STATE OF MAINE
DEPARTMENT OF TRANSPORTATION

STOCKHOLM
AROOSTOOK COUNTY
MADAWASKA BRIDGE
OVER
LITTLE MADAWASKA RIVER
MAIN STREET
FEDERAL AID PROJECT NO. AC-BR-1931(800)X
PROJECT LENGTH 0.057 mi.
BRIDGE NO. 5160

SPECIFICATIONS

Design: Load and Resistance Factor Design per AASHTO LRFD Bridge Design Specifications, Seventh Edition 2014 with 2015 interims.

DESIGN LOADING

Live Load ..... HL - 93 Modified

TRAFFIC DATA

Current (2012) AADT	510
Future (2032) AADT	610
DHV - % of AADT	12%
Design Hour Volume	73
Heavy Trucks (% of AADT)	11
Heavy Trucks (% of DHV)	11
Directional Distribution (% of DHV)	55
18 kip Equivalent P 2.0	24
18 kip Equivalent P 2.5	23
Design Speed (mph)	30

HYDROLOGIC DATA

Drainage Area	116 sq mi
Design Discharge (Q50)	6490 cfs
Check Discharge (Q100)	7380 cfs
Headwater Elevation (Q50)	548.09 ft
Headwater Elevation (Q100)	548.58 ft
Discharge Velocity (Q50)	8.90 fps
Discharge Velocity (Q100)	9.78 fps
Headwater Elevation (Q1.1)	542.03 ft
Discharge Velocity (Q1.1)	4.30 fps
Headwater Elevation (Q25)	547.71 ft

MATERIALS

Concrete:
- Curbs & Texas Classic Rail ..... Class "LP"
- All Other ..... Class "A"

Reinforcing Steel:
- Curbs & Texas Classic Rail ..... ASTM A 775/A 775M (Epoxy-Coated), Grade 60
- All Other ..... ASTM A 615/A 615M, Grade 60

Structural Steel:
- All Material (except as noted) ..... ASTM A 709, Grade 50W (unpainted)
- High Strength Bolts ..... ASTM A 325, Type 3

BASIC DESIGN STRESSES

Concrete, Class "LP"	f 'c = 5,000 psi
Concrete, Class "A"	f 'c = 4,000 psi
Reinforcing Steel	f y = 60,000 psi
Structural Steel:	
ASTM A 709, Grade 50W	F y = 50,000 psi
ASTM A 709, Grade 36	F y = 36,000 psi
ASTM A 325	F μ = 120,000 psi

LIST OF DRAWINGS

Title Sheet	1
Estimated Quantities & General Notes	2
General Plan	3
Profile	4
Boring Location Plan And Interpretive Subsurface Profile	5-6
Boring Logs	7
Cross Sections	8-18
Abutment Details	19-23
Framing Plan	24
Structural Steel Details	25
Superstructure Plan	26
Superstructure Reinforcing	27
Reinforcing Steel Schedule	28
Right-Of-Way Map	29

UTILITIES

Emera Maine (previously Bangor Hydro-Electric Company)
Northern New England Telephone Operations (Fairpoint Communications)

MAINTENANCE OF TRAFFIC

Maintain one 11'-0" lane of two-way signalized alternating traffic using single lane temporary bridge.

PROJECT LOCATION:	On Main Street, located 0.03 miles north of Lake Street. Latitude 47° 02' 22", Longitude 68° 08' 24"
PROGRAM AREA:	Bridge
OUTLINE OF WORK:	Bridge Replacement with 200 feet of approach work

HNTB

STATE OF MAINE
DEPARTMENT OF TRANSPORTATION
APPROVED — DATE
COMMISSIONER: 2/19/16
CHIEF ENGINEER: 2-17-16

STATE OF MAINE — ROLAND A. LAVALLEE No. 6452 — PROFESSIONAL ENGINEER
SIGNATURE
P.E. NUMBER 6452
DATE 1/21/16

PROJECT INFORMATION

PROGRAM	BRIDGE
PROJECT MANAGER	ANDY LATHE
DESIGNER	TIM COTE, P.E.
CONSULTANT	HNTB CORP.
PROJECT RESIDENT	
CONTRACTOR	
PROJECT COMPLETION DATE	

WIN 19318.00

AC-BR-1931(800)X

STOCKHOLM
MADAWASKA BRIDGE

TITLE SHEET

SHEET NUMBER
1
OF 29

Date: 1/21/2016 Username: Division: Filename: 001_Title.dgn

ITEM NO.	DESCRIPTION	QUANTITY	UNIT
202.19	Removing Existing Bridge (Concrete = 500 CY)	1	LS
202.202	Removing Pavement Surface	200	SY
203.20	Common Excavation	760	CY
203.2318	Disposal of Special Waste	70	TON
203.25	Granular Borrow	400	CY
206.082	Structural Earth Excavation - Major Structures, Plan Quantity	1,000	CY
304.10	Aggregate Subbase Course - Gravel	800	CY
403.208	Hot Mix Asphalt, 12.5 mm Nominal Maximum Size	96	TON
403.209	Hot Mix Asphalt, 9.5 mm Nominal Maximum Size (Sidewalks, Drives, Islands & Incidentals)	30	TON
403.211	Hot Mix Asphalt, 9.5 mm Nominal Maximum Size (Shimming)	8	TON
403.213	Hot Mix Asphalt, 12.5 mm Nominal Maximum Size (Base and Intermediate Base Course)	170	TON
409.15	Bituminous Tack Coat, Applied	37	GAL
461.131	Temporary Pavement	150	TON
501.231	Dynamic Loading Test	2	EA
501.50	Steel H-beam Piles 89 lb/ft, delivered	548	LF
501.501	Steel H-beam Piles 89 lb/ft, in place	548	LF
501.90	Pile Tips	8	EA
501.91	Pile Splices	8	EA
501.92	Pile Driving Equipment Mobilization	1	LS
502.219	Structural Concrete, Abutments and Retaining Walls (105 CY)	1	LS
502.26	Structural Concrete Roadway and Sidewalk Slab on Steel Bridges (91 CY)	1	LS
502.31	Structural Concrete Approach Slab (21 CY)	1	LS
502.49	Structural Concrete Curbs and Sidewalks (9 CY)	1	LS
503.12	Reinforcing Steel, Fabricated and Delivered	14,700	LB
503.13	Reinforcing Steel, Placing	14,700	LB
503.14	Epoxy-Coated Reinforcing Steel, Fabricated and Delivered	438	LB
503.15	Epoxy-Coated Reinforcing Steel, Placing	438	LB
504.702	Structural Steel Fabricated and Delivered, Welded (102,000 lbs)	1	LS
504.71	Structural steel erection (102,000 lbs)	1	LS
505.08	Shear Connectors (1608 EA)	1	LS
510.10	Special Detour, 11 foot Roadway Width Vehicular and Pedestrian Traffic Not Separated	1	LS
511.07	Cofferdam: Abutment #1	1	LS
511.07	Cofferdam: Abutment #2	1	LS
512.081	French Drains (92 LF)	1	LS
514.06	Curing Box for Concrete Cylinders	1	EA
515.21	Protective Coating for Concrete Surfaces (539 SY)	1	LS
526.301	Temporary Concrete Barrier, Type I (490 LF)	1	LS
526.323	Texas Classic Rail (206 LF)	1	LS
527.34	Work Zone Crash Cushions	4	UN
606.1721	Bridge Transition - Type I	4	EA
606.23	Guardrail Type 3c - Single Rail	237.5	LF
606.231	Guardrail Type 3c - 15 ft Radius and Less	25.0	LF
606.232	Guardrail Type 3c - Over 15 ft Radius	87.5	LF
606.265	Terminal End - Single Rail - Galvanized Steel	3	EA
606.353	Reflectorized Flexible Guardrail Marker	5	EA
606.78	Low Volume Guardrail End - Type 3	1	EA
610.08	Plain Riprap	800	CY
613.319	Erosion Control Blanket	330	SY
615.07	Loam	39	CY
618.141	Seeding Method Number 3	6.5	UN
619.1201	Mulch	6.5	UN
619.1401	Erosion Control Mix	50	CY
620.58	Erosion Control Geotextile	1,050	SY
629.05	Hand Labor, Straight Time	35	HR
631.12	All Purpose Excavator (including operator)	20	HR
631.14	Grader (including operator)	25	HR
631.15	Roller, Earth and Base (including operator)	20	HR
631.172	Truck-large (including operator)	20	HR
631.32	Culvert Cleaner (including operators)	20	HR
637.071	Dust Control	1	LS
639.19	Field Office, Type B	1	EA
643.72	Temporary Traffic Signal at: Madawaska Bridge Detour	1	LS
652.312	Type III Barricades	4	EA
652.33	Drum	50	EA
652.34	Cone	50	EA
652.35	Construction Signs	390	SF
652.361	Maintenance of Traffic Control Devices (250 CD)	1	LS
652.38	Flaggers	480	HR
656.75	Temporary Soil Erosion and Water Pollution Control	1	LS
659.10	Mobilization	1	LS

GENERAL CONSTRUCTION NOTES:

1. The clearing limits as shown on the plans are approximate. The exact limits will be established in the field by the Resident. Payment for clearing will be considered incidental to Contract items.

2. For easements, construction limits and right of way lines, refer to Right of Way Maps.

3. All utility facilities shall be adjusted by the respective utilities unless otherwise noted.

4. Do not excavate for Aggregate Subbase Course where existing material is suitable as determined by the Resident.

5. In areas where the Resident directs the Contractor not to excavate to the subgrade line shown on the plans, payment for removing existing pavement, grubbing, shaping, ditching, and compacting the existing subbase and layers of new subbase 6 inches or less thick will be made under appropriate equipment rental items.

6. All embankment material, except as otherwise shown, placed below EL. 542.03 shall be Granular Borrow meeting the requirements of Subsection 703.19, Material for Underwater Backfill.

7. Loam shall be placed to a nominal depth of 4 inches in lawn areas and 2 inches in all other areas unless otherwise noted or directed.

8. Erosion Control Mix may be substituted in those areas normally receiving loam and seed as directed by the Resident. Placement shall be in accordance with Standard Specifications Section 619, Mulch. Payment will be made under Item No. 619.1401, Erosion Control Mix.

9. Place a 24-in. wide strip of Temporary Erosion Control Blanket on the side slopes along the top of riprap and behind the wingwalls.

10. An NCHRP350 compliant guardrail end treatment shall be installed concurrently with the placement of each section of beam guardrail.

11. Place a 4-ft wide strip of Extended Use Erosion Control Blanket along the bottom of all ditches.

12. Extended Use Erosion Control Blanket, seeded gutters, riprap downspouts, and other gutters lined with Stone Ditch Protection shall be constructed after paving and shoulder work is completed, where it is apparent that runoff will cause continual erosion. Payment will be made under the appropriate Contract items.

13. Protective Coating for Concrete Surfaces shall be applied to the following areas:

All exposed surfaces of concrete curbs,
Fascias down to the drip notch,
All exposed surfaces of Texas Classic Rail,
Top of abutment backwalls and to one foot below the top of backwalls on the back side,
All exposed surfaces of concrete wearing surface.

14. Project information referred to below may be accessed at the following MaineDOT web address:
http://www.maine.gov/mdot/contractors/*projectbl.

15. The existing bridge plans may be accessed at the MaineDOT web address. The plans are reproductions of the original drawings as prepared for the construction of the bridge. It is very unlikely that the plans will show any construction field changes or any alterations which may have been made to the bridge during its life span.

16. The hydrologic report of the bridge site may be accessed at the MaineDOT web address. The hydrologic report is based on the designers interpretation of the information obtained for the subject site. No assurance is given that the information or the conclusions of the report will be representative of actual conditions at the time of construction.

17. The project geotechnical report titled: Geotechnical Design Report for the Replacement of: Madawaska Bridge Main Street over Little Madawaska River, Stockholm Maine, Soils Report No. 2015-23, August 25, 2015 may be accessed at the MaineDOT web address.

18. Geotechnical information furnished or referred to in this plan set is for the use of the Bidders and the Contractor. No assurance is given that the information or interpretations will be representative of actual subsurface conditions at the construction site. MaineDOT will not be responsible for the Bidder's or Contractor's interpretations of, or conclusions drawn from, the geotechnical information. The boring logs contained in the plan set present factual and interpretive subsurface information collected at discrete locations. Data provided may not be representative of the subsurface conditions between the boring locations.

19. Quantities included for pay items measured and paid for by Lump Sum are estimated quantities and are provided by MaineDOT for informational purposes only. Lump Sum pay items will be paid for at the Contract Bid amount, with no addition or reduction in payment to the Contractor if the actual final quantities are different from the MaineDOT provided estimated quantities, except as follows:

a. If a Lump Sum pay item is eliminated, the requirements of Standard Specifications Section 109.2, Elimination of Items, will take precedence.

b. If other Contract Documents specifically allow a change in payment for a Lump Sum pay item, those requirements will be followed.

c. If a design change results in changes to estimated quantities for Lump Sum pay items, price adjustments will be made in accordance with Standard Specifications Section 109.7, Equitable Adjustments to Compensation.

20. The Contractor shall submit a Bridge Demolition Plan to the Resident at least 10 business days prior to the start of demolition work. The plan shall outline the methods and equipment to be used to remove and dispose of all materials included in the existing bridge. No work related to the removal of the bridge shall be undertaken by the Contractor until MaineDOT has reviewed the Bridge Demolition Plan for appropriateness and completeness. Payment for all work necessary for developing, submitting and finalizing the demolition Plan will be considered incidental to the bridge removal pay item.

21. Unpaved entrances shall be constructed with 14" Aggregate Subbase Course Gravel or 11" Aggregate Subbase Course Gravel and 3" untreated Aggregate Surface Course unless otherwise noted in the plans or directed by the Resident.

22. Commercial paved entrances shall be constructed with: 3" hot mix asphalt and 11" aggregate subbase course gravel.

23. The remains of some timber cribbing is visible in the river in the area located immediately upstream of the existing bridge where the temporary detour will be located. The limits of this timber cribbing are not known.

24. There are temporary traffic signals, poles, temporary concrete barriers, and work zone crash cushions on the existing bridge. The MaineDOT will be responsible for removing the elements upon request by the Contractor. The Contractor shall give the MaineDOT a weeks notice prior to requesting the removal and should contact Joseph Tedford at (207) 764-2060.

25. The location of the abutment piles of the new bridge have been located such that there are theoretically no interferences between these piles and the existing bridge abutments and wing walls, based on the as-built plans. If the existing structure was not constructed exactly as shown on the as-built plans, or if the piles are not driven precisely as shown on the Contract plans, then it is possible that interferences will occur between the new piles and the existing substructure units. Prior to driving the abutment piles, the Contractor shall verify that there are no interference issues between the new piles and the existing substructure units and shall take appropriate actions to remedy any interference issues that are discovered. All costs to perform this verification and remediation work, including, but not limited to, probing, excavation, backfilling and selective demolition, necessary to provide the appropriate clearances, will be considered incidental to related pay items.

HNTB

STATE OF MAINE
DEPARTMENT OF TRANSPORTATION

AC-BR-1931(800)X

WIN 19318.00

Bridge No. 5160

BRIDGE PLANS

		BY	DATE
PROJ. MANAGER	Andy Lathe		
DESIGN-DETAILED	H. Walton	P. Bishop	11\16
CHECKED-REVIEWED	K. Brayley	T. Cote	11\16
DESIGN2-DETAILED2	-	-	-
DESIGN3-DETAILED3	-	-	-
REVISIONS 1	-	-	-
REVISIONS 2	-	-	-
REVISIONS 3	-	-	-
REVISIONS 4	-	-	-
FIELD CHANGES	-	-	-

SIGNATURE

P.E. NUMBER

DATE

MADAWASKA BRIDGE
LITTLE MADAWASKA RIVER
STOCKHOLM AROOSTOOK COUNTY

ESTIMATED QUANTITIES & GENERAL NOTES

SHEET NUMBER
2
OF 29

Filename: 002_Estimated GeneralNotes and Quantities.dgn Username: Date:2/9/2016

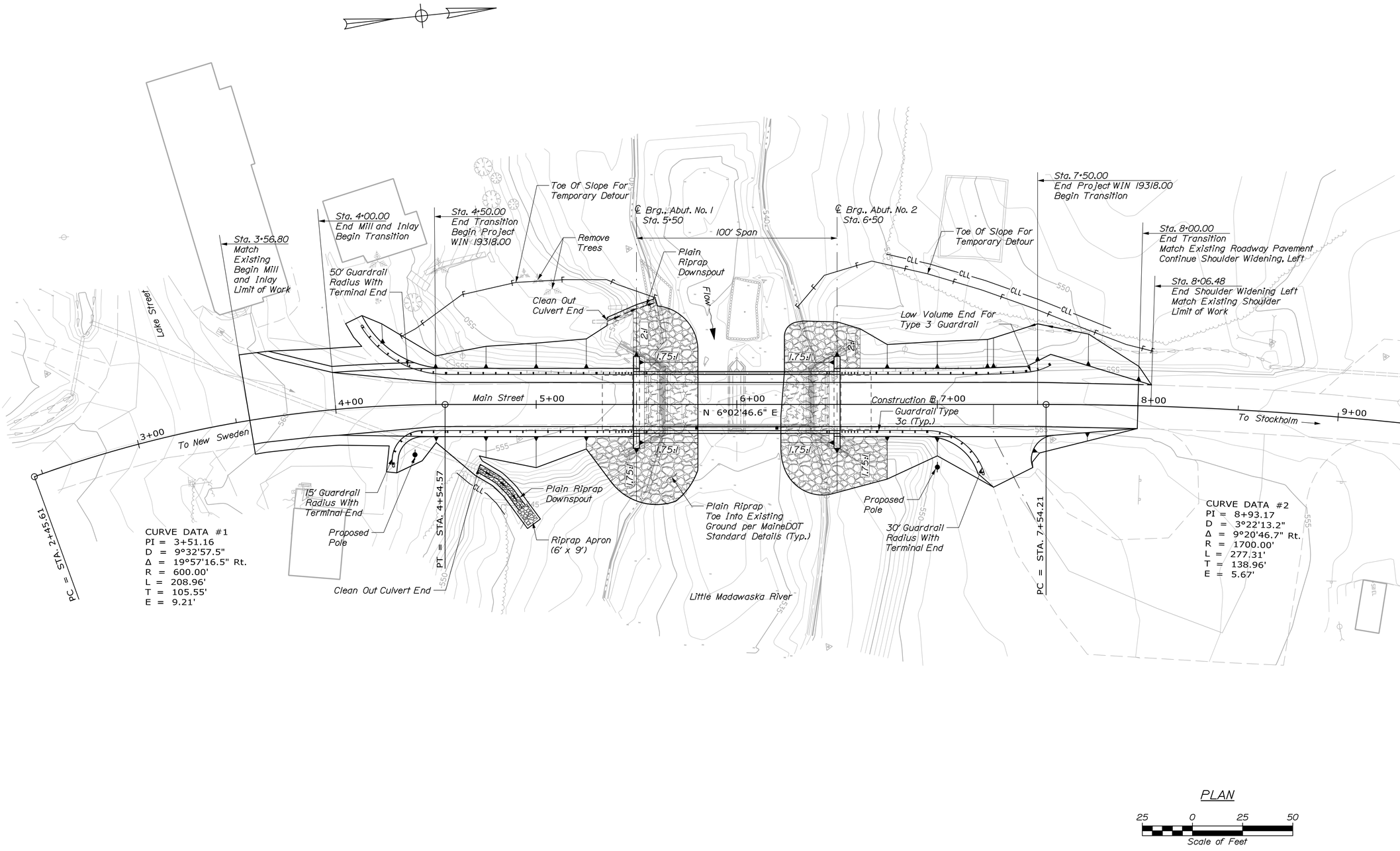

STATE OF MAINE
DEPARTMENT OF TRANSPORTATION

AC-BR-1931(800)X

WIN 19318.00

Bridge No. 5160

BRIDGE PLANS

		BY	DATE
PROJ. MANAGER	Andy Lathe		
DESIGN-DETAILED	P.Brown	D. Burgess	11.16
CHECKED-REVIEWED	P.Brown	R.Hanf	11.16
DESIGN2-DETAILED2	-	-	-
DESIGN3-DETAILED3	-	-	-
REVISIONS 1	-	-	-
REVISIONS 2	-	-	-
REVISIONS 3	-	-	-
REVISIONS 4	-	-	-
FIELD CHANGES	-	-	-

SIGNATURE

P.E. NUMBER

DATE

MADAWASKA BRIDGE
LITTLE MADAWASKA RIVER
STOCKHOLM AROOSTOOK COUNTY

GENERAL PLAN

SHEET NUMBER

3

OF 29

Filename: 003_General_Plan.dgn Division: Username: Date:1/29/2016

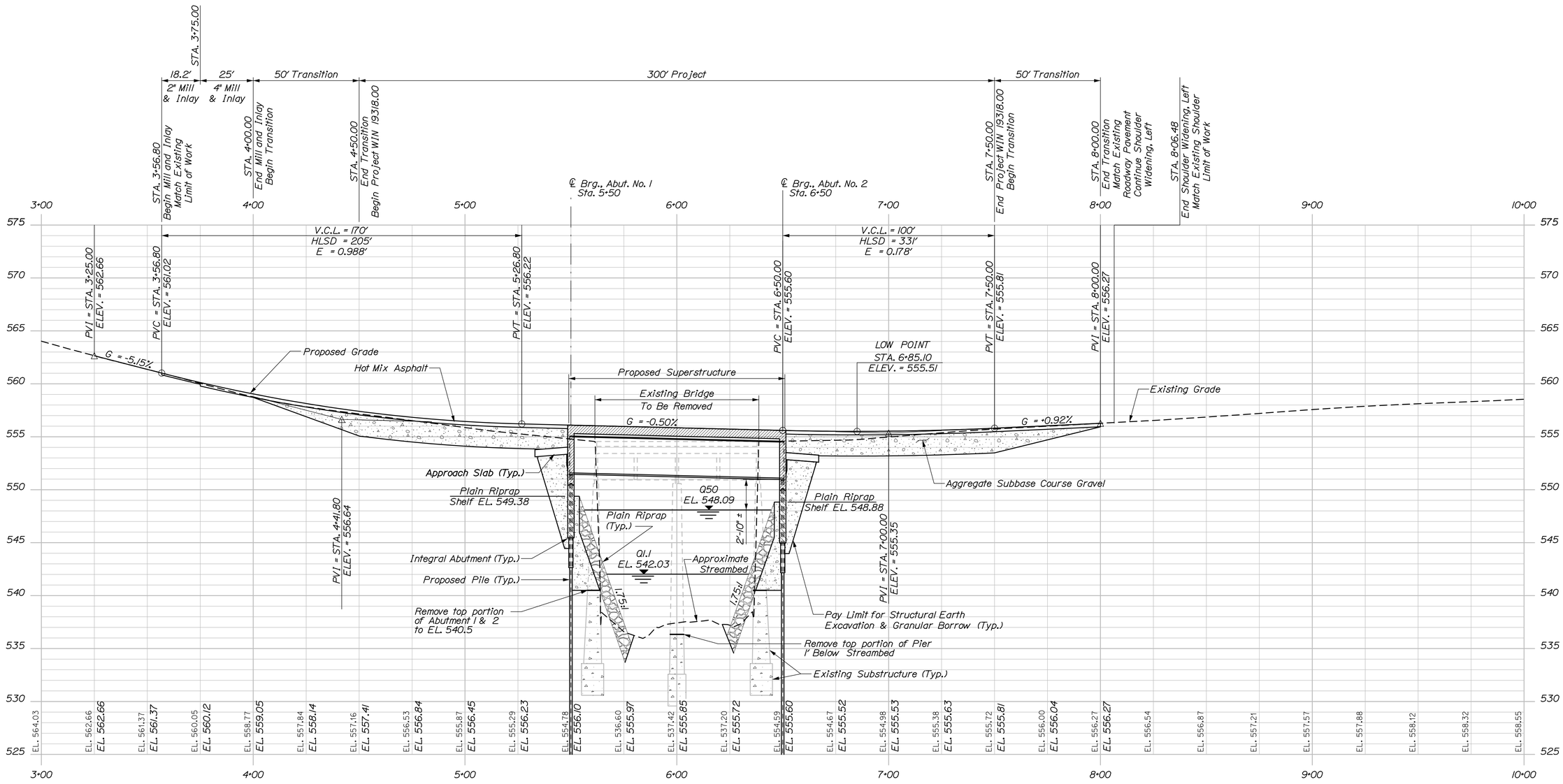

PROFILE

Horiz. 25 0 25 50
Vert. 5 0 5 10
Scale of Feet

STATE OF MAINE
DEPARTMENT OF TRANSPORTATION

AC-BR-1931(800)X

WIN 19318.00

Bridge No. 5160

BRIDGE PLANS

		BY	DATE
PROJ. MANAGER	Andy Lathe		
DESIGN-DETAILED	P.Brown	D. Burgess	11.16
CHECKED-REVIEWED	P.Brown	R.Hanf	11.16
DESIGN2-DETAILED2	-	-	-
DESIGN3-DETAILED3	-	-	-
REVISIONS 1	-	-	-
REVISIONS 2	-	-	-
REVISIONS 3	-	-	-
REVISIONS 4	-	-	-
FIELD CHANGES	-	-	-

SIGNATURE

P.E. NUMBER

DATE

MADAWASKA BRIDGE
LITTLE MADAWASKA RIVER
STOCKHOLM AROOSTOOK COUNTY

PROFILE

SHEET NUMBER

4

OF 29

Filename: 004_Profile.dgn
Division:
Username:
Date:1/29/2016

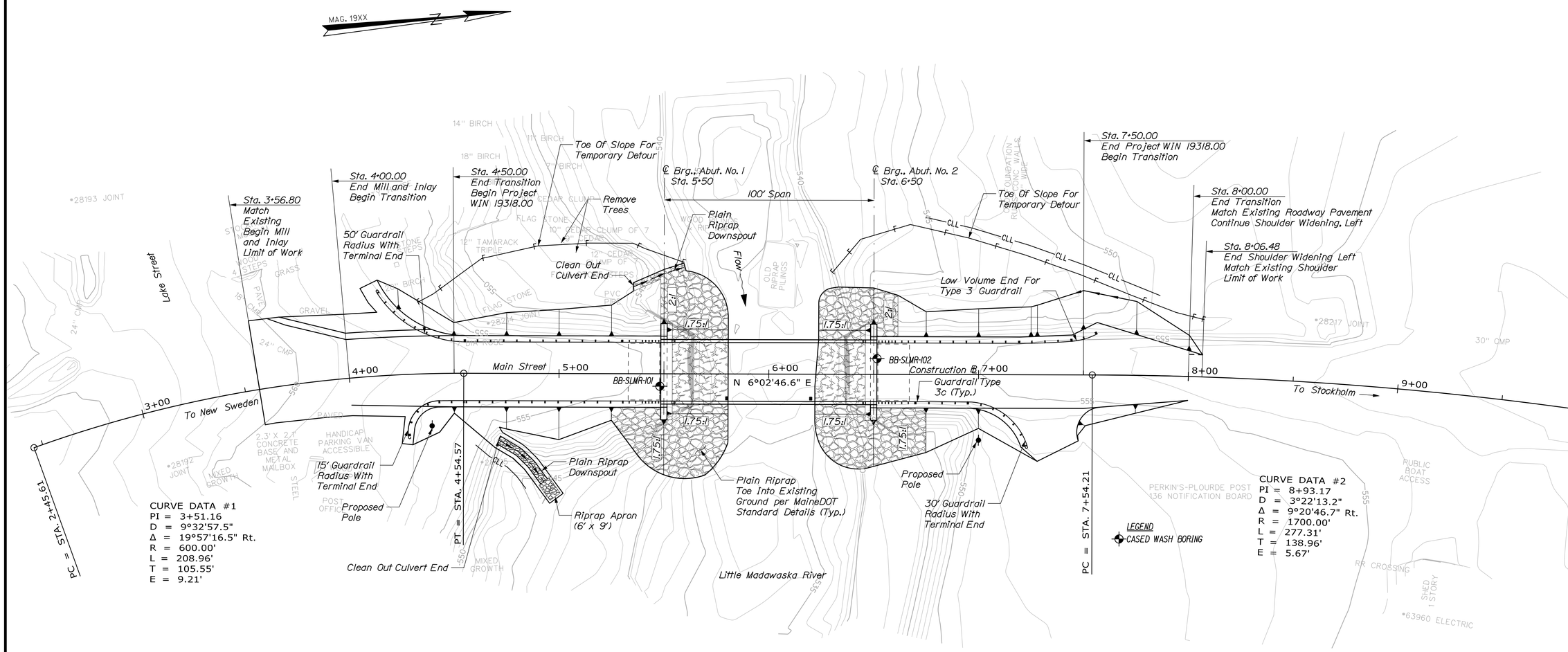

STATE OF MAINE
DEPARTMENT OF TRANSPORTATION

AC-BR-1931(800)X

WIN 19318.00

BRIDGE NO. 5160

BRIDGE PLANS

	BY	DATE
PROJ. MANAGER		
DESIGN-DETAILED		
CHECKED-REVIEWED		
DESIGN2-DETAILED2	B.SLAVEN	
DESIGN3-DETAILED3		
REVISIONS 1		
REVISIONS 2		
REVISIONS 3		
REVISIONS 4		
FIELD CHANGES		

SIGNATURE

P.E. NUMBER MAY 2015 T.WHITE

DATE

MADAWASKA BRIDGE
LITTLE MADAWASKA RIVER
STOCKHOLM AROOSTOOK COUNTY

BORING LOCATION PLAN

SHEET NUMBER

5

OF 29

Date:1/29/2016

Username:

Division:

Filename: 005_BLP1.dgn

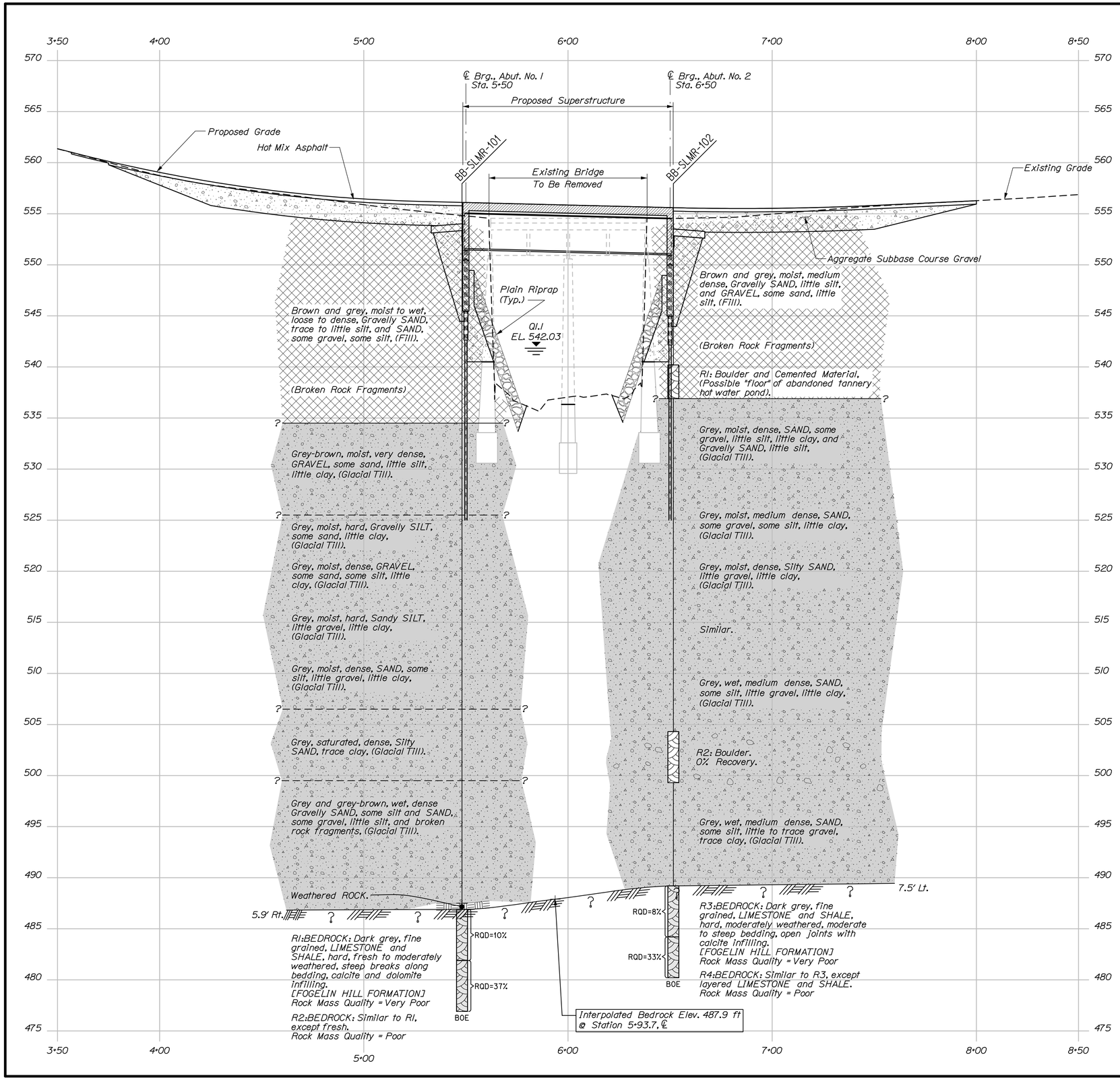

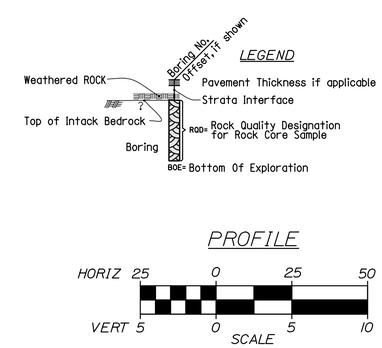

Note: This generalized interpretive soil profile is intended to convey trends in subsurface conditions. The boundaries between strata are approximate and idealized, and have been developed by interpretations of widely spaced explorations and samples. Actual soil transitions may vary and are probably more erratic. For more specific information refer to the exploration logs.

STATE OF MAINE
DEPARTMENT OF TRANSPORTATION

AC-BR-1931(800)X

WIN 19318.00

BRIDGE NO. 5160

BRIDGE PLANS

	BY	DATE
PROJ. MANAGER		
DESIGN-DETAILED		
CHECKED-REVIEWED		
DESIGN2-DETAILED2	B.SLAVEN	AUG 2015
DESIGN3-DETAILED3	T.WHITE	
REVISIONS 1		
REVISIONS 2		
REVISIONS 3		
REVISIONS 4		
FIELD CHANGES		

SIGNATURE

P.E. NUMBER

DATE

MADAWASKA BRIDGE
LITTLE MADAWASKA RIVER
STOCKHOLM AROOSTOOK COUNTY

INTERPRETIVE SUBSURFACE PROFILE

SHEET NUMBER
6
OF 29

Filename: 006_ISP1.dgn Division: Username: Date:1/29/2016

Date:1/29/2016

Username:

Division:

Filename: 007_BORING LOGS1.dgn

Maine Department of Transportation
Soil/Rock Exploration Log
US CUSTOMARY UNITS

Project: Madawaska Bridge #5160 carries Main Street over Little Madawaska		Location: Stockholm, Maine		Boring No.:	BB-SLMR-101
				WIN:	19318.00
Driller:	MaineDOT	Elevation (ft.)	554.5	Auger ID/OD:	5" Solid Stem
Operator:	Wilder/Giles/Daggett	Datum:	NAVD88	Sampler:	Standard Split Spoon
Logged By:	B. Wilder	Rig Type:	CME 45C	Hammer Wt./Fall:	140#/30"
Date Start/Finish:	4/13,18/2012	Drilling Method:	Cased Wash Boring	Core Barrel:	NQ-2"
Boring Location:	5+48.1, 5.9 ft Rt.	Casing ID/OD:	HW & NW	Water Level*:	None Observed
Hammer Efficiency Factor: 0.783		Hammer Type:	Automatic ☒ Hydraulic ☐ Rope & Cathead ☐		

Definitions:
D = Split Spoon Sample
MD = Unsuccessful Split Spoon Sample attempt
U = Thin Wall Tube Sample
MU = Unsuccessful Thin Wall Tube Sample attempt
V = Insitu Vane Shear Test, PP = Pocket Penetrometer
MV = Unsuccessful Insitu Vane Shear Test attempt
R = Rock Core Sample
SSA = Solid Stem Auger
HSA = Hollow Stem Auger
RC = Roller Cone
WOH = weight of 140lb. hammer
WOR/C = weight of rods or casing
WO1P = Weight of one person
S_u = Insitu Field Vane Shear Strength (psf)
T_v = Pocket Torvane Shear Strength (psf)
q_p = Unconfined Compressive Strength (ksf)
N-uncorrected = Raw field SPT N-value
Hammer Efficiency Factor = Annual Calibration Value
N_{60} = SPT N-uncorrected corrected for hammer efficiency
N_{60} = (Hammer Efficiency Factor/60%)*N-uncorrected
$S_{u(lab)}$ = Lab Vane Shear Strength (psf)
WC = water content, percent
LL = Liquid Limit
PL = Plastic Limit
PI = Plasticity Index
G = Grain Size Analysis
C = Consolidation Test

Depth (ft.)	Sample No.	Pen./Rec. (in.)	Sample Depth (ft.)	Blows (/6 in.) Shear Strength (psf) or RQD (%)	N-uncorrected	N_{60}	Casing Blows	Elevation (ft.)	Graphic Log	Visual Description and Remarks	Laboratory Testing Results/ AASHTO and Unified Class.
0							SSA	554.08		5" PAVEMENT. 0.42	
	S1		1.00 - 4.00							Brown, moist, fine to coarse SAND, some gravel, some silt, (Fill).	G#237522 A-2-4, SM WC=9.1%
5	1D	24/12	5.00 - 7.00	13/18/10/5	28	37				Brown, moist, dense, Gravelly fine to coarse SAND, little silt, (Fill).	
10	2D	24/7	10.00 - 12.00	9/4/3/6	7	9	19			Grey, wet, loose, Gravelly (broken rock fragments) fine to coarse SAND, trace silt, (Fill). Roller Coned ahead to 15.0 ft bgs.	
							13				
							25				
							23				
							39				
15	3D	24/4	15.00 - 17.00	2/4/4/7	8	10	30			Broken rock fragments.	
							56				
							52				
							47				
							55				
20	4D	24/17	20.00 - 22.00	9/21/37/43	58	76	6	534.50		20.00 Grey-brown, mottled, moist, very dense, GRAVEL, some fine to coarse sand, little silt, little clay, blocky, non-plastic, (Glacial Till). Changed to NW Casing at 20.0 ft bgs. Roller Coned ahead to 30.0 ft bgs.	G#237523 A-2-4, GC-GM WC=8.5%
							5				
							7				
							11				
							14				
25							4				
							5				
							11				
							19				
							89	525.50		29.00	
30	5D	24/16	30.50 - 32.50	35/36/27/23	63	82	75			Grey, moist, hard, Gravelly SILT, some sand, little clay, (Glacial Till).	
							161				
							159				
							156				
							196				
35	6D	24/17	35.00 - 37.00	12/21/15/23	36	47	169			Grey, moist, dense, GRAVEL, some sand, some silt, little clay, (Glacial Till).	G#237524 A-4, GC-GM WC=7.4%
							121				
							186				
							208				
							275				
40	7D	24/13	40.00 - 42.00	14/15/14/21	29	38	44			Grey, moist, hard, Sandy SILT, little gravel, little clay, (Glacial Till). Roller Coned ahead to 45.0 ft bgs.	
							55				
							72				
							87				
							132				
45	8D	24/14	45.00 - 47.00	13/15/16/17	31	40	91			Grey, moist, dense, SAND, some silt, little gravel, little clay, (Glacial Till).	G#237525 A-4, SC-SM WC=8.5%
							104				
							111				
							212	506.50		48.00	
							175				
50											

Remarks:

Stratification lines represent approximate boundaries between soil types; transitions may be gradual.

* Water level readings have been made at times and under conditions stated. Groundwater fluctuations may occur due to conditions other than those present at the time measurements were made.

Page 1 of 2

Boring No.: BB-SLMR-101

Maine Department of Transportation
Soil/Rock Exploration Log
US CUSTOMARY UNITS

Project: Madawaska Bridge #5160 carries Main Street over Little Madawaska		Location: Stockholm, Maine		Boring No.:	BB-SLMR-101
				WIN:	19318.00
Driller:	MaineDOT	Elevation (ft.)	554.5	Auger ID/OD:	5" Solid Stem
Operator:	Wilder/Giles/Daggett	Datum:	NAVD88	Sampler:	Standard Split Spoon
Logged By:	B. Wilder	Rig Type:	CME 45C	Hammer Wt./Fall:	140#/30"
Date Start/Finish:	4/13,18/2012	Drilling Method:	Cased Wash Boring	Core Barrel:	NQ-2"
Boring Location:	5+48.1, 5.9 ft Rt.	Casing ID/OD:	HW & NW	Water Level*:	None Observed
Hammer Efficiency Factor: 0.783		Hammer Type:	Automatic ☒ Hydraulic ☐ Rope & Cathead ☐		

Definitions:
D = Split Spoon Sample
MD = Unsuccessful Split Spoon Sample attempt
U = Thin Wall Tube Sample
MU = Unsuccessful Thin Wall Tube Sample attempt
V = Insitu Vane Shear Test, PP = Pocket Penetrometer
MV = Unsuccessful Insitu Vane Shear Test attempt
R = Rock Core Sample
SSA = Solid Stem Auger
HSA = Hollow Stem Auger
RC = Roller Cone
WOH = weight of 140lb. hammer
WOR/C = weight of rods or casing
WO1P = Weight of one person
S_u = Insitu Field Vane Shear Strength (psf)
T_v = Pocket Torvane Shear Strength (psf)
q_p = Unconfined Compressive Strength (ksf)
N-uncorrected = Raw field SPT N-value
Hammer Efficiency Factor = Annual Calibration Value
N_{60} = SPT N-uncorrected corrected for hammer efficiency
N_{60} = (Hammer Efficiency Factor/60%)*N-uncorrected
$S_{u(lab)}$ = Lab Vane Shear Strength (psf)
WC = water content, percent
LL = Liquid Limit
PL = Plastic Limit
PI = Plasticity Index
G = Grain Size Analysis
C = Consolidation Test

Depth (ft.)	Sample No.	Pen./Rec. (in.)	Sample Depth (ft.)	Blows (/6 in.) Shear Strength (psf) or RQD (%)	N-uncorrected	N_{60}	Casing Blows	Elevation (ft.)	Graphic Log	Visual Description and Remarks	Laboratory Testing Results/ AASHTO and Unified Class.
50	9D	24/19	50.00 - 52.00	9/11/13/9	24	31	122			Grey, saturated, dense, Silty fine to medium SAND, trace clay, (Glacial Till).	G#261880 A-4, CL-ML WC=20.4%
							136				
							155				
							146				
							162				
55	10D	24/14	55.00 - 57.00	19/12/14/16	26	34	81	499.00		55.50 Grey, wet, dense, Gravelly (broken rock fragments) fine to coarse SAND, some silt, (Glacial Till).	
							110				
							128				
							137				
							161				
60	11D	24/14	60.70 - 62.70	13/16/19/15	35	46	105			Broken rock fragments.	
							93				
							92				
							113				
							112				
65	12D	24/14	65.00 - 67.00	5/14/14/38	28	37	113			Grey-brown, mottled, dense, fine to medium SAND, some gravel (rock fragments), little silt, (Glacial Till).	
							122				
	R1	60/55	67.60 - 72.60	RQD = 10%			190 NQ-2	487.50 486.90		67.00 Weathered ROCK in tip of spoon. Roller Coned ahead to 67.6 ft bgs. 67.60 Top of Bedrock at Elev. 486.9 ft. R1:Bedrock: Dark grey, fine grained, LIMESTONE and SHALE, hard, moderately weathered, steep breaks along bedding, calcite and dolomite infilling. Rock Mass Quality = Very Poor. Fogelin Hill Formation. R1:Core Times (min:sec) 67.6-68.6 ft (4:00) 68.6-69.6 ft (2:10) 69.6-70.6 ft (2:00) 70.6-71.6 ft (4:20) 71.6-72.6 ft (3:40) 92% Recovery	
70											
	R2	60/60	72.60 - 77.60	RQD = 37%						R2: Bedrock: Similar to R1 except fresh. Rock Mass Quality = Poor. R2:Core Times (min:sec) 72.6-73.6 ft (3:25) 73.6-74.6 ft (2:35) 74.6-75.6 ft (2:50) 75.6-76.6 ft (2:45) 76.6-77.6 ft (2:50) 100% Recovery	
75											
								476.90		77.60 Bottom of Exploration at 77.60 feet below ground surface.	
80											
85											
90											
95											
100											

Remarks:

Stratification lines represent approximate boundaries between soil types; transitions may be gradual.

* Water level readings have been made at times and under conditions stated. Groundwater fluctuations may occur due to conditions other than those present at the time measurements were made.

Page 2 of 2

Boring No.: BB-SLMR-101

Maine Department of Transportation
Soil/Rock Exploration Log
US CUSTOMARY UNITS

Project: Madawaska Bridge #5160 carries Main Street over Little Madawaska		Location: Stockholm, Maine		Boring No.:	BB-SLMR-102
				WIN:	19318.00
Driller:	MaineDOT	Elevation (ft.)	554.5	Auger ID/OD:	5" Solid Stem
Operator:	Wilder/Giles/Daggett	Datum:	NAVD88	Sampler:	Standard Split Spoon
Logged By:	B. Wilder	Rig Type:	CME 45C	Hammer Wt./Fall:	140#/30"
Date Start/Finish:	4/11/12-4/12/12	Drilling Method:	Cased Wash Boring	Core Barrel:	NQ-2"
Boring Location:	6+51.6, 7.5 ft Lt.	Casing ID/OD:	HW & NW	Water Level*:	12.0 ft bgs.
Hammer Efficiency Factor: 0.783		Hammer Type:	Automatic ☒ Hydraulic ☐ Rope & Cathead ☐		

Definitions:
D = Split Spoon Sample
MD = Unsuccessful Split Spoon Sample attempt
U = Thin Wall Tube Sample
MU = Unsuccessful Thin Wall Tube Sample attempt
V = Insitu Vane Shear Test, PP = Pocket Penetrometer
MV = Unsuccessful Insitu Vane Shear Test attempt
R = Rock Core Sample
SSA = Solid Stem Auger
HSA = Hollow Stem Auger
RC = Roller Cone
WOH = weight of 140lb. hammer
WOR/C = weight of rods or casing
WO1P = Weight of one person
S_u = Insitu Field Vane Shear Strength (psf)
T_v = Pocket Torvane Shear Strength (psf)
q_p = Unconfined Compressive Strength (ksf)
N-uncorrected = Raw field SPT N-value
Hammer Efficiency Factor = Annual Calibration Value
N_{60} = SPT N-uncorrected corrected for hammer efficiency
N_{60} = (Hammer Efficiency Factor/60%)*N-uncorrected
$S_{u(lab)}$ = Lab Vane Shear Strength (psf)
WC = water content, percent
LL = Liquid Limit
PL = Plastic Limit
PI = Plasticity Index
G = Grain Size Analysis
C = Consolidation Test

Depth (ft.)	Sample No.	Pen./Rec. (in.)	Sample Depth (ft.)	Blows (/6 in.) Shear Strength (psf) or RQD (%)	N-uncorrected	N_{60}	Casing Blows	Elevation (ft.)	Graphic Log	Visual Description and Remarks	Laboratory Testing Results/ AASHTO and Unified Class.
0							SSA	554.04		5.5" PAVEMENT. 0.46	
	1D	24/16	1.00 - 3.00	11/12/8/9	20	26				Brown, moist, medium dense, GRAVEL, some fine to coarse sand, little silt, (Fill).	G#261881 A-1-b, GM WC=7.4%
5	2D	24/4	5.00 - 7.00	6/6/7/7	13	17				Similar to above.	
10	3D	24/5	10.00 - 12.00	11/7/4/5	11	14	28			Recovered broken rock fragments. Based on drill water: Grey, medium dense, Gravelly fine to coarse SAND, little silt, (Fill).	
							29				
							44				
							47				
	R1	42/30	14.30 - 17.80				a50	540.20		a50 blows for 0.3 ft. 14.30 R1: Boulder (Sandstone) and cemented material. R1:Core Times (min:sec) 14.3-15.3 ft (6:00) 15.3-16.3 ft (6:51) 16.3-17.3 ft (1:30) 17.3-17.8 ft (0:45) Roller Coned through Boulder with 3 7/8" dia. roller cone.	
15							OPEN HOLE				
								536.90		Weathered cemented bed from 16.5-17.1 ft bgs. Possible "floor" of abandoned tannery hot water pond. Roller Coned ahead to 25.0 ft bgs. 17.60	
20	4D	24/16	20.00 - 22.00	8/13/22/22	35	46				Grey, moist, dense, fine to coarse SAND, some gravel, little silt, little clay, (Glacial Till).	G#261882 A-2-4, SC-SM WC=7.2%
25	5D	24/12	25.00 - 27.00	8/16/15/17	31	40	18			Recovered broken rock fragments. Based on wash water: Grey, dense, Gravelly fine to coarse SAND, little silt. Changed to NW Casing at 25.0 ft bgs.	
							35				
							51				
							49				
							43				
30	6D	24/20	30.00 - 32.00	7/10/6/11	16	21	38			Grey, moist, medium dense, fine to coarse SAND, some gravel, some silt, little clay, (Glacial Till).	G#261883 A-2-4, SC-SM WC=8.1%
							41				
							36				
							43				
							57				
35	7D	24/14	35.00 - 37.00	10/14/14/13	28	37	62			Grey, moist, dense, Silty SAND, little gravel, little clay, (Glacial Till).	
							67				
							73				
							106				
							121				
40	8D	24/18	40.00 - 42.00	7/11/13/19	24	31	93			Similar to above.	
							139				
							167				
							198				
							189				
45	9D	24/18	45.00 - 47.00	5/7/13/19	20	26	33			Grey, wet, medium dense, SAND, some silt, little gravel, little clay, (Glacial Till).	G#261884 A-4, SC-SM WC=13.2%
							62				
							77				
							78				
							135			Roller Coned ahead to 50.2 ft bgs. Cobble from 49.5-50.2 ft bgs.	
50											

Remarks:

Stratification lines represent approximate boundaries between soil types; transitions may be gradual.

* Water level readings have been made at times and under conditions stated. Groundwater fluctuations may occur due to conditions other than those present at the time measurements were made.

Page 1 of 2

Boring No.: BB-SLMR-102

Maine Department of Transportation
Soil/Rock Exploration Log
US CUSTOMARY UNITS

Project: Madawaska Bridge #5160 carries Main Street over Little Madawaska		Location: Stockholm, Maine		Boring No.:	BB-SLMR-102
				WIN:	19318.00
Driller:	MaineDOT	Elevation (ft.)	554.5	Auger ID/OD:	5" Solid Stem
Operator:	Wilder/Giles/Daggett	Datum:	NAVD88	Sampler:	Standard Split Spoon
Logged By:	B. Wilder	Rig Type:	CME 45C	Hammer Wt./Fall:	140#/30"
Date Start/Finish:	4/11/12-4/12/12	Drilling Method:	Cased Wash Boring	Core Barrel:	NQ-2"
Boring Location:	6+51.6, 7.5 ft Lt.	Casing ID/OD:	HW & NW	Water Level*:	12.0 ft bgs.
Hammer Efficiency Factor: 0.783		Hammer Type:	Automatic ☒ Hydraulic ☐ Rope & Cathead ☐		

Definitions:
D = Split Spoon Sample
MD = Unsuccessful Split Spoon Sample attempt
U = Thin Wall Tube Sample
MU = Unsuccessful Thin Wall Tube Sample attempt
V = Insitu Vane Shear Test, PP = Pocket Penetrometer
MV = Unsuccessful Insitu Vane Shear Test attempt
R = Rock Core Sample
SSA = Solid Stem Auger
HSA = Hollow Stem Auger
RC = Roller Cone
WOH = weight of 140lb. hammer
WOR/C = weight of rods or casing
WO1P = Weight of one person
S_u = Insitu Field Vane Shear Strength (psf)
T_v = Pocket Torvane Shear Strength (psf)
q_p = Unconfined Compressive Strength (ksf)
N-uncorrected = Raw field SPT N-value
Hammer Efficiency Factor = Annual Calibration Value
N_{60} = SPT N-uncorrected corrected for hammer efficiency
N_{60} = (Hammer Efficiency Factor/60%)*N-uncorrected
$S_{u(lab)}$ = Lab Vane Shear Strength (psf)
WC = water content, percent
LL = Liquid Limit
PL = Plastic Limit
PI = Plasticity Index
G = Grain Size Analysis
C = Consolidation Test

Depth (ft.)	Sample No.	Pen./Rec. (in.)	Sample Depth (ft.)	Blows (/6 in.) Shear Strength (psf) or RQD (%)	N-uncorrected	N_{60}	Casing Blows	Elevation (ft.)	Graphic Log	Visual Description and Remarks	Laboratory Testing Results/ AASHTO and Unified Class.
50	R2	60/0	50.20 - 55.20				17	504.30		50.20 R2:BOULDER. R2:Core Times (min:sec) 50.2-51.2 ft (0:45) 51.2-52.2 ft (0:10) 52.2-53.2 ft (0:10) 53.2-54.2 ft (0:10) 54.2-55.2 ft (0:15) 0% Recovery	
							23				
							34				
							36				
							37				
55	10D	24/20	55.50 - 57.50	3/5/5/10	10	13	47	499.00		55.50 Grey, wet, medium dense, fine to medium SAND, some silt, trace gravel, trace clay, (Glacial Till).	G#261885 A-2-4, SC-SM WC=20.7%
							66				
							70				
							87				
							156				
60	11D	24/19	60.00 - 62.00	8/10/12/18	22	29	60			Grey, wet, medium dense, fine to coarse SAND, some silt, little gravel, trace clay, (Glacial Till).	
							58				
							112				
							129				
							163			Roller Coned ahead to 65.3 ft bgs.	
65	R3	60/51	65.30 - 70.30	RQD = 8%			NQ-2	489.20		65.30 Top of Bedrock at Elev. 489.2 ft. R3: Bedrock: Dark grey, very fine grained, LIMESTONE and SHALE, hard, moderately weathered, moderate to steep breaks along bedding, open joints with calcite infilling. Rock Mass Quality = Very Poor. Fogelin Hill Formation. R3:Core Times (min:sec) 65.3-66.3 ft (3:05) 66.3-67.3 ft (4:00) 67.3-68.3 ft (3:40) 68.3-69.3 ft (2:50) 69.3-70.3 ft (2:25) 85% Recovery	
70	R4	48/48	70.30 - 74.30	RQD = 33%						R4: Bedrock: Similar to R3. Layered LIMESTONE and SHALE. Shale is platey. RockMassQuality = Poor. R4:Core Times (min:sec) 70.3-71.3 ft (2:45) 71.3-72.3 ft (2:00) 72.3-73.3 ft (2:00) 73.3-74.3 ft (4:00) 85% Recovery Core Blocked	
								480.20		74.30 Bottom of Exploration at 74.30 feet below ground surface.	
75											

Remarks:

Stratification lines represent approximate boundaries between soil types; transitions may be gradual.

* Water level readings have been made at times and under conditions stated. Groundwater fluctuations may occur due to conditions other than those present at the time measurements were made.

Page 2 of 2

Boring No.: BB-SLMR-102

STATE OF MAINE
DEPARTMENT OF TRANSPORTATION

AC-BR-1931(800)X

WIN
19318.00

BRIDGE NO. 5160

BRIDGE PLANS

	BY	DATE
PROJ. MANAGER		
DESIGN-DETAILED		
CHECKED-REVIEWED		
DESIGN2-DETAILED2	B.SLAVEN	T.WHITE AUG 2015
DESIGN3-DETAILED3		
REVISIONS 1		
REVISIONS 2		
REVISIONS 3		
REVISIONS 4		
FIELD CHANGES		

SIGNATURE

P.E. NUMBER

DATE

MADAWASKA BRIDGE
LITTLE MADAWASKA RIVER
STOCKHOLM AROOSTOOK COUNTY

BORING LOGS

SHEET NUMBER

7

OF 29

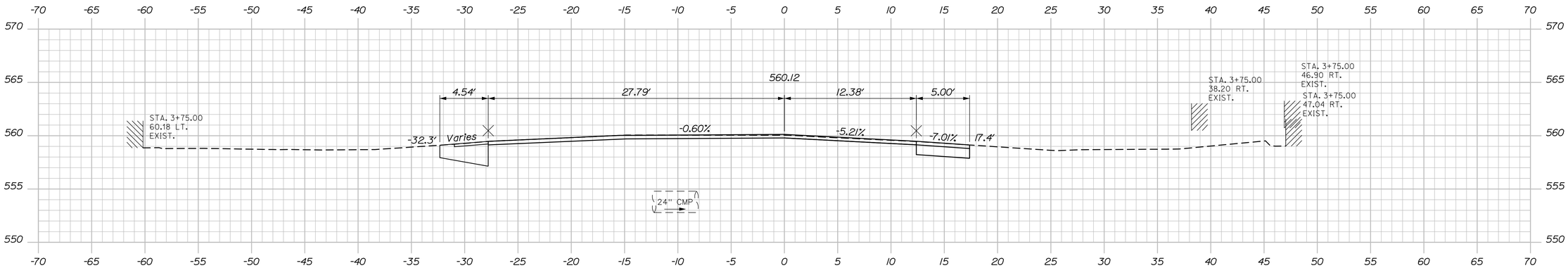

3+75.00

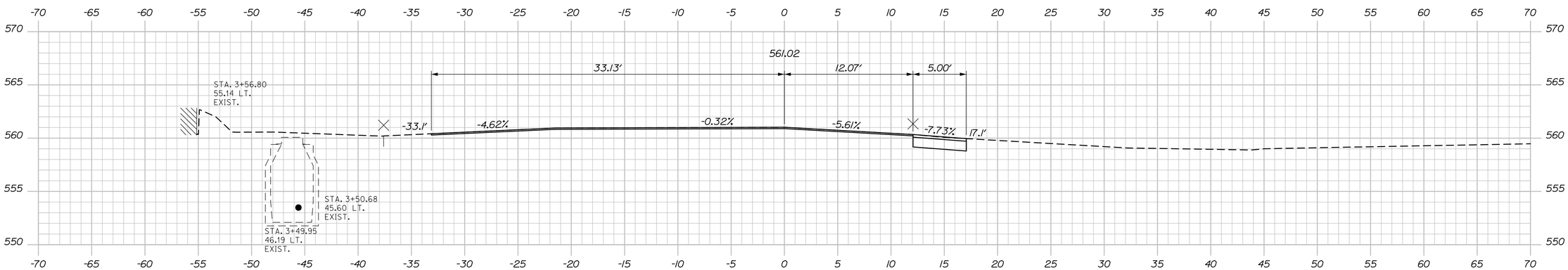

3+56.80
Begin Mill and Inlay
Match Existing
Limit of Work

Notes:

1. The pavement, base and subbase depths as shown on the plans are intended to be nominal.

2. When superelevation exceeds the slope of the low side shoulder, the low side shoulder pavement shall have the same cross slope as the travel way.

3. Crowns for both normal and superelevation sections for all courses of subbase and pavement shall be straight.

4. The Contractor, at their option, may use Item 304.16 Aggregate Base Course - Type C as an alternative to 304.10 Aggregate Subbase Course Gravel. No additional compensation will be provided.

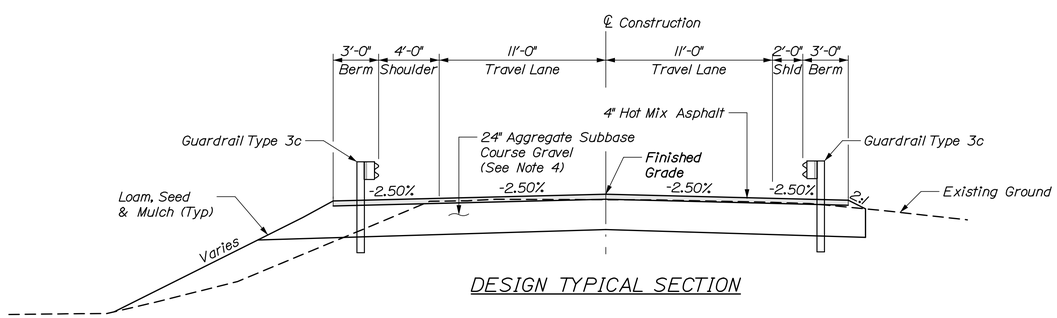

DESIGN TYPICAL SECTION

Main Street Super (e)		
Left %	Station	Right %
-0.32%	3+56.8	-5.61%
-0.60%	3+75	-5.21%
-0.98%	4+00	-4.67%
-1.36%	4+25	-4.13%
-1.74%	4+50	-3.59%
-2.12%	4+75	-3.04%
-2.50%	5+00	-2.50%
	To	
-2.50%	7+50	-2.50%
-1.73%	7+75	-3.10%
-0.96%	8+00	-3.70%

STATE OF MAINE
DEPARTMENT OF TRANSPORTATION

AC-BR-1931(800)X

WIN 19318.00

Bridge No. 5160

BRIDGE PLANS

SIGNATURE

P.E. NUMBER

DATE

		BY	DATE
PROJ. MANAGER	Andy Lathe		
DESIGN-DETAILED	P.Brown	D. Burgess	11\16
CHECKED-REVIEWED	P.Brown	R.Hanf	11\16
DESIGN2-DETAILED2	-	-	-
DESIGN3-DETAILED3	-	-	-
REVISIONS 1	-	-	-
REVISIONS 2	-	-	-
REVISIONS 3	-	-	-
REVISIONS 4	-	-	-
FIELD CHANGES	-	-	-

MADAWASKA BRIDGE
LITTLE MADAWASKA RIVER
STOCKHOLM AROOSTOOK COUNTY

CROSS SECTIONS

SHEET NUMBER

8

OF 29

Date:1/29/2016

Username:

Division:

Filename: 008_Xsect.dgn

Sta. 3+56.80 to Sta. 3+75.00

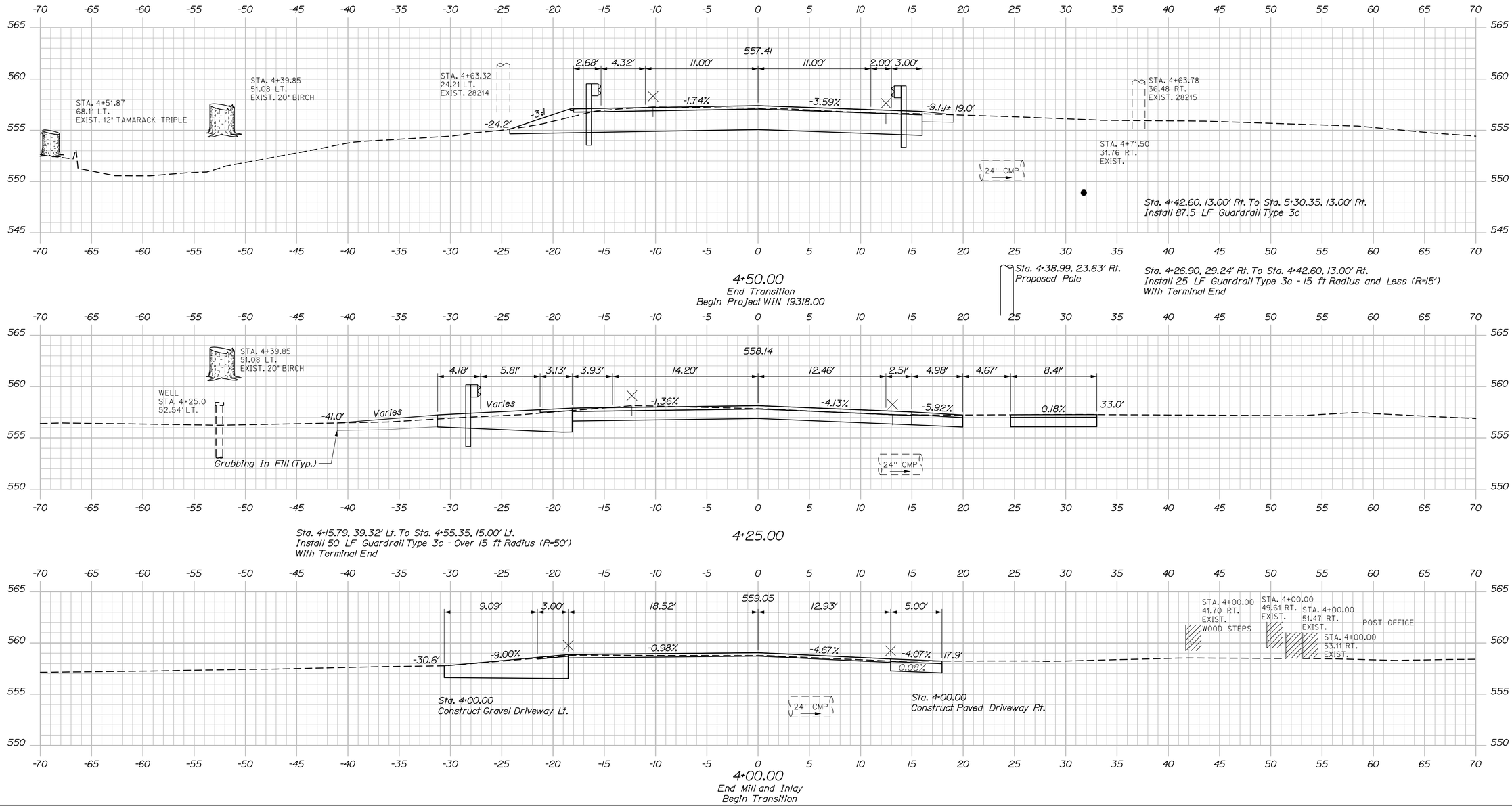

STATE OF MAINE
DEPARTMENT OF TRANSPORTATION

AC-BR-1931(800)X

WIN 19318.00

Bridge No. 5160

BRIDGE PLANS

PROJ. MANAGER	Andy Lathe		
DESIGN-DETAILED	P.Brown	D. Burgess	11\16
CHECKED-REVIEWED	P.Brown	R.Hanf	11\16
DESIGN2-DETAILED2	-	-	-
DESIGN3-DETAILED3	-	-	-
REVISIONS 1	-	-	-
REVISIONS 2	-	-	-
REVISIONS 3	-	-	-
REVISIONS 4	-	-	-
FIELD CHANGES	-	-	-

SIGNATURE

P.E. NUMBER

DATE

MADAWASKA BRIDGE
LITTLE MADAWASKA RIVER
STOCKHOLM AROOSTOOK COUNTY

CROSS SECTIONS

SHEET NUMBER

9

OF 29

Date:1/29/2016

Username:

Division:

Filename: 009_Xsect.dgn

Sta. 4+00.00 to Sta. 4+50.00

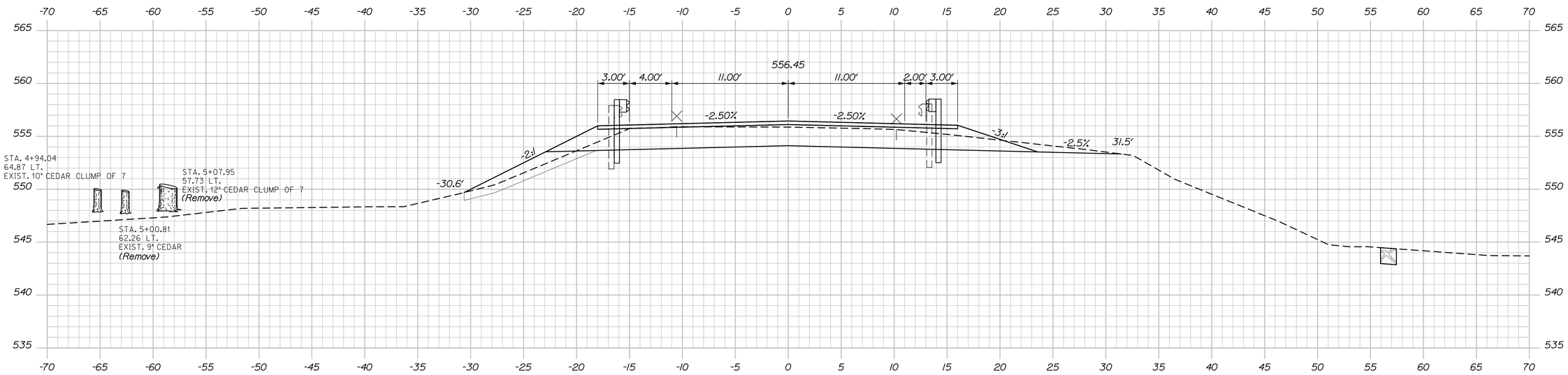

5+00.00

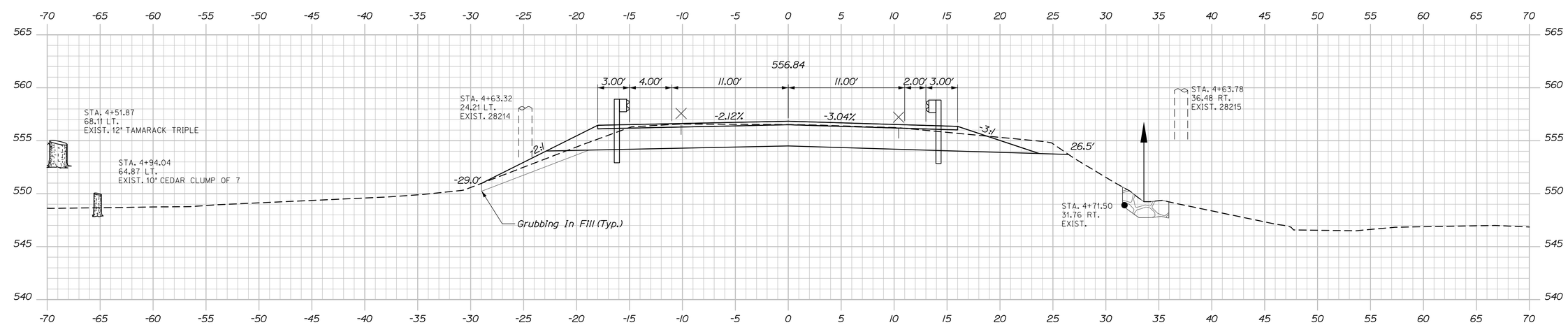

Sta. 4+55.35, 15.00′ Lt. To Sta. 5+30.35, 15.00′ Lt.
Install 75 LF Guardrail Type 3c

4+75.00

Sta. 4+71.39, Rt. To Sta. 4+95.93, Rt.
Install Riprap Downspout

STATE OF MAINE
DEPARTMENT OF TRANSPORTATION

AC-BR-1931(800)X

WIN 19318.00

Bridge No. 5160

BRIDGE PLANS

		BY	DATE
PROJ. MANAGER	Andy Lathe		
DESIGN-DETAILED	P.Brown	D. Burgess	11.16
CHECKED-REVIEWED	P.Brown	R.Hanf	11.16
DESIGN2-DETAILED2	-	-	-
DESIGN3-DETAILED3	-	-	-
REVISIONS 1	-		-
REVISIONS 2	-		-
REVISIONS 3	-		-
REVISIONS 4	-		-
FIELD CHANGES	-		-

SIGNATURE

P.E. NUMBER

DATE

MADAWASKA BRIDGE
LITTLE MADAWASKA RIVER
STOCKHOLM AROOSTOOK COUNTY

CROSS SECTIONS

SHEET NUMBER
10
OF 29

Sta. 4+75.00 to Sta. 5+00.00

Date:1/29/2016
Username:
Division:
Filename: 010_Xsect.dgn

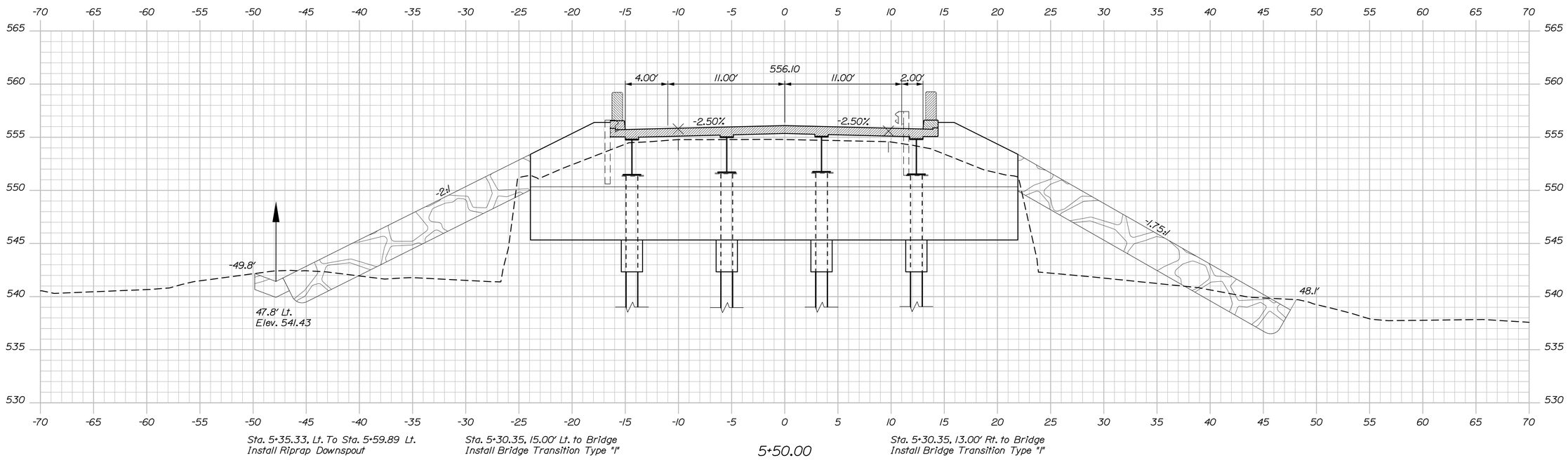

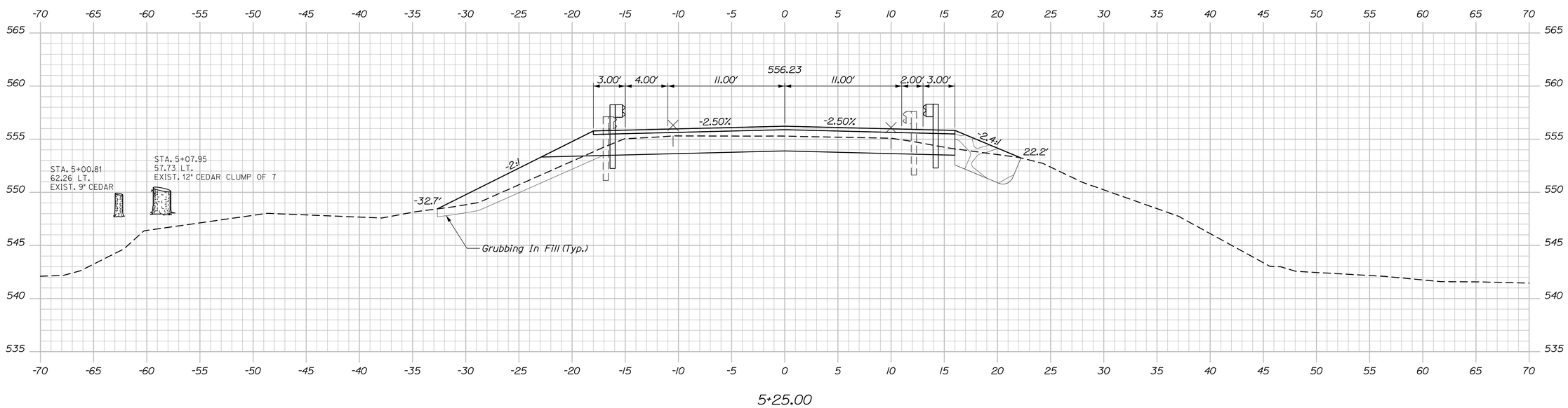

STATE OF MAINE
DEPARTMENT OF TRANSPORTATION

AC-BR-1931(800)X

WIN 19318.00

Bridge No. 5160

BRIDGE PLANS

		BY	DATE
PROJ. MANAGER	Andy Lathe		
DESIGN-DETAILED	P.Brown	D. Burgess	11.16
CHECKED-REVIEWED	P.Brown	R.Hanf	11.16
DESIGN2-DETAILED2	-	-	-
DESIGN3-DETAILED3	-	-	-
REVISIONS 1	-		-
REVISIONS 2	-		-
REVISIONS 3	-		-
REVISIONS 4	-		-
FIELD CHANGES	-		-

SIGNATURE

P.E. NUMBER

DATE

MADAWASKA BRIDGE
LITTLE MADAWASKA RIVER
STOCKHOLM AROOSTOOK COUNTY

CROSS SECTIONS

SHEET NUMBER

11

OF 29

Sta. 5+25 to Sta. 5+50.00

Date:1/29/2016

Username:

Division:

Filename: 011_Xsect.dgn

Date:1/29/2016

Username:

Division:

Filename: 012_Xsect.dgn

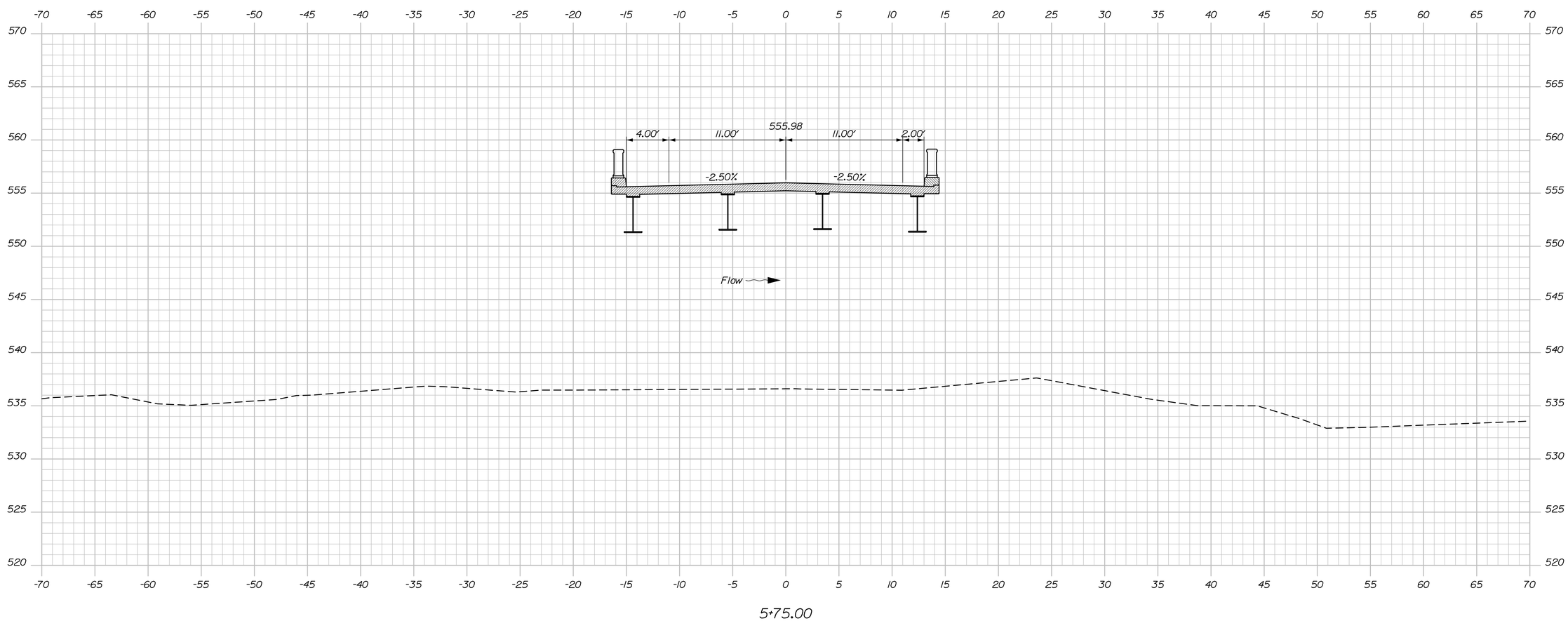

STATE OF MAINE
DEPARTMENT OF TRANSPORTATION

AC-BR-1931(800)X

WIN 19318.00

Bridge No. 5160

BRIDGE PLANS

		BY	DATE
PROJ. MANAGER	Andy Lathel		
DESIGN-DETAILED	P.Brown	D. Burgess	11\16
CHECKED-REVIEWED	P.Brown	R.Hanf	11\16
DESIGN2-DETAILED2	-	-	-
DESIGN3-DETAILED3	-	-	-
REVISIONS 1	-		-
REVISIONS 2	-		-
REVISIONS 3	-		-
REVISIONS 4	-		-
FIELD CHANGES	-		-

SIGNATURE

P.E. NUMBER

DATE

MADAWASKA BRIDGE
LITTLE MADAWASKA RIVER
STOCKHOLM AROOSTOOK COUNTY

CROSS SECTIONS

SHEET NUMBER

12

OF 29

Sta. 5+75.00

Date:1/29/2016

Username:

Division:

Filename: 013_Xsect.dgn

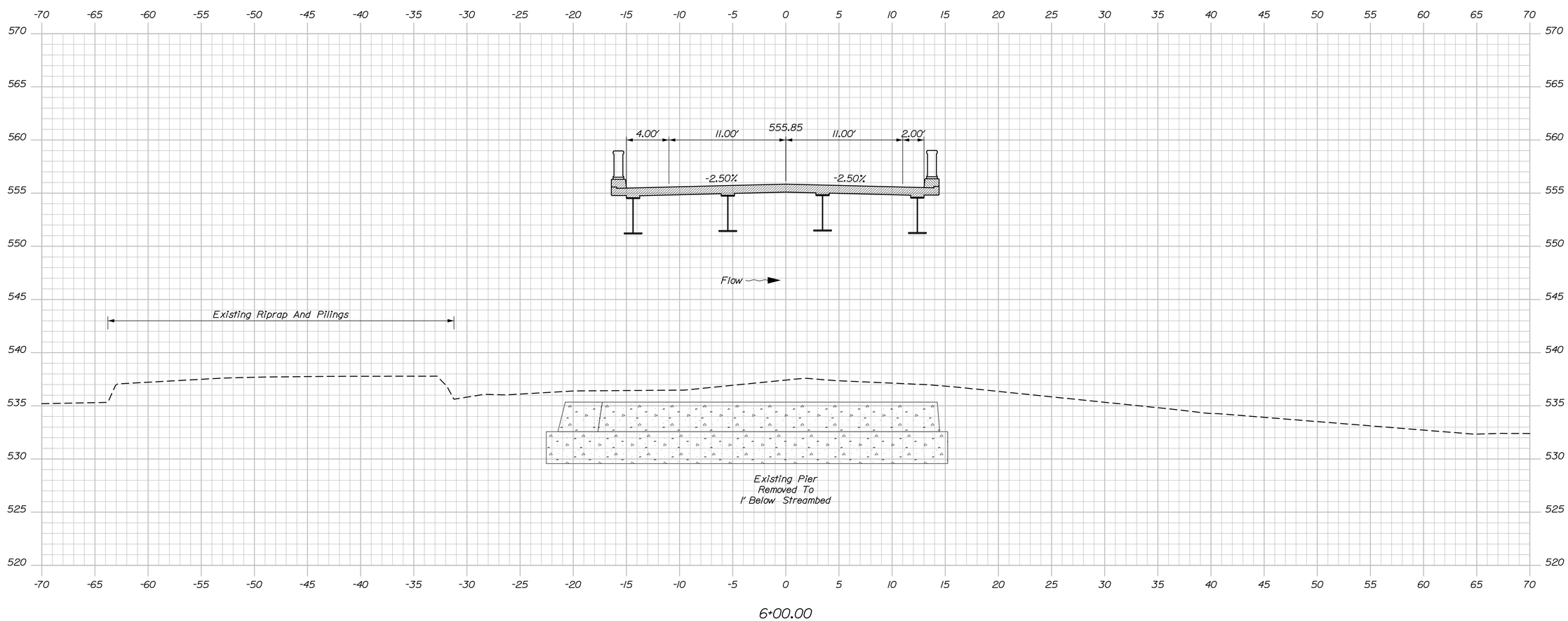

STATE OF MAINE
DEPARTMENT OF TRANSPORTATION

AC-BR-1931(800)X

WIN 19318.00

Bridge No. 5160

BRIDGE PLANS

PROJ. MANAGER	Andy Lathel	BY	DATE
DESIGN-DETAILED	P.Brown	D. Burgess	11\16
CHECKED-REVIEWED	P.Brown	R.Hanf	11\16
DESIGN2-DETAILED2	-	-	-
DESIGN3-DETAILED3	-	-	-
REVISIONS 1	-		-
REVISIONS 2	-		-
REVISIONS 3	-		-
REVISIONS 4	-		-
FIELD CHANGES	-		-

SIGNATURE

P.E. NUMBER

DATE

MADAWASKA BRIDGE
LITTLE MADAWASKA RIVER
STOCKHOLM AROOSTOOK COUNTY

CROSS SECTIONS

SHEET NUMBER

13

OF 29

Sta. 6+00.00

Date:1/29/2016

Username:

Division:

Filename: 014_Xsect.dgn

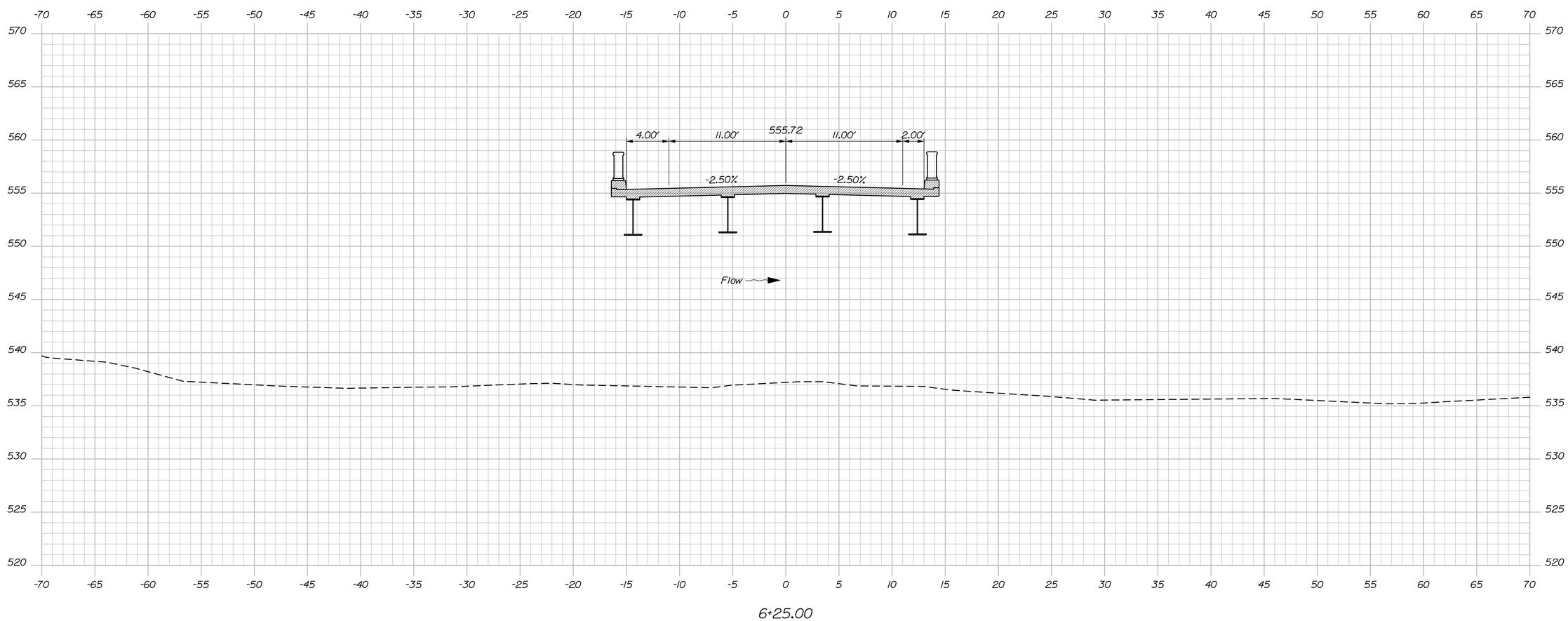

STATE OF MAINE
DEPARTMENT OF TRANSPORTATION

AC-BR-1931(800)X

WIN 19318.00

Bridge No. 5160

BRIDGE PLANS

		BY	DATE
PROJ. MANAGER	Andy Lathel		
DESIGN-DETAILED	P.Brown	D. Burgess	11\16
CHECKED-REVIEWED	P.Brown	R.Hanf	11\16
DESIGN2-DETAILED2	-	-	-
DESIGN3-DETAILED3	-	-	-
REVISIONS 1	-		-
REVISIONS 2	-		-
REVISIONS 3	-		-
REVISIONS 4	-		-
FIELD CHANGES	-		-

SIGNATURE

P.E. NUMBER

DATE

MADAWASKA BRIDGE
LITTLE MADAWASKA RIVER
STOCKHOLM AROOSTOOK COUNTY

CROSS SECTIONS

SHEET NUMBER

14

OF 29

Sta. 6+25.00

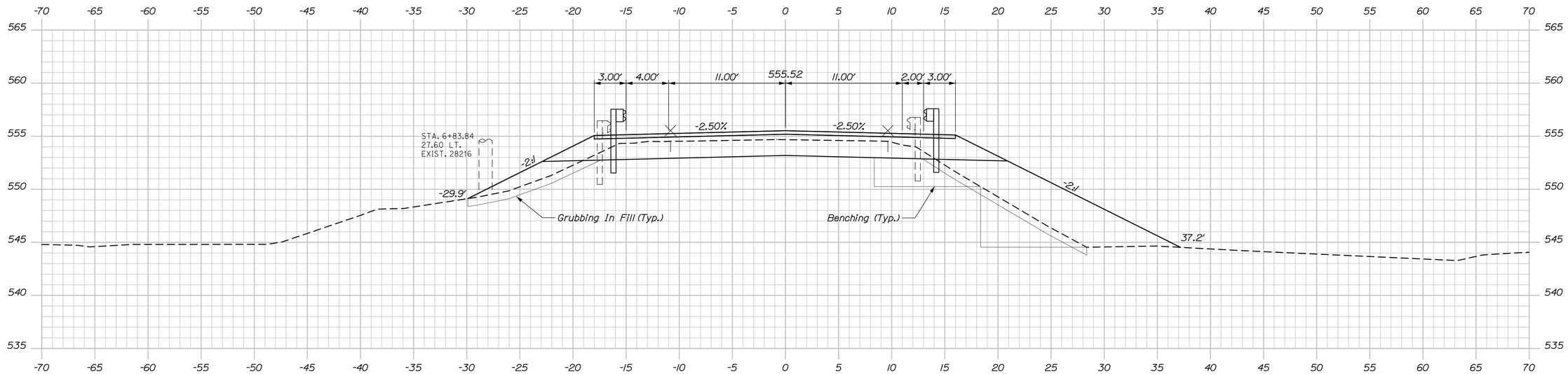

Sta. 6+69.65, 15.00' Lt. To Sta. 7+19.65, 15.00' Lt.
Install 50 LF Guardrail Type 3c

Bridge to Sta. 6+69.65, 15.00' Lt.
Install Bridge Transition Type "I"

6+75.00

Bridge to Sta. 6+69.65, 13.00' Rt.
Install Bridge Transition Type "I"

Sta. 6+69.65, 13.00' Rt. To Sta. 6+94.65, 13.00' Rt.
Install 25 LF Guardrail Type 3c

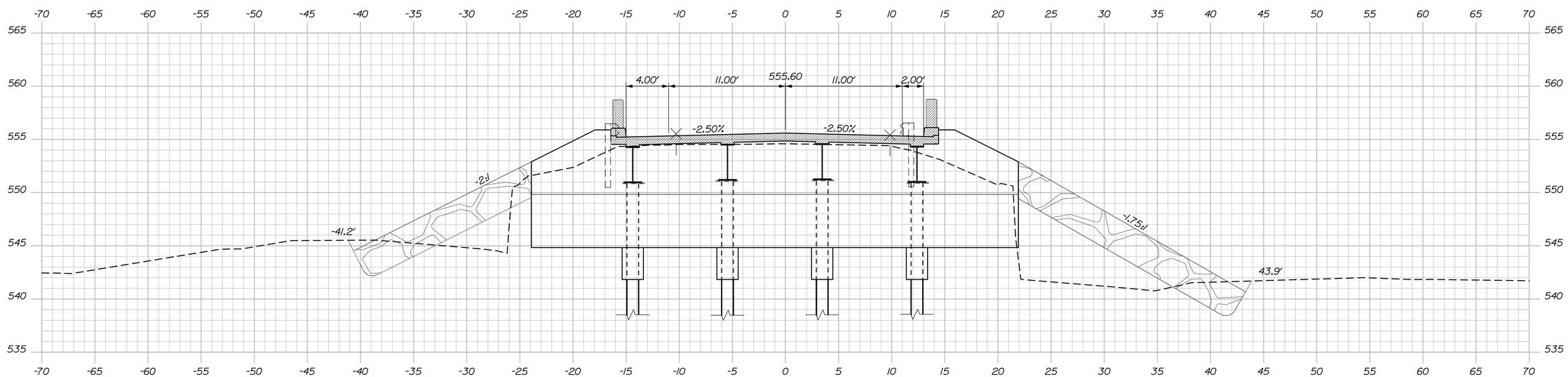

6+50.00

STATE OF MAINE
DEPARTMENT OF TRANSPORTATION

AC-BR-1931(800)X

WIN
19318.00

Bridge No. 5160

BRIDGE PLANS

		BY	DATE
PROJ. MANAGER	Andy Lathe		
DESIGN-DETAILED	P.Brown	D. Burgess	11.16
CHECKED-REVIEWED	P.Brown	R.Hanf	11.16
DESIGN2-DETAILED2	-	-	-
DESIGN3-DETAILED3	-	-	-
REVISIONS 1	-		-
REVISIONS 2	-		-
REVISIONS 3	-		-
REVISIONS 4	-		-
FIELD CHANGES	-		-

SIGNATURE

P.E. NUMBER

DATE

MADAWASKA BRIDGE
LITTLE MADAWASKA RIVER
STOCKHOLM AROOSTOOK COUNTY

CROSS SECTIONS

SHEET NUMBER
15
OF 29

Sta. 6+50.00 to Sta. 6+75.00

Date:1/29/2016
Username:
Division:
Filename: 015_Xsect.dgn

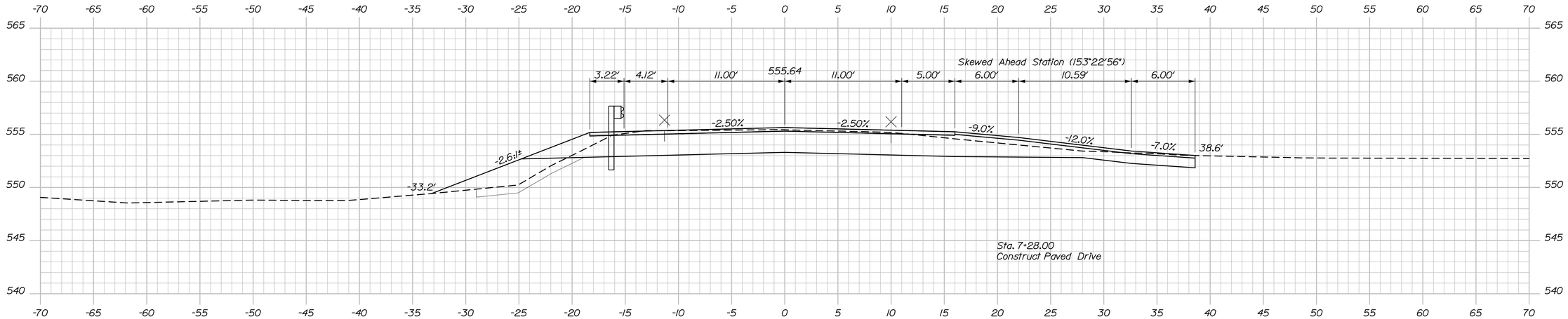

7+28.00

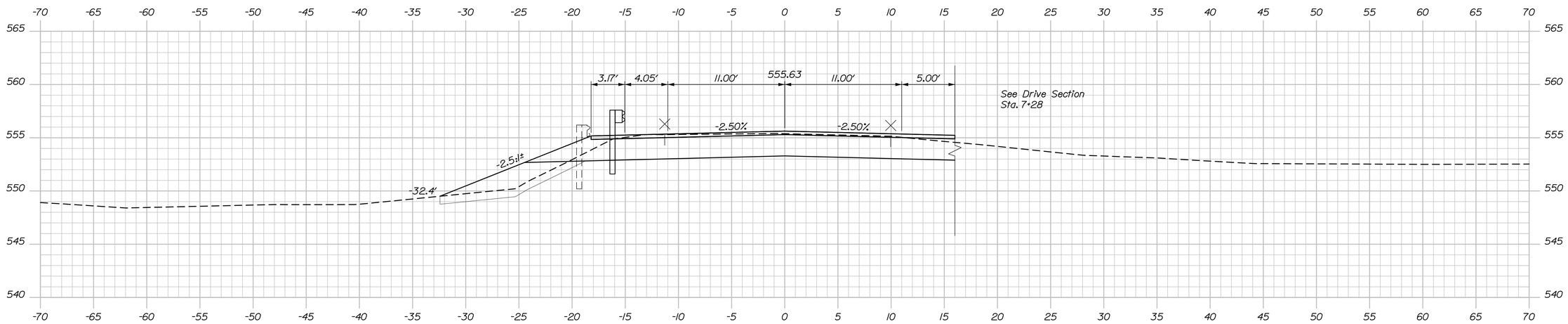

7+25.00

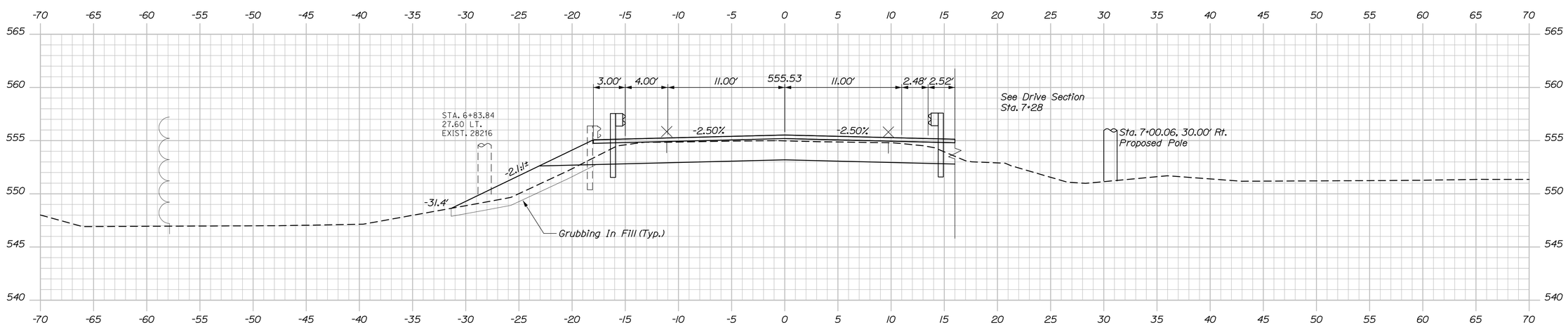

Sta. 7+19.65, 15.00' Lt. To Sta. 7+56.48, 19.61' Lt.
Install Low Volume End For Type 3 Guardrail

7+00.00

Sta. 6+94.65, 13.00' Rt. To Sta. 7+23.12, 33.54' Rt.
Install 37.5 LF Guardrail Type 3c - Over 15 ft Radius (R=30')
With Terminal End

STATE OF MAINE
DEPARTMENT OF TRANSPORTATION

AC-BR-1931(800)X

WIN
19318.00

Bridge No. 5160

BRIDGE PLANS

		BY	DATE
PROJ. MANAGER	Andy Lathe		
DESIGN-DETAILED	P.Brown	D. Burgess	11\16
CHECKED-REVIEWED	P.Brown	R.Hanf	11\16
DESIGN2-DETAILED2	-	-	-
DESIGN3-DETAILED3	-	-	-
REVISIONS 1	-		-
REVISIONS 2	-		-
REVISIONS 3	-		-
REVISIONS 4	-		-
FIELD CHANGES	-		-

SIGNATURE

P.E. NUMBER

DATE

MADAWASKA BRIDGE
LITTLE MADAWASKA RIVER
STOCKHOLM AROOSTOOK COUNTY

CROSS SECTIONS

SHEET NUMBER
16
OF 29

Date:1/29/2016

Username:

Division:

Filename: 016_Xsect.dgn

Sta. 7+00.00 to Sta. 7+28.00

Sta. 8+06.48
End Shoulder Widening, Left
Match Existing Shoulder
Limit of Work

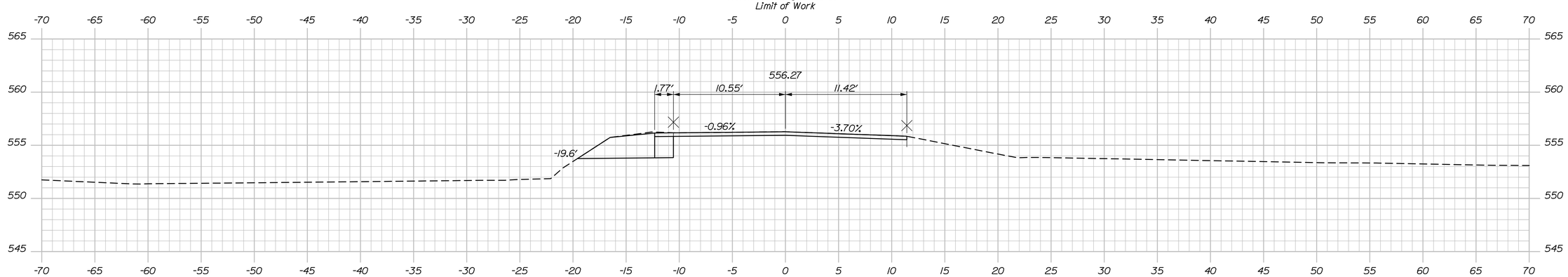

8+00.00
End Transition
Match Existing Roadway Pavement
Continue Shoulder Widening, Left

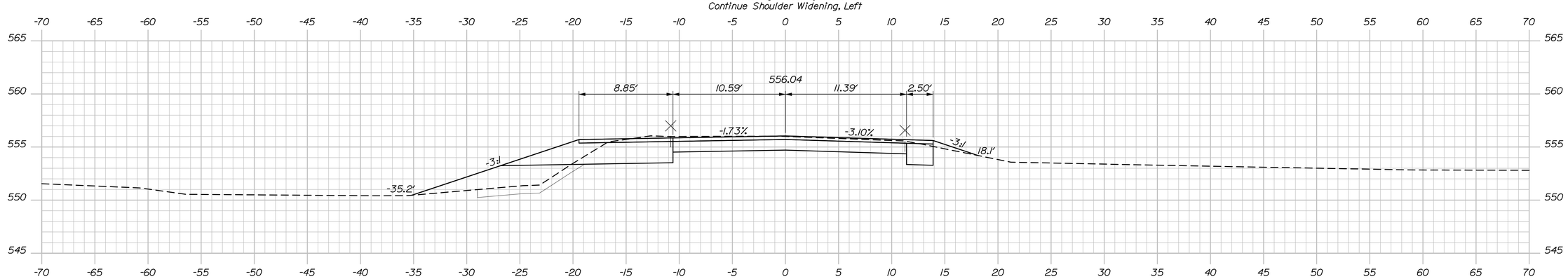

7+75.00

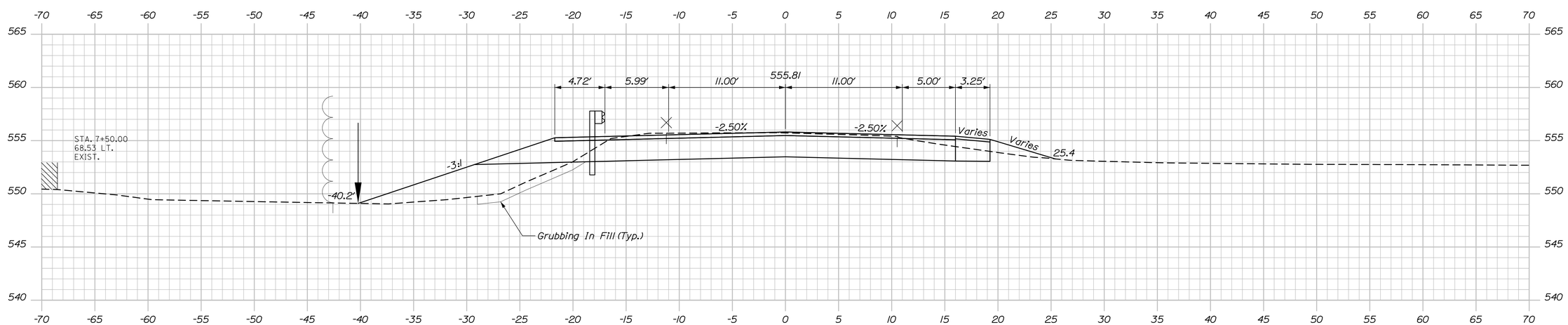

7+50.00
End Project WIN 19318.00
Begin Transition

STATE OF MAINE
DEPARTMENT OF TRANSPORTATION

AC-BR-1931(800)X

WIN 19318.00

Bridge No. 5160

BRIDGE PLANS

		BY	DATE
PROJ. MANAGER	Andy Lathe		
DESIGN-DETAILED	P.Brown	D. Burgess	11\16
CHECKED-REVIEWED	P.Brown	R.Hanf	11\16
DESIGN2-DETAILED2	-	-	-
DESIGN3-DETAILED3	-	-	-
REVISIONS 1	-		-
REVISIONS 2	-		-
REVISIONS 3	-		-
REVISIONS 4	-		-
FIELD CHANGES	-		-

SIGNATURE

P.E. NUMBER

DATE

MADAWASKA BRIDGE
LITTLE MADAWASKA RIVER
STOCKHOLM AROOSTOOK COUNTY

CROSS SECTIONS

SHEET NUMBER
17
OF 29

Sta. 7+50.00 to Sta. 8+00.00

Date:1/29/2016
Username:
Division:
Filename: 017_Xsect.dgn

Filename: 018_Xsect.dgn Division: Username: Date:1/29/2016

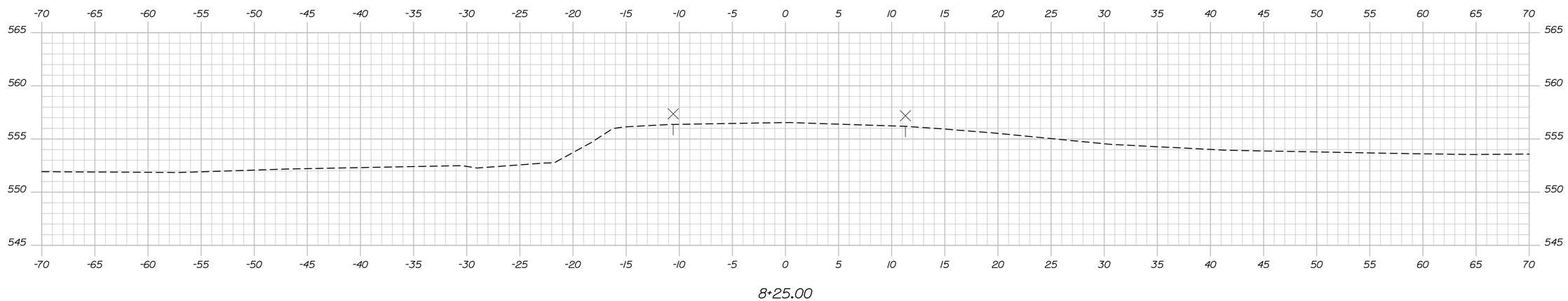

PROJ. MANAGER	Andy Lathel	BY	DATE
DESIGN-DETAILED	P.Brown	D. Burgess	11\16
CHECKED-REVIEWED	P.Brown	R.Hanf	11\16
DESIGN2-DETAILED2	-	-	-
DESIGN3-DETAILED3	-	-	-
REVISIONS 1	-		-
REVISIONS 2	-		-
REVISIONS 3	-		-
REVISIONS 4	-		-
FIELD CHANGES	-		-

SIGNATURE

P.E. NUMBER

DATE

STATE OF MAINE
DEPARTMENT OF TRANSPORTATION

AC-BR-1931(800)X

WIN 19318.00

Bridge No. 5160 BRIDGE PLANS

MADAWASKA BRIDGE
LITTLE MADAWASKA RIVER
STOCKHOLM AROOSTOOK COUNTY

CROSS SECTIONS

SHEET NUMBER

18

OF 29

Sta. 8+25.00

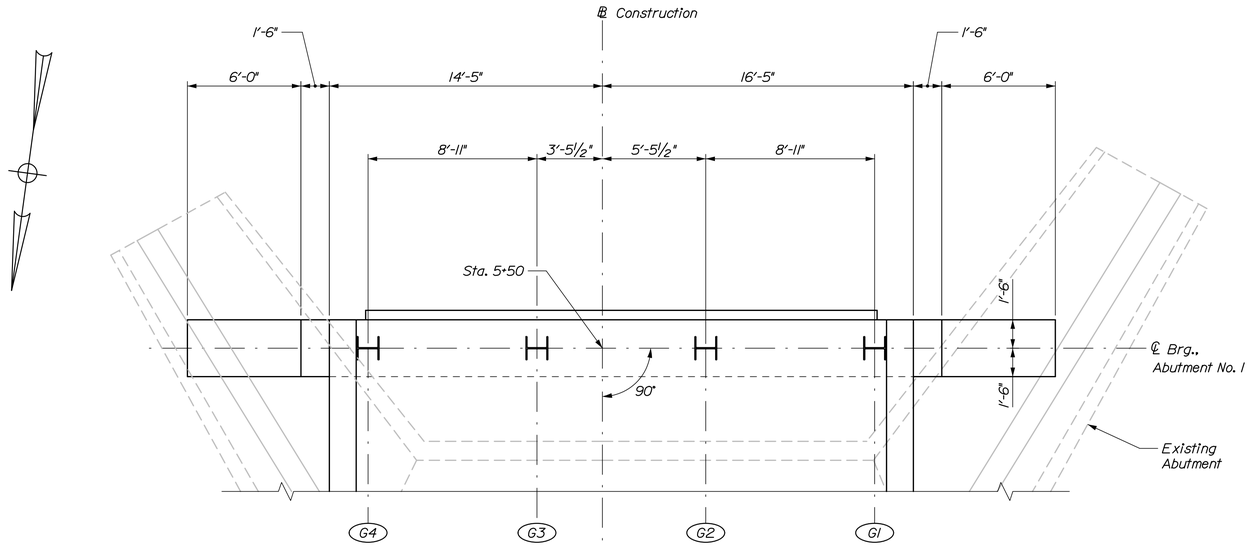

ABUTMENT NO. 1 PLAN

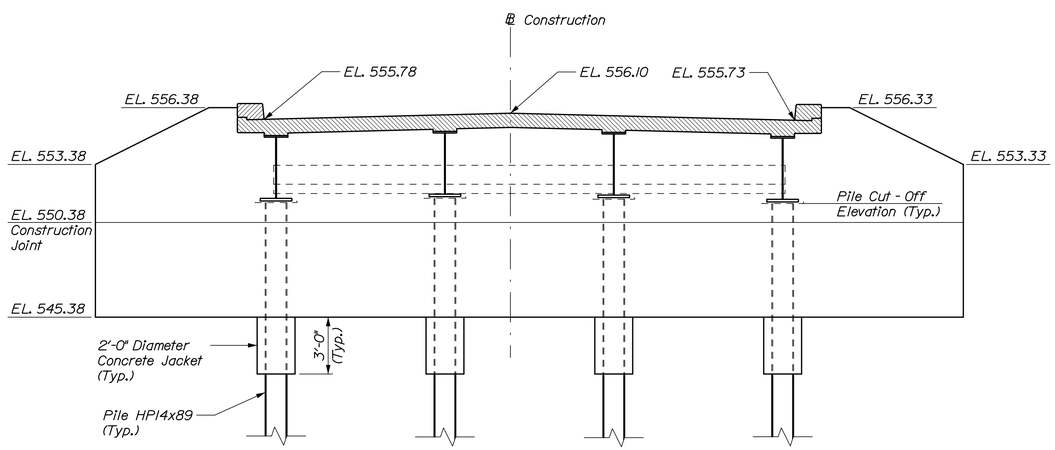

ABUTMENT NO. 1 ELEVATION

ABUTMENT NOTES:

1. Reinforcing steel shall have a minimum concrete cover of 2 inches unless otherwise noted.

2. All elevations are provided at centerline of bearing unless otherwise noted.

3. Cover joints where waterstops are not required in accordance with Standard Detail 502(01).

4. Place 4 inch diameter drains in breastwall and wingwalls at 8 feet maximum spacing. The exact location will be determined by the Resident.

5. Construct French Drains behind the abutments and wingwalls in accordance with Standard Specification Section 512, French Drains.

6. Abutments, wingwalls, and their footings shall be backfilled with Granular Borrow for Underwater Backfill. Pay limits will be the structural excavation limits in cut areas and a vertical plane located 10 feet behind the walls in fill areas.

7. The Contractor shall install Texas Classic Rail vertical closed stirrups as shown in Standard Details Section 526, prior to the placement of the curb concrete.

8. Payment for concrete jacket around the tops of the H-piles will not be paid for directly. Payment shall be incidental to Pay Item 502.219 Structural Concrete, Abutment and Retaining Walls. Fill concrete shall be used for the concrete jackets.

PILE NOTES:

1. The maximum factored pile load is 393 kips.

2. H-pile material shall be ASTM A 572, Grade 50.

3. Estimate of piles required (includes extra 5 feet per pile as contingency):

   Abutment No. 1: 4 ~ HP 14x89 @ 69.8 feet
   Abutment No. 2: 4 ~ HP 14x89 @ 67.0 feet

4. All piles shall be equipped with a pile tip in accordance with Standard Specification Section 501.90, Pile Tips.

5. Piles shall be driven to bedrock.

6. Piles shall not be out of position shown by more than 2 inches in any direction.

7. The Contractor shall perform and submit a wave equation analysis for review and acceptance by the Resident. The maximum allowable driving stress is 0.90 times Fy. The submittal analyses shall include the proposed stopping criteria based on the wave equation analysis and the proposed driving system. The stopping criteria shall include the blows per inch and the number of 1-in. intervals at which pile installation may be terminated. The cost of performing the wave equation analysis will be considered incidental to Item No. 501.92, Pile Driving Equipment Mobilization.

8. The Contractor shall perform 2 dynamic load test(s), one at each abutment, to confirm the ultimate capacity of the piles. The required nominal resistance for the pile is the factored axial pile load divided by a resistance factor of 0.65 per LRFD Specifications. The dynamic test shall be performed on the first production pile driven at each abutment.

9. The sole plates and installation of the sole plate at the top of the H-piles shall not be paid for directly. Payment shall be incidental to Pay Item No. 501.501, Steel H-beam Pile 89 lbs/ft., in place.

ABUTMENT NO. 1
PILE CUT-OFF
ELEVATIONS

Pile	Elevation
G1	551.29
G2	551.52
G3	551.57
G4	551.34

STATE OF MAINE
DEPARTMENT OF TRANSPORTATION

AC-BR-1931(800)X

WIN 19318.00

Bridge No. 5160

BRIDGE PLANS

PROJ. MANAGER	Andy Lathe	BY	DATE
DESIGN-DETAILED	H. Walton	P. Bishop	11\16
CHECKED-REVIEWED	K. Brayley	T. Cote	11\16
DESIGN2-DETAILED2	-	-	-
DESIGN3-DETAILED3	-	-	-
REVISIONS 1	-	-	-
REVISIONS 2	-	-	-
REVISIONS 3	-	-	-
REVISIONS 4	-	-	-
FIELD CHANGES	-	-	-

SIGNATURE

P.E. NUMBER

DATE

MADAWASKA BRIDGE
LITTLE MADAWASKA RIVER
STOCKHOLM AROOSTOOK COUNTY

ABUTMENT NO. 1

SHEET NUMBER

19

OF 29

Filename: 019_Abutment Number 1.dgn Division: Username: Date:1/29/2016

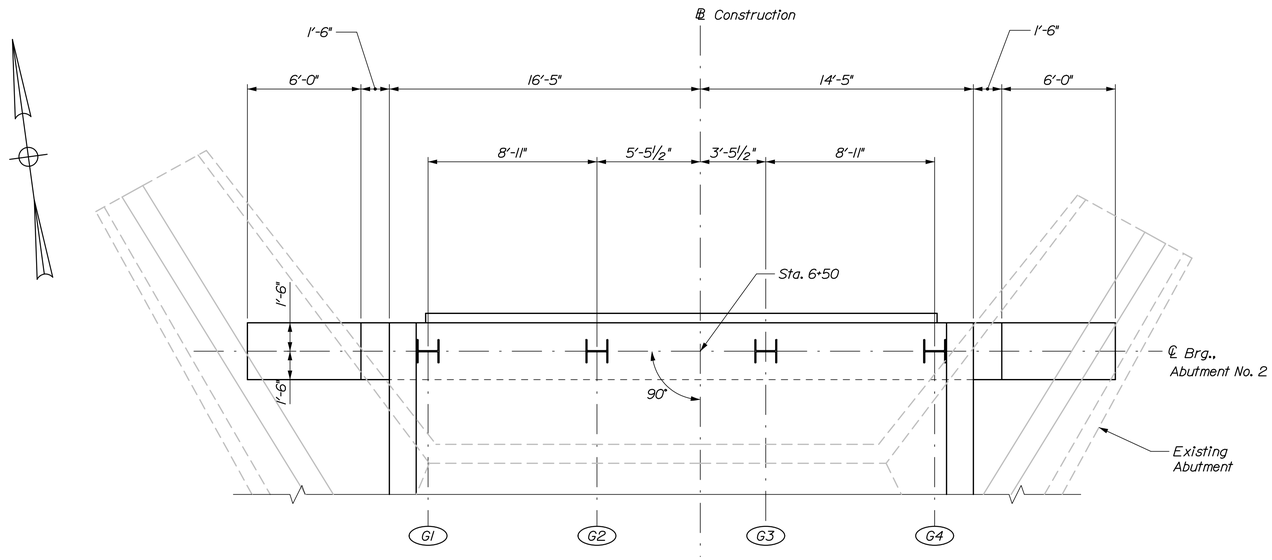

ABUTMENT NO. 2 PLAN

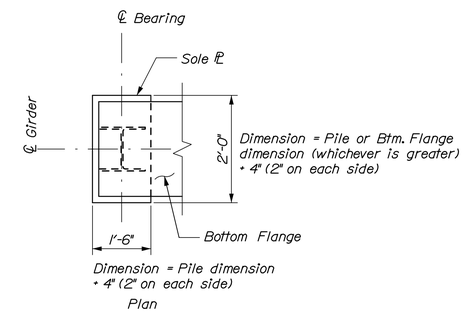

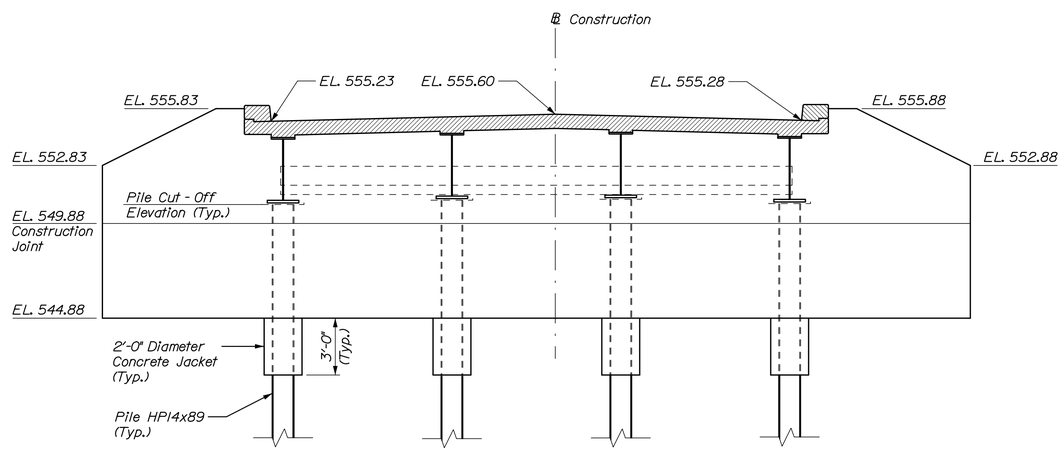

ABUTMENT NO. 2 ELEVATION

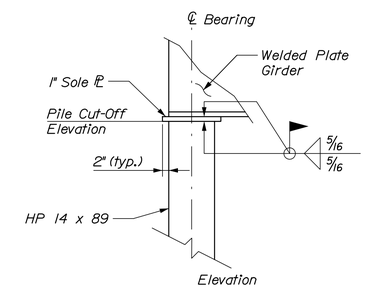

PILE CUT-OFF DETAIL

Pile cut-off elevation shall be located at center of the pile. Cut the pile at a slope to match the profile grade.

ABUTMENT NO. 2 PILE CUT-OFF ELEVATIONS	
Pile	Elevation
G1	550.79
G2	551.02
G3	551.07
G4	550.84

Date:1/29/2016 Username: Division: Filename: 020_Abutment Number 2.dgn

STATE OF MAINE
DEPARTMENT OF TRANSPORTATION

AC-BR-1931(800)X

WIN 19318.00

Bridge No. 5160

BRIDGE PLANS

PROJ. MANAGER	Andy Lathe	BY	DATE
DESIGN-DETAILED	H. Walton	P. Bishop	11\16
CHECKED-REVIEWED	K. Brayley	T. Cote	11\16
DESIGN2-DETAILED2	-	-	-
DESIGN3-DETAILED3	-	-	-
REVISIONS 1	-	-	-
REVISIONS 2	-	-	-
REVISIONS 3	-	-	-
REVISIONS 4	-	-	-
FIELD CHANGES	-	-	-

SIGNATURE

P.E. NUMBER

DATE

MADAWASKA BRIDGE
LITTLE MADAWASKA RIVER
STOCKHOLM AROOSTOOK COUNTY

ABUTMENT NO. 2

SHEET NUMBER

20

OF 29

NOTES:

1. The Contractor shall construct approach slabs as shown in Standard Details 502.

2. All costs related to mortared chamfer on the approach slab will not be paid for directly but will be considered incidental to the related contract items.

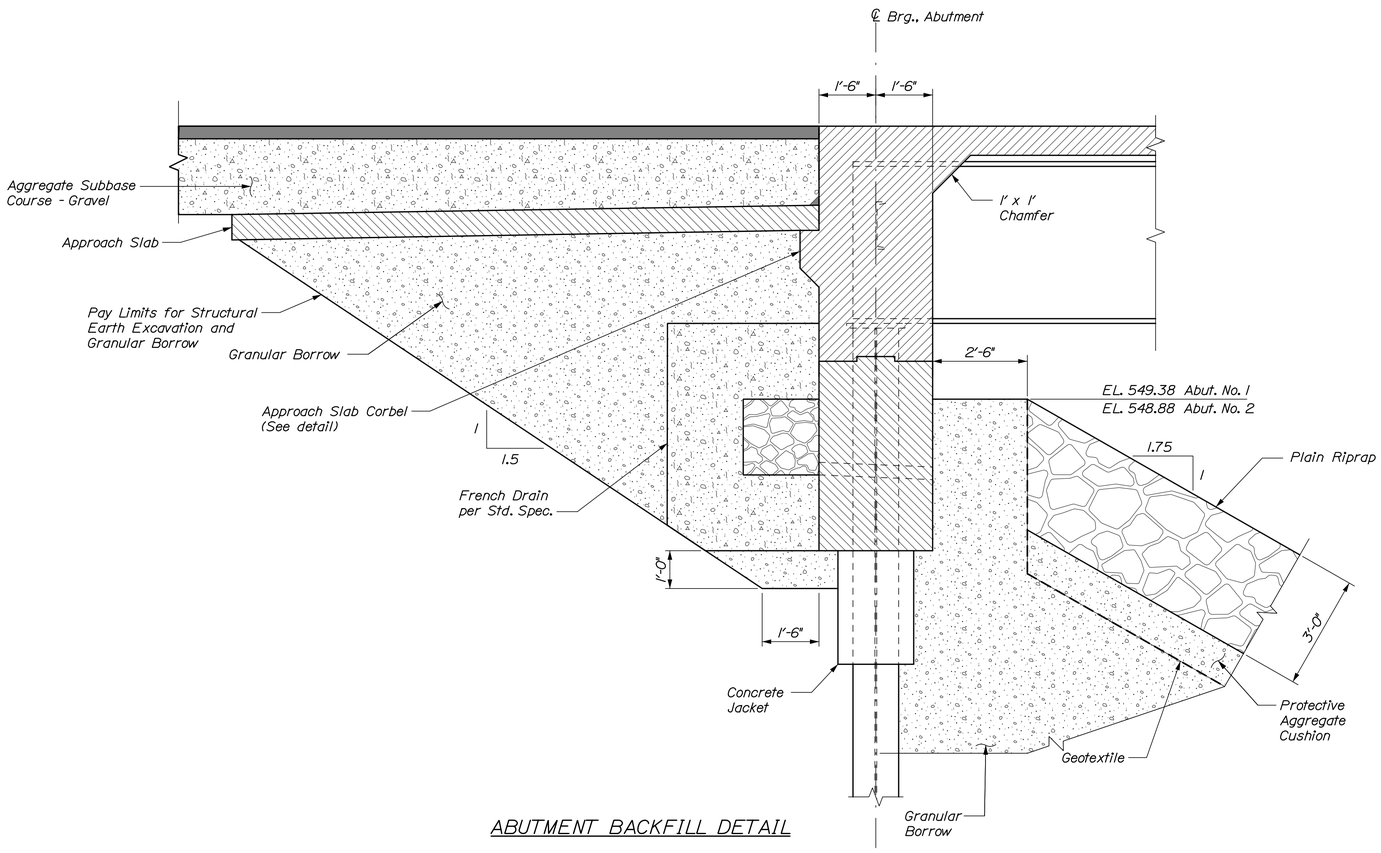

ABUTMENT BACKFILL DETAIL

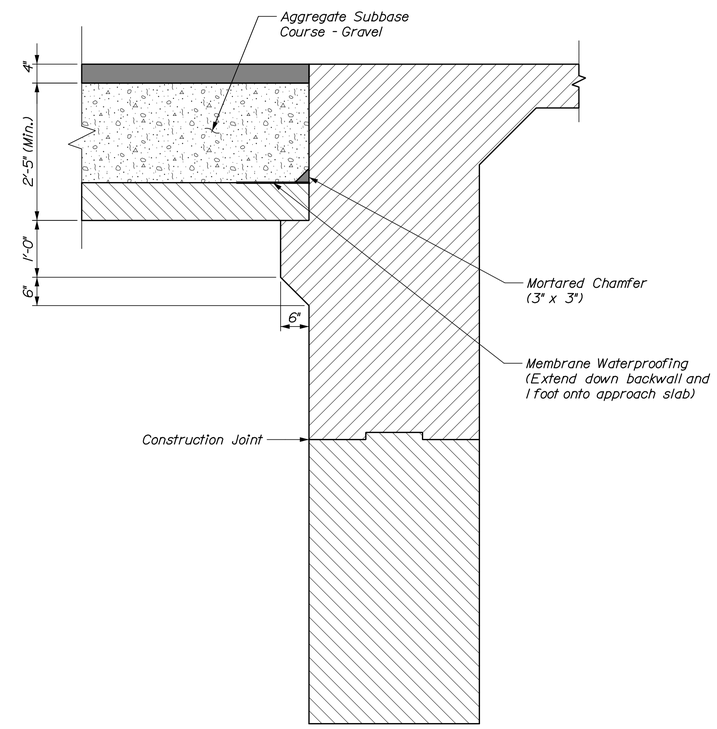

APPROACH SLAB CORBEL DETAIL

STATE OF MAINE
DEPARTMENT OF TRANSPORTATION

AC-BR-1931(800)X

WIN 19318.00

Bridge No. 5160

BRIDGE PLANS

		BY	DATE
PROJ. MANAGER	Andy Lathe		
DESIGN-DETAILED	H. Walton	P. Bishop	11\16
CHECKED-REVIEWED	K. Brayley	T. Cote	11\16
DESIGN2-DETAILED2	-	-	-
DESIGN3-DETAILED3	-	-	-
REVISIONS 1	-		-
REVISIONS 2	-		-
REVISIONS 3	-		-
REVISIONS 4	-		-
FIELD CHANGES	-		-

SIGNATURE

P.E. NUMBER

DATE

MADAWASKA BRIDGE
LITTLE MADAWASKA RIVER
STOCKHOLM AROOSTOOK COUNTY

ABUTMENT DETAILS

SHEET NUMBER

21

OF 29

Filename: 021_Abutment Details.dgn Division: Username: Date:1/29/2016

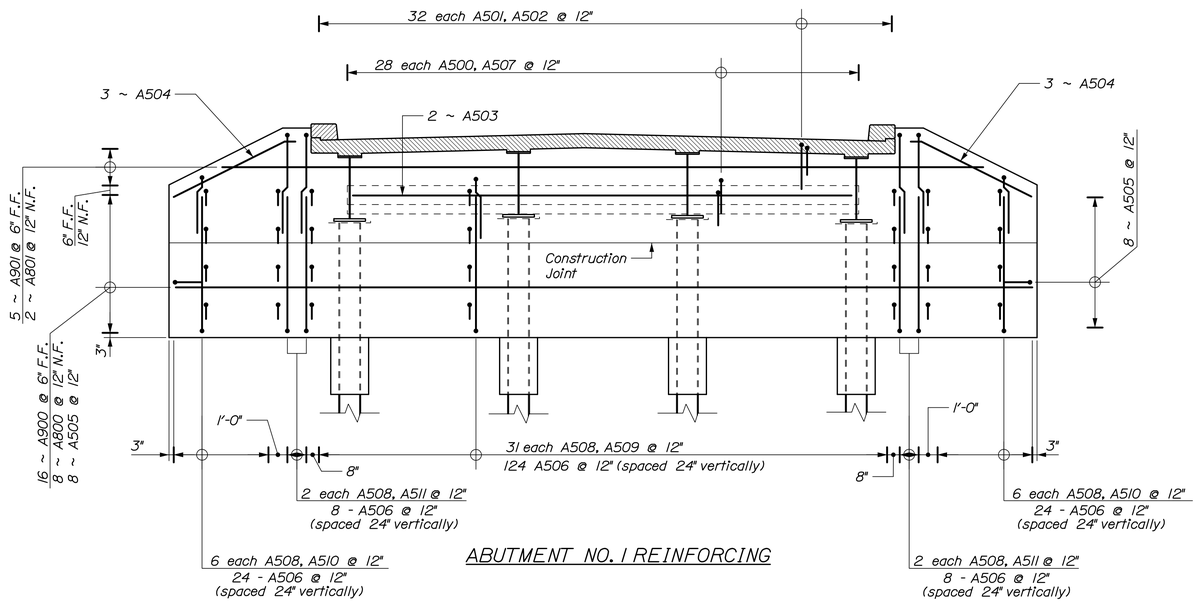

ABUTMENT NO. 1 REINFORCING

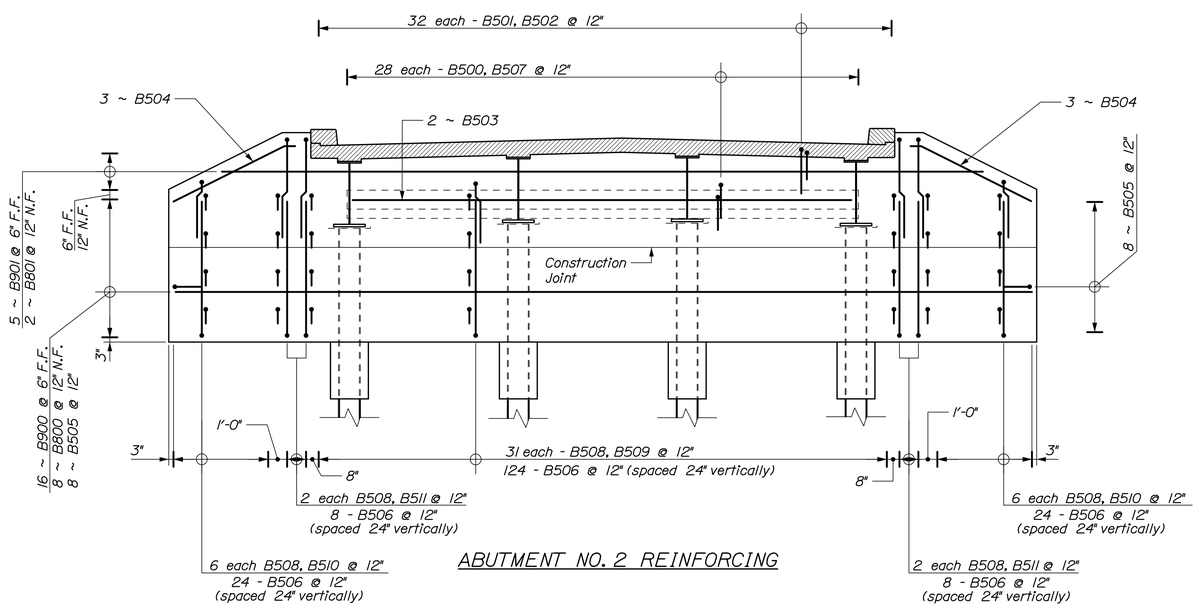

ABUTMENT NO. 2 REINFORCING

STATE OF MAINE
DEPARTMENT OF TRANSPORTATION

AC-BR-1931(800)X

WIN 19318.00

Bridge No. 5160

BRIDGE PLANS

			DATE
PROJ. MANAGER	Andy Lathel	BY	
DESIGN-DETAILED	H. Walton	P. Bishop	11\16
CHECKED-REVIEWED	K. Brayley	T. Cote	11\16
DESIGN2-DETAILED2	-	-	-
DESIGN3-DETAILED3	-	-	-
REVISIONS 1	-	-	-
REVISIONS 2	-	-	-
REVISIONS 3	-	-	-
REVISIONS 4	-	-	-
FIELD CHANGES	-	-	-

SIGNATURE

P.E. NUMBER

DATE

MADAWASKA BRIDGE
LITTLE MADAWASKA RIVER
STOCKHOLM AROOSTOOK COUNTY

ABUTMENT REINFORCING

SHEET NUMBER

22

OF 29

Filename: 022_Abutment Reinforcing.dgn Division: Username: Date:1/29/2016

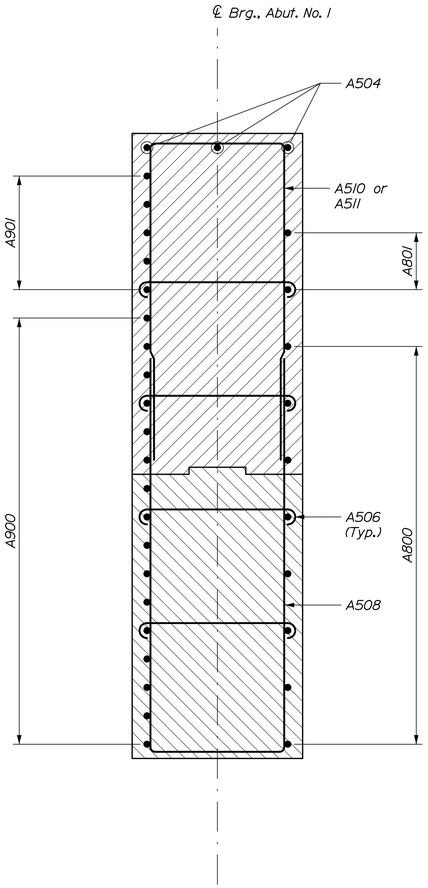

ABUTMENT NO. 1 WINGWALL SECTION

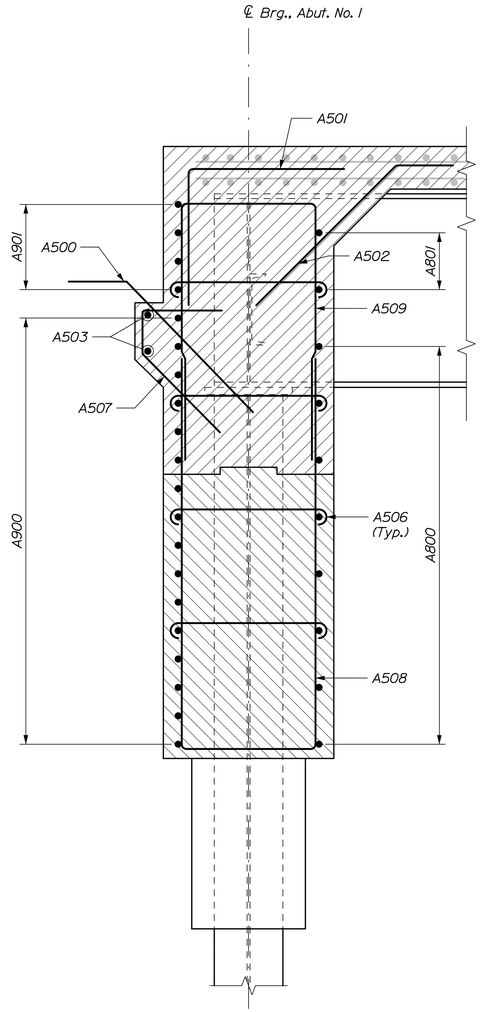

ABUTMENT NO. 1 SECTION

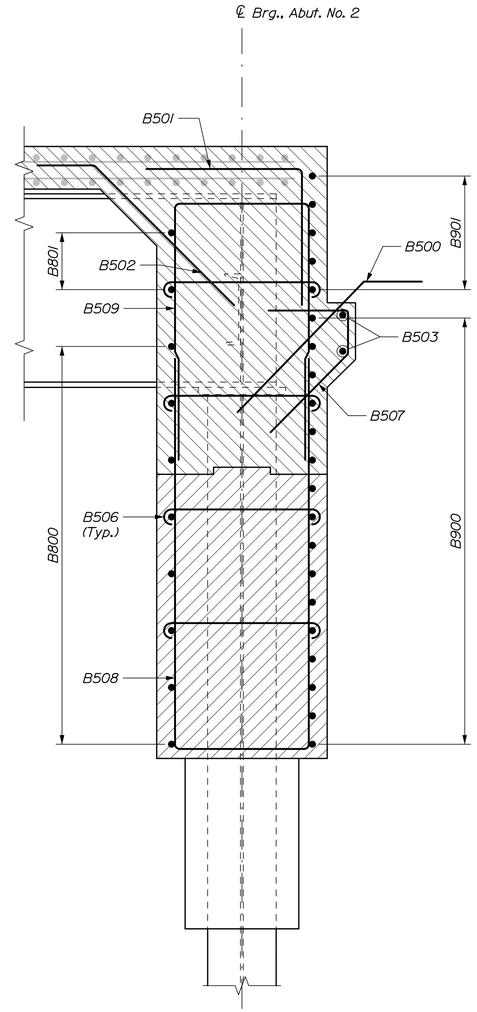

ABUTMENT NO. 2 SECTION

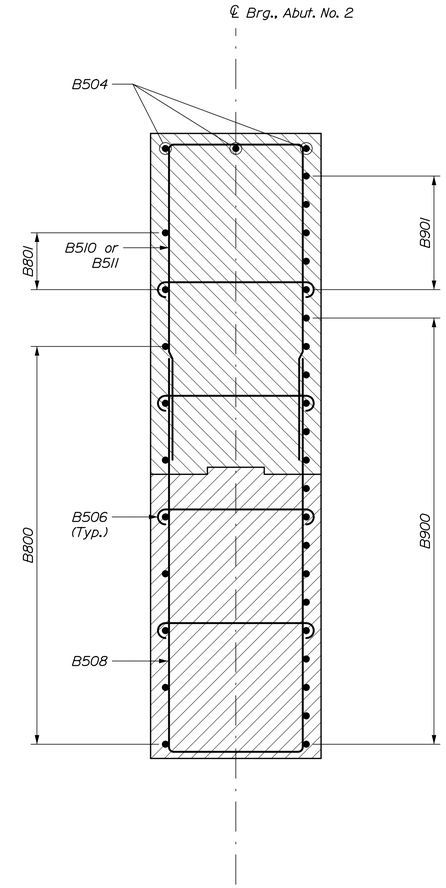

ABUTMENT NO. 2 WINGWALL SECTION

NOTES:

1. Deck reinforcing shown screened for clarity.
2. Where A506 or B506 do not intersect horizontal reinforcing, hook bar around vertical reinforcing.
3. Horizontal bars that conflict with the girder bottom flanges may be shifted in the field up to 5" to avoid the conflict.

STATE OF MAINE
DEPARTMENT OF TRANSPORTATION

AC-BR-1931(800)X

WIN 19318.00

Bridge No. 5160

BRIDGE PLANS

		BY	DATE
PROJ. MANAGER	Andy Lathel		
DESIGN-DETAILED	H. Walton	P. Bishop	11.16
CHECKED-REVIEWED	K. Brayley	T. Cote	11.16
DESIGN2-DETAILED2	-	-	-
DESIGN3-DETAILED3	-	-	-
REVISIONS 1	-	-	-
REVISIONS 2	-	-	-
REVISIONS 3	-	-	-
REVISIONS 4	-	-	-
FIELD CHANGES	-	-	-

SIGNATURE

P.E. NUMBER

DATE

MADAWASKA BRIDGE
LITTLE MADAWASKA RIVER
STOCKHOLM AROOSTOOK COUNTY

ABUTMENT SECTIONS

SHEET NUMBER
23
OF 29

Filename: 023_Abutment Sections.dgn Division: Username: Date:1/29/2016

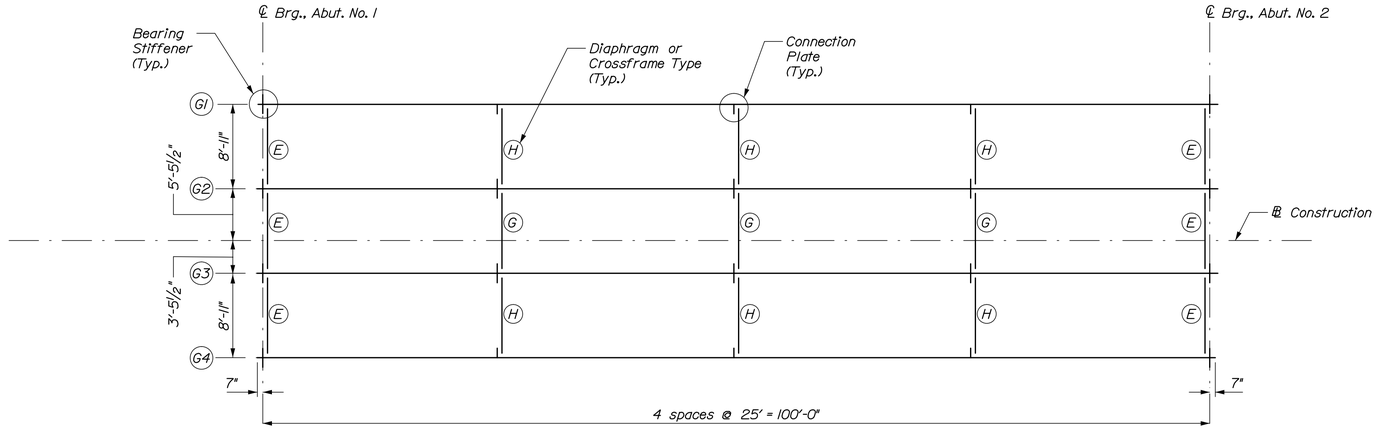

FRAMING PLAN

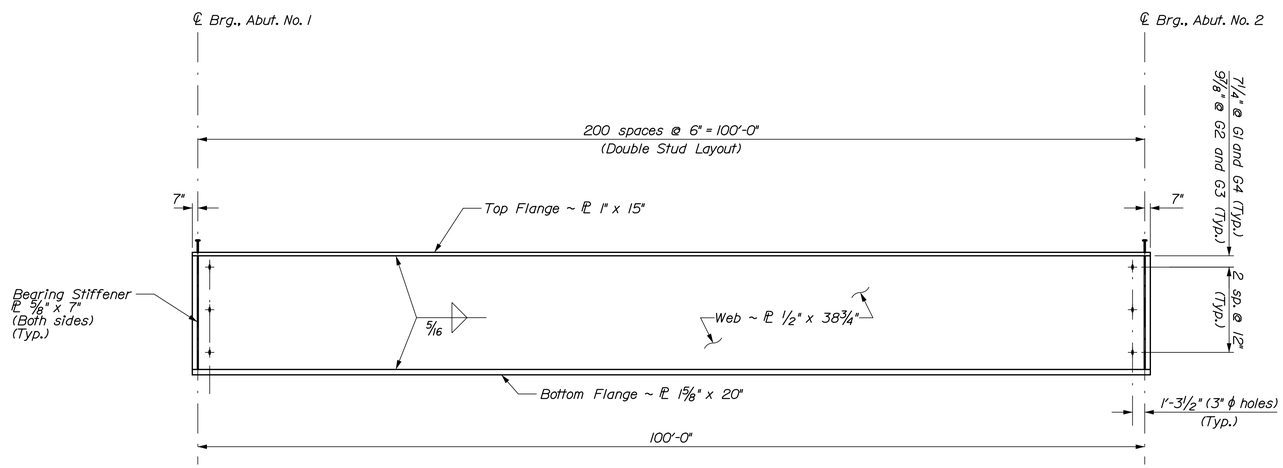

GIRDER ELEVATION

402 studs per girder (1608 studs total)

GIRDER	BOTTOM OF SLAB ELEVATIONS										
	℄ Brg., Abut. No. 1	0.1 x L	0.2 x L	0.3 x L	0.4 x L	0.5 x L	0.6 x L	0.7 x L	0.8 x L	0.9 x L	℄ Brg., Abut. No. 2
G1	554.99	555.03	555.07	555.08	555.07	555.04	554.97	554.88	554.77	554.63	554.49
G2	555.21	555.28	555.34	555.38	555.38	555.35	555.28	555.18	555.04	554.88	554.71
G3	555.26	555.33	555.39	555.43	555.43	555.40	555.33	555.23	555.09	554.93	554.76
G4	555.04	555.08	555.12	555.13	555.12	555.09	555.02	554.93	554.82	554.68	554.54

STATE OF MAINE
DEPARTMENT OF TRANSPORTATION

AC-BR-1931(800)X

WIN 19318.00

Bridge No. 5160

BRIDGE PLANS

PROJ. MANAGER	Andy Lathe	BY	DATE
DESIGN-DETAILED	H. Walton	P. Bishop	11\16
CHECKED-REVIEWED	K. Brayley	T. Cote	11\16
DESIGN2-DETAILED2	-	-	-
DESIGN3-DETAILED3	-	-	-
REVISIONS 1	-	-	-
REVISIONS 2	-	-	-
REVISIONS 3	-	-	-
REVISIONS 4	-	-	-
FIELD CHANGES	-	-	-

SIGNATURE

P.E. NUMBER

DATE

MADAWASKA BRIDGE
LITTLE MADAWASKA RIVER
STOCKHOLM AROOSTOOK COUNTY

FRAMING PLAN

SHEET NUMBER

24

OF 29

Filename: 024_Framing Plan.dgn Division: Username: Date:1/29/2016

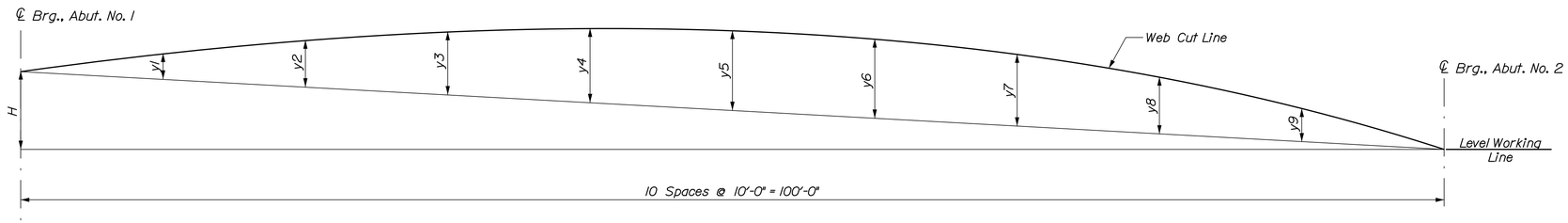

CAMBER DIAGRAM

GIRDER	CAMBER ORDINATES (INCHES)											
	H	℄ Brg., Abut. No. 1	y1	y2	y3	y4	y5	y6	y7	y8	y9	℄ Brg., Abut. No. 2
G1	6	0	1 7/16	2 11/16	3 11/16	4 5/16	4 9/16	4 5/16	3 11/16	2 11/16	1 7/16	0
G2	6	0	1 3/4	3 5/16	4 9/16	5 5/16	5 5/8	5 5/16	4 9/16	3 5/16	1 3/4	0
G3	6	0	1 3/4	3 5/16	4 9/16	5 5/16	5 5/8	5 5/16	4 9/16	3 5/16	1 3/4	0
G4	6	0	1 7/16	2 11/16	3 11/16	4 5/16	4 9/16	4 5/16	3 11/16	2 11/16	1 7/16	0

GIRDER	DEAD LOAD COMPONENT	DEAD LOAD DEFLECTIONS (INCHES)										
		℄ Brg., Abut. No. 1	y1	y2	y3	y4	y5	y6	y7	y8	y9	℄ Brg., Abut. No. 2
G1	Steel Dead Load	0.00	-0.31	-0.58	-0.80	-0.94	-0.98	-0.94	-0.80	-0.58	-0.31	0.00
	Deck Concrete Load	0.00	-0.96	-1.81	-2.50	-2.92	-3.06	-2.92	-2.50	-1.81	-0.96	0.00
	Superimposed Dead Load	0.00	-0.16	-0.30	-0.41	-0.47	-0.49	-0.47	-0.41	-0.30	-0.16	0.00
G2	Steel Dead Load	0.00	-0.31	-0.60	-0.83	-0.96	-1.01	-0.96	-0.83	-0.60	-0.31	0.00
	Deck Concrete Load	0.00	-1.30	-2.46	-3.37	-3.95	-4.15	-3.95	-3.37	-2.46	-1.30	0.00
	Superimposed Dead Load	0.00	-0.14	-0.26	-0.36	-0.42	-0.44	-0.42	-0.36	-0.26	-0.14	0.00
G3	Steel Dead Load	0.00	-0.31	-0.60	-0.83	-0.96	-1.01	-0.96	-0.83	-0.60	-0.31	0.00
	Deck Concrete Load	0.00	-1.30	-2.46	-3.37	-3.95	-4.15	-3.95	-3.37	-2.46	-1.30	0.00
	Superimposed Dead Load	0.00	-0.14	-0.26	-0.36	-0.42	-0.44	-0.42	-0.36	-0.26	-0.14	0.00
G4	Steel Dead Load	0.00	-0.31	-0.58	-0.80	-.094	-0.98	-0.94	-0.80	-0.58	-0.31	0.00
	Deck Concrete Load	0.00	-0.96	-1.81	-2.50	-2.92	-3.06	-02.92	-2.50	-1.81	-0.96	0.00
	Superimposed Dead Load	0.00	-0.16	-0.30	-0.41	-0.47	-0.49	-0.47	-0.41	-0.30	-0.16	0.00

STRUCTURAL STEEL NOTES:

1. Camber ordinates, as shown, are computed to compensate for all dead load deflections and for the finished grade profile.

2. No transverse butt-weld splices will be allowed in the flange plates or web plates within 10 feet or 10% of the span length (whichever is greater) from the points of maximum negative moment or maximum positive moment. Butt-weld splices in flanges shall be not less than 3 feet from transverse butt-welds in the web plates and no transverse web or flange butt-welds shall be located within 3 feet of other transverse welds (e.g. connection plates to web welds) on either flange or web. No transverse butt-weld splices will be allowed in areas of stress reversal.

3. Sections of flange plates or web plates between transverse shop splices or between a transverse shop splice and a field splice shall be not less than 20 feet in length unless otherwise shown on the plans.

4. Bearing stiffeners shall be plumb after erection and dead loading of the structure. Intermediate web stiffeners may be either plumb or normal to the top flange.

5. Crossframe or diaphragm connection plates may be either plumb or normal to the top flange.

6. All connection plates and stiffeners shall be welded to the top and bottom flanges using 5/16" fillet welds.

7. If Precast Concrete Deck Panels are used to construct the superstructure slab, the heads of the shear connectors shall extend a minimum of 1 inch above the top of the panels.

8. The ends of the girders and the end diaphragms shall be coated with a zinc-rich coating system in accordance with Standard Specifications Section 506, Shop Applied Protective Coating - Steel (Zinc Rich Coating System), to a distance of 10 feet from the face of the abutments. All costs related to coating will not be paid for directly but will be considered incidental to related structural steel contract items. Paint color shall meet Federal Color Standard 595B Color 20059 dark brown.

9. Shear connectors shall be installed per Standard Detail 505(01).

STATE OF MAINE
DEPARTMENT OF TRANSPORTATION

AC-BR-1931(800)X

WIN 19318.00

Bridge No. 5160

BRIDGE PLANS

		BY	DATE
PROJ. MANAGER	Andy Lathe		
DESIGN-DETAILED	H. Walton	P. Bishop	11\16
CHECKED-REVIEWED	K. Brayley	T. Cote	11\16
DESIGN2-DETAILED2	-	-	-
DESIGN3-DETAILED3	-	-	-
REVISIONS 1	-		-
REVISIONS 2	-		-
REVISIONS 3	-		-
REVISIONS 4	-		-
FIELD CHANGES	-		-

SIGNATURE

P.E. NUMBER

DATE

MADAWASKA BRIDGE
LITTLE MADAWASKA RIVER
STOCKHOLM AROOSTOOK COUNTY

STRUCTURAL STEEL DETAILS

SHEET NUMBER
25
OF 29

Filename: 025_Structural Steel Details.dgn Division: Username: Date:1/29/2016

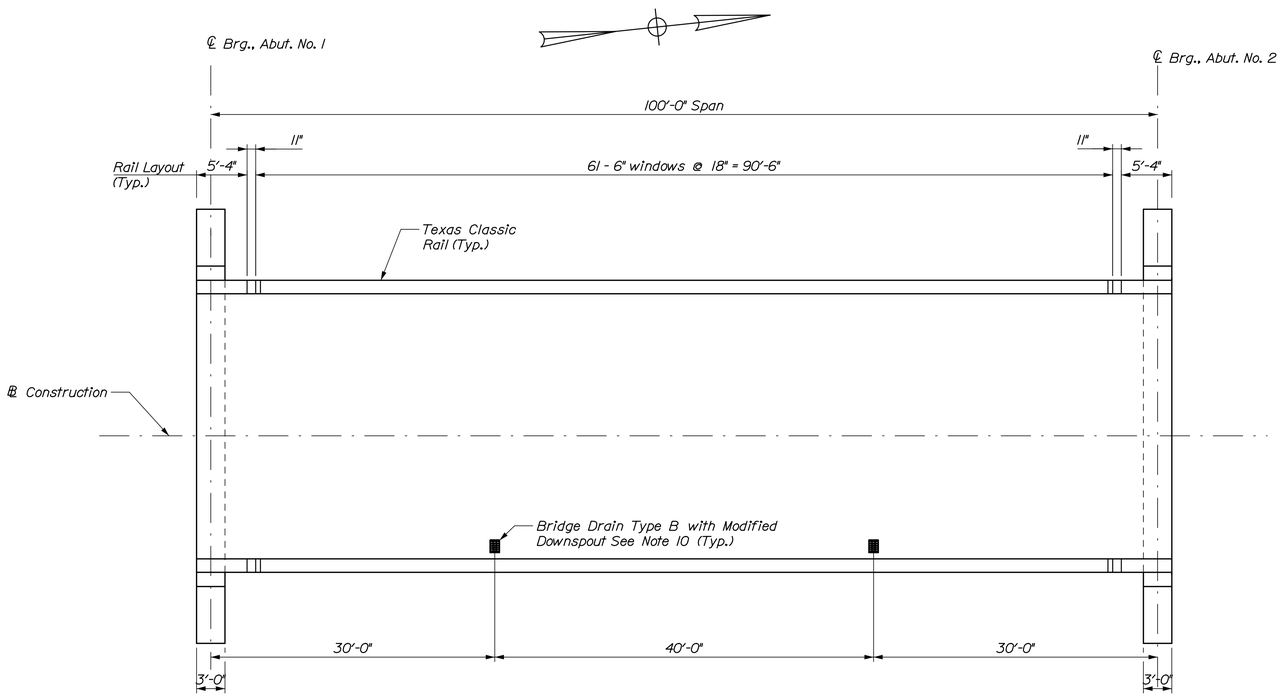

SUPERSTRUCTURE PLAN

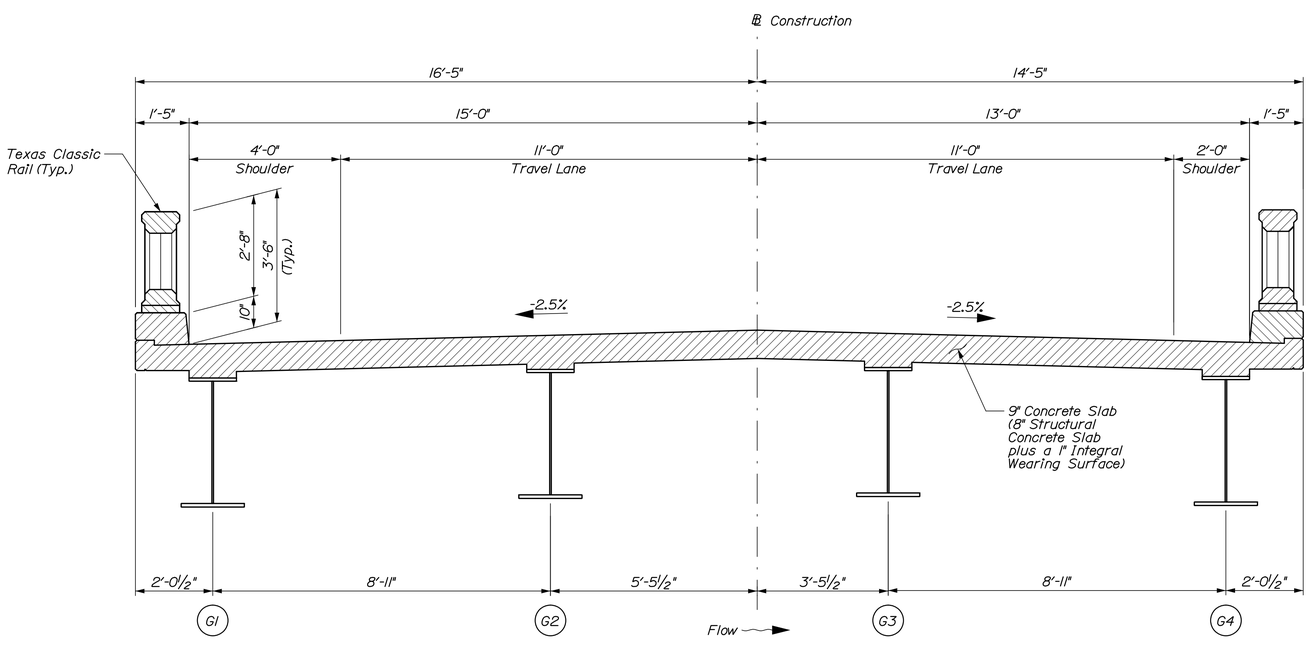

TYPICAL SECTION

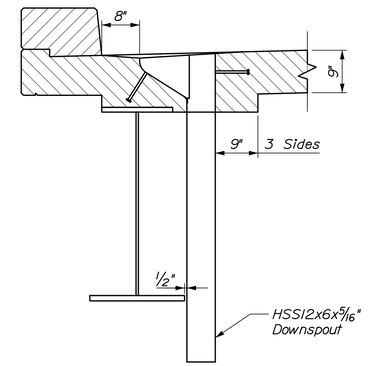

MODIFIED TYPE B DRAIN DETAIL

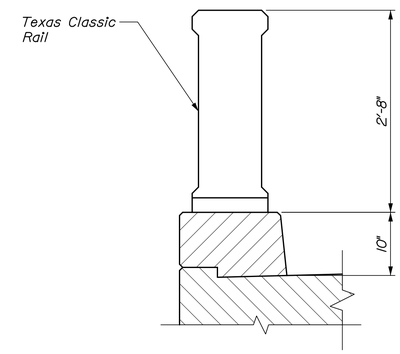

MODIFIED CURB DETAIL

SUPERSTRUCTURE NOTES:

1. The theoretical blocking used for design of the structure is 3" (2" clear) at the centerline of bearing of the abutments. Refer to Standard Detail 502(02) for blocking details.

2. Reinforcing steel shall have a minimum concrete cover of 2" unless otherwise noted.

3. Form a one inch V-groove on the fascias at the horizontal joint between the curb and slab.

4. The superstructure slab shall be placed in one continuous operation and shall be kept plastic until the entire placement has been made.

5. At the Contractor's option, Precast Deck Panels may be used in place of the full depth cast-in-place deck slab, in accordance with Special Provisions Section 502, Structural Concrete - Precast Deck Panels, and in accordance with the Standard Details.

6. Payment for the reinforcing steel fabricated, delivered, and placed in the cast-in-place portion of the structural concrete slab and approach slab will be considered incidental to the appropriate Section 502 pay items. Payment for the longitudinal epoxy-coated reinforcing steel fabricated, delivered, and placed in curbs shall be paid for under item Item No. 503.14 and 503.15. All other epoxy-coated reinforcing steel fabricated, delivered, and placed in curbs will be considered incidental to the appropriate Section 502 pay items as noted in reinforcing schedule.

7. Payment for the epoxy-coated reinforcing steel fabricated, delivered, and placed in the cast-in-place portion of the Texas Classic Rails will be considered incidental to the appropriate Section 526 pay items.

8. The Contractor shall install Texas Classic Rail longitudinal and vertical bars as shown in Standard Details Section 526 prior to the placement of curb concrete.

9. Bridge curb and rail shall be constructed per Standard Detail 526 Texas Classic Rail - Traffic Rail with a modified curb reveal of 10".

10. Bridge drain shall be modified from the Standard Detail 502(16) to use a HSS12x6x5/16 downspout and shall have an 8" offset from the curb as shown in Modified Type B Drain Detail.

STATE OF MAINE
DEPARTMENT OF TRANSPORTATION

AC-BR-1931(800)X

WIN 19318.00

Bridge No. 5160

BRIDGE PLANS

		BY	DATE
PROJ. MANAGER	Andy Lathe		
DESIGN-DETAILED	H. Walton	P. Bishop	11\16
CHECKED-REVIEWED	K. Brayley	T. Cote	11\16
DESIGN2-DETAILED2	-	-	-
DESIGN3-DETAILED3	-	-	-
REVISIONS 1	-	-	-
REVISIONS 2	-	-	-
REVISIONS 3	-	-	-
REVISIONS 4	-	-	-
FIELD CHANGES	-	-	-

SIGNATURE

P.E. NUMBER

DATE

MADAWASKA BRIDGE
LITTLE MADAWASKA RIVER
STOCKHOLM AROOSTOOK COUNTY

SUPERSTRUCTURE PLAN

SHEET NUMBER

26

OF 29

Filename: 026_Superstructure Plan.dgn Division: Username: Date:1/29/2016

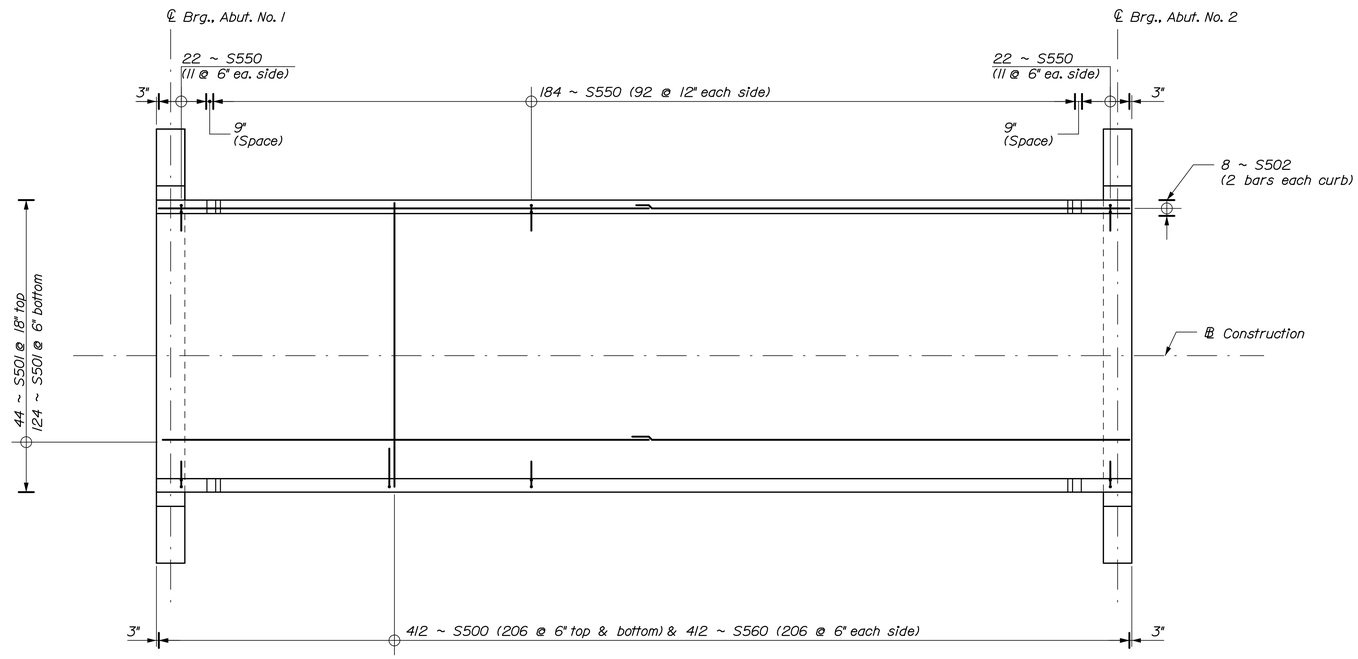

SUPERSTRUCTURE REINFORCING PLAN

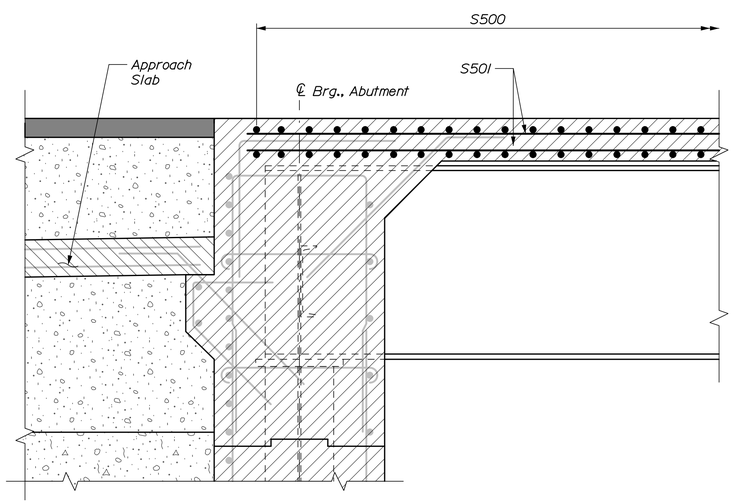

PARTIAL LONGITUDINAL SECTION

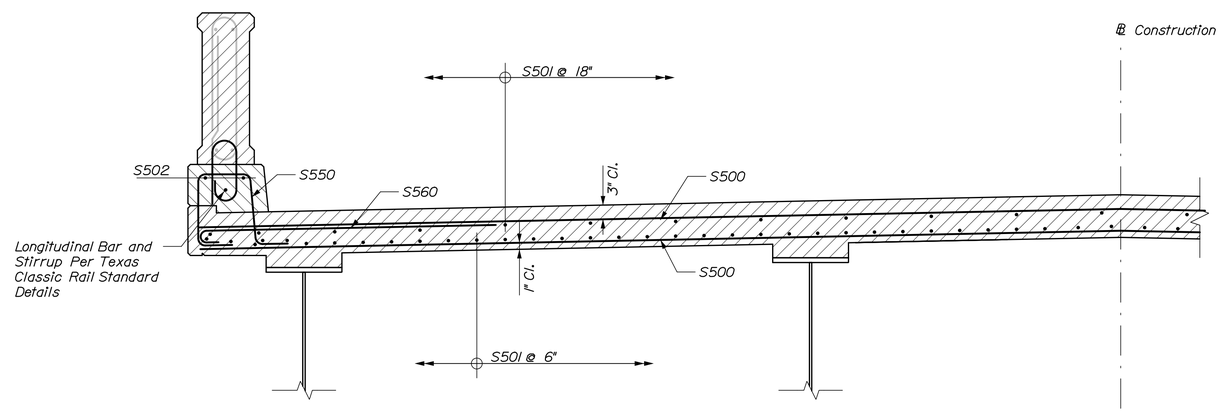

PARTIAL TRANSVERSE SECTION

NOTE:
1. Abutment and approach slab reinforcing shown screened for clarity.

STATE OF MAINE
DEPARTMENT OF TRANSPORTATION

AC-BR-1931(800)X

WIN 19318.00

Bridge No. 5160

BRIDGE PLANS

		BY	DATE
PROJ. MANAGER	Andy Lathe		
DESIGN-DETAILED	H. Walton	P. Bishop	11\16
CHECKED-REVIEWED	K. Brayley	T. Cote	11\16
DESIGN2-DETAILED2	-	-	-
DESIGN3-DETAILED3	-	-	-
REVISIONS 1	-		-
REVISIONS 2	-		-
REVISIONS 3	-		-
REVISIONS 4	-		-
FIELD CHANGES	-		-

SIGNATURE

P.E. NUMBER

DATE

MADAWASKA BRIDGE
LITTLE MADAWASKA RIVER
STOCKHOLM AROOSTOOK COUNTY

SUPERSTRUCTURE
REINFORCING

SHEET NUMBER
27
OF 29

Filename: 027_Superstructure Reinforcing.dgn Division: Username: Date:1/29/2016

STRAIGHT BARS

MARK	QTY.	LENGTH	INCREMENT	LOCATION
Abutment No. 1				
A503	2	26'-8"	--	Corbel Longitudinal
A800	8	45'-4"	--	Front Face of Abutment
A801	2	40'-4" to 44'-4"	4'-0"	Front Face of Abutment (Array)
A900	16	45'-4"	--	Back Face of Abutment
A901	5	36'-4" to 44'-4"	2'-0"	Back Face of Abutment (Array)
Abutment No. 2				
B503	2	26'-8"	--	Corbel Longitudinal
B800	8	45'-4"	--	Front Face of Abutment
B801	2	40'-4" to 44'-4"	4'-0"	Front Face of Abutment (Array)
B900	16	45'-4"	--	Back Face of Abutment
B901	5	36'-4" to 44'-4"	2'-0"	Back Face of Abutment (Array)
Deck Slab and Curb				
S500*	412	30'-6"	--	Deck Top & Bottom Transverse
S501*	168	52'-4"	--	Deck Top & Bottom Longitudinal
S502+	8	52'-6"	-	Curb Longitudinal

BENT BARS

MARK	QTY.	LENGTH	TYPE	A	B	C	D	E	F	G	H	O	R	INCREMENT	LOCATION
Abutment No. 1															
A500	28	4'-6"	V				2'-6"	2'-0"			1'-5"				Approach Slab Pin
A501	32	5'-4"	L	3'-0"	2'-4"										Backwall to Deck Pin
A502	32	6'-0"	V				4'-0"	2'-0"			1'-5"				Deck Slab Pin
A504	6	7'-10 1/2"	V				6'-6 1/2"	1'-4"			8"				Wingwall Top Reinforcing
A505	16	8'-0"	S	0"	2'-8"	2'-8"	2'-8"			0"					Wingwall End Stirrups
A506	188	3'-10"	C	7"	2'-8"	7"									Abutment Shear Tie
A507	28	5'-4"	SC	0"	1'-10"	8"	2'-10"			0"		2'-8"			Corbel Stirrups
A508	47	16'-9 3/4"	S	0"	7'-2"	2'-5 3/4"	7'-2"			0"					Abutment Bottom Stirrups
A509	31	10'-4 3/4"	S	0"	3'-11 1/2"	2'-5 3/4"	3'-11 1/2"			0"					Backwall Top Stirrups
A510	12	7'-7 3/4" to 12'-7 3/4"	S	0"	2'-7" to 5'-1"	2'-5 3/4"	2'-7" to 5'-1"			0"				B=D=6"	Wingwall Top Stirrups (Array)
A511	4	13'-5 3/4"	S	0"	5'-6"	2'-5 3/4"	5'-6"			0"					Wingwall Top Stirrups
Abutment No. 2															
B500	28	4'-6"	V				2'-6"	2'-0"			1'-5"				Approach Slab Pin
B501	32	5'-4"	L	3'-0"	2'-4"										Backwall to Deck Pin
B502	32	6'-0"	V				4'-0"	2'-0"			1'-5"				Deck Slab Pin
B504	6	7'-10 1/2"	V				6'-6 1/2"	1'-4"			3'-0"				Wingwall Top Reinforcing
B505	16	8'-0"	S	0"	2'-8"	2'-8"	2'-8"			0"					Wingwall End Stirrups
B506	188	3'-10"	C	7"	2'-8"	7"									Abutment Shear Tie
B507	28	5'-4"	SC	0"	1'-10"	8"	2'-10"			0"		2'-8"			Corbel Stirrups
B508	47	16'-9 3/4"	S	0"	7'-2"	2'-5 3/4"	7'-2"			0"					Abutment Bottom Stirrups
B509	31	10'-4 3/4"	S	0"	3'-11 1/2"	2'-5 3/4"	3'-11 1/2"			0"					Backwall Top Stirrups
B510	12	7'-7 3/4" to 12'-7 3/4"	S	0"	2'-7" to 5'-1"	2'-5 3/4"	2'-7" to 5'-1"			0"				B=D=6"	Wingwall Top Stirrups (Array)
B511	4	13'-5 3/4"	S	0"	5'-6"	2'-5 3/4"	5'-6"			0"					Wingwall Top Stirrups
Deck Slab and Curb															
S550**	226	5'-4"	SC	10"	1'-4"	1'-0"	1'-4"			10"		1'-5 1/2"			Curb Reinforcement
S560*	412	5'-1"	C	7"	4'-6"	0"									Deck Overhang

TYPE - BENDING DIAGRAMS

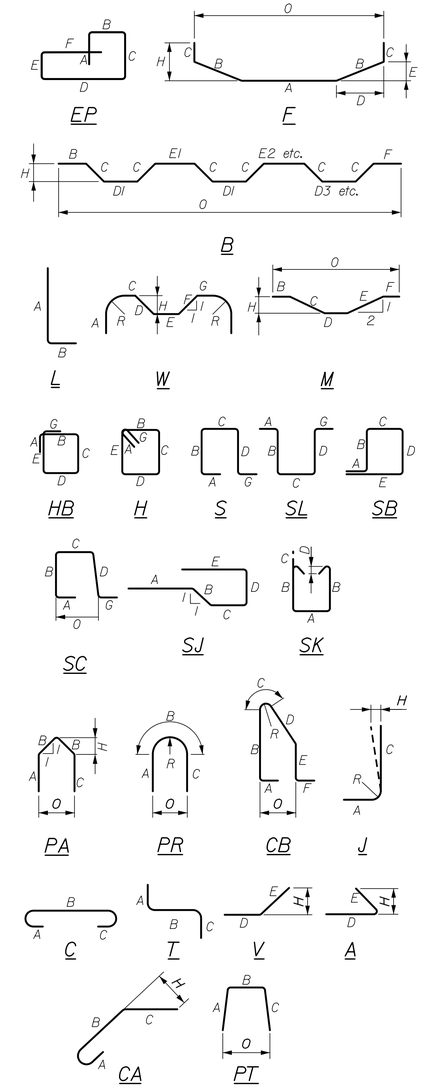

* Bar is incidental to related concrete pay item.
\+ Bar is epoxy coated.

All dimensions are out-to-out of bar.

Bending details and hooks shall conform to the recommendations of the current revision of ACI Standard 315 and ACI Standard 318.

Reinforcing Bar: ASTM A615/A615M, Grade 60

GENERAL NOTES

1. The first two digits following the letter(s) of the mark indicate the size of the bar:

   Mark "A502" = bar size #5
   Mark "P805" = bar size #8
   Mark "S650" = bar size #6

2. Each crank bar, Type B, may be replaced by two (2) straight bars (one top and one bottom) of the same bar size as the crank bar. Payment in either case shall be based on crank bars as schedule on the plans.

HNTB

STATE OF MAINE
DEPARTMENT OF TRANSPORTATION

AC-BR-1931(800)X

WIN 19318.00

BRIDGE PLANS

Bridge No. 5160

PROJ. MANAGER	Andy Lathe	BY	DATE
DESIGN-DETAILED	H. Walton	P. Bishop	11.16
CHECKED-REVIEWED	K. Brayley	T. Cote	11.16
DESIGN2-DETAILED2	-	-	-
DESIGN3-DETAILED3	-	-	-
REVISIONS 1	-	-	-
REVISIONS 2	-	-	-
REVISIONS 3	-	-	-
REVISIONS 4	-	-	-
FIELD CHANGES	-	-	-

SIGNATURE

P.E. NUMBER

DATE

MADAWASKA BRIDGE
LITTLE MADAWASKA RIVER
STOCKHOLM AROOSTOOK COUNTY

REINFORCING STEEL SCHEDULE

SHEET NUMBER

28

OF 29

Filename: 028_Reinforcing Schedule.dgn Division: Username: Date:1/29/2016

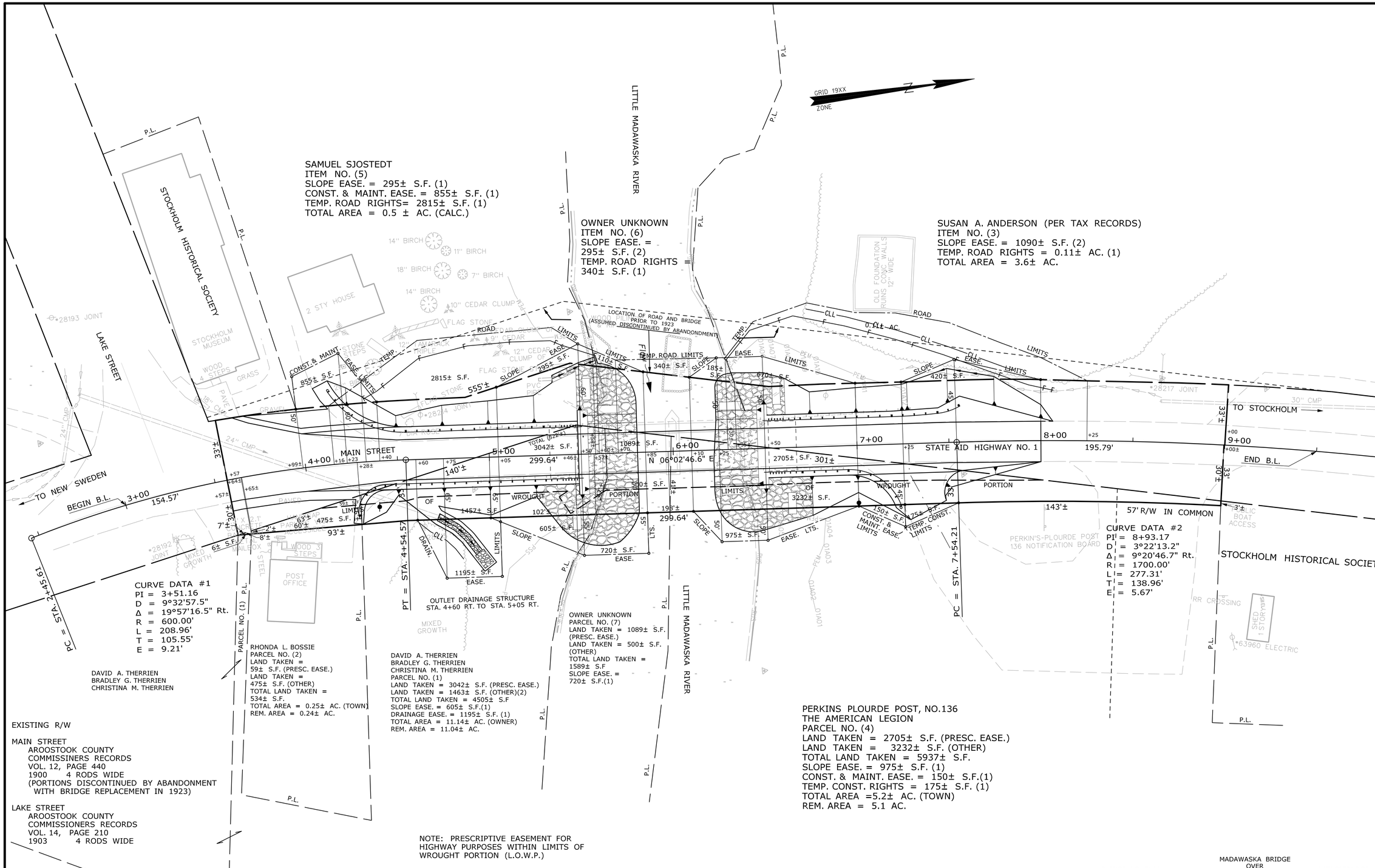

Date:1/29/2016

Division:

Username:

Filename: 029_RWPLAN1.dgn

REVISIONS			
NO.	DATE	DESCRIPTION	BY

PLAN NO.	FILED IN PLAN BOOK GRANTOR	PAGE INSTRUMENT	COUNTY RECORD DATE	BOOK	PAGE
		COND.	12/14/15	1917	323

(NORTH)

DAVID BERNHARDT
COMMISSIONER
JOYCE NOEL TAYLOR
CHIEF ENGINEER
DATE

BRIDGE NO. 5160 — MADAWASKA BRIDGE OVER LITTLE MADAWASKA RIVER — WIN 019318.00

STATE AID HIGHWAY NO. 1
MAIN STREET
STOCKHOLM AROOSTOOK COUNTY
FEDERAL AID PROJECT NO. BR-1931(800)X

OCTOBER 2015 | RIGHT-OF-WAY MAP | D.O.T. FILE NO. 2-576
SCALE 1" = 25' | SHEET 1 OF 1

SYMBOLS
WELL — (WELL)
GROUNDING UNIT LINE
CONSTRUCTION LIMIT LINE
PROPERTY LINE
LIMITS OF WROUGHT PORTION (L.O.W.P.)
EXISTING RIGHT OF WAY
NEW RIGHT OF WAY
NEW ROW WITHIN EXIST. ROW
CONTROL OF ACCESS
IP or IPF (IRON PIPE or PIN FOUND)
S.T. (SEPTIC TANK)
(ROW MONUMENT)
BM (TRAVERSE POINT)
WATER LINE
GAS LINE
ELECTRIC LINE
TELEPHONE LINE
SEWER LINE

ITEM	TECH	CHECKED
BASE MAP		
EXIST. R/W	D.S.G.	
PROP. LINES	T.L.B.	
AREAS	T.L.B.	

STATE OF MAINE
DEPARTMENT OF TRANSPORTATION
16 STATE HOUSE STATION - AUGUSTA, ME 04333-0016
STOCKHOLM
STOCKHOLM
RIGHT OF WAY MAP

SHEET NUMBER
29
OF 29