STATE OF MAINE
DEPARTMENT OF TRANSPORTATION

BATH
SAGADAHOC COUNTY
WEST APPROACH BRIDGE
OVER
STATE OF MAINE OWNED RAILROAD AND CITY STREETS

PROJECT LENGTH 0.28 mi.
BRIDGE REPLACEMENT
BRIDGE NO. 3838

SPECIFICATIONS

Design: Load and Resistance Factor Design per AASHTO LRFD Bridge Design Specifications 7th Edition 2014, with Interim Revisions

DESIGN LOADING

Live Load ..... HL-93 Modified
Construction Live Load ..... HL-93 Truck

TRAFFIC DATA - US ROUTE 1

Current (2012) AADT 32,700
Future (2032) AADT 39,200
DHV - % of AADT 11%
Design Hour Volume 2140
Heavy Trucks (% of AADT) 9%
Heavy Trucks (% of DHV) 7%
Directional Distribution (% of DHV) 55%
18 kip Equivalent P 2.0 769
18 kip Equivalent P 2.5 732
Design Speed (mph) 35

MATERIALS

Concrete:
- Curbs, Barriers, Transitions, Pedestal ..... Class "LP"
- Precast Substructure and NEXT Beams ..... Class "P"
- Precast (Other), Expansion Joint Headers ..... Class "A"
- Zipper, Link Slabs and Abutment Closure Pour ..... UHPC
- Link Curb ..... Elastomeric
- All Other ..... Class "A"

Reinforcing Steel:
- Curbs, Expansion Joint Headers, Pier Columns, Abutment Closure Pour
- Pier Caps, Link Slab ..... ASTM A1035 Grade 100
- All Other (Unless Noted) ..... ASTM A615 Grade 60

Prestressing Strands ..... ASTM A416 Grade 270 Low Relaxation

Structural Steel:
- All Material (except as noted) .. ASTM A709, Grade 50 (galvanized or metalized)
- High Strength Bolts ..... ASTM A325, Type 1 (galvanized)

BASIC DESIGN STRESSES

Concrete:
- Substructure (Cast-in-Place) ..... f'c = 4,000 psi
- Precast/Prestressed NEXT Beams ..... f'c = 8,000 psi; f'ci = 6,000 psi
- Precast Pier Caps and Columns ..... f'c = 5,000 psi
- Curb, Barriers, Transitions, Pedestals ..... f'c = 5,000 psi
- Deck Slab ..... f'c = 4,000 psi
- Zipper and Link Slab ..... f'c = 21,700 psi
- Link Curbs ..... ft = 600 psi

Reinforcing Steel ..... fy = 60,000 psi
Prestressing Strands ..... fpu = 270,000 psi

Structural Steel
- ASTM A 709, Grade 50 ..... F y = 50,000 psi
- ASTM A 325 ..... F µ = 120,000 psi

UTILITIES

Central Maine Power Co.
Fairpoint Communications
Maine Eastern Railroad Co.
Central Maine and Quebec Railroad
Bath Water District
City of Bath Sewer
Comcast Cable TV

MAINTENANCE OF TRAFFIC

While viaduct is closed maintain two (2) twelve foot (12') minimum lanes of traffic, along Frontage Road Detour Routes or as specified in the Contract Provisions.

PROJECT LOCATION:	Bridge is located 0.03 miles northeast of Washington Street. Washington Street improvements from Commercial Street to Centre Street. Latitude 43°54'48" Longitude 69°49'12"
PROGRAM AREA:	Bridge Program
OUTLINE OF WORK:	Bridge Construction: Bridge replacement and related approach work. Highway Safety and Spot Improvements: Traffic Signals and related work.

LIST OF DRAWINGS

Title Sheet 1
General Notes 2
Quantities 3
General Plan and Elevation 4
Roadway Typicals ..... 5 - 7
General Plans ..... 8 - 11
* Landscape Plan 12
Profile ..... 13 - 15
Curb Layout Plans ..... 16 - 19
Striping and Signing Plans ..... 20 - 23
Sign Summary 24
Railroad Plan and Profile 25
Cross Sections ..... 26 - 45
Detour Notes 46
Detour Sign Summary 47
US Route 1 Detour ..... 48 - 52
Temporary Pedestrian Plans ..... 53 - 54
Frontage Roads (WB) Detour ..... 55 - 56
Phase I Traffic Control Plans ..... 57 - 59
Traffic Control Signal Plan 60
Traffic Signal Plans ..... 61 - 63
Temporary Striping Plans ..... 64 - 69

Boring Location Plan ..... 70 - 71
Interpretive Subsurface Profile ..... 72 - 73
Boring Logs ..... 74 - 76
Plan and Elevation (Units 1 thru 4) ..... 77 - 80
Unit 4 Curb and Fascia Layout 81
Survey Layout Unit 1 thru Unit 4 ..... 82 - 83
Abutment No. 1 Retaining Wall Details ..... 84 - 86
Abutment No. 1 Retaining Wall Reinforcement ..... 87 - 89
Abutment No. 2 Retaining Wall Details 90
Abutment Removal ..... 91 - 92
Abutment Modifications ..... 93 - 94
Abutment Details 95
Abutment Reinforcement ..... 96 - 99
Cathodic Protection Details ..... 100 - 101
High Street Pier Transition Barrier 102
Wingwall 2A Transition Barrier 103
Light Pole Pedestal Details 104

Pier Geometry ..... 105 - 106
Pier Elevation Tables ..... 107 - 108
Pier Transition Footing Details 109
Pier Column Details 110
Pier Cap Details 111

STEEL SUPERSTRUCTURE OPTION
Steel Superstructure Sections and Details 112
Steel Superstructure Framing Plan (Unit 1 thru Unit 4) ..... 113 - 116
Steel Superstructure Fabrication Details 117
Steel Superstructure Details ..... 118 - 119
Steel Superstructure Fixed Bearing 120
Steel Superstructure Expansion Bearing 121
Steel Superstructure Expansion Joint ..... 122 - 124

CONCRETE SUPERSTRUCTURE OPTION
Concrete Superstructure Sections 125
Concrete Superstructure Framing Plan Unit 1 thru Unit 4 ..... 126 - 127
NEXT Beam Reinforcement Details 128
NEXT Beam Strand Layout 129
NEXT Beam Details ..... 130 - 131
NEXT Beam Flange Details ..... 132 - 133
Concrete Superstructure Utility Support Details 134
Concrete Superstructure Fixed Bearing 135
Concrete Superstructure Expansion Bearing 136
Concrete Superstructure Expansion Joint 137

Link Slab and Curb Details 138
Bridge Drain Details 139
Lighting Plans ..... 140 - 142
Miscellaneous Conduit Details 143
Snow Fence Details 144
Reinforcing Steel Schedule 145

* Plan provided by MaineDOT

STATE OF MAINE
DEPARTMENT OF TRANSPORTATION
APPROVED — DATE
COMMISSIONER: 12/30/15
CHIEF ENGINEER: 12-30-15

STATE OF MAINE — Steven M. Hodgdon 11206 — LICENSED PROFESSIONAL ENGINEER
SIGNATURE: Steven M. Hodgdon
P.E. NUMBER: 11206
DATE: 12/21/2015

PROJECT INFORMATION

PROGRAM	BRIDGE
PROJECT MANAGER	J. KITTREDGE
DESIGNER	S. HODGDON
CONSULTANT	VHB
PROJECT RESIDENT	
CONTRACTOR	
PROJECT COMPLETION DATE	

PROJECT NO. NHPP-1927(300)WIN 19273.00 WIN 20565.00

BATH
WEST APPROACH BRIDGE

TITLE SHEET

SHEET NUMBER
1
OF 145

Filename:\BRIDGE\MSTA\001_title_01.dgn Division: HIGHWAY Username: kwentworth Date:12/21/2015

GENERAL BRIDGE CONSTRUCTION NOTES

1. These plans include two superstructure options: a steel superstructure or concrete superstructure. Only one superstructure option shall be constructed. The substructures are detailed for both superstructure options.

2. During construction, the US Route 1 Viaduct (West Approach Bridge) will be closed to traffic for a time period specified in the Special Provisions.

3. For right of way lines, refer to General Plans.

4. Payment for any clearing will be considered incidental to Contract items.

5. All utility facilities shall be adjusted by the respective utilities unless otherwise noted.

6. All aluminum bridge rail, rail posts, and associated hardware which are to be removed shall be carefully salvaged by the Contractor and will remain the property of the Department.

7. Protective Coating for Concrete Surfaces shall be applied to the following areas:

- All exposed surfaces of concrete curbs and bridge lighting support bump-outs as detailed
- Exterior beam fascias as shown on the plans
- All exposed surfaces of concrete transition barriers and light pole pedestals
- Top of abutment backwalls and to one foot below the top of backwalls on the back side.
- Abutment wingwalls and retaining walls as shown in the plans.
- All surfaces of piers as shown in plans

8. Project information referred to below may be accessed at the following MaineDOT web address: http://www.maine.gov/mdot/comprehensive-list-projects/project-information.php.

The existing bridge plans may be accessed at the MaineDOT web address. The plans are reproductions of the original drawings as prepared for the construction of the bridge. It is very unlikely that the plans will show any construction field changes or any alterations which may have been made to the bridge during its life span.

Existing bridge elevations are not in a conventional datum. To correlate to NAVD 88 subtract 46.8 from 1957 and 1959 as-built plan elevations.

Geotechnical information furnished or referred to in this plan set is for the use of the Bidders and the Contractor. No assurance is given that the information or interpretations will be representative of actual subsurface conditions at the construction site. MaineDOT will not be responsible for the Bidders' or Contractor's interpretations of, or conclusions drawn from, the geotechnical information. The boring logs contained in the plan set present factual and interpretive subsurface information collected at discrete locations. Data provided may not be representative of the subsurface conditions between the boring locations.

9. Quantities included for pay items measured and paid for by Lump Sum are estimated quantities and are provided by MaineDOT for informational purposes only. Lump Sum pay items will be paid for at the Contract Bid amount, with no addition or reduction in payment to the Contractor if the actual final quantities are different from the MaineDOT provided estimated quantities, except as follows:

a. If a Lump Sum pay item is eliminated, the requirements of Standard Specifications Section 109.2, Elimination of Items, will take precedence.

b. If other Contract Documents specifically allow a change in payment for a Lump Sum pay item, those requirements will be followed.

c. If a design change results in changes to estimated quantities for Lump Sum pay items, price adjustments will be made in accordance with Standard Specifications Section 109.7, Equitable Adjustments to Compensation and Time.

10. The Contractor shall submit a Bridge Demolition Plan to the Resident at least 10 business days prior to the start of demolition work. The plan shall outline the methods and equipment to be used to remove and dispose of all materials included in the existing bridge. No work related to the removal of the bridge shall be undertaken by the Contractor until MaineDOT has reviewed the Bridge Demolition Plan for appropriateness and completeness. Payment for all work necessary for developing, submitting and finalizing the Demolition Plan will be considered incidental to the bridge removal pay item.

11. The existing bridge shall be removed by and become the property of the Contractor. Bridge removal includes the superstructure, pier caps, pier columns and portions of abutments and retaining walls as shown in the plans. The steel portions of the existing bridge are coated with a lead-based paint system. The Contractor is responsible for the containment, proper management and disposal of all lead-contaminated hazardous waste generated by the process of demolishing the bridge. The Contractor is responsible for implementing appropriate OSHA mandated personal protection standards related to this process. Once the existing bridge is removed, the Contractor is solely responsible for the care, custody and control of the components of the existing bridge and any hazardous waste generated as a result of the storage, recycling or disposal of the bridge components, including lead-coated steel. The Contractor shall recycle or reuse the steel in accordance with the Maine Department of Environmental Protection's "Maine Hazardous Waste Management Regulations," Chapter 850. A copy of this regulation is available at MaineDOT's offices on Child Street in Augusta. Payment for all labor, materials, equipment and other costs required to remove and dispose of the existing bridge will be considered incidental to the bridge removal pay item.

12. Removal of existing pier caps and columns shall be paid under Item 202.17, Removing Existing Structural Concrete. All other substructure concrete removal including abutments, wingwalls and retaining walls shall be paid under Item 202.12, Removing Existing Structural Concrete.

13. Special Backfill for abutments, wingwalls and piers shall conform to Specification Section 703.13, Crushed Stone 3/4 inch. Separation Geotextile shall conform to Section 620, Geotextile.

14. Working Drawings and Reinforcing Steel Schedules for the pier columns, pier caps, steel superstructure deck, NEXT Beams, UHPC zipper pours, link slab, link curb, approach slabs, bridge lighting support bumpout and UHPC abutment closure pour shall be the responsibility of the Contractor. Refer to subsections 105.7 and 503.03 of the Standard Specifications for more information. Payment for all work associated with developing Working Drawings and Reinforcing Steel Schedules will be considered incidental to the related contract items.

15. Precast substructure fabrication tolerances shall be as follows:
Length: ± 1/4"
Width: ± 1/4"
Depth: ± 1/4"
Variation from Specified end squareness or skew: ± 1/2"
Location of blockout for voids: ± 1/2"

16. Gr. 100 reinforcement referred to in plans is low-carbon chromium reinforcement that conforms to ASTM A1035.

17. Decorative signs on the existing bridge shall be carefully removed by the Contractor and delivered to the City of Bath, Public Works Department, 450 Oak Grove Avenue. Payment will be considered incidental to Contract Items.

SUPERSTRUCTURE LOADING NOTE

1. Both superstructure options provided in these plans are designed to accommodate HL-93, truck only, construction loads before longitudinal (zipper) closure pours are constructed. If beams are subjected to this type of construction load, wheel lines shall not be positioned any closer than 4'-0" from the proposed face of curb.

ROADWAY WINTER MAINTENANCE

1. See US Route 1 Detour Plans for approximate location of winter maintenance limits as described in the Special Provisions.

GENERAL ROADWAY CONSTRUCTION NOTES

1. All work shall be performed within existing Right-of-Way or State-of-Maine (SOM) property.

2. The limits of mill and overlay shown on the plans are approximate. The final locations will be determined by the Resident in the field.

3. All joints between existing and proposed hot bituminous pavement shall be butted. Payment shall be made under the appropriate 202 Item.

4. Construct butt joints at paved drives and entrances as directed by the Resident.

5. A temporary ramp shall be constructed with HMA at the ends of the roadway section paved or milled each day. The use of millings or RAP will not be allowed, but cold patch may be temporarily utilized until HMA plants are open for the season. Temporary ramps shall be constructed with one foot of length for every 1/4" of transition depth on the leading end and the trailing end. Materials, placement, maintenance, and removal shall be incidental to contract items.

6. Grind transition tapers at catch basins under Item 202.203 Pavement Butt Joints, as directed by the Resident.

7. A 3' paved apron shall be placed at all gravel entrances unless otherwise noted in the plan or directed by the Resident.

8. All paved walks to be constructed with 12" aggregate subbase course - gravel and 2" hot mix asphalt unless otherwise noted in the plans or directed by the Resident.

9. Item 411.10 Untreated Aggregate Surface Course, may also meet the gradation requirements of Item 204.20 Add Shoulder Aggregate.

10. Shoulder shim shall taper to 0 inches prior to the face of existing curb and guardrail.

11. Any necessary cleaning of existing pavement prior to paving shall be incidental to the related paving items.

12. The following shall be incidental to the 603 Item(s):
a. Any cutting of existing drainage pipes and or connectors necessary to install new culvert replacements or extensions
b. All pipe excavation including any cutting and removal of pavement
c. All work necessary to connect to existing pipes and drainage structures
d. An 18" wide strip of non-woven geo-textile meeting the requirements of 620.58 shall be placed over all RCP joints

13. Existing catch basins and culverts may be cleaned as directed by the Resident under Item 631.32 Culvert Cleaner, Including Operator, where such work is not incidental to other contract items.

14. No existing drainage shall be abandoned, removed or plugged without prior approval of the Resident.

15. The culvert sizes shown on the plans and cross sections are for smoothlined pipes.

16. A1-C and B1-C catch basins shall be Shape 1 with haunched cone, as per Standard Detail 604(02), unless otherwise noted on the plans.

17. Any necessary cutting of existing pipes to fit in areas of proposed catch basins will not be paid for separately and will be considered incidental to Item 604.

18. Any necessary cutting of existing catch basins to allow for proposed pipe connections will not be paid for separately and will be considered incidental to Item 603 or 605.

19. Existing drainage structures that are labeled "remove" or "cap and abandon" and are not paid for directly shall be considered incidental and no separate payment shall be made.

20. Temporary drainage connections needed to maintain traffic or existing drainage that are not noted on the plans shall be considered incidental.

21. Existing abandoned water mains broken by the Contractor during construction shall have the ends plugged with brick and mortar. Cost for all labor and material will be considered incidental to the contract and no direct payment will be made.

22. Guardrail end treatments shall be installed concurrently with the placement of each section of beam guardrail.

23. Holes created by Guardrail removal will be filled and compacted with approved materials as directed by the Resident. Payment to be considered incidental to the guardrail items.

24. Backing up bituminous curb is incidental to the curb items. If directed, loam will be paid for separately. In areas where new bituminous curb is designated to replace existing, the removal of the old bituminous curb shall be incidental to the new curb.

25. Loam has been estimated for disturbed lawn areas. Actual placement of the loam shall be as noted on the plans or designated by the Resident.

26. Loam shall be placed to a nominal depth of 4 inches in lawn areas and 2 inches in all other areas unless otherwise noted or directed.

27. The contractor is responsible for carefully maintaining 100' stationing on the frontage roads or as directed by the Resident. All layout and stationing will be checked and must be acceptable to the Resident.

28. Any damage caused by the Contractor's equipment, personnel, or operation shall be repaired to the satisfaction of the Resident. All work, equipment, and materials required to make repairs shall be at the Contractor's expense.

29. No separate payment for superintendent or foreman will be made for the supervision of equipment being paid for under the equipment rental items.

30. "Undetermined Locations" shall be determined by the Resident.

31. Stations referenced are approximate.

32. All work shall be done in accordance with the Maine Department of Transportation's Best Management Practices for Erosion and Sedimentation Control, February, 2008.

33. The information shown on the base plans was gathered from data obtained by MaineDOT survey, as-built information and field measurements. Copies of the MaineDOT survey and as-built plans may be made available upon request.

34. Utility locations shown on the plans and cross sections are approximate. It is the Contractor's responsibility to verify all utility locations.

GENERAL SIGNAL CONSTRUCTION NOTES

1. Where noted on the plans, all new vehicular signal heads shall be equipped with new LED lenses 12 inches in diameter and equipped with new 5-inch louvered back plates.

2. All new signal heads shall be fix mounted to mast arms with Astrobrackets, or tethered to span wire, or mounted to mast arm poles with bracket arms as indicated on plans.

3. The bottom of the housing of new signal faces shall be at least 16 feet but not more than 19 feet above the pavement grade at the center of the roadway. For pole mounted signal heads, the bottom of the housing shall be mounted at least 8 feet but not more than 19 feet above the sidewalk, or if there is no sidewalk, above the pavement grade at the high point of the road.

4. Two copies of as-built plans, wiring diagrams, box prints, and equipment manuals shall be left in each of the controller cabinets.

5. All signing, signal and striping materials and placement shall conform to the MaineDOT Standard Specifications, Supplemental Specifications and Standard Details and with the Federal Highway Administration "Manual on Uniform Traffic Control Devices" (MUTCD) dated 2009, as amended.

6. Foundations

The Contractor shall be responsible for a mast arm pole foundation design suitable to the existing soil conditions and in accordance with the 2014 MaineDOT Standard Specifications. The Contractor shall be responsible for final structural design of the mast arms and the connection of the mast arms to their foundations. All designs shall be prepared and stamped by a professional engineer licensed in the state of Maine. Design computations, including design loads (overturning moment, torsion, shear force, and axial load) at the top of the foundations, and shop drawings shall be submitted for approval by MaineDOT. No materials shall be ordered or fabricated until the design has been approved.

The bottom of each mast arm foundation is coincident with the top of bedrock surface as encountered in the test borings. If the actual bedrock surface at the mast arm foundation locations is encountered at depths that vary from those shown, the need to shorten or lengthen the foundations or pin or not pin them to bedrock shall be re-evaluated by the Resident.

When new conduit is extended or installed into new mast arm signal foundations, Contractor shall break into existing foundation to expose the existing conduit bend. New conduit shall be attached to existing conduit bend.

7. Video Detection Installation - The Engineer reserves the right to direct the Contractor to field adjust the video detector mounting height for local conditions identified during or after installation. No additional cost will be allowed for field adjusting the pipe extensions or rewiring as necessary. This work will be incidental to the 643.83 Video Detection System items.

STATE OF MAINE
DEPARTMENT OF TRANSPORTATION

NHPP - 1927(300)

WIN 19273.00

BRIDGE NO. 3838

BRIDGE PLANS

vhb

PROJ. MANAGER	J. KITTREDGE		
DESIGN-DETAILED	KZS	KDW	12/15
CHECKED-REVIEWED	JGM	SMH	12/15
DESIGN2-DETAILED2	---	---	---
DESIGN3-DETAILED3	---	---	---
REVISIONS 1	---	---	---
REVISIONS 2	---	---	---
REVISIONS 3	---	---	---
REVISIONS 4	---	---	---
FIELD CHANGES	---	---	---

WEST APPROACH BRIDGE
MAINE OWNED RR & CITY STREETS
BATH SAGADAHOC COUNTY

GENERAL NOTES

SHEET NUMBER
2
OF 145

Filename: ...\BRIDGE\MSTA\002_notes_01.dgn Division: HIGHWAY Username: kwentworth Date:12/21/2015

ESTIMATED QUANTITIES

ITEM NO.	DESCRIPTION	QUANTITY	QUANTITY	UNIT
	ITEMS COMMON TO BOTH ALTERNATES	WIN 19273.00	WIN 20565.00	
202.10	Removing Existing Superstructure Property of Contractor (Concrete: 2050 CY)	1		LS
	(Steel: 480,200 LB)			
202.12	Removing Existing Structural Concrete	160		CY
202.134	Removing Existing Railings (Retained by Department) (2950 LF)	1		LS
202.17	Removing Existing Structural Concrete (710 CY)	1		LS
202.202	Removing Pavement Surface	15450		SY
202.203	Pavement Butt Joints	125		SY
203.20	Common Excavation	1150		CY
203.25	Granular Borrow	30		CY
206.07	Structural Rock Excavation - Drainage and Minor Structures	250		CY
206.082	Structural Earth Excavation - Major Structures, Plan Quantity	350		CY
206.14	Special Backfill	340		CY
304.10	Aggregate Subbase Course-Gravel	1600		CY
403.102	Hot Mix Asphalt Pavement for Special Areas	50		T
403.2081	Hot Mix Asphalt - 12.5 mm Nominal Maximum Size (Polymer Modified)	1800		T
403.209	Hot Mix Asphalt, 9.5 mm Nominal Maximum Size (Sidewalks, Drives, Islands & Incidentals)	320		T
403.211	Hot Mix Asphalt, 9.5 mm Nominal Maximum Size (Shimming)	600		T
403.213	Hot Mix Asphalt, 12.5 mm Nominal Maximum Size (Base and Intermediate Base Course)	800		T
403.2131	Hot Mix Asphalt, 12.5 mm Nominal Maximum Size (Base and Intermediate Base course, Polymer Modified)	450		T
409.15	Bituminous Tack Coat, Applied	1600		G
411.10	Untreated Aggregate Surface Course, Truck Measure	180		CY
430.25	Cobblestone Pavement	10		SY
502.21	Structural Concrete, Abutments and Retaining Walls	90		CY
502.239	Structural Concrete Piers (78 CY)	1		LS
502.35	Structural Concrete, Stamped Colored	680		SY
502.49	Structural Concrete Curbs and Sidewalks (220 CY)	1		LS
502.55	Structural Concrete Utility Support System	1		LS
502.565	Concrete Fill	3		CY
502.59	Elastomeric Concrete (Link Curb)	160		CF
502.704	Drainage System (Downspouts, troughs, etc.)	1		LS
502.77	FRP Bridge Drain - Type D	13		EA
503.12	Reinforcing Steel, Fabricated and Delivered	48000		LB
503.13	Reinforcing Steel, Placing	48000		LB
503.19	Low-Carbon Chromium Reinforcement, Fabricated and Delivered	6100		LB
503.20	Low-Carbon Chromium Reinforcement, Placing	6100		LB
507.0821	Steel Bridge Railing, 3 Bar (2950 LF)	1		LS
508.14	High Performance Waterproofing Membrane (4590 SY)	1		LS
514.06	Curing Box for Concrete Cylinders	2		EA
520.2321	Asphaltic Crack Control Joint (64 LF)	1		LS
523.52	Bearing Installation	320		EA
523.5401	Laminated Elastomeric Bearings, Fixed	48		EA
523.5402	Laminated Elastomeric Bearings, Expansion	272		EA
524.301	Temporary Structural Support	1		LS
526.301	Temporary Concrete Barrier, Type 1 (1100 LF)	1		LS
526.34	Permanent Concrete Transition Barrier	1		EA
526.3401	Permanent Concrete Transition Barrier - Modified	3		EA
527.34	Work Zone Crash Cushions	4		UN
534.7601	Precast Approach Slab (28 CY)	1		LS
534.76021	Precast Pier Columns (332 CY)	1		LS
534.76022	Precast Pier Caps (562 CY)	1		LS
603.155	12 inch Reinforced Concrete Pipe Class III	45		LF
603.159	12 inch Culvert Pipe Option III	61		LF
603.165	15 inch Reinforced Concrete Pipe Class III	220		LF
603.195	24 inch Reinforced Concrete Pipe Class III	130		LF
603.215	36 inch Reinforced Concrete Pipe Class III	100		LF
603.216	36" Special RCP	30		LF
603.431	36 inch Reinforced Concrete Pipe Class V	14		LF
604.072	Catch Basin Type AI-C	3		EA
604.092	Catch Basin Type BI-C	10.125		EA
604.094	72 inch Catch Basin Type BI	3.375		EA
604.161	Altering Catch Basin	8		EA
604.18	Adjusting Manhole or Catch Basin to Grade	40		EA
604.252	Catch Basin Type A5-C	3		EA
605.10	6 inch Underdrain Outlet	15		LF
605.12	15 inch Underdrain Type C	230		LF
605.15	24 inch Underdrain Type C	430		LF
606.365	Guardrail, Remove, Modify, and Reset, Type 3b to 3c	150		LF
606.791	Remove and Reset 350 Flared Terminal	1		EA
607.1702	Temporary Chain Link Fence - 6' (1555 LF)	1		LS
607.183	Chain Link Snow Fence - 33" (2950 LF)	1		LS
608.092	Remove and Reset Existing Cobblestone	70		SY
608.26	Curb Ramp Detectable Warning Field	210		SF
608.28	Granite Pavers with Sand Base	230		SY
608.45	Construct Sidewalk	280		SY
609.11	Vertical Curb Type 1	830		LF
609.12	Vertical Curb Type 1 - Circular	360		LF
609.234	Terminal Curb Type 1 - 4 Foot	3		EA
609.2341	Terminal Curb Type 1 - 4 Foot - Circular	1		EA
609.238	Terminal Curb Type 1 - 8 Foot	8		EA
609.2381	Terminal Curb Type 1 - 8 Foot - Circular	10		EA
609.31	Curb Type 3	140		LF
609.34	Curb Type 5	50		LF
609.35	Curb-Type 5 - Circular	50		LF
609.38	Reset Curb Type 1	1100		LF
609.40	Reset Curb Type 5	1300		LF
615.07	Loam	66		CY
615.086	Loam/Compost	140		CY
618.13	Seeding Method Number 1	5.5		UN
619.12	Mulch	5.5		UN
619.13	Bark Mulch	47		CY
620.60	Separation Geotextile	460		SY

ESTIMATED QUANTITIES

ITEM NO.	DESCRIPTION	QUANTITY	QUANTITY	UNIT
	ITEMS COMMON TO BOTH ALTERNATES	WIN 19273.00	WIN 20565.00	
621.101	Groundcover Plugs, 2 1/4" Cont.	300		EA
621.389	Evergreen Shrubs, 15"-18" Cont. Group A	72		EA
621.397	Evergreen Shrubs, 18"-24" Cont. Group C	18		EA
621.401	Evergreen Shrubs, 2'-2 1/2' Group A	3		EA
621.51	Deciduous Shrubs, 15"-18" Cal. Gr. A Cont.	108		EA
621.54	Deciduous Shrubs, 18"-24" Group A	42		EA
621.546	Deciduous Shrubs, 2'-3' Group A	42		EA
621.554	Deciduous Shrubs, 3'-4' Group C	6		EA
621.71	Herbaceous Perennials Group A 1 Gallon	280		EA
621.71	Herbaceous Perennials Group A 2 quart/cont.	132		EA
623.09	Remove and Reset Monument	1		EA
626.11	Precast Concrete Junction Box		3	EA
626.21	Metallic Conduit	900		LF
626.22	Non-Metallic Conduit	110	1225	LF
626.31	18 inch Diameter Foundation	2	14	EA
626.332	30-Inch Diameter, greater than 8-feet long, and all 36-Inch and 42-Inch Diameter Foundations		8	CY
626.35	Controller Cabinet Foundation	1	2	EA
627.18	12 Inch Solid White Pavement Marking Line	165		LF
627.4075	Temporary White Pavement Marking Symbol	1500		SF
627.733	4" White or Yellow Painted Pavement Marking Line	19400		LF
627.75	White or Yellow Pavement & Curb Marking	4950		SF
627.77	Removing Existing Pavement Marking	5600		SF
627.78	Temporary Pavement Marking Line, White or Yellow	49200		LF
629.05	Hand Labor, Straight Time	90		HR
631.12	All Purpose Excavator (including operator)	100		HR
631.172	Truck-large (including operator)	200		HR
631.32	Culvert Cleaner (including operators)	10		HR
634.160	Highway Lighting	1		LS
634.2042	LED Luminaires	11		EA
634.210	Conventional Light Standard	11		EA
638.01	Embedded Work In Structure	1		LS
639.18	Field Office, Type A	1		EA
643.71	Traffic Signal Modification: Washington St/Centre St School St/Vine St/Commercial St/Leeman Hwy		1	LS
643.83	Video Detection System: Washington St/Centre St School St/Vine St/Commercial St/Leeman Hwy		1	LS
643.86	Traffic Signal Loop Detector		2	EA
643.91	Mast Arm Pole (25 FT)		2	EA
643.91	Mast Arm Pole (35 FT)		1	EA
643.92	Pedestal Pole (4 FT)		3	EA
643.92	Pedestal Pole (8 FT)		6	EA
643.92	Pedestal Pole (10 FT)		5	EA
645.106	Demount Regulatory, Warning, Confirmation and Route Marker Assembly Sign	46		EA
645.116	Reinstall Regulatory, Warning, Confirmation and Route Marker Assembly Sign	38		EA
645.271	Regulatory, Warning, Confirmation and Route Marker Assembly Sign, Type 1	97.25		SF
648.5201	Reconstruct Grade Crossings	170		TF
648.53	Remove Existing Track - At Grade	340		TF
652.30	Flashing Arrow	2		EA
652.312	Type III Barricades	17		EA
652.33	Drum	220		EA
652.34	Cone	210		EA
652.35	Construction Signs	2204		SF
652.361	Maintenance of Traffic Control Devices	1		LS
652.38	Flaggers	10800		HR
652.381	Traffic Officers	144		HR
652.41	Portable-Changeable Message Sign	5		EA
655.513	Embedded Cathodic Protection System	1		LS
656.75	Temporary Soil Erosion and Water Pollution Control Plan	1		LS
658.20	Acrylic Latex Color Finish	2400		SY
659.10	Mobilization	1		LS
660.21	On-the-Job Training	1000		HR
801.141	4" PVC Sanitary Sewer (SDR-35)	10		LF
801.16	6" PVC Sanitary Sewer (SDR-35)	10		LF
910.301	Special Work - Winter Maintenance & Snowplowing	1		LS

ESTIMATED QUANTITIES

ITEM NO.	DESCRIPTION	QUANTITY	UNIT
	ITEMS SPECIFIC TO STEEL SUPERSTRUCTURE ALTERNATE	WIN 19273.00	
502.412	Structural Concrete Superstructure Special (14 CY)	1	LS
502.58	Ultra-High Performance Structural Concrete (93 CY)	1	LS
506.9103	Galvanizing	1	LS
506.9104	Thermal Spray Coating - Shop Applied	1	LS
515.21	Protective Coating for Concrete Surfaces (4380 SY)	1	LS
515.26	Elastomeric Coating - Shop Applied (55 SY)	1	LS
521.23	Expansion Device - Finger Joint	3	EA
521.32	Fabric Trough for Finger Joint	3	EA
530.04	Prefabricated Bridge Structure and Assembly (Concrete: 1150 CY)	1	LS
	(Steel: 1,326,800 LB)		

ESTIMATED QUANTITIES

ITEM NO.	DESCRIPTION	QUANTITY	UNIT
	ITEMS SPECIFIC TO CONCRETE SUPERSTRUCTURE ALTERNATE	WIN 19273.00	
502.412	Structural Concrete Superstructure Special (8 CY)	1	LS
502.58	Ultra-High Performance Structural Concrete (108 CY)	1	LS
515.21	Protective Coating for Concrete Surfaces (5350 SY)	1	LS
515.26	Elastomeric Coating - Shop Applied (230 SY)	1	LS
520.21	Expansion Device - Gland Seal	3	EA
535.622	Prestressed Structural Concrete NEXT Beam (2280 CY)	1	LS

STATE OF MAINE
DEPARTMENT OF TRANSPORTATION

NHPP - 1927(300)

WIN 19273.00

BRIDGE NO. 3838

BRIDGE PLANS

vhb

PROJ. MANAGER	J. KITTREDGE		
DESIGN-DETAILED	KZS	KDW	12/15
CHECKED-REVIEWED	KZS	JGM	12/15
DESIGN2-DETAILED2	---	SMH	---
DESIGN3-DETAILED3	---	---	---
REVISIONS 1	---	---	---
REVISIONS 2	---	---	---
REVISIONS 3	---	---	---
REVISIONS 4	---	---	---
FIELD CHANGES	---	---	---

WEST APPROACH BRIDGE
MAINE OWNED RR & CITY STREETS
BATH SAGADAHOC COUNTY

QUANTITIES

SHEET NUMBER
3
OF 145

Filename: ...\MSTA\003_quantities_01.dgn Division: HIGHWAY Username: kwentworth Date:12/22/2015

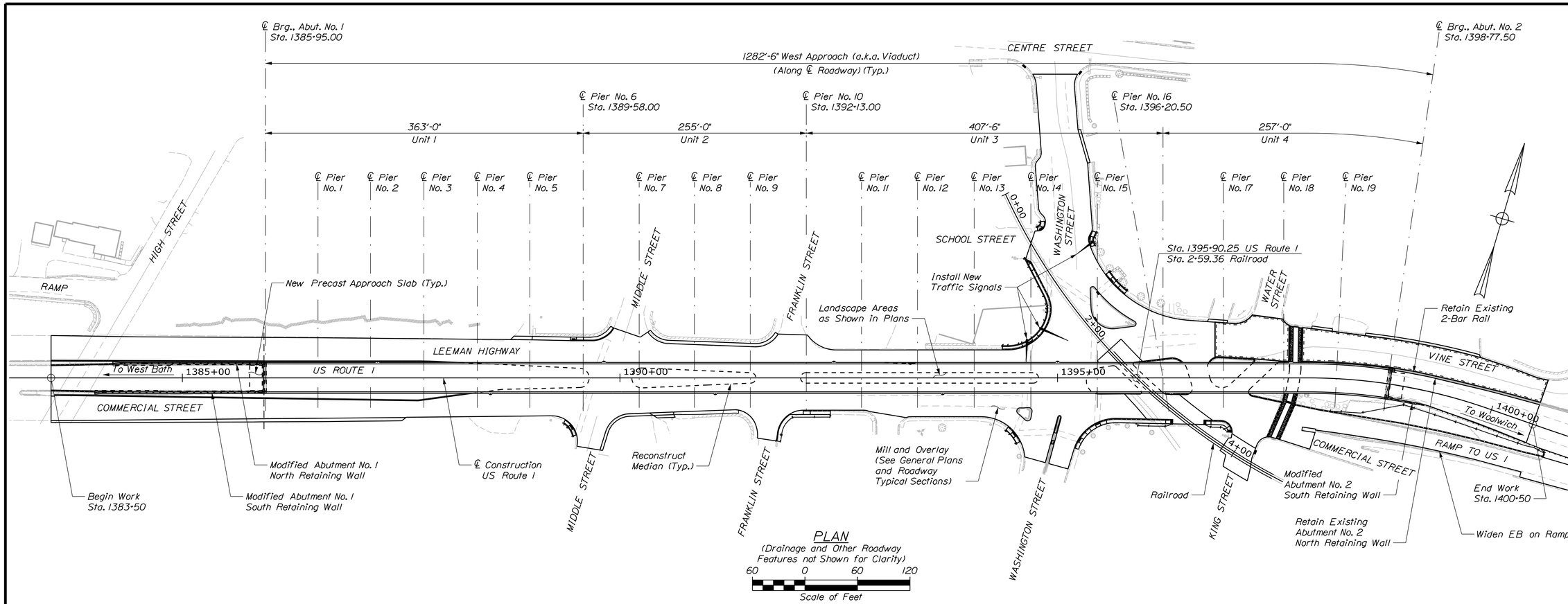

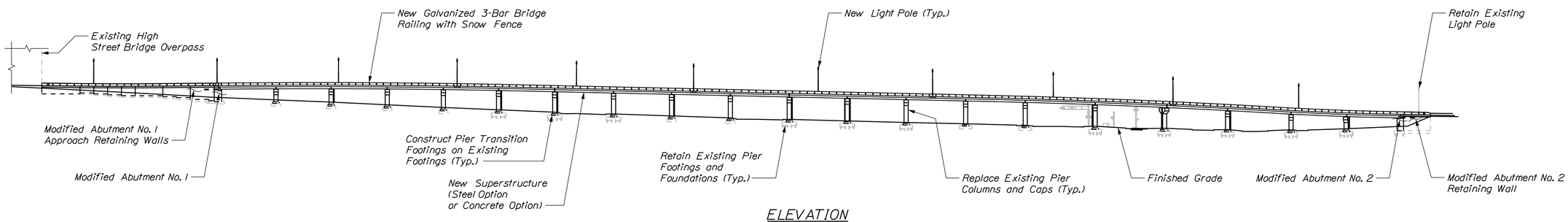

ELEVATION

GENERAL CONSTRUCTION PHASING

A general outline of the work is summarized below. This outline does not include all elements of the work and may be subject to change to conform to specific prosecution of work and traffic restrictions in the contract documents.

PHASE I

The following work is anticipated to be constructed wholly or in part prior to closing the US Route 1 viaduct bridge:

- Install new drainage along the Frontage Roads
- Install new concrete facing along Abutment No. 1 retaining walls (except for upper section above horizontal construction joint)
- Overlay Vine Street as indicated
- Install new mast arm signal at 1394+80 LT and equip for temporary traffic control condition
- Install new traffic controller cabinet and relocate/reconfigure existing cabinet as indicated
- Replace track grade crossing to limits shown, extend drain pipe under track with steel casing pipe. (New crossing installed by MaineDOT)
- Widen ramp from Commercial Street to US 1 EB
- Remove conflicting pavement markings and install new temporary pavement markings along Frontage Roads
- Remove island at Washington Street and Commercial Street

PHASE II

The following work is anticipated to be constructed wholly or in part during the closure of the US Route 1 viaduct bridge:

- Remove structure to limits provided
- Partially remove abutment and retaining wall sections and reconstruct as indicated
- Construct new pier transition footings, columns, and pier caps
- Furnish and install new superstructure (concrete or steel option)
- Reconstruct/Install new drainage at Abutment No. 1 approach
- Grout columns and caps as required
- Construct longitudinal zipper pours between beam units as temperatures allow
- Construct link slabs and link curbs within each bridge unit as temperatures allow
- Construct expansion joints and curb closures
- Construct approaches to viaduct bridge
- Grind UHPC closures as required
- Install waterproofing membrane and pavement
- Install bridge railing, snow fencing, lighting, transition barriers, and approach guardrail
- Complete traffic signal installations

PHASE III

The following work is anticipated to be completed after the US Route 1 viaduct is re-opened to traffic:

- Construct final curb, median, and sidewalk areas
- Mill and overlay roadways as indicated
- Install final striping
- Coat concrete surfaces as required
- Install landscaping treatments as indicated
- Adjust drainage structures to final grade

NOTES

1. The Bridge has been detailed in these Plans as Four Bridge Units. Each Unit consists of a Continuous Superstructure separated by a Bridge Expansion Joint.

2. See General Plans and Roadway Typicals for work along Frontage Roads and other roadways.

STATE OF MAINE
DEPARTMENT OF TRANSPORTATION

NHPP - 1927(300)

WIN 19273.00

BRIDGE NO. 3838

BRIDGE PLANS

vhb

		BY	DATE
PROJ. MANAGER	J. KITTREDGE		
DESIGN-DETAILED	KZS	KDW	12/15
CHECKED-REVIEWED	JGM	SMH	12/15
DESIGN2-DETAILED2	---	---	---
DESIGN3-DETAILED3	---	---	---
REVISIONS 1	---	---	---
REVISIONS 2	---	---	---
REVISIONS 3	---	---	---
REVISIONS 4	---	---	---
FIELD CHANGES	---	---	---

WEST APPROACH BRIDGE
MAINE OWNED RR & CITY STREETS
BATH SAGADAHOC COUNTY

GENERAL PLAN AND ELEVATION

SHEET NUMBER
4
OF 145

Filename: ...\MSTA\004_bridgeplan_01.dgn Division: HIGHWAY Username: kwentworth Date:12/21/2015

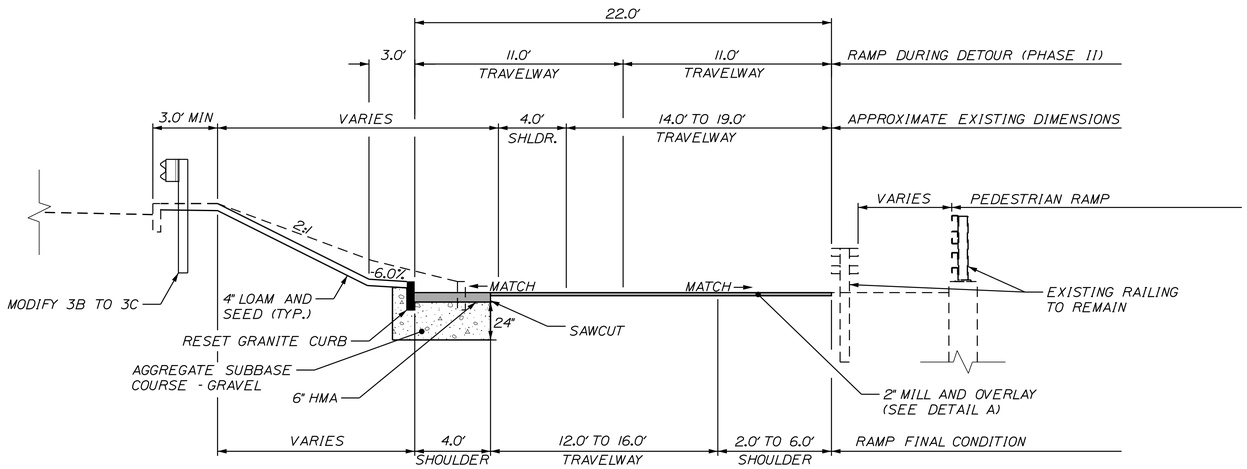

EASTBOUND US ROUTE 1 ON-RAMP
STA. 1398+00 TO STA. 1401+50, RT

NOTES:

1. THE PAVEMENT, BASE, AND SUBBASE AS SHOWN ON THE PLANS ARE INTENDED TO BE NOMINAL.
2. CROWNS FOR BOTH NORMAL AND SUPERELEVATION SECTIONS FOR ALL COURSES OF SUBBASE AND PAVEMENT SHALL BE STRAIGHT.
3. THE ALGEBRAIC DIFFERENCE BETWEEN SHOULDER AND TRAVEL LANE CROSS SLOPE'S "ROLLOVER" SHALL NOT EXCEED 8%.
4. THE STATION SHOWN UNDER EACH TYPICAL IS APPROXIMATE.
5. MILL AND OVERLAYS SHALL BE MILLED TO DEPTH.

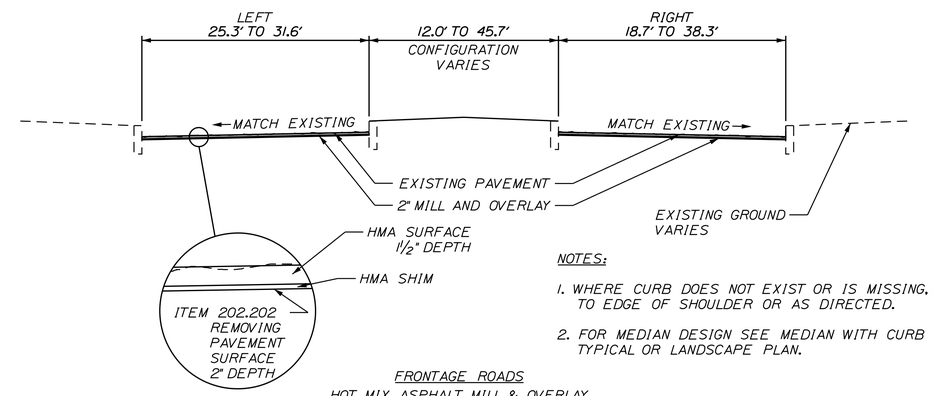

DETAIL A

NOTES:

1. WHERE CURB DOES NOT EXIST OR IS MISSING, MILL TO EDGE OF SHOULDER OR AS DIRECTED.
2. FOR MEDIAN DESIGN SEE MEDIAN WITH CURB TYPICAL OR LANDSCAPE PLAN.

FRONTAGE ROADS
HOT MIX ASPHALT MILL & OVERLAY
STA. 1385+96 TO STA. 1396+80, LT
STA. 1385+96 TO STA. 1398+00, RT

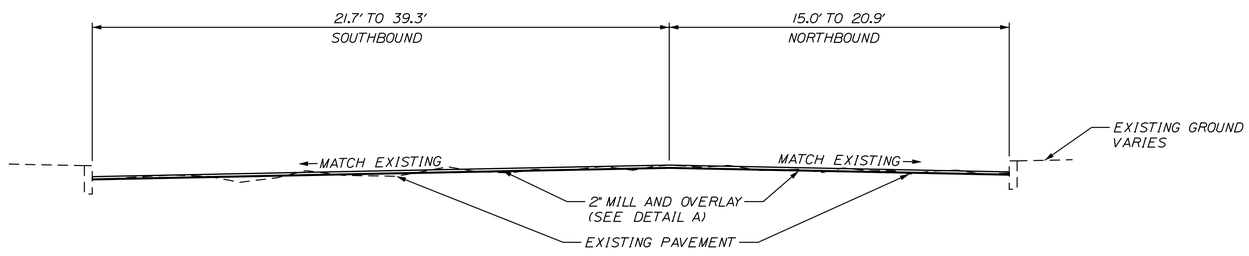

WASHINGTON STREET
(LOOKING NORTHERLY)

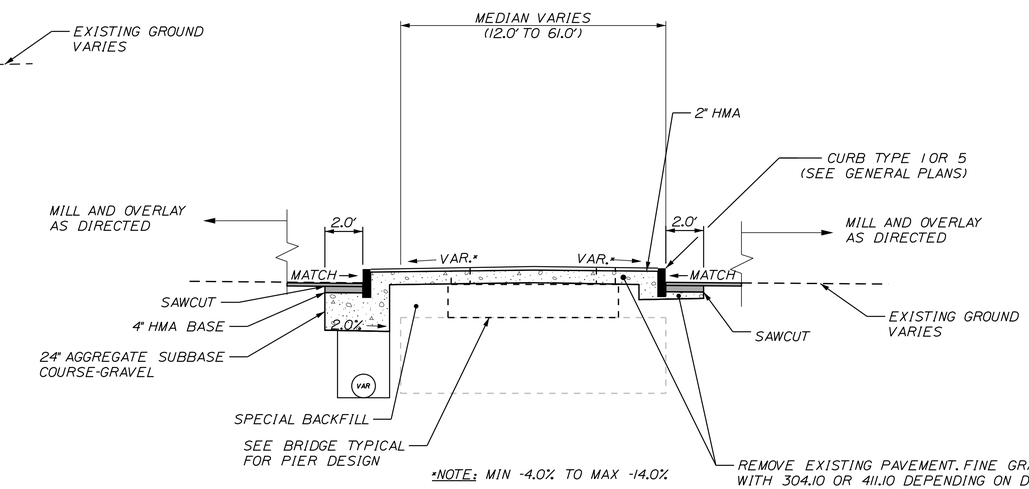

*NOTE: MIN -4.0% TO MAX -14.0%

FRONTAGE ROADS
MEDIAN WITH CURB
STA 1385+96 TO STA 1389+64
STA 1390+20 TO STA 1391+55
OTHER ISLANDS SEE LANDSCAPE PLANS

NOT TO SCALE

STATE OF MAINE
DEPARTMENT OF TRANSPORTATION

NHPP - 1927(300)

WIN 19273.00

BRIDGE NO. 3838

BRIDGE PLANS

vhb

PROJ. MANAGER	J. KITTREDGE	BY	DATE
DESIGN-DETAILED	ECF	SAB	12/15
CHECKED-REVIEWED	AG	SMH	12/15
DESIGN2-DETAILED2	---	---	---
DESIGN3-DETAILED3	---	---	---
REVISIONS 1	---	---	---
REVISIONS 2	---	---	---
REVISIONS 3	---	---	---
REVISIONS 4	---	---	---
FIELD CHANGES	---	---	---

WEST APPROACH BRIDGE
MAINE OWNED RR & CITY STREETS
BATH SAGADAHOC COUNTY

ROADWAY TYPICALS

SHEET NUMBER
5
OF 145

Filename: ...\MSTA\005_Typical_Highway.dgn Division: HIGHWAY Username: eflynn Date:12/21/2015

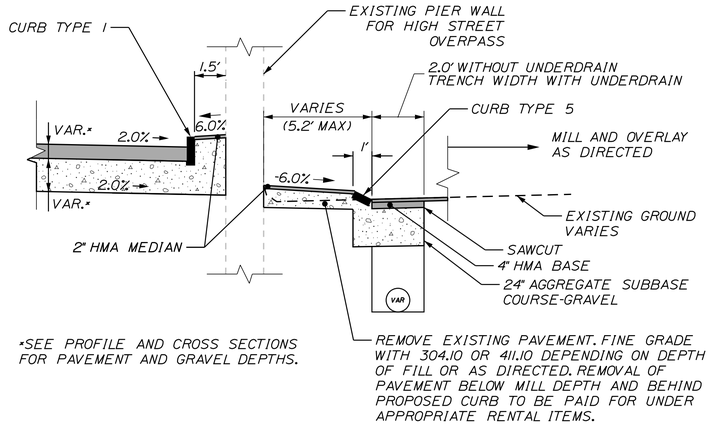

US ROUTE 1
CURB RECONSTRUCTION AT HIGH STREET OVERPASS

STA 1383+50 TO STA 1384+00 RT
STA 1383+50 TO STA 1384+20 LT

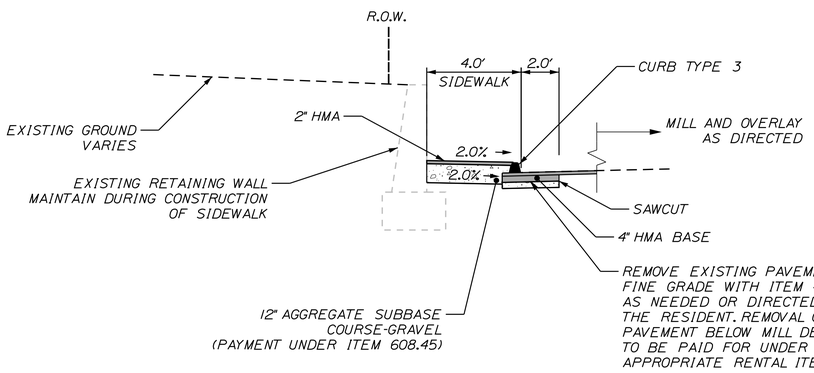

FRONTAGE ROADS
SIDEWALK ADJACENT TO RETAINING WALL

STA 1389+43 LT TO STA 1389+93 LT

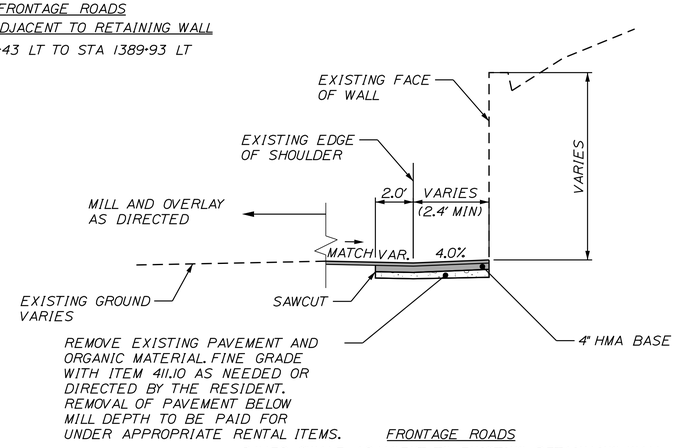

FRONTAGE ROADS
PAVED SWALE ADJACENT TO EXISTING RETAINAING WALL

STA 1383+50 RT TO STA 1387+51 RT
STA 1389+00 LT TO STA 1389+43 LT
STA 1390+32 LT TO STA 1391+81 LT
STA 1390+60 RT TO STA 1391+25 RT
STA 1389+77 RT TO STA 1390+38 RT

NOTES

1. THE PAVEMENT, BASE, AND SUBBASE AS SHOWN ON THE PLANS ARE INTENDED TO BE NOMINAL.
2. CROWNS FOR BOTH NORMAL AND SUPERELEVATION SECTIONS FOR ALL COURSES OF SUBBASE AND PAVEMENT SHALL BE STRAIGHT.
3. THE ALGEBRAIC DIFFERENCE BETWEEN SHOULDER AND TRAVEL LANE CROSS SLOPE'S "ROLLOVER" SHALL NOT EXCEED 8%.
4. THE STATION SHOWN UNDER EACH TYPICAL IS APPROXIMATE.
5. MILL AND OVERLAYS SHALL BE MILLED TO DEPTH.

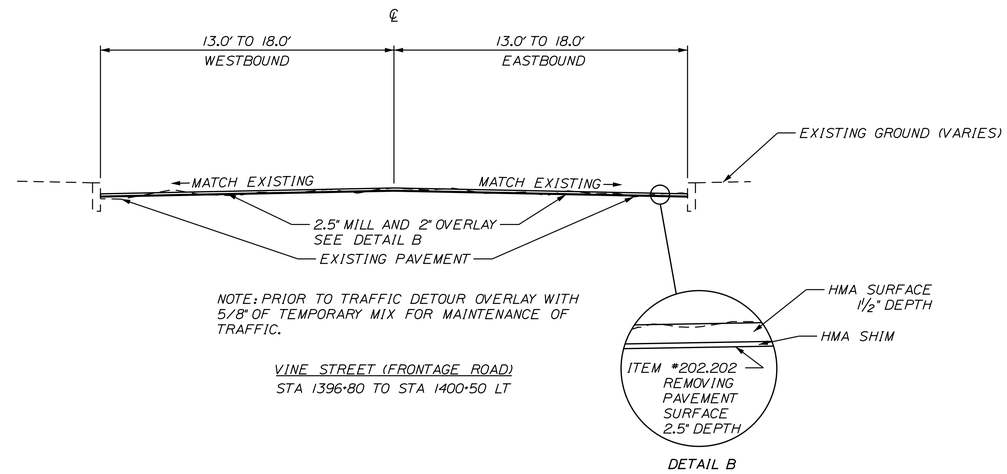

NOTE: PRIOR TO TRAFFIC DETOUR OVERLAY WITH 5/8" OF TEMPORARY MIX FOR MAINTENANCE OF TRAFFIC.

VINE STREET (FRONTAGE ROAD)
STA 1396+80 TO STA 1400+50 LT

DETAIL B

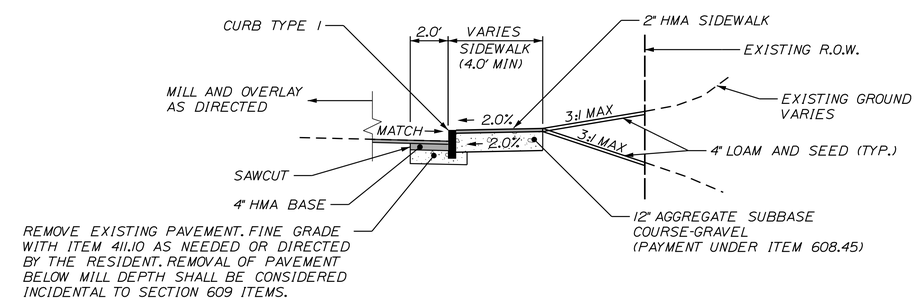

SIDEWALK WITH CURB TYPE 1

STA 1392+09 RT TO STA 1392+40 RT
STA 1395+19 RT TO STA 1396+32 RT
STA 1395+55 LT TO STA 1395+76 LT
STA 1396+67 RT TO STA 1397+00 RT
STA 1394+37 LT TO SCHOOL ST.
SEE PLANS FOR LOCATION ON WASHINGTON ST.

NOT TO SCALE

STATE OF MAINE
DEPARTMENT OF TRANSPORTATION

NHPP - 1927(300)

WIN 19273.00

BRIDGE NO. 3838

BRIDGE PLANS

vhb

PROJ. MANAGER	J. KITTREDGE		
DESIGN-DETAILED	ECF	SAB	12/15
CHECKED-REVIEWED	AG	SMH	12/15
DESIGN2-DETAILED2	---	---	---
DESIGN3-DETAILED3	---	---	---
REVISIONS 1	---	---	---
REVISIONS 2	---	---	---
REVISIONS 3	---	---	---
REVISIONS 4	---	---	---
FIELD CHANGES	---	---	---

WEST APPROACH BRIDGE
MAINE OWNED RR & CITY STREETS
BATH SAGADAHOC COUNTY

ROADWAY TYPICALS

SHEET NUMBER
6
OF 145

Filename: ...\MSTA\006_Typical_Highway.dgn Division: HIGHWAY Username: eflynn Date:12/21/2015

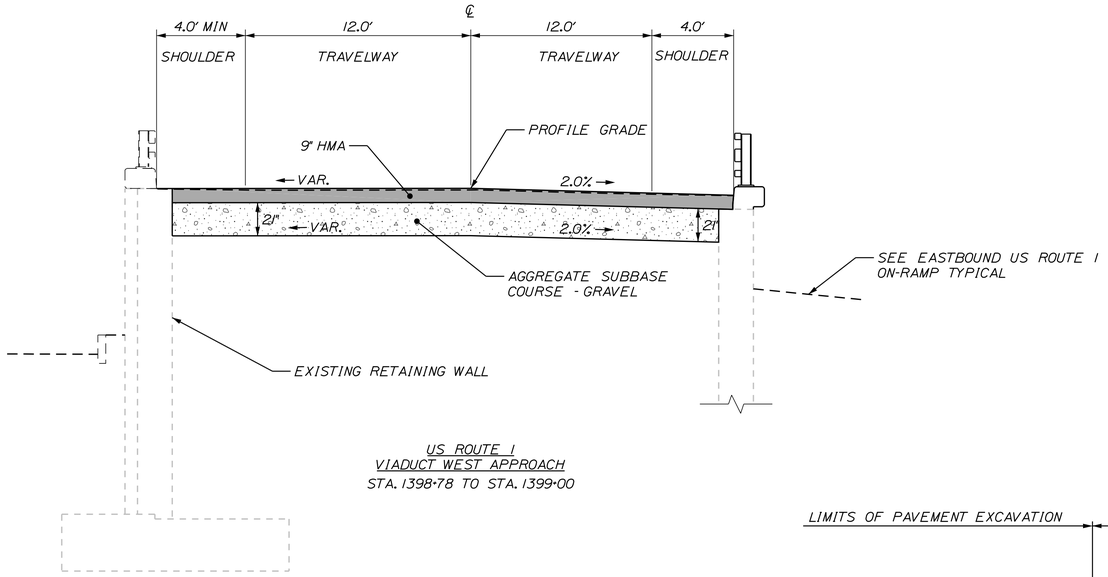

US ROUTE 1
VIADUCT WEST APPROACH
STA. 1398+78 TO STA. 1399+00

NOTE:

1. THE PAVEMENT, BASE, AND SUBBASE AS SHOWN ON THE PLANS ARE INTENDED TO BE NOMINAL.
2. CROWNS FOR BOTH NORMAL AND SUPERELEVATION SECTIONS FOR ALL COURSES OF SUBBASE AND PAVEMENT SHALL BE STRAIGHT.
3. THE ALGEBRAIC DIFFERENCE BETWEEN SHOULDER AND TRAVEL LANE CROSS SLOPE'S "ROLLOVER" SHALL NOT EXCEED 8%.
4. THE STATION SHOWN UNDER EACH TYPICAL IS APPROXIMATE.
5. MILL AND OVERLAYS SHALL BE MILLED TO DEPTH.

BATH VIADUCT SUPERELEVATION TABLE					
LT SHLDR %	LT TW %	STATION	RT TW %	RT SHLDR %	PIER #
		START			
-2.0	-2.0	1383+50	-2.0	-2.0	MATCH
		TO			
-2.0	-2.0	1396+90	-2.0	-2.0	17
-1.7	-1.7	1397+00	-2.0	-2.0	
-0.2	-0.2	1397+50	-2.0	-2.0	
0.0	0.0	1397+59	-2.0	-2.0	18
1.4	1.4	1398+00	-2.0	-2.0	
2.0	2.0	1398+19	-2.0	-2.0	19
		TO			
2.0	2.0	1398+78	-2.0	-2.0	ABUT
		TO			
2.0	2.0	1399+00	-2.0	-2.0	-
0.7	0.7	1399+50	-2.0	-2.0	
-0.7	-0.7	1400+00	-2.0	-2.0	
-2.0	-2.0	1400+50	-2.0	-2.0	MATCH
		END			

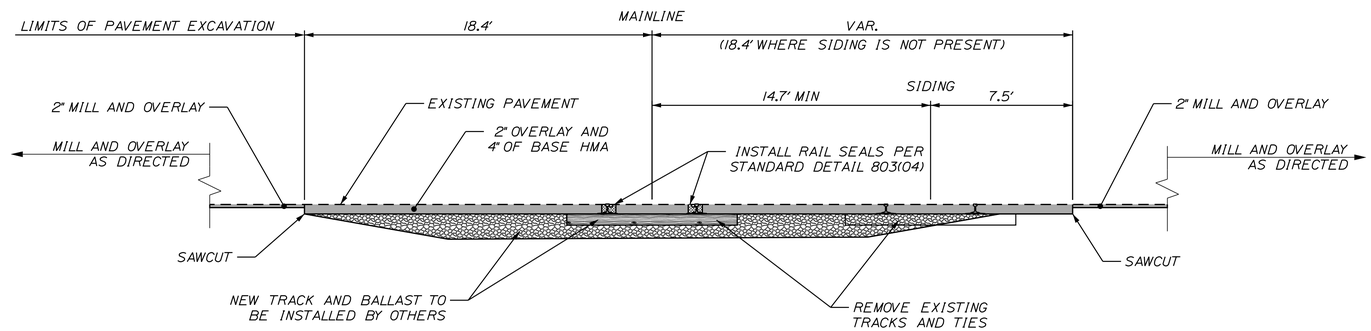

SECTION B-B
FRONTAGE ROADS RAILROAD CROSSING
REMOVE EXISTING RAILS AND
INSTALL NEW CROSSING
RAIL STA. 3+00 (SKEWED)
(SEE RAILROAD PLAN AND PROFILE SHEET)

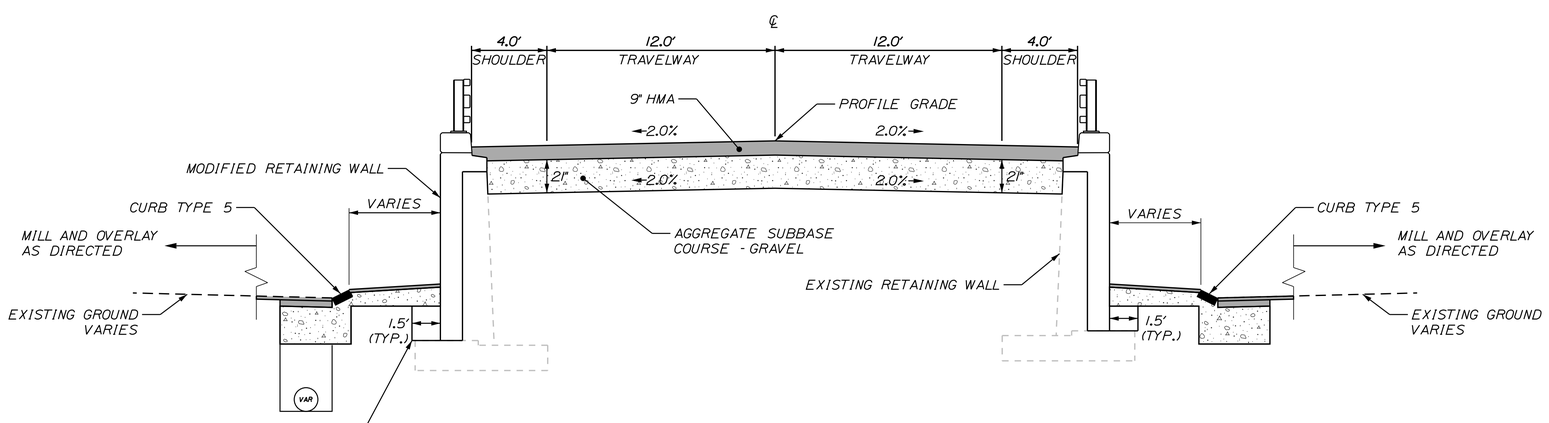

US ROUTE 1
VIADUCT EAST APPROACH
STA. 1384+00 TO STA. 1385+82

NOT TO SCALE

STATE OF MAINE
DEPARTMENT OF TRANSPORTATION

NHPP - 1927(300)

WIN 19273.00

BRIDGE NO. 3838

BRIDGE PLANS

vhb

		BY	DATE
PROJ. MANAGER	J. KITTREDGE		
DESIGN-DETAILED	ECF	SAB	12/15
CHECKED-REVIEWED	AG	SMH	12/15
DESIGN2-DETAILED2	---	---	---
DESIGN3-DETAILED3	---	---	---
REVISIONS 1	---	---	---
REVISIONS 2	---	---	---
REVISIONS 3	---	---	---
REVISIONS 4	---	---	---
FIELD CHANGES	---	---	---

WEST APPROACH BRIDGE
MAINE OWNED RR & CITY STREETS
BATH SAGADAHOC COUNTY

ROADWAY TYPICALS

SHEET NUMBER
7
OF 145

Filename: ...\MSTA\007_Typical_Highway.dgn Division: HIGHWAY Username: eflynn Date:12/21/2015

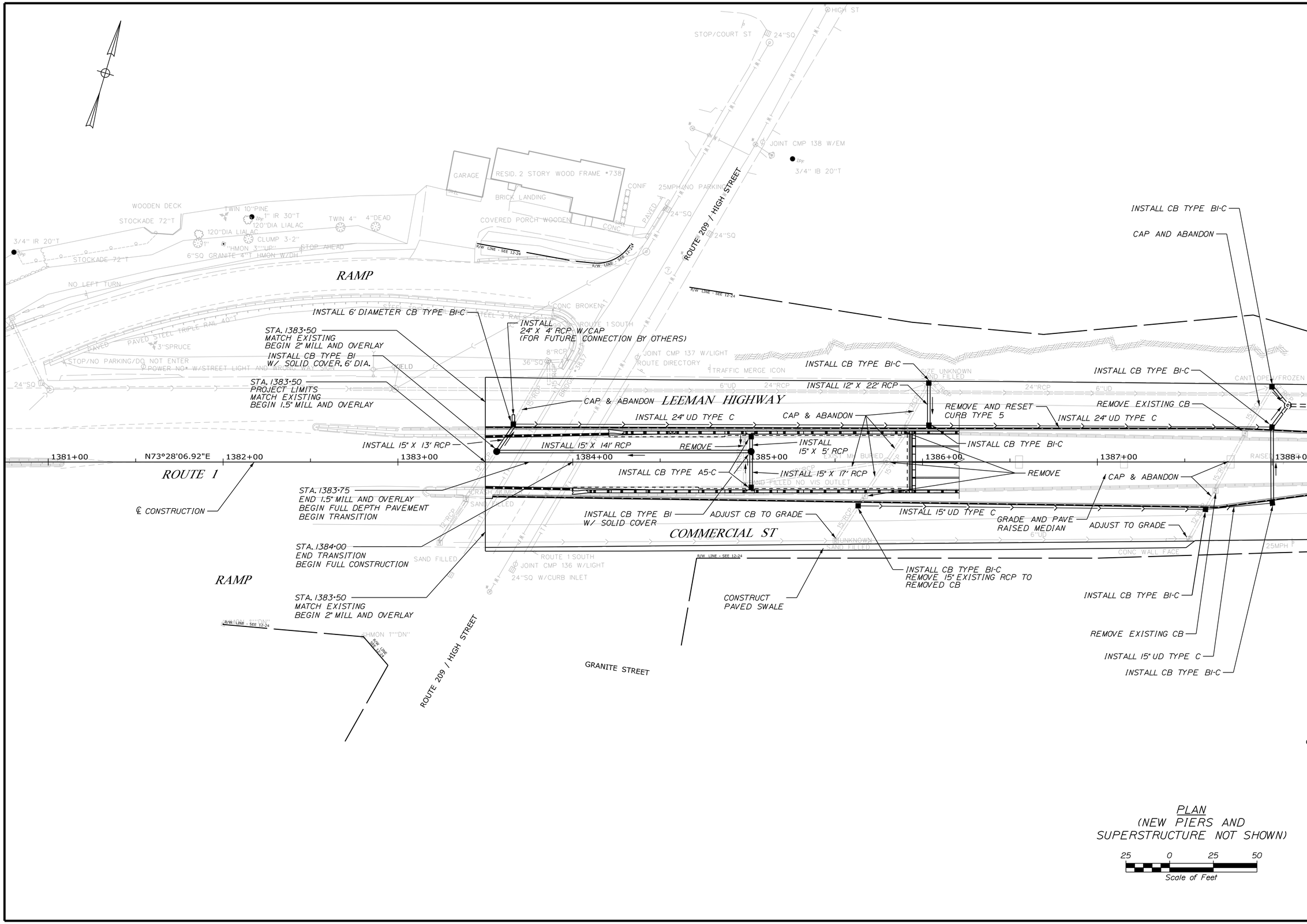

STATE OF MAINE
DEPARTMENT OF TRANSPORTATION

NHPP - 1927(300)

WIN 19273.00

BRIDGE NO. 3838

BRIDGE PLANS

vhb

PROJ. MANAGER	J. KITTREDGE		
DESIGN-DETAILED	ECF	SAB	12/15
CHECKED-REVIEWED	AG	SMH	12/15
DESIGN2-DETAILED2	---	---	---
DESIGN3-DETAILED3	---	---	---
REVISIONS 1	---	---	---
REVISIONS 2	---	---	---
REVISIONS 3	---	---	---
REVISIONS 4	---	---	---
FIELD CHANGES	---	---	---

WEST APPROACH BRIDGE
MAINE OWNED RR & CITY STREETS
BATH SAGADAHOC COUNTY

GENERAL PLANS (1 OF 4)

SHEET NUMBER

8

OF 145

Filename: ...\HIGHWAY\MSTA\008_HDPlan1.dgn Division: HIGHWAY Username: eflynn Date:12/21/2015

NOTES

- THE CITY OF BATH HAS PLANS FOR A DRAINAGE RELOCATION PROJECT FROM APPROXIMATE STA 1388+09, LT TO APPROXIMATE STA 1393+32, LT. THE STRUCTURES SHOWN AS BOLD DASHED ON THIS SHEET WILL BE INSTALLED BY OTHERS PRIOR TO JUNE 1, 2016. THE INFORMATION CONTAINED WITHIN THESE PLANS REPRESENTS THE MOST RECENT INFORMATION PROVIDED BY THE CITY OF BATH AT TIME OF ADVERTISE.
- PRIOR TO CONNECTING THE 24" RCP PIPE TO STUB PIPE INSTALLED AS PART OF THE DRAINAGE RELOCATION PROJECT AT APPROXIMATE STA 1393+37, LT THE CONTRACTOR SHALL NOTIFY THE RESIDENT SO THE CITY OF BATH CAN BE NOTIFIED TO PLUG THE TEMPORARY 15" PIPE.
- APPLY ITEM 658.20 ACRYLIC LATEX COLOR FINISH TO RAISED MEDIAN ISLANDS FROM STA 1385+94 TO 1391+55 AND FROM STA 1398+16 TO STA 1398+78 OR AS DIRECTED BY THE RESIDENT. SEE SPRECIAL PROVISION 658.

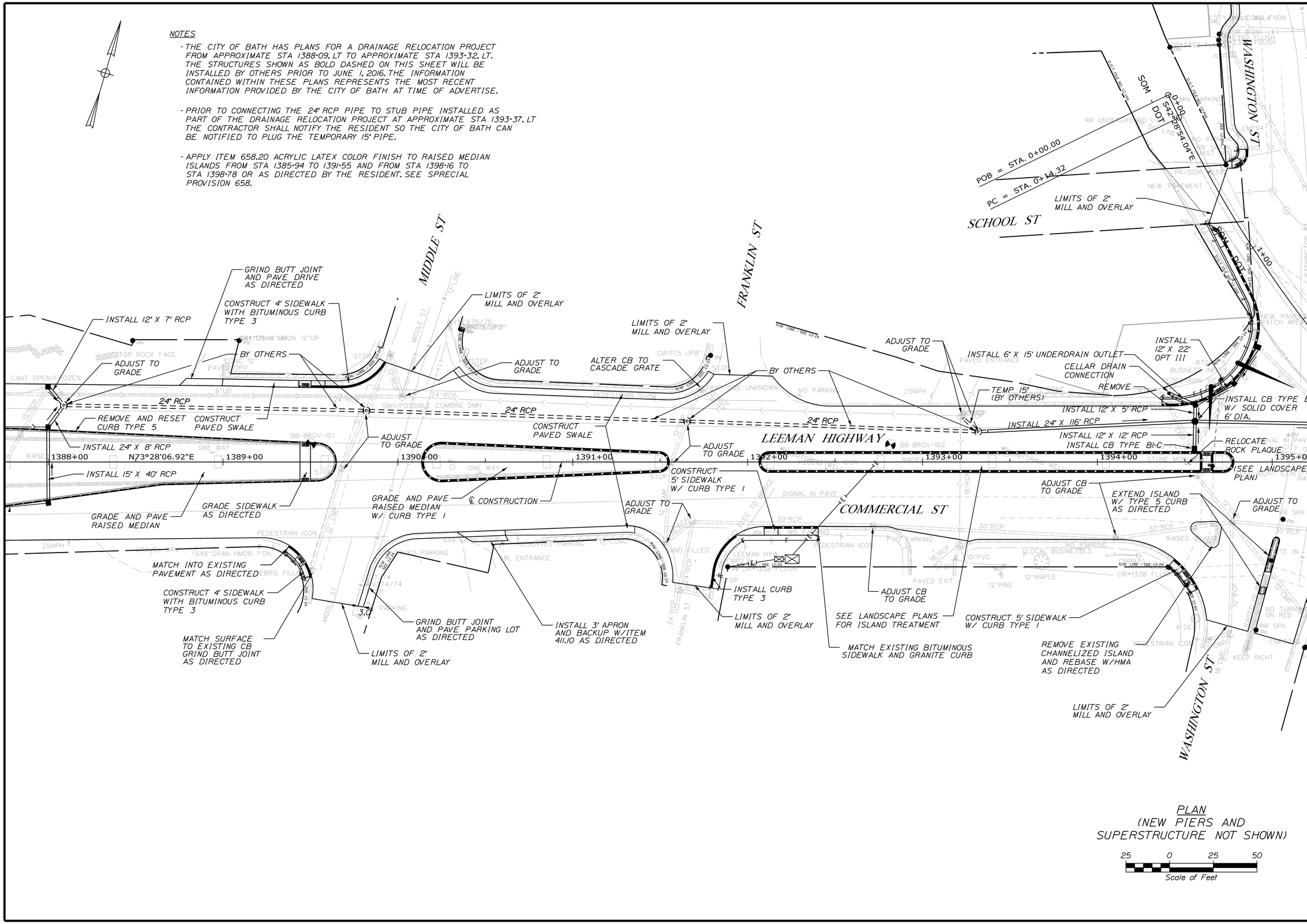

PLAN
(NEW PIERS AND SUPERSTRUCTURE NOT SHOWN)

25 0 25 50
Scale of Feet

STATE OF MAINE
DEPARTMENT OF TRANSPORTATION

NHPP - 1927(300)

WIN 19273.00

BRIDGE NO. 3838

BRIDGE PLANS

vhb

		BY	DATE
PROJ. MANAGER	J. KITTREDGE		
DESIGN-DETAILED	ECF	SAB	12/15
CHECKED-REVIEWED	AG	SMH	12/15
DESIGN2-DETAILED2	...	...	...
DESIGN3-DETAILED3	...	...	...
REVISIONS 1	...	...	...
REVISIONS 2	...	...	...
REVISIONS 3	...	...	...
REVISIONS 4	...	...	...
FIELD CHANGES	...	...	...

WEST APPROACH BRIDGE
MAINE OWNED RR & CITY STREETS
BATH SAGADAHOC COUNTY

GENERAL PLANS (2 OF 4)

SHEET NUMBER
9
OF 145

Filename: ...\HIGHWAY\MSTA\009_HDPlan2.dgn Division: HIGHWAY Username: eflynn Date:12/21/2015

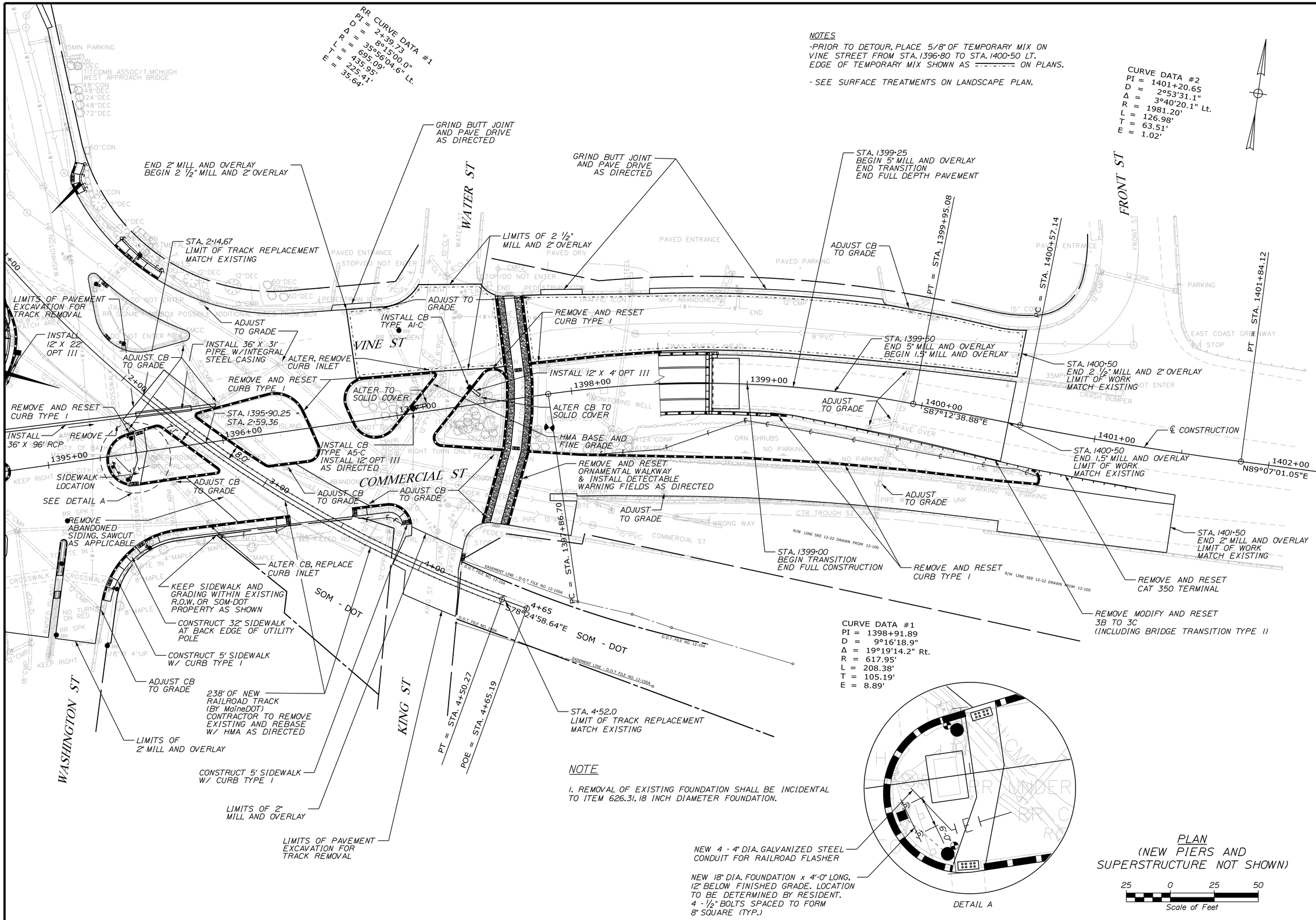

STATE OF MAINE
DEPARTMENT OF TRANSPORTATION

NHPP - 1927(300)

WIN 19273.00

BRIDGE NO. 3838

BRIDGE PLANS

vhb

	BY	DATE
PROJ. MANAGER	J. KITTREDGE	
DESIGN-DETAILED	ECF	SAB 12/15
CHECKED-REVIEWED	AG	SMH 12/15
DESIGN2-DETAILED2	...	...
DESIGN3-DETAILED3	...	...
REVISIONS 1	...	...
REVISIONS 2	...	...
REVISIONS 3	...	...
REVISIONS 4	...	...
FIELD CHANGES	...	...

WEST APPROACH BRIDGE
MAINE OWNED RR & CITY STREETS
BATH SAGADAHOC COUNTY

GENERAL PLANS (3 OF 4)

SHEET NUMBER
10
OF 145

Filename: ...\HIGHWAY\MSTA\010_HDPlan3.dgn Division: HIGHWAY Username: eflynn Date:12/21/2015

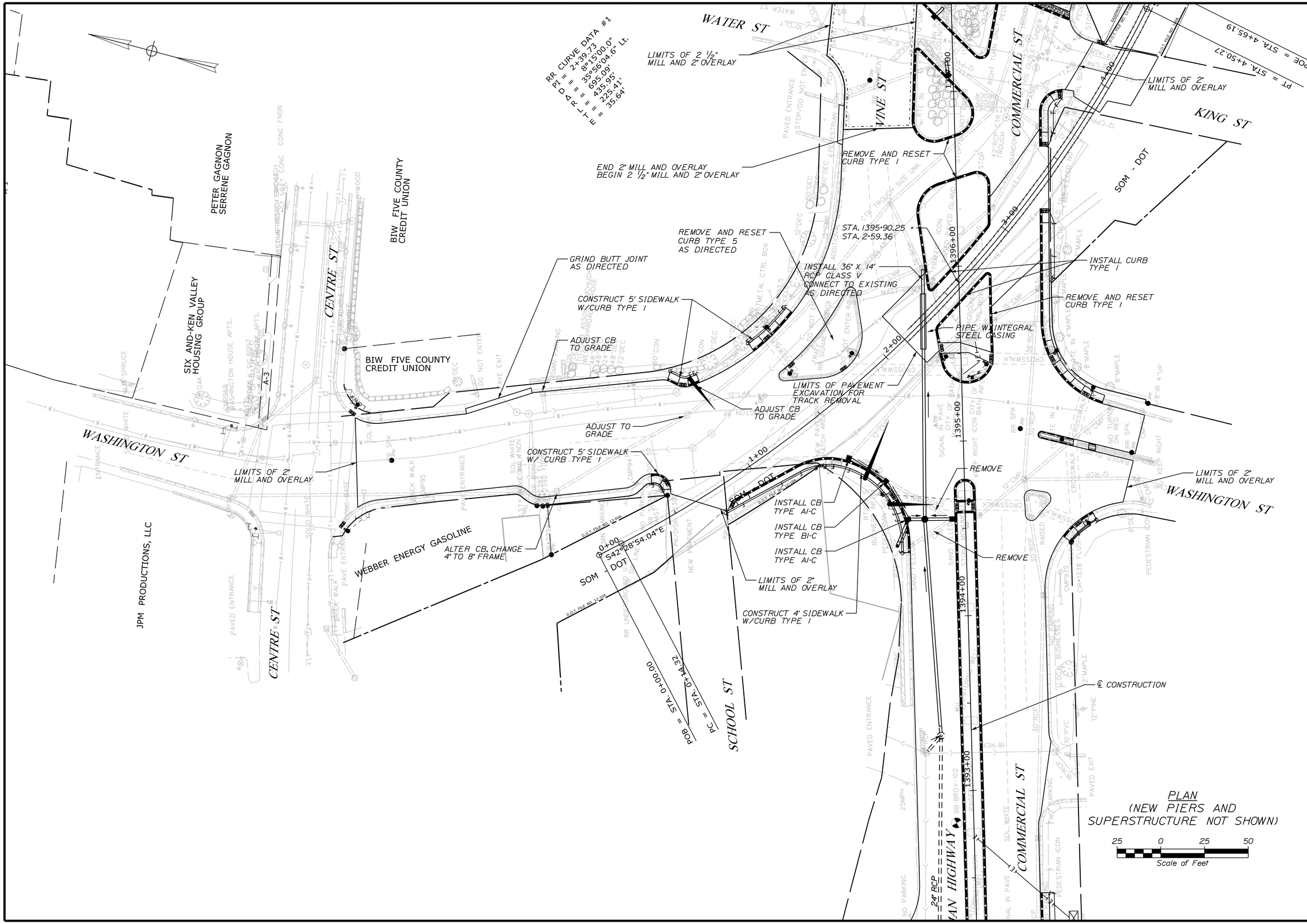

STATE OF MAINE
DEPARTMENT OF TRANSPORTATION

NHPP - 1927(300)

WIN 19273.00

BRIDGE NO. 3838

BRIDGE PLANS

vhb

PROJ. MANAGER	J. KITTREDGE	BY	DATE
DESIGN-DETAILED	ECF	SAB	12/15
CHECKED-REVIEWED	AG	SMH	12/15
DESIGN2-DETAILED2	---	---	---
DESIGN3-DETAILED3	---	---	---
REVISIONS 1	---	---	---
REVISIONS 2	---	---	---
REVISIONS 3	---	---	---
REVISIONS 4	---	---	---
FIELD CHANGES	---	---	---

WEST APPROACH BRIDGE
MAINE OWNED RR & CITY STREETS
BATH SAGADAHOC COUNTY

GENERAL PLANS (4 OF 4)

SHEET NUMBER

11

OF 145

Filename: ...\HIGHWAY\MSTA\011_HDPlan4.dgn Division: HIGHWAY Username: eflynn Date:12/21/2015

PLANT MATERIALS

Item No.	Description	Unit	Quant.	Total
621.101	Groundcover Plugs Min. 2¼" cont.	Ea.		300
	Vinca minor (Periwinkle/Vinca)		300	
621.389	Evergreen Shrubs 15" - 18" Cont. Group A	Ea.		72
	Juniperus horizontalis 'Bar Harbor' (Bar Harbor Juniper)		36	
	Juniperus pfitzeriana compacta (Dwarf Pfitzer Juniper)		36	
621.397	Evergreen Shrubs 18" - 24" Group C	Ea.		18
	Picea abies nidiformis (Birds Nest Spruce)		18	
621.401	Evergreen Shrubs 2' - 2½' Group A	Ea.		3
	Taxus hicksii (Hick's Yew)		3	
621.51	Deciduous Shrubs 15" - 18" cal. Gr. A Cont.	Ea.		108
	Spiraea alpinum (Dwarf Alpine Spiraea)		36	
	Potentilla 'Mango Tango' (Dwarf Peach Potentilla)		36	
	Comptonia peregrina (Sweet Fern)		36	
621.54	Deciduous Shrubs 18" - 24" Group A	Ea.		42
	Ilex verticillata 'Red Sprite' (Dwarf R. Sprite Winterberry)		36	
	Ilex verticillata 'Jim Dandy'		6	
621.546	Deciduous Shrubs 2' - 3' Group A	Ea.		42
	Cornus sericea (Red Twig Dogwood)		12	
	Myrica pensylvanica (Northern Bayberry)		12	
	Viburnum dentatum (Arrowwood Viburnum)		12	
	Hydrangea paniculata grandiflora (Pee-Gee Snowball)		6	
621.554	Deciduous Shrubs 3' - 4' Group C	Ea.		6
	Fothergilla gardennii (Dwarf Bottlebrush)		6	
621.71	Herbaceous Perennials Group A 1 gallon	Ea.		280
	Hemerocallis Joyful, Yellow Monmouth, Real Wind, Rosy		160	
	Nepeta mussinii 'Blue Wonder'		48	
	Perovskia atriplicifolia 'Little Spires'		48	
	Panicum 'North Wind'		24	
621.71	Herbaceous Perennials Group A 2 quart/cont.	Ea.		132
	Astilbe 'Bridal Veil', Astilbe 'Younique' A. sprite		60	
	Coreopsis 'Moonbeam'		36	
	Amsonia tabernaemontana 'Blue Star'		36	

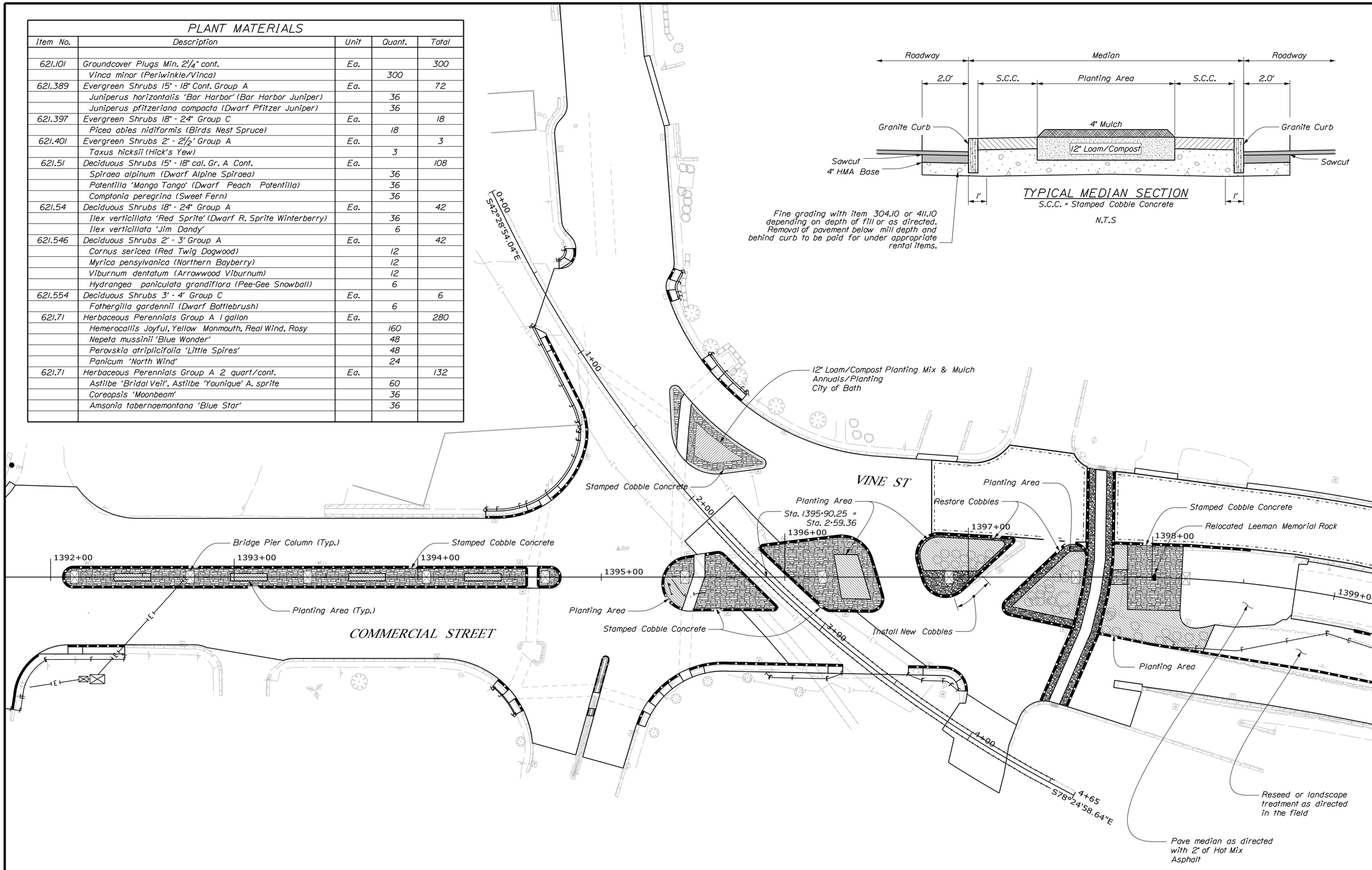

TYPICAL MEDIAN SECTION
S.C.C. = Stamped Cobble Concrete
N.T.S

LANDSCAPE PLAN

STATE OF MAINE
DEPARTMENT OF TRANSPORTATION

NHPP - 1927(300)

WIN 19273.00

BRIDGE NO. 3838

BRIDGE PLANS

PROJ. MANAGER	J. Kittredge	BY	DATE
DESIGN-DETAILED	K. Cooper	D. Damren	Sept. 2015
CHECKED-REVIEWED	---	---	---
DESIGN2-DETAILED2	---	---	---
DESIGN3-DETAILED3	---	---	---
REVISIONS 1	---	---	---
REVISIONS 2	---	---	---
REVISIONS 3	---	---	---
REVISIONS 4	---	---	---
FIELD CHANGES	---	---	---

WEST APPROACH BRIDGE
MAINE OWNED RR & CITY STREETS
SAGADAHOC COUNTY
BATH

LANDSCAPE PLAN

SHEET NUMBER
12
OF 145

Filename: ...\MSTA\012_Bridge_Landscape.dgn Division: HIGHWAY Username: eflynn Date:12/21/2015

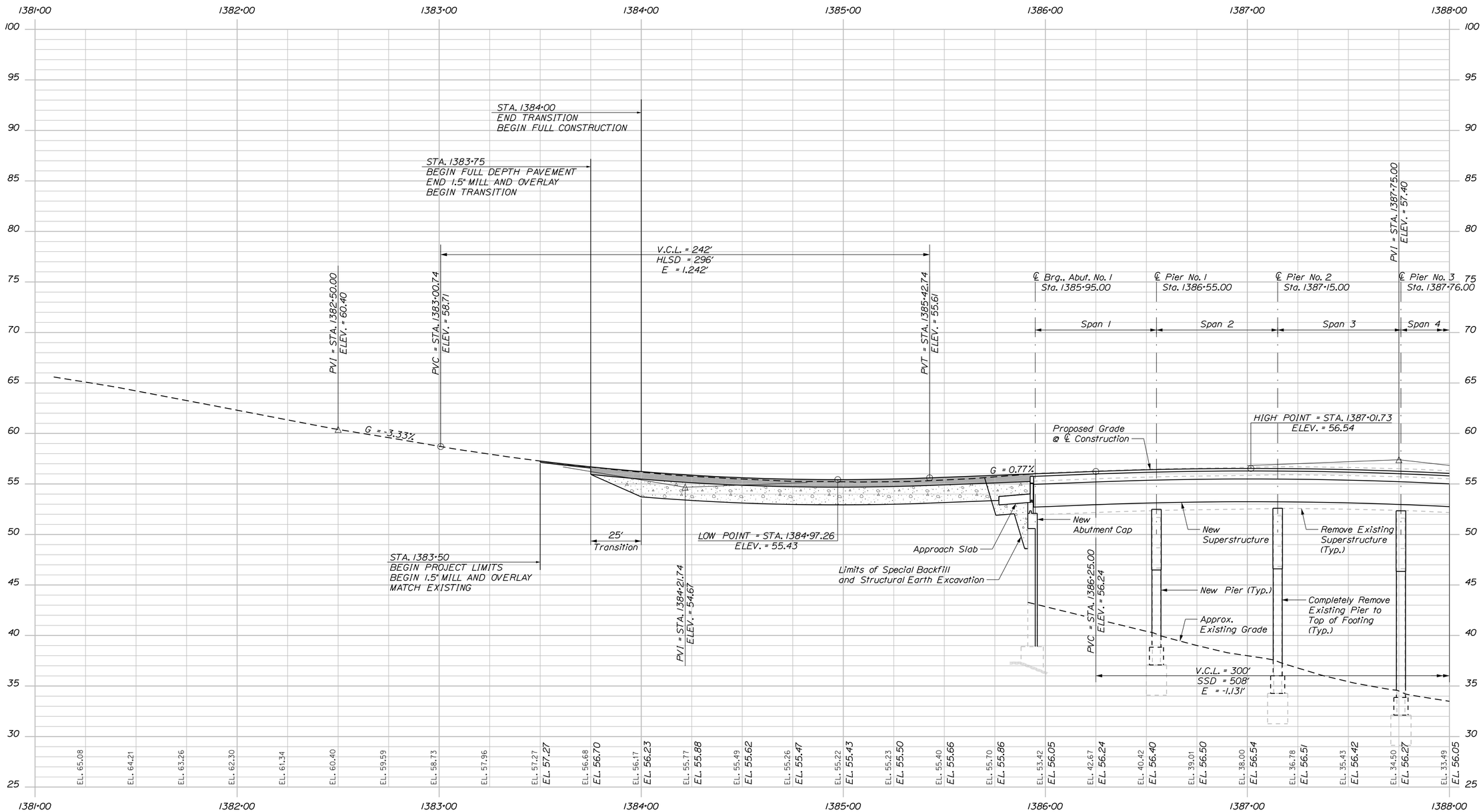

PROFILE

Horiz. 25 0 25 50

Vert. 5 0 5 10

Scale of Feet

STATE OF MAINE
DEPARTMENT OF TRANSPORTATION

NHPP - 1927(300)

WIN 19273.00

BRIDGE NO. 3838

BRIDGE PLANS

vhb

		BY	DATE
PROJ. MANAGER	J. KITTREDGE		
DESIGN-DETAILED	ECF	SAB	12/15
CHECKED-REVIEWED	AG	SMH	12/15
DESIGN2-DETAILED2	---	---	---
DESIGN3-DETAILED3	---	---	---
REVISIONS 1	---	---	---
REVISIONS 2	---	---	---
REVISIONS 3	---	---	---
REVISIONS 4	---	---	---
FIELD CHANGES	---	---	---

WEST APPROACH BRIDGE
MAINE OWNED RR & CITY STREETS
BATH SAGADAHOC COUNTY

PROFILE (1 OF 3)

SHEET NUMBER

13

OF 145

Filename: ...\HIGHWAY\MSTA\013_Profile1.dgn Division: HIGHWAY Username: eflynn Date:12/21/2015

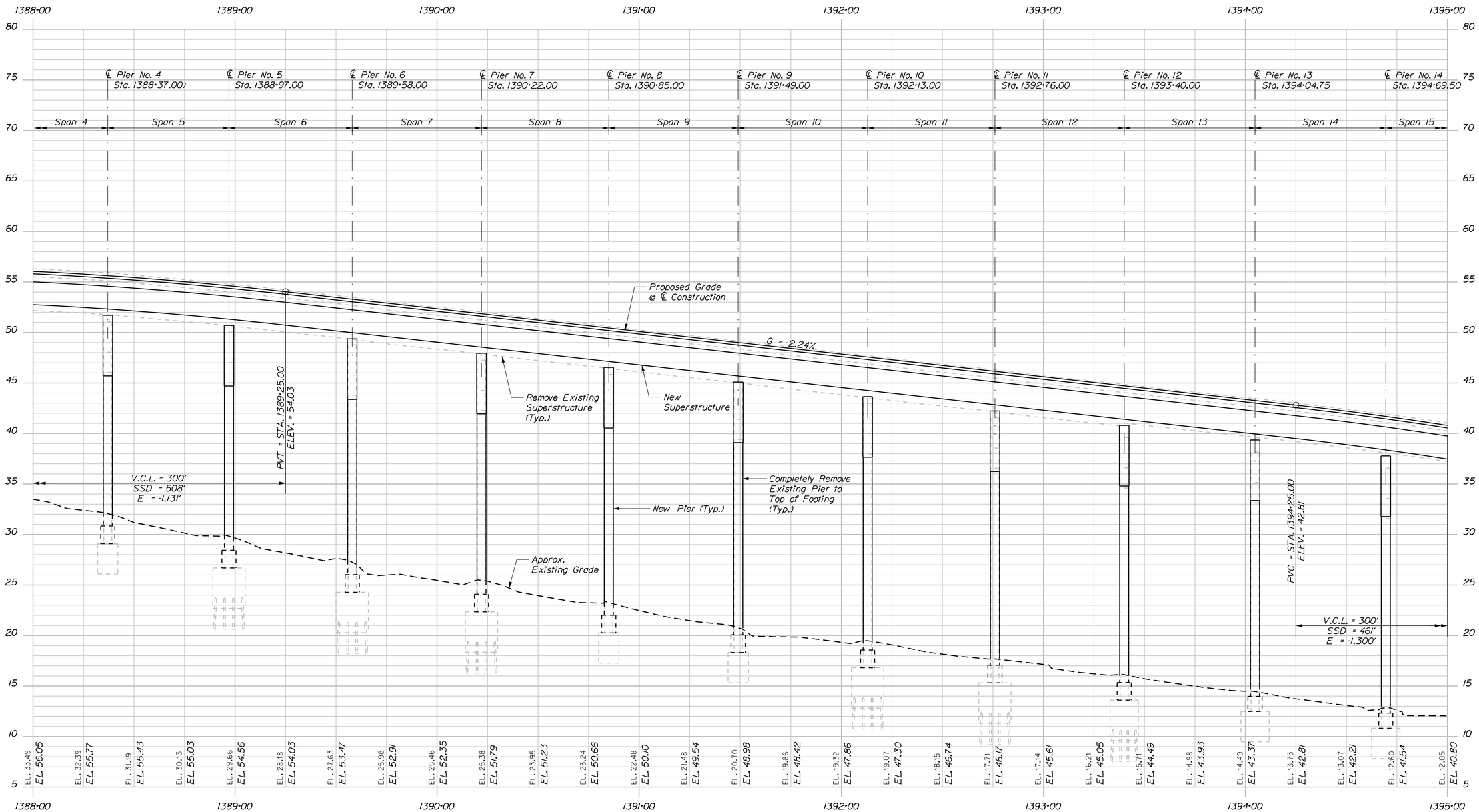

STATE OF MAINE
DEPARTMENT OF TRANSPORTATION

NHPP - 1927(300)

WIN 19273.00

BRIDGE NO. 3838

BRIDGE PLANS

vhb

		BY	DATE
PROJ. MANAGER	J. KITTREDGE		
DESIGN-DETAILED	ECF	SAB	12/15
CHECKED-REVIEWED	AG	SMH	12/15
DESIGN2-DETAILED2	---	---	---
DESIGN3-DETAILED3	---	---	---
REVISIONS 1	---		---
REVISIONS 2	---		---
REVISIONS 3	---		---
REVISIONS 4	---		---
FIELD CHANGES	---		---

WEST APPROACH BRIDGE
MAINE OWNED RR & CITY STREETS
BATH SAGADAHOC COUNTY

PROFILE (2 OF 3)

SHEET NUMBER

14

OF 145

Filename: ...\HIGHWAY\MSTA\014_Profile2.dgn Division: HIGHWAY Username: eflynn Date:12/21/2015

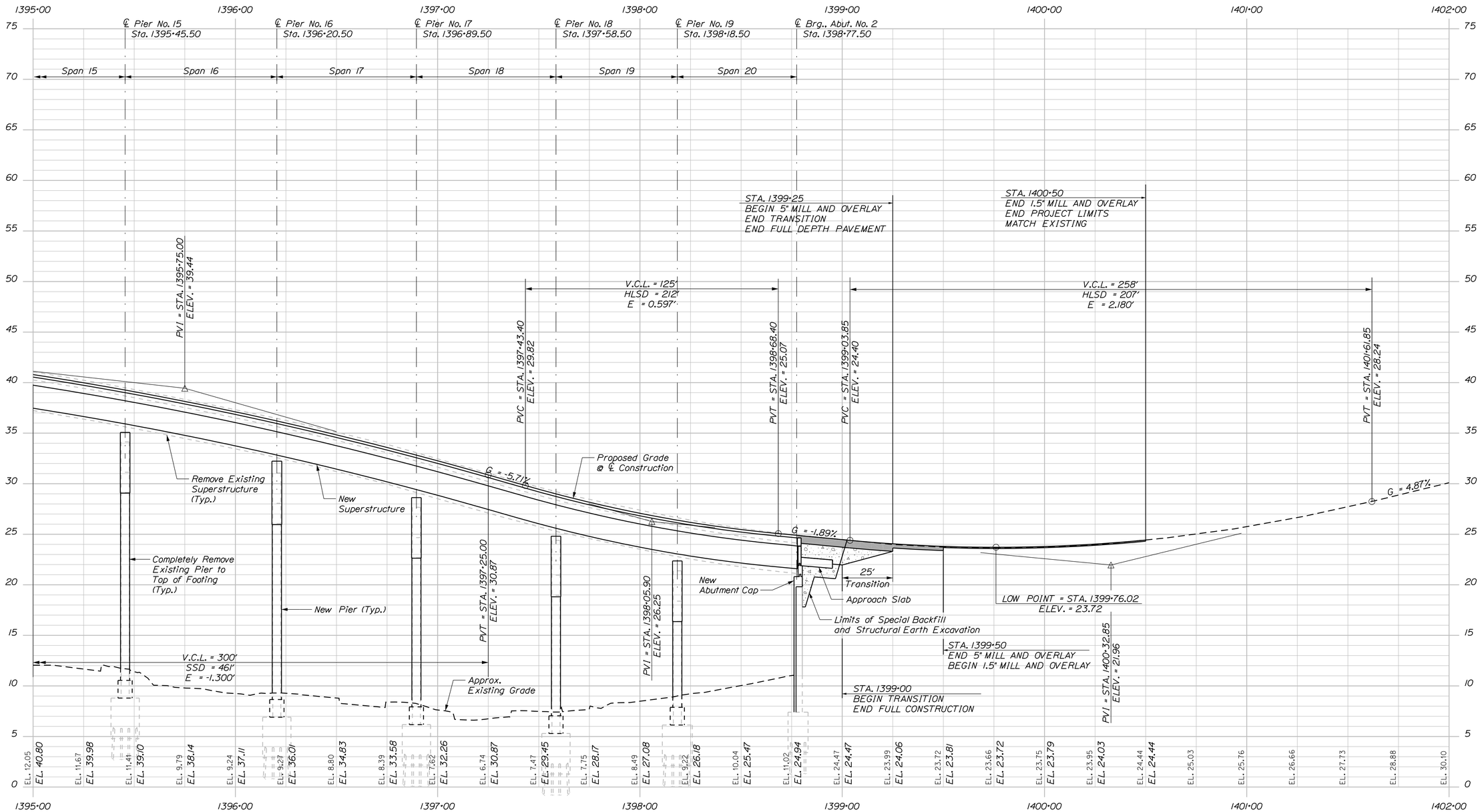

STATE OF MAINE
DEPARTMENT OF TRANSPORTATION

NHPP - 1927(300)

WIN 19273.00

BRIDGE NO. 3838

BRIDGE PLANS

vhb

		BY	DATE
PROJ. MANAGER	J. KITTREDGE		
DESIGN-DETAILED	ECF	SAB	12/15
CHECKED-REVIEWED	AG	SMH	12/15
DESIGN2-DETAILED2	---	---	---
DESIGN3-DETAILED3	---	---	---
REVISIONS 1	---	---	---
REVISIONS 2	---	---	---
REVISIONS 3	---	---	---
REVISIONS 4	---	---	---
FIELD CHANGES	---	---	---

WEST APPROACH BRIDGE
MAINE OWNED RR & CITY STREETS
BATH SAGADAHOC COUNTY

PROFILE (3 OF 3)

SHEET NUMBER

15

OF 145

Filename: ...\HIGHWAY\MSTA\015_Profile3.dgn Division: HIGHWAY Username: eflynn Date:12/21/2015

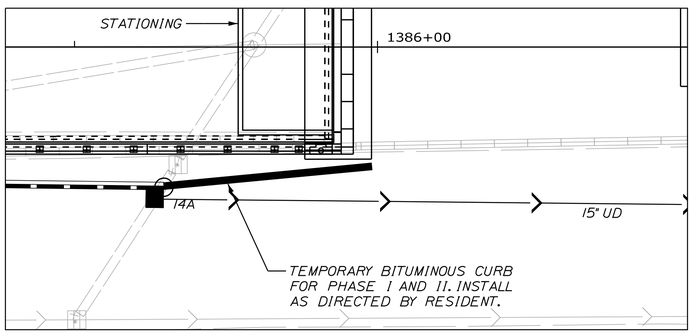

DETAIL A

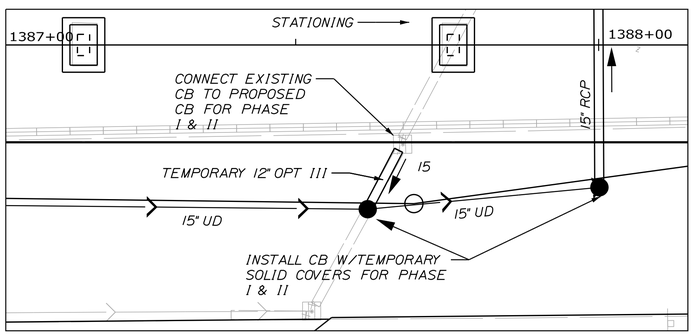

DETAIL B

EXISTING GRANITE CURB

STATION BEG.	OFFSET BEG.	STATION END	OFFSET END	TYPE 5	TYPE 5 CIRCULAR	TYPE 1	RADIUS
1383+50.00	14.50' RT	1385+83.32	14.62' RT			233.33'	-
1383+50.00	19.62' LT	1389+54.03	10.71' LT	358.95'			
1383+50.00	14.50' LT	1383+87.53	14.37' LT			37.53'	-
1383+54.08	20.00' RT	1389+54.23	10.52' RT	600.07'			
1384+03.94	14.45' LT	1385+81.77	14.68' LT			177.84'	-
1385+86.19	14.49' RT	1385+92.88	14.47' RT			6.69'	-
1385+89.86	14.66' LT	1385+93.01	14.63' LT			3.15'	-
1389+54.03	10.71' LT	1389+54.23	10.52' RT		32.45'		
1390+21.67	9.32' LT	1391+48.96	5.57' LT	127.35'			
1390+21.67	9.32' LT	1390+22.52	9.00' RT		28.34'		
1390+22.52	9.00' RT	1391+48.87	5.51' RT	126.40'			
1391+48.96	5.57' LT	1391+48.87	5.51' RT		16.62'		
1392+12.76	5.50' RT	1394+60.79	6.36' RT	248.13'			
1392+13.87	5.60' LT	1394+59.03	6.06' LT	245.23'			
1392+13.87	5.60' LT	1392+12.76	5.50' RT		17.64'		
1394+43.50	56.29' RT	1394+49.17	61.79' RT			7.90'	-
1394+52.61	65.68' RT	1394+57.04	72.92' RT			8.49'	-
1394+56.75	35.93' RT	1394+55.62	39.49' RT		4.58'		
1394+60.27	35.90' LT	1394+67.38	39.24' LT			7.86'	-
1394+65.14	47.23' RT	1394+62.55	45.79' RT	2.96'			
1394+65.20	35.22' RT	1394+67.48	35.74' RT	2.34'			
1394+66.22	6.44' RT	1394+73.53	5.74' RT	5.74'			
1394+66.43	5.97' LT	1394+73.00	5.42' LT	6.62'			
1394+67.48	35.74' RT	1394+69.13	37.97' RT		2.92'		
1394+67.69	45.68' RT	1394+65.14	47.23' RT		3.33'		
1394+69.13	37.97' RT	1394+67.69	45.68' RT	7.84'			
1394+72.09	41.97' LT	1394+91.97	70.97' LT			36.19'	44.00'
1394+73.00	5.42' LT	1394+73.53	5.74' RT		14.98'		
1394+77.50	168.41' LT	1394+85.64	179.02' LT			14.30'	11.00'
1394+93.03	75.57' RT	1394+95.59	64.49' RT	11.43'			
1394+97.27	57.89' RT	1394+98.57	54.82' RT	3.33'			
1394+98.57	54.82' RT	1395+00.68	55.55' RT		3.35'		
1394+98.77	65.46' RT	1394+95.58	75.73' RT	10.79'			
1395+00.68	55.55' RT	1395+00.51	57.67' RT	2.13'			
1395+19.91	80.21' RT	1395+23.37	73.03' RT			7.97'	-
1395+26.40	68.05' RT	1395+42.57	53.09' RT			22.34'	39.00'
1395+35.93	156.21' LT	1395+37.94	150.03' LT			6.50'	-
1395+36.63	162.31' LT	1395+35.93	156.21' LT			6.23'	10.00'
1395+39.70	168.18' LT	1395+36.63	162.31' LT			6.67'	10.00'
1395+42.00	9.33' LT	1395+49.20	11.55' LT			7.57'	25.00'
1395+44.11	17.45' RT	1395+38.37	7.06' LT			30.81'	14.00'
1395+48.93	50.28' RT	1395+69.34	46.81' RT			20.85'	51.00'
1395+55.03	118.48' LT	1395+76.46	96.20' LT			31.00'	-
1395+69.34	46.81' RT	1395+96.94	46.89' RT			27.60'	-
1395+74.83	17.97' RT	1395+49.49	17.96' RT			25.33'	-
1395+90.12	17.73' LT	1396+33.34	22.39' LT			43.47'	-
1396+33.34	22.39' LT	1396+47.86	10.22' LT		19.78'		
1396+46.56	18.93' RT	1396+27.33	18.52' RT			19.23'	-
1396+47.86	10.22' LT	1396+53.74	10.87' RT	21.92'			
1396+53.74	10.87' RT	1396+46.56	18.93' RT		12.09'		
1396+67.36	48.69' RT	1396+85.68	49.70' RT			18.34'	-
1396+72.42	6.56' LT	1396+82.56	23.73' LT		22.59'		
1396+75.36	1.39' RT	1396+72.42	6.56' LT	8.48'			
1396+79.31	7.12' RT	1396+75.36	1.39' RT			6.96'	-
1396+82.56	23.73' LT	1397+28.45	20.95' LT			45.98'	-
1396+85.68	49.70' RT	1396+98.84	63.89' RT			21.85'	13.00'
1396+92.00	9.20' RT	1396+79.31	7.12' RT			14.20'	9.00'
1396+98.84	63.89' RT	1396+98.08	68.65' RT			4.82'	-
1397+20.98	12.42' RT	1397+42.66	4.44' LT			27.48'	-
1397+22.88	19.81' RT	1397+20.98	12.42' RT			9.07'	5.00'
1397+28.45	20.95' LT	1397+29.52	15.73' LT			6.71'	3.00'
1397+29.52	15.73' LT	1396+92.00	9.20' RT			45.02'	-
1397+42.66	4.44' LT	1397+45.04	4.31' LT			2.69'	2.00'
1397+45.04	4.31' LT	1397+47.15	1.80' LT			3.28'	-
1397+47.15	1.80' LT	1397+50.80	4.61' LT			4.61'	-
1397+50.80	4.61' LT	1397+53.31	12.20' LT			8.50'	7.00'
1397+53.22	27.20' RT	1397+22.88	19.81' RT			31.26'	-
1397+53.31	12.20' LT	1397+61.20	15.41' LT			8.52'	-
1397+55.35	26.08' RT	1397+53.22	27.20' RT			2.63'	2.00'
1397+61.20	15.41' LT	1397+63.25	14.31' LT			2.64'	2.00'
1397+63.25	14.31' LT	1397+55.35	26.08' RT			41.21'	-
1397+69.06	28.62' RT	1397+70.10	30.53' RT			2.35'	2.00'
1397+70.10	30.53' RT	1400+69.95	35.91' RT			287.12'	-
1397+77.34	15.61' LT	1397+69.06	28.62' RT			45.08'	-
1397+97.33	16.93' LT	1397+77.34	15.61' LT			2.55'	2.00'
1398+52.05	18.16' LT	1397+97.33	16.93' LT			74.56'	-
1400+69.95	35.91' RT	1400+73.22	32.10 ' RT			5.34'	5.00'
1400+73.22	32.10 ' RT	1400+73.31	27.56' RT			4.54'	-
1400+73.31	27.56' RT	1400+69.13	23.68' RT			6.13'	5.00'
1398+78.47	13.91' RT	1399+26.14	15.69' RT			46.73'	-

SUMMARY

	TYPE 5	TYPE 5 CIRCULAR	TYPE 1	TYPE 1 CIRCULAR
SUBTOTAL	1790	179	1339	230
% BREAKAGE OR UNUSABLE	25%	25%	25%	75%
TOTAL CURB FOR RESET	1342	134	1005	57
TOTAL PROPOSED CURB	1240	40	1833	414
ESTIMATED REMOVE & RESET QUANTITY	1240	40	1005	57
SURPLUS	102	94	-	-
ESTIMATED NEW QUANTITY	-	-	828	357

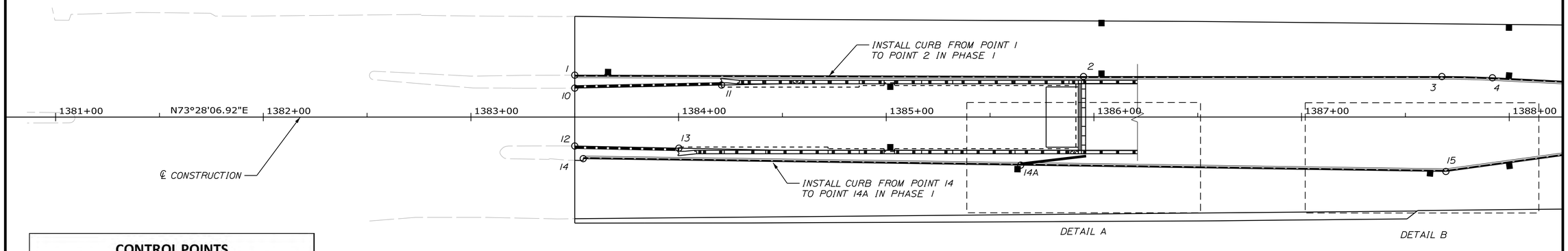

CONTROL POINTS

POINT	STATION	OFFSET	X COORD.	Y COORD.
1	1383+50.00	20.17' LT	1130421.67	393152.53
2	1385+95.00	19.50' LT	1130656.73	393221.60
3	1387+67.57	19.50' LT	1130822.17	393270.70
10	1383+50.00	13.95' LT	1130423.44	393146.56
11	1384+20.70	15.40' LT	1130490.80	393168.07
12	1383+50.00	13.92' RT	1130431.37	393119.85
13	1384+00.14	14.96' RT	1130479.73	393133.12
14	1383+54.08	20.00' RT	1130437.01	393115.18
14A	1384+64.74	23.13' RT	1130639.86	393172.12
15	1387+69.51	26.18' RT	1130837.03	393227.46

CURB TABLE

PT. TO PT.	RADIUS	LENGTH	DESCRIPTION
1 to 2	-	245.0'	CURB TYPE 5
2 to 3	-	172.6'	CURB TYPE 5
3 to 4	500.00'	24.4'	CURB TYPE 5
10 to 11	-	70.7'	VERT CURB TYPE 1
12 to 13	-	50.2'	VERT CURB TYPE 1
14 to 14A	-	210.7'	CURB TYPE 5
14A to 15	-	204.8'	CURB TYPE 5
15 to 16	-	96.9'	CURB TYPE 5

PLAN

25 0 25 50

Scale of Feet

STATE OF MAINE
DEPARTMENT OF TRANSPORTATION

NHPP - 1927(300)

WIN 19273.00

BRIDGE NO. 3838

BRIDGE PLANS

vhb

	BY	DATE
PROJ. MANAGER	J. KITTREDGE	
DESIGN-DETAILED	ECF	SAB 12/15
CHECKED-REVIEWED	AG	SMH 12/15
DESIGN2-DETAILED2	...	...
DESIGN3-DETAILED3	...	...
REVISIONS 1	...	...
REVISIONS 2	...	...
REVISIONS 3	...	...
REVISIONS 4	...	...
FIELD CHANGES	...	...

WEST APPROACH BRIDGE
MAINE OWNED RR & CITY STREETS
BATH SAGADAHOC COUNTY

CURB LAYOUT PLANS
(1 OF 4)

SHEET NUMBER

16

OF 145

Filename: ...\MSTA\016_HDPlan-Geometric1.dgn Division: HIGHWAY Username: eflynn Date:12/21/2015

CONTROL POINTS

POINT	STATION	OFFSET	X COORD.	Y COORD.	POINT	STATION	OFFSET	X COORD.	Y COORD.
4	1387+91.91	18.91' LT	1130845.67	393277.06	32	1390+25.00	11.40' LT	1131071.26	393336.19
5	1389+40.00	11.69' LT	1130989.70	393312.28	33	1391+50.00	6.00' LT	1131192.63	393366.58
6	1389+44.00	11.49' LT	1130993.58	393313.23	34	1392+12.42	6.00' LT	1131252.47	393384.34
7	1389+50.00	11.20' LT	1130999.42	393314.66	35	1394+58.00	6.00' LT	1131487.90	393454.22
8	1389+54.00	11.01' LT	1131003.30	393315.61	36	1394+60.00	4.00' LT	1131490.39	393452.87
9	1389+54.40	10.99' LT	1131003.70	393315.70	37	1394+65.00	4.00' LT	1131495.18	393454.29
16	1388+65.15	13.11' RT	1130924.99	393267.20	38	1394+67.00	6.00' LT	1131496.53	393456.78
17	1389+40.00	11.36' RT	1130996.25	393290.18	39	1394+72.20	6.00' LT	1131501.51	393458.26
18	1389+44.00	11.22' RT	1131000.05	393291.45	40	1390+25.00	11.40' RT	1131077.75	393314.33
19	1389+50.00	11.08' RT	1131005.76	393293.30	41	1391+50.00	5.92' RT	1131196.02	393355.15
20	1389+54.00	10.98' RT	1131009.56	393294.53	42	1392+12.42	6.00' RT	1131255.88	393372.83
21	1389+54.79	10.96' RT	1131010.32	393294.77	43	1394+58.00	6.00' RT	1131491.31	393442.71
21A	1394+37.00	32.00' LT	1131460.37	393473.17	44	1394+60.00	4.00' RT	1131492.66	393445.20
21B	1394+43.64	32.00' LT	1131466.73	393475.06	45	1394+65.00	4.00' RT	1131497.46	393446.62
22	1394+60.56	35.12' LT	1131482.06	393482.86	46	1394+67.00	6.00' RT	1131499.94	393445.27
23	1394+67.80	38.49' LT	1131488.05	393488.15	47	1394+72.20	6.00' RT	1131504.93	393446.75
24	1394+72.84	41.75' LT	1131491.95	393492.71	48	1392+09.41	36.89' RT	1131261.79	393342.36
25	1394+78.87	46.99' LT	1131496.24	393499.45	49	1392+17.41	36.89' RT	1131269.46	393344.64
26	1394+89.93	64.26' LT	1131501.92	393519.18	50	1392+40.40	36.89' RT	1131291.49	393351.18
27	1394+91.19	68.08' LT	1131502.05	393523.18	51	1394+44.16	55.48' RT	1131492.13	393391.34
28	1394+92.60	74.49' LT	1131501.58	393529.72	52	1394+49.94	61.00' RT	1131499.24	393387.70
29	1394+88.44	96.04' LT	1131491.46	393547.19	53	1394+53.66	65.70' RT	1131504.14	393384.24
30	1394+73.99	124.41' LT	1131469.54	393572.28	54	1394+57.68	72.61' RT	1131509.96	393378.77
31	1394+70.36	131.53' LT	1131464.03	393578.08					

CURB TABLE

PT. TO PT.	RADIUS	LENGTH	DESCRIPTION
4 to 5	-	148.3'	CURB TYPE 5
5 to 6	-	4.0'	CURB TYPE 5
7 to 8	-	4.0'	CURB TYPE 5
8 to 9	-	0.4'	CURB TYPE 5
9 to 21	11.00'	33.1'	CURB TYPE 5 - CIRCULAR
16 to 17	-	74.9'	CURB TYPE 5
17 to 18	-	4.0'	CURB TYPE 5
19 to 20	-	4.0'	CURB TYPE 5
20 to 21	-	0.8'	CURB TYPE 5
21A to 21B	-	6.6'	VERT CURB TYPE 1
21B to 22	50.00'	25.3'	VERT CURB TYPE 1- CIRCULAR
22 to 23	50.00'	8.0'	TERMINAL CURB TYPE 1 - 8' CIRCULAR
24 to 25	50.00'	8.0'	TERMINAL CURB TYPE 1 - 8' CIRCULAR
25 to 26	50.00'	20.7'	VERT CURB TYPE 1- CIRCULAR
26 to 27	50.00'	4.0'	CURB INLET
27 to 28	50.00'	6.6'	VERT CURB TYPE 1- CIRCULAR
28 to 29	39.63'	22.2'	VERT CURB TYPE 1- CIRCULAR
29 to 30	-	31.8'	VERT CURB TYPE 1
30 to 31	-	8.0'	TERMINAL CURB TYPE 1 - 8'
32 to 33	-	125.1'	VERT CURB TYPE 1
32 to 40	11.41'	35.9'	VERT CURB TYPE 1- CIRCULAR
33 to 41	6.00'	17.5'	VERT CURB TYPE 1- CIRCULAR
34 to 42	6.00'	18.9'	VERT CURB TYPE 1- CIRCULAR
34 to 35	-	245.6'	VERT CURB TYPE 1
35 to 36	2.00'	3.1'	VERT CURB TYPE 1- CIRCULAR
36 to 44	-	8.0'	VERT CURB TYPE 1
37 to 38	2.00'	3.1'	VERT CURB TYPE 1- CIRCULAR
38 to 39	-	5.2'	VERT CURB TYPE 1
40 to 41	-	125.1'	VERT CURB TYPE 1
42 to 43	-	245.6'	VERT CURB TYPE 1
43 to 44	2.00'	3.1'	VERT CURB TYPE 1- CIRCULAR
45 to 37	-	8.0'	VERT CURB TYPE 1
45 to 46	2.00'	3.1'	VERT CURB TYPE 1- CIRCULAR
46 to 47	-	5.2'	VERT CURB TYPE 1
47 to 39	6.00'	18.8'	VERT CURB TYPE 1- CIRCULAR
48 to 49	-	8.0'	TERMINAL CURB TYPE 1 - 8'
49 to 50	-	23.0'	VERT CURB TYPE 1
51 to 52	50.00'	8.0'	TERMINAL CURB TYPE 1 - 8' CIRCULAR
53 to 54	50.00'	8.0'	TERMINAL CURB TYPE 1 - 8' CIRCULAR

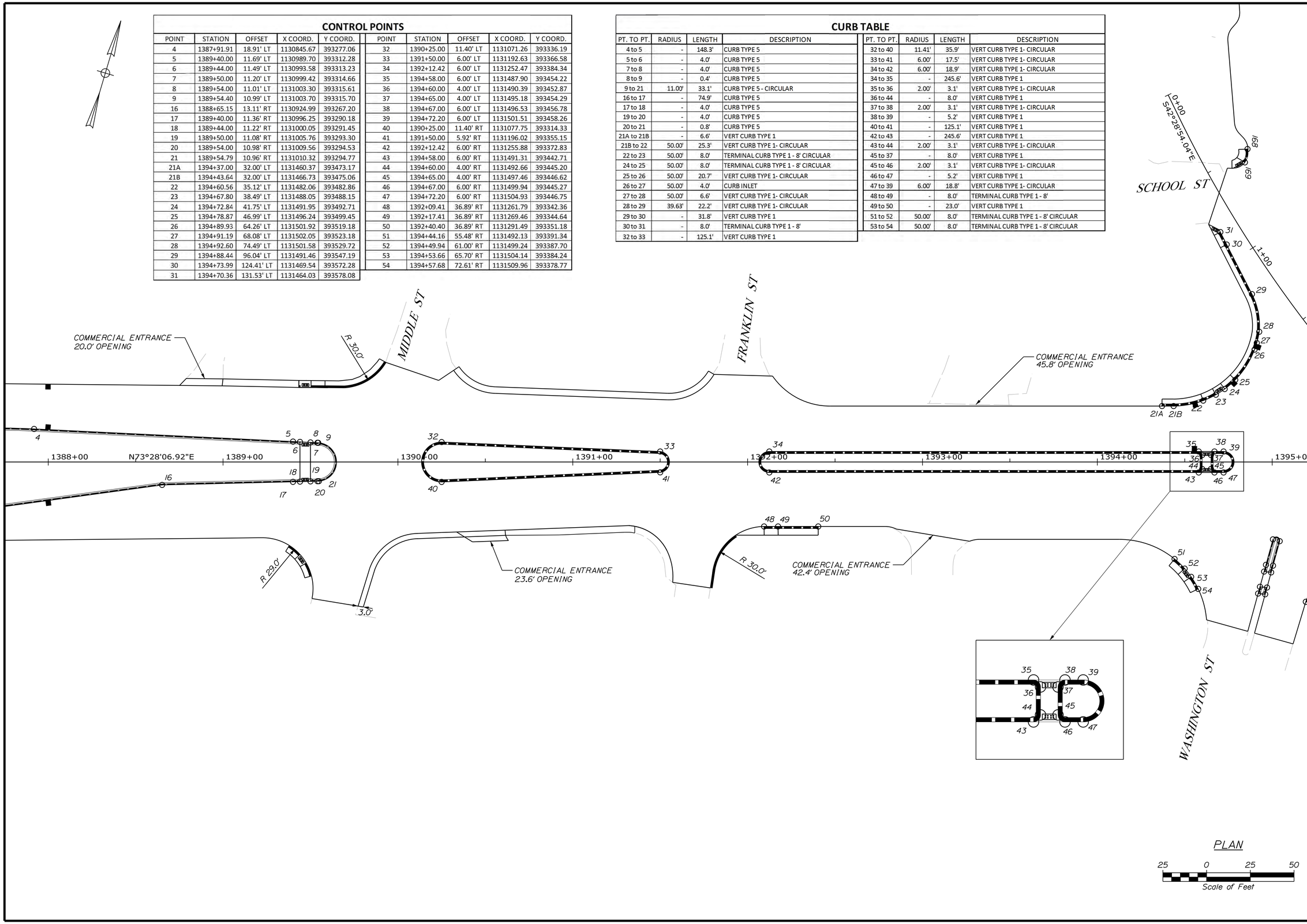

STATE OF MAINE
DEPARTMENT OF TRANSPORTATION

NHPP - 1927(300)

WIN 19273.00

BRIDGE NO. 3838

BRIDGE PLANS

vhb

	BY	DATE
PROJ. MANAGER	J. KITTREDGE	
DESIGN-DETAILED	ECF	SAB	12/15
CHECKED-REVIEWED	AG	SMH	12/15
DESIGN2-DETAILED2	---	---	---
DESIGN3-DETAILED3	---	---	---
REVISIONS 1	---	---	---
REVISIONS 2	---	---	---
REVISIONS 3	---	---	---
REVISIONS 4	---	---	---
FIELD CHANGES	---	---	---

WEST APPROACH BRIDGE
MAINE OWNED RR & CITY STREETS
BATH SAGADAHOC COUNTY

CURB LAYOUT PLANS
(2 OF 4)

SHEET NUMBER
17
OF 145

Filename: ...\MSTA\017_HDPlan-Geometric2.dgn Division: HIGHWAY Username: eflynn Date:12/21/2015

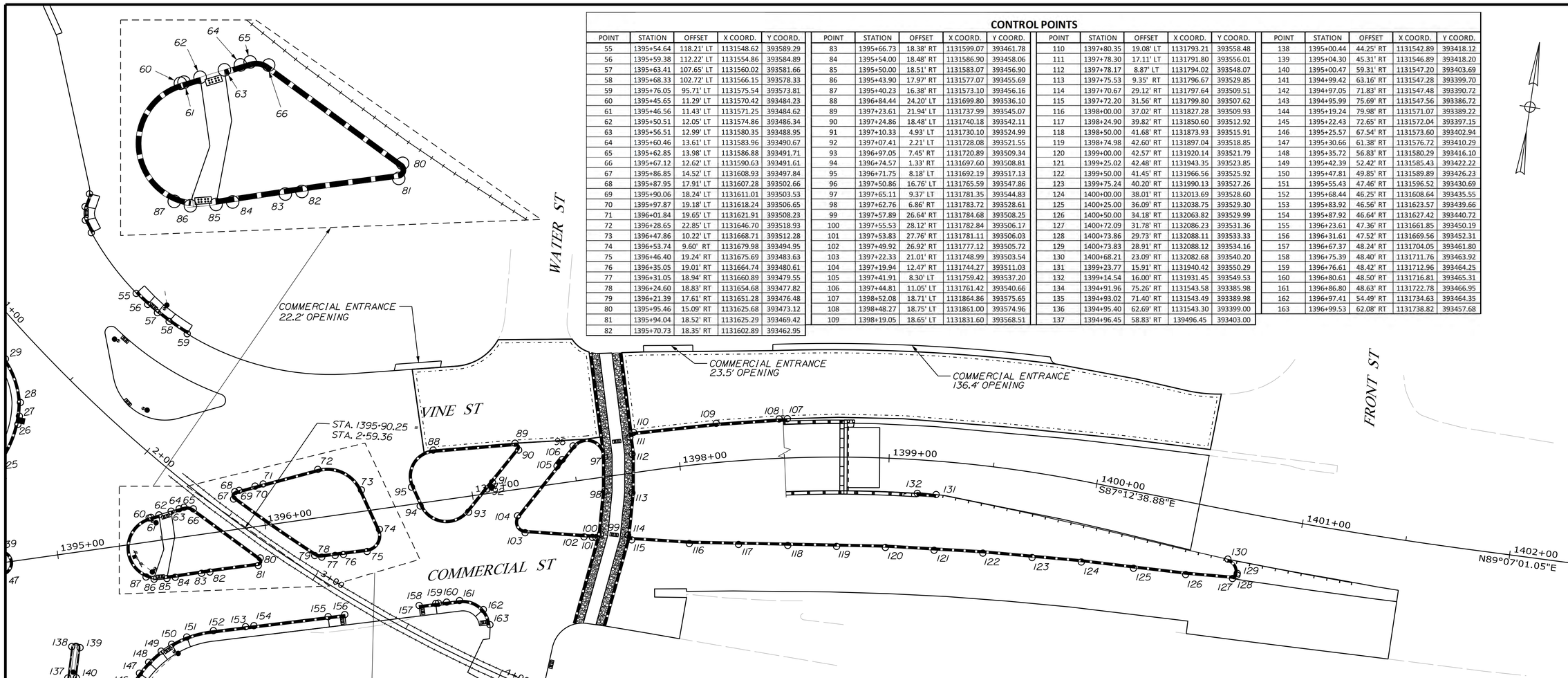

CONTROL POINTS

POINT	STATION	OFFSET	X COORD.	Y COORD.
55	1395+54.64	118.21' LT	1131548.62	393589.29
56	1395+59.38	112.22' LT	1131554.86	393584.89
57	1395+63.41	107.65' LT	1131560.02	393581.66
58	1395+68.33	102.72' LT	1131566.15	393578.33
59	1395+76.05	95.71' LT	1131575.54	393573.81
60	1395+45.65	11.29' LT	1131570.42	393484.23
61	1395+46.56	11.43' LT	1131571.25	393484.62
62	1395+50.51	12.05' LT	1131574.86	393486.34
63	1395+56.51	12.99' LT	1131580.35	393488.95
64	1395+60.46	13.61' LT	1131583.96	393490.67
65	1395+62.85	13.98' LT	1131586.88	393491.71
66	1395+67.12	12.62' LT	1131590.63	393491.61
67	1395+86.85	14.52' LT	1131608.93	393497.84
68	1395+87.95	17.91' LT	1131607.28	393502.66
69	1395+90.06	18.24' LT	1131611.01	393503.53
70	1395+97.87	19.18' LT	1131618.24	393506.65
71	1396+01.84	19.65' LT	1131621.91	393508.23
72	1396+28.65	22.85' LT	1131646.70	393518.93
73	1396+47.86	10.22' LT	1131668.71	393512.28
74	1396+53.74	9.60' RT	1131679.98	393494.95
75	1396+46.40	19.24' RT	1131675.69	393483.63
76	1396+35.05	19.01' RT	1131664.74	393480.61
77	1396+31.05	18.94' RT	1131660.89	393479.55
78	1396+24.60	18.83' RT	1131654.68	393477.82
79	1396+21.39	17.61' RT	1131651.28	393476.48
80	1395+95.46	15.09' RT	1131625.68	393473.12
81	1395+94.04	18.52' RT	1131625.29	393469.42
82	1395+70.73	18.35' RT	1131602.89	393462.95
83	1395+66.73	18.38' RT	1131599.07	393461.78
84	1395+54.00	18.48' RT	1131586.90	393458.06
85	1395+50.00	18.51' RT	1131583.07	393456.90
86	1395+43.90	17.97' RT	1131577.07	393455.69
87	1395+40.23	16.38' RT	1131573.10	393456.16
88	1396+84.44	24.20' LT	1131699.80	393536.10
89	1397+23.61	21.94' LT	1131737.99	393545.07
90	1397+24.86	18.48' LT	1131740.18	393542.11
91	1397+10.33	4.93' LT	1131730.10	393524.99
92	1397+07.41	2.21' LT	1131728.08	393521.55
93	1396+97.05	7.45' RT	1131720.89	393509.34
94	1396+74.57	1.33' RT	1131697.60	393508.81
95	1396+71.75	8.18' LT	1131692.19	393517.13
96	1397+50.86	16.76' LT	1131765.59	393547.86
97	1397+65.11	9.37' LT	1131781.35	393544.83
98	1397+62.76	6.86' RT	1131783.72	393528.61
99	1397+57.89	26.64' RT	1131784.68	393508.25
100	1397+55.53	28.12' RT	1131782.84	393506.17
101	1397+53.83	27.76' RT	1131781.11	393506.03
102	1397+49.92	26.92' RT	1131777.12	393505.72
103	1397+22.33	21.01' RT	1131748.99	393503.54
104	1397+19.94	12.47' RT	1131744.27	393511.03
105	1397+41.91	8.30' LT	1131759.42	393537.20
106	1397+44.81	11.05' LT	1131761.42	393540.66
107	1398+52.08	18.71' LT	1131864.86	393575.65
108	1398+48.27	18.75' LT	1131861.00	393574.96
109	1398+19.05	18.65' LT	1131831.60	393568.51
110	1397+80.35	19.08' LT	1131793.21	393558.48
111	1397+78.30	17.11' LT	1131791.80	393556.01
112	1397+78.17	8.87' LT	1131794.02	393548.07
113	1397+75.53	9.35' RT	1131796.67	393529.85
114	1397+70.67	29.12' RT	1131797.64	393509.51
115	1397+72.20	31.56' RT	1131799.80	393507.62
116	1398+00.00	37.02' RT	1131827.28	393509.93
117	1398+24.90	39.82' RT	1131850.60	393512.92
118	1398+50.00	41.68' RT	1131873.93	393515.91
119	1398+74.98	42.60' RT	1131897.04	393518.85
120	1399+00.00	42.57' RT	1131920.14	393521.79
121	1399+25.02	42.48' RT	1131943.35	393523.85
122	1399+50.00	41.45' RT	1131966.56	393525.92
123	1399+75.24	40.20' RT	1131990.13	393527.26
124	1400+00.00	38.01' RT	1132013.69	393528.60
125	1400+25.00	36.09' RT	1132038.75	393529.30
126	1400+50.00	34.18' RT	1132063.82	393529.99
127	1400+72.09	31.78' RT	1132086.23	393531.36
128	1400+73.86	29.73' RT	1132088.11	393533.33
129	1400+73.83	28.91' RT	1132088.12	393534.16
130	1400+68.21	23.09' RT	1132082.68	393540.20
131	1399+23.77	15.91' RT	1131940.42	393550.29
132	1399+14.54	16.00' RT	1131931.45	393549.53
134	1394+91.96	75.26' RT	1131543.58	393385.98
135	1394+93.02	71.40' RT	1131543.49	393389.98
136	1394+95.40	62.69' RT	1131543.30	393399.00
137	1394+96.45	58.83' RT	139496.45	393403.00
138	1395+00.44	44.25' RT	1131542.89	393418.12
139	1395+04.30	45.31' RT	1131546.89	393418.20
140	1395+00.47	59.31' RT	1131547.20	393403.69
141	1394+99.42	63.16' RT	1131547.28	393399.70
142	1394+97.05	71.83' RT	1131547.48	393390.72
143	1394+95.99	75.69' RT	1131547.56	393386.72
144	1395+19.24	79.98' RT	1131571.07	393389.22
145	1395+22.43	72.65' RT	1131572.04	393397.15
146	1395+25.57	67.54' RT	1131573.60	393402.94
147	1395+30.66	61.38' RT	1131576.72	393410.29
148	1395+35.72	56.83' RT	1131580.29	393416.10
149	1395+42.39	52.42' RT	1131585.43	393422.22
150	1395+47.81	49.85' RT	1131589.89	393426.23
151	1395+55.43	47.46' RT	1131596.52	393430.69
152	1395+68.44	46.25' RT	1131608.64	393435.55
153	1395+83.92	46.56' RT	1131623.57	393439.66
154	1395+87.92	46.64' RT	1131627.42	393440.72
155	1396+23.61	47.36' RT	1131661.85	393450.19
156	1396+31.61	47.52' RT	1131669.56	393452.31
157	1396+67.37	48.24' RT	1131704.05	393461.80
158	1396+75.39	48.40' RT	1131711.76	393463.92
159	1396+76.61	48.42' RT	1131712.96	393464.25
160	1396+80.61	48.50' RT	1131716.81	393465.31
161	1396+86.80	48.63' RT	1131722.78	393466.95
162	1396+97.41	54.49' RT	1131734.63	393464.35
163	1396+99.53	62.08' RT	1131738.82	393457.68

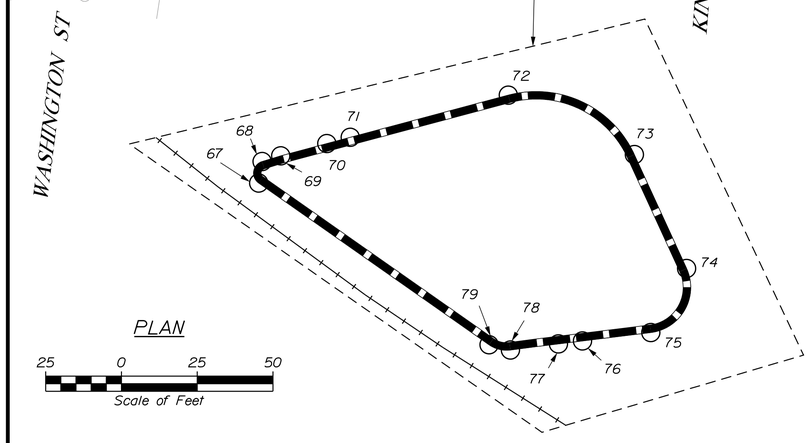

CURB TABLE

PT. TO PT.	RADIUS	LENGTH	DESCRIPTION
55 to 56	130.00'	8.0'	TERMINAL CURB TYPE 1 - 8'
57 to 58	130.00'	8.0'	TERMINAL CURB TYPE 1 - 8'
58 to 59	130.00'	11.1'	VERT CURB TYPE 1
60 to 61	-	0.9'	VERT CURB TYPE 1
61 to 62	-	4.0'	TERMINAL CURB TYPE 1 - 4 FOOT
63 to 64	-	4.0'	TERMINAL CURB TYPE 1 - 4 FOOT
64 to 65	-	2.4'	VERT CURB TYPE 1
65 to 66	5.00'	4.6'	VERT CURB TYPE 1- CIRCULAR
66 to 80	-	39.6'	VERT CURB TYPE 1
67 to 68	2.00'	4.4'	VERT CURB TYPE 1- CIRCULAR
68 to 69	-	3.2'	VERT CURB TYPE 1
69 to 70	-	7.9'	VERT CURB TYPE 1
70 to 71	-	4.0'	CURB INLET
71 to 72	-	27.0'	VERT CURB TYPE 1
72 to 73	17.83'	25.0'	VERT CURB TYPE 1- CIRCULAR
73 to 74	-	20.7'	VERT CURB TYPE 1
74 to 75	7.50'	14.0'	VERT CURB TYPE 1- CIRCULAR
75 to 76	-	11.4'	VERT CURB TYPE 1
76 to 77	-	4.0'	CURB INLET
77 to 78	-	6.4'	VERT CURB TYPE 1
78 to 79	5.00'	3.5'	VERT CURB TYPE 1- CIRCULAR
79 to 67	687.09'	47.2'	VERT CURB TYPE 1
80 to 81	2.00'	4.8'	VERT CURB TYPE 1- CIRCULAR
81 to 82	-	23.3'	VERT CURB TYPE 1
82 to 83	-	4.0'	CURB INLET
83 to 84	-	12.7'	VERT CURB TYPE 1
84 to 85	-	4.0'	TERMINAL CURB TYPE 1 - 4 FOOT
86 to 87	15.00'	4.0'	TERMINAL CURB TYPE 1 - 4 FOOT - CIRCULAR
87 to 60	15.00'	36.7'	VERT CURB TYPE 1- CIRCULAR
88 to 89	-	39.2'	VERT CURB TYPE 1
89 to 90	2.00'	4.7'	VERT CURB TYPE 1- CIRCULAR
90 to 91	-	19.9'	VERT CURB TYPE 1
91 to 92	-	4.0'	CURB INLET
92 to 93	-	14.2'	VERT CURB TYPE 1
93 to 94	13.70'	27.9'	VERT CURB TYPE 1- CIRCULAR
94 to 95	-	9.9'	VERT CURB TYPE 1
95 to 88	12.49'	23.9'	VERT CURB TYPE 1- CIRCULAR
96 to 97	8.50'	21.0'	VERT CURB TYPE 1- CIRCULAR
97 to 98	-	16.4'	VERT CURB TYPE 1
98 to 99	-	20.4'	VERT CURB TYPE 1
99 to 100	2.00'	3.1'	VERT CURB TYPE 1- CIRCULAR
100 to 101	-	1.7'	VERT CURB TYPE 1
101 to 102	-	4.0'	CURB INLET
102 to 103	-	28.2'	VERT CURB TYPE 1
103 to 104	5.00'	10.9'	VERT CURB TYPE 1- CIRCULAR
104 to 105	-	30.2'	VERT CURB TYPE 1
105 to 106	-	4.0'	CURB INLET
106 to 96	-	8.3'	VERT CURB TYPE 1
107 to 108	-	3.9'	VERT CURB TYPE 1
108 to 109	-	30.1'	VERT CURB TYPE 1
109 to 110	-	39.7'	VERT CURB TYPE 1
110 to 111	2.00'	3.2'	VERT CURB TYPE 1- CIRCULAR
111 to 112	-	8.2'	VERT CURB TYPE 1
112 to 113	-	18.4'	VERT CURB TYPE 1
113 to 114	-	20.4'	VERT CURB TYPE 1
114 to 115	2.00'	3.2'	VERT CURB TYPE 1- CIRCULAR
115 to 116	-	27.6'	VERT CURB TYPE 1
116 to 117	-	23.5'	VERT CURB TYPE 1
117 to 118	-	23.5'	VERT CURB TYPE 1
118 to 119	-	23.3'	VERT CURB TYPE 1
119 to 120	-	23.3'	VERT CURB TYPE 1
120 to 121	-	23.3'	VERT CURB TYPE 1
121 to 122	-	23.3'	VERT CURB TYPE 1
122 to 123	-	23.6'	VERT CURB TYPE 1
123 to 124	-	23.6'	VERT CURB TYPE 1
124 to 125	-	25.1'	VERT CURB TYPE 1
125 to 126	-	25.1'	VERT CURB TYPE 1
126 to 127	-	22.5'	VERT CURB TYPE 1
127 to 128	2.00'	3.0'	VERT CURB TYPE 1- CIRCULAR
128 to 129	-	0.8'	VERT CURB TYPE 1
129 to 130	6.00'	8.9'	VERT CURB TYPE 1- CIRCULAR
131 to 132	-	9.0'	VERT CURB TYPE 1
134 to 135	-	4.0'	CURB TYPE 5
136 to 137	-	4.0'	CURB TYPE 5
137 to 138	-	15.1'	CURB TYPE 5
138 to 139	2.00'	6.3'	CURB TYPE 5 - CIRCULAR
139 to 140	-	14.5'	CURB TYPE 5
140 to 141	-	4.0'	CURB TYPE 5
142 to 143	-	4.0'	CURB TYPE 5
144 to 145	50.00'	8.0'	TERMINAL CURB TYPE 1 - 8' CIRCULAR
146 to 147	50.00'	8.0'	TERMINAL CURB TYPE 1 - 8' CIRCULAR
147 to 148	50.00'	6.8'	VERT CURB TYPE 1- CIRCULAR
148 to 149	50.00'	8.0'	TERMINAL CURB TYPE 1 - 8' CIRCULAR
150 to 151	50.00'	8.0'	TERMINAL CURB TYPE 1 - 8' CIRCULAR
151 to 152	50.00'	13.1'	VERT CURB TYPE 1- CIRCULAR
152 to 153	-	15.5'	VERT CURB TYPE 1
153 to 154	-	4.0'	CURB INLET
154 to 155	-	35.7'	VERT CURB TYPE 1
155 to 156	-	8.0'	TERMINAL CURB TYPE 1 - 8'
157 to 158	-	8.0'	TERMINAL CURB TYPE 1 - 8'
158 to 159	-	1.2'	VERT CURB TYPE 1
159 to 160	-	4.0'	CURB INLET
160 to 161	-	6.2'	VERT CURB TYPE 1
161 to 162	13.00'	12.6'	VERT CURB TYPE 1- CIRCULAR
162 to 163	13.00'	8.0'	TERMINAL CURB TYPE 1 - 8' CIRCULAR

STATE OF MAINE
DEPARTMENT OF TRANSPORTATION

NHPP - 1927(300)

WIN 19273.00

BRIDGE NO. 3838

BRIDGE PLANS

vhb

		BY	DATE
PROJ. MANAGER	J. KITTREDGE		
DESIGN-DETAILED	ECF	SAB	12/15
CHECKED-REVIEWED	AG	SMH	12/15
DESIGN2-DETAILED2	---	---	---
DESIGN3-DETAILED3	---	---	---
REVISIONS 1	---	---	---
REVISIONS 2	---	---	---
REVISIONS 3	---	---	---
REVISIONS 4	---	---	---
FIELD CHANGES	---	---	---

WEST APPROACH BRIDGE
MAINE OWNED RR & CITY STREETS
BATH SAGADAHOC COUNTY

CURB LAYOUT PLANS
(3 OF 4)

SHEET NUMBER
18
OF 145

Filename: ...\MSTA\018_HDPlan-Geometric3.dgn Division: HIGHWAY Username: eflynn Date:12/21/2015

CONTROL POINTS				
POINT	STATION	OFFSET	EASTING	NORTHING
164	1395+39.29	0001+68.33	1131519.51	393632.97
165	1395+36.32	162.58' LT	1131518.43	393626.61
166	1395+35.55	156.18' LT	1131519.51	393620.25
167	1395+37.53	149.89' LT	1131523.20	393614.79
168	1394+85.89	179.03' LT	1131465.40	393628.04
169	1394+84.41	171.41' LT	1131466.15	393620.30

CURB TABLE			
PT. TO PT.	RADIUS	LENGTH	DESCRIPTION
164 to 165	-	8.0'	TERMINAL CURB TYPE 1 - 8'
166 to 167	-	8.0'	TERMINAL CURB TYPE 1 - 8'
168 to 169	8.56'	8.0'	TERMINAL CURB TYPE 1 - 8' CIRCULAR

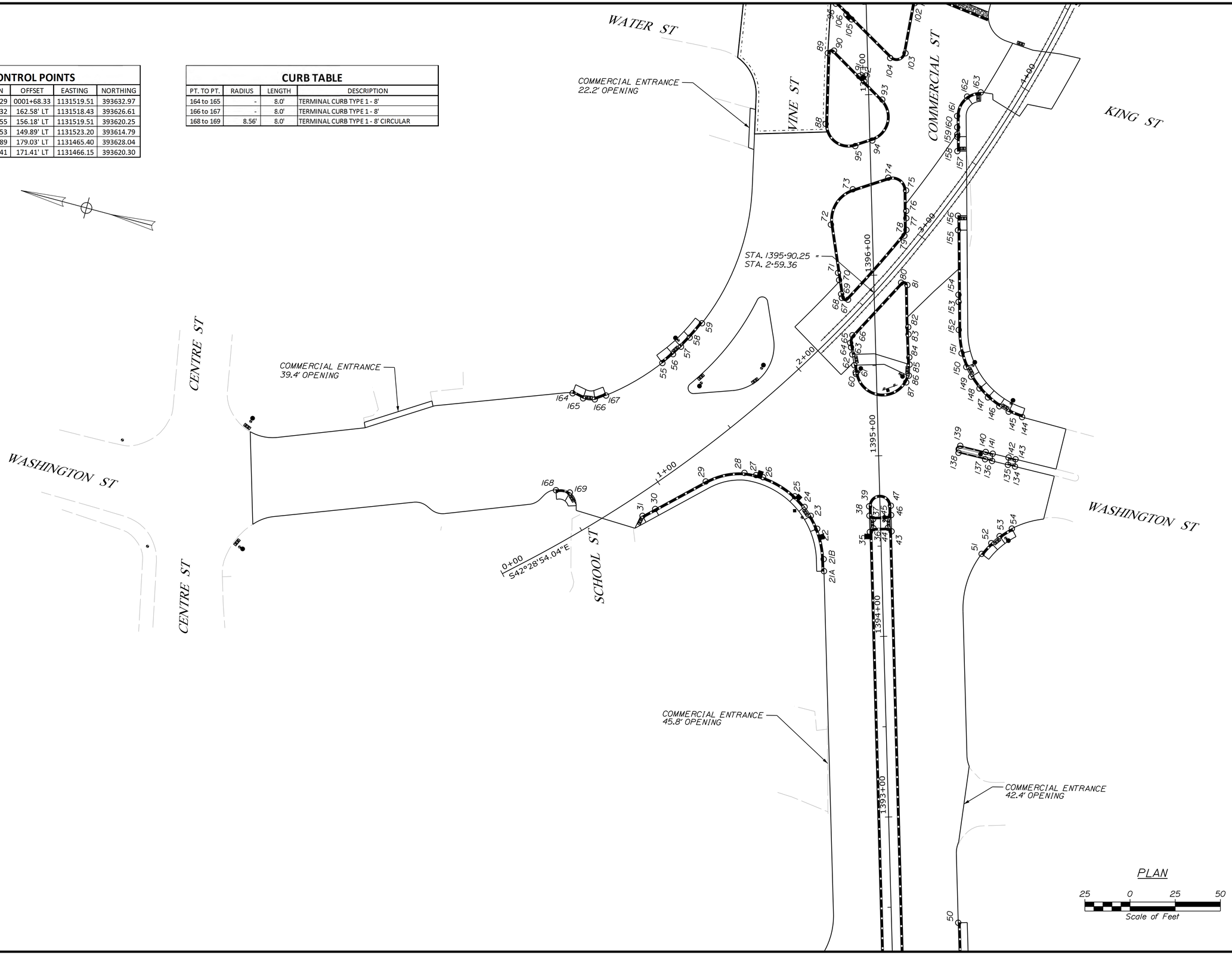

STATE OF MAINE
DEPARTMENT OF TRANSPORTATION

NHPP - 1927(300)

WIN 19273.00

BRIDGE NO. 3838

BRIDGE PLANS

vhb

PROJ. MANAGER	J. KITTREDGE	BY	DATE
DESIGN-DETAILED	ECF	SAB	12/15
CHECKED-REVIEWED	AG	SMH	12/15
DESIGN2-DETAILED2	---	---	---
DESIGN3-DETAILED3	---	---	---
REVISIONS 1	---	---	---
REVISIONS 2	---	---	---
REVISIONS 3	---	---	---
REVISIONS 4	---	---	---
FIELD CHANGES	---	---	---

WEST APPROACH BRIDGE
MAINE OWNED RR & CITY STREETS
BATH SAGADAHOC COUNTY

CURB LAYOUT PLANS (4 OF 4)

SHEET NUMBER

19

OF 145

Filename: ...\MSTA\019_HDPlan-Geometric4.dgn Division: HIGHWAY Username: eflynn Date:12/21/2015

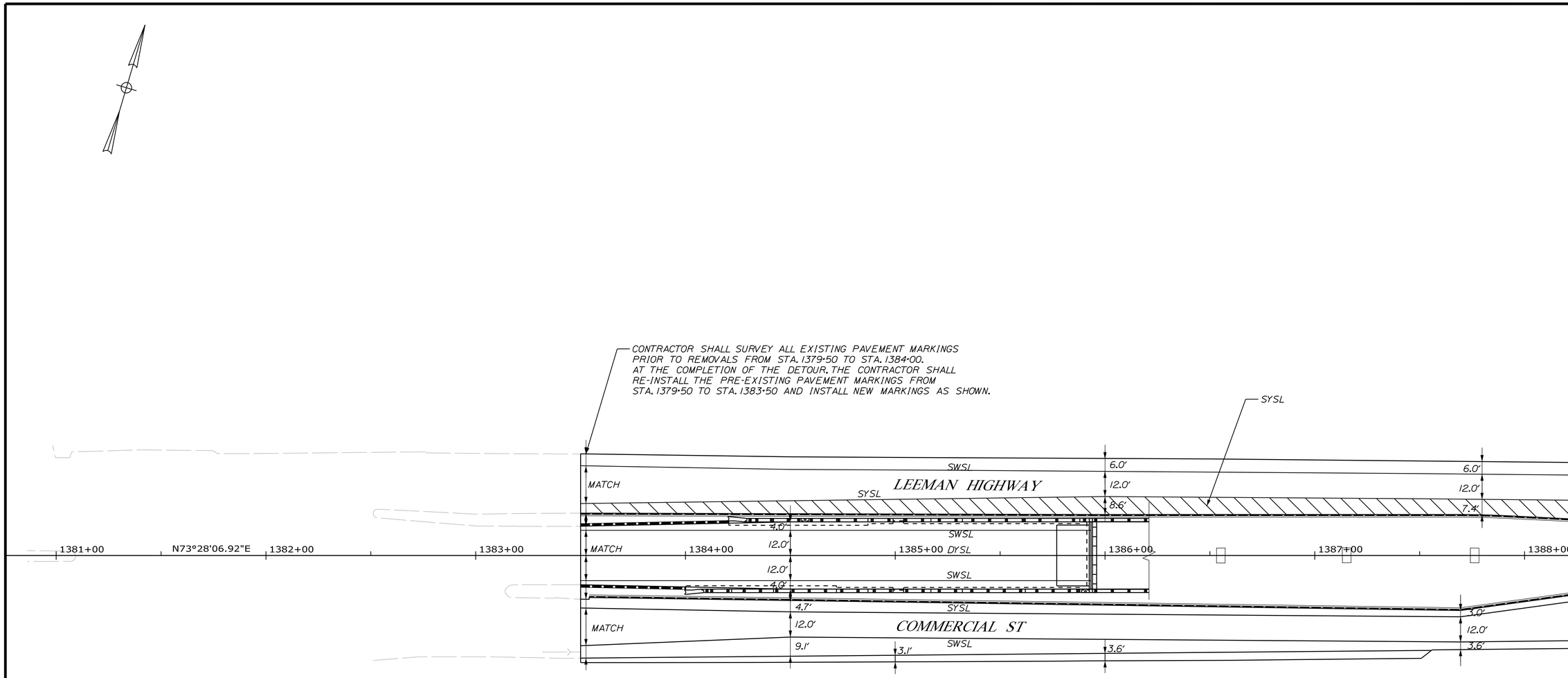

STRIPING LEGEND

SYMBOL	DESCRIPTION	SYMBOL	DESCRIPTION
SWSL	Single White Solid Line		Left Arrow Pavement Marking
SWDL	Single White Dashed Line		Right Arrow Pavement Marking
SYSL	Single Yellow Solid Line		Left/U-Turn Arrow Pavement Marking
DYSL	Double Yellow Solid Line		Straight/Right Arrow Pavement Marking
SL	Stop Line - 24" Wide		
ONLY	ONLY Pavment Marking		
	Straight Arrow Pavement Marking		

NOTE

ALL EXISTING SIGNS NOT IDENTIFIED SHALL REMAIN.

PLAN

25 0 25 50

Scale of Feet

STATE OF MAINE
DEPARTMENT OF TRANSPORTATION

NHPP - 1927(300)

WIN 19273.00

BRIDGE NO. 3838

BRIDGE PLANS

vhb

PROJ. MANAGER	J. KITTREDGE	BY	DATE
DESIGN-DETAILED	ECF	SAB	12/15
CHECKED-REVIEWED	AG	SMH	12/15
DESIGN2-DETAILED2	---	---	---
DESIGN3-DETAILED3	---	---	---
REVISIONS 1	---	---	---
REVISIONS 2	---	---	---
REVISIONS 3	---	---	---
REVISIONS 4	---	---	---
FIELD CHANGES	---	---	---

WEST APPROACH BRIDGE
MAINE OWNED RR & CITY STREETS
BATH SAGADAHOC COUNTY

STRIPING & SIGNING PLANS (1 OF 4)

SHEET NUMBER

20

OF 145

Filename: ...\MSTA\020_HDPlan-Striping1.dgn Division: HIGHWAY Username: eflynn Date:12/21/2015

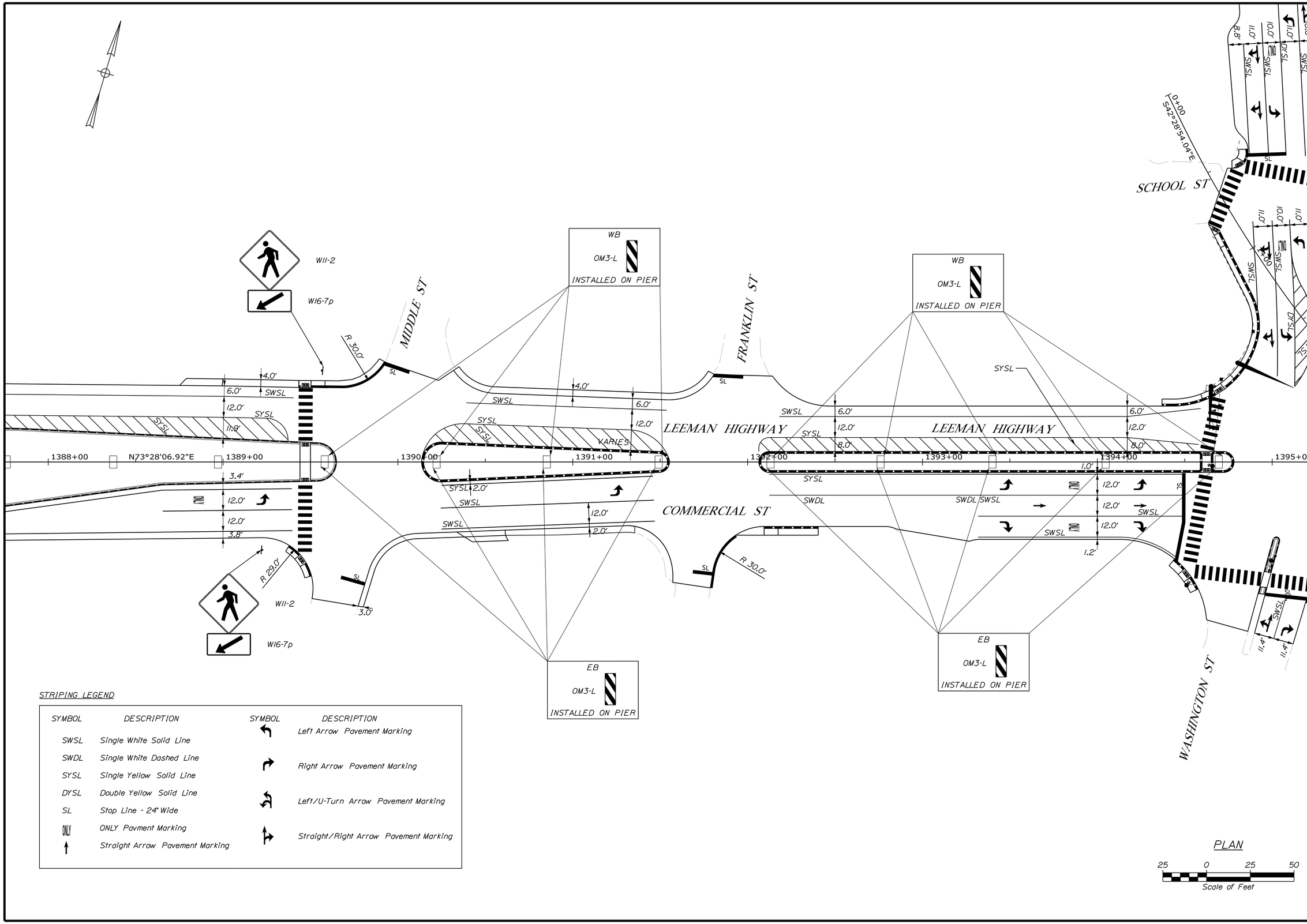

STATE OF MAINE
DEPARTMENT OF TRANSPORTATION

NHPP - 1927(300)

WIN 19273.00

BRIDGE NO. 3838

BRIDGE PLANS

vhb

PROJ. MANAGER	J. KITTREDGE		
DESIGN-DETAILED	ECF	SAB	12/15
CHECKED-REVIEWED	AG	SMH	12/15
DESIGN2-DETAILED2	...	...	...
DESIGN3-DETAILED3	...	...	...
REVISIONS 1	...	...	...
REVISIONS 2	...	...	...
REVISIONS 3	...	...	...
REVISIONS 4	...	...	...
FIELD CHANGES	...	...	...

WEST APPROACH BRIDGE
MAINE OWNED RR & CITY STREETS
BATH SAGADAHOC COUNTY

STRIPING & SIGNING PLANS (2 OF 4)

SHEET NUMBER
21
OF 145

Filename: ...\MSTA\021_HDPlan-Striping2.dgn Division: HIGHWAY Username: eflynn Date:12/21/2015

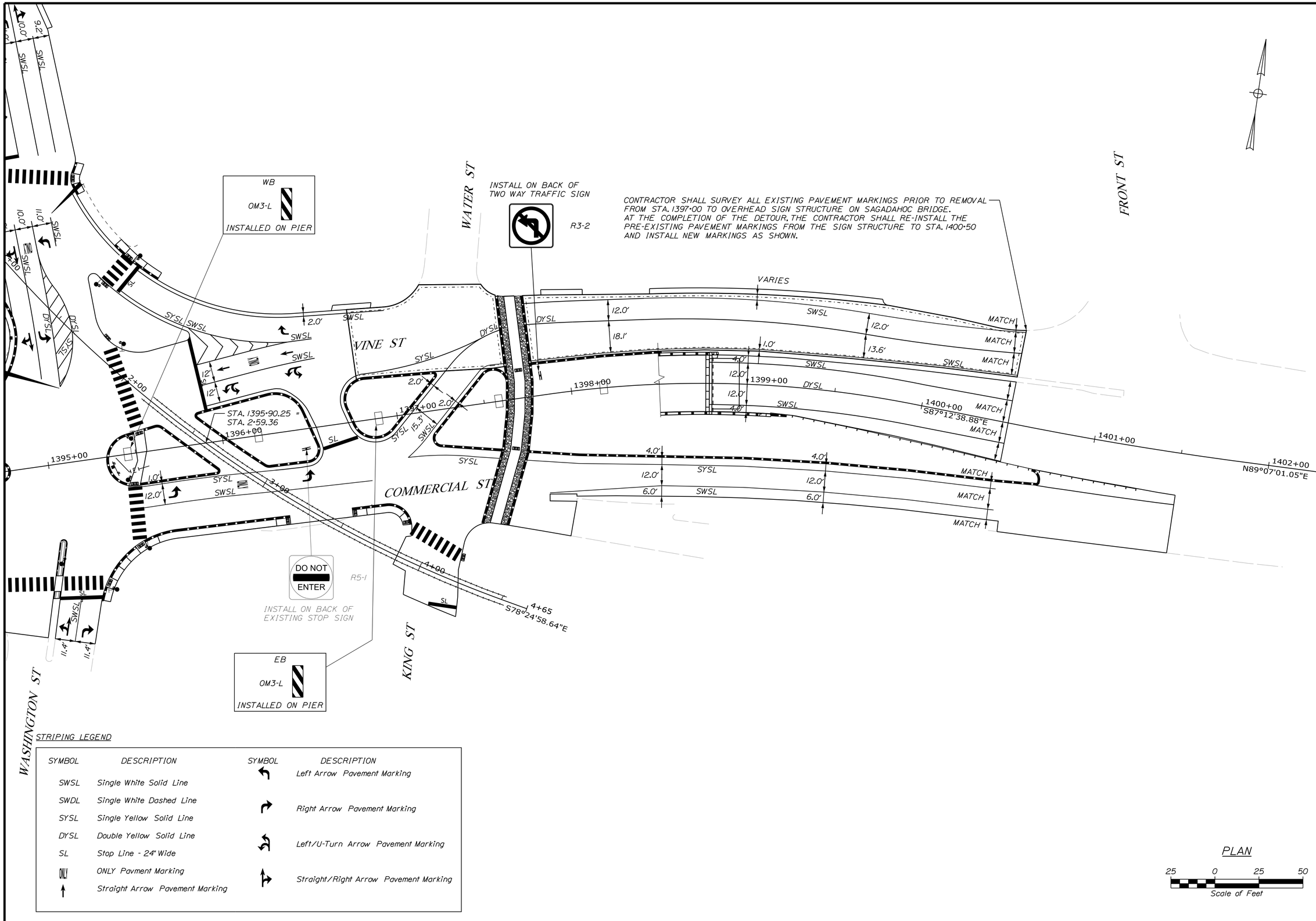

STRIPING LEGEND

SYMBOL	DESCRIPTION	SYMBOL	DESCRIPTION
SWSL	Single White Solid Line		Left Arrow Pavement Marking
SWDL	Single White Dashed Line		Right Arrow Pavement Marking
SYSL	Single Yellow Solid Line		Left/U-Turn Arrow Pavement Marking
DYSL	Double Yellow Solid Line		Straight/Right Arrow Pavement Marking
SL	Stop Line - 24" Wide		
ONLY	ONLY Pavment Marking		
	Straight Arrow Pavement Marking		

STATE OF MAINE
DEPARTMENT OF TRANSPORTATION

NHPP - 1927(300)

WIN 19273.00

BRIDGE NO. 3838

BRIDGE PLANS

vhb

		BY	DATE
PROJ. MANAGER	J. KITTREDGE		
DESIGN-DETAILED	ECF	SAB	12/15
CHECKED-REVIEWED	AG	SMH	12/15
DESIGN2-DETAILED2	---	---	---
DESIGN3-DETAILED3	---	---	---
REVISIONS 1	---	---	---
REVISIONS 2	---	---	---
REVISIONS 3	---	---	---
REVISIONS 4	---	---	---
FIELD CHANGES	---	---	---

WEST APPROACH BRIDGE
MAINE OWNED RR & CITY STREETS
BATH SAGADAHOC COUNTY

STRIPING & SIGNING
PLANS (3 OF 4)

SHEET NUMBER
22
OF 145

Filename: ...\MSTA\022_HDPlan-Striping3.dgn Division: HIGHWAY Username: eflynn Date:12/21/2015

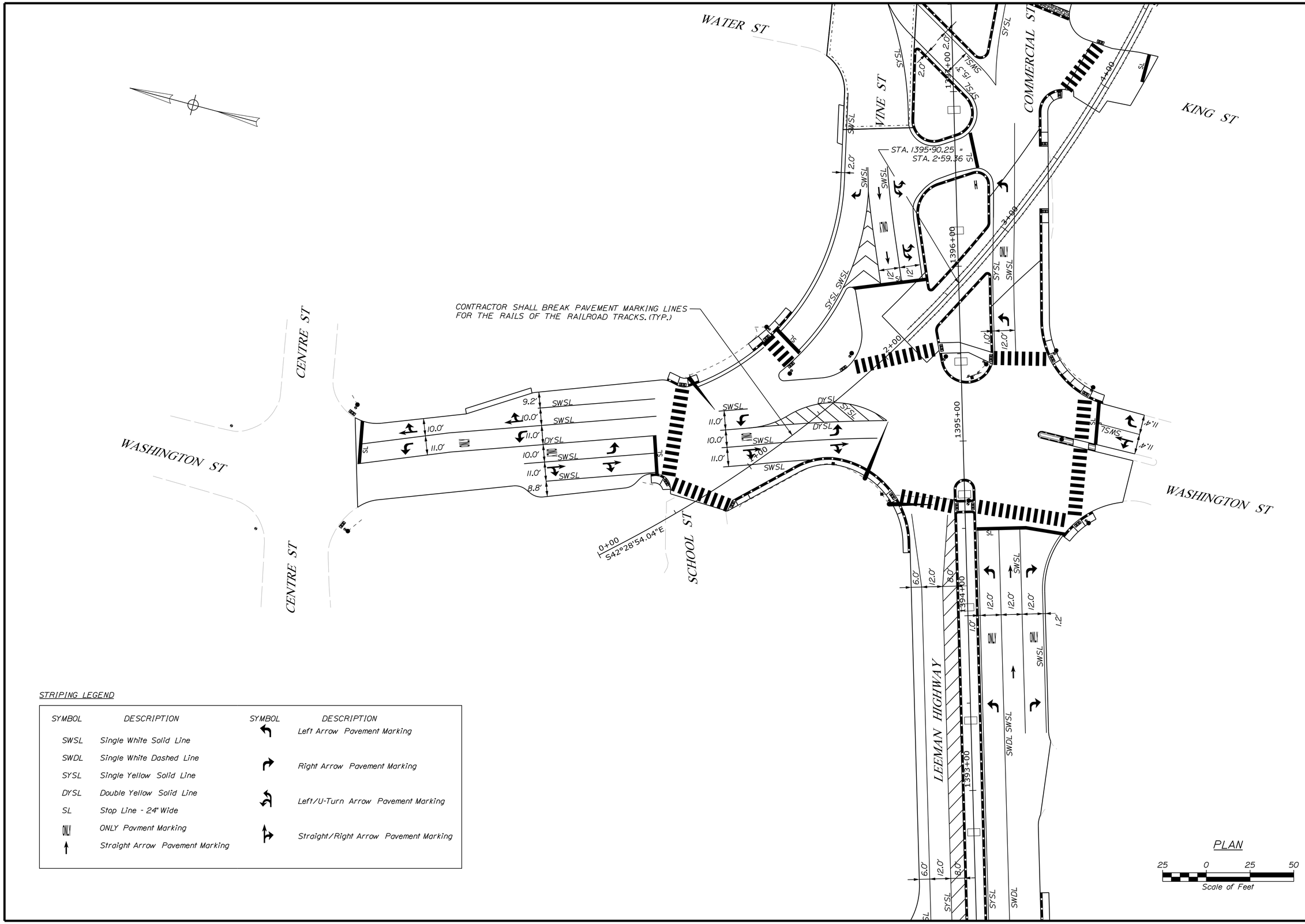

STRIPING LEGEND

SYMBOL	DESCRIPTION	SYMBOL	DESCRIPTION
SWSL	Single White Solid Line		Left Arrow Pavement Marking
SWDL	Single White Dashed Line		Right Arrow Pavement Marking
SYSL	Single Yellow Solid Line		Left/U-Turn Arrow Pavement Marking
DYSL	Double Yellow Solid Line		Straight/Right Arrow Pavement Marking
SL	Stop Line - 24" Wide		
ONLY	ONLY Pavment Marking		
	Straight Arrow Pavement Marking		

STATE OF MAINE
DEPARTMENT OF TRANSPORTATION

NHPP - 1927(300)

WIN 19273.00

BRIDGE NO. 3838

BRIDGE PLANS

vhb

		BY	DATE
PROJ. MANAGER	J. KITTREDGE		
DESIGN-DETAILED	ECF	SAB	12/15
CHECKED-REVIEWED	AG	SMH	12/15
DESIGN2-DETAILED2	---	---	---
DESIGN3-DETAILED3	---	---	---
REVISIONS 1	---	---	---
REVISIONS 2	---	---	---
REVISIONS 3	---	---	---
REVISIONS 4	---	---	---
FIELD CHANGES	---	---	---

WEST APPROACH BRIDGE
MAINE OWNED RR & CITY STREETS
BATH SAGADAHOC COUNTY

STRIPING & SIGNING PLANS (4 OF 4)

SHEET NUMBER
23
OF 145

Filename: ...\MSTA\023_HDPlan-Striping4.dgn Division: HIGHWAY Username: eflynn Date:12/21/2015

Identification Number	Size of Sign		Text	Text Dimensions (Inches)			Number of Signs Required	Color		Border Radius	Area in Square Feet	Post
	Width	Height		Letter Height	Vertical Spacing	Arrow RTE.MKR.		Back-ground	Legend Border			
D3-1c	54"	12"	Washington St	6/4.5C	3" 3"		2	Green	White	1"	4.5 (9.0)	Mount on existing posts
D3-1d	42"	12"	School St	6/4.5C	3" 3"		1	Green	White	1"	3.5 (3.5)	Mount on existing posts
D3-1e	36"	12"	Vine St	6/4.5C	3" 3"		1	Green	White	1"	3.0 (3.0)	Mount on existing posts
OM3-L	12"	36"		SHSB	SHSB	SHSB	20	SHSB	SHSB	SHSB	3.0 (60.0)	Mount to bridge pier
R3-2	36"	36"					1				9.0 (9.0)	Back of W6-3
R3-5a	30"	36"	ONLY				1				7.5 (7.5)	Mount to mast arm
R3-5L	30"	36"	ONLY				4				7.5 (30.0)	Mount to mast arms
R3-5R	30"	36"	ONLY				2				7.5 (15.0)	Mount to mast arms
R3-6L	30"	36"					2				7.5 (15.0)	Mount to mast arms
R3-6R	30"	36"					3				7.5 (22.5)	Mount to mast arms
R3-8e	42"	36"	ONLY ONLY				1				10.5 (10.5)	U-channel
R5-1	30"	30"	DO NOT ENTER				3				6.25 (18.75)	U-channel Back of R1-1
R10-3e	9"	15"					17				0.94 (15.98)	Mount to posts
R10-12	30"	36"	LEFT TURN YIELD ON GREEN				1				7.5 (7.5)	Mount to mast arm
W11-2	36"	36"					2				9.0 (18.0)	U-channel
W16-7p	24"	12"					2				2.0 (4.0)	Mount below W11-2

SHSB - Text Dimensions Shall Conform to "Standard Highway Signs Book" - 2012 Edition.

STATE OF MAINE
DEPARTMENT OF TRANSPORTATION

NHPP - 1927(300)

WIN 19273.00

BRIDGE NO. 3838

BRIDGE PLANS

vhb

		BY	DATE
PROJ. MANAGER	J. KITTREDGE		
DESIGN-DETAILED	MLG	JAR	12/15
CHECKED-REVIEWED	MDS	SMH	12/15
DESIGN2-DETAILED2	---	---	---
DESIGN3-DETAILED3	---	---	---
REVISIONS 1	---	---	---
REVISIONS 2	---	---	---
REVISIONS 3	---	---	---
REVISIONS 4	---	---	---
FIELD CHANGES	---	---	---

WEST APPROACH BRIDGE
MAINE OWNED RR & CITY STREETS
BATH SAGADAHOC COUNTY

SIGN SUMMARY

SHEET NUMBER
24
OF 145

Filename: ...\MSTA\024_SignSummary.dgn Division: HIGHWAY Username: kwentworth Date:12/21/2015

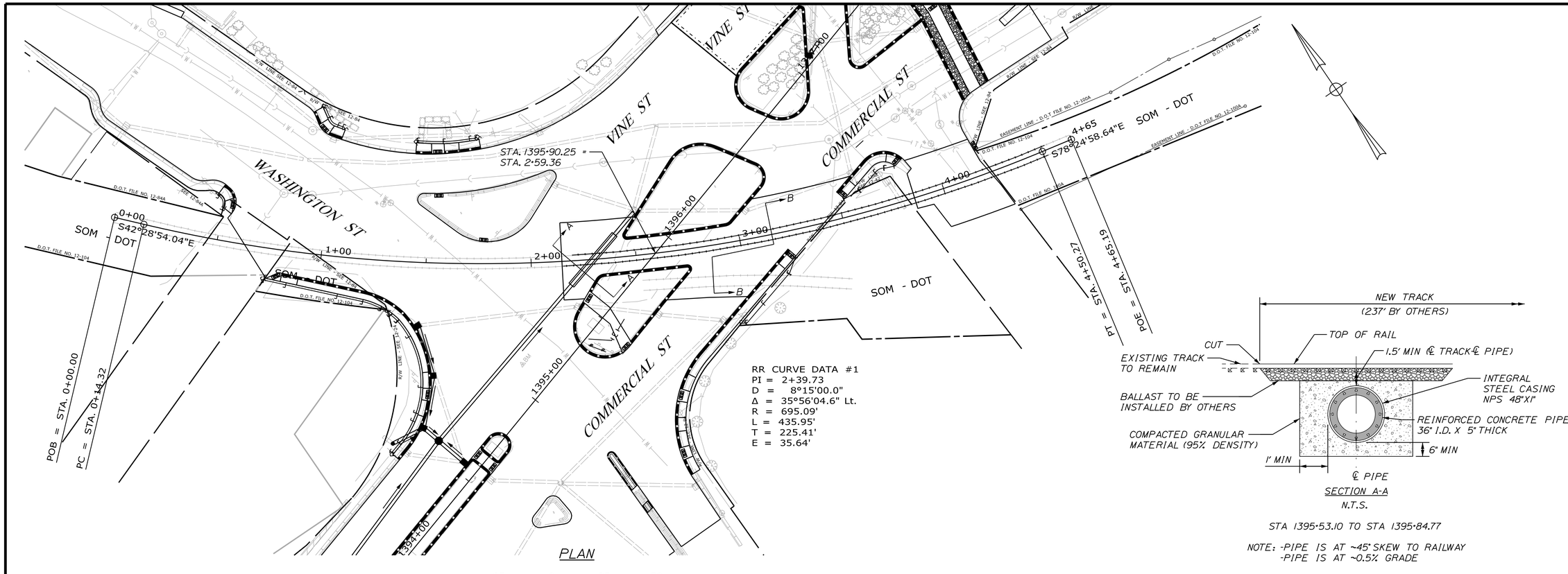

SECTION A-A
N.T.S.

STA 1395+53.10 TO STA 1395+84.77

NOTE: -PIPE IS AT ~45° SKEW TO RAILWAY
-PIPE IS AT ~0.5% GRADE

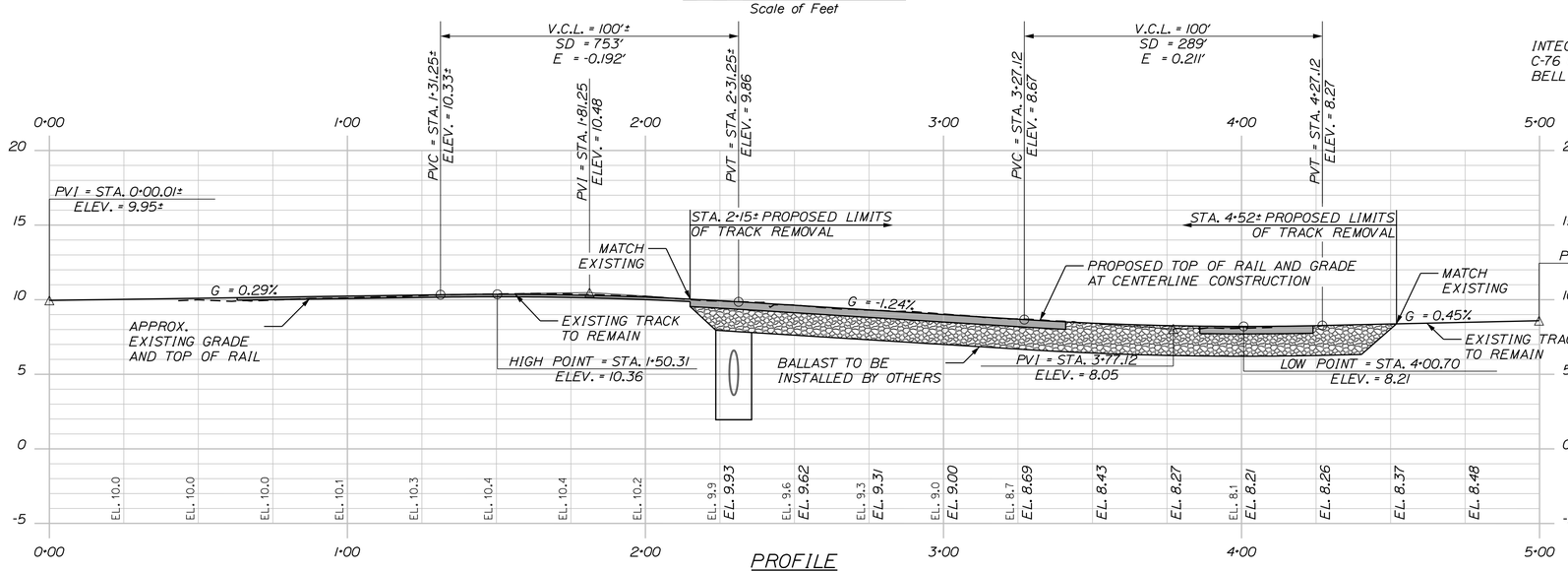

PROFILE
(RAIL AND TIES NOT SHOWN FOR CLARITY)

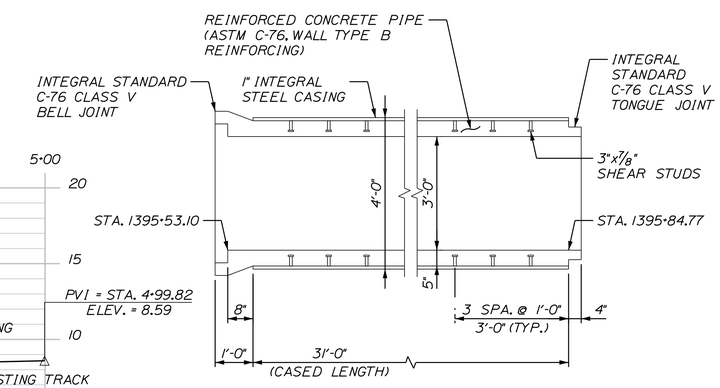

LONGITUDINAL PIPE SECTION
(MODIFIED ASTM C-76, CLASS V, 36" RCP W/ WALL B REINFORCING AND INTEGRAL STEEL CASING)
N.T.S.

RAILROAD NOTES

1. HORIZONTAL AND VERTICAL ALIGNMENT (PROFILE) INFORMATION IS A BEST-FIT GEOMETRY OF EXISTING CONDITIONS BASED ON LIMITED FIELD SURVEY INFORMATION.
2. BALLEST, TIES, AND RAIL TO BE INSTALLED BY OTHERS PER MAINE DOT.
3. CONTRACTOR SHALL COORDINATE EXACT RAIL REMOVAL LIMITS ALONG EACH RAIL WITH THE RESIDENT AT LEAST 90 DAYS PRIOR TO PERFORMING THE WORK TO ENSURE ADEQUATE ROOM FOR DRAINAGE PIPE CONSTRUCTION AND LEAD LINE FOR RAIL FABRICATION.
4. SEE ROADWAY TYPICALS FOR SKEWED SECTION B-B.

STATE OF MAINE
DEPARTMENT OF TRANSPORTATION

NHPP - 1927(300)

WIN 19273.00

BRIDGE NO. 3838

BRIDGE PLANS

vhb

		BY	DATE
PROJ. MANAGER	J. KITTREDGE		
DESIGN-DETAILED	ECF	SAB	12/15
CHECKED-REVIEWED	AG	SMH	12/15
DESIGN2-DETAILED2	---	---	---
DESIGN3-DETAILED3	---	---	---
REVISIONS 1	---	---	---
REVISIONS 2	---	---	---
REVISIONS 3	---	---	---
REVISIONS 4	---	---	---
FIELD CHANGES	---	---	---

WEST APPROACH BRIDGE
MAINE OWNED RR & CITY STREETS
BATH SAGADAHOC COUNTY

RAILROAD PLAN AND PROFILE (1 OF 1)

SHEET NUMBER
25
OF 145

Filename: ...\MSTA\025_HDPlan_RR1.dgn Division: HIGHWAY Username: eflynn Date:12/21/2015

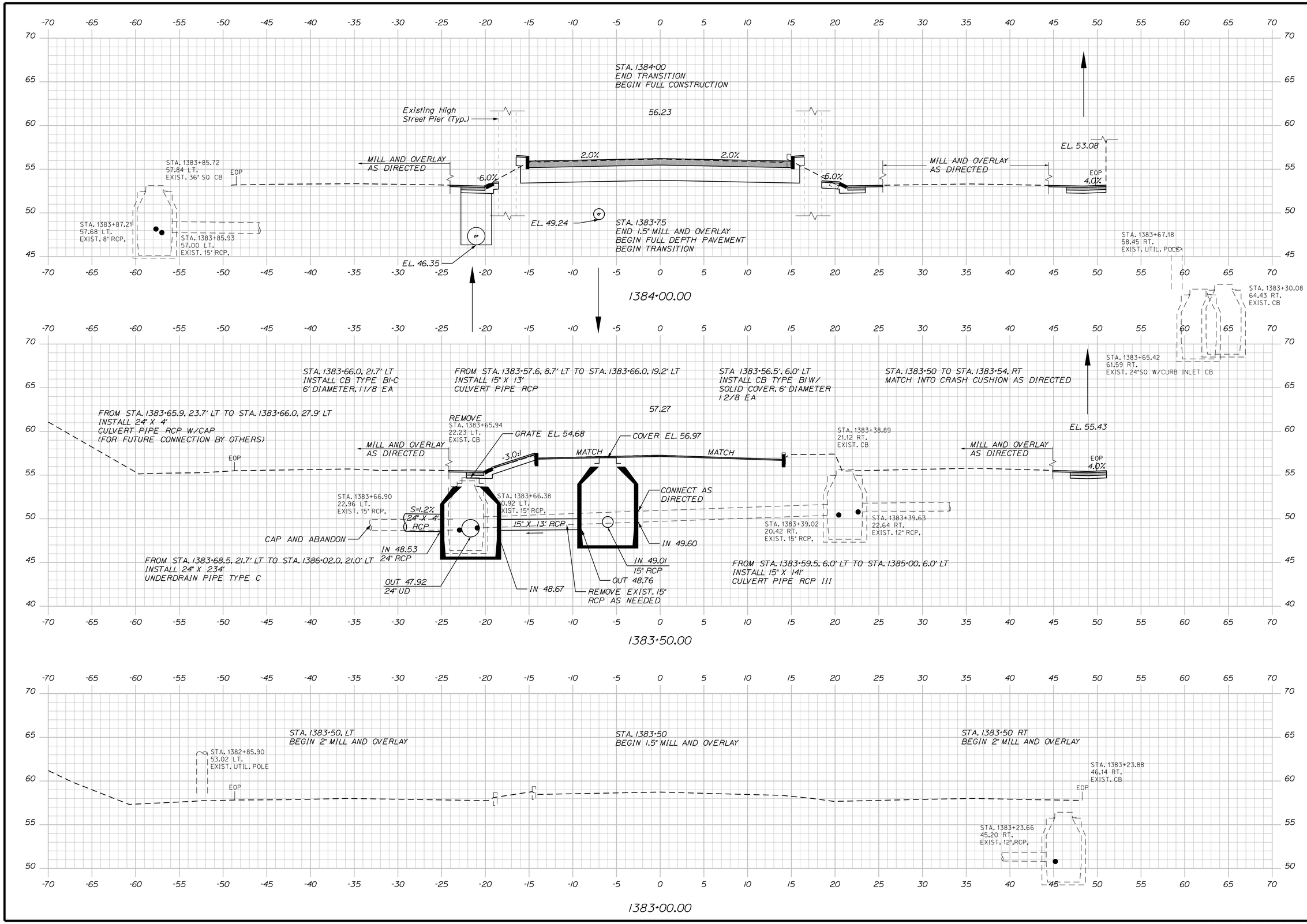

STATE OF MAINE
DEPARTMENT OF TRANSPORTATION

NHPP - 1927(300)

WIN 19273.00

BRIDGE NO. 3838

BRIDGE PLANS

vhb

PROJ. MANAGER	J. KITTREDGE	BY	DATE
DESIGN-DETAILED	ECF	SAB	12/15
CHECKED-REVIEWED	AG	SMH	12/15
DESIGN2-DETAILED2	...	...	...
DESIGN3-DETAILED3	...	...	...
REVISIONS 1	...	...	...
REVISIONS 2	...	...	...
REVISIONS 3	...	...	...
REVISIONS 4	...	...	...
FIELD CHANGES	...	...	...

WEST APPROACH BRIDGE
MAINE OWNED RR & CITY STREETS
BATH SAGADAHOC COUNTY

CROSS SECTIONS

SHEET NUMBER
26
OF 145

Filename: ...\00\HIGHWAY\MSTA\Xsect.dgn Division: HIGHWAY Username: eflynn Date:12/21/2015

Sta. 1383+00.00 to Sta. 1384+00.00

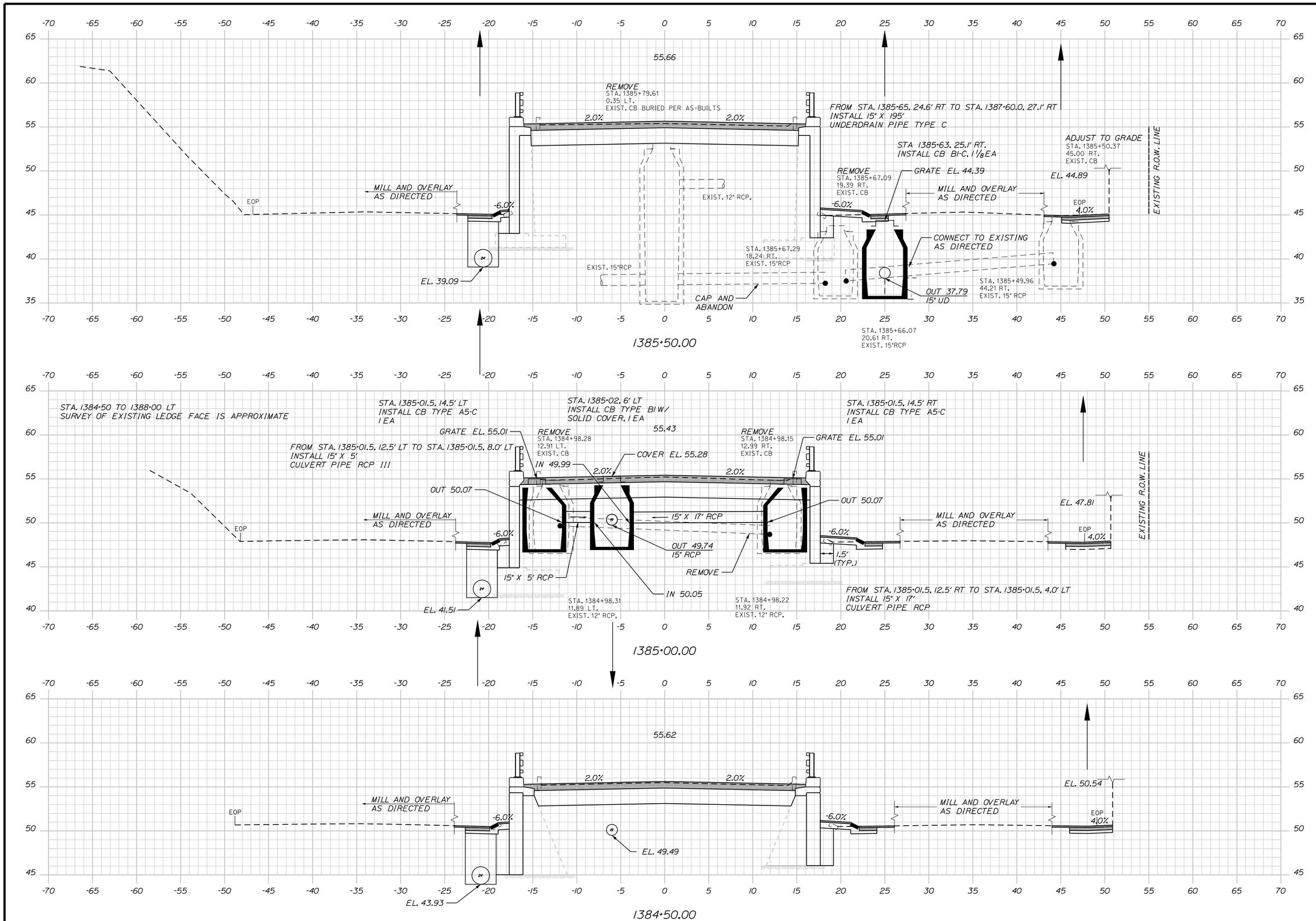

Sta. 1384+50.00 to Sta. 1385+50.00

STATE OF MAINE
DEPARTMENT OF TRANSPORTATION

NHPP - 1927(300)

WIN 19273.00

BRIDGE NO. 3838

BRIDGE PLANS

PROJ. MANAGER	J. KITTREDGE	BY	DATE
DESIGN-DETAILED	ECF	SAB	12/15
CHECKED-REVIEWED	AG	SMH	12/15
DESIGN2-DETAILED2	...	...	...
DESIGN3-DETAILED3	...	...	...
REVISIONS 1	...	...	...
REVISIONS 2	...	...	...
REVISIONS 3	...	...	...
REVISIONS 4	...	...	...
FIELD CHANGES	...	...	...

WEST APPROACH BRIDGE
MAINE OWNED RR & CITY STREETS
BATH SAGADAHOC COUNTY

CROSS SECTIONS

SHEET NUMBER
27
OF 145

Filename: ...\00\HIGHWAY\MSTA\Xsect.dgn Division: HIGHWAY Username: eflynn Date:12/21/2015

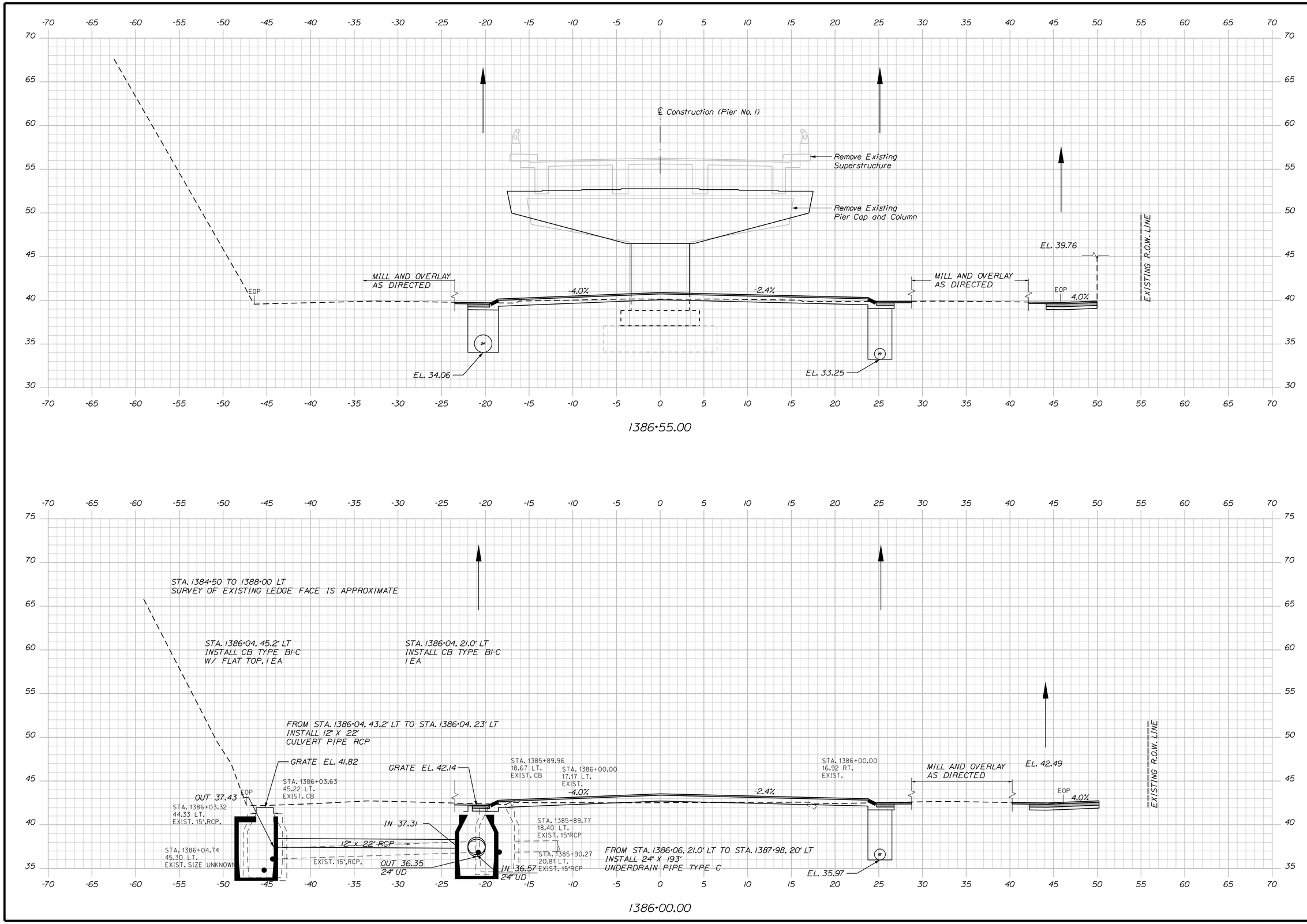

STATE OF MAINE
DEPARTMENT OF TRANSPORTATION

NHPP - 1927(300)

WIN 19273.00

BRIDGE NO. 3838

BRIDGE PLANS

vhb

		BY	DATE
PROJ. MANAGER	J. KITTREDGE		
DESIGN-DETAILED	ECF	SAB	12/15
CHECKED-REVIEWED	AG	SMH	12/15
DESIGN2-DETAILED2	---	---	---
DESIGN3-DETAILED3	---	---	---
REVISIONS 1	---	---	---
REVISIONS 2	---	---	---
REVISIONS 3	---	---	---
REVISIONS 4	---	---	---
FIELD CHANGES	---	---	---

WEST APPROACH BRIDGE
MAINE OWNED RR & CITY STREETS
BATH SAGADAHOC COUNTY

CROSS SECTIONS

SHEET NUMBER
28
OF 145

Sta. 1386+00.00 to Sta. 1386+55.00

Filename: ...\00\HIGHWAY\MSTA\Xsect.dgn Division: HIGHWAY Username: eflynn Date:12/21/2015

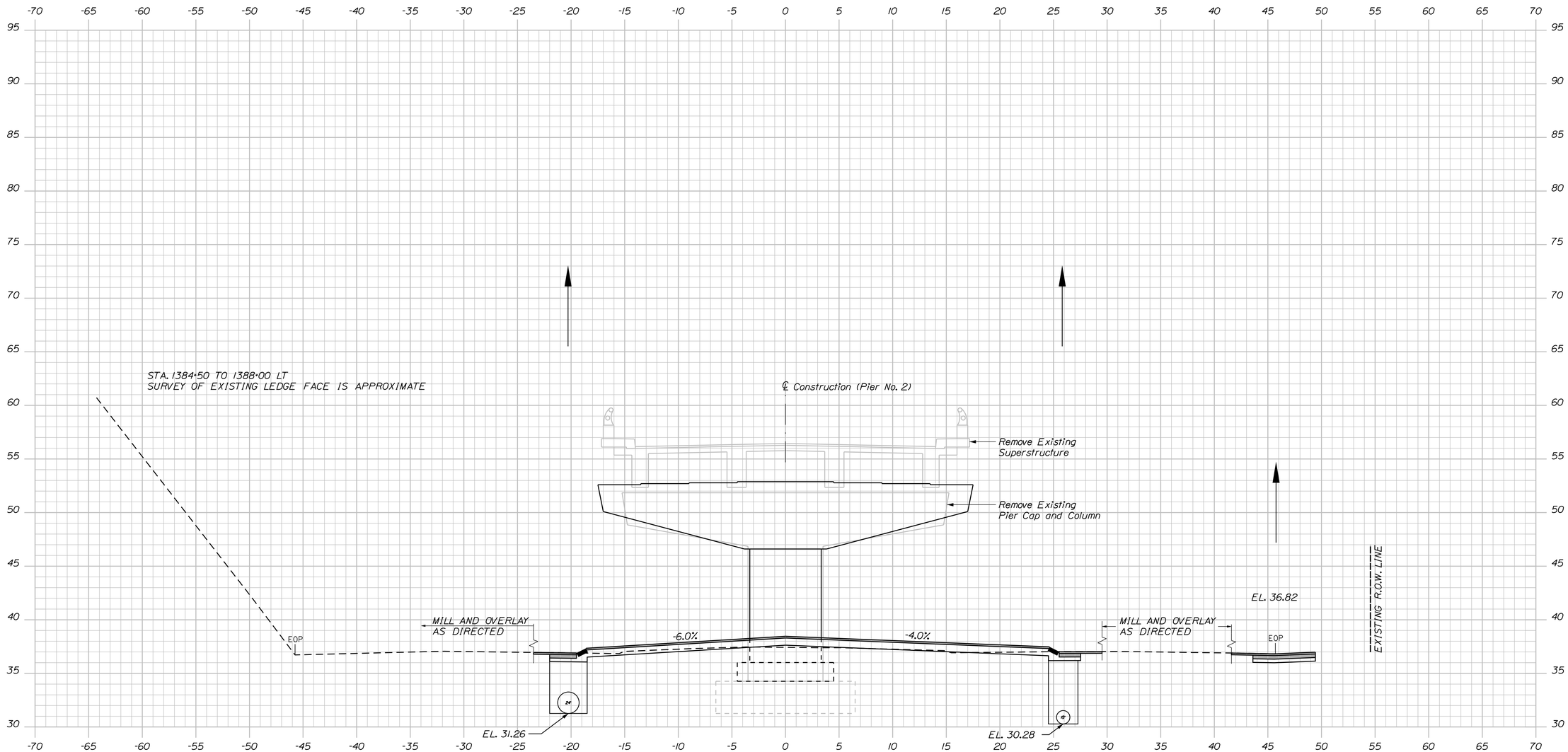

STATE OF MAINE
DEPARTMENT OF TRANSPORTATION

NHPP - 1927(300)

WIN 19273.00

BRIDGE NO. 3838

BRIDGE PLANS

PROJ. MANAGER	J. KITTREDGE	BY	DATE
DESIGN-DETAILED	ECF	SAB	12/15
CHECKED-REVIEWED	AG	SMH	12/15
DESIGN2-DETAILED2	---	---	---
DESIGN3-DETAILED3	---	---	---
REVISIONS 1	---	---	---
REVISIONS 2	---	---	---
REVISIONS 3	---	---	---
REVISIONS 4	---	---	---
FIELD CHANGES	---	---	---

WEST APPROACH BRIDGE
MAINE OWNED RR & CITY STREETS
BATH SAGADAHOC COUNTY

CROSS SECTIONS

SHEET NUMBER
29
OF 145

Filename: ...\00\HIGHWAY\MSTA\Xsect.dgn Division: HIGHWAY Username: eflynn Date:12/21/2015

Sta. 1387+15.00

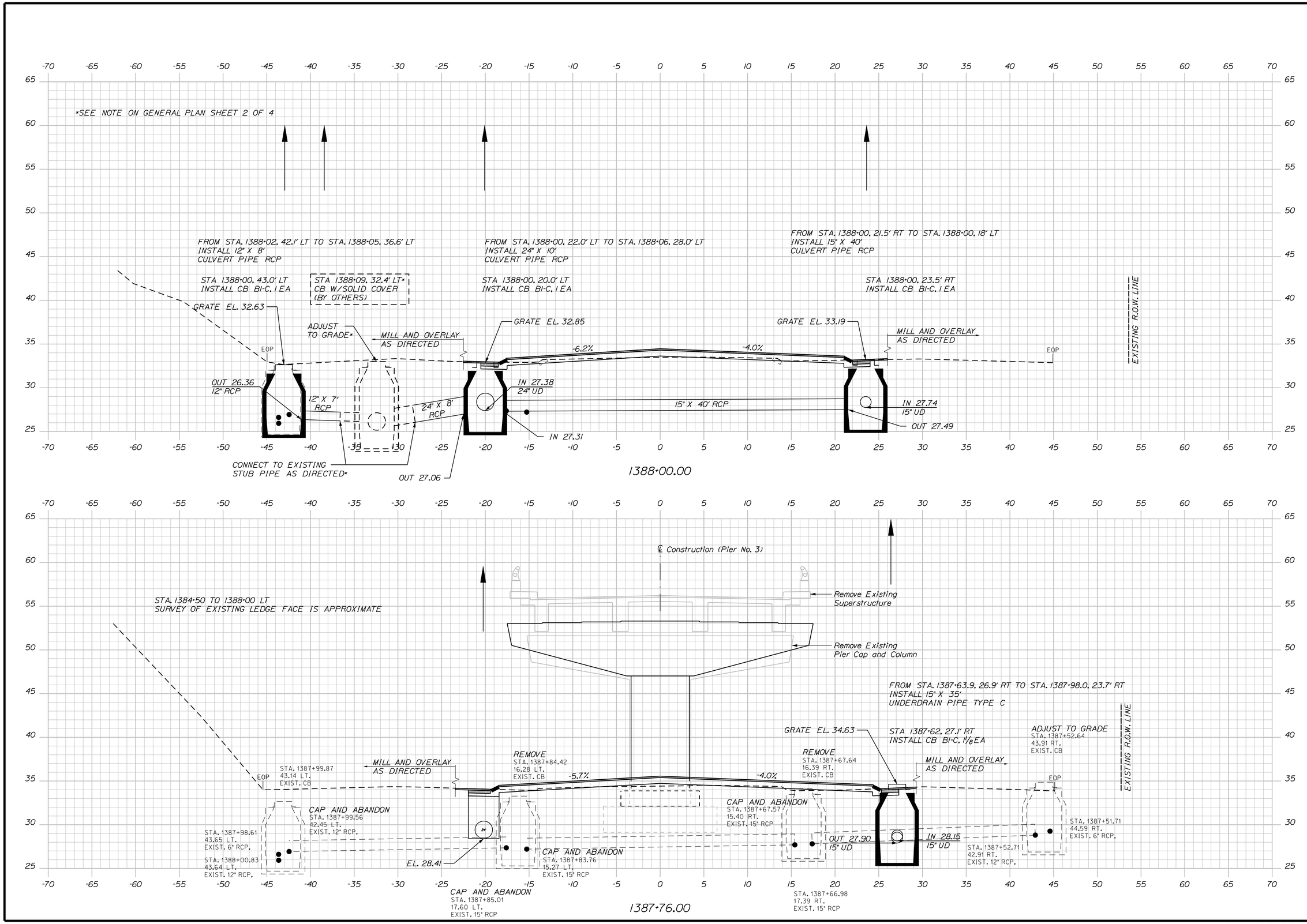

STATE OF MAINE
DEPARTMENT OF TRANSPORTATION

NHPP - 1927(300)

WIN
19273.00

BRIDGE NO. 3838

BRIDGE PLANS

vhb

PROJ. MANAGER	J. KITTREDGE	BY	DATE
DESIGN-DETAILED	ECF	SAB	12/15
CHECKED-REVIEWED	AG	SMH	12/15
DESIGN2-DETAILED2	---	---	---
DESIGN3-DETAILED3	---	---	---
REVISIONS 1	---	---	---
REVISIONS 2	---	---	---
REVISIONS 3	---	---	---
REVISIONS 4	---	---	---
FIELD CHANGES	---	---	---

WEST APPROACH BRIDGE
MAINE OWNED RR & CITY STREETS
BATH SAGADAHOC COUNTY

CROSS SECTIONS

SHEET NUMBER
30
OF 145

Sta. 1387+76.00 to 1388+00.00

Filename: ...\00\HIGHWAY\MSTA\Xsect.dgn Division: HIGHWAY Username: eflynn Date:12/21/2015

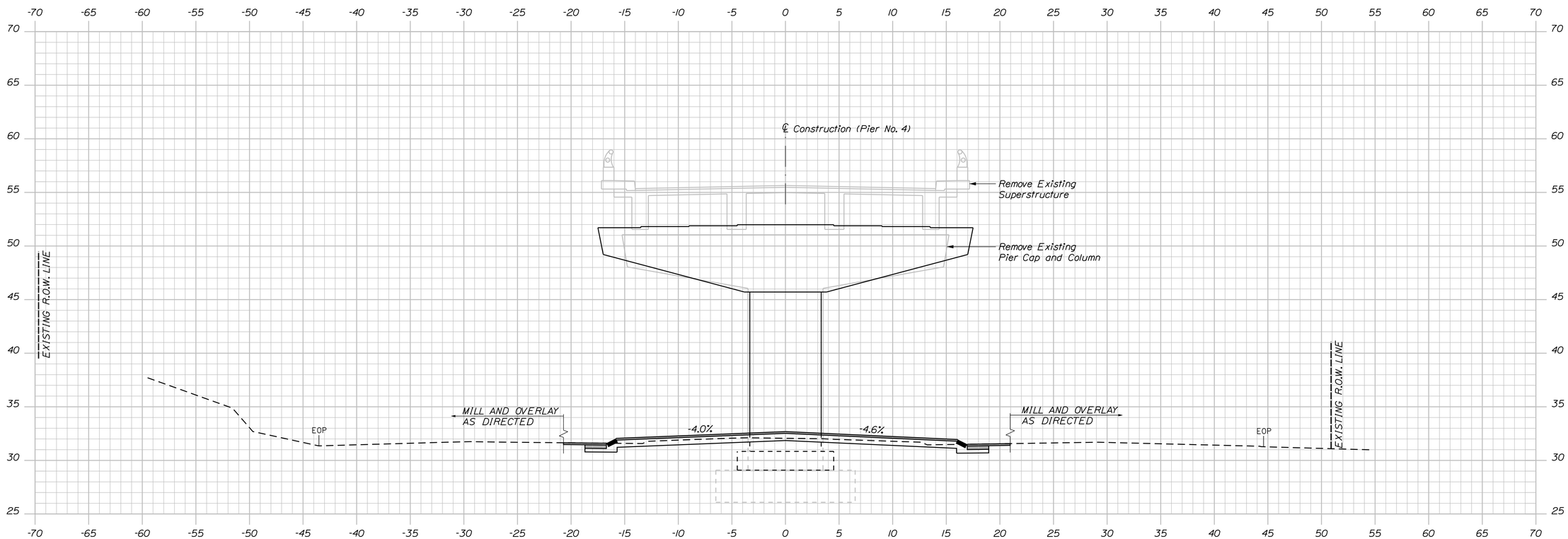

Sta. 1388+37.00

STATE OF MAINE
DEPARTMENT OF TRANSPORTATION

NHPP - 1927(300)

WIN 19273.00

BRIDGE NO. 3838

BRIDGE PLANS

vhb

PROJ. MANAGER	J. KITTREDGE	BY	DATE
DESIGN-DETAILED	ECF	SAB	12/15
CHECKED-REVIEWED	AG	SMH	12/15
DESIGN2-DETAILED2	---	---	---
DESIGN3-DETAILED3	---	---	---
REVISIONS 1	---	---	---
REVISIONS 2	---	---	---
REVISIONS 3	---	---	---
REVISIONS 4	---	---	---
FIELD CHANGES	---	---	---

WEST APPROACH BRIDGE
MAINE OWNED RR & CITY STREETS
BATH SAGADAHOC COUNTY

CROSS SECTIONS

SHEET NUMBER

31

OF 145

Filename: ...\00\HIGHWAY\MSTA\Xsect.dgn Division: HIGHWAY Username: eflynn Date:12/21/2015

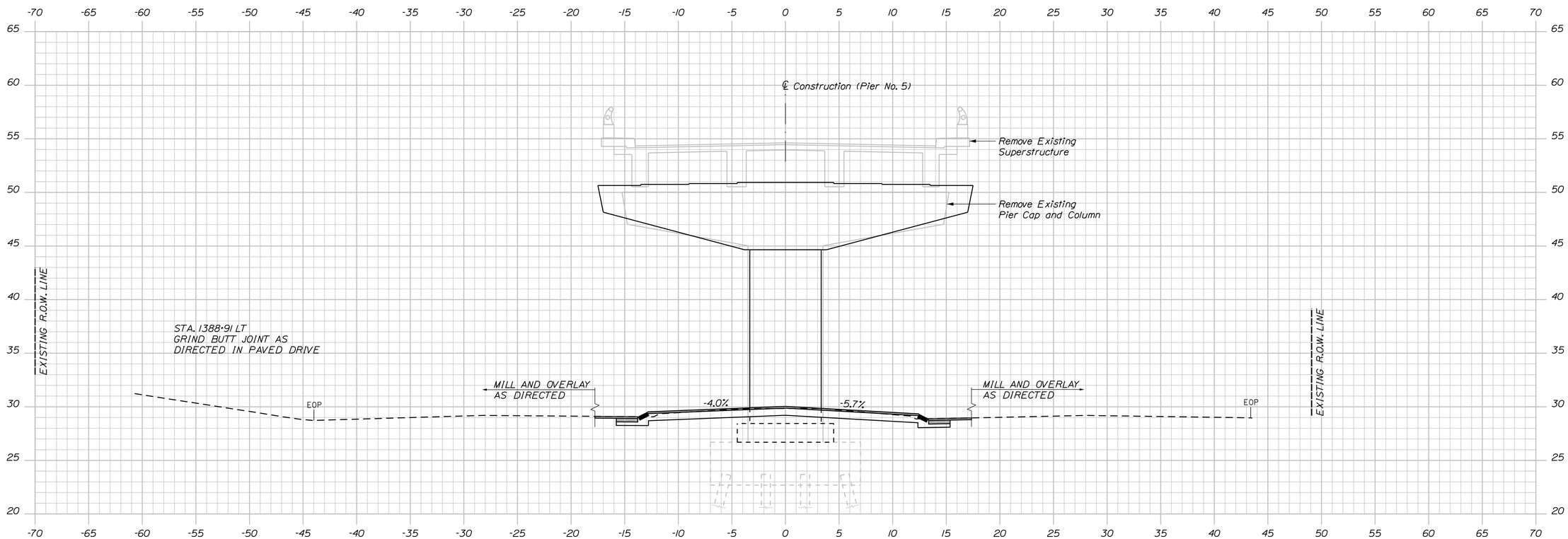

STATE OF MAINE
DEPARTMENT OF TRANSPORTATION

NHPP - 1927(300)

WIN 19273.00

BRIDGE NO. 3838

BRIDGE PLANS

vhb

PROJ. MANAGER	J. KITTREDGE	BY	DATE
DESIGN-DETAILED	ECF	SAB	12/15
CHECKED-REVIEWED	AG	SMH	12/15
DESIGN2-DETAILED2	---	---	---
DESIGN3-DETAILED3	---	---	---
REVISIONS 1	---	---	---
REVISIONS 2	---	---	---
REVISIONS 3	---	---	---
REVISIONS 4	---	---	---
FIELD CHANGES	---	---	---

WEST APPROACH BRIDGE
MAINE OWNED RR & CITY STREETS
BATH SAGADAHOC COUNTY

CROSS SECTIONS

SHEET NUMBER
32
OF 145

Sta. 1388+97.00

Filename: ...\00\HIGHWAY\MSTA\Xsect.dgn Division: HIGHWAY Username: eflynn Date:12/21/2015

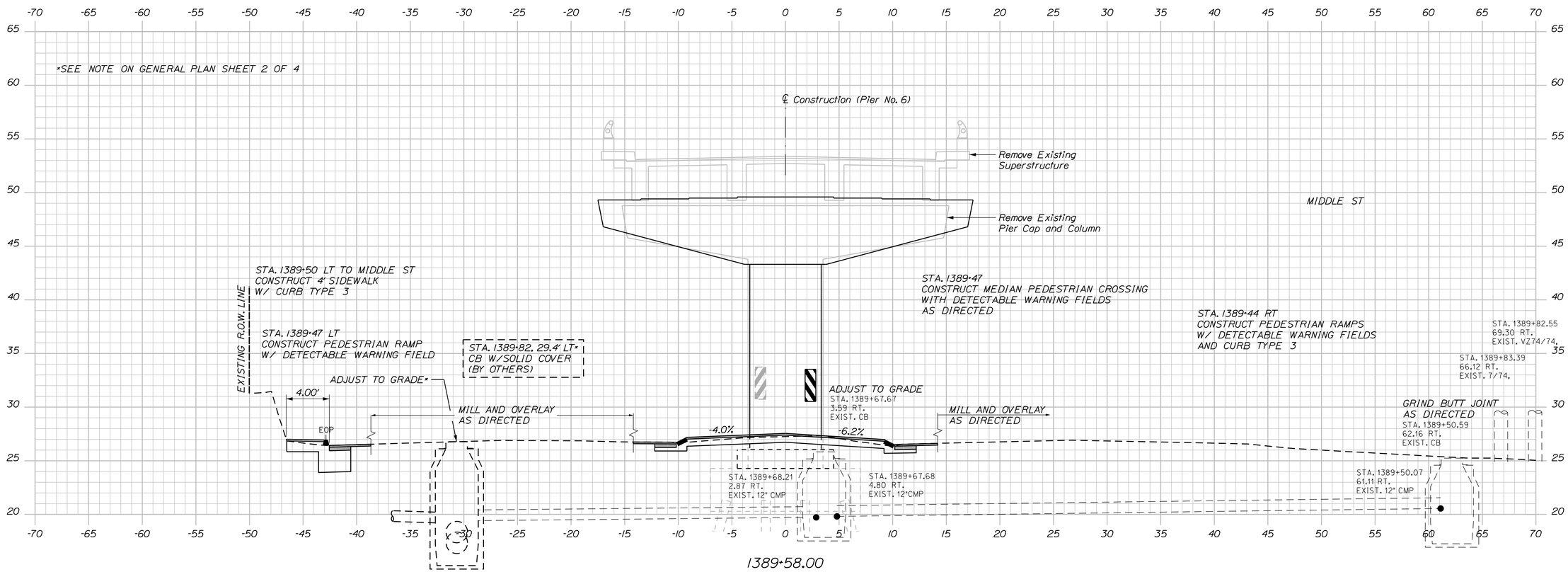

STATE OF MAINE
DEPARTMENT OF TRANSPORTATION

NHPP - 1927(300)

WIN 19273.00

BRIDGE NO. 3838

BRIDGE PLANS

vhb

		BY	DATE
PROJ. MANAGER	J. KITTREDGE		
DESIGN-DETAILED	ECF	SAB	12/15
CHECKED-REVIEWED	AG	SMH	12/15
DESIGN2-DETAILED2	---	---	---
DESIGN3-DETAILED3	---	---	---
REVISIONS 1	---	---	---
REVISIONS 2	---	---	---
REVISIONS 3	---	---	---
REVISIONS 4	---	---	---
FIELD CHANGES	---	---	---

WEST APPROACH BRIDGE
MAINE OWNED RR & CITY STREETS
BATH SAGADAHOC COUNTY

CROSS SECTIONS

SHEET NUMBER
33
OF 145

Filename: ...\00\HIGHWAY\MSTA\Xsect.dgn Division: HIGHWAY Username: eflynn Date:12/21/2015

Sta. 1389+58.00

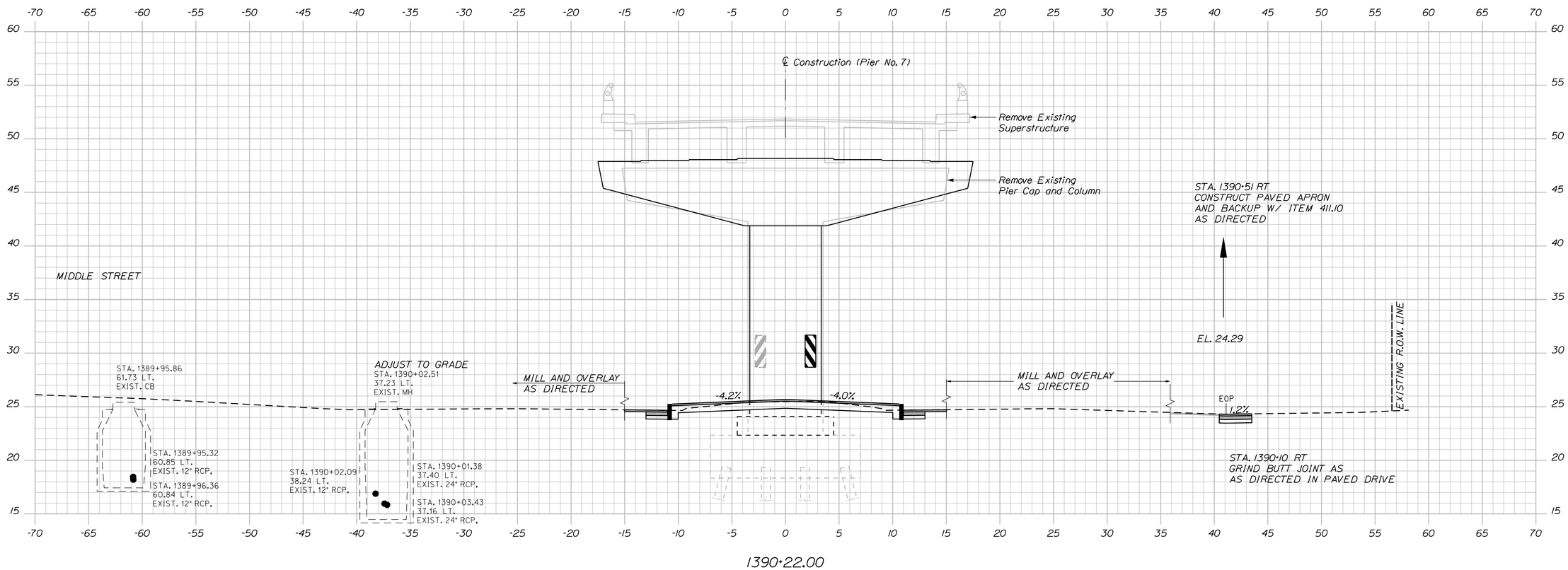

STATE OF MAINE
DEPARTMENT OF TRANSPORTATION

NHPP - 1927(300)

WIN
19273.00

BRIDGE NO. 3838

BRIDGE PLANS

vhb

PROJ. MANAGER	J. KITTREDGE	BY	DATE
DESIGN-DETAILED	ECF	SAB	12/15
CHECKED-REVIEWED	AG	SMH	12/15
DESIGN2-DETAILED2	---	---	---
DESIGN3-DETAILED3	---	---	---
REVISIONS 1	---	---	---
REVISIONS 2	---	---	---
REVISIONS 3	---	---	---
REVISIONS 4	---	---	---
FIELD CHANGES	---	---	---

WEST APPROACH BRIDGE
MAINE OWNED RR & CITY STREETS
BATH SAGADAHOC COUNTY

CROSS SECTIONS

SHEET NUMBER
34
OF 145

Filename: ...\00\HIGHWAY\MSTA\Xsect.dgn Division: HIGHWAY Username: eflynn Date:12/21/2015

Sta. 1390+22.00

Filename: ...\00\HIGHWAY\MSTA\Xsect.dgn Division: HIGHWAY Username: eflynn Date:12/21/2015

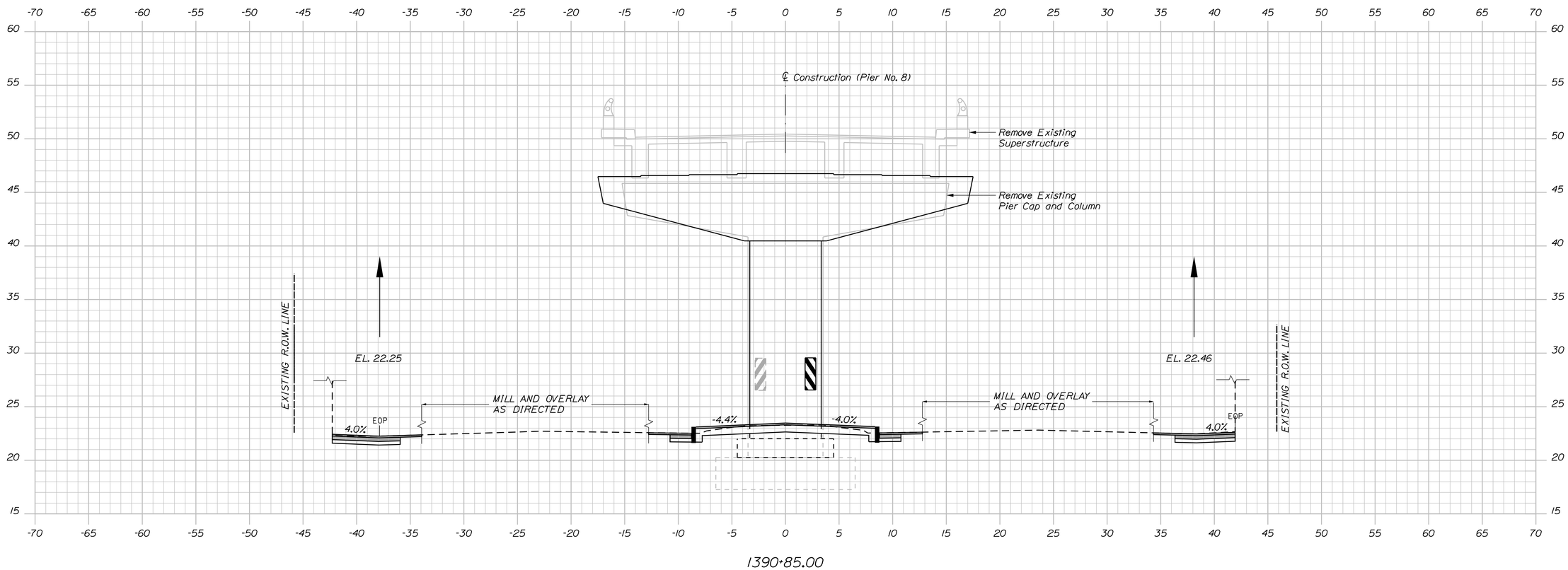

STATE OF MAINE
DEPARTMENT OF TRANSPORTATION

NHPP - 1927(300)

WIN **19273.00**

BRIDGE NO. 3838

BRIDGE PLANS

vhb

PROJ. MANAGER	J. KITTREDGE	BY	DATE
DESIGN-DETAILED	ECF	SAB	12/15
CHECKED-REVIEWED	AG	SMH	12/15
DESIGN2-DETAILED2	---	---	---
DESIGN3-DETAILED3	---	---	---
REVISIONS 1	---	---	---
REVISIONS 2	---	---	---
REVISIONS 3	---	---	---
REVISIONS 4	---	---	---
FIELD CHANGES	---	---	---

WEST APPROACH BRIDGE
MAINE OWNED RR & CITY STREETS
BATH SAGADAHOC COUNTY

CROSS SECTIONS

SHEET NUMBER

35

OF 145

Sta. 1390+85.00

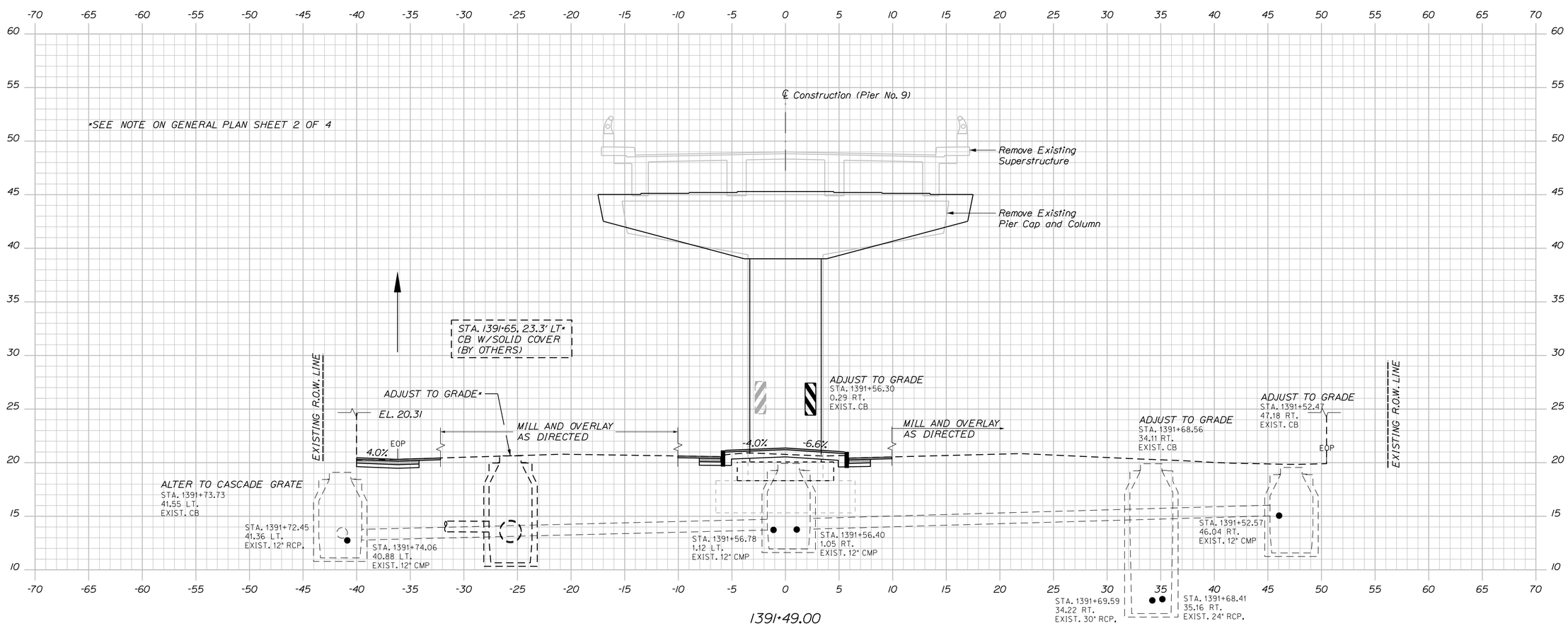

STATE OF MAINE
DEPARTMENT OF TRANSPORTATION

NHPP - 1927(300)

WIN 19273.00

BRIDGE NO. 3838

BRIDGE PLANS

vhb

PROJ. MANAGER	J. KITTREDGE		
		BY	DATE
DESIGN-DETAILED	EGF	SAB	12/15
CHECKED-REVIEWED	AG	SMH	12/15
DESIGN2-DETAILED2	---	---	---
DESIGN3-DETAILED3	---	---	---
REVISIONS 1	---	---	---
REVISIONS 2	---	---	---
REVISIONS 3	---	---	---
REVISIONS 4	---	---	---
FIELD CHANGES	---	---	---

WEST APPROACH BRIDGE
MAINE OWNED RR & CITY STREETS
BATH SAGADAHOC COUNTY

CROSS SECTIONS

SHEET NUMBER
36
OF 145

Sta. 1391+49.00

Filename: ...\00\HIGHWAY\MSTA\Xsect.dgn Division: HIGHWAY Username: eflynn Date:12/21/2015

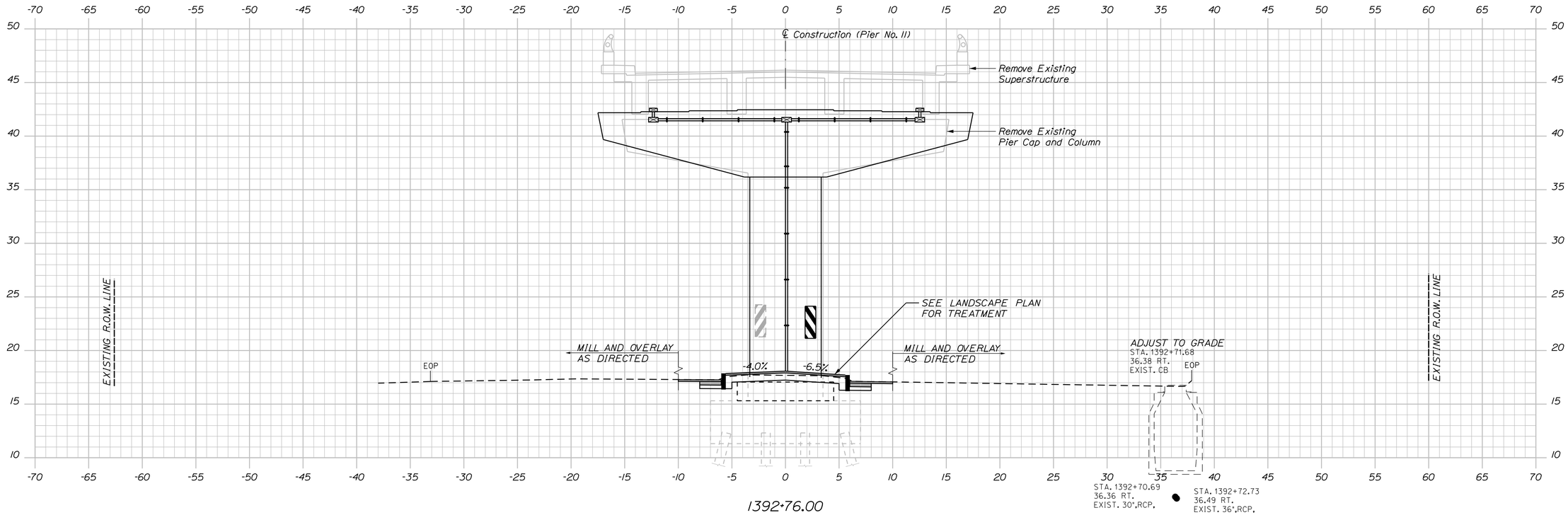

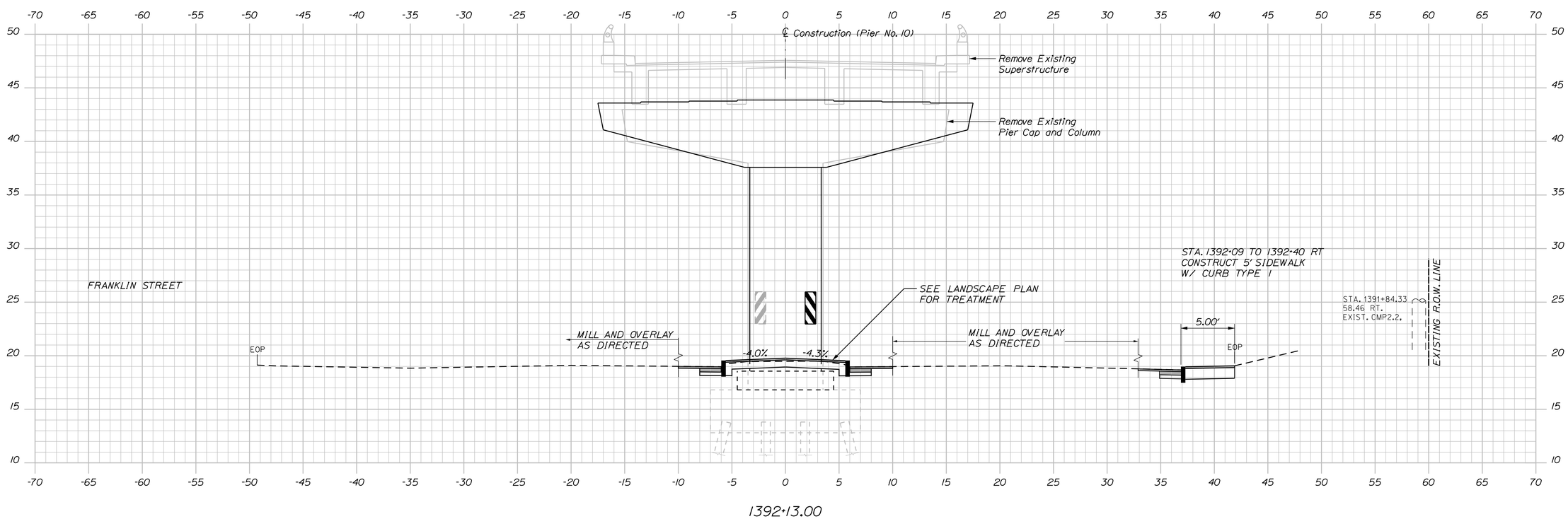

STATE OF MAINE
DEPARTMENT OF TRANSPORTATION

NHPP - 1927(300)

WIN 19273.00

BRIDGE NO. 3838

BRIDGE PLANS

vhb

PROJ. MANAGER	J. KITTREDGE	BY	DATE
DESIGN-DETAILED	ECF	SAB	12/15
CHECKED-REVIEWED	AG	SMH	12/15
DESIGN2-DETAILED2	---	---	---
DESIGN3-DETAILED3	---	---	---
REVISIONS 1	---	---	---
REVISIONS 2	---	---	---
REVISIONS 3	---	---	---
REVISIONS 4	---	---	---
FIELD CHANGES	---	---	---

WEST APPROACH BRIDGE
MAINE OWNED RR & CITY STREETS
BATH SAGADAHOC COUNTY

CROSS SECTIONS

SHEET NUMBER
37
OF 145

Sta. 1392+13.00 to Sta. 1392+76.00

Filename: ...\00\HIGHWAY\MSTA\Xsect.dgn Division: HIGHWAY Username: eflynn Date:12/21/2015

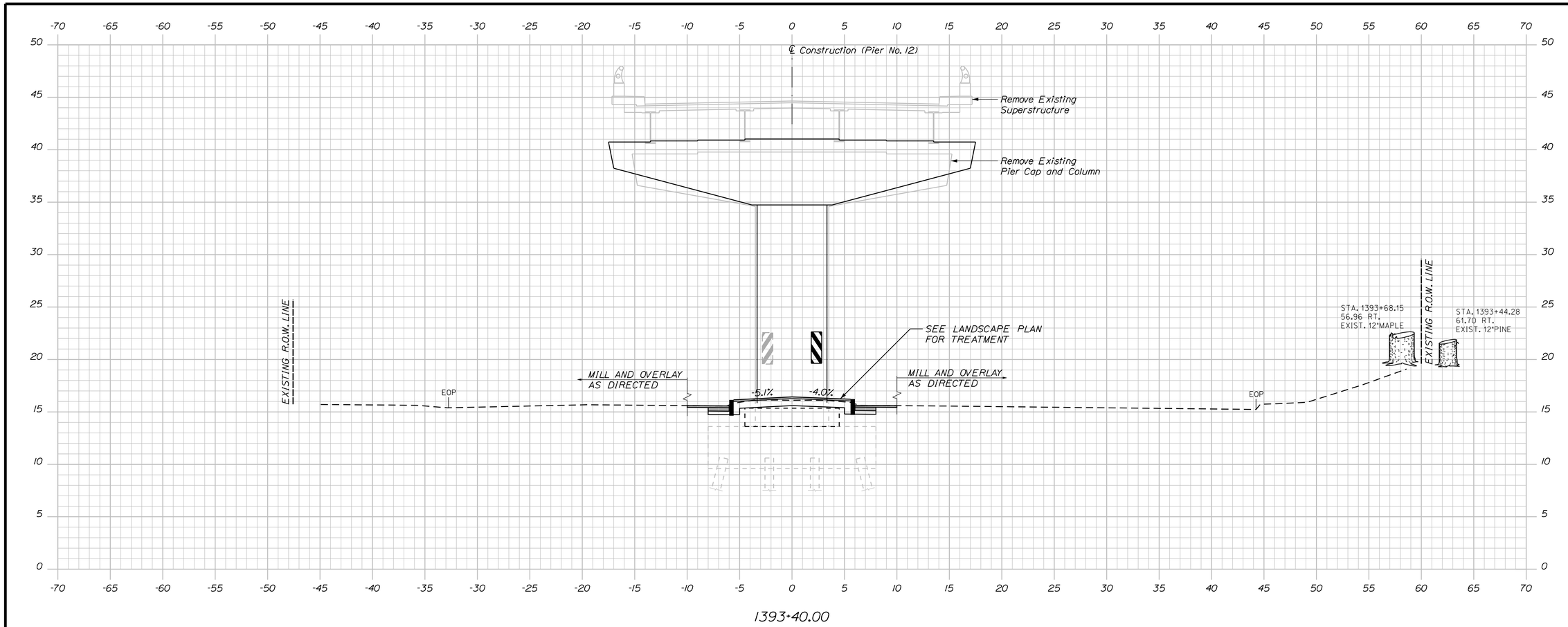

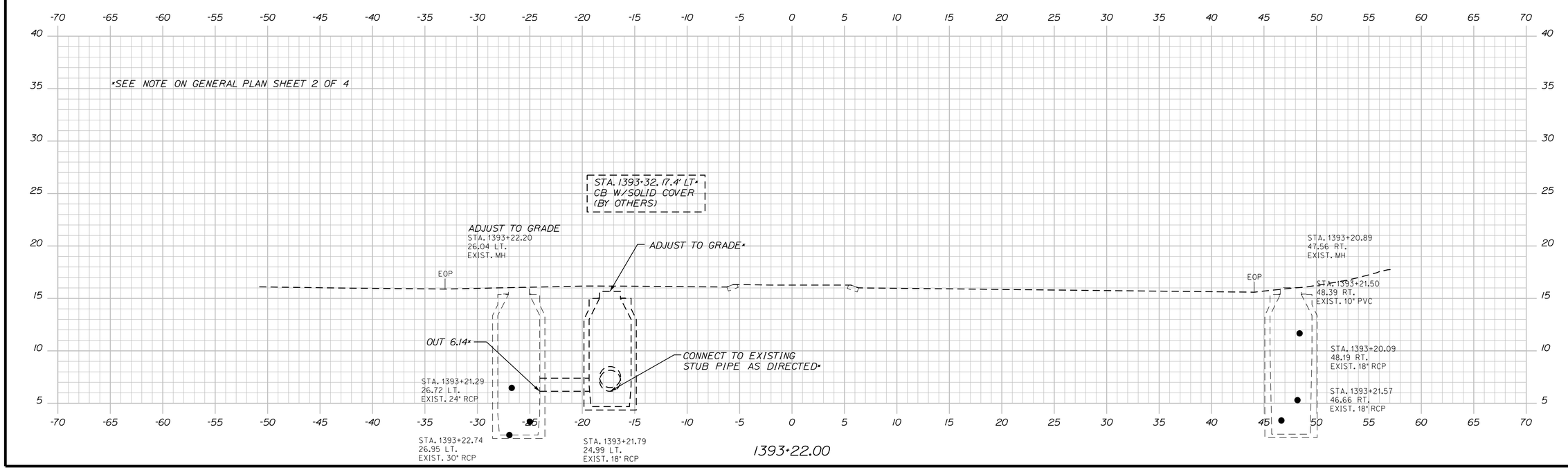

STATE OF MAINE
DEPARTMENT OF TRANSPORTATION

NHPP - 1927(300)

WIN 19273.00

BRIDGE NO. 3838

BRIDGE PLANS

vhb

		BY	DATE
PROJ. MANAGER	J. KITTREDGE		
DESIGN-DETAILED	ECF	SAB	12/15
CHECKED-REVIEWED	AG	SMH	12/15
DESIGN2-DETAILED2	...	...	...
DESIGN3-DETAILED3	...	...	...
REVISIONS 1	...	...	...
REVISIONS 2	...	...	...
REVISIONS 3	...	...	...
REVISIONS 4	...	...	...
FIELD CHANGES	...	...	...

WEST APPROACH BRIDGE
MAINE OWNED RR & CITY STREETS
SAGADAHOC COUNTY
BATH

CROSS SECTIONS

SHEET NUMBER
38
OF 145

Sta. 1393+22.00 to Sta. 1393+40.00

Filename: ...\00\HIGHWAY\MSTA\Xsect.dgn Division: HIGHWAY Username: eflynn Date:12/21/2015

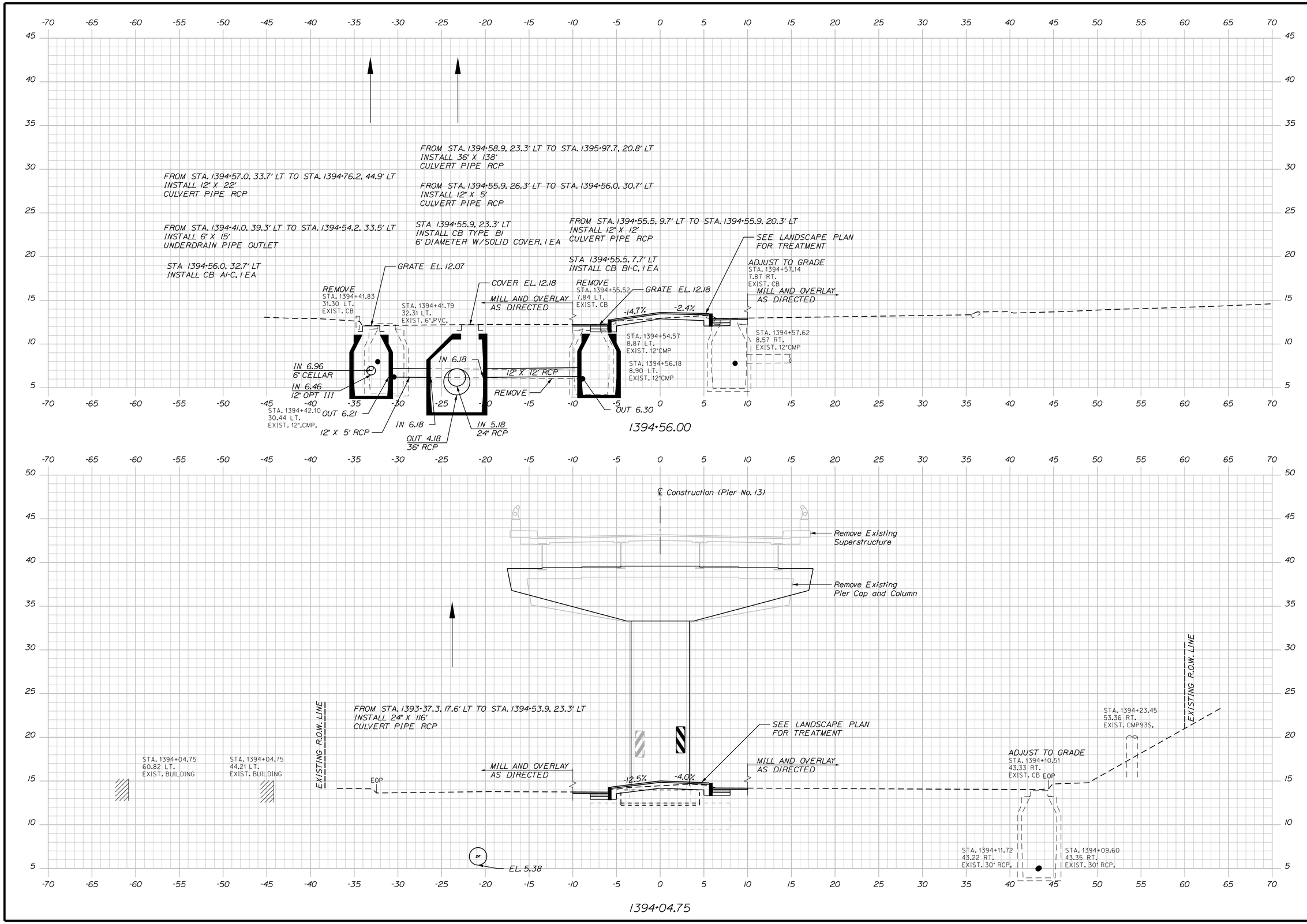

STATE OF MAINE
DEPARTMENT OF TRANSPORTATION

NHPP - 1927(300)

WIN 19273.00

BRIDGE NO. 3838

BRIDGE PLANS

vhb

PROJ. MANAGER	J. KITTREDGE		
DESIGN-DETAILED	ECF	SAB	12/15
CHECKED-REVIEWED	AG	SMH	12/15
DESIGN2-DETAILED2	---	---	---
DESIGN3-DETAILED3	---	---	---
REVISIONS 1	---	---	---
REVISIONS 2	---	---	---
REVISIONS 3	---	---	---
REVISIONS 4	---	---	---
FIELD CHANGES	---	---	---

WEST APPROACH BRIDGE
MAINE OWNED RR & CITY STREETS
BATH SAGADAHOC COUNTY

CROSS SECTIONS

SHEET NUMBER
39
OF 145

Sta. 1394+04.75

Filename: ...\00\HIGHWAY\MSTA\Xsect.dgn Division: HIGHWAY Username: eflynn Date:12/21/2015

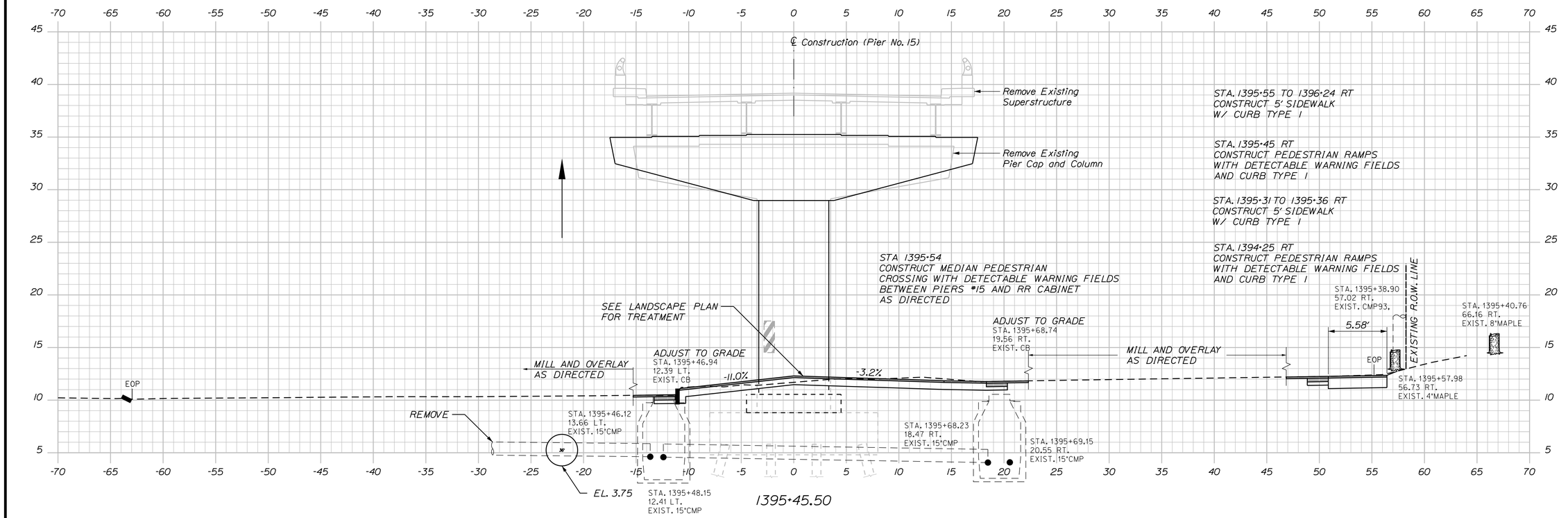

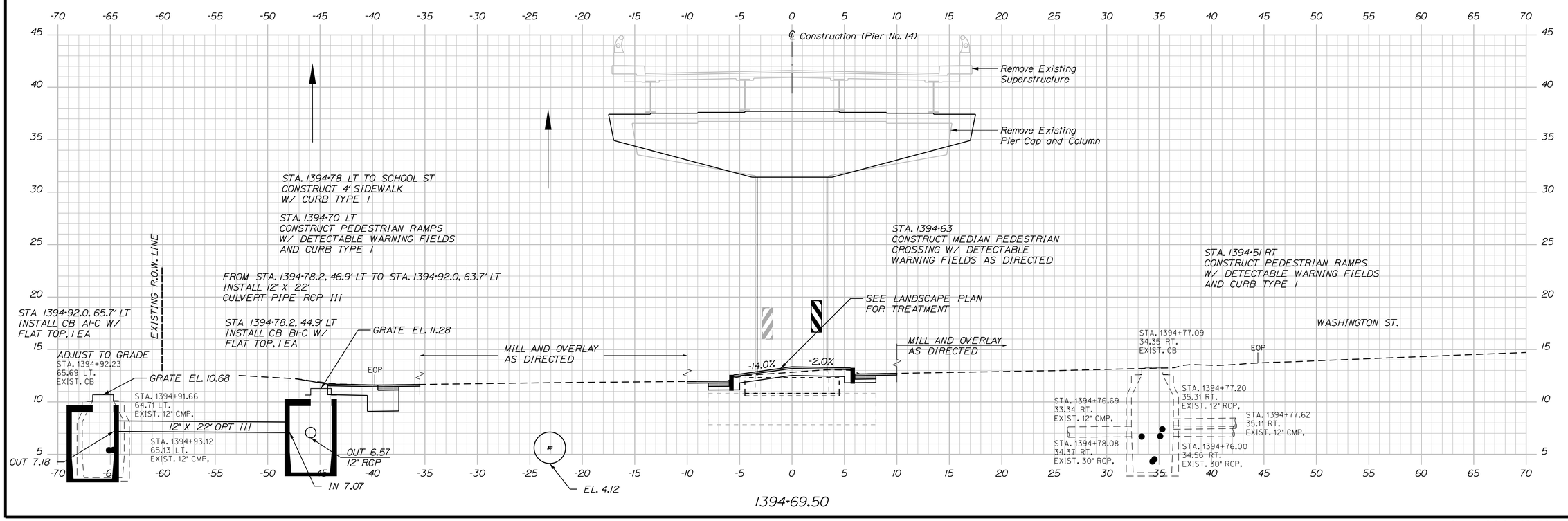

STATE OF MAINE
DEPARTMENT OF TRANSPORTATION

NHPP - 1927(300)

WIN 19273.00

BRIDGE NO. 3838

BRIDGE PLANS

vhb

PROJ. MANAGER	J. KITTREDGE	BY	DATE
DESIGN-DETAILED	ECF	SAB	12/15
CHECKED-REVIEWED	AG	SMH	12/15
DESIGN2-DETAILED2	...	...	...
DESIGN3-DETAILED3	...	...	...
REVISIONS 1	...	...	...
REVISIONS 2	...	...	...
REVISIONS 3	...	...	...
REVISIONS 4	...	...	...
FIELD CHANGES	...	...	...

WEST APPROACH BRIDGE
MAINE OWNED RR & CITY STREETS
BATH SAGADAHOC COUNTY

CROSS SECTIONS

SHEET NUMBER
40
OF 145

Sta. 1394+69.50 to Sta. 1395+45.50

Filename: ...\00\HIGHWAY\MSTA\Xsect.dgn Division: HIGHWAY Username: eflynn Date:12/21/2015

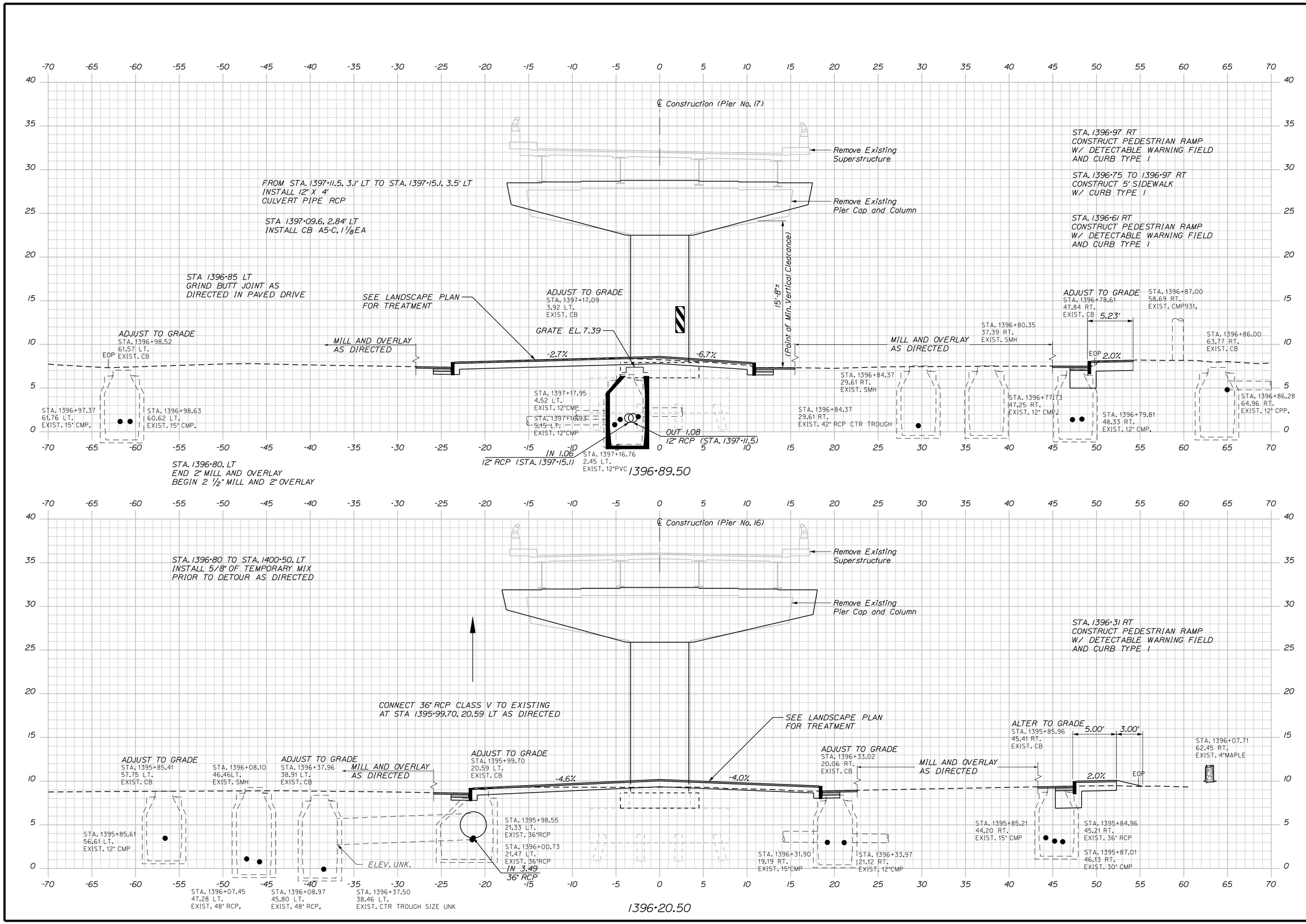

STATE OF MAINE
DEPARTMENT OF TRANSPORTATION

NHPP - 1927(300)

WIN 19273.00

BRIDGE NO. 3838

BRIDGE PLANS

vhb

PROJ. MANAGER	J. KITTREDGE		
DESIGN-DETAILED	ECF	SAB	12/15
CHECKED-REVIEWED	AG	SMH	12/15
DESIGN2-DETAILED2	---	---	---
DESIGN3-DETAILED3	---	---	---
REVISIONS 1	---	---	---
REVISIONS 2	---	---	---
REVISIONS 3	---	---	---
REVISIONS 4	---	---	---
FIELD CHANGES	---	---	---

WEST APPROACH BRIDGE
MAINE OWNED RR & CITY STREETS
BATH SAGADAHOC COUNTY

CROSS SECTIONS

SHEET NUMBER
41
OF 145

Sta. 1396+20.50 to Sta. 1396+89.50

Filename: ...\00\HIGHWAY\MSTA\Xsect.dgn Division: HIGHWAY Username: eflynn Date:12/21/2015

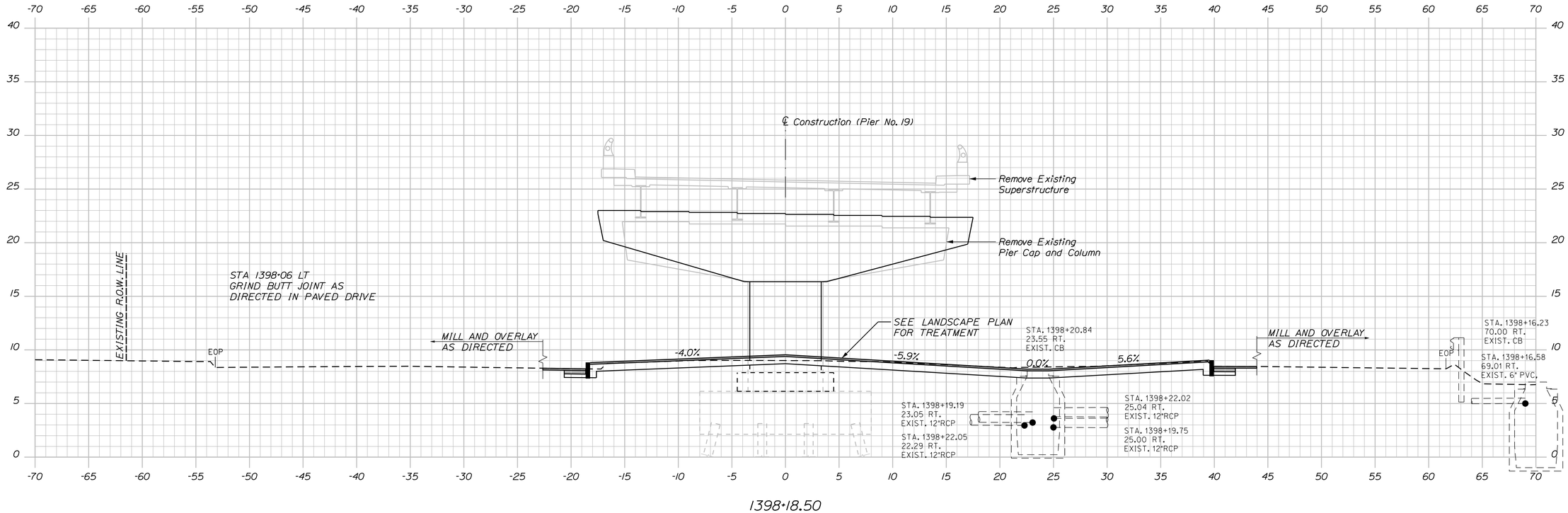

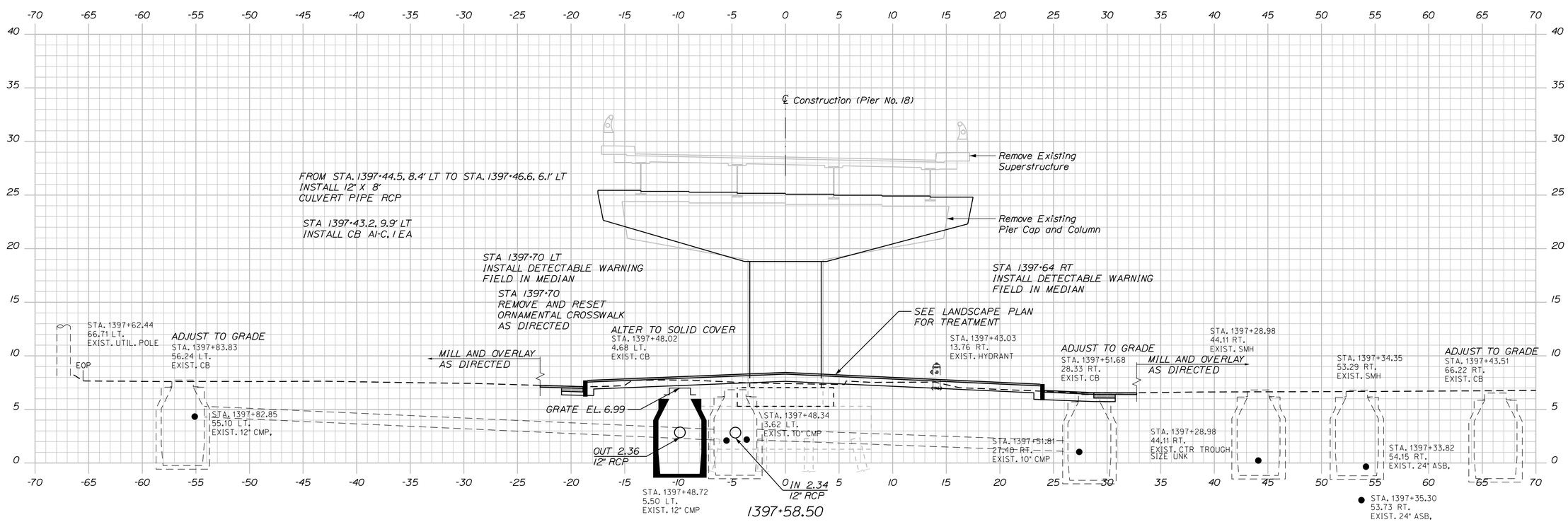

STATE OF MAINE
DEPARTMENT OF TRANSPORTATION

NHPP - 1927(300)

WIN 19273.00

BRIDGE NO. 3838

BRIDGE PLANS

vhb

		BY	DATE
PROJ. MANAGER	J. KITTREDGE		
DESIGN-DETAILED	ECF	SAB	12/15
CHECKED-REVIEWED	AG	SMH	12/15
DESIGN2-DETAILED2	---	---	---
DESIGN3-DETAILED3	---	---	---
REVISIONS 1	---	---	---
REVISIONS 2	---	---	---
REVISIONS 3	---	---	---
REVISIONS 4	---	---	---
FIELD CHANGES	---	---	---

WEST APPROACH BRIDGE
MAINE OWNED RR & CITY STREETS
BATH SAGADAHOC COUNTY

CROSS SECTIONS

SHEET NUMBER
42
OF 145

Sta. 1397+58.50 to Sta. 1398+18.50

Filename: ...\00\HIGHWAY\MSTA\Xsect.dgn Division: HIGHWAY Username: eflynn Date:12/21/2015

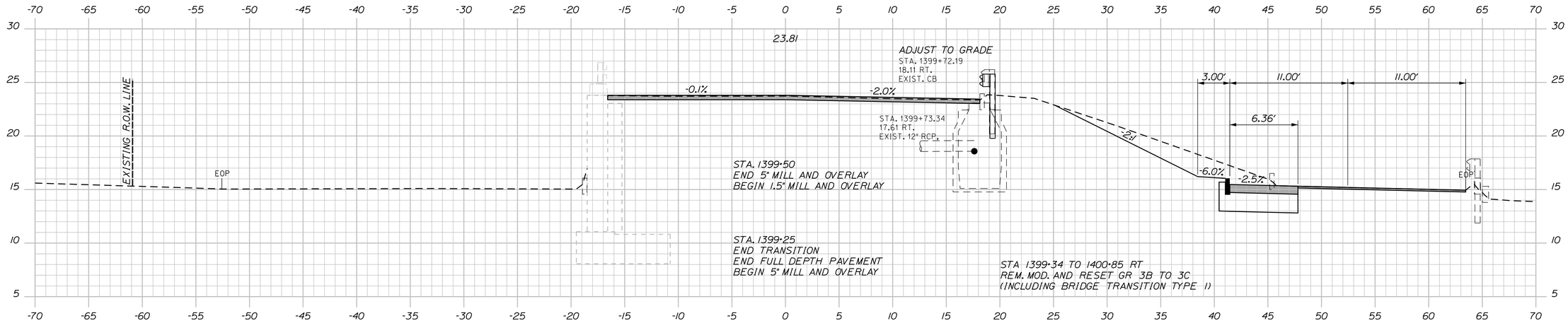

1399+50.00

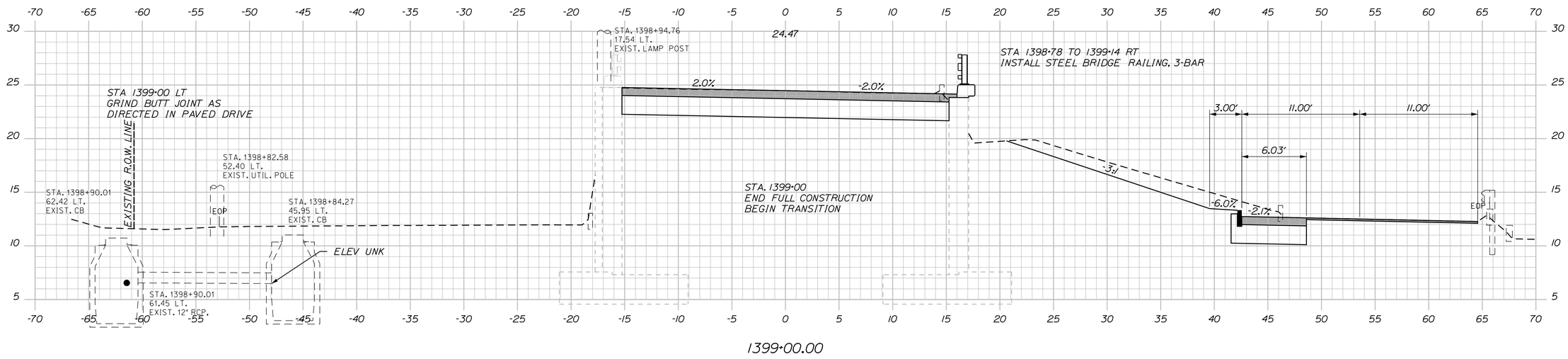

1399+00.00

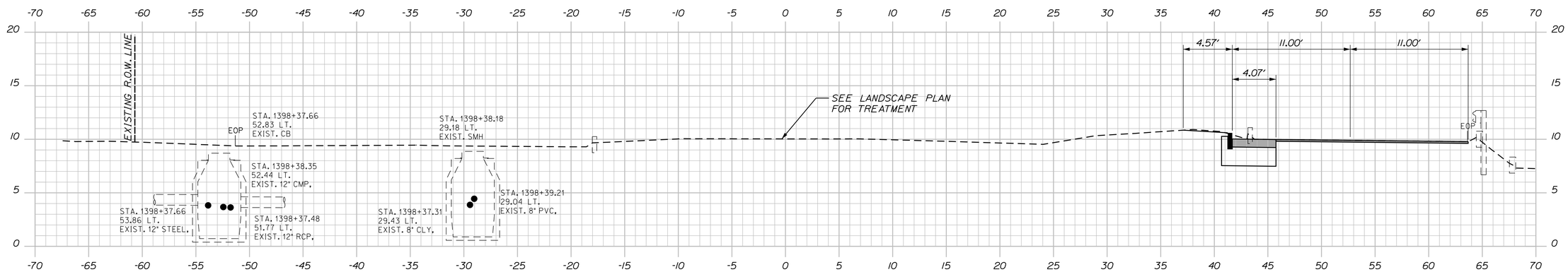

1398+50.00

STATE OF MAINE
DEPARTMENT OF TRANSPORTATION

NHPP - 1927(300)

WIN 19273.00

BRIDGE NO. 3838

BRIDGE PLANS

vhb

PROJ. MANAGER	J. KITTREDGE		
		BY	DATE
DESIGN-DETAILED	EGF	SAB	12/15
CHECKED-REVIEWED	AG	SMH	12/15
DESIGN2-DETAILED2	...	...	...
DESIGN3-DETAILED3	...	...	...
REVISIONS 1	...	...	...
REVISIONS 2	...	...	...
REVISIONS 3	...	...	...
REVISIONS 4	...	...	...
FIELD CHANGES	...	...	...

WEST APPROACH BRIDGE
MAINE OWNED RR & CITY STREETS
BATH SAGADAHOC COUNTY

CROSS SECTIONS

SHEET NUMBER
43
OF 145

Sta. 1398+50.00 to Sta. 1399+50.00

Date:12/21/2015
Username: eflynn
Division: HIGHWAY
Filename: ...\00\HIGHWAY\MSTA\Xsect.dgn

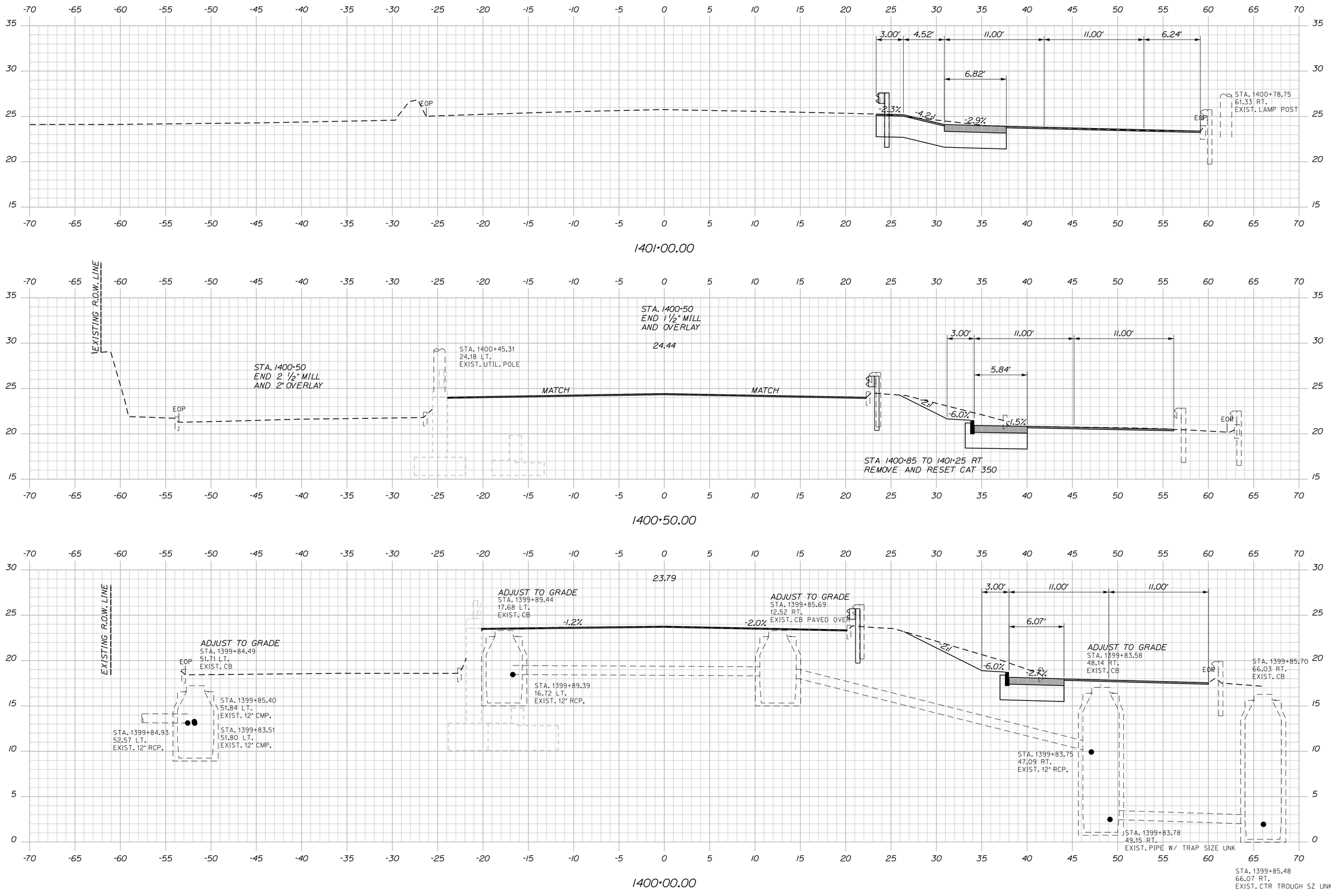

STATE OF MAINE
DEPARTMENT OF TRANSPORTATION

NHPP - 1927(300)

WIN 19273.00

BRIDGE NO. 3838

BRIDGE PLANS

vhb

		BY	DATE
PROJ. MANAGER	J. KITTREDGE		
DESIGN-DETAILED	ECF	SAB	12/15
CHECKED-REVIEWED	AG	SMH	12/15
DESIGN2-DETAILED2	---	---	---
DESIGN3-DETAILED3	---	---	---
REVISIONS 1	---	---	---
REVISIONS 2	---	---	---
REVISIONS 3	---	---	---
REVISIONS 4	---	---	---
FIELD CHANGES	---	---	---

WEST APPROACH BRIDGE
MAINE OWNED RR & CITY STREETS
BATH SAGADAHOC COUNTY

CROSS SECTIONS

SHEET NUMBER
44
OF 145

Sta. 1400+00.00 to Sta. 1401+00.00

Filename: ...\00\HIGHWAY\MSTA\Xsect.dgn Division: HIGHWAY Username: eflynn Date:12/21/2015

Filename: ...\00\HIGHWAY\MSTA\Xsect.dgn Division: HIGHWAY Username: eflynn Date:12/21/2015

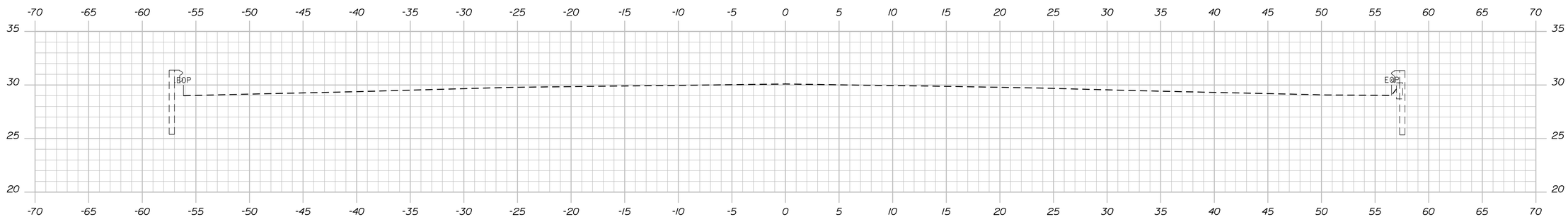

1402+00.00

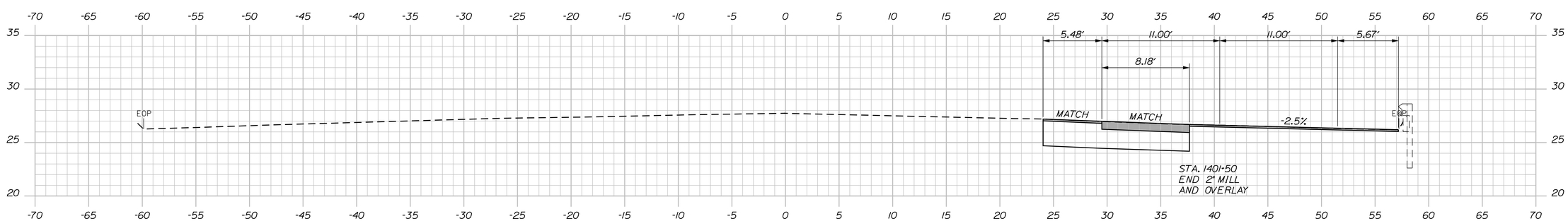

1401+50.00

PROJ. MANAGER	J. KITTREDGE	BY	DATE
DESIGN-DETAILED	ECF	SAB	12/15
CHECKED-REVIEWED	AG	SMH	12/15
DESIGN2-DETAILED2	---	---	---
DESIGN3-DETAILED3	---	---	---
REVISIONS 1	---	---	---
REVISIONS 2	---	---	---
REVISIONS 3	---	---	---
REVISIONS 4	---	---	---
FIELD CHANGES	---	---	---

STATE OF MAINE
DEPARTMENT OF TRANSPORTATION

NHPP - 1927(300)

WIN 19273.00

BRIDGE NO. 3838 BRIDGE PLANS

WEST APPROACH BRIDGE
MAINE OWNED RR & CITY STREETS
BATH SAGADAHOC COUNTY

CROSS SECTIONS

SHEET NUMBER
45
OF 145

Sta. 1401+50.00 to Sta. 1402+00.00

MAINTENANCE OF TRAFFIC GENERAL NOTES

- For the purpose of this project, the roadways that generally run parallel to the US Route 1 viaduct are referred to as Frontage Roads. Westbound (WB) Frontage Roads include Vine Street and other roads on the north side of the viaduct. Eastbound (EB) Frontage Roads include Commercial Street and other roads located on the south side of the viaduct.
- The maintenance of traffic plan for the removal and construction of the Route 1 Viaduct will consist of road closures with a primary detour for US Route 1 traffic along the Frontage Roads.
- When it is permissible to close the WB Frontage Road, a secondary detour route will be included for Route 1 southbound traffic with a detour route that includes Front Street, Centre Street, and High Street.
- When any roadway is closed, the Contractor shall place Type 3 barricades across the full roadway at the closure location. The roadway shall not be closed until all detour signs are installed and visible to traffic.
- All traffic control equipment and devices shall conform to the latest edition of the Maine Department of Transportation (MaineDOT) Standard Specifications. All traffic control equipment and layouts shall conform to the 2009 edition of the Federal Highway Administration (FHWA) Manual on Uniform Traffic Control Devices (MUTCD), chapter 6. All traffic control signs, sign support structures, channelizing devices, flashing arrow panels (FAP), portable changeable message signs (PCMS), and other traffic control equipment along the roadside shall meet or exceed NCHRP 350 test level 2 (TL-2) requirements regardless of where implemented on the project.
- Prior to begining demolition of the viaduct, traffic control signal plan work will need to be completed. This work is generally considered to be part of the final traffic signal work.
- Placement of signs shall be adjusted to avoid obstructing existing signs and to ensure proper sight lines to the construction signs as determined by the Resident. Other signs may be required as directed by the Resident. The Contractor shall cover any conflicting route and directional signs.
- Any signs, equipment, or devices found to be damaged or unserviceable shall be replaced at the Contractor's expense.
- Pedestrian access under the viaduct shall be maintained at all times.
- When the detour is removed all signs that have been removed and stored shall be replaced in the original positions unless otherwise noted by the Resident.
- Temporary lane closures may be required throughout construction. Traffic control shall conform to the 2009 edition of FHWA's MUTCD chapter 6. Contractor shall notify the Resident 48 hours before any closures.

LEGEND

⊢	Detour Sign on Post Support
⊠	Type 3 Barricade with Detour Sign

US ROUTE 1 DETOUR NOTES

A - INTERSECTION OF MIDDLE STREET & FRONTAGE ROADS

- Remove existing crosswalk with non-destructive means.
- Remove and store existing pedestrian crossing signs on both the east and west approaches. Replace signs at the end of the detour.
- Block Middle Street with barriers and temporary fencing in the median so that no through vehicle or pedestrian traffic on Middle Street can cross the Frontage Roads.
- Remove and store existing stop signs with street name signs in the median for northbound/southbound traffic under the viaduct.
- Install detour signs on fences facing the north and south approaches of Middle Street.
- Remove and store the one-way sign located on the westbound frontage road two piers west of Middle Street. Reinstall sign at the end of the detour.
- Remove and store the street name sign "← Middle Street → " facing the eastbound traffic mounted on the pier east of Middle Street. Reinstall sign at the end of the detour.
- Remove and store the one-way and no parking signs located on the eastbound frontage road one pier east of Middle Street.

B - INTERSECTION OF FRANKLIN STREET & FRONTAGE ROADS

- Block Franklin Street with barriers and temporary fencing in the median so that no through vehicle or pedestrian traffic on Franklin Street can cross the Frontage Roads.
- Remove and store existing stop sign in the median for southbound traffic under the viaduct.
- Install detour signs on fences facing the north and south approaches of Franklin Street.
- Remove and store the advanced pedestrian crossing sign located on the westbound frontage road just west of Franklin Street.

C - INTERSECTION OF WASHINGTON STREET & FRONTAGE ROADS

- Modify the existing signal timing to provide a concurrent pedestrian phase instead of the existing exclusive pedestrian phase. See traffic control signal plan.
- Install southbound mast arm and pedestrian equipment to cross Washington Street and School Street as shown on the traffic control signal plan.
- Install temporary wire loops to provide for actuated traffic signal control at all times during construction.
- Eastbound and westbound left turns from the frontage roads at Washington Street will be prohibited under the viaduct during construction.
- Remove and store the "Keep Right" sign located in the west median nose during construction. Reinstall sign at the end of the detour.
- Frontage Road Eastbound:
  - o Remove existing island for right turn bay.
  - o Remove existing pavement markings.
  - o Restripe approach to provide two through lanes, and a right turn lane.
  - o Modify existing route assembly on southeast corner by covering the "TO" sign and replacing the "left arrow" sign with a "straight arrow."
  - o Modify municipal sign on the opposite side of the intersection to have the arrow to downtown match the arrow to the waterfront on the line below.
- Frontage Road Westbound
  - o Remove existing left turn lane markings.
  - o Restripe lanes to be two through lanes and a right turn lane.
  - o Remove existing lane use sign in median showing a u-turn/left lane and a through lane. Replace with a new lane use sign with two through lanes and a right turn lane.
  - o Remove existing lane use sign on north side of Vine Street showing u-turn/left lane and a through lane. Replace with a new lane use sign with two through lanes and a right turn lane.

US ROUTE 1 DETOUR NOTES (CONT.)

D - INTERSECTION OF CREAMER WAY & FRONTAGE ROADS

- Install 4 detour signs along Vine Street facing north for traffic exiting businesses.
- Remove and store existing route assembly for US 1 north on the post with Creamer Way street name sign.
- Remove and store additional regulatory and directional signs for Creamer Way "Downtown Bath left".
- Remove and store existing W6-3 "Two-way Traffic" sign with back to back "No Left Turn" sign on Vine Street northbound approach.
- Remove and store existing "Two way Traffic Ahead" and "Parking ahead" signs on Vine Street northbound approach.
- Remove and store the "do not enter" sign with back to back "No Parking" sign for access road under the viaduct for Vine Street eastbound. Reset sign at the end of the detour

E - INTERSECTION OF FRONT STREET & VINE STREET

- Remove existing pavement markings on the east and west approaches with non-destructive means.
- Restripe westbound (Route 1 southbound) as two lanes; through and through-right. Install through arrows in left lane and though-right arrows in right lane.
- Remove and store existing stop sign on westbound approach.
- Remove one parking space on west side of Front Street closest to the intersection.
- Install stop sign and stop bar for the Front Street southbound approach.
- Remove yellow center lines along Vine Street by non-destructive means south of the new Front Street stop bar.
- Remove and store existing left turn only signs on eastbound Vine Street approach.
- Remove and store existing 35 mph speed limit sign for viaduct traffic.

F - FRONTAGE ROADS BETWEEN HIGH STREET AND WASHINGTON STREET

- Restripe the EB direction as 2 11-foot lanes.
- Restripe the WB direction as 2 11-foot lanes from Washington Street to the merge back onto the existing US Route 1 southbound 2 lanes.
- Refer to temporary striping plans for additional details.

G - FRONTAGE ROADS BETWEEN WASHINGTON STREET AND FRONT STREET

- Restripe the EB direction as 2 11-foot lanes from Washington Street to the US Route 1 northbound on-ramp.
- Provide temporary pavement to maintain the 22 foot cross section the entire length of the US Route 1 northbound on-ramp.
- Provide temporary retaining wall as needed along the temporary widening on the US Route 1 northbound on-ramp.
- Restripe the WB direction as 2 11-foot lanes.
- Remove and store "added lane" warning sign for the eastbound US Route 1 on-ramp.
- Refer to temporary striping plans for additional details.

FRONTAGE ROAD (WB) DETOUR NOTES

Frontage Road (WB) detour traffic control is to be added to the US Route 1 Detour traffic control.

J - INTERSECTION OF CENTRE STREET & WATER STREET

- Add Detour sign to existing US 1 route assembly on the Centre Street westbound approach.

K - INTERSECTION OF CENTRE STREET & FRONT STREET

- Install "Detour south US 1 left" assembly on a u-channel post and band the post to the existing granite bollard.

L - INTERSECTION OF FRONT STREET & LAMBARD STREET

- Cover or remove existing US 1 route assembly sign.

STATE OF MAINE
DEPARTMENT OF TRANSPORTATION

NHPP - 1927(300)

WIN 19273.00

BRIDGE NO. 3838

BRIDGE PLANS

vhb

PROJ. MANAGER	J. KITTREDGE	BY	DATE
DESIGN-DETAILED	MLG	JAR	12/15
CHECKED-REVIEWED	MDS	SMH	12/15
DESIGN2-DETAILED2	---	---	---
DESIGN3-DETAILED3	---	---	---
REVISIONS 1	---	---	---
REVISIONS 2	---	---	---
REVISIONS 3	---	---	---
REVISIONS 4	---	---	---
FIELD CHANGES	---	---	---

WEST APPROACH BRIDGE
MAINE OWNED RR & CITY STREETS
BATH SAGADAHOC COUNTY

DETOUR NOTES

SHEET NUMBER
46
OF 145

Filename: ...\MSTA\046_DetourNotes_01.dgn Division: HIGHWAY Username: kwentworth Date:12/21/2015

DETOUR SIGN SUMMARY

Sign		Text Dimensions (Inches) Letter Height	Text Dimensions (Inches) Vertical Spacing	Size	Quantity and Color
R1-1	STOP	SHSB		30"x30"	1 - White on Red
R2-1(25)	SPEED LIMIT 25			30"x36"	2 - Black on White
R2-6aP	FINES DOUBLED			24"x18"	2 - Black on White
R3-2				36"x36"	5 - Black & Red on White
R3-5fP	RIGHT LANE			30"x12"	2 - Black on Orange
R3-8a	ONLY			30"x42"	3 - Black on White
R3-24a	U AND LEFT TURNS			72"x18"	1 - Black on White
R3-26	U AND LEFT TURNS			72"x18"	1 - Black on White
R9-3				24"x24"	11 - Black & Red on White
R9-9	CROSSWALK CLOSED			24"x12"	4 - Black on White
R9-11aML	CROSSWALK CLOSED CROSS HERE			24"x12"	4 - Black on White
R9-11aMR	CROSSWALK CLOSED CROSS HERE			24"x12"	1 - Black on White
R11-2	ROAD CLOSED			48"x30"	6 - Black on White
R11-4	ROAD CLOSED TO THRU TRAFFIC			60"x30"	2 - Black on White
W3-1	STOP			36"x36"	1 - Black, White, Red on Orange
W3-5(25)	SPEED LIMIT 25			36"x36"	2 - Black and White on Orange

SHSB - Text Dimensions Shall Conform to "Standard Highway Signs Book" - 2012 Edition.

DETOUR SIGN SUMMARY

Sign		Text Dimensions (Inches) Letter Height	Text Dimensions (Inches) Vertical Spacing	Size	Quantity and Color
W11-2		SHSB		36"x36"	4 - Black on Orange
W20-2	DETOUR 1/2 MILE AHEAD			48"x48"	2 - Black on Orange
W20-4(MOD)	BOTH LANES EXIT	7" 7" 7"	4.75" 5.25"	48"x48"	2 - Black on Orange
D3-1a	Centre St	SHSB		30"x12"	5 - Black on Orange
D3-1b	Washington St			42"x12"	9 - Black on Orange
D3-1c	Downtown Bath	6B 6B	4" 4" 4"	30"x24"	1 - Black on Orange
D3-1d	Downtown	SHSB		30"x12"	4 - Black on Orange
D3-1e	Bath Iron Works			48"x12"	2 - Black on Orange
M1-4(1)	1			24"x24"	12 - Black on White
M3-1	NORTH			24"x12"	5 - Black on Orange
M3-3	SOUTH			24"x12"	7 - Black on Orange
M4-8	DETOUR			24"x12"	14 - Black on Orange
M4-8a	END DETOUR			24"x18"	5 - Black on Orange
M4-9(MOD L)	DETOUR			30"x24"	4 - Black on Orange
M4-9(MOD R)	DETOUR			30"x24"	4 - Black on Orange
M4-10R	DETOUR			48"x18"	8 - Black on Orange

SHSB - Text Dimensions Shall Conform to "Standard Highway Signs Book" - 2012 Edition.

DETOUR SIGN SUMMARY

Sign		Text Dimensions (Inches) Letter Height	Text Dimensions (Inches) Vertical Spacing	Size	Quantity and Color
M6-1L		SHSB		21"x15"	3 - Black on White
M6-1R				21"x15"	1 - Black on White
M6-2L				21"x15"	1 - Black on White
M6-2R				21"x15"	2 - Black on White
M6-3				21"x15"	6 - Black on White
G20-5aP	WORK ZONE			24"x18"	2 - Black on Orange
TGS-01	ROAD CLOSED	12E	9" 9"	144"x30"	3 - Black on Orange
TGS-02	FOLLOW DETOUR	12D	9" 9"	144"x30"	1 - Black on Orange

SHSB - Text Dimensions Shall Conform to "Standard Highway Signs Book" - 2012 Edition.

STATE OF MAINE
DEPARTMENT OF TRANSPORTATION

NHPP - 1927(300)

WIN 19273.00

BRIDGE NO. 3838

BRIDGE PLANS

vhb

PROJ. MANAGER	J. KITTREDGE			
DESIGN-DETAILED	MLG	JAR	12/15	
CHECKED-REVIEWED	MDS	SMH	12/15	
DESIGN2-DETAILED2	...	...	...	
DESIGN3-DETAILED3	...	...	...	
REVISIONS 1	...	...	...	
REVISIONS 2	...	...	...	
REVISIONS 3	...	...	...	
REVISIONS 4	...	...	...	
FIELD CHANGES	...	...	...	

WEST APPROACH BRIDGE
MAINE OWNED RR & CITY STREETS
BATH SAGADAHOC COUNTY

DETOUR SIGN SUMMARY

SHEET NUMBER
47
OF 145

Filename: ...\MSTA\047_DetourSignSummary.dgn Division: HIGHWAY Username: kwentworth Date:12/21/2015

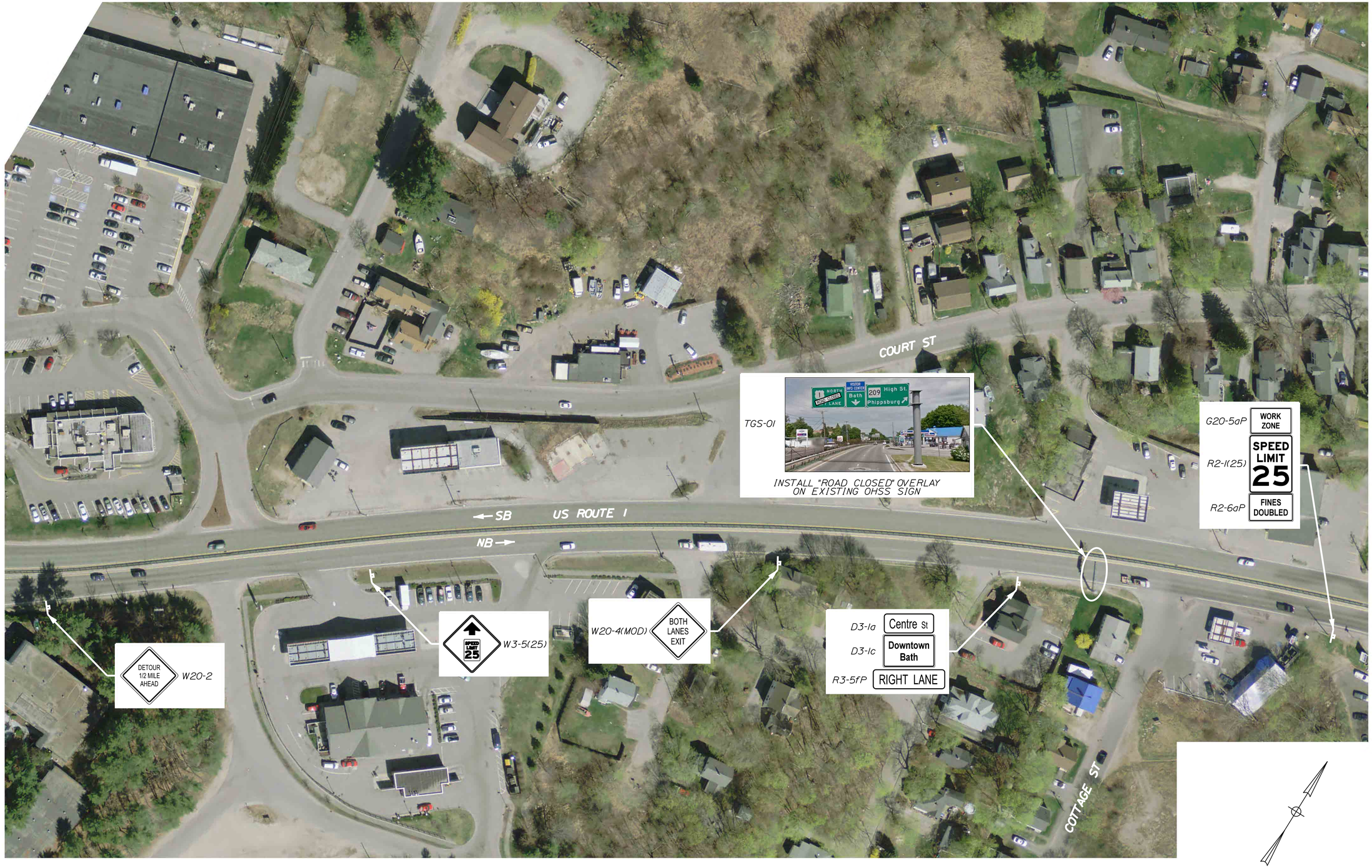

NOTES:

1. SEE TEMPORARY STRIPING PLANS FOR FRONTAGE ROAD DETOUR STRIPING.

PLAN

50 0 50 100

Scale of Feet (Approximate)

STATE OF MAINE
DEPARTMENT OF TRANSPORTATION

NHPP - 1927(300)

WIN 19273.00

BRIDGE NO. 3838

BRIDGE PLANS

vhb

		BY	DATE
PROJ. MANAGER	J. KITTREDGE		
DESIGN-DETAILED	MLG	JAR	12/15
CHECKED-REVIEWED	MDS	SMH	12/15
DESIGN2-DETAILED2	---	---	---
DESIGN3-DETAILED3	---	---	---
REVISIONS 1	---	---	---
REVISIONS 2	---	---	---
REVISIONS 3	---	---	---
REVISIONS 4	---	---	---
FIELD CHANGES	---	---	---

WEST APPROACH BRIDGE
MAINE OWNED RR & CITY STREETS
BATH SAGADAHOC COUNTY

US ROUTE 1 DETOUR
(1 OF 5)

SHEET NUMBER

48

OF 145

Filename: ...\TRAFFIC\MSTA\048_Detour_01.dgn Division: HIGHWAY Username: kwentworth Date:12/21/2015

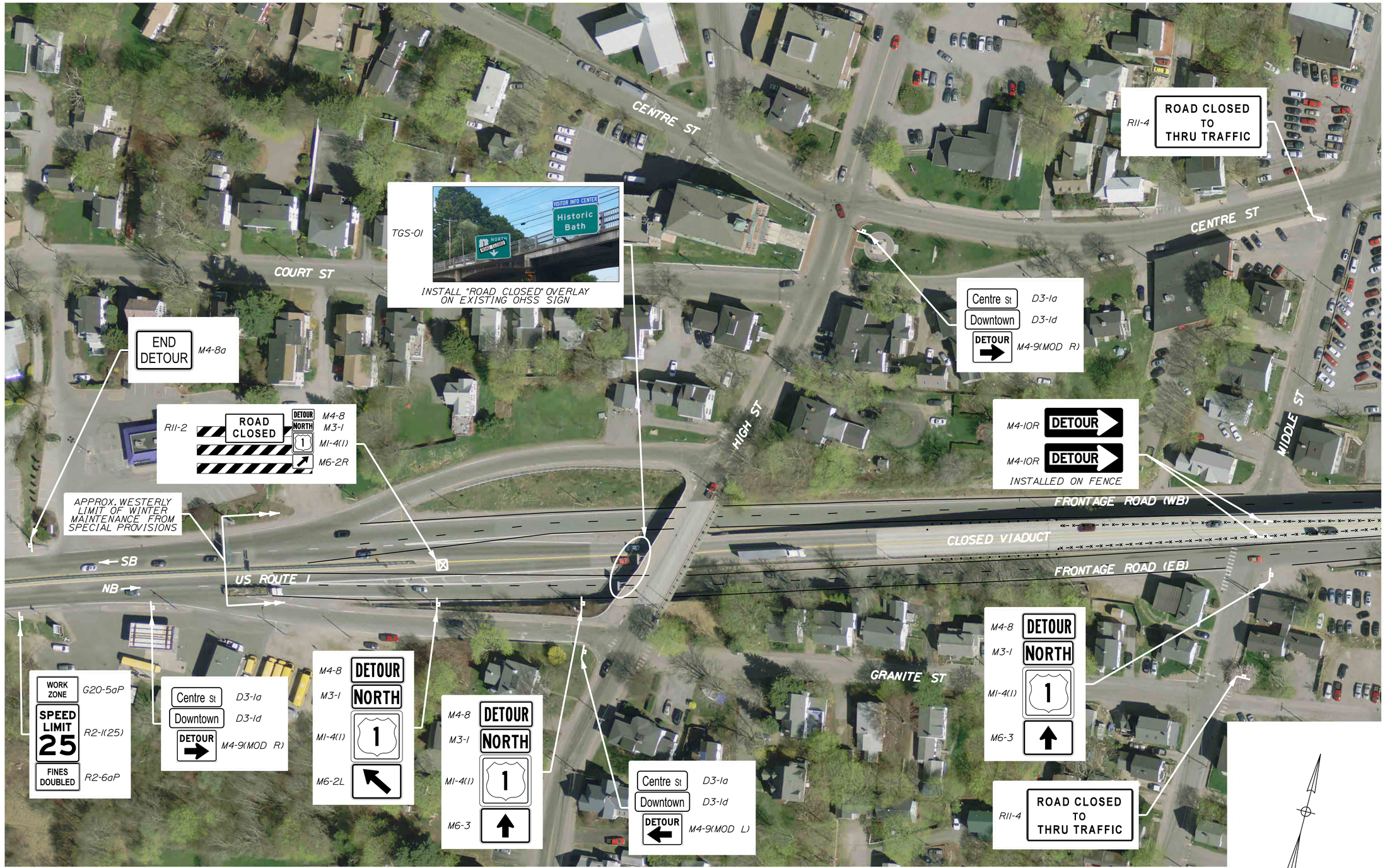

LOCATIONS A AND F

NOTES:

1. SEE TEMPORARY STRIPING PLANS FOR FRONTAGE ROAD DETOUR STRIPING.
2. SEE DETOUR NOTES SHEET FOR LOCATIONS A AND F DESCRIPTIONS.

PLAN

50 0 50 100

Scale of Feet (Approximate)

STATE OF MAINE
DEPARTMENT OF TRANSPORTATION

NHPP - 1927(300)

WIN 19273.00

BRIDGE NO. 3838

BRIDGE PLANS

vhb

		BY	DATE
PROJ. MANAGER	J. KITTREDGE		
DESIGN-DETAILED	MLG	JAR	12/15
CHECKED-REVIEWED	MDS	SMH	12/15
DESIGN2-DETAILED2	---	---	---
DESIGN3-DETAILED3	---	---	---
REVISIONS 1	---	---	---
REVISIONS 2	---	---	---
REVISIONS 3	---	---	---
REVISIONS 4	---	---	---
FIELD CHANGES	---	---	---

WEST APPROACH BRIDGE
MAINE OWNED RR & CITY STREETS
BATH SAGADAHOC COUNTY

US ROUTE 1 DETOUR
(2 OF 5)

SHEET NUMBER

49

OF 145

Filename: ...\TRAFFIC\MSTA\049_Detour_02.dgn Division: HIGHWAY Username: kwentworth Date:12/21/2015

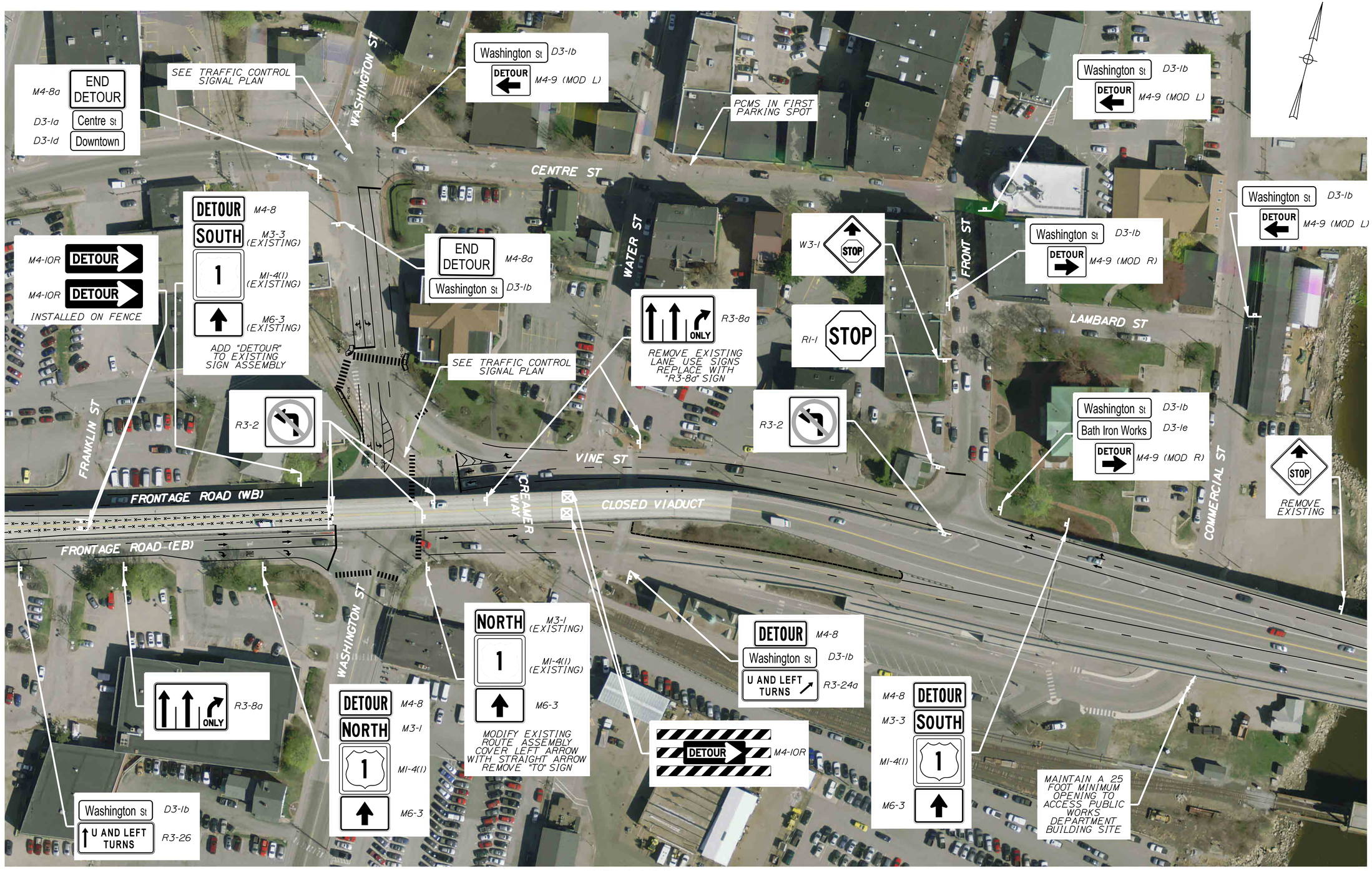

LOCATIONS B THRU G

NOTES:

1. SEE TEMPORARY STRIPING PLANS FOR FRONTAGE ROAD DETOUR STRIPING.
2. SEE DETOUR NOTES SHEET FOR LOCATIONS B THRU G DESCRIPTIONS.

PLAN

50 0 50 100

Scale of Feet (Approximate)

STATE OF MAINE
DEPARTMENT OF TRANSPORTATION

NHPP - 1927(300)

BRIDGE NO. 3838

WIN 19273.00

BRIDGE PLANS

vhb

		BY	DATE
PROJ. MANAGER	J. KITTREDGE		
DESIGN-DETAILED	MLG	JAR	12/15
CHECKED-REVIEWED	MDS	SMH	12/15
DESIGN2-DETAILED2	...	...	...
DESIGN3-DETAILED3	...	...	...
REVISIONS 1	...	...	...
REVISIONS 2	...	...	...
REVISIONS 3	...	...	...
REVISIONS 4	...	...	...
FIELD CHANGES	...	...	...

WEST APPROACH BRIDGE
MAINE OWNED RR & CITY STREETS
BATH SAGADAHOC COUNTY

US ROUTE 1 DETOUR
(3 OF 5)

SHEET NUMBER
50
OF 145

Filename: ...\TRAFFIC\MSTA\050_Detour_03.dgn Division: HIGHWAY Username: kwentworth Date:12/21/2015

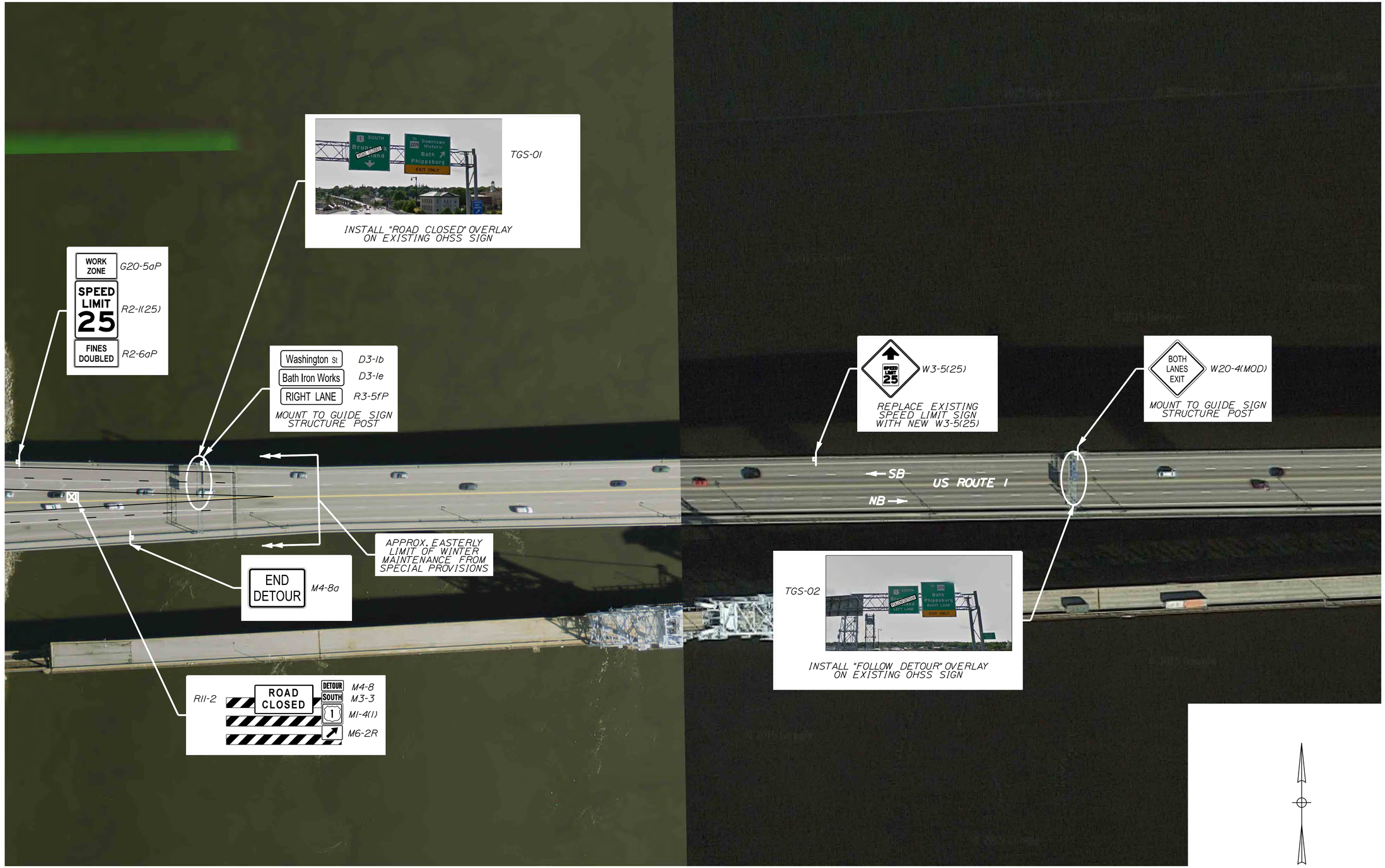

NOTES:

1. SEE TEMPORARY STRIPING PLANS FOR FRONTAGE ROAD DETOUR STRIPING.

PLAN

50 0 50 100

Scale of Feet (Approximate)

STATE OF MAINE
DEPARTMENT OF TRANSPORTATION

NHPP - 1927(300)

WIN 19273.00

BRIDGE NO. 3838

BRIDGE PLANS

vhb

PROJ. MANAGER	J. KITTREDGE	BY	DATE
DESIGN-DETAILED	MLG	JAR	12/15
CHECKED-REVIEWED	MDS	SMH	12/15
DESIGN2-DETAILED2	---	---	---
DESIGN3-DETAILED3	---	---	---
REVISIONS 1	---	---	---
REVISIONS 2	---	---	---
REVISIONS 3	---	---	---
REVISIONS 4	---	---	---
FIELD CHANGES	---	---	---

WEST APPROACH BRIDGE
MAINE OWNED RR & CITY STREETS
BATH SAGADAHOC COUNTY

US ROUTE 1 DETOUR
(4 OF 5)

SHEET NUMBER

51

OF 145

Filename: ...\TRAFFIC\MSTA\051_Detour_04.dgn Division: HIGHWAY Username: kwentworth Date:12/21/2015

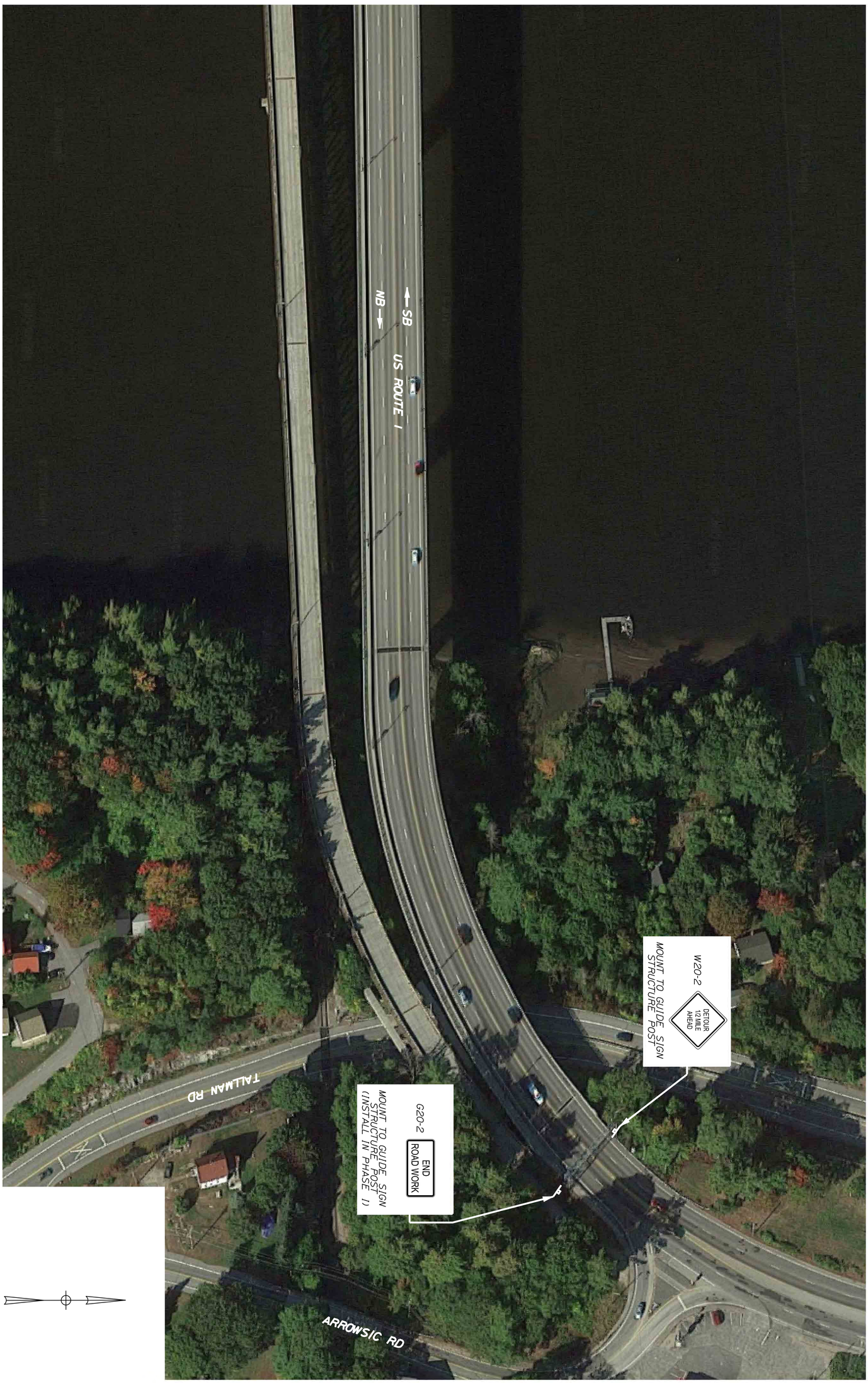

PLAN

Scale of Feet (Approximate)
50 0 50 100

PROJ. MANAGER	J. KITTREDGE	BY	DATE
DESIGN-DETAILED	MLG	JAR	12/15
CHECKED-REVIEWED	MDS	SMH	12/15
DESIGN2-DETAILED2	---	---	---
DESIGN3-DETAILED3	---	---	---
REVISIONS 1	---		---
REVISIONS 2	---		---
REVISIONS 3	---		---
REVISIONS 4	---		---
FIELD CHANGES	---		---

WEST APPROACH BRIDGE
MAINE OWNED RR & CITY STREETS
BATH SAGADAHOC COUNTY

US ROUTE 1 DETOUR
(5 OF 5)

STATE OF MAINE
DEPARTMENT OF TRANSPORTATION

NHPP - 1927(300)

BRIDGE NO. 3838 WIN 19273.00 BRIDGE PLANS

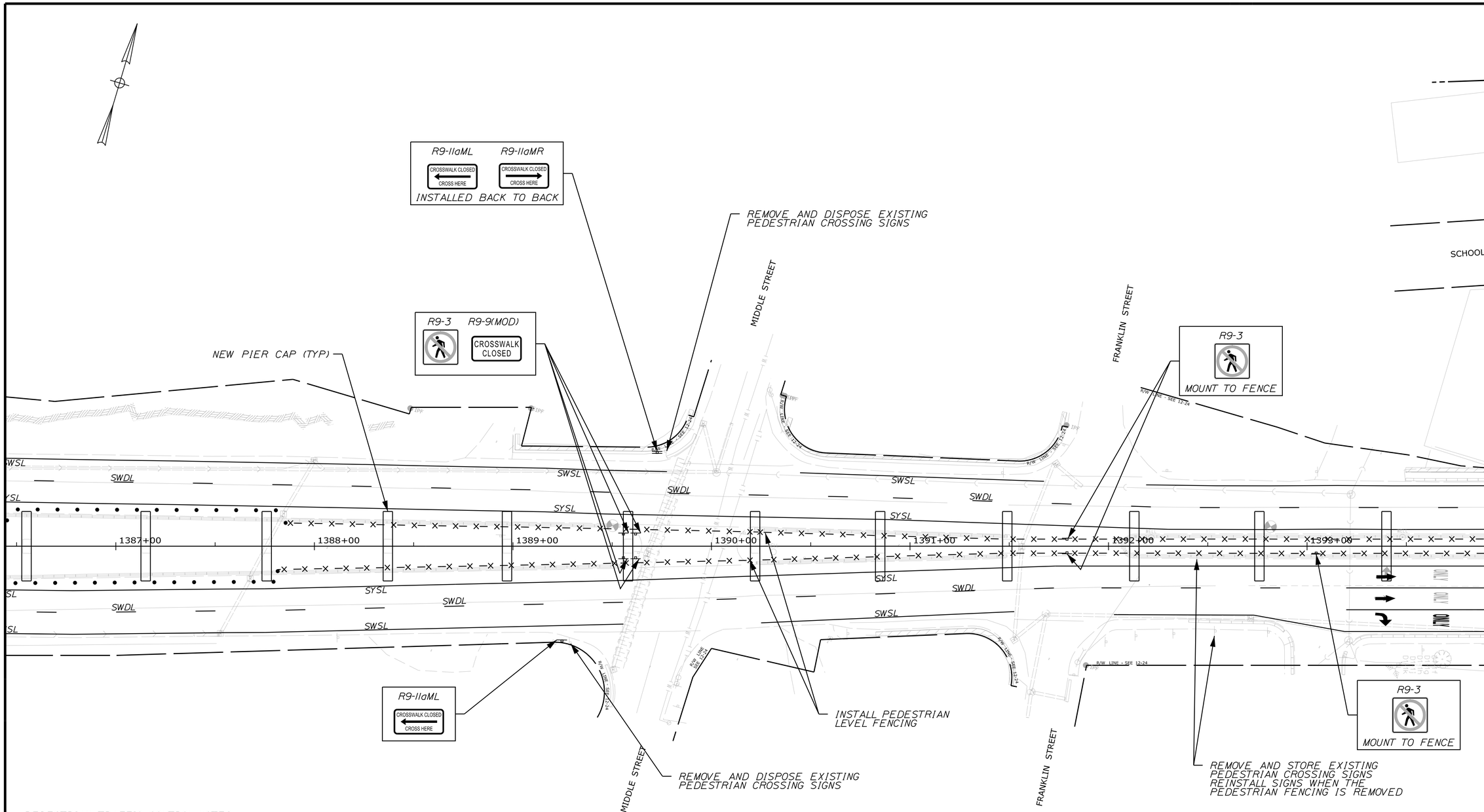

PEDESTRIAN TRAFFIC CONTROL NOTES:

1. IN ADDITION TO THE VEHICULAR SIGNS PROVIDED UNDER US ROUTE 1 DETOUR AND FRONTAGE ROAD DETOUR PLANS, PEDESTRIAN SIGNS SHALL BE PROVIDED DURING CONSTRUCTION. THE PRIMARY CROSSING UNDER THE VIADUCT FOR PEDESTRIANS SHALL BE AT THE EAST SIDE OF THE WASHINGTON STREET/COMMERCIAL STREET/VINE STREET SIGNALIZED INTERSECTION. THIS CROSSING IS CONTROLLED BY THE TRAFFIC SIGNAL. THE MEDIAN (UNDER THE VIADUCT) TO THE WEST OF WASHINGTON STREET SHALL BE FENCED OFF TO DIRECT FLOW OF PEDESTRIANS TO THE DESIRED LOCATION. THE WEST SIDE CROSSWALK OF THE WASHINGTON STREET SIGNAL SHALL BE BLOCKED WITH BARRICADES AND SIGNS (SEE TEMPORARY PEDESTRIAN PLANS SHEET 2 OF 2).

2. WHEN CONSTRUCTION ACTIVITIES NEAR THE PEDESTRIAN CROSSING AT THE EAST SIDE OF THE SIGNALIZED INTERSECTION AND PIER 15 REQUIRE THE CROSSING TO BE CLOSED, PEDESTRIANS SHALL BE REROUTED TO THE WEST SIDE OF THE INTERSECTION. THIS CROSSING WILL BE CONTROLLED BY A UNIFORMED OFFICER DURING THE DAY. THE EAST SIDE PEDESTRIAN CROSSING WILL BE CLOSED WITH BARRICADES AND SIGNS.

3. UNLESS OTHERWISE DIRECTED BY THE RESIDENT THE MIDBLOCK PEDESTRIAN CROSSING EAST OF WASHINGTON STREET UNDER THE VIADUCT SHALL BE MAINTAINED THROUGHOUT CONSTRUCTION.

4. SEE DETOUR NOTES SHEET FOR LOCATIONS A, B, AND F DESCRIPTIONS.

LOCATIONS A, B, AND F

PLAN

25 0 25 50
Scale of Feet

STATE OF MAINE
DEPARTMENT OF TRANSPORTATION

NHPP - 1927(300)

WIN 19273.00

BRIDGE NO. 3838

BRIDGE PLANS

vhb

		BY	DATE
PROJ. MANAGER	J. KITTREDGE		
DESIGN-DETAILED	MLG	JAR	12/15
CHECKED-REVIEWED	MDS	SMH	12/15
DESIGN2-DETAILED2	---	---	---
DESIGN3-DETAILED3	---	---	---
REVISIONS 1	---	---	---
REVISIONS 2	---	---	---
REVISIONS 3	---	---	---
REVISIONS 4	---	---	---
FIELD CHANGES	---	---	---

WEST APPROACH BRIDGE
MAINE OWNED RR & CITY STREETS
BATH SAGADAHOC COUNTY

TEMPORARY PEDESTRIAN PLANS (1 OF 2)

SHEET NUMBER
53
OF 145

Filename: ...\MSTA\053_TempPed_01.dgn Division: HIGHWAY Username: kwentworth Date:12/21/2015

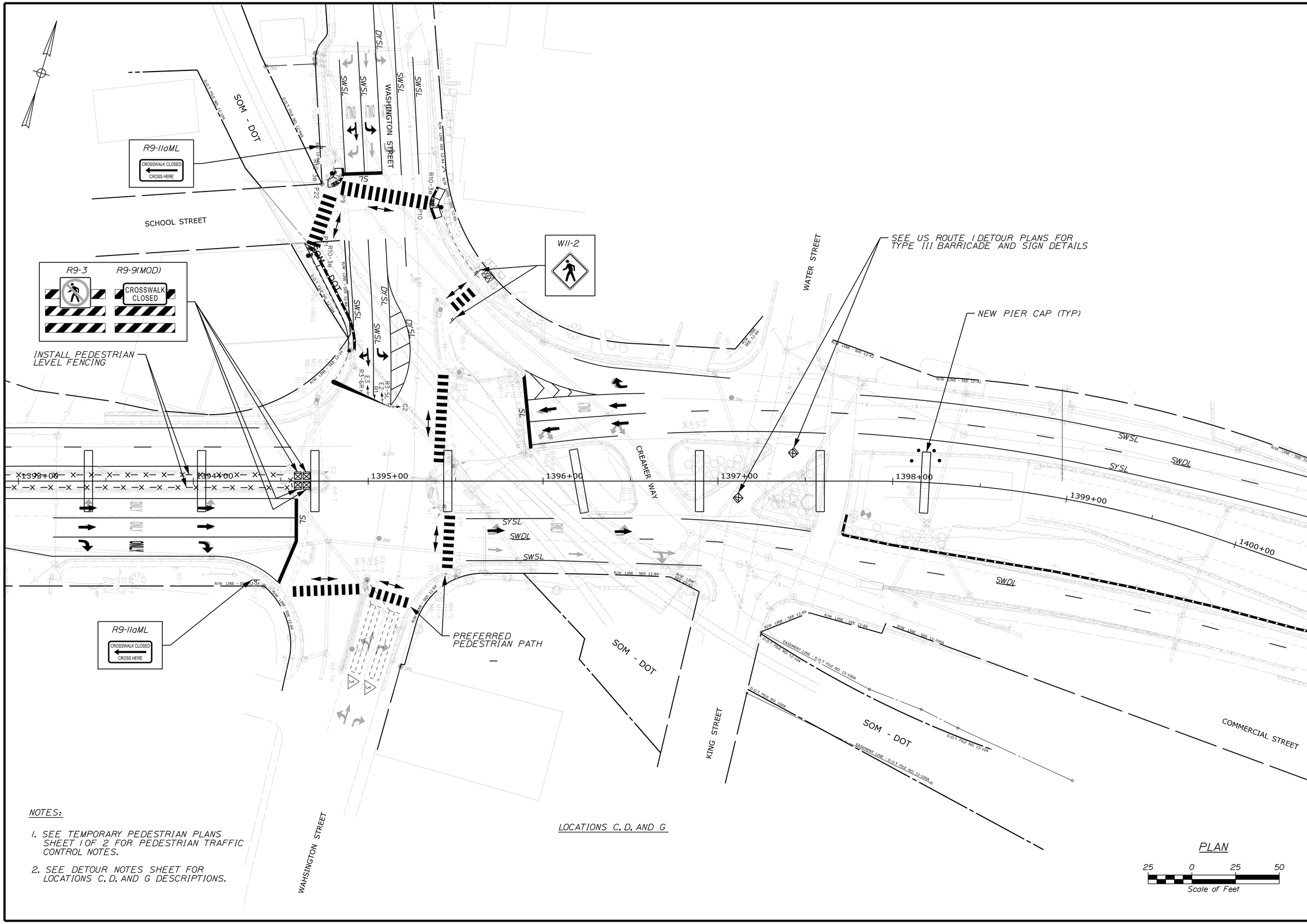

NOTES:

1. SEE TEMPORARY PEDESTRIAN PLANS SHEET 1 OF 2 FOR PEDESTRIAN TRAFFIC CONTROL NOTES.
2. SEE DETOUR NOTES SHEET FOR LOCATIONS C, D, AND G DESCRIPTIONS.

STATE OF MAINE
DEPARTMENT OF TRANSPORTATION

NHPP - 1927(300)

WIN 19273.00

BRIDGE NO. 3838

BRIDGE PLANS

vhb

		BY	DATE
PROJ. MANAGER	J. KITTREDGE		
DESIGN-DETAILED	MLG	JAR	12/15
CHECKED-REVIEWED	MDS	SMH	12/15
DESIGN2-DETAILED2	...	...	...
DESIGN3-DETAILED3	...	...	...
REVISIONS 1	...	...	...
REVISIONS 2	...	...	...
REVISIONS 3	...	...	...
REVISIONS 4	...	...	...
FIELD CHANGES	...	...	...

WEST APPROACH BRIDGE
MAINE OWNED RR & CITY STREETS
BATH SAGADAHOC COUNTY

TEMPORARY PEDESTRIAN PLANS (2 OF 2)

SHEET NUMBER

54

OF 145

Filename: ...\MSTA\054_TempPed_02.dgn Division: HIGHWAY Username: kwentworth Date:12/21/2015

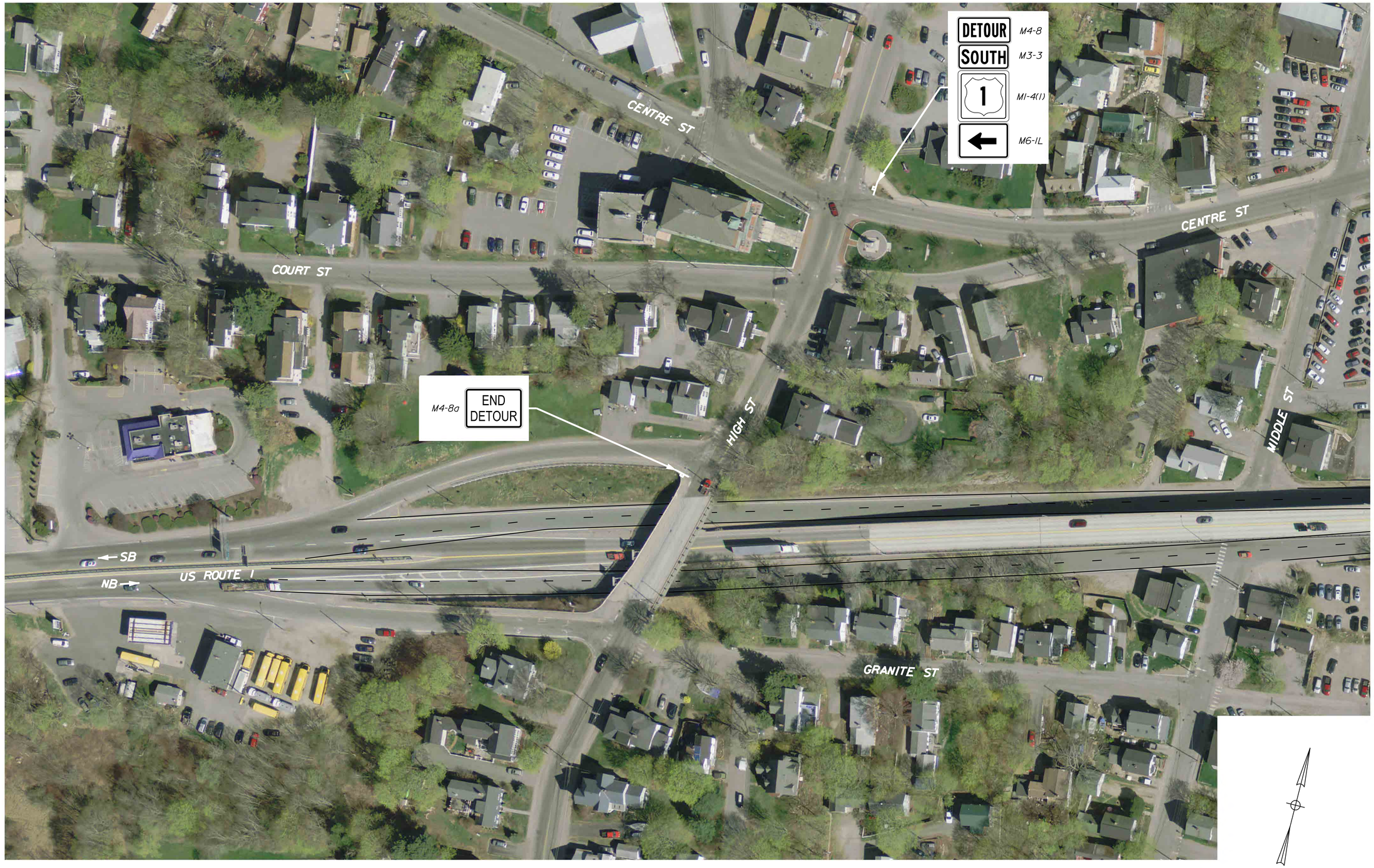

PLAN

50 0 50 100

Scale of Feet (Approximate)

STATE OF MAINE
DEPARTMENT OF TRANSPORTATION

NHPP - 1927(300)

WIN 19273.00

BRIDGE NO. 3838

BRIDGE PLANS

vhb

PROJ. MANAGER	J. KITTREDGE	BY	DATE
DESIGN-DETAILED	MLG	JAR	12/15
CHECKED-REVIEWED	MDS	SMH	12/15
DESIGN2-DETAILED2	---	---	---
DESIGN3-DETAILED3	---	---	---
REVISIONS 1	---	---	---
REVISIONS 2	---	---	---
REVISIONS 3	---	---	---
REVISIONS 4	---	---	---
FIELD CHANGES	---	---	---

WEST APPROACH BRIDGE
MAINE OWNED RR & CITY STREETS
BATH SAGADAHOC COUNTY

FRONTAGE ROADS (WB)
DETOUR (1 OF 2)

SHEET NUMBER

55

OF 145

Filename: ...\MSTA\055_Vine-Detour_01.dgn Division: HIGHWAY Username: kwentworth Date:12/21/2015

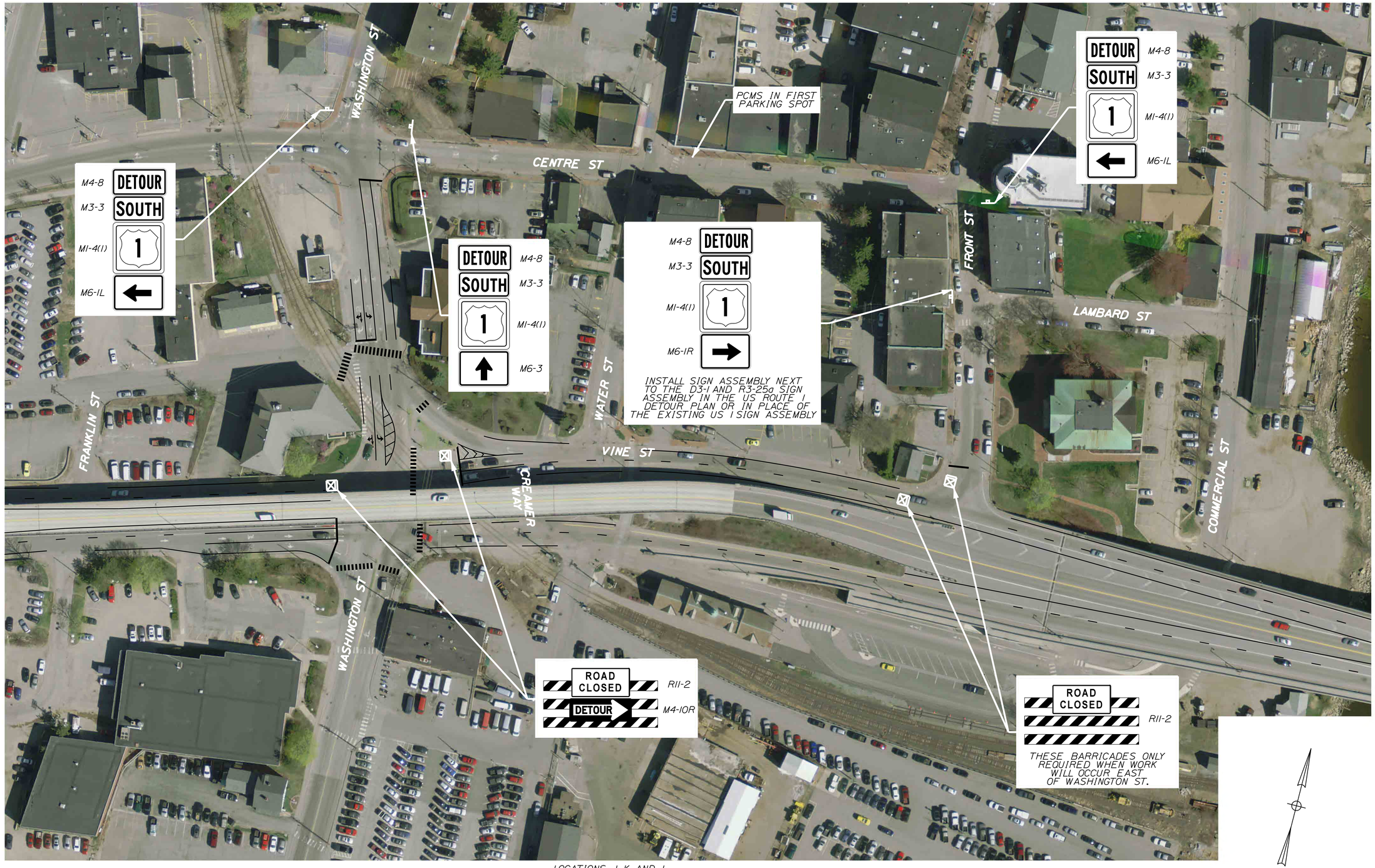

LOCATIONS J, K, AND L

NOTES:

1. SEE DETOUR NOTES SHEET FOR LOCATIONS J, K, AND L DESCRIPTIONS.

PLAN

50 0 50 100

Scale of Feet (Approximate)

STATE OF MAINE
DEPARTMENT OF TRANSPORTATION

NHPP - 1927(300)

BRIDGE NO. 3838 WIN 19273.00 BRIDGE PLANS

vhb

		BY	DATE
PROJ. MANAGER	J. KITTREDGE		
DESIGN-DETAILED	MLG	JAR	12/15
CHECKED-REVIEWED	MDS	SMH	12/15
DESIGN2-DETAILED2	---	---	---
DESIGN3-DETAILED3	---	---	---
REVISIONS 1	---	---	---
REVISIONS 2	---	---	---
REVISIONS 3	---	---	---
REVISIONS 4	---	---	---
FIELD CHANGES	---	---	---

WEST APPROACH BRIDGE
MAINE OWNED RR & CITY STREETS
BATH SAGADAHOC COUNTY

FRONTAGE ROADS (WB)
DETOUR (2 OF 2)

SHEET NUMBER
56
OF 145

Filename: ...\MSTA\056_Vine-Detour_02.dgn Division: HIGHWAY Username: kwentworth Date:12/21/2015

PHASE I TRAFFIC CONTROL SIGN SUMMARY

Sign		Text Dimensions (Inches) Letter Height	Text Dimensions (Inches) Vertical Spacing	Size	Quantity and Color
G20-2	END ROAD WORK	SHSB		36"x18"	2 - Black on Orange
W20-1	ROAD WORK AHEAD			36"x36"	1 - Black on Orange
W21-5bL	LEFT SHOULDER CLOSED			36"x36"	2 - Black on Orange
W24-1				36"x36"	2 - Black on Orange

SHSB - Text Dimensions Shall Conform to "Standard Highway Signs Book" - 2012 Edition.

PHASE I TRAFFIC CONTROL NOTES

1. Traffic control plan shown for refacing abutment number 1 retaining walls.
2. Traffic shall be maintained on each frontage road for the duration of this work.
3. Viaduct is open during Phase I traffic control.
4. See US Route 1 Detour Plans for second G20-2 sign.

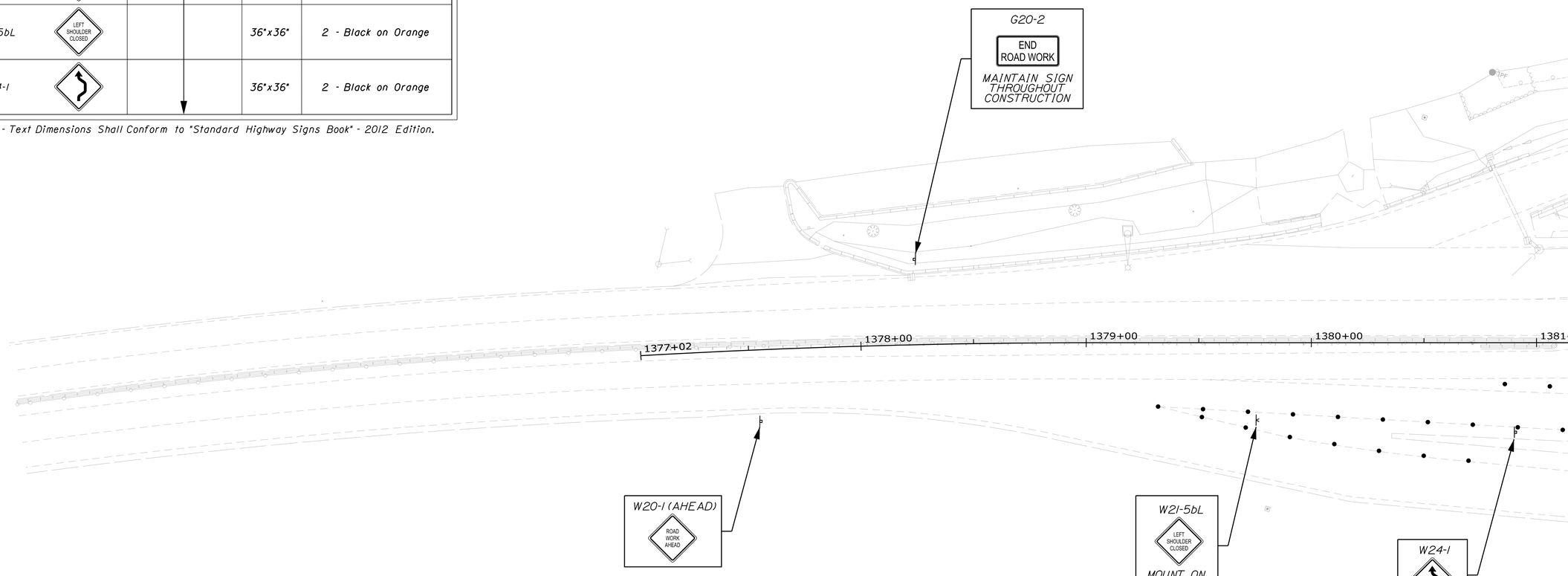

LEGEND

SYMBOL	DESCRIPTION
	Construction Area
	Portable Concrete Barrier
	Traffic Barrel
	Traffic Attenuator

PLAN

25 0 25 50

Scale of Feet

STATE OF MAINE
DEPARTMENT OF TRANSPORTATION

NHPP - 1927(300)

WIN 19273.00

BRIDGE NO. 3838

BRIDGE PLANS

vhb

		BY	DATE
PROJ. MANAGER	J. KITTREDGE		
DESIGN-DETAILED	MLG	JAR	12/15
CHECKED-REVIEWED	MDS	SMH	12/15
DESIGN2-DETAILED2	---	---	---
DESIGN3-DETAILED3	---	---	---
REVISIONS 1	---	---	---
REVISIONS 2	---	---	---
REVISIONS 3	---	---	---
REVISIONS 4	---	---	---
FIELD CHANGES	---	---	---

WEST APPROACH BRIDGE
MAINE OWNED RR & CITY STREETS
BATH SAGADAHOC COUNTY

PHASE I TRAFFIC CONTROL PLANS (1 OF 3)

SHEET NUMBER

57

OF 145

Filename: ...\MSTA\057_Phase1_TCP_01.dgn Division: HIGHWAY Username: kwentworth Date:12/21/2015

Filename: ...\MSTA\058_Phase1_TCP_02.dgn Division: HIGHWAY Username: kwentworth Date:12/21/2015

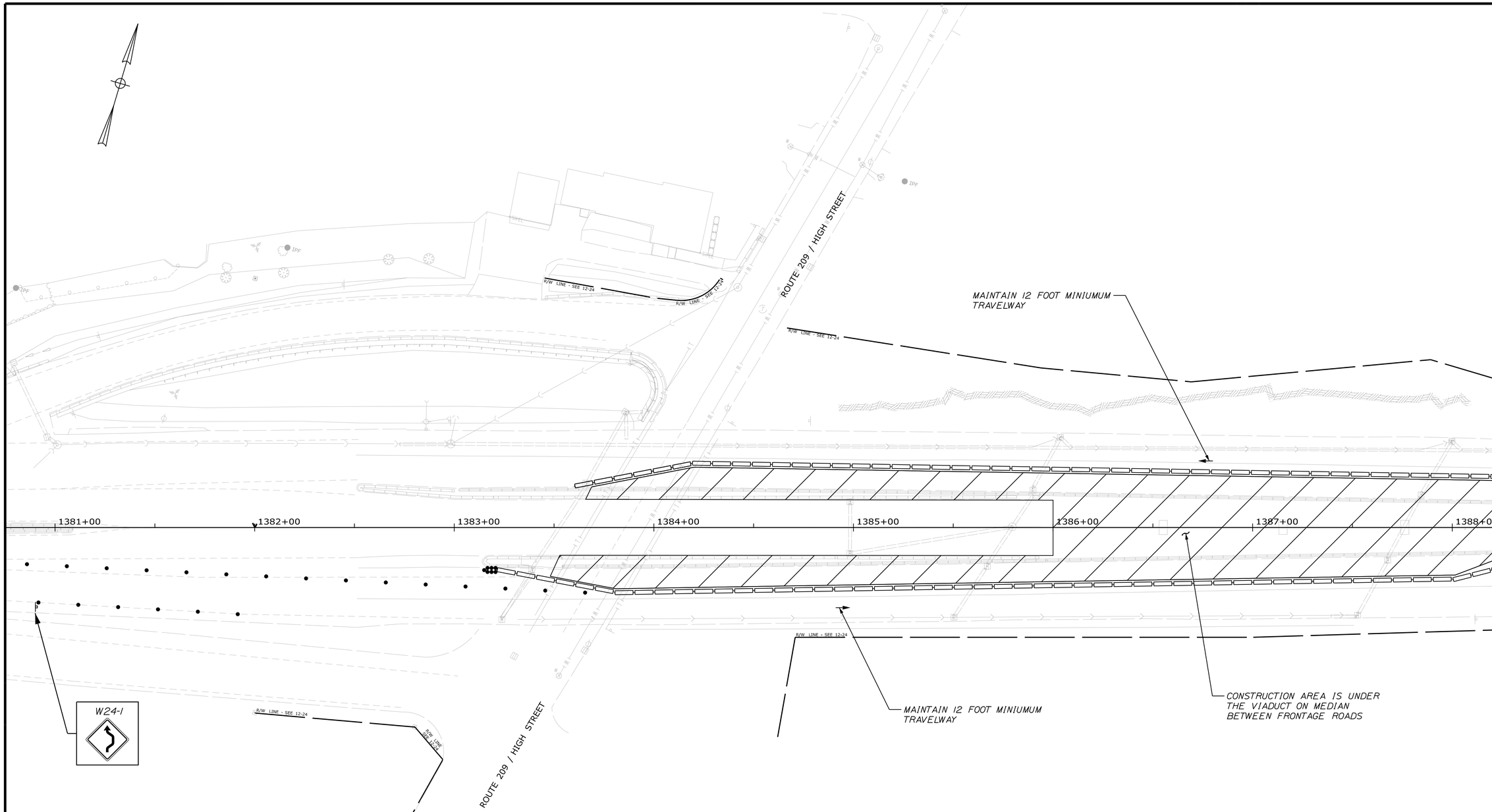

LEGEND

SYMBOL	DESCRIPTION
	Construction Area
	Portable Concrete Barrier
	Traffic Barrel
	Traffic Attenuator

PLAN

25 0 25 50

Scale of Feet

STATE OF MAINE
DEPARTMENT OF TRANSPORTATION

NHPP - 1927(300)

WIN 19273.00

BRIDGE NO. 3838

BRIDGE PLANS

vhb

		BY	DATE
PROJ. MANAGER	J. KITTREDGE		
DESIGN-DETAILED	MLG	JAR	12/15
CHECKED-REVIEWED	MDS	SMH	12/15
DESIGN2-DETAILED2	---	---	---
DESIGN3-DETAILED3	---	---	---
REVISIONS 1	---	---	---
REVISIONS 2	---	---	---
REVISIONS 3	---	---	---
REVISIONS 4	---	---	---
FIELD CHANGES	---	---	---

WEST APPROACH BRIDGE
MAINE OWNED RR & CITY STREETS
BATH SAGADAHOC COUNTY

PHASE I TRAFFIC CONTROL PLANS (2 OF 3)

SHEET NUMBER

58

OF 145

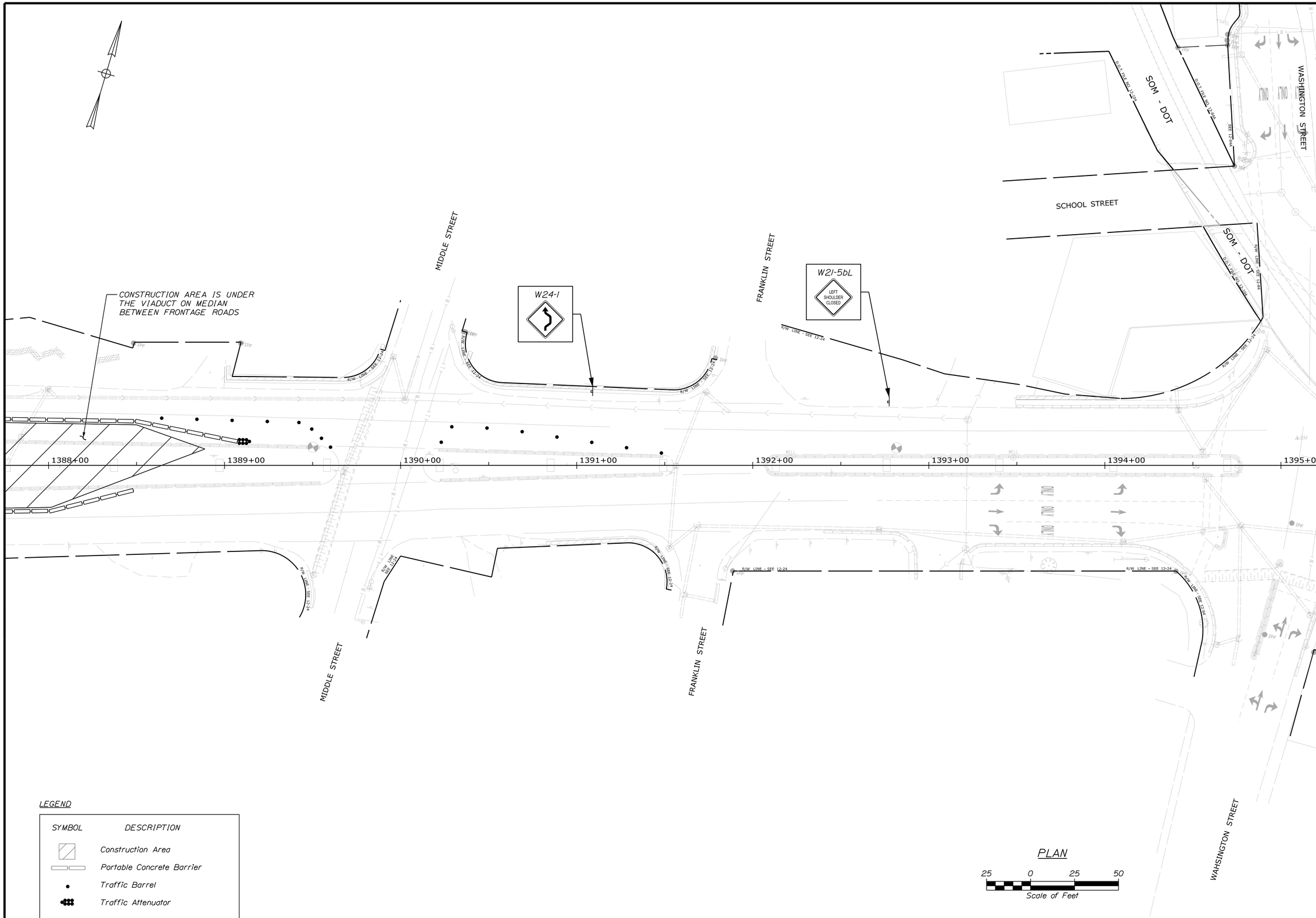

STATE OF MAINE
DEPARTMENT OF TRANSPORTATION

NHPP - 1927(300)

BRIDGE NO. 3838

WIN 19273.00

BRIDGE PLANS

		BY	DATE
PROJ. MANAGER	J. KITTREDGE		
DESIGN-DETAILED	MLG	JAR	12/15
CHECKED-REVIEWED	MDS	SMH	12/15
DESIGN2-DETAILED2	---	---	---
DESIGN3-DETAILED3	---	---	---
REVISIONS 1	---	---	---
REVISIONS 2	---	---	---
REVISIONS 3	---	---	---
REVISIONS 4	---	---	---
FIELD CHANGES	---	---	---

WEST APPROACH BRIDGE
MAINE OWNED RR & CITY STREETS
BATH SAGADAHOC COUNTY

PHASE I TRAFFIC CONTROL PLANS (3 OF 3)

SHEET NUMBER
59
OF 145

Filename: ...\MSTA\059_Phase1_TCP_03.dgn Division: HIGHWAY Username: kwentworth Date:12/21/2015

EXISTING INDICATIONS

A1,A2,B2,C1
C2,D1,D2,G2
G3,E1,E2,E3
F2,G1,H1,H3

F1

B1

PED FACE
P1-P14

PROPOSED INDICATIONS

E2,E3

PED FACE
P21-P22

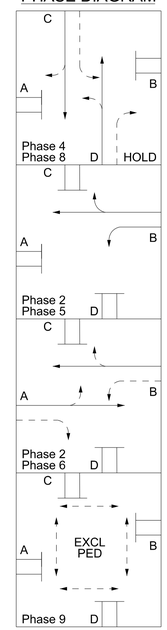

CENTRE ST
PHASE DIAGRAM

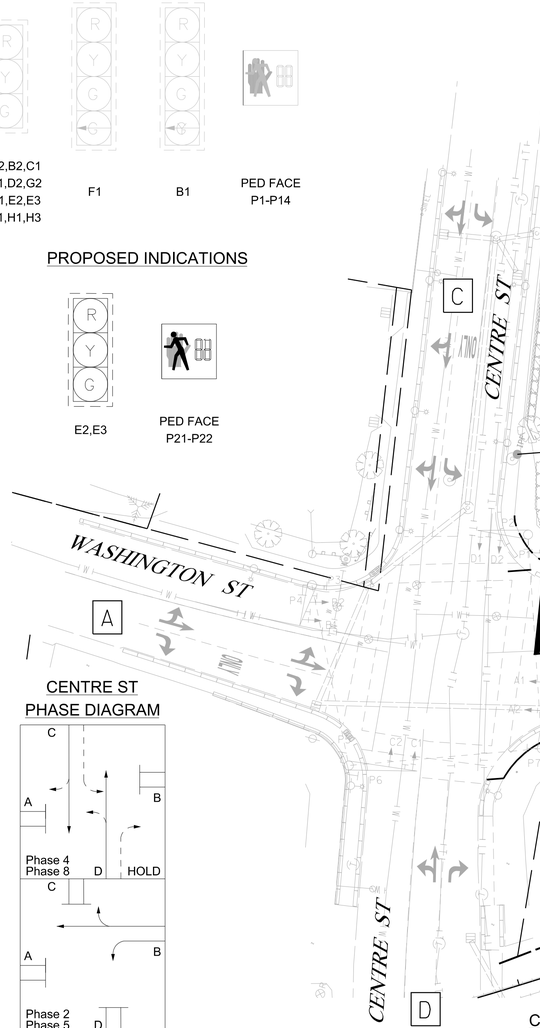

VINE / COMMERICAL ST
PHASE DIAGRAM

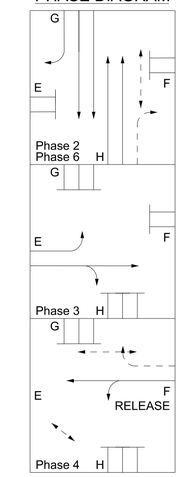

CENTRE ST
SIGNAL TIMING SCHEDULE

ITEM / PHASE	2	4*	5	6	8*	9
MINIMUM INITIAL	8	10	5	8	10	-
PASSAGE TIME	3	3	3	3	3	-
MAXIMUM 1	45	40	25	20	40	-
MAXIMUM 2	-	-	-	-	-	-
YELLOW	4	4	4	4	4	3
ALL RED	2	2	2	2	2	0
PEDESTRIAN WALK	-	-	-	-	-	4
PEDESTRIAN CLEARANCE	-	-	-	-	-	15
RECALL	OFF	OFF	OFF	OFF	OFF	OFF
DETECTOR OPERATION	PR	PR	PR	PR	PR	PR
FLASH	R	R	R	R	R	D

NOTES:

PR = PRESENCE R = RED
Y = YELLOW D = DARK

* - HOLD TO BE APPLIED TO Ø4 AND Ø8 UNTIL RELEASE RECEIVED FROM Ø4 VINE/COMMERCIAL TRAFFIC SIGNAL CONTROLLER, 6:30-8:00 AM AND 3:00-4:30 PM MONDAY-FRIDAY.
THE INTERSECTION SHALL OPERATE UNDER FREE ON-DEMAND OPERATIONS ALL REMAINING HOURS OF THE DAY AND ON WEEKENDS.

VINE / COMMERICAL ST
SIGNAL TIMING SCHEDULE

ITEM / PHASE	2	3	4^	6	
MINIMUM INITIAL	10	8	8	10	
PASSAGE TIME	3	3	3	3	
MAXIMUM 1	75	35	20	75	
MAXIMUM 2	-	-	-	-	
YELLOW	3	3	3	3	
ALL RED	3	6	4	3	
PEDESTRIAN WALK	4	-	4	4	
PEDESTRIAN CLEARANCE	13	-	13	18	
RECALL	OFF	OFF	OFF	OFF	
DETECTOR OPERATION	PR	PR	PR	PR	
FLASH	R	R	R	R	

NOTES:

PR = PRESENCE R = RED
Y = YELLOW D = DARK

^ - Ø4 SHALL INITIATE RELEASE VIA RELAY TO CENTRE STREET TRAFFIC SIGNAL CONTROLLER, 6:30-8:00 AM AND 3:00-4:30 PM MONDAY-FRIDAY.
THERE WILL BE NO TIMED OFFSET BETWEEN THE HOLD AND RELEASE.

DETECTOR SCHEDULE

DETECTOR				
PLAN ID	STREET	DIRECTION	LANE	Ø
3	WASHINGTON ST.	NORTHBOUND	LEFT-THRU	4
3	WASHINGTON ST.	NORTHBOUND	RIGHT	4

PROPOSED OVERHEAD AND POST MOUNTED SIGNS

R3-5L
30x36
1-PROPOSED

R3-6R
30x36
1-PROPOSED

R10-3e
9x15
3-PROPOSED

PLAN

25 0 25 50
Scale of Feet

STATE OF MAINE
DEPARTMENT OF TRANSPORTATION

BR - 1927(300) / STP - 2056 (500)

WIN
BRIDGE NO. 3838 19273.00 / 20565.00 BRIDGE PLANS

vhb

PROJ. MANAGER	J. KITTREDGE	BY	DATE
DESIGN-DETAILED	MLG	JAR	12/15
CHECKED-REVIEWED	MDS	SMH	12/15
DESIGN2-DETAILED2	---	---	---
DESIGN3-DETAILED3	---	---	---
REVISIONS 1	---	---	---
REVISIONS 2	---	---	---
REVISIONS 3	---	---	---
REVISIONS 4	---	---	---
FIELD CHANGES	---	---	---

WEST APPROACH BRIDGE
MAINE OWNED RR & CITY STREETS
BATH SAGADAHOC COUNTY

TRAFFIC CONTROL SIGNAL PLAN

SHEET NUMBER
60
OF 145

Filename: ...\MSTA\060_TempSignal_01.dgn Division: HIGHWAY Username: kwentworth Date:12/21/2015

LIST OF MAJOR ITEMS

EQUIPMENT AND WORK ITEMS 643.71	QUANTITY
FURNISH AND INSTALL NEW NEMA TS2, TYPE 1 ETHERNET EQUIPPED CONTROLLER IN NEW P-44 TYPE GROUND MOUNTED CONTROLLER CABINET WITH 15-INCH EXTENSION BASE COMPLETE WITH ALL ANCILLARY EQUIPMENT AND WIRING	1
FURNISH AND INSTALL NEW 16-CHANNEL ETHERNET EQUIPPED ENHANCED MALFUNCTION MANAGEMENT UNIT (MMU)	1
FURNISH AND INSTALL NEMA TS2-1 LATEST SOFTWARE UPDATE	1
FURNISH AND INSTALL ONE-WAY 3-SECTION 12-INCH FEDERAL YELLOW SIGNAL HEADS WITH LED MODULES WITH TUNNEL VISORS AND LOUVERED BACKPLATES MOUNTED ON MAST ARM	17
FURNISH AND INSTALL ONE-WAY 4-SECTION 12-INCH FEDERAL YELLOW SIGNAL HEADS WITH LED MODULES WITH TUNNEL VISORS AND LOUVERED BACKPLATES MOUNTED ON MAST ARM	5
REMOVE AND RESET EXISTING TRAFFIC SIGNAL HEADS	1
FURNISH AND INSTALL ONE-WAY, 16 X 18-INCH LED POST MOUNTED COUNTDOWN PEDESTRIAN SIGNAL HEADS	21
FURNISH AND INSTALL ONE-WAY, 16 X 18-INCH MAST ARM MOUNTED COUNTDOWN PEDESTRIAN SIGNAL HEADS	6
FURNISH AND INSTALL ADA COMPLIANT ACCESSIBLE PEDESTRIAN SIGNAL (APS) BUTTON WITH 9"X 15"R10-3e INFORMATIONAL SIGN	17
FURNISH AND INSTALL 4-CHANNEL PREEMPTION PHASE SELECTOR WITH SYSTEM CHASSIS	2
FURNISH AND INSTALL LIGHT-BASED PREEMPTION RECEIVERS WITH DETECTOR CABLE	8
FURNISH AND INSTALL PREEMPTION CONFIRMATION RED STROBE WITH CABLE	2
FURNISH AND INSTALL OVERHEAD MAST ARM MOUNTED SIGNS	13
FURNISH AND INSTALL REGULATORY SIGNS	3
FURNISH AND INSTALL STREET NAME SIGN	4
FURNISH AND INSTALL NEW SIGNAL CABLE	-
IMPLEMENT LOCAL AND SYSTEM TIMING	-

THE LISTED QUANTITIES ARE APPROXIMATE AND ARE FURNISHED FOR INFORMATION ONLY.

CENTRE ST DETECTOR SCHEDULE

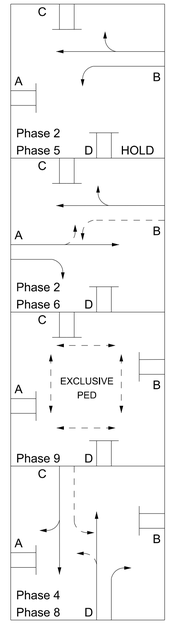

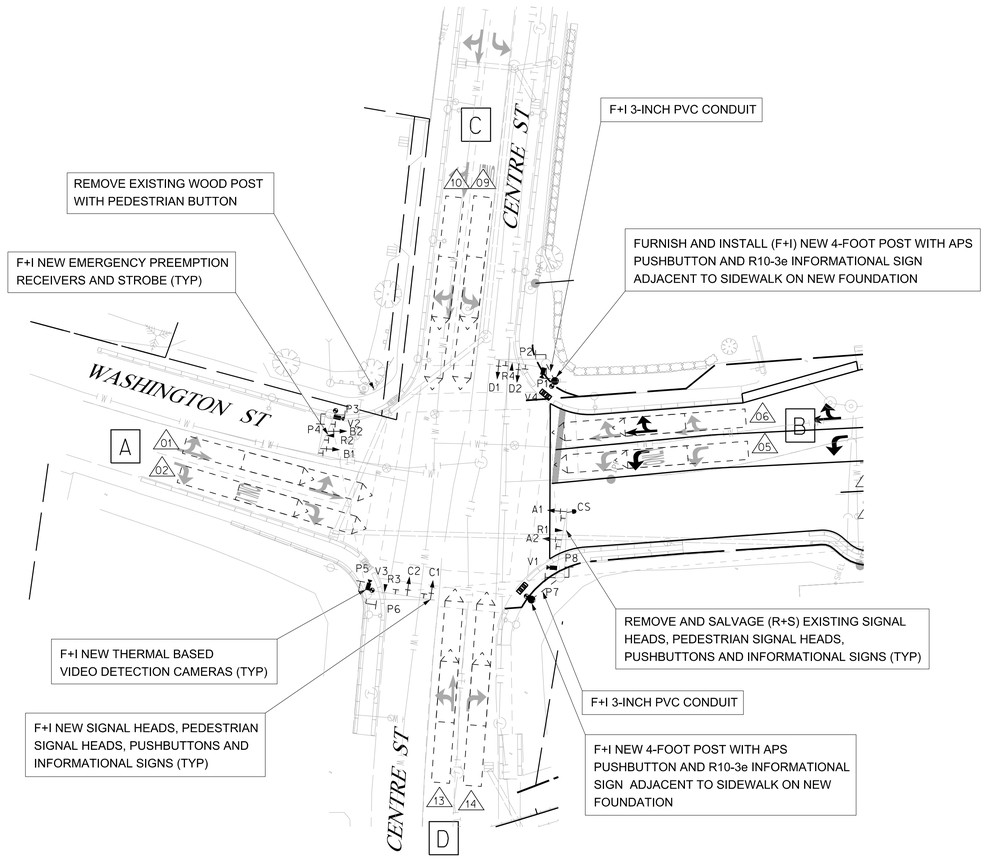

PROPOSED INDICATIONS

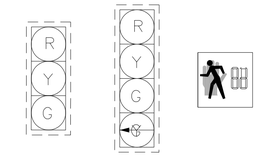

A1,A2,B2,C1 C2,D1,D2 | B1 | PED FACE P1-P8

PROPOSED EMERGENCY VEHICLE PRE-EMPTION OPERATION WASHINGTON STREET AT CENTRE STREET

ID	PREEMPT ASSIGNMENT	RECEIVER PRIORITY	ACTIVE PHASE
	1	RAILROAD	
	2	-	
R1	3	1	Ø6
R2	4	2	Ø2 & Ø5
R3	5	3	Ø8
R4	6	4	Ø4

EMERGENCY VEHICLE PRE-EMPTION NOTES:
WASHINGTON STREET AT CENTRE STREET

1. EMERGENCY VEHICLE PRE-EMPTION SIGNALS SHALL BE TRANSMITTED BY OPTICAL EMITTERS (PROVIDED BY OTHERS) MOUNTED IN EMERGENCY VEHICLES AND RECEIVED BY OPTICAL DETECTORS LOCATED AT THE INTERSECTION.
2. PRE-EMPTION SIGNALS SHALL BE SERVICED ON A PRIORITY BASIS WITH RECEIVERS ASSIGNED DESCENDING PRIORITIES (1 = HIGHEST, 4 = LOWEST)
3. IN RESPONSE TO A PRE-EMPTION SIGNAL RECEIVED AT AN INTERSECTION BY AN OPTICAL DETECTOR, THE CONTROLLER SHALL HOLD OR ADVANCE TO AND HOLD THE EMERGENCY ACTIVE PHASE GREEN FOR A MINIMUM OF 7 SECONDS OR UNTIL THE PRE-EMPTION SIGNAL CEASES. THE CONTROLLER SHALL THEN TIME PRE-EMPTION PHASE CLEARANCE (4.0 SECONDS YELLOW AND 2.0 SECONDS ALL RED) AND SERVICE SUBSEQUENT EMERGENCY ACTIVE PHASES AS NECESSARY. AT THE COMPLETION OF THE PRE-EMPTION CYCLE, THE CONTROLLER SHALL TIME THE PRE-EMPTION CLEARANCE AND RESUME NORMAL SIGNAL OPERATION BEGINNING WITH PHASE 5.
4. MINIMUM GREEN AND NORMAL VEHICLE CLEARANCE SHALL BE PROVIDED ON PHASES THAT ARE TO BE TERMINATED BY PRE-EMPTION DEMAND.
5. CONFIRMATION STROBES SHALL BE ILLUMINATED WHENEVER ANY EMERGENCY VEHICLE PREEMPTION GREEN IS ON.
6. RAILROAD PREEMPTION SHALL OVERRIDE THE EMERGENCY VEHICLE PREEMPTION.
7. TRANSFER EXISTING RAILROAD PREEMPT IN EXISTING CONTROLLER TO NEW CONTROLLER. EXISTING RAILROAD PREEMPTION FUNCTIONALITY SHALL BE RETAINED. IN THE EVENT OF AN UNFORSEEN DISCREPANCY WITH PROPOSED SIGNAL OPERATION, THE MOST CONSTERVATIVE APPROACH TO THE DISCREPANCY SHALL BE APPLIED.

CENTRE ST DETECTOR SCHEDULE

	DETECTOR					DETECTOR CARD IN VEHICLE DETECTION RACK			
	PLAN ID	STREET	DIRECTION	LANE	Ø	TYPE	SLOT NO	DETECTOR NO	CHANNEL
CAMERA V1	1	WASHINGTON ST.	SOUTHBOUND	LEFT-THRU	6	THERMAL	2	1	1
	2	WASHINGTON ST.	SOUTHBOUND	RIGHT	6	THERMAL	2	1	1
	(3)	SPARE							
	(4)	SPARE							
CAMERA V2	5	WASHINGTON ST.	NORTHBOUND	LEFT	5	THERMAL	2	1	2
	6	WASHINGTON ST.	NORTHBOUND	THRU-RIGHT	2	THERMAL	2	1	2
	(7)	SPARE							
	(8)	SPARE							
CAMERA V3	9	CENTRE ST.	WESTBOUND	LEFT	4	THERMAL	4	2	1
	10	CENTRE ST.	WESTBOUND	THRU-RIGHT	4	THERMAL	4	2	1
	(11)	SPARE							
	(12)	SPARE							
CAMERA V4	13	CENTRE ST.	EASTBOUND	LEFT-THRU	8	THERMAL	4	2	2
	14	CENTRE ST.	EASTBOUND	RIGHT	8	THERMAL	4	2	2
	(15)	SPARE							
	(16)	SPARE							

CENTRE ST SIGNAL TIMING SCHEDULE

ITEM / PHASE	2*	4	5*	6	8	9
MINIMUM INITIAL	10	8	5	10	8	-
PASSAGE TIME	3	3	2	3	3	-
MAXIMUM 1	45	20	25	20	20	-
MAXIMUM 2	-	-	-	-	-	-
YELLOW	4	4	4	4	4	3
ALL RED	2	2	2	2	2	0
PEDESTRIAN WALK	-	-	-	-	-	4
PEDESTRIAN CLEARANCE	-	-	-	-	-	15
RECALL	SOFT	OFF	OFF	OFF	OFF	OFF
DETECTOR OPERATION	PR	PR	PR	PR	PR	PR
FLASH	Y	R	R	Y	R	D

NOTES:

PR = PRESENCE R = RED
Y = YELLOW D = DARK

* - HOLD TO BE APPLIED TO Ø2 AND Ø5 UNTIL RELEASE RECEIVED FROM Ø3 VINE/COMMERCIAL TRAFFIC SIGNAL CONTROLLER, 6:30-8:00 AM AND 3:00-4:30 PM MONDAY-FRIDAY.
THE INTERSECTION SHALL OPERATE UNDER FREE ON-DEMAND OPERATIONS ALL REMAINING HOURS OF THE DAY AND ON WEEKENDS.

PLAN

25 0 25 50
Scale of Feet

STATE OF MAINE
DEPARTMENT OF TRANSPORTATION

ISTP - 2056 (500))

WIN 20565.00

BRIDGE NO. 3838

BRIDGE PLANS

vhb

PROJ. MANAGER	J. KITTREDGE	BY	DATE
DESIGN-DETAILED	MLG	JAR	12/15
CHECKED-REVIEWED	CMB	SMH	12/15
DESIGN2-DETAILED2	---	---	---
DESIGN3-DETAILED3	---	---	---
REVISIONS 1	---	---	---
REVISIONS 2	---	---	---
REVISIONS 3	---	---	---
REVISIONS 4	---	---	---
FIELD CHANGES	---	---	---

WEST APPROACH BRIDGE
MAINE OWNED RR & CITY STREETS
BATH SAGADAHOC COUNTY

TRAFFIC SIGNAL PLANS
(1 OF 3)

SHEET NUMBER
61
OF 145

Filename: ...\TRAFFIC\MSTA\061_Signal_01.dgn Division: HIGHWAY Username: kwentworth Date:12/21/2015

VINE / COMMERCIAL ST DETECTOR SCHEDULE

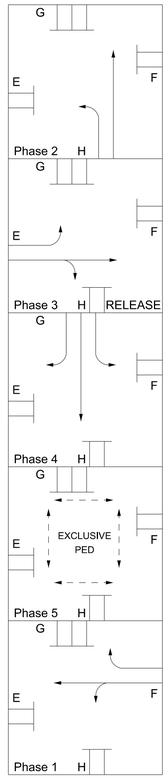

F+I NEW 8-FOOT POST WITH NEW COUNTDOWN PEDESTRIAN SIGNAL HEADS, APS PUSHBUTTONS, AND R10-3e INFORMATIONAL SIGNS ON EXISTING FOUNDATION (STA 1395+49 LT)

F+I NEW 10-FOOT POST WITH NEW VEHICULAR SIGNAL HEAD, COUNTDOWN PEDESTRIAN SIGNAL HEAD, APS PUSHBUTTON, AND R10-3e INFORMATIONAL SIGN ON EXISTING FOUNDATION (STA 1395+52 LT, STA 1395+42 LT)

F+I NEW 8-FOOT POST WITH COUNTDOWN PEDESTRIAN SIGNAL HEAD, APS PUSHBUTTON, AND R10-3e INFORMATIONAL SIGN ADJACENT TO SIDEWALK ON NEW FOUNDATION (STA 1395+70 LT)

F+I 3-INCH PVC CONDUIT

F+I 25-FOOT MAST ARM WITH VEHICULAR SIGNAL HEADS. COUNTDOWN PEDESTRIAN SIGNAL HEAD, APS PUSHBUTTON, AND R10-3e INFORMATIONAL SIGN INSTALLED UNDER TRAFFIC CONTROL SIGNAL PLAN (STA 1395+44 RT)

8-FOOT POST WITH NEW COUNTDOWN PEDESTRIAN SIGNAL HEADS, APS PUSHBUTTON, AND R10-3e INFORMATIONAL SIGN ADJACENT TO SIDEWALK ON NEW FOUNDATION INSTALLED UNDER SIGNAL TRAFFIC CONTROL PLAN (STA 1394+60 LT, STA 1394+84 LT)

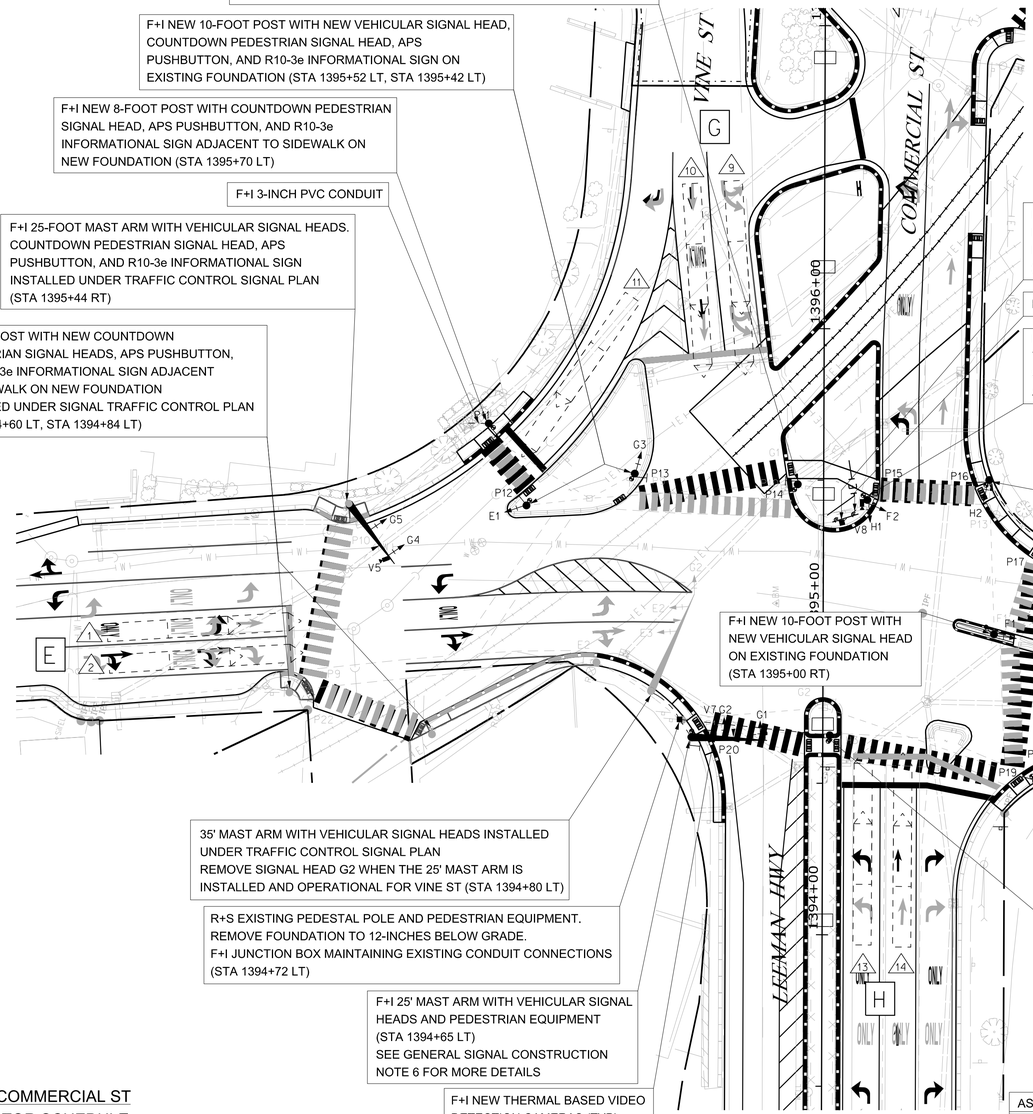

R+S EXISTING PEDESTAL POST
REMOVE FOUNDATION TO 12 INCHES BELOW GRADE
F+I JUNCTION BOX MAINTAINING EXISTING CONDUIT CONNECTIONS (STA 1395+38 RT)

F+I 3-INCH PVC CONDUIT

F+I NEW 10-FOOT POST WITH NEW VEHICULAR SIGNAL HEADS, TOP MOUNTED VIDEO CAMERA, COUNTDOWN PEDESTRIAN SIGNAL HEAD, APS PUSHBUTTON, AND R10-3e INFORMATIONAL ADJACENT TO SIDEWALK ON NEW FOUNDATION (STA 1395+44 RT)

F+I NEW 10-FOOT POST WITH NEW VEHICULAR SIGNAL HEAD, COUNTDOWN PEDESTRIAN SIGNAL HEAD, APS PUSHBUTTON, AND R10-3e INFORMATIONAL SIGN ON EXISTING FOUNDATION (STA 1395+50 RT)

F+I NEW 8-FOOT POST WITH TOP MOUNTED WIDE ANGLE VIDEO CAMERA,NEW COUNTDOWN PEDESTRIAN SIGNAL HEAD, APS PUSHBUTTON, AND R10-3e INFORMATIONAL SIGN ADJACENT TO SIDEWALK ON NEW FOUNDATION (STA 1395+32 RT)
F+I 3-INCH PVC CONDUIT FROM POST P18

F+I NEW 10-FOOT POST WITH NEW VEHICULAR SIGNAL HEAD ON EXISTING FOUNDATION (STA 1395+00 RT)

35' MAST ARM WITH VEHICULAR SIGNAL HEADS INSTALLED UNDER TRAFFIC CONTROL SIGNAL PLAN
REMOVE SIGNAL HEAD G2 WHEN THE 25' MAST ARM IS INSTALLED AND OPERATIONAL FOR VINE ST (STA 1394+80 LT)

R+S EXISTING PEDESTAL POLE AND PEDESTRIAN EQUIPMENT.
REMOVE FOUNDATION TO 12-INCHES BELOW GRADE.
F+I JUNCTION BOX MAINTAINING EXISTING CONDUIT CONNECTIONS (STA 1394+72 LT)

F+I 25' MAST ARM WITH VEHICULAR SIGNAL HEADS AND PEDESTRIAN EQUIPMENT (STA 1394+65 LT)
SEE GENERAL SIGNAL CONSTRUCTION NOTE 6 FOR MORE DETAILS

F+I NEW THERMAL BASED VIDEO DETECTION CAMERAS (TYP)

F+I NEW 8-FOOT POST WITH NEW COUNTDOWN PEDESTRIAN SIGNAL HEADS, WITH APS PUSHBUTTON, AND R10-3e INFORMATIONAL SIGN ON EXISTING FOUNDATION (STA 1394+51 RT)

F+I NEW 4-FOOT POST WITH APS PUSHBUTTON AND R10-3e INFORMATIONAL SIGN ADJACENT TO SIDEWALK ON NEW FOUNDATION (STA 1394+66 RT)
F+I 3-INCH PVC CONDUIT FROM JUNCTION BOX

PROPOSED INDICATIONS

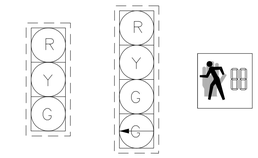

F2,G2,G3, G4,G5,H2 — G1,E1,F1,H1 — PED FACE P11-P20

EXISTING INDICATIONS
(INSTALLED UNDER TRAFFIC CONTROL SIGNAL)

E2,E3 — PED FACE P9-P10 P21-P22

VINE / COMMERCIAL ST SIGNAL TIMING SCHEDULE

ITEM / PHASE	1	2	3*	4	5
MINIMUM INITIAL	8	8	8	8	-
PASSAGE TIME	3	3	3	3	-
MAXIMUM 1	30	30	30	30	-
MAXIMUM 2	-	-	-	-	-
YELLOW	3	3	3	3	3
ALL RED	6	6	6	4	0
PEDESTRIAN WALK	-	-	-	-	4
PEDESTRIAN CLEARANCE	-	-	-	-	19
RECALL	OFF	OFF	OFF	OFF	OFF
DETECTOR OPERATION	PR	PR	PR	PR	PR
FLASH	R	R	R	R	D

NOTES:

PR = PRESENCE R = RED
Y = YELLOW D = DARK

* - Ø3 SHALL INITIATE RELEASE VIA RELAY TO CENTRE STREET TRAFFIC SIGNAL CONTROLLER, 6:30-8:00 AM AND 3:00-4:30 PM MONDAY-FRIDAY.
THERE WILL BE NO TIMED OFFSET BETWEEN THE HOLD AND RELEASE.

VINE / COMMERCIAL ST DETECTOR SCHEDULE

	DETECTOR					DETECTOR CARD IN VEHICLE DETECTION RACK			
	PLAN ID	STREET	DIRECTION	LANE	Ø	TYPE	SLOT NO	DETECTOR NO	CHANNEL
CAMERA V5	1	WASHINGTON ST.	SOUTHBOUND	LEFT-THRU	3	THERMAL	2	3	1
	2	WASHINGTON ST.	SOUTHBOUND	RIGHT	3	THERMAL	2	3	1
	(3)	SPARE							
	(4)	SPARE							
CAMERA V6	5	WASHINGTON ST.	NORTHBOUND	LEFT-THRU	1	THERMAL	2	3	2
	6	WASHINGTON ST.	NORTHBOUND	RIGHT	1	THERMAL	2	3	2
	(7)	SPARE							
	(8)	SPARE							
CAMERA V7	9	VINE ST.	WESTBOUND	LEFT	4	THERMAL	4	4	1
	10	VINE ST.	WESTBOUND	THROUGH	4	THERMAL	4	4	1
	11	VINE ST.	WESTBOUND	RIGHT	4	THERMAL	4	4	1
	(12)	SPARE							
CAMERA V8	13	LEEMAN HWY.	EASTBOUND	LEFT	2	THERMAL	4	4	2
	14	LEEMAN HWY.	EASTBOUND	THROUGH	2	THERMAL	4	4	2
	(15)	SPARE							
	(16)	SPARE							

LIST OF MAJOR ITEMS

ASSOCIATED EQUIPMENT AND WORK	QUANTITY
FURNISH AND INSTALL PRECAST JUNCTION BOX (ITEM 626.11)	3
FURNISH AND INSTALL NON-METALLIC CONDUIT (ITEM 626.22)	320 LF
FURNISH AND INSTALL 18-INCH FOUNDATION (ITEM 626.31)	14
FURNISH AND INSTALL 30-INCH DIAMETER, GREATER THAN 8-FEET LONG AND ALL 36-INCH AND 42-INCH DIAMETER FOUNDATIONS (ITEM 626.332)	8 CY
FURNISH AND INSTALL CONTROLLER CABINET FOUNDATION (ITEM 626.35)	2
FURNISH AND INSTALL VIDEO DETECTION SYSTEM (ITEM 643.83)	1
FURNISH AND INSTALL TRAFFIC SIGNAL LOOP (ITEM 643.86)	2
FURNISH AND INSTALL MAST ARM POLE (ITEM 643.91)	3
FURNISH AND INSTALL PEDESTAL POLE (TIME 643.92)	14

THE LISTED QUANTITIES ARE APPROXIMATE AND ARE FURNISHED FOR INFORMATION ONLY.

PLAN

25 0 25 50
Scale of Feet

STATE OF MAINE
DEPARTMENT OF TRANSPORTATION

ISTP - 2056 (500))

WIN 20565.00

BRIDGE NO. 3838

BRIDGE PLANS

vhb

		BY	DATE
PROJ. MANAGER	J. KITTREDGE		
DESIGN-DETAILED	MLG	JAR	12/15
CHECKED-REVIEWED	CMB	SMH	12/15
DESIGN2-DETAILED2	---	---	---
DESIGN3-DETAILED3	---	---	---
REVISIONS 1	---	---	---
REVISIONS 2	---	---	---
REVISIONS 3	---	---	---
REVISIONS 4	---	---	---
FIELD CHANGES	---	---	---

WEST APPROACH BRIDGE
MAINE OWNED RR & CITY STREETS
BATH SAGADAHOC COUNTY

TRAFFIC SIGNAL PLANS
(2 OF 3)

SHEET NUMBER
62
OF 145

Filename: ...\TRAFFIC\MSTA\062_Signal_02.dgn Division: HIGHWAY Username: kwentworth Date:12/21/2015

PROPOSED OVERHEAD AND POST MOUNTED SIGNS

* EXISTING SIGNS INSTALLED DURING TRAFFIC CONTROL SIGNAL PLAN

R3-5R	R3-5L	R3-6L	R3-6R	R3-5a
30x36	30x36	30x36	30x36	30x36
2-PROPOSED	3-PROPOSED * 1-EXISTING	2-PROPOSED	2-PROPOSED * 1-EXISTING	1-PROPOSED

R10-12	R10-3e	R3-8e	R5-1
30x36	9x15	42x36	30x30
1-PROPOSED	14-PROPOSED * 3-EXISTING	1-PROPOSED	2-PROPOSED

School St	Vine St	Washington St
D3-1d	D3-1e	D3-1c
12x42	12x36	12x54
1-PROPOSED	1-PROPOSED	2-PROPOSED

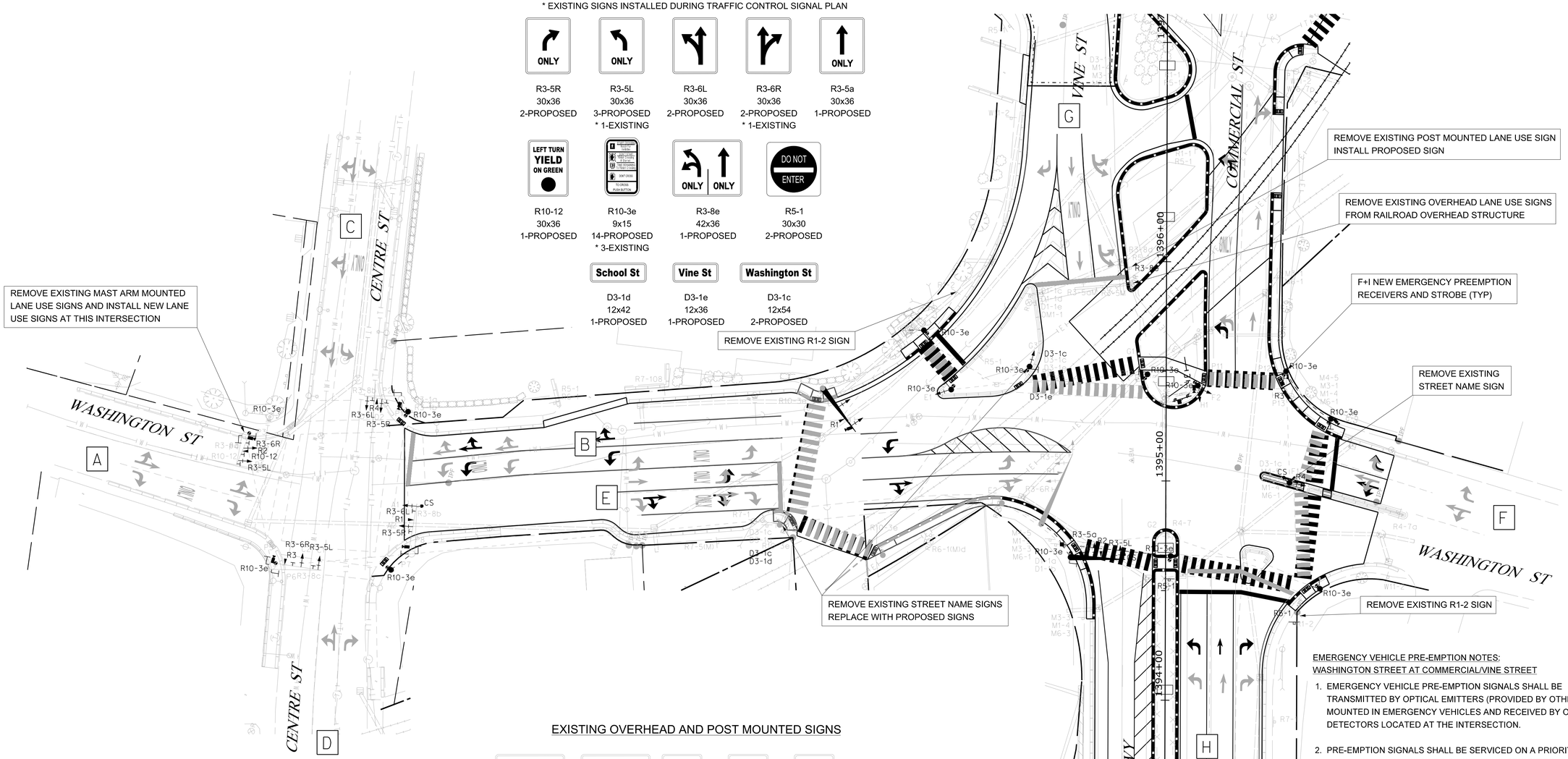

EXISTING OVERHEAD AND POST MOUNTED SIGNS

R3-8b	R3-8d	R3-5M	R3-5aM	R10-12	R1-2
2-REMOVED	1-REMOVED	1-REMOVED	1-REMOVED	1-REMOVED	2-REMOVED

Centre St	Washington St	WASHINGTON ST	SCHOOL ST	VINE ST
D3-1a	D3-1b	D3-1c	D3-1d	D3-1e
1-RETAINED	1-RETAINED	3-REMOVED	1-REMOVED	1-REMOVED

R3-8c	R3-8a	D3-1f	R5-1
1-REMOVED	1-REMOVED	1-RETAINED	3-RETAINED

ALL OTHER EXISTING SIGNS TO BE RETAINED UNLESS DIRECTED BY RESIDENT

PROPOSED EMERGENCY VEHICLE PRE-EMPTION OPERATION WASHINGTON STREET AT COMMERCIAL/VINE STREET

ID	PREEMPT ASSIGNMENT	RECEIVER PRIORITY	ACTIVE PHASE
	1	RAILROAD	
	2	-	
R1	3	1	Ø3
R2	4	2	Ø4
R3	5	3	Ø2
R4	6	4	Ø1

EMERGENCY VEHICLE PRE-EMPTION NOTES:
WASHINGTON STREET AT COMMERCIAL/VINE STREET

1. EMERGENCY VEHICLE PRE-EMPTION SIGNALS SHALL BE TRANSMITTED BY OPTICAL EMITTERS (PROVIDED BY OTHERS) MOUNTED IN EMERGENCY VEHICLES AND RECEIVED BY OPTICAL DETECTORS LOCATED AT THE INTERSECTION.
2. PRE-EMPTION SIGNALS SHALL BE SERVICED ON A PRIORITY BASIS WITH RECEIVERS ASSIGNED DESCENDING PRIORITIES (1 = HIGHEST, 4 = LOWEST)
3. IN RESPONSE TO A PRE-EMPTION SIGNAL RECEIVED AT AN INTERSECTION BY AN OPTICAL DETECTOR, THE CONTROLLER SHALL HOLD OR ADVANCE TO AND HOLD THE EMERGENCY ACTIVE PHASE GREEN FOR A MINIMUM OF 7 SECONDS OR UNTIL THE PRE-EMPTION SIGNAL CEASES. THE CONTROLLER SHALL THEN TIME PRE-EMPTION PHASE CLEARANCE (3.0 SECONDS YELLOW AND 6.0 SECONDS ALL RED) AND SERVICE SUBSEQUENT EMERGENCY ACTIVE PHASES AS NECESSARY. AT THE COMPLETION OF THE PRE-EMPTION CYCLE, THE CONTROLLER SHALL TIME THE PRE-EMPTION CLEARANCE AND RESUME NORMAL SIGNAL OPERATION BEGINNING WITH PHASE 2.
4. MINIMUM GREEN AND NORMAL VEHICLE CLEARANCE SHALL BE PROVIDED ON PHASES THAT ARE TO BE TERMINATED BY PRE-EMPTION DEMAND.
5. CONFIRMATION STROBES SHALL BE ILLUMINATED WHENEVER ANY EMERGENCY VEHICLE PREEMPTION GREEN IS ON.
6. RAILROAD PREEMPTION SHALL OVERRIDE THE EMERGENCY VEHICLE PREEMPTION.
7. EXISTING RAILROAD PREEMPTION FUNCTIONALITY SHALL BE RETAINED. IN THE EVENT OF AN UNFORSEEN DISCREPANCY WITH PROPOSED SIGNAL OPERATION, THE MOST CONSTERVATIVE APPROACH TO THE DISCREPANCY SHALL BE APPLIED.

PLAN

25 0 25 50
Scale of Feet

STATE OF MAINE
DEPARTMENT OF TRANSPORTATION

ISTP - 2056 (500))

WIN 20565.00

BRIDGE NO. 3838

BRIDGE PLANS

vhb

		BY	DATE
PROJ. MANAGER			
DESIGN-DETAILED	M.L.G.	JAR	12/15
CHECKED-REVIEWED	CMB	SMH	12/15
DESIGN2-DETAILED2	---	---	---
DESIGN3-DETAILED3	---	---	---
REVISIONS 1	---	---	---
REVISIONS 2	---	---	---
REVISIONS 3	---	---	---
REVISIONS 4	---	---	---
FIELD CHANGES	---	---	---

WEST APPROACH BRIDGE
MAINE OWNED RR & CITY STREETS
BATH SAGADAHOC COUNTY

TRAFFIC SIGNAL PLANS
(3 OF 3)

SHEET NUMBER
63
OF 145

Filename: ...\TRAFFIC\MSTA\063_Signal_03.dgn Division: HIGHWAY Username: kwentworth Date:12/21/2015

NOTES:

1. CONTRACTOR SHALL MILL AND SHIM AS NEEDED BEFORE APPLYING TEMPORARY STRIPING TO ALLOW FOR TWO TRAVEL LAENS ON BOTH FRONTAGE ROADS.

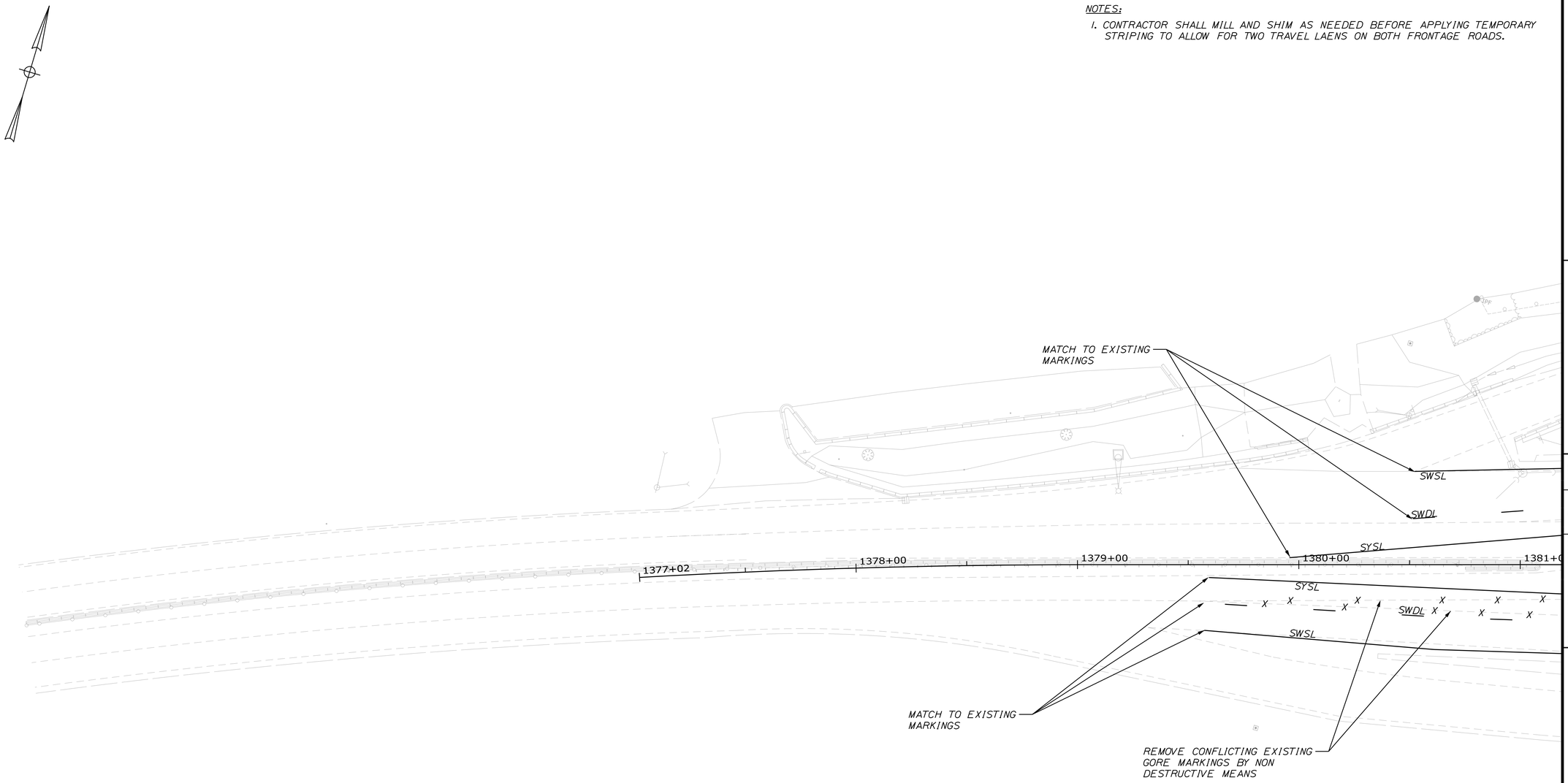

PLAN

PHASE II - TEMPORARY PAVEMENT MARKINGS

STRIPING LEGEND

SYMBOL	DESCRIPTION
SWSL	Single White Solid Line
SWDL	Single White Dashed Line
SYSL	Single Yellow Solid Line
DYSL	Double Yellow Solid Line
SL	Stop Line - 24" Wide
ONLY	ONLY Pavment Marking
↑	Straight Arrow Pavement Marking

SYMBOL	DESCRIPTION
↰	Left Arrow Pavement Marking
↱	Right Arrow Pavement Marking
↰↑	Left/U-Turn Arrow Pavement Marking
↑↰	Straight/Left Arrow Pavement Marking
↑↱	Straight/Right Arrow Pavement Marking

PLAN

25 0 25 50

Scale of Feet

STATE OF MAINE
DEPARTMENT OF TRANSPORTATION

NHPP - 1927(300)

WIN 19273.00

BRIDGE NO. 3838

BRIDGE PLANS

vhb

		BY	DATE
PROJ. MANAGER	J. KITTREDGE		
DESIGN-DETAILED	MLG	JAR	12/15
CHECKED-REVIEWED	MDS	SMH	12/15
DESIGN2-DETAILED2	---	---	---
DESIGN3-DETAILED3	---	---	---
REVISIONS 1	---	---	---
REVISIONS 2	---	---	---
REVISIONS 3	---	---	---
REVISIONS 4	---	---	---
FIELD CHANGES	---	---	---

WEST APPROACH BRIDGE
MAINE OWNED RR & CITY STREETS
BATH SAGADAHOC COUNTY

TEMPORARY STRIPING
PLANS (1 OF 6)

SHEET NUMBER

64

OF 145

Filename: ...\MSTA\064_TempPaveMark_01.dgn Division: HIGHWAY Username: kwentworth Date:12/21/2015

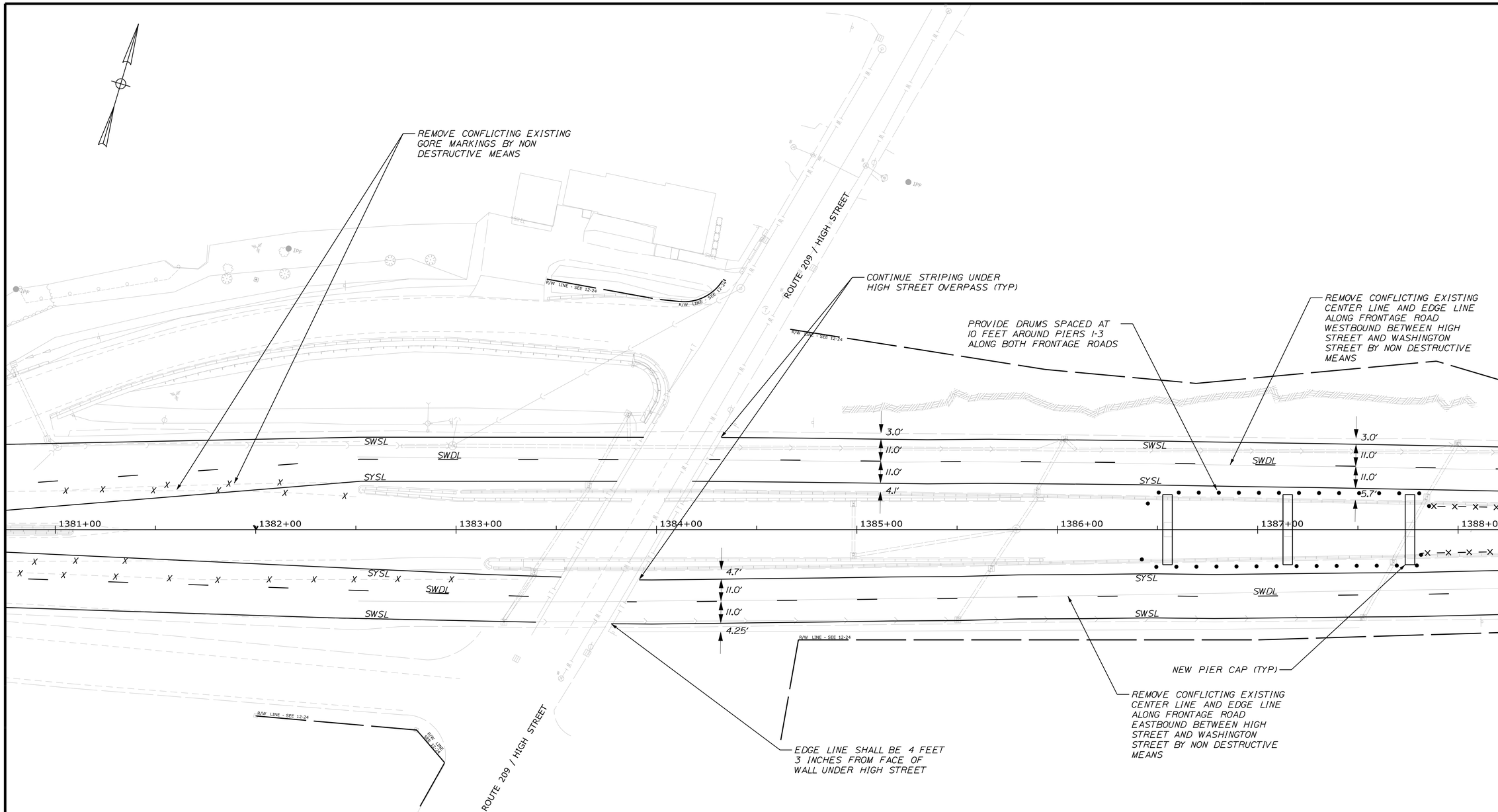

PLAN

PHASE II - TEMPORARY PAVEMENT MARKINGS

STRIPING LEGEND

SYMBOL	DESCRIPTION
SWSL	Single White Solid Line
SWDL	Single White Dashed Line
SYSL	Single Yellow Solid Line
DYSL	Double Yellow Solid Line
SL	Stop Line - 24" Wide
ONLY	ONLY Pavment Marking
↑	Straight Arrow Pavement Marking

SYMBOL	DESCRIPTION
↰	Left Arrow Pavement Marking
↱	Right Arrow Pavement Marking
↰↺	Left/U-Turn Arrow Pavement Marking
↰↑	Straight/Left Arrow Pavement Marking
↱↑	Straight/Right Arrow Pavement Marking

PLAN

25 0 25 50

Scale of Feet

STATE OF MAINE
DEPARTMENT OF TRANSPORTATION

NHPP - 1927(300)

WIN 19273.00

BRIDGE NO. 3838

BRIDGE PLANS

vhb

		BY	DATE
PROJ. MANAGER	J. KITTREDGE		
DESIGN-DETAILED	MLG	JAR	12/15
CHECKED-REVIEWED	MDS	SMH	12/15
DESIGN2-DETAILED2	---	---	---
DESIGN3-DETAILED3	---	---	---
REVISIONS 1	---	---	---
REVISIONS 2	---	---	---
REVISIONS 3	---	---	---
REVISIONS 4	---	---	---
FIELD CHANGES	---	---	---

WEST APPROACH BRIDGE
MAINE OWNED RR & CITY STREETS
BATH SAGADAHOC COUNTY

TEMPORARY STRIPING
PLANS (2 OF 6)

SHEET NUMBER

65

OF 145

Filename: ...\MSTA\065_TempPaveMark_02.dgn Division: HIGHWAY Username: kwentworth Date:12/21/2015

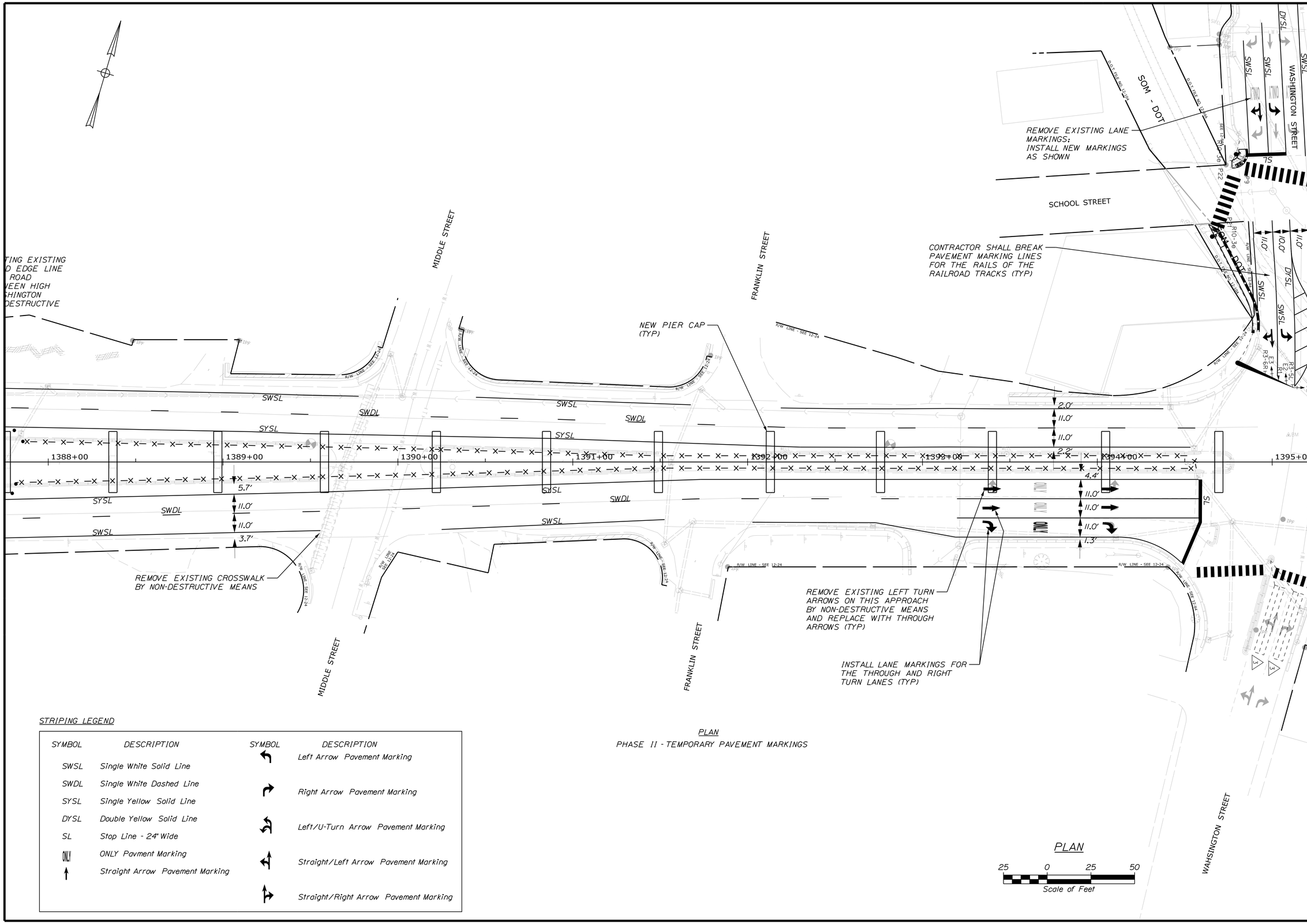

PLAN

PHASE II - TEMPORARY PAVEMENT MARKINGS

STRIPING LEGEND

SYMBOL	DESCRIPTION	SYMBOL	DESCRIPTION
SWSL	Single White Solid Line		Left Arrow Pavement Marking
SWDL	Single White Dashed Line		Right Arrow Pavement Marking
SYSL	Single Yellow Solid Line		Left/U-Turn Arrow Pavement Marking
DYSL	Double Yellow Solid Line		Straight/Left Arrow Pavement Marking
SL	Stop Line - 24" Wide		Straight/Right Arrow Pavement Marking
ONLY	ONLY Pavment Marking		
	Straight Arrow Pavement Marking		

STATE OF MAINE
DEPARTMENT OF TRANSPORTATION

NHPP - 1927(300)

WIN 19273.00

BRIDGE NO. 3838

BRIDGE PLANS

vhb

	BY	DATE
PROJ. MANAGER	J. KITTREDGE	
DESIGN-DETAILED	MLG	JAR	12/15
CHECKED-REVIEWED	MDS	SMH	12/15
DESIGN2-DETAILED2	...	...	...
DESIGN3-DETAILED3	...	...	...
REVISIONS 1	...	...	...
REVISIONS 2	...	...	...
REVISIONS 3	...	...	...
REVISIONS 4	...	...	...
FIELD CHANGES	...	...	...

WEST APPROACH BRIDGE
MAINE OWNED RR & CITY STREETS
BATH SAGADAHOC COUNTY

TEMPORARY STRIPING
PLANS (3 OF 6)

SHEET NUMBER
66
OF 145

Filename: ...\MSTA\066_TempPaveMark_03.dgn Division: HIGHWAY Username: kwentworth Date:12/21/2015

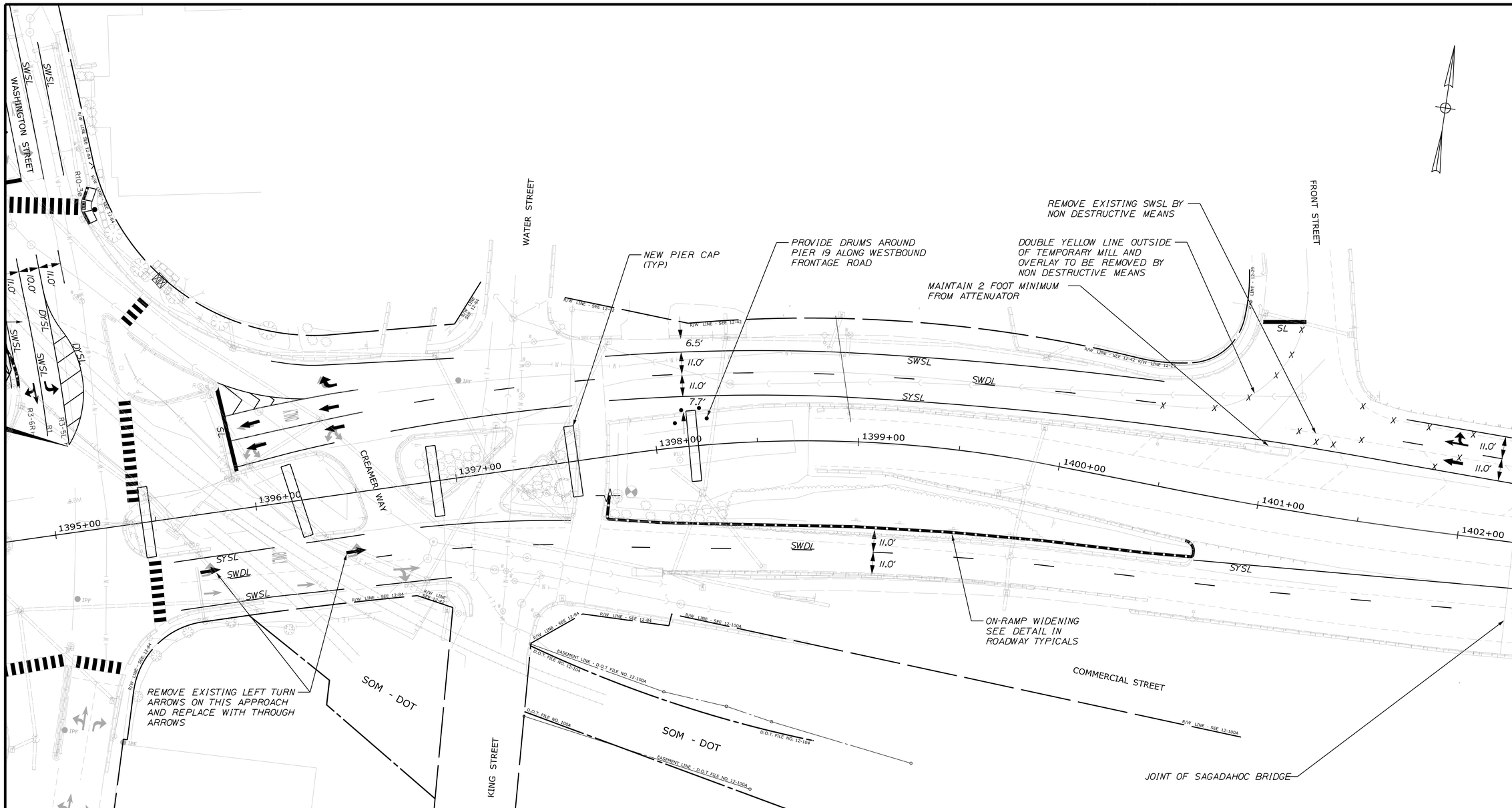

STRIPING LEGEND

SYMBOL	DESCRIPTION
SWSL	Single White Solid Line
SWDL	Single White Dashed Line
SYSL	Single Yellow Solid Line
DYSL	Double Yellow Solid Line
SL	Stop Line - 24" Wide
ONLY	ONLY Pavment Marking
↑	Straight Arrow Pavement Marking
↰	Left Arrow Pavement Marking
↱	Right Arrow Pavement Marking
↰↑	Left/U-Turn Arrow Pavement Marking
↰↑	Straight/Left Arrow Pavement Marking
↱↑	Straight/Right Arrow Pavement Marking

PLAN

PHASE II - TEMPORARY PAVEMENT MARKINGS

PLAN

25 0 25 50

Scale of Feet

STATE OF MAINE
DEPARTMENT OF TRANSPORTATION

NHPP - 1927(300)

WIN 19273.00

BRIDGE NO. 3838

BRIDGE PLANS

vhb

PROJ. MANAGER	J. KITTREDGE	BY	DATE
DESIGN-DETAILED	MLG	JAR	12/15
CHECKED-REVIEWED	MDS	SMH	12/15
DESIGN2-DETAILED2	...	...	...
DESIGN3-DETAILED3	...	...	...
REVISIONS 1	...	...	...
REVISIONS 2	...	...	...
REVISIONS 3	...	...	...
REVISIONS 4	...	...	...
FIELD CHANGES	...	...	...

WEST APPROACH BRIDGE
MAINE OWNED RR & CITY STREETS
BATH SAGADAHOC COUNTY

TEMPORARY STRIPING PLANS (4 OF 6)

SHEET NUMBER

67

OF 145

Filename: ...\MSTA\067_TempPaveMark_04.dgn Division: HIGHWAY Username: kwentworth Date:12/21/2015

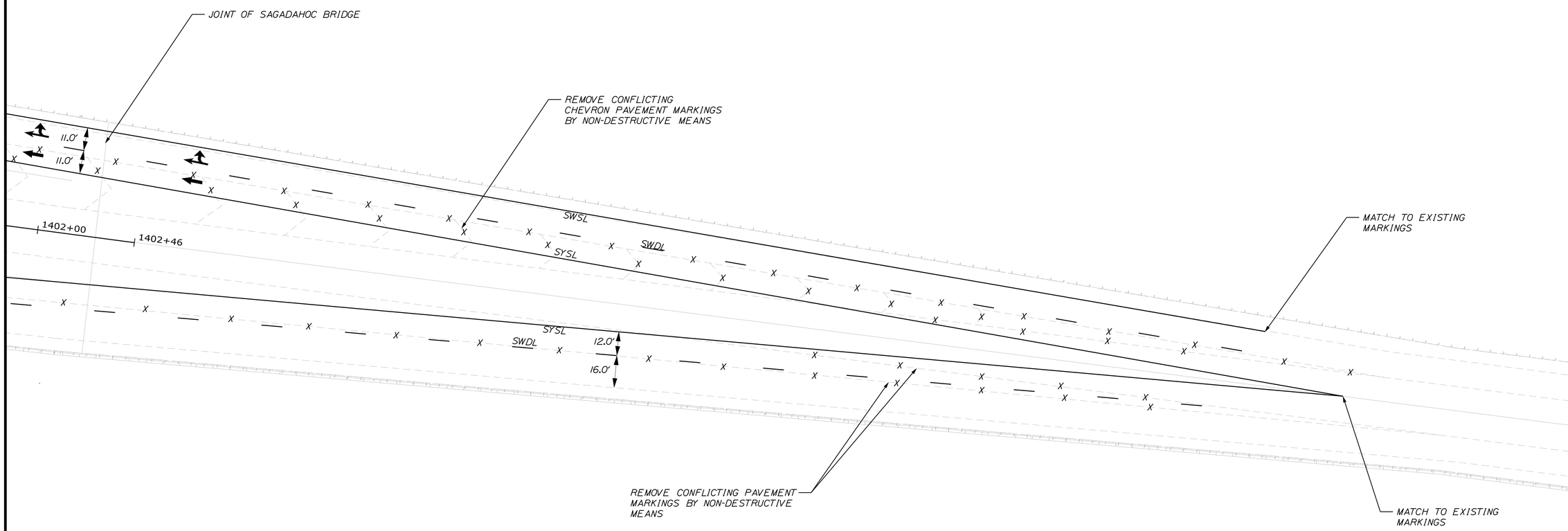

PLAN
PHASE II - TEMPORARY PAVEMENT MARKINGS

STRIPING LEGEND

SYMBOL	DESCRIPTION
SWSL	Single White Solid Line
SWDL	Single White Dashed Line
SYSL	Single Yellow Solid Line
DYSL	Double Yellow Solid Line
SL	Stop Line - 24" Wide
ONLY	ONLY Pavment Marking
↑	Straight Arrow Pavement Marking

SYMBOL	DESCRIPTION
	Left Arrow Pavement Marking
	Right Arrow Pavement Marking
	Left/U-Turn Arrow Pavement Marking
	Straight/Left Arrow Pavement Marking
	Straight/Right Arrow Pavement Marking

PLAN

25 0 25 50
Scale of Feet

STATE OF MAINE
DEPARTMENT OF TRANSPORTATION

NHPP - 1927(300)

WIN 19273.00

BRIDGE NO. 3838

BRIDGE PLANS

vhb

PROJ. MANAGER	J. KITTREDGE	BY	DATE
DESIGN-DETAILED	MLG	JAR	12/15
CHECKED-REVIEWED	MDS	SMH	12/15
DESIGN2-DETAILED2	---	---	---
DESIGN3-DETAILED3	---	---	---
REVISIONS: 1	---	---	---
REVISIONS: 2	---	---	---
REVISIONS: 3	---	---	---
REVISIONS: 4	---	---	---
FIELD CHANGES	---	---	---

WEST APPROACH BRIDGE
MAINE OWNED RR & CITY STREETS
BATH SAGADAHOC COUNTY

TEMPORARY STRIPING
PLANS (5 OF 6)

SHEET NUMBER
68
OF 145

Filename: ...\MSTA\068_TempPaveMark_05.dgn Division: HIGHWAY Username: kwentworth Date:12/21/2015

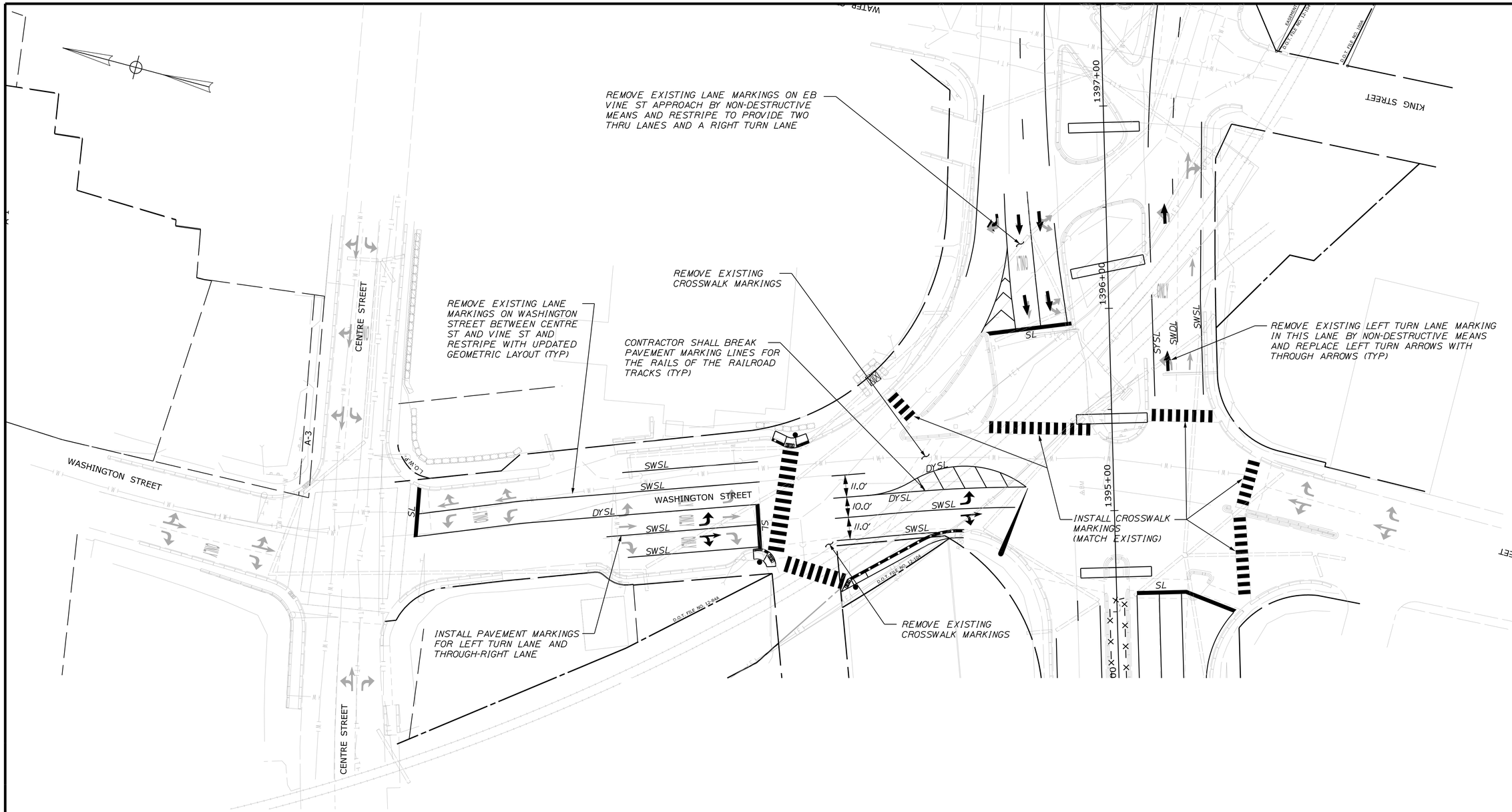

STRIPING LEGEND

SYMBOL	DESCRIPTION	SYMBOL	DESCRIPTION
SWSL	Single White Solid Line		Left Arrow Pavement Marking
SWDL	Single White Dashed Line		Right Arrow Pavement Marking
SYSL	Single Yellow Solid Line		Left/U-Turn Arrow Pavement Marking
DYSL	Double Yellow Solid Line		Straight/Left Arrow Pavement Marking
SL	Stop Line - 24" Wide		Straight/Right Arrow Pavement Marking
ONLY	ONLY Pavment Marking		
	Straight Arrow Pavement Marking		

PLAN

PHASE II - TEMPORARY PAVEMENT MARKINGS

PLAN

25 0 25 50

Scale of Feet

STATE OF MAINE
DEPARTMENT OF TRANSPORTATION

NHPP - 1927(300)

WIN 19273.00

BRIDGE NO. 3838

BRIDGE PLANS

vhb

PROJ. MANAGER	J. KITTREDGE	BY	DATE
DESIGN-DETAILED	MLG	JAR	12/15
CHECKED-REVIEWED	MDS	SMH	12/15
DESIGN2-DETAILED2	---	---	---
DESIGN3-DETAILED3	---	---	---
REVISIONS 1	---	---	---
REVISIONS 2	---	---	---
REVISIONS 3	---	---	---
REVISIONS 4	---	---	---
FIELD CHANGES	---	---	---

WEST APPROACH BRIDGE
MAINE OWNED RR & CITY STREETS
BATH SAGADAHOC COUNTY

TEMPORARY STRIPING
PLANS (6 OF 6)

SHEET NUMBER

69

OF 145

Filename: ...\MSTA\069_TempPaveMark_06.dgn Division: HIGHWAY Username: kwentworth Date:12/21/2015

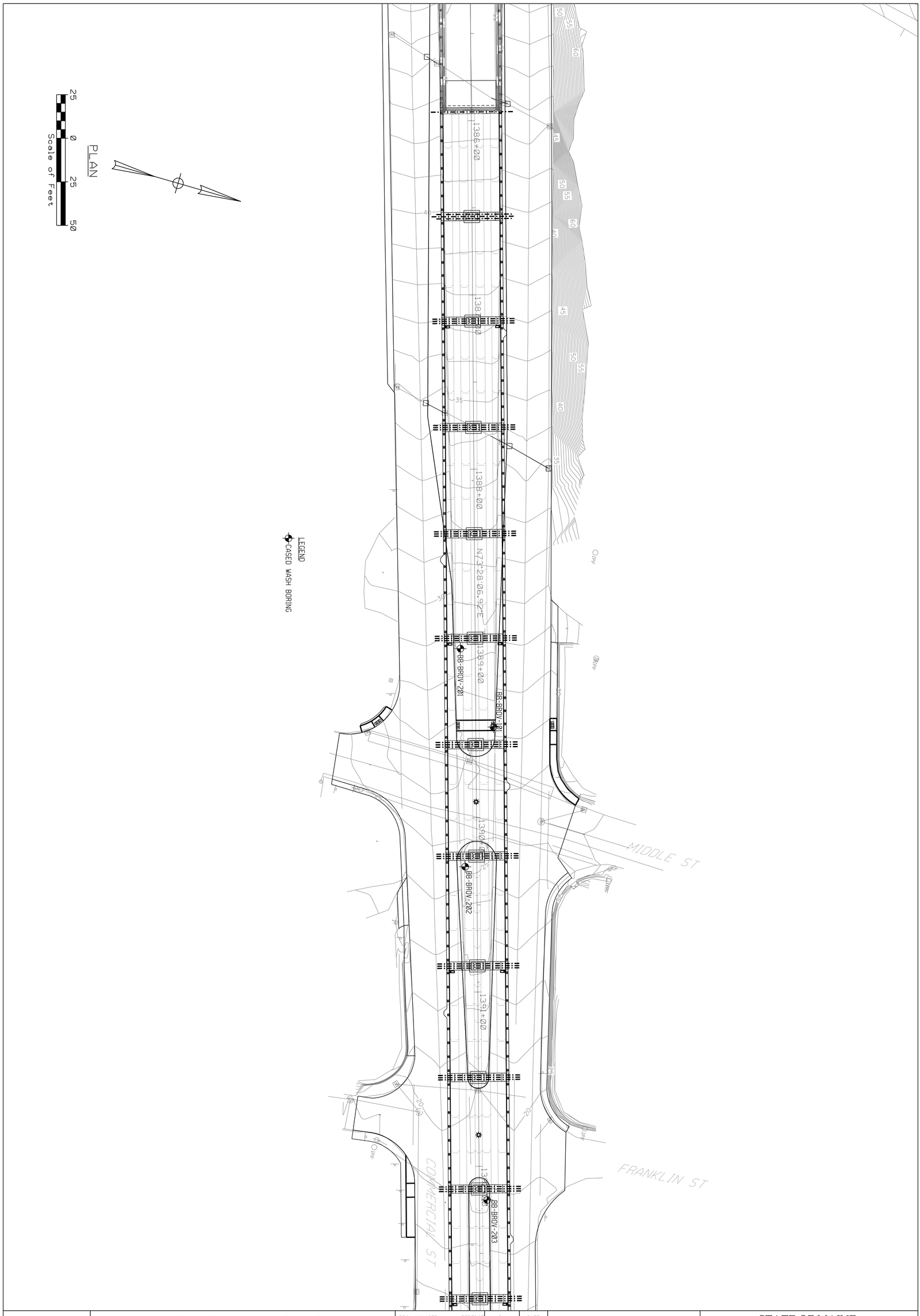

PROJ. MANAGER	J. KITTREDGE	BY	DATE
DESIGN-DETAILED	P. KOWALKE	PHK	10/15
CHECKED-REVIEWED	B. STEINERT	BCS	10/15
DESIGN2-DETAILED2	---	---	---
DESIGN3-DETAILED3	---	---	---
REVISIONS 1	---		---
REVISIONS 2	---		---
REVISIONS 3	---		---
REVISIONS 4	---		---
FIELD CHANGES	---		---

Bryan C. Steinert

SIGNATURE

12008

P.E. NUMBER

11/30/2015

DATE

STATE OF MAINE
BRYAN C. STEINERT
No. 12008
LICENSED
PROFESSIONAL ENGINEER

WEST APPROACH BRIDGE
MAINE OWNED RR & CITY STREETS
BATH SAGADAHOC COUNTY

BORING LOCATION PLAN

STATE OF MAINE
DEPARTMENT OF TRANSPORTATION

19273.00

WIN 19273.00

BRIDGE NO. 3838

BRIDGE PLANS

SHEET NUMBER 70 OF 145

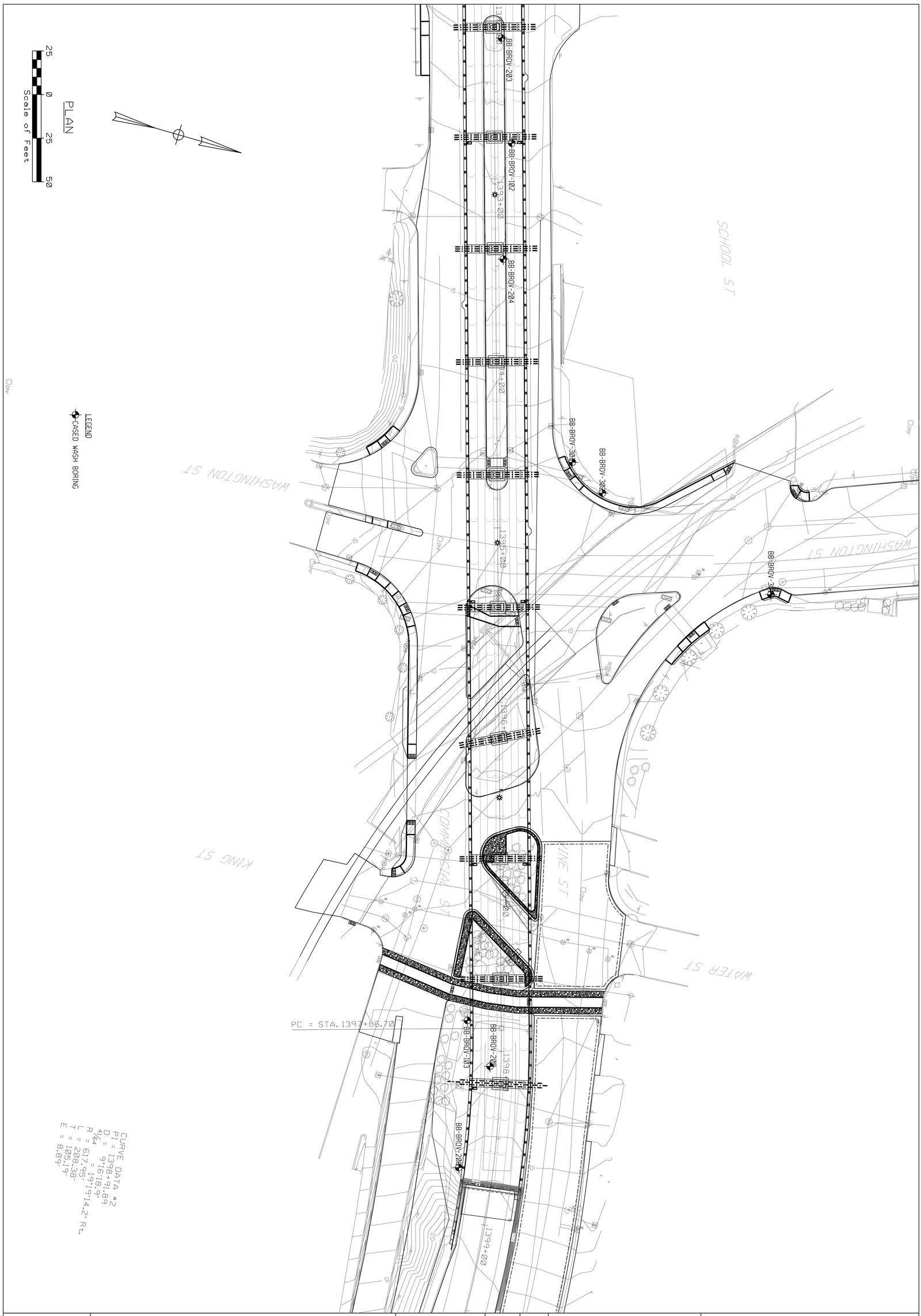

PROJ. MANAGER	J. KITTREDGE	BY	DATE
DESIGN-DETAILED	P. KOWALKE	PHK	10/15
CHECKED-REVIEWED	B. STEINERT	BCS	10/15
DESIGN2-DETAILED2	---	---	---
DESIGN3-DETAILED3	---	---	---
REVISIONS 1	---		---
REVISIONS 2	---		---
REVISIONS 3	---		---
REVISIONS 4	---		---
FIELD CHANGES	---		---

Bryan C. Steinert
SIGNATURE
12008
P.E. NUMBER
11/30/2015
DATE

STATE OF MAINE
BRYAN C. STEINERT
No. 12008
LICENSED
PROFESSIONAL ENGINEER

WEST APPROACH BRIDGE
MAINE OWNED RR & CITY STREETS
BATH SAGADAHOC COUNTY

BORING LOCATION PLAN

STATE OF MAINE
DEPARTMENT OF TRANSPORTATION

19273.00

WIN
19273.00

BRIDGE NO. 3838

BRIDGE PLANS

SHEET NUMBER
71
OF 145

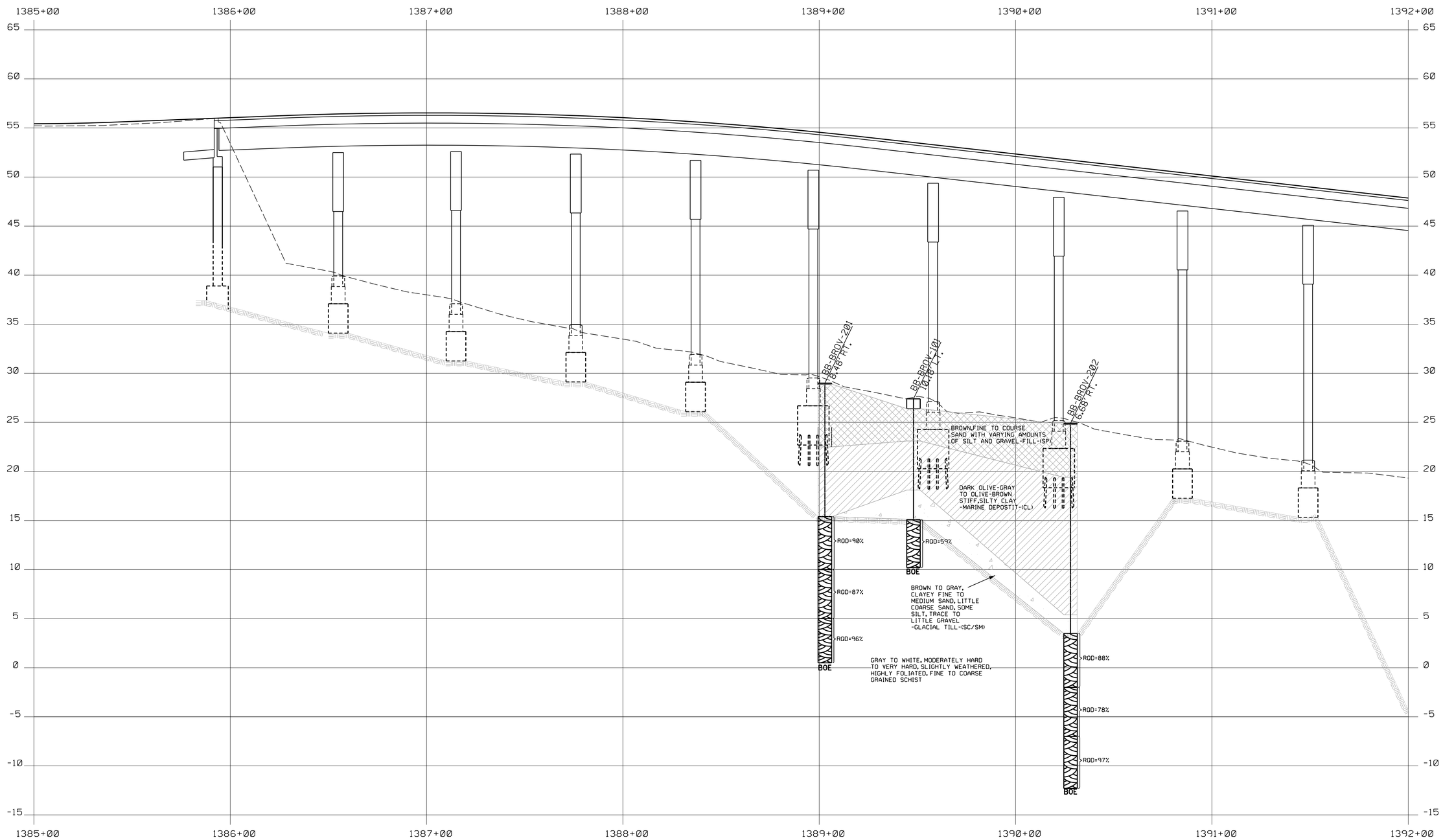

LEGEND

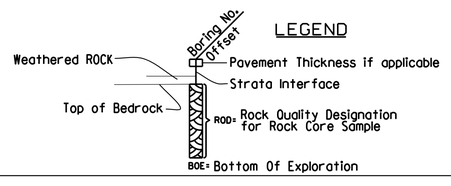

PROFILE

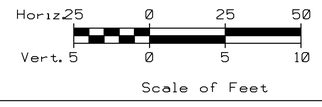

NOTES:
1. TOP OF BEDROCK SURFACE SHOWN BASED ON LINEAR INTERPOLATION BETWEEN HISTORIC EXPLORATIONS COMPLETED BY MAINEDOT AND RECENT EXPLORATIONS COMPLETED UNDER THE DIRECTON OF HALEY & ALDRICH AND KNOWN EXISTING FOUNDATION BEARING LEVELS.

STATE OF MAINE
DEPARTMENT OF TRANSPORTATION

19273.00

WIN 19273.00

BRIDGE NO. 3838

BRIDGE PLANS

STATE OF MAINE
BRYAN C. STEINERT
No. 12008
LICENSED PROFESSIONAL ENGINEER

PROJ. MANAGER	J. KITTREDGE	BY	DATE
DESIGN-DETAILED	P. KOWALKE	PHK	10/15
CHECKED-REVIEWED	B. STEINERT	BCS	10/15
DESIGN2-DETAILED2	...	...	...
DESIGN3-DETAILED3	...	...	...
REVISIONS 1	...	...	...
REVISIONS 2	...	...	...
REVISIONS 3	...	...	...
REVISIONS 4	...	...	...
FIELD CHANGES	...	...	...

SIGNATURE
12008
P.E. NUMBER
12/07/2015
DATE

WEST APPROACH BRIDGE
MAINE OWNED RR & CITY STREETS
BATH SAGADAHOC COUNTY

INTERPRETIVE SUBSURFACE PROFILE

SHEET NUMBER
72
OF 145

Filename: $file$ Division: $wkgroup$ Username: $user$ Date:$date$

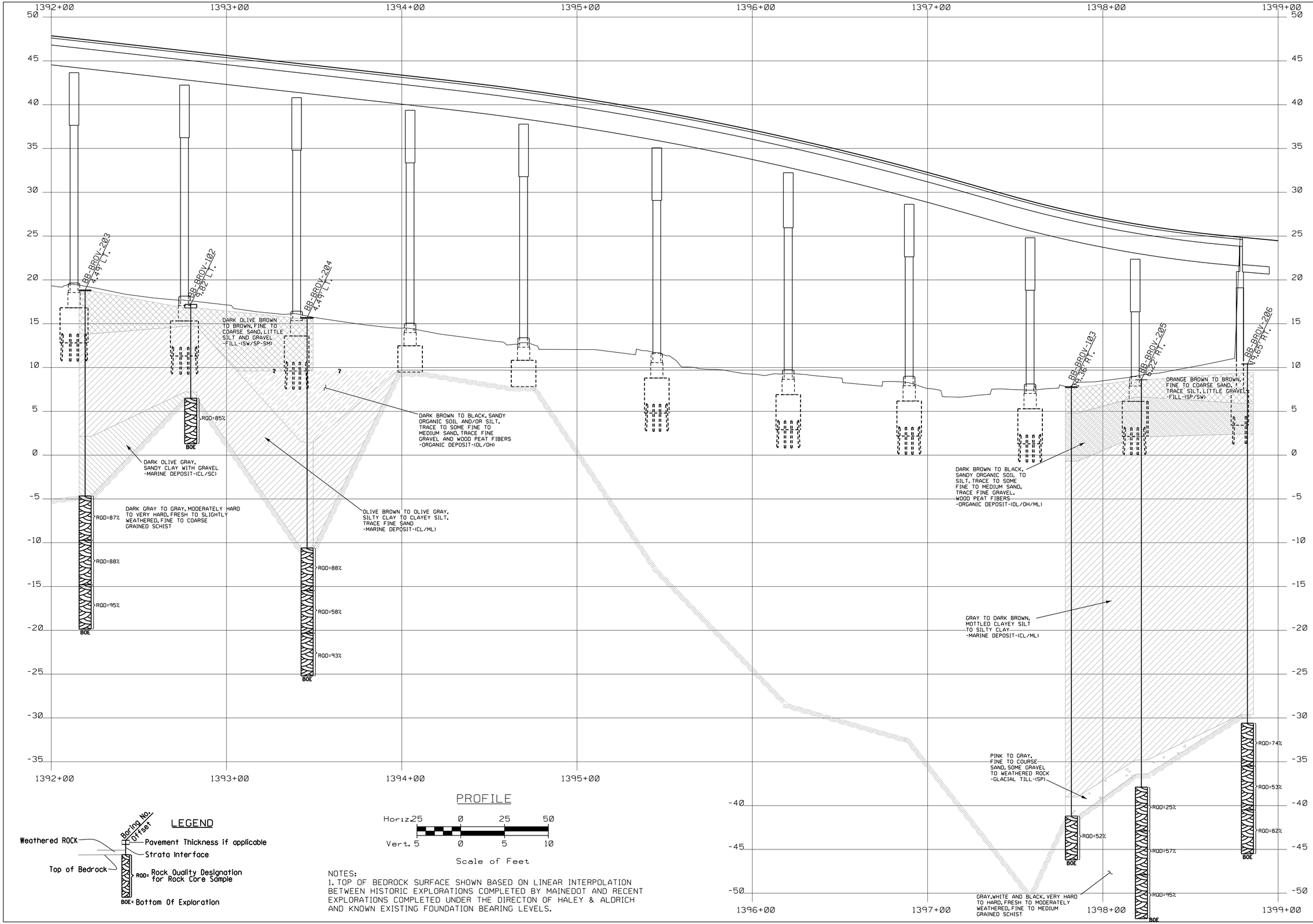

PROFILE

Horiz. 25 0 25 50
Vert. 5 0 5 10
Scale of Feet

LEGEND

Boring No.
Offset
Weathered ROCK
Pavement Thickness if applicable
Strata Interface
Top of Bedrock
RQD= Rock Quality Designation for Rock Core Sample
BOE= Bottom Of Exploration

NOTES:
1. TOP OF BEDROCK SURFACE SHOWN BASED ON LINEAR INTERPOLATION BETWEEN HISTORIC EXPLORATIONS COMPLETED BY MAINEDOT AND RECENT EXPLORATIONS COMPLETED UNDER THE DIRECTON OF HALEY & ALDRICH AND KNOWN EXISTING FOUNDATION BEARING LEVELS.

STATE OF MAINE
DEPARTMENT OF TRANSPORTATION

19273.00

WIN 19273.00

BRIDGE NO. 3838

BRIDGE PLANS

STATE OF MAINE
BRYAN C. STEINERT
No. 12008
LICENSED PROFESSIONAL ENGINEER

		BY	DATE
PROJ. MANAGER	J. KITTREDGE		
DESIGN-DETAILED	P. KOWALKE	PHK	10/15
CHECKED-REVIEWED	B. STEINERT	BCS	10/15
DESIGN2-DETAILED2	...	...	...
DESIGN3-DETAILED3	...	...	...
REVISIONS 1	...	...	...
REVISIONS 2	...	...	...
REVISIONS 3	...	...	...
REVISIONS 4	...	...	...
FIELD CHANGES	...	...	...

SIGNATURE
12008
P.E. NUMBER
12/07/2015
DATE

WEST APPROACH BRIDGE
MAINE OWNED RR & CITY STREETS
BATH SAGADAHOC COUNTY

INTERPRETIVE SUBSURFACE PROFILE

SHEET NUMBER
73
OF 145

Filename: $file$ Division: $wkgroup$ Username: $user$ Date:$date$

Date:$date$
Username: $user$
Division: $wkgroup$
Filename: $file$

Maine Department of Transportation
Soil/Rock Exploration Log
US CUSTOMARY UNITS

Project: Route 1 Viaduct Bridge Rehabilitation
Location: Bath, Maine
Boring No.: BB-BROV-201
PIN: 19273.00

Driller:	MaineDOT	**Elevation (ft.)**	29.0	**Auger ID/OD:**	--
Operator:	C. Giles	**Datum:**	NAVD 88	**Sampler:**	Split Spoon-1.375 in. ID
Logged By:	S. Shay	**Rig Type:**	CME 45C	**Hammer Wt./Fall:**	HW-300#/24 in. SS-140#/30
Date Start/Finish:	3-25-2014/3-25-2014	**Drilling Method:**	HW Drive	**Core Barrel:**	NQ-1.875 in.
Boring Location:	E1130962, N393283.3 (See Plan)	**Casing ID/OD:**	HW-4.0 in. ID	**Water Level*:**	6.0
Hammer Efficiency Factor:	0.867	**Hammer Type:**	Automatic☒ Hydraulic☐ Rope & Cathead☐		

Definitions:
D = Split Spoon Sample
MD = Unsuccessful Split Spoon Sample attempt
U = Thin Wall Tube Sample
MU = Unsuccessful Thin Wall Tube Sample attempt
V = Insitu Vane Shear Test
MV = Unsuccessful Insitu Vane Shear Test attempt
R = Rock Core Sample
SSA = Solid Stem Auger
HSA = Hollow Stem Auger
RC = Roller Cone
WOH = weight of 140lb. hammer
WOR = weight of rods
WO1P = Weight of one person
S~u = Insitu Field Vane Shear Strength (psf)
T~v = Pocket Torvane Shear Strength (psf)
q~p = Unconfined Compressive Strength (ksf)
N-uncorrected = Raw field SPT N-value
Hammer Efficiency Factor = Annual Calibration Value
N~6~0 = SPT N-uncorrected corrected for hammer efficiency
N~6~0 = (Hammer Efficiency Factor/60%)*N-uncorrected
S~u~(~l~a~b~) = Lab Vane Shear Strength (psf)
WC = water content, percent
LL = Liquid Limit
PL = Plastic Limit
PI = Plasticity Index
G = Grain Size Analysis
C = Consolidation Test

Sample No.	Pen./Rec. (in.)	Sample Depth (ft.)	Blows (/6 in.) Shear Strength (psf) or RQD (%)	N-uncorrected	N~6~0	Casing Blows	Elevation (ft.)
						SSA	28.90
1D	24/15	2.0 - 4.0	7/16/13/8	29	33		
							24.50
2D	24/9	5.0 - 7.0	4/6/7/27	13	15	HW	
							22.50
						40	
						68	
3D	24/13	9.0 - 11.0	23/13/10/10	23	27	35	
						41	
						33	
						23	
						75(7.0")	15.40
R1	60/60	14.0 - 19.0	RQD = 90%			NQ Core	
R2	60/60	19.0 - 24.0	RQD = 87%				
R3	54/54	24.0 - 28.5	RQD = 96%				
							0.50

Visual Description and Remarks

-BITUMINOUS CONCRETE- (0.1)

Olive-brown, medium dense, fine to medium SAND
-FILL-(SP) (4.5)

Dark olive-gray, wet, stiff, CLAY, some silt, trace sand, trace asphalt particles, appears reworked
-FILL-(CL) (6.5)

Olive-brown with weak mottling, medium dense, fine to coarse SAND, little silt
-MARINE DEPOSIT-(SM)

Brown, medium dense, silty fine to medium SAND, trace gravel
-MARINE DEPOSIT-(SM) (13.6)

Note: Attempted split spoon sample at 13.6 ft (several blows with no penetration/no recovery). Advanced borehole with roller bit to 14.0 ft prior to coring.
Top of bedrock at El. 15.4
Gray/white, fine to coarse grained SCHIST. Highly foliated. Very hard, slightly weathered. Joints dipping at low angles, close to moderate, rough, planar, fresh, tight.
Rock Mass Quality=Good
-CAPE ELIZABETH FORMATION-
Recovery=100%
R1 Core Times (min:sec): 14.0-15.0' (5:00); 15.0-16.0' (5:00); 16.0-17.0' (5:00); 17.0-18.0' (6:00); 18.0-19.0' (6:00)
Gray, fine grained SCHIST. Weak foliation. Very hard, slightly weathered. Primary joints dipping at low angles, moderate, rough, planar, fresh, tight. Secondary high angle joints, wide, rough, stepped, fresh, tight.
Rock Mass Quality=Good
-CAPE ELIZABETH FORMATION-
Recovery=100%
R2 Core Times (min:sec): 19.0-20.0' (4:00); 20.0-21.0' (4:00); 21.0-22.0' (4:00); 22.0-23.0' (4:00); 23.0-24.0' (5:00)
Gray/white, fine to coarse grained SCHIST. Highly foliated. Very hard, slightly weathered. Joints dipping at low angles, close to moderate, rough, planar, fresh, tight. Core barrel jammed at 28.5 ft with portion of R2 recovered. Minimal water loss R1-R3.
Rock Mass Quality=Excellent
-CAPE ELIZABETH FORMATION-
Recovery=100%
R3 Core Times (min:sec): 24.0-25.0' (4:00); 25.0-26.0' (6:00); 26.0-27.0' (4:00); 27.0-28.0' (5:00); 28.0-28.5' (6:00) (28.5)

Bottom of Exploration at 28.5 feet below ground surface.

Remarks:
1. As-drilled coordinates of test borings determined by MaineDOT and provided in NAD83 (96) ME2000 West Zone coordinate system.
2. Installed 2-in. diameter solid PVC pipe in completed borehole to facilitate non-destructive testing. PVC pipe was installed from the bottom of the borehole up to existing ground surface.

Stratification lines represent approximate boundaries between soil types; transitions may be gradual.
`* Water level readings have been made at times and under conditions stated. Groundwater fluctuations may occur due to conditions other than those present at the time measurements were made.

Page 1 of 1
Boring No.: BB-BROV-201

Maine Department of Transportation
Soil/Rock Exploration Log
US CUSTOMARY UNITS

Project: U.S. Route 1 Viaduct Bridge Replacement
Location: Bath, Maine
Boring No.: BB-BROV-101
PIN: 19273.00

Driller:	Maine Test Borings	**Elevation (ft.)**	27.4	**Auger ID/OD:**	--
Operator:	M. Porter	**Datum:**	NAVD 88	**Sampler:**	Split Spoon-1.375 in. ID
Logged By:	M. Snow	**Rig Type:**	Mobile Drill B-53 Truck	**Hammer Wt./Fall:**	NW-300#/24 in.-SS 140#/30
Date Start/Finish:	3-26-13/3-26-13	**Drilling Method:**	NW	**Core Barrel:**	NQ-1.875 in.
Boring Location:	E1131000, N393314 (See Plan)	**Casing ID/OD:**	NW-3.0 in. ID	**Water Level*:**	11.8
Hammer Efficiency Factor:	0.6	**Hammer Type:**	Automatic☐ Hydraulic☐ Rope & Cathead☒		

Definitions:
D = Split Spoon Sample
MD = Unsuccessful Split Spoon Sample attempt
U = Thin Wall Tube Sample
MU = Unsuccessful Thin Wall Tube Sample attempt
V = Insitu Vane Shear Test
MV = Unsuccessful Insitu Vane Shear Test attempt
R = Rock Core Sample
SSA = Solid Stem Auger
HSA = Hollow Stem Auger
RC = Roller Cone
WOH = weight of 140lb. hammer
WOR = weight of rods
WO1P = Weight of one person
S~u = Insitu Field Vane Shear Strength (psf)
T~v = Pocket Torvane Shear Strength (psf)
q~p = Unconfined Compressive Strength (ksf)
N-uncorrected = Raw field SPT N-value
Hammer Efficiency Factor = Annual Calibration Value
N~6~0 = SPT N-uncorrected corrected for hammer efficiency
N~6~0 = (Hammer Efficiency Factor/60%)*N-uncorrected
Su(lab) = Lab Vane Shear Strength (psf)
WC = water content, percent
LL = Liquid Limit
PL = Plastic Limit
PI = Plasticity Index
G = Grain Size Analysis
C = Consolidation Test

Sample No.	Pen./Rec. (in.)	Sample Depth (ft.)	Blows (/6 in.) Shear Strength (psf) or RQD (%)	N-uncorrected	N~6~0	Casing Blows	Elevation (ft.)	Laboratory Testing Results/ AASHTO and Unified Class.
						SSA	26.40	
1D	24/12	1.0 - 3.0	6/7/6/25	13	22			
							23.10	
2D	24/22	4.3 - 6.3	4/6/6/5	12	20			
							21.10	
3D	24/22	6.3 - 8.3	6/6/6/5	12	20			
4D / ~~V1A~~	24/22	8.3 - 10.3	1/2/3/3 ~~Su>1940 psf~~	5	8			
						4	18.10	
						13		
						42	15.40	
R1	59/59	12.3 - 17.2	RQD = 59%			26(2.0")	15.10	GTX#300397 qp=2,321 psi
							10.20	

Visual Description and Remarks

-BITUMINOUS CONCRETE- (1.0)

Brown, dry, medium dense, medium to fine SAND, little coarse sand, trace silt, little gravel
-FILL-(SW)
Note: Probable cobble from approximately 3.0 to 4.3 ft. (4.3)

Brown-gray, dry to moist, stiff mottled SILT, trace fine sand
-MARINE DEPOSIT-(ML) (6.3)

Brown-gray, moist, stiff, silty CLAY
-MARINE DEPOSIT-(CL)

Brown, moist, medium stiff, silty CLAY with sand layers
55x110 mm vane raw torque reading:
V1A: >500 in/lbs (9.3)

Brown, clayey, medium to fine SAND, little coarse sand, little gravel
-GLACIAL TILL-(SC/SM) (12.0)

-WEATHERED BEDROCK- (12.3)

Top of Bedrock at El. 15.1
Gray, medium to fine-grained chlorite, biotite, SCHIST with frequent quartz and pegmatitic intrusions. Moderately hard, slightly weathered with occasional moderately weathered joints, low angle to moderately dipping, one steep secondary joint, very close to close, tight to open
Rock Mass Quality=Fair
-CAPE ELIZABETH FORMATION-
Recovery=100%
R1 Core Times (min:sec): 12.3-13.3' (1:45); 13.3-14.3' (2:33); 14.3-15.3' (1:53); 15.3-16.3' (2:26); 16.3-17.2' (3:04) (17.2)

Bottom of Exploration at 17.2 feet below ground surface.

Remarks:
1. As-drilled coordinates of test borings determined by MaineDOT and provided in NAD83 (96) ME2000 West Zone coordinate system.
2. Hammer consisted of rope and cathead and safety hammer.
3. qp=unconfined compressive strength; psf=pounds per square foot; psi=pounds per square inch. 1. As-drilled coordinates of test borings determined by MaineDOT and provided in NAD83 (96) ME2000 West Zone coordinate system.
2. Hammer consisted of rope and cathead and safety hammer.

Stratification lines represent approximate boundaries between soil types; transitions may be gradual.
`* Water level readings have been made at times and under conditions stated. Groundwater fluctuations may occur due to conditions other than those present at the time measurements were made.

Page 1 of 1
Boring No.: BB-BROV-101

Maine Department of Transportation
Soil/Rock Exploration Log
US CUSTOMARY UNITS

Project: Route 1 Viaduct Bridge Rehabilitation
Location: Bath, Maine
Boring No.: BB-BROV-202
PIN: 19273.00

Driller:	MaineDOT	**Elevation (ft.)**	24.9	**Auger ID/OD:**	--
Operator:	C. Giles	**Datum:**	NAVD 88	**Sampler:**	Split Spoon-1.375 in. ID
Logged By:	S. Shay	**Rig Type:**	CME 45C	**Hammer Wt./Fall:**	HW-300#/24 in. SS-140#/30
Date Start/Finish:	3-26-2014/3-26-2014	**Drilling Method:**	HW Drive	**Core Barrel:**	NQ-1.875 in.
Boring Location:	E1131082, N393320.6 (See Plan)	**Casing ID/OD:**	HW-4.0 in. ID	**Water Level*:**	5.0
Hammer Efficiency Factor:	0.867	**Hammer Type:**	Automatic☒ Hydraulic☐ Rope & Cathead☐		

Definitions:
D = Split Spoon Sample
MD = Unsuccessful Split Spoon Sample attempt
U = Thin Wall Tube Sample
MU = Unsuccessful Thin Wall Tube Sample attempt
V = Insitu Vane Shear Test
MV = Unsuccessful Insitu Vane Shear Test attempt
R = Rock Core Sample
SSA = Solid Stem Auger
HSA = Hollow Stem Auger
RC = Roller Cone
WOH = weight of 140lb. hammer
WOR = weight of rods
WO1P = Weight of one person
S~u = Insitu Field Vane Shear Strength (psf)
T~v = Pocket Torvane Shear Strength (psf)
q~p = Unconfined Compressive Strength (ksf)
N-uncorrected = Raw field SPT N-value
Hammer Efficiency Factor = Annual Calibration Value
N~6~0 = SPT N-uncorrected corrected for hammer efficiency
N~6~0 = (Hammer Efficiency Factor/60%)*N-uncorrected
S~u~(~l~a~b~) = Lab Vane Shear Strength (psf)
WC = water content, percent
LL = Liquid Limit
PL = Plastic Limit
PI = Plasticity Index
G = Grain Size Analysis
C = Consolidation Test

Sample No.	Pen./Rec. (in.)	Sample Depth (ft.)	Blows (/6 in.) Shear Strength (psf) or RQD (%)	N-uncorrected	N~6~0	Casing Blows	Elevation (ft.)
						SSA	24.80
1D	24/3	2.0 - 4.0	2/3/2/2	5	6		
2D	24/18	5.0 - 7.0	1/4/7/8	11	13	HW	19.40
						40	
						55	
						53	
3D	24/24	9.0 - 11.0	3/4/4/4	8	9	37	
						55	
						63	
						71	12.40
						70	
4D	24/24	14.0 - 16.0	WOH(24.0")			53	
						43	
						46	
						47	
						47	
5D	24/18	19.0 - 21.0	1/13/5/5	18	21	39	5.40
						85	
R1	60/60	21.9 - 26.9	RQD = 88%			50(5.0")	3.50
						NQ Core	
R2	60/60	26.9 - 31.9	RQD = 78%				
						NQ Core	
R3	60/60	31.9 - 36.9	RQD = 97%				
							-12.30

Visual Description and Remarks

-BITUMINOUS CONCRETE- (0.1)

Brown, loose, fine to coarse SAND
-FILL-(SP)

Note: Stratum change based on change in effort to drive split spoon. (5.5)

Dark olive-gray to olive-brown, stiff, silty CLAY
-MARINE DEPOSIT-(CL)

Olive-brown, medium stiff, silty CLAY
-MARINE DEPOSIT-(CL) (12.5)

Olive-brown grading to olive-gray, very soft, silty CLAY
-MARINE DEPOSIT-(CL)

Olive-gray, very soft, silty CLAY
-MARINE DEPOSIT-(CL) (19.5)

Gray, medium dense, clayey fine to medium SAND, some silt, trace gravel
-GLACIOFLUVIAL DEPOSIT-(SC) (21.4)

Top of Bedrock at El. 3.5
Note: Advanced borehole with roller bit to 21.9 ft prior to coring.
Gray black/white, fine to coarse grained micaceous SCHIST. Highly foliated. Very hard to hard, slightly weathered. Joints at high angles, moderate, rough, stepped, fresh, tight. Occasional quartz/pegmatite intrusions.
Rock Mass Quality=Good
-CAPE ELIZABETH FORMATION-
Recovery=100%
R1 Core Times (min:sec): 21.9-22.9' (4:00); 22.9-23.9' (3:00); 23.9-24.9' (3:00); 24.9-25.9' (3:00); 25.9-26.9' (3:00)
Gray black/white, fine to coarse grained micaceous SCHIST. Highly foliated. Very hard to hard, slightly weathered. Joints at low angles, moderate, rough, stepped, fresh, tight, close with extremely fractured zone from approximately 29.0 to 30.0 ft.
Rock Mass Quality=Good
-CAPE ELIZABETH FORMATION-
Recovery=100%
R2 Core Times (min:sec): 26.9-27.9' (2:00); 27.9-28.9' (3:00); 28.9-29.9' (2:00); 29.9-30.9' (3:00); 30.9-31.9' (3:00)
Gray/black/white, fine to coarse grained micaceous SCHIST. Highly foliated. Very hard, fresh. Joints at low angle angles, moderate, rough, stepped, fresh surfaces, tight.
Rock Mass Quality=Excellent
-CAPE ELIZABETH FORMATION-
Recovery=100%
R3 Core Times (min:sec): 31.9-32.9' (3:00); 32.9-33.9' (4:00); 33.9-34.9' (4:00); 34.9-35.9' (3:00); 35.9-36.9' (4:00) (37.2)

Bottom of Exploration at 37.2 feet below ground surface.

Remarks:
1. As-drilled coordinates of test borings determined by MaineDOT and provided in NAD83 (96) ME2000 West Zone coordinate system.
2. Installed 2-in. diameter solid PVC pipe in completed borehole to facilitate non-destructive testing. PVC pipe was installed from the bottom of the borehole up to existing ground surface.

Stratification lines represent approximate boundaries between soil types; transitions may be gradual.
`* Water level readings have been made at times and under conditions stated. Groundwater fluctuations may occur due to conditions other than those present at the time measurements were made.

Page 1 of 1
Boring No.: BB-BROV-202

Maine Department of Transportation
Soil/Rock Exploration Log
US CUSTOMARY UNITS

Project: Route 1 Viaduct Bridge Rehabilitation
Location: Bath, Maine
Boring No.: BB-BROV-203
PIN: 19273.00

Driller:	MaineDOT	**Elevation (ft.)**	19.2	**Auger ID/OD:**	--
Operator:	C. Giles	**Datum:**	NAVD 88	**Sampler:**	Split Spoon-1.375 in. ID
Logged By:	S. Shay	**Rig Type:**	CME 45C	**Hammer Wt./Fall:**	HW-300#/24 in. SS-140#/30
Date Start/Finish:	3-27-2014/3-27-2014	**Drilling Method:**	HW Drive	**Core Barrel:**	NQ-1.875 in.
Boring Location:	E1131262, N393385.7 (See Plan)	**Casing ID/OD:**	HW-4.0 in. ID	**Water Level*:**	5.0
Hammer Efficiency Factor:	0.867	**Hammer Type:**	Automatic☒ Hydraulic☐ Rope & Cathead☐		

Definitions:
D = Split Spoon Sample
MD = Unsuccessful Split Spoon Sample attempt
U = Thin Wall Tube Sample
MU = Unsuccessful Thin Wall Tube Sample attempt
V = Insitu Vane Shear Test
MV = Unsuccessful Insitu Vane Shear Test attempt
R = Rock Core Sample
SSA = Solid Stem Auger
HSA = Hollow Stem Auger
RC = Roller Cone
WOH = weight of 140lb. hammer
WOR = weight of rods
WO1P = Weight of one person
S~u = Insitu Field Vane Shear Strength (psf)
T~v = Pocket Torvane Shear Strength (psf)
q~p = Unconfined Compressive Strength (ksf)
N-uncorrected = Raw field SPT N-value
Hammer Efficiency Factor = Annual Calibration Value
N~6~0 = SPT N-uncorrected corrected for hammer efficiency
N~6~0 = (Hammer Efficiency Factor/60%)*N-uncorrected
S~u~(~l~a~b~) = Lab Vane Shear Strength (psf)
WC = water content, percent
LL = Liquid Limit
PL = Plastic Limit
PI = Plasticity Index
G = Grain Size Analysis
C = Consolidation Test

Sample No.	Pen./Rec. (in.)	Sample Depth (ft.)	Blows (/6 in.) Shear Strength (psf) or RQD (%)	N-uncorrected	N~6~0	Casing Blows	Elevation (ft.)
						SSA	19.10
1D	24/14	2.0 - 4.0	2/8/12/22	20	23		
						7	14.20
2D	24/21	5.0 - 7.0	9/10/13/13	23	27	23	
						40	
						55	
						69	
3D	24/24	9.0 - 11.0	5/4/5/7	9	10	58	
						64	
						70	
						85	6.70
						84	
4D	24/24	14.0 - 16.0	WOH(24.0")			51	
						57	
						77	2.50
						81	
						73	
5D	24/4	19.0 - 21.0	7/3/3/3	6	7	33	
						37	
						53	
						200	
R1	60/60	23.7 - 28.7	RQD = 87%			100(6.0")	-4.30
						NQ Core	
R2	60/60	28.7 - 33.7	RQD = 88%				
						NQ Core	
R3	60/60	33.7 - 38.7	RQD = 95%				
							-19.50

Visual Description and Remarks

-BITUMINOUS CONCRETE- (0.1)

Dark olive-brown, medium dense, fine to coarse SAND, little silt
-FILL-(SP-SM) (5.0)

Olive-brown, very stiff, CLAY, little silt
-MARINE DEPOSIT-(CL)

Olive-brown, stiff, CLAY, little silt
-MARINE DEPOSIT-(CL) (12.5)

Olive-gray, very soft, silty CLAY
-MARINE DEPOSIT-(CL) (16.7)

Note: Prepare borehole for vane shear test at 17.0 ft, advance roller bit to 16.0 ft, unable to push vane beyond 16.7 on possible sand or gravel. Aborted vane shear test.

Dark olive-gray, medium stiff, sandy CLAY, little gravel
-MARINE DEPOSIT-(CL/SC)

Note: Possible highly weathered rock from 23.0 to 23.5 ft (unable to drive casing beyond 23.5 ft). (23.5)

Top of Bedrock at El. -4.3
Note: Advance borehole to 23.7 ft with roller bit prior to coring.
Gray, coarse grained quartz/pegmatite SCHIST. Extremely foliated. Very hard, slightly weathered. Joints dipping at moderate angles, close, rough, planar, slightly weathered at micaceous zones, open.
Rock Mass Quality=Good
-CAPE ELIZABETH FORMATION-
Recovery=100%
R1 Core Times: not recorded
Dark gray, fine to coarse grained SCHIST. Extremely foliated, pegmatite instrusions with occasional schist xenoliths. Very hard, slightly weathered. Primary high angle joints, moderate, rough, stepped, slightly weathered, tight, occasional moderately dipping secondary joints present.
-Rock Mass Quality=Good
-CAPE ELIZABETH FORMATION-
Recovery=100%
R2 Core Times: not recorded
White/gray, fine to coarse grained quartzite SCHIST. Foliation trending at moderate angles. Very hard, fresh. Joints dipping at moderate angles, wide except for two visible close, smooth, planar, micaceous joint surfaces, tight, minimal water loss R1-R3.
Rock Mass Quality=Excellent
-CAPE ELIZABETH FORMATION-
Recovery=100%
R3 Core Times: not recorded (38.7)

Bottom of Exploration at 38.7 feet below ground surface.

Remarks:
1. As-drilled coordinates of test borings determined by MaineDOT and provided in NAD83 (96) ME2000 West Zone coordinate system.
2. Installed 2-in. diameter solid PVC pipe in completed borehole to facilitate non-destructive testing. PVC pipe was installed from the bottom of the borehole up to existing ground surface.

Stratification lines represent approximate boundaries between soil types; transitions may be gradual.
`* Water level readings have been made at times and under conditions stated. Groundwater fluctuations may occur due to conditions other than those present at the time measurements were made.

Page 1 of 1
Boring No.: BB-BROV-203

Maine Department of Transportation
Soil/Rock Exploration Log
US CUSTOMARY UNITS

Project: U.S. Route 1 Viaduct Bridge Replacement
Location: Bath, Maine
Boring No.: BB-BROV-102
PIN: 19273.00

Driller:	Maine Test Borings	**Elevation (ft.)**	17.2	**Auger ID/OD:**	--
Operator:	M. Porter	**Datum:**	NAVD 88	**Sampler:**	Split Spoon-1.375 in. ID
Logged By:	M. Snow	**Rig Type:**	Mobile Drill B-53 Truck	**Hammer Wt./Fall:**	HW-300#/24 in.-SS 140#/30
Date Start/Finish:	3-26-13/3-26-13	**Drilling Method:**	HW	**Core Barrel:**	NQ-1.875 in.
Boring Location:	E1131318, N393408 (See Plan)	**Casing ID/OD:**	HW-4.0 in. ID	**Water Level*:**	14.2
Hammer Efficiency Factor:	0.6	**Hammer Type:**	Automatic☐ Hydraulic☐ Rope & Cathead☒		

Definitions:
D = Split Spoon Sample
MD = Unsuccessful Split Spoon Sample attempt
U = Thin Wall Tube Sample
MU = Unsuccessful Thin Wall Tube Sample attempt
V = Insitu Vane Shear Test
MV = Unsuccessful Insitu Vane Shear Test attempt
R = Rock Core Sample
SSA = Solid Stem Auger
HSA = Hollow Stem Auger
RC = Roller Cone
WOH = weight of 140lb. hammer
WOR = weight of rods
WO1P = Weight of one person
S~u = Insitu Field Vane Shear Strength (psf)
T~v = Pocket Torvane Shear Strength (psf)
q~p = Unconfined Compressive Strength (ksf)
N-uncorrected = Raw field SPT N-value
Hammer Efficiency Factor = Annual Calibration Value
N~6~0 = SPT N-uncorrected corrected for hammer efficiency
N~6~0 = (Hammer Efficiency Factor/60%)*N-uncorrected
S~u~(~l~a~b~) = Lab Vane Shear Strength (psf)
WC = water content, percent
LL = Liquid Limit
PL = Plastic Limit
PI = Plasticity Index
G = Grain Size Analysis
C = Consolidation Test

Sample No.	Pen./Rec. (in.)	Sample Depth (ft.)	Blows (/6 in.) Shear Strength (psf) or RQD (%)	N-uncorrected	N~6~0	Casing Blows	Elevation (ft.)	Laboratory Testing Results/ AASHTO and Unified Class.
1D	24/6	0.5 - 2.5	18/16/7/6	23	38	SSA	16.80	
2D	24/14	2.5 - 4.5	5/10/11/16	21	35		14.70	
3D	24/22	4.5 - 6.5	9/10/10/10	20	33			
4D	24/20	6.5 - 8.5	13/14/20/21	34	57			
5D	20/2	8.5 - 10.2	9/16/28/40(3.0")	44	73			
							7.20	
R1	62/62	10.7 - 15.9	RQD = 85%				6.50	GTX#300397 qp=1,522 psi
							1.30	

Visual Description and Remarks

-BITUMINOUS CONCRETE- (0.4)

Brown, dry, medium dense, fine to medium SAND, some coarse sand, trace silt, little gravel
-FILL-(SW) (2.5)

Brown-gray, dry, very stiff, mottled clayey SILT, trace fine sand
-MARINE DEPOSIT-(ML)

Brown-gray, dry, very stiff, mottled clayey SILT, trace fine sand
-MARINE DEPOSIT-(ML)

Brown-gray, dry to moist, hard, clayey SILT, trace fine sand
-MARINE DEPOSIT-(ML)

Note: Recovered 2-in. brown, dry, dense, weathered rock. (10.0)

-WEATHERED BEDROCK- (10.7)

Top of Bedrock at El. 6.5
Tan-white-gray, medium to fine-grained GNEISS. Moderately hard, slightly weathered, joints low angle to moderately dipping, few steep secondary joints, very close to moderately close, tight to open, occasional silt coatings on joint surfaces.
Rock Mass Quality=Good
-CAPE ELIZABETH FORMATION-
Recovery=100%
R1 Core Times (min:sec): 10.7-11.7' (2:08); 11.7-12.7' (1:08); 12.7-13.7' (1:19); 13.7-14.7' (1:31); 14.7-15.9' (1:00) (15.9)

Bottom of Exploration at 15.9 feet below ground surface.

Remarks:
1. As-drilled coordinates of test borings determined by MaineDOT and provided in NAD83 (96) ME2000 West Zone coordinate system.
2. Hammer consisted of rope and cathead and safety hammer.
3. qp=unconfined compressive strength; psf=pounds per square foot; psi=pounds per square inch.

Stratification lines represent approximate boundaries between soil types; transitions may be gradual.
`* Water level readings have been made at times and under conditions stated. Groundwater fluctuations may occur due to conditions other than those present at the time measurements were made.

Page 1 of 1
Boring No.: BB-BROV-102

STATE OF MAINE
DEPARTMENT OF TRANSPORTATION

19273.00

WIN
19273.00

BRIDGE PLANS

BRIDGE NO. 3838

STATE OF MAINE
BRYAN C. STEINERT
No. 12008
LICENSED PROFESSIONAL ENGINEER

SIGNATURE
12008
P.E. NUMBER
11/30/2015
DATE

		BY	DATE
PROJ. MANAGER	J. KITTREDGE		
DESIGN-DETAILED	P. KOWALKE	PHK	10/15
CHECKED-REVIEWED	B. STEINERT	BCS	10/15
DESIGN2-DETAILED2	---	---	---
DESIGN3-DETAILED3	---	---	---
REVISIONS 1	---		---
REVISIONS 2	---		---
REVISIONS 3	---		---
REVISIONS 4	---		---
FIELD CHANGES	---		---

WEST APPROACH BRIDGE
MAINE OWNED RR & CITY STREETS
BATH SAGADAHOC COUNTY

BORING LOGS

SHEET NUMBER
74
OF 145

Maine Department of Transportation
Soil/Rock Exploration Log
US CUSTOMARY UNITS

Project: Route 1 Viaduct Bridge Rehabilitation
Location: Bath, Maine
Boring No.: BB-BROV-204
PIN: 19273.00

Driller:	MaineDOT	Elevation (ft.)	15.7
Operator:	C. Giles	Datum:	NAVD 88
Logged By:	S. Shay	Rig Type:	CME 45C
Date Start/Finish:	3-26-2014/4-01-2014	Drilling Method:	HW Drive
Boring Location:	E1131383, N393421.8 (See Plan)	Casing ID/OD:	ESA-2.25 in. ID; HW-4.0 in. ID
Hammer Efficiency Factor:	0.867	Hammer Type:	Automatic☒ Hydraulic☐ Rope & Cathead☐
Auger ID/OD:	--	Sampler:	Split Spoon-1.375 in. ID
Hammer Wt./Fall:	HW-3000/24 in. SS-1400/30	Core Barrel:	NQ-1.875 in.
Water Level *:	7.3		

Definitions:
D = Split Spoon Sample
MD = Unsuccessful Split Spoon Sample attempt
U = Thin Wall Tube Sample
MU = Unsuccessful Thin Wall Tube Sample attempt
V = Insitu Vane Shear Test
MV = Unsuccessful Insitu Vane Shear Test attempt
R = Rock Core Sample
SSA = Solid Stem Auger
HSA = Hollow Stem Auger
RC = Roller Cone
WOH = weight of 140lb. hammer
WOR = weight of rods
WO1P = Weight of one person
Su = Insitu Field Vane Shear Strength (psf)
Tv = Pocket Torvane Shear Strength (psf)
qp = Unconfined Compressive Strength (ksf)
N-uncorrected = Raw field SPT N-value
Hammer Efficiency Factor = Annual Calibration Value
N60 = SPT N-uncorrected corrected for hammer efficiency
N60 = (Hammer Efficiency Factor/60%)*N-uncorrected
Su(lab) = Lab Vane Shear Strength (psf)
WC = water content, percent
LL = Liquid Limit
PL = Plastic Limit
PI = Plasticity Index
G = Grain Size Analysis
C = Consolidation Test

Sample Information

Depth (ft.)	Sample No.	Pen./Rec. (in.)	Sample Depth (ft.)	Blows (/6 in.) Shear Strength (psf) or RQD (%)	N-uncorrected	N-60	Casing Blows	Elevation (ft.)	Graphic Log	Visual Description and Remarks	Laboratory Testing Results/ AASHTO and Unified Class.
0							SSA	15.66		-BITUMINOUS CONCRETE- (0.1)	
	1D	24/15	2.0 - 4.0	2/4/4/4	8	9				Brown, medium dense, fine to coarse SAND -FILL=(SP)	
5	2D	24/6	5.0 - 7.0	13/14/5/2	19	22	6	9.70		Brown, medium dense, fine to coarse SAND, coarse gravel piece lodged in spoon tip -FILL=(SP) (6.0)	
							27			Note: Stratum change estimated on change in effort to drive split spoon.	
							25				
							18			**Note: Casing dropped 6 in. during load in soft material. Very soft ORGANIC SOIL with up to 25% peat fibers, trace rubber piece, trace fine sand, no organic odor, possibly disturbed -FILL=(OL/OH)	
10	3D	24/14	9.5 - 11.5	3/2/1/1	3	3	W(6.0)*				
							15			Disturbed gravelly ORGANIC SOIL -FILL=(OL/OH)	
							74				
	4D	24/14	12.0 - 14.0	47/25/27/33	52	60	16	2.70		Wood, possible pile or buried log -FILL= (13.0)	
							98				
							18*	1.50			
15	5D	24/9	15.0 - 17.0	7/14/15/9	29	33	27*			Olive gray, very stiff, silty CLAY, trace sand, trace gravel -MARINE DEPOSIT=(CL) (14.2)	
							32*				
							38*			Note: Advanced borehole with roller bit ahead of casing; * = casing blows in disturbed soil.	
							34*				
							36*				
20	6D	24/24	20.0 - 22.0	WOH(12.0)/3/2	4	5	21*			Olive-gray and olive-brown, soft, interbedded silty CLAY and sandy CLAY, trace fine gravel -MARINE DEPOSIT=(CL/SC)	
							32*				
							43*				
							60*			Note: Advance roller bit ahead of casing to 24.5 ft. Possible cobble at 24.0 ft.	
25	7D	18/12	24.5 - 26.0	6/4/100	104	120	84			Olive-gray, loose, clayey SAND -MARINE DEPOSIT=(SC)	
							125	-9.80			
	R1	60/56	26.3 - 31.3	RQD = 88%			NQ Core	-10.60		Top of Bedrock at EL -9.8 Gray/black, very dense, highly weathered micaceous ROCK (26.3)	
30							NQ Core			Dark gray, fine to medium grained, micaceous SCHIST. Foliation generally trending at low angles with most drill breaks along foliation planes. Hard to moderately hard, slightly weathered. Joints dipping at low angles, moderate to wide, occasionally slickensided (bottom 1 ft of core), planar, fresh, tight. Rock Mass Quality=Good -CAPE ELIZABETH FORMATION- Recovery=93% R2 Core Times (min:sec): 26.3-27.3' (5:00); 27.3-28.3' (6:00); 28.3-29.3' (6:00); 29.3-30.3' (5:00); 30.3-31.3' (5:00)	
	R2	55/54	31.3 - 35.9	RQD = 58%							
35	R3	60/56	35.9 - 40.9	RQD = 93%						Dark gray, fine to medium grained, micaceous SCHIST. Foliation generally trending at low angles. Hard to moderately hard, slightly weathered. Joints dipping at low angles, moderate to wide, planar, fresh, tight. Middle 1.5 ft of core run moderately weathered with soft zones, occasional pegmatite intrusions, extremely fractured, may have recovered portion of R1 as core barrel jammed at 35.9 ft. Rock Mass Quality=Fair -CAPE ELIZABETH FORMATION- Recovery=98% R2 Core Times (min:sec): 31.3-32.3' (4:00); 32.3-33.3' (5:00); 33.3-34.3' (4:00); 34.3-35.3' (5:00); 35.3-35.9' (6:00) Dark gray fine-grained SCHIST. Foliation trending at low angles with occasional drill breaks along foliation planes. Very hard to hard, fresh. Joints not apparent in R3 and assumed wide to very wide. Occasional quartzic intrusions up to 0.8 ft wide. Minimal water loss R1-R3. Rock Mass Quality=Excellent -CAPE ELIZABETH FORMATION- Recovery=93% R3 Core Times (min:sec): 35.9-36.9' (5:00); 36.9-37.9' (5:00); 37.9-38.9' (6:00); 38.9-39.9' (5:00); 39.9-40.9' (5:00)	
								-25.20			
40											
45											-40.9
50											

Remarks:
1. As-drilled coordinates of test borings determined by MaineDOT and provided in NAD83 (96) ME2000 West Zone coordinate system.
2. Installed 2-in. diameter solid PVC pipe in completed borehole to facilitate non-destructive testing. PVC pipe was installed from the bottom of the borehole up to existing ground surface.

Stratification lines represent approximate boundaries between soil types; transitions may be gradual.
** Water level readings have been made at times and under conditions stated. Groundwater fluctuations may occur due to conditions other than those present at the time measurements were made.

Page 1 of 1
Boring No.: BB-BROV-204

Maine Department of Transportation
Soil/Rock Exploration Log
US CUSTOMARY UNITS

Project: Route 1 Viaduct Bridge Rehabilitation
Location: Bath, Maine
Boring No.: BB-BROV-303
PIN: 19273.00

Driller:	New England Boring Contractors	Elevation (ft.)	11.0 (Est.)
Operator:	C. Dupuis	Datum:	NAVD 88
Logged By:	K. Russ	Rig Type:	Mobile B52
Date Start/Finish:	9-17-15/9-17-15	Drilling Method:	NW Drive
Boring Location:	See Plan	Casing ID/OD:	NW-3.0 in. ID
Hammer Efficiency Factor:	0.6	Hammer Type:	Automatic☐ Hydraulic☐ Rope & Cathead☒
Auger ID/OD:	--	Sampler:	Split Spoon-1.375 in. ID
Hammer Wt./Fall:	NW-3000/24 in. SS-1400/30	Core Barrel:	NQ-2.0 in.
Water Level *:	See Plan		

Definitions:
D = Split Spoon Sample
MD = Unsuccessful Split Spoon Sample attempt
U = Thin Wall Tube Sample
MU = Unsuccessful Thin Wall Tube Sample attempt
V = Insitu Vane Shear Test
MV = Unsuccessful Insitu Vane Shear Test attempt
R = Rock Core Sample
SSA = Solid Stem Auger
HSA = Hollow Stem Auger
RC = Roller Cone
WOH = weight of 140lb. hammer
WOR = weight of rods
WO1P = Weight of one person
Su = Insitu Field Vane Shear Strength (psf)
Tv = Pocket Torvane Shear Strength (psf)
qp = Unconfined Compressive Strength (ksf)
N-uncorrected = Raw field SPT N-value
Hammer Efficiency Factor = Annual Calibration Value
N60 = SPT N-uncorrected corrected for hammer efficiency
N60 = (Hammer Efficiency Factor/60%)*N-uncorrected
Su(lab) = Lab Vane Shear Strength (psf)
WC = water content, percent
LL = Liquid Limit
PL = Plastic Limit
PI = Plasticity Index
G = Grain Size Analysis
C = Consolidation Test

Sample Information

Depth (ft.)	Sample No.	Pen./Rec. (in.)	Sample Depth (ft.)	Blows (/6 in.) Shear Strength (psf) or RQD (%)	N-uncorrected	N-60	Casing Blows	Elevation (ft.)	Graphic Log	Visual Description and Remarks	Laboratory Testing Results/ AASHTO and Unified Class.
0	1D	6/6	0.0 - 0.5	1/6/9/11	15	23	NW Drive	10.5		Dark brown, dry, very soft, SILT, trace fine sand, contains organics -TOPSOIL=(OH) (0.5)	
	1DA	10/6	0.5 - 2.0							Brown, dry, medium dense, fine to medium, SAND, trace coarse sand, trace fine gravel -FILL=(SP)	
	2D	24/14	2.0 - 4.0	7/10/12/6	22	37				Brown, dry, medium dense, fine to medium SAND, trace silt, trace coarse sand, little coarse gravel -FILL=(SP)	
	3D	12/5	4.0 - 5.0	21/20/50(3.0")	70	117				Brown, dry, very dense, fine to medium SAND, trace coarse sand, trace gravel -FILL=(SP)	
5	3DA	3/3	5.0 - 5.3	RQD = 27%				6.0			
	R1	60/40	5.0 - 10.0				NQ	5.4		Light brown, dry, very dense, fine to coarse SAND, some gravel, contains micaceous weathered rock -WEATHERED BEDROCK=(SW) Note: Containing micaceous weathered rock. Note: Auger refusal at 5.6 ft. Drove casing to 5.6 ft, advanced roller bit to 5.6 ft.	
								0.40		Top of Bedrock El.5.4 Gray-black-white, fine to medium-grained GNEISS. Very hard to moderately hard, slight to moderately weathered. Joints low angle, very close to close, open, silt infilling on joint surfaces, weathered joint surfaces. Recovery=80% Rock Mass Quality=Poor R1 Core Times (min:sec): 5.6-6.6' (6:30); 6.6-7.6' (2:45); 7.6-8.6' (2:39); 8.6-9.6' (4:38); 9.6-10.6' (2:45)	
10										Bottom of Exploration at 10.6 feet below ground surface.	
15											
20											
25											
30											

Remarks:

Stratification lines represent approximate boundaries between soil types; transitions may be gradual.
** Water level readings have been made at times and under conditions stated. Groundwater fluctuations may occur due to conditions other than those present at the time measurements were made.

Page 1 of 1
Boring No.: BB-BROV-303

Maine Department of Transportation
Soil/Rock Exploration Log
US CUSTOMARY UNITS

Project: Route 1 Viaduct Bridge Rehabilitation
Location: Bath, Maine
Boring No.: BB-BROV-301
PIN: 19273.00

Driller:	New England Boring Contractors	Elevation (ft.)	9.0 (Est.)
Operator:	C. Dupuis	Datum:	NAVD 88
Logged By:	K. Russ	Rig Type:	Mobile B52
Date Start/Finish:	9-17-15/9-17-15	Drilling Method:	NW Drive
Boring Location:	See plan	Casing ID/OD:	NW-3.0 in. ID
Hammer Efficiency Factor:	0.6	Hammer Type:	Automatic☐ Hydraulic☐ Rope & Cathead☒
Auger ID/OD:	--	Sampler:	Split Spoon-1.375 in. ID
Hammer Wt./Fall:	NW-3000/24 in. SS-1400/30	Core Barrel:	NQ-2.0 in.
Water Level *:	See plan		

Definitions:
D = Split Spoon Sample
MD = Unsuccessful Split Spoon Sample attempt
U = Thin Wall Tube Sample
MU = Unsuccessful Thin Wall Tube Sample attempt
V = Insitu Vane Shear Test
MV = Unsuccessful Insitu Vane Shear Test attempt
R = Rock Core Sample
SSA = Solid Stem Auger
HSA = Hollow Stem Auger
RC = Roller Cone
WOH = weight of 140lb. hammer
WOR = weight of rods
WO1P = Weight of one person
Su = Insitu Field Vane Shear Strength (psf)
Tv = Pocket Torvane Shear Strength (psf)
qp = Unconfined Compressive Strength (ksf)
N-uncorrected = Raw field SPT N-value
Hammer Efficiency Factor = Annual Calibration Value
N60 = SPT N-uncorrected corrected for hammer efficiency
N60 = (Hammer Efficiency Factor/60%)*N-uncorrected
Su(lab) = Lab Vane Shear Strength (psf)
WC = water content, percent
LL = Liquid Limit
PL = Plastic Limit
PI = Plasticity Index
G = Grain Size Analysis
C = Consolidation Test

Sample Information

Depth (ft.)	Sample No.	Pen./Rec. (in.)	Sample Depth (ft.)	Blows (/6 in.) Shear Strength (psf) or RQD (%)	N-uncorrected	N-60	Casing Blows	Elevation (ft.)	Graphic Log	Visual Description and Remarks	Laboratory Testing Results/ AASHTO and Unified Class.
0							NW Drive	8.50		-BITUMINOUS CONCRETE- (0.2)	
	1D	21.6/6	0.2 - 2.0	1/4/6/7	10	11				Light brown, dry, loose, poorly-graded GRAVEL, little fine sand, trace medium and coarse sand -FILL=(GP) Light brown, dry, loose, fine to medium SAND, little coarse sand, trace fine gravel -FILL=(SW) (3.3)	
	2D	15/7	2.0 - 3.3	7/4/2/1	6	10					
	2DA	9/8	3.3 - 4.0								
	3D	7.2/7	4.0 - 4.6	7/8/12/16	20	33				Olive-brown, dry, soft, SILT (Likely reworked naturally-deposited soil) -FILL=(ML) (1.0)	
	3DA	16.8/16	4.6 - 6.0							Brown, dry, loose, fine SAND, some medium sand, little coarse sand, little fine gravel, trace silt -FILL=(SW) (1.6)	
5							36				
							37				
							36				
							36				
10	4D	24/21	10.0 - 12.0	4/6/7/8	15	25	47			Olive-brown, dry, hard, SILT, trace fine sand -MARINE DEPOSIT=(ML) (15.3)	
							53				
							50				
							55				
							55				
15	5D	10/10	15.0 - 15.8	5/10/50(1.0")	60	100	64	-6.70		Olive-brown, dry, medium stiff, SILT -MARINE DEPOSIT=(ML)	
	5DA	4/4	15.7 - 16.0					-7.10			
	R1		16.1 - 21.1				NQ			Light brown to olive-brown, moist, very dense, sandy SILT, trace fine gravel, loosely bonded -GLACIAL TILL=(ML) (16.3)	
								-12.10		Top of Bedrock El.-7.1 White and gray, medium to fine-grained GNEISS. Hard, fresh to slightly weathered, joints low angle, very close to moderately close, few secondary vertical joints, tight to open. Recovery=90% Rock Mass Quality=Good R1 Core Times (min:sec): 16.1-17.1' (1:00); 17.1-18.1' (1:30); 18.1-19.1' (1:30); 19.1-20.1' (1:30); 20.1-21.1' (1:30)	
20											
25										Bottom of Exploration at 21.1 feet below ground surface.	
30											

Remarks:

Stratification lines represent approximate boundaries between soil types; transitions may be gradual.
** Water level readings have been made at times and under conditions stated. Groundwater fluctuations may occur due to conditions other than those present at the time measurements were made.

Page 1 of 1
Boring No.: BB-BROV-301

Maine Department of Transportation
Soil/Rock Exploration Log
US CUSTOMARY UNITS

Project: U.S. Route 1 Viaduct Bridge Replacement
Location: Bath, Maine
Boring No.: BB-BROV-103
PIN: 19273.00

Driller:	Maine Test Borings	Elevation (ft.)	7.8
Operator:	M. Porter	Datum:	NAVD 88
Logged By:	M. Snow	Rig Type:	Mobile Drill B-53 Truck
Date Start/Finish:	3-27-13/3-27-13	Drilling Method:	HW
Boring Location:	E1131808, N393523 (See Plan)	Casing ID/OD:	HW-4.0 in. ID
Hammer Efficiency Factor:	0.6	Hammer Type:	Automatic☐ Hydraulic☒ Rope & Cathead☒
Auger ID/OD:	--	Sampler:	Split Spoon-1.375 in. ID
Hammer Wt./Fall:	HW-3000/24 in. SS-1400/30	Core Barrel:	NQ-2.0 in.
Water Level *:	14.2		

Definitions:
D = Split Spoon Sample
MD = Unsuccessful Split Spoon Sample attempt
U = Thin Wall Tube Sample
MU = Unsuccessful Thin Wall Tube Sample attempt
V = Insitu Vane Shear Test
MV = Unsuccessful Insitu Vane Shear Test attempt
R = Rock Core Sample
SSA = Solid Stem Auger
HSA = Hollow Stem Auger
RC = Roller Cone
WOH = weight of 140lb. hammer
WOR = weight of rods
WO1P = Weight of one person
Su = Insitu Field Vane Shear Strength (psf)
Tv = Pocket Torvane Shear Strength (psf)
qp = Unconfined Compressive Strength (ksf)
N-uncorrected = Raw field SPT N-value
Hammer Efficiency Factor = Annual Calibration Value
N60 = SPT N-uncorrected corrected for hammer efficiency
N60 = (Hammer Efficiency Factor/60%)*N-uncorrected
Su(lab) = Lab Vane Shear Strength (psf)
WC = water content, percent
LL = Liquid Limit
PL = Plastic Limit
PI = Plasticity Index
G = Grain Size Analysis
C = Consolidation Test

Sample Information

Depth (ft.)	Sample No.	Pen./Rec. (in.)	Sample Depth (ft.)	Blows (/6 in.) Shear Strength (psf) or RQD (%)	N-uncorrected	N-60	Casing Blows	Elevation (ft.)	Graphic Log	Visual Description and Remarks	Laboratory Testing Results/ AASHTO and Unified Class.
0							SSA			-BITUMINOUS CONCRETE- (0.1)	
	1D	24/12	0.5 - 2.5	6/20/30/6	50	83	SSA			Brown, dry, medium, medium to fine SAND, little coarse sand, little gravel, trace silt -FILL=(SW) (3.0)	
	2D	24/10	2.5 - 4.5	3/2/2/1	4	7		4.80		Dark brown, moist, soft, SILT, little organics (woody/fibrous), trace fine sand -ORGANIC DEPOSIT=(ML) Dark brown, moist, soft, SILT with organics, trace fine sand -ORGANIC DEPOSIT=(ML)	
	3D	24/24	4.5 - 6.5	1/1/1/1	2	3					
	4D	24/24	6.5 - 8.5	2/2/3/5	5	8				Dark brown, moist, medium stiff, SILT with organics (fibrous), trace fine sand -ORGANIC DEPOSIT=(ML)	
	5D	24/24	8.5 - 10.5	3/5/7/8	12	20					
10								-0.70		Brown-gray, moist, stiff, mottled clayey SILT with organics (fibrous) -MARINE DEPOSIT=(ML) (8.5)	
	6D	24/24	10.5 - 12.5	13/12/14/12	26	43				Brown-gray, moist, very stiff, mottled clayey SILT to silty CLAY -MARINE DEPOSIT=(ML CL)	
	7D	24/12	12.5 - 14.5	4/5/6/7	13	22				Note: Attempted field vane shear test at 12.0 ft, could not push. Brown-gray, moist to wet, stiff, mottled clayey SILT to silty CLAY -MARINE DEPOSIT=(ML CL)	
15	8D	24/24	15.0 - 17.0	3/4/5/4	9	15				Brown-gray, moist to wet, stiff, mottled clayey SILT to silty CLAY -MARINE DEPOSIT=(ML CL)	
								-9.20			
	9D	24/18	17.0 - 19.0	1/2/2/2	4	7				Gray, moist to wet, medium stiff, silty CLAY (CL) -MARINE DEPOSIT=(CL)	
20	10D	24/24	19.0 - 21.0	WOH/WOH/WOH/WOH						Gray, wet, medium stiff, silty CLAY -MARINE DEPOSIT=(CL) 85x110 mm vane raw torque readings: V1A: 220.6 in-lbs	C#IP-1 WC=41.9% LL=41 PL=19, PI=22
	V1A		19.6 - 20.0	Su=855/20 psf							
	U1		21.0 - 23.0								
	V2A		23.6 - 24.0	Su=700/95 psf						85x110 mm vane raw torque readings: V2A: 178/26 in-lbs V2B: 165/30 in-lbs Dark gray, wet, medium stiff, silty CLAY -MARINE DEPOSIT=(CL)	
	V2B		24.6 - 25.0	Su=640/115 psf							
25	11D	24/24	25.0 - 27.0	WOR/WOR/WOR/WOR							
	V3A		28.6 - 29.0	Su=550/80 psf						85x110 mm vane raw torque readings: V3A: 150/21 in-lbs V3B: 150/20 in-lbs Gray, wet, medium stiff, silty CLAY -MARINE DEPOSIT=(CL)	C#IP-3 WC=47.7% LL=38 PL=19, PI=19
	V3B		29.6 - 30.0	Su=580/80 psf							
	U2		30.0 - 32.0								
	V4A		32.6 - 33.0	Su=600/40 psf						85x110 mm vane raw torque readings: V4A: 154/12 in-lbs V4B: 170/32 in-lbs Dark gray, wet, medium stiff, silty CLAY -MARINE DEPOSIT=(CL)	
	V4B		33.6 - 34.0	Su=660/115 psf							
35											
	12D	24/24	35.0 - 37.0	WOR/WOR/WOR/WOR							
	V5A		38.6 - 39.0	Su=505/135 psf						85x110 mm vane raw torque readings: V5A: 130/34 in-lbs V5B: 127/11 in-lbs Gray, wet, soft to medium stiff, silty CLAY -MARINE DEPOSIT=(CL)	C#IP-2 WC=40.6% LL=37 PL=19, PI=18
	V5B		39.6 - 40.0	Su=485/40 psf							
40											
	U3		41.0 - 43.0								
	V6A		43.6 - 44.0	Su=525/115 psf						85x110 mm vane raw torque readings: V6A: 137/31 in-lbs V6B: 150/33 in-lbs	
	V6B		44.6 - 45.0	Su=580/135 psf							
45											
								-39.00		Note: Sand and gravel observed in wash water at approximately 46.8 ft. -PROBABLE GLACIAL TILL= (46.8)	
								-41.20		Top of Bedrock at El.-41.2 Gray, black and white, coarse to medium-grained pegmatitic SCHIST. Moderately hard, fresh to slightly weathered, joints low angle to moderately dipping, very close to close, tight to open, occasional weathered joint surfaces and silt coatings. Rock Mass Quality=Fair Recovery=100% R1 Core Times (min:sec): 49.0-50.0' (2:25); 50.0-51.0' (3:25); 51.0-52.0' (1:58); 52.0-53.0' (2:00); 53.0-54.0' (2:08) (49.0)	
								-46.20			
50										Bottom of Exploration at 54.0 feet below ground surface. (54.0)	
55											
60											

Remarks:
1. As-drilled coordinates of test borings determined by MaineDOT and provided in NAD83 (96) ME2000 West Zone coordinate system.
2. Hammer consisted of rope and cathead and safety hammer.
3. psf = pounds per square foot.

Stratification lines represent approximate boundaries between soil types; transitions may be gradual.
** Water level readings have been made at times and under conditions stated. Groundwater fluctuations may occur due to conditions other than those present at the time measurements were made.

Page 1 of 1
Boring No.: BB-BROV-103

Maine Department of Transportation
Soil/Rock Exploration Log
US CUSTOMARY UNITS

Project: Route 1 Viaduct Bridge Rehabilitation
Location: Bath, Maine
Boring No.: BB-BROV-302
PIN: 19273.00

Driller:	New England Boring Contractors	Elevation (ft.)	11.0 (Est.)
Operator:	C. Dupuis	Datum:	NAVD 88
Logged By:	K. Russ	Rig Type:	Mobile B52
Date Start/Finish:	9-16-15/9-17-15	Drilling Method:	NW Drive
Boring Location:	See Plan	Casing ID/OD:	NW-3.0 in. ID
Hammer Efficiency Factor:	0.6	Hammer Type:	Automatic☐ Hydraulic☐ Rope & Cathead☒
Auger ID/OD:	--	Sampler:	Split Spoon-1.375 in. ID
Hammer Wt./Fall:	NW-3000/24 in. SS-140#/30	Core Barrel:	NQ-2.0 in.
Water Level *:			

Definitions:
D = Split Spoon Sample
MD = Unsuccessful Split Spoon Sample attempt
U = Thin Wall Tube Sample
MU = Unsuccessful Thin Wall Tube Sample attempt
V = Insitu Vane Shear Test
MV = Unsuccessful Insitu Vane Shear Test attempt
R = Rock Core Sample
SSA = Solid Stem Auger
HSA = Hollow Stem Auger
RC = Roller Cone
WOH = weight of 140lb. hammer
WOR = weight of rods
WO1P = Weight of one person
Su = Insitu Field Vane Shear Strength (psf)
Tv = Pocket Torvane Shear Strength (psf)
qp = Unconfined Compressive Strength (ksf)
N-uncorrected = Raw field SPT N-value
Hammer Efficiency Factor = Annual Calibration Value
N60 = SPT N-uncorrected corrected for hammer efficiency
N60 = (Hammer Efficiency Factor/60%)*N-uncorrected
Su(lab) = Lab Vane Shear Strength (psf)
WC = water content, percent
LL = Liquid Limit
PL = Plastic Limit
PI = Plasticity Index
G = Grain Size Analysis
C = Consolidation Test

Sample Information

Depth (ft.)	Sample No.	Pen./Rec. (in.)	Sample Depth (ft.)	Blows (/6 in.) Shear Strength (psf) or RQD (%)	N-uncorrected	N-60	Casing Blows	Elevation (ft.)	Graphic Log	Visual Description and Remarks	Laboratory Testing Results/ AASHTO and Unified Class.
0	1D	24/7	0.0 - 2.0	1/7/12/7	19	32	NW Drive	10.4		Dark brown, damp, very loose, silty SAND, trace gravel -TOPSOIL=(SP) (0.6)	
	2D	24/0	2.0 - 4.0	4/5/4/7	9	15				Note: No Recovery on sample, rock lodged in spoon tip.	
5	3D	21/7	4.0 - 5.8	6/12/17/50(3.0")	29	48				Light brown, moist, medium dense, SAND, little gravel, trace silt -FILL=(SW) Note: Split-spoon refusal at 5.75 ft, probable bedrock. Advanced auger to refusal at 6.8 ft, set casing to 6.8 ft. (6.8)	
								4.20		-WEATHERED BEDROCK- (7.1)	
	R1	34.8/34	7.1 - 10.0	RQD = 79%			NQ	3.90		Top of Bedrock El.3.9 Tan-white-gray, medium to fine-grained GNEISS. Horizontal to low angle foliation. Very hard to hard, fresh joints Tan-white-gray, medium to fine-grained GNEISS with top 10 in. and lower 8 in. containing extremely close, extremely thin bands of biotite mica with horizontal to low angle quartz intrusions. Very hard to hard, fresh, joints low angle to moderately dipping, very close to close, rough, undulating, partly open to open. Recovery=90% Rock Mass Quality=Good R1 Core Times (min:sec): 7.1-8.1' (12:00); 8.1-9.1' (14:30); 9.1-10.0' (15:00)	
10	R2	53/52	10.0 - 14.4	RQD = 91%							
15								-3.40		Tan-white-gray, medium to fine-grained GNEISS with top 10 in. and lower 8 in. containing extremely thin bands of biotite mica with quartz intrusion at extremely close. Horizontal or low angle. Granitic intrusion in between. Very hard to hard, fresh. Joints low angle to moderately dipping, very close to close, rough, undulating, partly open to open. Gray-white-black, medium to fine-grained GNEISS, very hard to hard, slightly weathered to fresh, joints horizontal to low angle, very close to close, partly open to open, weathered joint surfaces. Foliation has high angle, no moderately dipping. Recovery=98% Rock Mass Quality=Excellent R2 Core Times (min:sec): 10.0-11.0' (11:30) 11.0-12.0' (15:30); 12.0-13.0' (17:00); 13.0-14.0' (15:00); 14.0-14.4' (7:00) (14.4)	
20											
25										Bottom of Exploration at 14.4 feet below ground surface.	
30											

Remarks:

Stratification lines represent approximate boundaries between soil types; transitions may be gradual.
** Water level readings have been made at times and under conditions stated. Groundwater fluctuations may occur due to conditions other than those present at the time measurements were made.

Page 1 of 1
Boring No.: BB-BROV-302

STATE OF MAINE
DEPARTMENT OF TRANSPORTATION

19273.00
WIN 19273.00

BRIDGE PLANS
BRIDGE NO. 3838

STATE OF MAINE
BRYAN C. STEINERT
No. 12008
LICENSED PROFESSIONAL ENGINEER

PROJ. MANAGER	J. KITTREDGE			
DESIGN-DETAILED	P. KOWALKE	PHK	10/15	DATE
CHECKED-REVIEWED	B. STEINERT	BCS	10/15	BY
DESIGN2-DETAILED2	---	---	---	
DESIGN3-DETAILED3	---	---	---	
REVISIONS 1	---	---	---	
REVISIONS 2	---	---	---	
REVISIONS 3	---	---	---	
REVISIONS 4	---	---	---	
FIELD CHANGES	---	---	---	

Bryan C. Steinert
SIGNATURE
12008
P.E. NUMBER
11/30/2015
DATE

WEST APPROACH BRIDGE
MAINE OWNED RR & CITY STREETS
BATH SAGADAHOC COUNTY

BORING LOGS

SHEET NUMBER
75
OF 145

Filename: $file$ Division: $wkgroup$ Username: $user$ Date: $date$

Date: $date$

Username: $user$

Division: $wkgroup$

Filename: $file$

Maine Department of Transportation
Soil/Rock Exploration Log
US CUSTOMARY UNITS

Project: Route 1 Viaduct Bridge Rehabilitation
Location: Bath, Maine
Boring No.: BB-BROV-205
PIN: 19273.00

Driller:	MaineDOT	**Elevation (ft.)**	8.6	**Auger ID/OD:**	--
Operator:	C. Giles	**Datum:**	NAVD 88	**Sampler:**	Split Spoon-1.375 in. ID
Logged By:	S. Shay	**Rig Type:**	CME 45C	**Hammer Wt./Fall:**	HW-300#/24 in. SS-140#/30
Date Start/Finish:	4-07-2014/4-08-2014	**Drilling Method:**	HW Drive	**Core Barrel:**	NQ-1.875 in.
Boring Location:	E1131830, N393542.7 (See Plan)	**Casing ID/OD:**	SSA-2.25 in. ID; HW-4.0 in. ID	**Water Level*:**	2.5
Hammer Efficiency Factor:	0.867	**Hammer Type:**	Automatic☒ Hydraulic☐ Rope & Cathead☐		

Definitions:
D = Split Spoon Sample
MD = Unsuccessful Split Spoon Sample attempt
U = Thin Wall Tube Sample
MU = Unsuccessful Thin Wall Tube Sample attempt
V = Insitu Vane Shear Test
MV = Unsuccessful Insitu Vane Shear Test attempt
R = Rock Core Sample
SSA = Solid Stem Auger
HSA = Hollow Stem Auger
RC = Roller Cone
WOH = weight of 140lb. hammer
WOR = weight of rods
WO1P = Weight of one person
S~u = Insitu Field Vane Shear Strength (psf)
T~v = Pocket Torvane Shear Strength (psf)
q~p = Unconfined Compressive Strength (ksf)
N-uncorrected = Raw field SPT N-value
Hammer Efficiency Factor = Annual Calibration Value
N~6~0 = SPT N-uncorrected corrected for hammer efficiency
N~6~0 = (Hammer Efficiency Factor/60%)*N-uncorrected
S~u~(~l~a~b~) = Lab Vane Shear Strength (psf)
WC = water content, percent
LL = Liquid Limit
PL = Plastic Limit
PI = Plasticity Index
G = Grain Size Analysis
C = Consolidation Test

Depth (ft.)	Sample No.	Pen./Rec. (in.)	Sample Depth (ft.)	Blows (/6 in.) Shear Strength (psf) or RQD (%)	N-uncorrected	N~6~0	Casing Blows	Elevation (ft.)
0	1D	24/8	0.0 - 2.0	1/2/1/2	3	3	SSA	
								6.60
							HW	
5	2D	24/24	5.0 - 7.0	1/1/1/7	2	2	10	
							18	2.10
							34	
							26	
	3D	24/24	9.0 - 11.0	3/5/5/7	10	12	52	
10							65	
							92	
							96	
							88	
							72	
15							51	-6.40
							57	
							59	
							63	
	4D	24/24	19.0 - 21.0	WOH(24.0)			54	
20							35	
							39	
							32	
							25	
							25	
25							31	
							36	
							29	
							27	
	5D	24/17	29.0 - 31.0	WOH(24.0)			48	
30							60	
							67	
							66	
							55	
							56	
35							71	
							67	
							62	
							56	
							63	
40							65	
							68	
							73	
							128	-34.80
	6D	11/9	44.5 - 45.4	22/100(5.0)			96(6.0)	
45							NQ CORE	-36.40
	R1	60/57	46.5 - 51.5	RQD = 25*%				-37.90
50								
	R2	60/60	51.5 - 56.5	RQD = 57%				
55								
	R3	60/60	56.5 - 61.5	RQD = 95%				
60							NQ Core	
								-52.90
65								
70								

Visual Description and Remarks (Laboratory Testing Results/AASHTO and Unified Class: none listed)

Brown, very loose, fine to coarse SAND
-FILL-(SP)
— 2.0 —
Note: Viewed color/stratum change with hand dig to 3.0 ft.

Black to dark olive-gray, very soft, ORGANIC SOIL, some fine to medium sand, 5% wood fibers, no odor
-ORGANIC DEPOSITS-(OL/OH)
— 6.5 —
Medium stiff, mottled, silty CLAY
-MARINE DEPOSIT-(CL)

Olive-gray with weak mottling, stiff, silty CLAY
-MARINE DEPOSIT-(CL)
- - - 15.0 - - -
Dark gray, very soft, CLAY, little silt
-MARINE DEPOSIT-(CL)

Dark gray, very soft, CLAY, little silt
-MARINE DEPOSIT-(CL)

Note: Non-standard sampling interval.

Note: Drill action indicates strata change at approximately 43.4 ft.
— 43.4 —
Pink-gray, very dense, fine to coarse SAND, some gravel, grading to severely to completely weathered rock with gravel
-GLACIAL TILL-(SP)
— 45.0 —
Top of Bedrock at El. -36.4
Moderately to highly weathered ROCK
Note: Weathered zone to 46.5 ft. Continued to advance borehole with roller bit to 46.5 ft. Advanced casing to seat in bedrock at 46.5 ft prior to coring.
— 46.5 —
Gray/gray-black, fine to medium grained pegmatitic SCHIST. Irregular foliatoin joints dipping at low angles. Very hard to hard, moderately weathered, very close, rough, planar, discolored or micaceous joint surfaces, tight to open.
Rock Mass Quality=Very Poor
-CAPE ELIZABETH FORMATION-
Recovery=95%
R1 Core Times (min:sec): 46.5-47.5' (7:00); 47.5-48.5' (10:00); 48.5-49.5' (8:00); 49.5-50.5' (8:00); 50.5-51.5' (8:00)
Similar to above with intermittent planar foliation. White/gray pegmatitic SCHIST, slightly weathered, low angle joints, close.
Rock Mass Quality=Fair
-CAPE ELIZABETH FORMATION-
Recovery=100%
R2 Core Times (min:sec): 51.5-52.5' (7:00); 52.5-53.5' (6:00); 53.5-54.5' (6:00); 54.5-55.5' (7:00); 55.5-56.5' (7:00)
Gray-green, medium grained pegmatitic SCHIST. Weak, planar foliation. Very hard, fresh. Joints dipping at low angles, moderately spaced, rough, planar at fresh micaceous zones, tight. Occasional rehealed high angle secondary joint present. Minimal water loss R1-R3 during coring.
Rock Mass Quality=Excellent
-CAPE ELIZABETH FORMATION-
Recovery=100%
R3 Core times (min:sec): 56.5-57.5' (6:00); 57.5-58.5' (6:00); 58.5-59.5' (6:00); 59.5-60.5' (6:00); 60.5'61.5' (7:00)
— 61.5 —
Bottom of Exploration at 61.5 feet below ground surface.

Note: * RQD modifier for moderately weathered rock.

Remarks:

1. As-drilled coordinates of test borings determined by MaineDOT and provided in NAD83 (96) ME2000 West Zone coordinate system.
2. Installed 2-in. diameter solid PVC pipe in completed borehole to facilitate non-destructive testing. PVC pipe was installed from the bottom of the borehole up to existing ground surface.

Stratification lines represent approximate boundaries between soil types; transitions may be gradual.

* Water level readings have been made at times and under conditions stated. Groundwater fluctuations may occur due to conditions other than those present at the time measurements were made.

Page 1 of 1

Boring No.: BB-BROV-205

Maine Department of Transportation
Soil/Rock Exploration Log
US CUSTOMARY UNITS

Project: Route 1 Viaduct Bridge Rehabilitation
Location: Bath, Maine
Boring No.: BB-BROV-206
PIN: 19273.00

Driller:	MaineDOT	**Elevation (ft.)**	10.4	**Auger ID/OD:**	--
Operator:	C. Giles	**Datum:**	NAVD 88	**Sampler:**	Split Spoon-1.375 in. ID
Logged By:	S. Shay	**Rig Type:**	CME 45C	**Hammer Wt./Fall:**	HW-300#/24 in. SS-140#/30
Date Start/Finish:	4-02-2014/4-03-2014	**Drilling Method:**	HW Drive	**Core Barrel:**	NQ-1.875 in.
Boring Location:	E1131890, N393541.6 (See Plan)	**Casing ID/OD:**	SSA-2.25 in. ID; HW-4.0 in. ID	**Water Level*:**	4.5
Hammer Efficiency Factor:	0.867	**Hammer Type:**	Automatic☒ Hydraulic☐ Rope & Cathead☐		

Definitions:
D = Split Spoon Sample
MD = Unsuccessful Split Spoon Sample attempt
U = Thin Wall Tube Sample
MU = Unsuccessful Thin Wall Tube Sample attempt
V = Insitu Vane Shear Test
MV = Unsuccessful Insitu Vane Shear Test attempt
R = Rock Core Sample
SSA = Solid Stem Auger
HSA = Hollow Stem Auger
RC = Roller Cone
WOH = weight of 140lb. hammer
WOR = weight of rods
WO1P = Weight of one person
S~u = Insitu Field Vane Shear Strength (psf)
T~v = Pocket Torvane Shear Strength (psf)
q~p = Unconfined Compressive Strength (ksf)
N-uncorrected = Raw field SPT N-value
Hammer Efficiency Factor = Annual Calibration Value
N~6~0 = SPT N-uncorrected corrected for hammer efficiency
N~6~0 = (Hammer Efficiency Factor/60%)*N-uncorrected
S~u~(~l~a~b~) = Lab Vane Shear Strength (psf)
WC = water content, percent
LL = Liquid Limit
PL = Plastic Limit
PI = Plasticity Index
G = Grain Size Analysis
C = Consolidation Test

Depth (ft.)	Sample No.	Pen./Rec. (in.)	Sample Depth (ft.)	Blows (/6 in.) Shear Strength (psf) or RQD (%)	N-uncorrected	N~6~0	Casing Blows	Elevation (ft.)
0							1	
							SSA	9.40
	1D	24/16	2.0 - 4.0	5/11/6/6	17	20		
								5.90
5	2D	24/19	5.0 - 7.0	1/1/1/1	2	2		
								2.40
10	3D	24/24	10.0 - 12.0	5/8/8/9	16	18	14	
							28	
							67	
							72	
	4D	24/24	14.0 - 16.0	5/5/5/7	10	12	80	
15							33	
							40	
							45	
							48	
	5D	24/24	19.0 - 21.0	2/3/4/4	7	8	56	
20							104	
							82	
							74	-12.10
							67	
	6D ~~V1A~~ V1B	24/24	24.0 - 26.0 ~~24.0 - 25.0~~ 25.0 - 26.0	WOH(24.0) ~~Su=600/80 psf~~ Su=660/80 psf			62	
25							96	
							98	
							98	
							93	
	7D	24/24	29.0 - 31.0	WOH(24.0)			115	
30							127	
							123	
							123	
							91	
	8D ~~V2A~~ V2B	24/24	34.0 - 36.0 ~~34.0 - 35.0~~ 35.0 - 36.0	WOH(24.0) ~~Su=390/80 psf~~ Su=445/80 psf			86	
35							99	
							111	
							111	
							87	
	9D	24/22	39.0 - 41.0	WOH(12.0)/8/21			87	
40								-29.60
	R1	54/54	41.4 - 45.9	RQD = 74%			NQ Core	-30.60
45	R2	60/60	45.9 - 50.9	RQD = 53%				
50	R3	60/60	50.9 - 55.9	RQD = 82%				
55								
								-48.90
60								
65								

Visual Description and Remarks (Laboratory Testing Results/AASHTO and Unified Class: none listed)

Dark brown, sandy LOAM
-TOPSOIL-(OL/OH)
— 1.0 —
Orange-brown, medium dense, fine to coarse SAND
-FILL-(SP)
- - - 4.5 - - -
Dark gray, very soft, sandy ORGANIC SOIL, trace fine gravel, trace peat fibers, strong gasoline-like odor
-FILL-(OL/OH)

Note: Possible wood at 8.0 ft.
— 8.0 —
Olive-gray to olive-brown, very stiff, silty CLAY
-MARINE DEPOSIT-(CL)

Note: Attempted vane shear test at 14.0 ft, unable to push.

Olive-gray/olive-brown, stiff, silty CLAY
-MARINE DEPOSIT-(CL)

Note: Attempted vane shear test at 19.0 ft, only advanced 5 in.

Olive-brown grading to gray, medium stiff, silty CLAY, transitioned to soft in bottom 9 in.
-MARINE DEPOSIT-(CL)
- - - 22.5 - - -
Gray, very soft, silty CLAY, highly plastic
-MARINE DEPOSIT-(CL)
55x110 mm vane raw torque readings:
V1A: 155/20 in-lbs
V1B: 170/20 in-lbs

Gray, very soft, silty CLAY, highly plastic
-MARINE DEPOSIT-(CL)

Gray, very soft, silty CLAY, highly plastic
-MARINE DEPOSIT-(CL)
55x110 mm vane raw torque readings:
V2A: 102/20 in-lbs
V2B: 115/20 in-lbs

Gray, very soft, silty CLAY, highly plastic
-MARINE DEPOSIT-(CL)
- - - 40.0 - - -
Medium dense, sandy CLAY, with micaceous weathered rock
— 41.0 —
Top of Bedrock at El. -30.6
Gray/white/black, fine to medium grained SCHIST. Planar and/or undulating foliation. Very hard to hard, slightly weathered. Primary joints moderately dipping, very close to close with occasional extremely fractured zones, rough, planar, fresh except occasional discolored and silt coated, tight to open, core barrel jammed at 45.9 ft.
Rock Mass Quality=Fair
-CAPE ELIZABETH FORMATION-
Recovery=100%
R1 Core Times (min:sec): 41.4-42.4' (4:00); 42.4-43.4' (4:00); 43.4-44.4' (8:00); 44.4-45.4' (6:00); 45.4-45.9' (5:00)
Gray/gray-green, fine to medium grained SCHIST. Poorly defined foliation. Very hard to hard, slightly weathered. Primary joints moderately dipping, close, rough, planar, fresh, tight. Secondary joints dipping at high angles, similar to primary except undulating. Secondary chlorite mineralization.
Rock Mass Quality=Fair
-CAPE ELIZABETH FORMATION-
Recovery=100%
R2 Core Times (min:sec): 45.9-46.9' (4:00); 46.9-47.9' (4:00); 47.9-48.9' (4:00); 48.9-49.9' (6:00); 49.9-50.9' (6:00)
Gray/white/black, fine to medium grained SCHIST. Well defined planar foliation dipping at moderate angles. Hard, slightly weathered. Joints dipping at low angles, moderately spaced, rough, planar, moderately weathered surfaces somtimes silt coated, open. Secondary joints at moderate angles with micaceous surfaces. Minor secondary mineralization as possible garnet (top 2 in.) and chlorite. Minimal water loss R1-R3.
Rock Mass Quality=Good
-CAPE ELIZABETH FORMATION-
Recovery=93%
R3 Core Times (min:sec): 50.9-51.9' (4:00); 51.9-52.9' (5:00); 52.9-53.9' (5:00); 53.9-54.9' (5:00); 54.9-55.9' (5:00)
— 59.3 —
Bottom of Exploration at 59.3 feet below ground surface.

Remarks:

1. As-drilled coordinates of test borings determined by MaineDOT and provided in NAD83 (96) ME2000 West Zone coordinate system.
2. Installed 2-in. diameter solid PVC pipe in completed borehole to facilitate non-destructive testing. PVC pipe was installed from the bottom of the borehole up to existing ground surface.

Stratification lines represent approximate boundaries between soil types; transitions may be gradual.

* Water level readings have been made at times and under conditions stated. Groundwater fluctuations may occur due to conditions other than those present at the time measurements were made.

Page 1 of 1

Boring No.: BB-BROV-206

STATE OF MAINE
DEPARTMENT OF TRANSPORTATION

19273.00

WIN
19273.00

BRIDGE NO. 3838

BRIDGE PLANS

STATE OF MAINE · BRYAN C. STEINERT · No. 12008 · LICENSED · PROFESSIONAL ENGINEER

SIGNATURE
12008
P.E. NUMBER
11/30/2015
DATE

		BY	DATE
PROJ. MANAGER	J. KITTREDGE		
DESIGN-DETAILED	P. KOWALKE	PHK	10/15
CHECKED-REVIEWED	B. STEINERT	BCS	10/15
DESIGN2-DETAILED2	---	---	---
DESIGN3-DETAILED3	---	---	---
REVISIONS 1	---		---
REVISIONS 2	---		---
REVISIONS 3	---		---
REVISIONS 4	---		---
FIELD CHANGES	---		---

WEST APPROACH BRIDGE
MAINE OWNED RR & CITY STREETS
BATH SAGADAHOC COUNTY

BORING LOGS

SHEET NUMBER
76
OF 145

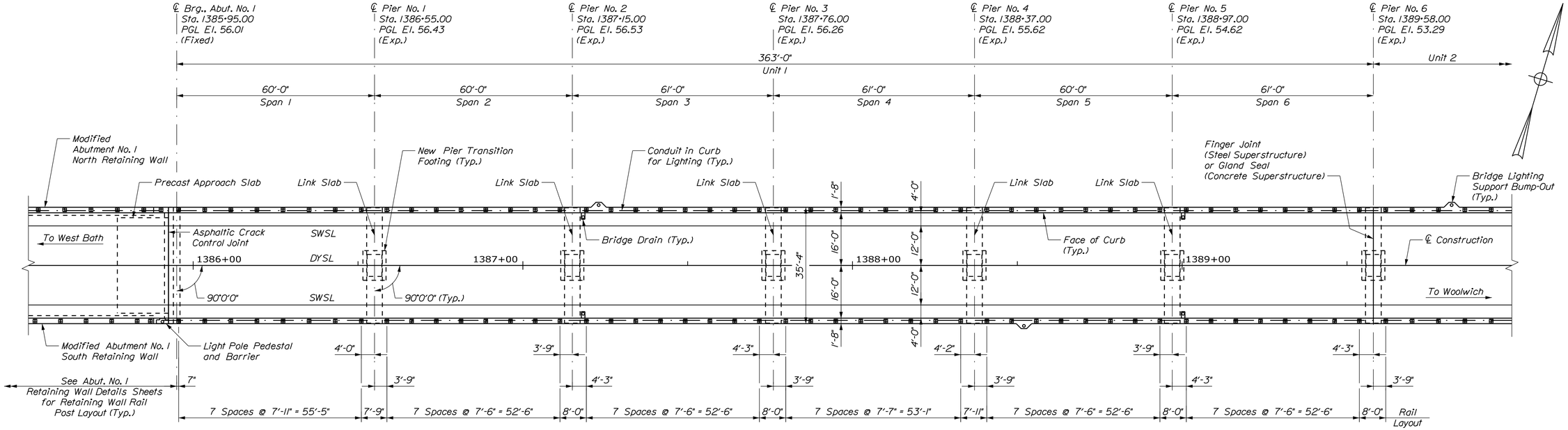

PLAN

(Median and Roadway below Bridge not Shown)
Scale: 1/16" = 1'-0"

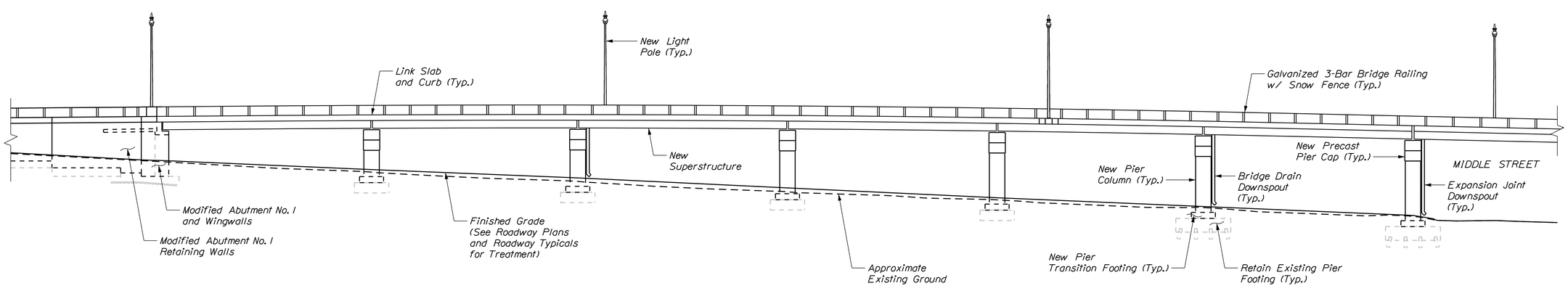

ELEVATION

Scale: 1/16" = 1'-0"

STRIPING LEGEND

SWSL	Single White Solid Line
DYSL	Double Yellow Solid Line

NOTES

1. Cast-in-Place pier columns shown.
2. Multiple centerline of bearing lines at piers not shown for clarity.
3. See Lighting Plan Sheets for lighting locations and details.

STATE OF MAINE
DEPARTMENT OF TRANSPORTATION

NHPP - 1927(300)

WIN 19273.00

BRIDGE NO. 3838

BRIDGE PLANS

vhb

PROJ. MANAGER	J. KITTREDGE		
DESIGN-DETAILED	KZS	KDW	12/15
CHECKED-REVIEWED	JGM	SMH	12/15
DESIGN2-DETAILED2	---	---	---
DESIGN3-DETAILED3	---	---	---
REVISIONS 1	---	---	---
REVISIONS 2	---	---	---
REVISIONS 3	---	---	---
REVISIONS 4	---	---	---
FIELD CHANGES	---	---	---

WEST APPROACH BRIDGE
MAINE OWNED RR & CITY STREETS
BATH SAGADAHOC COUNTY

PLAN AND ELEVATION (UNIT 1)

SHEET NUMBER
77
OF 145

Filename: ...\MSTA\077_bridgeplan_02.dgn Division: HIGHWAY Username: kwentworth Date:12/21/2015

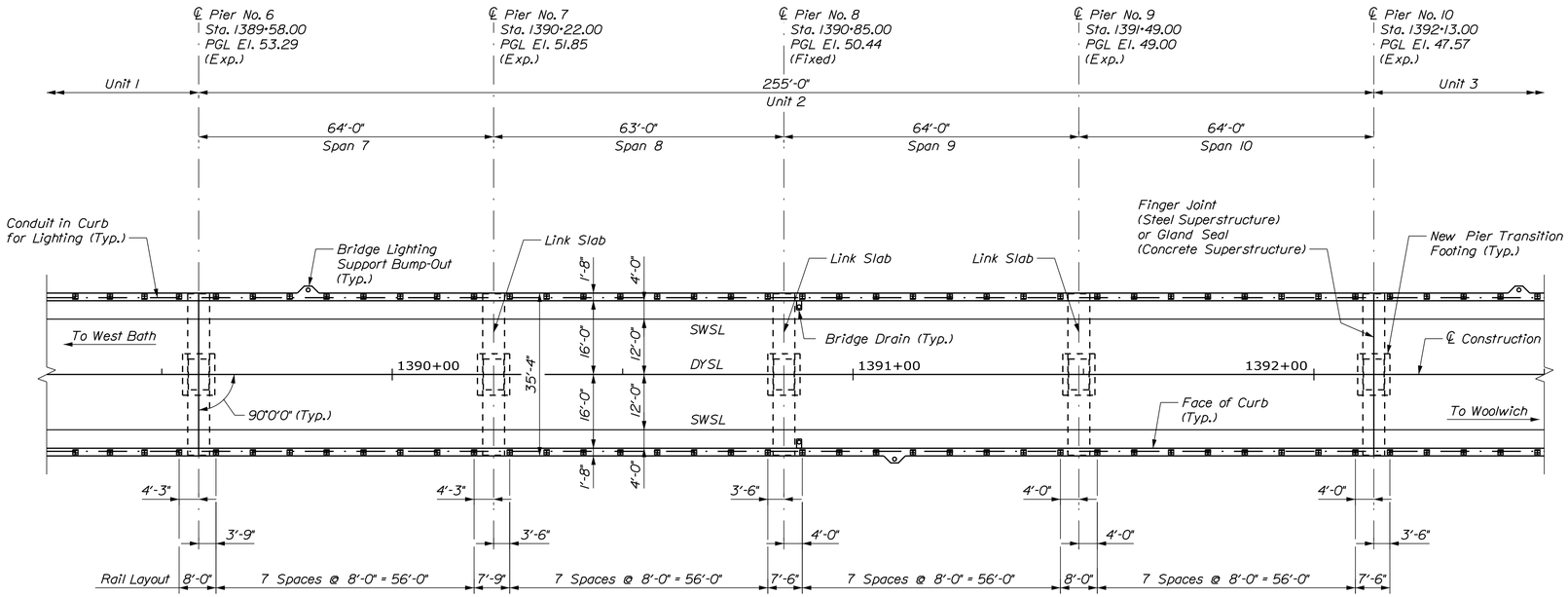

PLAN

(Median and Roadway below Bridge not Shown)
Scale: 1/16" = 1'-0"

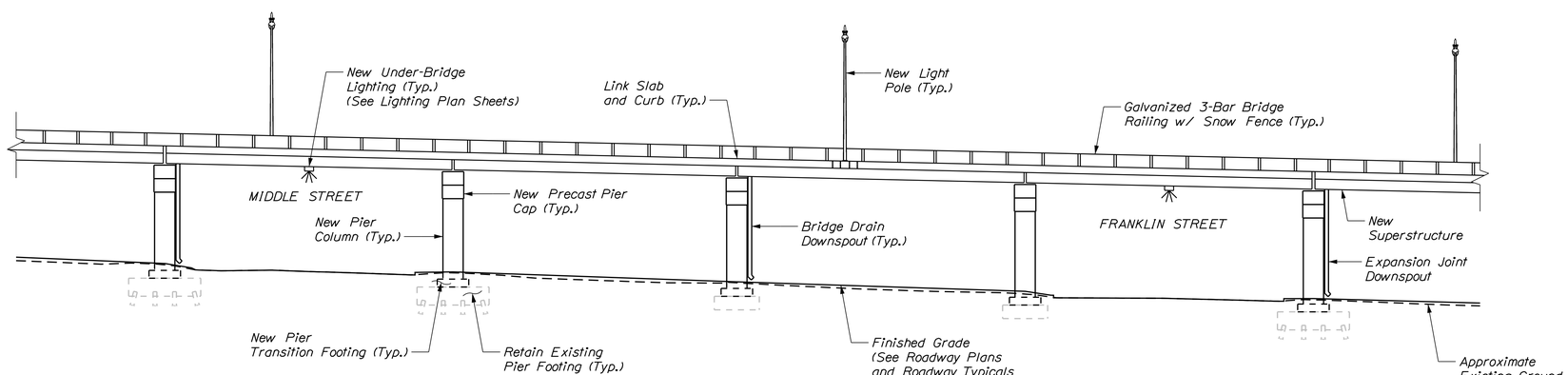

ELEVATION

Scale: 1/16" = 1'-0"

STRIPING LEGEND

SWSL	Single White Solid Line
DYSL	Double Yellow Solid Line

NOTES

1. Cast-in-Place pier columns shown.
2. Multiple centerline of bearing lines at piers not shown for clarity.
3. See Lighting Plan Sheets for lighting locations and details.

STATE OF MAINE
DEPARTMENT OF TRANSPORTATION

NHPP - 1927(300)

WIN 19273.00

BRIDGE NO. 3838

BRIDGE PLANS

vhb

		BY	DATE
PROJ. MANAGER	J. KITTREDGE		
DESIGN-DETAILED	KZS	KDW	12/15
CHECKED-REVIEWED	JGM	SMH	12/15
DESIGN2-DETAILED2	---	---	---
DESIGN3-DETAILED3	---	---	---
REVISIONS 1	---	---	---
REVISIONS 2	---	---	---
REVISIONS 3	---	---	---
REVISIONS 4	---	---	---
FIELD CHANGES	---	---	---

WEST APPROACH BRIDGE
MAINE OWNED RR & CITY STREETS
BATH SAGADAHOC COUNTY

PLAN AND ELEVATION (UNIT 2)

SHEET NUMBER
78
OF 145

Filename: ...\MSTA\078_bridgeplan_03.dgn Division: HIGHWAY Username: kwentworth Date:12/21/2015

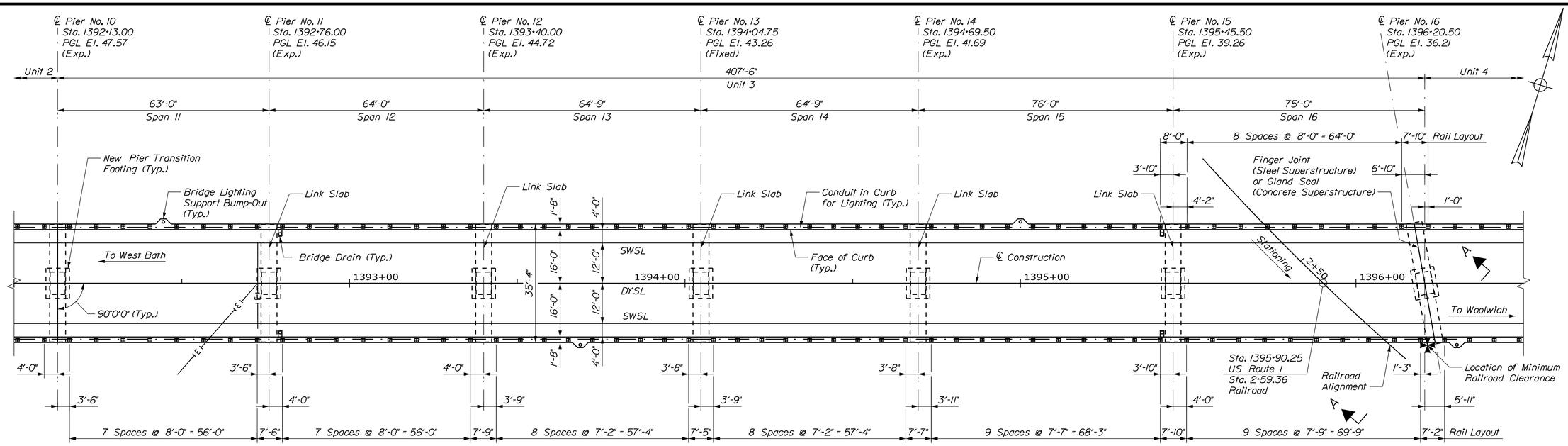

PLAN

(Median and Roadway below Bridge not Shown)
Scale: 1/16" = 1'-0"

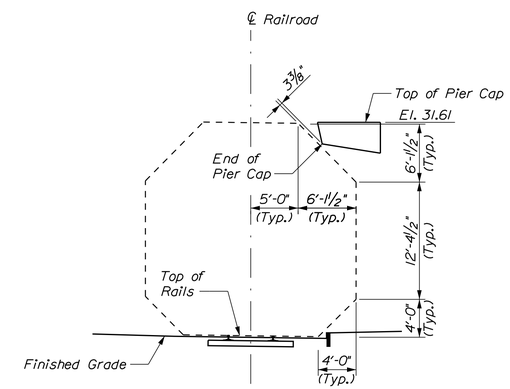

VIEW A-A

Scale: 1/8" = 1'-0"

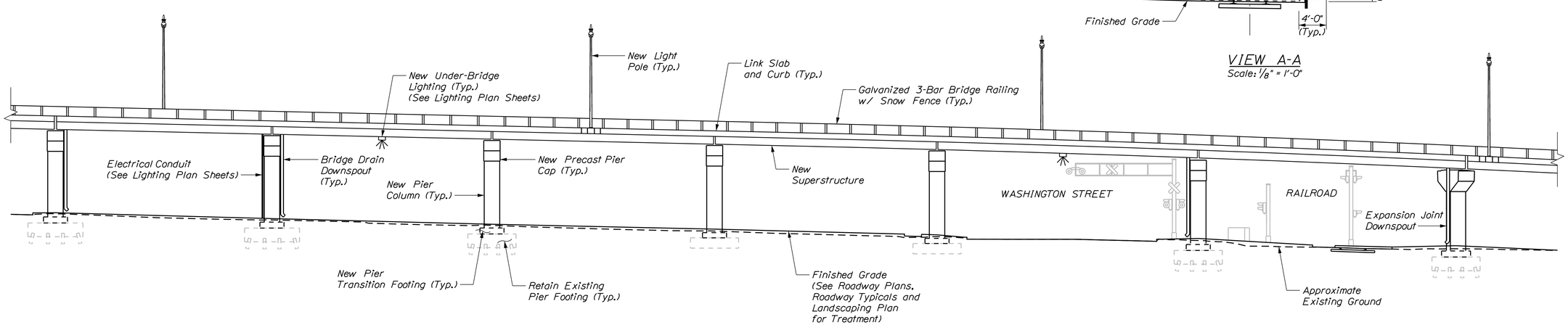

ELEVATION

Scale: 1/16" = 1'-0"

STRIPING LEGEND

SWSL	Single White Solid Line
DYSL	Double Yellow Solid Line

NOTES

1. Cast-in-Place pier columns shown.
2. Multiple centerline at bearing lines at piers not shown for clarity.
3. See Lighting Plan Sheets for lighting locations and details.

STATE OF MAINE
DEPARTMENT OF TRANSPORTATION

NHPP - 1927(300)

WIN 19273.00

BRIDGE NO. 3838

BRIDGE PLANS

vhb

PROJ. MANAGER	J. KITTREDGE	BY	DATE
DESIGN-DETAILED	KZS	KDW	12/15
CHECKED-REVIEWED	JGM	SMH	12/15
DESIGN2-DETAILED2	---	---	---
DESIGN3-DETAILED3	---	---	---
REVISIONS 1	---	---	---
REVISIONS 2	---	---	---
REVISIONS 3	---	---	---
REVISIONS 4	---	---	---
FIELD CHANGES	---	---	---

WEST APPROACH BRIDGE
MAINE OWNED RR & CITY STREETS
BATH SAGADAHOC COUNTY

PLAN AND ELEVATION (UNIT 3)

SHEET NUMBER
79
OF 145

Filename: ...\MSTA\079_bridgeplan_04.dgn Division: HIGHWAY Username: kwentworth Date:12/21/2015

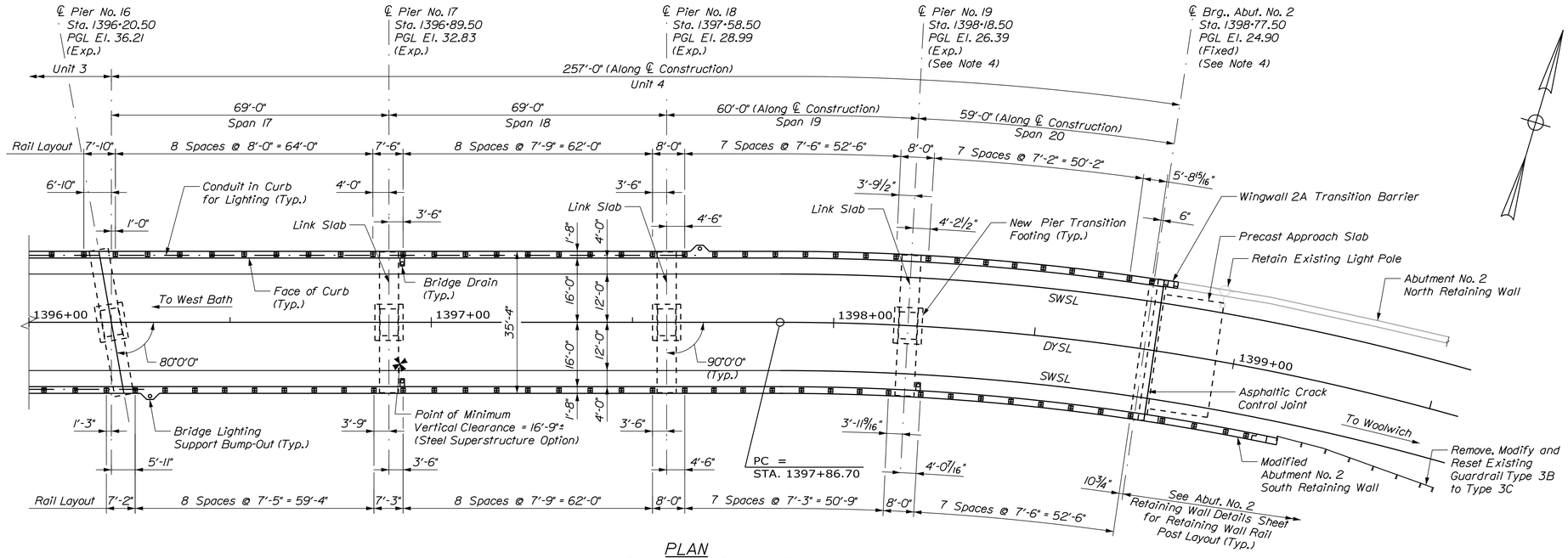

PLAN

(Median and Roadway below Bridge not Shown)
Scale: 1/16" = 1'-0"

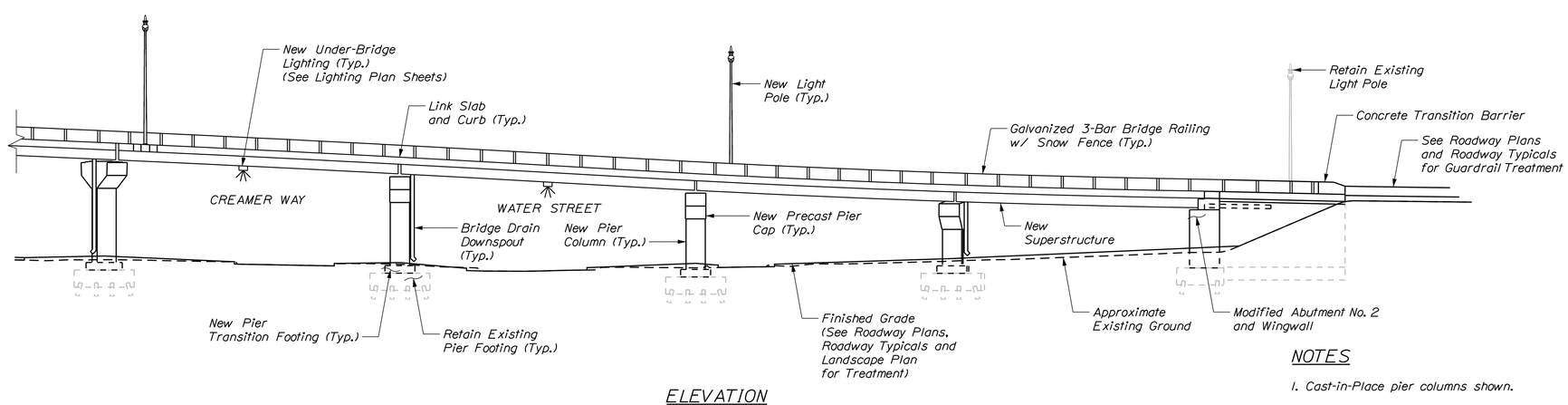

ELEVATION

Scale: 1/16" = 1'-0"

STRIPING LEGEND

SWSL	Single White Solid Line
DYSL	Double Yellow Solid Line

NOTES

1. Cast-in-Place pier columns shown.
2. Multiple centerline of bearing lines at piers not shown for clarity.
3. See Lighting Plan Sheets for lighting locations and details.
4. See Survey Layout Sheets for additional information.
5. See Unit 4 Curb and Fascia Layout Sheet for Curb Details.

STATE OF MAINE
DEPARTMENT OF TRANSPORTATION

NHPP - 1927(300)

WIN 19273.00

BRIDGE NO. 3838

BRIDGE PLANS

vhb

		BY	DATE
PROJ. MANAGER	J. KITTREDGE		
DESIGN-DETAILED	KZS	KDW	12/15
CHECKED-REVIEWED	JGM	SMH	12/15
DESIGN2-DETAILED2	---	---	---
DESIGN3-DETAILED3	---	---	---
REVISIONS 1	---	---	---
REVISIONS 2	---	---	---
REVISIONS 3	---	---	---
REVISIONS 4	---	---	---
FIELD CHANGES	---	---	---

WEST APPROACH BRIDGE
MAINE OWNED RR & CITY STREETS
BATH SAGADAHOC COUNTY

PLAN AND ELEVATION (UNIT 4)

SHEET NUMBER
80
OF 145

Filename: ...\MSTA\080_bridgeplan_05.dgn Division: HIGHWAY Username: kwentworth Date:12/21/2015

STEEL SUPERSTRUCTURE

Distance "X" (ft)	0 Pier No. 18	10'	20'	30'	40'	50'
"A"	17'-8"	17'-8"	17'-8"	17'-8"	17'-6 11/16"	17'-3 1/2"
"B"	17'-8"	17'-8"	17'-8"	17'-8/16"	17'-9 3/8"	18'-0 3/4"
"C"	16'-0"	16'-0"	16'-0"	16'-0"	15'-10 11/16"	15'-7 1/2"
"D"	16'-0"	16'-0"	16'-0"	16'-0/16"	16'-1 3/8"	16'-4 3/4"
"M"	N/A	N/A	N/A	1/16"	1 3/8"	4 5/8"

Distance "X" (ft)	60'	70'	80'	90'	100'	110'
"A"	16'-10 7/16"	16'-3 1/2"	15'-6 5/8"	14'-7 7/8"	13'-7 3/16"	12'-4 9/16"
"B"	18'-6 1/8"	19'-1 1/2"	19'-10 7/8"	20'-10 1/4"	21'-11 11/16"	23'-3 7/16"
"C"	15'-2 7/16"	14'-7 7/16"	13'-10 9/16"	12'-11 3/4"	11'-11 1/16"	10'-8 3/8"
"D"	16'-10 1/16"	17'-5 7/16"	18'-2 13/16"	19'-2 3/16"	20'-3 9/16"	21'-7"
"M"	9 13/16"	1'-5"	2'-2 1/8"	3'-1 3/16"	4'-2 1/4"	5'-5 1/4"

Distance "X" (ft)	118.83'	119.64'	123.46'
"A"	N/A	11'-0 5/8"	10'-5 7/8"
"B"	24'-6 9/16"	24'-8 1/16"	N/A
"C"	N/A	9'-4 7/16"	8'-9 5/8"
"D"	22'-10 5/16"	22'-11 3/16"	N/A
"M"	6'-8 3/16"	6'-9 5/8"	7'-4 5/8"

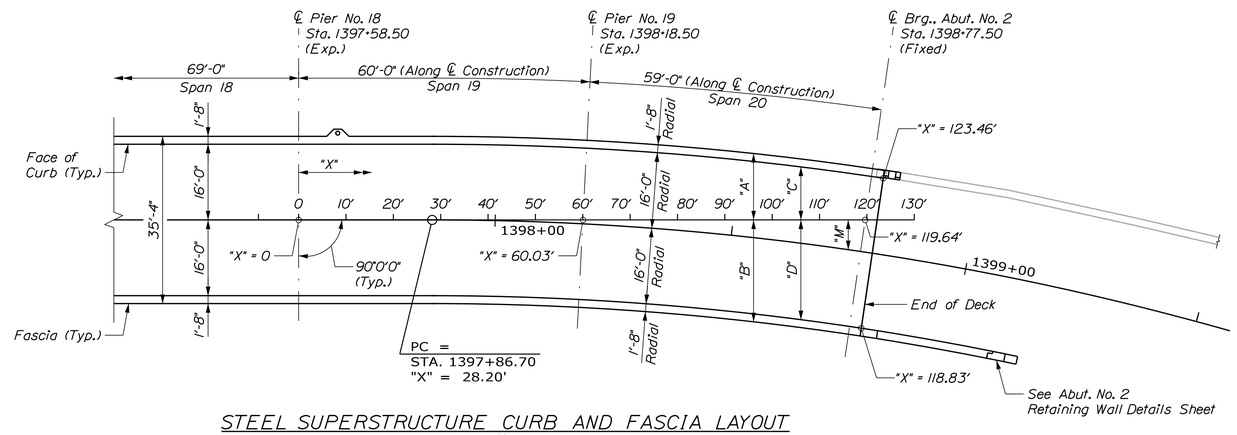

STEEL SUPERSTRUCTURE CURB AND FASCIA LAYOUT

Scale: 1/16" = 1'-0"

CONCRETE SUPERSTRUCTURE

Distance "X" (ft)	0 Pier No. 18	10'	20'	30'	40'	50'
"A"	17'-8"	17'-8"	17'-8"	17'-8"	17'-6 11/16"	17'-3 1/2"
"B"	17'-8"	17'-9 5/8"	17'-11 5/16"	18'-0 15/16"	18'-2 9/16"	18'-4 3/16"
"C"	16'-0"	16'-0"	16'-0"	16'-0"	15'-10 11/16"	15'-7 1/2"
"D"	16'-0"	16'-0"	16'-0"	16'-0/16"	16'-1 3/8"	16'-4 3/4"
"M"	N/A	N/A	N/A	1/16"	1 3/8"	4 5/8"

Distance "X" (ft)	60'	70'	80'	90'	100'	110'
"A"	16'-10 7/16"	16'-3 1/2"	15'-6 5/8"	14'-7 7/8"	13'-7 3/16"	12'-4 9/16"
"B"	18'-6 7/8"	19'-6 13/16"	20'-6 3/4"	21'-6 11/16"	22'-6 5/8"	23'-6 5/8"
"C"	15'-2 7/16"	14'-7 7/16"	13'-10 9/16"	12'-11 3/4"	11'-11 1/16"	10'-8 3/8"
"D"	16'-10 1/16"	17'-5 7/16"	18'-2 13/16"	19'-2 3/16"	20'-3 9/16"	21'-7"
"M"	9 13/16"	1'-5"	2'-2 1/8"	3'-1 3/16"	4'-2 1/4"	5'-5 1/4"

Distance "X" (ft)	118.83'	119.64'	123.46'
"A"	N/A	11'-0 5/8"	10'-5 7/8"
"B"	24'-6 9/16"	24'-8 1/16"	N/A
"C"	N/A	9'-4 7/16"	8'-9 5/8"
"D"	22'-10 5/16"	22'-11 3/16"	N/A
"M"	6'-8 3/16"	6'-9 5/8"	7'-4 5/8"

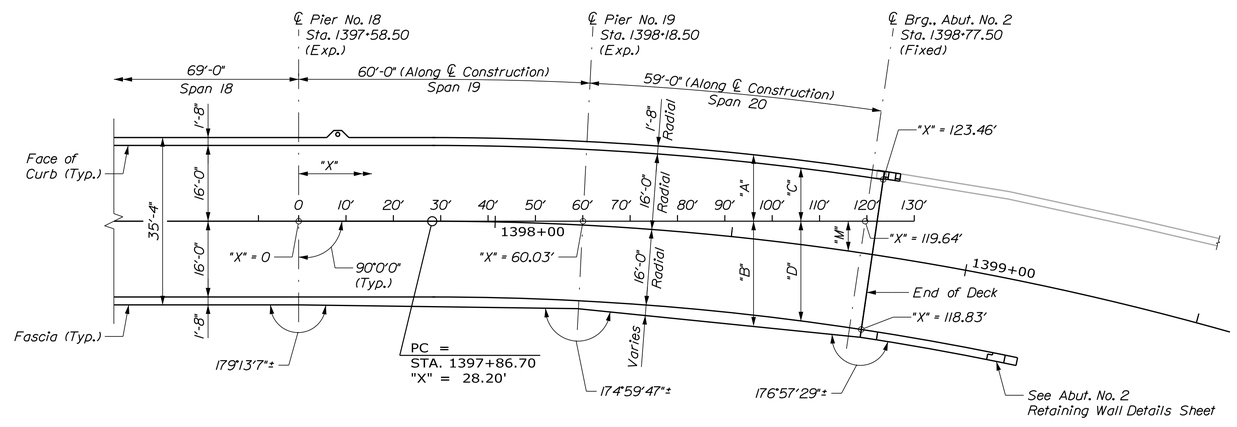

CONCRETE SUPERSTRUCTURE CURB AND FASCIA LAYOUT

Scale: 1/16" = 1'-0"

NOTE

1. See Survey Layout Sheets for additional information.

STATE OF MAINE
DEPARTMENT OF TRANSPORTATION

NHPP - 1927(300)

WIN 19273.00

BRIDGE NO. 3838

BRIDGE PLANS

vhb

		BY	DATE
PROJ. MANAGER	J. KITTREDGE		
DESIGN-DETAILED	KDW/LSC	KDW	12/15
CHECKED-REVIEWED	JGM/JAW	SMH	12/15
DESIGN2-DETAILED2	---	---	---
DESIGN3-DETAILED3	---	---	---
REVISIONS 1	---	---	---
REVISIONS 2	---	---	---
REVISIONS 3	---	---	---
REVISIONS 4	---	---	---
FIELD CHANGES	---	---	---

WEST APPROACH BRIDGE
MAINE OWNED RR & CITY STREETS
BATH SAGADAHOC COUNTY

UNIT 4 CURB AND FASCIA LAYOUT

SHEET NUMBER

81

OF 145

Filename: ...\00\BRIDGE\MSTA\081_Curb.dgn Division: HIGHWAY Username: kwentworth Date:12/21/2015

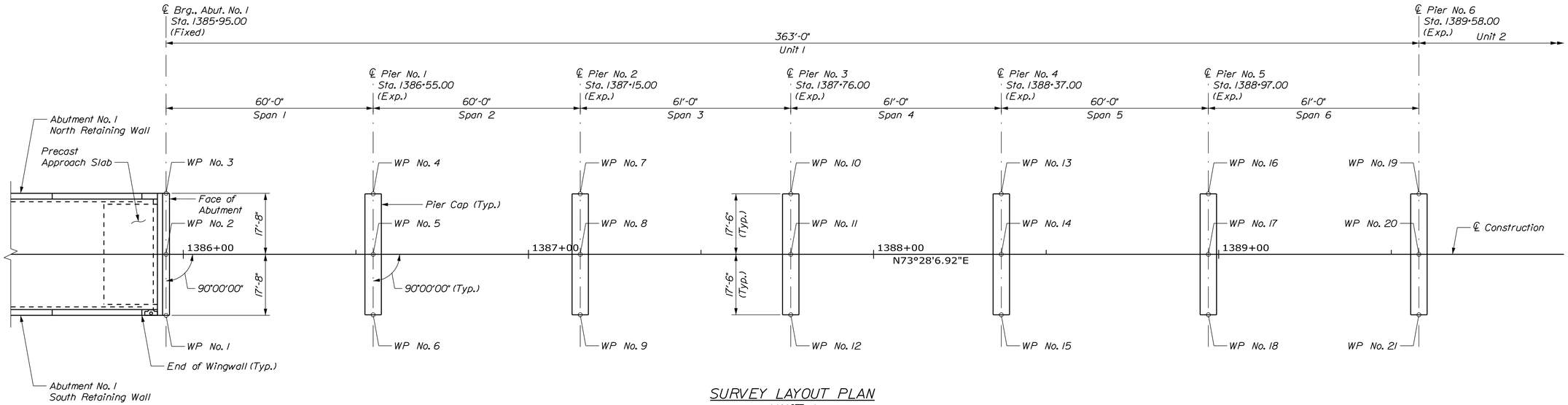

SURVEY LAYOUT PLAN
UNIT 1

	Working Point Coordinates	
WP No.	Northing	Easting
1	393185.9690	1130667.3062
2	393202.9054	1130662.2793
3	393219.8418	1130657.2524
4	393236.7545	1130714.8196
5	393219.9779	1130719.7991
6	393203.2013	1130724.7786
7	393253.8270	1130772.3395
8	393237.0504	1130777.3189
9	393220.2737	1130782.2984
10	393271.1840	1130830.8180
11	393254.4074	1130835.7974
12	393237.6307	1130840.7769

	Working Point Coordinates	
WP No.	Northing	Easting
13	393288.5410	1130889.2965
14	393271.7643	1130894.2759
15	393254.9877	1130899.2554
16	393305.6134	1130946.8163
17	393288.8368	1130951.7958
18	393272.0602	1130956.7752
19	393322.9704	1131005.2948
20	393306.1938	1131010.2743
21	393289.4172	1131015.2537
22	393341.1810	1131066.6493
23	393324.4044	1131071.6288
24	393307.6278	1131076.6082

	Working Point Coordinates	
WP No.	Northing	Easting
25	393359.1071	1131127.0451
26	393342.3305	1131132.0246
27	393325.5539	1131137.0040
28	393377.3177	1131188.3996
29	393360.5411	1131193.3791
30	393343.7645	1131198.3585
31	393395.5284	1131249.7541
32	393378.7517	1131254.7336
33	393361.9751	1131259.7130

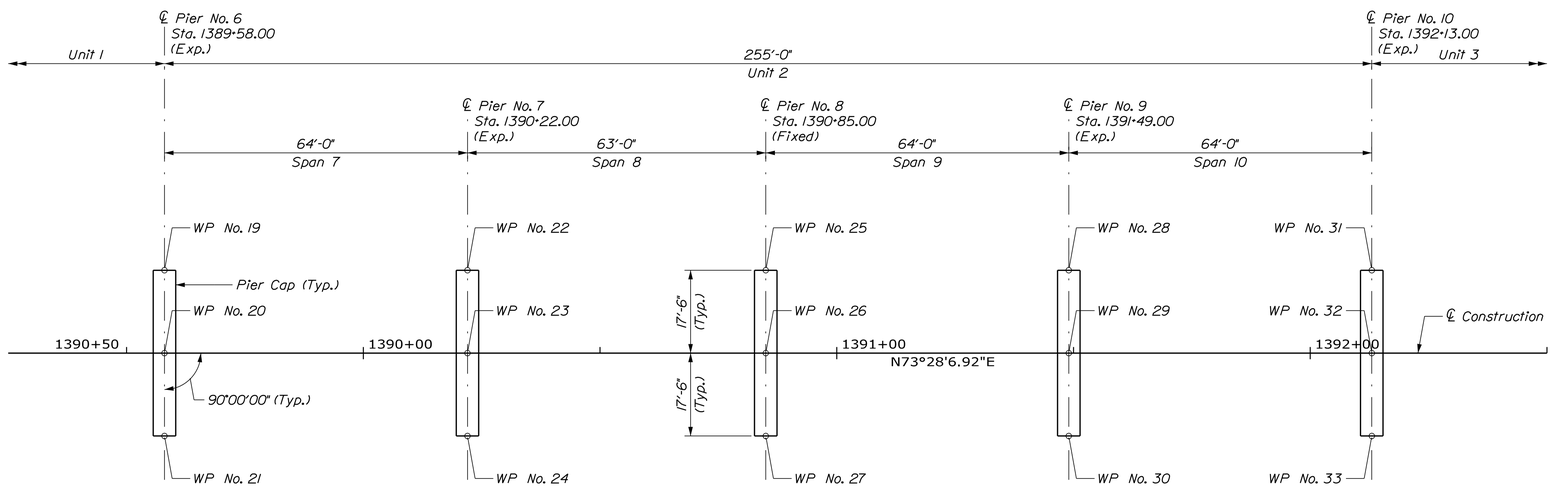

SURVEY LAYOUT PLAN
UNIT 2

STATE OF MAINE
DEPARTMENT OF TRANSPORTATION

NHPP - 1927(300)

WIN 19273.00

BRIDGE NO. 3838

BRIDGE PLANS

vhb

		BY	DATE
PROJ. MANAGER	J. KITTREDGE		
DESIGN-DETAILED	KZS	KDW	12/15
CHECKED-REVIEWED	JGM	SMH	12/15
DESIGN2-DETAILED2	---	---	---
DESIGN3-DETAILED3	---	---	---
REVISIONS 1	---	---	---
REVISIONS 2	---	---	---
REVISIONS 3	---	---	---
REVISIONS 4	---	---	---
FIELD CHANGES	---	---	---

WEST APPROACH BRIDGE
MAINE OWNED RR & CITY STREETS
BATH SAGADAHOC COUNTY

SURVEY LAYOUT
UNIT 1 AND UNIT 2

SHEET NUMBER
82
OF 145

Filename: ...\BRIDGE\MSTA\082_survey_01.dgn Division: HIGHWAY Username: kwentworth Date:12/21/2015

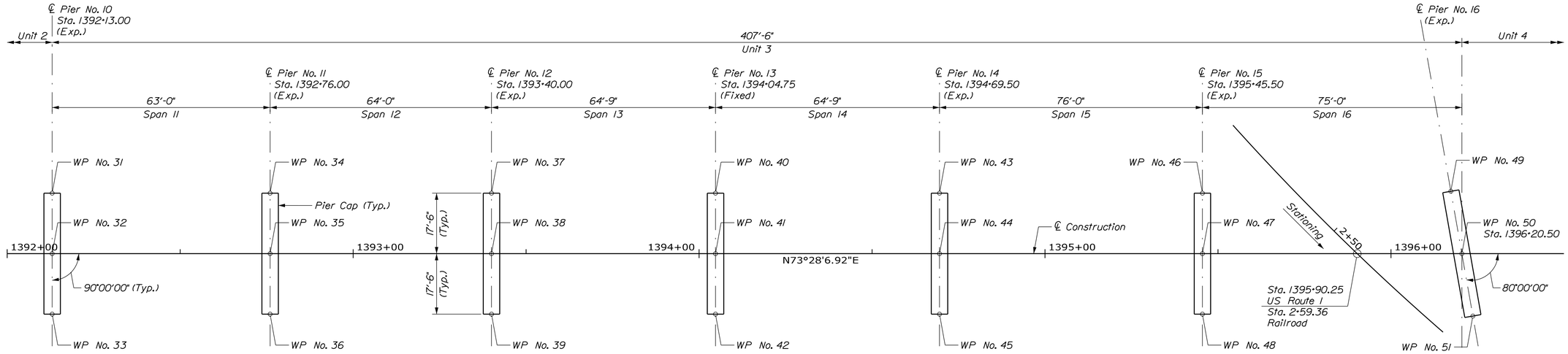

SURVEY LAYOUT PLAN
UNIT 3

WP No.	Working Point Coordinates	
	Northing	Easting
31	393395.5284	1131249.7541
32	393378.7517	1131254.7336
33	393361.9751	1131259.7130
34	393413.4544	1131310.1499
35	393396.6778	1131315.1294
36	393379.9012	1131320.1089
37	393431.6651	1131371.5044
38	393414.8884	1131376.4839
39	393398.1118	1131381.4633
40	393450.0891	1131433.5779
41	393433.3125	1131438.5574
42	393416.5359	1131443.5368

WP No.	Working Point Coordinates	
	Northing	Easting
43	393468.5131	1131495.6514
44	393451.7365	1131500.6308
45	393434.9599	1131505.6103
46	393490.1382	1131568.5098
47	393473.3616	1131573.4893
48	393456.5850	1131578.4688
49	393511.1048	1131637.1998
50	393494.7022	1131645.3891
51	393478.2995	1131653.5784
52	393531.1121	1131706.5574
53	393514.3355	1131711.5369
54	393497.5589	1131716.5164

WP No.	Working Point Coordinates	
	Northing	Easting
55	393550.7454	1131772.7052
56	393533.9688	1131777.6847
57	393517.1922	1131782.6642
58	393567.2636	1131831.3140
59	393550.2530	1131835.4239
60	393533.2424	1131839.5338
61	393578.4414	1131890.8791
62	393561.3520	1131893.3440
63	393543.9407	1131895.8553

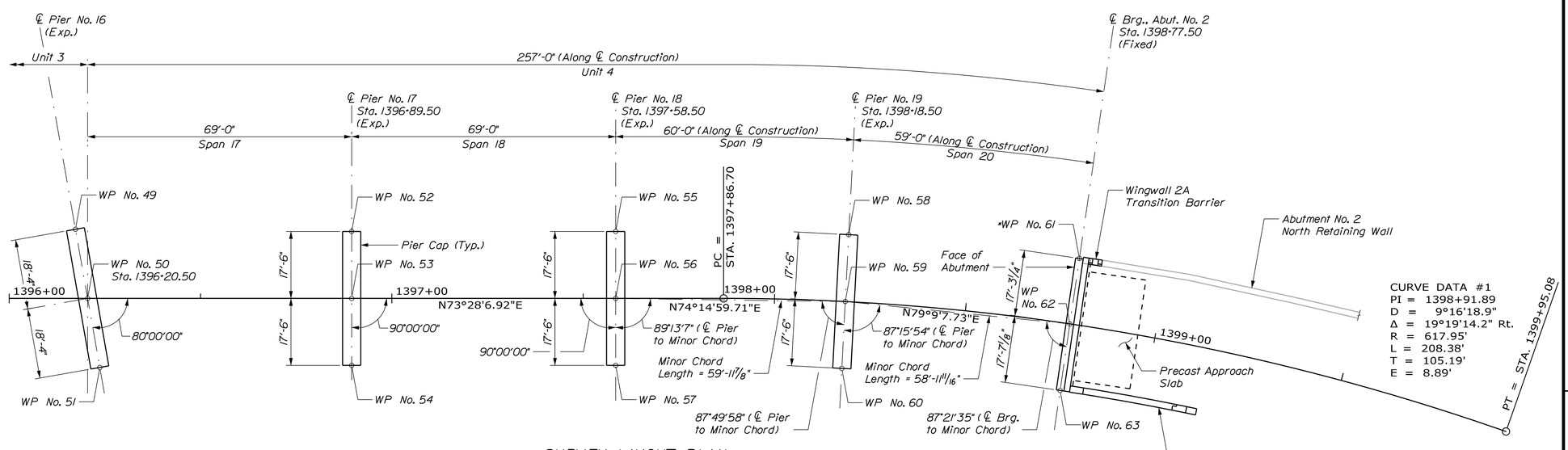

CURVE DATA #1
PI = 1398+91.89
D = 9°16'18.9"
Δ = 19°19'14.2" Rt.
R = 617.95'
L = 208.38'
T = 105.19'
E = 8.89'

SURVEY LAYOUT PLAN
UNIT 4

(* WP No. 61 is approximate. It coincides with Centerline Bearing and Edge of Seat at end of Abutment Seat)

STATE OF MAINE
DEPARTMENT OF TRANSPORTATION

NHPP - 1927(300)

WIN 19273.00

BRIDGE NO. 3838

BRIDGE PLANS

vhb

		BY	DATE
PROJ. MANAGER	J. KITTREDGE		
DESIGN-DETAILED	KZS	KDW	12/15
CHECKED-REVIEWED	JGM	SMH	12/15
DESIGN2-DETAILED2	---	---	---
DESIGN3-DETAILED3	---	---	---
REVISIONS 1	---	---	---
REVISIONS 2	---	---	---
REVISIONS 3	---	---	---
REVISIONS 4	---	---	---
FIELD CHANGES	---	---	---

WEST APPROACH BRIDGE
MAINE OWNED RR & CITY STREETS
BATH SAGADAHOC COUNTY

SURVEY LAYOUT
UNIT 3 AND UNIT 4

SHEET NUMBER
83
OF 145

Filename: ...\BRIDGE\MSTA\083_survey_02.dgn Division: HIGHWAY Username: kwentworth Date:12/21/2015

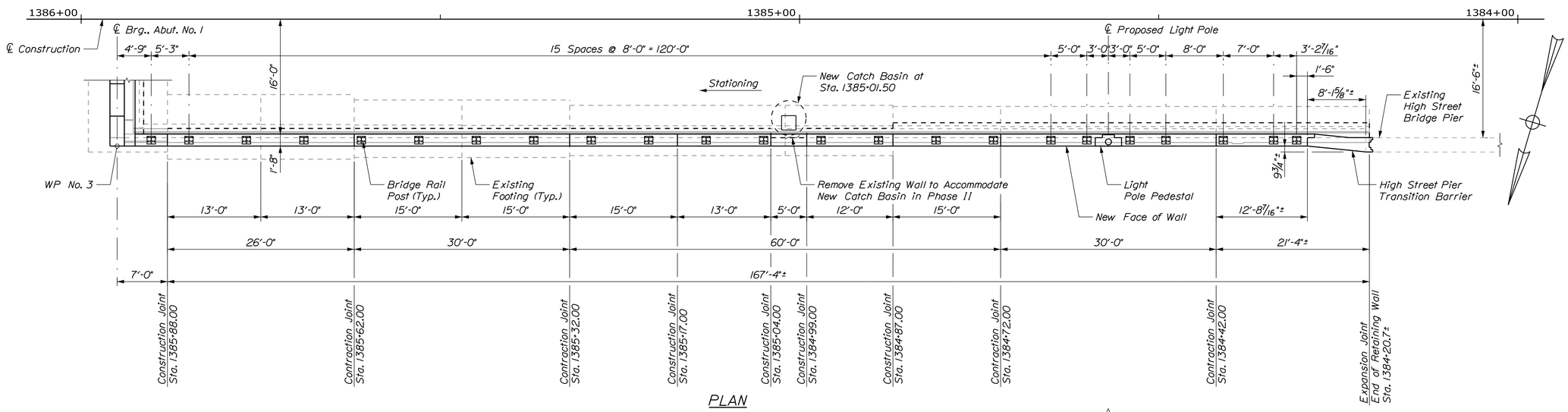

PLAN

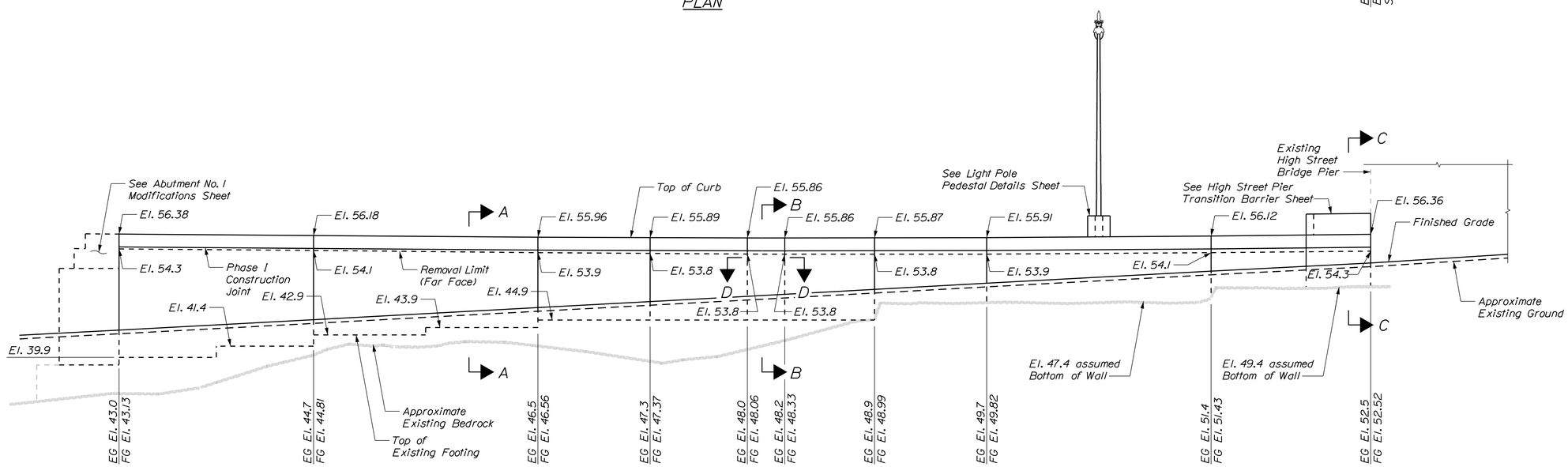

ELEVATION
(3-Bar Rail and Rail Posts not Shown for Clarity)

ABUTMENT NO. 1
NORTH RETAINING WALL
Scale: 1/8" = 1'-0"

RETAINING WALL NOTES

1. Reinforcing steel shall have a minimum concrete cover of 2 inches in the walls.

2. The Contractor shall install Transition Barrier vertical closed stirrups, as shown in Standard Details Section 526, prior to the placement of the curb concrete.

3. Cover joints where waterstops are not required in accordance with Standard Details Section 502. In cold weather applications, use roofing felt and plastic roofing cement specifically formulated for cold weather conditions.

4. Existing footing elevations to be confirmed by Contractor.

5. See Abut. No. 1 Retaining Wall Details (3 of 3) Sheet for Section A-A, Section B-B, Section C-C and Section D-D.

6. Gravity Wall extents are based on 1959 as-built field notes.

STATE OF MAINE
DEPARTMENT OF TRANSPORTATION

NHPP - 1927(300)

WIN 19273.00

BRIDGE NO. 3838

BRIDGE PLANS

vhb

PROJ. MANAGER	J. KITTREDGE	BY	DATE
DESIGN-DETAILED	JGM	KDW	12/15
CHECKED-REVIEWED	KZS	SMH	12/15
DESIGN2-DETAILED2	---	---	---
DESIGN3-DETAILED3	---	---	---
REVISIONS 1	---	---	---
REVISIONS 2	---	---	---
REVISIONS 3	---	---	---
REVISIONS 4	---	---	---
FIELD CHANGES	---	---	---

WEST APPROACH BRIDGE
MAINE OWNED RR & CITY STREETS
BATH SAGADAHOC COUNTY

ABUT. NO. 1 RETAINING WALL DETAILS (1 OF 3)

SHEET NUMBER
84
OF 145

Filename: ...\BRIDGE\MSTA\084_retwall_01.dgn Division: HIGHWAY Username: kwentworth Date:12/21/2015

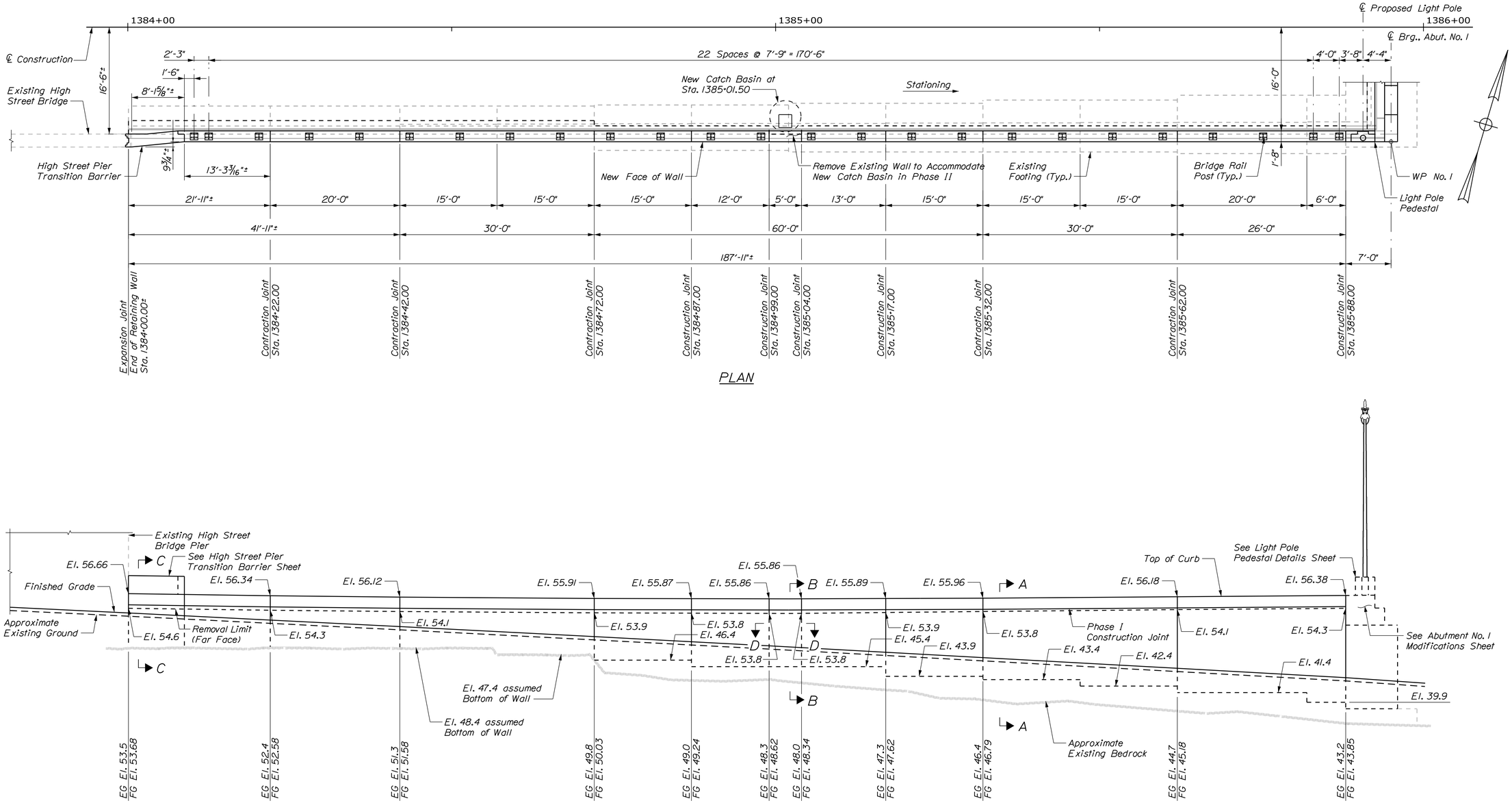

ABUTMENT NO. 1
SOUTH RETAINING WALL

Scale: 1/8" = 1'-0"

NOTES

1. See Abut. No. 1 Retaining Wall Details (1 of 3) for Retaining Wall Notes.
2. See Abut. No. 1 Retaining Wall Details (3 of 3) for Section A-A, Section B-B, Section C-C and Section D-D.

STATE OF MAINE
DEPARTMENT OF TRANSPORTATION

NHPP - 1927(300)

WIN 19273.00

BRIDGE NO. 3838

BRIDGE PLANS

vhb

PROJ. MANAGER	J. KITTREDGE		
DESIGN-DETAILED	JGM	KDW	12/15
CHECKED-REVIEWED	KZS	SMH	12/15
DESIGN2-DETAILED2	---	---	---
DESIGN3-DETAILED3	---	---	---
REVISIONS 1	---	---	---
REVISIONS 2	---	---	---
REVISIONS 3	---	---	---
REVISIONS 4	---	---	---
FIELD CHANGES	---	---	---

WEST APPROACH BRIDGE
MAINE OWNED RR & CITY STREETS
BATH SAGADAHOC COUNTY

ABUT. NO. 1 RETAINING WALL DETAILS (2 OF 3)

SHEET NUMBER
85
OF 145

Filename: ...\BRIDGE\MSTA\085_retwall_02.dgn Division: HIGHWAY Username: kwentworth Date:12/21/2015

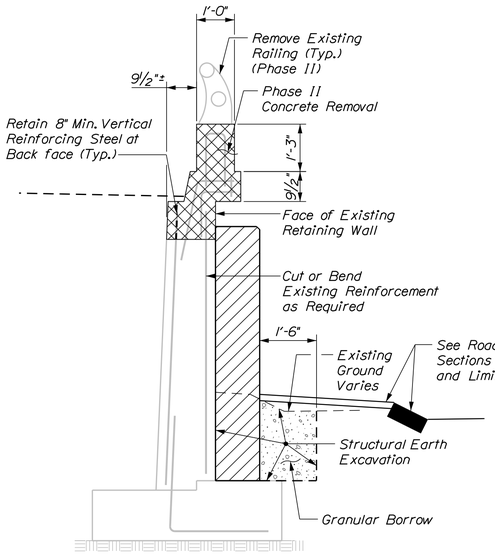

PHASE I/II

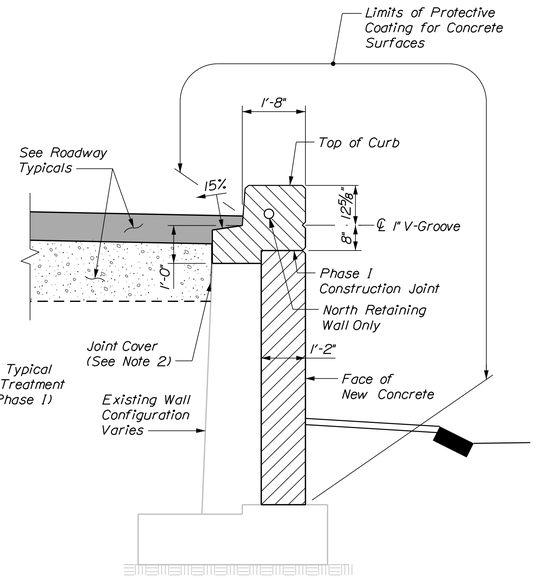

PHASE II/III

SECTION A-A
(3-Bar Rail and Rail Posts not Shown for Clarity)
Not to Scale

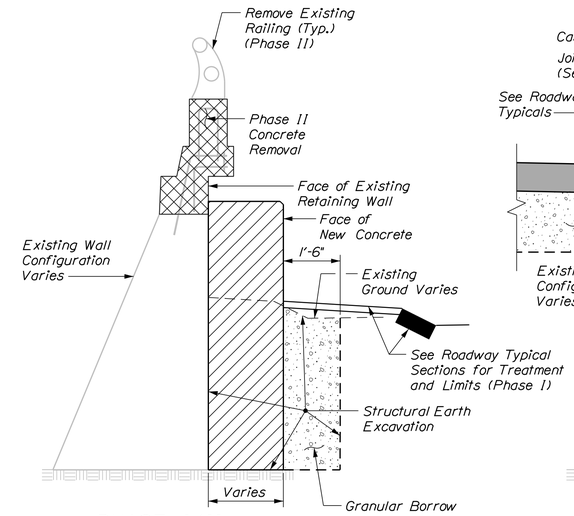

PHASE I/II

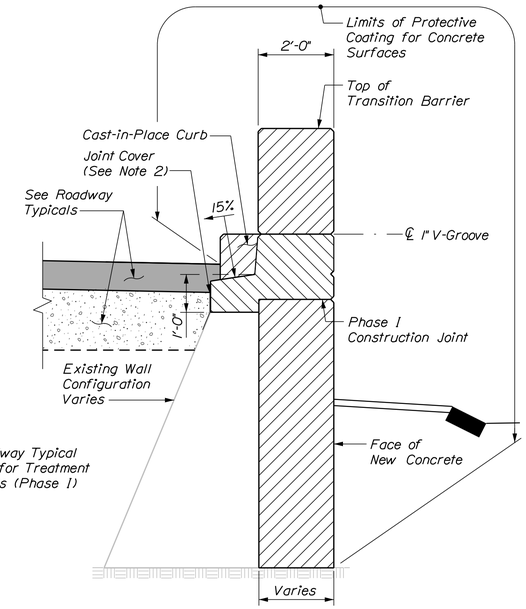

PHASE II/III

SECTION C-C
Scale: ½" = 1'-0"

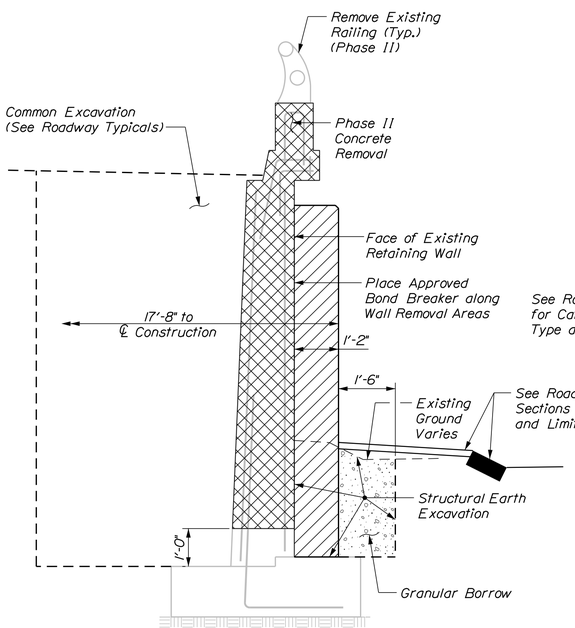

PHASE I/II

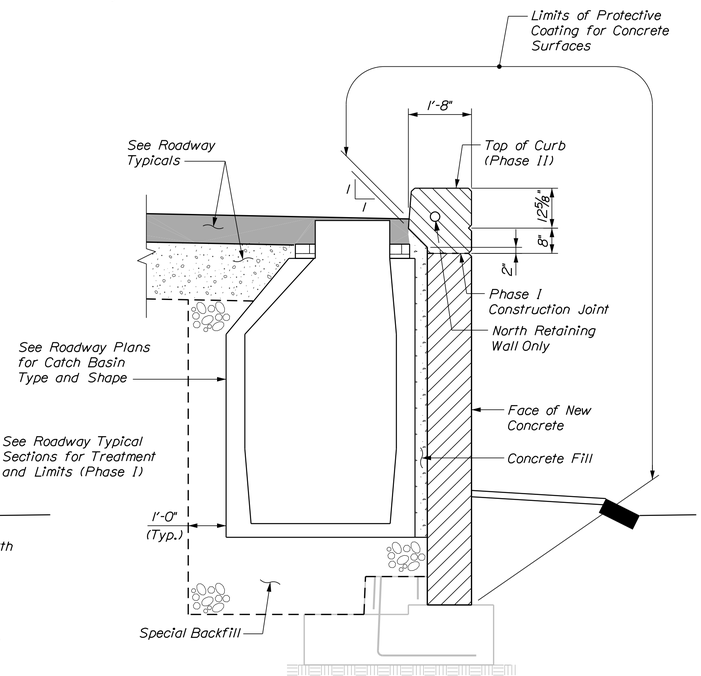

PHASE II/III

SECTION B-B
(3-Bar Rail and Rail Posts not Shown for Clarity)
Not to Scale

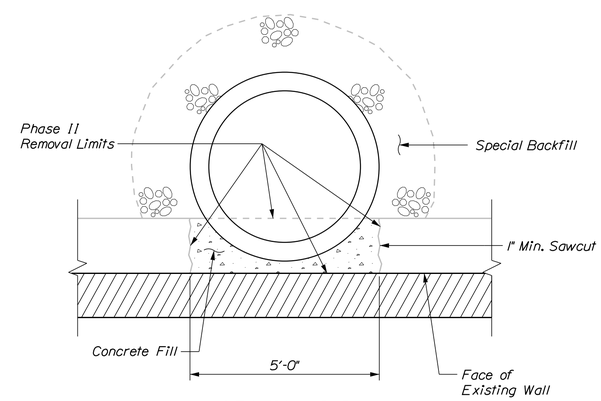

SECTION D-D
Scale: ½" = 1'-0"

NOTES

1. See Abut. No. 1 Retaining Wall Details (1 of 3) and (2 of 3) for section locations.

2. Joint Cover with 2 layers of heavy roofing felt using, plastic roofing cement for cold weather applications as approved by Resident, recess not required.

KEY

= Concrete Removal

STATE OF MAINE
DEPARTMENT OF TRANSPORTATION

NHPP - 1927(300)

WIN 19273.00

BRIDGE NO. 3838

BRIDGE PLANS

vhb

		BY	DATE
PROJ. MANAGER	J. KITTREDGE		
DESIGN-DETAILED	JGM	KDW	12/15
CHECKED-REVIEWED	KZS	SMH	12/15
DESIGN2-DETAILED2	---	---	---
DESIGN3-DETAILED3	---	---	---
REVISIONS 1	---	---	---
REVISIONS 2	---	---	---
REVISIONS 3	---	---	---
REVISIONS 4	---	---	---
FIELD CHANGES	---	---	---

WEST APPROACH BRIDGE
MAINE OWNED RR & CITY STREETS
BATH SAGADAHOC COUNTY

ABUT. NO. 1 RETAINING WALL DETAILS (3 OF 3)

SHEET NUMBER
86
OF 145

Filename: ...\BRIDGE\MSTA\086_retwall_06.dgn Division: HIGHWAY Username: kwentworth Date:12/21/2015

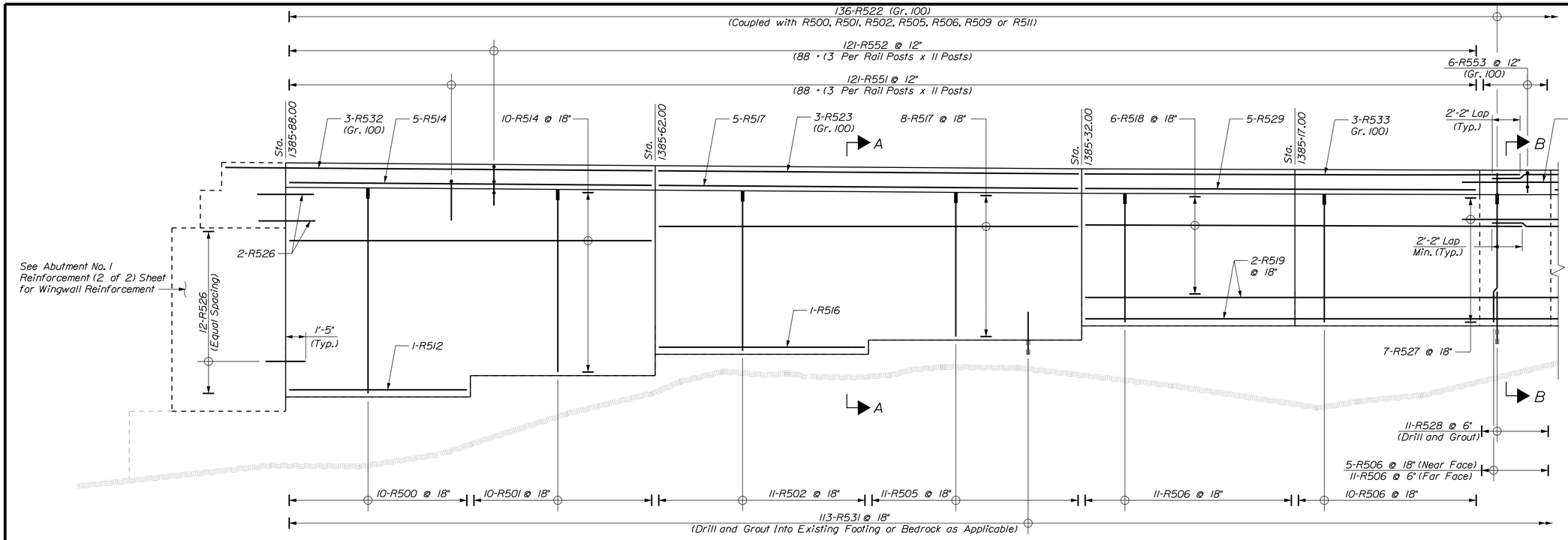

NORTH WALL PARTIAL ELEVATION

(Light Pole Pedestal and Concrete Transition Barrier not Shown for Clarity)
(Dowels into Existing Wall not Shown for Clarity)
Scale: 1/4" = 1'-0"

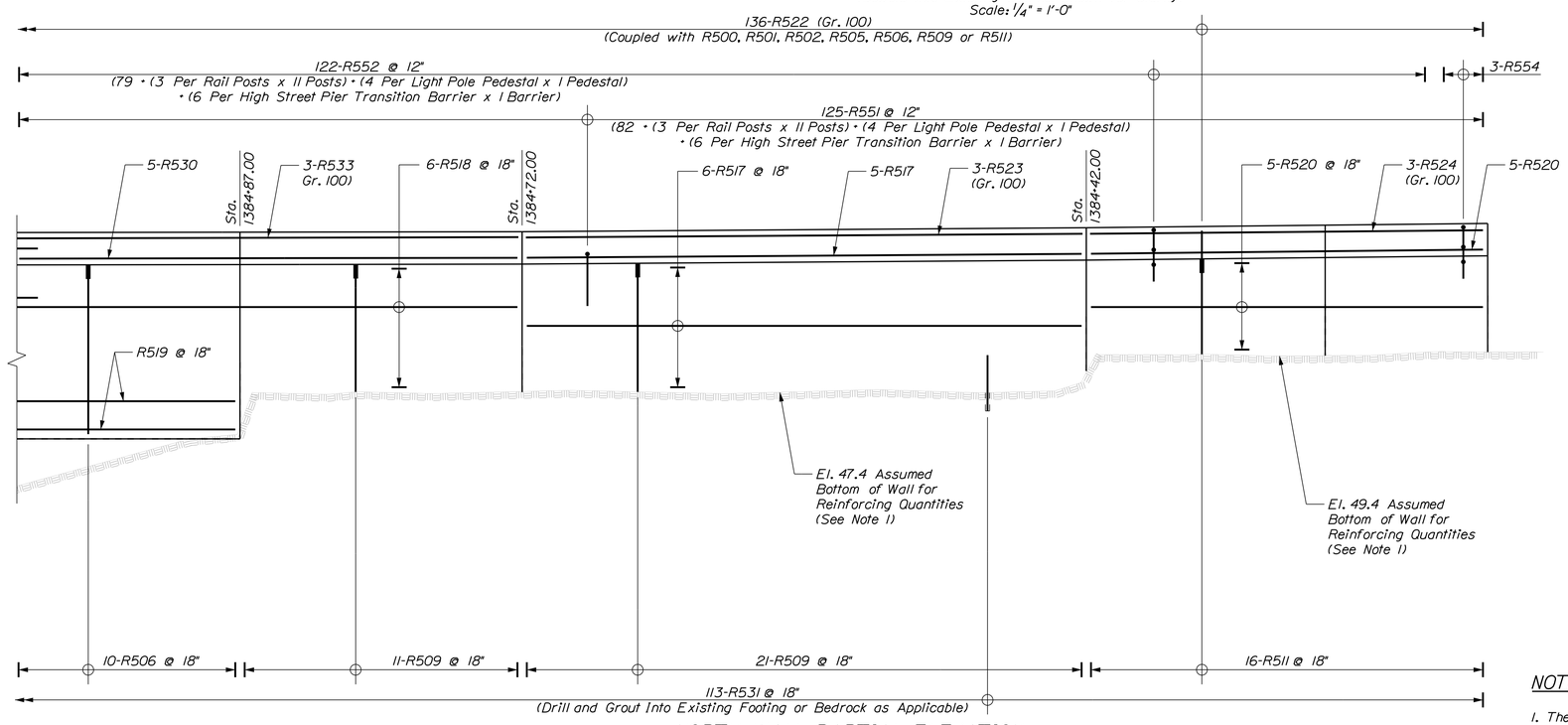

NORTH WALL PARTIAL ELEVATION

(Light Pole Pedestal and Concrete Transition Barrier not Shown for Clarity)
(Dowels into Existing Wall not Shown for Clarity)
Scale: 1/4" = 1'-0"

NOTES

1. The elevations used for reinforcing quantities are the same as those noted on Abut. No. 1 Retaining Wall Details Sheet except for those noted above.
2. Reinforcing may need to be field cut or bent to accommodate field conditions.
3. See Abut. No. 1 Retaining Wall Reinforcement (3 of 3) for Sections A-A and B-B.

STATE OF MAINE
DEPARTMENT OF TRANSPORTATION

NHPP - 1927(300)

WIN 19273.00

BRIDGE NO. 3838

BRIDGE PLANS

vhb

		BY	DATE
PROJ. MANAGER	J. KITTREDGE		
DESIGN-DETAILED	JAW	KDW	12/15
CHECKED-REVIEWED	KZS	SMH	12/15
DESIGN2-DETAILED2	---	---	---
DESIGN3-DETAILED3	---	---	---
REVISIONS 1	---	---	---
REVISIONS 2	---	---	---
REVISIONS 3	---	---	---
REVISIONS 4	---	---	---
FIELD CHANGES	---	---	---

WEST APPROACH BRIDGE
MAINE OWNED RR & CITY STREETS
BATH SAGADAHOC COUNTY

ABUT. NO. 1 RETAINING WALL REINFORCEMENT (1 OF 3)

SHEET NUMBER
87
OF 145

Filename: ...\BRIDGE\MSTA\087_retwall_03.dgn Division: HIGHWAY Username: kwentworth Date:12/21/2015

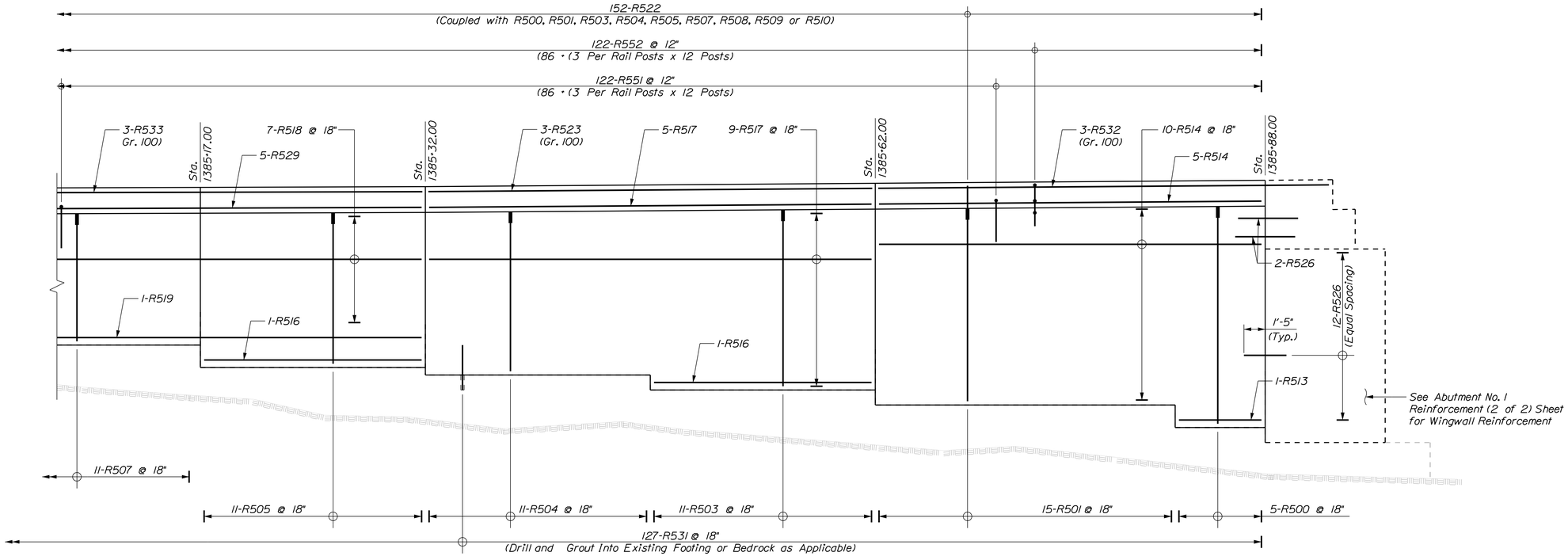

SOUTH WALL PARTIAL ELEVATION

(Light Pole Pedestal and Concrete Transition Barrier not Shown for Clarity)
(Dowels into Existing Wall not Shown for Clarity)
Scale: 1/4" = 1'-0"

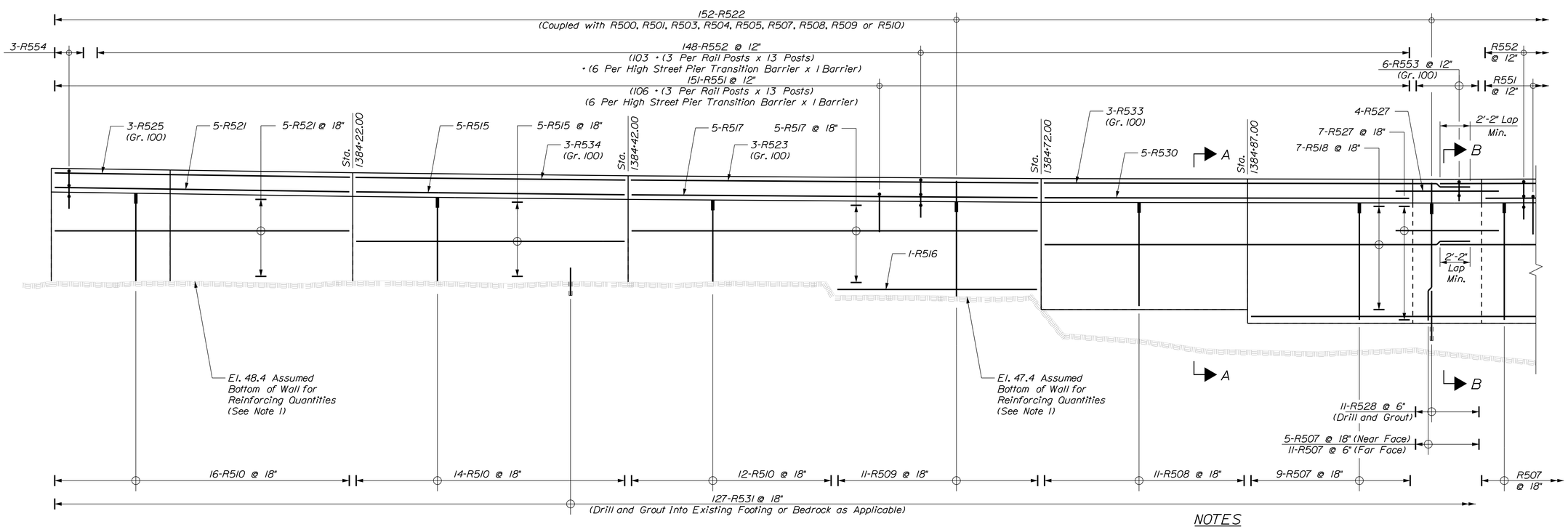

SOUTH WALL PARTIAL ELEVATION

(Light Pole Pedestal and Concrete Transition Barrier not Shown for Clarity)
(Dowels into Existing Wall not Shown for Clarity)
Scale: 1/4" = 1'-0"

NOTES

1. See Abut. No. 1 Retaining Wall Reinforcement (1 of 3) for Notes.
2. See Abut. No. 1 Retaining Wall Reinforcement (3 of 3) for Sections A-A and B-B.

STATE OF MAINE
DEPARTMENT OF TRANSPORTATION

NHPP - 1927(300)

WIN 19273.00

BRIDGE NO. 3838

BRIDGE PLANS

vhb

		BY	DATE
PROJ. MANAGER	J. KITTREDGE		
DESIGN-DETAILED	JAW	KDW	12/15
CHECKED-REVIEWED	KZS	SMH	12/15
DESIGN2-DETAILED2	---	---	---
DESIGN3-DETAILED3	---	---	---
REVISIONS 1	---		---
REVISIONS 2	---		---
REVISIONS 3	---		---
REVISIONS 4	---		---
FIELD CHANGES	---		---

WEST APPROACH BRIDGE
MAINE OWNED RR & CITY STREETS
BATH SAGADAHOC COUNTY

ABUT. NO. 1 RETAINING WALL REINFORCEMENT (2 OF 3)

SHEET NUMBER
88
OF 145

Filename: ...\BRIDGE\MSTA\088_retwall_05.dgn Division: HIGHWAY Username: kwentworth Date:12/21/2015

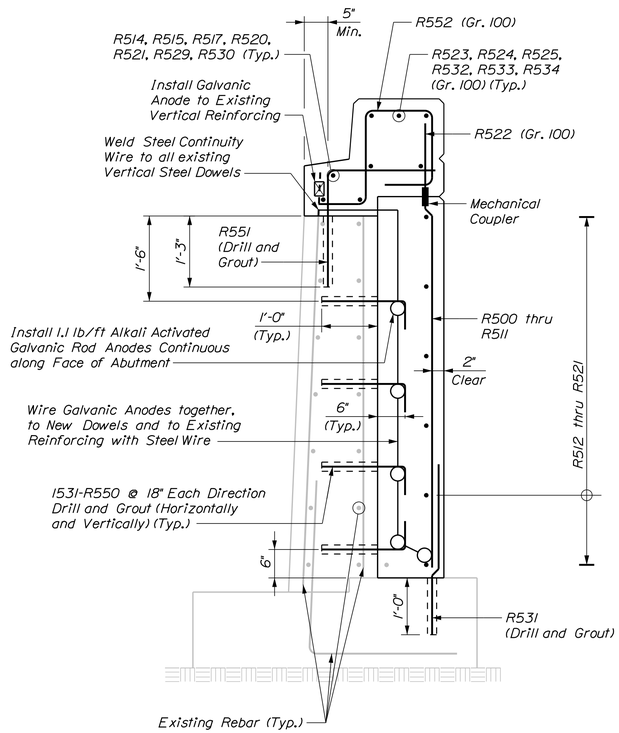

SECTION A-A
Scale: 3/4" = 1'-0"

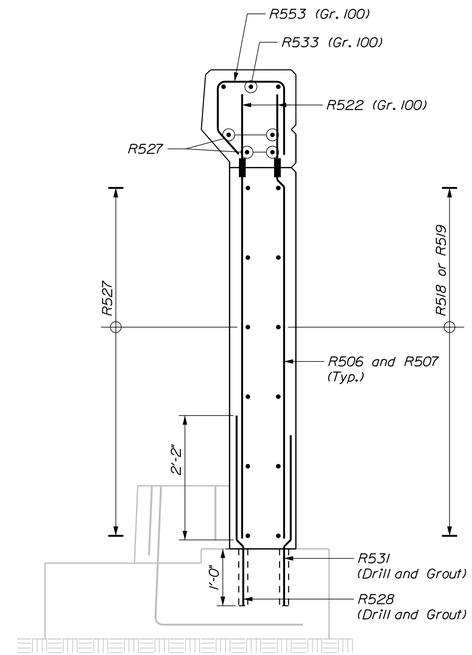

SECTION B-B
Scale: 3/4" = 1'-0"

STATE OF MAINE
DEPARTMENT OF TRANSPORTATION

NHPP - 1927(300)

WIN 19273.00

BRIDGE NO. 3838

BRIDGE PLANS

vhb

PROJ. MANAGER	J. KITTREDGE	BY	DATE
DESIGN-DETAILED	JGM	KDW	12/15
CHECKED-REVIEWED	KZS/JAW	SMH	12/15
DESIGN2-DETAILED2	---	---	---
DESIGN3-DETAILED3	---	---	---
REVISIONS 1	---	---	---
REVISIONS 2	---	---	---
REVISIONS 3	---	---	---
REVISIONS 4	---	---	---
FIELD CHANGES	---	---	---

WEST APPROACH BRIDGE
MAINE OWNED RR & CITY STREETS
BATH SAGADAHOC COUNTY

ABUT. NO. 1 RETAINING WALL REINFORCEMENT (3 OF 3)

SHEET NUMBER
89
OF 145

Filename: ...\BRIDGE\MSTA\089_retwall_07.dgn Division: HIGHWAY Username: kwentworth Date:12/21/2015

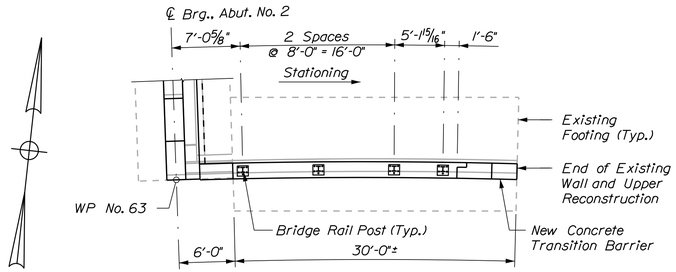

PLAN
(Approach Slab not Shown)

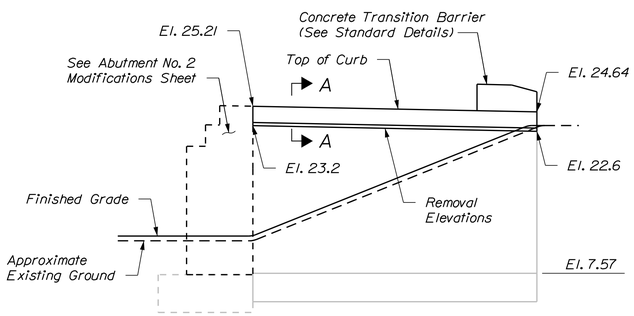

MASONRY ELEVATION
(3-Bar Rail and Rail Posts not Shown for Clarity)

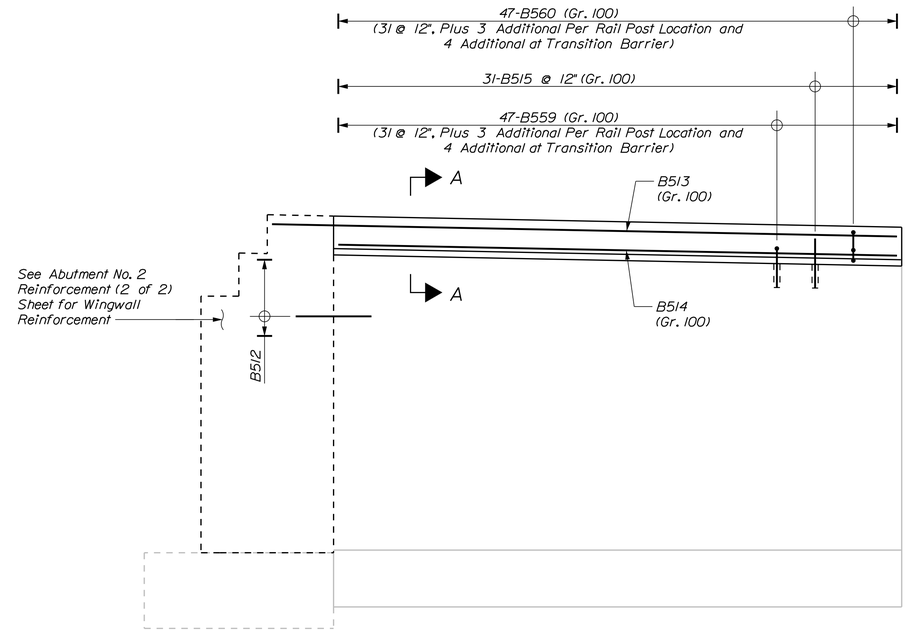

REINFORCING ELEVATION
(Concrete Transition Barrier not Shown for Clarity)
Scale: 1/4" = 1'-0"

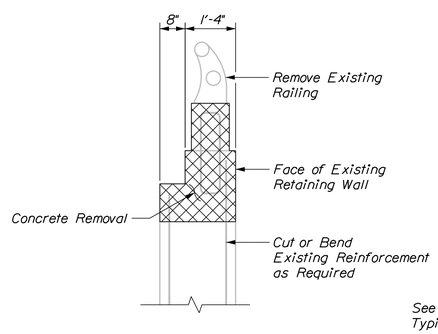

REMOVAL

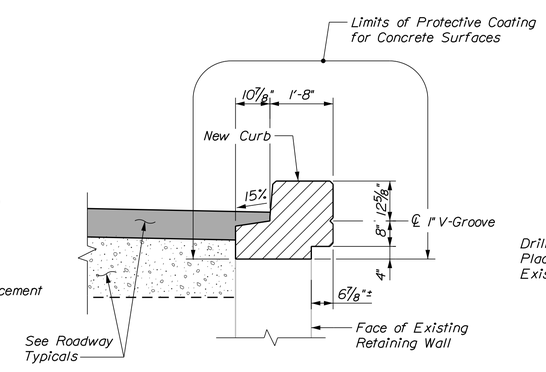

NEW MASONRY
(3-Bar Rail and Rail Posts not Shown)

SECTION A-A

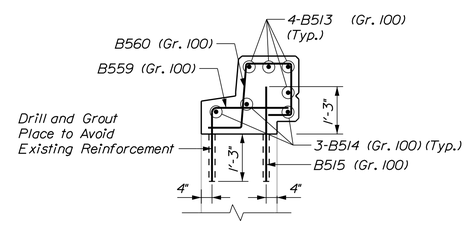

REINFORCING

ABUTMENT NO. 2
SOUTH RETAINING WALL

KEY

= Concrete Removal

STATE OF MAINE
DEPARTMENT OF TRANSPORTATION

NHPP - 1927(300)

WIN 19273.00

BRIDGE NO. 3838

BRIDGE PLANS

PROJ. MANAGER	J. KITTREDGE	BY	DATE
DESIGN-DETAILED	KZS	KDW	12/15
CHECKED-REVIEWED	JGM	SMH	12/15
DESIGN2-DETAILED2	---	---	---
DESIGN3-DETAILED3	---	---	---
REVISIONS 1	---	---	---
REVISIONS 2	---	---	---
REVISIONS 3	---	---	---
REVISIONS 4	---	---	---
FIELD CHANGES	---	---	---

WEST APPROACH BRIDGE
MAINE OWNED RR & CITY STREETS
BATH SAGADAHOC COUNTY

ABUT. NO. 2 RETAINING WALL DETAILS

SHEET NUMBER
90
OF 145

Filename: ...\BRIDGE\MSTA\090_retwall_04.dgn Division: HIGHWAY Username: kwentworth Date:12/21/2015

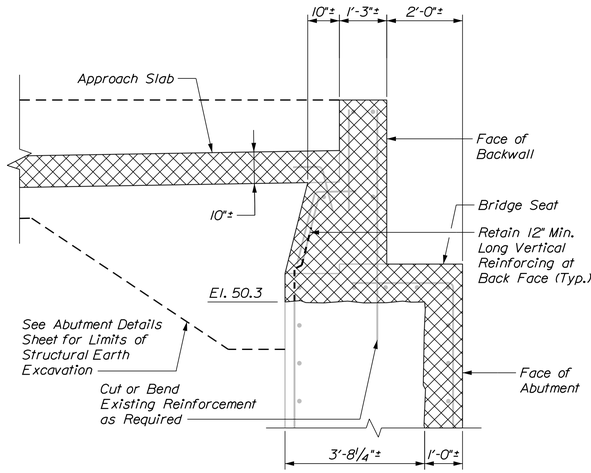

SECTION A-A
Scale: ½" = 1'-0"

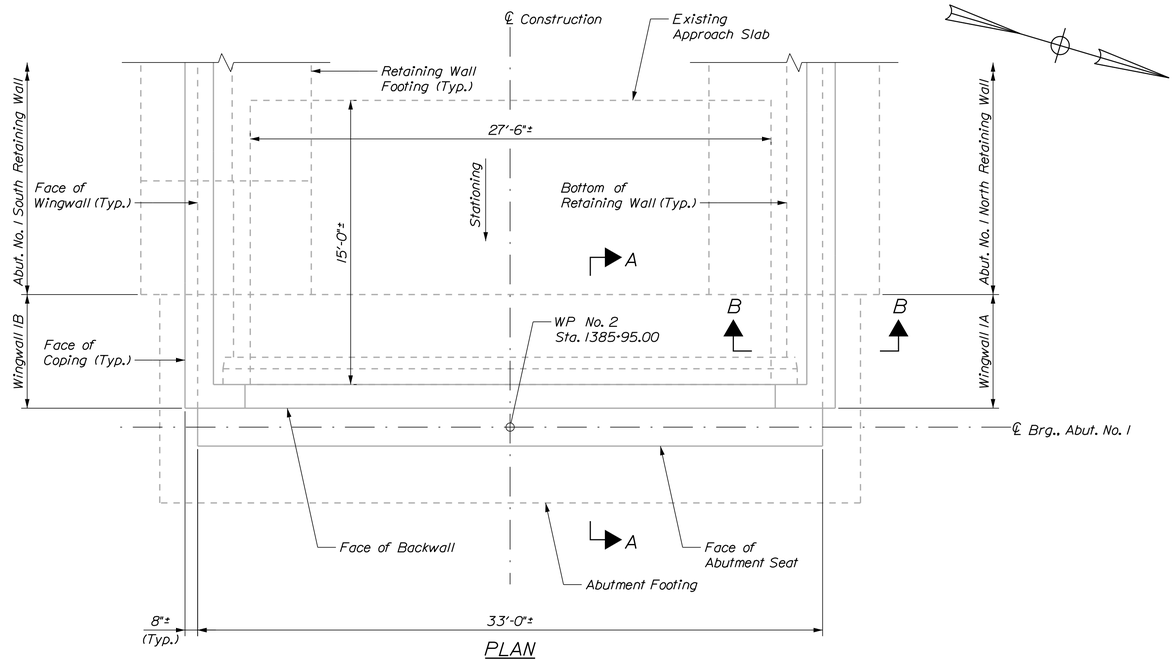

PLAN
Scale: ¼" = 1'-0"

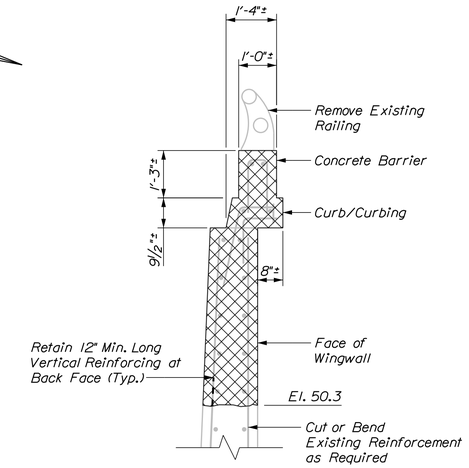

SECTION B-B
Scale: ½" = 1'-0"

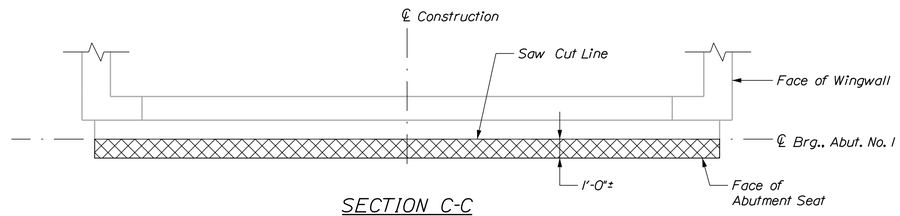

SECTION C-C
Scale: ¼" = 1'-0"

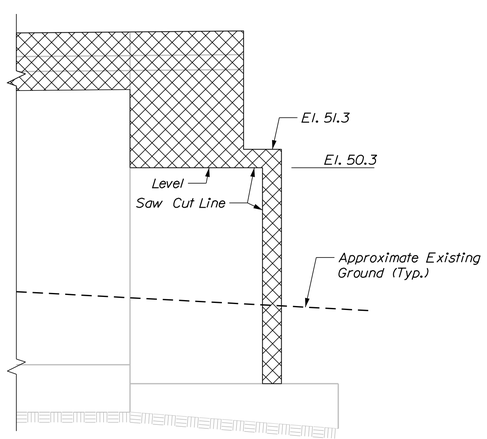

ELEVATION
WINGWALL 1B
(Railing not Shown)
Scale: ¼" = 1'-0"

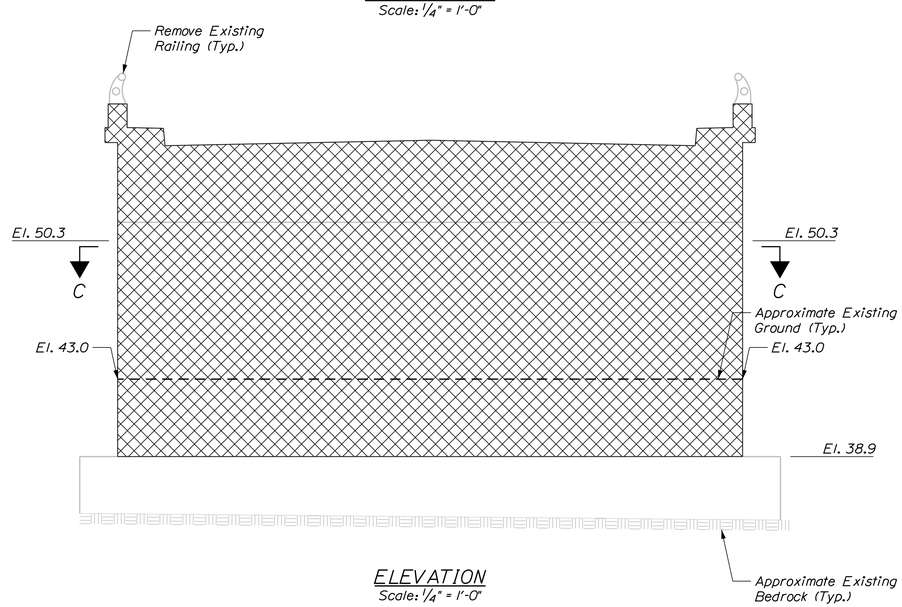

ELEVATION
Scale: ¼" = 1'-0"

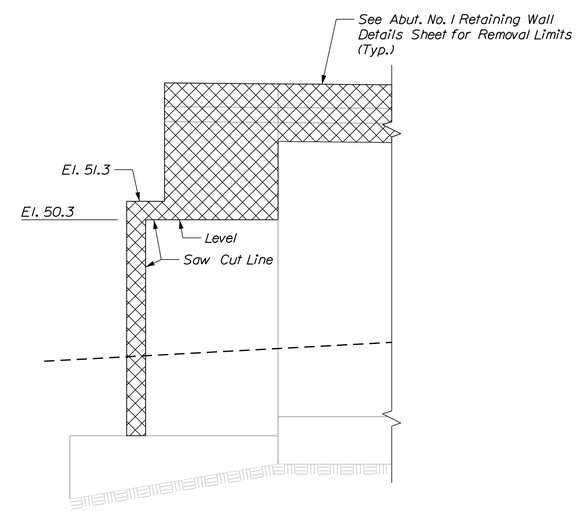

ELEVATION
WINGWALL 1A
(Railing not Shown)
Scale: ¼" = 1'-0"

KEY
= Concrete Removal

STATE OF MAINE
DEPARTMENT OF TRANSPORTATION

NHPP - 1927(300)

WIN 19273.00

BRIDGE NO. 3838

BRIDGE PLANS

PROJ. MANAGER	J. KITTREDGE	BY	DATE
DESIGN-DETAILED	KZS	KDW	12/15
CHECKED-REVIEWED	JGM	SMH	12/15
DESIGN2-DETAILED2	---	---	---
DESIGN3-DETAILED3	---	---	---
REVISIONS 1	---	---	---
REVISIONS 2	---	---	---
REVISIONS 3	---	---	---
REVISIONS 4	---	---	---
FIELD CHANGES	---	---	---

WEST APPROACH BRIDGE
MAINE OWNED RR & CITY STREETS
BATH SAGADAHOC COUNTY

ABUTMENT NO. 1 REMOVAL

SHEET NUMBER
91
OF 145

Filename: ...\MSTA\091_abutrem1_01.dgn Division: HIGHWAY Username: kwentworth Date:12/21/2015

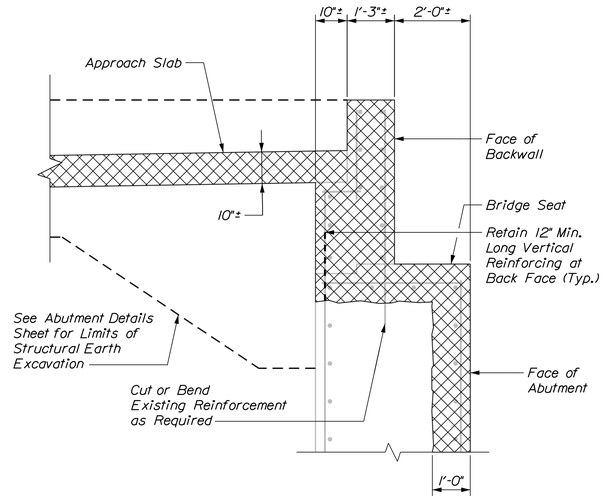

SECTION A-A
Scale: 1/2" = 1'-0"

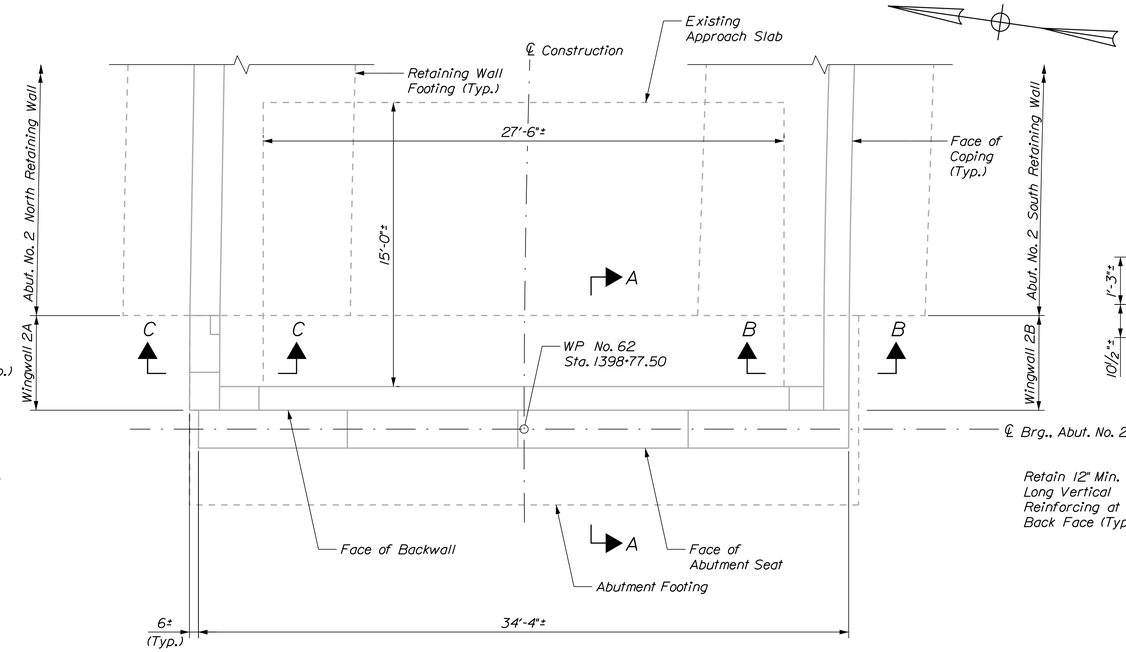

PLAN

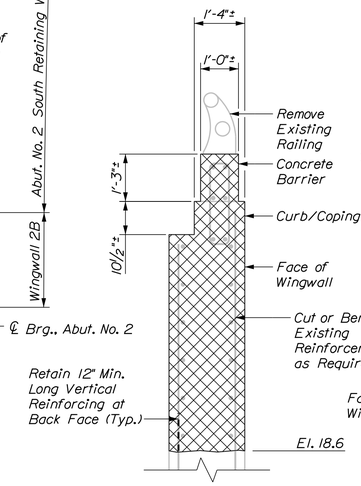

SECTION B-B
Scale: 1/2" = 1'-0"

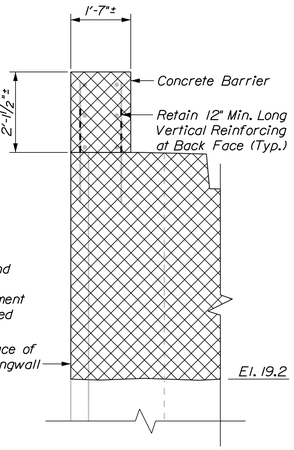

SECTION C-C
Scale: 1/2" = 1'-0"

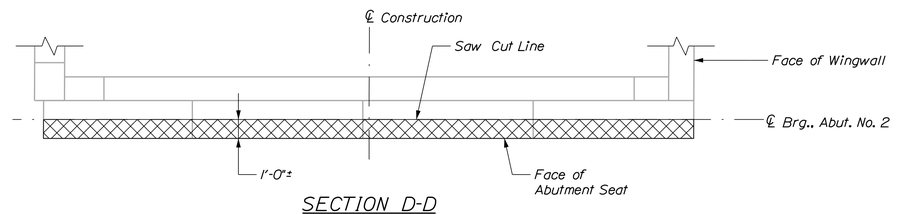

SECTION D-D

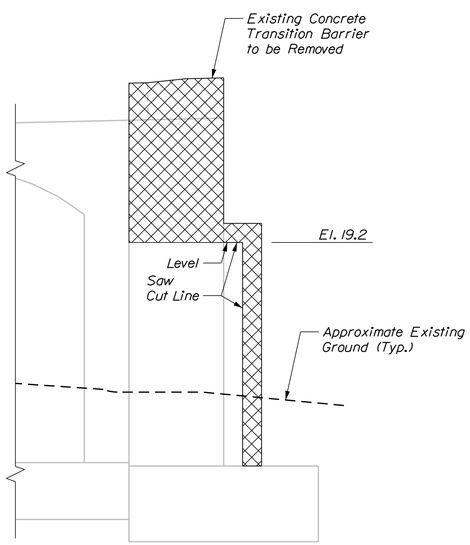

ELEVATION
WINGWALL 2A
(Railing not Shown)
Scale: 1/4" = 1'-0"

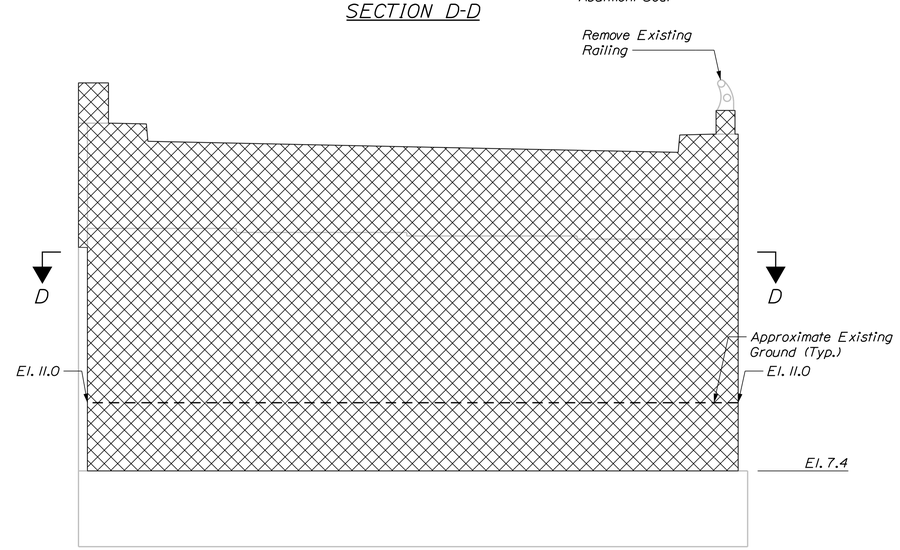

ELEVATION
(Existing Piles Not Shown)
Scale: 1/4" = 1'-0"

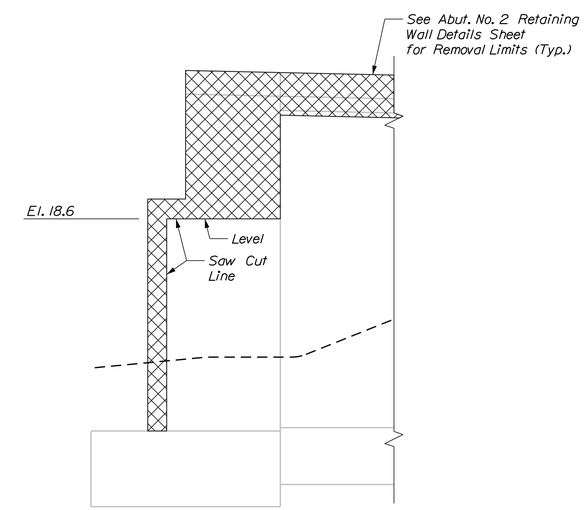

ELEVATION
WINGWALL 2B
(Railing not Shown)
Scale: 1/4" = 1'-0"

KEY

= Concrete Removal

STATE OF MAINE
DEPARTMENT OF TRANSPORTATION

NHPP - 1927(300)

WIN 19273.00

BRIDGE NO. 3838

BRIDGE PLANS

		BY	DATE
PROJ. MANAGER	J. KITTREDGE		
DESIGN-DETAILED	KZS	KDW	12/15
CHECKED-REVIEWED	JGM	SMH	12/15
DESIGN2-DETAILED2	---	---	---
DESIGN3-DETAILED3	---	---	---
REVISIONS 1	---	---	---
REVISIONS 2	---	---	---
REVISIONS 3	---	---	---
REVISIONS 4	---	---	---
FIELD CHANGES	---	---	---

WEST APPROACH BRIDGE
MAINE OWNED RR & CITY STREETS
BATH SAGADAHOC COUNTY

ABUTMENT NO. 2 REMOVAL

SHEET NUMBER
92
OF 145

Filename: ...\MSTA\092_abutrem2_01.dgn Division: HIGHWAY Username: kwentworth Date:12/21/2015

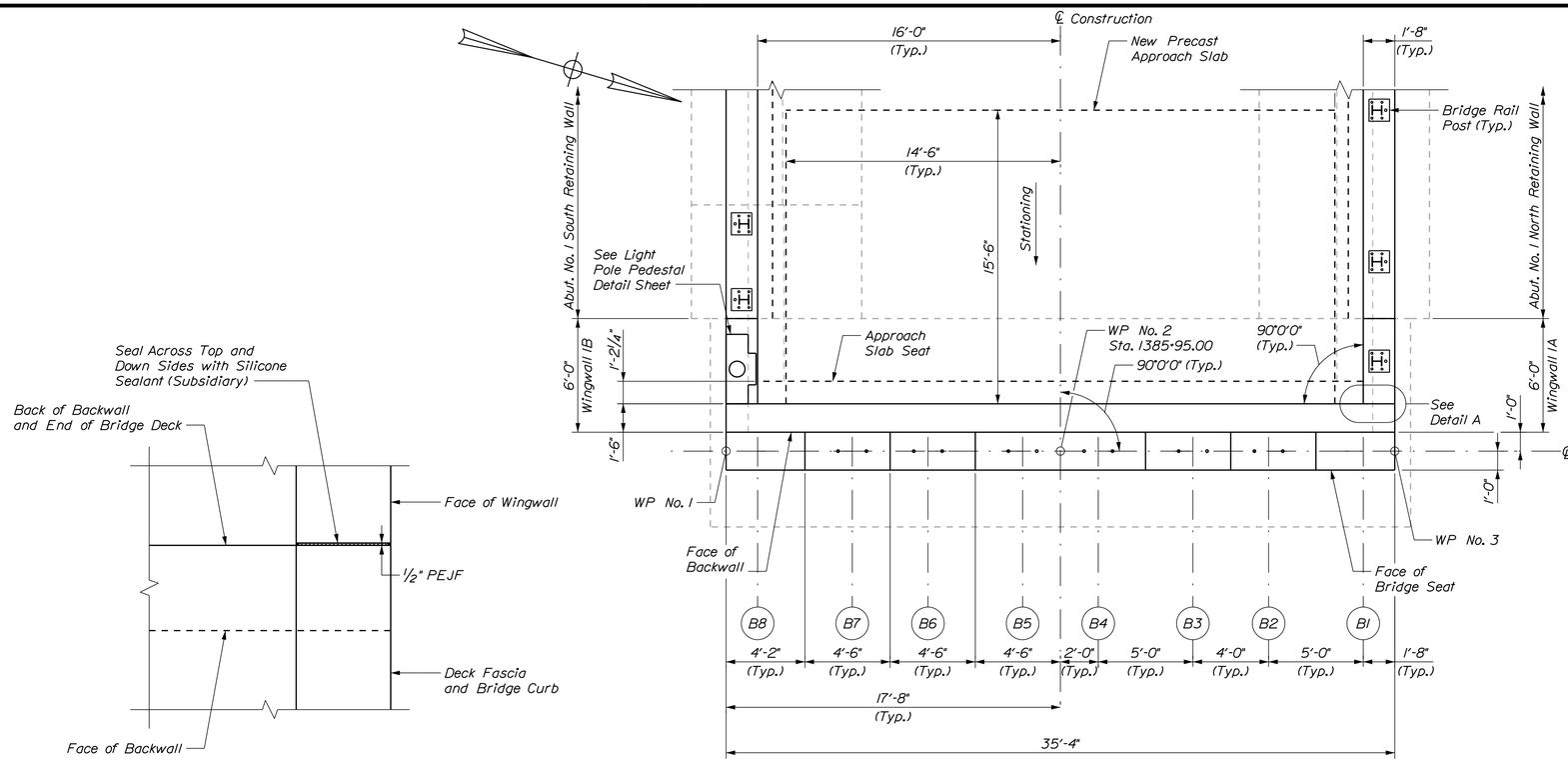

PLAN
Scale: 1/4" = 1'-0"

DETAIL A
Scale: 3/4" = 1'-0"

ABUTMENT NO. 1 NOTES

1. Reinforcing steel shall have a minimum concrete cover of 2 inches.

2. The Contractor shall install Barrier/Light Pole Pedestal vertical closed stirrups prior to placement of the curb concrete.

3. Cover joints where waterstops are not required in accordance with Standard Details Section 502. In cold weather applications, use roofing felt and plastic roofing cement specifically formulated for cold weather conditions as approved by the Resident.

4. Abutments and wingwalls shall be backfilled with Special Backfill. Pay limits will be the structural excavation limits or as shown in plans.

5. See Abutment Details Sheet for Section A-A and B-B.

6. There shall be no difference between the pedestal elevations given in the plans and those measured in the field. Locations that do not match the proposed elevations shall be adjusted by methods proposed by the Contractor and approved by the Resident at no additional cost to the Department.

7. Reinforcement may need to be cut in the field based on superstructure option constructed.

	Superstructure Option	
El.	Steel	Concrete
A	51.93	51.96
B	52.03	52.05
C	52.11	52.13
D	52.21	52.23
E	52.11	52.13
F	52.03	52.05
G	51.93	51.96
H	54.67	54.53
I	54.70	54.56
J	55.02	54.88
K	54.70	54.56
L	54.67	54.53

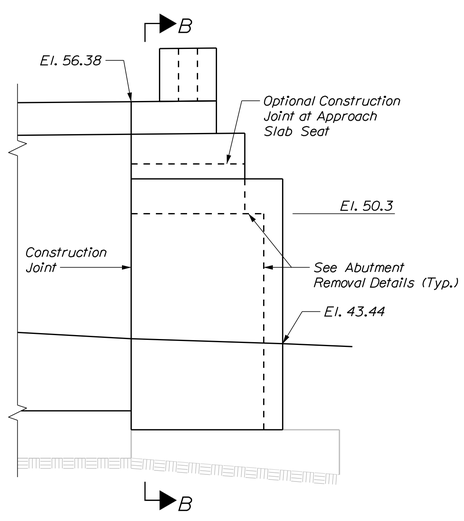

ELEVATION
WINGWALL 1B
(Railing not Shown)
Scale: 1/4" = 1'-0"

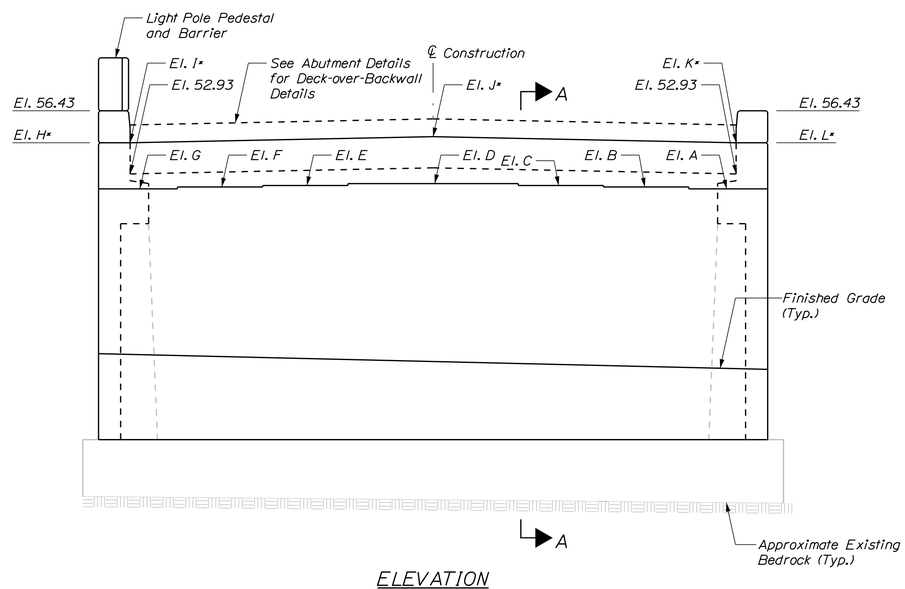

ELEVATION
* Elevations Provided at Front face of Backwall
(Railing not Shown)
Scale: 1/4" = 1'-0"

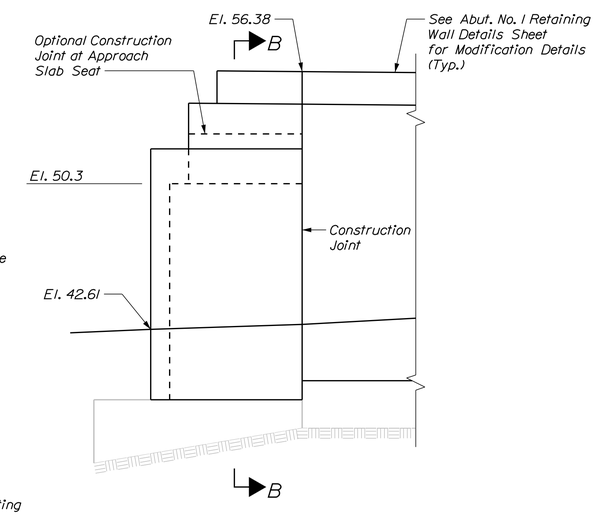

ELEVATION
WINGWALL 1A
(Railing not Shown)
Scale: 1/4" = 1'-0"

STATE OF MAINE
DEPARTMENT OF TRANSPORTATION

NHPP - 1927(300)

WIN 19273.00

BRIDGE NO. 3838

BRIDGE PLANS

vhb

PROJ. MANAGER	J. KITTREDGE		BY	DATE
DESIGN-DETAILED	JGM		KDW	12/15
CHECKED-REVIEWED	KZS		SMH	12/15
DESIGN2-DETAILED2	---		---	---
DESIGN3-DETAILED3	---		---	---
REVISIONS 1	---		---	---
REVISIONS 2	---		---	---
REVISIONS 3	---		---	---
REVISIONS 4	---		---	---
FIELD CHANGES	---		---	---

WEST APPROACH BRIDGE
MAINE OWNED RR & CITY STREETS
BATH SAGADAHOC COUNTY

ABUTMENT NO. 1
MODIFICATIONS

SHEET NUMBER
93
OF 145

Filename: ...\BRIDGE\MSTA\093_abut1_01.dgn Division: HIGHWAY Username: kwentworth Date:12/21/2015

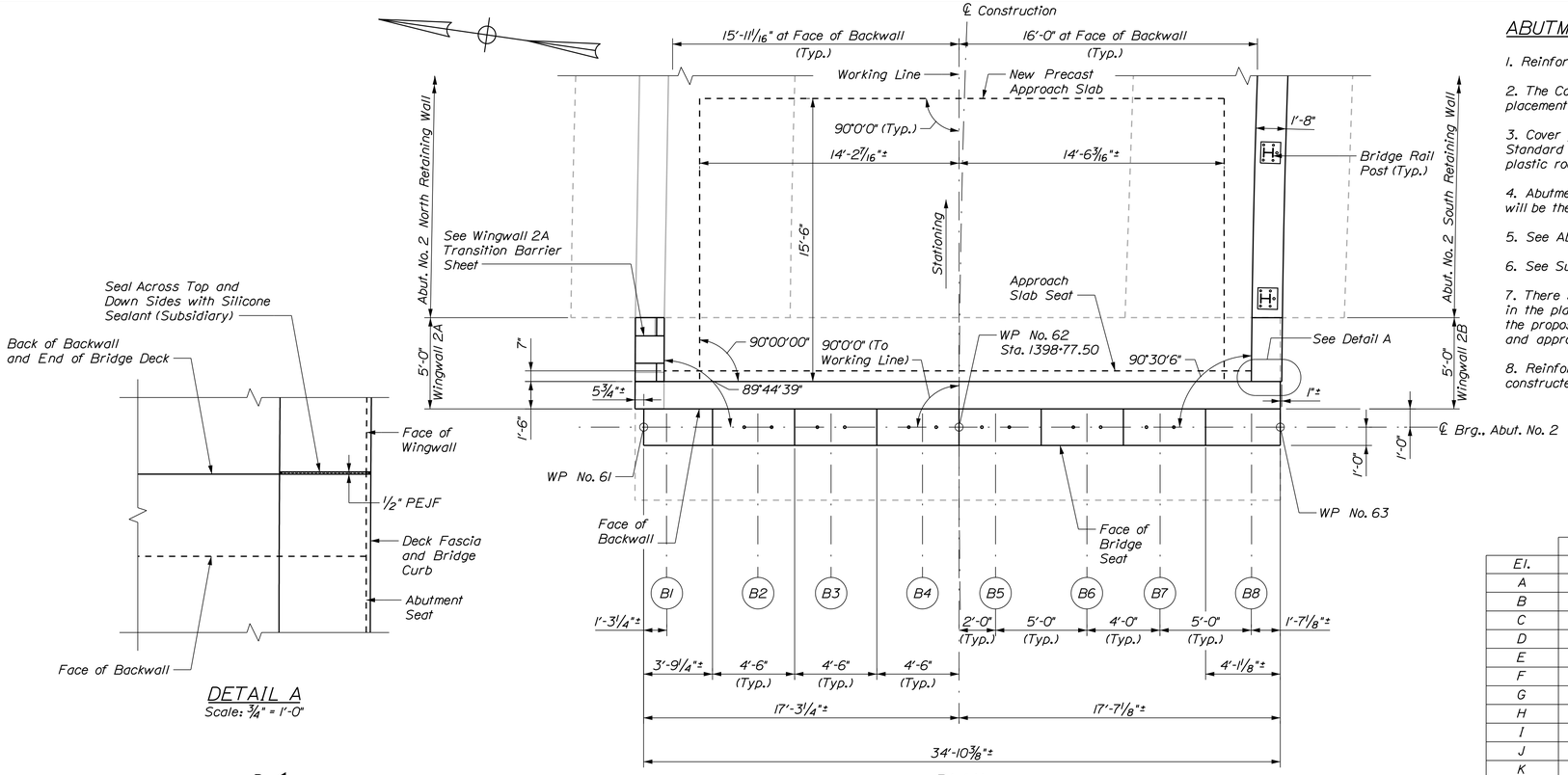

DETAIL A
Scale: 3/4" = 1'-0"

PLAN
Scale: 1/4" = 1'-0"

ABUTMENT NO. 2 NOTES

1. Reinforcing steel shall have a minimum concrete cover of 2 inches.

2. The Contractor shall install Transition Barrier vertical closed stirrups prior to placement of the curb concrete.

3. Cover joints where waterstops are not required in accordance with Standard Details Section 502. In cold weather applications, use roofing felt and plastic roofing cement specifically formulated for cold weather conditions.

4. Abutments and wingwalls shall be backfilled with Special Backfill. Pay limits will be the structural excavation limits or as shown in plans.

5. See Abutment Details Sheet for Sections.

6. See Survey Layout Sheet regarding WP No. 61.

7. There shall be no difference between the pedestal elevations given in the plans and those measured in the field. Locations that do not match the proposed elevations shall be adjusted by methods proposed by the Contractor and approved by the Resident at no additional cost to the Department.

8. Reinforcement may need to be cut in the field based on superstructure option constructed.

	Superstructure Option	
El.	Steel	Concrete
A	21.45	21.34
B	21.35	21.23
C	21.27	21.15
D	21.17	21.05
E	21.09	20.97
F	20.99	20.87
G	20.91	20.79
H	20.81	20.70
I	24.25	23.97
J	24.22	23.94
K	23.90	23.62
L	23.58	23.30
M	23.55	23.26

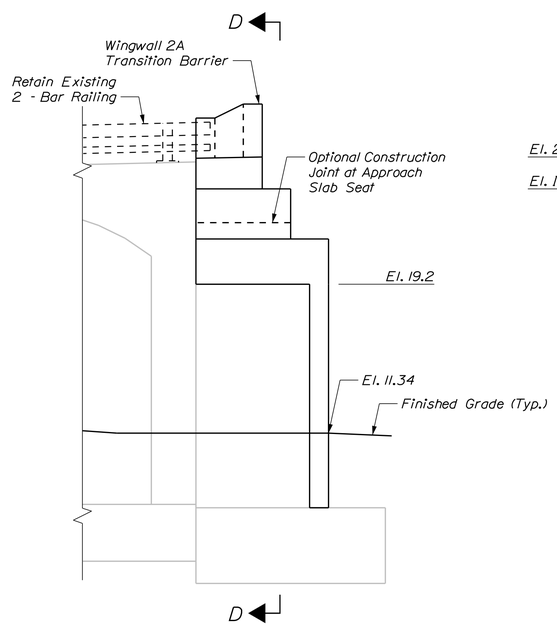

ELEVATION WINGWALL 2A
Scale: 1/4" = 1'-0"

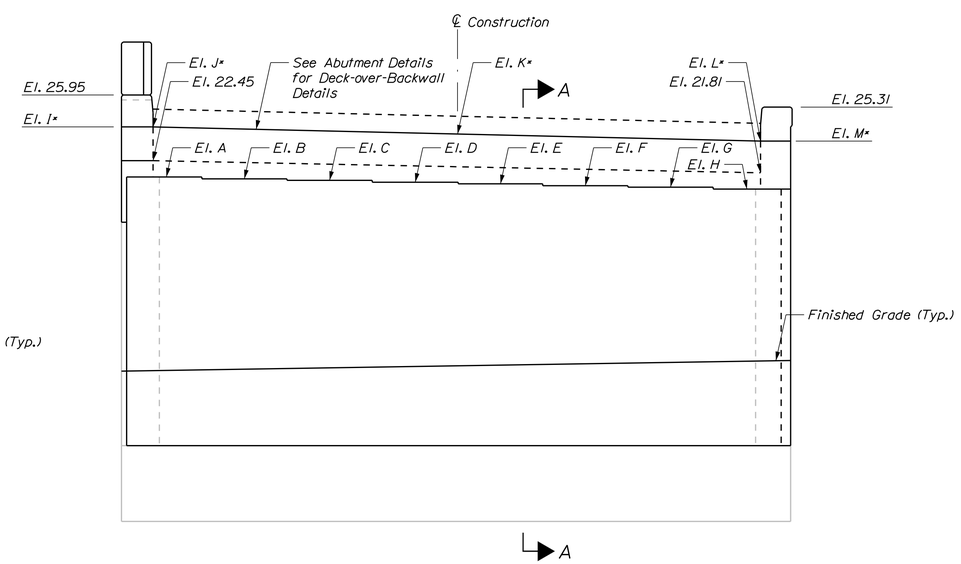

ELEVATION
* Elevations Provided at Front Face of Backwall (Railing and Existing Piles not Shown)
Scale: 1/4" = 1'-0"

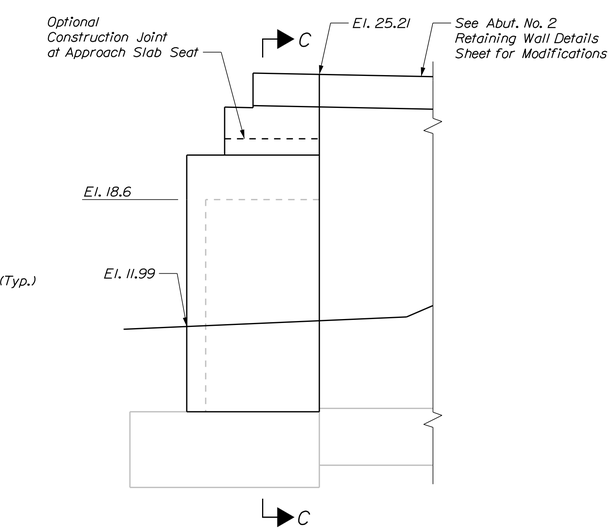

ELEVATION WINGWALL 2B
(Railing not Shown)
Scale: 1/4" = 1'-0"

STATE OF MAINE
DEPARTMENT OF TRANSPORTATION

NHPP - 1927(300)

WIN 19273.00

BRIDGE NO. 3838

BRIDGE PLANS

vhb

PROJ. MANAGER	J. KITTREDGE	BY	DATE
DESIGN-DETAILED	JGM	KDW	12/15
CHECKED-REVIEWED	KZS/JAW	SMH	12/15
DESIGN2-DETAILED2	---	---	---
DESIGN3-DETAILED3	---	---	---
REVISIONS 1	---	---	---
REVISIONS 2	---	---	---
REVISIONS 3	---	---	---
REVISIONS 4	---	---	---
FIELD CHANGES	---	---	---

WEST APPROACH BRIDGE
MAINE OWNED RR & CITY STREETS
BATH SAGADAHOC COUNTY

ABUTMENT NO. 2 MODIFICATIONS

SHEET NUMBER
94
OF 145

Filename: ...\BRIDGE\MSTA\094_abut2_01.dgn Division: HIGHWAY Username: kwentworth Date:12/21/2015

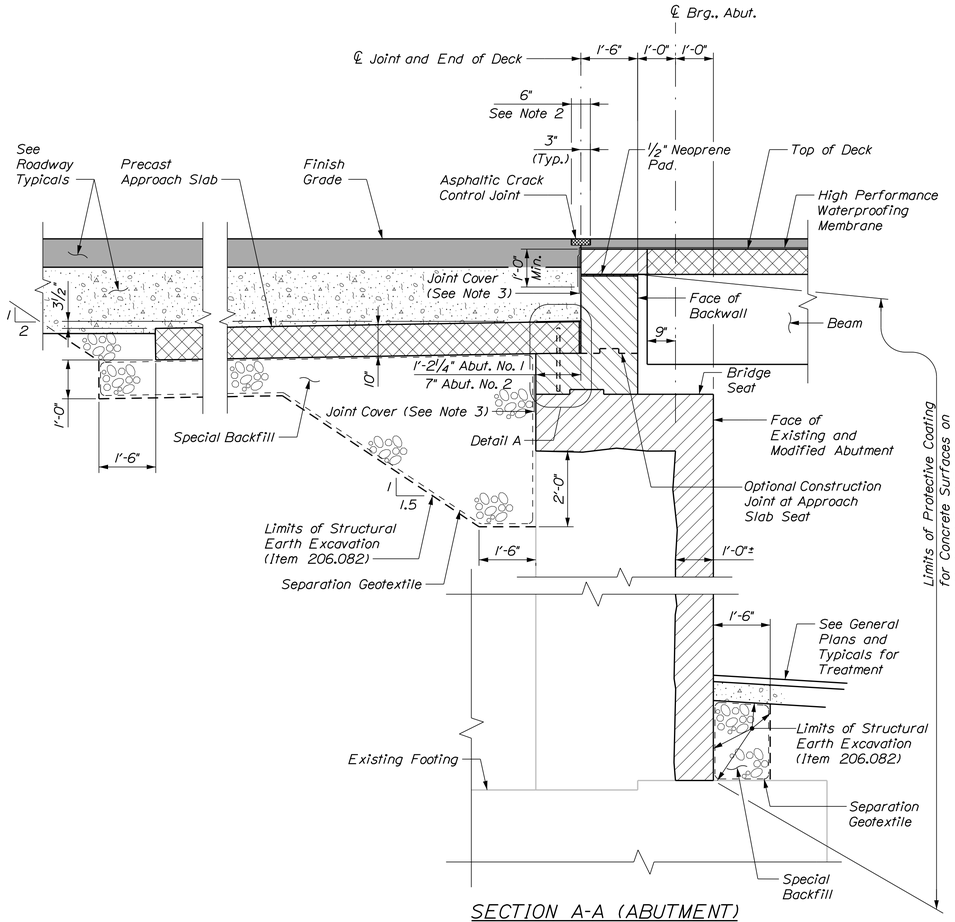

SECTION A-A (ABUTMENT)

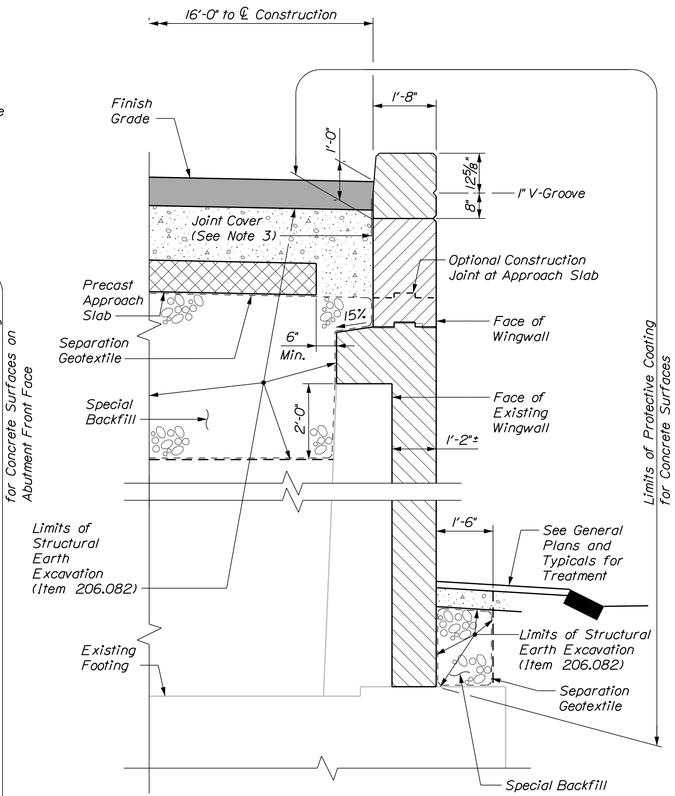

SECTION B-B (WINGWALL)
(Railing not Shown)

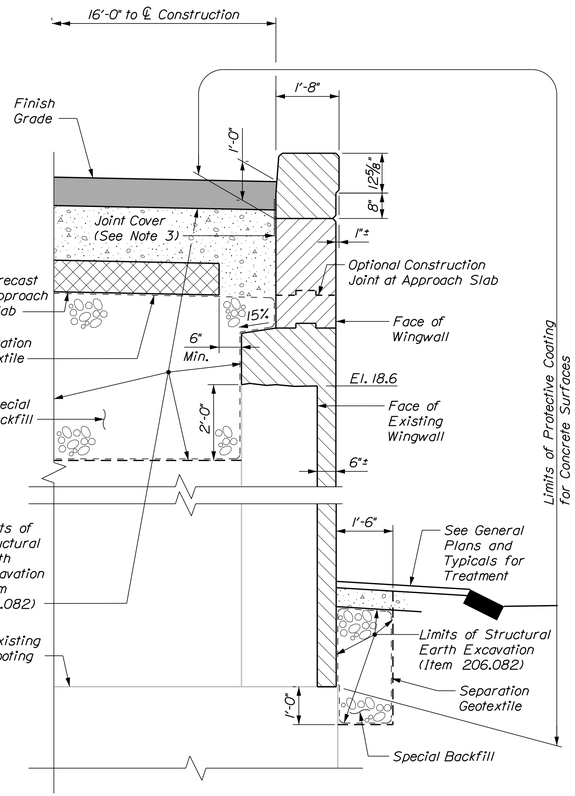

SECTION C-C (WINGWALL)
(Railing not Shown)

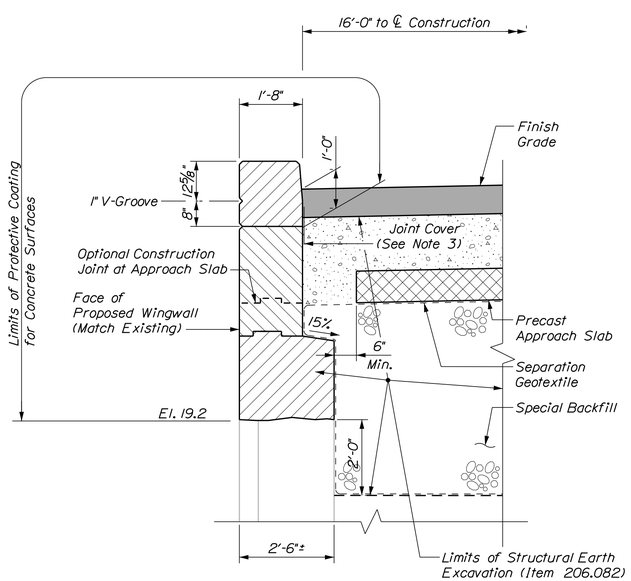

SECTION D-D (WINGWALL)
(Transition Barrier not Shown)

ABUTMENT SECTIONS
(See Abutment No. 1 Modifications and Abutment No. 2 Modifications for Section Locations)
Scale: 1/2" = 1'-0"

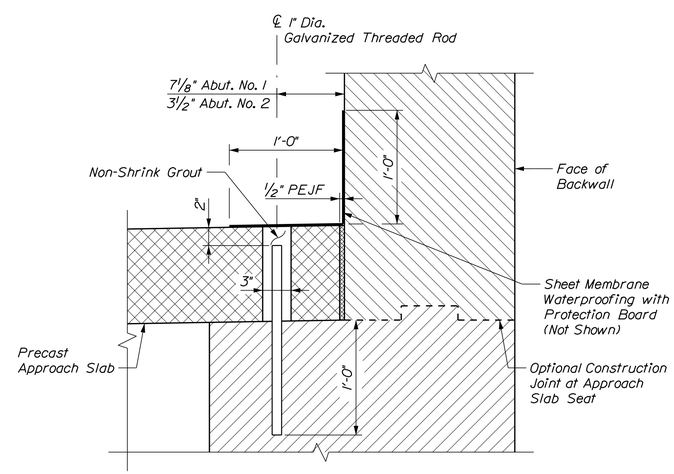

DETAIL A - PRECAST APPROACH SLAB
Scale: 1 1/2" = 1'-0"

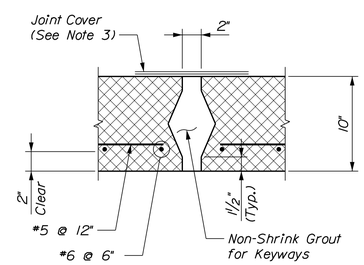

PRECAST APPROACH SLAB LONGITUDINAL JOINT AND REINFORCEMENT DETAIL
Not to Scale

NOTES

1. Contractor shall employ measures to warm substrate for grouting sleeves and applying sheet membrane waterproofing so that surface and localized ambient temperatures are above 40°F. as approved by the Resident.

2. Saw bituminous pavement (notch curbs at end of deck before paving, to ensure remove pavement, top layer only, to saw cut line).

3. Joint cover with 2 layers of heavy roofing felt using plastic roofing cement for cold weather applications as approved by the Resident, recess not required.

STATE OF MAINE
DEPARTMENT OF TRANSPORTATION

NHPP - 1927(300)

WIN 19273.00

BRIDGE NO. 3838

BRIDGE PLANS

vhb

		BY	DATE
PROJ. MANAGER	J. KITTREDGE		
DESIGN-DETAILED	JGM	KDW	12/15
CHECKED-REVIEWED	KZS/JAW	SMH	12/15
DESIGN2-DETAILED2	---	---	---
DESIGN3-DETAILED3	---	---	---
REVISIONS 1	---	---	---
REVISIONS 2	---	---	---
REVISIONS 3	---	---	---
REVISIONS 4	---	---	---
FIELD CHANGES	---	---	---

WEST APPROACH BRIDGE
MAINE OWNED RR & CITY STREETS
BATH SAGADAHOC COUNTY

ABUTMENT DETAILS

SHEET NUMBER
95
OF 145

Filename: ...\MSTA\095_abutdetails_01.dgn Division: HIGHWAY Username: kwentworth Date:12/21/2015

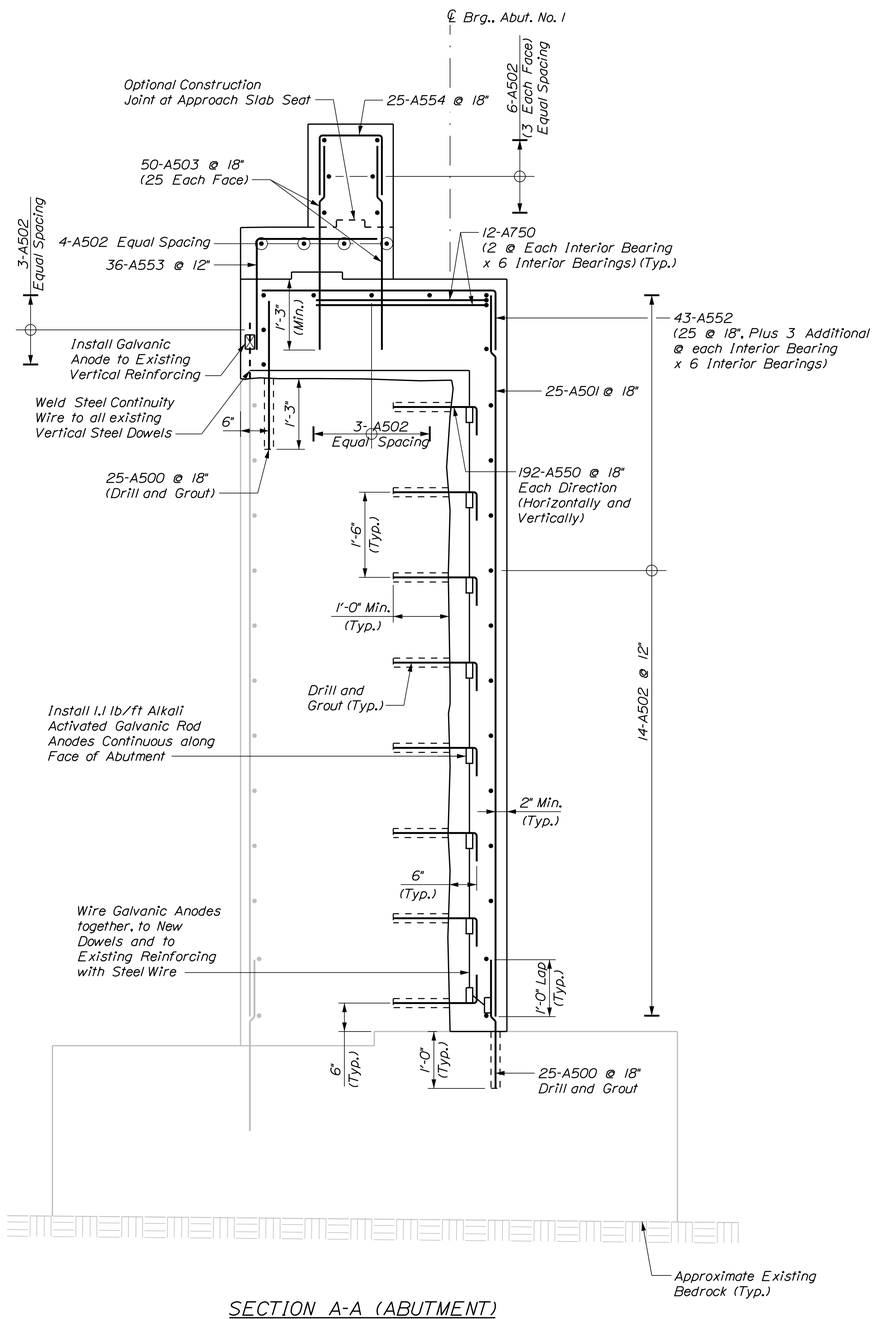

SECTION A-A (ABUTMENT)

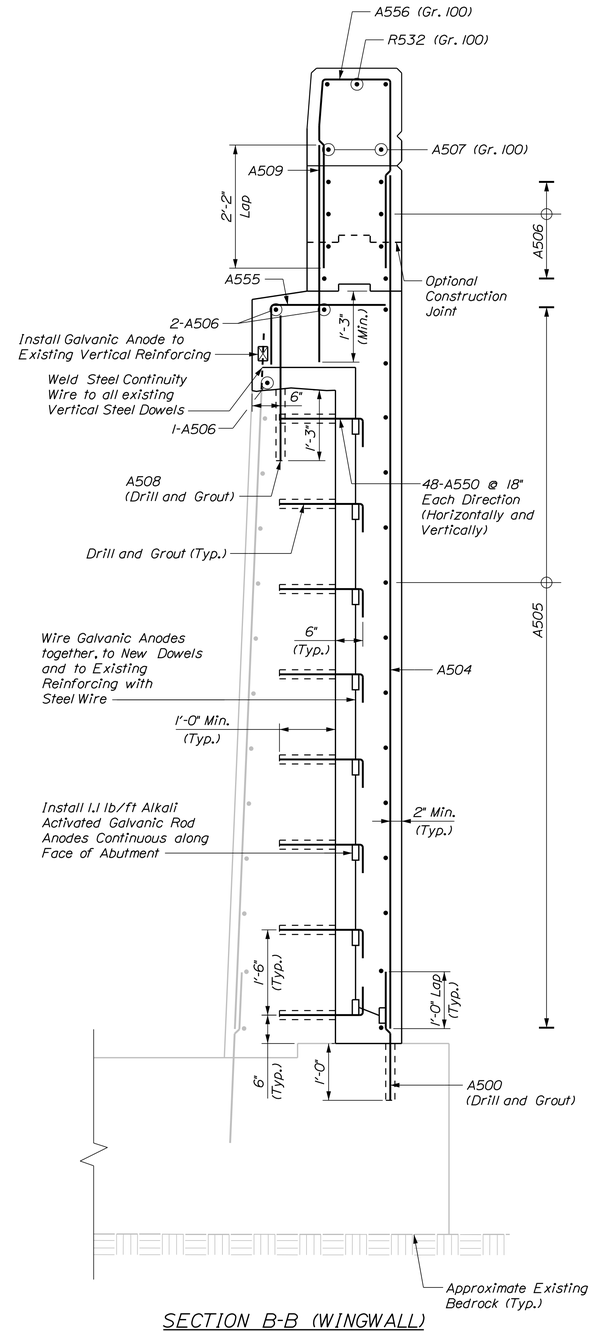

SECTION B-B (WINGWALL)

(Quantities Shown for One Wall Only)

ABUTMENT NO. 1

(See Abutment No. 1 Modifications Sheet for Section Locations)

Scale: ¾" = 1'-0"

STATE OF MAINE
DEPARTMENT OF TRANSPORTATION

NHPP - 1927(300)

WIN 19273.00

BRIDGE NO. 3838

BRIDGE PLANS

PROJ. MANAGER	J. KITTREDGE	BY	DATE
DESIGN-DETAILED	JGM	KDW	12/15
CHECKED-REVIEWED	KZS/JAW	SMH	12/15
DESIGN2-DETAILED2	---	---	---
DESIGN3-DETAILED3	---	---	---
REVISIONS 1	---	---	---
REVISIONS 2	---	---	---
REVISIONS 3	---	---	---
REVISIONS 4	---	---	---
FIELD CHANGES	---	---	---

WEST APPROACH BRIDGE
MAINE OWNED RR & CITY STREETS
BATH SAGADAHOC COUNTY

ABUTMENT NO. 1
REINFORCEMENT (1 OF 2)

SHEET NUMBER

96

OF 145

Filename: ...\MSTA\096_abut1reinf_01.dgn Division: HIGHWAY Username: kwentworth Date:12/21/2015

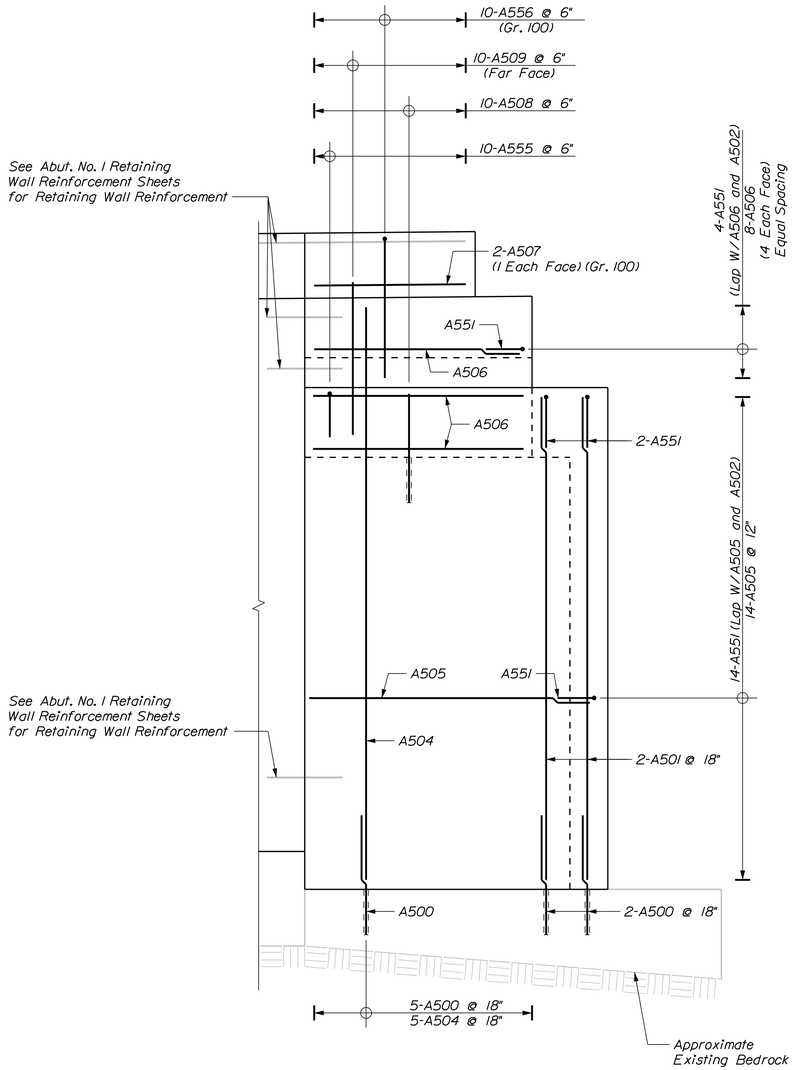

ELEVATION
WINGWALL 1B

(Wingwall 1B Shown, Wingwall 1A Similar)
(Quantities Shown for Wingwall 1B Only)
Scale: 1/2" = 1'-0"

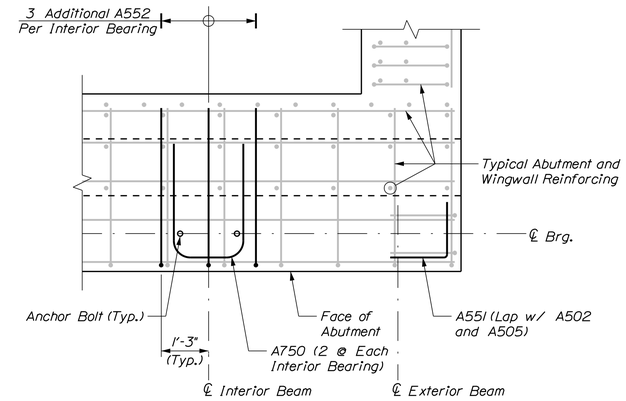

ABUTMENT SEAT
REINFORCING DETAIL

Scale: 1/2" = 1'-0"

STATE OF MAINE
DEPARTMENT OF TRANSPORTATION

NHPP - 1927(300)

WIN 19273.00

BRIDGE NO. 3838

BRIDGE PLANS

vhb

PROJ. MANAGER	J. KITTREDGE	BY	DATE
DESIGN-DETAILED	JGM	KDW	12/15
CHECKED-REVIEWED	KZS/JAW	SMH	12/15
DESIGN2-DETAILED2	---	---	---
DESIGN3-DETAILED3	---	---	---
REVISIONS 1	---	---	---
REVISIONS 2	---	---	---
REVISIONS 3	---	---	---
REVISIONS 4	---	---	---
FIELD CHANGES	---	---	---

WEST APPROACH BRIDGE
MAINE OWNED RR & CITY STREETS
BATH SAGADAHOC COUNTY

ABUTMENT NO. 1
REINFORCEMENT (2 OF 2)

SHEET NUMBER
97
OF 145

Filename: ...\MSTA\097_abutlreinf_02.dgn Division: HIGHWAY Username: kwentworth Date:12/21/2015

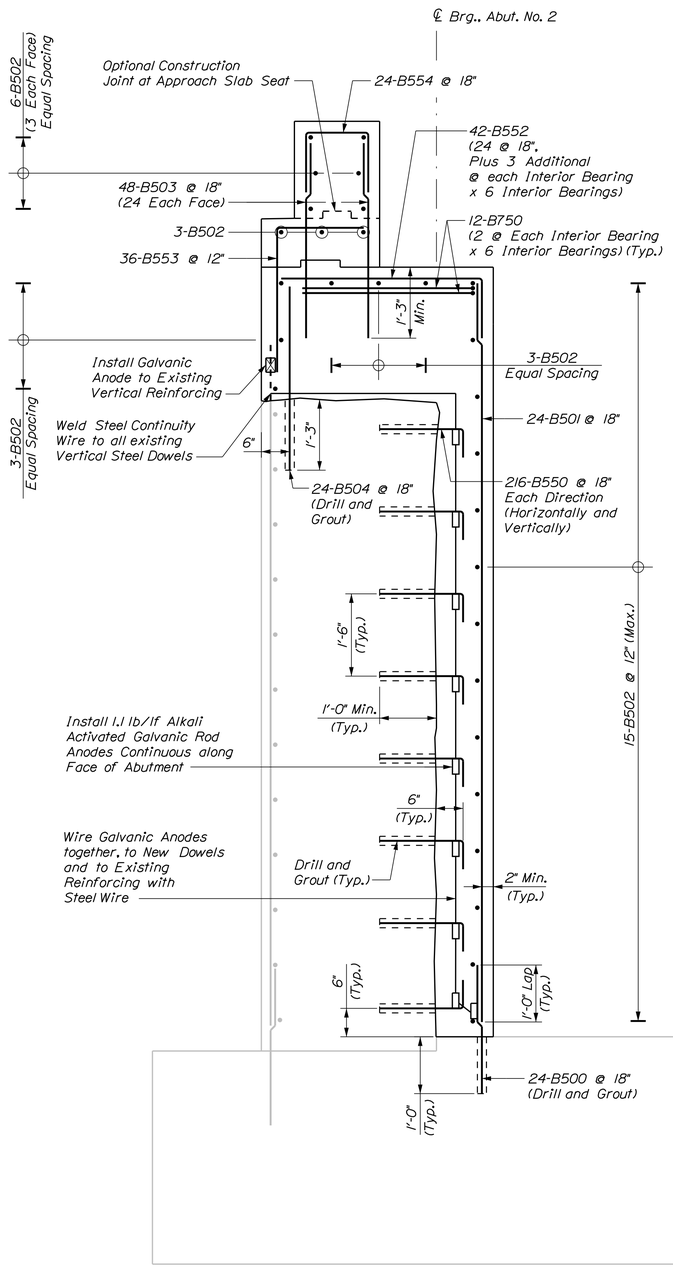

SECTION A-A (ABUTMENT)

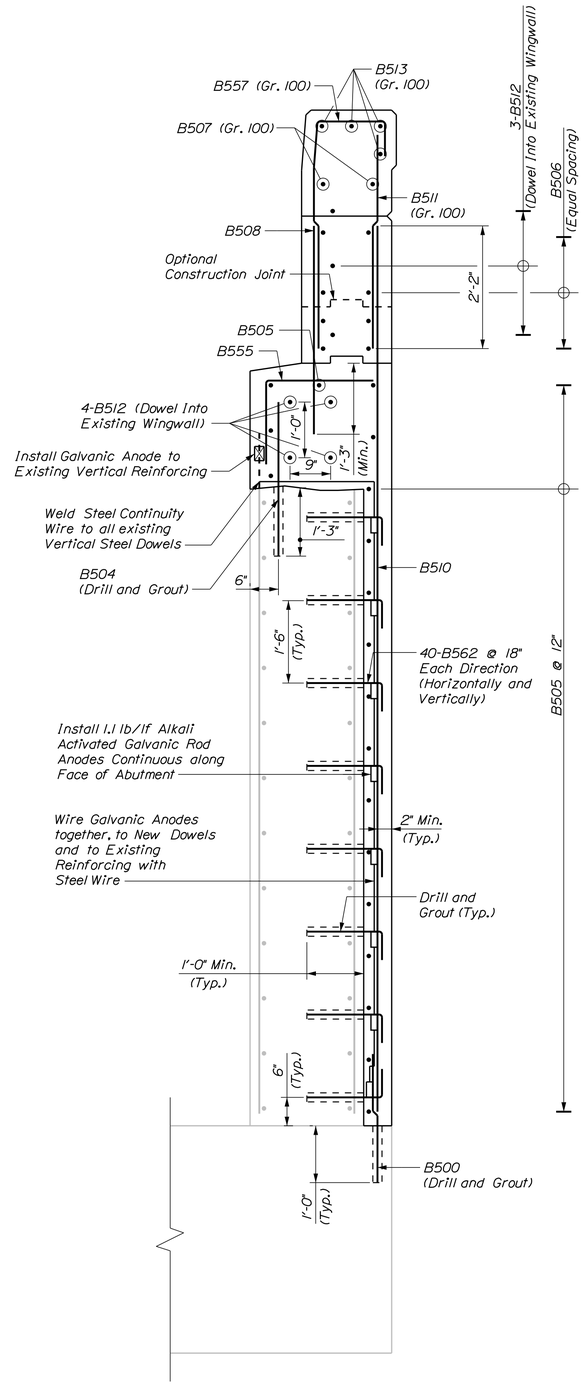

SECTION C-C (WINGWALL 2B)

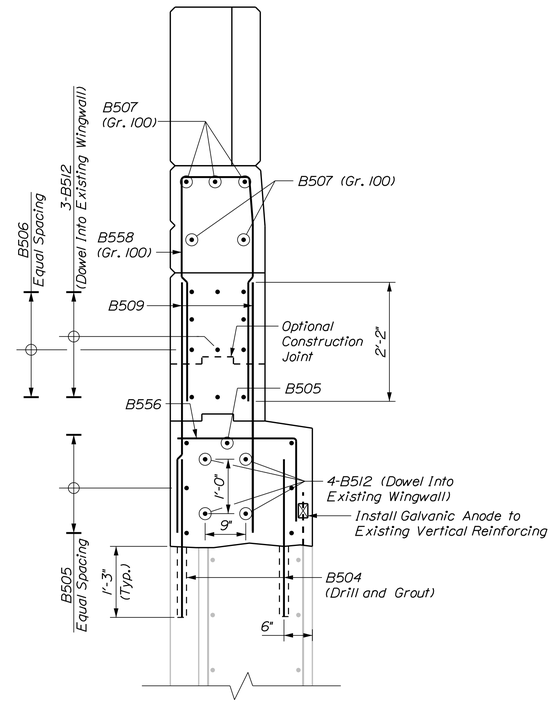

SECTION D-D (WINGWALL 2A)
(Transition Barrier Reinforcement not Shown)

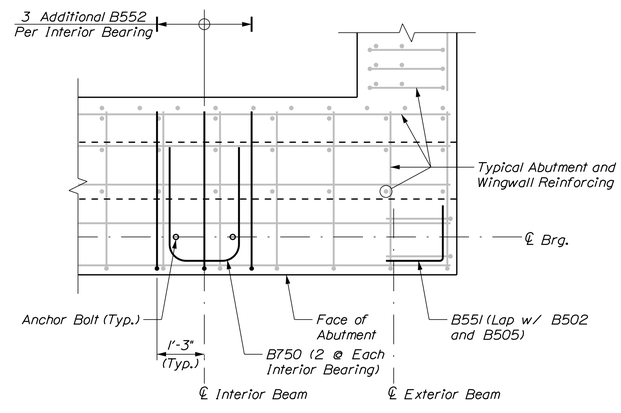

ABUTMENT SEAT REINFORCING DETAIL
Scale: 1/2" = 1'-0"

ABUTMENT NO. 2
(See Abutment No. 2 Modifications Sheet for Section Locations)
Scale: 3/4" = 1'-0"

STATE OF MAINE
DEPARTMENT OF TRANSPORTATION

NHPP - 1927(300)

WIN 19273.00

BRIDGE NO. 3838

BRIDGE PLANS

		BY	DATE
PROJ. MANAGER	J. KITTREDGE		
DESIGN-DETAILED	JGM	KDW	12/15
CHECKED-REVIEWED	KZS/JAW	SMH	12/15
DESIGN2-DETAILED2	---	---	---
DESIGN3-DETAILED3	---	---	---
REVISIONS 1	---	---	---
REVISIONS 2	---	---	---
REVISIONS 3	---	---	---
REVISIONS 4	---	---	---
FIELD CHANGES	---	---	---

WEST APPROACH BRIDGE
MAINE OWNED RR & CITY STREETS
BATH SAGADAHOC COUNTY

ABUTMENT NO. 2
REINFORCEMENT (1 OF 2)

SHEET NUMBER
98
OF 145

Filename: ...\MSTA\098_abut2reinf_01.dgn Division: HIGHWAY Username: kwentworth Date:12/21/2015

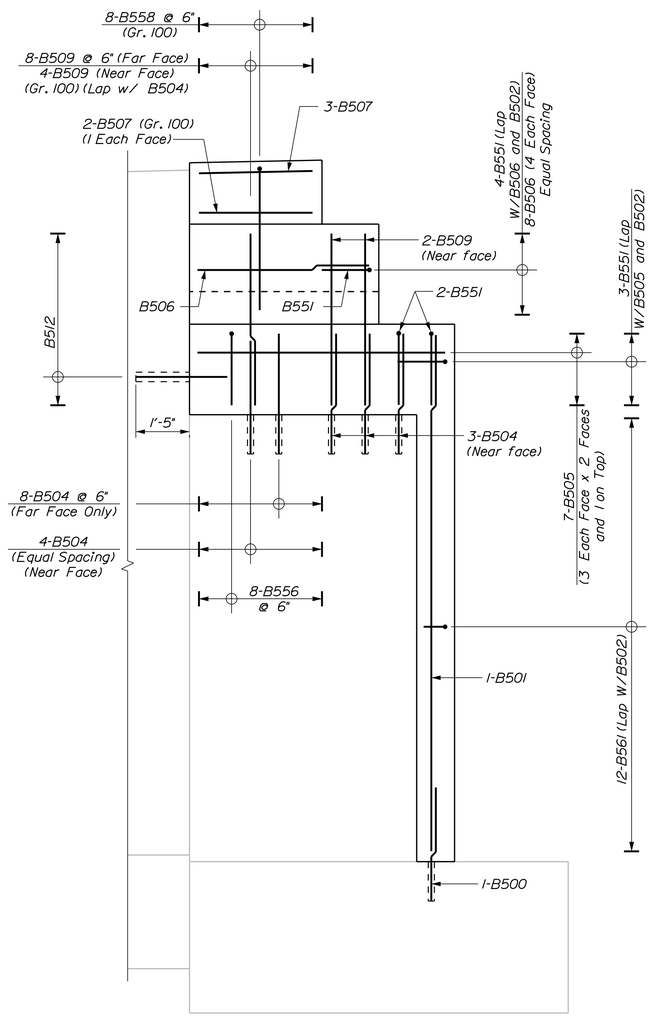

ELEVATION
WINGWALL 2A
(Transition Barrier not Shown for Clarity)
Scale: 1/2" = 1'-0"

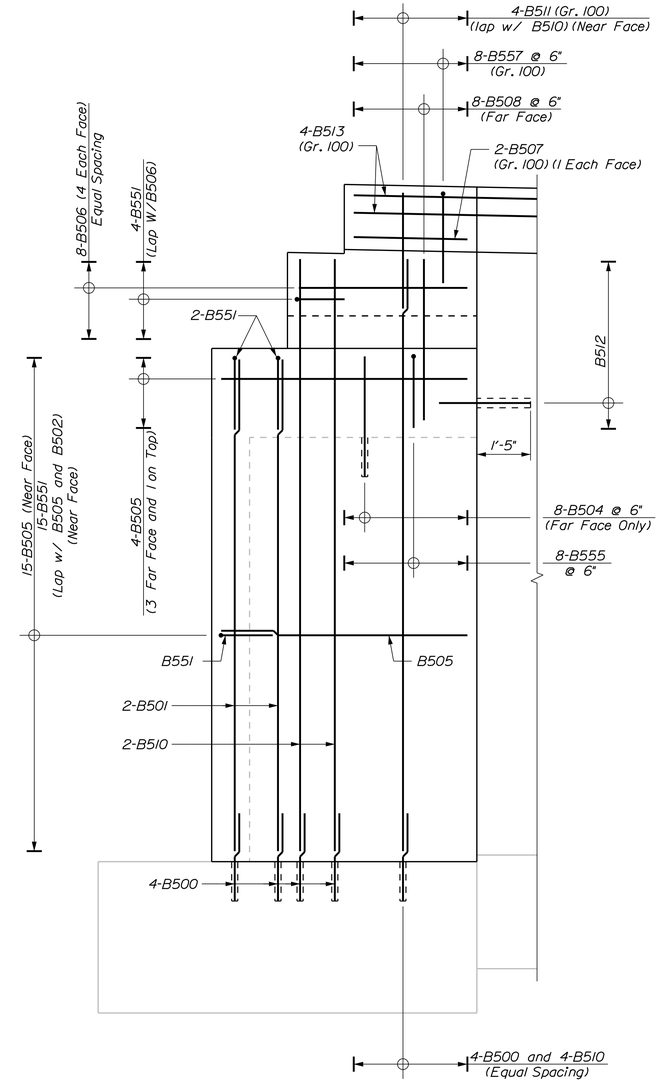

ELEVATION
WINGWALL 2B
(Transition Barrier not Shown for Clarity)
Scale: 1/2" = 1'-0"

STATE OF MAINE
DEPARTMENT OF TRANSPORTATION

NHPP - 1927(300)

WIN 19273.00

BRIDGE NO. 3838

BRIDGE PLANS

vhb

PROJ. MANAGER	J. KITTREDGE		
DESIGN-DETAILED	JGM	KDW	12/15
CHECKED-REVIEWED	KZS/JAW	SMH	12/15
DESIGN2-DETAILED2	---	---	---
DESIGN3-DETAILED3	---	---	---
REVISIONS 1	---	---	---
REVISIONS 2	---	---	---
REVISIONS 3	---	---	---
REVISIONS 4	---	---	---
FIELD CHANGES	---	---	---

WEST APPROACH BRIDGE
MAINE OWNED RR & CITY STREETS
BATH SAGADAHOC COUNTY

ABUTMENT NO. 2
REINFORCEMENT (2 OF 2)

SHEET NUMBER
99
OF 145

Filename: ...\MSTA\099_abut2reinf_02.dgn Division: HIGHWAY Username: kwentworth Date:12/21/2015

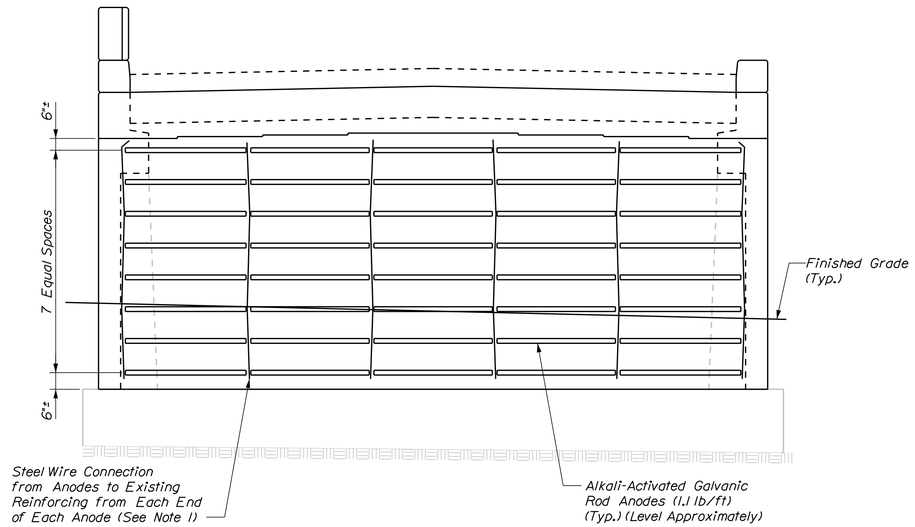

ABUTMENT NO. 1
ELEVATION
Scale: 1/4" = 1'-0"

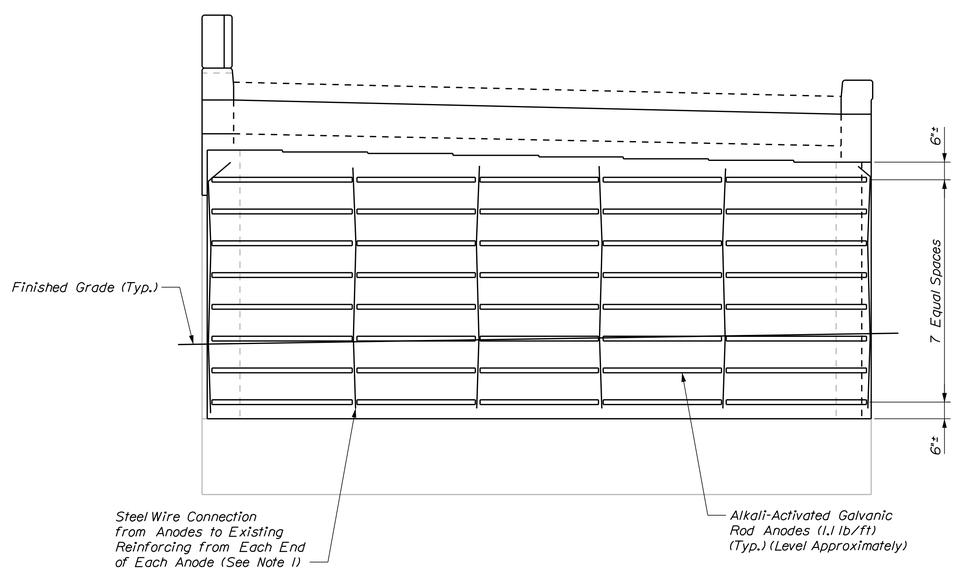

ABUTMENT NO. 2
ELEVATION
Scale: 1/4" = 1'-0"

NOTE

1. See Abut. Reinforcement Sheets for additional Cathodic Protection Details.

STATE OF MAINE
DEPARTMENT OF TRANSPORTATION

NHPP - 1927(300)

WIN 19273.00

BRIDGE NO. 3838

BRIDGE PLANS

vhb

PROJ. MANAGER	J. KITTREDGE	BY	DATE
DESIGN-DETAILED	VCS	KDW	12/15
CHECKED-REVIEWED	VCS	SMH	12/15
DESIGN2-DETAILED2	---	---	---
DESIGN3-DETAILED3	---	---	---
REVISIONS 1	---	---	---
REVISIONS 2	---	---	---
REVISIONS 3	---	---	---
REVISIONS 4	---	---	---
FIELD CHANGES	---	---	---

WEST APPROACH BRIDGE
MAINE OWNED RR & CITY STREETS
BATH SAGADAHOC COUNTY

CATHODIC PROTECTION
DETAILS (1 OF 2)

SHEET NUMBER
100
OF 145

Filename: ...\MSTA\100_cathodic_01.dgn Division: HIGHWAY Username: kwentworth Date:12/21/2015

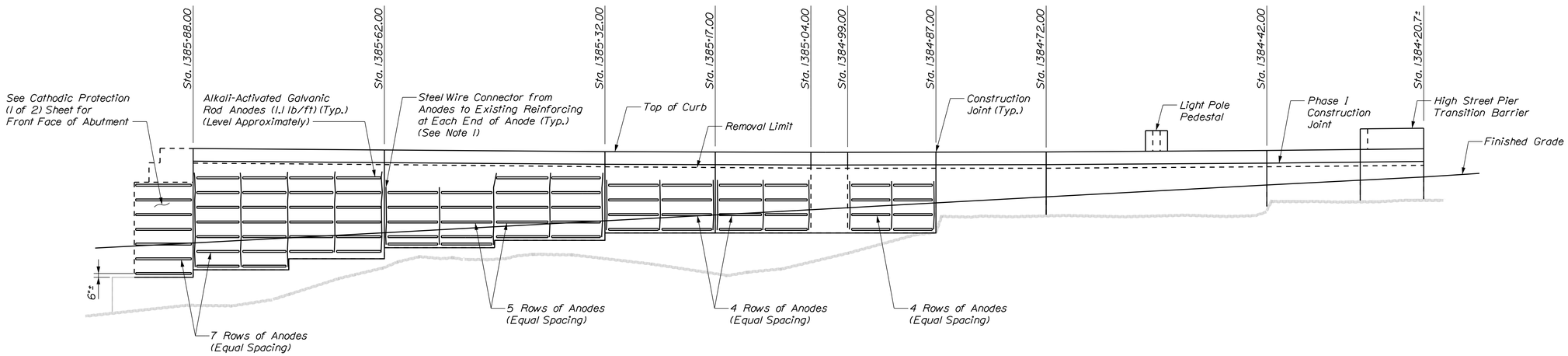

ABUTMENT NO. 1
NORTH RETAINING WALL ELEVATION
(3-Bar Rail and Posts not Shown for Clarity)
Scale: 1/8" = 1'-0"

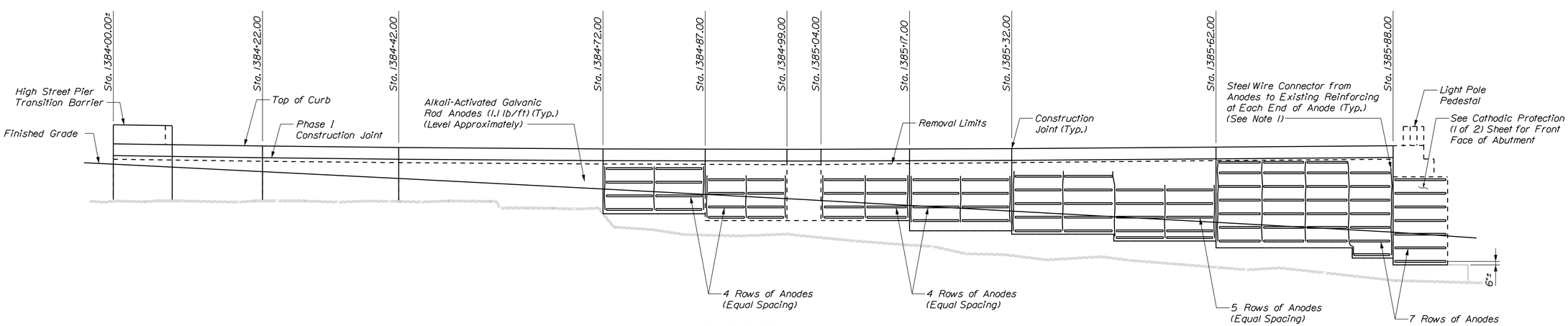

ABUTMENT NO. 1
SOUTH RETAINING WALL ELEVATION
(3-Bar Rail and Posts not Shown for Clarity)
Scale: 1/8" = 1'-0"

NOTE

1. See Abut. No. 1 Retaining Wall Reinforcement for additional Cathodic Protection Details.

STATE OF MAINE
DEPARTMENT OF TRANSPORTATION

NHPP - 1927(300)

WIN 19273.00

BRIDGE NO. 3838

BRIDGE PLANS

vhb

		BY	DATE
PROJ. MANAGER	J. KITTREDGE		
DESIGN-DETAILED	VCS	KDW	12/15
CHECKED-REVIEWED	VCS	SMH	12/15
DESIGN2-DETAILED2	---	---	---
DESIGN3-DETAILED3	---	---	---
REVISIONS 1	---	---	---
REVISIONS 2	---	---	---
REVISIONS 3	---	---	---
REVISIONS 4	---	---	---
FIELD CHANGES	---	---	---

WEST APPROACH BRIDGE
MAINE OWNED RR & CITY STREETS
BATH SAGADAHOC COUNTY

CATHODIC PROTECTION DETAILS (2 OF 2)

SHEET NUMBER
101
OF 145

Filename: ...\MSTA\101_cathodic_02.dgn Division: HIGHWAY Username: kwentworth Date:12/21/2015

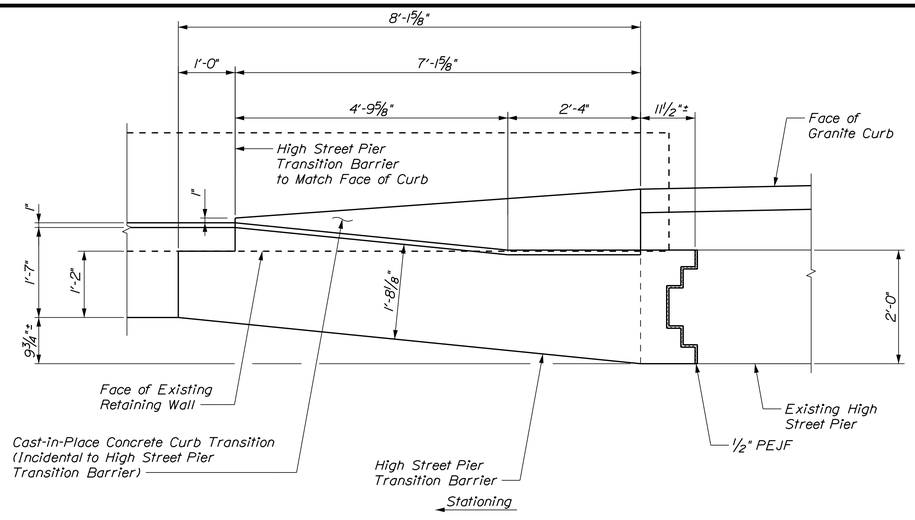

PLAN

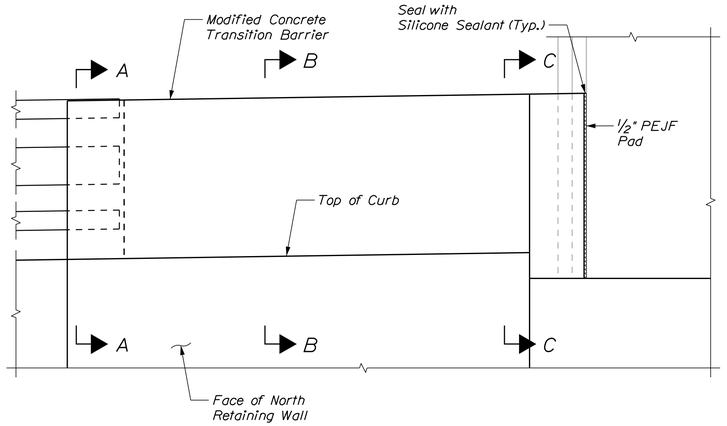

MASONRY ELEVATION

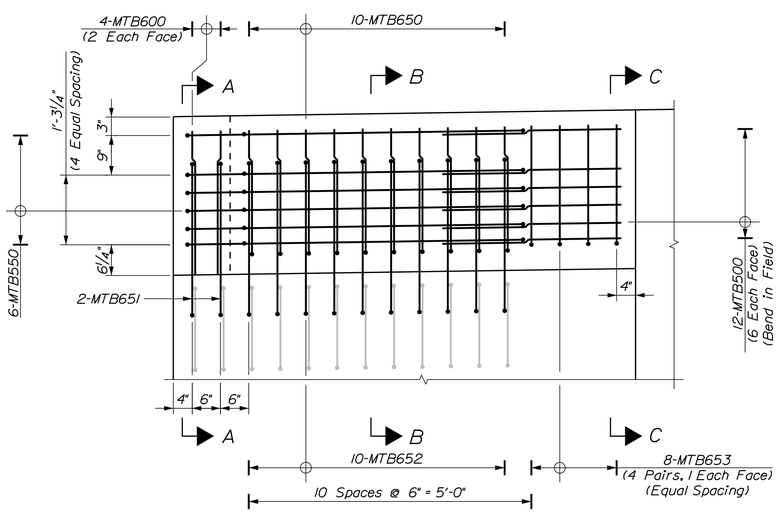

REINFORCING ELEVATION

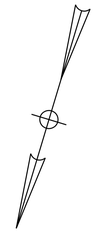

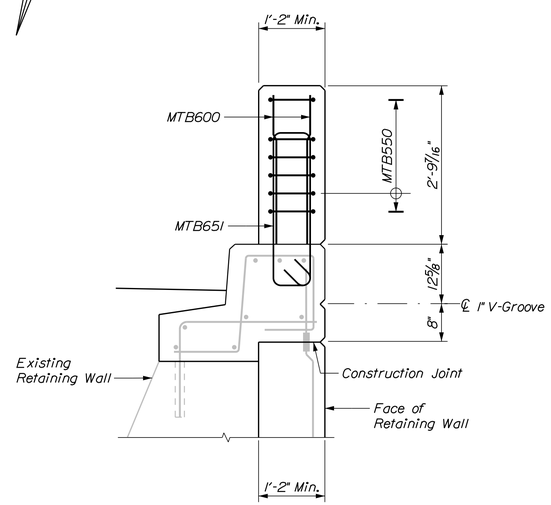

SECTION A-A

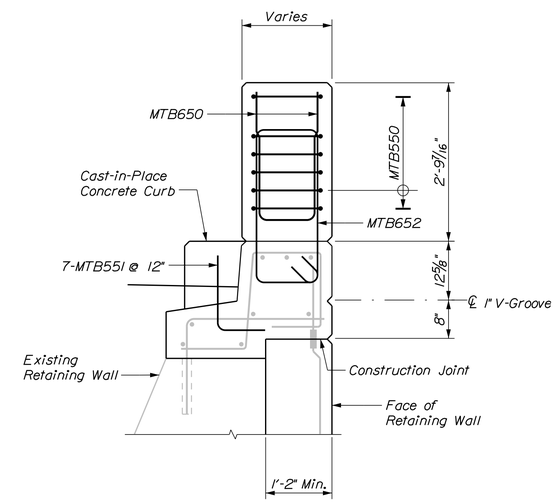

SECTION B-B

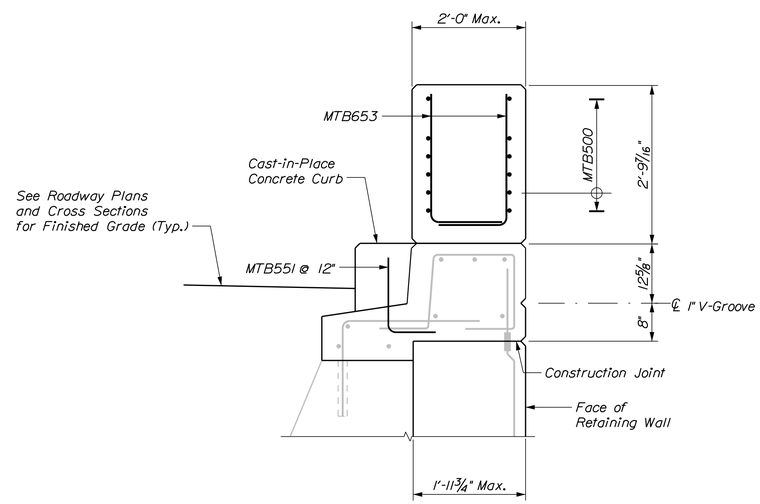

SECTION C-C

HIGH STREET PIER TRANSITION BARRIER
(North Shown, South Similar)
Scale: 3/4" = 1'-0"

NOTE

1. Payment for High Street Pier Transition Barrier will be made under Item 526.3401, Permanent Concrete Transition Barrier-Modified.

STATE OF MAINE
DEPARTMENT OF TRANSPORTATION

NHPP - 1927(300)

WIN 19273.00

BRIDGE NO. 3838

BRIDGE PLANS

vhb

PROJ. MANAGER	J. KITTREDGE		
DESIGN-DETAILED	KZS	KDW	12/15
CHECKED-REVIEWED	JGM	SMH	12/15
DESIGN2-DETAILED2	---	---	---
DESIGN3-DETAILED3	---	---	---
REVISIONS 1	---	---	---
REVISIONS 2	---	---	---
REVISIONS 3	---	---	---
REVISIONS 4	---	---	---
FIELD CHANGES	---	---	---

WEST APPROACH BRIDGE
MAINE OWNED RR & CITY STREETS
BATH SAGADAHOC COUNTY

HIGH STREET PIER TRANSITION BARRIER

SHEET NUMBER
102
OF 145

Filename: ...\MSTA\102_barriers_01.dgn Division: HIGHWAY Username: kwentworth Date:12/21/2015

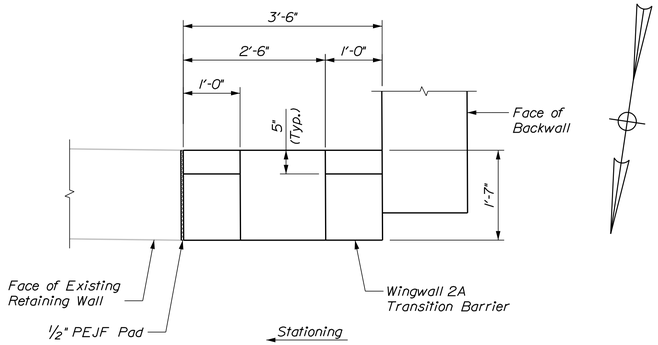

PLAN

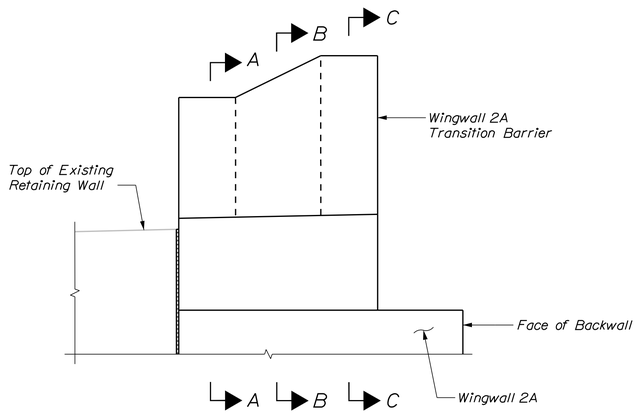

ELEVATION
(Rail not Shown for Clarity)

NOTE

1. Payment for Wingwall 2A Transition Barrier will be made under Item 526.3401, Permanent Concrete Transition Barrier-Modified.

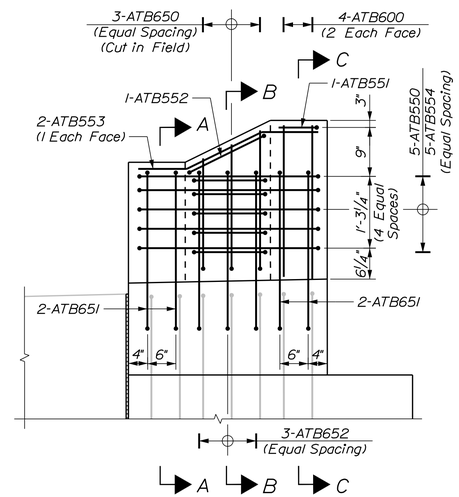

ELEVATION
(Rail not Shown for Clarity)

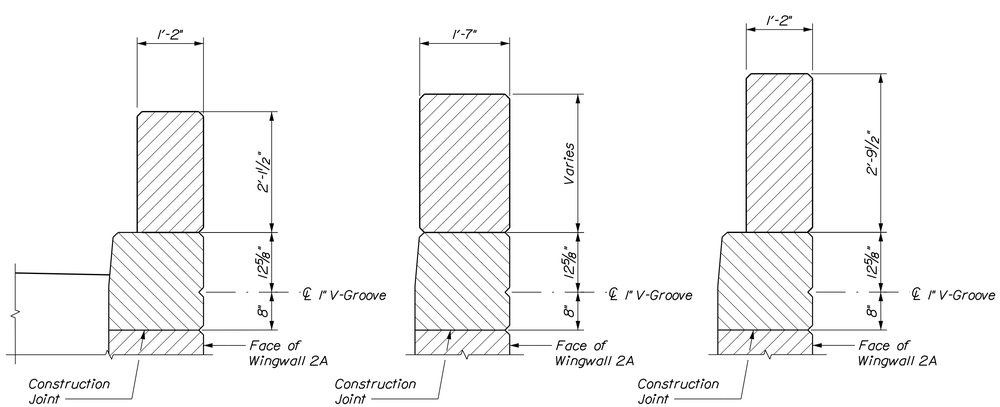

SECTION A-A SECTION B-B SECTION C-C

WINGWALL 2A
TRANSITION BARRIER MASONRY
Scale: 3/4" = 1'-0"

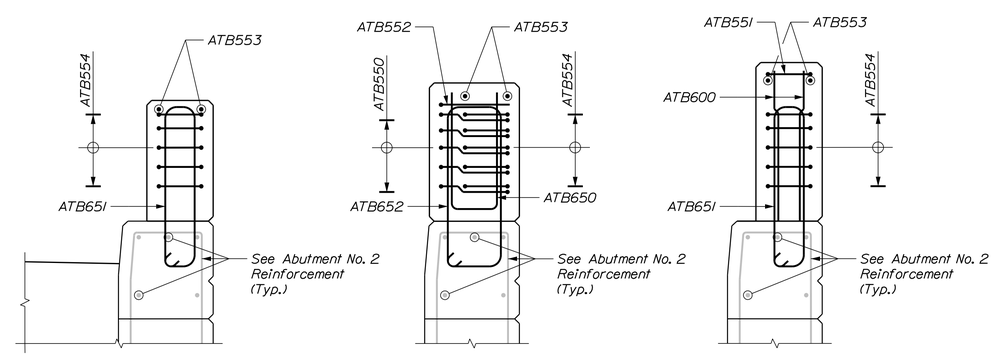

SECTION A-A SECTION B-B SECTION C-C

WINGWALL 2A
TRANSITION BARRIER REINFORCEMENT
Scale: 3/4" = 1'-0"

STATE OF MAINE
DEPARTMENT OF TRANSPORTATION

NHPP - 1927(300)

WIN 19273.00

BRIDGE NO. 3838

BRIDGE PLANS

vhb

PROJ. MANAGER	J. KITTREDGE	BY	DATE
DESIGN-DETAILED	KZS	KDW	12/15
CHECKED-REVIEWED	JGM	SMH	12/15
DESIGN2-DETAILED2	---	---	---
DESIGN3-DETAILED3	---	---	---
REVISIONS 1	---	---	---
REVISIONS 2	---	---	---
REVISIONS 3	---	---	---
REVISIONS 4	---	---	---
FIELD CHANGES	---	---	---

WEST APPROACH BRIDGE
MAINE OWNED RR & CITY STREETS
BATH SAGADAHOC COUNTY

WINGWALL 2A
TRANSITION BARRIER

SHEET NUMBER
103
OF 145

Filename: ...\MSTA\103_barriers_02.dgn Division: HIGHWAY Username: kwentworth Date:12/21/2015

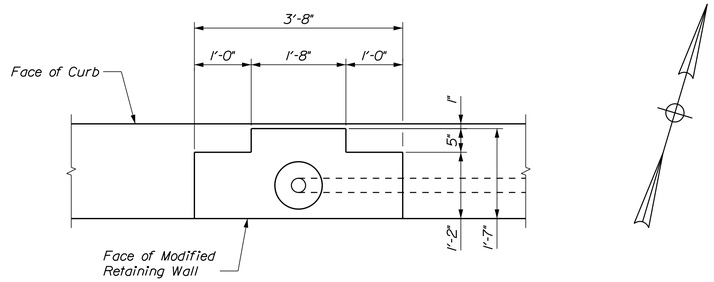

PLAN

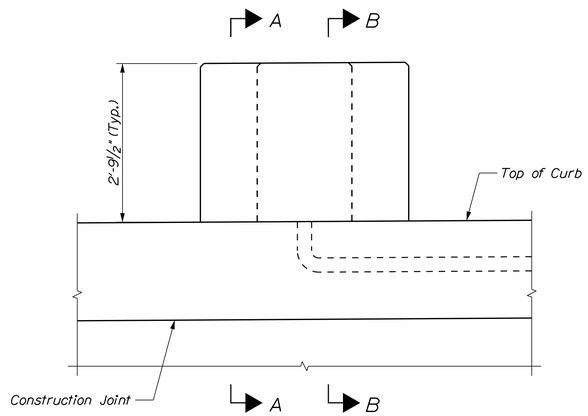

ELEVATION
(3-Bar Rail and Light Pole not Shown for Clarity)

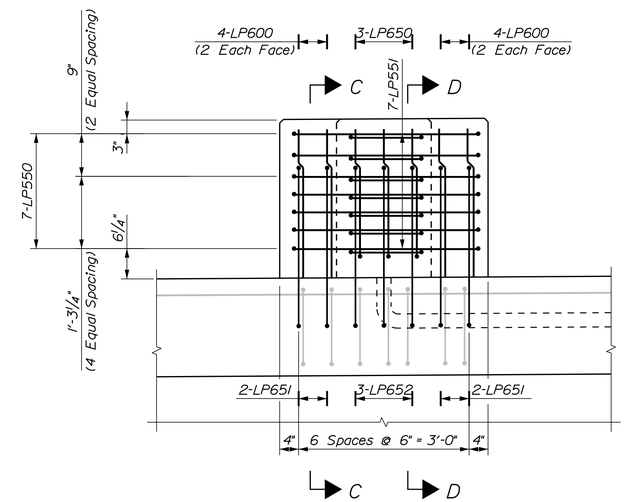

ELEVATION
(3-Bar Rail and Light Pole not Shown for Clarity)

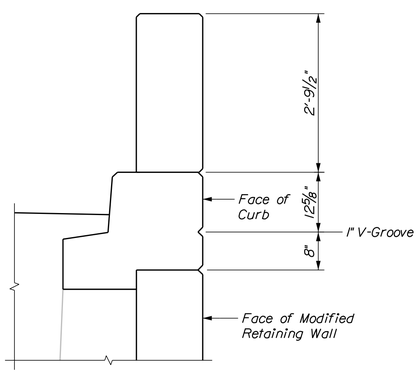

SECTION A-A

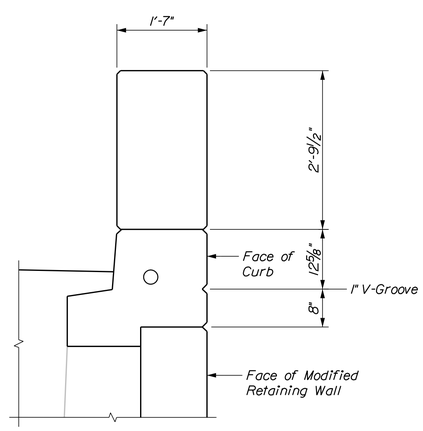

SECTION B-B

ABUTMENT NO. 1 RETAINING WALL AND WINGWALL
LIGHT POLE PEDESTAL MASONRY
(North Shown, South Similar)
Scale: 3/4" = 1'-0"

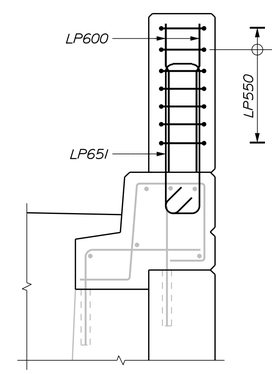

SECTION C-C

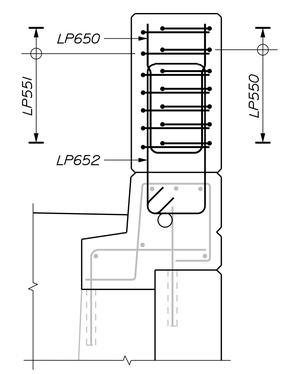

SECTION D-D

ABUTMENT NO. 1 RETAINING WALL AND WINGWALL
LIGHT POLE PEDESTAL REINFORCEMENT
(North Shown, South Similar)
Scale: 3/4" = 1'-0"

NOTE

1. Payment for Light Pole Pedestals will be made under Item No. 502.55, Structural Concrete Utility Support System.

STATE OF MAINE
DEPARTMENT OF TRANSPORTATION

NHPP - 1927(300)

WIN 19273.00

BRIDGE NO. 3838

BRIDGE PLANS

vhb

PROJ. MANAGER	J. KITTREDGE	BY	DATE
DESIGN-DETAILED	KZS	KDW	12/15
CHECKED-REVIEWED	JGM	SMH	12/15
DESIGN2-DETAILED2	---	---	---
DESIGN3-DETAILED3	---	---	---
REVISIONS 1	---	---	---
REVISIONS 2	---	---	---
REVISIONS 3	---	---	---
REVISIONS 4	---	---	---
FIELD CHANGES	---	---	---

WEST APPROACH BRIDGE
MAINE OWNED RR & CITY STREETS
BATH SAGADAHOC COUNTY

LIGHT POLE
PEDESTAL DETAILS

SHEET NUMBER
104
OF 145

Filename: ...\MSTA\104_lightpost_01.dgn Division: HIGHWAY Username: kwentworth Date:12/21/2015

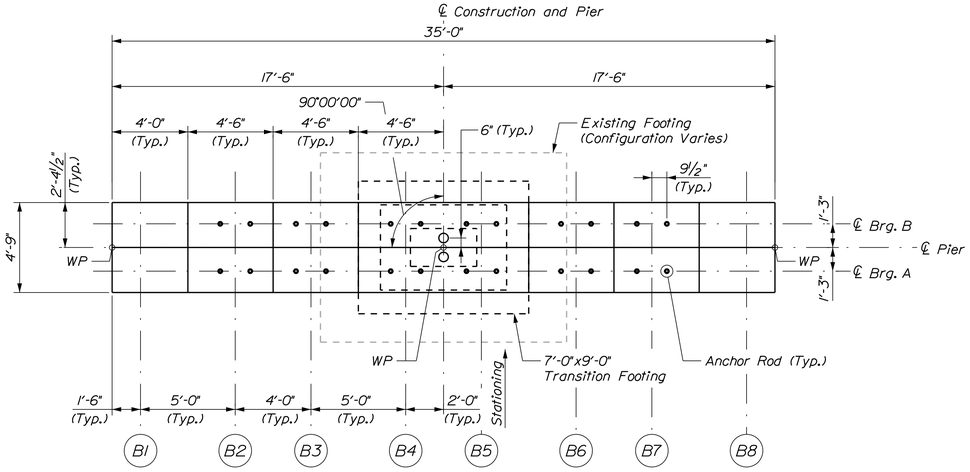

PIERS 1 THRU 5, 7, 9, 11 THRU 15 AND 17

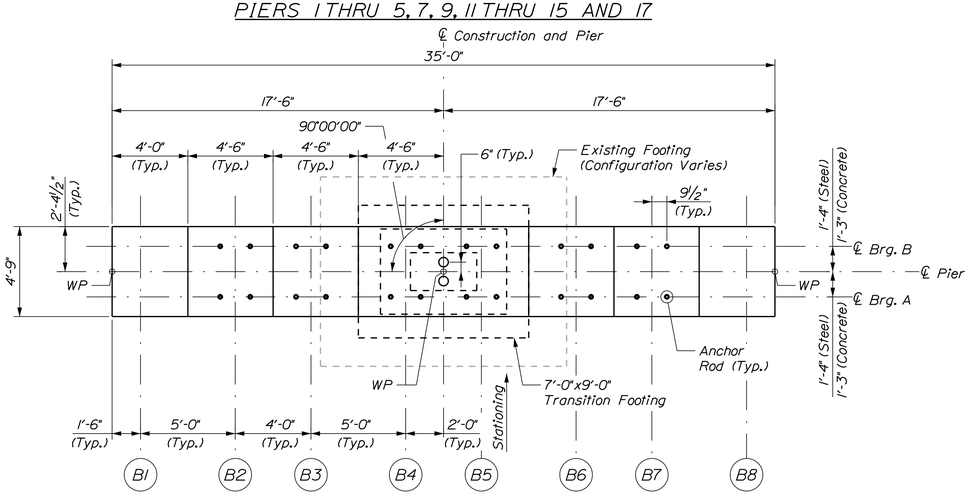

PIERS 6 AND 10

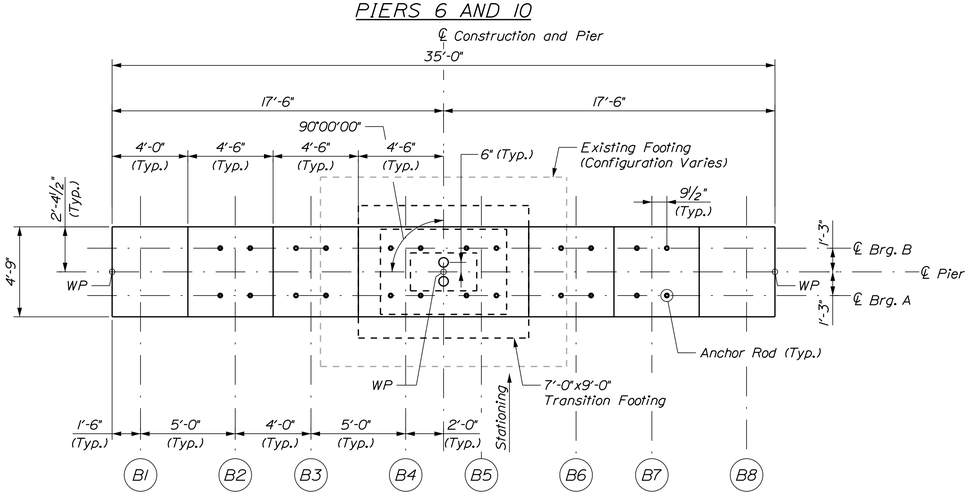

FIXED PIERS 8 AND 13

PLAN
(Collar for Precast Columns not Shown)
Scale: 1/4" = 1'-0"

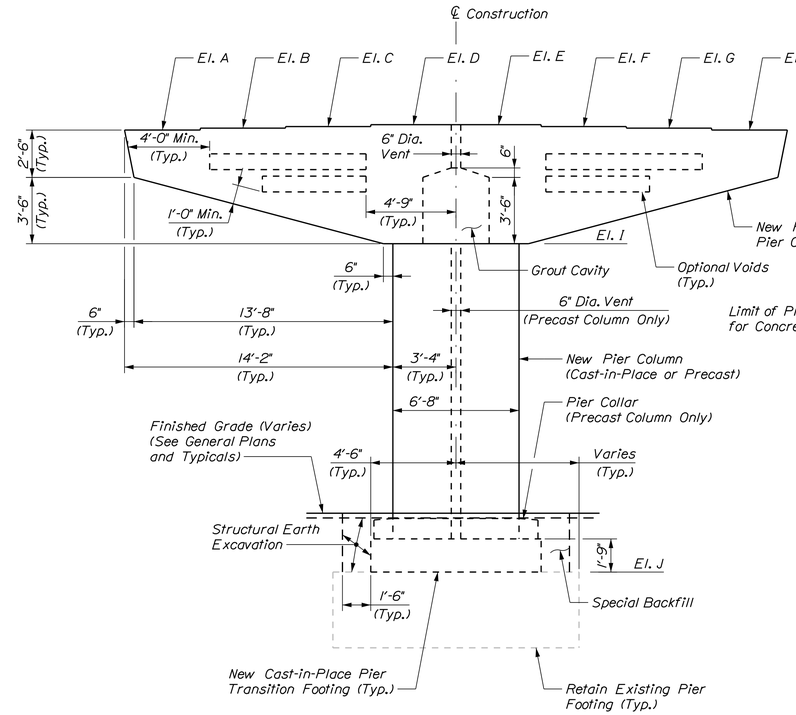

ELEVATION
(Piers 1 thru 15 and 17 only)
Scale: 1/4" = 1'-0"

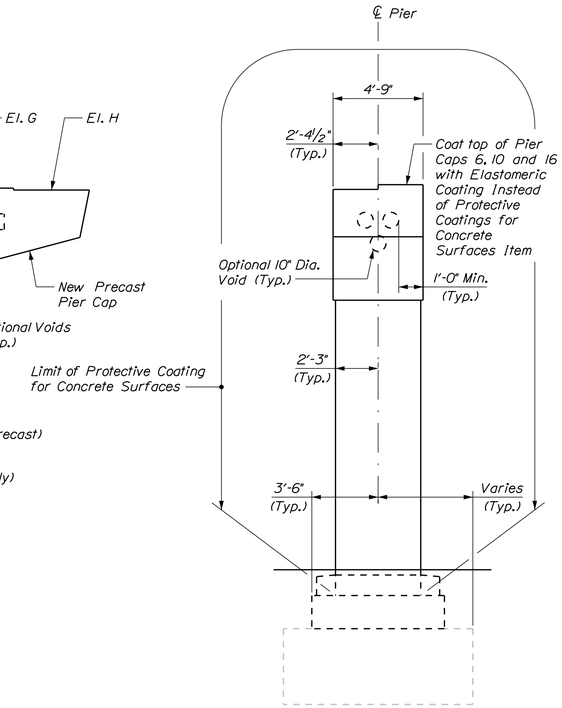

END ELEVATION
Scale: 1/4" = 1'-0"

PIER NOTES

1. Pier Caps at Piers 18 and 19 may be cast-in-place instead of precast if sufficient clearance for traffic is provided. For CIP caps, eliminate optional voids and related grout details. Pier columns may be either cast-in-place or precast.

2. Reinforcing steel shall have a minimum concrete cover of 3 inches unless otherwise noted.

3. Surface coatings for precast pier caps shall be shop applied unless approved otherwise by the Resident and allowed by maintenance of traffic restrictions in the Contract.

4. There shall be no difference between the pedestal elevations given in the plans and those measured in the field. Locations that do not match the proposed elevations shall be adjusted by methods proposed by the Contractor and approved by the Resident at no additional cost to the Department.

5. Lifting pockets shall not be allowed in the top of the pier cap.

6. Anchor rods shall be set by template prior to pouring the precast or cast-in-place pier cap.

STATE OF MAINE
DEPARTMENT OF TRANSPORTATION

NHPP - 1927(300)

WIN 19273.00

BRIDGE NO. 3838

BRIDGE PLANS

vhb

		BY	DATE
PROJ. MANAGER	J. KITTREDGE		
DESIGN-DETAILED	KZS	KDW	12/15
CHECKED-REVIEWED	JAW	SMH	12/15
DESIGN2-DETAILED2	---	---	---
DESIGN3-DETAILED3	---	---	---
REVISIONS 1	---	---	---
REVISIONS 2	---	---	---
REVISIONS 3	---	---	---
REVISIONS 4	---	---	---
FIELD CHANGES	---	---	---

WEST APPROACH BRIDGE
MAINE OWNED RR & CITY STREETS
BATH SAGADAHOC COUNTY

PIER GEOMETRY (1 OF 2)

SHEET NUMBER
105
OF 145

Filename: ...\MSTA\105_pierdetail_01.dgn Division: HIGHWAY Username: kwentworth Date:12/21/2015

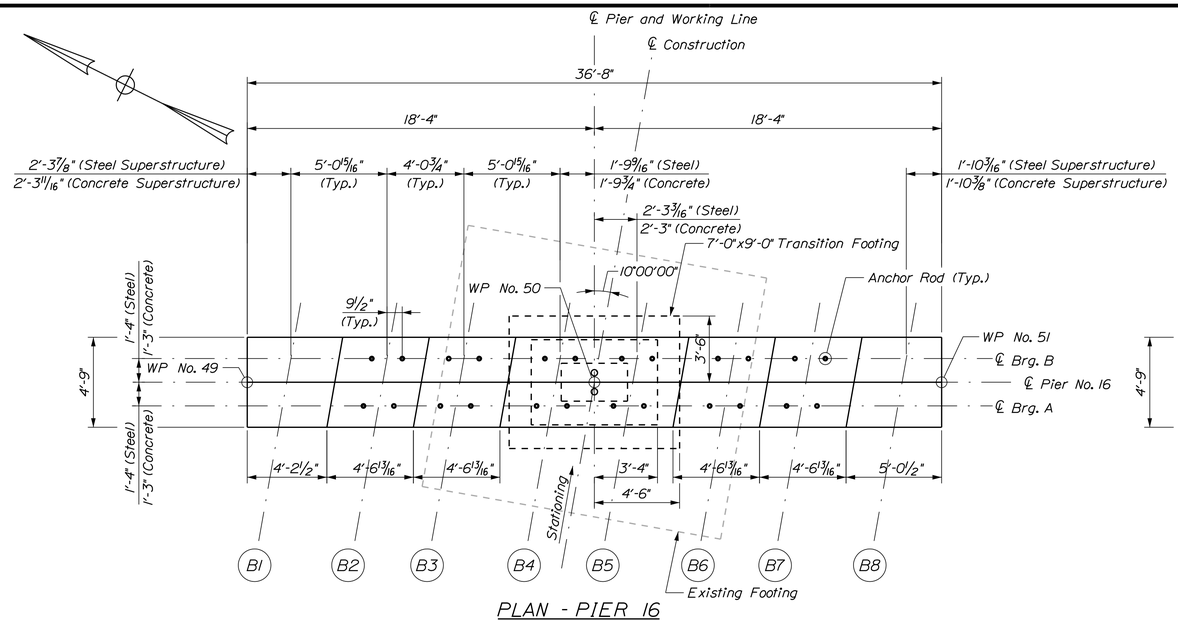

PLAN - PIER 16

Scale: 1/4" = 1'-0"

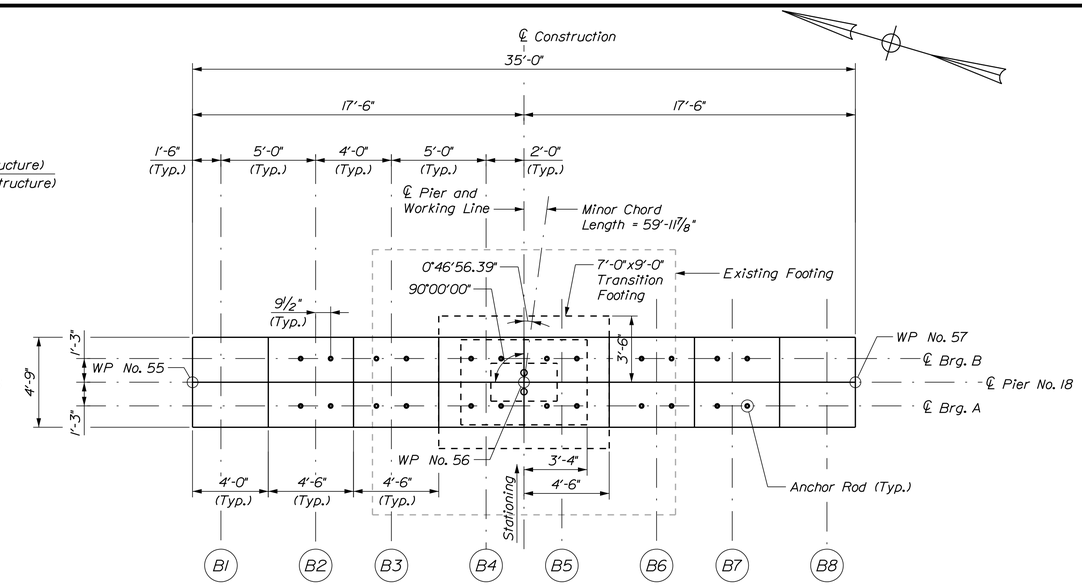

PLAN - PIER 18

Scale: 1/4" = 1'-0"

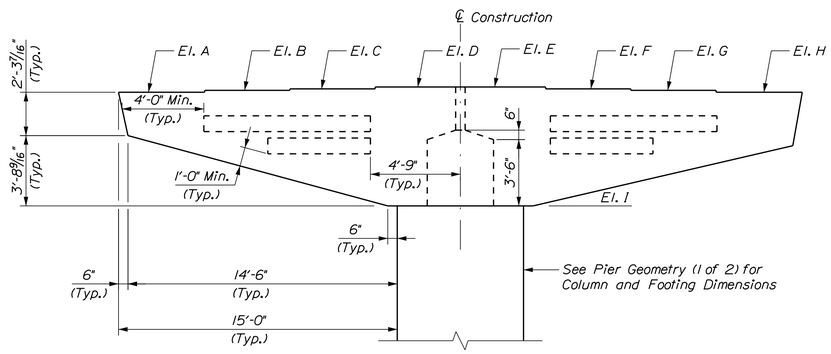

ELEVATION - PIER 16

Scale: 1/4" = 1'-0"

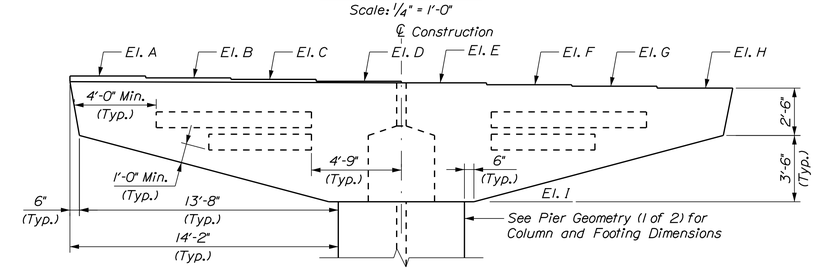

ELEVATION - PIERS 18 AND 19

(Pier 19 Concrete Superstructure Shown)

Scale: 1/4" = 1'-0"

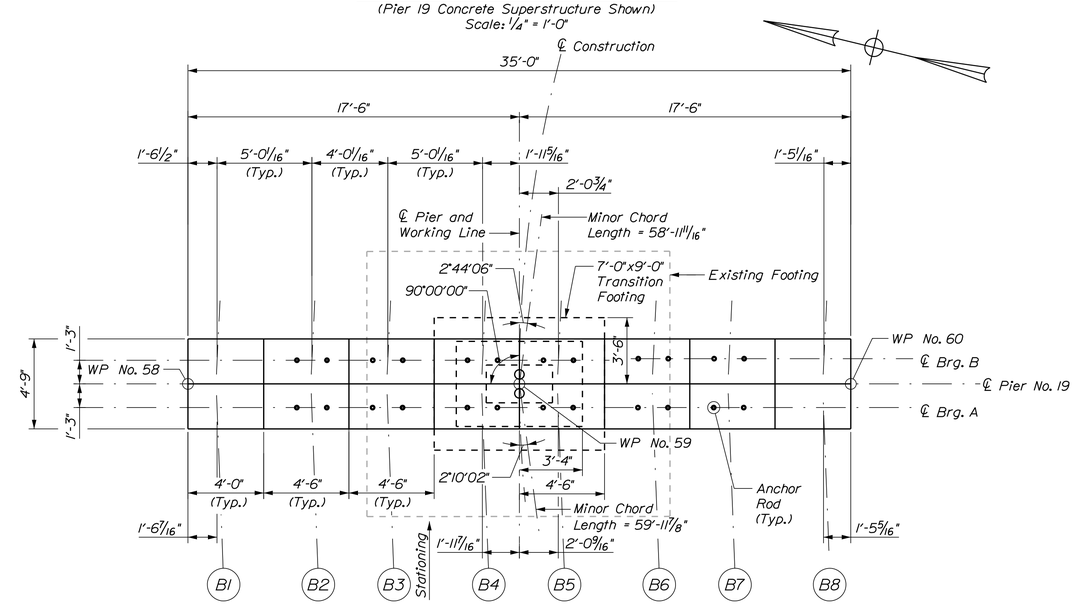

PLAN - PIER 19

Scale: 1/4" = 1'-0"

NOTE

1. See Pier Geometry (1 of 2) for Pier Notes.

STATE OF MAINE
DEPARTMENT OF TRANSPORTATION

NHPP - 1927(300)

WIN 19273.00

BRIDGE NO. 3838

BRIDGE PLANS

vhb

		BY	DATE
PROJ. MANAGER	J. KITTREDGE		
DESIGN-DETAILED	KZS	KDW	12/15
CHECKED-REVIEWED	JCM/JAW	SMH	12/15
DESIGN2-DETAILED2	---	---	---
DESIGN3-DETAILED3	---	---	---
REVISIONS 1	---	---	---
REVISIONS 2	---	---	---
REVISIONS 3	---	---	---
REVISIONS 4	---	---	---
FIELD CHANGES	---	---	---

WEST APPROACH BRIDGE
MAINE OWNED RR & CITY STREETS
BATH SAGADAHOC COUNTY

PIER GEOMETRY
(2 OF 2)

SHEET NUMBER

106

OF 145

Filename: ...\MSTA\106_pierdetail_05.dgn Division: HIGHWAY Username: kwentworth Date:12/21/2015

STEEL SUPERSTRUCTURE OPTION

Pier No. 1		
El.	℄ Brg. A	℄ Brg. B
A	52.32	52.33
B	52.42	52.43
C	52.50	52.51
D	52.60	52.61
E	52.60	52.61
F	52.50	52.51
G	52.42	52.43
H	52.32	52.33
I	46.32	46.32
J	37.09	37.09

Pier No. 2		
El.	℄ Brg. A	℄ Brg. B
A	52.43	52.42
B	52.53	52.52
C	52.61	52.60
D	52.71	52.70
E	52.71	52.70
F	52.61	52.60
G	52.53	52.52
H	52.43	52.42
I	46.42	46.42
J	34.26	34.26

Pier No. 3		
El.	℄ Brg. A	℄ Brg. B
A	52.17	52.15
B	52.27	52.25
C	52.35	52.33
D	52.45	52.43
E	52.45	52.43
F	52.35	52.33
G	52.27	52.25
H	52.17	52.15
I	46.15	46.15
J	31.87	31.87

Pier No. 4		
El.	℄ Brg. A	℄ Brg. B
A	51.52	51.49
B	51.62	51.59
C	51.70	51.67
D	51.80	51.77
E	51.80	51.77
F	51.70	51.67
G	51.62	51.59
H	51.52	51.49
I	45.49	45.49
J	29.09	29.09

Pier No. 5		
El.	℄ Brg. A	℄ Brg. B
A	50.53	50.48
B	50.63	50.58
C	50.71	50.66
D	50.81	50.76
E	50.81	50.76
F	50.71	50.66
G	50.63	50.58
H	50.53	50.48
I	44.48	44.48
J	26.69	26.09

Pier No. 6		
El.	℄ Brg. A	℄ Brg. B
A	49.20	49.14
B	49.30	49.24
C	49.38	49.32
D	49.48	49.42
E	49.48	49.42
F	49.38	49.32
G	49.30	49.24
H	49.20	49.14
I	43.14	43.14
J	24.28	24.28

Pier No. 7		
El.	℄ Brg. A	℄ Brg. B
A	47.77	47.71
B	47.87	47.81
C	47.95	47.89
D	48.05	47.99
E	48.05	47.99
F	47.95	47.89
G	47.87	47.81
H	47.77	47.71
I	41.71	41.71
J	22.34	22.34

Pier No. 8		
El.	℄ Brg. A	℄ Brg. B
A	46.38	46.32
B	46.48	46.42
C	46.56	46.50
D	46.66	46.60
E	46.66	46.60
F	46.56	46.50
G	46.48	46.42
H	46.38	46.32
I	40.32	40.32
J	20.26	20.26

Pier No. 9		
El.	℄ Brg. A	℄ Brg. B
A	44.92	44.86
B	45.02	44.96
C	45.10	45.04
D	45.20	45.14
E	45.20	45.14
F	45.10	45.04
G	45.02	44.96
H	44.92	44.86
I	38.86	38.86
J	18.32	18.32

Pier No. 10		
El.	℄ Brg. A	℄ Brg. B
A	43.48	43.43
B	43.58	43.53
C	43.66	43.61
D	43.76	43.71
E	43.76	43.71
F	43.66	43.61
G	43.58	43.53
H	43.48	43.43
I	37.43	37.43
J	16.81	16.81

Pier No. 11		
El.	℄ Brg. A	℄ Brg. B
A	42.06	42.00
B	42.16	42.10
C	42.24	42.18
D	42.34	42.28
E	42.34	42.28
F	42.24	42.18
G	42.16	42.10
H	42.06	42.00
I	36.00	36.00
J	15.31	15.31

Pier No. 12		
El.	℄ Brg. A	℄ Brg. B
A	40.63	40.57
B	40.73	40.67
C	40.81	40.75
D	40.91	40.85
E	40.91	40.85
F	40.81	40.75
G	40.73	40.67
H	40.63	40.57
I	34.57	34.57
J	13.60	13.60

Pier No. 13		
El.	℄ Brg. A	℄ Brg. B
A	39.20	39.14
B	39.30	39.24
C	39.38	39.32
D	39.48	39.42
E	39.48	39.42
F	39.38	39.32
G	39.30	39.24
H	39.20	39.14
I	33.14	33.14
J	12.48	12.48

Pier No. 14		
El.	℄ Brg. A	℄ Brg. B
A	37.61	37.26
B	37.71	37.36
C	37.79	37.44
D	37.89	37.54
E	37.89	37.54
F	37.79	37.44
G	37.71	37.36
H	37.61	37.26
I	31.26	31.26
J	10.82	10.82

Pier No. 15		
El.	℄ Brg. A	℄ Brg. B
A	34.90	34.81
B	35.00	34.91
C	35.08	34.99
D	35.18	35.09
E	35.18	35.09
F	35.08	34.99
G	35.00	34.91
H	34.90	34.81
I	28.81	28.81
J	8.80	8.80

Pier No. 16		
El.	℄ Brg. A	℄ Brg. B
A	31.97	31.86
B	32.03	31.92
C	32.08	31.96
D	32.14	32.02
E	32.11	31.99
F	31.97	31.85
G	31.86	31.74
H	31.72	31.60
I	25.60	25.60
J	6.90	6.90

Pier No. 17		
El.	℄ Brg. A	℄ Brg. B
A	28.47	28.33
B	28.57	28.43
C	28.65	28.51
D	28.75	28.61
E	28.75	28.61
F	28.65	28.51
G	28.57	28.43
H	28.47	28.33
I	22.33	22.33
J	6.17	6.17

Pier No. 18		
El.	℄ Brg. A	℄ Brg. B
A	24.96	25.11
B	24.96	25.11
C	24.96	25.11
D	24.96	25.11
E	24.92	25.07
F	24.82	24.97
G	24.74	24.89
H	24.64	24.79
I	18.64	18.64
J	5.29	5.29

Pier No. 19		
El.	℄ Brg. A	℄ Brg. B
A	22.95	22.87
B	22.85	22.77
C	22.77	22.69
D	22.67	22.59
E	22.59	22.51
F	22.49	22.41
G	22.41	22.33
H	22.31	22.23
I	16.23	16.23
J	6.13	6.13

NOTE

1. For Concrete Superstructure Option, see Pier Elevation Tables (2 of 2).

STATE OF MAINE
DEPARTMENT OF TRANSPORTATION

NHPP - 1927(300)

WIN 19273.00

BRIDGE NO. 3838

BRIDGE PLANS

vhb

		BY	DATE
PROJ. MANAGER	J. KITTREDGE		
DESIGN-DETAILED	JGM	KDW	12/15
CHECKED-REVIEWED	KCD	SMH	12/15
DESIGN2-DETAILED2	---	---	---
DESIGN3-DETAILED3	---	---	---
REVISIONS 1	---	---	---
REVISIONS 2	---	---	---
REVISIONS 3	---	---	---
REVISIONS 4	---	---	---
FIELD CHANGES	---	---	---

WEST APPROACH BRIDGE
MAINE OWNED RR & CITY STREETS
BATH SAGADAHOC COUNTY

PIER ELEVATION
TABLES (1 OF 2)

SHEET NUMBER
107
OF 145

Filename: ...\MSTA\107_pierdelevs_01.dgn Division: HIGHWAY Username: kwentworth Date:12/21/2015

CONCRETE SUPERSTRUCTURE OPTION

Pier No. 1		
El.	℄ Brg. A	℄ Brg. B
A	52.35	52.38
B	52.45	52.48
C	52.53	52.56
D	52.63	52.66
E	52.63	52.66
F	52.53	52.56
G	52.45	52.48
H	52.35	52.38
I	46.35	46.35
J	37.09	37.09

Pier No. 2		
El.	℄ Brg. A	℄ Brg. B
A	52.48	52.48
B	52.57	52.57
C	52.65	52.65
D	52.75	52.75
E	52.75	52.75
F	52.65	52.65
G	52.57	52.57
H	52.48	52.48
I	46.48	46.48
J	34.26	34.26

Pier No. 3		
El.	℄ Brg. A	℄ Brg. B
A	52.22	52.20
B	52.31	52.29
C	52.39	52.37
D	52.49	52.47
E	52.49	52.47
F	52.39	52.37
G	52.31	52.29
H	52.22	52.20
I	46.20	46.20
J	31.87	31.87

Pier No. 4		
El.	℄ Brg. A	℄ Brg. B
A	51.58	51.54
B	51.67	51.64
C	51.75	51.72
D	51.85	51.82
E	51.85	51.82
F	51.75	51.72
G	51.67	51.64
H	51.58	51.54
I	45.54	45.54
J	29.09	29.09

Pier No. 5		
El.	℄ Brg. A	℄ Brg. B
A	50.58	50.51
B	50.67	50.60
C	50.75	50.68
D	50.85	50.78
E	50.85	50.78
F	50.75	50.68
G	50.67	50.60
H	50.58	50.51
I	44.51	44.51
J	26.69	26.69

Pier No. 6		
El.	℄ Brg. A	℄ Brg. B
A	49.23	49.15
B	49.32	49.25
C	49.40	49.33
D	49.50	49.43
E	49.50	49.43
F	49.40	49.33
G	49.32	49.25
H	49.23	49.15
I	43.15	43.15
J	24.28	24.28

Pier No. 7		
El.	℄ Brg. A	℄ Brg. B
A	47.77	47.72
B	47.87	47.81
C	47.95	47.89
D	48.05	47.99
E	48.05	47.99
F	47.95	47.89
G	47.87	47.81
H	47.77	47.72
I	41.72	41.72
J	22.34	22.34

Pier No. 8		
El.	℄ Brg. A	℄ Brg. B
A	46.38	46.33
B	46.48	46.42
C	46.56	46.50
D	46.66	46.60
E	46.66	46.60
F	46.56	46.50
G	46.48	46.42
H	46.38	46.33
I	40.33	40.33
J	20.26	20.26

Pier No. 9		
El.	℄ Brg. A	℄ Brg. B
A	44.92	44.87
B	45.02	44.96
C	45.10	45.04
D	45.20	45.14
E	45.20	45.14
F	45.10	45.04
G	45.02	44.96
H	44.92	44.87
I	38.87	38.87
J	18.32	18.32

Pier No. 10		
El.	℄ Brg. A	℄ Brg. B
A	43.48	43.42
B	43.58	43.52
C	43.66	43.60
D	43.76	43.70
E	43.76	43.70
F	43.66	43.60
G	43.58	43.52
H	43.48	43.42
I	37.42	37.42
J	16.81	16.81

Pier No. 11		
El.	℄ Brg. A	℄ Brg. B
A	42.07	42.01
B	42.16	42.11
C	42.24	42.19
D	42.34	42.29
E	42.34	42.29
F	42.24	42.19
G	42.16	42.11
H	42.07	42.01
I	36.01	36.01
J	15.31	15.31

Pier No. 12		
El.	℄ Brg. A	℄ Brg. B
A	40.63	40.52
B	40.73	40.62
C	40.81	40.70
D	40.91	40.80
E	40.91	40.80
F	40.81	40.70
G	40.73	40.62
H	40.63	40.52
I	34.52	34.52
J	13.60	13.60

Pier No. 13		
El.	℄ Brg. A	℄ Brg. B
A	39.15	39.14
B	39.24	39.23
C	39.32	39.31
D	39.42	39.41
E	39.42	39.41
F	39.32	39.31
G	39.24	39.23
H	39.15	39.14
I	33.14	33.14
J	12.48	12.48

Pier No. 14		
El.	℄ Brg. A	℄ Brg. B
A	37.61	37.44
B	37.70	37.53
C	37.78	37.61
D	37.88	37.71
E	37.88	37.71
F	37.78	37.61
G	37.70	37.53
H	37.61	37.44
I	31.44	31.44
J	10.82	10.82

Pier No. 15		
El.	℄ Brg. A	℄ Brg. B
A	35.08	35.00
B	35.18	35.09
C	35.26	35.17
D	35.36	35.27
E	35.36	35.27
F	35.26	35.17
G	35.18	35.09
H	35.08	35.00
I	29.00	29.00
J	8.80	8.80

Pier No. 16		
El.	℄ Brg. A	℄ Brg. B
A	32.16	32.14
B	32.22	32.20
C	32.26	32.25
D	32.32	32.31
E	32.29	32.28
F	32.15	32.14
G	32.04	32.02
H	31.91	31.89
I	25.89	25.89
J	6.90	6.90

Pier No. 17		
El.	℄ Brg. A	℄ Brg. B
A	28.75	28.58
B	28.84	28.67
C	28.92	28.74
D	29.02	28.84
E	29.02	28.84
F	28.92	28.74
G	28.84	28.67
H	28.75	28.58
I	22.58	22.58
J	6.17	6.17

Pier No. 18		
El.	℄ Brg. A	℄ Brg. B
A	24.88	25.02
B	24.97	25.01
C	25.06	25.01
D	25.15	25.01
E	25.15	24.95
F	25.05	24.85
G	24.97	24.77
H	24.88	24.68
I	18.68	18.68
J	5.29	5.29

Pier No. 19		
El.	℄ Brg. A	℄ Brg. B
A	22.53	22.76
B	22.54	22.65
C	22.53	22.57
D	22.53	22.47
E	22.47	22.39
F	22.37	22.29
G	22.29	22.21
H	22.20	22.12
I	16.12	16.12
J	6.13	6.13

NOTE

1. For Steel Superstructure Option, see Pier Elevation Tables (1 of 2).

STATE OF MAINE
DEPARTMENT OF TRANSPORTATION

NHPP - 1927(300)

WIN 19273.00

BRIDGE NO. 3838

BRIDGE PLANS

vhb

		BY	DATE
PROJ. MANAGER	J. KITTREDGE		
DESIGN-DETAILED	KZS	KDW	12/15
CHECKED-REVIEWED	JGM	SMH	12/15
DESIGN2-DETAILED2	---	---	---
DESIGN3-DETAILED3	---	---	---
REVISIONS 1	---	---	---
REVISIONS 2	---	---	---
REVISIONS 3	---	---	---
REVISIONS 4	---	---	---
FIELD CHANGES	---	---	---

WEST APPROACH BRIDGE
MAINE OWNED RR & CITY STREETS
BATH SAGADAHOC COUNTY

PIER ELEVATION
TABLES (2 OF 2)

SHEET NUMBER
108
OF 145

Filename: ...\MSTA\108_pierdelevs_02.dgn Division: HIGHWAY Username: kwentworth Date:12/21/2015

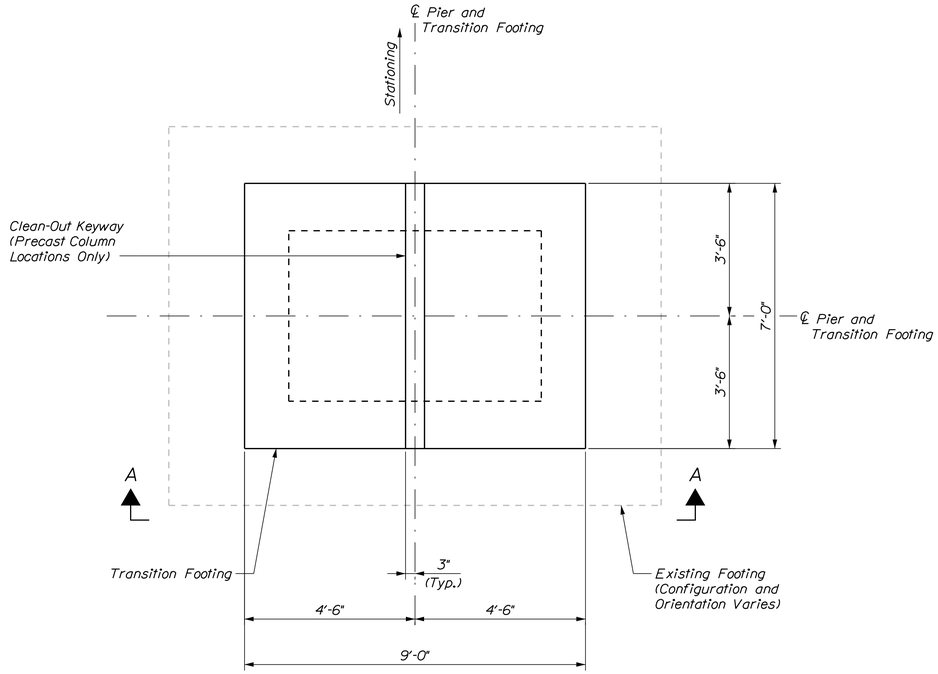

PLAN

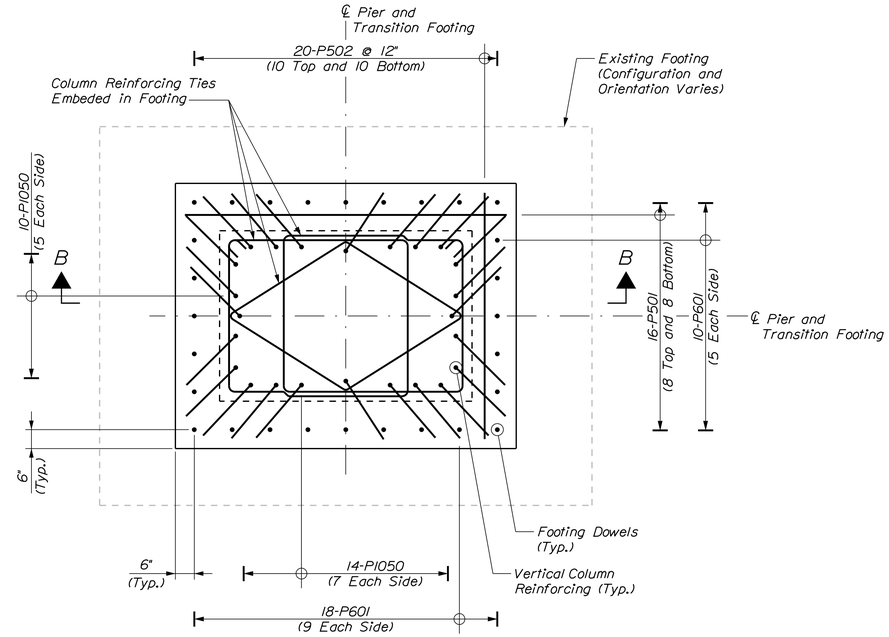

REINFORCING PLAN
(Cast-in-Place Transition Footing Shown)

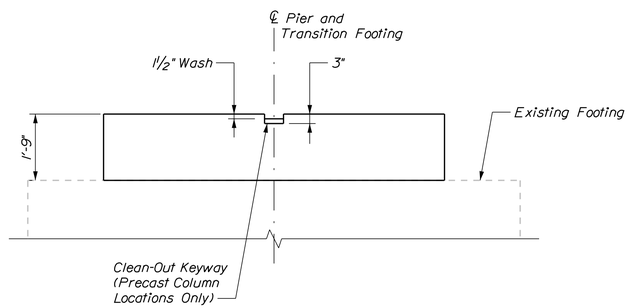

VIEW A-A

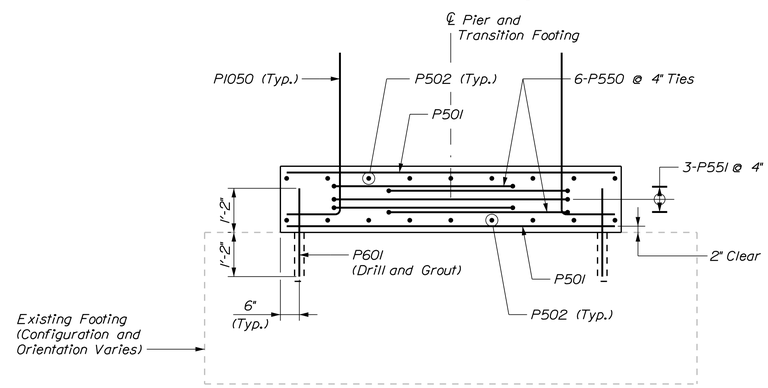

SECTION B-B
(Cast-in-Place Transition Footing Shown)
(Column not Shown)

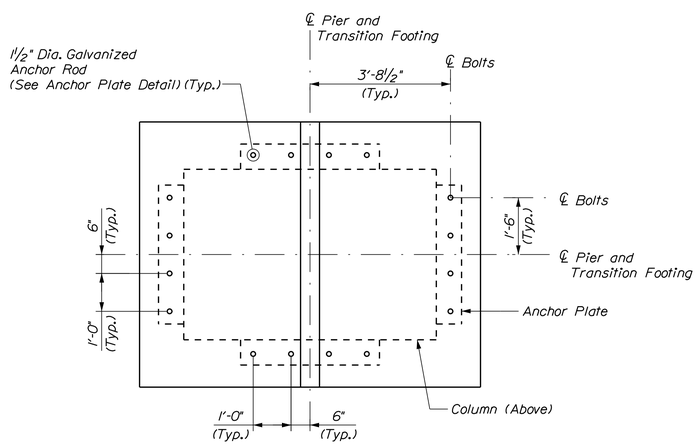

PRECAST COLUMN TEMPORARY FOOTING ANCHORAGE DETAILS

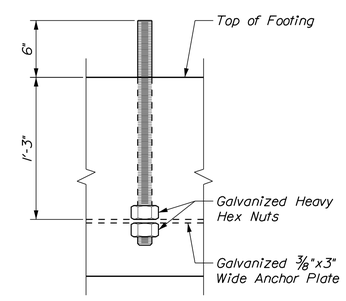

ANCHOR PLATE DETAIL

STATE OF MAINE
DEPARTMENT OF TRANSPORTATION

NHPP - 1927(300)

WIN 19273.00

BRIDGE NO. 3838

BRIDGE PLANS

vhb

		BY	DATE
PROJ. MANAGER	J. KITTREDGE		
DESIGN-DETAILED	KZS	KDW	12/15
CHECKED-REVIEWED	JAW	SMH	12/15
DESIGN2-DETAILED2	---	---	---
DESIGN3-DETAILED3	---	---	---
REVISIONS: 1	---	---	---
REVISIONS: 2	---	---	---
REVISIONS: 3	---	---	---
REVISIONS: 4	---	---	---
FIELD CHANGES	---	---	---

WEST APPROACH BRIDGE
MAINE OWNED RR & CITY STREETS
BATH SAGADAHOC COUNTY

PIER TRANSITION FOOTING DETAILS

SHEET NUMBER
109
OF 145

Filename: ...\MSTA\109_pierdetail_04.dgn Division: HIGHWAY Username: kwentworth Date:12/21/2015

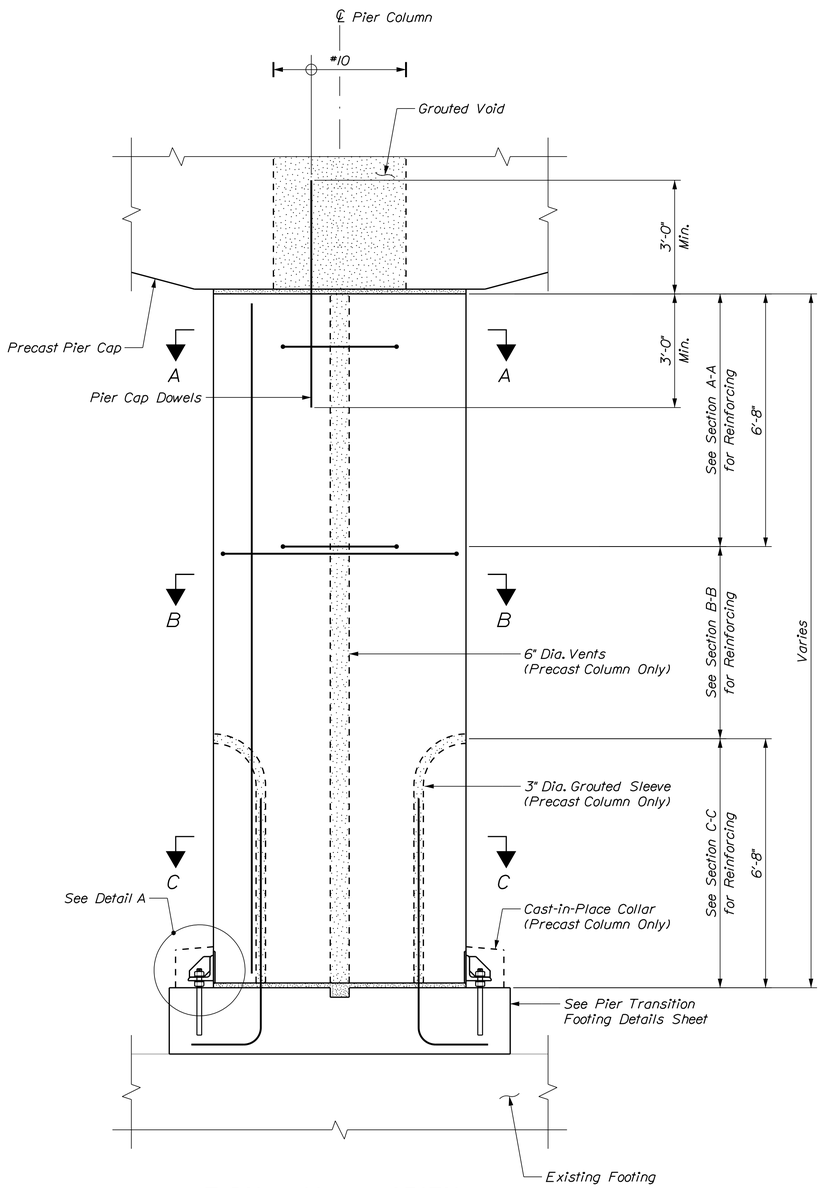

TYPICAL COLUMN SECTION
(Precast Column Shown)
(Cast-in-Place Columns Similar)
Scale: 1/2" = 1'-0"

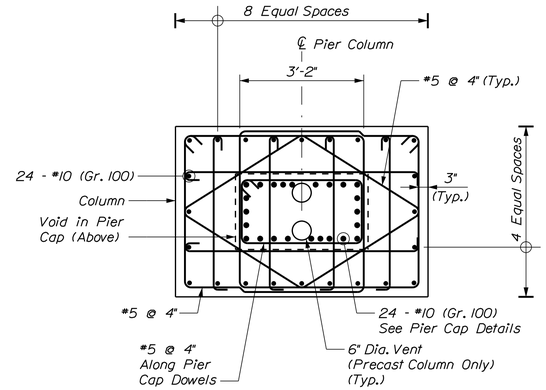

SECTION A-A
Scale: 1/2" = 1'-0"

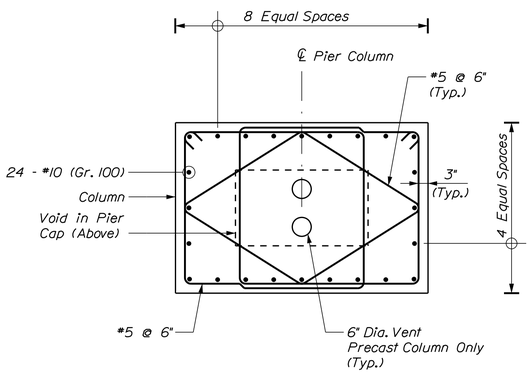

SECTION B-B
Scale: 1/2" = 1'-0"

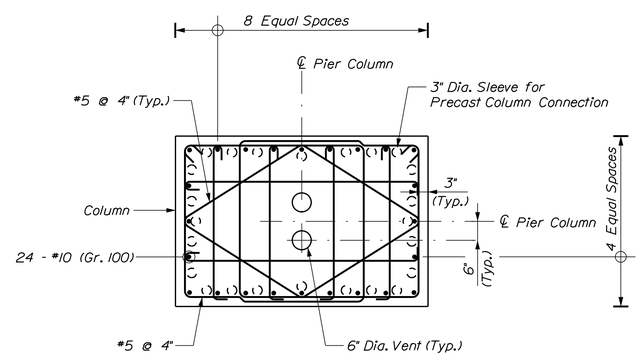

SECTION C-C
Scale: 1/2" = 1'-0"

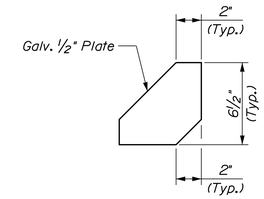

STIFFENER PLATE DETAIL
Scale: 2" = 1'-0"

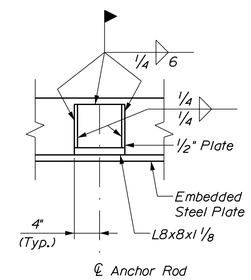

WELD DETAIL
Scale: 1" = 1'-0"

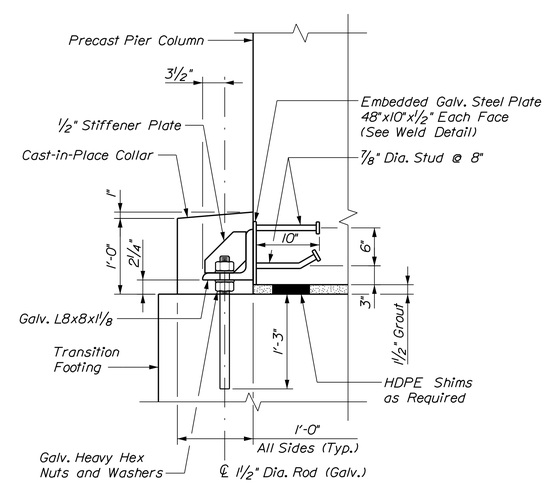

DETAIL A
Scale: 1" = 1'-0"

STATE OF MAINE
DEPARTMENT OF TRANSPORTATION

NHPP - 1927(300)

WIN 19273.00

BRIDGE NO. 3838

BRIDGE PLANS

vhb

PROJ. MANAGER	J. KITTREDGE	BY	DATE
DESIGN-DETAILED	KZS	KDW	12/15
CHECKED-REVIEWED	JAW	SMH	12/15
DESIGN2-DETAILED2	---	---	---
DESIGN3-DETAILED3	---	---	---
REVISIONS 1	---	---	---
REVISIONS 2	---	---	---
REVISIONS 3	---	---	---
REVISIONS 4	---	---	---
FIELD CHANGES	---	---	---

WEST APPROACH BRIDGE
MAINE OWNED RR & CITY STREETS
BATH SAGADAHOC COUNTY

PIER COLUMN DETAILS

SHEET NUMBER
110
OF 145

Filename: ...\MSTA\110_pierdetail_02.dgn Division: HIGHWAY Username: kwentworth Date:12/21/2015

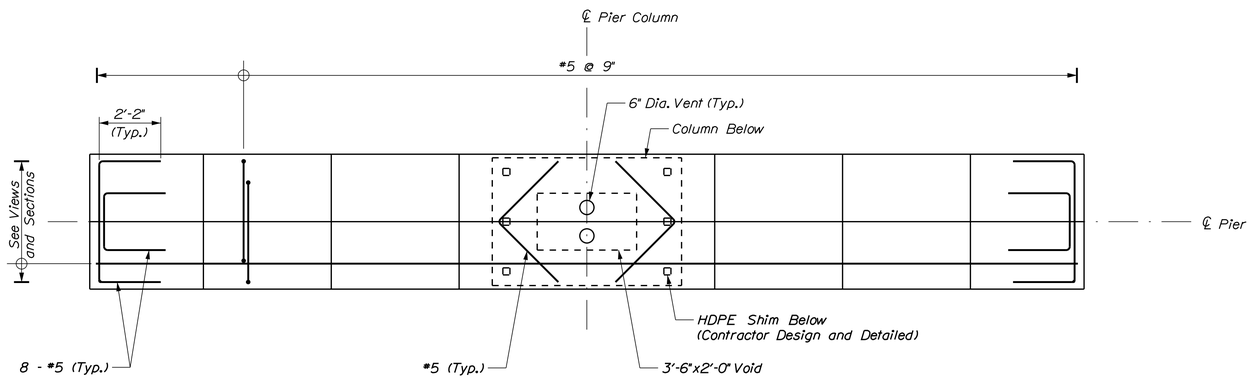

PLAN
(Optional Voids not Shown)
Scale: 3/8 = 1'-0"

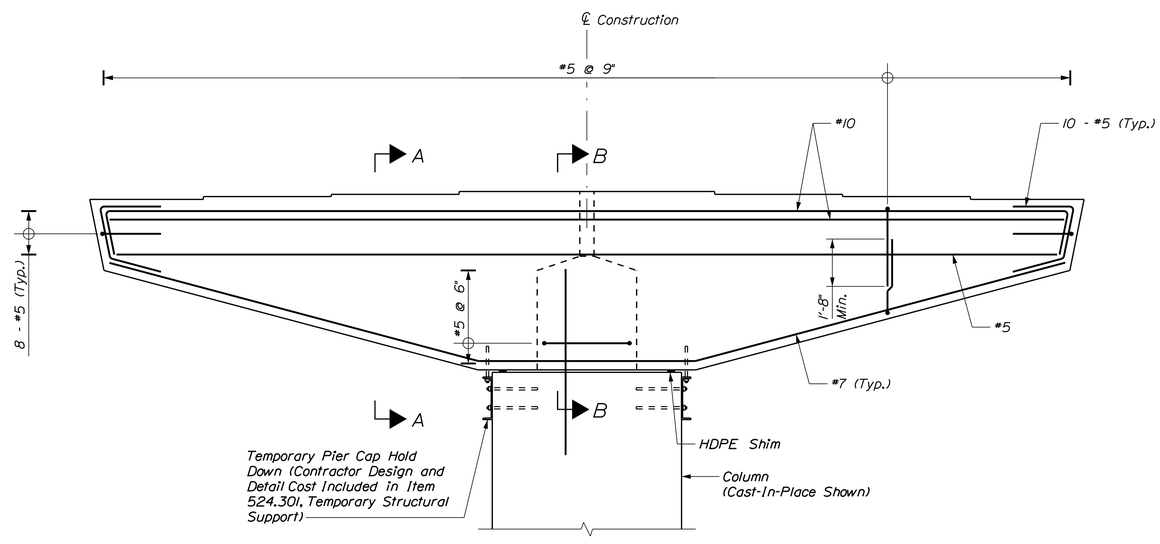

ELEVATION
(Optional Voids Not Shown)
Scale: 3/8 = 1'-0"

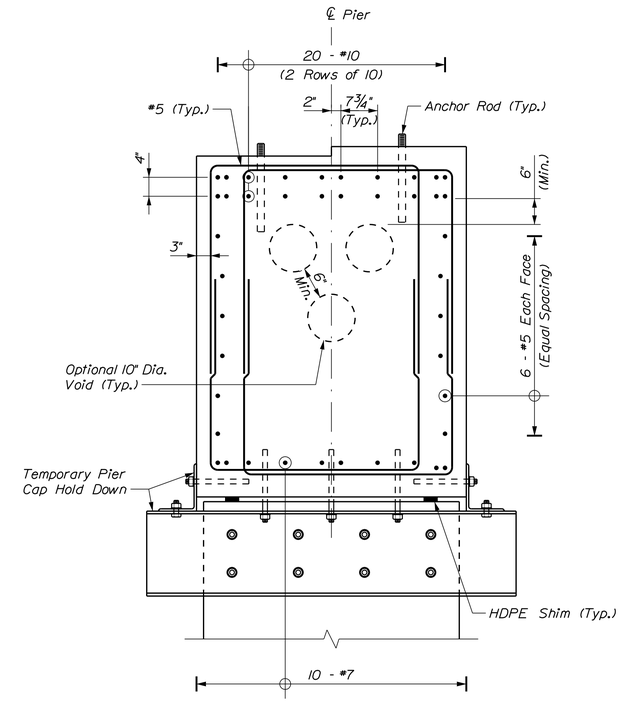

VIEW A-A
(Ungrouted Condition)
Scale: 1" = 1'-0"

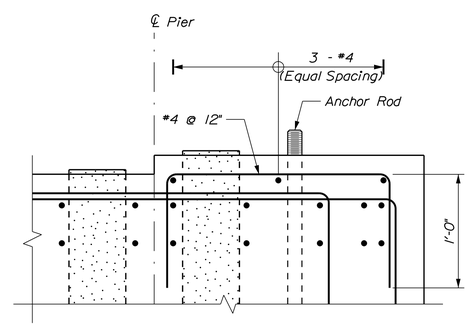

PEDESTAL REINFORCEMENT DETAIL
(Required When Cover is Greater than 4 1/2" to Main Reinforcement)
Scale: 1 1/2" = 1'-0"

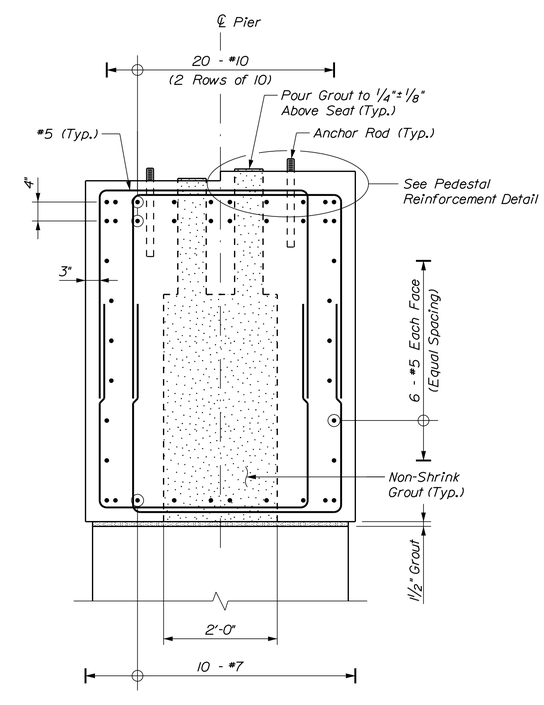

SECTION B-B
(Pier Column Dowels not Shown)
Scale: 1" = 1'-0"

STATE OF MAINE
DEPARTMENT OF TRANSPORTATION

NHPP - 1927(300)

WIN 19273.00

BRIDGE NO. 3838

BRIDGE PLANS

vhb

PROJ. MANAGER	J. KITTREDGE	BY	DATE
DESIGN-DETAILED	KZS	KDW	12/15
CHECKED-REVIEWED	JAW	SMH	12/15
DESIGN2-DETAILED2	---	---	---
DESIGN3-DETAILED3	---	---	---
REVISIONS 1	---	---	---
REVISIONS 2	---	---	---
REVISIONS 3	---	---	---
REVISIONS 4	---	---	---
FIELD CHANGES	---	---	---

WEST APPROACH BRIDGE
MAINE OWNED RR & CITY STREETS
BATH SAGADAHOC COUNTY

PIER CAP DETAILS

SHEET NUMBER
111
OF 145

Filename: ...\MSTA\111_pierdetail_03.dgn Division: HIGHWAY Username: kwentworth Date:12/21/2015

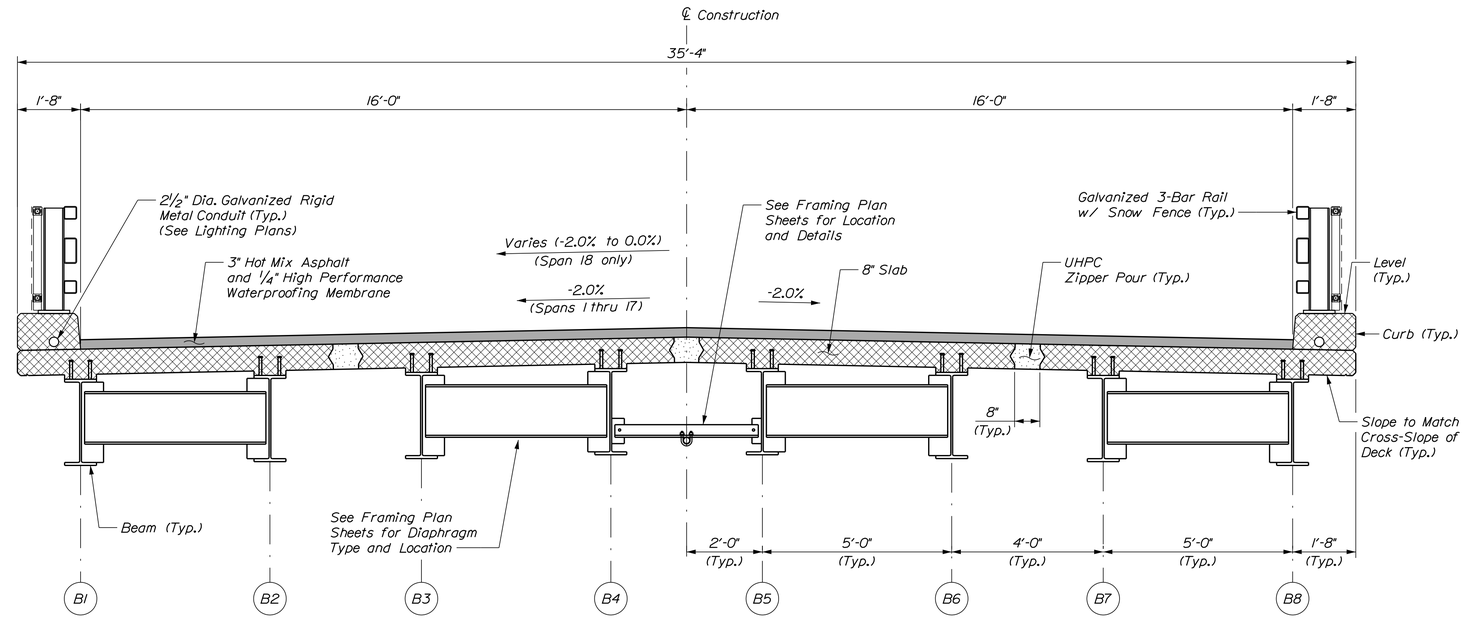

STEEL SUPERSTRUCTURE OPTION
Spans 1 thru 18
(Normal Crown, Spans 1 thru 17)
(Transition, Span 18)

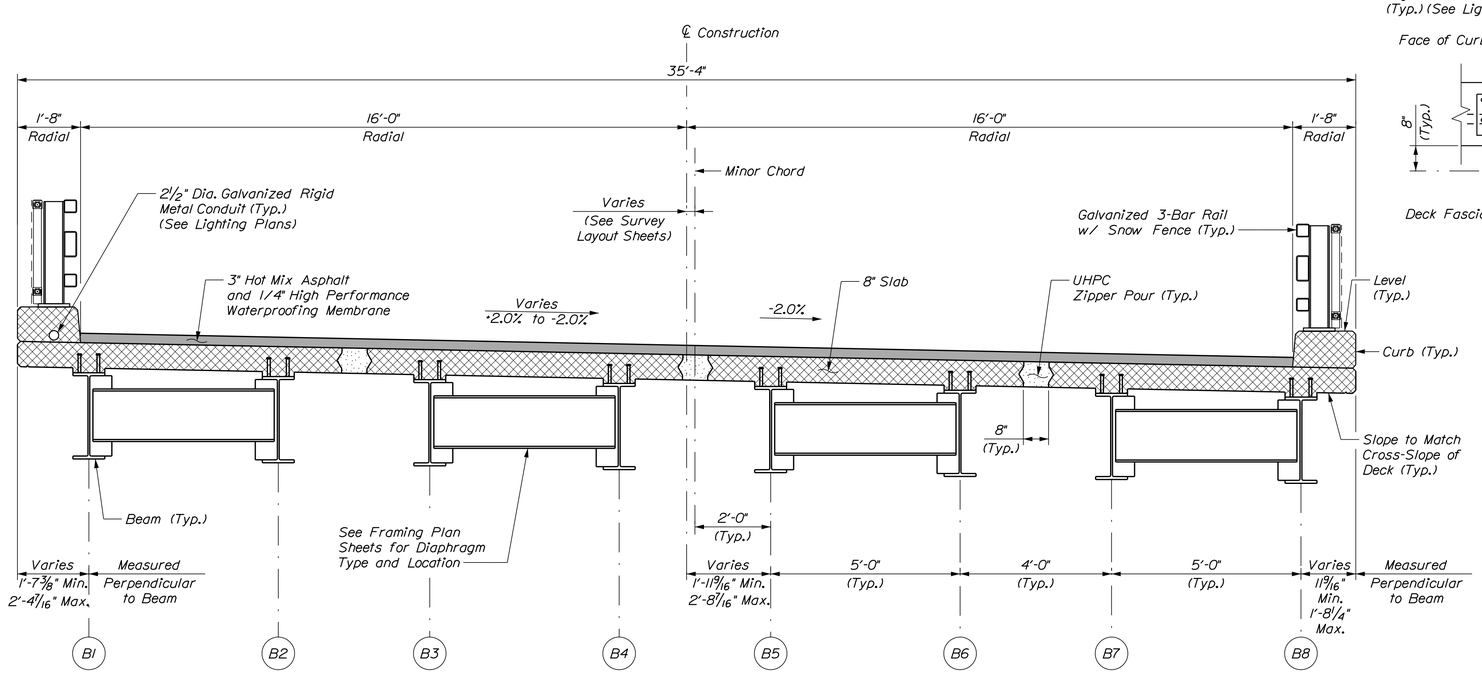

STEEL SUPERSTRUCTURE OPTION
Span 19 and Span 20
(Superelevated or Transition)

STEEL SUPERSTRUCTURE NOTES

1. See Steel Superstructure Fabrication Details Sheet for support and shim layout and deck pour geometric layout.

2. Reinforcing steel shall have a minimum concrete cover of 2 inches unless otherwise noted.

3. Adjust reinforcing steel to fit around the bridge drains in a manner approved by the Resident. Do not cut transverse reinforcing bars.

4. Form a one inch V-groove on the fascias at the horizontal joint between the curb and slab.

5. The superstructure slab concrete for each beam unit shall be placed continuously and shall be kept plastic until the entire placement has been made.

6. The formwork and its supports, over the full width of the structural slab, shall remain in place until a minimum of 48 hours has elapsed after placement of the final section of the slab. After this period, removal of formwork for sections meeting the requirements for form removal of Standard Specifications Section 502, Structural Concrete, may proceed.

7. Payment for reinforcing steel fabricated, delivered, and placed in the structural concrete slab and curbs will be considered incidental.

8. The concrete curb shall not be placed until the deck has achieved 28-day design strength. Payment for the concrete curb and bridge lighting support bump-out will be made under Item No. 502.49, Structural Concrete Curbs and Sidewalks.

9. Payment for UHPC Zipper pours, UHPC Link Slab and UHPC Abutment Closure Pour will be made under Item 502.58, Ultra-High Performance Structural Concrete.

10. UHPC Zipper Pours shall be placed concurrently within each span. Link slabs shall be placed concurrently within each bridge unit following completion of all longitudinal zipper pours within the bridge unit and after 48 hours has elapsed. During UHPC placement, begin pours from the lowest elevation and proceed to the highest elevation.

11. See Superstructure Loading Note on General Notes Sheet.

12. Prefabricated Steel Beam Units shall not be moved or transported until the deck concrete has reached 80% of the 28-day design strength.

13. Blockout and details for lifting devices and attachments shall be included with the working drawings for approval.

14. Provide ¾" chamfers along fascias of deck and top of curbs.

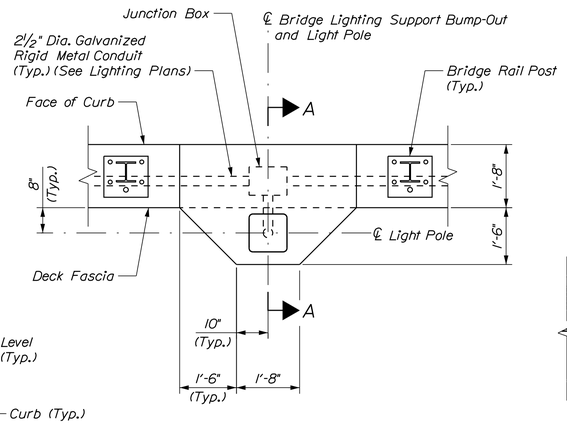

PLAN

BRIDGE LIGHTING SUPPORT BUMP-OUT
Scale: ½" = 1'-0"

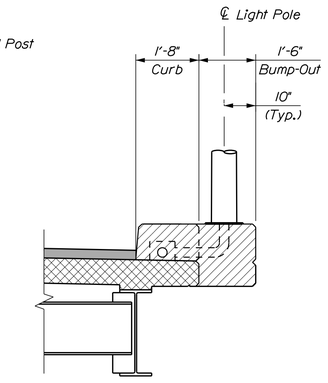

SECTION A-A
(Railing and Snow Fence not Shown)

NOTES

1. Bridge Drains not shown.

STATE OF MAINE
DEPARTMENT OF TRANSPORTATION

NHPP - 1927(300)

WIN 19273.00

BRIDGE NO. 3838

BRIDGE PLANS

vhb

		BY	DATE
PROJ. MANAGER	J. KITTREDGE		
DESIGN-DETAILED	JGM	KDW	12/15
CHECKED-REVIEWED	KCD	SMH	12/15
DESIGN2-DETAILED2	---	---	---
DESIGN3-DETAILED3	---	---	---
REVISIONS 1	---	---	---
REVISIONS 2	---	---	---
REVISIONS 3	---	---	---
REVISIONS 4	---	---	---
FIELD CHANGES	---	---	---

WEST APPROACH BRIDGE
MAINE OWNED RR & CITY STREETS
BATH SAGADAHOC COUNTY

STEEL SUPERSTRUCTURE
SECTIONS AND DETAILS

SHEET NUMBER
112
OF 145

Filename: ...\00\BRIDGE\MSTA\112_typ_01.dgn Division: HIGHWAY Username: kwentworth Date:12/21/2015

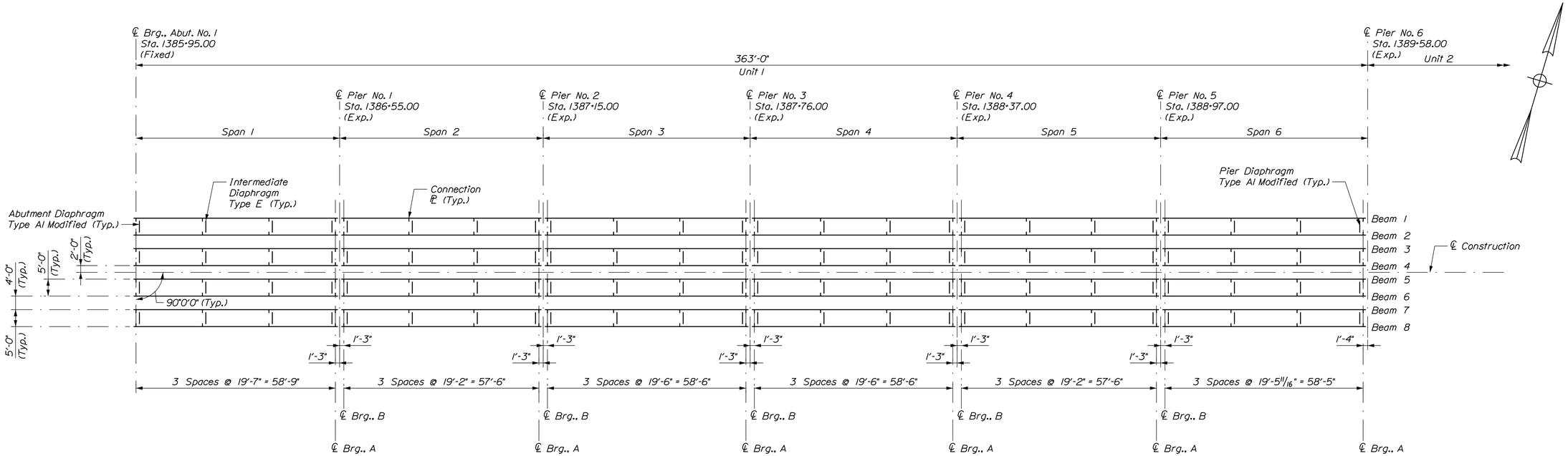

PLAN

Scale: 1/16" = 1'-0"

STRUCTURAL STEEL NOTES

1. All structural steel rolled beams shall be either thermal spray coated and seal coated or galvanized at the option of the Contractor. All exterior beams shall have the same treatment and if galvanized must be top coated "Battleship Gray" along the exterior face including the bottom of the bottom flange.

2. Diaphragms and utility supports shall be galvanized.

3. Diaphragm connection plates may either be plumb or normal to the top flange except at bearing locations where they shall be plumb.

4. A maximum natural camber (upward) of 1/8" per 10' of beam will be allowed for structural steel rolled beams. No additional camber shall be introduced. Natural camber shall be upward except for spans in sag curves where it shall be downward.

5. Beam ends shall be plumb in final position.

6. See MaineDOT Standard Details Section 504 for diaphragms and connection plate details. Type AI modified diaphragms shall be as detailed in Standard Details except diaphragms shall be W16x57.

Beam Table

Span	A	B	C	D	E	F	G	H	I	Length
1	0'-3"	0'-9"	1'-0"	0'-11 1/2"	118	59'-0"	1'-0"	0'-3"	1'-3"	60'-6"
2	0'-3"	1'-0"	1'-3"	0'-0"	115	57'-6"	1'-0"	0'-3"	1'-3"	59'-6"
3	0'-3"	1'-0"	1'-3"	0'-0"	117	58'-6"	1'-0"	0'-3"	1'-3"	60'-6"
4	0'-3"	1'-0"	1'-3"	0'-0"	117	58'-6"	1'-0"	0'-3"	1'-3"	60'-6"
5	0'-3"	1'-0"	1'-3"	0'-0"	115	57'-6"	1'-0"	0'-3"	1'-3"	59'-6"
6	0'-3"	1'-0"	1'-3"	0'-1/2"	117	58'-6"	0'-11"	0'-5"	1'-4"	60'-4"

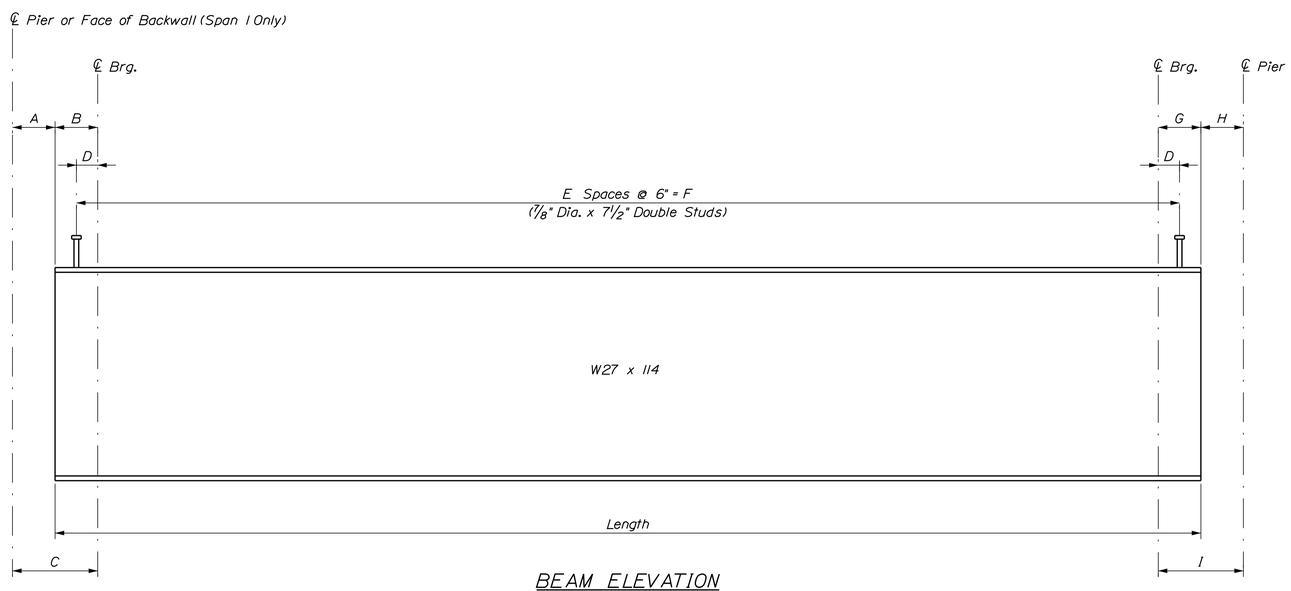

BEAM ELEVATION

(Connection Plates not Shown)

Not to Scale

STATE OF MAINE
DEPARTMENT OF TRANSPORTATION

NHPP - 1927(300)

WIN 19273.00

BRIDGE NO. 3838

BRIDGE PLANS

vhb

		BY	DATE
PROJ. MANAGER	J. KITTREDGE		
DESIGN-DETAILED	JGM	KDW	12/15
CHECKED-REVIEWED	KCD	SMH	12/15
DESIGN2-DETAILED2	---	---	---
DESIGN3-DETAILED3	---	---	---
REVISIONS 1	---	---	---
REVISIONS 2	---	---	---
REVISIONS 3	---	---	---
REVISIONS 4	---	---	---
FIELD CHANGES	---	---	---

WEST APPROACH BRIDGE
MAINE OWNED RR & CITY STREETS
BATH SAGADAHOC COUNTY

STEEL SUPERSTRUCTURE
FRAMING PLAN (UNIT 1)

SHEET NUMBER

113

OF 145

Filename: ...\MSTA\113_framing_steel_01.dgn Division: HIGHWAY Username: kwentworth Date:12/21/2015

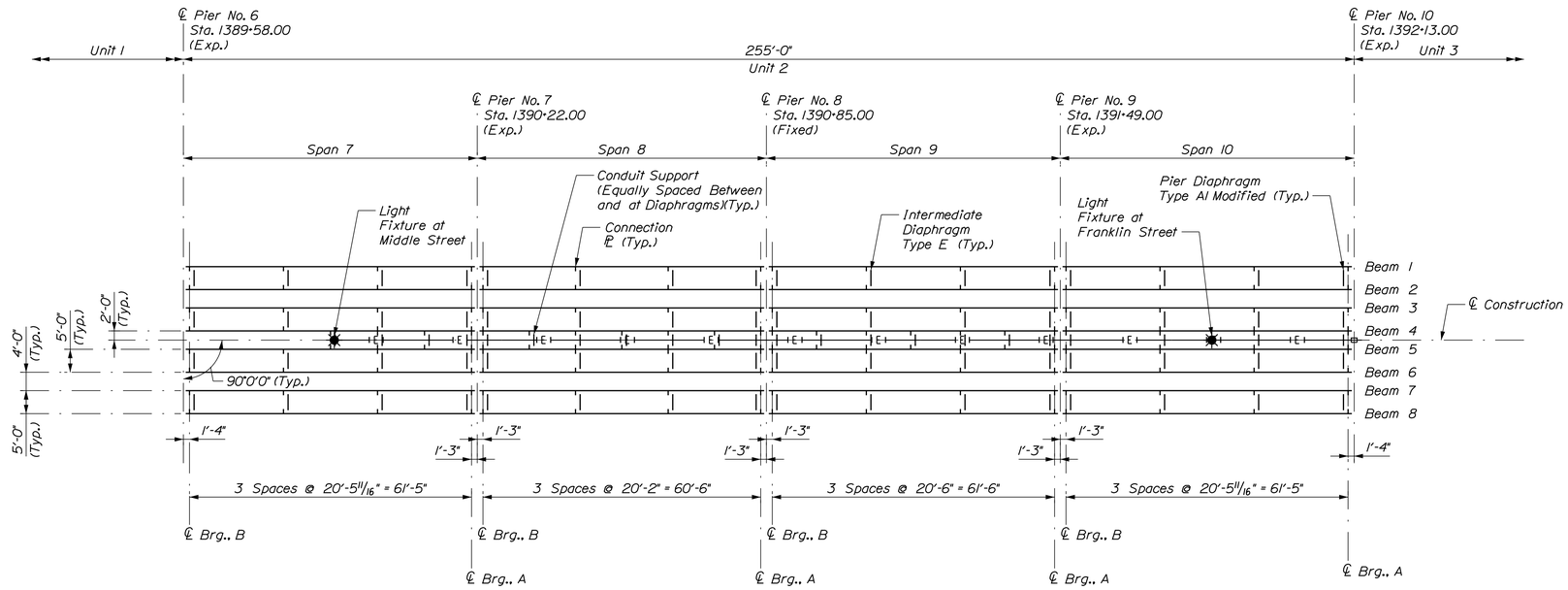

PLAN
Scale: 1/16" = 1'-0"

Beam Table										
Span	A	B	C	D	E	F	G	H	I	Length
7	0'-5"	0'-11"	1'-4"	0'-1/2"	123	61'-6"	1'-0"	0'-3"	1'-3"	63'-4"
8	0'-3"	1'-0"	1'-3"	0'-0"	121	60'-6"	1'-0"	0'-3"	1'-3"	62'-6"
9	0'-3"	1'-0"	1'-3"	0'-0"	123	61'-6"	1'-0"	0'-3"	1'-3"	63'-6"
10	0'-3"	1'-0"	1'-3"	0'-1/2"	123	61'-6"	0'-11"	0'-5"	1'-4"	63'-4"

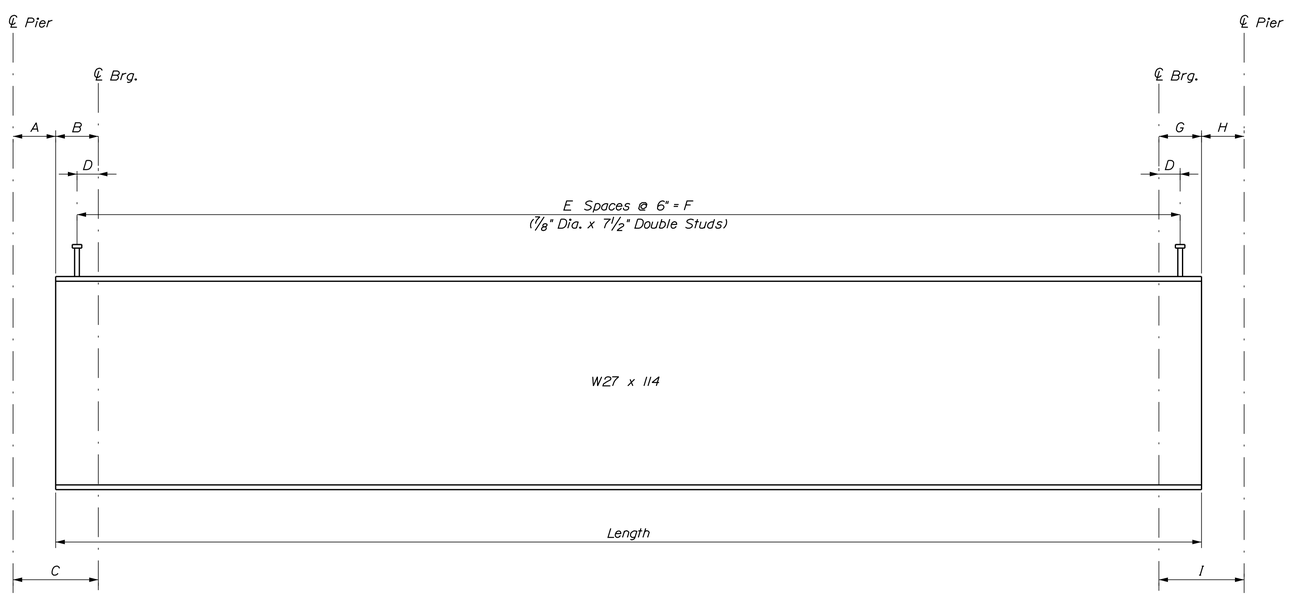

BEAM ELEVATION
(Connection Plate not Shown)
Not to Scale

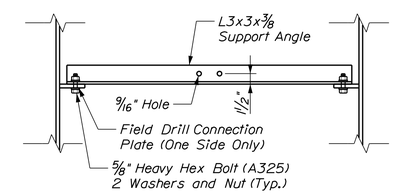

PLAN

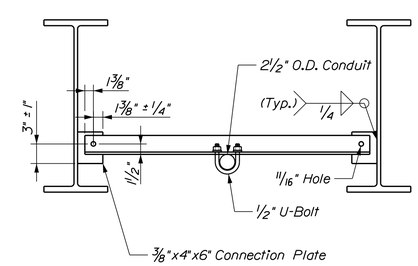

ELEVATION

LIGHT/CONDUIT SUPPORT
Scale: 1" = 1'-0"

NOTE

1. All field drilled holes to be touched up with zinc rich paint.

STATE OF MAINE
DEPARTMENT OF TRANSPORTATION

NHPP - 1927(300)

WIN 19273.00

BRIDGE NO. 3838

BRIDGE PLANS

vhb

PROJ. MANAGER	J. KITTREDGE	BY	DATE
DESIGN-DETAILED	JGM	KDW	12/15
CHECKED-REVIEWED	KCD	SMH	12/15
DESIGN2-DETAILED2	---	---	---
DESIGN3-DETAILED3	---	---	---
REVISIONS 1	---	---	---
REVISIONS 2	---	---	---
REVISIONS 3	---	---	---
REVISIONS 4	---	---	---
FIELD CHANGES	---	---	---

WEST APPROACH BRIDGE
MAINE OWNED RR & CITY STREETS
BATH SAGADAHOC COUNTY

STEEL SUPERSTRUCTURE
FRAMING PLAN (UNIT 2)

SHEET NUMBER
114
OF 145

Filename: ...\MSTA\114_framing_steel_02.dgn Division: HIGHWAY Username: kwentworth Date:12/21/2015

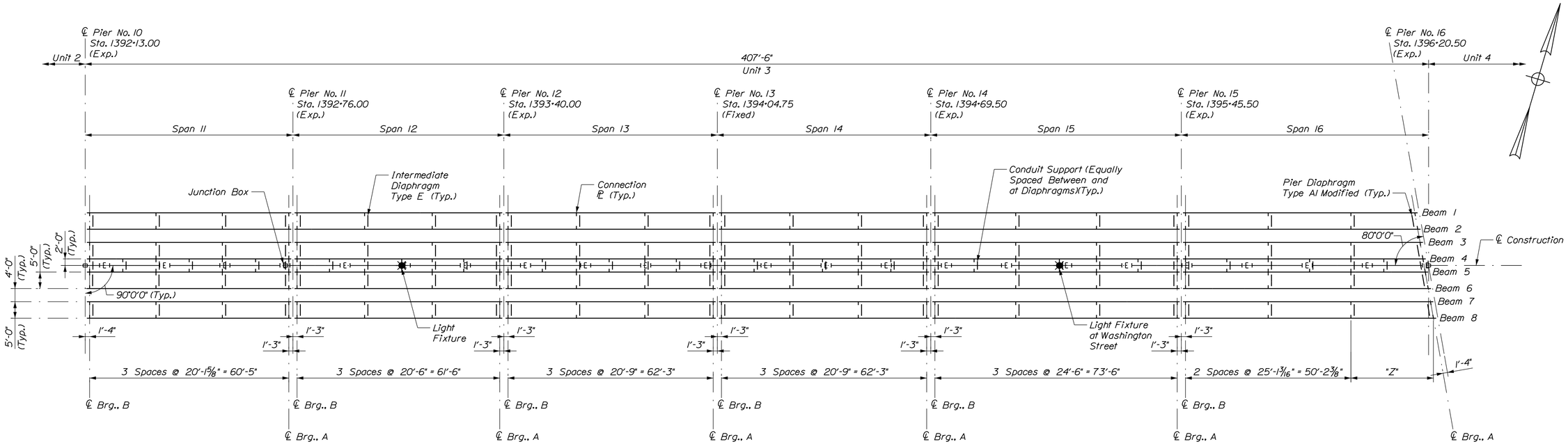

PLAN

Scale: 1/16" = 1'-0"

Beam Table											
Span	A	B	C	D	E	F	G	H	I	Length	Size
11	0'-5"	0'-11"	1'-4"	0'-1/2"	121	60'-6"	1'-0"	0'-3"	1'-3"	62'-4"	W27x114
12	0'-3"	1'-0"	1'-3"	0'-0"	123	61'-6"	1'-0"	0'-3"	1'-3"	63'-6"	W27x114
13	0'-3"	1'-0"	1'-3"	0'-1 1/2"	125	62'-6"	1'-0"	0'-3"	1'-3"	64'-3"	W27x114
14	0'-3"	1'-0"	1'-3"	0'-1 1/2"	125	62'-6"	1'-0"	0'-3"	1'-3"	64'-3"	W27x114
15	0'-3"	1'-0"	1'-3"	0'-0"	147	73'-6"	1'-0"	0'-3"	1'-3"	75'-6"	W30x148
16 - Beam 1	0'-3"	1'-0"	1'-3"	0'-2 3/16"	140	70'-0"	0'-11"	0'-5"	1'-4"	71'-6 11/16"	W30x148
16 - Beam 2	0'-3"	1'-0"	1'-3"	0'-2 15/16"	142	71'-0"	0'-11"	0'-5"	1'-4"	72'-5 1/16"	W30x148
16 - Beam 3	0'-3"	1'-0"	1'-3"	0'-1 3/16"	143	71'-6"	0'-11"	0'-5"	1'-4"	73'-1 7/16"	W30x148
16 - Beam 4	0'-3"	1'-0"	1'-3"	0'-2 9/16"	145	72'-6"	0'-11"	0'-5"	1'-4"	73'-11 13/16"	W30x148
16 - Beam 5	0'-3"	1'-0"	1'-3"	0'-1 7/16"	146	73'-0"	0'-11"	0'-5"	1'-4"	74'-8 3/16"	W30x148
16 - Beam 6	0'-3"	1'-0"	1'-3"	0'-2 3/16"	148	74'-0"	0'-11"	0'-5"	1'-4"	75'-6 9/16"	W30x148
16 - Beam 7	0'-3"	1'-0"	1'-3"	0'-1 1/16"	149	74'-6"	0'-11"	0'-5"	1'-4"	76'-2 15/16"	W30x148
16 - Beam 8	0'-3"	1'-0"	1'-3"	0'-1 3/16"	151	75'-6"	0'-11"	0'-5"	1'-4"	77'-1 5/16"	W30x148

Variable Diaphragm Spacing								
Variable	Beam 1	Beam 2	Beam 3	Beam 4	Beam 5	Beam 6	Beam 7	Beam 8
Z	19'-5 5/16"	20'-3 11/16"	21'-0 1/16"	21'-10 7/16"	22'-6 13/16"	23'-5 3/16"	24'-1 9/16"	24'-11 15/16"

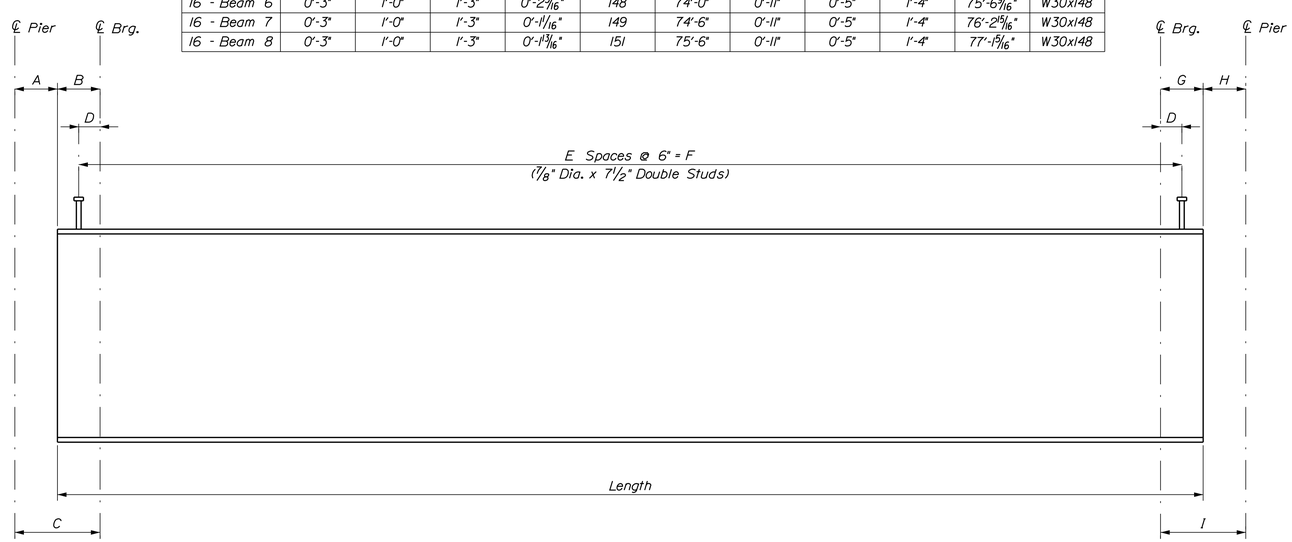

BEAM ELEVATION

(Connection Plates not Shown)
Not to Scale

STATE OF MAINE
DEPARTMENT OF TRANSPORTATION

NHPP - 1927(300)

WIN 19273.00

BRIDGE NO. 3838

BRIDGE PLANS

vhb

	BY	DATE
PROJ. MANAGER	J. KITTREDGE	
DESIGN-DETAILED	JGM	KDW	12/15
CHECKED-REVIEWED	KCD	SMH	12/15
DESIGN2-DETAILED2	---	---	---
DESIGN3-DETAILED3	---	---	---
REVISIONS 1	---	---	---
REVISIONS 2	---	---	---
REVISIONS 3	---	---	---
REVISIONS 4	---	---	---
FIELD CHANGES	---	---	---

WEST APPROACH BRIDGE
MAINE OWNED RR & CITY STREETS
BATH SAGADAHOC COUNTY

STEEL SUPERSTRUCTURE FRAMING PLAN (UNIT 3)

SHEET NUMBER
115
OF 145

Filename: ...\MSTA\115_framing_steel_03.dgn Division: HIGHWAY Username: kwentworth Date:12/21/2015

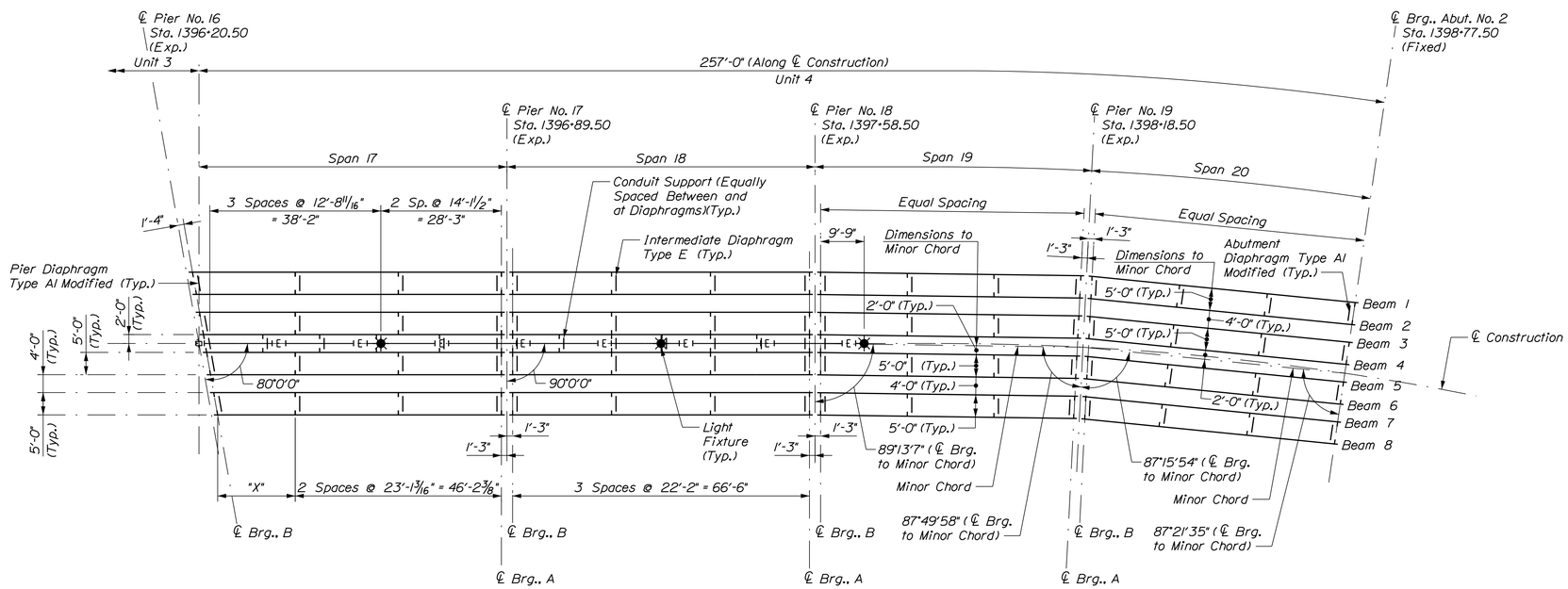

PLAN

Scale: 1/16" = 1'-0"

Variable Diaphragm Spacing								
Variable	Beam 1	Beam 2	Beam 3	Beam 4	Beam 5	Beam 6	Beam 7	Beam 8
X	22'-11 15/16"	22'-1 9/16"	21'-5 3/16"	20'-6 13/16"	19'-10 7/16"	19'- 1/16"	18'-3 11/16"	17'-5 5/16"

Beam Table											
Span	A	B	C	D	E	F	G	H	I	Length	Size
17 - Beam 1	0'-5"	0'-11"	1'-4"	0'-1 3/16"	139	69'-6"	1'-0"	0'-3"	1'-3"	71'-1 5/16"	W30x148
17 - Beam 2	0'-5"	0'-11"	1'-4"	0'-1 1/16"	137	68'-6"	1'-0"	0'-3"	1'-3"	70'-2 15/16"	W30x148
17 - Beam 3	0'-5"	0'-11"	1'-4"	0'-2 3/16"	136	68'-0"	1'-0"	0'-3"	1'-3"	69'-6 9/16"	W30x148
17 - Beam 4	0'-5"	0'-11"	1'-4"	0'-1 7/16"	134	67'-0"	1'-0"	0'-3"	1'-3"	68'-8 3/16"	W30x148
17 - Beam 5	0'-5"	0'-11"	1'-4"	0'-2 9/16"	133	66'-6"	1'-0"	0'-3"	1'-3"	67'-11 13/16"	W30x148
17 - Beam 6	0'-5"	0'-11"	1'-4"	0'-1 3/16"	131	65'-6"	1'-0"	0'-3"	1'-3"	67'-1 7/16"	W30x148
17 - Beam 7	0'-5"	0'-11"	1'-4"	0'-2 15/16"	130	65'-0"	1'-0"	0'-3"	1'-3"	66'-5 1/16"	W30x148
17 - Beam 8	0'-5"	0'-11"	1'-4"	0'-2 3/16"	128	64'-0"	1'-0"	0'-3"	1'-3"	65'-6 11/16"	W30x148
18	0'-3"	1'-0"	1'-3"	0'-0"	133	66'-6"	1'-0"	0'-3"	1'-3"	68'-6"	W30x148
19 - Beam 1	0'-3"	1'-0"	1'-3"	0'-1 1/8"	117	58'-6"	1'-0"	0'-3"	1'-3"	60'-3 3/4"	W27x114
19 - Beam 2	0'-3"	1'-0"	1'-3"	0'-2 5/8"	117	58'-6"	1'-0"	0'-3"	1'-3"	60'-1 11/16"	W27x114
19 - Beam 3	0'-3"	1'-0"	1'-3"	0'-7 1/8"	116	58'-0"	1'-0"	0'-3"	1'-3"	59'-10 1/4"	W27x114
19 - Beam 4	0'-3"	1'-0"	1'-3"	0'-2 7/16"	116	58'-0"	1'-0"	0'-3"	1'-3"	59'-7 1/8"	W27x114
19 - Beam 5	0'-3"	1'-0"	1'-3"	0'-11/16"	115	57'-6"	1'-0"	0'-3"	1'-3"	59'-4 11/16"	W27x114
19 - Beam 6	0'-3"	1'-0"	1'-3"	0'-2 3/16"	115	57'-6"	1'-0"	0'-3"	1'-3"	59'-1 9/16"	W27x114
19 - Beam 7	0'-3"	1'-0"	1'-3"	0'-7/16"	114	57'-0"	1'-0"	0'-3"	1'-3"	58'-11 1/8"	W27x114
19 - Beam 8	0'-3"	1'-0"	1'-3"	0'-2"	114	57'-0"	1'-0"	0'-3"	1'-3"	58'-8"	W27x114
20 - Beam 1	0'-3"	1'-0"	1'-3"	0'-1 5/8"	117	58'-6"	0'-9"	0'-3"	1'-0"	59'-11 11/16"	W27x114
20 - Beam 2	0'-3"	1'-0"	1'-3"	0'-1 7/16"	116	58'-0"	0'-9"	0'-3"	1'-0"	59'-6 1/16"	W27x114
20 - Beam 3	0'-3"	1'-0"	1'-3"	0'-11/16"	115	57'-6"	0'-9"	0'-3"	1'-0"	59'-1 9/16"	W27x114
20 - Beam 4	0'-3"	1'-0"	1'-3"	0'-1/2"	114	57'-0"	0'-9"	0'-3"	1'-0"	58'-7 15/16"	W27x114
20 - Beam 5	0'-3"	1'-0"	1'-3"	0'-2 13/16"	114	57'-0"	0'-9"	0'-3"	1'-0"	58'-3 3/8"	W27x114
20 - Beam 6	0'-3"	1'-0"	1'-3"	0'-2 11/16"	113	56'-6"	0'-9"	0'-3"	1'-0"	57'-9 11/16"	W27x114
20 - Beam 7	0'-3"	1'-0"	1'-3"	0'-1 15/16"	112	56'-0"	0'-9"	0'-3"	1'-0"	57'-5 1/16"	W27x114
20 - Beam 8	0'-3"	1'-0"	1'-3"	0'-1 13/16"	111	55'-6"	0'-9"	0'-3"	1'-0"	56'-11 3/8"	W27x114

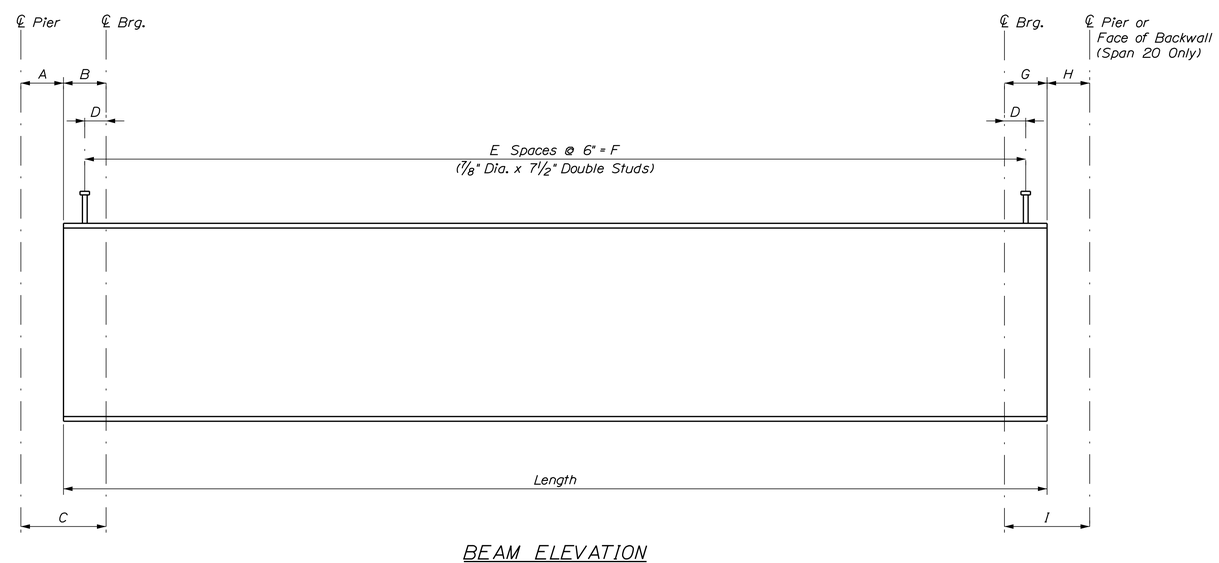

BEAM ELEVATION

(Connection Plates Not Shown)
Not to Scale

STATE OF MAINE
DEPARTMENT OF TRANSPORTATION

NHPP - 1927(300)

WIN 19273.00

BRIDGE NO. 3838

BRIDGE PLANS

		BY	DATE
PROJ. MANAGER	J. KITTREDGE		
DESIGN-DETAILED	JGM	KDW	12/15
CHECKED-REVIEWED	KCD	SMH	12/15
DESIGN2-DETAILED2	---	---	---
DESIGN3-DETAILED3	---	---	---
REVISIONS 1	---	---	---
REVISIONS 2	---	---	---
REVISIONS 3	---	---	---
REVISIONS 4	---	---	---
FIELD CHANGES	---	---	---

WEST APPROACH BRIDGE
MAINE OWNED RR & CITY STREETS
BATH SAGADAHOC COUNTY

STEEL SUPERSTRUCTURE FRAMING PLAN (UNIT 4)

SHEET NUMBER

116

OF 145

Filename: ...\MSTA\116_framing_steel_04.dgn Division: HIGHWAY Username: kwentworth Date:12/21/2015

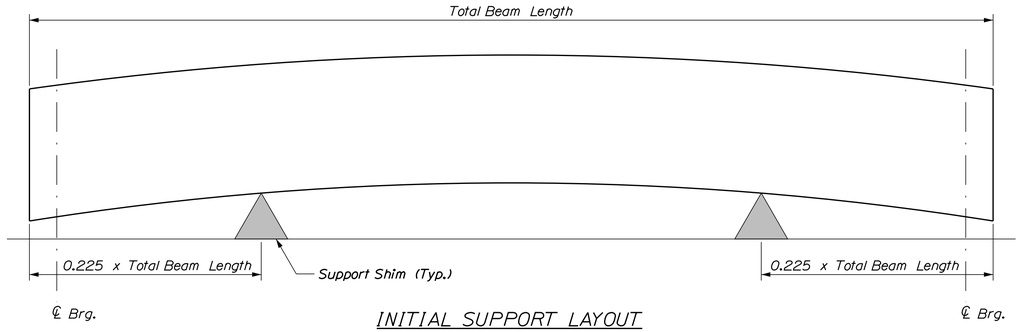

INITIAL SUPPORT LAYOUT
Not to Scale

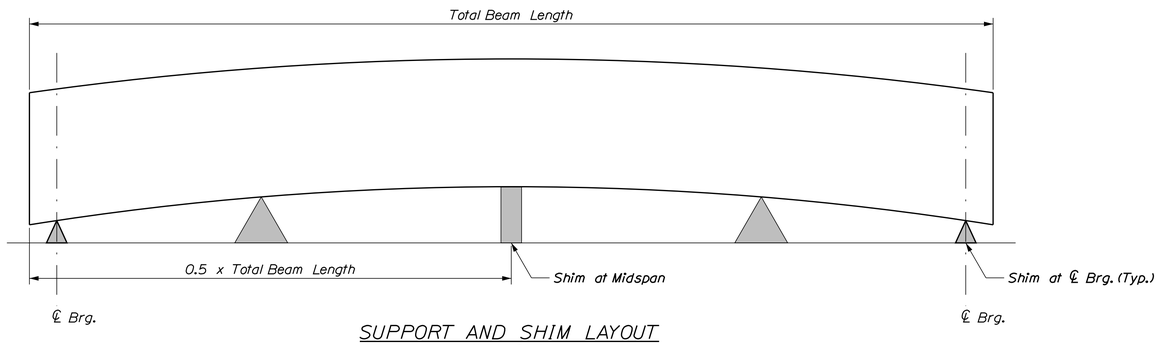

SUPPORT AND SHIM LAYOUT
Not to Scale

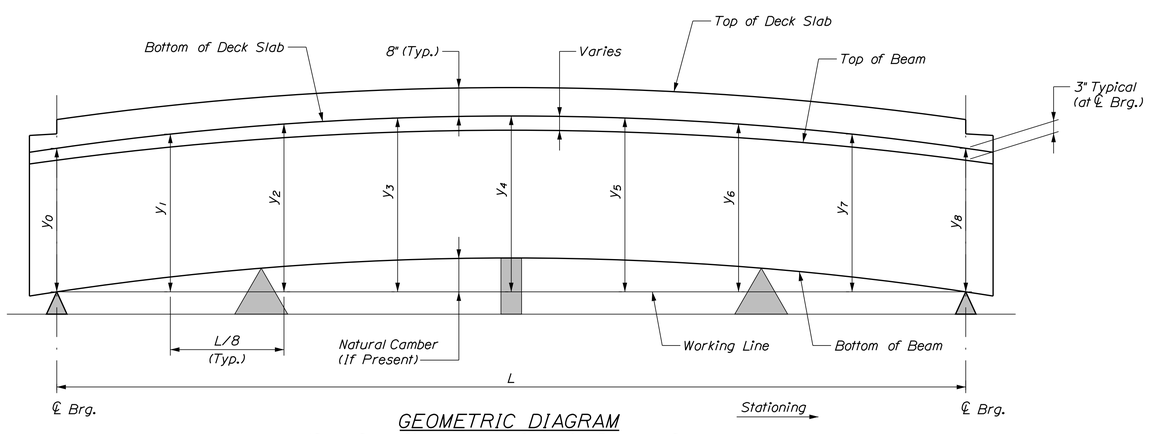

GEOMETRIC DIAGRAM
(Shear Studs, Diaphragms, and Connection Plates not Shown)
Not to Scale

GEOMETRIC TABLE "Y" (ft)									
Spans	y_0	y_1	y_2	y_3	y_4	y_5	y_6	y_7	y_8
1, 6-13	2.52	2.55	2.58	2.59	2.60	2.59	2.58	2.55	2.52
2-5	2.52	2.56	2.59	2.62	2.62	2.62	2.59	2.56	2.52
14	2.52	2.57	2.61	2.64	2.65	2.64	2.62	2.57	2.52
15, 16 (Beams 6-8)	2.80	2.88	2.95	2.99	3.00	2.99	2.95	2.88	2.80
16 (Beams 1-5)	2.80	2.87	2.92	2.96	2.97	2.96	2.92	2.87	2.80
17 (Beams 1-3)	2.80	2.86	2.91	2.94	2.95	2.94	2.91	2.86	2.80
17 (Beams 4-8)	2.80	2.85	2.90	2.92	2.93	2.92	2.90	2.85	2.80
18	2.80	2.85	2.88	2.90	2.90	2.88	2.85	2.82	2.80
19	2.52	2.49	2.47	2.46	2.45	2.46	2.47	2.49	2.52
20	2.52	2.49	2.47	2.46	2.46	2.47	2.48	2.50	2.52

STEEL SUPERSTRUCTURE FABRICATION NOTES

1. Beams shall be supported at the locations shown in the "Initial Support Layout" diagram to remove self-weight deflection. Then supports shall be added under the beams at the locations shown in the "Support & Shim Layout" diagram.

2. Beams shall be supported and shimmed to represent in field final elevations with respect to girder drops from one beam line to another. See Substructure Sheets and Cross Slope Tables in Roadway Plans.

3. The working line shall be a straight reference line between the bottoms of beam at the centerline of bearings at the centerline of beams.

4. The "y" dimensions shown in the geometric table represents the distance between the working line and the bottom of slab at the centerline of web at the time of deck pour. This dimension accounts for vertical curvature (or profile grade) and composite beam deflections under complete self-weight and superimposed dead loads (ie. pavement, rail, ect.) installed in the field.

5. Install diaphragms prior to placing concrete.

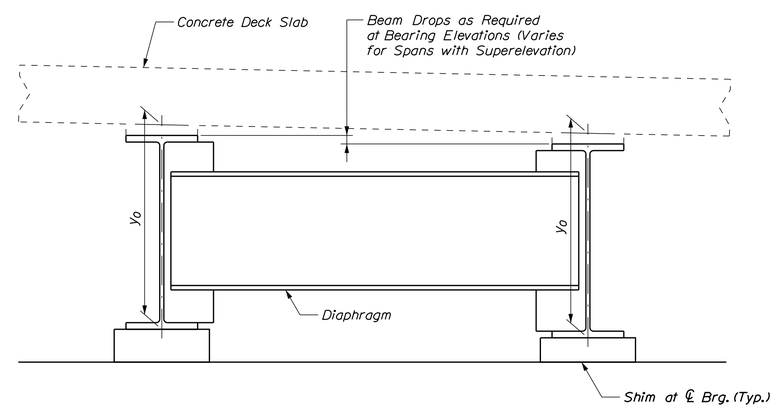

VIEW AT BEAM ENDS
(Shear Studs not Shown)
Not to Scale

STATE OF MAINE
DEPARTMENT OF TRANSPORTATION

NHPP - 1927(300)

WIN 19273.00

BRIDGE NO. 3838

BRIDGE PLANS

vhb

		BY	DATE
PROJ. MANAGER	J. KITTREDGE		
DESIGN-DETAILED	JGM	KDW	12/15
CHECKED-REVIEWED	KCD	SMH	12/15
DESIGN2-DETAILED2	---	---	---
DESIGN3-DETAILED3	---	---	---
REVISIONS 1	---	---	---
REVISIONS 2	---	---	---
REVISIONS 3	---	---	---
REVISIONS 4	---	---	---
FIELD CHANGES	---	---	---

WEST APPROACH BRIDGE
MAINE OWNED RR & CITY STREETS
BATH SAGADAHOC COUNTY

STEEL SUPERSTRUCTURE
FABRICATION DETAILS

SHEET NUMBER
117
OF 145

Filename: ...\MSTA\117_steeldet_01.dgn Division: HIGHWAY Username: kwentworth Date:12/21/2015

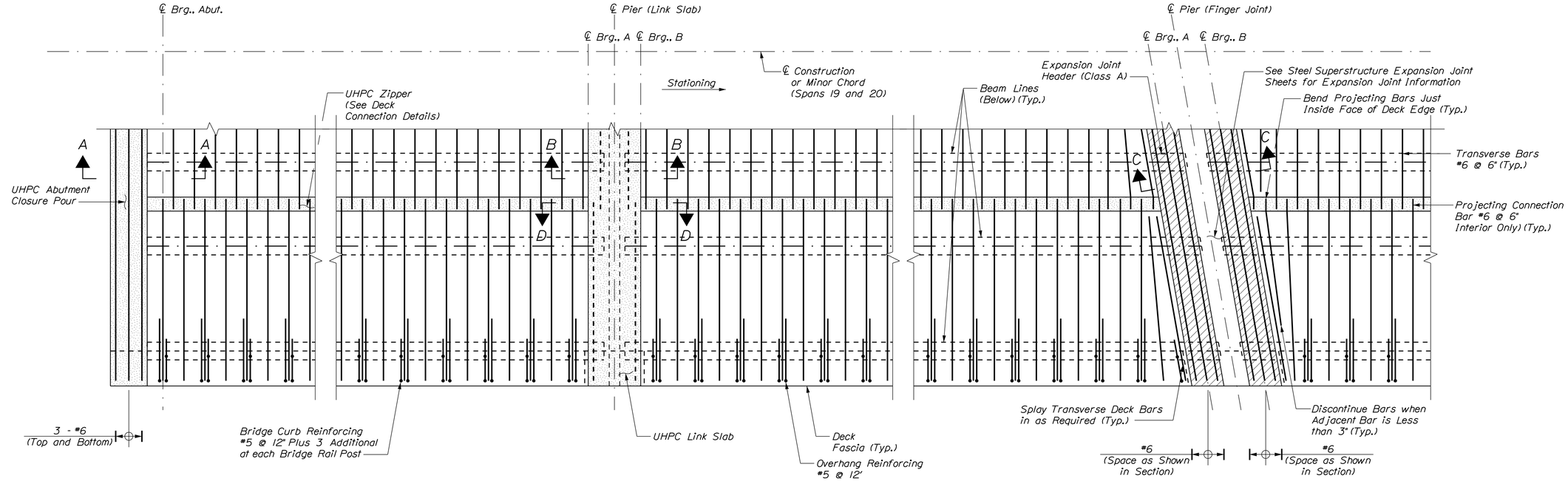

DECK REINFORCING PARTIAL PLAN

(Longitudinal Bars not Shown for Clarity)
Not to Scale

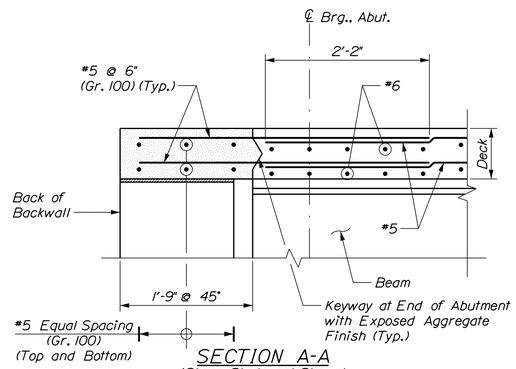

SECTION A-A

(Shear Studs not Shown)
Scale: 1" = 1'-0"

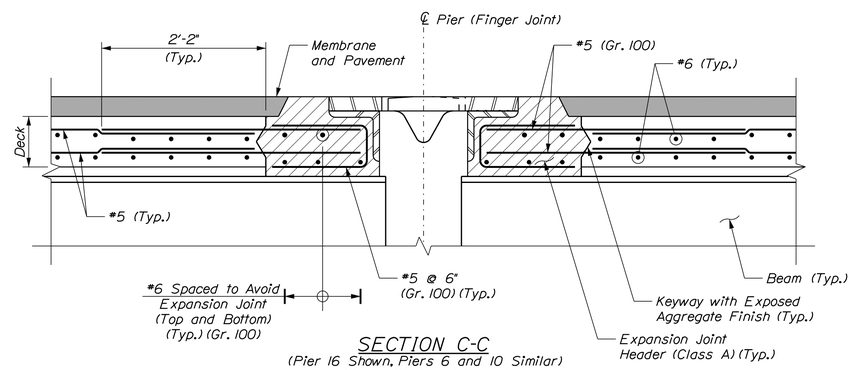

SECTION C-C

(Pier 16 Shown, Piers 6 and 10 Similar)
(Shear Studs not Shown)
Scale: 1" = 1'-0"

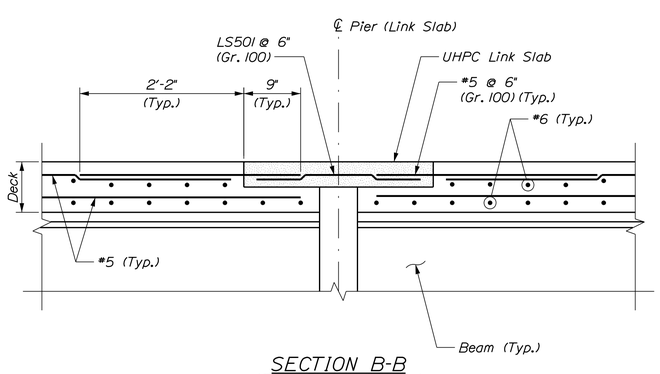

SECTION B-B

(Shear Studs not Shown)
Scale: 1" = 1'-0"

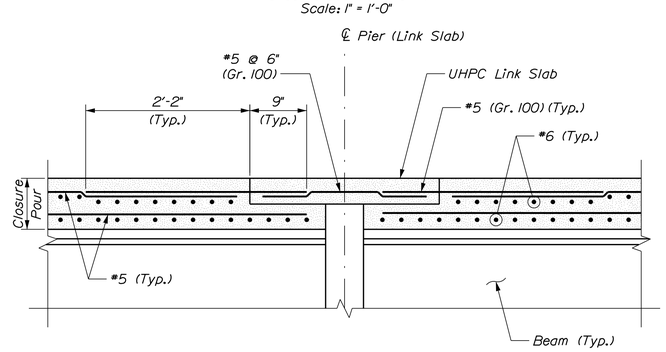

SECTION D-D

Scale: 1" = 1'-0"

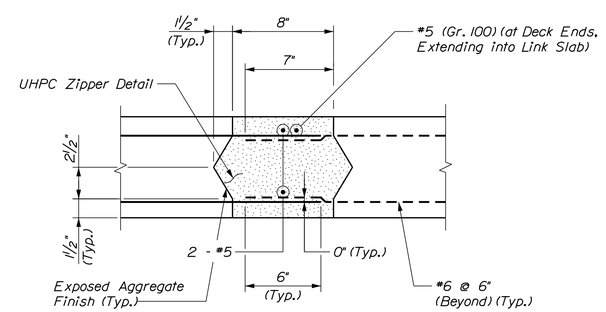

SECTION

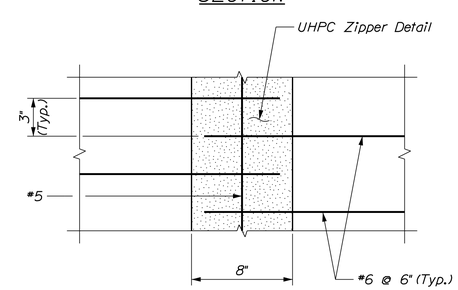

PLAN

DECK CONNECTION DETAILS AT ZIPPER POUR

Scale: 1 ½" = 1'-0"

LAYOUT NOTES

1. Prefabricated Steel Beam Superstructure Units are to be positioned as shown in the framing plans and typical sections with units parallel to centerline of construction or minor chord (Spans 19 and 20).

STATE OF MAINE
DEPARTMENT OF TRANSPORTATION

NHPP - 1927(300)

WIN 19273.00

BRIDGE NO. 3838

BRIDGE PLANS

vhb

		BY	DATE
PROJ. MANAGER	J. KITTREDGE		
DESIGN-DETAILED	JGM	KDW	12/15
CHECKED-REVIEWED	KZS	SMH	12/15
DESIGN2-DETAILED2	---	---	---
DESIGN3-DETAILED3	---	---	---
REVISIONS 1	---	---	---
REVISIONS 2	---	---	---
REVISIONS 3	---	---	---
REVISIONS 4	---	---	---
FIELD CHANGES	---	---	---

WEST APPROACH BRIDGE
MAINE OWNED RR & CITY STREETS
BATH SAGADAHOC COUNTY

STEEL SUPERSTRUCTURE DETAILS (1 OF 2)

SHEET NUMBER
118
OF 145

Filename: ...\00\BRIDGE\MSTA\118_pbu_01.dgn Division: HIGHWAY Username: kwentworth Date:12/21/2015

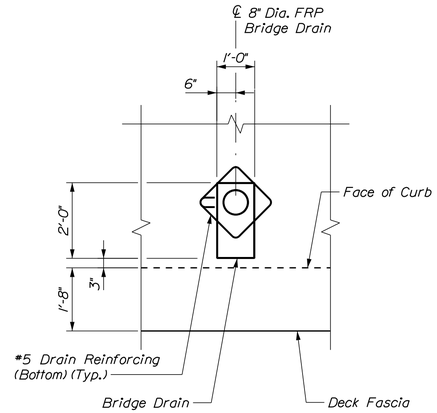

PLAN AT BRIDGE DRAIN
(Deck Rebar not Shown for Clarity)
Not to Scale

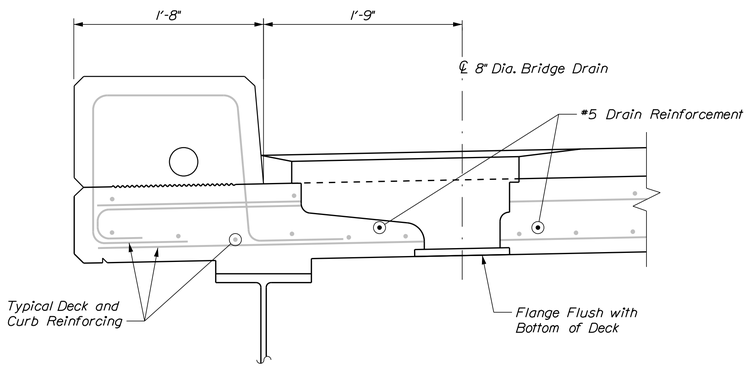

SECTION AT BRIDGE DRAIN
Scale: 1½" = 1'-0"

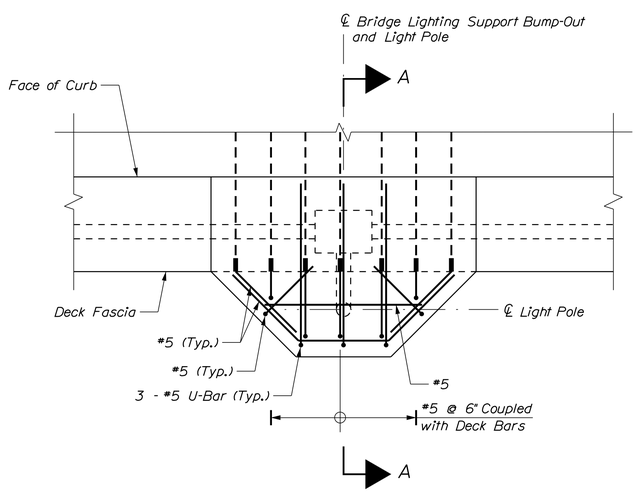

PLAN

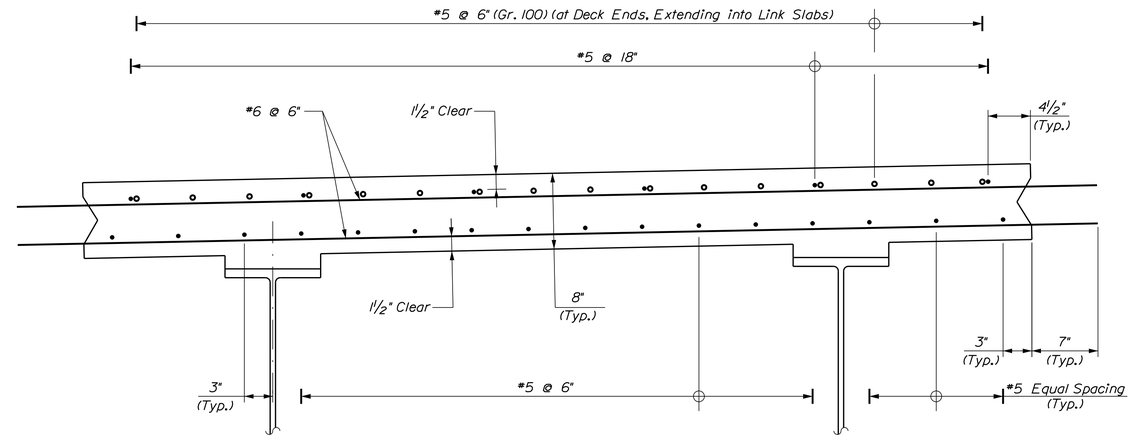

INTERIOR DECK REINFORCING
Scale: 1½" = 1'-0"

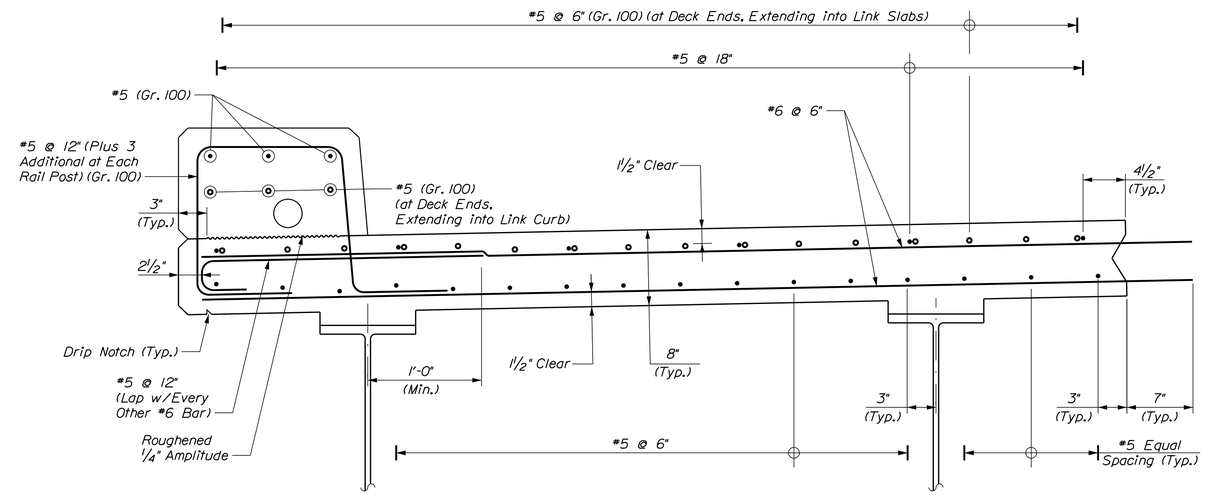

EXTERIOR DECK REINFORCING
Scale: 1½" = 1'-0"

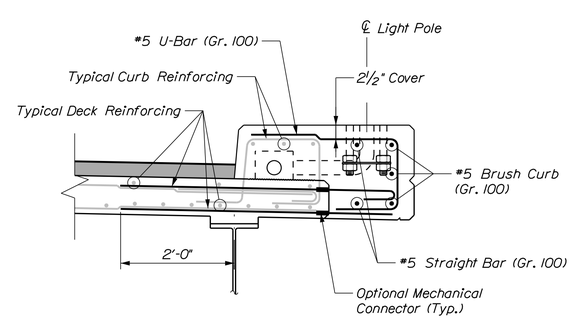

SECTION A-A

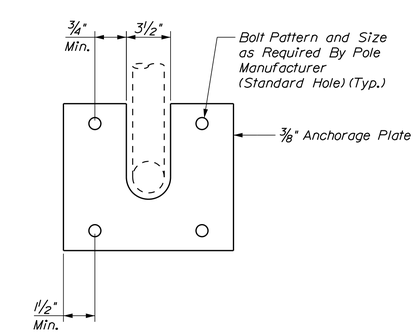

EMBEDED LIGHT POLE ANCHORAGE PLATE DETAIL
Not to Scale

BRIDGE LIGHTING SUPPORT REINFORCING
Scale: ¾" = 1'-0"

STATE OF MAINE
DEPARTMENT OF TRANSPORTATION

NHPP - 1927(300)

WIN 19273.00

BRIDGE NO. 3838

BRIDGE PLANS

vhb

PROJ. MANAGER	J. KITTREDGE		
DESIGN-DETAILED	JGM	KDW	12/15
CHECKED-REVIEWED	KCD	SMH	12/15
DESIGN2-DETAILED2	---	---	---
DESIGN3-DETAILED3	---	---	---
REVISIONS 1	---	---	---
REVISIONS 2	---	---	---
REVISIONS 3	---	---	---
REVISIONS 4	---	---	---
FIELD CHANGES	---	---	---

WEST APPROACH BRIDGE
MAINE OWNED RR & CITY STREETS
BATH SAGADAHOC COUNTY

STEEL SUPERSTRUCTURE DETAILS (2 OF 2)

SHEET NUMBER
119
OF 145

Filename: ...\00\BRIDGE\MSTA\119_pbu_02.dgn Division: HIGHWAY Username: kwentworth Date:12/21/2015

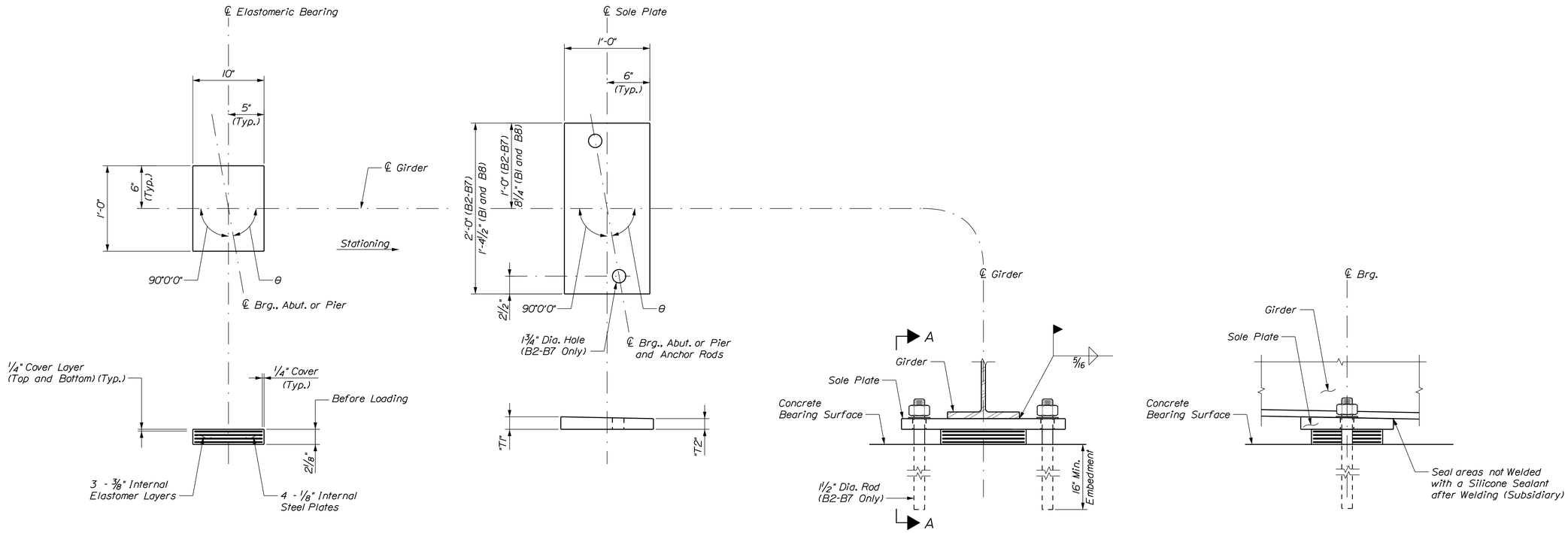

ELASTOMERIC BEARING

SOLE PLATE

ELEVATION
(Beam Lines B2-B7 Shown, B1 and B8 Similar)

VIEW A-A
(Beam Lines B2-B7 Shown, B1 and B8 Similar)

Bearing Skew Angles	
Location	θ
Abut. No. 1	90°00'00"
Pier No. 8	90°00'00"
Pier No. 13	90°00'00"
Abut. No. 2	87°21'35"

Sole Plate Thickness Table		
Location	"T1"	"T2"
Abutment No. 1	1 1/2"	1 1/2"
Pier No. 8	1 3/4"	1 1/2"
Pier No. 13	1 3/4"	1 1/2"
Abutment No. 2	1 3/4"	1 1/2"

ELASTOMERIC BEARING NOTES

1. The shear modulus of the elastomer shall be between 100 and 130 psi.

2. Vulcanizing of the elastomer to the steel plates shall be done during the primary molding process.

3. Sole plates and load plates shall meet the requirements of ASTM A 709, Grade 50.

4. Internal steel reinforcing plates shall conform ASTM A 36.

5. Sole plates and load plates for the steel superstructure shall be galvanized in accordance with ASTM A 123.

6. Horizontal PTFE at expansion bearings shall be dimpled and lubricated. Lubrication shall be supplied and installed per the manufactures recommendation to ensure a coefficient of friction less than or equal to 0.03 at 68 degrees F. Cost included in Bearing item.

7. Resetting of bearing during construction is not anticipated based on required sequence of link slab construction and anticipated ambient temperatures.

8. All bearings shall be marked prior to shipping. The marks shall include the bearing location on the bridge and an arrow which points upstation. All marks shall be permanent and shall be visible after the bearing is installed.

9. Bearings shall be covered during transit.

10. All necessary precautions shall be taken to protect bearing components from field weld flash and splatter. Heat from welding operation shall be controlled such that steel adjacent to the elastomer does not exceed 200 degrees F. The temperature shall be verified by the use of temperature indicating crayons or other suitable means.

11. Touch up damaged galvanized surfaces with Zinc-Rich paint as directed by the Resident.

ANCHOR ROD NOTES

1. Anchor rods shall meet the requirements of ASTM F 1554, Grade 105 and shall be swedged on the embedded portion of the rod.

2. Anchor rods, washers, and nuts shall be galvanized in accordance with ASTM A 153.

3. Leave nuts 1/4" above washers to allow for girder rotation. Upset the threads on the anchor rods after assembly of the bearing to prevent nut movement. Touch up damaged galvanized surfaces with Zinc-Rich paint as directed by the Resident.

4. Anchor rods shall be set by template prior to pouring the precast or cast-in-place pier cap.

Bearing Design Criteria		
Loads	Fixed	Expansion
Unfactored Dead Load (Max.)	28 kips	36 kips
Unfactored Live Load (Max.)	69 kips	73 kips

STATE OF MAINE
DEPARTMENT OF TRANSPORTATION

NHPP - 1927(300)

WIN 19273.00

BRIDGE NO. 3838

BRIDGE PLANS

vhb

		BY	DATE
PROJ. MANAGER	J. KITTREDGE		
DESIGN-DETAILED	JGM	KDW	12/15
CHECKED-REVIEWED	KCD	SMH	12/15
DESIGN2-DETAILED2	---	---	---
DESIGN3-DETAILED3	---	---	---
REVISIONS 1	---	---	---
REVISIONS 2	---	---	---
REVISIONS 3	---	---	---
REVISIONS 4	---	---	---
FIELD CHANGES	---	---	---

WEST APPROACH BRIDGE
MAINE OWNED RR & CITY STREETS
BATH SAGADAHOC COUNTY

STEEL SUPERSTRUCTURE
FIXED BEARING

SHEET NUMBER
120
OF 145

Filename: ...\MSTA\120_bearings_01.dgn Division: HIGHWAY Username: kwentworth Date:12/21/2015

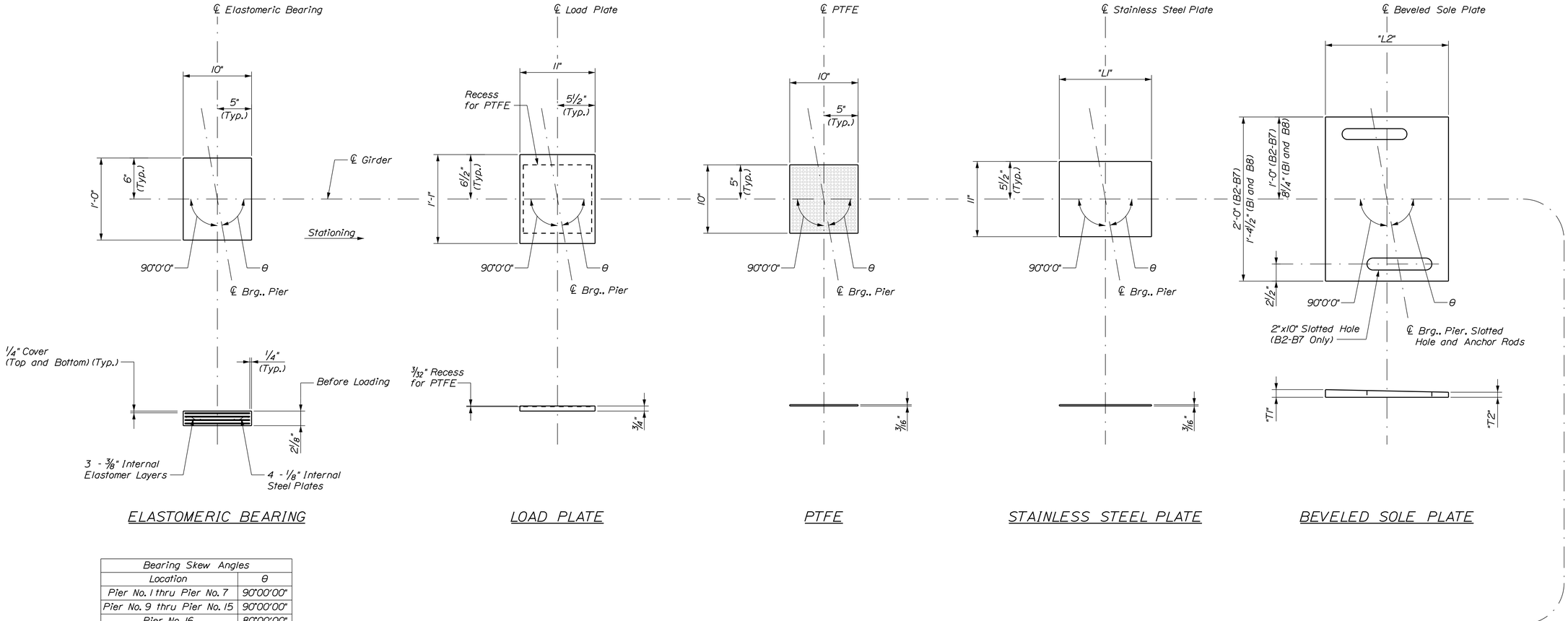

Bearing Skew Angles	
Location	θ
Pier No. 1 thru Pier No. 7	90°00'00"
Pier No. 9 thru Pier No. 15	90°00'00"
Pier No. 16	80°00'00"
Pier No. 17	90°00'00"
Pier No. 18A	90°00'00"
Pier No. 18B	89°13'07"
Pier No. 19A	87°49'58"
Pier No. 19B	87°15'54"

Sole Plate and Stainless Steel Plate Dimension Table				
Location	"T1"	"T2"	"L1"	"L2"
Pier No. 1	3/4"	3/4"	1 1/2"	1'-1 1/2"
Pier No. 2	3/4"	3/4"	1'-1 1/2"	1'-3 1/2"
Pier No. 3	3/4"	3/4"	1'-4"	1'-6"
Pier No. 4	1"	3/4"	1'-4"	1'-6"
Pier No. 5	1 1/8"	3/4"	1'-6 1/2"	1'-8 1/2"
Pier No. 6A	1 1/4"	3/4"	1'-6 1/2"	1'-8 1/2"
Pier No. 6B	1 1/8"	3/4"	1'-1 1/2"	1'-3 1/2"
Pier No. 7	1"	3/4"	1 1/2"	1'-1 1/2"
Pier No. 9	1"	3/4"	1 1/2"	1'-1 1/2"
Pier No. 10A	1 1/8"	3/4"	1'-1 1/2"	1'-3 1/2"
Pier No. 10B	1 1/8"	3/4"	1'-4"	1'-6"
Pier No. 11	1 1/8"	3/4"	1'-1 1/2"	1'-3 1/2"
Pier No. 12	1"	3/4"	1 1/2"	1'-1 1/2"
Pier No. 14	1 1/8"	3/4"	1 1/2"	1'-1 1/2"
Pier No. 15	1 3/8"	3/4"	1'-1 1/2"	1'-3 1/2"
Pier No. 16A	1 5/8"	3/4"	1'-4"	1'-6"
Pier No. 16B	1 5/8"	3/4"	1'-4"	1'-6"
Pier No. 17	1 3/4"	3/4"	1'-4"	1'-6"
Pier No. 18	1 1/2"	3/4"	1'-1 1/2"	1'-3 1/2"
Pier No. 19	1 1/4"	3/4"	1 1/2"	1'-1 1/2"

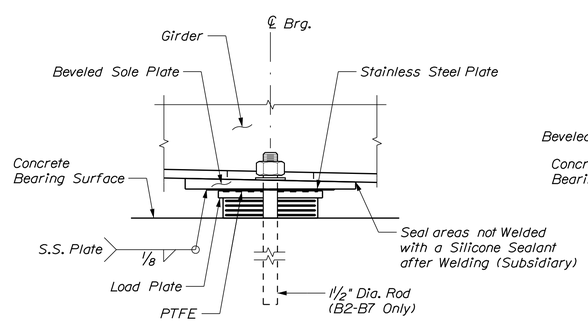

VIEW A-A
(Beam Lines B2-B7 Shown, B1 and B8 Similar)

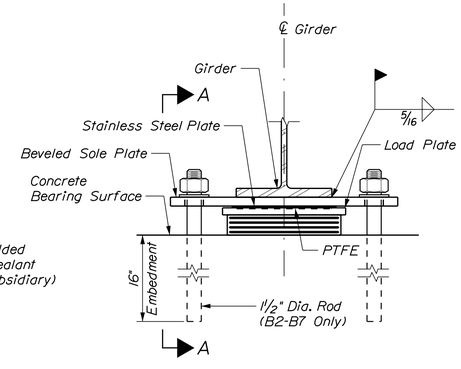

ELEVATION
(Beam Lines B2-B7 Shown, B1 and B8 Similar)

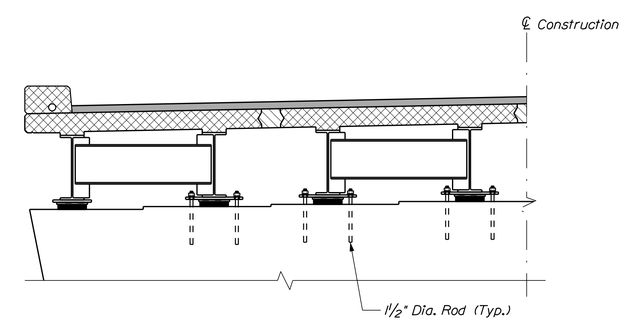

ANCHOR ROD PLACEMENT

NOTES

1. See Elastomeric Bearing Notes and Anchor Rod Notes on Steel Superstructure Fixed Bearing sheet.

STATE OF MAINE
DEPARTMENT OF TRANSPORTATION

NHPP - 1927(300)

WIN 19273.00

BRIDGE NO. 3838

BRIDGE PLANS

vhb

		BY	DATE
PROJ. MANAGER	J. KITTREDGE		
DESIGN-DETAILED	JGM	KDW	12/15
CHECKED-REVIEWED	KCD	SMH	12/15
DESIGN2-DETAILED2	---	---	---
DESIGN3-DETAILED3	---	---	---
REVISIONS 1	---	---	---
REVISIONS 2	---	---	---
REVISIONS 3	---	---	---
REVISIONS 4	---	---	---
FIELD CHANGES	---	---	---

WEST APPROACH BRIDGE
MAINE OWNED RR & CITY STREETS
BATH SAGADAHOC COUNTY

STEEL SUPERSTRUCTURE
EXPANSION BEARING

SHEET NUMBER
121
OF 145

Filename: ...\MSTA\121_bearings_02.dgn Division: HIGHWAY Username: kwentworth Date:12/21/2015

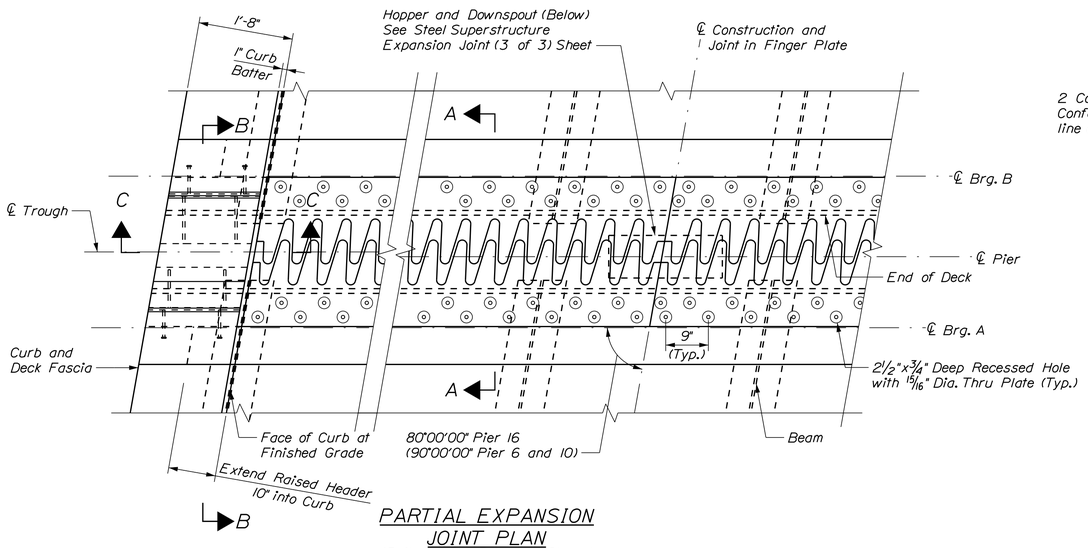

PARTIAL EXPANSION JOINT PLAN

(Rail and Rail Posts not Shown)
(Pier 16 Shown)
Scale: ¾" = 1'-0"

TEMPERATURE ADJUSTMENT TABLE

	Pier 6	Pier 10	Pier 16
Temperature	"T"	"T"	"T"
-15° F	17.25	16.3125	17.125
0° F	16.5625	15.875	16.5
15° F	15.875	15.375	15.8125
30° F	15.1875	14.9375	15.1875
45° F	14.5	14.5	14.5
60° F	13.8125	14.0625	13.8125
75° F	13.125	13.625	13.1875
90° F	12.4375	13.125	12.5

Note: Values for "T" are Perpendicular to ℄ Bearing

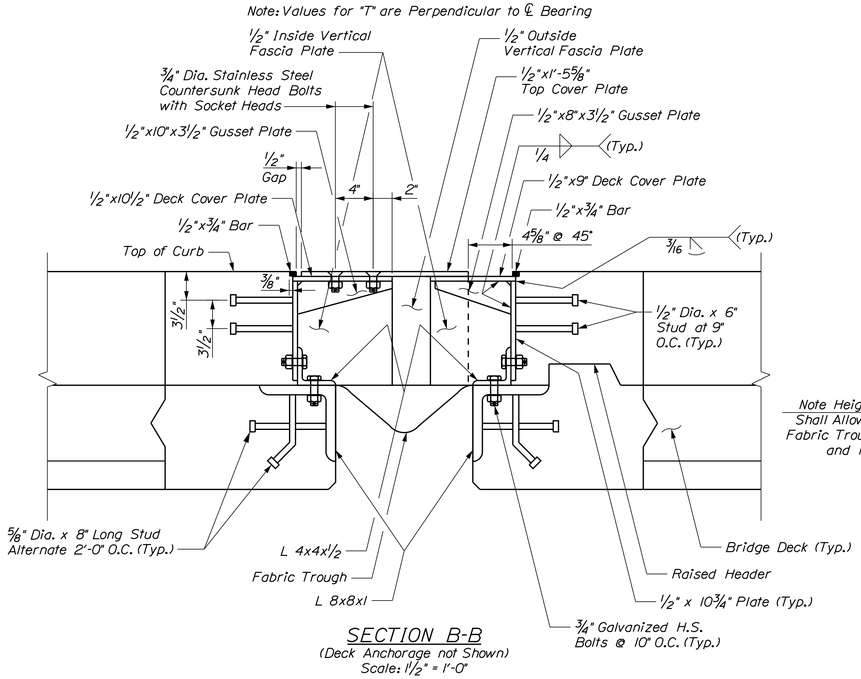

SECTION B-B

(Deck Anchorage not Shown)
Scale: 1½" = 1'-0"

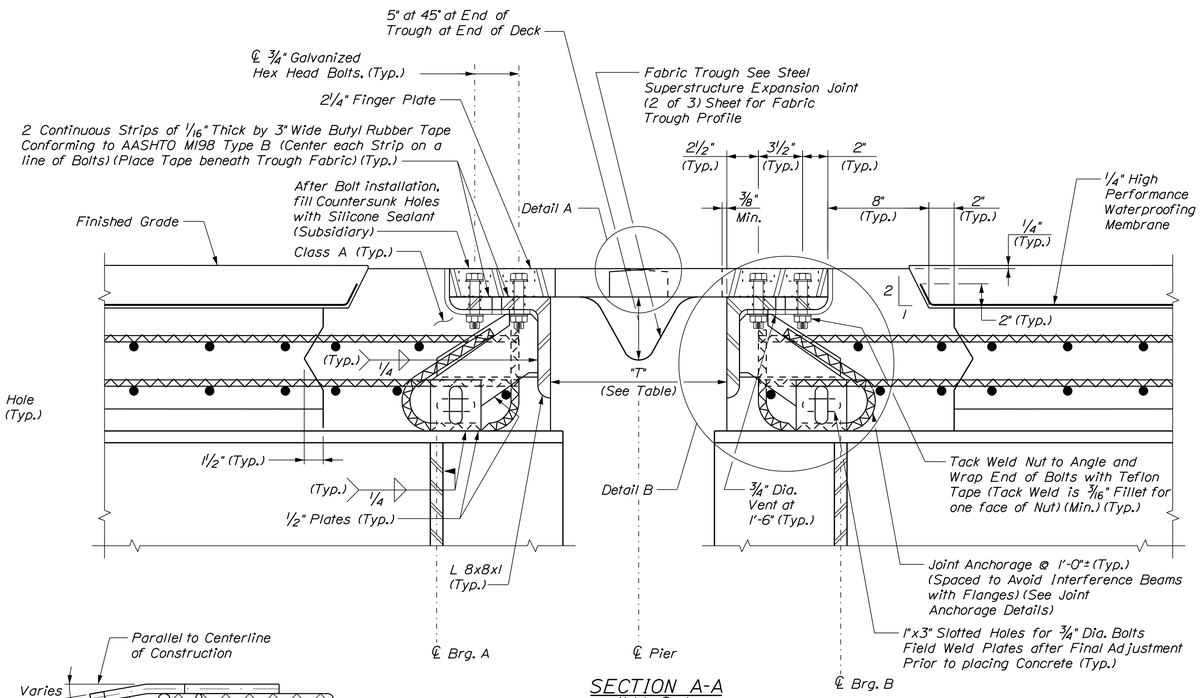

SECTION A-A

Not to Scale

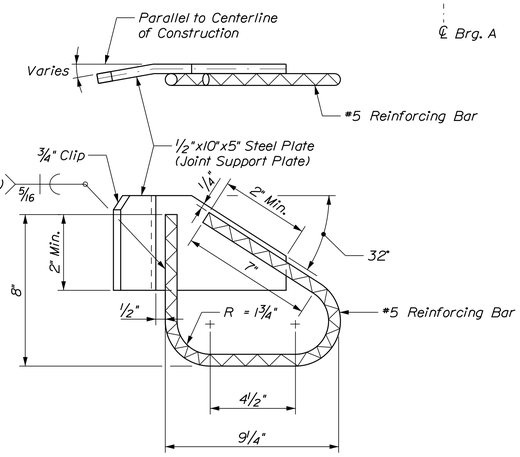

ANCHOR DETAILS

Scale: 3" = 1'-0"

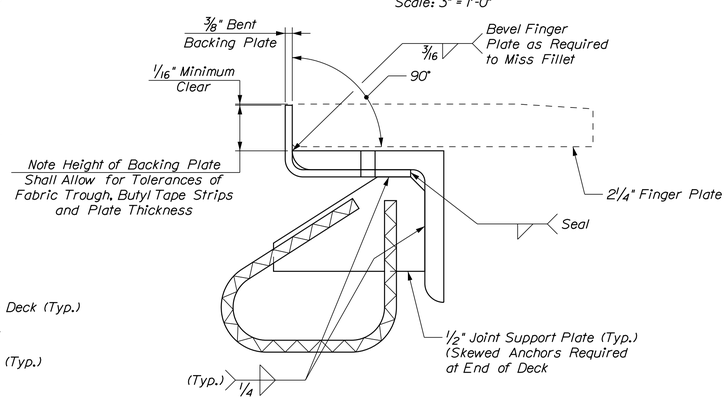

DETAIL B

Scale: 3" = 1'-0"

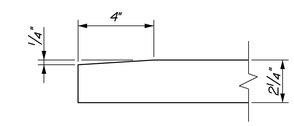

DETAIL A

Scale: 3" = 1'-0"

EXPANSION JOINT NOTES

1. Expansion joint steel shall conform to AASHTO M270, Grade 50 (ASTM A709, Grade 50), Galvanized.
2. Curb plates shall conform to AASHTO M270, Grade 36 (ASTM A709, Grade 36), Galvanized.
3. Splices for expansion joint steel shall develop full strength.
4. The expansion joint shall be preset to the temperature anticipated at the time of installation. Final setting in the field shall be determined by the Resident (see Temperature Adjustment Table).
5. Protect the top of the expansion joint during placement of concrete and bituminous pavement.
6. Joint support plates shall be shop welded to the expansion joint steel and shall be vertical after the joint assembly has been adjusted for roadway cross-slope and grade.
7. Immediately after the joint has been secured to the structural steel remove shipping devices. Welding of shipping device to finger plates shall not be allowed.
8. Each finger plate shall be cut from one continuous 25¼" wide x 2¼" thick plate (see Finger Cutting Details on Steel Superstructure Expansion Joint (2 of 3) sheet).
9. Countersunk head bolts with socket head shall conform to ASTM A276, Type 304, Stainless Steel. Hex Head bolts shall conform ASTM A325, Galvanized. Anchor bolts shall conform to ASTM A307, Galvanized. Cost included in Item 521.23.
10. See Steel Superstructure Expansion Joint (2 of 3) for Detail C and Section C-C.
11. Payment for Expansion Joint Header will be made under Item No. 502.412, Structural Concrete Superstructure Special.

STATE OF MAINE
DEPARTMENT OF TRANSPORTATION

NHPP - 1927(300)

WIN 19273.00

BRIDGE NO. 3838

BRIDGE PLANS

vhb

		BY	DATE
PROJ. MANAGER	J. KITTREDGE		
DESIGN-DETAILED	JGM	KDW	12/15
CHECKED-REVIEWED	JAW/KZS	SMH	12/15
DESIGN2-DETAILED2	---	---	---
DESIGN3-DETAILED3	---	---	---
REVISIONS 1	---	---	---
REVISIONS 2	---	---	---
REVISIONS 3	---	---	---
REVISIONS 4	---	---	---
FIELD CHANGES	---	---	---

WEST APPROACH BRIDGE
MAINE OWNED RR & CITY STREETS
BATH SAGADAHOC COUNTY

STEEL SUPERSTRUCTURE EXPANSION JOINT (1 OF 3)

SHEET NUMBER
122
OF 145

Filename: ...\MSTA\122_expjoint_01.dgn Division: HIGHWAY Username: kwentworth Date:12/21/2015

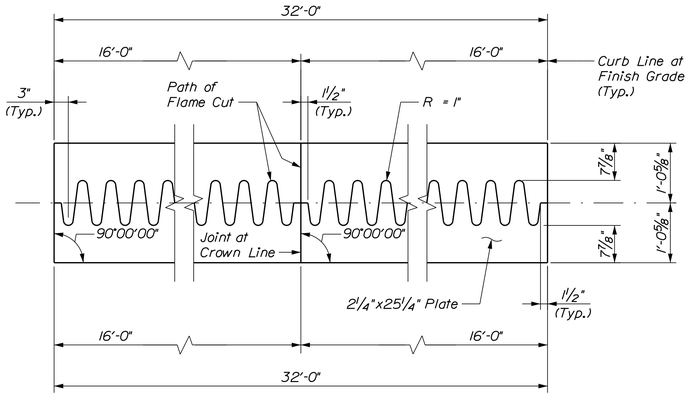

PIER 6 AND 10

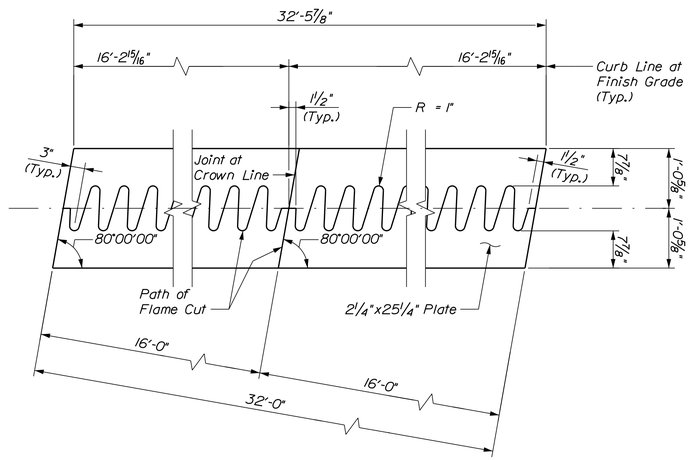

PIER 16

FINGER PLATE CUTTING DETAIL
Not to Scale

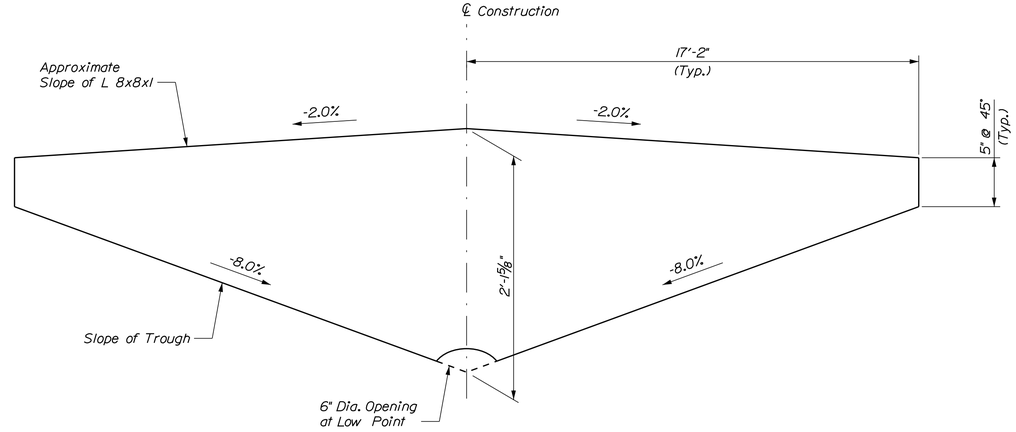

PIER 6 AND 10

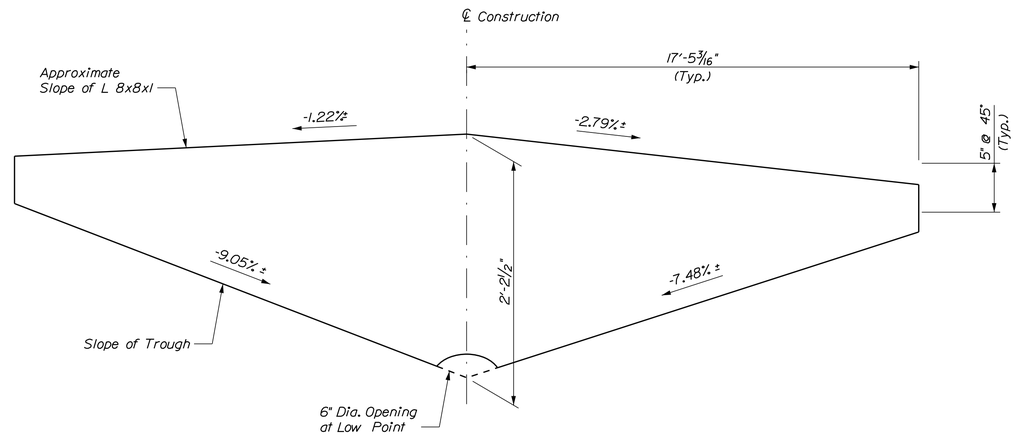

PIER 16

FABRIC TROUGH DETAIL
Not to Scale

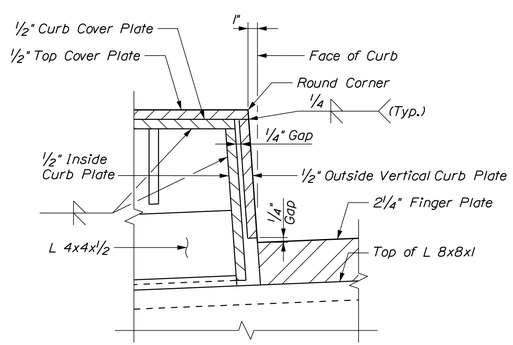

DETAIL C
(Use Similar Detail at Outside Fascia Plates)

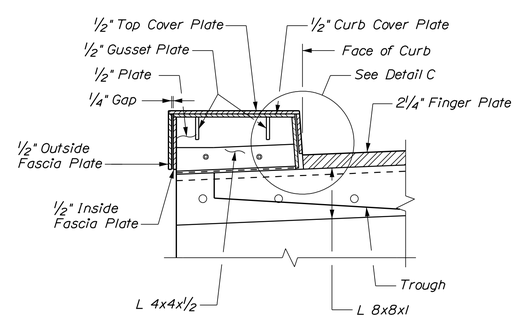

SECTION C-C

FABRIC TROUGH NOTES

1. Fabric trough shall be paid as Item 521.32 Fabric Trough for Finger Joint.

2. Fabric trough shall be installed no less than two days after the placement of expansion joint concrete.

STATE OF MAINE
DEPARTMENT OF TRANSPORTATION

NHPP - 1927(300)

WIN 19273.00

BRIDGE NO. 3838

BRIDGE PLANS

vhb

PROJ. MANAGER	J. KITTREDGE	BY	DATE
DESIGN-DETAILED	JGM	KDW	12/15
CHECKED-REVIEWED	JAW/KZS	SMH	12/15
DESIGN2-DETAILED2	---	---	---
DESIGN3-DETAILED3	---	---	---
REVISIONS 1	---	---	---
REVISIONS 2	---	---	---
REVISIONS 3	---	---	---
REVISIONS 4	---	---	---
FIELD CHANGES	---	---	---

WEST APPROACH BRIDGE
MAINE OWNED RR & CITY STREETS
BATH SAGADAHOC COUNTY

STEEL SUPERSTRUCTURE
EXPANSION JOINT (2 OF 3)

SHEET NUMBER
123
OF 145

Filename: ...\MSTA\123_expjoint_02.dgn Division: HIGHWAY Username: kwentworth Date:12/21/2015

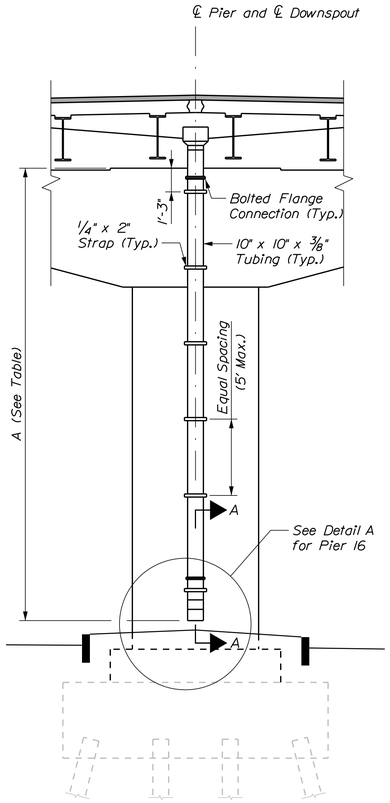

EXPANSION JOINT HOPPER AND DOWNSPOUT ELEVATION

Dimension Table	
Location	A
Pier No. 6	21'-5"
Pier No. 10	23'-5"
Pier No. 16	21'-0"

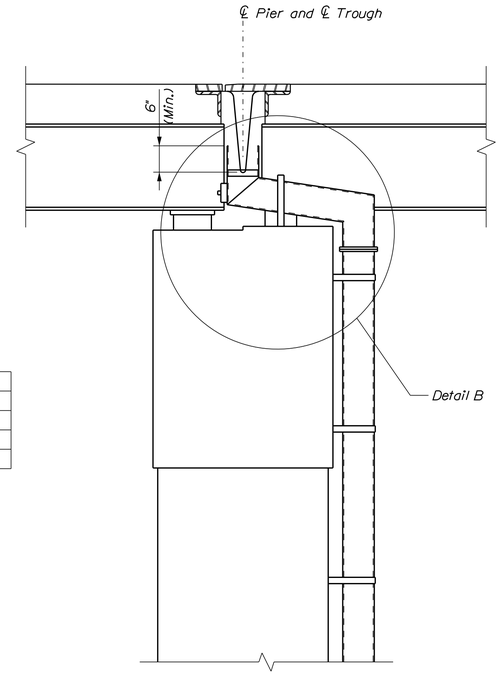

BRIDGE DOWNSPOUT SECTION
(Pier 16 Shown, Others Similar)

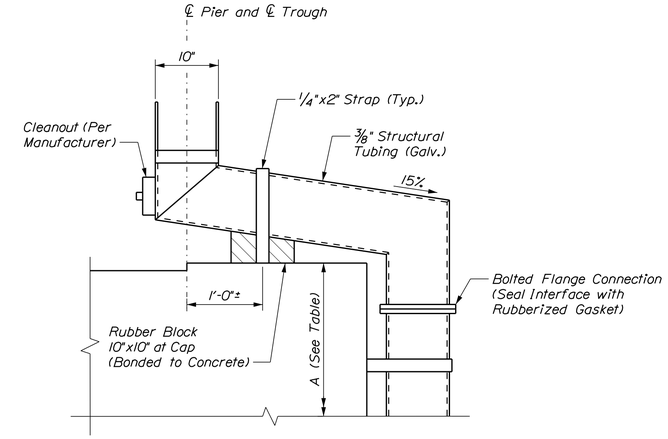

DETAIL B
(Pier 16 Shown, Others Similar)

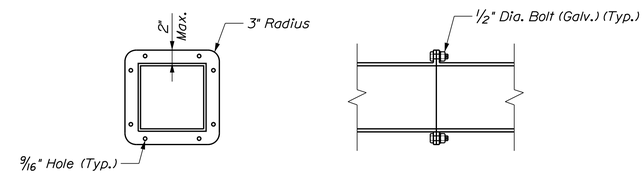

BOLTED FLANGE DETAIL
Scale: 1" = 1'-0"

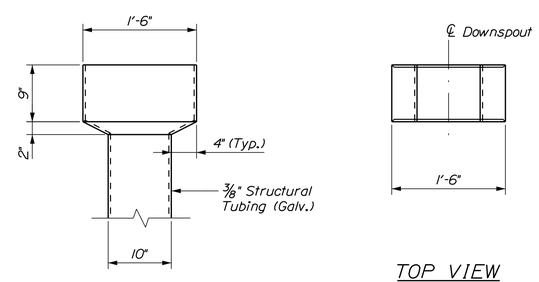

HOPPER DETAIL
Scale: 1" = 1'-0"

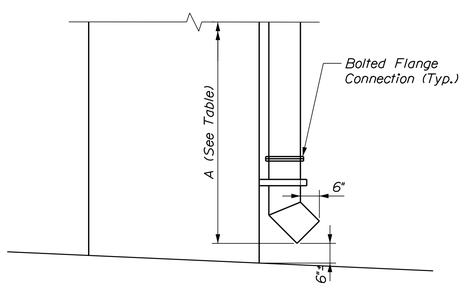

SECTION A-A
(Pier 6 and Pier 10)
(Place on East Face of Pier)

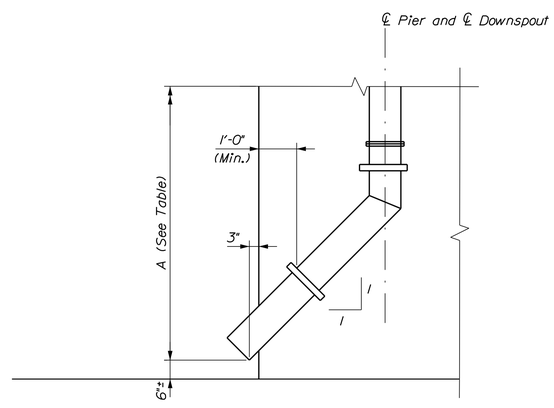

DETAIL A
(Pier 16)
(Place on West Face of Pier, Drains North)

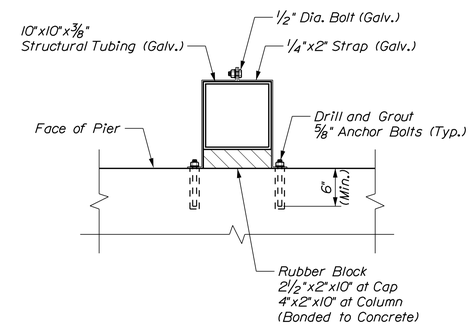

DOWNSPOUT DETAIL
Scale: 1" = 1'-0"

STATE OF MAINE
DEPARTMENT OF TRANSPORTATION

NHPP - 1927(300)

WIN 19273.00

BRIDGE NO. 3838

BRIDGE PLANS

vhb

PROJ. MANAGER	J. KITTREDGE		
DESIGN-DETAILED	KZS	KDW	12/15
CHECKED-REVIEWED	JGM	SMH	12/15
DESIGN2-DETAILED2	---	---	---
DESIGN3-DETAILED3	---	---	---
REVISIONS 1	---	---	---
REVISIONS 2	---	---	---
REVISIONS 3	---	---	---
REVISIONS 4	---	---	---
FIELD CHANGES	---	---	---

WEST APPROACH BRIDGE
MAINE OWNED RR & CITY STREETS
BATH SAGADAHOC COUNTY

STEEL SUPERSTRUCTURE
EXPANSION JOINT (3 OF 3)

SHEET NUMBER
124
OF 145

Filename: ...\BRIDGE\MSTA\124_Drain_02.dgn Division: HIGHWAY Username: kwentworth Date:12/21/2015

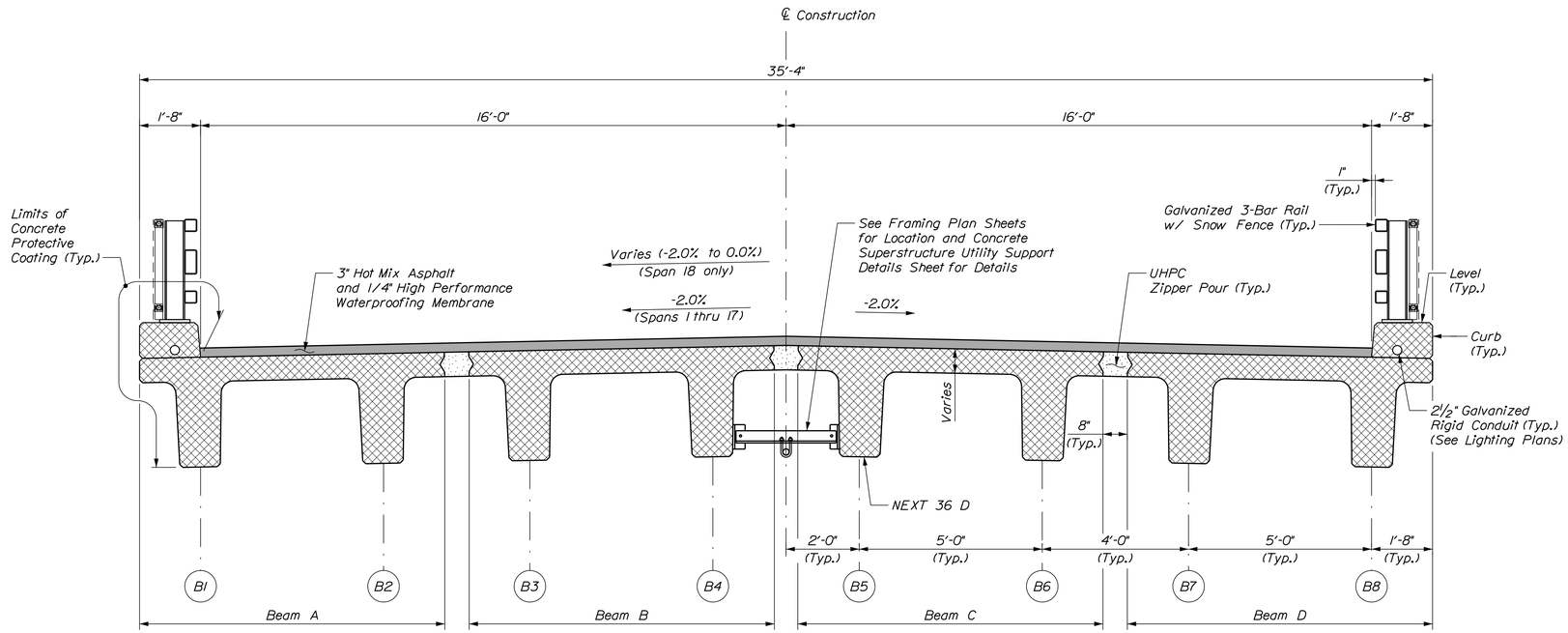

CONCRETE SUPERSTRUCTURE OPTION
Spans 1 thru 18
(Normal Crown, Spans 1 thru 17)
(Transition, Span 18)

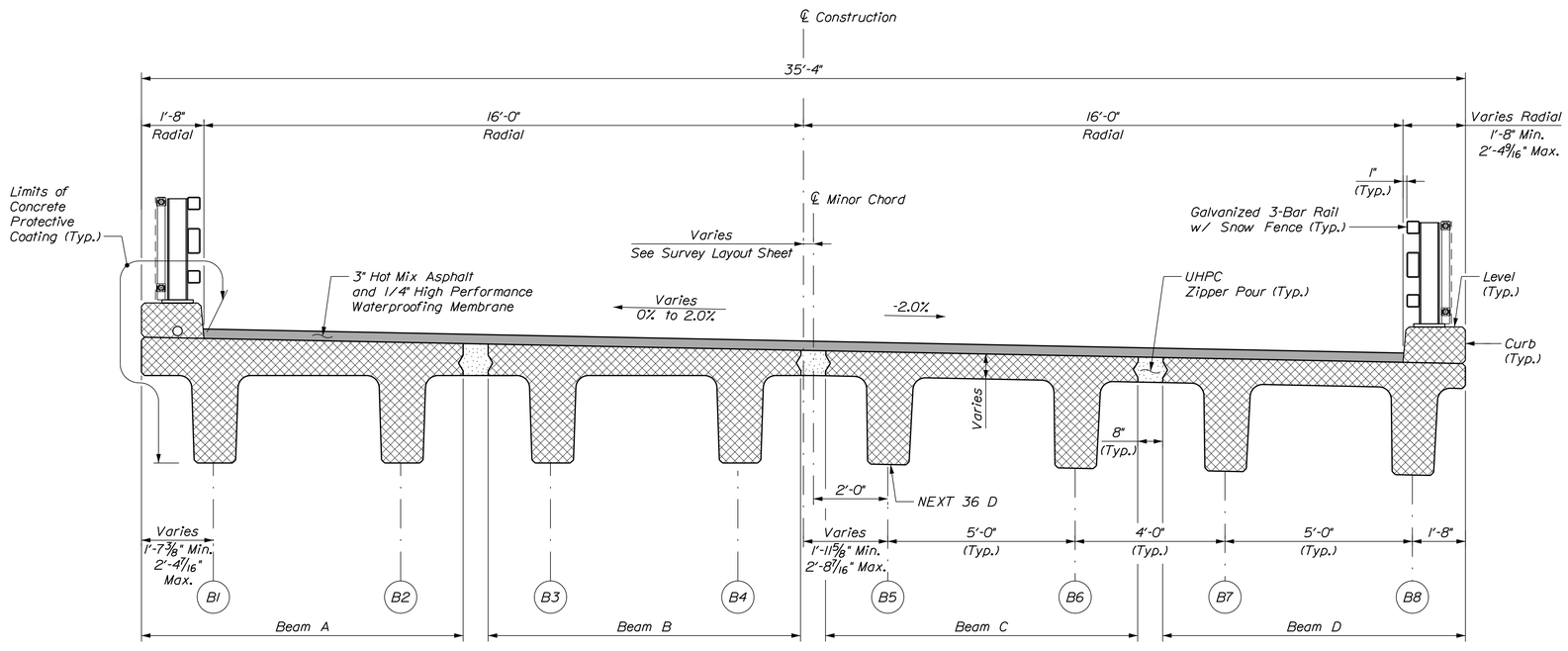

CONCRETE SUPERSTRUCTURE OPTION
Span 19 and Span 20
(Superelevated or Transition)

NOTE

1. Bridge Drains not shown.

PRECAST CONCRETE SUPERSTRUCTURE OPTION NOTES

1. Prestressing strands shall be 0.6-in. diameter. The tensioning force is 44 kips per prestressing strand.

2. Reinforcing steel shall have a minimum concrete cover of 2 inches unless otherwise noted.

3. The drilling of holes in the prestressed beams and the use of power actuated tools on the beams will not be permitted.

4. NEXT beams shall be removed from forms within 8 hours of detensioning to provide relative consistency in camber behavior.

5. NEXT beams shall be stored on hardwood blocking within 6 inches of centerline of bearing to provide relatively consistent creep of concrete.

6. NEXT beams shall be aged for a minimum of 120 days prior to erection.

7. Forms at the ends of the flanges along the longitudinal closure pour and vertical faces of link slab blockout shall be treated with concrete surface retarder or similar, and power washed to provide a roughened/exposed aggregate surface.

8. Method of forming flange connection (zipper pour) shall be determined by the contractor. The forms shall be removable and able to accommodate differential camber between beams. Form supports shall not be attached to any prefabricated superstructure element by drilling or similar means.

9. The concrete curb shall not be placed until the NEXT Beam has aged 90 days. Payment for the Curb and Bridge Lighting Support Bump-Outs will be made under Item No. 502.49, Structural Concrete Curbs and Sidewalks.

10. Payment for UHPC Zipper pours, UHPC Link Slab and UHPC Abutment Closure Pour will be made under Item No. 502.58, Ultra-High Performance Structural Concrete.

11. UHPC Zipper Pours shall be placed concurrently within each span. Link slabs shall be placed concurrently within each bridge unit following completion of all longitudinal zipper pours within the bridge unit and after 48 hours has elapsed. During UHPC placement, begin pours from the lowest elevation and proceed to the highest elevation.

12. See Superstructure Loading Note on General Notes Sheet.

13. Provide drip notch in accordance with Standard Details.

14. Form a one inch v-groove on the fascias at the horizontal joint between the curb and slab.

STATE OF MAINE
DEPARTMENT OF TRANSPORTATION

NHPP - 1927(300)

WIN 19273.00

BRIDGE NO. 3838

BRIDGE PLANS

vhb

		BY	DATE
PROJ. MANAGER	J. KITTREDGE		
DESIGN-DETAILED	KZS	KDW	12/15
CHECKED-REVIEWED	LSC	SMH	12/15
DESIGN2-DETAILED2	---	---	---
DESIGN3-DETAILED3	---	---	---
REVISIONS 1	---	---	---
REVISIONS 2	---	---	---
REVISIONS 3	---	---	---
REVISIONS 4	---	---	---
FIELD CHANGES	---	---	---

WEST APPROACH BRIDGE
MAINE OWNED RR & CITY STREETS
BATH SAGADAHOC COUNTY

CONCRETE SUPERSTRUCTURE SECTIONS

SHEET NUMBER
125
OF 145

Filename: ...\00\BRIDGE\MSTA\125_typ_02.dgn Division: HIGHWAY Username: kwentworth Date:12/21/2015

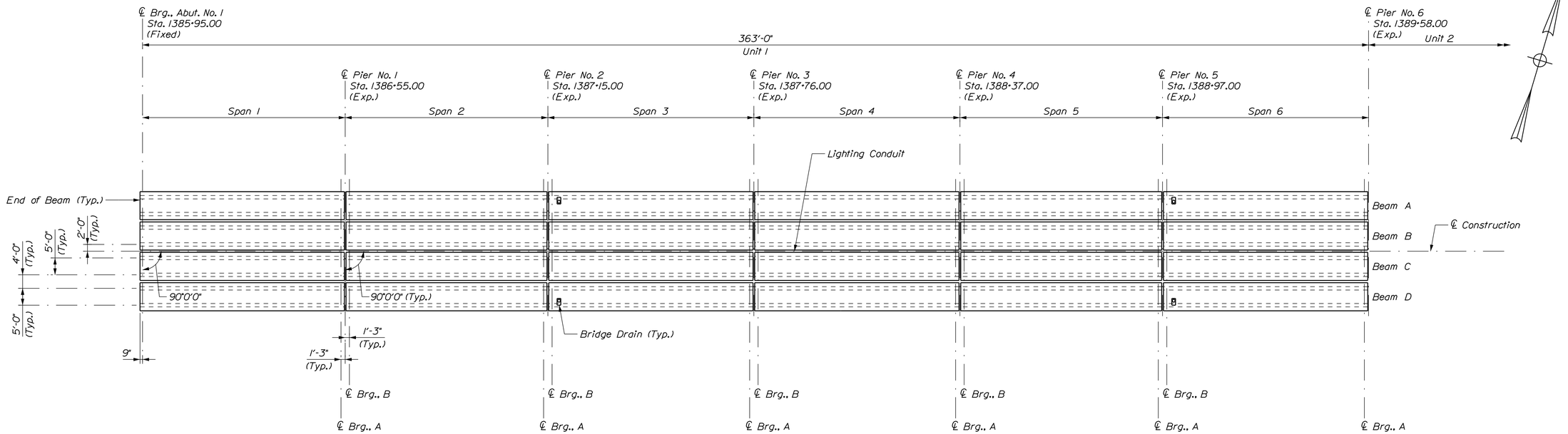

PLAN
Scale: 1/16" = 1'-0"

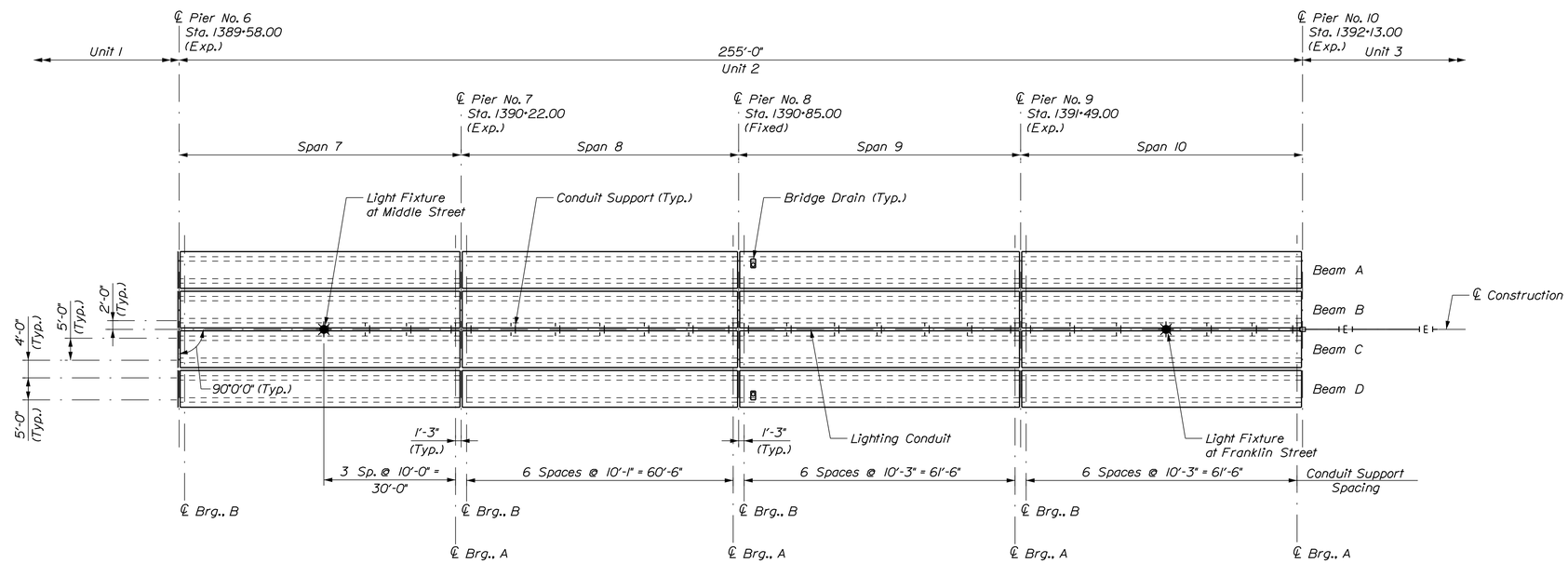

PLAN
Scale: 1/16" = 1'-0"

NOTE

1. See Bridge Drain Sheet for bridge drain locations.

STATE OF MAINE
DEPARTMENT OF TRANSPORTATION

NHPP - 1927(300)

WIN 19273.00

BRIDGE NO. 3838

BRIDGE PLANS

vhb

PROJ. MANAGER	J. KITTREDGE	BY	DATE
DESIGN-DETAILED	KZS	KDW	12/15
CHECKED-REVIEWED	LSC	SMH	12/15
DESIGN2-DETAILED2	---	---	---
DESIGN3-DETAILED3	---	---	---
REVISIONS 1	---	---	---
REVISIONS 2	---	---	---
REVISIONS 3	---	---	---
REVISIONS 4	---	---	---
FIELD CHANGES	---	---	---

WEST APPROACH BRIDGE
MAINE OWNED RR & CITY STREETS
BATH SAGADAHOC COUNTY

CONCRETE SUPERSTRUCTURE
FRAMING PLAN UNIT 1 & 2

SHEET NUMBER
126
OF 145

Filename: ...\MSTA\126_framing_next_01.dgn Division: HIGHWAY Username: kwentworth Date:12/21/2015

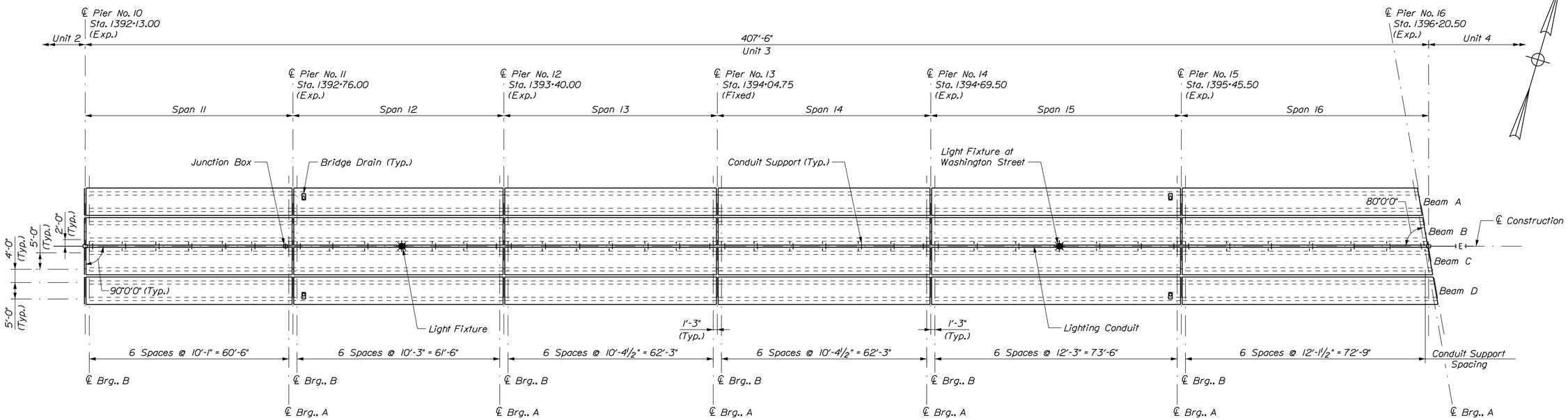

PLAN
Scale: 1/16" = 1'-0"

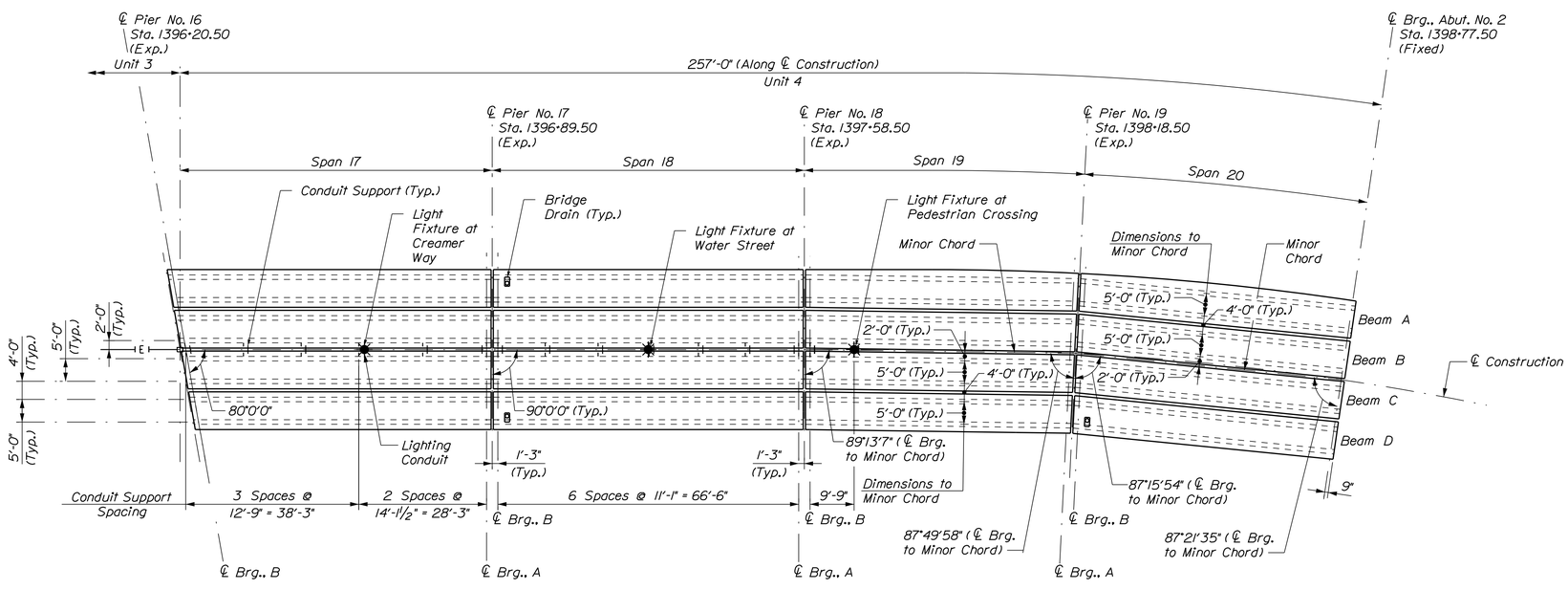

PLAN
Scale: 1/16" = 1'-0"

NOTES

1. End of beams are parallel to the centerline of bearing.
2. See Bridge Drain Sheet for bridge drain locations.

STATE OF MAINE
DEPARTMENT OF TRANSPORTATION

NHPP - 1927(300)

WIN 19273.00

BRIDGE NO. 3838

BRIDGE PLANS

vhb

PROJ. MANAGER	J. KITTREDGE	BY	DATE
DESIGN-DETAILED	KZS	KDW	12/15
CHECKED-REVIEWED	LSC	SMH	12/15
DESIGN2-DETAILED2	---	---	---
DESIGN3-DETAILED3	---	---	---
REVISIONS 1	---	---	---
REVISIONS 2	---	---	---
REVISIONS 3	---	---	---
REVISIONS 4	---	---	---
FIELD CHANGES	---	---	---

WEST APPROACH BRIDGE
MAINE OWNED RR & CITY STREETS
BATH SAGADAHOC COUNTY

CONCRETE SUPERSTRUCTURE FRAMING PLAN UNIT 3 & 4

SHEET NUMBER
127
OF 145

Filename: ...\MSTA\127_framing_next_03.dgn Division: HIGHWAY Username: kwentworth Date:12/21/2015

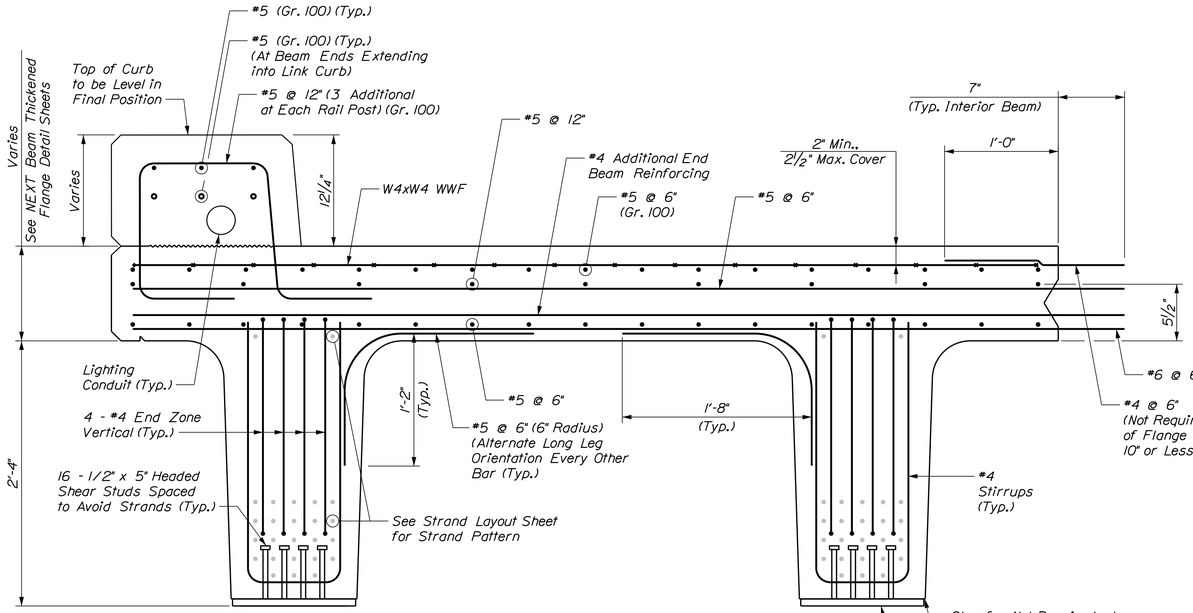

END OF BEAM SECTION
(Curb and Curb Reinforcing at Exterior Beams Only)
Scale: 1 ½" = 1'-0"

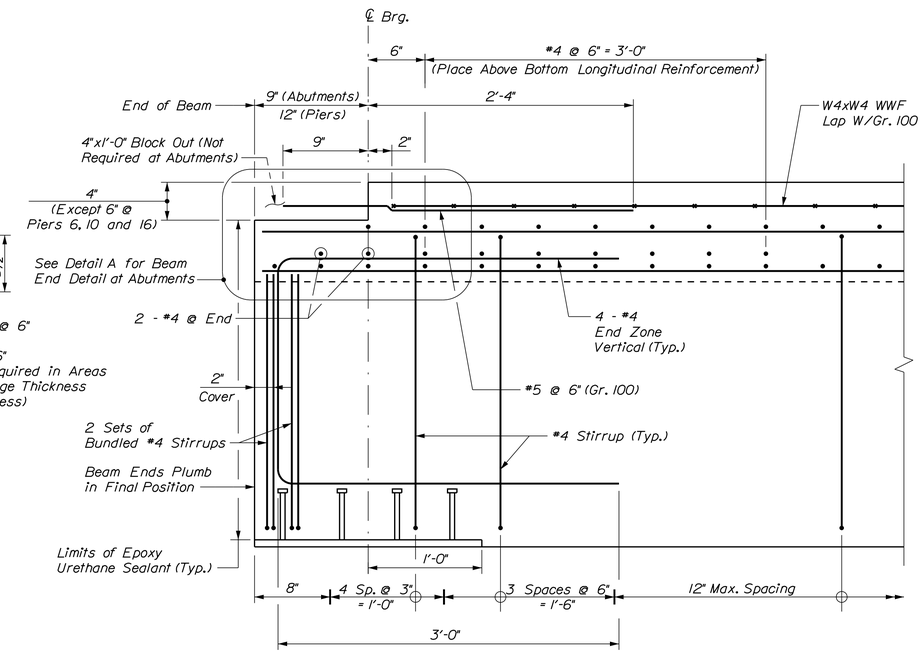

BEAM END ELEVATION
(Strands not Shown for Clarity)
Scale: 1 ½" = 1'-0"

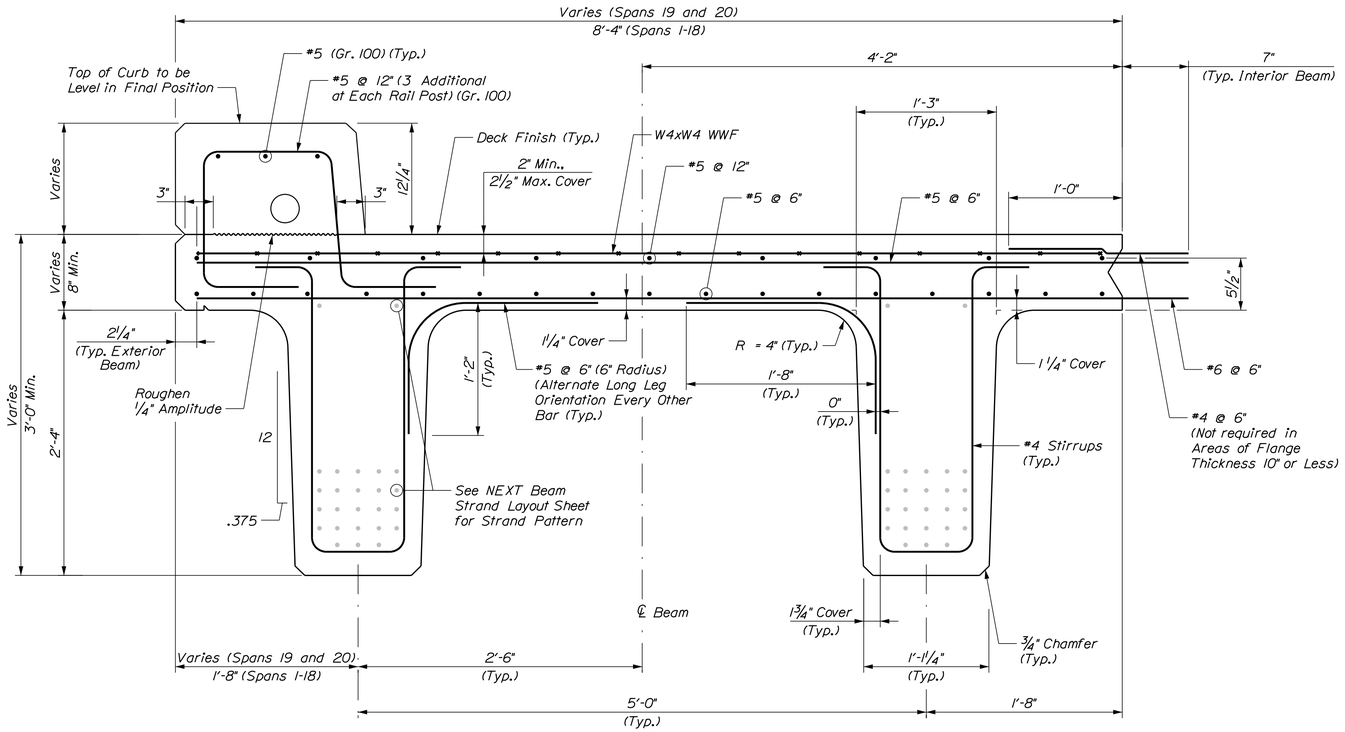

TYPICAL MID-BEAM SECTION
AND BEAM DIMENSIONS
(Curb and Curb Reinforcing at Exterior Beams Only)
Scale: 1 ½" = 1'-0"

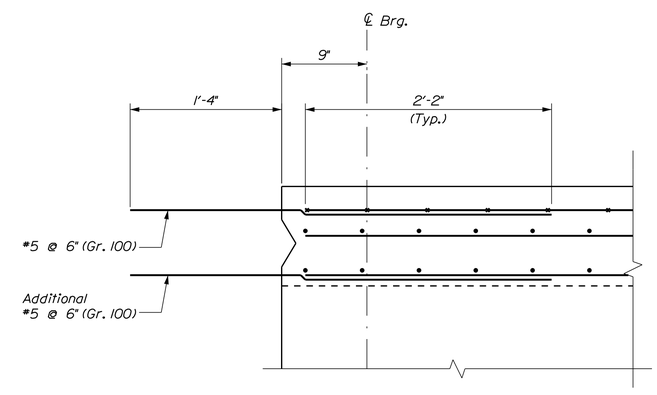

DETAIL A
BEAM END AT ABUTMENT
(Strands not Shown for Clarity)
Scale: 1 ½" = 1'-0"

STATE OF MAINE
DEPARTMENT OF TRANSPORTATION

NHPP - 1927(300)

WIN 19273.00

BRIDGE NO. 3838

BRIDGE PLANS

vhb

PROJ. MANAGER	J. KITTREDGE		
DESIGN-DETAILED	KZS	KDW	12/15
CHECKED-REVIEWED	LSC	SMH	12/15
DESIGN2-DETAILED2	---	---	---
DESIGN3-DETAILED3	---	---	---
REVISIONS 1	---	---	---
REVISIONS 2	---	---	---
REVISIONS 3	---	---	---
REVISIONS 4	---	---	---
FIELD CHANGES	---	---	---

WEST APPROACH BRIDGE
MAINE OWNED RR & CITY STREETS
BATH SAGADAHOC COUNTY

NEXT BEAM
REINFORCEMENT DETAILS

SHEET NUMBER
128
OF 145

Filename: ...\BRIDGE\MSTA\128_nextdet_01.dgn Division: HIGHWAY Username: kwentworth Date:12/21/2015

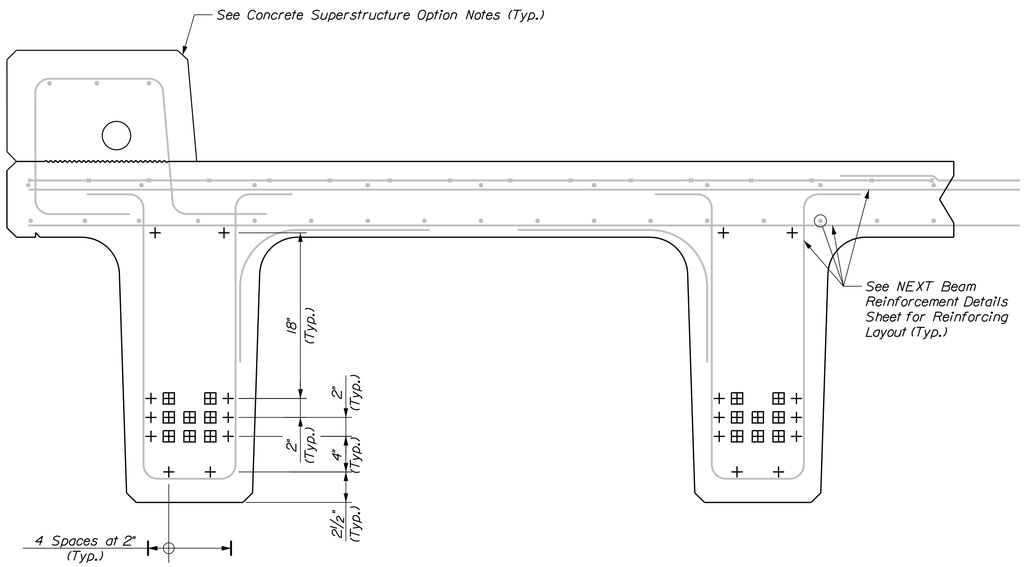

STRAND LAYOUT 1
(Beam A Shown, Others Similar)
Scale: 1 1/2" = 1'-0"

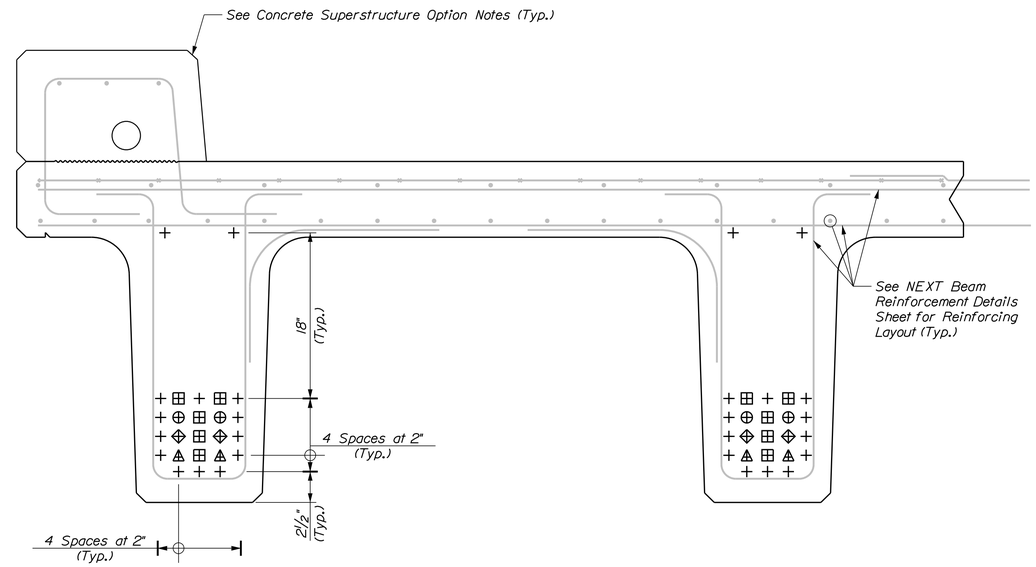

STRAND LAYOUT 3
(Beam A Shown, Others Similar)
Scale: 1 1/2" = 1'-0"

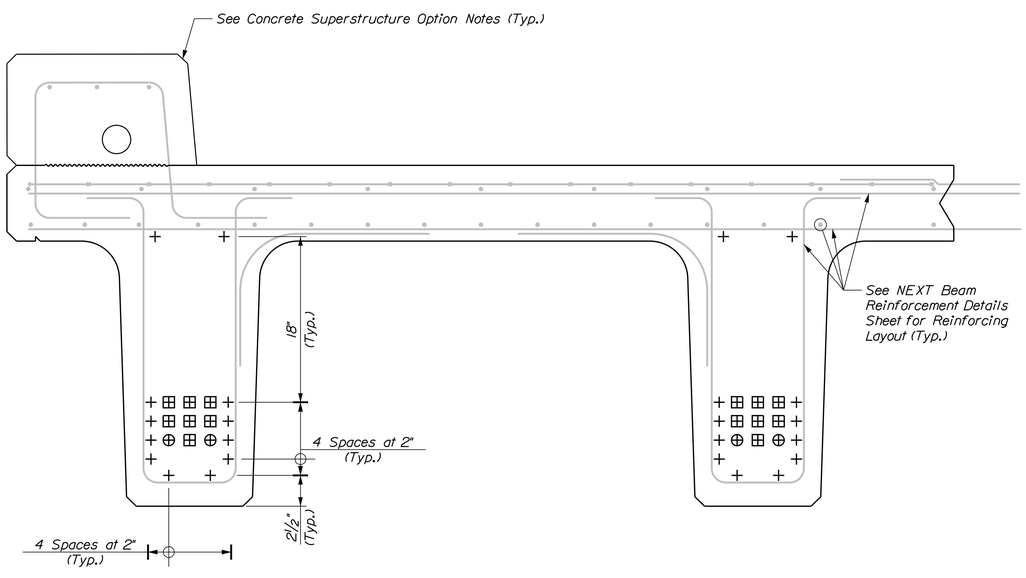

STRAND LAYOUT 2
(Beam A Shown, Others Similar)
Scale: 1 1/2" = 1'-0"

Span	Strand Layout
1	1
2	1
3	1
4	1
5	1
6	1
7	1
8	1
9	1
10	1
11	1
12	1
13	2
14	2
15	3
16	3
17	2
18	2
19	1
20	1

KEY

- + Straight Bonded Strand
- Debond 16'-0" From End
- Debond 8'-0" From End
- Debond 3'-0" From End
- Debond 0'-6" From End

STATE OF MAINE
DEPARTMENT OF TRANSPORTATION

NHPP - 1927(300)

WIN 19273.00

BRIDGE NO. 3838

BRIDGE PLANS

vhb

PROJ. MANAGER	J. KITTREDGE		
DESIGN-DETAILED	KZS	KDW	12/15
CHECKED-REVIEWED	LSC	SMH	12/15
DESIGN2-DETAILED2	---	---	---
DESIGN3-DETAILED3	---	---	---
REVISIONS 1	---	---	---
REVISIONS 2	---	---	---
REVISIONS 3	---	---	---
REVISIONS 4	---	---	---
FIELD CHANGES	---	---	---

WEST APPROACH BRIDGE
MAINE OWNED RR & CITY STREETS
SAGADAHOC COUNTY
BATH

NEXT BEAM
STRAND LAYOUT

SHEET NUMBER
129
OF 145

Filename: ...\BRIDGE\MSTA\129_nextdet_02.dgn Division: HIGHWAY Username: kwentworth Date:12/21/2015

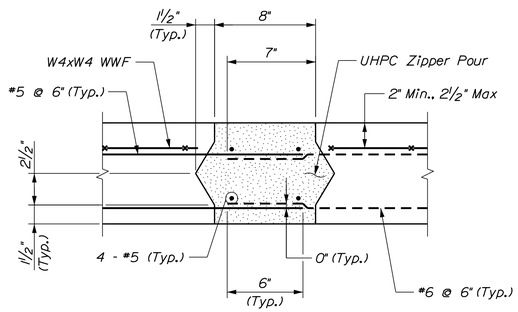

SECTION (DECK ≤ 10")

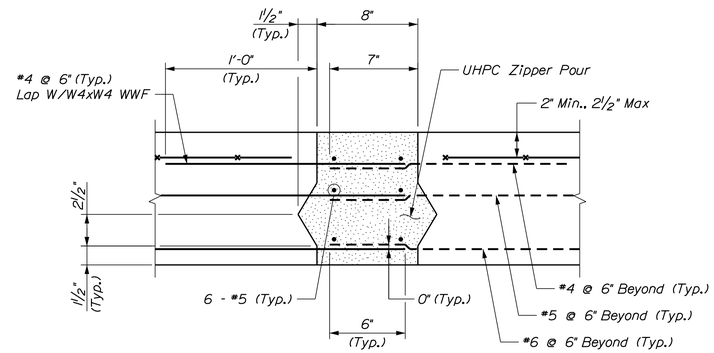

SECTION (DECK > 10")

DECK CONNECTION DETAILS

(Longitudinal Reinforcing in Beam Not Shown)
Not to Scale

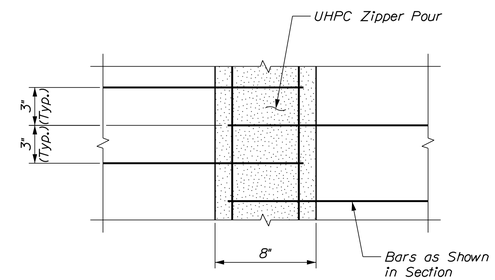

PLAN

(WWF not Shown)

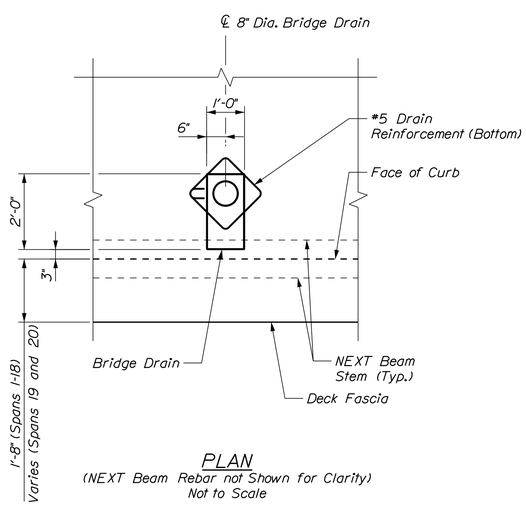

PLAN

(NEXT Beam Rebar not Shown for Clarity)
Not to Scale

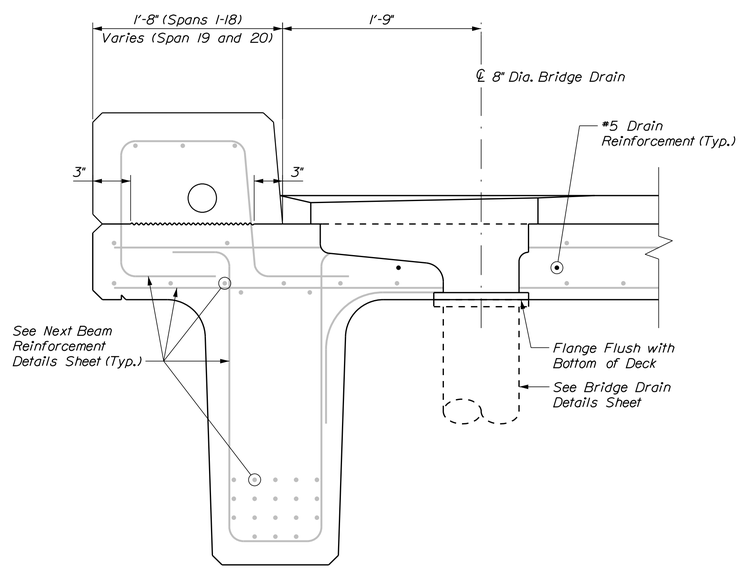

SECTION

Scale: 1½" = 1'-0"

BRIDGE DRAIN DETAILS

STATE OF MAINE
DEPARTMENT OF TRANSPORTATION

NHPP - 1927(300)

WIN 19273.00

BRIDGE NO. 3838

BRIDGE PLANS

vhb

PROJ. MANAGER	J. KITTREDGE	BY	DATE
DESIGN-DETAILED	KZS	KDW	12/15
CHECKED-REVIEWED	JGM	SMH	12/15
DESIGN2-DETAILED2	---	---	---
DESIGN3-DETAILED3	---	---	---
REVISIONS 1	---	---	---
REVISIONS 2	---	---	---
REVISIONS 3	---	---	---
REVISIONS 4	---	---	---
FIELD CHANGES	---	---	---

WEST APPROACH BRIDGE
MAINE OWNED RR & CITY STREETS
BATH SAGADAHOC COUNTY

NEXT BEAM DETAILS
(1 OF 2)

SHEET NUMBER
130
OF 145

Filename: ...\BRIDGE\MSTA\130_next1det_05.dgn Division: HIGHWAY Username: kwentworth Date:12/21/2015

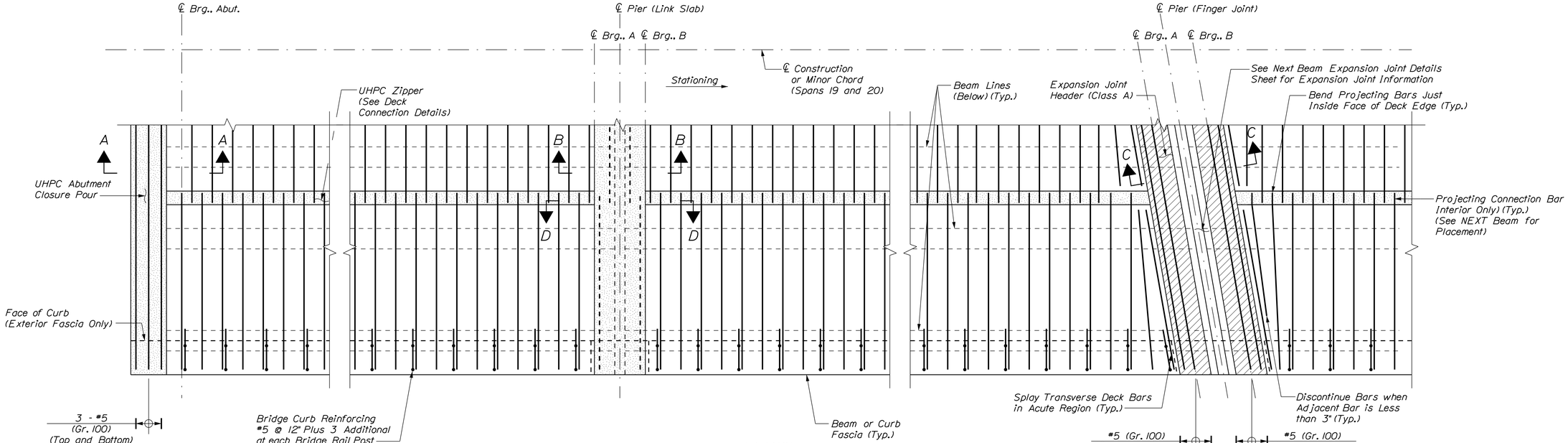

FLANGE REINFORCING PARTIAL PLAN
(Longitudinal Bars not Shown for Clarity)
Not to Scale

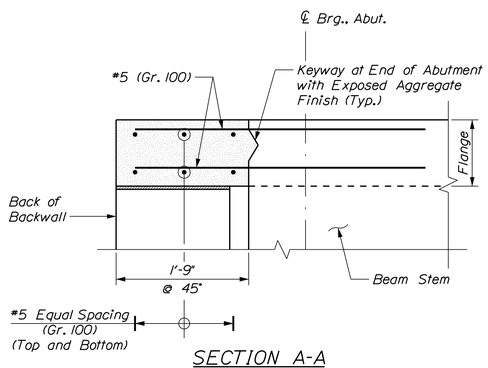

SECTION A-A
(NEXT Beam Reinforcing and Pavement not Shown)
Scale: 1" = 1'-0"

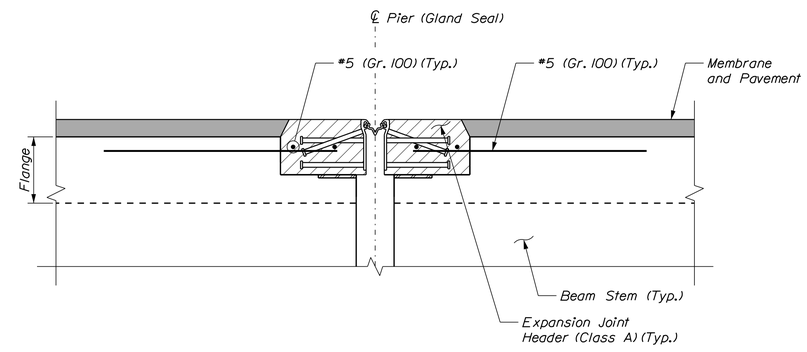

SECTION C-C
(NEXT Beam Reinforcing not Shown)
Scale: 1" = 1'-0"

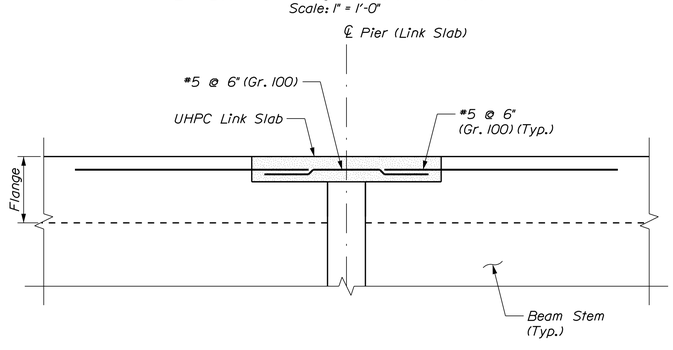

SECTION B-B
(NEXT Beam Reinforcing and Pavement not Shown)
Scale: 1" = 1'-0"

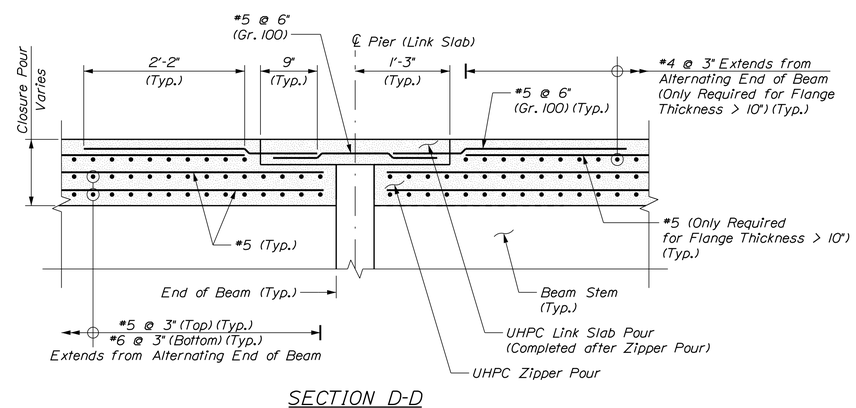

SECTION D-D
(Pavement not Shown)
(Flanges > 10" Shown, Flanges ≤ 10" Similar)
Scale: 1" = 1'-0"

STATE OF MAINE
DEPARTMENT OF TRANSPORTATION

NHPP - 1927(300)

WIN 19273.00

BRIDGE NO. 3838

BRIDGE PLANS

vhb

		BY	DATE
PROJ. MANAGER	J. KITTREDGE		
DESIGN-DETAILED	KZS	KDW	12/15
CHECKED-REVIEWED	JGM	SMH	12/15
DESIGN2-DETAILED2	---	---	---
DESIGN3-DETAILED3	---	---	---
REVISIONS 1	---	---	---
REVISIONS 2	---	---	---
REVISIONS 3	---	---	---
REVISIONS 4	---	---	---
FIELD CHANGES	---	---	---

WEST APPROACH BRIDGE
MAINE OWNED RR & CITY STREETS
BATH SAGADAHOC COUNTY

NEXT BEAM DETAILS (2 OF 2)

SHEET NUMBER
131
OF 145

Filename: ...\BRIDGE\MSTA\131_nextdet_07.dgn Division: HIGHWAY Username: kwentworth Date:12/21/2015

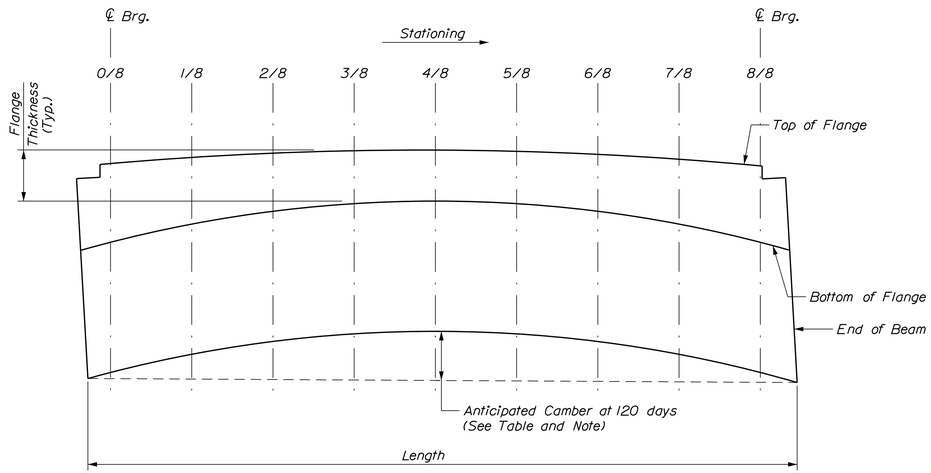

THICKENED FLANGE DETAIL

Not to Scale

Span	Length	Camber (Inches)
1	60'-6"	1.9
2	59'-6"	1.9
3	60'-6"	1.9
4	60'-6"	1.9
5	59'-6"	1.9
6	60'-6"	1.9
7	63'-6"	2.0
8	62'-6"	2.0
9	63'-6"	2.0
10	63'-6"	2.0
11	62'-6"	2.0
12	63'-6"	2.0
13	64'-3"	2.7
14	64'-3"	2.7
15	75'-6"	4.2
16 - Beam A	72'-1 3/8"	4.1
16 - Beam B	73'-8 7/16"	4.1
16 - Beam C	75'-3 1/2"	4.2
16 - Beam D	76'-10 1/2"	4.3
17 - Beam A	70'-10 1/2"	2.9
17 - Beam B	69'-3 1/2"	2.8
17 - Beam C	67'-8 7/16"	2.8
17 - Beam D	66'-1 3/8"	2.7
18	68'-6"	2.8
19 - Beam A	60'-2 1/4"	1.9
19 - Beam B	59'-8 11/16"	1.9
19 - Beam C	59'-3 1/8"	1.9
19 - Beam D	58'-9 9/16"	1.9
20 - Beam A	60'-8 7/8"	1.9
20 - Beam B	59'-10 3/4"	1.9
20 - Beam C	59'-0 5/8"	1.9
20 - Beam D	58'-2 1/2"	1.9

Flange Thickness at Centerline of Beam (inches)									
Span	0/8	1/8	2/8	3/8	4/8	5/8	6/8	7/8	8/8
1	9.7	8.9	8.4	8.1	8.0	8.2	8.5	9.0	9.7
2	9.4	8.8	8.4	8.1	8.0	8.1	8.4	8.8	9.4
3	9.4	8.8	8.4	8.1	8.0	8.1	8.4	8.8	9.4
4	9.4	8.8	8.4	8.1	8.0	8.1	8.4	8.8	9.4
5	9.4	8.8	8.4	8.1	8.0	8.1	8.4	8.8	9.4
6	9.7	9.0	8.5	8.2	8.0	8.1	8.4	8.9	9.7
7	10.0	9.1	8.5	8.1	8.0	8.1	8.5	9.1	10.0
8	10.0	9.1	8.5	8.1	8.0	8.1	8.5	9.1	10.0
9	10.0	9.1	8.5	8.1	8.0	8.1	8.5	9.1	10.0
10	10.0	9.1	8.5	8.1	8.0	8.1	8.5	9.1	10.0
11	10.0	9.1	8.5	8.1	8.0	8.1	8.5	9.1	10.0
12	10.0	9.1	8.5	8.1	8.0	8.1	8.5	9.1	10.0
13	10.7	9.5	8.7	8.2	8.0	8.2	8.7	9.5	10.7
14	10.1	9.1	8.4	8.1	8.0	8.2	8.6	9.2	10.1
15	11.3	9.8	8.8	8.2	8.0	8.2	8.8	9.8	11.3
16A	11.2	9.8	8.8	8.2	8.0	8.2	8.8	9.8	11.2
16B	11.2	9.8	8.8	8.2	8.0	8.2	8.8	9.8	11.2
16C	11.3	9.9	8.8	8.2	8.0	8.2	8.8	9.9	11.3
16D	11.3	9.9	8.8	8.2	8.0	8.2	8.8	9.9	11.3
17A	10.1	9.2	8.5	8.1	8.0	8.1	8.5	9.2	10.1
17B	10.1	9.2	8.5	8.1	8.0	8.1	8.5	9.2	10.1
17C	10.0	9.1	8.5	8.1	8.0	8.1	8.5	9.1	10.0
17D	10.0	9.1	8.5	8.1	8.0	8.1	8.5	9.1	10.0
18	See NEXT Beam Flange Details (2 of 2) Sheet								
19	See NEXT Beam Flange Details (2 of 2) Sheet								
20	See NEXT Beam Flange Details (2 of 2) Sheet								

NOTE

1. Thickened flange provided to accommodate profile, cross-slope, and anticipated beam camber at erection.

STATE OF MAINE
DEPARTMENT OF TRANSPORTATION

NHPP - 1927(300)

WIN 19273.00

BRIDGE NO. 3838

BRIDGE PLANS

vhb

		BY	DATE
PROJ. MANAGER	J. KITTREDGE		
DESIGN-DETAILED	KZS	KDW	12/15
CHECKED-REVIEWED	LSC	SMH	12/15
DESIGN2-DETAILED2	---	---	---
DESIGN3-DETAILED3	---	---	---
REVISIONS 1	---	---	---
REVISIONS 2	---	---	---
REVISIONS 3	---	---	---
REVISIONS 4	---	---	---
FIELD CHANGES	---	---	---

WEST APPROACH BRIDGE
MAINE OWNED RR & CITY STREETS
BATH SAGADAHOC COUNTY

NEXT BEAM
FLANGE DETAILS (1 OF 2)

SHEET NUMBER
132
OF 145

Filename: ...\BRIDGE\MSTA\132_nextdet_04.dgn Division: HIGHWAY Username: kwentworth Date:12/21/2015

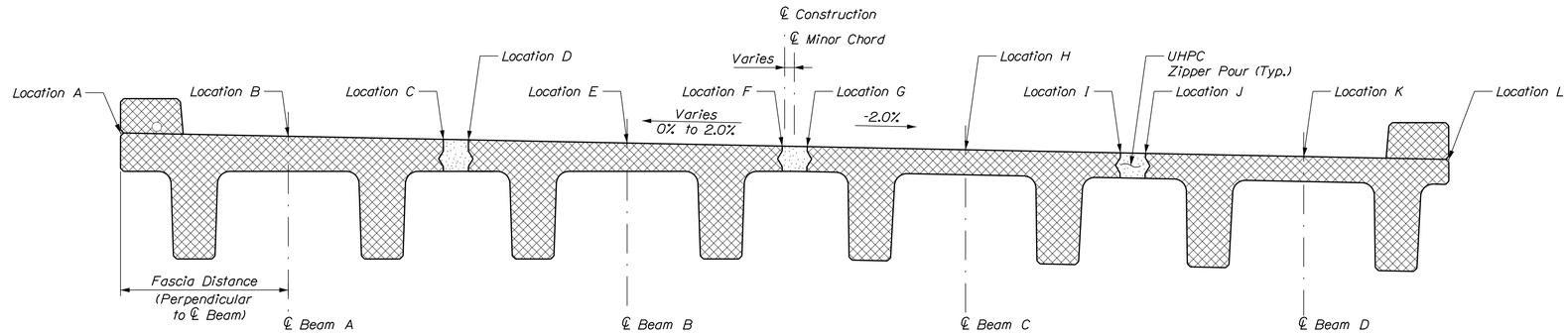

TYPICAL BRIDGE SECTION
(Span 18 thru 20)

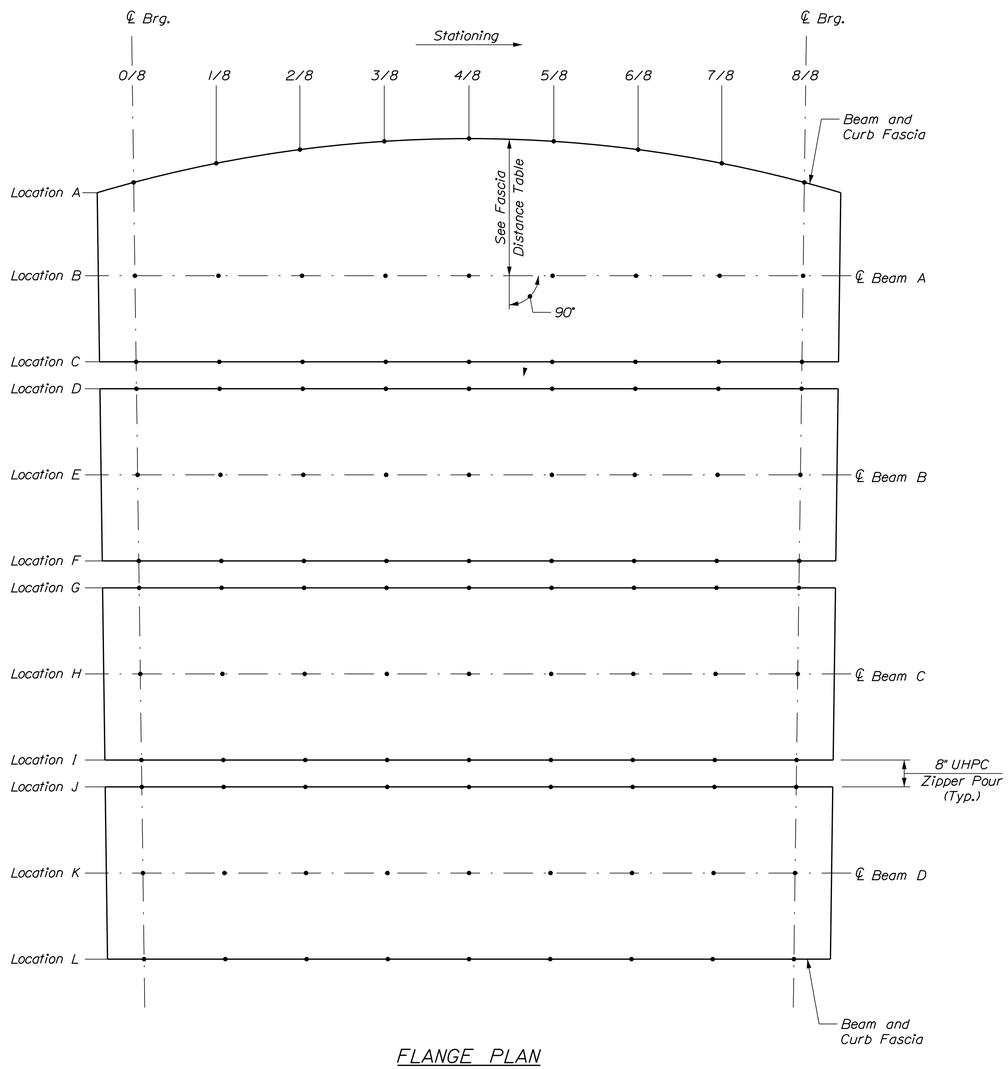

FLANGE PLAN
(Span 18 Thru 20)
Not to Scale

	Flange Thickness (inches)								
	Span 18								
	0/8	1/8	2/8	3/8	4/8	5/8	6/8	7/8	8/8
Location A	10.7	10.2	9.9	9.9	10.2	10.7	11.6	12.9	14.7
Location B	10.7	10.1	9.7	9.5	9.6	10.1	10.8	12.0	13.8
Location C	10.7	9.9	9.4	9.1	9.1	9.4	10.1	11.1	12.8
Location D	10.7	9.9	9.3	9.1	9.1	9.3	10.0	11.0	12.6
Location E	10.6	9.7	9.1	8.7	8.5	8.7	9.2	10.1	11.6
Location F	10.6	9.6	8.8	8.3	8.0	8.1	8.5	9.3	10.7
Location G	10.6	9.6	8.8	8.3	8.0	8.0	8.4	9.2	10.6
Location H	10.6	9.6	8.8	8.3	8.0	8.0	8.4	9.2	10.6
Location I	10.6	9.6	8.8	8.3	8.0	8.0	8.4	9.2	10.6
Location J	10.6	9.6	8.8	8.3	8.0	8.0	8.4	9.2	10.6
Location K	10.6	9.6	8.8	8.3	8.0	8.0	8.4	9.2	10.6
Location L	10.6	9.6	8.8	8.3	8.0	8.0	8.4	9.2	10.6
	Span 19								
	0/8	1/8	2/8	3/8	4/8	5/8	6/8	7/8	8/8
Location A	11.5	10.5	10.0	9.8	10.1	10.8	12.0	13.6	15.6
Location B	11.5	10.4	9.7	9.4	9.6	10.2	11.3	12.7	14.6
Location C	11.5	10.3	9.4	9.1	9.1	9.6	10.5	11.9	13.7
Location D	11.5	10.2	9.4	9.0	9.0	9.5	10.4	11.7	13.5
Location E	11.5	10.1	9.1	8.6	8.5	8.9	9.7	10.9	12.5
Location F	11.5	10.0	8.9	8.2	8.0	8.3	8.9	10.0	11.5
Location G	11.5	10.0	8.9	8.2	8.0	8.2	8.9	10.0	11.5
Location H	11.5	10.0	8.9	8.2	8.0	8.2	8.9	10.0	11.5
Location I	11.5	10.0	8.9	8.2	8.0	8.2	8.9	10.0	11.5
Location J	11.5	10.0	8.9	8.2	8.0	8.2	8.9	10.0	11.5
Location K	11.5	10.0	8.9	8.2	8.0	8.2	8.9	10.0	11.5
Location L	11.5	10.0	8.9	8.2	8.0	8.2	8.9	10.0	11.5
	Span 20								
	0/8	1/8	2/8	3/8	4/8	5/8	6/8	7/8	8/8
All Locations	11.4	9.9	8.8	8.2	8.0	8.2	8.9	10.0	11.4

	Beam A Fascia Distance (feet)								
	0/8	1/8	2/8	3/8	4/8	5/8	6/8	7/8	8/8
Span 18	4.17	4.17	4.17	4.17	4.17	4.17	4.17	4.17	4.17
Span 19	4.18	4.28	4.38	4.48	4.58	4.61	4.56	4.42	4.21
Span 20	4.21	4.51	4.71	4.83	4.87	4.82	4.68	4.46	4.16

NOTE

1. See Thickened Flange Detail on NEXT Beam Flange Details (1 of 2).

STATE OF MAINE
DEPARTMENT OF TRANSPORTATION

NHPP - 1927(300)

WIN 19273.00

BRIDGE NO. 3838

BRIDGE PLANS

vhb

PROJ. MANAGER	J. KITTREDGE		
DESIGN-DETAILED	KZS	KDW	12/15
CHECKED-REVIEWED	LSC	SMH	12/15
DESIGN2-DETAILED2	---	---	---
DESIGN3-DETAILED3	---	---	---
REVISIONS 1	---	---	---
REVISIONS 2	---	---	---
REVISIONS 3	---	---	---
REVISIONS 4	---	---	---
FIELD CHANGES	---	---	---

WEST APPROACH BRIDGE
MAINE OWNED RR & CITY STREETS
BATH SAGADAHOC COUNTY

NEXT BEAM
FLANGE DETAILS (2 OF 2)

SHEET NUMBER
133
OF 145

Filename: ...\BRIDGE\MSTA\133_nextdet_06.dgn Division: HIGHWAY Username: kwentworth Date:12/21/2015

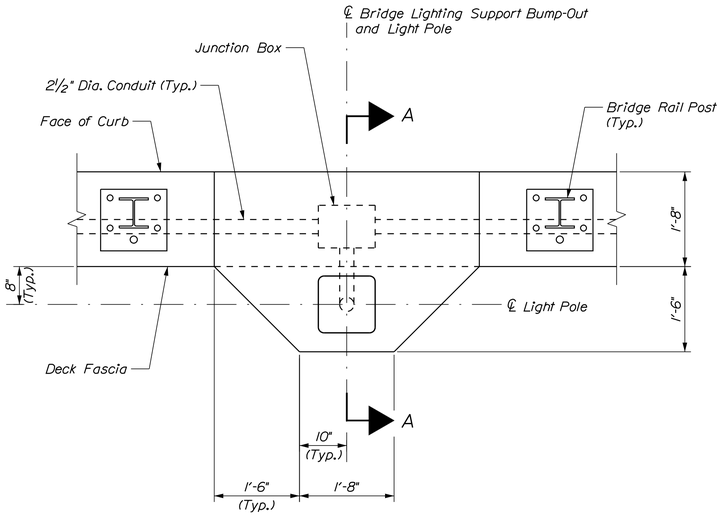

PLAN

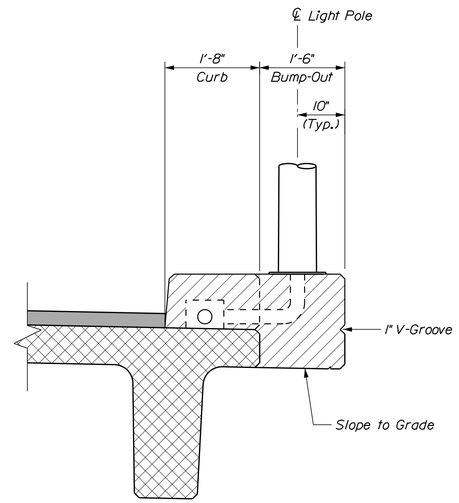

SECTION A-A
(Bridge Rail and Snow Fence not Shown)

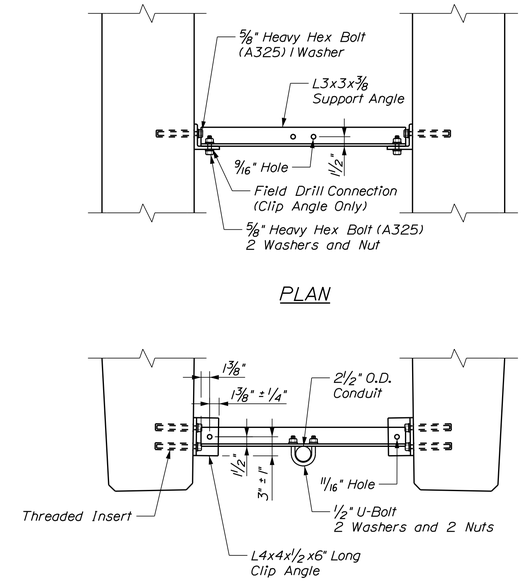

PLAN

ELEVATION

LIGHTING/CONDUIT SUPPORT
Scale: 1" = 1'-0"

BRIDGE LIGHTING SUPPORT MASONRY
Scale: ¾" = 1'-0"

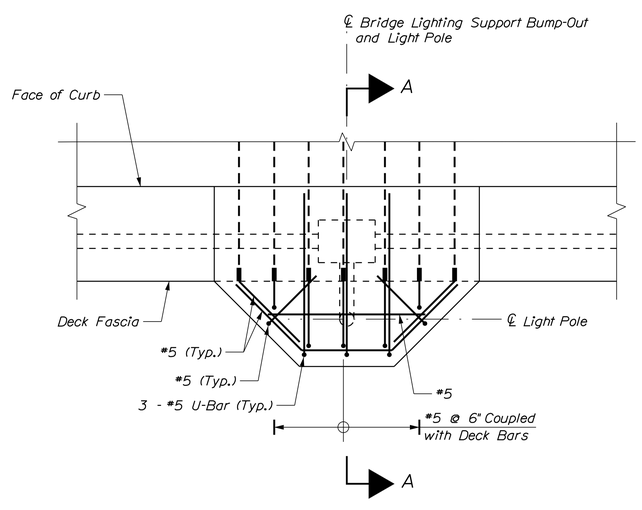

PLAN

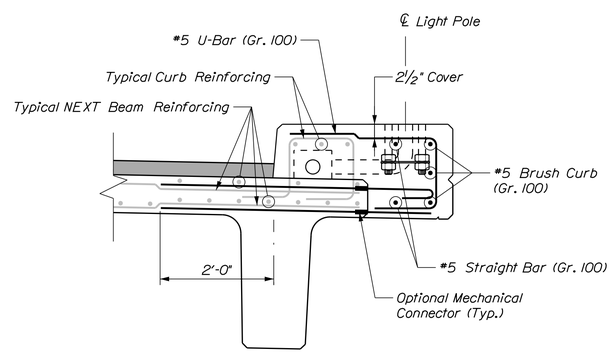

SECTION A-A

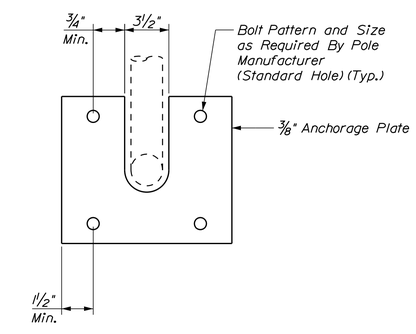

EMBEDED LIGHT POLE ANCHORAGE PLATE DETAIL
Not to Scale

BRIDGE LIGHTING SUPPORT REINFORCING
Scale: ¾" = 1'-0"

STATE OF MAINE
DEPARTMENT OF TRANSPORTATION

NHPP - 1927(300)

WIN 19273.00

BRIDGE NO. 3838

BRIDGE PLANS

vhb

PROJ. MANAGER	J. KITTREDGE		
DESIGN-DETAILED	KZS	KDW	12/15
CHECKED-REVIEWED	JGM	SMH	12/15
DESIGN2-DETAILED2	---	---	---
DESIGN3-DETAILED3	---	---	---
REVISIONS 1	---	---	---
REVISIONS 2	---	---	---
REVISIONS 3	---	---	---
REVISIONS 4	---	---	---
FIELD CHANGES	---	---	---

WEST APPROACH BRIDGE
MAINE OWNED RR & CITY STREETS
BATH SAGADAHOC COUNTY

CONCRETE SUPERSTRUCTURE
UTILITY SUPPORT DETAILS

SHEET NUMBER
134
OF 145

Filename: ...\00\BRIDGE\MSTA\134_typ_02a.dgn Division: HIGHWAY Username: kwentworth Date:12/21/2015

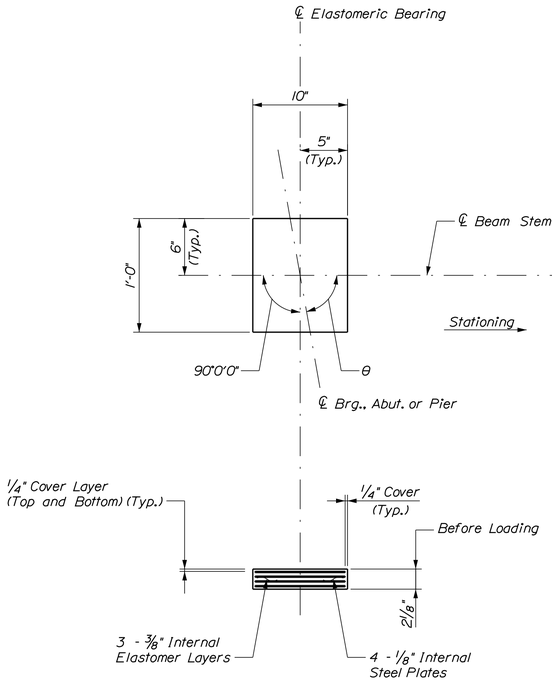

ELASTOMERIC BEARING

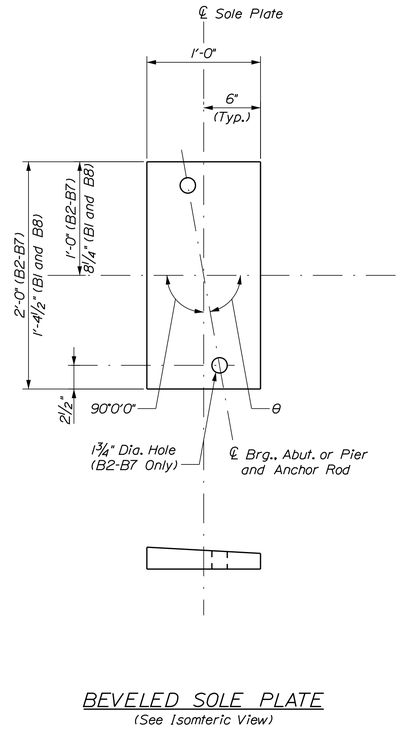

BEVELED SOLE PLATE
(See Isometric View)

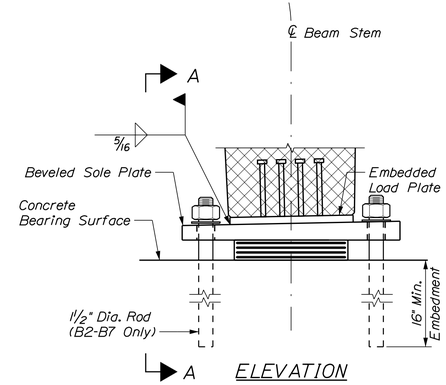

ELEVATION

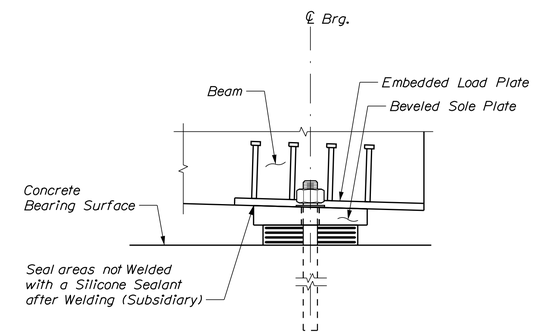

VIEW A-A

Beveled Sole Plate Thickness Table													
		B1			B2-B4			B5-B7			B8		
Location	PGL Slope	Cross Slope	Mid Thickness (in)	Quantity	Cross Slope	Mid Thickness (in)	Quantity	Cross Slope	Mid Thickness (in)	Quantity	Cross Slope	Mid Thickness (in)	Quantity
Abutment No. 1	0.77%	2.00%	1.71	1	2.00%	1.79	3	-2.00%	1.79	3	-2.00%	1.71	1
Pier No. 8	-2.24%	2.00%	1.80	2	2.00%	1.87	7	-2.00%	1.87	7	-2.00%	1.80	2
Pier No. 13	-2.24%	2.00%	1.80	2	2.00%	1.87	7	-2.00%	1.87	7	-2.00%	1.80	2
Abutment No. 2	-1.89%	-2.00%	1.78	1	-2.00%	1.85	3	-2.00%	1.85	3	-2.00%	1.78	1

Bearing Skew Angles	
Location	θ
Abut. No. 1	90°00'00"
Pier No. 8	90°00'00"
Pier No. 13	90°00'00"
Abut. No. 2	87°21'35"

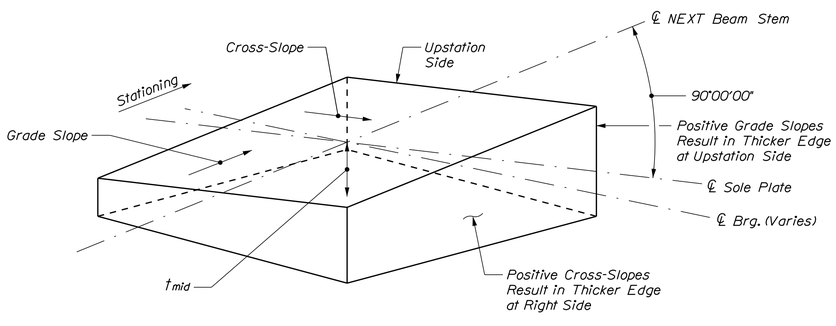

TWO-WAY TAPERED SOLE PLATE SCHEMATIC

ELASTOMERIC BEARING NOTES

1. The shear modulus of the elastomer shall be between 100 and 130 psi.

2. Vulcanizing of the elastomer to the steel plates shall be done during the primary molding process.

3. Sole plates and load plates shall meet the requirements of ASTM A 709, Grade 50.

4. Internal steel reinforcing plates shall conform ASTM A 36.

5. Sole plates and load plates shall be galvanized in accordance with ASTM A 123.

6. Horizontal PTFE at expansion bearings shall be dimpled and lubricated. Lubrication shall be supplied and installed per the manufactures recommendation to ensure a coefficient of friction less that or equal to 0.03 at 68 degrees F. Cost included in Bearing item.

7. Resetting of bearing during construction is not anticipated based on required sequence of link slab construction and anticipated ambient temperatures.

8. All bearings shall be marked prior to shipping. The marks shall include the bearing location on the bridge and an arrow which points upstation. All marks shall be permanent and shall be visible after the bearing is installed.

9. Bearings shall be covered during transit.

10. All necessary precautions shall be taken to protect bearing components from field weld flash and splatter. Heat from welding operation shall be controlled such that steel adjacent to the elastomer does not exceed 200 degrees F. The temperature shall be verified by the use of temperature indicating crayons or other suitable means.

11. Touch up damaged galvanized surfaces with Zinc-Rich paint as directed by the Resident.

ANCHOR ROD NOTES

1. Anchor rods shall meet the requirements of ASTM F 1554, Grade 105 and shall be swedged on the embedded portion of the rod.

2. Anchor rods, washers, and nuts shall be galvanized in accordance with ASTM A 153.

3. Leave nuts 1/4" above washers to allow for girder rotation (Upset the threads on the anchor rods after the temporary plate washer has been removed to prevent nut movement). Touch up damaged galvanized surfaces with Zinc-Rich paint as directed by the Resident.

4. Anchor rods shall be set by template prior to pouring the precast or cast-in-place pier cap.

Bearing Design Criteria		
Loads	Fixed	Expansion
Unfactored Dead Load (Max.)	37 kips	45 kips
Unfactored Live Load (Max.)	54 kips	68 kips

STATE OF MAINE
DEPARTMENT OF TRANSPORTATION

NHPP - 1927(300)

WIN 19273.00

BRIDGE NO. 3838

BRIDGE PLANS

vhb

PROJ. MANAGER	J. KITTREDGE		
DESIGN-DETAILED	JGM	KDW	12/15
CHECKED-REVIEWED	KCD	SMH	12/15
DESIGN2-DETAILED2	---	---	---
DESIGN3-DETAILED3	---	---	---
REVISIONS 1	---	---	---
REVISIONS 2	---	---	---
REVISIONS 3	---	---	---
REVISIONS 4	---	---	---
FIELD CHANGES	---	---	---

WEST APPROACH BRIDGE
MAINE OWNED RR & CITY STREETS
BATH SAGADAHOC COUNTY

CONCRETE SUPERSTRUCTURE
FIXED BEARING

SHEET NUMBER
135
OF 145

Filename: ...\MSTA\135_bearings_03.dgn Division: HIGHWAY Username: kwentworth Date:12/21/2015

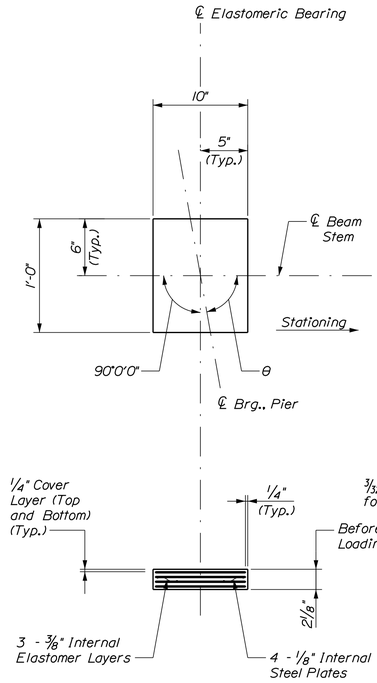

ELASTOMERIC BEARING

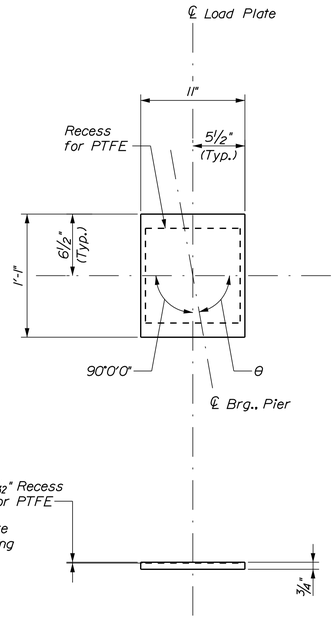

LOAD PLATE

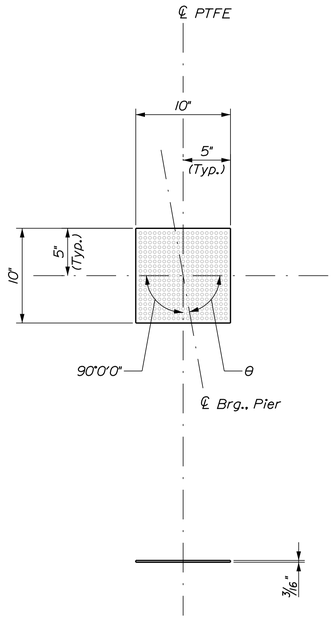

PTFE

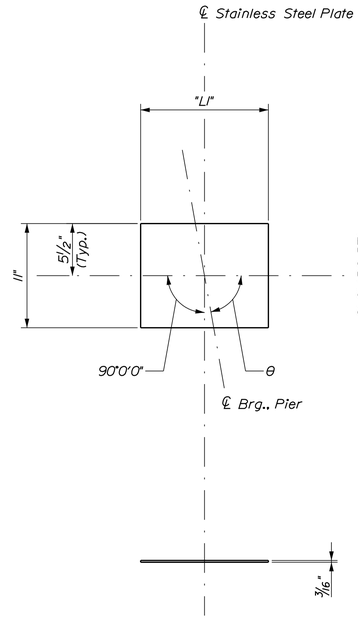

STAINLESS STEEL PLATE

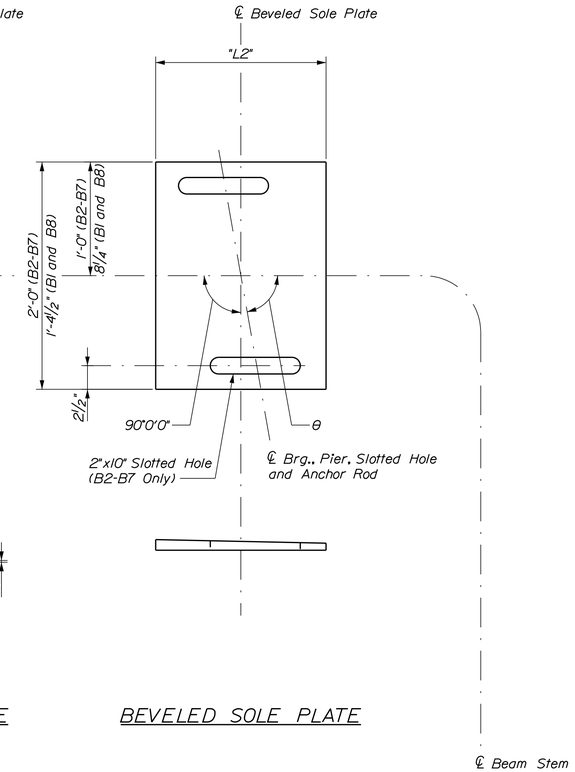

BEVELED SOLE PLATE

Beveled Sole Plate Dimension Table										
		B1		B2-B4		B5-B7		B8		
Location	PGL Slope	Cross Slope	Mid Thickness (in)	Cross Slope	Mid Thickness (in)	Cross Slope	Mid Thickness (in)	Cross Slope	Mid Thickness (in)	"L2"
Pier No. 1	0.46%	2.00%	0.95	2.00%	1.02	-2.00%	1.02	-2.00%	0.95	1'-1 1/2"
Pier No. 2	-0.14%	2.00%	0.93	2.00%	1.00	-2.00%	1.00	-2.00%	0.93	1'-3 1/2"
Pier No. 3	-0.76%	2.00%	0.98	2.00%	1.06	-2.00%	1.06	-2.00%	0.98	1'-6"
Pier No. 4	-1.37%	2.00%	1.04	2.00%	1.11	-2.00%	1.11	-2.00%	1.04	1'-6"
Pier No. 5	-1.97%	2.00%	1.12	2.00%	1.19	-2.00%	1.19	-2.00%	1.12	1'-8 1/2"
Pier No. 6A	-2.24%	2.00%	1.15	2.00%	1.22	-2.00%	1.22	-2.00%	1.15	1'-8 1/2"
Pier No. 6B	-2.24%	2.00%	1.09	2.00%	1.16	-2.00%	1.16	-2.00%	1.09	1'-3 1/2"
Pier No. 7	-2.24%	2.00%	1.07	2.00%	1.14	-2.00%	1.14	-2.00%	1.07	1'-1 1/2"
Pier No. 9	-2.24%	2.00%	1.07	2.00%	1.14	-2.00%	1.14	-2.00%	1.07	1'-1 1/2"
Pier No. 10A	-2.24%	2.00%	1.09	2.00%	1.16	-2.00%	1.16	-2.00%	1.09	1'-3 1/2"
Pier No. 10B	-2.24%	2.00%	1.12	2.00%	1.19	-2.00%	1.19	-2.00%	1.12	1'-6"
Pier No. 11	-2.24%	2.00%	1.09	2.00%	1.16	-2.00%	1.16	-2.00%	1.09	1'-3 1/2"
Pier No. 12	-2.24%	2.00%	1.07	2.00%	1.14	-2.00%	1.14	-2.00%	1.07	1'-1 1/2"
Pier No. 14	-2.77%	2.00%	1.10	2.00%	1.18	-2.00%	1.18	-2.00%	1.10	1'-1 1/2"
Pier No. 15	-3.65%	2.00%	1.20	2.00%	1.27	-2.00%	1.27	-2.00%	1.20	1'-3 1/2"
Pier No. 16A	-4.52%	2.00%	1.32	2.00%	1.40	-2.00%	1.40	-2.00%	1.32	1'-6"
Pier No. 16B	-4.52%	2.00%	1.32	2.00%	1.40	-2.00%	1.40	-2.00%	1.32	1'-6"
Pier No. 17	-5.31%	2.00%	1.39	2.00%	1.47	-2.00%	1.47	-2.00%	1.39	1'-6"
Pier No. 18A	-5.22%	2.00%	1.32	2.00%	1.39	-2.00%	1.39	-2.00%	1.32	1'-3 1/2"
Pier No. 18B	-5.22%	0.00%	1.15	0.00%	1.15	-2.00%	1.39	-2.00%	1.32	1'-3 1/2"
Pier No. 19A	-3.39%	0.00%	0.98	0.00%	0.98	-2.00%	1.22	-2.00%	1.14	1'-1 1/2"
Pier No. 19B	-3.39%	-2.00%	1.14	-2.00%	1.22	-2.00%	1.22	-2.00%	1.14	1'-1 1/2"

Stainless Steel Plate Dimension Table	
Location	"L1"
Pier No. 1	11 1/2"
Pier No. 2	1'-1 1/2"
Pier No. 3	1'-4"
Pier No. 4	1'-4"
Pier No. 5	1'-6 1/2"
Pier No. 6A	1'-6 1/2"
Pier No. 6B	1'-1 1/2"
Pier No. 7	11 1/2"
Pier No. 9	11 1/2"
Pier No. 10A	1'-1 1/2"
Pier No. 10B	1'-4"
Pier No. 11	1'-1 1/2"
Pier No. 12	11 1/2"
Pier No. 14	11 1/2"
Pier No. 15	1'-1 1/2"
Pier No. 16A	1'-4"
Pier No. 16B	1'-4"
Pier No. 17	1'-4"
Pier No. 18A	1'-1 1/2"
Pier No. 18B	1'-11 1/2"
Pier No. 19A	11 1/2"
Pier No. 19B	11 1/2"

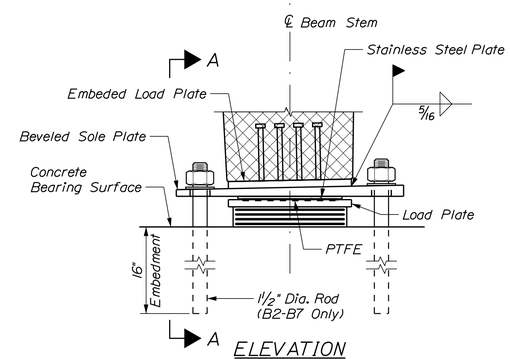

ELEVATION

(Beam Lines B2-B7 Shown, B1 and B8 Similar)

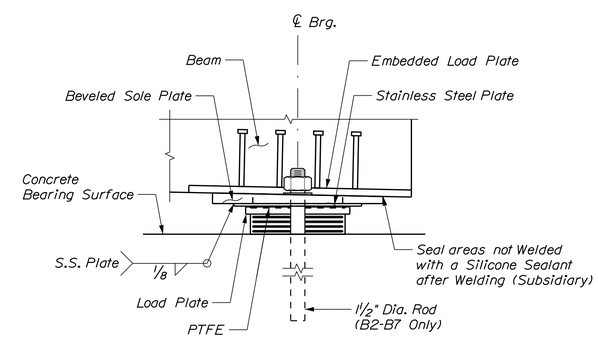

VIEW A-A

(Beam Lines B2-B7 Shown, B1 and B8 Similar)

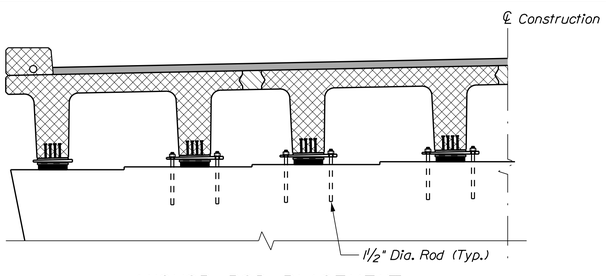

ANCHOR ROD PLACEMENT

Bearing Skew Angles	
Location	θ
Pier No. 1 thru Pier No. 7	90°00'00"
Pier No. 9 thru Pier No. 15	90°00'00"
Pier No. 16	80°00'00"
Pier No. 17	90°00'00"
Pier No. 18A	90°00'00"
Pier No. 18B	89°13'07"
Pier No. 19A	87°49'58"
Pier No. 19B	87°15'54"

NOTES

1. See Elastomeric Bearing Notes and Anchor Rod Notes on Concrete Superstructure Fixed Bearing sheet.

2. See Concrete Superstructure Fixed Bearing Sheet for Two-Way Tapered Sole Plate Schematic.

STATE OF MAINE
DEPARTMENT OF TRANSPORTATION

NHPP - 1927(300)

WIN 19273.00

BRIDGE NO. 3838

BRIDGE PLANS

vhb

		BY	DATE
PROJ. MANAGER	J. KITTREDGE		
DESIGN-DETAILED	JGM	KDW	12/15
CHECKED-REVIEWED	KCD	SMH	12/15
DESIGN2-DETAILED2	---	---	---
DESIGN3-DETAILED3	---	---	---
REVISIONS 1	---	---	---
REVISIONS 2	---	---	---
REVISIONS 3	---	---	---
REVISIONS 4	---	---	---
FIELD CHANGES	---	---	---

WEST APPROACH BRIDGE
MAINE OWNED RR & CITY STREETS
BATH SAGADAHOC COUNTY

CONCRETE SUPERSTRUCTURE
EXPANSION BEARING

SHEET NUMBER
136
OF 145

Filename: ...\MSTA\136_bearings_04.dgn Division: HIGHWAY Username: kwentworth Date:12/21/2015

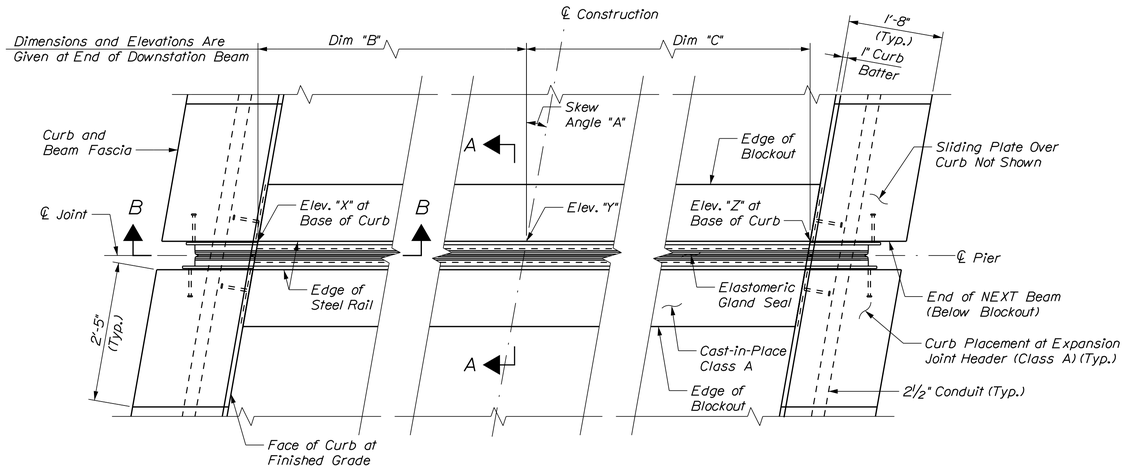

PARTIAL EXPANSION JOINT PLAN

(Rail, Rail Posts, and expansion Dam Plates not Shown)
(Pier 16 Shown, Pier 6 and 10 Similar)
Scale: 3/4" = 1'-0"

Location	Skew "A"	Dim "B"	Dim "C"	Elev. X	Elev. Y	Elev. Z
Pier 6	0°	16'-0"	16'-0"	52.98	53.30	52.98
Pier 10	0°	16'-0"	16'-0"	47.25	47.57	47.25
Pier 16	10°	16'-2 15/16"	16'-2 15/16"	36.03	36.22	35.77

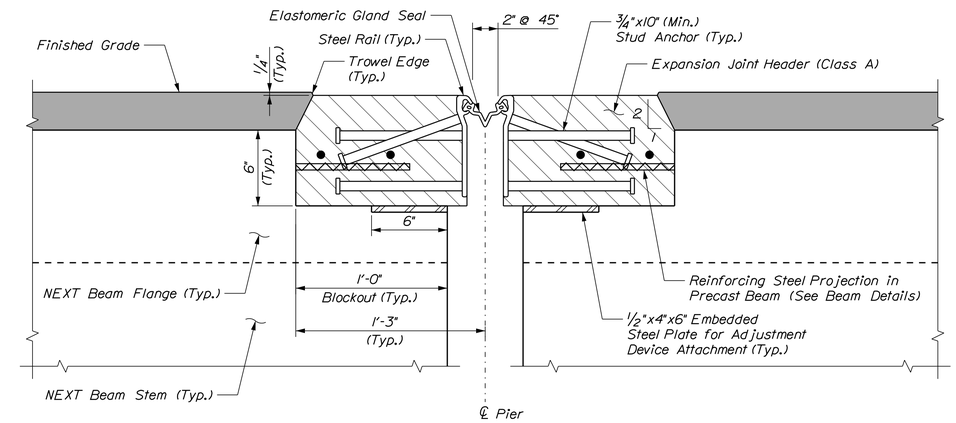

SECTION A-A

(NEXT Beam Reinforcing not Shown)
Not to Scale

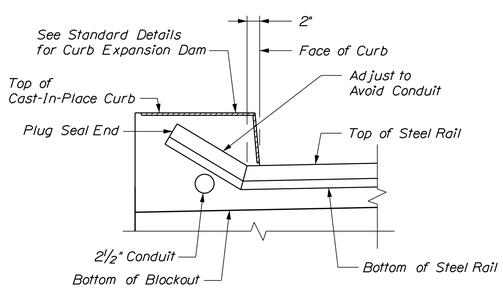

SECTION B-B

Not to Scale

EXPANSION JOINT NOTES

1. Expansion joint steel shall be galvanized AASHTO M270 Grade 50 (ASTM A709 Grade 50), except as otherwise allowed. The entire assembly, including the elastomeric seal, shall be paid for as Item 520.21, Expansion Device-Gland Seal.
2. The elastomeric gland seal shall have a minimum range of movement of 3.0 inches and shall be listed on the Maine Department of Transportation Qualified Products List.
3. The Expansion Device shall be fabricated to be installed normal to grade.
4. Anchor studs shall be installed using automatically timed stud welding equipment.
5. The elastomeric gland seal shall be furnished in one continuous length, no splices will be allowed.
6. Splices for expansion joint steel shall develop full strength.
7. The Expansion Device shall be set to an opening of two inches in the fabrication shop. The joint opening shall be adjusted for temperature in the field at the time of installation using the following formula:

   0.00008 x "D" x "ΔT" = Adjustment (in inches)

   "D" is the distance in feet between fixed bearings at either side of the expansion joint. "ΔT" is the difference between the temperature of the structure and 45° F. A structure temperature above 45° F will result in a smaller joint opening.
8. The concrete in the block-out may be placed with the curb concrete. An approved epoxy bonding agent shall be applied to all vertical surfaces of the block-out and curb masonry surfaces before making the final concrete placement.
9. Protect the top of the expansion joint during placement of concrete and bituminous pavement.
10. The gland seal assembly shall accommodate the blockout dimensions provided without adjustment.
11. Payment for Expansion Joint Header will be made under Item. No. 502.412, Structural Concrete Superstructure Special.
12. See Standard Details for additional details.

STATE OF MAINE
DEPARTMENT OF TRANSPORTATION

NHPP - 1927(300)

WIN 19273.00

BRIDGE NO. 3838

BRIDGE PLANS

vhb

		BY	DATE
PROJ. MANAGER	J. KITTREDGE		
DESIGN-DETAILED	KZS	KDW	12/15
CHECKED-REVIEWED	JGM	SMH	12/15
DESIGN2-DETAILED2	---	---	---
DESIGN3-DETAILED3	---	---	---
REVISIONS 1	---	---	---
REVISIONS 2	---	---	---
REVISIONS 3	---	---	---
REVISIONS 4	---	---	---
FIELD CHANGES	---	---	---

WEST APPROACH BRIDGE
MAINE OWNED RR & CITY STREETS
BATH SAGADAHOC COUNTY

CONCRETE SUPERSTRUCTURE
EXPANSION JOINT

SHEET NUMBER
137
OF 145

Filename: ...\MSTA\137_expjoint_03.dgn Division: HIGHWAY Username: kwentworth Date:12/21/2015

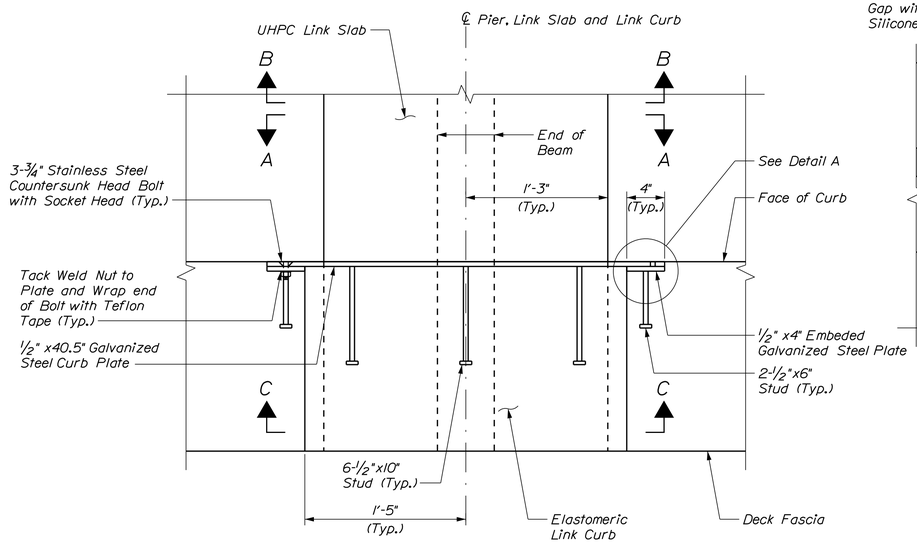

PLAN
(Pavement and Membrane not Shown)
Scale: 1 1/2" = 1'-0"

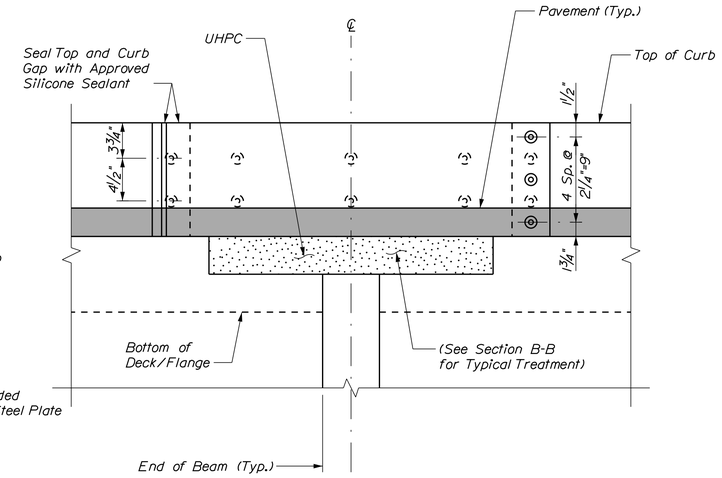

VIEW A-A
Scale: 1 1/2" = 1'-0"

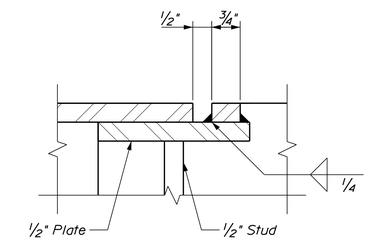

DETAIL A
Not to Scale

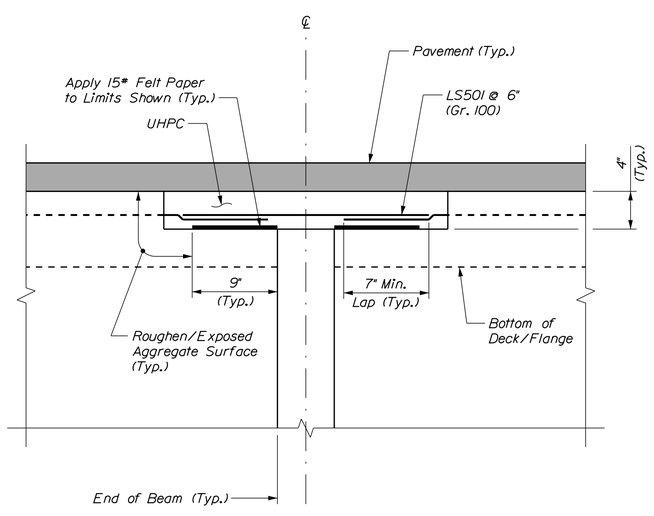

SECTION B-B
Scale: 1 1/2" = 1'-0"

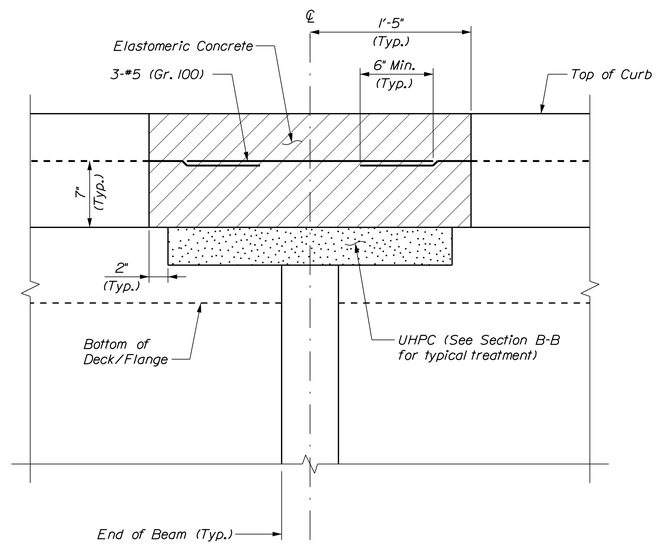

SECTION C-C
(Curb Reinforcement not Shown)
Scale: 1 1/2" = 1'-0"

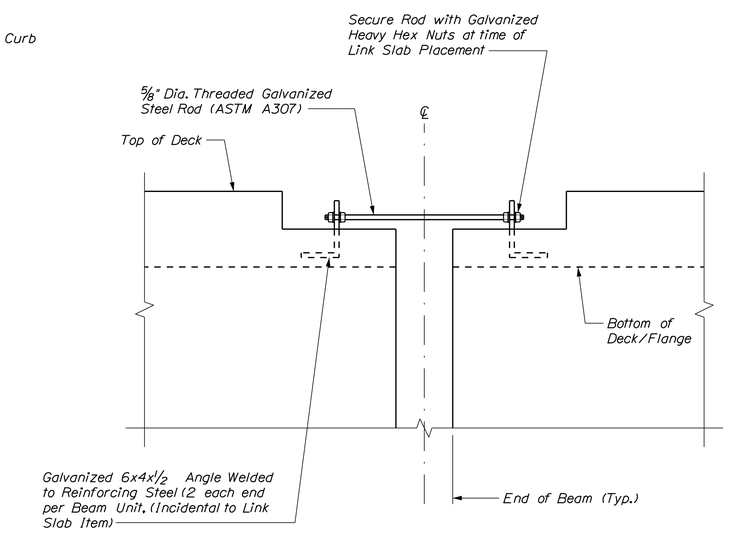

BEAM CONNECTION DURING LINK SLAB PLACEMENT
Scale: 1 1/2" = 1'-0"

NOTE

1. Payment for Link Slab Curb will be made under Item 502.59, Elastomeric Concrete (Link Curb).

STATE OF MAINE
DEPARTMENT OF TRANSPORTATION

NHPP - 1927(300)

WIN 19273.00

BRIDGE NO. 3838

BRIDGE PLANS

vhb

PROJ. MANAGER	J. KITTREDGE	BY	DATE
DESIGN-DETAILED		KDW	12/15
CHECKED-REVIEWED		SMH	12/15
DESIGN2-DETAILED2	---	---	---
DESIGN3-DETAILED3	---	---	---
REVISIONS 1	---	---	---
REVISIONS 2	---	---	---
REVISIONS 3	---	---	---
REVISIONS 4	---	---	---
FIELD CHANGES	---	---	---

WEST APPROACH BRIDGE
MAINE OWNED RR & CITY STREETS
BATH SAGADAHOC COUNTY

LINK SLAB AND CURB DETAILS

SHEET NUMBER
138
OF 145

Filename: ...\MSTA\138_linkslab_01.dgn Division: HIGHWAY Username: kwentworth Date:12/21/2015

NOTE

1. Payment for steel drain downspouts and hopper will be made under Item 502.704. Drainage System (Downspots, Troughs, etc.). Structural steel tubing shall conform to ASTM A500. Structural steel plate shall conform to ASTM A36.

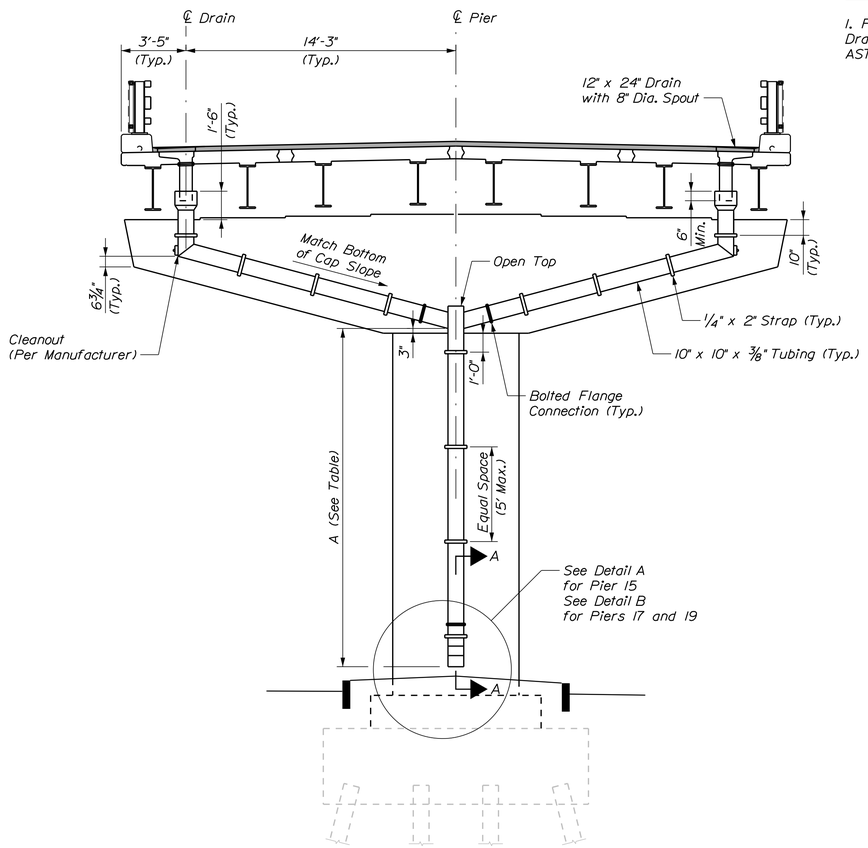

BRIDGE DRAIN DOWNSPOUT ELEVATION
(Concrete Superstructure Option Similar)

Dimension Table		
Location	A	Station
Pier No. 2	7'-8"	Sta. 1387+18.00
Pier No. 5	13'-11"	Sta. 1389+00.00
Pier No. 8	16'-6"	Sta. 1390+88.00
Pier No. 11	17'-6"	Sta. 1392+79.00
Pier No. 15	16'-6"	Sta. 1395+42.50
Pier No. 17	13'-4"	Sta. 1396+92.50
Pier No. 19	6'-2"	Sta. 1398+21.50

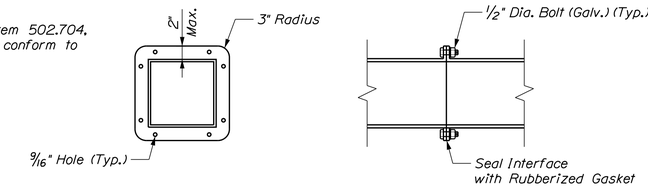

BOLTED FLANGE DETAIL
Scale: 1" = 1'-0"

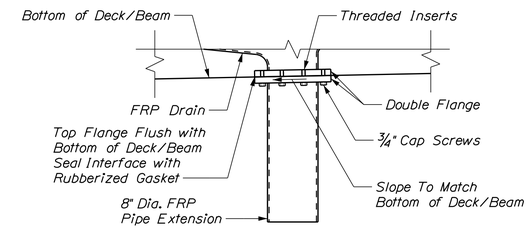

FRP PIPE FLANGE DETAIL
Scale: 1" = 1'-0"

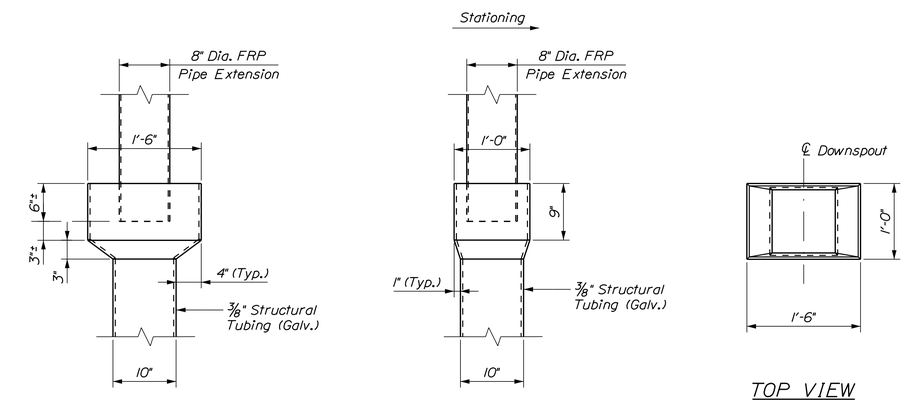

FRONT VIEW

SIDE VIEW

TOP VIEW

HOPPER DETAIL
Scale: 1" = 1'-0"

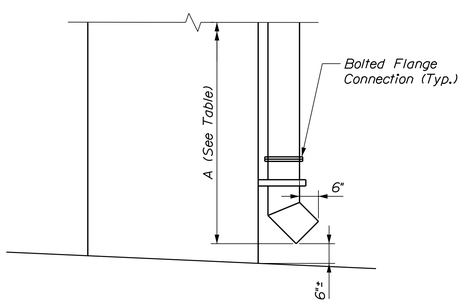

SECTION A-A
(Pier 2, Pier 5, Pier 8, and Pier 11)
(Place on East Face of Pier)

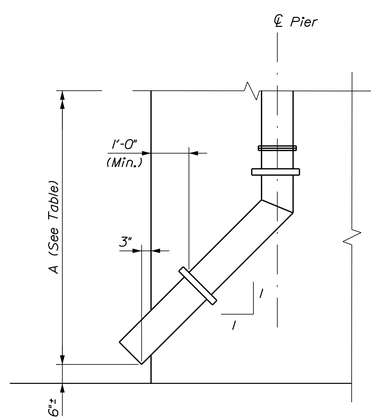

DETAIL A
(Pier 15) (Drains North)
(Place on West Face of Pier)

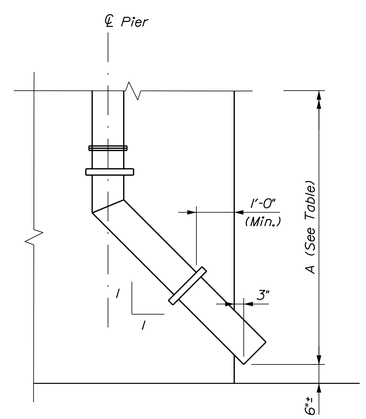

DETAIL B
(Piers 17 and 19) (Drains South)
(Place on East Face of Pier)

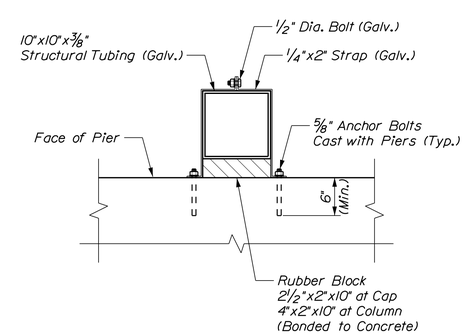

TYPICAL DOWNSPOUT SECTION
Scale: 1" = 1'-0"

STATE OF MAINE
DEPARTMENT OF TRANSPORTATION

NHPP - 1927(300)

BRIDGE NO. 3838

WIN 19273.00

BRIDGE PLANS

vhb

		BY	DATE
PROJ. MANAGER	J. KITTREDGE		
DESIGN-DETAILED	KZS	KDW	12/15
CHECKED-REVIEWED	JGM	SMH	12/15
DESIGN2-DETAILED2	---	---	---
DESIGN3-DETAILED3	---	---	---
REVISIONS 1	---	---	---
REVISIONS 2	---	---	---
REVISIONS 3	---	---	---
REVISIONS 4	---	---	---
FIELD CHANGES	---	---	---

WEST APPROACH BRIDGE
MAINE OWNED RR & CITY STREETS
BATH SAGADAHOC COUNTY

BRIDGE DRAIN DETAILS

SHEET NUMBER
139
OF 145

Filename: ...\00\BRIDGE\MSTA\139_Drain.dgn Division: HIGHWAY Username: kwentworth Date:12/21/2015

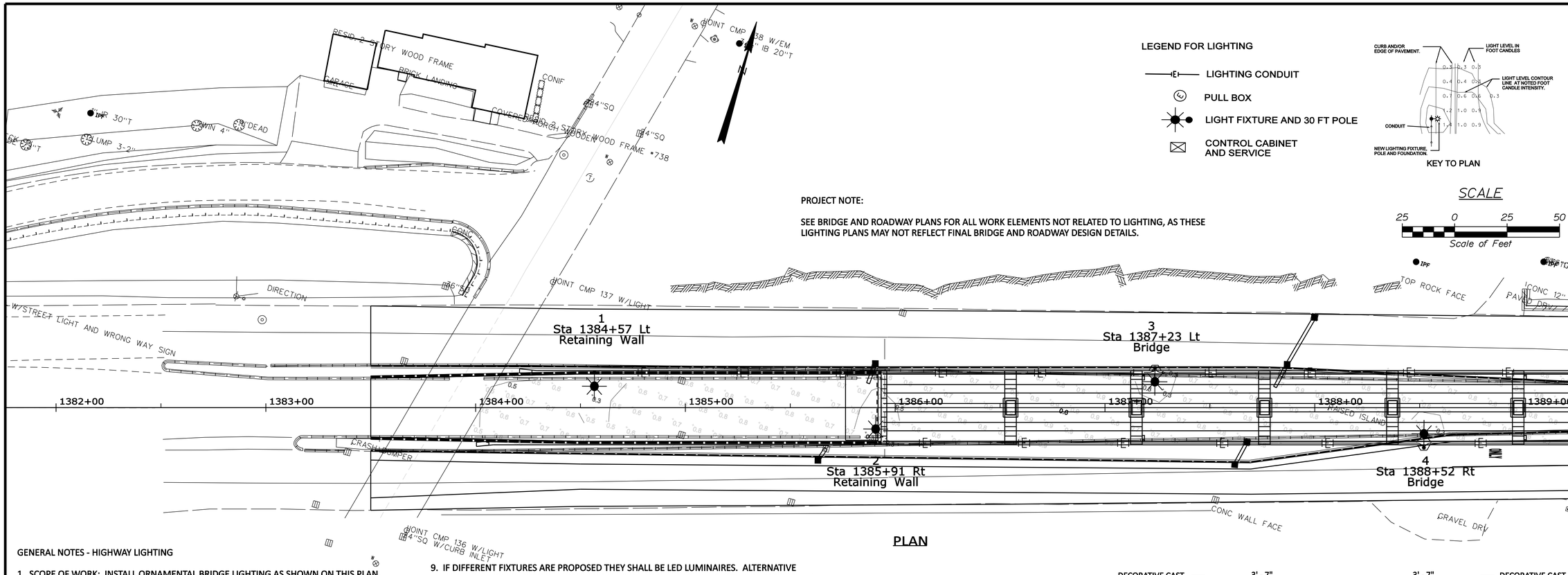

PLAN

LEGEND FOR LIGHTING

- LIGHTING CONDUIT
- PULL BOX
- LIGHT FIXTURE AND 30 FT POLE
- CONTROL CABINET AND SERVICE

KEY TO PLAN

SCALE

25 0 25 50

Scale of Feet

PROJECT NOTE:

SEE BRIDGE AND ROADWAY PLANS FOR ALL WORK ELEMENTS NOT RELATED TO LIGHTING, AS THESE LIGHTING PLANS MAY NOT REFLECT FINAL BRIDGE AND ROADWAY DESIGN DETAILS.

GENERAL NOTES - HIGHWAY LIGHTING

1. SCOPE OF WORK: INSTALL ORNAMENTAL BRIDGE LIGHTING AS SHOWN ON THIS PLAN. INSTALL CONDUIT, WIRING, POLES, BRACKET ARMS, AND L.E.D. LUMINAIRES AND RELATED HARDWARE. INSTALL ADDITIONAL LIGHTING ON THE UNDERSIDE OF THE BRIDGE AT LOCATIONS SHOWN.
2. ALL MATERIALS AND WORKMANSHIP SHALL CONFORM TO APPLICABLE PROVISIONS OF THE MAINE DEPARTMENT OF TRANSPORTATION STANDARD SPECIFICATIONS AND STANDARD DETAILS, NATIONAL ELECTRICAL CODE AND ANY REQUIREMENTS OF THE POWER COMPANY.
3. ALL LIGHTING CIRCUITS ARE TO BE PHOTOCELL ACTIVATED BY PHOTOCELL ON CONTROL CABINET.
4. LIGHTING FIXTURE VOLTAGE SHALL BE 240 VOLTS. WIRE SHALL BE STRANDED COPPER XHHW-2. WIRE SIZE FOR CIRCUIT 1 WILL BE #10. WIRE SIZE FOR CIRCUITS 2 AND 3 WILL BE # 12.
5. LIGHTING FIXTURES SHALL BE LIGHT EMITTING DIODE (LED) FIXTURES, IES DISTRIBUTION TYPE 2. THE UNDER BRIDGE LIGHTING SHALL BE IES DISTRIBUTION TYPE 5.
6. ALL FIXTURES SHALL BE GASKETED, HAVE SURGE PROTECTION AND A DOUBLE FUSE KIT. LED COLOR TEMPERATURE FOR ALL POLE-MOUNTED FIXTURES INSTALLED SHALL BE 5000K. THE PHOTOMETRIC LAYOUT FOR THE BRIDGE DECK WAS DONE USING HOLOPHANE "ESPLANADE LED" TEARDROP LUMINAIRES, CATALOG NUMBER: ESP 110 5K AS X 4, TYPE 2 IES DISTRIBUTION. THE PHOTOMETRIC LAYOUT UNDER THE BRIDGE WAS DONE USING PHILIPS GARDCO G3 LED PARKING GARAGE AND CANOPY LUMINAIRES. FOUR DIFFERENT GARDCO LUMINAIRES WERE USED. CATALOG NUMBERS ARE LISTED IN THE LUMINAIRE SCHEDULE.
7. MAINEDOT'S INTENT FOR THE ABOVE-BRIDGE FIXTURES, POLES AND RELATED HARDWARE IS TO MATCH THE APPEARANCE, AS CLOSELY AS POSSIBLE, OF THE LIGHTING ON THE ADJACENT SAGADAHOC BRIDGE. ALL EXPOSED COMPONENTS SHALL BE BLACK. THE FOLLOWING COMPONENTS WILL BE CONSIDERED ACCEPTABLE FOR THIS PURPOSE:

   HOLOPHANE "ESPLANADE LED"TEARDROP LUMINAIRES;

   VALMONT 30' ROUND TAPERED ALUMINUM OR GALVANIZED STEEL POLES WITH 4-BOLT ANCHOR BASE, STANDARD NUT COVERS, AND POLE CAP. POLE BASE OUTSIDE DIAMETER SHALL BE 8 INCHES MINIMUM. ACTUAL DIAMETER SHALL BE DETERMINED BY THE CALCULATED EPA OF THE STRUCTURE, DESIGN WIND LOAD AND WALL THICKNESS SELECTED BY THE CONTRACTOR. POLES SHALL BE PROVIDED WITH A 4"x 6.5"REINFORCED OVALIZED HANDHOLE;

   HOLOPHANE "WEST LIBERTY"STYLE DECORATIVE ARM FITTERS FOR ATTACHMENT OF LUMINAIRES TO 2"DIAMETER HORIZONTAL ARMS;

   DECORATIVE CAST BRACKET ARM ATTACHMENTS MATCHING THE DIMENSIONS AND PATTERN OF THOSE ON THE SAGADAHOC BRIDGE POLES. THIS IS A NON-STANDARD ITEM AVAILABLE FROM HOLOPHANE. DETAILS ARE AVAILABLE FROM THE REGIONAL HOLOPHANE REPRESENTATIVE WITH REFERENCE TO CITY OF PORTLAND ORDER #2066-11-10010-2.

8. MINIMUM BASE PLATE BOLT CIRCLE DIAMETER SHALL BE 11.00"FOR STEEL POLES AND 11.63"FOR ALUMINUM POLES. MINIMUM ANCHOR BOLT DIMENSIONS SHALL BE 1.00"x 36.00"x 4.00". BASE PLATES SHALL BE INSTALLED WITH FABREEKA ® VIBRATION DAMPING ISOLATOR PADS, OR APPROVED EQUAL.
9. IF DIFFERENT FIXTURES ARE PROPOSED THEY SHALL BE LED LUMINAIRES. ALTERNATIVE LUMINAIRES, POLES, BRACKET ARMS AND OTHER HARDWARE SHALL CLOSELY REPRODUCE THE APPEARANCE AND DIMENSIONS OF THE EXISTING LIGHTING ON THE SAGADAHOC BRIDGE, IN THE SOLE OPINION OF MAINEDOT. THE CONTRACTOR MUST DEMONSTRATE THAT PROPOSED ALTERNATIVE LUMINAIRES WILL REASONABLY EQUAL THE LIGHT LEVELS AND DISTRIBUTIONS SHOWN ON THE PLANS, IN THE OPINION OF MAINEDOT. EVALUATION BY MAINEDOT OF ALTERNATIVE LED LUMINAIRES THAT MAY BE PROPOSED BY THE CONTRACTOR FOR SUBSTITUTION WILL REQUIRE SUBMITTAL OF THE FOLLOWING, AT MINIMUM:

   IES LM-79-08 ABSOLUTE TESTING REPORT FOR THE PROPOSED ALTERNATIVE LUMINAIRE;

   IES LM-80-15 TESTING REPORT FOR LED CHIPS TO BE USED IN THE ALTERNATIVE LUMINAIRE, DOCUMENTING TESTING FOR A MINIMUM OF 8500 HOURS;

   IES TM-21-11 REPORT FOR PROJECTED LONG TERM LUMEN MAINTENANCE, INCLUDING INCREMENTAL LUMEN DEPRECIATION TABLE AT 25 DEGREES CELSIUS TO A MINIMUM OF 50,000 HOURS;

   IES PHOTOMETRIC FILE FROM THE MANUFACTURER FOR THE PROPOSED ALTERNATIVE LUMINAIRE;

   PHOTOMETRIC PLOT, OVERLAID ON THE LAYOUT OF THE LUMINAIRE LOCATIONS FOR THIS SPECIFIC PROJECT, SHOWING LIGHT CONTOURS, ILLUMINATION STATISTICS FOR EACH OF THE LIGHTING GROUPS, AND VALUE OF LIGHT LOSS FACTOR USED IN THE ANALYSIS;

   VALUES OF LLD, LDD, BALLAST FACTOR AND OTHER FACTORS USED FOR CALCULATION OF THE ASSUMED LIGHT LOSS FACTOR;

   SPECIFICATION DATA REGARDING OPTICS, CHROMATIC COLOR TEMPERATURE, DRIVER, SURGE PROTECTION, HOUSING AND GASKETING.

10. BURIED CONDUIT SHALL BE 2" MINIMUM, PVC SCHEDULE 40. CONDUIT UNDER PAVEMENT SHALL BE SCHEDULE 80. MINIMUM BURIAL DEPTH FOR CONDUIT SHALL BE 36". EXPOSED CONDUIT SHALL BE GALVANIZED STEEL. CONDUIT ON OR EMBEDDED IN THE BRIDGE STRUCTURE SHALL BE 2.5"GALVANIZED STEEL RIGID METAL CONDUIT.
11. THERE SHALL BE NO SPLICES OR JUNCTION BOXES BETWEEN POLES, EXCEPT AS SHOWN. THE WIRE IN CONDUITS SHALL BE CONTINUOUS BETWEEN POLES.
12. INSTALL APPROPRIATE CONDUIT EXPANSION COUPLINGS AT THE BRIDGE DECK EXPANSION JOINTS.
13. ALL LIGHT POLES SHALL BE BONDED TO THE GROUNDING CONDUCTOR.
14. INSTALL SERVICE AND MULTI CIRCUIT CONTROL CABINET AS SHOWN. THE CONTRACTOR SHALL ALSO INSTALL A METER DISCONNECT IN A SEPARATE NEMA 3R CABINET. CABINETS SHALL BE LOCKABLE. EACH SERVICE CABINET SHALL BE MARKED WITH ARC HAZARD TYPE 1, 2, 3 OR 4 AND THE APPROPRIATE PPE REQUIRED.
15. CONDUIT, JUNCTION BOXES, EXPANSION CONNECTIONS, WIRING, GROUNDING, BONDING AND OTHER ELECTRICAL WORK NECESSARY FOR A FULLY FUNCTIONING LIGHTING SYSTEM FOR THE PORTION OF THE WORK ON BRIDGE STRUCTURES WILL BE INCIDENTAL TO LUMP SUM PAYMENT UNDER ITEM 638.01 EMBEDDED WORK IN STRUCTURE.
16. PAYMENT UNDER ITEM 634.16, HIGHWAY LIGHTING WILL INCLUDE ALL MATERIALS, LABOR AND EQUIPMENT NECESSARY TO PROVIDE A FULLY FUNCTIONING HIGHWAY LIGHTING SYSTEM, EXCEPT THOSE ITEMS TO BE PAID UNDER OTHER RELATED BID ITEMS IN THE CONTRACT.
17. PAYMENT FOR LIGHT FIXTURES AND THEIR ATTACHMENT ON THE UNDERSIDE OF THE BRIDGE DECK SHALL BE INCLUDED IN ITEM NO. 634.16, HIGHWAY LIGHTING.
18. ADDITIONAL DETAILS OF ATTACHMENT OF LIGHT POLES TO THE BRIDGE DECK ARE SHOWN ELSEWHERE IN THESE PLANS.
19. UPON COMPLETION OF THIS PROJECT, THE CONTRACTOR SHALL FURNISH TO MAINEDOT A SET OF AS-BUILT PLANS FOR FUTURE REFERENCE AND SYSTEM MAINTENANCE.

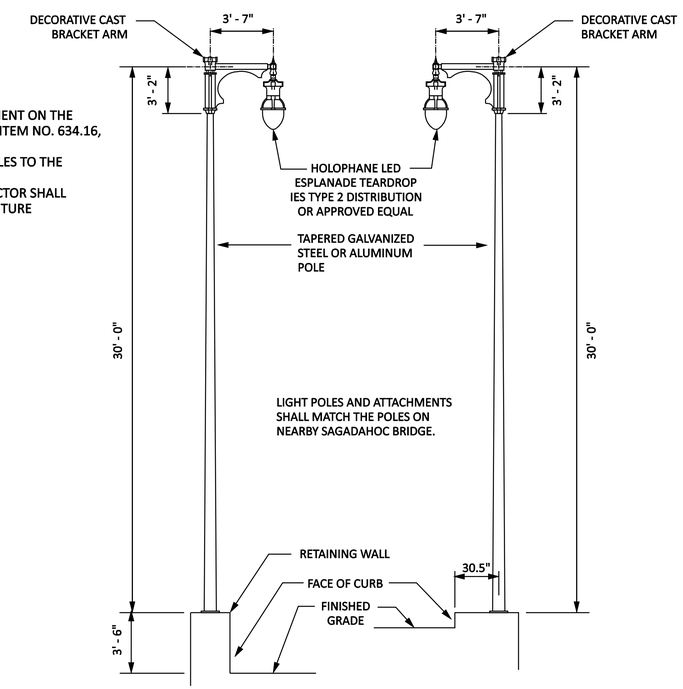

RETAINING WALL MOUNTED NEW

BRIDGE MOUNTED NEW

ORNAMENTAL BRIDGE LIGHTING POLE

STATE OF MAINE
DEPARTMENT OF TRANSPORTATION

NHPP-1927(300)

WIN 19273.00

BRIDGE NO. 3838

BRIDGE PLANS

STATE OF MAINE ALBERT L. GODFREY No. 4226 LICENSED PROFESSIONAL ENGINEER

SIGNATURE	4226	P.E. NUMBER
DATE	12/21/2015	DATE

PROJ. MANAGER	J. KITTREDGE	BY	DATE
DESIGN-DETAILED	RAL	RAL	Aug. 2015
CHECKED-REVIEWED	ALG	ALG	Nov. 2015
DESIGN2-DETAILED2	LED2		
DESIGN3-DETAILED3	LED3		
REVISIONS 1			
REVISIONS 2			
REVISIONS 3			
REVISIONS 4			
FIELD CHANGES			

WEST APPROACH BRIDGE
MAINE OWNED RR & CITY STREETS
BATH SAGADAHOC COUNTY

LIGHTING PLAN (1 of 3)

SHEET NUMBER

140

OF 145

Filename: ...\PlanSht1.dgn Division: HIGHWAY Username: morin Date:12/21/2015

LEGEND FOR LIGHTING

- LIGHTING CONDUIT
- PULL BOX
- LIGHT FIXTURE AND 30FT POLE
- UNDER BRIDGE LIGHT FIXTURE
- CONTROL CABINET AND SERVICE

KEY TO PLAN

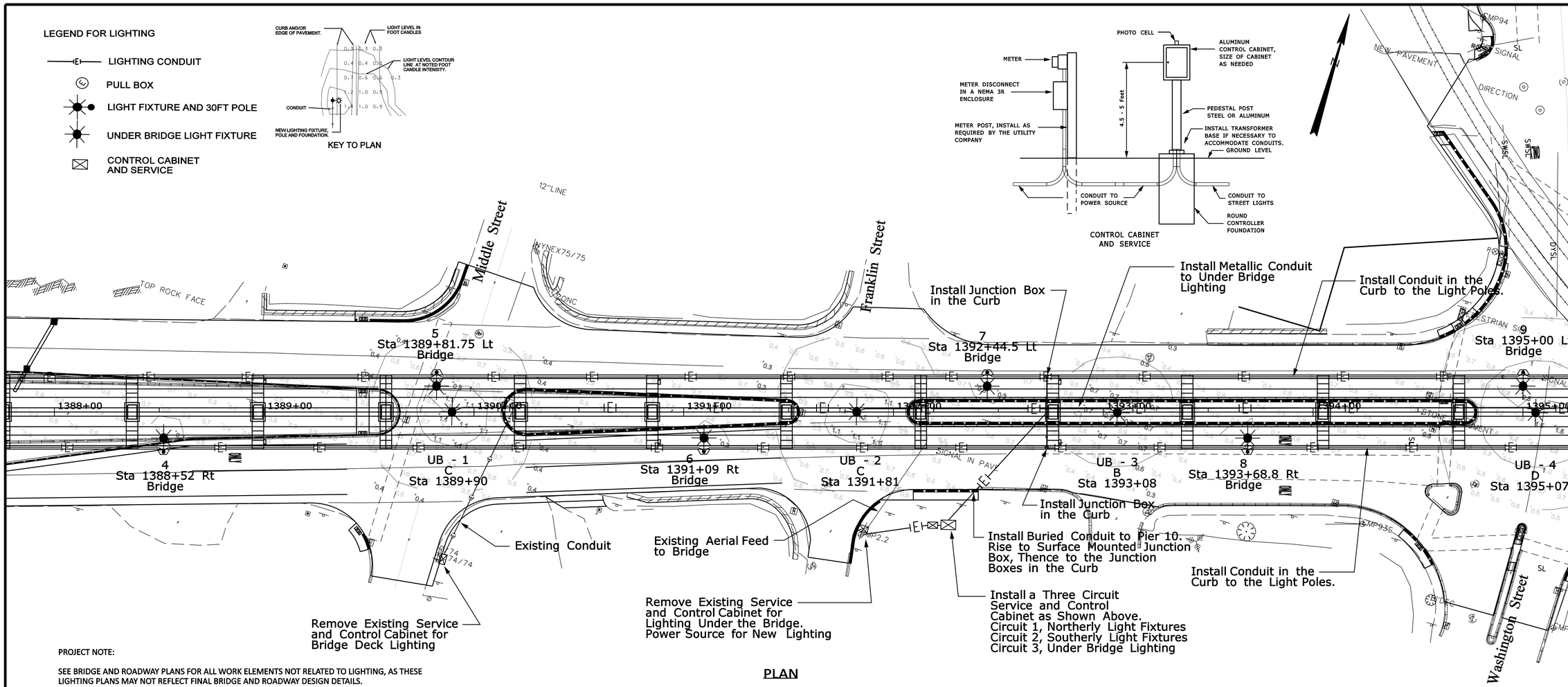

PLAN

PROJECT NOTE:

SEE BRIDGE AND ROADWAY PLANS FOR ALL WORK ELEMENTS NOT RELATED TO LIGHTING, AS THESE LIGHTING PLANS MAY NOT REFLECT FINAL BRIDGE AND ROADWAY DESIGN DETAILS.

LUMINAIRE SCHEDULE

Symbol	Qty	Catalog Number	Description	Lamp	File	Lumens	LLF	Watts
	4	ESU15AHP00X4	EXISTING ESPLANADE	150W CLEAR HPS	ESU15AHP00X 4.ies	16000	0.81	188
	11	ESL 150 4K AS X 4	LED TEARDROP	150W 136 LED ARRAY	ESL_150_4K_ AS_X_4.ies	Absolute	0.85	148

STATISTICS

Description	Symbol	Avg	Max	Min	Max/Min	Avg/Min
Bridge	+	0.8 fc	1.0 fc	0.3 fc	3.3:1	2.7:1
Existing, East of Bridge	+	0.8 fc	1.1 fc	0.4 fc	2.8:1	2.0:1

LUMINAIRE SCHEDULE, Under Bridge Lighting

Symbol	Label	Qty	Catalog Number	Description	Lamp	File	Lumens	LLF	Watts
	A	3	G3-5-1-38LA-1670-NW	GARDCO G3 LED PARKING GARAGE & CANOPY	(1) LIGHT ARRAY OF 16 LEDs DRIVEN AT 700mA	G3-5-1-38LA-1670-NW.ies	Absolute	0.85	36.8
	B	1	G3-5-2-73LA-3270-NW	GARDCO G3 LED PARKING GARAGE & CANOPY	(2) LIGHT ARRAY OF 16 LEDs DRIVEN AT 700mA	G3-5-2-73LA-3270-NW.ies	Absolute	0.85	71.6
	C	2	G3-5-3-104LA-4870--NW	GARDCO G3 LED PARKING GARAGE & CANOPY	(3) LIGHT ARRAY OF 16 LEDs DRIVEN AT 700mA	G3-5-3-104LA-4870-NW.ies	Absolute	0.85	104.5
	D	1	G3-5-4-137LA-6470--NW	GARDCO G3 LED PARKING GARAGE & CANOPY	(4) LIGHT ARRAY OF 16 LEDs DRIVEN AT 700mA	G3-5-4-137LA-6470-NW.ies	Absolute	0.85	138

STATISTICS

Description	Symbol	Avg	Max	Min	Max/Min	Avg/Min
Sta 1396+25 to 1398+00	+	0.6 fc	0.9 fc	0.2 fc	4.5:1	3.0:1
Sta 1389+50 TO 1390+25	+	0.7 fc	1.1 fc	0.4 fc	2.8:1	1.8:1
Sta 1391+50 to 1392	+	0.7 fc	1.1 fc	0.3 fc	3.7:1	2.3:1
Sta 1392+75 to 1393+40	+	0.5 fc	0.7 fc	0.3 fc	2.3:1	1.7:1
Sta 1394+50 to 1395+60	+	0.8 fc	1.5 fc	0.3 fc	5.0:1	2.7:1

SCALE

25 0 25 50

Scale of Feet

STATE OF MAINE
DEPARTMENT OF TRANSPORTATION

NHPP-1927(300)

WIN 19273.00

BRIDGE NO. 3838

BRIDGE PLANS

STATE OF MAINE ALBERT L. GODFREY No. 4226 LICENSED PROFESSIONAL ENGINEER

SIGNATURE		
4226	P.E. NUMBER	
12/21/2015	DATE	

		BY	DATE
PROJ. MANAGER	J. KITTREDGE		
DESIGN-DETAILED	RAL	RAL	Aug. 2015
CHECKED-REVIEWED	ALG	ALG	Nov. 2015
DESIGN2-DETAILED2			
DESIGN3-DETAILED3			
REVISIONS 1			
REVISIONS 2			
REVISIONS 3			
REVISIONS 4			
FIELD CHANGES			

WEST APPROACH BRIDGE
MAINE OWNED RR & CITY STREETS
BATH SAGADAHOC COUNTY

LIGHTING PLAN (2 of 3)

SHEET NUMBER

141

OF 145

Date:12/21/2015
Division: HIGHWAY
Username: morin
Filename: ...\PlanSht2.dgn

The Fitting Shall Provide For a Movement Of 8 Inches Along the Conduit Run. It Shall Also Allow For Deflection of 30 Degrees From Normal In Any Direction.

TYPICAL EXPANSION FITTING

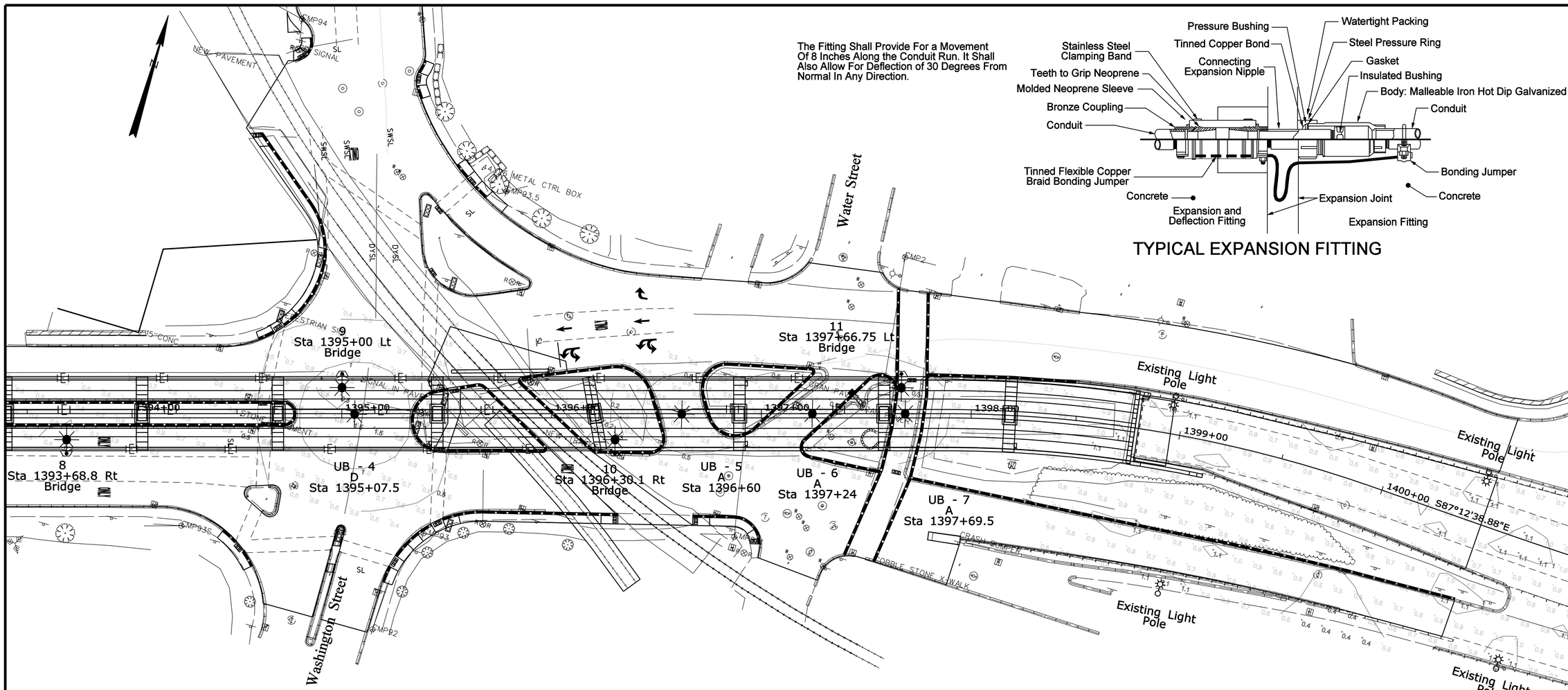

PLAN

SCALE

25 0 25 50

Scale of Feet

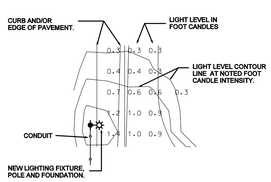

KEY TO PLAN

LEGEND FOR LIGHTING

- LIGHTING CONDUIT
- PULL BOX
- LIGHT FIXTURE AND 30FT POLE
- UNDER BRIDGE LIGHT FIXTURE
- CONTROL CABINET AND SERVICE

PROJECT NOTE:

SEE BRIDGE AND ROADWAY PLANS FOR ALL WORK ELEMENTS NOT RELATED TO LIGHTING, AS THESE LIGHTING PLANS MAY NOT REFLECT FINAL BRIDGE AND ROADWAY DESIGN DETAILS.

CONDUIT SUMMARY

CIRCUIT 1 , Northerly Fixtures			Wire Size Stranded Copper XHHW-2			
Station	Pole	Distance		#10		Remarks
Service Sta 1392+25 Rt		90		✓		To Surface Mtd JB Near Top Pier 11 In Conduit With Circuit 2 & 3
Sta 1392+75	JB	22		✓		To JB in Curb
Sta 1392+15 Lt	JB	30		✓		
Sta 1392+44.5 Lt	7	263		✓		
Sta 1389+81.75 Lt	5	259		✓		
Sta 1387+23 Lt	3	266		✓		
Sta 1384+57 Lt	1					
Sta 1392+75 Lt	JB	227		✓		
Sta 1395+00 Lt	9	267		✓		
Sta 1397+66.75 Lt	11					

CONDUIT SUMMARY

CIRCUIT 2, Southerly Fixtures			Wire Size Stranded Copper XHHW-2			
Station	Pole	Distance		#12		Remarks
Service Sta 1392+25 Rt		90		✓		To Surface Mtd JB Near Top Pier 11 In Conduit With Circuit 1 & 3
Sta 1392+75	JB	22		✓		To JB in Curb
Sta 1392+75 Rt	JB	97		✓		
Sta 1393+68.8 Rt	8	261		✓		
Sta 1396+30.1 Rt	10					
Sta 1392+75	JB	163		✓		
Sta 1391+09 Rt	6	263		✓		
Sta 1388+52 Rt	4	261		✓		
Sta 1385+91 Rt	2					

CONDUIT SUMMARY

CIRCUIT 3, Under Bridge Luminaires			Wire Size Stranded Copper XHHW-2			
Station	Luminaire	Distance		#12		Remarks
Service Sta 1392+25 Rt		90		✓		To Surface Mtd JB Near Top Pier 11 In Conduit With Circuit 1 & 2
Sta 1392+75	JB	95		✓		
Sta 1391+81	UB-2	189		✓		
Sta 1389+90	UB-1					
Sta 1392+75	JB	30		✓		
Sta 1393+08	UB-3	203		✓		
Sta 1395+07.5	UB-4	152		✓		
Sta 1396+60	UB-5	64		✓		
Sta 1397+24	UB-6	46		✓		
Sta 1397+69.5	UB-7					

Metallic Conduit

STATE OF MAINE
DEPARTMENT OF TRANSPORTATION

NHPP-1927(300)

WIN 19273.00

BRIDGE NO. 3838

BRIDGE PLANS

STATE OF MAINE ALBERT L. GOOFREY No. 4226 LICENSED PROFESSIONAL ENGINEER

	BY	DATE
PROJ. MANAGER		
DESIGN-DETAILED	RAL	Aug. 2015
CHECKED-REVIEWED	ALG	Nov. 2015
DESIGN2-DETAILED2		
DESIGN3-DETAILED3		
REVISIONS 1		
REVISIONS 2		
REVISIONS 3		
REVISIONS 4		
FIELD CHANGES		

J. KITTREDGE

SIGNATURE

4226

P.E. NUMBER

12/21/2015

DATE

WEST APPROACH BRIDGE
MAINE OWNED RR & CITY STREETS
BATH SAGADAHOC COUNTY

LIGHTING PLAN (3 of 3)

SHEET NUMBER

142

OF 145

Filename: ...\PlanSht3.dgn Division: HIGHWAY Username: morin Date:12/21/2015

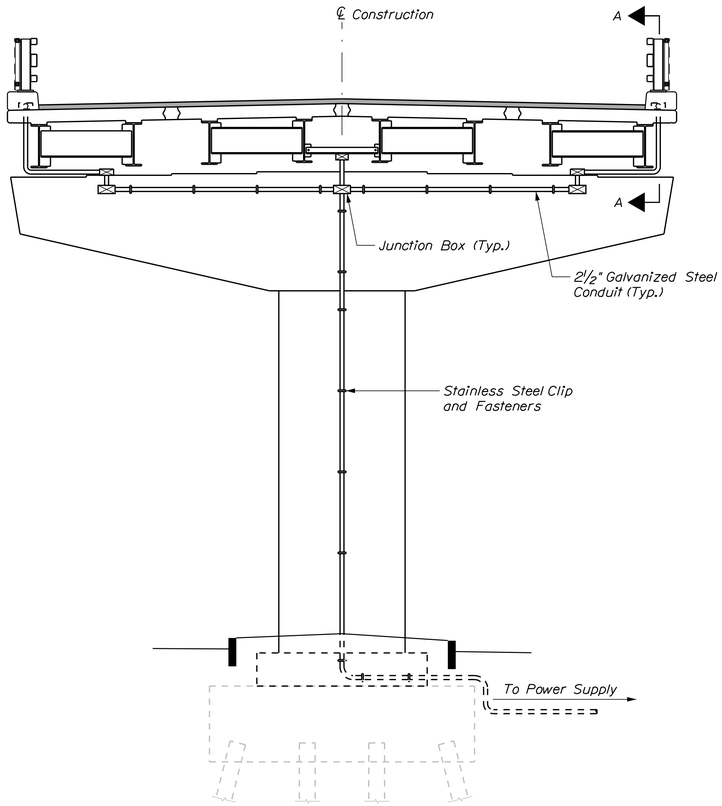

PIER II
ELEVATION

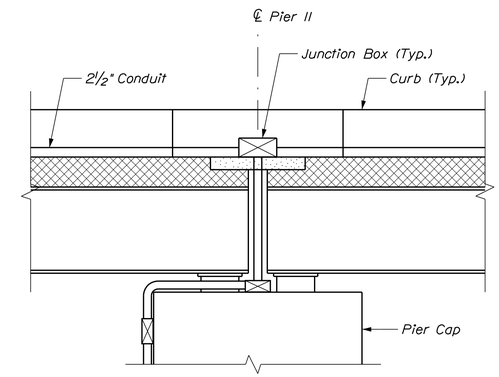

VIEW A-A

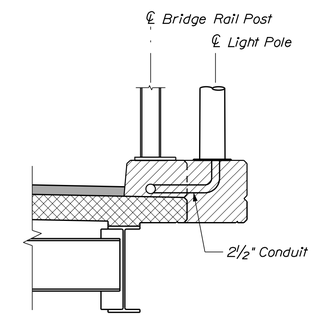

BRIDGE LIGHTING SUPPORT
BUMPOUT

NOTE

1. Steel superstructure shown, concrete similar.

STATE OF MAINE
DEPARTMENT OF TRANSPORTATION

NHPP - 1927(300)

WIN 19273.00

BRIDGE NO. 3838

BRIDGE PLANS

vhb

PROJ. MANAGER	J. KITTREDGE	BY	DATE
DESIGN-DETAILED	KZS	KDW	12/15
CHECKED-REVIEWED	JGM	SMH	12/15
DESIGN2-DETAILED2	---	---	---
DESIGN3-DETAILED3	---	---	---
REVISIONS 1	---	---	---
REVISIONS 2	---	---	---
REVISIONS 3	---	---	---
REVISIONS 4	---	---	---
FIELD CHANGES	---	---	---

WEST APPROACH BRIDGE
MAINE OWNED RR & CITY STREETS
BATH SAGADAHOC COUNTY

MISCELLANEOUS CONDUIT DETAILS

SHEET NUMBER
143
OF 145

Filename: ...\00\BRIDGE\MSTA\143_utility.dgn Division: HIGHWAY Username: kwentworth Date:12/21/2015

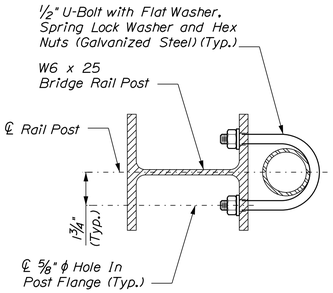

SECTION A-A
(At Interior Post)
Scale: 3" = 1'-0"

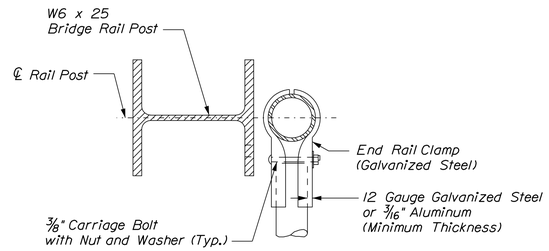

SECTION A-A
(At End Post)
(U-Bolt Not Shown)
Scale: 3" = 1'-0"

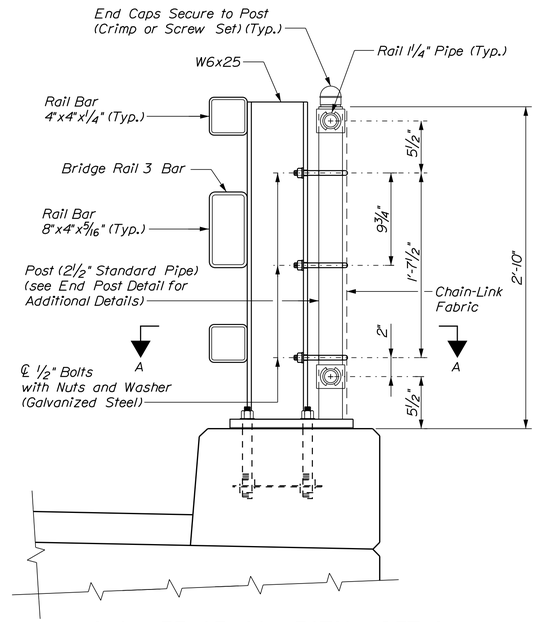

SNOW FENCE CONNECTION DETAIL
Scale: 1 1/2" = 1'-0"

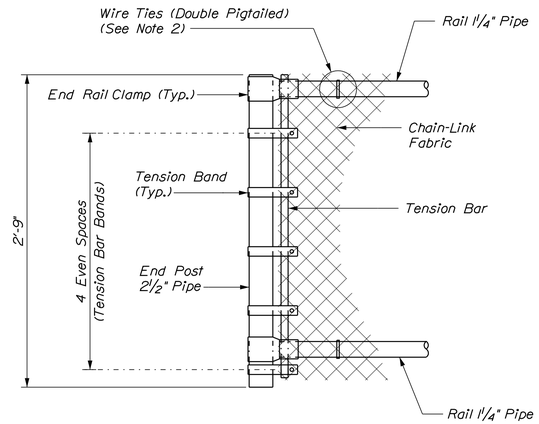

END POST DETAIL
Scale: 1 1/2" = 1'-0"

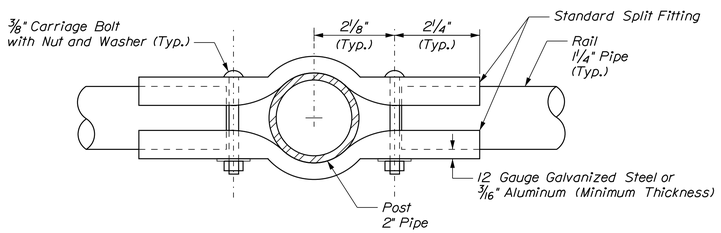

BOULEVARD CLAMP DETAIL
Scale: 6" = 1'-0"

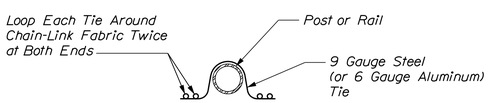

DOUBLE PIGTAILED TIE
Not to Scale

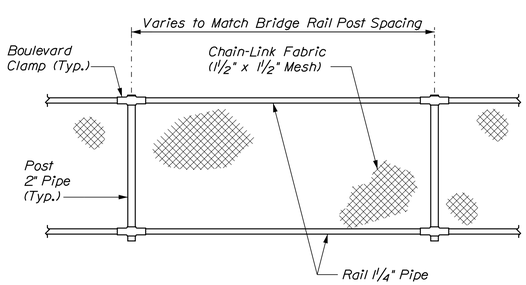

ELEVATION - SNOW FENCE
(Caps not Shown)
Not to Scale

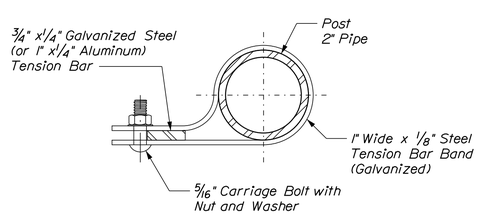

TENSION BAND DETAIL
Scale: 6" = 1'-0"

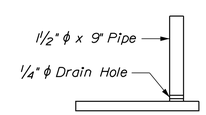

MODIFIED BASE PLATE ELEVATION
Scale: 1 1/2" = 1'-0"

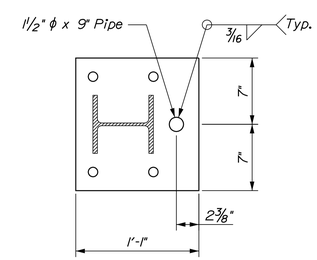

MODIFIED BASE PLATE DETAIL
Scale: 1 1/2" = 1'-0"

SNOW FENCE NOTES

1. Chain-Link fence shall conform to Section 710.03. Chain-link fabric wire shall be 9 gauge steel, and PVC coated black. Chain-link fabric shall be knuckled on top and bottom. The size of wire mesh (fabric) shall be 1 1/2".
2. Wire ties shall be standard round 9 gauge zinc- or aluminum-coated steel or 6 gauge aluminum alloy conforming to ASTM F626. All ties shall be wrapped around chain-link fabric twice (double pigtailed) at both ends. Space ties @ 6" o.c. to bottom rail and @ 12" o.c. to all posts and other rails. Mechanical/Power fastened fence ties acceptable.
3. Post and rail pipe shall be hot-dip galvanized steel conforming to AASHTO M181, Grade 1 (ASTM F1083) or aluminum alloy conforming to AASHTO M181 (ASTM B429, alloy 6063-T6). All pipe shall be schedule 40, standard weight. Nominal pipe sizes are shown.
4. Tension bars, bar bands, boulevard and end rail clamps shall be steel or aluminum alloy conforming to AASHTO M181 (ASTM F626). Steel components shall be hot-dip galvanized in accordance with AASHTO M111 (ASTM A123) or AASHTO M232 (ASTM A153) as applicable.
5. All bolts and nuts shall be steel conforming to ASTM A307 and ASTM A563 grade A respectively. Washers shall be hardened steel commercial type A plain and shall meet the dimensional requirements of ANSI B18.22. All bolts, nuts and washers shall be hot-dip galvanized in accordance with AASHTO M111 (ASTM A123) or AASHTO M232 (ASTM A153) as applicable.
6. Rail may be field cut (sawn) to fit post spacing. Galvanized rail, cut or drilled as allowed.
7. See Bridge Rail Details Sheet for additional details.

STATE OF MAINE
DEPARTMENT OF TRANSPORTATION

NHPP - 1927(300)

WIN 19273.00

BRIDGE NO. 3838

BRIDGE PLANS

vhb

PROJ. MANAGER	J. KITTREDGE	BY	DATE
DESIGN-DETAILED	KZS	KDW	12/15
CHECKED-REVIEWED	JGM	SMH	12/15
DESIGN2-DETAILED2	---	---	---
DESIGN3-DETAILED3	---	---	---
REVISIONS 1	---	---	---
REVISIONS 2	---	---	---
REVISIONS 3	---	---	---
REVISIONS 4	---	---	---
FIELD CHANGES	---	---	---

WEST APPROACH BRIDGE
MAINE OWNED RR & CITY STREETS
BATH SAGADAHOC COUNTY

SNOW FENCE DETAILS

SHEET NUMBER
144
OF 145

Filename: ...\00\BRIDGE\MSTA\144_snow_01.dgn Division: HIGHWAY Username: kwentworth Date:12/21/2015

STRAIGHT BARS

MARK	QTY.	LENGTH	LOCATION	MARK	QTY.	LENGTH	LOCATION
			Abutment No. 1 Retaining Wall				*Pier Footing*
R500	15	14'-4"		P501	304	8'-6"	
R501	25	12'-10"		P502	380	6'-6"	
R502	11	11'-2"		P601	532	2'-4"	
R503	11	11'-8"					
R504	11	10'-7"					
R505	22	10'-1"					
R506	46	9'-0"					
R507	35	8'-6"					
R508	11	7'-6"					
R509	43	6'-7"					
R510	42	5'-8"					
R511	16	4'-9"					
R512	1	12'-8"					
R513	1	5'-8"					
R514	30	25'-8"					
R515	10	19'-8"					
R516	4	14'-8"					
R517	48	29'-8"					
R518	26	30'-11"					
R519	3	44'-8"					
R520	10	21'-0"					
R521	10	21'-7"					
R522	288	1'-6"	Gr.100				
R523	12	29'-8"	Gr.100				
R524	3	21'-0"	Gr.100				
R525	3	21'-7"	Gr.100				
R526	28	2'-10"					
R527	22	7'-6"					
R528	22	3'-4"					
R529	10	27'-8"					
R530	10	26'-8"					
R531	240	3'-0"					
R532	6	30'-2"	Gr.100				
R533	12	30'-11"	Gr.100				
R534	3	19'-8"	Gr.100				
			Abutment No. 1				
A500	64	2'-3"					
A501	29	12'-8"					
A502	30	35'-0"					
A503	50	3'-10"					
A504	10	15'-3"					
A505	28	7'-8"					
A506	22	5'-8"					
A507	4	4'-2"	Gr. 100				
A508	20	3'-6"					
A509	20	3'-7"					
			Abutment No. 2				
B500	33	2'-3"					
B501	27	12'-11"					
B502	30	34'-6"					
B503	48	3'-9"					
B504	47	2'-11"					
B505	26	6'-8"					
B506	16	4'-8"					
B507	7	3'-2"	Gr. 100				
B508	8	4'-1"					
B509	14	4'-8"					
B510	6	15'-6"					
B511	4	4'-0"	Gr. 100				
B512	14	2'-10"					
B513	4	33'-2"	Gr. 100				
B514	3	29'-8"	Gr. 100				
B515	31	2'-6"	Gr. 100				
			High Street Pier Transition Barrier				
MTB500	24	4'-6"	*Bend in field as needed*				
MTB600	8	2'-7"					
			Wingwall 2A Transition Barrier				
ATB600	4	2'-7"					
			Light Post Pedestal				
LP600	16	2'-7"					
			Transition Barrier				
TB500	10	4'-6"					
TB501	2	2'-2"					
TB502	2	2'-0"					
TB503	2	1'-10"					
TB504	2	1'-8"					
TB505	2	1'-6"					
TB506	2	4'-8"					
TB600	4	2'-7"					
MARK	QTY.	LENGTH	LOCATION	MARK	QTY.	LENGTH	LOCATION

BENT BARS

MARK	QTY.	LENGTH	TYPE	A	B	C	D	E	F	G	H	O	R	LOCATION
R550	1531	2'-0"	L	1'-6"	0'-6"									*Abutment No. 1 Retaining Wall*
R551	519	3'-8"	L	1'-10"	1'-10"									
R552	513	5'-11"	SC	0'-10"	1'-4"	1'-3"	1'-8"			0'-10"		1'-4"		Gr.100
R553	12	4'-1"	SJ	-	0'-8"	0'-10"	1'-3"	1'-4"						Gr.100
R554	6	5'-10"	SC	0'-10"	1'-4"	1'-6"	1'-4"			0'-10"		1'-7¼"		Gr.100
														Abutment No. 1
A550	288	2'-0"	L	1'-6"	0'-6"									
A551	40	3'-0"	L	1'-6"	1'-6"									
A552	43	5'-7"	L	4'-4"	1'-3"									
A553	36	4'-6"	L	2'-3"	2'-3"									
A554	25	3'-8"	S	-	1'-3"	1'-2"	1'-3"			-				
A555	20	4'-0"	L	2'-0"	2'-0"									
A556	20	9'-7"	SW	-	4'-2"	1'-3"	0'-10"	3'-4"				1'-4"		Gr. 100
A750	12	7'-11"	S	-	3'-0"	1'-11"	3'-0"			-				
														Abutment No. 2
B550	216	2'-0"	L	1'-6"	0'-6"									
B551	30	3'-0"	L	1'-6"	1'-6"									
B552	42	5'-6"	L	3'-9"	1'-9"									
B553	36	4'-7"	L	2'-10"	1'-9"									
B554	24	3'-6"	S	-	1'-2"	1'-2"	1'-2"			-				
B555	8	3'-10"	L	1'-8"	2'-2"									
B556	8	3'-10"	L	1'-8"	2'-2"									
B557	8	6'-0"	SW	-	0'-8"	1'-3"	0'-10"	3'-3"				1'-4"		Gr. 100
B558	8	9'-7"	SW	-	4'-2"	1'-3"	0'-10"	3'-4"				1'-4"		Gr. 100
B559	47	3'-10"	L	1'-11"	1'-11"									Gr. 100
B560	47	5'-7"	SC	0'-8"	1'-4"	1'-3"	1'-8"			0'-8"		1'-4"		Gr. 100
B561	12	2'-2"	L	0'-8"	1'-6"									
B562	40	1'-9"	L	1'-3"	0'-6"									
B750	12	7'-11"	S	-	3'-0"	1'-11"	3'-0"			-				
														High Street Pier Transition Barrier
MTB550	12	15'-3"	EP	0'-11"	4'-11"	1'-3"	5'-10"	0'-10"	1'-6"					
MTB551	14	2'-2"	L	1'-4"	0'-10"									
MTB650	20	5'-10"	S	-	2'-4"	1'-1½"	2'-4"			-				
MTB651	4	7'-11"	H	0'-6"	2'-9"	0'-8½"	2'-9"	0'-8½"		0'-6"				
MTB652	20	8'-9"	H	0'-6"	2'-9"	1'-1½"	2'-9"	1'-1½"		0'-6"				
MTB653	16	3'-8"	L	2'-4"	1'-4"									
														Wingwall 2A Transition Barrier
ATB550	5	3'-8"	S	-	1'-3"	1'-2"	1'-3"			-				
ATB551	1	2'-10"	S	-	1'-0"	0'-10"	1'-0"			-				
ATB552	1	3'-10"	S	-	1'-3"	1'-4"	1'-3"			-				
ATB553	2	3'-4"	B		0'-10"	1'-8"	0'-10"				0'-9"	3'-2"		
ATB554	5	9'-0"	H	0'-6"	3'-2"	0'-10"	3'-2"	0'-10"		0'-6"				
ATB650	3	5'-11"	S	-	2'-4"	1'-3"	2'-4"			-				*Cut in Field*
ATB651	4	7'-11"	H	0'-6"	2'-9"	0'-8½"	2'-9"	0'-8½"		0'-6"				
ATB652	3	8'-9"	H	0'-6"	2'-9"	1'-1½"	2'-9"	1'-1½"		0'-6"				
														Light Post Pedestal
LP550	14	9'-4"	H	0'-6"	0'-10"	3'-4"	0'-10"	3'-4"		0'-6"				
LP551	14	3'-10"	S	-	1'-3"	1'-4"	1'-3"			-				
LP650	6	5'-10"	S	-	2'-4"	1'-1½"	2'-4"			-				
LP651	8	7'-11"	H	0'-6"	2'-9"	0'-8½"	2'-9"	0'-8½"		0'-6"				
LP652	6	8'-9"	H	0'-6"	2'-9"	1'-1½"	2'-9"	1'-1½"		0'-6"				
														Transition Barrier
TB550	6	10'-2"	EP	0'-11"	2'-4"	1'-3"	3'-4"	0'-10"	1'-6"					
TB650	5	5'-10"	S	-	2'-4"	1'-1½"	2'-4"			-				
TB651	2	7'-11"	H	0'-6"	2'-9"	0'-8½"	2'-9"	0'-8½"		0'-6"				
TB652	5	8'-9"	H	0'-6"	2'-9"	1'-1½"	2'-9"	1'-1½"		0'-6"				
														Pier Footing
P550	114	18'-11½"	H	0'-3¾"	4'-9"	4'-0"	4'-9"	4'-0"		0'-3¾"				
P551	57	15'-7½"	D	0'-3¾"	3'-9"	3'-9"	3'-9"	3'-9"		0'-3¾"	2'-3"			
P1050	456	8'-5"	L	6'-7"	1'-10"									
MARK	QTY.	LENGTH	TYPE	A	B	C	D	E	F	G	H	O	R	LOCATION

TYPE - BENDING DIAGRAMS

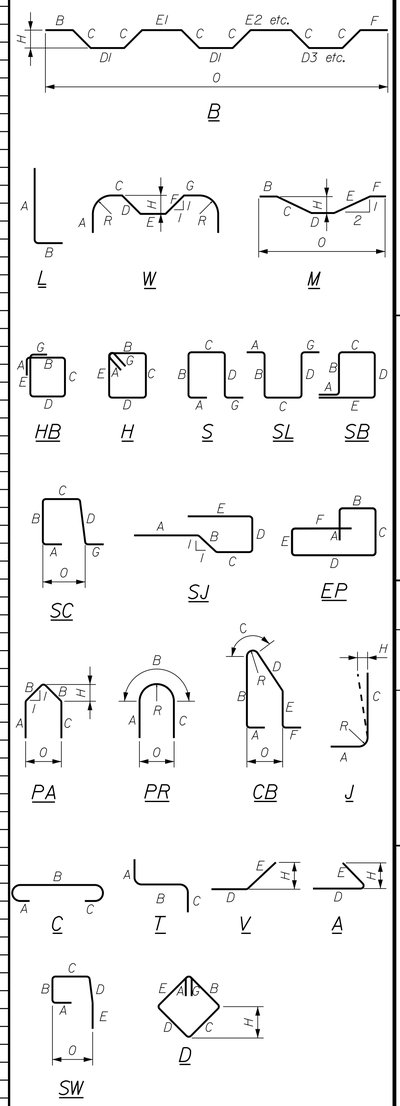

All dimensions are out-to-out of bar.

Bending details and hooks shall conform to the recommendations of the current revision of ACI Standard 315 and ACI Standard 318.

Reinforcing Bar: ASTM A615/A615M, Grade 60

GENERAL NOTES

1. The first two digits following the letter(s) of the mark indicate the size of the bar:

   Mark "A502" = bar size #5
   Mark "P805" = bar size #8
   Mark "S650" = bar size #6

2. Each crank bar, Type B, may be replaced by two (2) straight bars (one top and one bottom) of the same bar size as the crank bar. Payment in either case shall be based on crank bars as schedule on the plans.

STATE OF MAINE
DEPARTMENT OF TRANSPORTATION

NHPP - 1927(300)

WIN 19273.00

BRIDGE NO. 3838

BRIDGE PLANS

vhb

PROJ. MANAGER	J. KITTREDGE	BY	DATE
DESIGN-DETAILED	KZS	KDW	12/15
CHECKED-REVIEWED	JGM	SMH	12/15
DESIGN2-DETAILED2	---	---	---
DESIGN3-DETAILED3	---	---	---
REVISIONS 1	---	---	---
REVISIONS 2	---	---	---
REVISIONS 3	---	---	---
REVISIONS 4	---	---	---
FIELD CHANGES	---	---	---

WEST APPROACH BRIDGE
MAINE OWNED RR & CITY STREETS
SAGADAHOC COUNTY
BATH

REINFORCING STEEL SCHEDULE

SHEET NUMBER

145

OF 145

Filename: ...\BRIDGE\MSTA\145_rebar_01.dgn Division: HIGHWAY Username: kwentworth Date:12/21/2015