Updated 11/05/14

STATE PROJECT

Effective November 05, 2014
Supersedes January 19, 2012

BIDDING INSTRUCTIONS

FOR ALL PROJECTS:

1. Use pen and ink to complete all paper Bids.
2. As a minimum, the following must be received prior to the time of Bid opening:

For a Paper Bid:

a) a copy of the Notice to Contractors, b) the completed Acknowledgement of Bid Amendments form, c) the completed Schedule of Items, d) two copies of the completed and signed Contract Offer, Agreement & Award form, e) a Bid Guaranty, (if required), and f) any other certifications or Bid requirements listed in the Bid Documents as due by Bid opening.

For an Electronic Bid:

a) a completed Bid using Expedite® software and submitted via the Bid Express™ web-based service, b) an electronic Bid Guaranty (if required) or a faxed copy of a Bid Bond (with original to be delivered within 72 hours), and c) any other Certifications or Bid requirements listed in the Bid Documents as due by Bid opening.

3. Include prices for all items in the Schedule of Items (<u>excluding non-selected alternates</u>).
4. Bid Guaranty acceptable forms are:
   a) a properly completed and signed Bid Bond on the Department's prescribed form (or on a form that does not contain any significant variations from the Department's form as determined by the Department) for 5% of the Bid Amount or
   b) an Official Bank Check, Cashier's Check, Certified Check, U.S. Postal Money Order or Negotiable Certificate of Deposit in the amount stated in the Notice to Contractors or
   c) an electronic bid bond submitted with an electronic bid.

5. If a paper Bid is to be sent, "FedEx First Overnight" delivery is suggested as the package is delivered directly to the DOT Headquarters Building located at 16 Child Street in Augusta. Other means, such as U.S. Postal Service's Express Mail has proven not to be reliable.

IN ADDITION, FOR FEDERAL AID PROJECTS:

6. Complete the DBE Proposed Utilization form, and submit with your bid. If you are submitting your bid electronically, you must FAX the form to (207) 624-3431. This is a curable defect.

If you need further information regarding Bid preparation, call the DOT Contracts Section at (207) 624-3410.

For complete bidding requirements, refer to Section 102 of the Maine Department of Transportation, Standard Specifications, November 2014 Edition.

June 3, 2015
Supersedes November 05, 2014

NOTICE

The Maine Department of Transportation is attempting to improve the way Bid Amendments/Addendums are handled, and allow for an electronic downloading of bid packages from our website, while continuing to maintain an optional plan holders list.

Prospective bidders, subcontractors or suppliers who wish to download a copy of the bid package and receive a courtesy notification of project specific bid amendments must fill out the on-line plan holder registration form and provide an email address to the MDOT Contracts mailbox at: MDOT.contracts@maine.gov Each bid package will require a separate request.

Additionally, interested parties will be responsible for reviewing and retrieving the Bid Amendments from our web site, and acknowledging receipt and incorporating those Bid Amendments in their bids using the Acknowledgement of Bid Amendment Form.

The downloading of bid packages from the MDOT website is not the same as providing an electronic bid to the Department. Electronic bids must be submitted via http://www.BIDX.com For information on electronic bidding contact Rebecca Snowden at rebecca.snowden@maine.gov or Diane Barnes at diane.barnes@maine.gov

NOTICE

For security and other reasons, all Bid Packages which are mailed, shall be provided in double (one envelope inside the other) envelopes. The *Inner Envelope* shall have the following information provided on it:

Bid Enclosed - Do Not Open
PIN:
Town:
Date of Bid Opening:
Name of Contractor with mailing address and telephone number:

In Addition to the usual address information, the *Outer Envelope* should have written or typed on it:

Double Envelope: Bid Enclosed
PIN:
Town:
Date of Bid Opening:
Name of Contractor:
This should not be much of a change for those of you who use Federal Express or similar services.

Hand-carried Bids may be in one envelope as before, and should be marked with the following infrormation:

Bid Enclosed: Do Not Open
PIN:
Town:
Name of Contractor:

October 16, 2001

STATE OF MAINE DEPARTMENT OF TRANSPORTATION

Bid Guaranty-Bid Bond Form

KNOW ALL MEN BY THESE PRESENTS THAT_____

_____, of the City/Town of _____and State of_____

as Principal, and _____as Surety, a

Corporation duly organized under the laws of the State of_____and having a usual place of

Business in _____and hereby held and firmly bound unto the Treasurer of

the State of Maine in the sum of_____,for payment which Principal and Surety bind

themselves, their heirs, executers, administrators, successors and assigns, jointly and severally.

The condition of this obligation is that the Principal has submitted to the Maine Department of Transportation, hereafter Department, a certain bid, attached hereto and incorporated as a part herein, to enter into a written contract for the construction of _____

_____

_____and if the Department shall accept said bid and the Principal shall execute and deliver a contract in the form attached hereto (properly completed in accordance with said bid) and shall furnish bonds for this faithful performance of said contract, and for the payment of all persons performing labor or furnishing material in connection therewith, and shall in all other respects perform the agreement created by the acceptance of said bid, then this obligation shall be null and void; otherwise it shall remain in full force, and effect.

Signed and sealed this_____day of _____20_____

WITNESS:

_____

_____

_____

WITNESS

_____

_____

_____

PRINCIPAL:

By_____

By:_____

By:_____

SURETY:

By_____

By:_____

Name of Local Agency: _____

SAMPLE

NOTICE

Bidders:

Please use the attached "Request for Information" form when submitting questions concerning specific Contracts that have been advertised for Bid, include additional numbered pages as required. RFI's may be faxed to 207-624-3431, submitted electronically through the Departments web page of advertised projects by selecting the RFI tab on the project details page or via e-mail to RFI-Contracts.MDOT@maine.gov.

These are the only allowable mechanisms for answering Project specific questions. Maine DOT will not be bound to any answers to Project specific questions received during the Bidding phase through other processes.

When submitting RFIs by Email please follow the same guidelines as stated on the "Request for Information" form and include the word "RFI" along with the Project name and Identification number in the subject line.

State of Maine
Department of Transportation

RFI No: _____

REQUEST FOR INFORMATION

Date _____ Time _____

Information Requested for:

WIN(S): _____ Town(s): _____ Bid Date: _____

Question(s):_____

_____

_____

_____

_____

_____

_____

_____

_____

_____

_____

_____

_____

_____

_____

_____

Request by:

Company Name:_____**Phone:(_____)**_____

Email: _____ Fax: (_____)_____

Complete this form and fax to 207-624-3431, Attn: Project Manager (name listed on the "Notice to Contractors"), or Email questions to RFI-Contracts.MDOT@maine.gov, Please include the word "RFI" along with the Project Name and Identification Number in the Subject line, or electronically by using the RFI Tab located on the Individual Projects Detail page.

Vendor Registration

Prospective Bidders must register as a vendor with the Department of Administrative & Financial Services if the vendor is awarded a contract. Vendors will not be able to receive payment without first being registered. Vendors/Contractors will find information and register through the following link –
http://www.maine.gov/purchases/venbid/index.shtml

STATE OF MAINE DEPARTMENT OF TRANSPORTATION
NOTICE TO CONTRACTORS

Sealed Bids addressed to the Maine Department of Transportation, Augusta, Maine 04333 and endorsed on the wrapper "**Bids for Region 4 Crack Sealing in the towns of Corinth, Kenduskeag, Dedham, and the city of Ellsworth**" will be received from contractors at the Reception Desk, Maine DOT Building, Capitol Street, Augusta, Maine, until 11:00 o'clock A.M. (prevailing time) on May 18, 2016 and at that time and place publicly opened and read. Bids will be accepted from all bidders. The lowest responsive bidder must demonstrate successful completion of projects of similar size and scope to be considered for the award of this contract. **We now accept electronic bids for those bid packages posted on the bidx.com website. Electronic bids do not have to be accompanied by paper bids. Please note: the Department will accept a facsimile of the bid bond; however, the original bid bond must then be received at the MDOT Contract Section within 72 hours of the bid opening. Until further notice, dual bids (one paper, one electronic) will be accepted, with the paper copy taking precedence.**

Description: WIN 18994.40

Location: In Hancock and Penobscot Counties, a total of 21.57 miles:

- Section 1 is located on Route 15 in Kenduskeag beginning 0.70 of a mile north of Lancaster Brook Road and extending Northerly 2.29 miles to Southard Avenue.
- Section 2 is on Route 15 in Kenduskeag beginning at the intersection of Southard Avenue and extending northerly 9.08 miles to a point 0.45 of a mile south of Deer View Lane.
- Section 3 is on Route 1A in Ellsworth beginning 1.12 miles southeasterly of Winkumpaugh Road and extending southeasterly 6.91 miles to the Union River Bridge.
  Section 4 is on Route 1A in Dedham beginning 0.07 of a mile southeasterly of Lily Road and extending southeasterly 3.29 miles to a point 1.12 miles southeasterly of Winkumpaugh Road.

Outline of Work: Crack Sealing and other incidental work.

For general information regarding Bidding and Contracting procedures, contact George Macdougall at (207) 624-3410. Our webpage at http://www.maine.gov/mdot/contractors/ contains a copy of the Schedule of Items, Plan Holders List, written portions of bid amendments, drawings, bid results and an electronic form for RFI submittal. For Project-specific information fax all questions to **Scott Bickford** at (207) 624-3431, use electronic RFI form or email questions to RFI-Contracts.MDOT@maine.gov, project name and identification number should be in the subject line. Questions received after 12:00 noon of Monday prior to bid date will not be answered. Bidders shall not contact any other Departmental staff for clarification of Contract provisions, and the Department will not be responsible for any interpretations so obtained. TTY users call Maine Relay 711.

Specifications and bid forms may be seen at the Maine DOT Building in Augusta, Maine and at the Department of Transportation's Regional Office in Bangor. They may be purchased from the Department between the hours of 8:00 a.m. to 4:30 p.m. by cash, credit card (Visa/Mastercard) or check payable to Treasurer, State of Maine sent to Maine Department of Transportation, Attn.: Mailroom, 16 State House Station, Augusta, Maine 04333-0016. They also may be purchased by telephone at (207) 624-3536 between the hours of 8:00 a.m. to 4:30 p.m. Bid Book $10 ($13 by mail), Single Sheets $2, payment in advance, all non-refundable.

Each Bid must be made upon blank forms provided by the Department and must be accompanied by a bid bond at 5% of the bid amount or an official bank check, cashier's check, certified check, certificate of deposit, or United States postal money order in the amount of **$2,500** payable to Treasurer, State of Maine as a Bid guarantee. A Contract Performance Surety Bond and a Contract Payment Surety Bond, each in the amount of 100 percent of the Contract price, will be required of the successful Bidder.

This Contract is subject to all applicable State Laws.

All work shall be governed by "State of Maine, Department of Transportation, Standard Specifications, November 2014 Edition", price $10 [$15 by mail], and Standard Details, November 2014 Edition, price $10 [$15 by mail]. They also may be purchased by telephone at (207) 624-3536 between the hours of 8:00 a.m. to 4:30 p.m. Standard Detail updates can be found at http://www.maine.gov/mdot/contractors/publications/ .

The right is hereby reserved to the Maine DOT to reject any or all bids.

Augusta, Maine
April 27, 2016

STATE OF MAINE
Joyce Noel Taylor
6997
LICENSED
PROFESSIONAL ENGINEER

JOYCE NOEL TAYLOR P. E.
CHIEF ENGINEER

CORINTH, KENDUSKEAG, DEDHAM & ELLSWORTH
18994.40
April 14, 2011
Supersedes August 3, 2004

SPECIAL PROVISION 102.7.3
ACKNOWLEDGMENT OF BID AMENDMENTS

With this form, the Bidder acknowledges its responsibility to check for all Amendments to the Bid Package. For each Project under Advertisement, Amendments are located at http://www.maine.gov/mdot/contractors/ . It is the responsibility of the Bidder to determine if there are Amendments to the Project, to download them, to incorporate them into their Bid Package, and to reference the Amendment number and the date on the form below. The Maine DOT will not post Bid Amendments any later than noon the day before Bid opening without individually notifying all the planholders.

Amendment Number	Date

The Contractor, for itself, its successors and assigns, hereby acknowledges that it has received all of the above referenced Amendments to the Bid Package.

CONTRACTOR

_____
Date

_____
Signature of authorized representative

_____
(Name and Title Printed)

Maine Department of Transportation

Proposal Schedule of Items

Proposal ID: 018994.40 **Project(s):** 018994.40

SECTION: 1 HIGHWAY ITEMS

Alt Set ID: **Alt Mbr ID:**

Contractor: _____

Proposal Line Number	Item ID Description	Approximate Quantity and Units	Unit Price Dollars	Unit Price Cents	Bid Amount Dollars	Bid Amount Cents
0010	424.3331 ASPHALT LOW MODULUS CRACK SEALER, APPLIED	54,000.000 LB	_____	_____	_____	_____
0020	659.10 MOBILIZATION	LUMP SUM	LUMP SUM		_____	_____

Section: 1 **Total:** _____.____

Total Bid: _____.____

CONTRACT AGREEMENT, OFFER & AWARD

AGREEMENT made on the date last signed below, by and between the State of Maine, acting through and by its Department of Transportation (Department), an agency of state government with its principal administrative offices located at Child Street Augusta, Maine, with a mailing address at 16 State House Station, Augusta, Maine 04333-0016, and **(Name of the firm bidding the job)** a corporation or other legal entity organized under the laws of the State of Maine, with its principal place of business located at **(address of the firm bidding the job)**

The Department and the Contractor, in consideration of the mutual promises set forth in this Agreement (the "Contract"), hereby agree as follows:

SAMPLE

A. The Work.

The Contractor agrees to complete all Work as specified or indicated in the Contract including Extra Work in conformity with the Contract, PIN No. **1224.00**, for the **Hot Mix Asphalt Overlay** in the town/city of **South Nowhere,** County of **Washington**, Maine. The Work includes construction, maintenance during construction, warranty as provided in the Contract, and other incidental work.

The Contractor shall be responsible for furnishing all supervision, labor, equipment, tools supplies, permanent materials and temporary materials required to perform the Work including construction quality control including inspection, testing and documentation, all required documentation at the conclusion of the project, warranting its work and performing all other work indicated in the Contract.

The Department shall have the right to alter the nature and extent of the Work as provided in the Contract; payment to be made as provided in the same.

B. Time.

The Contractor agrees to complete all Work, except warranty work, on or before **November 15, 2006.** Further, the Department may deduct from moneys otherwise due the Contractor, not as a penalty, but as Liquidated Damages in accordance with Sections 107.7 and 107.8 of the State of Maine Department of Transportation Standard Specifications, Revision of December 2002 and related Special Provisions.

C. Price.

The quantities given in the Schedule of Items of the Bid Package will be used as the basis for determining the original Contract amount and for determining the amounts of the required Performance Surety Bond and Payment Surety Bond, and that the amount of this offer is ____(**Place bid here in alphabetical form such as One Hundred and Two dollars and 10 cents**)_____ **$_(repeat bid here in numerical terms, such as $102.10**)_____ Performance Bond and Payment Bond each being 100% of the amount of this Contract.

D. Contract.

This Contract, which may be amended, modified, or supplemented in writing only, consists of the Contract documents as defined in the Plans, Standard Specifications, Revision of December 2002, Standard Details Revision of December 2002, Supplemental Specifications, Special Provisions, Contract Agreement; and Contract Bonds. It is agreed and understood that this Contract will be governed by the documents listed above.

E. Certifications.

By signing below, the Contractor hereby certifies that to the best of the Contractor's knowledge and belief:

1. All of the statements, representations, covenants, and/or certifications required or set forth in the Bid and the Bid Documents, including those in Appendix A to Division 100 of the Standard Specifications Revision of December 2002 (Federal Contract Provisions Supplement), and the Contract are still complete and accurate as of the date of this Agreement.

2. The Contractor knows of no legal, contractual, or financial impediment to entering into this Contract.

3. The person signing below is legally authorized by the Contractor to sign this Contract on behalf of the Contractor and to legally bind the Contractor to the terms of the Contract.

SAMPLE

F. Offer.

The undersigned, having carefully examined the site of work, the Plans, Standard Specifications, Revision of December 2002, Standard Details Revision of December 2002, Supplemental Specifications, Special Provisions, Contract Agreement; and Contract Bonds contained herein for construction of:

PIN 1234.00 South Nowhere, Hot Mix Asphalt Overlay,

State of Maine, on which bids will be received until the time specified in the "Notice to Contractors" do(es) hereby bid and offer to enter into this contract to supply all the materials, tools, equipment and labor to construct the whole of the Work in strict accordance with the terms and conditions of this Contract at the unit prices in the attached "Schedule of Items".

The Offeror agrees to perform the work required at the price specified above and in accordance with the bids provided in the attached "Schedule of Items" in strict accordance with the terms of this solicitation, and to provide the appropriate insurance and bonds if this offer is accepted by the Government in writing.

As Offeror also agrees:

First: To do any extra work, not covered by the attached "Schedule of Items", which may be ordered by the Resident, and to accept as full compensation the amount determined upon a "Force Account" basis as provided in the Standard Specifications, Revision of December 2002, and as addressed in the contract documents.

Second: That the bid bond at 5% of the bid amount or the official bank check, cashier's check, certificate of deposit or U. S. Postal Money Order in the amount given in the "Notice to Contractors", payable to the Treasurer of the State of Maine and accompanying this bid, shall be forfeited, as liquidated damages, if in case this bid is accepted, and the undersigned shall fail to abide by the terms and conditions of the offer and fail to furnish satisfactory insurance and Contract bonds under the conditions stipulated in the Specifications within 15 days of notice of intent to award the contract.

Third: To begin the Work as stated in Section 107.2 of the Standard Specifications Revision of 2002 and complete the Work within the time limits given in the Special Provisions of this Contract.

Fourth: The Contractor will be bound to the Disadvantaged Business Enterprise (DBE) Requirements contained in the attached Notice (Additional Instructions to Bidders) and submit a completed Contractor's Disadvantaged Business Enterprise Utilization Plan with their bid.

Fifth: That this offer shall remain open for 30 calendar days after the date of opening of bids.

SAMPLE

Sixth: The Bidder hereby certifies, to the best of its knowledge and belief that: the Bidder has not, either directly or indirectly, entered into any agreement, participated in any collusion, or otherwise taken any action in restraint of competitive bidding in connection with its bid, and its subsequent contract with the Department.

IN WITNESS WHEREOF, the Contractor, for itself, its successors and assigns, hereby execute two duplicate originals of this Agreement and thereby binds itself to all covenants, terms, and obligations contained in the Contract Documents.

CONTRACTOR

_____ **(Sign Here)**
Date (Signature of Legally Authorized Representative of the Contractor)

____(**Witness Sign Here**) **(Print Name Here)**
Witness (Name and Title Printed)

SAMPLE

G. Award.

Your offer is hereby accepted. This award consummates the Contract, and the documents referenced herein.

MAINE DEPARTMENT OF TRANSPORTATION

_____ _____
Date By: David Bernhardt, Commissioner

_____
(Witness)

CONTRACT AGREEMENT, OFFER & AWARD

AGREEMENT made on the date last signed below, by and between the State of Maine, acting through and by its Department of Transportation (Department), an agency of state government with its principal administrative offices located at Child Street, Augusta, Maine, with a mailing address at 16 State House Station, Augusta, Maine 04333-0016, and _____ corporation or other legal entity organized under the laws of the State of _____, with its principal place of business located at _____

The Department and the Contractor, in consideration of the mutual promises set forth in this Agreement (the "Contract"), hereby agree as follows:

A. The Work.

The Contractor agrees to complete all Work as specified or indicated in the Contract including Extra Work in conformity with the Contract, **WIN No. 18994.40 for Crack Sealing in the towns of Corinth, Kenduskeag, Dedham, and the city of Ellsworth, Counties of Hancock and Penobscot, Maine.** The Work includes construction, maintenance during construction, warranty as provided in the Contract, and other incidental work.

The Contractor shall be responsible for furnishing all supervision, labor, equipment, tools supplies, permanent materials and temporary materials required to perform the Work including construction quality control including inspection, testing and documentation, all required documentation at the conclusion of the project, warranting its work and performing all other work indicated in the Contract.

The Department shall have the right to alter the nature and extent of the Work as provided in the Contract; payment to be made as provided in the same.

B. Time.

The Contractor agrees to complete all Work, except warranty work, on or before **October 1, 2016.** Further, the Department may deduct from moneys otherwise due the Contractor, not as a penalty, but as Liquidated Damages in accordance with Sections 107.7 and 107.8 of the State of Maine Department of Transportation Standard Specifications, November 2014 Edition and related Special Provisions.

C. Price.

The quantities given in the Schedule of Items of the Bid Package will be used as the basis for determining the original Contract amount and for determining the amounts of the required Performance Surety Bond and Payment Surety Bond, and that the amount of this offer is _____

_____

$_____ Performance Bond and Payment Bond each being 100% of the amount of this Contract.

D. Contract.

This Contract, which may be amended, modified, or supplemented in writing only, consists of the Contract documents as defined in the Plans, Standard Specifications, November 2014 Edition, Standard Details November 2014 Edition as updated through advertisement, Supplemental Specifications, Special Provisions, Contract Agreement; and Contract Bonds. It is agreed and understood that this Contract will be governed by the documents listed above.

E. Certifications.

By signing below, the Contractor hereby certifies that to the best of the Contractor's knowledge and belief:

1. All of the statements, representations, covenants, and/or certifications required or set forth in the Bid and the Bid Documents, including those in the Contract are still complete and accurate as of the date of this Agreement.

2. The Contractor knows of no legal, contractual, or financial impediment to entering into this Contract.

3. The person signing below is legally authorized by the Contractor to sign this Contract on behalf of the Contractor and to legally bind the Contractor to the terms of the Contract.

F. Offer.

The undersigned, having carefully examined the site of work, the Plans, Standard Specifications November 2014 Edition, Standard Details November 2014 Edition as updated through advertisement, Supplemental Specifications, Special Provisions, Contract Agreement; and Contract Bonds contained herein for construction of: **WIN No. 18994.40 for Crack Sealing in the towns of Corinth, Kenduskeag, Dedham, and the city of Ellsworth, Counties of Hancock and Penobscot,** State of Maine, on which bids will be received until the time specified in the "Notice to Contractors" do(es) hereby bid and offer to enter into this contract to supply all the materials, tools, equipment and labor to construct the whole of the Work in strict accordance with the terms and conditions of this Contract at the unit prices in the attached "Schedule of Items".

The Offeror agrees to perform the work required at the price specified above and in accordance with the bids provided in the attached "Schedule of Items" in strict accordance with the terms of this solicitation, and to provide the appropriate insurance and bonds if this offer is accepted by the Government in writing.

As Offeror also agrees:

First: To do any extra work, not covered by the attached "Schedule of Items", which may be ordered by the Resident, and to accept as full compensation the amount determined upon a "Force Account" basis as provided in the Standard Specifications, November 2014 Edition, and as addressed in the contract documents.

Second: That the bid bond at 5% of the bid amount or the official bank check, cashier's check, certificate of deposit or U. S. Postal Money Order in the amount given in the "Notice to Contractors", payable to the Treasurer of the State of Maine and accompanying this bid, shall be forfeited, as liquidated damages, if in case this bid is accepted, and the undersigned shall fail to abide by the terms and conditions of the offer and fail to furnish satisfactory insurance and Contract bonds under the conditions stipulated in the Specifications within 15 days of notice of intent to award the contract.

Third: To begin the Work as stated in Section 107.2 of the Standard Specifications November 2014 Edition and complete the Work within the time limits given in the Special Provisions of this Contract.

Fourth: That this offer shall remain open for 30 calendar days after the date of opening of bids.

Fifth: The Bidder hereby certifies, to the best of its knowledge and belief that: the Bidder has not, either directly or indirectly, entered into any agreement, participated in any collusion, or otherwise taken any action in restraint of competitive bidding in connection with its bid, and its subsequent contract with the Department.

IN WITNESS WHEREOF, the Contractor, for itself, its successors and assigns, hereby execute two duplicate originals of this Agreement and thereby binds itself to all covenants, terms, and obligations contained in the Contract Documents.

CONTRACTOR

_____	_____
Date	(Signature of Legally Authorized Representative of the Contractor)
_____	_____
Witness	(Name and Title Printed)

G. Award.

Your offer is hereby accepted. This award consummates the Contract, and the documents referenced herein.

MAINE DEPARTMENT OF TRANSPORTATION

_____	_____
Date	By: David Bernhardt, Commissioner
_____	
Witness	

CONTRACT AGREEMENT, OFFER & AWARD

AGREEMENT made on the date last signed below, by and between the State of Maine, acting through and by its Department of Transportation (Department), an agency of state government with its principal administrative offices located at Child Street, Augusta, Maine, with a mailing address at 16 State House Station, Augusta, Maine 04333-0016, and _____ corporation or other legal entity organized under the laws of the State of _____, with its principal place of business located at _____

The Department and the Contractor, in consideration of the mutual promises set forth in this Agreement (the "Contract"), hereby agree as follows:

A. The Work.

The Contractor agrees to complete all Work as specified or indicated in the Contract including Extra Work in conformity with the Contract, **WIN No. 18994.40 for Crack Sealing in the towns of Corinth, Kenduskeag, Dedham, and the city of Ellsworth, Counties of Hancock and Penobscot, Maine.** The Work includes construction, maintenance during construction, warranty as provided in the Contract, and other incidental work.

The Contractor shall be responsible for furnishing all supervision, labor, equipment, tools supplies, permanent materials and temporary materials required to perform the Work including construction quality control including inspection, testing and documentation, all required documentation at the conclusion of the project, warranting its work and performing all other work indicated in the Contract.

The Department shall have the right to alter the nature and extent of the Work as provided in the Contract; payment to be made as provided in the same.

B. Time.

The Contractor agrees to complete all Work, except warranty work, on or before **October 1, 2016.** Further, the Department may deduct from moneys otherwise due the Contractor, not as a penalty, but as Liquidated Damages in accordance with Sections 107.7 and 107.8 of the State of Maine Department of Transportation Standard Specifications, November 2014 Edition and related Special Provisions.

C. Price.

The quantities given in the Schedule of Items of the Bid Package will be used as the basis for determining the original Contract amount and for determining the amounts of the required Performance Surety Bond and Payment Surety Bond, and that the amount of this offer is _____

_____

$_____ Performance Bond and Payment Bond each being 100% of the amount of this Contract.

D. Contract.

This Contract, which may be amended, modified, or supplemented in writing only, consists of the Contract documents as defined in the Plans, Standard Specifications, November 2014 Edition, Standard Details November 2014 Edition as updated through advertisement, Supplemental Specifications, Special Provisions, Contract Agreement; and Contract Bonds. It is agreed and understood that this Contract will be governed by the documents listed above.

E. Certifications.

By signing below, the Contractor hereby certifies that to the best of the Contractor's knowledge and belief:

1. All of the statements, representations, covenants, and/or certifications required or set forth in the Bid and the Bid Documents, including those in the Contract are still complete and accurate as of the date of this Agreement.

2. The Contractor knows of no legal, contractual, or financial impediment to entering into this Contract.

3. The person signing below is legally authorized by the Contractor to sign this Contract on behalf of the Contractor and to legally bind the Contractor to the terms of the Contract.

F. Offer.

The undersigned, having carefully examined the site of work, the Plans, Standard Specifications November 2014 Edition, Standard Details November 2014 Edition as updated through advertisement, Supplemental Specifications, Special Provisions, Contract Agreement; and Contract Bonds contained herein for construction of: **WIN No. 18994.40 for Crack Sealing in the towns of Corinth, Kenduskeag, Dedham, and the city of Ellsworth, Counties of Hancock and Penobscot,** State of Maine, on which bids will be received until the time specified in the "Notice to Contractors" do(es) hereby bid and offer to enter into this contract to supply all the materials, tools, equipment and labor to construct the whole of the Work in strict accordance with the terms and conditions of this Contract at the unit prices in the attached "Schedule of Items".

The Offeror agrees to perform the work required at the price specified above and in accordance with the bids provided in the attached "Schedule of Items" in strict accordance with the terms of this solicitation, and to provide the appropriate insurance and bonds if this offer is accepted by the Government in writing.

As Offeror also agrees:

First: To do any extra work, not covered by the attached "Schedule of Items", which may be ordered by the Resident, and to accept as full compensation the amount determined upon a "Force Account" basis as provided in the Standard Specifications, November 2014 Edition, and as addressed in the contract documents.

Second: That the bid bond at 5% of the bid amount or the official bank check, cashier's check, certificate of deposit or U. S. Postal Money Order in the amount given in the "Notice to Contractors", payable to the Treasurer of the State of Maine and accompanying this bid, shall be forfeited, as liquidated damages, if in case this bid is accepted, and the undersigned shall fail to abide by the terms and conditions of the offer and fail to furnish satisfactory insurance and Contract bonds under the conditions stipulated in the Specifications within 15 days of notice of intent to award the contract.

Third: To begin the Work as stated in Section 107.2 of the Standard Specifications November 2014 Edition and complete the Work within the time limits given in the Special Provisions of this Contract.

Fourth: That this offer shall remain open for 30 calendar days after the date of opening of bids.

Fifth: The Bidder hereby certifies, to the best of its knowledge and belief that: the Bidder has not, either directly or indirectly, entered into any agreement, participated in any collusion, or otherwise taken any action in restraint of competitive bidding in connection with its bid, and its subsequent contract with the Department.

IN WITNESS WHEREOF, the Contractor, for itself, its successors and assigns, hereby execute two duplicate originals of this Agreement and thereby binds itself to all covenants, terms, and obligations contained in the Contract Documents.

CONTRACTOR

_____	_____
Date	(Signature of Legally Authorized Representative of the Contractor)
_____	_____
Witness	(Name and Title Printed)

G. Award.

Your offer is hereby accepted. This award consummates the Contract, and the documents referenced herein.

MAINE DEPARTMENT OF TRANSPORTATION

_____	_____
Date	By: David Bernhardt, Commissioner
_____	
Witness	

BOND # _____

CONTRACT PERFORMANCE BOND
(Surety Company Form)

KNOW ALL MEN BY THESE PRESENTS: That _____ _____ **in the State of** _____, as principal, and……....., a corporation duly organized under the la ws of the State of ..... and having a usual place of business ...., as Surety, are held and firm ly bound unto the Treasurer of the State of Maine in the sum of _____ **and 00/100 Dollars ($)**, to be paid said Treasurer of the State of Maine or his successors in office, for which payment well and truly to be m ade, Principa l and Surety bind them selves, their heirs, executors and adm inistrators, successors a nd assigns, jointly and severally by these presents.

The condition of this obligation is such that if the Principal designated as Contractor in the Contract to construct Project Num ber _____ in the Municipality of _____ prom ptly and faithfully perfor ms the Contract, then this obligation shall be null and void; otherwise it shall remain in full force and effect.

The Surety hereby waives notice of any altera tion or extension of tim e made by the State of Maine.

Signed and sealed this ..... day of ....., 20….. .

WITNESSES: SIGNATURES:
CONTRACTOR:
Signature..... .....….....
Print Name Legibly ..... Print Name Legibly ...…….....
SURETY:
Signature ....…….....
Print Name Legibly ..... Print Name Legibly .....
SURETY ADDRESS: NAME OF LOCAL AGENCY:
..... ADDRESS .....
....…….....
....…….....
TELEPHONE..... .....…….....

SAMPLE

BOND # _____

CONTRACT PAYMENT BOND
(Surety Company Form)

KNOW ALL MEN BY THESE PRESENTS: That _____ _____ **in the State of** _____, as principal, and.....….....
a corporation duly organized under the laws of the State of ..... and having a usual place of business in .....……,
as Surety, are held and firmly bound unto the Treasurer of the State of Maine for the use and benefit of claimants as herein below defined, in the sum of _____ **and 00/100 Dollars ($)**
for the payment whereof Principal and Surety bind themselves, their heirs, executors and administrators, successors and assigns, jointly and severally by these presents.

The condition of this obligation is such that if the Principal designated as Contractor in the Contract to construct Project Number _____ in the Municipality of _____ promptly satisfies all claims and demands incurred for all labor and material, used or required by him in connection with the work contemplated by said Contract, and fully reimburses the obligee for all outlay and expense which the obligee may incur in making good any default of said Principal, then this obligation shall be null and void; otherwise it shall remain in full force and effect.

A claimant is defined as one having a direct contract with the Principal or with a Subcontractor of the Principal for labor, material or both, used or reasonably required for use in the performance of the contract.

Signed and sealed this ..... day of ...……....., 20 ... .
WITNESS: SIGNATURES:

CONTRACTOR:

Signature……..... .....….....
Print Name Legibly .....…….. Print Name Legibly ….....

SURETY:

Signature..... ...….....
Print Name Legibly ..... Print Name Legibly ….....

SURETY ADDRESS: NAME OF LOCAL AGENCY:
...…..... ADDRESS ….....
..... …….....
TELEPHONE ..... …….....

SAMPLE

March 14, 2007
Supersedes March 3, 1966

Non-federal Projects Only

NOTICE TO CONTRACTORS - PREFERRED EMPLOYEES

Sec. 1303. Public Works; minimum wage

In the employment of laborers in the construction of public works, including state highways, by the State or by persons contracting for the construction, preference must first be given to citizens of the State who are qualified to perform the work to which the employment relates and, if they can not be obtained in sufficient numbers, then to citizens of the United States. Every contract for public works construction must contain a provision for employing citizens of this State or the United States. The hourly wage and benefit rate paid to laborers employed in the construction of public works, including state highways, may not be less than the fair minimum rate as determined in accordance with section 1308. Any contractor who knowingly and willfully violates this section is subject to a fine of not less than $250 per employee violation. Each day that any contractor employs a laborer at less than the wage and benefit minimum stipulated in this section constitutes a separate violation of this section. [1997, c. 757, §1 (amd).]

STATE OF MAINE
DEPARTMENT OF TRANSPORTATION

REGION 4

HANCOCK & PENOBSCOT COUNTIES

US ROUTE 1A & ROUTE 15

STATE PROJECT NO. 018994.40

PROJECT LENGTH: 21.57 MILES

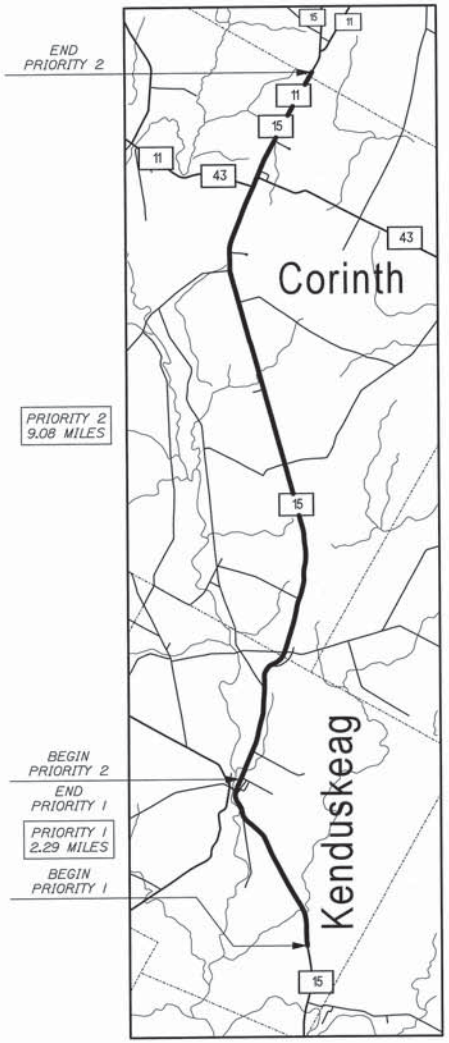

LAYOUT SCALE - PRIORITIES 1 & 2

4000 0 4000 8000

Scale In Feet

TRAFFIC DATA	Route 15
Current (2016) AADT	6200
Functional Class:	Minor Arterial
Corridor Priority:	2

TRAFFIC DATA	Route 1A
Current (2016) AADT	10300
Functional Class:	Other Principal Arterial
Corridor Priority:	1

PROJECT LOCATION:	CRACK SEAL - REGION 4
PROGRAM AREA:	HIGHWAY PRESERVATION PAVING
SCOPE OF WORK:	CRACK SEALING

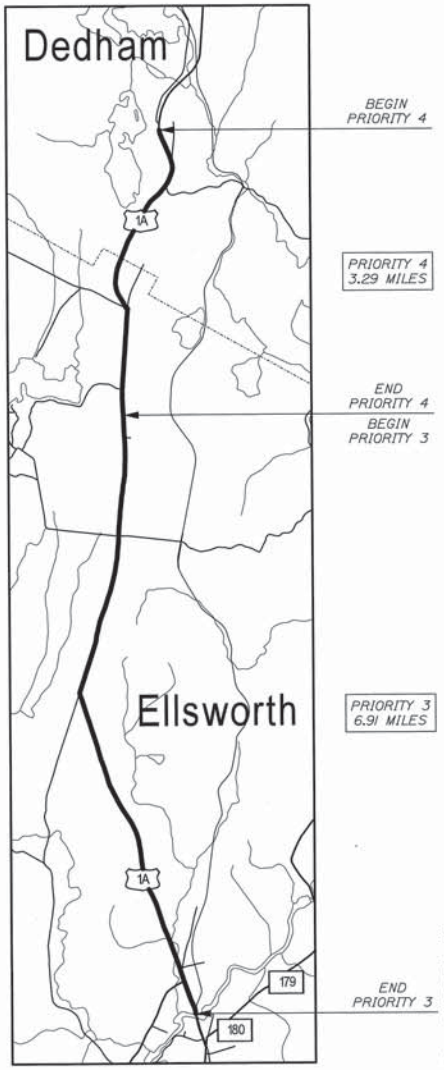

LAYOUT SCALE - PRIORITIES 3 & 4

3500 0 3500 7000

Scale In Feet

WIN 18994.40 018994.40

STATE OF MAINE
DEPARTMENT OF TRANSPORTATION

APPROVED

COMMISSIONER: DATE 4/19/16

CHIEF ENGINEER: DATE 4-19-16

STATE OF MAINE PROFESSIONAL ENGINEER

SIGNATURE

P.E. NUMBER 9094

DATE 3/29/16

PROJECT INFORMATION

PROGRAM	HIGHWAY
PROJECT MANAGER	B. BARROWS
DESIGNER	C. RINES
CONSULTANT	
PROJECT RESIDENT	
CONTRACTOR	
PROJECT COMPLETION DATE	

REGION 4
US ROUTE 1A & ROUTE 15

TITLE SHEET

SHEET NUMBER 1 OF 1

Filename: ...\MSTA\001_Title_18994.40.dgn Division: HIGHWAY Username: bill.lucas Date:3/29/2016

Priority	Rt#	Town(s)	Description	Length
1	15	Kenduskeag	Beginning 0.70 of a mile north of Lancaster Brook Road and extending Northerly 2.29 miles to Southard Avenue.	2.29
2	15	Kenduskeag-Corinth	Beginning at the intersection of Southard Avenue and extending northerly 9.08 miles to a point 0.45 of a mile south of Deer View Lane.	9.08
3	1A	Ellsworth	Beginning 1.12 miles southeasterly of Winkumpagh Road and extending southeasterly 6.91 miles to the Union River Bridge.	6.91
4	1A	Dedham-Ellsworth	Beginning 0.07 of a mile southeasterly of Lily Road and extending southeasterly 3.29 miles to a point 1.12 miles southeasterly of Winkumpaugh Road.	3.29
			Total Length (mi.)	21.57

The roads will be crack sealed in order of priority as listed above.

The Contractor shall crack seal the travel lanes only (from centerline out to and including the white edge line and/or longitudinal joint between travel lane and shoulder), unless directed otherwise by the Resident.

Due to fiscal restraints, MaineDOT may delete any portion of the work at any time.

GENERAL NOTES

1) Any necessary cleaning of existing pavement prior to applying the asphalt low modulus crack sealer shall be incidental to the related items.

2) The Contractor shall crack seal the travel lanes only (from centerline out to and including the white edge line and/or longitudinal joint between travel lane and shoulder), unless directed otherwise by the Resident.

3) Any damage to the slopes caused by the Contractor's equipment, personnel, or operation shall be repaired to the satisfaction of the Resident. All work, equipment, and materials required to make repairs shall be at the Contractor's expense.

4) MaineDOT may delete any portion of the work at any time due to unforeseen circumstances, conditions not favorable for crack sealing, or once the estimated quantity is reached.

5) Locations will be completed in the order of priority.

SPECIAL PROVISIONS
SECTION 104
Utilities

UTILITY COORDINATION

The contractor has primary responsibility for coordinating their work with utilities after contract award. The contractor shall communicate directly with the utilities regarding any utility work necessary to maintain the contractor's schedule and prevent project construction delays. The contractor shall notify the resident of any issues.

THE CONTRACTOR SHALL PLAN AND CONDUCT THEIR WORK ACCORDINGLY.

MEETING

A Pre-Construction Utility Conference, as defined in Subsection 104.4.6 of the Standard Specifications **IS NOT REQUIRED**.

GENERAL INFORMATION

These Special Provisions outline the arrangements that have been made by the Department for utility work to be undertaken in conjunction with this project. The following list identifies all known utilities having facilities presently located within the limits of this project or intending to install facilities during project construction.

Utilities have been notified and will be furnished a copy of the project specification.

Overview & Utility Contact Information:

Utility	Aerial	Underground	Contact Person	Contact Phone
City of Ellsworth		**X**	**Larry Wilson**	**266-2526**
Emera Maine	**X**	**X**	**Claude Brown or** **Bob Fairweather**	**949-3954** **461-0324**
FairPoint Communications	**X**	**X**	**Joe Cherry or** **Shannon Hughes**	**460-0817** **460-3959**
Maine Fiber Company	**X**		**Tim LaBreck**	**650-0702**
OTT Communications	**X**	**X**	**Jim Taplin**	**615-8431**
Time Warner Cable	**X**		**Jamie Labelle**	**458-8001**

Temporary utility adjustments **ARE NOT** anticipated on this project.

All adjustments are to be made by the respective utility unless otherwise specified herein.

Fire hydrants shall not be disturbed until all necessary work has been accomplished to provide proper fire protection.

Utility working days are Monday through Friday. Times are estimated on the basis of a single crew for each utility. Any times and dates mentioned are **estimates only** and are dependent upon favorable weather, working conditions, and freedom from emergencies. The Contractor shall have no claim against the Department if they are exceeded.

AERIAL

Aerial utility adjustments are not anticipated as part of this project. Utilities have been notified and if utility relocations, though unexpected, become necessary, they will be scheduled in compliance with Section 104 of the Standard Specifications and will be done by the utilities in conjunction with the work by the Contractor.

UNDERGROUND

Underground utility adjustments are not anticipated as part of this project. Utilities have been notified and if utility relocations, though unexpected, become necessary, they will be scheduled in compliance with Section 104 of the Standard Specifications and will be done by the utilities in conjunction with the work by the Contractor.

PLEASE NOTE

All underground utilities require **3 working days' notice** for any/all excavation or any other subsurface work around any underground facilities to schedule an on-site representative to be present. The contractor shall hand dig around all the underground facilities.

MAINTAINING UTILITY LOCATION MARKINGS

The Contractor will be responsible for maintaining the buried utility location markings following the initial locating by the appropriate utility or their designated representative.

UTILITY SIGNING

Any utility working within the construction limits of this project shall ensure that the traveling public is adequately protected at all times. All work areas shall be signed, lighted, and traffic flaggers employed as determined by field conditions. All traffic controls shall be in accordance with the latest edition of the Manual on Uniform Traffic Control Devices for Streets and Highways, as issued by the Federal Highway Administration.

THIS DOCUMENT MUST BE CLEARLY POSTED AT THE PERTAINING STATE FUNDED PREVAILING WAGE CONSTRUCTION SITE

State of Maine
Department of Labor
Bureau of Labor Standards
Wage and Hour Division
Augusta, Maine 04333-0045
Telephone (207) 623-7906

Wage Determination - In accordance with 26 MRSA §1301 et. seq., this is a determination by the Bureau of Labor Standards, of the fair minimum wage rate to be paid laborers and workers employed on the below titled project.

Title of Project --------18994.40-Region 4 Sealing-Penobscot County

Location of Project --Corinth, Kenduskeag, Penobscot County

2016 Fair Minimum Wage Rates
Highway & Earthwork Penobscot County

Occupation Title	Minimum Wage	Minimum Benefit	Total	Occupation Title	Minimum Wage	Minimum Benefit	Total
Asphalt Raker	$15.00	$0.00	$15.00	Ironworker – Structural	$23.20	$6.20	$29.40
Backhoe Loader Operator	$15.75	$0.37	$16.12	Laborers (Incl. Helpers & Tenders)	$13.00	$0.14	$13.14
Blaster Ordinance Handling & Explosives	$19.75	$2.02	$21.77	Laborer – Skilled	$14.80	$1.24	$16.04
Boom Truck (Truck Crane) Operator	$21.00	$2.85	$23.85	Line Erector – Power/Cable Splicer	$25.88	$5.88	$31.76
Bulldozer Operator	$15.50	$1.32	$16.82	Loader Operator – Front End	$16.75	$3.02	$19.77
Carpenter	$20.00	$1.63	$21.63	Mechanic – Maintenance	$17.75	$1.46	$19.21
Carpenter – Rough	$18.00	$1.15	$19.15	Mechanic – Refrigeration	$22.00	$3.54	$25.54
Concrete Mixing Plant Operator	$20.00	$4.46	$24.46	Painter	$16.87	$3.33	$20.20
Concrete Pump Operator	$20.00	$0.00	$20.00	Paver Operator	$21.00	$11.34	$32.34
Crane Operator <15 Tons	$18.61	$2.97	$21.58	Pipe Layer	$19.33	$2.37	$21.70
Crane Operator =>15 Tons	$24.50	$6.61	$31.11	Pump Installer	$25.00	$4.67	$29.67
Crusher Plant Operator	$16.50	$4.72	$21.22	Reclaimer Operator	$21.00	$11.34	$32.34
Driller – Rock	$19.25	$4.30	$23.55	Roller Operator – Earth	$11.75	$0.30	$12.05
Dry-Wall Applicator	$21.50	$2.63	$24.13	Roller Operator – Pavement	$21.00	$11.34	$32.34
Earth Auger Operator	$23.00	$0.00	$23.00	Screed/Wheelman	$15.00	$1.38	$16.38
Electrician – Licensed	$26.00	$13.87	$39.87	Sider	$23.00	$1.77	$24.77
Excavator Operator	$17.85	$1.05	$18.90	Stone Mason	$17.80	$0.00	$17.80
Fence Setter	$15.25	$1.32	$16.57	Truck Driver – Light	$13.50	$0.00	$13.50
Flagger	$10.00	$0.00	$10.00	Truck Driver – Medium	$15.00	$0.00	$15.00
Grader/Scraper Operator	$15.00	$2.60	$17.60	Truck Driver – Heavy	$14.00	$0.39	$14.39
Highway Worker/Guardrail Installer	$14.25	$1.30	$15.55	Truck Driver – Tractor Trailer	$15.00	$1.55	$16.55
Hot Top Plant Operator	$21.00	$8.53	$29.53	Truck Driver – Mixer (Cement)	$12.50	$4.01	$16.51

The Laborer classifications include a wide range of work duties. Therefore, if any specific occupation to be employed on this project is not listed in this determination, call the Bureau of Labor Standards at the above number for further clarification.

Welders are classified in the trade to which the welding is incidental.

Apprentices - The minimum wage rate for registered apprentices are those set forth in the standards and policies of the Maine State Apprenticeship and Training Council for approved apprenticeship programs.
Posting of Schedule - Posting of this schedule is required in accordance with 26 MRSA §1301 et. seq., by any contractor holding a State contract for construction valued at $50,000 or more and any subcontractors to such a contractor.
Appeal - Any person affected by the determination of these rates may appeal to the Commissioner of Labor by filing a written notice with the Commissioner stating the specific grounds of the objection within ten (10) days from the filing of these rates with the Secretary of State.

Determination No: HI-062-2016
Filing Date: March 31, 2016

Expiration Date: 12-31-2016

A true copy
Attest: Verna Eldridge
Verna Eldridge
Wage & Hour Director
Bureau of Labor Standards

BLS 424B2 (R2016)(Highway/Earthwork Penobscot)

THIS DOCUMENT MUST BE CLEARLY POSTED AT THE PERTAINING STATE FUNDED PREVAILING WAGE CONSTRUCTION SITE

State of Maine
Department of Labor
Bureau of Labor Standards
Wage and Hour Division
Augusta, Maine 04333-0045
Telephone (207) 623-7906

Wage Determination - In accordance with 26 MRSA §1301 et. seq., this is a determination by the Bureau of Labor Standards, of the fair minimum wage rate to be paid laborers and workers employed on the below titled project.

Title of Project --------18994.40-Region 4 Sealing-Hancock County

Location of Project --Ellsworth, Hancock County

2016 Fair Minimum Wage Rates
Highway & Earthwork Hancock County

Occupation Title	Minimum Wage	Minimum Benefit	Total	Occupation Title	Minimum Wage	Minimum Benefit	Total
Asphalt Raker	$14.50	$0.00	$14.50	Ironworker – Structural	$23.20	$6.20	$29.40
Backhoe Loader Operator	$16.11	$0.38	$16.49	Laborers (Incl. Helpers & Tenders)	$13.00	$0.07	$13.07
Blaster Ordinance Handling & Explosives	$19.75	$2.02	$21.77	Laborer – Skilled	$15.50	$1.13	$16.63
Boom Truck (Truck Crane) Operator	$21.00	$2.85	$23.85	Line Erector – Power/Cable Splicer	$25.88	$5.88	$31.76
Bulldozer Operator	$16.00	$1.32	$17.32	Loader Operator – Front End	$16.50	$1.89	$18.39
Carpenter	$20.00	$1.63	$21.63	Mechanic – Maintenance	$17.00	$0.77	$17.77
Carpenter – Rough	$18.00	$1.15	$19.15	Mechanic – Refrigeration	$22.00	$3.54	$25.54
Concrete Mixing Plant Operator	$20.00	$4.46	$24.46	Painter	$16.87	$3.33	$20.20
Concrete Pump Operator	$20.00	$0.00	$20.00	Paver Operator	$20.75	$1.90	$22.65
Crane Operator <15 Tons	$18.61	$2.97	$21.58	Pipe Layer	$19.33	$2.37	$21.70
Crane Operator =>15 Tons	$24.50	$6.61	$31.11	Pump Installer	$25.00	$4.67	$29.67
Crusher Plant Operator	$16.50	$4.72	$21.22	Reclaimer Operator	$21.00	$11.34	$32.34
Driller – Rock	$19.25	$4.30	$23.55	Roller Operator – Earth	$11.75	$0.30	$12.05
Dry-Wall Applicator	$21.50	$2.63	$24.13	Roller Operator – Pavement	$21.00	$8.78	$29.78
Earth Auger Operator	$23.00	$0.00	$23.00	Screed/Wheelman	$15.00	$0.00	$15.00
Electrician – Licensed	$26.00	$13.87	$39.87	Sider	$23.00	$1.77	$24.77
Excavator Operator	$18.00	$1.05	$19.05	Stone Mason	$17.80	$0.00	$17.80
Fence Setter	$15.25	$1.32	$16.57	Truck Driver – Light	$13.50	$0.00	$13.50
Flagger	$10.00	$0.00	$10.00	Truck Driver – Medium	$15.00	$0.00	$15.00
Grader/Scraper Operator	$17.75	$1.07	$18.82	Truck Driver – Heavy	$14.00	$0.48	$14.48
Highway Worker/Guardrail Installer	$14.25	$1.30	$15.55	Truck Driver – Tractor Trailer	$15.00	$1.36	$16.36
Hot Top Plant Operator	$23.60	$9.48	$33.08	Truck Driver – Mixer (Cement)	$12.50	$4.01	$16.51

The Laborer classifications include a wide range of work duties. Therefore, if any specific occupation to be employed on this project is not listed in this determination, call the Bureau of Labor Standards at the above number for further clarification.

Welders are classified in the trade to which the welding is incidental.

Apprentices - The minimum wage rate for registered apprentices are those set forth in the standards and policies of the Maine State Apprenticeship and Training Council for approved apprenticeship programs.
Posting of Schedule - Posting of this schedule is required in accordance with 26 MRSA §1301 et. seq., by any contractor holding a State contract for construction valued at $50,000 or more and any subcontractors to such a contractor.
Appeal - Any person affected by the determination of these rates may appeal to the Commissioner of Labor by filing a written notice with the Commissioner stating the specific grounds of the objection within ten (10) days from the filing of these rates with the Secretary of State.

Determination No: HI-063-2016
Filing Date: March 31, 2016

Expiration Date: 12-31-2016

A true copy
Attest: Verna Eldridge
Verna Eldridge
Wage & Hour Director
Bureau of Labor Standards

BLS 424B2 (R2016)(Highway/Earthwork Hancock)

SPECIAL PROVISION
SECTION 105
GENERAL SCOPE OF WORK
(LIMITATIONS OF OPERATIONS)

1. Lane closures shall be set up as stated in the Special Provision 652, Traffic Control Guidelines and as per MUTCD.

2. The Contractor's traffic control plan shall discuss/address ways to minimize impact to the traveling public.

3. No more than one crack sealing operation can be in progress at any one time unless authorized by the Resident.

4. All work schedule changes must be submitted to the Department a minimum of two (2) calendar days prior to the request change.

5. There is a separate Centerline Rumble Strip Project scheduled on sections 1 & 2 (Kenduskeag Corinth Rt. 15) which is required to be completed on or before August 20, 2016. Crack Sealing will not be allowed until the Centerline Rumble Strip project has been completed.

6. On Sections 3 & 4 (Dedham Ellsworth Rt. 1A) no work shall be done between the hours of 6:00 AM and 6:00 PM from June 20, 2016 through September 6, 2016.

7. The Contractor shall conduct their operations such that work progresses against the normal flow of traffic.

8. All traffic control will be incidental to the 424 item as per Special Provision Section 652 Maintenance of Traffic.

9. The Contractor shall stop all work and have all lanes open to traffic for the following dates:

   Friday July 1, 2016 by 4:00 PM and shall not commence work again until 6:00 AM Tuesday July 5, 2016 (Independence Day) on Sections 1 and 2.

   Friday July 1, 2016 by 6:00 AM and shall not commence work again until 6:00 PM Tuesday July 5, 2016 (Independence Day) on Section 3 and 4.

   Friday September 2, 2016 by 4:00 PM and shall not commence work again until 6:00 AM Tuesday September 6, 2016 (Labor Day) on Sections 1 and 2.

   Friday September 2, 2016 by 6:00 AM and shall not commence work again until 6:00 AM Wednesday September 7, 2016 (Labor Day) on Section 3 and 4.

Project No. 018994.40

SPECIAL PROVISION 105
CONSTRUCTION AREA

Construction Areas located in the **City of Ellsworth and Towns of Kenduskeag, Corinth and Dedham** have been established by the Maine Department of Transportation (MDOT) in accordance with provisions of 29-A § 2382 Maine Revised Statutes Annotated (MRSA).

The sections of highway receiving Crack Seal in Hancock and Penobscot Counties, Project No. 018994.40:

(a) Location 1, Kenduskeag on Route 15, begins 0.70 mi. north of Lancaster Brook Road and extends northerly 2.29 miles to Southard Avenue.
(b) Location 2, Kenduskeag – Corinth on Route 15, begins at the intersection of Southard Avenue and extends northerly 9.08 miles to a pouint 0.45 mi. south of Deer View Lane.
(c) Location 3, Ellsworth on Route 1A, begins 1.12 mi. southeast of Winkumpaugh Road and extends southeasterly 6.91 miles to the Union River Bridge.
(d) Location 4, Dedham – Ellsworth on Route 1A, begins 0.07 mi. south of Lily Road and extends southeasterly 3.29 miles to a point 1.12 mi. south of Winkumpaugh Road.

Total Length 21.57 miles.

Per 29-A § 2382 (7) MRSA, the MDOT may "*issue permits for stated periods of time for loads and equipment employed on public way construction projects, United States Government projects or construction of private ways, when within construction areas established by the Department of Transportation. The permit:*

A. Must be procured from the municipal officers for a construction area within that municipality;

B. May require the contractor to be responsible for damage to ways used in the construction areas and may provide for:

(1) Withholding by the agency contracting the work of final payment under contract; or

(2) The furnishing of a bond by the contractor to guarantee suitable repair or payment of damages.

The suitability of repairs or the amount of damage is to be determined by the Department of Transportation on state-maintained ways and bridges, otherwise by the municipal officers;

C. May be granted by the Department of Transportation or by the state engineer in charge of the construction contract; and

D. For construction areas, carries no fee and does not come within the scope of this section."

The maximum speed limits for trucks on any town way will be 25 mph (40 km per hour) unless a higher legal limit is specifically agreed upon in writing by the Municipal Officers concerned.

SPECIAL PROVISION
SECTION 107
PROSECUTION AND PROGRESS
(Contract Time)

This Contract shall be completed within **28** continuous calendar days. The Contractor may begin work **June 1, 2016** in accordance with Standard Specification 104.4.2 and upon approval of all required submittals. The Contract Completion Date will be no later than **October 1, 2016.**

At least 21 calendar days prior to the desired Begin Construction Date **and no later than June 15th 2016** the Contractor shall submit an **electronic copy of their signed request to begin work and the Begin Construction Date**. This signed request shall be sent read receipt through **email** with their **Schedule of Work**, in accordance with Standard Specification 107.4.2, to **Shawn.Smith@Maine.gov, Emory.Lovely@Maine.gov,** and **Scott.Bickford@Maine.gov**. The Contractor shall notify all utility contacts listed in the 104 Special Provision and provide the utility contacts the submitted schedule of work within 2 calendar days of the schedule of work submittal. **A penalty in the amount of $500/day will be assessed for each calendar day or partial calendar day beyond June 15th that the schedule of work is not received.** Upon receipt of the schedule of work, a pre-construction meeting will be scheduled. A Contract Modification will be executed to document the new Contract Completion Date based upon the Begin Construction Date. The modified Contract Completion Date shall not exceed the Contract Completion Date specified in this special provision.

The Contractor may request to adjust the submitted schedule of work and Begin Construction Date once after the initial submittal. The Department will allow adjustments in the Begin Construction Date of up to seven calendar days if the request is made at least 21 calendar days prior to the updated Begin Construction Date. This signed request shall be sent read receipt through **email** with their **Schedule of Work**, in accordance with Standard Specification 107.4.2, to **Shawn.Smith@Maine.gov, Emory.Lovely@Maine.gov,** and **Scott.Bickford@Maine.gov**. The Contractor shall notify all utility contacts listed in the 104 Special Provision and provide the utility contacts the updated schedule of work within 2 calendar days of the request to adjust the Begin Construction Date.

SPECIAL PROVISION
SECTION 107
SCHEDULING OF WORK

Replace Section 107.4.2 with the following:

"107.4.2 Schedule of Work Required Within 21 Days of Contract Execution and before beginning any on-site activities, the Contractor shall provide the Department with its Schedule of Work. The Contractor shall plan the Work, including the activity of Subcontractors, vendors, and suppliers, such that all Work will be performed in Substantial Conformity with its Schedule of Work. The Schedule must include sufficient time for the Department to perform its functions as indicated in this Contract, including QA inspection and testing, approval of the Contractor's TCP, SEWPCP and QCP, and review of Working Drawings.

At a minimum, the Schedule of Work shall include a bar chart which shows the major Work activities, milestones, durations, **submittals and approvals**, and a timeline. Milestones to be included in the schedule include: (A) start of Work, (B) beginning and ending of planned Work suspensions, (C) Completion of Physical Work, and (D) Completion. If the Contractor Plans to Complete the Work before the specified Completion date, the Schedule shall so indicate.

Any restrictions that affect the Schedule of Work such as paving restrictions or In-Stream Work windows must be charted with the related activities to demonstrate that the Schedule of Work complies with the Contract.

The Department will review the Schedule of Work and provide comments to the Contractor within 20 days of receipt of the schedule. The Contractor will make the requested changes to the schedule and issue the finalized version to the Department."

SPECIAL PROVISION
SECTION 424
FIBER REINFORCED LOW MODULUS OR FIBER MODIFIED ASPHALT CRACK SEALER

Description This work shall consist of the furnishing and placement of crack sealing material in the cracks of existing bituminous concrete pavement in accordance with these Special Provisions. Placement shall consist of: 1) crack cleaning and drying, 2) material preparation and application, 3) material finishing and shaping 4) barrier material and application.

Materials The sealant and equipment requirements shall be one of the following options (A or B) and shall be subject to approval by the Department prior to the start of work.

A.) Fiber Reinforced Low Modulus Crack Sealant Material:

1. Low Modulus Crack Sealant Material shall conform to AASHTO M 324, Type IV (ASTM D 6690, Type IV) and the following specification.

Cone Penetration	90 - 150
Flow @ 60°C [140ºF]	< 3.0mm [⅛ in]
Bond, non-immersed	Three 12.7mm [½ in] Specimens Pass[A] 3 cycles @ 200% extension @ -20ºF
Resilience, %	60 min
Asphalt Compatibility, ASTM D5329	Pass[B]

[A]The Development at any time during the test procedure of a crack, separation, or other opening that at any point is over 6 mm deep in the sealant or between the sealant and concrete block shall constitute failure of the test specimen. The depth of the crack, separation, or other opening shall be measured perpendicular to the side of the sealant showing the defect.

[B]There shall be no failure in adhesion, formation of any oily exudate at the interface between the sealant and asphaltic concrete or other deleterious effects on the asphaltic concrete or sealant when tested at 140ºF.

2. Fibers - Polyester, fully drawn.

Length	10 mm [0.4 in] (max)
Denier	15 dpf (max)
Tenacity	4 gpd (min)
Crimp	none
Color	natural

Fiber Reinforced Low Modulus Crack Sealant Material Properties:

Fiber concentration 0 to 5 % by weight of Low Modulus Crack Sealant Material; uniform dispersion of fibers

Blending of the fibers with the low modulus crack sealant material shall be in accordance with the recommendations of the manufacturer of the fibers. The % of fibers to be added will be at the Contractor's discretion with final adjustments and approval made by the Department. The asphalt-fiber compound shall be thoroughly mixed before application can begin, and continue if new material is added during the day.

Equipment Equipment used in the performance of the work shall be subject to the Resident's or authorized representative's approval and shall be maintained in a satisfactory working condition at all times.

(a) Air Compressor: Air compressors shall be portable and capable of furnishing not less than 4 yd^3 of air per minute at not less than 120 psi pressure at the nozzle. The compressor shall be equipped with traps that will maintain the compressed air free of oil and water.

(b) Sweeper: Manually operated, gas powered air-broom or self-propelled sweeper designed especially for use in cleaning pavements shall be used to remove debris, dirt, and dust from the cracks.

(c) Hot Air Lance: Should operate with propane and compressed air in combination at 2000°F - 3000°F, exit air heated at not less than 120 psi. The lance should draw propane from no smaller than a 100 lb tank using separate hoses for propane and air draw. The lance shall be designed in such that the flame does not come in contact with the pavement. The hoses shall be wrapped together with reflectorized wrap to keep them together and to protect workers in low light situations.

(d) Hand Tools: Shall consist of V-shaped squeegee, brooms, shovels, metal bars with chisel shaped ends, and any other tools which may be satisfactorily used to accomplish this work.

(e) Melting Kettle: The unit used to melt the packaged joint sealing compound shall be a double boiler, indirect fired type. The space between inner and outer shells shall be filled with a suitable heat transfer oil or substitute having a flash point of not less than 608°F. The kettle shall be equipped with a satisfactory means of agitating and mixing the joint sealer at all times. This may be accomplished by continuous stirring with mechanically operated paddles and/or a continuous circulating gear pump attached to the heating unit. The kettle must be equipped with thermostatic control calibrated between 200°F and 550°F.

(f) Application Wand: The application wand shall apply a controlled flow of material via an insulated or heated hose. The nozzle shall distribute the material as called for in this specification. A pressure regulator shall be provided to regulate pressure at the nozzle. A bypass line into the holding tank is required for use when the nozzle is shut off.

B.) Fiber Reinforced Modified Asphalt compound consisting of:

The sealant shall be a modified asphalt-fiber compound designed specifically for improving the strength and performance of the parent asphalt sealant.

(a) The asphalt binder shall consist of a blend of neat asphalt binder, chemically modified crumb rubber (CMCR), and a polymer package, all of which meet the following specifications:

The binder will meet PG 64-28E requirements after modification including:

PG grade requirements of ASHTO M320
Requirements of AASHTO P70/MP19

Modification, at a minimum, shall consist of adding 7% crumb rubber, and the maximum particle size for the recycled tire rubber shall be 80 mesh (#80 sieve)

The asphalt supplier shall provide testing for both the neat and modified asphalt binders

See below for typical modified test results for 64-28E with crumb rubber:

<u>DSR ORIGINAL</u>
kPa >1.00 @ 64° C. Fail temp = 76+° C

<u>DSR RTFO</u>.
kPa >2.20 @ 64° C. Fail temp = 76+° C

<u>MSCR</u>
J_{NR}: 3.2 E <0.5% @ 64° C R3200 (Average% Recovery): >70%

<u>DSR PAV</u>
kPa <6000@ 64° C
Stiffness <300@ -18° C.
M-Value >0.300@ -18° C

(b) Fiber reinforcing materials shall be short-length polyester fibers having the following properties:

Length*	0.25 in. ± 0.02 in.
Elongation at Break (ASTM D2256-90)	35% ± 3%
Melting Point (ASTM D3418-82)	>475°F
Crimps/Inch (ASTM 03937-90)	None
CrossSection	Round
Denier (ASTM D1577-90)	4.5 Nominal dpf
Tensile Strength (ASTM D2256-90)	>70,000 psi
Diameter	0.0008 in.**
Specific Gravity (ASTM D792-91)	1.32 to 1.40

* At temperatures ranging from ambient to maximum finished product mix temperature
** Subject to normal variations

The modified asphalt-fiber compound shall be mixed at a rate of 8% fiber (weight to weight) of asphalt cement unless otherwise approved by the Department.

The asphalt-fiber compound shall be thoroughly mixed for a minimum of one hour before application can begin. To ensure a uniform fiber distribution in the sealant, and also to limit fluctuations in the application temperature of the blended material, the contractor must have a full melter of sealant mixed, heated to the proper application temperature, and ready for testing at the start of each work day. Once that batch of sealant is emptied from the melter, crack sealing operations will cease for the remainder of the day. No new materials will be allowed to be added to the melter during the work day under any circumstances. Minimum application temperature shall be 320°F.

The Contractor shall supply the melter unit by means of a 3,000 to 5,000 gallon bulk tanker, filled at the asphalt suppliers facility, and accompanied by the a bill of lading, and material data sheet.

A Manufacturer's certificate of material compliance will be furnished to the Department certifying conformance to the above material specifications, including the following:

- Performance Grade of Unmodified Asphalt: PG 64-28S (standard) AASHTO M-320, Table 1

- 7% chemically-modified crumb rubber (CMCR) Composed of 100% 80-mesh recycled tire rubber

- 3-4% specially formulated polymer package

- Performance Grade of Modified Asphalt: PG 64-28E (able to withstand "extremely heavy" traffic loads)

- 8% polyester reinforcing fibers

Blending of the fibers with the modified asphalt binder shall be in accordance with the recommendations of the manufacturer of the fibers, and approval made by the Department.

The contractor shall provide the Resident or authorized representative with a copy of the material manufacturer's recommendations for the sealant material being provided pertaining to heating, application, and reheating prior to the beginning of operations or the changing of materials.

Equipment Equipment used in the performance of the work required by this section of the specification shall be subject to approval by the Department, and maintained in a satisfactory working condition at all times.

(a) Air Compressor: Air compressors shall be capable of furnishing not less than 100 cubic feet of air per minute at not less than 120 psi pressure at the nozzle. The compressor shall be equipped with traps that will maintain the compressed air free of oil and water.

(b) Sweeper: Manually operated, gas powered air-broom or self-propelled sweeper designed especially for use in cleaning highway and airfield pavements shall be used to remove debris, dirt and dust from the cracks.

(c) Hot Air Lance: Should operate with propane and compressed air in combination at 2000°F - 3000°F, exit air heated at not less than 120 psi. The lance should draw propane from no smaller than a 100 lb tank using separate hoses for propane and air draw. The lance shall be designed in such that the flame does not come in contact with the pavement. The hoses shall be wrapped together with reflectorized wrap to keep them together and to protect workers in low light situations.

(d) Melter: The unit used to melt or maintain the modified asphalt crack sealant compound shall have an approximate capacity of 1,000 gallons, and be equipped to maintain the sealant compound at the recommended application temperature. The unit shall be of the indirect fired type, and shall be equipped with a remote heat exchanger and hot oil circulation pump capable of maintaining a consistent temperature of the heat transfer oil. The heat transfer oil shall be circulated to all sides and the bottom of the tank containing the crack sealant compound making a continuous loop back to the heat exchanger and having a flash point of not less than 600°F. The melter shall be equipped with a satisfactory means of agitating the crack sealant at all times. This may be accomplished by continuous stirring with mechanically operated paddles and/or by a circulating gear pump attached to the melter. The melter must be equipped with a thermostatic control calibrated between 200°F and 550°F, and must be capable of pumping an 8% fiber content blend.

(d) Hand Tools: Shall consist of V-shaped squeegee, brooms, shovels, metal bars with chisel shaped ends, and any other tools which may be satisfactorily used to accomplish this work.

(e) Application Wand: The application wand shall apply a controlled flow of material via an insulated or heated hose. The nozzle shall distribute the material as called for in this specification. A pressure regulator shall be provided to regulate pressure at the nozzle. A bypass line into the holding tank is required for use when the nozzle is shut off.

GENERAL CONSTRUCTION REQUIREMENTS

Weather Crack Sealant Material shall not be applied on a wet surface, after sunset or before sunrise, or when the atmospheric temperature is below 50°F in a shaded area at the job site, or when weather conditions are otherwise unfavorable to proper construction procedures.

Equipment Equipment used in the performance of the work shall meet the requirements of the material and equipment option selected by the Contractor, and approved by the Department. Equipment shall be maintained in a satisfactory working condition at all times.

Preparation All cracks greater than 1/4 inch shall be blown free of loose material, dirt, vegetation, and other debris by high pressure air. Material removed from the crack shall be removed from the pavement surface by means of a power sweeper or appropriate hand tools as required. Cracks showing evidence of vegetation after being blown out shall be additionally cleaned by appropriate hand tools and additionally blown out. All cracks must be blown and heated via the hot air lance a maximum of 5 minutes prior to the crack being sealed. Distance between the hot air lance and the crack sealing unit should be no more than 50 ft to eliminate reinvasion of water, debris, and other incompressible material. All debris, vegetation, and water shall be removed to enhance adhesion of the crack sealing material. THIS WORK SHALL NOT BE DONE IN INCLEMENT WEATHER.

Preparation and Placement of Sealer The crack sealant material shall be heated and applied at the temperature specified by the manufacturer and approved by the Resident or authorized representative. Any material that has been heated above the manufacturer's specification shall not be used. Material that is reheated or held at temperature for an extended period of time may be used as allowed by the manufacturer's specification and approval of the Resident or authorized representative. The Contractor shall provide the Resident or authorized representative with a suitable device for verifying the sealant temperature in the kettle and at the application site. Any over application or spills are to be removed to the satisfaction of the Resident or authorized representative. Any sealed areas with damaged or contaminated sealer or visible voids are to be removed, prepared and resealed at no additional cost to the Department.

Sealer shall be delivered to the crack while the cracks are still hot from the hot air lance preparation through a pressure hose line and applicator shoe. The sealer overbanding area shall be a kept to a minimum and not exceed a maximum of 1 1/2 inch wide and 3/32 inch thick. The applicator shall be followed by a V-shaped squeegee to minimize the thickness of the overband. Any loose material on the surface or in the crack, which may contaminate the crack sealer or impede bonding of the sealant to the pavement, is to be removed by hand tools prior to crack filling. No crack filling material shall be applied in a crack that is wet or where frost, snow, or ice is present. The ambient air temperature must be 50°F or higher.

Blotter material such as Glenzoil, Black Beauty or an equivalent material approved by the Department shall be provided by the Contractor and shall be applied to the crack sealer to prevent pickup and tracking. Blotter material shall be incidental to the crack seal item.

Quality of Work Excess of spilled sealer shall be removed from the pavement by approved methods and discarded. Any quality of work determined to be below normal acceptable standards will not be accepted, and will be corrected and/or replaced as directed by the Resident or authorized representative at no additional cost to the Department.

Method of Measurement Low Modulus or Fiber Modified Asphalt Crack Sealer will be measured by the pound of sealant used. The manufacturer’s weights of the sealant will be accepted as the basis for measurement. The Department may, at their discretion, take material samples to verify the manufacturers weights provided.

Materials supplied by the gallon will be accompanied by a bill of lading and material certification specifying the pound per gallon conversion, and provide an accurate means to verify gallons used daily in order to accurately convert gallons to pounds.

Basis of Payment The accepted quantity of Low Modulus or Fiber Modified Asphalt Crack Sealer will be paid for at the contract unit price per pound complete in place. This price shall be full compensation for furnishing and placing crack sealer, including cleaning cracks and furnishing and placing barrier or blotter materials if necessary.

Payment will be made under:

Pay Item	Pay Unit
424.3331 Low Modulus Crack Sealer, Applied	Pound

SPECIAL PROVISION
SECTION 652
MAINTENANCE OF TRAFFIC

Work Area At the work site, signs and channelizing devices shall be used as referenced in the following 2 pages and as directed by the Resident. Signs include:

Road Work Next 2 Mi.
One Lane Road Ahead
Flagger Sign (Flagger Symbol)

The Contractor shall conduct their operations in such a manner that the roadway will only be restricted to one lane for a distance needed to safely perform the work with a maximum restriction to one lane of 800 m [2,500 ft].

Additional flaggers shall be used at intersections and side roads as needed when the traffic from these areas can not be safely and effectively directed by the permanent mainline flaggers in use.

Cones may be used along the centerline of the work zone for safety at the contractors or MDOT's discretion for safety.

All signs shall use super high intensity fluorescent retroreflective sheeting, ASTM 4956 - Type VII.

652.16 Basis of Payment: The furnishing, installation and maintenance of all Traffic Control Devices, including cones, will not be paid for directly, but will be incidental to the 424 item(s).

The furnishing of the necessary quantity of flaggers, including hiring, transporting, equipping, supervising and the payment of flaggers, breaker flaggers and all overhead and incidentals necessary to complete the work will not be paid for directly, but will be incidental to the 424 item(s).

MOBILE OPERATION ON A TWO LANE, TWO WAY ROAD USING FLAGGERS.

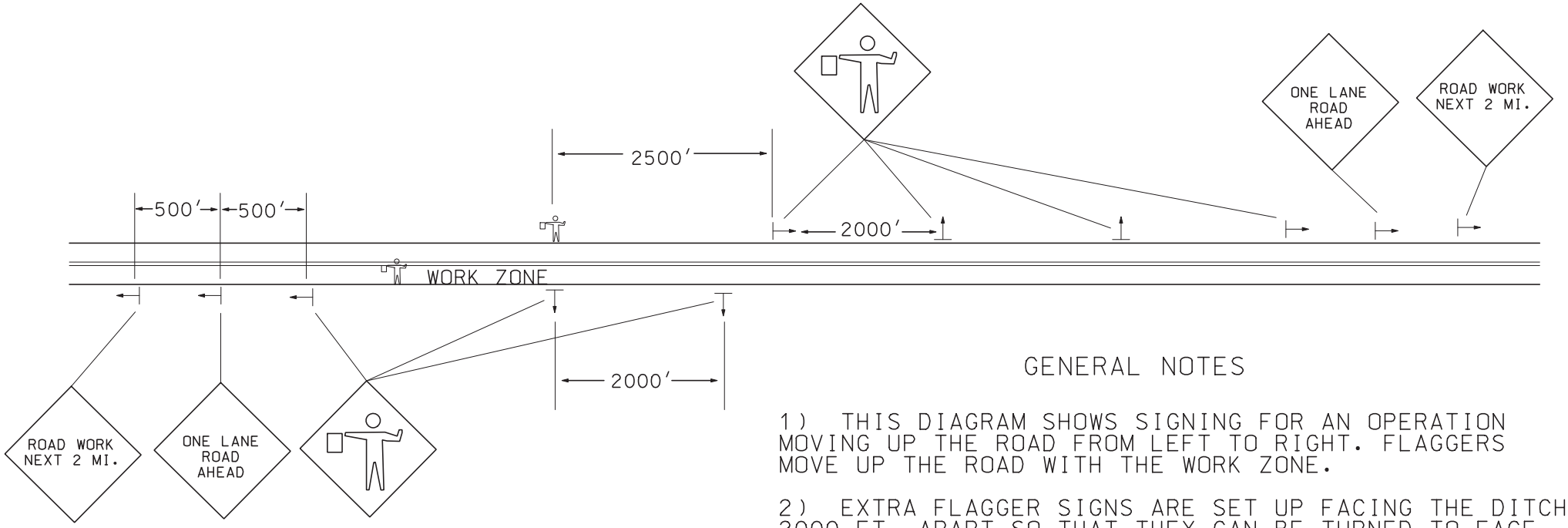

GENERAL NOTES

1) THIS DIAGRAM SHOWS SIGNING FOR AN OPERATION MOVING UP THE ROAD FROM LEFT TO RIGHT. FLAGGERS MOVE UP THE ROAD WITH THE WORK ZONE.

2) EXTRA FLAGGER SIGNS ARE SET UP FACING THE DITCH 2000 FT. APART SO THAT THEY CAN BE TURNED TO FACE ONCOMING TRAFFIC AS THE FLAGGER PASSES. THE FLAGGER SIGN UPSTREAM SHALL NOT BE REMOVED UNTIL THE FLAGGER IS 500 FT. PAST THE DOWNSTREAM SIGN.

3) EACH OPERATION SHALL HAVE A PERSON WHOSE RESPONSIBILITY IS TRAFFIC CONTROL INCLUDING THE PROPER SETUP AND REMOVAL OF SIGNS.

4) THE PERSON RESPONSIBLE FOR TRAFFIC CONTROL MAY WANT TO PERIODICALLY PLACE CONES ON THE CENTERLINE TO REINFORCE THE FACT THAT MOTORISTS ARE IN A WORK ZONE.

5) AT THE DISCRETION OF THE MDOT REPRESENTATIVE CONES MAY BE REQUIRED ALONG THE CENTERLINE OF THE WORK ZONE FOR SAFETY.

6) THIS APPLICATION MAY BE USED FOR MAINTENANCE PAVING OR CRACKSEALING OPERATIONS.

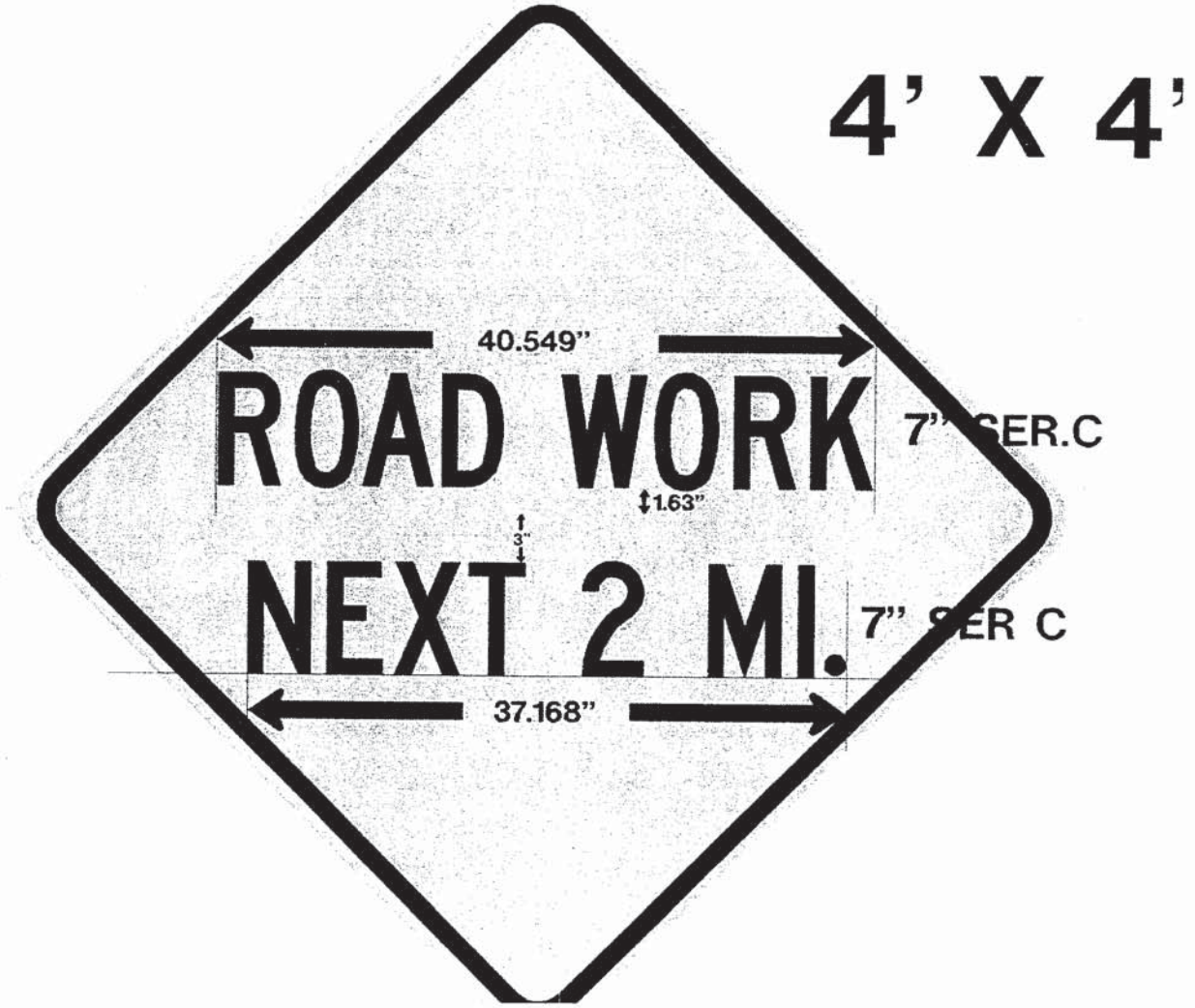

PAGE 2 OF 2

SPECIAL PROVISION SECTION 656
TEMPORARY SOIL EROSION AND WATER POLLUTION CONTROL

Amend 656.3.1 Qualification of Preparer to "The preparer of the SEWPCP must be knowledgeable and experienced with the handling, use, or storage of petroleum products or the hazardous matter/substances utilized on the project including the onsite fueling of equipment."

The Soil Erosion and Water Pollution Control Plan (SEWPCP) will consist of the following:

Standard Specification 656.3.3 a) & b)

Standard Specification 656.3.4 a) & f) all sections

Preparation of the plan will be considered incidental to the contract

October 13, 2015
Supersedes August 06, 2015

STANDARD DETAIL UPDATES

Standard Details and Standard Detail updates are available at:
http://maine.gov/mdot/contractors/publications/standarddetail/

Detail #	Description	Revision Date
501(02)	Pipe Pile Splice	3/05/2015
501(03)	H – Pile Splice	3/05/2015
504(07)	Diaphragm & Crossframe Notes	10/13/2015
507(13)	Steel Bridge Railing	6/03/2015
507(14)	Steel Bridge Railing	6/03/2015
507(31)	Barrier – Mounted Steel Bridge	8/06/2015
526(02)	Temporary Concrete Barrier	8/06/2015

SUPPLEMENTAL SPECIFICATIONS
(Corrections, Additions, & Revisions to Standard Specifications - November 2014)

SECTION 101
CONTRACT INTERPRETATION

101.2 Definitions
Page 1-5 – Remove the definition of Bridge in its entirety and replace with:
"**Bridge A structure that is erected over a depression or an obstruction, such as water, a highway or a railway, and has an opening measured along the centerline of the Roadway of more than 20 feet between: The faces of abutments; spring line of arches; extreme ends of openings of box culverts, pipes or pipe arches; or the extreme ends of openings for multiple box culverts, pipes or pipe arches**."

Page 1-12 – Remove the definition of Large Culvert in its entirety and replace with:
"**Large Culvert Any structure not defined as a Culvert or Bridge that provides a drainage or non-drainage opening under the Roadway or Approaches to the Roadway, with an opening that is 5 feet but less than 10 feet**."

Remove the definition of Minor Span in its entirety and replace with:
"**Minor Span Same definition as Bridge, except having an opening of between 10 feet and 20 feet, inclusive**."

SECTION 104
GENERAL RIGHTS AND RESPONSIBILITES

104.4.4 Coordination of Road Closure / Bridge Closure / Bridge Width Restrictions
Revise the last sentence by adding a period after 'Resident'; remove the "and" after Resident; and adding "**not covered by Pay Items**" between 'costs' and 'will'. So that the last paragraph reads "**All Newspaper notices, radio announcements and any notifications will be subject to the approval of the Resident. All costs not covered by Pay Items will be considered incidental to the Contract**.".

104.5.5 Prompt Payment of Subcontractors Add the following paragraph to this subsection:

C. Payment Tracking Federal Projects On federally funded projects, the prime contractor, subcontractors and lower-tier subcontractors will track and confirm the delivery and receipt of all payments through the Elation System. They will be responsible for entering all payments to all sub and lower tier contractors. MaineDOT will run a query monthly to ensure that contractors are complying and generate an e-mail to contractors who have not responded to confirm receipt of MaineDOT payment or contractor payment to lower tier subcontractors.

SECTION 105
GENERAL SCOPE OF WORK

105.4.5 Special Detours Remove this subsection in its entirety and replace with:
"105.4.5 Maintenance of Existing Structures When a new Bridge or Minor Span is being installed on a new alignment and the existing structure is to remain in service, the Department will maintain the existing structure and the portions of the roadway required for maintaining traffic until such time that the new structure is opened to traffic and the existing structure is taken out of service. A similar situation exists when a new Bridge or Minor Span is being installed on the same alignment as the existing structure, requiring a temporary detour to be installed by the Contractor per Section 510, Special Detours, prior to removal of the existing structure. In this case, the Department will maintain the existing structure and the portions of the existing roadway required for maintaining traffic until such time that either the temporary detour is opened to traffic or the Contractor begins any work on the existing structure, including, but not limited to, repairs, modifications, moving, demolition or removal. In either case, once the new structure or temporary detour is opened to traffic, or the Contractor begins any work on the existing structure, the Contractor shall be solely responsible for all maintenance of the existing structure and the portions of the existing approaches that lie outside the new roadway or the temporary detour, respectively. This specification is not intended to supersede Standard Specification Section 104.3.11, Responsibility for Property of Others."

105.6.2.4 Department Verification Add the following to the end of the first sentence:
"**or other approved method, such as reference staking, to allow the Department to independently verify the accuracy of the work, as approved by the Department."**

SECTION 106
QUALITY

106.4.1 General - In the first sentence, remove "When required by Special Provision," and replace with **"When required elsewhere in the Contract, "**

SECTION 108
PAYMENT

108.3 Retainage - Remove the paragraph beginning with " The Contractor may withdraw…" in its entirety.

108.4.1 Price Adjustment for Hot Mix Asphalt:
Remove this section in its entirety and replace with the following

For all contracts with hot mix asphalt in excess of 500 tons total, a price adjustment for performance graded binder will be made for the following pay items:

Item 403.102 Hot Mix Asphalt – Special Areas
Item 403.206 Hot Mix Asphalt - 25 mm

Item 403.207	**Hot Mix Asphalt - 19 mm**
Item 403.2071	**Hot Mix Asphalt - 19 mm (Polymer Modified)**
Item 403.2072	**Hot Mix Asphalt - 19 mm (Asphalt Rich Base)**
Item 403.208	**Hot Mix Asphalt - 12.5 mm**
Item 403.2081	**Hot Mix Asphalt - 12.5 mm (Polymer Modified)**
Item 403.209	**Hot Mix Asphalt - 9.5 mm (sidewalks, drives, & incidentals)**
Item 403.210	**Hot Mix Asphalt - 9.5 mm**
Item 403.2101	**Hot Mix Asphalt - 9.5 mm (Polymer Modified)**
Item 403.2102	**Hot Mix Asphalt - 9.5 mm (Asphalt Rich Base)**
Item 403.2104	**Hot Mix Asphalt - 9.5 mm (Thin Lift Surface Treatment)**
Item 403.21041	**Hot Mix Asphalt - 9.5 mm (Polymer Modified Thin Lift Surface Treatment)**
Item 403.211	**Hot Mix Asphalt – Shim**
Item 403.2111	**Hot Mix Asphalt – Shim (Polymer Modified)**
Item 403.212	**Hot Mix Asphalt - 4.75 mm (Shim)**
Item 403.213	**Hot Mix Asphalt - 12.5 mm (base and intermediate course)**
Item 403.2131	**Hot Mix Asphalt - 12.5 mm (base and intermediate course Polymer Modified)**
Item 403.2132	**Hot Mix Asphalt - 12.5 mm (Asphalt Rich Base and intermediate course)**
Item 403.214	**Hot Mix Asphalt - 4.75 mm (Surface)**
Item 403.235	**Hot Mix Asphalt (High Performance Rubberized HMA)**
Item 403.301	**Hot Mix Asphalt (Asphalt Rubber Gap-Graded)**
Item 404.70	**Colored Hot Mix Asphalt – 9.5mm (Surface)**
Item 404.72	**Colored Hot Mix Asphalt – 9.5mm (Islands, sidewalks, & incidentals)**
Item 461.13	**Light Capital Pavement**
Item 462.30	**Ultra-Thin Bonded Wearing Course**
Item 462.301	**Polymer Modified Ultra-Thin Bonded Wearing Course**

Price adjustments will be based on the variance in costs for the performance graded binder component of hot mix asphalt. They will be determined as follows:

The quantity of hot mix asphalt for each pay item will be multiplied by the performance graded binder percentages given in the table below times the difference in price between the base price and the period price of asphalt cement. Adjustments will be made upward or downward, as prices increase or decrease.

Item 403.102–6.2%
Item 403.206–4.8%
Item 403.207–5.2%
Item 403.2071–5.2%
Item 403.2072–5.8%
Item 403.208–5.6%
Item 403.2081–5.6%
Item 403.209–6.2%
Item 403.210–6.2%

Item 403.2101–6.2%
Item 403.2102–6.8%
Item 403.2104–6.2%
Item 403.21041–6.2%
Item 403.211–6.2%
Item 403.2111–6.2%
Item 403.212–6.8%
Item 403.213–5.6%
Item 403.2131–5.6%
Item 403.2132–6.2%
Item 403.214–6.8%
Item 403.235–5.5%
Item 403.301–6.2%
Item 404.70–6.2%
Item 404.72–6.2%
Item 461.13–6.5%
Item 462.30–0.0021 tons/SY
Item 462.301–0.0021 tons/SY

Hot Mix Asphalt: The quantity of hot mix asphalt will be determined from the quantity shown on the progress estimate for each pay period.

Base Price: The base price of performance graded binder to be used is the price per standard ton current with the bid opening date. This price is determined by using the average New England Selling Price (Excluding the Connecticut market area), as listed in the Asphalt Weekly Monitor.

Period Price: The period price of performance graded binder will be determined by the Department by using the average New England Selling Price (Excluding the Connecticut market area), listed in the Asphalt Weekly Monitor current with the paving date. The maximum Period Price for paving after the adjusted Contract Completion Date will be the Period Price on the adjusted Contract Completion Date.

SECTION 109
CHANGES

109.5.1 Definitions - Types of Delays
Delete Paragraph ‘A’ in its entirety and replace with:

“A. Excusable Delay Except as expressly provided otherwise by this Contract, an "Excusable Delay" is a Delay to the Critical Path that is directly and solely caused by (1) a weather related Event of such an unusually severe nature that a Federal Emergency Disaster is declared. The Contractor will only be entitled to an adjustment of time if the Project falls within the geographic boundaries prescribed under the disaster declaration. or (2) a flooding event at the effected location of the Project that results in a Q25 headwater elevation, or greater, but less than a Q50 headwater elevation. Theoretical headwater elevations will be determined by the Department; actual headwater elevations will be determined by the Contractor and verified by the Department or (3) An Uncontrollable Event.”

APPENDIX A TO DIVISION 100

Remove Section D in its entirety as this is now covered in Section 105.10 EQUAL OPPORTUNITY AND CIVIL RIGHTS.

SECTION 203
EXCAVATION AND EMBANKMENT

203.02 Materials
At the bottom of page 2-12, add as the first item in the list:

Crushed Stone, ¾ inch 703.13

203.042 Rock Excavation and Blasting
On page 2-16, add the word "**No**" to the third sentence in Section 5 Submittals, Subsection V, 1 so that it reads:
"***No* blasting products will be allowed on the job site if the date codes are missing**."

SECTION 304
AGGREGATE BASE AND SUBBASE COURSE

304.02 Aggregate
Remove the sentence "Aggregate for base and subbase courses shall be material meeting the aggregate type requirements specified in the following table" in its entirety and the table that follows it with headings of 'Material' and 'Aggregate Type'.

304.02 – Aggregate Add the following sentence before the sentence starting with "When designated on the plans…": **"Aggregate Base Course – Type C will be capped with 2" of millings or Untreated Aggregate Surface Course – Type B. Payment for this material will be made under 304.16"**

SECTION 307
FULL DEPTH RECYCLED PAVEMENT

Remove this Section in its entirety and replace with:

SECTION 307
FULL DEPTH RECYCLING
(UNTREATED OR TREATED WITH EMULSIFIED ASPHALT STABILIZER)

307.01 Description This work shall consist of pulverizing a portion of the existing roadway structure into a homogenous mass, adding an emulsified asphalt stabilizer (if required) to the depth of the pulverized material specified in the contract, placing and compacting this material to the lines, grades, and dimensions shown on the plans or established by the Resident.

MATERIALS

<u>307.02 Pulverized Material</u> Pulverized material shall consist of the existing asphalt pavement layers and one inch or more as specified of the underlying gravel, pulverized and blended into a homogenous mass. Pulverized material will be processed to 100% passing a 2 inch square mesh sieve.

<u>307.021 New Aggregate and Additional Recycled Material</u> New aggregate, if required by the contract, shall meet the requirements of Subsection 703.10 - Aggregate for Untreated Surface Course and Leveling Course, Type A. Aggregate Subbase Course Gravel Type D processed to 100 percent passing a 2 inch square mesh sieve and meeting the requirements of 703.06 – Aggregate for Base and Subbase may be used in areas requiring depths greater than 2 inches. New aggregate, will be measured and paid for under the appropriate item.

Recycled material, if required, shall consist of salvaged asphalt material from the project or from off-site stockpiles that has been processed before use to 100 percent passing a 2 inch square mesh sieve. Recycled material shall be conditionally accepted at the source by the Resident. It shall be free of winter sand, granular fill, construction debris, or other materials not generally considered asphalt pavement.

Recycled material generated and salvaged from the project shall be used within the roadway limits to the extent it is available as described in 307.09. No additional payment will be made for material salvaged from the project.

Recycled material supplied from off-site stockpiles shall be paid for as described in the contract, or by contract modification.

<u>307.022 Emulsified Asphalt Stabilizer</u>. If required, the emulsified asphalt stabilizer shall be grade MS-2, MS-4, SS-1, or CSS-1 meeting the requirements of Subsection 702.04 Emulsified Asphalt.

<u>307.023 Water</u> Water shall be clean and free from deleterious concentrations of acids, alkalis, salts or other organic or chemical substances.

<u>307.024 Portland Cement</u> If required, Portland Cement shall be Type I or II meeting the requirements of AASHTO M85.

<u>307.025 Hydrated Lime</u> If required, Hydrated Lime shall meet the requirements of AASHTO M216.

EQUIPMENT

<u>307.03 Pulverizer</u> The pulverizer shall be a self-propelled machine, specifically manufactured for full-depth recycling work and capable of reducing the required existing materials to a size that will pass a 2 inch square mesh sieve. The machine shall be equipped with standard automatic depth controls and must maintain a consistent cutting depth and width. The machine also shall be equipped with a gauge to show depth of material being processed.

<u>307.04 Liquid Mixer Unit or Distributor</u>. If treatment of the recycled layer with emulsified asphalt is required by the contract, a liquid mixing unit or distributor shall be used to introduce the emulsified asphalt stabilizer into the pulverized material. The mixing unit shall contain a liquid distribution and mixing system which has been specifically manufactured for full-depth recycling work, capable of mixing the pulverized material with an evenly metered distribution of emulsified asphalt into a homogeneous mixture, to the depth and width required.

The mixing unit shall be designed, equipped, maintained, and operated so that emulsified asphalt stabilizer at constant temperature may be applied uniformly on variable widths of pulverized material up to 6 feet at readily determined and controlled rates from 0.01 to 1.06 gal/yd^2 with uniform pressure and with an allowable variation from any specified rate not to exceed 0.01 gal/ yd^2. Mixing units shall include a tachometer, pressure gages, and accurate volume measuring devices or a calibrated tank and a thermometer for measuring temperatures of tank contents.

<u>307.041 Cement or Lime Spreader</u> If required by the contract, spreading of the Portland Cement or Hydrated Lime shall be done with a spreader truck designed to spread dry particulate (such as Portland Cement or Lime) or other approved means to insure a uniform distribution across the roadway and minimize fugitive dust. Pneumatic application, including through a slotted pipe, will not be permitted. Other systems that have been developed include fog systems, vacuum systems, etc. Slurry applications may also be accepted. The Department reserves the right to accept or reject the method of spreading cement. The Contractor shall provide a method for verifying that the correct amount of cement is being applied.

<u>307.05 Placement Equipment</u> Placement of the Full Depth recycled material to the required slope and grade shall be done with an approved highway grader or by another method approved by the Resident.

<u>307.06 Rollers</u> The full depth recycled material shall be rolled with a vibratory pad foot roller, a vibratory steel drum soil compactor and a pneumatic tire roller. The pad foot roller drum shall have a minimum of 112 tamping feet 3 inches in height, a minimum contact area per foot of 17 inch^2, and a minimum width of 84 inches. The vibratory steel drum roller shall have a minimum 84 inch width single drum. The pneumatic tire roller shall meet the requirements of Section 401.10 and the minimum allowable tire pressure shall be 85 psi.

MIX DESIGN

If treatment of the recycled layer with emulsified asphalt is required by the contract, the Department will supply a mix design for the emulsified asphalt stabilized material based on test results from pavement and soil analysis taken to the design depth. The Department will provide the following information prior to construction:

1. **Percent of emulsified asphalt to be used.**
2. **Quantity of lime or cement to be added.**

3. Optimum moisture content for proper compaction.
4. Additional aggregate (if required).

After a test strip has been completed or as the work progresses, it may be necessary for the Resident to make necessary adjustments to the mix design. Changes to compensation will be in accordance with the Mix Design Special Provision.

CONSTRUCTION REQUIREMENTS

<u>307.06 Pulverizing</u> The entire depth of existing pavement shall be pulverized together with 1 inch or more of the underlying gravel into a homogenous mass. All pulverizing shall be done with equipment that will provide a homogenous mass of pulverized material, processed in-place, which will pass a 2 inch square mesh sieve.

<u>307.07 Weather Limitations</u> Full depth recycled work shall be performed when;

A. Recycling operations will be allowed between May 15th and September 15th inclusive in Zone 1 - Areas north of US Route 2 from Gilead to Bangor and north of Route 9 from Bangor to Calais.
B. The atmospheric temperature, as determined by an approved thermometer placed in the shade at the recycling location, is 50°F and rising.
C. When there is no standing water on the surface.
D. During generally dry conditions, or when weather conditions are such that proper pulverizing, mixing, grading, finishing and curing can be obtained using proper procedures, and when compaction can be accomplished as determined by the Resident.
E. When the surface is not frozen and when overnight temperatures are expected to be above 32°F.
F. Wind conditions are such that the spreading of lime or cement on the roadway ahead of the recycling machine will not adversely affect the operation.

<u>307.08 Surface Tolerance</u> The complete surface of the Full Depth Recycled course shall be shaped and maintained to a tolerance, above or below the required cross sectional shape, of ⅜ inch.

<u>307.09 Full Depth Recycling Procedure</u> New aggregate or recycled material meeting the requirements of Section 307.021 - New Aggregate and Additional Recycled Material, shall be added as necessary to restore cross-slope and/or grade before pulverizing. Locations will be shown on the plans or described in the construction notes. The Resident may add other locations while construction of the project is in progress. The Contractor will use recycled material to the extent it is available, in lieu of new aggregate. The material shall then be pulverized, processed, and blended into a homogeneous mass passing a 2 inch square mesh sieve. Material found not pulverized down to a 2 inch size will be required to be reprocessed by the recycler with successive passes until approved by the Resident.

Should the Contractor be required to add new aggregate or recycled material to restore cross-slope and/or grade after the initial pulverizing process, those areas will require re-processing to blend into a homogenous mass passing a 2 in square mesh sieve.

Sufficient water shall be added during the recycling process to maintain optimum moisture for compaction.

The resultant material from the initial pulverizing processes shall be graded and compacted to the cross-slope and profile shown on the plans or as directed by the Resident. The Contractor will also be responsible for re-establishing the existing profile grade. The completed surface of the full depth recycled course shall be shaped and maintained to a tolerance, above or below the required cross sectional shape, of ⅜ inch. Areas not meeting this tolerance will be repaired as described in Section 307.091. The initial pulverizing process density requirements will be the same as Section 307.101 unless otherwise directed by the Resident.

Additives, if required, shall be introduced following completion of the initial pulverizing and blending process. Emulsified asphalt stabilizer shall be incorporated into the top of the processed material as specified in section 307.04 to the depth specified in the contract by use of the liquid mixer unit or a distributor, at the rate specified in the mix design. The emulsified asphalt shall then be uniformly blended into a homogeneous mass until an apparent uniform distribution has occurred. The rate of application may be adjusted as necessary by the Resident. Cement or lime shall be introduced as described in section 307.041. The resultant material shall be graded and compacted to the cross-slope and profile shown on the plans or as directed by the Resident. The Contractor will also be responsible for re-establishing the existing profile grade.

After final compaction, the roadway surface shall be treated with a light application of water, and rolled with pneumatic-tired rollers to create a close-knit texture. The finished layer shall be free from:

A. Surface laminations.
B. Segregation of fine and coarse aggregate.
C. Corrugations, centerline differential, potholes, or any other defects that may adversely affect the performance of the layer, or any layers to be placed upon it.

The Contractor shall protect and maintain the recycled layer until a lift of pavement is applied. Any damage or defects in the layer shall be repaired immediately. An even and uniform surface shall be maintained. The recycled surface shall be swept prior to hot mix asphalt overlay placement.

307.091 Repairs **Repairs and maintenance of the recycled layers, resulting from damage caused by traffic, weather or environmental conditions, or resulting from damage caused by the Contractor's operations or equipment, shall be completed at no additional cost to the Department.**

For recycled layers stabilized with emulsified asphalt, low areas will be repaired using a hot mix asphalt shim. Areas up to 1 inch high can be repaired by milling or shimming with hot mix asphalt. Areas greater than 1 inch high will be repaired using a hot mix asphalt shim. All repair work will be done with the Resident's approval at the Contractor's expense.

TESTING REQUIREMENTS

<u>307.10 Quality Control</u> The Contractor shall operate in accordance with the approved Quality Control Plan (QCP) to assure a product meeting the contract requirements. The QCP shall meet the requirements of Section 106.4 - Quality Control and this Section. The Contractor shall not begin recycling operations until the Department approves the QCP in writing.

Prior to performing any recycling process, the Department and the Contractor shall hold a Pre-recycle conference to discuss the recycling schedule, type and amount of equipment to be used, sequence of operations, and traffic control. A copy of the QC random numbers to be used on the project shall be provided to the Resident. All field supervisors including the responsible onsite recycling process supervisor shall attend this meeting.

The QCP shall address any items that affect the quality of the Recycling Process including, but not limited to, the following:

- **A. Sources for all materials, including New Aggregate and Additional Recycled Material.**
- **B. Make and type of rollers including weight, weight per inch of steel wheels, and average contact pressure for pneumatic tired rollers.**
- **C. Testing Plan.**
- **D. Recycling operations including recycling speed, methods to ensure that segregation is minimized, grading and compacting operations.**
- **E. Methods for protecting the finished product from damage and procedures for any necessary corrective action.**
- **F. Method of grade checks.**
- **G. Examples of Quality Control forms.**
- **H. Name, responsibilities, and qualifications of the Responsible onsite Recycling Supervisor experienced and knowledgeable with the process.**
- **I. A note that all testing will be done in accordance with AASHTO and MDOT/ACM procedures.**

The Project Superintendent shall be named in the QCP, and the responsibilities for successful implementation of the QCP shall be outlined.

The Contractor shall sample, test, and evaluate the full depth reclamation process in accordance with the following minimum frequencies:

MINIMUM QUALITY CONTROL FREQUENCIES

Test or Action	Frequency	Test Method
Density	1 per 1000 feet / lane	AASHTO T 310
Air Temperature	4 per day at even intervals	
Surface Temperature	At the beginning and end of each days operation	
Yield of all materials (Daily yield, yield since last test, and total project yield.)	1 per 1000 ft/lane	

The Department may view any QC test and request a QC test at any time. The Contractor shall submit all QC test reports and summaries in writing, signed by the appropriate technician, to the Department's onsite representative by 1:00 P.M. on the next working day, except when otherwise noted in the QCP due to local restrictions. The Contractor shall make all test results, including randomly sampled densities, available to the Department onsite.

The Contractor shall cease recycling operations whenever one of the following occurs:

A. The Contractor fails to follow the approved QCP.
B. The Contractor fails to achieve 98 percent density after corrective action has been taken.
C. The finished product is visually defective, as determined by the Resident.
D. The computed yield differs from the mix design by 10 percent or more.

Recycling operations shall not resume until the Department approves the corrective action to be taken.

<u>307.101 Test Strip</u> The contractor shall assemble all items of equipment for the recycling operation on the first day of the recycling work. The Contractor shall construct a test strip for the project at a location approved by the Resident. The Responsible onsite Recycling Supervisor will work with Department personnel to determine the suitability of the mixed material, moisture control within the mixed material, and compaction and surface finish. The test strip section is required to:

A. Demonstrate that the equipment and processes can produce recycled layers to meet the requirements specified in these special provisions.
B. Determine the effect on the gradation of the recycled material by varying the forward speed of the recycling machine and the rotation rate of the milling drum.
C. Determine the optimum moisture necessary to achieve proper compaction of the recycled layer.
D. Determine the sequence and manner of rolling necessary to obtain the compaction requirements and establish a target density. The Contractor and the Department will both conduct testing with their respective gauges at this time.

The test strip shall be at least 300 feet in length of a full lane-width (or a half-road width).

Full recycling production will not start until a passing test strip has been accomplished. If a test strip fails to meet the requirements of this specification, the Contractor will be required to repair or replace the test strip to the satisfaction of the Resident. Any repairs, replacement, or duplication of the test strip will be at the Contractor's expense.

After the test strip has been pulverized, and the roadway brought to proper shape, the Contractor shall add water until it is determined that optimum moisture has been obtained. The test strip shall then be rolled using the specified compaction equipment as directed until the density readings show an increase in dry density of less than 1 pcf for the final four roller passes of each roller. The Contractor and Department will each determine a target density using their respective gauges by performing several additional density tests and averaging them. The average of these tests will be used as the target density of the recycled material for QC and Acceptance purposes.

Following completion of the test strip, compaction of the material shall continue until a density of not less than 98 percent of the test strip target density has been achieved for the full width and depth of the layer. During the construction and compaction of the Full Depth Recycled base, should three consecutive Acceptance test results for density fail to meet a minimum of 95 percent of the target density, or exceed 102 percent of target density, a new test strip shall be constructed.

ACCEPTANCE TEST FREQUENCY

Property	Frequency	Test Method
In-place Density	1 per 2000 ft / lane	AASHTO T 310

308.102 Curing. No new pavement shall be placed on the full depth recycled pavement until curing has reduced the moisture content to 1 percent or less by total weight of the mixture, or a curing period of 4 days has elapsed, whichever comes first.

307.11 Method of Measurement Full Depth Recycled Pavement (Untreated or Treated with Emulsified Asphalt Stabilizer) will be measured by the square yard.

307.12 Basis of Payment The accepted quantity of Full Depth Recycled Asphalt Pavement (Untreated or Treated with Emulsified Asphalt Stabilizer) will be paid for at the contract unit price per square yard, complete in-place which price will be full compensation for furnishing all equipment, materials and labor for pulverizing, blending, placing, grading, compacting, and for all incidentals necessary to complete the work.

The addition of materials to restore profile grade and/or cross-slope in areas shown on the plans or described in the construction notes will be paid separately under designated pay items within the contract. No additional payment will be made for materials salvaged from the project.

Payments will be made under:

Pay Item	Pay Unit
307.331 Full Depth Recycled Pavement (Untreated)	**Square Yard**
307.332 Full Depth Recycled Pavement (with Emulsified Asphalt Stabilizer) 5 in. depth	**Square Yard**
307.333 Full Depth Recycled Pavement (with Emulsified Asphalt Stabilizer) 6 in. depth	**Square Yard**

SECTION 411
UNTREATED AGGREGATE SURFACE COURSE

411.02 – Aggregate Add the following to the end of the first sentence: **"- Type A"**

SECTION 501
FOUNDATION PILES

501.05 – Method of Measurement

b. Piles Furnished – After the second sentence, add the sentence **"Measurement will not include any pile tips"**.

c. Piles in Place – Add the sentence to the end of the second paragraph, **"Measurement will include the pile tips"**.

d. Pile Tips – Add the words "**on the Pile**" to the end of the sentence.

SECTION 502
STRUCTURAL CONCRETE

502.05 Composition and Proportioning

Replace Table 1 with

TABLE 1

Concrete CLASS	Minimum Compressive Strength (PSI)	Permeability as indicated by Surface Resistivity (KOhm-cm)	Entrained Air (%)		Notes
		LSL	LSL	USL	
S	3,000	N/A	N/A	N/A	4,5
A	4,000	14	6.0	9.0	1,4,5
P	-----	-----	5.5	7.5	1,2,3,4
LP	5,000	17	6.0	9.0	1,4,5
Fill	3,000	N/A	6.0	9.0	4,5

In the list of information submitted by the contractor for a mix design:

Item J Replace "Target Coulomb Value." with "Target KOhm-cm Value."

Note #1 - Remove, **"…Standard Specification Section 711.05, Protective Coating for Concrete Surfaces, and per the manufacturer's recommendations, at no additional cost to the Department."** and replace with, **"…Standard Specification Section 515, Protective Coating for Concrete Surfaces, at no additional cost to the Department."**

502.1703 Acceptance Methods A and B

In the paragraph that starts with "The Department will take Acceptance…" Remove the word chloride from chloride permeability in the last sentence.

Replace the paragraph starting with "Rapid Chloride Permeability specimens…" With the following:

"Surface Resistivity specimens will be tested by the Department in accordance with AASHTO TP-95 at an age ≥ 56 days. Four 4 inch x 8 inch cylinders will be cast per sublot placed. The average of three concrete specimens per sublot will constitute a test result and this average will be used to determine the permeability for pay adjustment computations."

502.1706 Acceptance Method C

Remove in its entirety and Replace with:

502.1706 Acceptance Method C The Department will determine the acceptability of the concrete through Acceptance testing. Acceptance tests will include compressive strength, air content and permeability. Method C concrete not meeting the requirements listed in Table 1 shall be removed and replaced at no cost to the Department. At the Department's sole discretion, material not meeting requirements may be left in place and paid for at a reduced price as described in Section 502.195.

502.1707 Resolution of Disputed Acceptance Test Results
Section B

Remove "Rapid Chloride" from the section heading.
In paragraph 4 replace T-277 with TP-95

502.192 Pay Adjustment for Chloride Permeability
Remove "Chloride" from the heading and from the first sentence.

Replace the sentence that starts with "values greater than…" and replace with "values less than 10 KOhms-cm for Class A concrete or 11 KOhms-cm for Class LP concrete shall be subject to rejection and replacement, at no additional cost to the Department."

502.194 Pay Adjustments for Compressive Strength, Chloride Permeability and Air Content, Methods A and B

Remove the word "Chloride" from the section heading and from the equation for CPF.

502.195 Pay Adjustment Method C

In Table 6: Method C Pay Reductions (page 5-53)
Under "Entrained Air" for "Class Fill", in the first line,
change from "< 4.0 (Removal)" to **"< 4.5 (Removal)**"

In Table 6: Method C PAY REDUCTIONS, revise the Chloride Permeability section by removing it in its entirety and replacing it with:

Surface Resistivity {Permeability in Kohm-cms and Pay Reduction per CY}			
15-16 ($50)	13 ($25)	N/A	N/A
13-14 ($75)	12($50)	N/A	N/A
12 ($100)	11 ($75)	N/A	N/A
11 ($125)	10 ($100)	N/A	N/A
< 11 (Removal)	< 10 (Removal)	N/A	N/A

SECTION 504
STRUCTURAL STEEL

504.26 Welding Remove the second paragraph beginning with "The range of heat…." in its entirety.

504.29 Welding ASTM A 709 HPS 70W Steel. Remove the third paragraph beginning with "Make Weld runoff tabs…" in its entirety.

SECTION 527
ENERGY ABSORBING UNIT

527.02 Materials This section is revised to read as follows.

527.02 Materials Work Zone Crash Cushions must comply with NCHRP Report 350. Work Zone Crash Cushions shall be selected from MaineDOT's Qualified Products List of Crash Cushions / Impact Attenuators, or an approved equal.

Acceptance Testing of Precast/Prestressed Concrete
Suggested Revisions to the Standard Specification to Require Acceptance Testing to be done by Representatives of the MaineDOT

SECTION 534
PRECAST STRUCTURAL CONCRETE

534.14 Process Control Test Cylinders

Revise this subsection to read:

"**534.14 Acceptance and Quality Control Testing of Concrete Refer to Section 712.061**."

SECTION 535
PRECAST, PRESTRESSED CONCRETE SUPERSTRUCTURE

Section 535.08 – Quality Assurance

Revise the second paragraph to read:

"The QAI will perform acceptance sampling and testing and will witness or review documentation, workmanship and testing to assure the Work is being performed in accordance with the Contract Documents."

Section 535.15 - Process Control Test Cylinders

Revise the first paragraph to read:

"535.15 Acceptance and Quality Control Testing of Concrete Acceptance of structural precast/prestressed units, for each day's production, will be determined by the Department, based on compliance with this specification and satisfactory concrete testing results. At least once per week, the QAI will make 2 concrete cylinders (6 cylinders when the Contract includes permeability requirements) for use by the Department; cylinders shall be standard cured in accordance with AASHTO T23 (ASTM C31). The QAI will perform entrained air content and slump flow testing, determine water-cement ratio and determine temperature of the sampled concrete at the time of cylinder casting. All testing equipment required by the QAI to perform this testing shall be provided in accordance with Standard Specification Section 502.041, Testing Equipment. In addition, the Contractor shall provide a slump cone meeting the requirements of AASHTO T 119. Providing and maintaining testing and curing equipment shall be considered incidental to the work and no additional payment will be made."

Insert the following as the second paragraph of Section 535.15:

"Quality Control concrete test cylinders shall be made for each day's cast and each form bed used. Cylinders tested to determine strand release strength and design strength shall be field cured in accordance with AASHTO T23 (ASTM C31). 28 day cylinders shall be standard cured. Record unit identification, entrained air content, water-cement ratio, slump flow and temperature of the sampled concrete at the time of cylinder casting."

SECTION 604
MANHOLES, INLETS CATCH BASINS

604.04 Adjusting Catch Basins and Manholes**,**

Add the following paragraph to the end of 604.04 b:

The Department will allow the use of metal ring inserts set into the manhole top frame or composite risers placed beneath the manhole frame to adjust manhole slope and grade for paving projects. The use of metal ring inserts shall be in accordance with 604.04 d. Ring Insert Requirements. The use of composite risers shall be in accordance with 604.04 e. Composite Riser Requirements.

Add the following paragraph after the first paragraph of 604.04 c:

The Department will allow the use of metal ring inserts set into the manhole top frame or composite risers placed beneath the manhole frame to adjust manhole slope and grade for paving projects. The use of metal ring inserts shall be in accordance with 604.04 d. Ring Insert Requirements. The use of composite risers shall be in accordance with 604.04 e. Composite Riser Requirements.

Add the following sections to 604.04:

d. Ring Insert Requirements Ring inserts to adjust manhole top frame slope and grade will are allowed in accordance with the following requirements:

1) **Materials**

   i. **All ring inserts must be made of iron. *Multiple ring inserts will not be allowed.* The single ring insert may be any height up to a maximum of 2 inches tall.**

   ii. **Ring inserts shall not be welded to the manhole frame to prevent brittle failure of the cast iron frame.**

iii. **Ring inserts shall be fastened to the manhole frame using liquid steel-filled epoxy such as Loctite Fixmaster Steel Liquid or equivalent. The epoxy shall be installed in accordance with the manufacturer's recommendations.**

2) **Where Ring Inserts May/May Not Be Used**

i. **MaineDOT will allow the use of a single manhole ring insert to raise manholes on state and state-aid highways.**

ii. ***Manhole ring inserts may not be used along state and state-aid highway sections where the speed limit is 40 miles per hour or more.*** **The standard brick and mortar or flat composite risers beneath the manhole frame must be used at these locations.**

3) **Construction Requirements For The Use of Iron Manhole Ring Inserts**

i. **Wherever iron ring inserts are used to raise manhole top elevations, the rings shall be fastened to the existing manhole frame using liquid steel-filled epoxy. The liquid steel-filled epoxy shall be placed evenly around the entire manhole frame before placing the ring insert.** ***Unbonded ring inserts will not be allowed.*** **If the manufacturer's recommended construction practices result in loose or unacceptable manhole cover restraint, standard brick and mortar or flat composite risers beneath the manhole frame must be used at these locations.**

e. Composite Riser Requirements **Flat or beveled, doughnut-shaped, composite risers placed beneath the manhole frame to adjust slope and grade are allowed. The composite riser shall be fastened to both the top of the concrete cone and bottom of the manhole frame with the manufacturer's recommended epoxy. Composite risers may be used at all locations on state and state-aid highways under any legal speed limit without restriction.**

SECTION 606
GUARDRAIL

606.09 Basis of Payment Amend the first sentence of the eighth paragraph of this subsection by removing the word "meter" and replace it with "linear foot".

SECTION 619
MULCH

619.07 Basis of Payment
In the list of Pay Items add "**619.12 Mulch**" with a Pay Unit of " **Unit** ".
Change the description of 619.1201 from "Mulch" to "**Mulch – Plan Quantity**"

In the list of Pay Items add "**619.13 Bark Mulch**" with a Pay Unit of " **CY** ".

Change the description of 619.1301 from "Bark Mulch" to "**Mulch – Plan Quantity**"

In the list of Pay Items add "**619.14 Erosion Control Mix**" with a Pay Unit of " **CY** ".
Change the description of 619.1401 from "Erosion Control Mix" to "**Mulch – Plan Quantity**"

SECTION 621
LANDSCAPING

621.0002 Materials - General
In the list of items change "Organic Humus" to "**Humus**".

621.0019 Plant Pits and Beds
c Class A Planting
In the third paragraph beginning with " The plant pit…" change "½ inch" to "**1 inch**"

SECTION 626
FOUNDATIONS, CONDUIT AND JUNTION BOXES FOR HIGHWAY SIGNING, LIGHTING AND SIGNALS

626.033 Polyvinylchloride Conduit Installation Amend the following subsection by adding the following paragraph to its end:

"NON-METALLIC UNDER PAVEMENT CONDUIT INSTALLATION

Where noted on the drawings, non-metallic under pavement conduit of schedule 80 or greater rating shall be provided to facilitate conduit crossing of the existing highway and ramps without disruption to the existing highway and ramp pavement surface. The non-metallic under pavement conduit shall be hydraulically jacked or directional bored below the highway and ramp at a depth of not less than (36 inches). Under pavement conduit shall extend for a distance of (10 feet) beyond the highway or ramp edge at each side."

626.034 Concrete Foundations
On Page 6-85, add the following paragraph before the paragraph beginning with "Drilled shafts shall not be…".

" No foundation design will be required for 18- and 24-inch diameter foundations for structures less than 30-feet tall and with no projecting arms. A foundation design prepared by a Professional Engineer licensed in accordance with the laws of the State of Maine will be required for all other foundations Precast foundations will be permitted for 18 and 24-inch diameter foundations for structures less than 30-feet tall and with no projecting arms. Where precast foundations are permitted flowable concrete fill shall be used as backfill in the annular space, and placed from the bottom up. Construction of precast foundations shall conform to the Standard Details and all requirements of Section 712.061 except that the concrete shall have a minimum permeability of 17 kOhm-cm and the use of calcium nitrite will not be required. "

On Page 6-86, add the following to the paragraph beginning with "Concrete for drilled shafts…" so that it reads as follows:

"….The Contractor shall provide temporary dewatering of excavations for foundations such that concrete is placed in the dry. **Concrete for drilled shafts shall be placed in accordance with Section 502.10 as temporary casing is withdrawn to prevent debris from contaminating the foundation and to ensure concrete is cast against the surrounding soil. Concrete for drilled shafts and spread footings shall be Class A in accordance with Section 502 - Structural Concrete. Precast foundations will not be permitted except as specified above in this Section.** Backfill for spread footing foundations shall be Gravel Borrow meeting the requirements of Section 703.20 - Gravel Borrow….."

626.05 Basis of Payment Amend this subsection by adding the following paragraph and Pay Item:

"**Payment will be made for the total number of (linear feet) of under pavement conduit actually furnished, installed and accepted at the contract price per (linear foot). This price shall include the cost of: furnishing and installing the conduit; excavating; furnishing special backfilling materials, pull wire, fittings, grounding and bonding; test cleaning interiors of conduits and all materials, labor, equipment and incidentals necessary to complete the work**."

Pay Item	**Pay Unit**
626.251 Non-Metallic Under pavement Conduit (Schedule 80 or greater rating)	(Linear Foot)

SECTION 627
PAVEMENT MARKINGS

627.10 Basis of Payment Remove the existing "627.78 Temporary Pavement Marking Line, White or Yellow" and replace with: **627.78 TEMP 4" PAINT PVMT MARK LINE W OR Y LF**

SECTION 652
MAINTENANCE OF TRAFFIC

652.3 Submittal of Traffic Control Plan On page **6-148**, note **f,** in the last sentence revise the "105.2.2" to "105.2.3" so that the last sentence reads, "**For a related provision, see Section 105.2.3 – Project Specific Emergency Planning**.".

652.3.4 General Revise the eighth paragraph by removing "Earth Berm" and replace it with "**Concrete Barrier**".

652.4 Flaggers In the first paragraph, revise the fifth sentence which says:

For nighttime conditions, Class 3 apparel, meeting ANSI 107-2004, shall be worn along with a hardhat with 360˚ retro-reflectivity.

So that it reads:

For nighttime conditions, Class 3 apparel, meeting ANSI 107-2004, including a Class 3 top (vest, shirt or jacket) and a Class E bottom (pants or coveralls), shall be worn along with a hardhat with 360 ˚ retro-reflectivity.

652.41 TRAFFIC OFFICERS
Revise this subsection so that the subsection number and title is
"**652.4.1 TRAFFIC OFFICERS** "

SECTION 656
TEMPORARY SOIL EROSION AND WATER POLLUTION CONTROL

656.5.2 If No Pay Item Add the following to the end of the first paragraph:
"Failure by the Contractor to follow Standard Specification or Special Provision - Section 656 will result in a violation letter and a reduction in payment as shown in the schedule list in 656.5.1. The Department's Resident or any other representative of The Department reserves the right to suspend the work at any time and request a meeting to discuss violations and remedies. The Department shall not be held responsible for any delay in the work due to any suspension under this item."

SECTION 660
ON-THE-JOB TRAINING

660.06 Method of Measurement

Remove the first sentence in its entirety and replace with " **The OJT item will be measured by the number of OJT hours by a trainee who has successfully completed an approved training program.**"

660.07 Basis of payment to the Contractor
Remove the last word in the first sentence so that the first sentence reads " The OJT shall be paid for once successfully completed at the contract unit price per **hour**."

Payment will be made under
Change the Pay Item from "660.22" to "**660.21**" and change the Pay Unit from "Each" to "**Hour**".

SECTION 674
PREFABRICATED CONCRETE MODULAR GRAVITY WALL

674.02 Materials
Amend this section by adding the following after "Concrete Units:" and before the paragraph beginning with "Tolerances ".

Concrete shall be Class P. The concrete shall contain a minimum of 5.5 gallons per cubic yard of calcium nitrite solution.

The minimum permeability of the concrete as indicated by Surface Resistivity shall be 17 KOhm-cm.

Defects Defects which may cause rejection of precast units include, but are not limited to, the following:

Any discontinuity (crack, rock pocket, etc.) of the concrete which could allow moisture to reach the reinforcing steel.
Rock pockets or honeycomb over 6 square inches in area or over 1 inch deep.
Edge or corner breakage exceeding 12 inches in length or 1 inch in depth.
Any other defect that clearly and substantially impacts the quality, durability, or maintainability of the structure, as determined by the Fabrication Engineer.

Repair honeycombing, ragged or irregular edges and other non-structural or cosmetic defects using a patching material from the MaineDOT Qualified Products List (QPL). The repair, including preparation of the repair area, mixing and application and curing of the patching material, shall be in accordance with the manufacturer's product data sheet. Corners that are not exposed in the final product may be ground smooth with no further repair necessary if the depth of the defect does not exceed 1/2 inch. Remove form ties and other hardware to a depth of not less than 1 inch from the face of the concrete and patch the holes using a patching material from the MaineDOT QPL.

Repair structural defects only with the approval of the Fabrication Engineer. Submit a nonconformance report (NCR) to the Fabrication Engineer with a proposed repair procedure. Do not perform structural repairs without an NCR that has been reviewed by the Fabrication Engineer. Structural defects include, but are not be limited to, exposed reinforcing steel or strand, cracks in bearing areas, through cracks and cracks 0.013 inch in width that extend more than 12 inches in length in any direction. Give the QAI adequate notice prior to beginning any structural repairs.

SECTION 677

On page 6 - 203 change “636.041” to “677.041”

SECTION 703
AGGREGATES

703,0201 Alkali Silica Reactive Aggregates
Remove this section in its entirety and replace with the following:

703.0201 Alkali Silica Reactive Aggregates. All coarse and fine aggregates proposed for use in concrete shall be tested for Alkali Silica Reactivity (ASR) potential under AASHTO T 303 (ASTM C 1260), Accelerated Detection of Potentially Deleterious Expansion of Mortar Bars Due to Alkali-Silica Reaction, prior to being accepted for use. Acceptance will be based on testing performed by an accredited independent lab submitted to the Department. Aggregate submittals will be required on a 5-year cycle, unless the source or character of the aggregate in question has changed within 5 years from the last test date.
As per AASHTO T 303 (ASTM C 1260): Use of a particular coarse or fine aggregate will be allowed with no restrictions when the mortar bars made with this aggregate expand less than or equal to 0.10 percent at 30 days from casting. Use of a particular coarse or fine aggregate will be classified as potentially reactive when the mortar bars made with this aggregate expand greater than 0.10 percent at 30 days from casting. Use of this aggregate will only be allowed with the use of cement-pozzolan blends and/or chemical admixtures that result in mortar bar expansion of less than 0.10 percent at 30 days from casting as tested under ASTM C 1567.

Acceptable pozzolans and chemical admixtures that may be used when an aggregate is classified as potentially reactive include, but are not limited to the following:

Class F Coal Fly Ash meeting the requirements of AASHTO M 295.
Ground Granulated Blast Furnace Slag (Grade 100 or 120) meeting the requirements of AASHTO M 302.

Densified Silica Fume meeting the requirements of AASHTO M 307.
Lithium based admixtures
Metakaolin

Pozzolans or chemical admixtures required to offset the effects of potentially reactive aggregates will be incorporated into the concrete at no additional cost to the Department.

703.06 Aggregate for Base and Subbase - Remove the first two paragraphs in their entirety and replace with these:

"**The following shall apply to Sections (a.) and (c.) below. The material shall have a Micro-Deval value of 25.0 or less as determined by AASHTO T 327. If the Micro- Deval value exceeds 25.0, the Washington State Degradation DOT Test Method T113, Method of Test for Determination of Degradation Value (January 2009 version) shall be performed, except that the test shall be performed on the portion of the sample that passes the ½ in sieve and is retained on the No. 10 sieve. If the material has a Washington Degradation value of less than 15, the material shall be rejected.**

The material used in Section (b.) below shall have a Micro-Deval value of 25.0 or less as determined by AASHTO T 327. If the Micro-Deval value exceeds 25.0 the material may be used if it does not exceed 25 percent loss on AASHTO T 96, Resistance to Degradation of Small-Size Coarse Aggregate by Abrasion and Impact in the Los Angeles Machine. "

703.19 Granular Borrow

Remove the gradation requirements table, and replace with the following:

Sieve Designation	Percentage by Weight Passing Square Mesh Sieves	
	Material for Underwater Backfill	Material for Embankment Construction
6 inch	100	
No. 40	0-70	0-70
No. 200	0-7.0	0-20.0

703.33 Stone Ballast - In the third paragraph, remove the words " less than" before 2.60 and add the words "**or greater**" after 2.60.

SECTION 712
MISCELLANEOUS HIGHWAY MATERIAL

Section 712.061- Structural Precast Concrete Units

Under the heading, Quality Control and Quality Assurance, revise the fourth paragraph to read:

"Acceptance is the prerogative of the Department. The Department will conduct Quality Assurance (QA) in accordance with Standard Specification Subsection 106.5. Testing deemed necessary by the Department that is in addition to the minimum testing requirements will be scheduled to minimize interference with the production schedule. The QAI will perform acceptance sampling and testing and will witness or review documentation, workmanship and testing to assure the Work is being performed in accordance with the Contract Documents."

Under the heading, Concrete Testing, revise the first paragraph to read as the following two paragraphs:

"Concrete Testing Acceptance of structural precast units, for each day's production, will be determined by the Department, based on compliance with this specification and satisfactory concrete testing results. At least once per week, the QAI will make 2 concrete cylinders (6 cylinders when the Contract includes permeability requirements) for use by the Department; cylinders shall be standard cured in accordance with AASHTO T23 (ASTM C31). The QAI will perform entrained air content and slump flow testing, determine water-cement ratio and determine temperature of the sampled concrete at the time of cylinder casting. All testing equipment required by the QAI to perform this testing shall be in accordance with Standard Specification Section 502.041, Testing Equipment. In addition, the Contractor shall provide a slump cone meeting the requirements of AASHTO T 119. Providing and maintaining testing and curing equipment shall be considered incidental to the work and no additional payment will be made.

Quality Control test cylinders shall be made and tested in accordance with the following standards:

AASHTO T 22 (ASTM C39) Test Method for Compressive Strength of Cylindrical Concrete Specimens
AASHTO T23 (ASTM C31) Practice for Making and Curing Concrete Test Specimens in Field
AASHTO T141 (ASTM C172) Practice for Sampling Freshly Mixed Concrete
AASHTO T152 (ASTM C231) Test Method for Air Content of Freshly Mixed Concrete by the Pressure Method
AASHTO T196 (ASTM C173) Standard Test Method for Air Content of Freshly Mixed Concrete by the Volumetric Method
ASTM C1064 Test Method for Temperature of Freshly mixed Portland Cement Concrete
ASTM C1611 Standard Test Method for Slump Flow of Self-Consolidating Concrete"

Under the heading, Concrete Testing, **delete** the paragraph that begins:
"At least once per week, the Contractor shall make 2 concrete cylinders..…for use by the Department….."

SECTION 717
ROADSIDE IMPROVEMENT MATERIAL

717.02 Agricultural Ground Limestone

In the table after the third paragraph which starts with "Liquid lime…" change the Specification for Nitrogen (N) from "15.5 percent of which 1% is from ammoniac nitrogen and 14.5 /5 is from Nitrate Nitrogen" to read "**15.5 % of which 1% is from Ammoniacal Nitrogen and 14.5 % is from Nitrate Nitrogen**"

Environmental Summary Sheet

WIN: 18994.40 **Date Submitted: 4/15/16**
Town: Region 4 (crack sealing)
CPD Team Leader: Colin Greenan
ENV Field Contact: Rob Chester

NEPA Complete: No FHWA funds, no NEPA

☒ **Section 106**
No Federal Action
Section 106 Resources: None

☒ **Section 4(f) and 6(f)**
Section 4(f)
Review Complete- No USDOT $
Section 6(f)
Not Applicable

☒ **Maine Department of Inland Fisheries and Wildlife Essential Habitat**

Not Applicable Timing Window: Not Applicable

☒ **Section 7**
No Effect
Species of Concern:
Comments/References: No tree clearing/no in-water work proposed

☒ **Essential Fish Habitat**
No Effect-No in-water work

☒ **Maine Department of Conservation/Public Lands, Submerged Land Lease**
Not Applicable

☒ **Maine Land Use Regulation Commission**

**Applicable Standards and Permits are included with the contract*

☒ **Maine Department of Environmental Protection**
Not Applicable - No in-water work
**Applicable Standards and Permits are included with the contract*

☒ **Army Corps of Engineers, Section 10 of the Rivers and Harbors Act and Section 404 of the Clean Water Act.**
Not Applicable - No in-water work
**Applicable Standards and Permits are included with the contract*

☒ **Stormwater Review**
N/A

☒ **Special Provisions Required**

Special Provision 105-Timing of Work Restriction	N/A☒	Applicable☐
Special Provision 656-Minor Soil Disturbance	**N/A☐**	**Applicable☒**
Standard Specification 656-Erosion Control Plan	N/A☒	Applicable☐
Special Provision 203-Dredge Spec	N/A☒	Applicable☐
General Note for Hazardous Waste	N/A☒	Applicable☐
Special Provision 203-Hazardous Waste	N/A☒	Applicable☐
Special Provision 105.9	N/A☒	Applicable☐

**All permits and approvals based on plans/scope as of: 4/6/16*