Updated 10/15/15

FEDERAL PROJECT

Effective November 05, 2014
Supersedes January 19, 2012

BIDDING INSTRUCTIONS

FOR ALL PROJECTS:

1. Use pen and ink to complete all paper Bids.
2. As a minimum, the following must be received prior to the time of Bid opening:

For a Paper Bid:

a) a copy of the Notice to Contractors, b) the completed Acknowledgement of Bid Amendments form, c) the completed Schedule of Items, d) two copies of the completed and signed Contract Offer, Agreement & Award form, e) a Bid Guaranty, (if required), and f) any other certifications or Bid requirements listed in the Bid Documents as due by Bid opening.

For an Electronic Bid:

a) a completed Bid using Expedite® software and submitted via the Bid Express™ web-based service, b) an electronic Bid Guaranty (if required) or a faxed copy of a Bid Bond (with original to be delivered within 72 hours), and c) any other Certifications or Bid requirements listed in the Bid Documents as due by Bid opening.

3. Include prices for all items in the Schedule of Items (<u>excluding non-selected alternates</u>).
4. Bid Guaranty acceptable forms are:
   a) a properly completed and signed Bid Bond on the Department's prescribed form (or on a form that does not contain any significant variations from the Department's form as determined by the Department) for 5% of the Bid Amount or
   b) an Official Bank Check, Cashier's Check, Certified Check, U.S. Postal Money Order or Negotiable Certificate of Deposit in the amount stated in the Notice to Contractors or
   c) an electronic bid bond submitted with an electronic bid.

5. If a paper Bid is to be sent, "FedEx First Overnight" delivery is suggested as the package is delivered directly to the DOT Headquarters Building located at 16 Child Street in Augusta. Other means, such as U.S. Postal Service's Express Mail has proven not to be reliable.

IN ADDITION, FOR FEDERAL AID PROJECTS:

6. Complete the DBE Proposed Utilization form, and submit with your bid. If you are submitting your bid electronically, you must FAX the form to (207) 624-3431. This is a curable defect.

If you need further information regarding Bid preparation, call the DOT Contracts Section at (207) 624-3410.

For complete bidding requirements, refer to Section 102 of the Maine Department of Transportation, Standard Specifications, November 2014 Edition.

October 15, 2015
Supersedes November 05, 2014

NOTICE

The Maine Department of Transportation is attempting to improve the way Bid Amendments/Addendums are handled, and allow for an electronic downloading of bid packages from our website, while continuing to maintain an optional plan holders list.

Prospective bidders, subcontractors or suppliers who wish to download a copy of the bid package and receive a courtesy notification of project specific bid amendments must fill out the on-line plan holder registration form and provide an email address to the MDOT Contracts mailbox at: MDOT.contracts@maine.gov. Each bid package will require a separate request.

Additionally, interested parties will be responsible for reviewing and retrieving the Bid Amendments from our web site, and acknowledging receipt and incorporating those Bid Amendments in their bids using the Acknowledgement of Bid Amendment Form.

The downloading of bid packages from the MDOT website is not the same as providing an electronic bid to the Department. Electronic bids must be submitted via http://www.BIDX.com. For information on electronic bidding contact Robert Skehan at robert.skehan@maine.gov , Rebecca Snowden at rebecca.snowden@maine.gov or Diane Barnes at diane.barnes@maine.gov.

NOTICE

For security and other reasons, all Bid Packages which are mailed, shall be provided in double (one envelope inside the other) envelopes. The *Inner Envelope* shall have the following information provided on it:

Bid Enclosed - Do Not Open
PIN:
Town:
Date of Bid Opening:
Name of Contractor with mailing address and telephone number:

In Addition to the usual address information, the *Outer Envelope* should have written or typed on it:

Double Envelope: Bid Enclosed
PIN:
Town:
Date of Bid Opening:
Name of Contractor:
This should not be much of a change for those of you who use Federal Express or similar services.

Hand-carried Bids may be in one envelope as before, and should be marked with the following infrormation:

Bid Enclosed: Do Not Open
PIN:
Town:
Name of Contractor:

October 16, 2001

STATE OF MAINE DEPARTMENT OF TRANSPORTATION

Bid Guaranty-Bid Bond Form

KNOW ALL MEN BY THESE PRESENTS THAT_____

_____, of the City/Town of _____and State of_____

as Principal, and _____as Surety, a

Corporation duly organized under the laws of the State of_____and having a usual place of

Business in _____and hereby held and firmly bound unto the Treasurer of

the State of Maine in the sum of_____,for payment which Principal and Surety bind

themselves, their heirs, executers, administrators, successors and assigns, jointly and severally.

The condition of this obligation is that the Principal has submitted to the Maine Department of Transportation, hereafter Department, a certain bid, attached hereto and incorporated as a part herein, to enter into a written contract for the construction of _____

_____

_____and if the Department shall accept said bid and the Principal shall execute and deliver a contract in the form attached hereto (properly completed in accordance with said bid) and shall furnish bonds for this faithful performance of said contract, and for the payment of all persons performing labor or furnishing material in connection therewith, and shall in all other respects perform the agreement created by the acceptance of said bid, then this obligation shall be null and void; otherwise it shall remain in full force, and effect.

Signed and sealed this_____day of _____20_____

WITNESS:

_____

_____

_____

WITNESS

_____

_____

_____

PRINCIPAL:

By_____

By:_____

By:_____

SURETY:

By_____

By:_____

Name of Local Agency: _____

SAMPLE

NOTICE

Bidders:

Please use the attached "Request for Information" form when submitting questions concerning specific Contracts that have been advertised for Bid, include additional numbered pages as required. RFI's may be faxed to 207-624-3431, submitted electronically through the Departments web page of advertised projects by selecting the RFI tab on the project details page or via e-mail to RFI-Contracts.MDOT@maine.gov.

These are the only allowable mechanisms for answering Project specific questions. Maine DOT will not be bound to any answers to Project specific questions received during the Bidding phase through other processes.

When submitting RFIs by Email please follow the same guidelines as stated on the "Request for Information" form and include the word "RFI" along with the Project name and Identification number in the subject line.

State of Maine
Department of Transportation

RFI No: _____

REQUEST FOR INFORMATION

Date _____ Time _____

Information Requested for:

WIN(S): _____ Town(s): _____ Bid Date: _____

Question(s):_____

_____

_____

_____

_____

_____

_____

_____

_____

_____

_____

_____

_____

_____

_____

_____

Request by:

Company Name:_____**Phone:(_____)**_____

Email: _____ Fax: (_____)_____

Complete this form and fax to 207-624-3431, Attn: Project Manager (name listed on the "Notice to Contractors"), or Email questions to RFI-Contracts.MDOT@maine.gov, Please include the word "RFI" along with the Project Name and Identification Number in the Subject line, or electronically by using the RFI Tab located on the Individual Projects Detail page.

NOTICE

Disadvantaged Business Enterprise Proposed Utilization

The Apparent Low Bidder shall submit the Disadvantaged Business Enterprise Proposed Utilization form with their bid. This is a curable bid defect.

The Contractor's Disadvantaged Business Enterprise Proposed Utilization Plan form contains additional information that is required by USDOT.

The Contractor's Disadvantaged Business Enterprise Proposed Utilization Plan form should be used.

A copy of the new Contractor's Disadvantaged Business Enterprise Proposed Utilization Plan and instructions for completing it are attached.

Note: Questions about DBE firms, or to obtain a printed copy of the DBE Directory, contact The Office of Civil Rights at (207) 624-3066.

MDOTs DBE Directory of Certified firms can also be obtained at http://www.maine.gov/mdot/civilrights/dbe.htm

INSTRUCTIONS FOR PREPARING THE MaineDOT CONTRACTOR'S DBE/SUBCONTRACTOR UTILIZATION FORM

The Contractor Shall Extend equal opportunity to MaineDOT certified DBE firms (as listed in MaineDOT's DBE Directory of Certified Businesses) in the selection and utilization of Subcontractors and Suppliers.

SPECIFIC INSTRUCTIONS FOR COMPLETING THE FORM:

Insert Contractor name, the name of the person(s) preparing the form, and that person(s) telephone, fax number and e-mail address.

Calculate and provide percentage of your bid that will be allocated to DBE firms, Federal Project Identification Number, and location of the Project work.

In the columns, name each subcontractor, DBE and non-DBE firm to be used, provide the Unit/Item cost of the work/product to be provided by the subcontractor, give a brief description and the dollar value of the work.

Revised 1/12

FHWA DBE GOAL NOTICE FFY 2016-18
Maine Department of Transportation
Disadvantaged Business Enterprise Program

Notice is hereby given that in accordance with US DOT regulation 49 CFR Part 26, the Maine Department of Transportation has established a DBE Program for disadvantaged business participation in the federal-aid highway and bridge construction program; MaineDOT contracts covered by the program include consulting, construction, supplies, manufacturing, and service contracts.

For FFY 2016-18 (October 1, 2015 through September 30, 2018) MaineDOT has established an annual DBE participation goal of **2.0%** to be achieved through race/gender neutral means. This goal has been approved by the Federal Highway Administration and remains in effect through September 30, 2018. Maine DOT must meet this goal each federal fiscal year. If the goal is not met, MaineDOT must provide a justification for not meeting the goal and provide a plan to ensure the goal is met, which may include contract goals on certain projects that contractors will be required to meet.

MaineDOT asks all contractors, consultants and subcontractors to seek certified DBE firms for projects and to work to meet the determined 2.0% goal without the need to impose contract goals. DBE firms are listed on the MaineDOT website at:

http://www.maine.gov/mdot/civilrights/dbe/

Interested parties may view MaineDOT's DBE goal setting methodology also posted on this website. If you have questions regarding this goal or the DBE program you may contact Sherry Tompkins at the Maine Department of Transportation, Civil Rights Office by telephone at (207) 624-3066 or by e-mail at: sherry.tompkins@maine.gov

.

MaineDOT CONTRACTOR'S DBE/SUBCONTRACTOR PROPOSED UTILIZATION FORM

All Bidders must furnish this form with their bid on Bid Opening day

Contractor: _____ **Telephone:** _____ **Ext** _____

Contact Person: _____ **Fax:** _____

E-mail: _____

BID DATE: _____

FEDERAL PROJECT PIN # _____ **PROJECT LOCATION:** _____

TOTAL ANTICIPATED DBE ____ % PARTICIPATION FOR THIS CONTRACT

WBE	DBE	Non DBE	Firm Name	Item Number & Description of Work	Quantity	Cost Per Unit/Item	Anticipated $ Value
						Subcontractor Total>	
						DBE Total >	

NOTE: THIS INFORMATION IS USED TO TRACK AND REPORT ANTICIPATED DBE PARTICIPATION IN ALL FEDERALLY FUNDED MAINE DOT CONTRACTS. THE ANTICIPATED DBE AMOUNT IS VOLUNTARY AND WILL NOT BECOME A PART OF THE CONTRACTUAL TERMS.

Equal Opportunity Use:

Form received: ___/___/___ Verified by: _____

FHWA ☐ FTA ☐ FAA ☐

For a complete list of certified firms and company designation (WBE/DBE) go to http://www.maine.gov/mdot

Rev. 05/13

Maine Department of Transportation Civil Rights Office

Directory of Certified Disadvantaged Business Enterprises

Listing can be found at:

http://www.maine.gov/mdot/civilrights/dbe.htm

For additional information and guidance contact:

Civil Rights Office at (207) 624-3066

It is the responsibility of the Contractor to access the DBE Directory at this site in order to have the most current listing.

Vendor Registration

Prospective Bidders must register as a vendor with the Department of Administrative & Financial Services if the vendor is awarded a contract. Vendors will not be able to receive payment without first being registered. Vendors/Contractors will find information and register through the following link –
http://www.maine.gov/purchases/venbid/index.shtml

STATE OF MAINE DEPARTMENT OF TRANSPORTATION
NOTICE TO CONTRACTORS

Sealed Bids addressed to the Maine Department of Transportation, Augusta, Maine 04333 and endorsed on the wrapper "Bids for **Pavement Milling, Hot Mix Asphalt Overlay with Drainage Improvements in the towns of Sherman, Staceyville, and Patten**" will be received from contractors at the Reception Desk, Maine DOT Building, Capitol Street, Augusta, Maine, until 11:00 o'clock A.M. (prevailing time) on March 30, 2016 and at that time and place publicly opened and read. Bids will be accepted from all bidders. The lowest responsive bidder must have completed, or successfully complete, a Highway Construction, Paving, or project specific prequalification to be considered for the award of this contract. **We now accept electronic bids for those bid packages posted on the bidx.com website. Electronic bids do not have to be accompanied by paper bids. Please note: the Department will accept a facsimile of the bid bond; however, the original bid bond must then be received at the MDOT Contract Section within 72 hours of the bid opening. Until further notice, dual bids (one paper, one electronic) will be accepted, with the paper copy taking precedence.**

Description: Maine Federal Aid Project No. STP-1879(600), WIN 18796.00.

Location: In Aroostook and Penobscot Counties, STP-1879(600) is located on Route 11 beginning at the Grindstone Road in Sherman and extending northerly 9.29 miles to the Shin Pond Road in Patten.

Outline of Work: Pavement Milling, Hot Mix Asphalt Overlay with Drainage Improvements and other incidental work.

For general information regarding Bidding and Contracting procedures, contact George Macdougall at (207) 624-3410. Our webpage at http://www.maine.gov/mdot/contractors/ contains a copy of the Schedule of Items, Plan Holders List, written portions of bid amendments, drawings, bid results and an electronic form for RFI submittal. For Project-specific information fax all questions to **Scott Bickford** at (207) 624-3431, use electronic RFI form or email questions to RFI-Contracts.MDOT@maine.gov, project name and identification number should be in the subject line. Questions received after 12:00 noon of Monday prior to bid date will not be answered. Bidders shall not contact any other Departmental staff for clarification of Contract provisions, and the Department will not be responsible for any interpretations so obtained. TTY users call Maine Relay 711.

Specifications and bid forms may be seen at the Maine DOT Building in Augusta, Maine and at the Department of Transportation's Regional Office in Presque Isle. They may be purchased from the Department between the hours of 8:00 a.m. to 4:30 p.m. by cash, credit card (Visa/MasterCard) or check payable to Treasurer, State of Maine sent to Maine Department of Transportation, Attn.: Mailroom, 16 State House Station, Augusta, Maine 04333-0016. They also may be purchased by telephone at (207) 624-3536 between the hours of 8:00 a.m. to 4:30 p.m. Bid Book $10 ($13 by mail), payment in advance, all non-refundable.

Each Bid must be made upon blank forms provided by the Department and must be accompanied by a bid bond at 5% of the bid amount or an official bank check, cashier's check, certified check, certificate of deposit, or United States postal money order in the amount of **$80,000** payable to Treasurer, State of Maine as a Bid guarantee. A Contract Performance Surety Bond and a Contract Payment Surety Bond, each in the amount of 100 percent of the Contract price, will be required of the successful Bidder.

This Contract is subject to all applicable Federal Laws. This contract is subject to compliance with the Disadvantaged Business Enterprise program requirements as set forth by the Maine Department of Transportation.

All work shall be governed by "State of Maine, Department of Transportation, Standard Specifications, November 2014 Edition," price $10 [$15 by mail], and Standard Details, November 2014 Edition, price $10 [$15 by mail]. They also may be purchased by telephone at (207) 624-3536 between the hours of 8:00 a.m. to 4:30 p.m. Standard Detail updates can be found at http://www.maine.gov/mdot/contractors/publications/ .

The right is hereby reserved to the Maine DOT to reject any or all bids.

Augusta, Maine
March 9, 2016

STATE OF MAINE
Joyce Noel Taylor
6997
LICENSED
PROFESSIONAL ENGINEER

Joyce Noel Taylor

JOYCE NOEL TAYLOR P. E.
CHIEF ENGINEER

NOTICE

All bids for Federal Projects **shall** be accompanied by the DBE Proposed Utilization form. If you are submitting an electronic bid, the DBE Utilization Form may be faxed to 207-624-3431. Failure to submit the form with the bid will be considered a curable defect.

SPECIAL PROVISION 102.7.3
ACKNOWLEDGMENT OF BID AMENDMENTS

With this form, the Bidder acknowledges its responsibility to check for all Amendments to the Bid Package. For each Project under Advertisement, Amendments are located at http://www.maine.gov/mdot/contractors/ . It is the responsibility of the Bidder to determine if there are Amendments to the Project, to download them, to incorporate them into their Bid Package, and to reference the Amendment number and the date on the form below. The Maine DOT will not post Bid Amendments any later than noon the day before Bid opening without individually notifying all the planholders.

Amendment Number	Date

The Contractor, for itself, its successors and assigns, hereby acknowledges that it has received all of the above referenced Amendments to the Bid Package.

CONTRACTOR

_____
Date

_____
Signature of authorized representative

_____
(Name and Title Printed)

Maine Department of Transportation

Proposal Schedule of Items

Proposal ID: 018796.00 Project(s): 018796.00

SECTION: 1 HIGHWAY ITEMS

Alt Set ID: Alt Mbr ID:

Contractor: _____

Proposal Line Number	Item ID Description	Approximate Quantity and Units	Unit Price Dollars	Unit Price Cents	Bid Amount Dollars	Bid Amount Cents
0010	202.202 REMOVING PAVEMENT SURFACE	7,700.000 SY				
0020	202.203 PAVEMENT BUTT JOINTS	2,120.000 SY				
0030	304.16 AGGREGATE BASE COURSE - TYPE C	350.000 CY				
0040	403.102 HOT MIX ASPHALT PAVEMENT - SPECIAL AREAS	10.000 T				
0050	403.209 HOT MIX ASPHALT 9.5 MM (SIDEWALKS, DRIVES, INCIDENTALS)	400.000 T				
0060	403.210 HOT MIX ASPHALT 9.5 MM	13,760.000 T				
0070	403.211 HOT MIX ASPHALT (SHIMMING)	9,000.000 T				
0080	403.213 HOT MIX ASPHALT 12.5 MM BASE	60.000 T				
0090	409.15 BITUMINOUS TACK COAT - APPLIED	10,190.000 G				
0100	411.10 UNTREATED AGGREGATE SURFACE COURSE (TRUCK MEASURE)	370.000 CY				
0110	604.18 ADJUSTING MANHOLE OR CATCH BASIN TO GRADE	49.000 EA				
0120	605.09 6 INCH UNDERDRAIN TYPE B	180.000 LF				

Maine Department of Transportation

Proposal Schedule of Items

Proposal ID: 018796.00 Project(s): 018796.00

SECTION: 1 HIGHWAY ITEMS

Alt Set ID: Alt Mbr ID:

Contractor: _____

Proposal Line Number	Item ID Description	Approximate Quantity and Units	Unit Price Dollars	Unit Price Cents	Bid Amount Dollars	Bid Amount Cents
0130	605.11 12 INCH UNDERDRAIN TYPE C	250.000 LF				
0140	605.12 15 INCH UNDERDRAIN TYPE C	201.000 LF				
0150	609.31 CURB TYPE 3	1,220.000 LF				
0160	615.07 LOAM	40.000 CY				
0170	615.10 DIRTY BORROW	2,550.000 CY				
0180	618.13 SEEDING METHOD NUMBER 1	6.000 UN				
0190	618.14 SEEDING METHOD NUMBER 2	318.000 UN				
0200	619.12 MULCH	324.000 UN				
0210	627.733 4" WHITE OR YELLOW PAINTED PAVEMENT MARKING LINE	149,000.000 LF				
0220	627.75 WHITE OR YELLOW PAVEMENT & CURB MARKING	370.000 SF				
0230	627.78 TEMPORARY 4 INCH PAINTED PAVEMENT MARKING LINE, WHITE OR YELLOW	200,950.000 LF				
0240	629.05 HAND LABOR, STRAIGHT TIME	50.000 HR				

Maine Department of Transportation

Proposal Schedule of Items

Proposal ID: 018796.00 Project(s): 018796.00

SECTION: 1 HIGHWAY ITEMS

Alt Set ID: Alt Mbr ID:

Contractor: _____

Proposal Line Number	Item ID Description	Approximate Quantity and Units	Unit Price Dollars	Unit Price Cents	Bid Amount Dollars	Bid Amount Cents
0250	631.10 AIR COMPRESSOR (INCLUDING OPERATOR)	10.000 HR				
0260	631.11 AIR TOOL (INCLUDING OPERATOR)	10.000 HR				
0270	631.12 ALL PURPOSE EXCAVATOR (INCLUDING OPERATOR)	25.000 HR				
0280	631.133 SKID STEER (INCLUDING OPERATOR)	20.000 HR				
0290	631.172 TRUCK - LARGE (INCLUDING OPERATOR)	40.000 HR				
0300	631.18 CHAIN SAW RENTAL (INCLUDING OPERATOR)	10.000 HR				
0310	631.32 CULVERT CLEANER (INCLUDING OPERATOR)	10.000 HR				
0320	639.18 FIELD OFFICE TYPE A	1.000 EA				
0330	652.33 DRUM	50.000 EA				
0340	652.34 CONE	150.000 EA				
0350	652.35 CONSTRUCTION SIGNS	1,690.000 SF				
0360	652.36 MAINTENANCE OF TRAFFIC CONTROL DEVICES	134.000 CD				

Maine Department of Transportation

Proposal Schedule of Items

Proposal ID: 018796.00 Project(s): 018796.00

SECTION: 1 HIGHWAY ITEMS

Alt Set ID: Alt Mbr ID:

Contractor: _____

Proposal Line Number	Item ID Description	Approximate Quantity and Units	Unit Price Dollars Cents	Bid Amount Dollars Cents
0370	652.38 FLAGGER	3,210.000 HR	_____.____	_____.____
0380	656.75 TEMPORARY SOIL EROSION AND WATER POLLUTION CONTROL	LUMP SUM	LUMP SUM	_____.____
0390	659.10 MOBILIZATION	LUMP SUM	LUMP SUM	_____.____
0400	812.162 ADJUSTING SEWER MANHOLE TO GRADE	3.000 EA	_____.____	_____.____
0410	823.332 GATE VALVE BOX, ADJUST TO GRADE	31.000 EA	_____.____	_____.____

Section: 1 Total: _____.____

Total Bid: _____.____

CONTRACT AGREEMENT, OFFER & AWARD

AGREEMENT made on the date last signed below, by and between the State of Maine, acting through and by its Department of Transportation (Department), an agency of state government with its principal administrative offices located at Child Street Augusta, Maine, with a mailing address at 16 State House Station, Augusta, Maine 04333-0016, and **(Name of the firm bidding the job)** a corporation or other legal entity organized under the laws of the State of Maine, with its principal place of business located at **(address of the firm bidding the job)**

The Department and the Contractor, in consideration of the mutual promises set forth in this Agreement (the "Contract"), hereby agree as follows:

SAMPLE

A. The Work.

The Contractor agrees to complete all Work as specified or indicated in the Contract including Extra Work in conformity with the Contract, PIN No.**1224.00**, for the **Hot Mix Asphalt Overlay** in the town/city of **South Nowhere,** County of **Washington**, Maine. The Work includes construction, maintenance during construction, warranty as provided in the Contract, and other incidental work.

The Contractor shall be responsible for furnishing all supervision, labor, equipment, tools supplies, permanent materials and temporary materials required to perform the Work including construction quality control including inspection, testing and documentation, all required documentation at the conclusion of the project, warranting its work and performing all other work indicated in the Contract.

The Department shall have the right to alter the nature and extent of the Work as provided in the Contract; payment to be made as provided in the same.

B. Time.

The Contractor agrees to complete all Work, except warranty work, on or before **November 15, 2006.** Further, the Department may deduct from moneys otherwise due the Contractor, not as a penalty, but as Liquidated Damages in accordance with Sections 107.7 and 107.8 of the State of Maine Department of Transportation Standard Specifications, November 2014 Edition and related Special Provisions.

C. Price.

The quantities given in the Schedule of Items of the Bid Package will be used as the basis for determining the original Contract amount and for determining the amounts of the required Performance Surety Bond and Payment Surety Bond, and that the amount of this offer is **____(Place bid here in alphabetical form such as One Hundred and Two dollars and 10 cents)** **$_ (repeat bid here in numerical terms, such as $102.10)**_____ Performance Bond and Payment Bond each being 100% of the amount of this Contract.

D. Contract.

This Contract, which may be amended, modified, or supplemented in writing only, consists of the Contract documents as defined in the Plans, Standard Specifications, November 2014 Edition, Standard Details November 2014 Edition, Supplemental Specifications, Special Provisions, Contract Agreement; and Contract Bonds. It is agreed and understood that this Contract will be governed by the documents listed above.

E. Certifications.

By signing below, the Contractor hereby certifies that to the best of the Contractor's knowledge and belief:

1. All of the statements, representations, covenants, and/or certifications required or set forth in the Bid and the Bid Documents, including those in Appendix A to Division 100 of the Standard Specifications November 2014 Edition (Federal Contract Provisions Supplement), and the Contract are still complete and accurate as of the date of this Agreement.

2. The Contractor knows of no legal, contractual, or financial impediment to entering into this Contract.

3. The person signing below is legally authorized by the Contractor to sign this Contract on behalf of the Contractor and to legally bind the Contractor to the terms of the Contract.

SAMPLE

F. Offer.

The undersigned, having carefully examined the site of work, the Plans, Standard Specifications, November 2014 Edition, Standard Details November 2014 Edition, Supplemental Specifications, Special Provisions, Contract Agreement; and Contract Bonds contained herein for construction of:

PIN 1234.00 South Nowhere, Hot Mix Asphalt Overlay,

State of Maine, on which bids will be received until the time specified in the "Notice to Contractors" do(es) hereby bid and offer to enter into this contract to supply all the materials, tools, equipment and labor to construct the whole of the Work in strict accordance with the terms and conditions of this Contract at the unit prices in the attached "Schedule of Items".

The Offeror agrees to perform the work required at the price specified above and in accordance with the bids provided in the attached "Schedule of Items" in strict accordance with the terms of this solicitation, and to provide the appropriate insurance and bonds if this offer is accepted by the Government in writing.

As Offeror also agrees:

First: To do any extra work, not covered by the attached "Schedule of Items", which may be ordered by the Resident, and to accept as full compensation the amount determined upon a "Force Account" basis as provided in the Standard Specifications, November 2014 Edition, and as addressed in the contract documents.

Second: That the bid bond at 5% of the bid amount or the official bank check, cashier's check, certificate of deposit or U. S. Postal Money Order in the amount given in the "Notice to Contractors", payable to the Treasurer of the State of Maine and accompanying this bid, shall be forfeited, as liquidated damages, if in case this bid is accepted, and the undersigned shall fail to abide by the terms and conditions of the offer and fail to furnish satisfactory insurance and Contract bonds under the conditions stipulated in the Specifications within 15 days of notice of intent to award the contract.

Third: To begin the Work as stated in Section 107.2 of the Standard Specifications November 2014 Edition and complete the Work within the time limits given in the Special Provisions of this Contract.

Fourth: The Contractor will be bound to the Disadvantaged Business Enterprise (DBE) Requirements contained in the attached Notice (Additional Instructions to Bidders) and submit a completed Contractor's Disadvantaged Business Enterprise Utilization Plan with their bid.

Fifth: That this offer shall remain open for 30 calendar days after the date of opening of bids.

SAMPLE

Sixth: The Bidder hereby certifies, to the best of its knowledge and belief that: the Bidder has not, either directly or indirectly, entered into any agreement, participated in any collusion, or otherwise taken any action in restraint of competitive bidding in connection with its bid, and its subsequent contract with the Department.

IN WITNESS WHEREOF, the Contractor, for itself, its successors and assigns, hereby execute two duplicate originals of this Agreement and thereby binds itself to all covenants, terms, and obligations contained in the Contract Documents.

CONTRACTOR

_____	**(Sign Here)**
Date	(Signature of Legally Authorized Representative of the Contractor)
____(**Witness Sign Here)**	**(Print Name Here)**
Witness	(Name and Title Printed)

SAMPLE

G. Award.

Your offer is hereby accepted. This award consummates the Contract, and the documents referenced herein.

MAINE DEPARTMENT OF TRANSPORTATION

_____	_____
Date	By: David Bernhardt, Commissioner

_____
(Witness)

CONTRACT AGREEMENT, OFFER & AWARD

AGREEMENT made on the date last signed below, by and between the State of Maine, acting through and by its Department of Transportation (Department), an agency of state government with its principal administrative offices located at Child Street, Augusta, Maine, with a mailing address at 16 State House Station, Augusta, Maine 04333-0016, and _____ a corporation or other legal entity organized under the laws of the State of _____, with its principal place of business located at _____

The Department and the Contractor, in consideration of the mutual promises set forth in this Agreement (the "Contract"), hereby agree as follows:

A. The Work.

The Contractor agrees to complete all Work as specified or indicated in the Contract including Extra Work in conformity with the Contract, **WIN 18796.00, for the Pavement Milling, Hot Mix Asphalt Overlay with Drainage Improvements in the towns of Sherman, Staceyville, and Patten, Counties of Aroostook and Penobscot, Maine.** The Work includes construction, maintenance during construction, warranty as provided in the Contract, and other incidental work.

The Contractor shall be responsible for furnishing all supervision, labor, equipment, tools supplies, permanent materials and temporary materials required to perform the Work including construction quality control including inspection, testing and documentation, all required documentation at the conclusion of the project, warranting its work and performing all other work indicated in the Contract.

The Department shall have the right to alter the nature and extent of the Work as provided in the Contract; payment to be made as provided in the same.

B. Time.

The Contractor agrees to complete all Work, except warranty work, on or before **October 1, 2016.** Further, the Department may deduct from moneys otherwise due the Contractor, not as a penalty, but as Liquidated Damages in accordance with Sections 107.7 and 107.8 of the State of Maine Department of Transportation Standard Specifications, November 2014 Edition and related Special Provisions.

C. Price.

The quantities given in the Schedule of Items of the Bid Package will be used as the basis for determining the original Contract amount and for determining the amounts of the required Performance Surety Bond and Payment Surety Bond, and that the amount of this offer is _____

_____

$_ _____ Performance Bond and Payment Bond each being 100% of the amount of this Contract.

D. Contract.

This Contract, which may be amended, modified, or supplemented in writing only, consists of the Contract documents as defined in the Plans, Standard Specifications, November 2014 Edition, Standard Details November 2014 Edition as updated through advertisement, Supplemental Specifications, Special Provisions, Contract Agreement; and Contract Bonds. It is agreed and understood that this Contract will be governed by the documents listed above.

E. Certifications.

By signing below, the Contractor hereby certifies that to the best of the Contractor's knowledge and belief:

1. All of the statements, representations, covenants, and/or certifications required or set forth in the Bid and the Bid Documents, including those in the Federal Contract Provisions Supplement, and the Contract are still complete and accurate as of the date of this Agreement.

2. The Contractor knows of no legal, contractual, or financial impediment to entering into this Contract.

3. The person signing below is legally authorized by the Contractor to sign this Contract on behalf of the Contractor and to legally bind the Contractor to the terms of the Contract.

F. Offer.

The undersigned, having carefully examined the site of work, the Plans, Standard Specifications November 2014 Edition, Standard Details November 2014 Edition as updated through advertisement, Supplemental Specifications, Special Provisions, Contract Agreement; and Contract Bonds contained herein for construction of: **WIN 18796.00 for the Pavement Milling, Hot Mix Asphalt Overlay with Drainage Improvements in the towns of Sherman, Staceyville, and Patten, Counties of Aroostook and Penobscot,** State of Maine, on which bids will be received until the time specified in the "Notice to Contractors" do(es) hereby bid and offer to enter into this contract to supply all the materials, tools, equipment and labor to construct the whole of the Work in strict accordance with the terms and conditions of this Contract at the unit prices in the attached "Schedule of Items".

The Offeror agrees to perform the work required at the price specified above and in accordance with the bids provided in the attached "Schedule of Items" in strict accordance with the terms of this solicitation, and to provide the appropriate insurance and bonds if this offer is accepted by the Government in writing.

As Offeror also agrees:

First: To do any extra work, not covered by the attached "Schedule of Items", which may be ordered by the Resident, and to accept as full compensation the amount determined upon a "Force Account" basis as provided in the Standard Specifications, November 2014 Edition, and as addressed in the contract documents.

Second: That the bid bond at 5% of the bid amount or the official bank check, cashier's check, certificate of deposit or U. S. Postal Money Order in the amount given in the "Notice to Contractors", payable to the Treasurer of the State of Maine and accompanying this bid, shall be forfeited, as liquidated damages, if in case this bid is accepted, and the undersigned shall fail to abide by the terms and conditions of the offer and fail to furnish satisfactory insurance and Contract bonds under the conditions stipulated in the Specifications within 15 days of notice of intent to award the contract.

Third: To begin the Work as stated in Section 107.2 of the Standard Specifications November 2014 Edition and complete the Work within the time limits given in the Special Provisions of this Contract.

Fourth: The Contractor will be bound to the Disadvantaged Business Enterprise (DBE) Requirements contained in the attached Notice (Additional Instructions to Bidders) and submit a completed Contractor's Disadvantaged Business Enterprise Utilization Plan with their bid.

Fifth: That this offer shall remain open for 30 calendar days after the date of opening of bids.

Sixth: The Bidder hereby certifies, to the best of its knowledge and belief that: the Bidder has not, either directly or indirectly, entered into any agreement, participated in any collusion, or otherwise taken any action in restraint of competitive bidding in connection with its bid, and its subsequent contract with the Department.

IN WITNESS WHEREOF, the Contractor, for itself, its successors and assigns, hereby execute two duplicate originals of this Agreement and thereby binds itself to all covenants, terms, and obligations contained in the Contract Documents.

CONTRACTOR

_____	_____
Date	(Signature of Legally Authorized Representative of the Contractor)
_____	_____
Witness	(Name and Title Printed)

G. Award.

Your offer is hereby accepted. This award consummates the Contract, and the documents referenced herein.

MAINE DEPARTMENT OF TRANSPORTATION

_____	_____
Date	By: David Bernhardt, Commissioner
_____	
Witness	

CONTRACT AGREEMENT, OFFER & AWARD

AGREEMENT made on the date last signed below, by and between the State of Maine, acting through and by its Department of Transportation (Department), an agency of state government with its principal administrative offices located at Child Street, Augusta, Maine, with a mailing address at 16 State House Station, Augusta, Maine 04333-0016, and _____ a corporation or other legal entity organized under the laws of the State of _____, with its principal place of business located at _____

The Department and the Contractor, in consideration of the mutual promises set forth in this Agreement (the "Contract"), hereby agree as follows:

A. The Work.

The Contractor agrees to complete all Work as specified or indicated in the Contract including Extra Work in conformity with the Contract, **WIN 18796.00, for the Pavement Milling, Hot Mix Asphalt Overlay with Drainage Improvements in the towns of Sherman, Staceyville, and Patten, Counties of Aroostook and Penobscot, Maine.** The Work includes construction, maintenance during construction, warranty as provided in the Contract, and other incidental work.

The Contractor shall be responsible for furnishing all supervision, labor, equipment, tools supplies, permanent materials and temporary materials required to perform the Work including construction quality control including inspection, testing and documentation, all required documentation at the conclusion of the project, warranting its work and performing all other work indicated in the Contract.

The Department shall have the right to alter the nature and extent of the Work as provided in the Contract; payment to be made as provided in the same.

B. Time.

The Contractor agrees to complete all Work, except warranty work, on or before **October 1, 2016.** Further, the Department may deduct from moneys otherwise due the Contractor, not as a penalty, but as Liquidated Damages in accordance with Sections 107.7 and 107.8 of the State of Maine Department of Transportation Standard Specifications, November 2014 Edition and related Special Provisions.

C. Price.

The quantities given in the Schedule of Items of the Bid Package will be used as the basis for determining the original Contract amount and for determining the amounts of the required Performance Surety Bond and Payment Surety Bond, and that the amount of this offer is _____

_____

$_ _____ Performance Bond and Payment Bond each being 100% of the amount of this Contract.

D. Contract.

This Contract, which may be amended, modified, or supplemented in writing only, consists of the Contract documents as defined in the Plans, Standard Specifications, November 2014 Edition, Standard Details November 2014 Edition as updated through advertisement, Supplemental Specifications, Special Provisions, Contract Agreement; and Contract Bonds. It is agreed and understood that this Contract will be governed by the documents listed above.

E. Certifications.

By signing below, the Contractor hereby certifies that to the best of the Contractor's knowledge and belief:

1. All of the statements, representations, covenants, and/or certifications required or set forth in the Bid and the Bid Documents, including those in the Federal Contract Provisions Supplement, and the Contract are still complete and accurate as of the date of this Agreement.

2. The Contractor knows of no legal, contractual, or financial impediment to entering into this Contract.

3. The person signing below is legally authorized by the Contractor to sign this Contract on behalf of the Contractor and to legally bind the Contractor to the terms of the Contract.

F. Offer.

The undersigned, having carefully examined the site of work, the Plans, Standard Specifications November 2014 Edition, Standard Details November 2014 Edition as updated through advertisement, Supplemental Specifications, Special Provisions, Contract Agreement; and Contract Bonds contained herein for construction of: **WIN 18796.00 for the Pavement Milling, Hot Mix Asphalt Overlay with Drainage Improvements in the towns of Sherman, Staceyville, and Patten, Counties of Aroostook and Penobscot,** State of Maine, on which bids will be received until the time specified in the "Notice to Contractors" do(es) hereby bid and offer to enter into this contract to supply all the materials, tools, equipment and labor to construct the whole of the Work in strict accordance with the terms and conditions of this Contract at the unit prices in the attached "Schedule of Items".

The Offeror agrees to perform the work required at the price specified above and in accordance with the bids provided in the attached "Schedule of Items" in strict accordance with the terms of this solicitation, and to provide the appropriate insurance and bonds if this offer is accepted by the Government in writing.

As Offeror also agrees:

First: To do any extra work, not covered by the attached "Schedule of Items", which may be ordered by the Resident, and to accept as full compensation the amount determined upon a "Force Account" basis as provided in the Standard Specifications, November 2014 Edition, and as addressed in the contract documents.

Second: That the bid bond at 5% of the bid amount or the official bank check, cashier's check, certificate of deposit or U. S. Postal Money Order in the amount given in the "Notice to Contractors", payable to the Treasurer of the State of Maine and accompanying this bid, shall be forfeited, as liquidated damages, if in case this bid is accepted, and the undersigned shall fail to abide by the terms and conditions of the offer and fail to furnish satisfactory insurance and Contract bonds under the conditions stipulated in the Specifications within 15 days of notice of intent to award the contract.

Third: To begin the Work as stated in Section 107.2 of the Standard Specifications November 2014 Edition and complete the Work within the time limits given in the Special Provisions of this Contract.

Fourth: The Contractor will be bound to the Disadvantaged Business Enterprise (DBE) Requirements contained in the attached Notice (Additional Instructions to Bidders) and submit a completed Contractor's Disadvantaged Business Enterprise Utilization Plan with their bid.

Fifth: That this offer shall remain open for 30 calendar days after the date of opening of bids.

Sixth: The Bidder hereby certifies, to the best of its knowledge and belief that: the Bidder has not, either directly or indirectly, entered into any agreement, participated in any collusion, or otherwise taken any action in restraint of competitive bidding in connection with its bid, and its subsequent contract with the Department.

IN WITNESS WHEREOF, the Contractor, for itself, its successors and assigns, hereby execute two duplicate originals of this Agreement and thereby binds itself to all covenants, terms, and obligations contained in the Contract Documents.

CONTRACTOR

_____	_____
Date	(Signature of Legally Authorized Representative of the Contractor)
_____	_____
Witness	(Name and Title Printed)

G. Award.

Your offer is hereby accepted. This award consummates the Contract, and the documents referenced herein.

MAINE DEPARTMENT OF TRANSPORTATION

_____	_____
Date	By: David Bernhardt, Commissioner
_____	
Witness	

STATE OF MAINE
DEPARTMENT OF TRANSPORTATION

SHERMAN - PATTEN

AROOSTOOK AND PENOBSCOT COUNTIES

ROUTE 11

STP-1879(600)

PROJECT LENGTH : 9.29 MILES

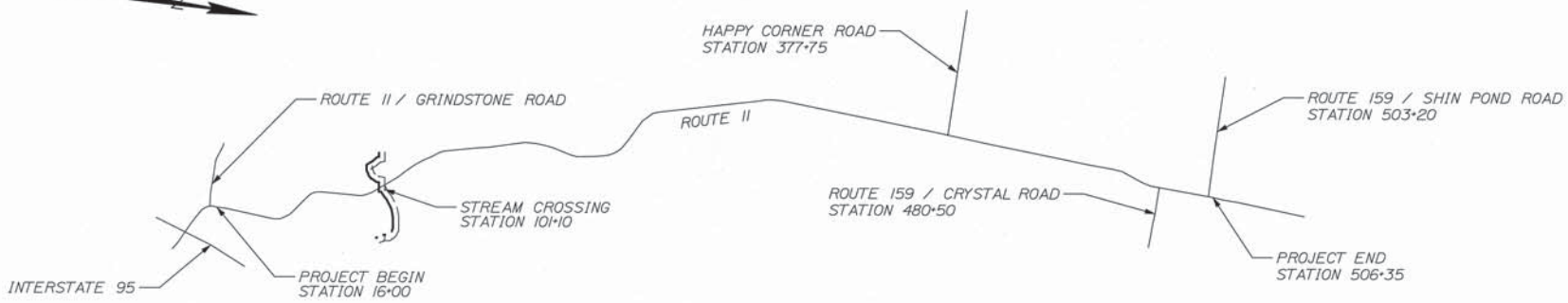

TRAFFIC DATA

Current (2016) AADT	3240
Future (2028) AADT	3630
DHV - % of AADT	10%
Design Hour Volume (2028)	363
% Heavy Trucks (AADT)	8%
% Heavy Trucks (DHV)	6%
Directional Distribution (DHV)	55%
18 kip Equivalent P 2.0 (2028)	205
18 kip Equivalent P 2.5 (2028)	195
Design Speed (mph)	50
Functional Class:	Major Urban Collector
Corridor Priority:	3, 4

PROJECT LOCATION:	Beginning on Route 11 at the Grindstone Road in Sherman and extending northerly 9.29 miles to the Shin Pond Road in Patten.
PROGRAM AREA:	Highway Preservation Paving
SCOPE OF WORK:	1 1/4" Overlay

WIN 18796.00 STP-1879(600)

STATE OF MAINE
DEPARTMENT OF TRANSPORTATION
APPROVED
DATE
COMMISSIONER
CHIEF ENGINEER 2-24-16

STATE OF MAINE
REGISTERED PROFESSIONAL ENGINEER
No. 8231
2/24/16

PROJECT INFORMATION		
PROGRAM	HIGHWAY	
PROJECT MANAGER	ROGER SOUCY	SIGNATURE
DESIGNER		
CONSULTANT		P.E. NUMBER
PROJECT RESIDENT		2/24/16
CONTRACTOR		DATE
PROJECT COMPLETION DATE		

SHERMAN - PATTEN
ROUTE 11

TITLE SHEET

SHEET NUMBER
1
OF 1

Filename: ...\00\HIGHWAY\MSTA\001_Title.dgn Division: HIGHWAY Username: Jeanne.Kannegieser Date:2/25/2016

HOT MIX ASPHALT SHIM & OVERLAY SUPERELEVATED SECTION

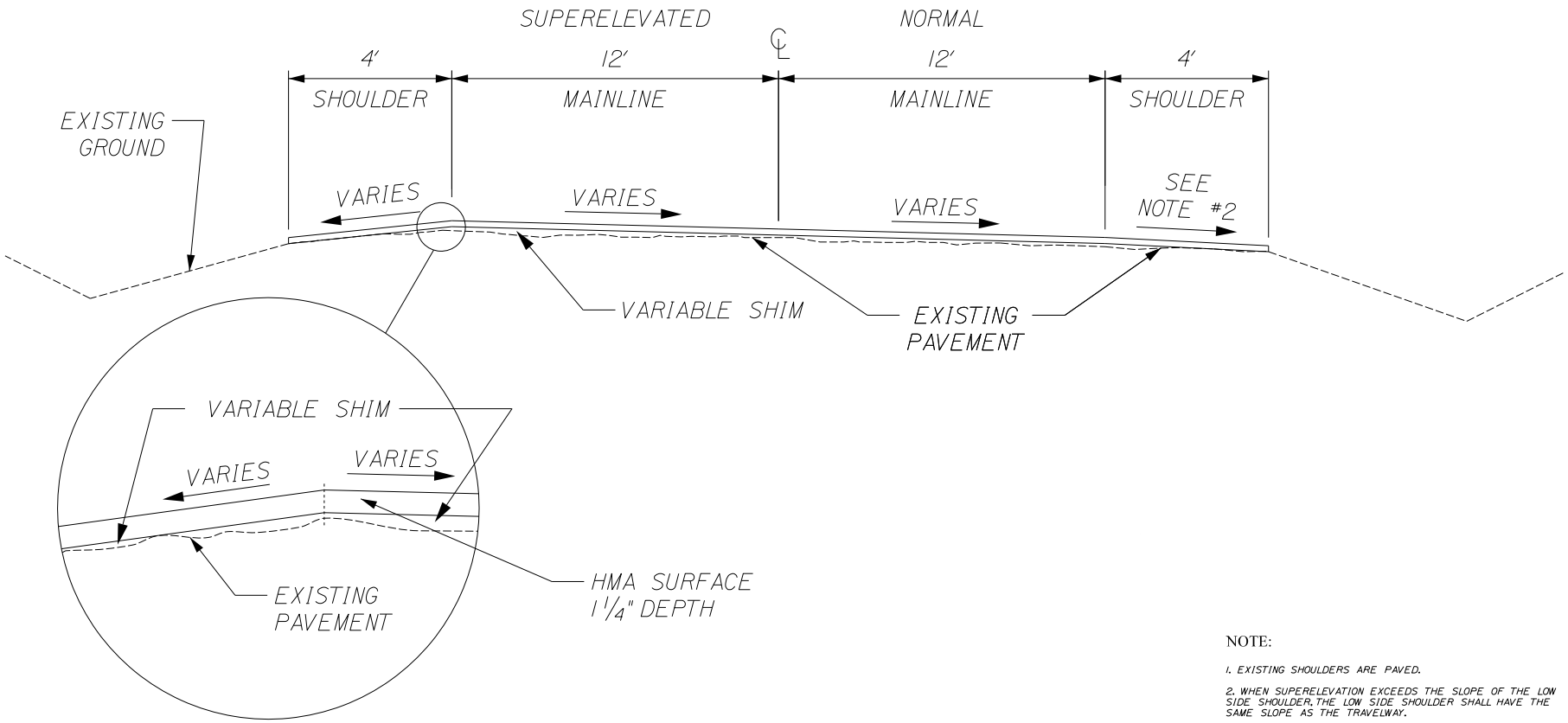

NOTE:

1. EXISTING SHOULDERS ARE PAVED.

2. WHEN SUPERELEVATION EXCEEDS THE SLOPE OF THE LOW SIDE SHOULDER, THE LOW SIDE SHOULDER SHALL HAVE THE SAME SLOPE AS THE TRAVELWAY.

3. CROWNS FOR BOTH NORMAL AND SUPERELEVATION SECTIONS FOR ALL COURSES OF PAVEMENT SHALL BE STRAIGHT.

4. THE ALGEBRAIC DIFFERENCE BETWEEN THE SHOULDER AND TRAVELWAY CROSS SLOPES "ROLLOVER" SHALL NOT EXCEED 8%.

5. SHIM SHALL TAPER TO 0" ON THE OUTSIDE EDGE OF PAVED SHOULDERS OR AS DIRECTED BY THE RESIDENT.

NOT TO SCALE

STATE OF MAINE
DEPARTMENT OF TRANSPORTATION

STP-1879(600)

WIN 18796.00

HIGHWAY PLANS

PROJ. MANAGER	R. SOUCY	BY	DATE
DESIGN-DETAILER			
DESIGN2-MANAGER			
DESIGN2-DETAILED2			
DESIGN3-DETAILED3			
REVISIONS 1			
REVISIONS 2			
REVISIONS 3			
REVISIONS 4			
FIELD CHANGES			

SIGNATURE

P.E. NUMBER

DATE

SHERMAN-PATTEN
ROUTE 11

TYPICAL SECTIONS

SHEET NUMBER
1
OF 5

Filename: ...\HIGHWAY\MSTA\001_Typical.dgn Division: HIGHWAY Username: Jeanne.Konnegieser Date:2/26/2016

HOT MIX ASPHALT SHIM AND OVERLAY CURB SECTION

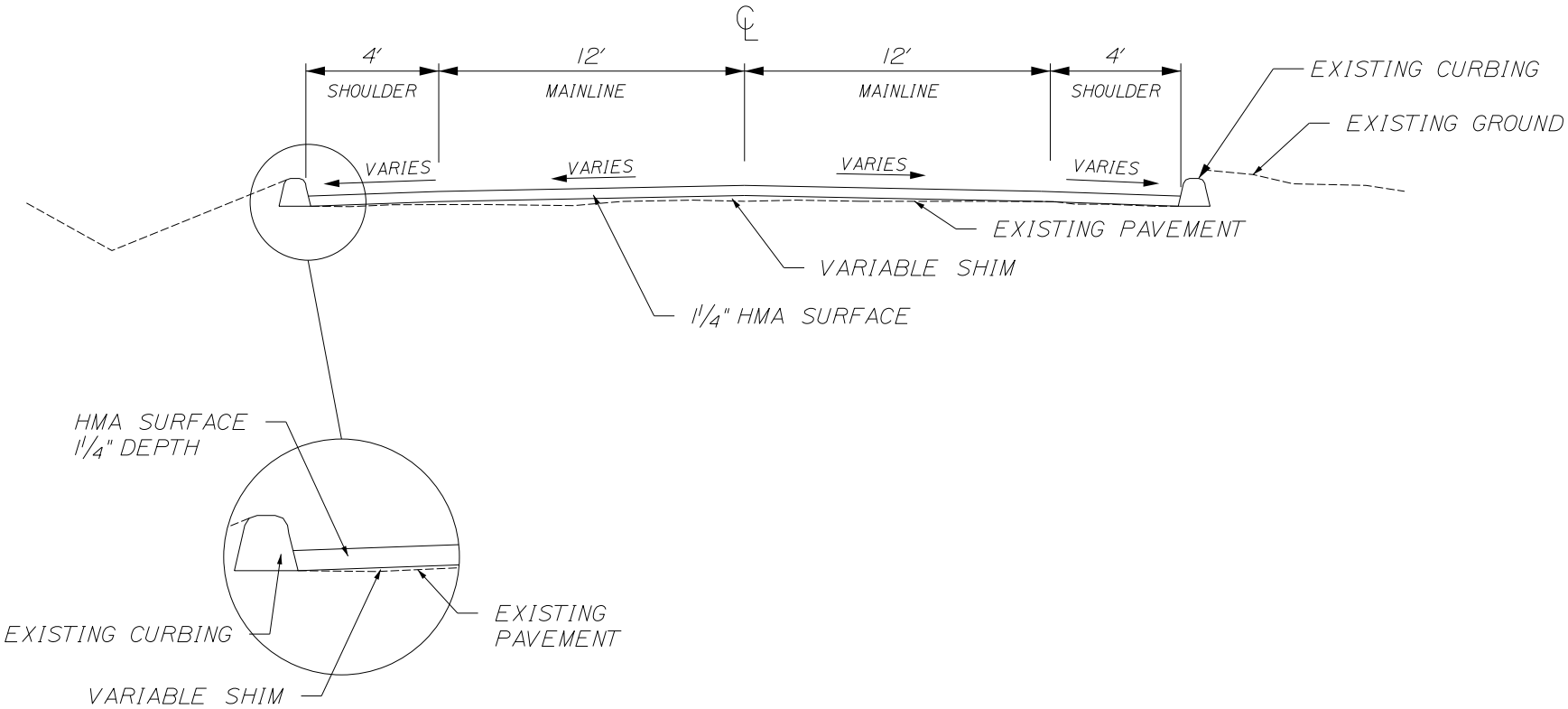

CURB
STATIONS
SEE CONSTRUCTION NOTES

NOTES:

1. THE PAVEMENT DEPTHS AS SHOWN ON THE PLANS ARE INTENDED TO BE NOMINAL.

2. WHEN SUPERELEVATION EXCEEDS THE SLOPE OF THE LOW SIDE SHOULDER, THE LOW SIDE SHOULDER SHALL HAVE THE SAME SLOPE AS THE TRAVELWAY.

3. THE ALGEBRAIC DIFFERENCE BETWEEN THE SHOULDER AND THE TRAVELWAY CROSS SLOPES "ROLLOVER" SHALL NOT EXCEED 8%.

4. SHIM SHALL TAPER TO 0" ON THE OUTSIDE EDGE OF PAVED SHOULDERS OR AS DIRECTED BY THE RESIDENT.

NOT TO SCALE

STATE OF MAINE
DEPARTMENT OF TRANSPORTATION

STP-1879(600)

WIN
18796.00

HIGHWAY PLANS

PROJ. MANAGER	ROGER SOUCY	BY	DATE
DESIGN-DETAILED			
CHECKED-DETAILED			
DESIGN2-DETAILED2			
DESIGN3-DETAILED3			
REVISIONS 1			
REVISIONS 2			
REVISIONS 3			
REVISIONS 4			
FIELD CHANGES			

SIGNATURE

P.E. NUMBER

DATE

SHERMAN-PATTEN
ROUTE 11

TYPICAL SECTIONS

SHEET NUMBER
2
OF 5

Filename: ...\HIGHWAY\MSTA\002_Typical.dgn Division: HIGHWAY Username: Jeanne.Konnegieser Date:2/26/2016

HOT MIX ASPHALT SHIM & OVERLAY
GUARDRAIL SECTION

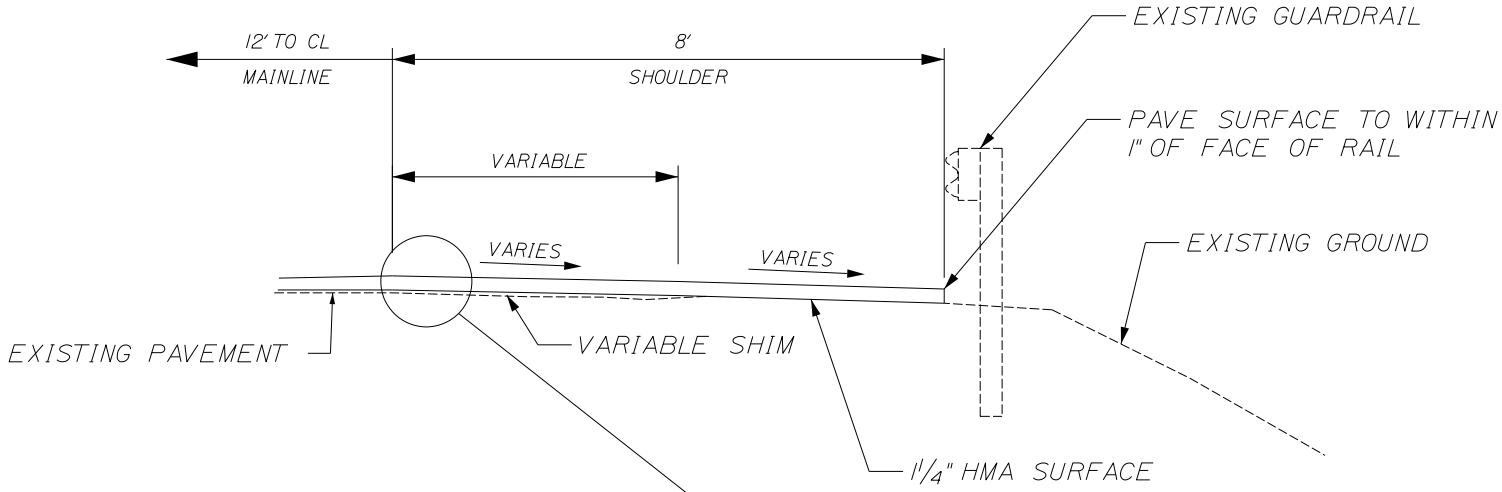

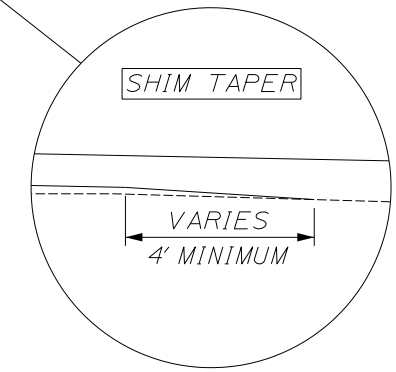

STATIONS

76+30 TO 81+40 LT.
99+98 TO 101+40 LT.

27+70 TO 32+20 RT.
45+78 TO 56+10 RT.
76+87 TO 82+20 RT.
100+37 TO 101+47 RT.

NOTES:

1. THE PAVEMENT DEPTHS AS SHOWN ON THE PLANS ARE INTENDED TO BE NOMINAL.

2. SHIM SHALL TAPER TO 0" ON EXISTING PAVED SHOULDERS WITH GUARDRAIL. TAPER WIDTH WILL VARY AS DIRECTED BY RESIDENT.

NOT TO SCALE

STATE OF MAINE
DEPARTMENT OF TRANSPORTATION

STP-1879(600)

WIN
18796.00

HIGHWAY PLANS

PROJ. MANAGER	ROGER SOUCY	BY	DATE
DESIGN-DETAILER	------	------	------
DESIGN-DETAILER2	------	------	------
DESIGN2-DETAILED2	------	------	------
DESIGN3-DETAILED3	------	------	------
REVISIONS 1	------	------	------
REVISIONS 2	------	------	------
REVISIONS 3	------	------	------
REVISIONS 4	------	------	------
FIELD CHANGES	------	------	------

SIGNATURE

P.E. NUMBER

DATE

SHERMAN-PATTEN
ROUTE 11

TYPICAL SECTIONS

SHEET NUMBER
3
OF 5

Filename: ...\HIGHWAY\MSTA\003_Typical.dgn Division: HIGHWAY Username: Jeanne.Konnegieser Date:2/26/2016

HOT MIX ASPHALT SHIM & OVERLAY
NORMAL TRUCK LANE SECTION

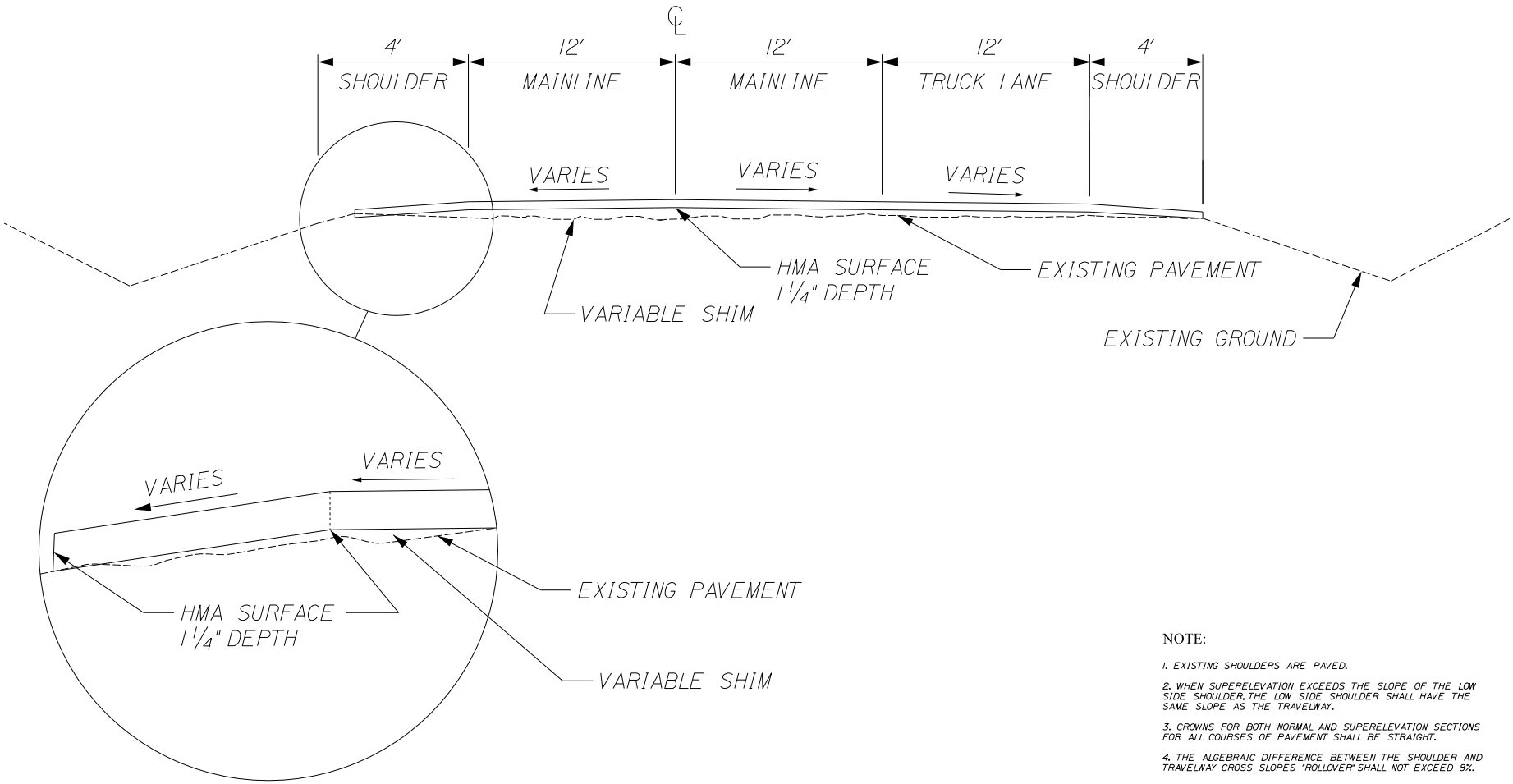

NOTE:

1. EXISTING SHOULDERS ARE PAVED.

2. WHEN SUPERELEVATION EXCEEDS THE SLOPE OF THE LOW SIDE SHOULDER, THE LOW SIDE SHOULDER SHALL HAVE THE SAME SLOPE AS THE TRAVELWAY.

3. CROWNS FOR BOTH NORMAL AND SUPERELEVATION SECTIONS FOR ALL COURSES OF PAVEMENT SHALL BE STRAIGHT.

4. THE ALGEBRAIC DIFFERENCE BETWEEN THE SHOULDER AND TRAVELWAY CROSS SLOPES "ROLLOVER" SHALL NOT EXCEED 8%.

5. SHIM SHALL TAPER TO 0" ON THE OUTSIDE EDGE OF PAVED SHOULDERS OR AS DIRECTED BY THE RESIDENT.

NOT TO SCALE

STATE OF MAINE
DEPARTMENT OF TRANSPORTATION

STP - 1879(600)

WIN
18796.00

HIGHWAY PLANS

PROJ. MANAGER	ROGER SOUCY	BY	DATE
DESIGN-DETAILER			
DESIGN2-MANAGER			
DESIGN2-DETAILED2			
DESIGN3-DETAILED3			
REVISIONS 1			
REVISIONS 2			
REVISIONS 3			
REVISIONS 4			
FIELD CHANGES			

SIGNATURE

P.E. NUMBER

DATE

SHERMAN - PATTEN
ROUTE 11

TYPICAL SECTIONS

SHEET NUMBER
4
OF 5

Filename: ...\HIGHWAY\MSTA\004_Typical.dgn Division: HIGHWAY Username: Jeanne.Konnegieser Date:2/26/2016

HOT MIX ASPHALT MILL AND FILL

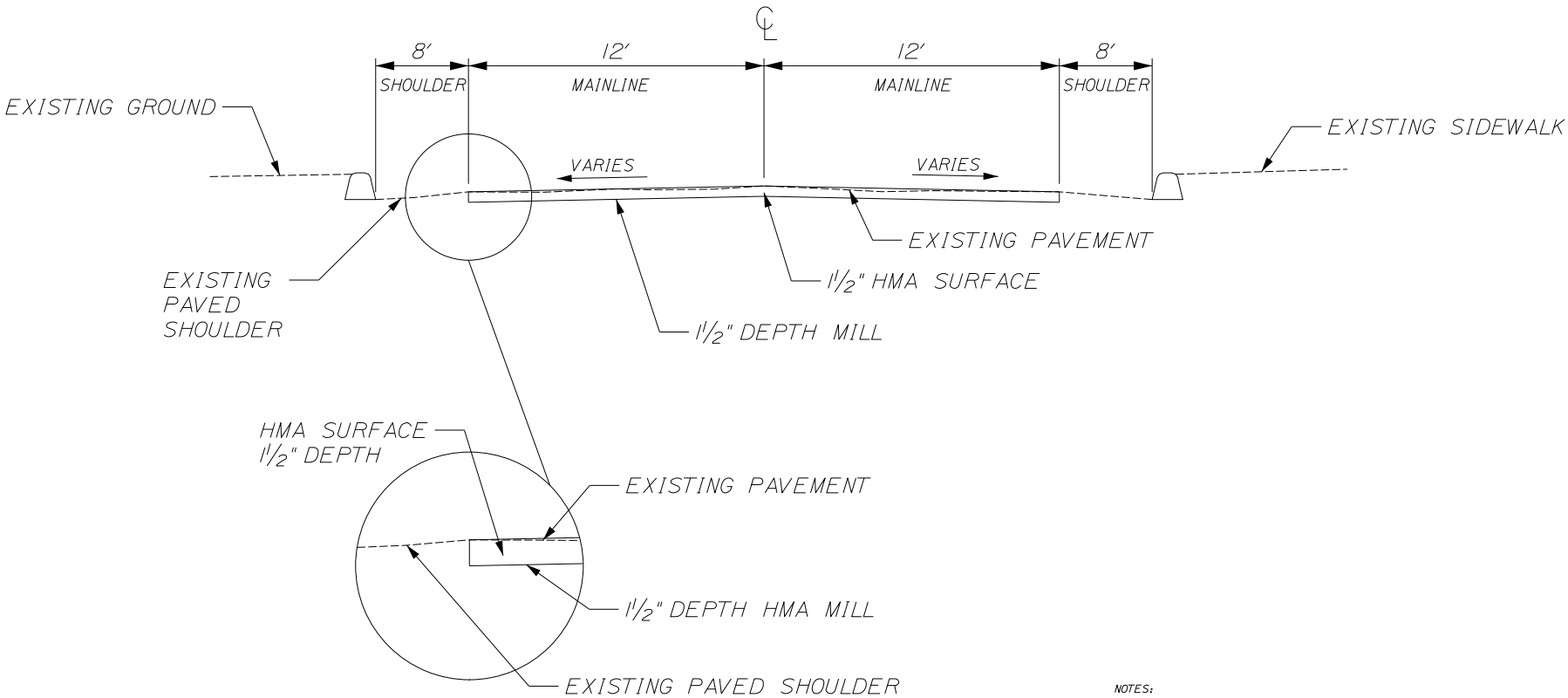

STATIONS

481+50 TO 506+50 RT./LT.

NOTES:

1. THE PAVEMENT DEPTHS AS SHOWN ON THE PLANS ARE INTENDED TO BE NOMINAL.

2. WHEN SUPERELEVATION EXCEEDS THE SLOPE OF THE LOW SIDE SHOULDER, THE LOW SIDE SHOULDER SHALL HAVE THE SAME SLOPE AS THE TRAVELWAY.

3. CROWNS FOR BOTH THE NORMAL AND SUPERELEVATION SECTIONS FOR ALL COURSES OF PAVEMENT SHALL BE STRAIGHT.

4. THE ALGEBRAIC DIFFERENCE BETWEEN THE SHOULDER AND THE TRAVELWAY CROSS SLOPES "ROLLOVER" SHALL NOT EXCEED 8%.

5. REFER TO CONSTRUCTION NOTES FOR ADDITIONAL MILLING LOCATIONS.

NOT TO SCALE

STATE OF MAINE
DEPARTMENT OF TRANSPORTATION

STP-1879(600)

WIN 18796.00

HIGHWAY PLANS

		BY	DATE
PROJ. MANAGER	ROGER SOUCY		
DESIGN DETAILED			
DESIGN2 DETAILED			
DESIGN3 DETAILED			
REVISIONS 1			
REVISIONS 2			
REVISIONS 3			
REVISIONS 4			
FIELD CHANGES			

SIGNATURE

P.E. NUMBER

DATE

SHERMAN-PATTEN
ROUTE 11

TYPICAL SECTIONS

SHEET NUMBER

5

OF 5

Filename: ...\HIGHWAY\MSTA\005_Typical.dgn Division: HIGHWAY Username: Jeanne.Konnegieser Date:2/26/2016

Project Stationing

Left	Station	Right
	65+60	Pole 291A
	62+75	Pole 791
	59+95	Pole 792
	57+42	Pole 798
	56+10	End Guardrail
	54+85	Pole 70269
	49+50	Pole 70273
	46+85	70275
	45+78	Begin Guardrail
	44+30	Pole 70279
	41+76	Pole 71064
	39+15	Pole 800
Pole 70281	37+35	
Pole 70282	35+30	
Pole 70283	33+10	
	32+20	End Guardrail
Pole 70285	30+40	
Pole 70286	27+86	
	27+70	Begin Guardrail
Pole 70287	25+37	
Pole 70288	23+10	
Pole 70289	20+55	
Pole 70290	18+55	
Pole 70231	16+65	
Begin project	16+00	**Begin project**

Project Stationing

Left	Station	Right
	108+77	Pole 768
	108+50	Begin Tracks
CB	105+95	
	105+70	CB
	103+55	Pole 770
CB	103+50	CB
	101+25	Pole 771
	98+70	T/L
	96+45	Pole 773
	94+35	Pole 774
CB	93+45	
	92+70	Pole 775
	90+95	Pole 776
	88+50	Pole 777
	86+68	Pole 778
	84+50	Pole 779
Pole 49	84+00	
	82+20	End Guardrail
	82+15	Pole 780
End Guardrail	81+40	
	79+50	Pole 784
	76+87	Begin Guardrail
Begin Guardrail	76+30	
	74+80	Pole 786
	72+60	Pole 787
	70+25	Pole 780
	69+95	CB
	68+58	CB
Pole 798	67+95	
Pole 732	167+45	
Pole 733	165+90	

Project Stationing

Left	Station	Right
Pole 734	164+28	
Rolling Meadows Road	162+80	
Pole 735	162+50	
pole 736	160+75	
Pole 737	159+50	
Pole 740	154+55	
Pole 741	152+90	
Pole 744	148+10	
Pole 745	146+40	
Pole 746	144+70	
Pole 747	143+07	
Pole 748	141+33	
Pole 750	138+05	
Pole 751	136+86	
Pole 752	135+15	
Pole 753	133+60	
Pole 755	130+50	
Pole 756	128+70	
Pole 758	126+90	
Pole 759	123+30	
Pole 760	122+00	
Katahdin Street	120+20	
Pole 762	119+25	
Pole 763	117+30	
Pole 764	114+90	
Pole 291	113+60	
	109+90	Pole 821A
Pole 696	232+50	
Pole 697	230+75	
Pole 698	228+45	
Pole 700	225+40	

Project Stationing

Left	Station	Right
Pole 701	223+59	
Pole 703	220+25	
Pole 705	216+45	
Pole 706	214+50	
Pole 707	212+60	
Pole 708	210+50	
Pole 710	206+67	
Pole 712	202+80	
Pole 713	200+90	
Pole 714	199+00	
Pole 715	197+35	
Pole 716	195+75	
Pole 717	193+80	
Pole 719	190+15	
Pole 720	188+30	
Pole 721	186+45	
Pole 722	184+50	
Pole 723	182+65	
Pole 724	180+85	
Pole 725	179+10	
Pole 726	177+22	
Pole 727	175+25	
Pole 728	173+48	
Pole 729	172+00	
Pole 731	169+15	
Pole 659	288+30	
Pole 660	286+60	
Pole 661	284+70	
Pole 662	283+10	
Pole 663	281+40	
Pole 664	279+50	

Project Stationing

Left	Station	Right
Pole 665	278+20	
Pole 666	276+50	
Pole 667	274+80	
Pole 668	273+10	
Pole 671	270+40	
Pole 673	267+50	
Pole 674	265+90	
Pole 675	264+40	
Pole 676	262+85	
Pole 677	261+35	
Pole 687	259+80	
Pole 679	258+25	
Pole 680	256+60	
Pole 681	255+00	
Pole 682	253+40	
Pole 685	248+50	
Pole 686	247+05	
Pole 687	245+60	
Pole 688	244+00	
Pole 690	241+00	
Pole 691	239+60	
Pole 693	236+90	
Pole 695	234+25	
	360+35	Pole 63
	357+90	Pole 64
	354+85	Pole 65
Pole 616	353+40	
	350+60	Pole 67
	349+10	Pole 68
	347+62	Pole 69
	344+65	Pole 70

Project Stationing

Left	Station	Right
	341+60	Pole 71
	339+60	Pole 72
	337+70	Pole 73
	335+15	Pole 74
	332+15	Pole 3/75
	329+20	Pole 76
	326+65	Pole 77
	323+85	Pole 78
Pole 636	323+20	
Pole 637	321+75	
Pole 638	320+25	
Pole 639	318+80	
Pole 640	317+30	
Pole 641	315+75	
Pole 642	314+30	
Pole 643	312+75	
Pole 644	311+30	
Pole 645	309+80	
Pole 646	308+50	
Pole 647	307+05	
Pole 648	305+55	
Pole 649	303+95	
Pole 650	302+25	
	296+50	Pole 3/88
	295+20	T/L
Pole 656	292+65	
Pole 657	291+25	
Pole 658	289+90	
	452+00	Pole 20
	447+75	Pole 23
	445+00	Pole 3/25

Project Stationing

Left	Station	Right
	443+60	Pole 26
	441+00	Pole 28
	438+25	Pole 3/30
	436+90	Pole 31
	434+10	Pole 33
	432+60	Pole 34
	431+15	Pole 35
Pole 572	429+25	
Pole 574	426+85	
Pole 575	424+42	
Pole 577	421+95	
Pole 578	419+45	
Pole 579	417+00	
Pole 580	416+20	
Pole 24	414+50	
	411+56	Pole 44s
Pole 21	407+25	
	403+75	Pole 47
	400+75	Pole 48
	397+70	Pole 49
	394+70	Pole 50
	391+65	Pole 51
	388+60	Pole 52
	385+60	Pole 53
	382+60	Pole 54
	380+55	Pole 55
	378+55	Pole 56
Happy Corner Road	377+75	
	376+45	Pole 57
	374+30	Pole 58
	372+45	Pole 59

Project Stationing

Left	Station	Right
	369+45	Pole 60
	366+45	Pole 61
	363+45	Pole 62
Paved Drive	503+90	
	503+65	Gravel Drive
Route 159	503+20	
Gravel Drive	502+30	Gravel Drive
CB	501+60	CB
Gravel Drive	501+30	
Gravel Drive	500+46	
Paved Drive	499+65	
CB	499+25	CB
Paved Drive	498+90	Scribner Street
Paved Drive	496+80	
	496+50	CB
Paved Drive	496+20	
	496+10	Church Street
CB	495+80	CB
	495+50	Paved Drive
CB	495+10	CB
Gravel Drive	494+85	
Gravel Drive	493+80	
	493+15	Paved Drive
Gravel Drive	492+25	Gravel Drive
Paved Drive	492+00	
CB	491+60	CB
	491+15	Paved Drive
Paved Drive	490+95	
Gravel Drive	490+05	Gravel Drive
Lip	489+15	Paved Drive
Gravel Drive	488+50	

Project Stationing

Left	Station	Right
End Project	506+35	**End Project**
Gravel Drive	505+70	
	505+50	Paved Drive
Paved Drive	505+00	
	504+44	Gravel Drive
	488+15	Paved Drive
CB	487+00	CB
Paved Drive	486+90	
Paved Drive	486+26	
CB	485+50	
Katahdin Street	485+25	
CB	479+50	CB
Pole 549	478+30	
CB	478+25	CB
Pole 550	477+15	
Pole 551	475+50	
	473+75	Potato Row
	471+65	Pole 5535
Pole 554	469+35	
Pole 556	465+00	
Pole 557	461+75	Windy Drive
	456+75	Pole 560
	453+40	Pole 19

Construction Notes

202.202 Removing Pavement Surface

Description	Station	Width	Depth	Station	Width	Depth
Joint to begin overlay	16+00	36’	1 ¼”	16+40	36’	0”
Before tracks	108+00	40’	0”	108+50	36’	1 ¼”
Between tracks	108+50	40’	1 ¼”	108+90	40’	1 ¼”
After tracks	108+90	40’	1 ¼”	109+40	50’	0”
Begin Mill/Fill Transition	481+50	40’	0”	482+00	40’	1 ½”
Mainline Right	482+00	12’	1 ½”	506+50	12’	1 ½”
Mainline Left	482+00	12’	1 ½”	506+50	12’	1 ½”
Right Shoulder	495+25	8’	1 ½”	496+25	8’	1 ½”
Right Shoulder	497+25	8’	1 ½”	497+60	8’	1 ½”
Left Shoulder	485+20	8’	1 ½”	485+60	8’	1 ½”

Notes:
- Pavement between railroad tracks will be milled.
- All generated millings are to become the property of the Contractor.

202.203 Pavement Butt Joints

Description	Side	Total Length
Side Streets/Roads (2)	LT	800’
Side Streets/Roads (2)	RT	450’
Paved Drives/Entrances	LT	3000’
Paved Drives/Entrances	RT	2100’

Notes:
- A 3’ x ¾” joint will be ground on side streets/roads.
- Exact widths of the approximately 105 paved driveways and entrances will be determined in the field by the Resident.

304.16 Aggregate Base Course-Type C

This item is to be used in underdrain trenches.

403.102 Hot Mix Asphalt – Special Areas

Item will be used to fill existing potholes and cracks as directed prior to placement of the shim course. Areas will be prepared by use of rental items, as directed by the Resident.

Construction Notes

403.210 Hot Mix Asphalt 9.5 mm

Pavement placed around reset catch basin frames will be paid under this item. (30 tons estimated)

411.10 Untreated Aggregate Surface Course - Truck Measure

- Item will be used in driveways and entrances, as directed by the Resident.
- Material meeting the gradation requirements of item #204.20, Add Shoulder Aggregate, may also be used for this item.

604.18 Adjust Manhole or Catch Basin to Grade

Left	Right
93+45	68+58
101+80	69+95
103+50	103+50
105+95	105+70
112+13	110+92
113+42	112+23
114+75	113+42
116+82	114+75
200+40	118+70
122+53	122+63
127+94	127+94
132+02	131+82
135+93	151+60
138+77	155+73
149+20	163+25
150+71	464+90
151+20	466+85
152+20	470+95
155+44	472+50
157+54	478+25
464+90	479+50
467+06	480+75
471+30	
472+95	
474+35	
478+25	
479+50	
480+75	

Construction Notes

605.09 6" Underdrain - Type B

110+30 – 112+10 LT

605.11 12" Underdrain – Type C

112+16 – 113+39 LT
113+45 – 114+72 LT

605.12 15" Underdrain – Type C

114+78 – 116+79 LT

609.31 Curb Type 3

Left Station	to	Station
93+40	-	93+48
101+67	-	101+95
104+10	-	104+40
104+50	-	106+20
110+65	-	112+12
112+40	-	113+70
114+50	-	114+80
116+70	-	116+85
122+50	-	122+65
127+65	-	127+96
131+92	-	132+06
135+85	-	135+95
138+75	-	138+90
149+15	-	149+45
150+70	-	150+80
151+15	-	151+27
152+10	-	152+22
155+30	-	155+46
157+50	-	158+00
464+90	-	465+00
467+06	-	467+20
471+25	-	471+40
472+90	-	473+00
474+30	-	474+44
478+22	-	478+35

Right Station	to	Station
68+50	-	68+60
69+70	-	70+00
103+38	-	103+52
105+60	-	105+72
110+75	-	110+95
114+70	-	114+85
118+65	-	119+00
122+60	-	122+70
127+90	-	128+05
131+80	-	132+30
151+48	-	151+62
155+60	-	155+75
464+90	-	465+00
466+80	-	467+20
470+92	-	471+04
472+40	-	472+52
478+22	-	478+50

These stations are approximate. Actual locations will be located in the field, as directed by the Resident.

Construction Notes

615.10 Dirty Borrow

Item will be used primarily to back up the edge of paved shoulders at a depth of 3" and a width of 3', and in other areas as directed by the Resident.

627.733 4" White or Yellow Painted Pavement Marking Line

- Final striping will not commence until 10 days have elapsed from the completion of surface pavement and must be completed within 20 days of the completion of surface pavement. Unless otherwise directed, failure to comply will result in a Traffic Control Violation.
- Once construction is complete, Maintenance of Traffic Control Devices (652.36) will not be paid while waiting to final stripe.
- Once construction is complete, liquidated damages will not be charged while waiting to final stripe.

627.75 White or Yellow Pavement & Curb Marking

Description	Quantity	Area
Stop Bar at RRXC x (12' x 2')	6	144 ft^2
"RxR" (stenciled)	2	69 ft^2/Each
Merge Arrows	2	40 ft^2/ Each

627.78 Temporary 4" Painted Pavement Marking Line, White or Yellow

- Temporary center lines shall be painted on all matched pavement within one week.
- Temporary edge lines shall be painted on all pavement layers within four weeks.
- All temporary lines shall be painted prior to final striping.
- Multilane sections, truck lanes, and milled surfaces must be striped daily on all matched pavement layers.
- TOMs must be used on all pavement layers until temporary paint is applied.
- TOMs will be removed before final striping.
- TOM removal will be addressed in the Traffic Control Plan.
- Only painted temporary line will be paid under this item. TOMs will be considered incidental to the contract.

629 & 631 Hourly Items

Primary use of the 631.12 All Purpose Excavator, 631.172 Truck-Large, and 631.133 Skid Steer items will be for removal of excess material from in-slopes and ditches. Cleaning of pavement following rental work will be considered incidental to the rental items, and will be done daily to the satisfaction of the Resident.

Construction Notes

652.35 Construction Signs

Note: Two “ROAD WORK NEXT 9 MILES” signs are required as part of this project.

GENERAL NOTES

1) All joints between existing and proposed hot bituminous pavement shall be butted. Payment shall be made under Item 202.203 Pavement Butt Joint or Item 202.202 Remove Pavement Surface.

2) A temporary ramp shall be constructed with HMA at the ends of the roadway section paved or milled each day. The use of millings or RAP will not be allowed, but cold patch may be temporarily utilized until HMA plants are open for the season.

    - For Interstate Highways or roadways with speed limits exceeding 50 mph, temporary ramps shall be constructed with one foot of length for every 1/8" of transition depth on the leading end, and one foot of length for every 1/4" of transition depth on the trailing end.

    - For all other roadways with speed limits less than 50 mph, temporary ramps shall be constructed with one foot of length for every 1/4" of transition depth on the leading and the trailing end.

    - Materials, placement, maintenance, and removal shall be incidental to contract items.

3) Grind transition tapers at Catch Basins under Item 202.203 Pavement Butt Joints, as directed by the Resident.

4) Where deemed necessary by the Resident, unsuitable excess material shall be removed from the edges of shoulders and placed in designated areas or disposed of. Payment will be made under the appropriate contract items.

5) The Contractor shall place suitable existing or other material acceptable to the Resident on all pavement edges to allow a drop off no greater than the surface pavement thickness. The material shall be graded to match existing in-slope or as directed by the Resident before surface is placed. The contractor will be paid under appropriate equipment rental items. Borrow is not authorized until all acceptable waste material has been utilized. Seed and Mulch will be paid for at the contract unit price.

6) All waste material not used on the project shall be disposed of in acceptable waste areas and reviewed by the Resident. Grading, seeding, and mulching of waste areas shall be considered incidental.

7) A 3' paved lip shall be placed at all gravel entrances unless otherwise noted in the plans or directed by the Resident.

GENERAL NOTES

8) Any necessary cleaning of existing pavement prior to paving (or milling) shall be incidental to the related paving (or milling) items.

9) All existing paved shoulders and widenings to be resurfaced as directed by the Resident.

10) Shoulder shim shall taper to 0 inches prior to face of existing curb and guardrail.

11) When super elevation exceeds the slope of the low side shoulder, the shoulder pavement will have same slope as traveled way.

12) The following shall be incidental to the 603 Item(s):
    a. Any cutting of existing culverts and or connectors necessary to install new culvert replacements or extensions
    b. All pipe excavation including any cutting and removal of pavement
    c. All ditching at pipe ends
    d. Furnishing, placing, grading, and compacting of any new gravel and/or fill material. This also includes material used for temporary detours to maintain traffic during pipe installation. Excavation of maintenance of traffic material is also incidental.
    e. All work necessary to connect to existing pipes and drainage structures
    f. Flow lines may be changed by up to 1.5 ft
    g. Any necessary clearing of brush and non-pay trees within 10 feet of culvert ends
    h. An 18” wide strip of non-woven geo-textile meeting the requirements of 620.58 shall be placed over all RCP joints.

13) Existing culverts and catch basins will be cleaned as directed by the Resident under the appropriate pay items.

14) No existing drainage shall be abandoned, removed or plugged without prior approval of the Resident.

15) Backing up bituminous curb is incidental to the curb items. If directed, loam or dirty borrow will be paid for separately. In areas where new bituminous curb is designated to replace existing, the removal of the old bituminous curb shall be incidental to the new curb.

16) Loam shall be placed to a nominal depth of 2 inches in lawn areas.

GENERAL NOTES

17) Any pavement not surfaced before winter will require temporary pavement markings of paint, both yellow centerline, white edge lines, and arrows and will be considered incidental to the contract.

18) The contractor will be responsible for maintaining all existing mailboxes to ensure that the mail will be deliverable each day. Payment will be made under appropriate rental items.

19) Any damage to the slopes caused by the contractor's equipment, personnel, or operation shall be repaired to the satisfaction of the resident. All work, equipment, and materials required to make repairs shall be at the contractor's expense.

20) Plans of previously constructed projects are available on request. Contact Roger Soucy or Ryan Sullivan at the MaineDOT Region 5 Office in Presque Isle at (207)764-2060. These projects are:
    - Stacyville — STP-6608(00)X
    - Patten — S-0326(7)
    - Patten — S-2020(2)
    - Stacyville-Patten — RS-STP 320S(13)X

21) No separate payment for superintendent or foreman will be made for the supervision of equipment being paid for under the equipment rental items.

22) “Undetermined Locations” shall be determined by the Resident.

23) Stations referenced are approximate.

24) All work shall be done in accordance with the Maine Department of Transportation’s Best Management Practices for Erosion & Sedimentation Control, February, 2008.

25) The contractor will place appropriately marked stakes at the following locations on the project: striping pattern changes, cross-slope changes, and every 500’ for stationing. The contractor will paint every full station (100’) on the existing roadway and will transfer the painted stationing through all intermediate lifts (not surface). Appropriately sized striping pattern changes will be painted on surface. Stationing control must be placed before work can commence. Cross-slope and striping change controls must be placed before paving can commence.

General Decision Number: ME160038 01/08/2016 ME38

Superseded General Decision Number: ME20150038

State: Maine

Construction Type: Highway

County: Aroostook County in Maine.

HIGHWAY CONSTRUCTION PROJECTS (excluding tunnels, building structures in rest area projects & railroad construction; bascule, suspension & spandrel arch bridges designed for commercial navigation, bridges involving marine construction; and other major bridges).Note: Under Executive Order (EO) 13658, an hourly minimum wage of $10.15 for calendar year 2016 applies to all contracts subject to the Davis-Bacon Act for which the solicitation was issued on or after January 1, 2015. If this contract is covered by the EO, the contractor must pay all workers in any classification listed on this wage determination at least $10.15 (or the applicable wage rate listed on this wage determination, if it is higher) for all hours spent performing on the contract in calendar year 2016. The EO minimum wage rate will be adjusted annually. Additional information on contractor requirements and worker protections under the EO is available at www.dol.gov/whd/govcontracts.

Modification Number	Publication Date
0	01/08/2016

*** ENGI0004-011 04/01/2014**

	Rates	Fringes
POWER EQUIPMENT OPERATOR:		
Asphalt Roller, Mechanic, Paver	$ 20.75	10.84

TEAM0340-001 08/01/2013

	Rates	Fringes
TRUCK DRIVER		
Low Boy	$ 14.75	17.5825

SUME2011-033 09/14/2011

	Rates	Fringes
CARPENTER, Includes Form Work	$ 18.34	2.84
INSTALLER - GUARDRAIL	$ 11.53	1.55
IRONWORKER, REINFORCING	$ 18.71	0.00
LABORER: Asphalt Raker	$ 13.10	2.65
LABORER: Flagger	$ 9.00	0.00
LABORER: Landscape	$ 14.44	0.16

LABORER: Pipelayer.....$ 13.21 1.58

LABORER: Wheelman.....$ 13.81 1.47

LABORER: Common or General,
Including Highway/Parking Lot
Striping.....$ 11.20 1.89

OPERATOR: Backhoe.....$ 16.18 4.98

OPERATOR: Bobcat/Skid
Steer/Skid Loader.....$ 16.73 5.57

OPERATOR: Bulldozer.....$ 14.72 3.11

OPERATOR: Cold Planer.....$ 17.63 0.00

OPERATOR: Crane.....$ 21.21 6.19

OPERATOR: Excavator.....$ 15.22 2.73

OPERATOR: Grader/Blade.....$ 19.46 6.30

OPERATOR: Loader.....$ 13.99 1.45

OPERATOR: Milling Machine
Reclaimer Combo.....$ 16.81 0.80

OPERATOR: Screed.....$ 15.34 3.67

OPERATOR: Roller (Earth).....$ 11.55 1.72

TRUCK DRIVER, Includes All
Dump Trucks.....$ 11.92 2.41

TRUCK DRIVER: Semi-Trailer
Truck.....$ 16.36 9.09

TRUCK DRIVER: 1, 2, 3 Axle
Truck.....$ 11.29 1.78

WELDERS - Receive rate prescribed for craft performing operation to which welding is incidental.

==========

Unlisted classifications needed for work not included within the scope of the classifications listed may be added after award only as provided in the labor standards contract clauses(29CFR 5.5 (a) (1) (ii)).

The body of each wage determination lists the classification and wage rates that have been found to be prevailing for the cited type(s) of construction in the area covered by the wage determination. The classifications are listed in alphabetical order of "identifiers" that indicate whether the particular rate is a union rate (current union negotiated rate for local), a survey rate (weighted average rate) or a union average rate (weighted union average rate).

Union Rate Identifiers

A four letter classification abbreviation identifier enclosed in dotted lines beginning with characters other than "SU" or "UAVG" denotes that the union classification and rate were prevailing for that classification in the survey. Example: PLUM0198-005 07/01/2014. PLUM is an abbreviation identifier of the union which prevailed in the survey for this classification, which in this example would be Plumbers. 0198 indicates the local union number or district council number where applicable, i.e., Plumbers Local 0198. The next number, 005 in the example, is an internal number used in processing the wage determination. 07/01/2014 is the effective date of the most current negotiated rate, which in this example is July 1, 2014.

Union prevailing wage rates are updated to reflect all rate changes in the collective bargaining agreement (CBA) governing this classification and rate.

Survey Rate Identifiers

Classifications listed under the "SU" identifier indicate that no one rate prevailed for this classification in the survey and the published rate is derived by computing a weighted average rate based on all the rates reported in the survey for that classification. As this weighted average rate includes all rates reported in the survey, it may include both union and non-union rates. Example: SULA2012-007 5/13/2014. SU indicates the rates are survey rates based on a weighted average calculation of rates and are not majority rates. LA indicates the State of Louisiana. 2012 is the year of survey on which these classifications and rates are based. The next number, 007 in the example, is an internal number used in producing the wage determination. 5/13/2014 indicates the survey completion date for the classifications and rates under that identifier.

Survey wage rates are not updated and remain in effect until a new survey is conducted.

Union Average Rate Identifiers

Classification(s) listed under the UAVG identifier indicate that no single majority rate prevailed for those classifications; however, 100% of the data reported for the classifications was union data. EXAMPLE: UAVG-OH-0010 08/29/2014. UAVG indicates that the rate is a weighted union average rate. OH indicates the state. The next number, 0010 in the example, is an internal number used in producing the wage determination. 08/29/2014 indicates the survey completion date for the classifications and rates under that identifier.

A UAVG rate will be updated once a year, usually in January of each year, to reflect a weighted average of the current negotiated/CBA rate of the union locals from which the rate is based.

WAGE DETERMINATION APPEALS PROCESS

1.) Has there been an initial decision in the matter? This can be:

* **an existing published wage determination**
* **a survey underlying a wage determination**
* **a Wage and Hour Division letter setting forth a position on a wage determination matter**
* **a conformance (additional classification and rate) ruling**

On survey related matters, initial contact, including requests for summaries of surveys, should be with the Wage and Hour Regional Office for the area in which the survey was conducted because those Regional Offices have responsibility for the Davis-Bacon survey program. If the response from this initial contact is not satisfactory, then the process described in 2.) and 3.) should be followed. With regard to any other matter not yet ripe for the formal process described here, initial contact should be with the Branch of Construction Wage Determinations. Write to:

Branch of Construction Wage Determinations
Wage and Hour Division
U.S. Department of Labor
200 Constitution Avenue, N.W.
Washington, DC 20210

2.) If the answer to the question in 1.) Is yes, then an interested party (those affected by the action) can request review and reconsideration from the Wage and Hour Administrator (See 29 CFR Part 1.8 and 29 CFR Part 7). Write to:

Wage and Hour Administrator
U.S. Department of Labor
200 Constitution Avenue, N.W.
Washington, DC 20210

The request should be accompanied by a full statement of the interested party's position and by any information (wage payment data, project description, area practice material, etc.) that the requestor considers relevant to the issue.

3.) If the decision of the Administrator is not favorable, an interested party may appeal directly to the Administrative Review Board (formerly the Wage Appeals Board). Write to:

Administrative Review Board
U.S. Department of Labor
200 Constitution Avenue, N.W.
Washington, DC 20210

4.) All decisions by the Administrative Review Board are final.

==========

END OF GENERAL DECISION

General Decision Number: ME160051 01/08/2016 ME51

Superseded General Decision Number: ME20150051

State: Maine

Construction Type: Highway

County: Penobscot County in Maine.

HIGHWAY CONSTRUCTION PROJECTS (excluding tunnels, building structures in rest area projects & railroad construction; bascule, suspension & spandrel arch bridges designed for commercial navigation, bridges involving marine construction; and other major bridges).

Note: Under Executive Order (EO) 13658, an hourly minimum wage of $10.15 for calendar year 2016 applies to all contracts subject to the Davis-Bacon Act for which the solicitation was issued on or after January 1, 2015. If this contract is covered by the EO, the contractor must pay all workers in any classification listed on this wage determination at least $10.15 (or the applicable wage rate listed on this wage determination, if it is higher) for all hours spent performing on the contract in calendar year 2016. The EO minimum wage rate will be adjusted annually. Additional information on contractor requirements and worker protections under the EO is available at www.dol.gov/whd/govcontracts.

Modification Number	Publication Date
0	01/08/2016

*** ENGI0004-013 04/01/2014**

	Rates	Fringes
POWER EQUIPMENT OPERATOR:		
Grader/ Blade, Milling Machine	$ 20.75	10.84

SUME2011-046 09/14/2011

	Rates	Fringes
CARPENTER, Includes Form Work	$ 14.72	1.72
CEMENT MASON/CONCRETE FINISHER	$ 16.94	0.00
ELECTRICIAN	$ 21.55	3.51
IRONWORKER, REINFORCING	$ 17.45	0.00
IRONWORKER, STRUCTURAL	$ 18.75	4.56
LABORER: Common or General	$ 12.83	2.20
LABORER: Flagger	$ 9.00	0.00
LABORER: Highway/Parking Lot Striping	$ 14.63	0.00

LABORER: Landscape.....$ 15.43 2.09

OPERATOR: Backhoe.....$ 17.27 3.45

OPERATOR: Bobcat/Skid Steer/Skid Loader.....$ 16.21 4.60

OPERATOR: Broom/Sweeper.....$ 13.49 1.22

OPERATOR: Bulldozer.....$ 17.74 2.72

OPERATOR: Crane.....$ 19.03 1.70

OPERATOR: Excavator.....$ 16.33 2.78

OPERATOR: Loader.....$ 15.66 4.79

OPERATOR: Mechanic.....$ 21.71 6.29

OPERATOR: Milling Machine Reclaimer Combo.....$ 24.77 8.39

OPERATOR: Paver (Asphalt, Aggregate, and Concrete).....$ 19.89 7.20

OPERATOR: Roller excluding Asphalt.....$ 19.97 7.43

OPERATOR: Screed.....$ 19.58 5.95

TRUCK DRIVER, Includes all axles including Dump Trucks.....$ 12.31 4.44

TRUCK DRIVER: Lowboy Truck.....$ 15.15 5.62

WELDERS - Receive rate prescribed for craft performing operation to which welding is incidental.

==========

Unlisted classifications needed for work not included within the scope of the classifications listed may be added after award only as provided in the labor standards contract clauses (29CFR 5.5 (a) (1) (ii)).

The body of each wage determination lists the classification and wage rates that have been found to be prevailing for the cited type(s) of construction in the area covered by the wage determination. The classifications are listed in alphabetical order of "identifiers" that indicate whether the particular rate is a union rate (current union negotiated rate for local), a survey rate (weighted average rate) or a union average rate (weighted union average rate).

Union Rate Identifiers

A four letter classification abbreviation identifier enclosed in dotted lines beginning with characters other than "SU" or "UAVG" denotes that the union classification and rate were prevailing for that classification in the survey. Example: PLUM0198-005 07/01/2014. PLUM is an abbreviation identifier of the union which prevailed in the survey for this classification, which in this example would be Plumbers. 0198 indicates the local union number or district council number where applicable, i.e., Plumbers Local 0198. The next number, 005 in the example, is an internal number used in processing the wage determination. 07/01/2014 is the effective date of the most current negotiated rate, which in this example is July 1, 2014.

Union prevailing wage rates are updated to reflect all rate changes in the collective bargaining agreement (CBA) governing this classification and rate.

Survey Rate Identifiers

Classifications listed under the "SU" identifier indicate that no one rate prevailed for this classification in the survey and the published rate is derived by computing a weighted average rate based on all the rates reported in the survey for that classification. As this weighted average rate includes all rates reported in the survey, it may include both union and non-union rates. Example: SULA2012-007 5/13/2014. SU indicates the rates are survey rates based on a weighted average calculation of rates and are not majority rates. LA indicates the State of Louisiana. 2012 is the year of survey on which these classifications and rates are based. The next number, 007 in the example, is an internal number used in producing the wage determination. 5/13/2014 indicates the survey completion date for the classifications and rates under that identifier.

Survey wage rates are not updated and remain in effect until a new survey is conducted.

Union Average Rate Identifiers

Classification(s) listed under the UAVG identifier indicate that no single majority rate prevailed for those classifications; however, 100% of the data reported for the classifications was union data. EXAMPLE: UAVG-OH-0010 08/29/2014. UAVG indicates that the rate is a weighted union average rate. OH indicates the state. The next number, 0010 in the example, is an internal number used in producing the wage determination. 08/29/2014 indicates the survey completion date for the classifications and rates under that identifier.

A UAVG rate will be updated once a year, usually in January of each year, to reflect a weighted average of the current negotiated/CBA rate of the union locals from which the rate is based.

WAGE DETERMINATION APPEALS PROCESS

1.) Has there been an initial decision in the matter? This can be:

* **an existing published wage determination**
* **a survey underlying a wage determination**
* **a Wage and Hour Division letter setting forth a position on a wage determination matter**
* **a conformance (additional classification and rate) ruling**

On survey related matters, initial contact, including requests for summaries of surveys, should be with the Wage and Hour Regional Office for the area in which the survey was conducted because those Regional Offices have responsibility for the Davis-Bacon survey program. If the response from this initial contact is not satisfactory, then the process described in 2.) and 3.) should be followed.

With regard to any other matter not yet ripe for the formal process described here, initial contact should be with the Branch of Construction Wage Determinations. Write to:

Branch of Construction Wage Determinations
Wage and Hour Division
U.S. Department of Labor
200 Constitution Avenue, N.W.
Washington, DC 20210

2.) If the answer to the question in 1.) is yes, then an interested party (those affected by the action) can request review and reconsideration from the Wage and Hour Administrator (See 29 CFR Part 1.8 and 29 CFR Part 7). Write to:

Wage and Hour Administrator
U.S. Department of Labor
200 Constitution Avenue, N.W.
Washington, DC 20210

The request should be accompanied by a full statement of the interested party's position and by any information (wage payment data, project description, area practice material, etc.) that the requestor considers relevant to the issue.

3.) If the decision of the Administrator is not favorable, an interested party may appeal directly to the Administrative Review Board (formerly the Wage Appeals Board). Write to:

Administrative Review Board
U.S. Department of Labor
200 Constitution Avenue, N.W.
Washington, DC 20210

4.) All decisions by the Administrative Review Board are final.

==========

END OF GENERAL DECISION

Town: **Patton, Stacyville, Sherman**
Project: **WIN 18796.00**
Date: **February 8, 2016**

SPECIAL PROVISIONS
SECTION 104
Utilities

UTILITY COORDINATION

The contractor has primary responsibility for coordinating their work with utilities after contract award. The contractor shall communicate directly with the utilities regarding any utility work necessary to maintain the contractor's schedule and prevent project construction delays. The contractor shall notify the resident of any issues.

THE CONTRACTOR SHALL PLAN AND CONDUCT WORK ACCORDINGLY.

MEETING

A Preconstruction Utility Conference, as defined in Subsection 104.4.6 of the Standard Specifications **IS** required.

GENERAL INFORMATION

These Special Provisions outline the arrangements that have been made by the Department for utility and/or railroad work to be undertaken in conjunction with this project. The following list identifies all known utilities or railroads having facilities presently located within the limits of this project or intending to install facilities during project construction. Utilities have been notified and will be furnished a project specification.

Utility Contact Information				
Utility	**Contact Person**	**Contact Phone**	**Aerial**	**Underground**
Emera Maine	Chris Nicholas	760-2526	X	
Eastern Maine Electric Coop.	Reggie Wilson	532-4424	X	
Maine Fiber	Tim LaBreck	956-6657	X	
Time Warner Cable	Patrick Hardgrove Jr	253-2443	X	
Fairpoint	Dwayne Hartin	463-9950	X	X
Town Of Patten	Kevin Noyes	528-2215		X
Maine Northern Railroad	Fred McLaughlin	736-2373		At Grade Crossing

Utility working days are generally Monday through Friday. Times are estimated on the basis of a single crew working 8 hours per day for each utility. Any times and dates mentioned are **estimates only** and are dependent upon favorable weather, working conditions, and freedom from emergencies.

All adjustments are to be made by the respective utility unless otherwise specified herein.

All clearing and tree removal in areas where utilities are involved must be completed before the utilities are able to relocate their facilities.

Fire hydrants shall not be disturbed until all necessary work has been accomplished to provide proper fire protection.

The contractor shall give all Utilities **10 working days notice** prior to beginning any work on this project.

AERIAL

Aerial utility adjustments **are not** anticipated as part of this project. If any unexpected utility relocations become necessary, they will be scheduled in compliance with Section 104 of the Standard Specifications and will be done by the utilities in conjunction with the work by the Contractor.

Temporary utility adjustments **are not** anticipated on this project. Should the contractor choose to have any poles temporarily relocated, all work will be done by pole owner at the contractor's request and expense with no additional cost or schedule impacts to the Department. All adjustments are to be made by the respective utility unless otherwise specified herein.

All of the aerial utilities have lines along and crossing the project location. There may also be underground services from the utility poles into homes or businesses.

SUBSURFACE

Summary:

Utility	**Summary of Work**	**Estimated Working Days**
Patten Sewer Department	Adjust **3** Sewer Manholes	3
Patten Water Department	Adjust **31** Water Gate Boxes	5
Total		**8**

Subsurface utility adjustments **are** anticipated as part of this project. If any unexpected utility relocations become necessary, they will be scheduled in compliance with Section 104 of the Standard Specifications and will be done by the utilities in conjunction with the work by the Contractor.

Temporary utility adjustments **are** anticipated as part of this project. If any unexpected utility relocations become necessary, they will be scheduled in compliance with Section 104 of the Standard Specifications and will be done by the utilities in conjunction with the work by the

Contractor. All work will be done at the contractor's request and expense with no additional cost or schedule impacts to the Department.

The **Patten Sewer Department (PSD)** has approximately **3** sewer manholes to raise prior to paving surface. The **Contractor** will perform all of the sewer manholes adjustments. The **Contractor** will notify the **PSD 10 business days** prior to sewer manhole work and will arrange oversight needs.

The **Patten Water Department (PWD)** has approximately **31** water gate boxes to lower for milling and raise prior to paving surface. The **Contractor** will perform all of the water gate adjustments. **The Contractor** will notify the **PWD 10 business days** prior any milling or gate valve work and will notify the **PWD** again **10 business days** prior to surface paving to arrange oversight needs.

RAILROADS

Maine Northern Railway has 2 at grade rail crossing within the limits of the project. This rail line is owned by Maine DOT and is being operated by **Maine Northern Railway**.

The crossings are on Route 11 (Sherman Station Road) in Stacyville.

It is the **Contractor's** responsibility to coordinate and schedule work in this area with the Railroad. The **Contractor** will contact **Maine Northern Railway 2 weeks prior** to paving near the railroad crossing to discuss the work, match points and Rail Protection.

*****Please See the Attached PRTS*****

The **Contractor** will mill or excavate between the rails and outside the rails to replace pavement up to and between the tracks or rubber rail seal gaskets located within the Railroad right-of-way as directed by Maine DOT. The **Contractor** shall keep all men, equipment and materials out of the railroad right-of-way (20 feet from the tracks) unless authorized by the railroad. **Maine Northern Railway** will determine if a railroad flagger is required during the work.

It is the **Contractor's** responsibility to provide roadway traffic control for the work. Work will need to be completed to allow the roadway to be open to two way traffic at the end of each work day. An agreement has been entered into, between **Maine Northern Railway** and the **Maine Department of Transportation** for railroad flagging purposes. **The Contractor shall** contact **Maine Northern Railway** and comply with Special Provision **"Protection of Railroad Traffic and Structure" (PRTS)** contained herein, before any work is done in the proximity of the at-grade crossings. All road work in these areas must be coordinated in advance with the Railroad to assure that proper safety procedures are in place. The contact for **Maine Northern Railway** is Fred McLaughlin, and he can be reached at (207) 736-2373 or Cell (207) 461-4610

MAINTAINING UTILITY LOCATION MARKINGS

The Contractor will be responsible for maintaining the buried utility location markings following the initial locating by the appropriate utility or their designated representative.

UTILITY SIGNING

Any utility working within the construction limits of this project shall ensure that the traveling public is adequately protected at all times. All work areas shall be signed, lighted, and traffic flaggers employed as determined by field conditions. All traffic controls shall be in accordance with the latest edition of the Manual on Uniform Traffic Control Devices for Streets and Highways, as issued by the Federal Highway Administration.

Town: **Patten, Stacyville, Sherman**
Project/PIN: **WIN 18796.00**
Date: **2-10-2016**

SPECIAL PROVISION
PROTECTION OF RAILROAD TRAFFIC AND STRUCTURES

1. GENERAL REQUIREMENTS

Part of the work required by the Contract will be performed within a railroad right of way and/or adjacent to the tracks, telephone, telegraph, and signal and electric supply lines of a railroad or railroads. The Contractor agrees to perform all such work in compliance with all of the terms of this Special Provision and all safety rules, regulations, or standards applicable to the Railroad. The Contractor shall be fully responsible for all damages arising from its failure to comply with the requirements of this Special Provision. The Contractor shall be deemed to have included all costs in the unit prices of the Schedule of Prices and the Proposal.

2. AMOUNT OF RAILROAD WORK

The amount of work to be done within **20** feet of the track (from either approach) of the **Maine Northern Railway** is **1 %** of the contract.

3. NUMBER OF TRAINS AND TRAIN SPEED

The Contractor is notified that a maximum speed of **30** mph will be considered as prevailing for the operation of trains of the Railroad at this project and that the approximate number of trains per day at this project is **2-3** .

4. PRIORITY OF RAILROAD OPERATIONS

The train movements of the Railroad, and its lessees, and licensees shall have absolute priority over the performance of the Construction Project within the railroad right of way. The Contractor hereby agrees that the hours and times of work within the Railroad right of way must be coordinated through the Railroad and that such hours and times are subject to change without prior notice to the Contractor, unless other prior arrangements have been made through the Railroad.

5. AUTHORITY OF RAILROAD TO STOP WORK

If the Contractor fails to comply with the safety terms of this Special Provision, or if the Chief Engineer of the Railroad determines that the Contractor is using unsafe practices that threaten the safety of rail traffic, rail workers, or the general public, the Railroad shall have the right to immediately order the Contractor to cease work and vacate the Railroad's property. The Railroad agrees to confirm any cessation of work in writing by delivering to the Department's Construction Manager a completed Stop Work Order form attached as Exhibit A within 24 hours of giving any such order.

6. ENTRY UPON RAILROAD PROPERTY

The Railroad hereby agrees to permit the Contractor, together with their subcontractors, suppliers, consultants and engineers (the "Contractor"), to enter upon the Railroad property for the purpose of performing the Construction Project, PROVIDED THAT the Contractor complies with all of the terms of this Special Provision and all safety requirements and directions of the Chief Engineer of the Railroad, or his authorized representative (the "Railroad's Chief Engineer").

7. NOTICE REQUIRED BEFORE ENTRY

The Contractor shall give written notice to the Railroad's Chief Engineer at least **5** calendar day(s) in advance of the time it proposes to do work within the limits of the Railroad right-of-way or perform operations that may create a Hazard as specified by this Special Provision. The Contractor shall give such notice regardless of whether the work may also be within the limits of a public highway.

8. HAZARDS

The Contractor shall assess to its own satisfaction hazards which may be caused by its operations. At a minimum, the Contractor agrees that the following shall constitute Hazards.

An operating track shall be considered fouled and subject to hazard when any object is brought nearer than **20** feet to the gauge line of the near rail of the track.

A signal line or communication line shall be considered fouled and subject to hazard when any object is brought nearer than **10** feet to any wire or cable.

An electric supply line shall be considered fouled and subject to hazard when any object is brought nearer than **10** feet to any wire of the line.

Cranes, trucks, power shovels or any other equipment shall be considered as fouling and subjecting to hazard a track, signal line, communication or electric supply line when working in such position that failure of equipment, with or without load, could foul the track, signal line, communication or electric supply line.

Railroad operation will be considered subject to hazard when explosives are used in the vicinity of railroad premises, or during the driving or pulling of sheeting for any footing adjacent to a track, or when erecting structural steel adjacent to a track, or when performing work under, across or adjacent to a track, or when operations involve, swinging booms or chutes that could in any way come nearer than **20** feet to the gauge line of the near rail of the track, or when erection or removal of staging, false work or forms fouls a track or wire line.

None of the operations specified as a Hazard above shall be carried on during the approach or passing of a train or without permission from the Railroad's Chief Engineer and the presence of a

railroad inspector/flagman, unless other prior arrangements have been made through the Railroad.

9. MINIMUM CLEARANCES

During the construction of staging, false work or forms, the Contractor shall at all times maintain a minimum vertical clearance of **20** feet above the top of high rail and a minimum side clearance of **20** feet from the gauge line of the near rail where track is tangent. Additional side clearance must be maintained where track is on a curve.

10. WORK PLAN SUBMITTAL AND APPROVAL

The Contractor shall submit in writing to the Railroad's Chief Engineer or duly authorized representative, and the Departments Railroad Property Manager or his appointed representative, at least **30** calendar day(s) in advance of the start of the project, an outline of his plan for work within the Railroad right of way including contemplated method(s) of construction. This plan must meet with the approval of the Railroad's Chief Engineer and the Department's Railroad Property Manager in every respect. If the Contractor contemplates the use of "on the track equipment", it should so state and obtain from the Railroad the conditions pertaining to such operations. All Railroad costs included in this operation will be borne by the Contractor. In a like manner, any of the Contractor's equipment or material on cars for this project shall be handled in conformance with existing traffic rules with all costs borne by the Contractor.

Prior to submitting its Proposal, the Contractor shall have ascertained from the Railroad and from the Department's Railroad Property Manager or his appointed representative, all information relating to its requirements and regulations and all costs in connection with compliance thereto.

11. EXCAVATIONS

Before excavation for footings adjacent to tracks and/or within the Railroad's right-of-way may commence, whether or not also within the limits of a public highway, plans and calculations for such excavations, prepared by a Professional Engineer authorized to practice in Maine, shall be submitted to the Railroad's Chief Engineer for review and approval. Unless other prior arrangements have been made, the Railroad's Chief Engineer shall have **4** week(s) to perform such review and approval and issue a written permission to proceed with the excavation. No excavation shall proceed without such permission.

At a minimum, excavations must utilize proper bracing, shoring, sheeting or other support as determined by the Railroad's Chief Engineer, to support the tracks with railroad traffic. Open excavation shall be suitably planked over when construction operations are not in progress. No excavation work shall be performed by the Contractor within the limits of the Railroad right of way, whether or not also within the limits of a public highway, until the Contractor has ascertained from the Chief Engineer of the railroad the location of any wires, conduits, pipes, cables or other railroad facilities below the surface of the ground. Damage to any such facilities

caused by the failure of the Contractor to ascertain the location of such facilities or by failure to use due care to avoid injury to such facilities shall be at the expense of the Contractor.

12. EQUIPMENT

Equipment of the Contractor shall be in such condition so as to prevent failure that would cause delay in the operation of trains or damage to railroad facilities. Equipment shall not be placed or put in operation adjacent to a track without first obtaining permission of the Railroad. The Railroad agrees that such permission shall not be unreasonably withheld.

13. RAILROAD SERVICES - GENERALLY

When work is to be performed within the Railroad's right-of-way, the Railroad shall provide the services, equipment and materials provided in this Special Provision including, but not limited to, engineering, flagging, inspection, signal protection and/or relocation, and restoration or replacement of the Railroad's track structure of ballast. Further, if the Railroad's Chief Engineer determines that the Contractor's operations do not comply with all of the safety requirements of this Special Provision and all safety requirements and directions of said Chief Engineer, the Railroad will employ the necessary qualified employees to protect its trains and other facilities. The Contractor shall pay to the Railroad the cost for performing all Railroad Services unless said costs are to be paid by the Department as specified in this Special Provision.

14. INSPECTION / FLAGGING

The Railroad shall furnish and assign all inspectors / flaggers for general inspection purposes of general protection of railroad property and operations during construction as the Railroad's Chief Engineer determines are necessary to preserve safety.

(a) Responsibility for Cost. The Department will bear the cost of flagging or inspection (including travel time) or any combination thereof up to **_0_** man days of said flagging or inspection. If, in the opinion of the Railroad's Chief Engineer, further services of a flagger or inspector will be required due to the operations of the Contractor, the services will be furnished and the cost thereof (salary, expenses, insurance, taxes and vacation allowance, etc.) shall be paid to the Railroad by the Department, and will be recovered by the Department from the Contractor.

(b) Terms. The minimum hours per day for the Railroad employees engaged in inspection flagging services shall be eight (8) hours. Time at rates for straight time, overtime or for deadheading starts in accordance with established practices in effect in the territory in which the project is located. Information as to these practices should be obtained from the Railroad's Chief Engineer.

The Contractor shall notify the Railroad's Chief Engineer and the Chief Engineer of the Department in writing **7** calendar day(s) before beginning, resuming or suspending work within **20** feet of the track, so that an inspector may be provided or removed in accordance with the requirements of this Special Provision. An inspector may be removed upon **2** calendar day(s) notice. Failure to give notice of intent to suspend work shall be cause of charge to the Contractor the cost of inspection during the period when work is suspended.

(c) Estimated Cost. The following is an estimate of the cost per day of inspection/flagging necessary for this project. The rates shown include all overhead charges, travel time, deadheading and personal expenses.

Date of estimate **N/A**.

Estimated daily rate for eight (8) consecutive hours Monday-Friday (straight time): **N/A**

Estimated daily rate for four (4) consecutive hours Saturday, Sunday, Holiday (overtime): **N/A**
Estimated rate for hours worked in excess of eight (8) hours in any one day: **N/A**

Rates charged will be those in effect at the time of the performing the inspection/ flagging which may be different than the rates used at the date of the Estimate. The Railroad agrees to notify the Department if rates used to calculate the above estimates change before the date of bids are received for this Contract.

(d) Definitions.

Man day (M.D.) - eight (8) consecutive hours or any portion thereof.

Overtime - Each additional hour or fraction thereof consecutive to and beyond the standard man day will count as 3/16 of a man day.

Standard Man day - Eight (8) consecutive hour, Monday - Friday between the hours of **7** a.m. to **3** p.m. unless otherwise noted and agreed to by all parties. *(Note: Does not include lunch period from 12:00 pm to 12:30 pm or Travel Time).*

Travel Time - Time required by flagger and/or inspector to commute between his or her point of headquarters to the project site. This time shall not be charged used in determining available man days.

15. OTHER CONTRACTOR RESPONSIBILITIES

The restoring and resurfacing of tracks, if disturbed due to Contractor's operations, shall be at the expense of the Contractor.

Any other changes made or services furnished by the Railroad as a result of the Contractor will be at the Contractor's expense.

16. EXTRA-CONTRACT SERVICES

Temporary and permanent changes of tracks and telephone, signal and electric supply lines made necessary by or to clear the permanent work of the Contractor as shown on the construction plans and included in the Railroad force account as recollect-able from the State will be made or caused to be made by the Railroad without expense to the Contractor.

17. INDEMNIFICATION

Where work is being performed over, under, across or adjacent to Railroad premises, the Contractor shall defend, indemnify and save harmless the Railroad and the Maine Department of Transportation from and against any and all loss, cost, damage, claims, suits, demands, or liability for damages for personal injury including death and for damage to property, which may arise from or out of the operations conducted under his contract, occurring by reason of any act or omission of the Contractor, his agents, servants or employees, or by reason of any act or omission of any subcontractor, his agents, servants or employees.

18. INSURANCE

In addition to any other forms of insurance or bonds required under the terms of the Contract, the Contractor will be required to procure and maintain, at its sole cost and expense, the following insurance coverages naming the Railroad as an insured.

(a) Railroad Protective Liability Insurance with limits not less than **$3 million** per single occurrence and **$6 million** per aggregate total occurrences.

(b) Comprehensive General Liability Insurance protecting against liability from bodily injury or property damage arising out of the Construction Project with limits of not less than **$3 million** per single occurrence and **$6 million** per aggregate total occurrences.

(c) Workers Compensation and Occupational Disease Insurance, as required by law.

(d) Automobile Liability Insurance covering all motor vehicles used about or in connection with the Construction Project.

If any part of the work is sublet, these insurance coverages shall be provided by or on behalf of the subcontractors to cover their operations

Each policy shall carry an endorsement covering the “save harmless” clause in favor of the Railroad and the Maine Department of Transportation, as set forth in the paragraph, “Responsibility for Damage Claims”.

If blasting is to be done in the vicinity of the Railroad, the insurance policies shall include such coverage.

The policies shall be in force before any work is done on the project and shall remain in effect until all work required to be performed under the terms of the contract is satisfactorily completed as evidenced by the formal acceptance by the State and the Railroad.

Before any work is done on the project, the Department of Transportation and the Railroad's Chief Engineer shall be furnished certificates of each policy. Further, the original policy of the Comprehensive General Liability Insurance and the Railroad Protective Liability Insurance shall be furnished to the Railroad's Chief Engineer and a duplicate shall be furnished to the Department of Transportation.

The policy or policies of the Railroad’s protective public liability and property damage liability shall be written by a Company authorized to do business in the State of Maine, and shall be signed by the President and Secretary of the Insurance Company and shall be countersigned by an authorized representative of the Company.

19. **ROADWAY WORKER SAFETY REGULATION**

Notice to all Contractors/Subcontractors and individuals must be aware of the Federal Roadway Worker Safety Regulation, CFR 49, and Part 214(c). They may be required to comply with this regulation. Any requirements for them to comply will be discussed at the pre-construction utility meeting.

Town: **Patten, Stacyville, Sherman**
Project/PIN: **WIN 18796.00**
Date: **2-10-2016**

EXHIBIT A
ORIGINAL TO CONTRACTOR

MDOT/RAILROAD STOP WORK ORDER

Section A - Contractor	Town
	DOT Railroad Project #
Railroad Name	Location
	Notice #
DESCRIPTION OF SAFETY HAZARD/REASON FOR ORDER	
Standard Violated	RAC (Risk Assessment Code) **N/R**
Railroad Official (Flagger/Inspector) Name Signature	Date
SECTION B - ACTION TAKEN:	

cc: MDOT - R.E. or Inspector
MDOT - Utility Section
MDOT - Construction Division
Railroad - Chief Engineer

Ver: 12/2000

dgl

1. Risk Assessment. Each identified/validated hazard shall be assigned a Risk Assessment Code (RAC) by the Safety Office. The RAC represents the degree of risk associated with the deficiency and combines the elements of hazard severity and mishap probability. The RAC is derived as follows:

a. Hazard Severity. The hazard severity is an assessment of the worst potential consequence: Defined by degree of injury, occupational illness, or property damage, which is likely to occur as a result of a deficiency. Hazard severity categories shall be assigned by roman numeral according to the following criteria.

(1) Category I - Catastrophic: The hazard may cause death or loss of a facility.

(2) Category II - Critical: May cause severe injury, severe occupational illness, or major property damage.

(3) Category III - Marginal: May cause minor injury, minor occupational illness, or minor property damage.

(4) Category IV - Negligible: Probably would not affect personnel safety or health, but is nevertheless in violation of a NAVOSH standard.

b. Mishap Probability. The mishap probability is the probability that a hazard will result in a mishap, based on an assessment of such factors as location, exposure in terms of cycles or hours of operation, and affected population. Mishap probability shall be assigned an Arabic letter according to the following criteria:

(1) Sub-category A - Likely to occur immediately or within a short period of time.

(2) Sub-category B - Probably will occur in time.

(3) Sub-category C - May occur in time.

(4) Sub-category D - Unlikely to occur.

c. Risk Assessment Code. The RAC is an expression of risk which combines the elements of hazard severity and mishap probability. Using the matrix shown below, the RAC is expressed as a single Arabic number that can be used to help determine hazard abatement priorities.

		Mishap Probability				RAC
		A	B	C	D	1 - Critical
Hazard Severity	I	1	1	2	3	2 - Serious
	II	1	2	3	4	3 - Moderate
	III	2	3	4	5	4 - Minor
	IV	3	4	5	5	5 - Negligible

December 17, 2010
Supersedes December 30, 2009

SPECIAL PROVISION
SECTION 104
GENERAL RIGHTS AND RESPONSIBILITIES
(Electronic Payroll Submission)
(Payment Tracking)

104.3.8.1 Electronic Payroll Submission The prime contractor and all subcontractors and lower-tier subcontractors will submit their certified payrolls electronically on this contract utilizing the Elation System web based reporting. There is no charge to the contracting community for the use of this service. The submission of paper payrolls will not be allowed or accepted. Additional information can be found at http://www.maine.gov/mdot/contractors/ under the first "Notice".

104.3.8.2 Payment Tracking The prime contractor and all subcontractors and lower-tier subcontractors will track and confirm the delivery and receipt of all payments through the Elation System

Project No.: 18796.00

SPECIAL PROVISION 105
CONSTRUCTION AREA

A Construction Area located in the **Towns of Sherman, Stacyville and Patten** has been established by the Maine Department of Transportation (MDOT) in accordance with provisions of 29-A § 2382 Maine Revised Statutes Annotated (MRSA).

(a) The section of highway under construction in Aroostook and Penobscot Counties, Project No. STP-1879(600) is located on Route 11, beginning at Grindstone Road in Sherman and extending northerly 9.29 miles to the Shin Pond Road in Patten.

Per 29-A § 2382 (7) MRSA, the MDOT may "*issue permits for stated periods of time for loads and equipment employed on public way construction projects, United States Government projects or construction of private ways, when within construction areas established by the Department of Transportation. The permit:*

A. Must be procured from the municipal officers for a construction area within that municipality;

B. May require the contractor to be responsible for damage to ways used in the construction areas and may provide for:

(1) Withholding by the agency contracting the work of final payment under contract; or

(2) The furnishing of a bond by the contractor to guarantee suitable repair or payment of damages.

The suitability of repairs or the amount of damage is to be determined by the Department of Transportation on state-maintained ways and bridges, otherwise by the municipal officers;

C. May be granted by the Department of Transportation or by the state engineer in charge of the construction contract; and

D. For construction areas, carries no fee and does not come within the scope of this section."

The Municipal Officers for the **Towns of Sherman, Stacyville and Patten** agreed that an Overlimit Permit will be issued to the Contractor for the purpose of using loads and equipment on municipal ways in excess of the limits as specified in 29-A MRSA, on the municipal ways as described in the "Construction Area".

As noted above, a bond may be required by the municipality, the exact amount of said bond to be determined prior to use of any municipal way. The MDOT will assist in determining the bond amount if requested by the municipality.

The maximum speed limits for trucks on any town way will be 25 mph (40 km per hour) unless a higher legal limit is specifically agreed upon in writing by the Municipal Officers concerned.

Special Provision
Section 105
General Scope of Work
(Limitations of Operations)

1) This contract allows for only one paving operation per day unless otherwise authorized by the Resident.

2) Traffic will be allowed to travel on milled surfaces on the mainline. After 7 calendar days any milled surfaces needing repair or maintenance, shall be repaired to the satisfaction of the Resident (please see Special Provision 202). All work, equipment and materials required to make repairs shall be at the Contractor's expense. Failure to adequately maintain milled areas will also result in a violation of Special Provision 652. The Contractor shall plan and conduct their work accordingly.

3) A 24 hour notice is required for any changes in work schedule.

4) A 48 hour notice is required prior to paving operations.

5) A 48 hour notice is required prior to working any Saturdays.

6) Weepers shall be milled on the shoulder to allow for water run-off/drainage as directed by the Resident. This work shall be considered incidental to the 652 items. Pavement placed to pave in weepers will be paid under the surface pavement item.

7) The Contractor is advised that no work will be allowed between the dates and times listed below:
    - Friday, May 27, 2016, at sunset to Tuesday, May 31, 2016, at 6:00 a.m.
    - Friday, July 1, 2016, at sunset to Tuesday, July 5, 2016, at 6:00 a.m.
    - Saturday, July 30, 2016, at sunset to Monday, August 15, 2016, at 6:00a.m., to accommodate for the 175th Annual Pioneer Days Celebration held in the Town of Patten from station 475+00 to station 506+35.
    - Friday, September 2, 2016, at sunset to Tuesday, September 6, 2016, at 6:00 a.m.

Sherman-Patten
STP-1879(600)
18796.00
Route 11
February 25, 2016

MaineDOT DBE Project Attainment Target (PAT)
for this Project is 4.1 %

The MaineDOT seeks to meet the specified annual Disadvantaged Business Enterprise (DBE) usage goal set out by 49 CFR 26.45 through the efforts of contractors seeking to employ qualified DBE subcontractors. We seek to meet this goal by race neutral means and do not, at this time, use contract specific requirements for each project. We do however, understand the capacity of Maine's DBE community and the unique characteristics a project may have that would differ from the broad annual goal.

Taking this into consideration, the MaineDOT will review each project and develop an anticipated attainment or Project Attainment Target (PAT) based on several factors that are project specific. Those factors include:

- ☐ Scope of Work
- ☐ DBE availability according to Specification Item
- ☐ Geographic location
- ☐ DBE capacity

This PAT is developed to assist contractors to better understand the DBE participation that the MaineDOT can reasonably expect for a specific project. The PAT is NOT a mandate but an assessment of the DBE opportunities that this project could meet or exceed. MaineDOT anticipates that each contractor will make the best effort to reach or exceed the PAT for this project.

SPECIAL PROVISION
SECTION 107
PROSECUTION AND PROGRESS
(Contract Time)

This Contract shall be completed within (**134**) continuous calendar days. The Contractor may begin work **May 1st 2016** in accordance with Standard Specification 104.4.2 and upon approval of all required submittals. The Contract Completion Date will be no later than **October 1st 2016**.

At least 21 calendar days prior to the desired Begin Construction Date **(and no later than June 15th)**, the Contractor shall submit an **electronic copy of their signed request to begin work and the Begin Construction Date**. This signed request shall be sent read receipt through **email** with their **Schedule of Work**, in accordance with Standard Specification 107.4.2, to **Shawn.Smith@Maine.gov**, **Emory.Lovely@Maine.gov**, and **Scott.Bickford@Maine.gov**. The Contractor shall notify all utility contacts listed in the 104 Special Provision and provide the utility contacts the submitted schedule of work within 2 calendar days of the schedule of work submittal townofpatten@fairpoint.net. **A penalty in the amount of $500/day will be assessed for each calendar day or partial calendar day beyond June 15th that the schedule of work is not received.** Upon receipt of the schedule of work, a pre-construction meeting will be scheduled. A Contract Modification will be executed to document the new Contract Completion Date based upon the Begin Construction Date. The modified Contract Completion Date shall not exceed the Contract Completion Date specified in this special provision.

The Contractor may request to adjust the submitted schedule of work and Begin Construction Date once after the initial submittal. The Department will allow adjustments in the Begin Construction Date of up to seven calendar days if the request is made at least 21 calendar days prior to the updated Begin Construction Date. This signed request shall be sent read receipt through **email** with their **Schedule of Work**, in accordance with Standard Specification 107.4.2, to **Shawn.Smith@Maine.gov**, **Emory.Lovely@Maine.gov**, and **Scott.Bickford@Maine.gov**. The Contractor shall notify all utility contacts listed in the 104 Special Provision and provide the utility contacts the updated schedule of work within 2 calendar days of the request to adjust the Begin Construction Date.

SPECIAL PROVISION
SECTION 107
SCHEDULING OF WORK

Replace Section 107.4.2 with the following:

"107.4.2 Schedule of Work Required Within 21 Days of Contract Execution and before beginning any on-site activities, the Contractor shall provide the Department with its Schedule of Work. The Contractor shall plan the Work, including the activity of Subcontractors, vendors, and suppliers, such that all Work will be performed in Substantial Conformity with its Schedule of Work. The Schedule must include sufficient time for the Department to perform its functions as indicated in this Contract, including QA inspection and testing, approval of the Contractor's TCP, SEWPCP and QCP, and review of Working Drawings.

At a minimum, the Schedule of Work shall include a bar chart which shows the major Work activities, milestones, durations, **submittals and approvals**, and a timeline. Milestones to be included in the schedule include: (A) start of Work, (B) beginning and ending of planned Work suspensions, (C) Completion of Physical Work, and (D) Completion. If the Contractor Plans to Complete the Work before the specified Completion date, the Schedule shall so indicate.

Any restrictions that affect the Schedule of Work such as paving restrictions or In-Stream Work windows must be charted with the related activities to demonstrate that the Schedule of Work complies with the Contract.

The Department will review the Schedule of Work and provide comments to the Contractor within 20 days of receipt of the schedule. The Contractor will make the requested changes to the schedule and issue the finalized version to the Department."

SPECIAL PROVISIONS
SECTION 202
REMOVING STRUCTURES AND OBSTRUCTIONS
(Removing Pavement Surface)

The November 2014 Revision of the Standard Specifications, Section 202-Removing Structures and Obstructions, subsection 202.061-Removing Pavement Surface, has been removed and replaced in it's entirety by the following:

202.061 Removing Pavement Surface The equipment for removing the bituminous surface shall be a power operated milling machine or grinder capable of removing bituminous concrete pavement to the required depth, transverse cross slope, and profile grade by the use of an automated grade and slope control system. The controls shall automatically increase or decrease the pavement removal depth as required, and readily maintain desired cross slope, to compensate for surface irregularities in the existing pavement course. The equipment shall be capable of accurately establishing profile grades by referencing from a fixed reference such as a grade wire, or from the existing pavement surface using a 30 foot minimum contact ski (floating beam), or 24 foot non-contact grade control beam.

The Contractor shall locate and remove all objects in the pavement through the work area that would be detrimental to the planing or grinding machine. Any structures or obstructions left within the travel lane or shoulders shall have tapers installed according to Standard Detail 202(01). The finished milled surface will be inspected before being accepted, and any deviations in the profile exceeding 1/2 inch under a 16 foot string line or straightedge placed parallel to the centerline will be corrected. Any deviations in the cross-slope that exceed 3/8 inch under a 10 foot string line or straightedge placed transversely to centerline will be corrected. All corrections will be made with approved methods and materials. Any areas that require corrective measures will be subject to the same acceptance tolerances. Excess material that becomes bonded to the milled surface will be removed to the Resident's satisfaction before the area is accepted.

On highways or expressways with directional traffic, the Contractor will be required to remove the pavement surface on the adjacent sections of travel lane and designated portions of adjacent shoulder before the end of the following calendar day unless the centerline edge is tapered to a 12:1. Failure to remove the centerline vertical edge by milling, using the approved taper, or matching the adjacent course the following day will constitute a traffic control violation unless an excusable delay is granted by the Department. The Contractor will be required to remove the specified pavement course over the full width of the mainline traveled ways prior to opening the sections to weekend or holiday traffic.

On roadways with two-way traffic, the Contractor will be required to remove the specified pavement course over the full width of the mainline traveled ways prior to opening the sections to weekend or holiday traffic.

During any period that a centerline vertical or tapered edge exists, the Contractor will be responsible for installing additional warning signage that clearly defines the centerline vertical or tapered edge and elevation differential hazard, as well as additional centerline delineation such as double RPM application, or temporary painted line. The Traffic Control Plan shall include the additional requirements. All signs and traffic control devices will conform to Section 719.01, and Section 652, and will be installed prior to the work, at a maximum spacing of 0.50 mile for the entire length of the effected roadway section. All additional signing, labor, traffic control devices, or incidentals will not be paid for directly, but will be considered incidental to the appropriate 652 bid items.

When pavement milling operations leave a 2 inch or less exposed vertical face at the edge of the traveled way, RPMs shall be placed on the remaining pavement surface along the vertical edge at 200 foot intervals. Uneven pavement signs shall be placed at a maximum spacing of ½ mile when pavement milling operations leave an exposed vertical face at the edge of travelway.

When pavement milling operations on directional or bi-directional traffic roadways leave an exposed vertical face greater than 2 inches at the edge of the traveled way the edge shall be either;

1. Be tapered to a zero edge by means of milling a 12:1 transition from the edge of traveled way onto the shoulder before opening the lane to traffic. Tapers shall be removed to form a vertical edge prior to the placement of the new pavement course. No additional payment will be made for tapers, or taper removal.
2. Have an additional 2 feet of pavement shall be removed from the shoulder to eliminate the vertical edge at the edge of travelway before opening the lane to traffic. Payment will be made under the pavement removal item.
3. A pavement layer will be placed to reduce the vertical edge to 2 inch or less before opening the lane to traffic.

As a minimum, the use of temporary painted line, or RPMs placed along the edge of traveled way at 200 foot intervals is required. When pavement milling is extended into the shoulder (including milled tapers), appropriate channelization devices shall be placed 2 feet outside the edge of the vertical face at intervals not exceeding 600 feet, and RPMs shall be placed on the remaining pavement surface along the vertical edge at 200 foot intervals. Uneven pavement signs shall be placed at a maximum spacing of ½ mile when any pavement milling operations leaves an exposed uneven pavement surface.

Any areas of concern, such as de-lamination or pot-holing shall be identified on a continuous basis as milling progresses. Proper corrective action will be determined by the Resident and paid for under the appropriate contract items, and if required, completed prior to opening lane to traffic. Any issues that arise **up to** 7 calendar days after being milled will be the responsibility of the MaineDOT unless otherwise noted in Special Provision Section 105 – Limitations Of Operations. Issues that arise after 7 calendar days will be the responsibility of the Contractor unless otherwise noted in Special Provision Section 105 – Limitations Of Operations.

SPECIAL PROVISION
SECTION 400
HOT MIX ASPHALT PAVEMENTS
(HMA using Hydrated Lime)

The following sections of Section 400 have been revised with following additional requirements.

401.01 Description The Contractor shall compose Hot Mix Asphalt (HMA) Pavement with aggregate, Performance Graded Asphalt Binder (PGAB), hydrated lime, and mineral filler if required. Hydrated Lime shall be utilized in all mixtures so denoted in Special Provision 403 - Hot Mix Asphalt Pavement.

401.02 Materials Materials shall meet the requirements specified in Section 700 – Materials; and the applicable AASHTO and ASTM Standards specified:

Asphalt Cement	702.01
Aggregates for HMA Pavement	703.07
RAP for HMA Pavement	703.08
HMA Mixture Composition	703.09
Hydrated Lime	AASHTO M216

401.03 Composition of Mixtures The Contractor shall compose the Hot Mix Asphalt Pavement with aggregate, Performance Graded Asphalt Binder (PGAB), hydrated lime and mineral filler if required. HMA shall be designed and tested according to AASHTO R35 and the volumetric criteria in Table 1. The Contractor shall size, uniformly grade, and combine the aggregate fractions in proportions that provide a mixture meeting the grading requirements of the Job Mix Formula (JMF).

Hydrated lime shall be used in all HMA at a rate of one percent (1%) by weight of the total dry aggregate including RAP aggregate, if used. The Contractor shall obtain a shipping ticket for each shipment of hydrated lime. The Contractor shall provide the Resident with a copy of each shipping ticket from the supplier, including the date, time and weight of hydrated lime shipped and used in HMA production. The Contractor shall submit a material data sheet for the hydrated lime to the Resident for approval.

The Contractor shall provide the following information with the proposed JMF:
Material Safety Data Sheets (MSDS) for hydrated lime
Supplier and source for Hydrated Lime

401.13 Preparation of Aggregates The Contractor shall add water to the aggregates as required to maintain a minimum total aggregate moisture content of 3 percent. The Contractor shall mix the lime uniformly with the aggregate before introducing the aggregate into the dryer or dryer drum. Hydrated lime introduction systems must be controlled by a proportioning device to the amount required on the JMF plus or minus 0.1% of the target.

The Contractor shall add lime to the aggregate by one of the following methods:

A. The Contractor shall add lime to the combined cold feed aggregate using an enclosed in-line cold feed mechanical pugmill mixer. The Contractor shall use a twin-shaft, continuous mixing pugmill with mixing paddles to thoroughly blend the lime with the aggregate. The Contractor shall adjust the retention time of the mixture in the pugmill so no unmixed lime is visible after the lime and aggregate exit the pugmill.

B. The Contractor shall add lime to the produced aggregates during stockpiling using a pugmill. The Contractor shall distribute the lime per the stockpile ratios stated in the asphalt concrete mix design. A minimum moisture content of 2 percent by dry weight for coarse aggregate and 4 percent by dry weight for fine aggregate is required at the time the aggregates and lime are mixed. The Contractor shall marinate treated

aggregate in stockpiles from 24 hours to 60 days before using in asphalt concrete mix. Do not use aggregate marinated longer than 60 days.

C. The Contractor shall add lime to the combined cold feed aggregate by introducing the lime between aggregate layers as the aggregate flows from the cold feed bins. The Contractor shall thoroughly mix the lime and aggregate on the conveyor belt. The Contractor shall provide a lime introduction and blending system so that no unmixed lime is visible before the lime and combined aggregate enter the drum.

D. The Contractor shall add lime directly into the pugmill of a batch plant prior to the introduction of the PGAB. Dry mix time shall be increased to ensure thorough mixing and blending of lime and aggregate. The additional mix time shall be documented and included in the supplemental QCP.

The cold storage for hydrated lime shall be a separate bulk storage bin with a vane feeder or other approved feeder system which can be readily calibrated. The system shall provide a means for convenient sampling of the hydrated lime additive and verifying the quantity of lime dispensed. If the hydrated lime is to be introduced directly into the plant then the additive equipment shall be synchronized with the cold feed controls to operate concurrently with the cold feed operation. The system will be configured to automatically adjust the hydrated lime feed to variations in the cold aggregate feed. The hydrated lime system shall have out-of-tolerance sensing ability by weight, and have a means to indicate the out–of–tolerance condition.

<u>401.14 Mixing</u> Hydrated lime shall be added into the HMA aggregate mixture prior to the aggregate blend mixing with the PGAB. Aggregate feed rate, or pugmill mixing times shall be adjusted to ensure complete blending of Hydrated Lime and aggregate before the PGAB is added.

<u>401.18 Quality Control Method A, B, & C</u> The Contractor shall provide a written supplement to the project specific QCP outlining the proposed methods of adding and mixing the hydrated lime for approval by the Department. This written summary shall also provide information describing how the Contractor will perform quality control on the addition of hydrated lime, specifically the method of introduction and how the lime use will be measured to assure that the specified percentage is consistently added, and appropriately mixed. The supplemental QCP covering hydrated lime introduction shall be provided to the Department at least one week prior to the prepave meeting.

SPECIAL PROVISION
SECTION 401 - HOT MIX ASPHALT PAVEMENT

The Standard Specification 401 – Hot Mix Asphalt Pavement, has been modified with the following revisions. All sections not revised by this Supplemental Specification shall be as outlined in Section 401 of the Standard Specifications.

401.18 Quality Control Method A, B & C The Contractor shall operate in accordance with the approved Quality Control Plan (QCP) to assure a product meeting the contract requirements. The QCP shall meet the requirements of Section 106.6 - Acceptance and this Section. The Contractor shall not begin paving operations until the Department approves the QCP in writing.

The Contractor shall cease paving operations whenever one of the following occurs on a lot in progress:

a. Method A: The Pay Factor for VMA, Voids @ N_d, Percent PGAB, composite gradation, VFB, fines to effective binder or density using all Acceptance or all Quality Control tests for the current lot is less than 0.85. No ceasing of paving operations shall be required for fines to effective binder if the mean test value is equal to the LSL or USL and s = 0.
b. Method B: The Pay Factor for VMA, Voids @ N_d, Percent PGAB, composite gradation, VFB, fines to effective binder or density using all Acceptance or all Quality Control tests for the current lot is less than 0.90. No ceasing of paving operations shall be required for fines to effective binder if the mean test value is equal to the LSL or USL and s = 0.
c. Method C: The Pay Factor for Percent PGAB, percent passing the nominal maximum sieve, percent passing 2.36 mm sieve, percent passing 0.300 mm sieve, percent passing 0.075 mm sieve or density using all Acceptance or all available Quality Control tests for the current lot is less than 0.85. No ceasing of paving operations shall be required for percent passing the nominal maximum sieve, percent passing 2.36 mm sieve, percent passing 0.300 mm sieve, or percent passing 0.075 mm sieve if the mean test value is equal to the LSL or USL and s = 0.
d. The Coarse Aggregate Angularity or Fine Aggregate Angularity value falls below the requirements of Table 3: Aggregate Consensus Properties Criteria in Section 703.07 for the design traffic level.
e. Each of the first 2 control tests for a Method A or B lot fall outside the upper or lower limits for VMA, Voids @ Nd, or Percent PGAB; or under Method C, each of the first 2 control tests for the lot fall outside the upper or lower limits for the nominal maximum, 2.36 mm, 0.300 mm or 0.075 mm sieves, or percent PGAB.
f. The Flat and Elongated Particles value exceeds 10% by ASTM D4791.
g. There is any visible damage to the aggregate due to over-densification other than on variable depth shim courses.
h. The Contractor fails to follow the approved QCP.

401.203 Method C Lot Size will be the entire production per JMF for the project, or if so agreed at the Pre-paving Conference, equal lots of up to 4500 tons, with unanticipated over-runs of up to 1500 ton rolled into the last lot. Sublot sizes shall be 750 ton for mixture properties, 500 ton for base or binder densities and 250 ton for surface densities. The minimum number of sublots for mixture properties shall be 4, and the minimum number of sublots for density shall be five.

TABLE 7: METHOD C ACCEPTANCE LIMITS

Property	USL and LSL
Passing 4.75 mm and larger sieves	Target +/-7%
Passing 2.36 mm to 1.18 mm sieves	Target +/-5%
Passing 0.60 mm	Target +/-4%
Passing 0.30 mm to 0.075 mm sieve	Target +/-2%
PGAB Content	Target +/-0.4%
% TMD (In place density)	95.0% +/- 2.5%

Pay Adjustment Method C

The Department will use density, Performance Graded Asphalt Binder content, and the percent passing the nominal maximum, 2.36 mm, 0.300 mm and 0.075 mm sieves for the type of HMA represented in the JMF. If the PGAB content falls below 0.80, then the PGAB pay factor shall be 0.55.

Density: For mixes having a density requirement, the Department will determine a pay factor using Table 7: Method C Acceptance Limits:

PA = (density PF- 1.0)(Q)(P)x0.50

PGAB Content and Gradation The Department will determine a pay factor using Table **7**: Method C Acceptance Limits. The Department will calculate the price adjustment for Mixture Properties as follows:

PA = (% Passing Nom. Max PF-1.0)(Q)(P)X0.05+(% passing 2.36 mm PF-1.0)(Q)(P)X0.05+(%passing 0.30 mm PF-1.0)(Q)(P)X0.05+(%passing 0.075 mm PF-1.0)(Q)(P)X0.10+(PGAB PF-1.0)(Q)(P)X0.25

401.223 Process for Dispute Resolution (Methods A B & C only)

TABLE 10: DISPUTE RESOLUTION VARIANCE LIMITS

PGAB Content	+/-0.4%
G_{mb}	+/-0.030
G_{mm}	+/-0.020
Voids @ N_d	+/-0.8%
VMA	+/-0.8%
Passing 4.75 mm and larger sieves	+/- 4.0%
Passing 2.36 mm to 0.60 mm sieves	+/- 3.0%
Passing 0.30 mm to 0.15	+/- 2.0 %
0.075 mm sieve	+/- 0.8%

SPECIAL PROVISION
SECTION 401
HOT MIX ASPHALT PAVEMENT
(Material Transfer Vehicle Option)

Description The Contractor may elect to use a material transfer vehicle at their option to transfer hot mix asphalt to the paver on mainline travelways, shoulders, and ramps as denoted in Special Provision 403 - Hot Mix Asphalt Pavement.

Material transfer vehicles shall operate as an independent unit not attached to the paver. It shall be a commercially manufactured unit specifically designed to transfer the hot mix from haul trucks to the paver without depositing the mix on the roadway. A separate hopper with a capacity of 14 ton shall be inserted into the regular paver hopper. The material transfer vehicle or the hopper insert shall be designed so that the mix receives additional internal mixing action either in the material transfer vehicle or the paver hopper.

Method of Measurement Hot mix asphalt pavement transferred by the material transfer vehicle and hopper insert will be measured by the ton.

Basis of Payment The accepted quantities of hot mix asphalt pavement transferred by the material transfer vehicle and hopper insert will be paid for at a price of $2.00 per ton.

Payments will be made under:

Pay Item:		Pay Unit:
403.40	Material Transfer Vehicle (MTV)	Ton

SPECIAL PROVISION
SECTION 403
HOT MIX ASPHALT

Desc. Of Course	Grad Design.	Item Number	Total Thick	No. Of Layers	Comp. Notes
1 ¼" HMA Overlay with Shim					
Mainline Travelway, Shoulders, & Approach Roads					
Wearing	9.5 mm	403.210	1 ¼"	1	1,4,7,19,20,27
Shim	9.5 mm	403.211	variable	1/more	1,2,4,7,11,14,20
1 ½" Mill & 1 ½" HMA Overlay					
Mainline Travelway Only					
Wearing	9.5 mm	403.210	1 ½"	1	1,4,7,19,20,27
Spot Shims / Delaminated Areas – As Directed by the Resident					
Shim	9.5 mm	403.211	variable	1/more	1,2,4,7,11,14,20
Drives, Misc.					
Wearing	9.5 mm	403.209	1 ½"	1/more	2,3,10,11,14

COMPLEMENTARY NOTES

1. The required PGAB for this mixture will meet a **PG 64-28** grading.
2. The incentive/disincentive provisions for density shall not apply. Rollers shall meet the requirements of this special provision. The use of an oscillating steel roller shall be required to compact all mixtures pavements placed on bridge decks.
3. The design traffic level for mix placed shall be <0.3 million ESALS. The design, verification, Quality Control, and Acceptance tests for this mix will be performed at **50 gyrations**.
4. The design traffic level for mix placed shall be 0.3 to <3 million ESALS. The design, verification, Quality Control, and Acceptance tests for this mix will be performed at **50 gyrations**.
7. Section 106.6 Acceptance, (1) Method A.
10. Section 106.6 Acceptance, (2) Method D.
11. The combined aggregate gradation required for this item shall be classified as a 9.5mm "**fine graded"** mixture, (using the Primary Control Sieve control point) as defined in 703.09.
14. The combined aggregate gradation required for this item shall be classified as a 9.5mm Thin Lift Mixture (TLM) mixture, using the Aggregate Gradation Control Points as defined in 703.09.
19. The Contractor may, at their option, use a Material Transfer Vehicle (MTV) for **all mainline travelway and adjacent shoulders surface course** if paved in the same operation. See Special Provision 401 – Material Transfer Vehicle for specifics.

20. The Contractor may place the specified HMA pavement course, not to exceed 2 inch compacted depth, over the full single travel lane width, for each production day. If this option is utilized the Contractor will be required to place a matching course of HMA over the adjacent section of travel lane before the end of the following calendar day. The Contractor will also be responsible for installing additional warning signage that clearly defines the centerline elevation differential hazard. Unless otherwise addressed in the contract, the Contractor shall install additional centerline delineation such as a double RPM application, or temporary painted line for centerline depths exceeding ¾" inch, and provide a single RPM application placed on the newly placed pavement for ¾" inch or less layers. The Traffic Control Plan shall be amended to include this option and the additional requirements. All signs and traffic control devices will conform to Section 719.01, and Section 652, and will be installed prior to the work, at a maximum spacing of 0.50 mile for the entire length of effected roadway section. On roadways with two-way traffic, the Contractor will be required to place the specified course over the full width of the mainline traveled way being paved prior to opening the sections to weekend or holiday traffic. If this option is utilized, all additional signing, labor, traffic control devices, or incidentals will not be paid for directly, will be considered incidental to the appropriate 652 items.
27. Hydrated lime shall be added to the HMA mixture at a rate of one percent (1%) by weight of the total dry aggregate including RAP aggregate, if used. See Special Provision 401 – HMA using Hydrated Lime for project specifics.

Tack Coat

A tack coat of emulsified asphalt, RS-1 or RS-1h, Item 409.15 shall be applied to any existing pavement at a rate of approximately 0.030 gal/yd², and on milled pavement approximately 0.05 gal/yd² prior to placing a new course. A fog coat of emulsified asphalt shall be applied between shim /base courses and surface course as well as to any bridge membrane prior to the placement of HMA layers at a rate not to exceed 0.030 gal/yd². Tack used will be paid for at the contract unit price for Item 409.15 Bituminous Tack Coat.

February 4, 2011
Supersedes February 27, 2003

SPECIAL PROVISION
SECTION 652
MAINTENANCE OF TRAFFIC

Approaches Approach signing shall include the following signs as a minimum. Field conditions may warrant the use of additional signs as determined by the Resident.

Road work Next x Miles
Road work 500 Feet
End Road Work

Work Area At each work site, signs and channelizing devices shall be used as directed by the Resident. Signs include:

Road Work xxxx [1]
One Lane Road Ahead
Flagger Sign

Other typical signs include:

Be Prepared to Stop
Low Shoulder
Bump
Pavement Ends

The above lists of Approach signs and Work Area signs are representative of the contract Requirements. Other sign legends may be required.

The Contractor shall conduct their operations in such a manner that the roadway will not be restricted to one lane for more than 800 m [2,500 ft] at each work area. To encourage quality paving in warm-weather conditions, the length can be extended to 4,000 ft depending on the traffic impacts. Where more than one work area restricts traffic to one lane operation, these work areas shall be separated by at least 1.6 km [1 mile] of two way operation.

Temporary Centerline A temporary centerline shall be placed each day on all new pavement to be used by traffic. The temporary centerline, when specified of reflectorized traffic paint, shall conform to the standard marking patterns used for permanent markings.

Failure to apply a temporary centerline daily will result in a Traffic Control Violation and suspension of paving operations until temporary markers are applied to all previously placed pavement.

[1] "Road Work Ahead" to be used in mobile operations and "Road Work xx ft" to be used in stationary operations as directed by the Resident.

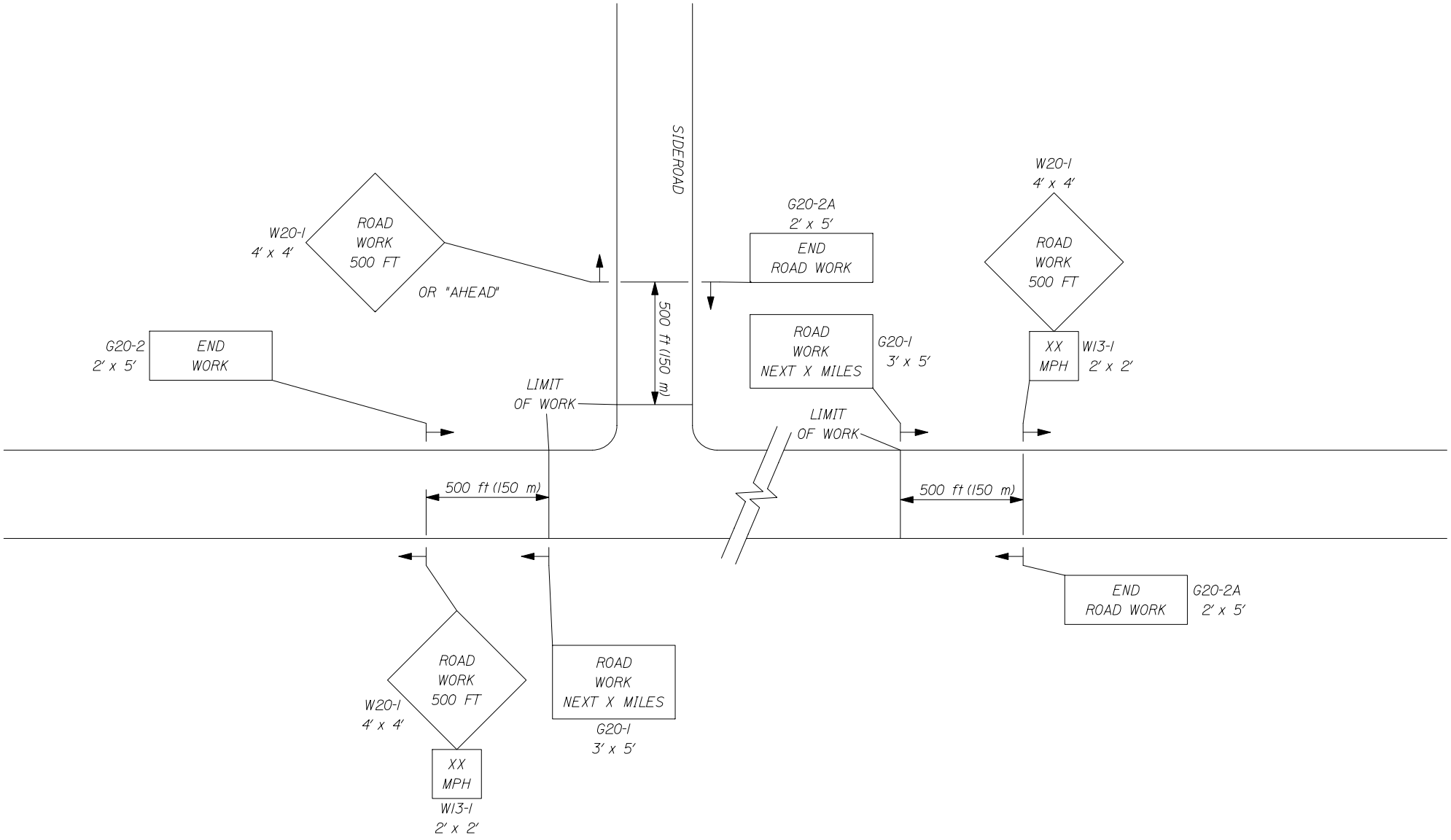

1 of 3

-- PROJECT APPROACH SIGNING --
TWO WAY TRAFFIC

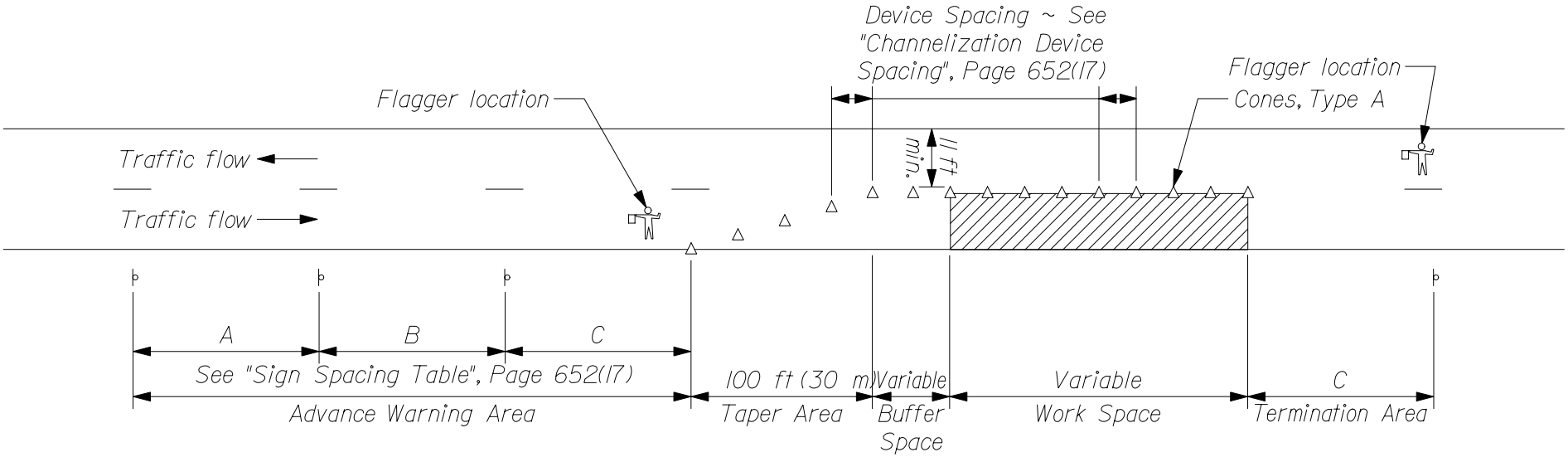

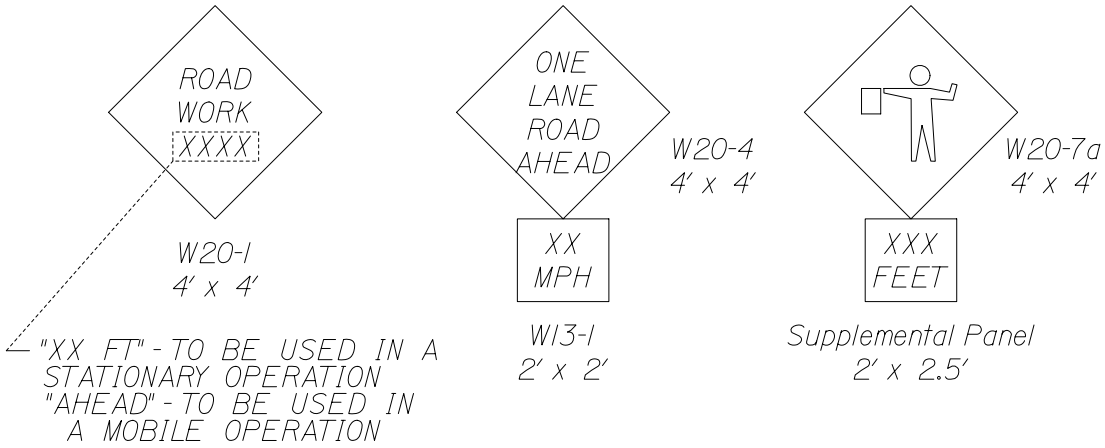

TYPICAL APPLICATION: TWO - WAY, TWO LANE ROADWAY, CLOSING ONE LANE USING FLAGGERS

TYPE OF TAPER	TAPER LENGTH (L)*
Merging Taper	at least L
Shifting Taper	at least 0.5L
Shoulder Taper	at least 0.33L
One-Lane, Two-Way Traffic Taper	100 ft (30 m) maximum
Downstream Taper	100 ft (30 m) per lane

* Formulas for L are as follows:

For speed limits of 40 mph (60 km/h) or less:

$L = \frac{WS^2}{60}$ $\quad (L = \frac{WS^2}{155})$

For speed limits of 45 mph (70 km/h) or greater:

$L = WS$ $\quad (L = \frac{WS}{1.6})$

* Formulas for L are as follows:

A minimum of 5 channelization devices shall be used in the taper.

CHANNELIZATION DEVICE SPACING

The spacing of channelization devices shall not exceed a distance equal to 1.0 times the speed limit in mph when used for taper channelization, and a distance in feet of 2.0 times the speed limit in mph when used for tangent channelization.

SIGN SPACING TABLE			
Road Type	Distance Between Signs**		
	A	B	C
Urban 30 mph (50 km/h) or less	100 (30)	100 (30)	100 (30)
Urban 35 mph (55 km/h) and greater	350 (100)	350 (100)	350 (100)
Rural	500 (150)	500 (150)	500 (150)
Expressway / Urban Parkway	2,640 (800)	1,500 (450)	1000 (300)

**Distances are shown in feet (meters).

GENERAL NOTES;

1. Final placement of signs and devices may be changed to fit field conditions as approved by the Resident.

SUGGESTED BUFFER ZONE LENGTHS

Speed (mph)	Length (feet)	Speed (mph)	Length (feet)
20	115	40	325
25	155	45	360
30	200	50	425
35	250	55	495

March 19, 2014

SPECIAL PROVISION
SECTION 812
SEWER MANHOLE

Description This work shall consist of the adjustment of manholes as indicated in the Bid Book, Plans, or as directed by the Resident.

Adjust Sewer Manhole to Grade shall consist of adjusting a manhole to the required final grade, including any lowering and any other adjustments that may be necessary prior to setting the final grade and in accordance with this Section and Section 604 - Manholes, Inlets, and Catch Basins.

Method of Measurement: Measurement shall be in accordance with Subsection 604.05.

Basis of Payment: Payment shall be in accordance with Subsection 604.06.

Pay Item		Pay Unit
812.162	Adjust Sewer Manhole to Grade	Each

January 3, 2003

SPECIAL PROVISION
SECTION 823
GATE VALVE BOXES

Description This work shall consist of the adjustment or installation of gate valve boxes as indicated in the Bid Book, Plans, or as directed by the Resident.

Gate Valve Box, Adjust to Grade shall consist of adjusting a gate valve box to the required final grade, including any lowering and any other adjustments that may be necessary prior to setting the final grade.

Gate Valve Box, Install Only shall consist of removing an existing gate valve box, installing a replacement gate valve box, and adjusting the replacement gate valve box as specified above.

Materials The municipality or utility company owning or operating the existing water main system will provide all replacement gate valve boxes necessary for the Gate Valve Box, Install Only item. Any gate valve boxes damaged by improper construction methods or handling by the Contractor, as determined by the Department, shall be replaced at the Contractor's expense.

Method of Measurement Gate Valve Box, Adjust to Grade and Gate Valve Box, Install Only will be measured by the unit each, complete and in place.

Basis of Payment Payment for Gate Valve Box, Adjust to Grade shall be full compensation for all equipment, labor, and incidental materials necessary to adjust a gate valve box as specified above.

Payment for Gate Valve Box, Install Only shall be full compensation for all equipment, labor, and incidental materials necessary to replace and adjust a gate valve box as specified above.

Pay Item		Pay Unit
823.011	Gate Valve Box, Install Only	Each
823.332	Gate Valve Box, Adjust to Grade	Each

October 13, 2015
Supersedes August 06, 2015

STANDARD DETAIL UPDATES

Standard Details and Standard Detail updates are available at:
http://maine.gov/mdot/contractors/publications/standarddetail/

Detail #	Description	Revision Date
501(02)	Pipe Pile Splice	3/05/2015
501(03)	H – Pile Splice	3/05/2015
504(07)	Diaphragm & Crossframe Notes	10/13/2015
507(13)	Steel Bridge Railing	6/03/2015
507(14)	Steel Bridge Railing	6/03/2015
507(31)	Barrier – Mounted Steel Bridge	8/06/2015
526(02)	Temporary Concrete Barrier	8/06/2015

SUPPLEMENTAL SPECIFICATIONS
(Corrections, Additions, & Revisions to Standard Specifications - November 2014)

SECTION 101
CONTRACT INTERPRETATION

101.2 Definitions
Page 1-5 – Remove the definition of Bridge in its entirety and replace with:
"**Bridge A structure that is erected over a depression or an obstruction, such as water, a highway or a railway, and has an opening measured along the centerline of the Roadway of more than 20 feet between: The faces of abutments; spring line of arches; extreme ends of openings of box culverts, pipes or pipe arches; or the extreme ends of openings for multiple box culverts, pipes or pipe arches**."

Page 1-12 – Remove the definition of Large Culvert in its entirety and replace with:
"**Large Culvert Any structure not defined as a Culvert or Bridge that provides a drainage or non-drainage opening under the Roadway or Approaches to the Roadway, with an opening that is 5 feet but less than 10 feet**."

Remove the definition of Minor Span in its entirety and replace with:
"**Minor Span Same definition as Bridge, except having an opening of between 10 feet and 20 feet, inclusive**."

SECTION 104
GENERAL RIGHTS AND RESPONSIBILITES

104.5.5 Prompt Payment of Subcontractors Add the following paragraph to this subsection:

C. Payment Tracking Federal Projects On federally funded projects, the prime contractor, subcontractors and lower-tier subcontractors will track and confirm the delivery and receipt of all payments through the Elation System. They will be responsible for entering all payments to all sub and lower tier contractors. MaineDOT will run a query monthly to ensure that contractors are complying and generate an e-mail to contractors who have not responded to confirm receipt of MaineDOT payment or contractor payment to lower tier subcontractors.

SECTION 105
GENERAL SCOPE OF WORK

105.4.5 Special Detours Remove this subsection in its entirety and replace with:
"105.4.5 Maintenance of Existing Structures When a new Bridge or Minor Span is being installed on a new alignment and the existing structure is to remain in service, the Department will maintain the existing structure and the portions of the roadway required for maintaining traffic until such time that the new structure is opened to traffic and the existing structure is taken out of service. A similar situation exists when a new Bridge or Minor Span is being installed on the same alignment as the existing structure, requiring a temporary detour to be installed by the Contractor per Section 510, Special Detours,

prior to removal of the existing structure. In this case, the Department will maintain the existing structure and the portions of the existing roadway required for maintaining traffic until such time that either the temporary detour is opened to traffic or the Contractor begins any work on the existing structure, including, but not limited to, repairs, modifications, moving, demolition or removal. In either case, once the new structure or temporary detour is opened to traffic, or the Contractor begins any work on the existing structure, the Contractor shall be solely responsible for all maintenance of the existing structure and the portions of the existing approaches that lie outside the new roadway or the temporary detour, respectively. This specification is not intended to supersede Standard Specification Section 104.3.11, Responsibility for Property of Others."

105.6.2.4 Department Verification Add the following to the end of the first sentence:
"**or other approved method, such as reference staking, to allow the Department to independently verify the accuracy of the work, as approved by the Department."**

SECTION 106
QUALITY

106.4.1 General - In the first sentence, remove "When required by Special Provision," and replace with **"When required elsewhere in the Contract, "**

SECTION 108
PAYMENT

108.3 Retainage - Remove the paragraph beginning with " The Contractor may withdraw…" in its entirety.

108.4.1 Price Adjustment for Hot Mix Asphalt:
Remove this section in its entirety and replace with the following

For all contracts with hot mix asphalt in excess of 500 tons total, a price adjustment for performance graded binder will be made for the following pay items:

Item 403.102	**Hot Mix Asphalt – Special Areas**
Item 403.206	**Hot Mix Asphalt - 25 mm**
Item 403.207	**Hot Mix Asphalt - 19 mm**
Item 403.2071	**Hot Mix Asphalt - 19 mm (Polymer Modified)**
Item 403.2072	**Hot Mix Asphalt - 19 mm (Asphalt Rich Base)**
Item 403.208	**Hot Mix Asphalt - 12.5 mm**
Item 403.2081	**Hot Mix Asphalt - 12.5 mm (Polymer Modified)**
Item 403.209	**Hot Mix Asphalt - 9.5 mm (sidewalks, drives, & incidentals)**
Item 403.210	**Hot Mix Asphalt - 9.5 mm**
Item 403.2101	**Hot Mix Asphalt - 9.5 mm (Polymer Modified)**
Item 403.2102	**Hot Mix Asphalt - 9.5 mm (Asphalt Rich Base)**
Item 403.2104	**Hot Mix Asphalt - 9.5 mm (Thin Lift Surface Treatment)**
Item 403.21041	**Hot Mix Asphalt - 9.5 mm (Polymer Modified Thin Lift Surface Treatment)**
Item 403.211	**Hot Mix Asphalt – Shim**

Item 403.2111 Hot Mix Asphalt – Shim (Polymer Modified)
Item 403.212 Hot Mix Asphalt - 4.75 mm (Shim)
Item 403.213 Hot Mix Asphalt - 12.5 mm (base and intermediate course)
Item 403.2131 Hot Mix Asphalt - 12.5 mm (base and intermediate course Polymer Modified)
Item 403.2132 Hot Mix Asphalt - 12.5 mm (Asphalt Rich Base and intermediate course)
Item 403.214 Hot Mix Asphalt - 4.75 mm (Surface)
Item 403.235 Hot Mix Asphalt (High Performance Rubberized HMA)
Item 403.301 Hot Mix Asphalt (Asphalt Rubber Gap-Graded)
Item 404.70 Colored Hot Mix Asphalt – 9.5mm (Surface)
Item 404.72 Colored Hot Mix Asphalt – 9.5mm (Islands, sidewalks, & incidentals)
Item 461.13 Light Capital Pavement
Item 462.30 Ultra-Thin Bonded Wearing Course
Item 462.301 Polymer Modified Ultra-Thin Bonded Wearing Course

Price adjustments will be based on the variance in costs for the performance graded binder component of hot mix asphalt. They will be determined as follows:

The quantity of hot mix asphalt for each pay item will be multiplied by the performance graded binder percentages given in the table below times the difference in price between the base price and the period price of asphalt cement. Adjustments will be made upward or downward, as prices increase or decrease.

Item 403.102–6.2%
Item 403.206–4.8%
Item 403.207–5.2%
Item 403.2071–5.2%
Item 403.2072–5.8%
Item 403.208–5.6%
Item 403.2081–5.6%
Item 403.209–6.2%
Item 403.210–6.2%
Item 403.2101–6.2%
Item 403.2102–6.8%
Item 403.2104–6.2%
Item 403.21041–6.2%
Item 403.211–6.2%
Item 403.2111–6.2%
Item 403.212–6.8%
Item 403.213–5.6%
Item 403.2131–5.6%
Item 403.2132–6.2%
Item 403.214–6.8%
Item 403.235–5.5%
Item 403.301–6.2%
Item 404.70–6.2%

Item 404.72–6.2%
Item 461.13–6.5%
Item 462.30–0.0021 tons/SY
Item 462.301–0.0021 tons/SY

Hot Mix Asphalt: The quantity of hot mix asphalt will be determined from the quantity shown on the progress estimate for each pay period.

Base Price: The base price of performance graded binder to be used is the price per standard ton current with the bid opening date. This price is determined by using the average New England Selling Price (Excluding the Connecticut market area), as listed in the Asphalt Weekly Monitor.

Period Price: The period price of performance graded binder will be determined by the Department by using the average New England Selling Price (Excluding the Connecticut market area), listed in the Asphalt Weekly Monitor current with the paving date. The maximum Period Price for paving after the adjusted Contract Completion Date will be the Period Price on the adjusted Contract Completion Date.

SECTION 109
CHANGES

109.5.1 Definitions - Types of Delays
Delete Paragraph 'A' in its entirety and replace with:

"A. Excusable Delay Except as expressly provided otherwise by this Contract, an "Excusable Delay" is a Delay to the Critical Path that is directly and solely caused by (1) a weather related Event of such an unusually severe nature that a Federal Emergency Disaster is declared. The Contractor will only be entitled to an adjustment of time if the Project falls within the geographic boundaries prescribed under the disaster declaration. or (2) a flooding event at the effected location of the Project that results in a Q25 headwater elevation, or greater, but less than a Q50 headwater elevation. Theoretical headwater elevations will be determined by the Department; actual headwater elevations will be determined by the Contractor and verified by the Department or (3) An Uncontrollable Event."

APPENDIX A TO DIVISION 100

Remove Section D in its entirety as this is now covered in Section 105.10 EQUAL OPPORTUNITY AND CIVIL RIGHTS.

SECTION 203
EXCAVATION AND EMBANKMENT

203.02 Materials
At the bottom of page 2-12, add as the first item in the list:

Crushed Stone, ¾ inch 703.13

203.042 Rock Excavation and Blasting
On page 2-16, add the word "**No**" to the third sentence in Section 5 Submittals, Subsection V, 1 so that it reads:
"***No* blasting products will be allowed on the job site if the date codes are missing**."

SECTION 304
AGGREGATE BASE AND SUBBASE COURSE

304.02 Aggregate
Remove the sentence "Aggregate for base and subbase courses shall be material meeting the aggregate type requirements specified in the following table" in its entirety and the table that follows it with headings of 'Material' and 'Aggregate Type'.

304.02 – Aggregate Add the following sentence before the sentence starting with "When designated on the plans…": **"Aggregate Base Course – Type C will be capped with 2" of millings or Untreated Aggregate Surface Course – Type B. Payment for this material will be made under 304.16"**

SECTION 307
FULL DEPTH RECYCLED PAVEMENT

Remove this Section in its entirety and replace with:

SECTION 307
FULL DEPTH RECYCLING
(UNTREATED OR TREATED WITH EMULSIFIED ASPHALT STABILIZER)

307.01 Description This work shall consist of pulverizing a portion of the existing roadway structure into a homogenous mass, adding an emulsified asphalt stabilizer (if required) to the depth of the pulverized material specified in the contract, placing and compacting this material to the lines, grades, and dimensions shown on the plans or established by the Resident.

MATERIALS

307.02 Pulverized Material **Pulverized material shall consist of the existing asphalt pavement layers and one inch or more as specified of the underlying gravel, pulverized and blended into a homogenous mass. Pulverized material will be processed to 100% passing a 2 inch square mesh sieve.**

307.021 New Aggregate and Additional Recycled Material **New aggregate, if required by the contract, shall meet the requirements of Subsection 703.10 - Aggregate for Untreated Surface Course and Leveling Course, Type A. Aggregate Subbase Course Gravel Type D processed to 100 percent passing a 2 inch square mesh sieve and meeting the requirements of 703.06 – Aggregate for Base and Subbase may be used in areas requiring depths greater than 2 inches. New aggregate, will be measured and paid for under the appropriate item.**

Recycled material, if required, shall consist of salvaged asphalt material from the project or from off-site stockpiles that has been processed before use to 100 percent passing a 2 inch square mesh sieve. Recycled material shall be conditionally accepted at the source by the Resident. It shall be free of winter sand, granular fill, construction debris, or other materials not generally considered asphalt pavement.

Recycled material generated and salvaged from the project shall be used within the roadway limits to the extent it is available as described in 307.09. No additional payment will be made for material salvaged from the project.

Recycled material supplied from off-site stockpiles shall be paid for as described in the contract, or by contract modification.

307.022 Emulsified Asphalt Stabilizer. If required, the emulsified asphalt stabilizer shall be grade MS-2, MS-4, SS-1, or CSS-1 meeting the requirements of Subsection 702.04 Emulsified Asphalt.

307.023 Water **Water shall be clean and free from deleterious concentrations of acids, alkalis, salts or other organic or chemical substances.**

307.024 Portland Cement **If required, Portland Cement shall be Type I or II meeting the requirements of AASHTO M85.**

307.025 Hydrated Lime **If required, Hydrated Lime shall meet the requirements of AASHTO M216.**

EQUIPMENT

307.03 Pulverizer **The pulverizer shall be a self-propelled machine, specifically manufactured for full-depth recycling work and capable of reducing the required existing materials to a size that will pass a 2 inch square mesh sieve. The machine shall be equipped with standard automatic depth controls and must maintain a consistent cutting depth and width. The machine also shall be equipped with a gauge to show depth of material being processed.**

<u>307.04 Liquid Mixer Unit or Distributor</u>. If treatment of the recycled layer with emulsified asphalt is required by the contract, a liquid mixing unit or distributor shall be used to introduce the emulsified asphalt stabilizer into the pulverized material. The mixing unit shall contain a liquid distribution and mixing system which has been specifically manufactured for full-depth recycling work, capable of mixing the pulverized material with an evenly metered distribution of emulsified asphalt into a homogeneous mixture, to the depth and width required.

The mixing unit shall be designed, equipped, maintained, and operated so that emulsified asphalt stabilizer at constant temperature may be applied uniformly on variable widths of pulverized material up to 6 feet at readily determined and controlled rates from 0.01 to 1.06 gal/yd^2 with uniform pressure and with an allowable variation from any specified rate not to exceed 0.01 gal/ yd^2. Mixing units shall include a tachometer, pressure gages, and accurate volume measuring devices or a calibrated tank and a thermometer for measuring temperatures of tank contents.

<u>307.041 Cement or Lime Spreader</u> If required by the contract, spreading of the Portland Cement or Hydrated Lime shall be done with a spreader truck designed to spread dry particulate (such as Portland Cement or Lime) or other approved means to insure a uniform distribution across the roadway and minimize fugitive dust. Pneumatic application, including through a slotted pipe, will not be permitted. Other systems that have been developed include fog systems, vacuum systems, etc. Slurry applications may also be accepted. The Department reserves the right to accept or reject the method of spreading cement. The Contractor shall provide a method for verifying that the correct amount of cement is being applied.

<u>307.05 Placement Equipment</u> Placement of the Full Depth recycled material to the required slope and grade shall be done with an approved highway grader or by another method approved by the Resident.

<u>307.06 Rollers</u> The full depth recycled material shall be rolled with a vibratory pad foot roller, a vibratory steel drum soil compactor and a pneumatic tire roller. The pad foot roller drum shall have a minimum of 112 tamping feet 3 inches in height, a minimum contact area per foot of 17 inch^2, and a minimum width of 84 inches. The vibratory steel drum roller shall have a minimum 84 inch width single drum. The pneumatic tire roller shall meet the requirements of Section 401.10 and the minimum allowable tire pressure shall be 85 psi.

MIX DESIGN

If treatment of the recycled layer with emulsified asphalt is required by the contract, the Department will supply a mix design for the emulsified asphalt stabilized material based on test results from pavement and soil analysis taken to the design depth. The Department will provide the following information prior to construction:

1. **Percent of emulsified asphalt to be used.**
2. **Quantity of lime or cement to be added.**
3. **Optimum moisture content for proper compaction.**
4. **Additional aggregate (if required).**

After a test strip has been completed or as the work progresses, it may be necessary for the Resident to make necessary adjustments to the mix design. Changes to compensation will be in accordance with the Mix Design Special Provision.

CONSTRUCTION REQUIREMENTS

<u>307.06 Pulverizing</u> The entire depth of existing pavement shall be pulverized together with 1 inch or more of the underlying gravel into a homogenous mass. All pulverizing shall be done with equipment that will provide a homogenous mass of pulverized material, processed in-place, which will pass a 2 inch square mesh sieve.

<u>307.07 Weather Limitations</u> Full depth recycled work shall be performed when;

A. Recycling operations will be allowed between May 15th and September 15th inclusive in Zone 1 - Areas north of US Route 2 from Gilead to Bangor and north of Route 9 from Bangor to Calais.
B. The atmospheric temperature, as determined by an approved thermometer placed in the shade at the recycling location, is 50°F and rising.
C. When there is no standing water on the surface.
D. During generally dry conditions, or when weather conditions are such that proper pulverizing, mixing, grading, finishing and curing can be obtained using proper procedures, and when compaction can be accomplished as determined by the Resident.
E. When the surface is not frozen and when overnight temperatures are expected to be above 32°F.
F. Wind conditions are such that the spreading of lime or cement on the roadway ahead of the recycling machine will not adversely affect the operation.

<u>307.08 Surface Tolerance</u> The complete surface of the Full Depth Recycled course shall be shaped and maintained to a tolerance, above or below the required cross sectional shape, of ⅜ inch.

<u>307.09 Full Depth Recycling Procedure</u> New aggregate or recycled material meeting the requirements of Section 307.021 - New Aggregate and Additional Recycled Material, shall be added as necessary to restore cross-slope and/or grade before pulverizing. Locations will be shown on the plans or described in the construction notes. The Resident may add other locations while construction of the project is in progress. The Contractor will use recycled material to the extent it is available, in lieu of new aggregate. The material shall then be pulverized, processed, and blended into a homogeneous mass passing a 2 inch square mesh sieve. Material found not pulverized down to a 2 inch size will be required to be reprocessed by the recycler with successive passes until approved by the Resident.

Should the Contractor be required to add new aggregate or recycled material to restore cross-slope and/or grade after the initial pulverizing process, those areas will require re-processing to blend into a homogenous mass passing a 2 in square mesh sieve.

Sufficient water shall be added during the recycling process to maintain optimum moisture for compaction.

The resultant material from the initial pulverizing processes shall be graded and compacted to the cross-slope and profile shown on the plans or as directed by the Resident. The Contractor will also be responsible for re-establishing the existing profile grade. The completed surface of the full depth recycled course shall be shaped and maintained to a tolerance, above or below the required cross sectional shape, of ⅜ inch. Areas not meeting this tolerance will be repaired as described in Section 307.091. The initial pulverizing process density requirements will be the same as Section 307.101 unless otherwise directed by the Resident.

Additives, if required, shall be introduced following completion of the initial pulverizing and blending process. Emulsified asphalt stabilizer shall be incorporated into the top of the processed material as specified in section 307.04 to the depth specified in the contract by use of the liquid mixer unit or a distributor, at the rate specified in the mix design. The emulsified asphalt shall then be uniformly blended into a homogeneous mass until an apparent uniform distribution has occurred. The rate of application may be adjusted as necessary by the Resident. Cement or lime shall be introduced as described in section 307.041. The resultant material shall be graded and compacted to the cross-slope and profile shown on the plans or as directed by the Resident. The Contractor will also be responsible for re-establishing the existing profile grade.

After final compaction, the roadway surface shall be treated with a light application of water, and rolled with pneumatic-tired rollers to create a close-knit texture. The finished layer shall be free from:

A. Surface laminations.
B. Segregation of fine and coarse aggregate.
C. Corrugations, centerline differential, potholes, or any other defects that may adversely affect the performance of the layer, or any layers to be placed upon it.

The Contractor shall protect and maintain the recycled layer until a lift of pavement is applied. Any damage or defects in the layer shall be repaired immediately. An even and uniform surface shall be maintained. The recycled surface shall be swept prior to hot mix asphalt overlay placement.

307.091 Repairs **Repairs and maintenance of the recycled layers, resulting from damage caused by traffic, weather or environmental conditions, or resulting from damage caused by the Contractor's operations or equipment, shall be completed at no additional cost to the Department.**

For recycled layers stabilized with emulsified asphalt, low areas will be repaired using a hot mix asphalt shim. Areas up to 1 inch high can be repaired by milling or shimming with hot mix asphalt. Areas greater than 1 inch high will be repaired using a hot mix asphalt shim. All repair work will be done with the Resident's approval at the Contractor's expense.

TESTING REQUIREMENTS

<u>307.10 Quality Control</u> The Contractor shall operate in accordance with the approved Quality Control Plan (QCP) to assure a product meeting the contract requirements. The QCP shall meet the requirements of Section 106.4 - Quality Control and this Section. The Contractor shall not begin recycling operations until the Department approves the QCP in writing.

Prior to performing any recycling process, the Department and the Contractor shall hold a Pre-recycle conference to discuss the recycling schedule, type and amount of equipment to be used, sequence of operations, and traffic control. A copy of the QC random numbers to be used on the project shall be provided to the Resident. All field supervisors including the responsible onsite recycling process supervisor shall attend this meeting.

The QCP shall address any items that affect the quality of the Recycling Process including, but not limited to, the following:

- **A. Sources for all materials, including New Aggregate and Additional Recycled Material.**
- **B. Make and type of rollers including weight, weight per inch of steel wheels, and average contact pressure for pneumatic tired rollers.**
- **C. Testing Plan.**
- **D. Recycling operations including recycling speed, methods to ensure that segregation is minimized, grading and compacting operations.**
- **E. Methods for protecting the finished product from damage and procedures for any necessary corrective action.**
- **F. Method of grade checks.**
- **G. Examples of Quality Control forms.**
- **H. Name, responsibilities, and qualifications of the Responsible onsite Recycling Supervisor experienced and knowledgeable with the process.**
- **I. A note that all testing will be done in accordance with AASHTO and MDOT/ACM procedures.**

The Project Superintendent shall be named in the QCP, and the responsibilities for successful implementation of the QCP shall be outlined.

The Contractor shall sample, test, and evaluate the full depth reclamation process in accordance with the following minimum frequencies:

MINIMUM QUALITY CONTROL FREQUENCIES

Test or Action	Frequency	Test Method
Density	1 per 1000 feet / lane	AASHTO T 310
Air Temperature	4 per day at even intervals	
Surface Temperature	At the beginning and end of each days operation	
Yield of all materials (Daily yield, yield since last test, and total project yield.)	1 per 1000 ft/lane	

The Department may view any QC test and request a QC test at any time. The Contractor shall submit all QC test reports and summaries in writing, signed by the appropriate technician, to the Department's onsite representative by 1:00 P.M. on the next working day, except when otherwise noted in the QCP due to local restrictions. The Contractor shall make all test results, including randomly sampled densities, available to the Department onsite.

The Contractor shall cease recycling operations whenever one of the following occurs:

A. The Contractor fails to follow the approved QCP.
B. The Contractor fails to achieve 98 percent density after corrective action has been taken.
C. The finished product is visually defective, as determined by the Resident.
D. The computed yield differs from the mix design by 10 percent or more.

Recycling operations shall not resume until the Department approves the corrective action to be taken.

<u>307.101 Test Strip</u> The contractor shall assemble all items of equipment for the recycling operation on the first day of the recycling work. The Contractor shall construct a test strip for the project at a location approved by the Resident. The Responsible onsite Recycling Supervisor will work with Department personnel to determine the suitability of the mixed material, moisture control within the mixed material, and compaction and surface finish. The test strip section is required to:

A. Demonstrate that the equipment and processes can produce recycled layers to meet the requirements specified in these special provisions.
B. Determine the effect on the gradation of the recycled material by varying the forward speed of the recycling machine and the rotation rate of the milling drum.
C. Determine the optimum moisture necessary to achieve proper compaction of the recycled layer.
D. Determine the sequence and manner of rolling necessary to obtain the compaction requirements and establish a target density. The Contractor and the Department will both conduct testing with their respective gauges at this time.

The test strip shall be at least 300 feet in length of a full lane-width (or a half-road width). Full recycling production will not start until a passing test strip has been accomplished. If a test strip fails to meet the requirements of this specification, the Contractor will be required to repair or replace the test strip to the satisfaction of the Resident. Any repairs, replacement, or duplication of the test strip will be at the Contractor's expense.

After the test strip has been pulverized, and the roadway brought to proper shape, the Contractor shall add water until it is determined that optimum moisture has been obtained. The test strip shall then be rolled using the specified compaction equipment as directed until the density readings show an increase in dry density of less than 1 pcf for the final four roller passes of each roller. The Contractor and Department will each determine a target density using their respective gauges by performing several additional density tests and averaging them. The average of these tests will be used as the target density of the recycled material for QC and Acceptance purposes.

Following completion of the test strip, compaction of the material shall continue until a density of not less than 98 percent of the test strip target density has been achieved for the full width and depth of the layer. During the construction and compaction of the Full Depth Recycled base, should three consecutive Acceptance test results for density fail to meet a minimum of 95 percent of the target density, or exceed 102 percent of target density, a new test strip shall be constructed.

ACCEPTANCE TEST FREQUENCY

Property	Frequency	Test Method
In-place Density	1 per 2000 ft / lane	AASHTO T 310

308.102 Curing. No new pavement shall be placed on the full depth recycled pavement until curing has reduced the moisture content to 1 percent or less by total weight of the mixture, or a curing period of 4 days has elapsed, whichever comes first.

307.11 Method of Measurement Full Depth Recycled Pavement (Untreated or Treated with Emulsified Asphalt Stabilizer) will be measured by the square yard.

307.12 Basis of Payment The accepted quantity of Full Depth Recycled Asphalt Pavement (Untreated or Treated with Emulsified Asphalt Stabilizer) will be paid for at the contract unit price per square yard, complete in-place which price will be full compensation for furnishing all equipment, materials and labor for pulverizing, blending, placing, grading, compacting, and for all incidentals necessary to complete the work.

The addition of materials to restore profile grade and/or cross-slope in areas shown on the plans or described in the construction notes will be paid separately under designated pay items within the contract. No additional payment will be made for materials salvaged from the project.

Payments will be made under:

Pay Item	Pay Unit
307.331 Full Depth Recycled Pavement (Untreated)	**Square Yard**
307.332 Full Depth Recycled Pavement (with Emulsified Asphalt Stabilizer) 5 in. depth	**Square Yard**
307.333 Full Depth Recycled Pavement (with Emulsified Asphalt Stabilizer) 6 in. depth	**Square Yard**

SECTION 411
UNTREATED AGGRAGATE SURFACE COURSE

411.02 – Aggregate Add the following to the end of the first sentence: **"- Type A"**

SECTION 501
FOUNDATION PILES

501.05 – Method of Measurement

b. Piles Furnished – After the second sentence, add the sentence **"Measurement will not include any pile tips"**.

c. Piles in Place – Add the sentence to the end of the second paragraph, **"Measurement will include the pile tips"**.

d. Pile Tips – Add the words "**on the Pile**" to the end of the sentence.

SECTION 502
STRUCTURAL CONCRETE

502.05 Composition and Proportioning

Replace Table 1 with

TABLE 1

Concrete CLASS	Minimum Compressive Strength (PSI)	Permeability as indicated by Surface Resistivity (KOhm-cm)	Entrained Air (%)		Notes
		LSL	LSL	USL	
S	3,000	N/A	N/A	N/A	4,5
A	4,000	14	6.0	9.0	1,4,5
P	-----	-----	5.5	7.5	1,2,3,4
LP	5,000	17	6.0	9.0	1,4,5
Fill	3,000	N/A	6.0	9.0	4,5

In the list of information submitted by the contractor for a mix design:

Item J Replace "Target Coulomb Value." with "Target KOhm-cm Value."

Note #1 - Remove, **"…Standard Specification Section 711.05, Protective Coating for Concrete Surfaces, and per the manufacturer's recommendations, at no additional cost to the Department."** and replace with, **"…Standard Specification Section 515, Protective Coating for Concrete Surfaces, at no additional cost to the Department."**

502.1703 Acceptance Methods A and B

In the paragraph that starts with "The Department will take Acceptance…" Remove the word chloride from chloride permeability in the last sentence.

Replace the paragraph starting with "Rapid Chloride Permeability specimens…" With the following:

"Surface Resistivity specimens will be tested by the Department in accordance with AASHTO TP-95 at an age ≥ 56 days. Four 4 inch x 8 inch cylinders will be cast per sublot placed. The average of three concrete specimens per sublot will constitute a test result and this average will be used to determine the permeability for pay adjustment computations."

502.1706 Acceptance Method C

Remove in its entirety and Replace with:

502.1706 Acceptance Method C The Department will determine the acceptability of the concrete through Acceptance testing. Acceptance tests will include compressive strength, air content and permeability. Method C concrete with a failing permeability as indicated by the surface resistivity test may be tested for permeability in accordance with the Rapid Chloride Permeability Test AASHTO T-277 averaging the results from two

specimens cut from the samples prepared for the surface resistivity test. Method C concrete not meeting the requirements listed in Table 1 or if the Rapid Chloride Permeability test results in values exceeding 2000 coulombs for Class LP or 2400 for Class A, shall be removed and replaced at no cost to the Department. At the Department's sole discretion, material not meeting requirements may be left in place and paid for at a reduced price as described in Section 502.195.

502.1707 Resolution of Disputed Acceptance Test Results
Section B

Remove "Rapid Chloride" from the section heading.
In paragraph 4 replace T-277 with TP-95

502.192 Pay Adjustment for Chloride Permeability
Remove "Chloride" from the heading and from the first sentence.

Replace the sentence that starts with "values greater than…" and replace with "values less than 10 KOhms-cm for Class A concrete or 11 KOhms-cm for Class LP concrete shall be subject to rejection and replacement, at no additional cost to the Department."

502.194 Pay Adjustments for Compressive Strength, Chloride Permeability and Air Content, Methods A and B

Remove the word "Chloride" from the section heading and from the equation for CPF.

502.195 Pay Adjustment Method C

Table 6: Method C Pay Reductions (page 5-53)
Under "Entrained Air" for "Class Fill", in the first line,
change from "< 4.0 (Removal)" to **"< 4.5 (Removal)**"

In Table 6: Method C PAY REDUCTIONS remove the word 'Chloride' from 'Chloride Permeability'.

SECTION 619
MULCH

619.07 Basis of Payment
In the list of Pay Items add "**619.12 Mulch**" with a Pay Unit of " **Unit** ".
Change the description of 619.1201 from "Mulch" to "**Mulch – Plan Quantity**"

In the list of Pay Items add "**619.13 Bark Mulch**" with a Pay Unit of " **CY** ".
Change the description of 619.1301 from "Bark Mulch" to "**Mulch – Plan Quantity**"

In the list of Pay Items add "**619.14 Erosion Control Mix**" with a Pay Unit of " **CY** ".
Change the description of 619.1401 from "Erosion Control Mix" to "**Mulch – Plan Quantity**"

SECTION 621
LANDSCAPING

621.0002 Materials - General
In the list of items change "Organic Humus" to "**Humus**".

621.0019 Plant Pits and Beds
c Class A Planting
In the third paragraph beginning with " The plant pit…" change "½ inch" to "**1 inch**"

SECTION 626
FOUNDATIONS, CONDUIT AND JUNTION BOXES FOR HIGHWAY SIGNING, LIGHTING AND SIGNALS

626.034 Concrete Foundations

On Page 6-85, add the following paragraph before the paragraph beginning with "Drilled shafts shall not be…".

No foundation design will be required for 18- and 24-inch diameter foundations for structures less than 30-feet tall and with no projecting arms. A foundation design prepared by a Professional Engineer licensed in accordance with the laws of the State of Maine will be required for all other foundations Precast foundations will be permitted for 18 and 24-inch diameter foundations for structures less than 30-feet tall and with no projecting arms. Where precast foundations are permitted flowable concrete fill shall be used as backfill in the annular space, and placed from the bottom up. Construction of precast foundations shall conform to the Standard Details and all requirements of Section 712.061 except that the concrete shall have a minimum permeability of 17 kOhm-cm and the use of calcium nitrite will not be required.

On Page 6-86, add the following to the paragraph beginning with "Concrete for drilled shafts…" so that it reads as follows:

"….The Contractor shall provide temporary dewatering of excavations for foundations such that concrete is placed in the dry. **Concrete for drilled shafts shall be placed in accordance with Section 502.10 as temporary casing is withdrawn to prevent debris from contaminating the foundation and to ensure concrete is cast against the surrounding soil. Concrete for drilled shafts and spread footings shall be Class A in accordance with Section 502 - Structural Concrete. Precast foundations will not be permitted except as specified above in this Section.** Backfill for spread footing foundations shall be Gravel Borrow meeting the requirements of Section 703.20 - Gravel Borrow….."

SECTION 652
MAINTENANCE OF TRAFFIC

652.3 Submittal of Traffic Control Plan On page **6-148**, note **f,** in the last sentence change the 105.2.2 to 105.2.3 so that the last sentence reads, "**For a related provision, see Section 105.2.3 – Project Specific Emergency Planning**.".

652.4 Flaggers In the first paragraph, change the fifth sentence which says:

For nighttime conditions, Class 3 apparel, meeting ANSI 107-2004, shall be worn along with a hardhat with 360˚ retro-reflectivity.

So that it reads:

For nighttime conditions, Class 3 apparel, meeting ANSI 107-2004, including a Class 3 top (vest, shirt or jacket) and a Class E bottom (pants or coveralls), shall be worn along with a hardhat with 360 ˚ retro-reflectivity.

SECTION 656
TEMPORARY SOIL EROSION AND WATER POLLUTION CONTROL

656.5.2 If No Pay Item Add the following to the end of the first paragraph:
"Failure by the Contractor to follow Standard Specification or Special Provision - Section 656 will result in a violation letter and a reduction in payment as shown in the schedule list in 656.5.1. The Department's Resident or any other representative of The Department reserves the right to suspend the work at any time and request a meeting to discuss violations and remedies. The Department shall not be held responsible for any delay in the work due to any suspension under this item."

SECTION 660
ON-THE-JOB TRAINING

660.06 Method of Measurement

Remove the first sentence in its entirety and replace with " **The OJT item will be measured by the number of OJT hours by a trainee who has successfully completed an approved training program.**"

660.07 Basis of payment to the Contractor
Remove the last word in the first sentence so that the first sentence reads " The OJT shall be paid for once successfully completed at the contract unit price per **hour**."

Payment will be made under
Change the Pay Item from "660.22" to "**660.21**" and change the Pay Unit from "Each" to "**Hour**".

SECTION 677

On page 6 - 203 change “636.041” to “677.041”

SECTION 703
AGGREGATES

703,0201 Alkali Silica Reactive Aggregates
Remove this section in its entirety and replace with the following:

703.0201 Alkali Silica Reactive Aggregates. All coarse and fine aggregates proposed for use in concrete shall be tested for Alkali Silica Reactivity (ASR) potential under AASHTO T 303 (ASTM C 1260), Accelerated Detection of Potentially Deleterious Expansion of Mortar Bars Due to Alkali-Silica Reaction, prior to being accepted for use. Acceptance will be based on testing performed by an accredited independent lab submitted to the Department. Aggregate submittals will be required on a 5-year cycle, unless the source or character of the aggregate in question has changed within 5 years from the last test date.
As per AASHTO T 303 (ASTM C 1260): Use of a particular coarse or fine aggregate will be allowed with no restrictions when the mortar bars made with this aggregate expand less than or equal to 0.10 percent at 30 days from casting. Use of a particular coarse or fine aggregate will be classified as potentially reactive when the mortar bars made with this aggregate expand greater than 0.10 percent at 30 days from casting. Use of this aggregate will only be allowed with the use of cement-pozzolan blends and/or chemical admixtures that result in mortar bar expansion of less than 0.10 percent at 30 days from casting as tested under ASTM C 1567.

Acceptable pozzolans and chemical admixtures that may be used when an aggregate is classified as potentially reactive include, but are not limited to the following:

Class F Coal Fly Ash meeting the requirements of AASHTO M 295.
Ground Granulated Blast Furnace Slag (Grade 100 or 120) meeting the requirements of AASHTO M 302.

Densified Silica Fume meeting the requirements of AASHTO M 307.
Lithium based admixtures
Metakaolin

Pozzolans or chemical admixtures required to offset the effects of potentially reactive aggregates will be incorporated into the concrete at no additional cost to the Department.

703.06 Aggregate for Base and Subbase - Remove the first two paragraphs in their entirety and replace with these:

"**The following shall apply to Sections (a.) and (c.) below. The material shall have a Micro-Deval value of 25.0 or less as determined by AASHTO T 327. If the Micro- Deval value exceeds 25.0, the Washington State Degradation DOT Test Method T113, Method of Test for Determination of Degradation Value (January 2009 version) shall be performed, except that the test shall be performed on the portion of the sample that passes the ½ in sieve and is retained on the No. 10 sieve. If the material has a Washington Degradation value of less than 15, the material shall be rejected.**

The material used in Section (b.) below shall have a Micro-Deval value of 25.0 or less as determined by AASHTO T 327. If the Micro-Deval value exceeds 25.0 the material may be used if it does not exceed 25 percent loss on AASHTO T 96, Resistance to Degradation of Small-Size Coarse Aggregate by Abrasion and Impact in the Los Angeles Machine. "

703.19 Granular Borrow

Remove the gradation requirements table, and replace with the following:

Sieve Designation	Percentage by Weight Passing Square Mesh Sieves	
	Material for Underwater Backfill	Material for Embankment Construction
6 inch	100	
No. 40	0-70	0-70
No. 200	0-7.0	0-20.0

703.33 Stone Ballast - In the third paragraph, remove the words " less than" before 2.60 and add the words "**or greater**" after 2.60.

SECTION 717
ROADSIDE IMPROVEMENT MATERIAL

717.02 Agricultural Ground Limestone

In the table after the third paragraph which starts with "Liquid lime…" change the Specification for Nitrogen (N) from "15.5 percent of which 1% is from ammoniac nitrogen and 14.5 /5 is from Nitrate Nitrogen" to read "**15.5 % of which 1% is from Ammoniacal Nitrogen and 14.5 % is from Nitrate Nitrogen**"

APPENDIX A TO DIVISION 100

SECTION 1 - BIDDING PROVISIONS

A. Federally Required Certifications By signing and delivering a Bid, the Bidder certifies as provided in all certifications set forth in this Appendix A - Federal Contract Provisions Supplement including:

- Certification Regarding No Kickbacks to Procure Contract as provided on this page 1 below.
- Certification Regarding Non-collusion as provided on page 1 below.
- Certification Regarding Non-segregated Facilities as provided by FHWA Form 1273, section III set forth on page 21 below.
- "Certification Regarding Debarment, Suspension, Ineligibility and Voluntary Exclusion" as provided by FHWA Form 1273, section XI set forth on page 32 below.
- "Certification Regarding Use of Contract Funds for Lobbying" as provided by FHWA Form 1273, section XII set forth on page 35 below.

Unless otherwise provided below, the term "Bidder", for the purposes of these certifications, includes the Bidder, its principals, and the person(s) signing the Bid. Upon execution of the Contract, the Bidder (then called the Contractor) will again make all the certifications indicated in this paragraph above.

CERTIFICATION REGARDING NO KICKBACKS TO PROCURE CONTRACT Except expressly stated by the Bidder on sheets submitted with the Bid (if any), the Bidder hereby certifies, to the best of its knowledge and belief, that it has not:

(A) employed or retained for a commission, percentage, brokerage, contingent fee, or other consideration, any firm or person (other then a bona fide employee working solely for me) to solicit or secure this contract;

(B) agreed, as an express or implied condition for obtaining this contract, to employ or retain the services of any firm or person in connection with carrying out the contract, or;

C) paid, or agreed to pay, to any firm, organization, or person (other than a bona fide employee working solely for me) any fee, contribution, donation, or consideration of any kind for, or in connection with, procuring or carrying out the contract;

By signing and submitting a Bid, the Bidder acknowledges that this certification is to be furnished to the Maine Department of Transportation and the Federal Highway Administration, U.S. Department of Transportation in connection with this contract in anticipation of federal aid highway funds and is subject to applicable state and federal laws, both criminal and civil.

CERTIFICATION REGARDING NONCOLLUSION Under penalty of perjury as provided by federal law (28 U.S.C. §1746), the Bidder hereby certifies, to the best of its knowledge and belief, that:

> the Bidder has not, either directly or indirectly, entered into any agreement, participated in any collusion, or otherwise taken any action in restraint of competitive bidding in connection with the Contract.

For a related provisions, see Section 102.7.2 (C) of the Standard Specifications - "Effects of Signing and Delivery of Bids" - "Certifications", Section 3 of this Appendix A entitled "Other Federal Requirements" including section XI - "Certification Regarding Debarment, Suspension, Ineligibility, and Voluntary Exclusion" and section XII. - "Certification Regarding Use of Contract Funds for Lobbying."

****

B. Bid Rigging Hotline To report bid rigging activities call: **1-800-424-9071**

The U.S. Department of Transportation (DOT) operates the above toll-free “hotline” Monday through Friday, 8:00 a.m. to 5:00 p.m., eastern time. Anyone with knowledge of possible bid rigging, bidder collusion, or other fraudulent activities should use the “hotline” to report such activities.

The “hotline” is part of the DOT’s continuing effort to identify and investigate highway construction contract fraud and abuse and is operated under the direction of the DOT Inspector General. All information will be treated confidentially and caller anonymity will be respected.

****

SECTION 2 - FEDERAL EEO AND CIVIL RIGHTS REQUIREMENTS

Unless expressly otherwise provided in the Bid Documents, the provisions contained in this Section 2 of this "Federal Contract Provisions Supplement" are hereby incorporated into the Bid Documents and Contract.

A. Nondiscrimination & Civil Rights - Title VI The Contractor and its subcontractors shall not discriminate on the basis of race, color, national origin, or sex in the performance of this Contract. The Contractor shall carry out applicable requirements of 49 CFR Part 26 in the award and administration of DOT assisted contracts. Failure by the Contractor to carry out these requirements is a material breach of this contract, which may result in the termination of this contract or such other remedy as the Department deems appropriate. The Contractor and subcontractors shall comply with Title VI of the Civil Rights Act of 1964, as amended, and with all State of Maine and other Federal Civil Rights laws.

For related provisions, see Subsection B - "Nondiscrimination and Affirmative Action - Executive Order 11246" of this Section 2 and Section 3 - Other Federal Requirements of this "Federal Contract Provisions Supplement" including section II - "Nondiscrimination" of the “Required Contract Provisions, Federal Aid Construction Contracts”, FHWA-1273.

B. Nondiscrimination and Affirmative Action - Executive Order 11246 Pursuant to Executive Order 11246, which was issued by President Johnson in 1965 and amended in 1967 and 1978, this Contract provides as follows.

The Contractor shall take specific affirmative actions to ensure equal employment opportunity. The evaluation of the Contractor's compliance with these specifications shall be based upon its efforts to achieve maximum results from its actions. The Contractor shall document these efforts fully, and shall implement affirmative action steps at least as extensive as the following:

Ensure and maintain a working environment free of harassment, intimidations, and coercion at all sites, and in all facilities at which the Contractor's employees are assigned to work. The Contractor, where possible, will assign two or more women to each construction project. The Contractor shall specifically ensure that all forepersons, superintendents, and other on-site supervisory personnel are aware of and carry out the Contractor's obligation to maintain such a working environment, with specific attention to minority or female individuals working at such sites or in such facilities.

Establish and maintain a current list of minority and female recruitment sources, provide written notification to minority and female recruitment sources and to community organizations when the Contractor or its union have employment opportunities available, and to maintain a record of the organization's responses.

Maintain a current file of the names, addresses and telephone numbers of each minority and female off-the-street applicant and minority or female referral from a union, a recruitment source or community organization and of what action was taken with respect to each such individual. If such individual was sent to the union hiring hall for referral and was not referred back to the Contractor by the union or, if referred, not employed by the Contractor, this shall be documented in the file with the reason therefore, along with whatever additional actions the Contractor may have taken.

Provide immediate written notification to the Department's Civil Rights Office when the union or unions with which the Contractor has a collective bargaining agreement has not referred to the Contractor a minority person or woman sent by the Contractor, or when the Contractor has other information that the union referral process has impeded the Design-Builder's efforts to meet its obligations.

Develop on-the-job training opportunities and/or participate in training programs for the area which expressly include minorities and women, including upgrading programs and apprenticeship and trainee programs relevant to the Contractor's employment needs, especially those programs funded or approved by the Department of Labor. The Contractor shall provide notice of these programs to the sources compiled under B above.

Disseminate the Contractor's EEO policy by providing notice of the policy to unions and training programs and requesting their cooperation in assisting the Contractor in meeting its EEO obligation; by including it in any policy manual and collective bargaining agreement; by publicizing it in the company newspaper, annual report, etc.; by specific review of the policy with all management personnel and with all minority and female employees at least once a year; and by posting the company EEO policy on bulletin boards accessible to all employees at each location where construction work is performed.

Review, at least annually, the company's EEO policy and affirmative action obligations under these specifications with all employees having any responsibility for hiring, assignment, layoff, termination, or other employment decisions including specific review of these items with on-site supervisory personnel such as Superintendents, General Forepersons, etc., prior to the initiation of construction work at any job site. A written record shall be made and maintained identifying the time and place of these meetings, persons attending, subject matter discussed, and disposition of the subject matter.

Disseminate the Contractor's EEO policy externally by including it in any advertising in the news media, specifically including minority and female news media, and providing written notification to and discussing the Contractor's EEO policy with other Contractor's and Subcontractors with whom the Contractor does or anticipates doing business.

Direct its recruitment efforts, both orally and written to minority, female and community organizations, to schools with minority and female students and to minority and female recruitment and training organizations serving the Contractor's recruitment area and employment needs. Not later that one month prior to the date for the acceptance of applications for apprenticeship or other training by any recruitment source, the Contractor shall send written notification to organizations such as the above describing the openings, screenings, procedures, and test to be used in the selection process.

Encourage present minority and female employees to recruit other minority persons and women and, where reasonable, provide after school, summer and vacation employment to minority and female youth, both on the site and in other areas of a Contractor's workforce.

Validate all tests and other selection requirements.

Conduct, at least annually, an inventory and evaluation at least of all minority and female personnel for promotional opportunities and encourage these employees to seek or to prepare for, through appropriate training, etc., such opportunities.

Ensure that seniority practices, job classifications, work assignments and other personnel practices, do not have a discriminatory effect by continually monitoring all personnel and employment related activities to ensure that the EEO policy and the Contractor's obligations under these specifications are being carried out.

Ensure that all facilities and company activities are non segregated except that separate or single-user toilet and necessary changing facilities shall be provided to assure privacy between the sexes.

Document and maintain a record of all solicitations of offers for subcontracts from minority and female construction Contractor's and suppliers, including circulation of solicitations to minority and female Contractor associations and other business associations.

Conduct a review, at least annually, of all supervisors' adherence to and performance under the Contractor's EEO policies and affirmative action obligations.

C. Goals for Employment of Women and Minorities Per Executive Order 11246, craft tradesperson goals are 6.9% women and .5% minorities employed. However, goals may be adjusted upward at the mutual agreement of the Contractor and the Department. Calculation of these percentages shall not include On-the-Job Training Program trainees, and shall not include clerical or field clerk position employees.

For a more complete presentation of requirements for such Goals, see the federally required document "Goals for Employment of Females and Minorities" set forth in the next 6 pages below.

****

Start of GOALS FOR EMPLOYMENT OF FEMALES AND MINORITIES
Federally Required Contract Document

§60-4.2 Solicitations

(d) The following notice shall be included in, and shall be part of, all solicitations for offers and bids on all Federal and federally assisted construction contracts or subcontracts in excess of $10,000 to be performed in geographical areas designated by the Director pursuant to §60-4.6 of this part (see 41 CFR 60-4.2(a)):

Notice of Requirement for Affirmative Action to Ensure Equal Opportunity (Executive Order 11246)

1. The Offeror's or bidder's attention is called to the "Equal Opportunity Clause" and the "Standard Federal Equal Employment Specifications" set forth herein.

2. The goals and timetables for minority and female participation, expressed in percentage terms for the Contractor's aggregate work force in each trade on all construction work in the covered area, are as follows:

Goals for female participation in each trade 6.9%

Goals for minority participation for each trade
Maine
001 Bangor, ME 0.8%
Non-SMSA Counties (Aroostook, Hancock, Penobscot, Piscataquis, Waldo, Washington)

002 Portland-Lewiston, ME
SMSA Counties: 4243 Lewiston-Auburn, ME 0.5%
(Androscoggin)

6403 Portland, ME 0.6%
(Cumberland, Sagadahoc)

Non-SMSA Counties: 0.5%
(Franklin, Kennebec, Knox, Lincoln, Oxford, Somerset, York)

These goals are applicable to all the Contractor's construction work (whether or not it is Federal or federally assisted) performed in the covered area. If the contractor performs construction work in a geographical area located outside of the covered area, it shall apply the goals established for such geographical area where the work is actually performed. With regard to this second area, the contractor also is subject to the goals for both its federally involved and non federally involved construction.

The contractor's compliance with the Executive Order and the regulations in 41 CFR Part 60-4 shall be based on its implementation of the Equal Opportunity Clause, specific affirmative action obligations required by the specifications set forth in 41 CFR 60-4.3(a), and its efforts to meet the goals. The hours of minority and female employment and training must be substantially uniform throughout the length of the contract, and in each trade, and the contractor shall make a good faith effort to employ minorities and women evenly on each of its projects. The transfer of minority or female employees or trainees from Contractor to Contractor or from project to project for the sole purpose of meeting the Contractor's goals shall be in violation of the contract, the Executive Order and the regulations in 41 CFR Part 60-4. Compliance with the goals will be measured against the total work hours performed.

3. The Contractor shall provide written notification to the Director of the Office of Federal Contract Compliance Programs within 10 working days of award of any construction subcontract in excess of $10,000 at any tier for construction work under the contract resulting from this solicitation. The notification shall list the name, address and telephone number of the subcontractor, employer identification number of the subcontractor, estimated dollar amount of the subcontract; estimated started and completion dates of the subcontract; and the geographical area in which the subcontract is to be performed.

4. As used in this Notice, and in the Contract resulting from this solicitation, the "covered area" is (insert description of the geographical areas where the contract is to be performed giving the state, county and city, if any).

STANDARD FEDERAL EQUAL EMPLOYMENT OPPORTUNITY CONSTRUCTION CONTRACT SPECIFICATIONS (EXECUTIVE ORDER 11246)

1. As used in these specifications:

   a. "Covered area" means the geographical area described in the solicitation from which this contract resulted;

   b. "Director" means Director, Office of Federal Contract Compliance Programs, United States Department of Labor, or any person to whom the Director delegates authority;

   c. "Employer identification number" means the Federal Social Security number used on the Employer's Quarterly Federal Tax Return, U.S. Treasury Department form 941;

   d. "Minority" includes:

(i) Black (all persons having origins in any of the Black African racial groups not of Hispanic origin);
(ii) Hispanic (all persons of Mexican, Puerto Rican, Cuban, Central or South American or other Spanish Culture or origin, regardless of race);
(iii) Asian and Pacific Islander (all persons having origins in any of the original peoples of the Far East, Southeast Asia, the Indian Subcontinent, or the Pacific Islands); and
(iv) American Indian or Alaskan Native (all persons having origins in any of the original peoples of the North America and maintaining identifiable tribal affiliations through membership and participation or community identification).

2. Whenever the Contractor, or any subcontractor at any tier, subcontracts a portion of the work involving any construction trade, it shall physically include in each subcontract in excess of $10,000 the provisions of these specifications and the Notice which contains the applicable goals for minority and female participation and which is set forth in the solicitations from which this contract resulted.

3. If the contractor, is participating (pursuant to 41 CFR 60-4.5) in a Hometown Plan approved by the U.S. Department of Labor in the covered area either individually or through an association, its affirmative action obligations on all work in the Plan area (including goals and timetables) shall be in accordance with that Plan for those trades which have unions participating in the Plan. Contractors must be able to demonstrate their participation in and compliance with the provisions of any such Hometown Plan. Each Contractor or Subcontractor participating in an approved Plan is individually required to comply with its obligations under the EEO clause, and to make a good faith effort to achieve each goal under the Plan in each trade in which it has employees. The overall good faith performance by other Contractors for Subcontractors toward a goal in an approved Plan does not excuse any covered Contractor's or Subcontractor's failure to take good faith efforts to achieve the Plan goals and timetables.

4. The Contractor shall implement the specific affirmative action standards provided in paragraphs 7 a. through p. of these specifications. The goals set forth in the solicitation from which this contract resulted are expressed as percentages of the total hours of employment and training of minority and female utilization the Contractor should reasonably be able to achieve in each construction trade in which it has employees in contractors performing construction work in geographical areas where they do not have a Federal or federally assisted construction contract shall apply the minority and female goals established for the geographical areas where the work is being performed. Goals are published periodically in the Federal Register in notice form and such notices may be obtained from any Office of Federal Contract Compliance Programs office or from Federal procurement contracting officers. The Contractor is expected to make substantially uniform progress in meeting its goals in each craft during the period specific.

5. Neither the provisions of any collective bargaining agreement, nor the failure by a union with whom the Contractor has a collective bargaining agreement, to refer either minorities or women shall excuse the Contractor's obligations under these specifications, Executive Order 11246, or the regulations promulgated pursuant, thereto.

6. In order for the non working training hours of apprentices and trainees to be counted in meeting the goals, such apprentices and trainees must be employed by the Contractor during the training period, and the Contractor must have made a commitment to employ the apprentices and trainees at the completion of their training, subject to the availability of employment opportunities. Trainees must be trained pursuant to training programs approved by the U.S. Department of Labor.

7. The Contractor shall take specific affirmative actions to ensure equal employment opportunity. The evaluation of the Contractor's compliance with these specifications shall be based upon its effort to achieve maximum results from its actions. The Contractor shall document these efforts fully, and shall implement affirmative action steps at least as expensive as the following:

   a. Ensure and maintain a working environment free of harassment, intimidation, coercion at all sites, and in all facilities at which the Contractor's employees are assigned to work. The Contractor, when possible, will assign two or more women to each construction project. The Contractor shall specifically ensure that all foremen, superintendents, and other on-site supervisory personnel are aware of and carry out the Contractor's obligation to maintain such a working environment, with specific attention to minority or female individuals working at such sites or in such facilities.

   b. Establish and maintain a current list of minority and female recruitment sources provide written notification to minority and female recruitment sources and to community organizations when the Contractor or its unions have employment opportunities available, and maintain a record of the organization's responses.

   c. Maintain a current file of the names, addresses and telephone numbers of each minority and female off-the-street applicant and minority or female referral from a union, a recruitment sources or community organization and of what action was taken with respect to each such individual. If such individual was sent to the union hiring hall for referral and was not referred back to the Contractor by the union or, if referred, not employed by the Contractor, this shall be documented in the file with the reason therefore, along with whatever additional actions the Contractor may have taken.

   d. Provide immediate written notification to the Director when the union or unions with which the Contractor has a collective bargaining agreement has not referred to the Contractor a minority person or woman sent by the Contractor, or when the Contractor has other information that the union referral process has impeded the Contractor's efforts to meet its obligations.

   e. Develop on-the-job training opportunities and/or participate in training programs for the area which expressly include minorities and women, including upgrading programs and apprenticeship and trainee programs relevant to the Contractor's employment needs, especially those programs funded or approved by the Department of Labor. The Contractor shall provide notice of these programs to the sources complied under 7b above.

f. Disseminate the Contractor's EEO policy by providing notice of the policy to unions and training programs and requesting their cooperation in assisting the Contractor in meeting its EEO obligations; by including in any policy manual and collective bargaining agreement; by publicizing it in the company newspaper, annual report, etc.; by specific review of the policy with all management personnel and with all minority and female employees at least once a year; and by posting the company EEO policy on bulletin boards accessible to all employees at each location where construction work is performed.

g. Review, at least annually, the company's EEO policy and affirmative action obligations under these specifications with all employees having any responsibility for hiring, assignment, layoff, termination or other employment decisions including specific review of these items with on-site supervisory personnel such as Superintendents, General Foremen, etc., prior to the initiation of construction work at any job site. A written record shall be made and maintained identifying the time and place of these meetings, persons attending, subject matter discussed, and disposition of the subject matter.

h. Disseminate the Contractor's EEO policy externally by including it in any advertising in the news media, specifically including minority and female news media, and providing written notification to and discussing the Contractor's EEO policy with other Contractors and Subcontractors with whom the Contractor does or anticipates doing business.

i. Direct its recruitment, efforts, both oral and written, to minority, female and community organizations, to schools with minority and female students and to minority and female recruitment and training organizations serving the Contractor's recruitment area and employment needs. Not later than one month other training by any recruitment source, the Contractor shall send written notification to organizations such as the above, describing prior to the date for the acceptance of applications for apprenticeship or the openings, screening procedures, and tests to be used in the selection process.

j. Encourage present minority and female employees to recruit other minority persons and women and, where reasonable, provide after school, summer and vacation employment to minority and female youth both on site and in other areas of a Contractor's work force.

k. Validate all tests and other selection requirements where there is an obligation to do so under 41 CFR Part 60-3.

l. Conduct, at least annually, an inventory and evaluation at least of all minority and female personnel for promotional opportunities and encourage these employees to seek or to prepare for, through appropriate training, etc., such opportunities.

m. Ensure that seniority practices, job classifications, work assignments and other personnel practices, do not have a discriminatory effect by continually monitoring all personnel and employment related activities to ensure that the EEO policy and the Contractor's obligations under these specifications are being carried out.

n. Ensure that all facilities and company activities are non segregated except that separate or single-user toilet and necessary changing facilities shall be provided to assure privacy between the sexes.

o. Document and maintain a record of all solicitations of offers for subcontracts from minority and female construction contractors and suppliers, including circulation of solicitation to minority and female contractor associations and other business associations.

p. Conduct a review, at least annually, of all supervisor's adherence to and performance under the Contractor's EEO policies and affirmative action obligations.

8. Contractors are encouraged to participate in voluntary associations which assist in fulfilling one or more of their affirmative action obligations (7 a through p.). The efforts of a contractor association, joint contractor-union, contractor-community, or other similar group of which the contractor is a member and participant, may be asserted as fulfilling any one or more of its obligations under 7 a through p. of these specifications provided that the contractor actively participates in the group, makes every effort to assure that the group has a positive impact on the employment of minorities and women in the industry, ensures that the concrete benefits of the program and reflected in the Contractor's minority and female work force participation, makes a good faith effort to meet its individual goals and timetables, and can provide access to documentation which demonstrates the effectiveness of actions take on behalf of the Contractor. The obligation to comply, however, is the Contractor's and failure of such a group to fulfill an obligation shall not be a defense for the Contractor's noncompliance.

9. A single goal for minorities and a separate single goal for women have been established. The Contractor, however, is required to provide equal employment opportunity and to take affirmative action for all minority groups, both make and female, and all women, both minority and non-minority. Consequently, the Contractor may be in violation of the Executive Order if a particular group is employed in a substantially disparate manner (for example, specific minority group of women is underutilized.)

10. The Contractor shall not use the goals and timetables or affirmative action even through the Contractor has achieved its goals for women generally, the Contractor may be in violation of the Executive Order if standards to discriminate against any person because of race, color, religion, sex, or national origin.

11. The Contractor shall not enter into any Subcontract with any person or firm debarred from Government contracts pursuant to Executive Order 11246.

12. The Contractor shall carry out such sanctions and penalties for violation of these specifications and of the Equal Opportunity Clause, including suspension, termination and cancellation of existing subcontracts as may be imposed or ordered pursuant to Executive Order 11246, as amended, and its implementation regulations by the Office of Federal Contract Compliance Programs. Any Contractor who fails to carry out such sanctions and penalties shall be in violation of these specifications and Executive Order 11246, as amended.

13. The Contractor, in fulfilling its obligations under these specifications, shall implement specific affirmative action steps, at least as extensive as those standards prescribed in paragraph 7 of these specifications, so as to achieve maximum results from its efforts to ensure equal employment opportunity. If the Contractor fails to comply with the requirements of the Executive Order, the implementing regulations, or these specifications, the Director shall proceed in accordance with 41 CFR 60-4.6.

14. The Contractor shall designate a responsible official to monitor all employment related activity to ensure that the company EEO policy is being carried out, to submit reports relating to the provisions hereof as may be required by the Government and to keep records. Records shall at least include for each employee the name, address, telephone numbers, construction trade, union affiliation if any, employee identification number when assigned, social security number, race, sex, status (e.g. mechanic, apprentice, trainee, helper, or laborer), dates of changes in status, hours worked per week in the indicated trade, rate of pay, and location sat which the work was performed. Records be maintained in an easily understandable and retrievable form; however, to the degree that existing records satisfy this requirement, contractors shall not be required to maintain separate records.

15. Nothing herein provided shall be construed as a limitation upon the application of other laws which establish different standards of compliance or upon the application of requirements for the hiring of local or other area residents (e.g., those under the Public Works Employment Act of 1977 and the Community Development Block Grant Program).

End of GOALS FOR EMPLOYMENT OF FEMALES AND MINORITIES
Federally Required Contract Document

****

D. Section '**D Disadvantaged Business Enterprise (DBE) Requirements**' is removed in its entirety. The DBE material is in:

Section 105.10 EQUAL OPPORTUNITY AND CIVIL RIGHTS.

SECTION 3 - OTHER FEDERAL REQUIREMENTS

Unless expressly otherwise provided in the Bid Documents, the provisions contained in this Section 3 of this "Federal Contract Provisions Supplement" are hereby incorporated into the Bid Documents and Contract.

A. Buy America

If the cost of products purchased for permanent use in this project which are manufactured of steel, iron or the application of any coating to products of these materials exceeds 0.1 percent of the contract amount, or $2,500.00, whichever is greater, the products shall have been manufactured and the coating applied in the United States. The coating materials are not subject to this clause, only the application of the coating. In computing that amount, only the cost of the product and coating application cost will be included.

Ore, for the manufacture of steel or iron, may be from outside the United States; however, all other manufacturing processes of steel or iron must be in the United States to qualify as having been manufactured in the United States.

United States includes the 50 United States and any place subject to the jurisdiction thereof.

Products of steel include, but are not limited to, such products as structural steel, piles, guardrail, steel culverts, reinforcing steel, structural plate and steel supports for signs, luminaries and signals.

Products of iron include, but are not limited to, such products as cast iron grates.

Application of coatings include, but are not limited to, such applications as epoxy, galvanized and paint.

To assure compliance with this section, the Contractor shall submit a certification letter on its letterhead to the Department stating the following:

> "This is to certify that products made of steel, iron or the application of any coating to products of these materials whose costs are in excess of $2,500.00 or 0.1 percent of the original contract amount, whichever is greater, were manufactured and the coating, if one was required, was applied in the United States."

B. Materials

a. Convict Produced Materials References: 23 U.S.C. 114(b)(2), 23 CFR 635.417

Applicability: FHWA's prohibition against the use of convict material only applies to Federal-aid highways. Materials produced after July 1, 1991, by convict labor may only be incorporated in a Federal-aid highway construction project if: 1) such materials have been produced by convicts who are on parole, supervised release, or probation from a prison; or 2) such material has been produced in a qualified prison facility, e.g., prison industry, with the amount produced during any 12-month period, for use in Federal-aid projects, not exceeding the amount produced, for such use, during the 12-month period ending July 1, 1987.

Materials obtained from prison facilities (e.g., prison industries) are subject to the same requirements for Federal-aid participation that are imposed upon materials acquired from other sources. Materials manufactured or produced by convict labor will be given no preferential treatment.

The preferred method of obtaining materials for a project is through normal contracting procedures which require the contractor to furnish all materials to be incorporated in the work. The contractor selects the source, public or private, from which the materials are to be obtained (23 CFR 635.407). Prison industries are prohibited from bidding on projects directly (23 CFR 635.112e), but may act as material supplier to construction contractors.

Prison materials may also be approved as State-furnished material. However, since public agencies may not bid in competition with private firms, direct acquisition of materials from a

prison industry for use as State-furnished material is subject to a public interest finding with the Division Administrator's concurrence (23 CFR 635.407d). Selection of materials produced by convict labor as State-furnished materials for mandatory use should be cleared prior to the submittal of the Plans Specifications & Estimates (PS&E).

b. Patented/Proprietary Products References: 23 U.S.C. 112, 23 CFR 635.411

FHWA will not participate, directly or indirectly, in payment for any premium or royalty on any patented or proprietary material, specification, or process specifically set forth in the plans and specifications for a project, unless:

- the item is purchased or obtained through competitive bidding with equally suitable unpatented items,
- the STA certifies either that the proprietary or patented item is essential for synchronization with the existing highway facilities or that no equally suitable alternative exists, or
- the item is used for research or for a special type of construction on relatively short sections of road for experimental purposes. States should follow FHWA's procedures for "Construction Projects Incorporating Experimental Features" (expermnt.htm) for the submittal of work plans and evaluations.

The primary purpose of the policy is to have competition in selection of materials and allow for development of new materials and products. The policy further permits materials and products that are judged equal may be bid under generic specifications. If only patented or proprietary products are acceptable, they shall be bid as alternatives with all, or at least a reasonable number of, acceptable materials or products listed; and the Division Administrator may approve a single source if it can be found that its utilization is in the public interest.

Trade names are generally the key to identifying patented or proprietary materials. Trade name examples include 3M, Corten, etc. Generally, products identified by their brand or trade name are not to be specified without an "or equal" phrase, and, if trade names are used, all, or at least a reasonable number of acceptable "equal" materials or products should be listed. The licensing of several suppliers to produce a product does not change the fact that it is a single product and should not be specified to the exclusion of other equally suitable products.

c. State Preference References: 23 U.S.C. 112, 23 CFR 635.409

Materials produced within Maine shall not be favored to the exclusion of comparable materials produced outside of Maine. State preference clauses give particular advantage to the designated source and thus restrict competition. Therefore, State preference provisions shall not be used on any Federal-aid construction projects.

This policy also applies to State preference actions against materials of foreign origin, except as otherwise permitted by Federal law. Thus, States cannot give preference to in-State material sources over foreign material sources. Under the Buy America provisions, the States are

permitted to expand the Buy America restrictions provided that the STA is legally authorized under State law to impose more stringent requirements.

d. State Owned/Furnished/Designated Materials References: 23 U.S.C. 112, 23 CFR 635.407

Current FHWA policy requires that the contractor must furnish all materials to be incorporated in the work, and the contractor shall be permitted to select the sources from which the materials are to be obtained. Exceptions to this requirement may be made when there is a definite finding, by MaineDOT and concurred in by Federal Highway Administration's (FHWA) Division Administrator, that it is in the public interest to require the contractor to use materials furnished by the MaineDOT or from sources designated by MaineDOT. The exception policy can best be understood by separating State-furnished materials into the categories of manufactured materials and local natural materials.

Manufactured Materials When the use of State-furnished manufactured materials is approved based on a public interest finding, such use must be made mandatory. The optional use of State-furnished manufactured materials is in violation of our policy prohibiting public agencies from competing with private firms. Manufactured materials to be furnished by MaineDOT must be acquired through competitive bidding, unless there is a public interest finding for another method, and concurred in by FHWA's Division Administrator.

Local Natural Materials When MaineDOT owns or controls a local natural materials source such as a borrow pit or a stockpile of salvaged pavement material, etc., the materials may be designated for either optional or mandatory use; however, mandatory use will require a public interest finding (PIF) and FHWA's Division Administrator's concurrence.

In order to permit prospective bidders to properly prepare their bids, the location, cost, and any conditions to be met for obtaining materials that are made available to the contractor shall be stated in the bidding documents.

Mandatory Disposal Sites Normally, the disposal site for surplus excavated materials is to be of the contractor's choosing; although, an optional site(s) may be shown in the contract provisions. A mandatory site shall be specified when there is a finding by MaineDOT, with the concurrence of the Division Administrator, that such placement is the most economical or that the environment would be substantially enhanced without excessive cost. Discussion of the mandatory use of a disposal site in the environmental document may serve as the basis for the public interest finding.

Summarizing FHWA policy for the mandatory use of borrow or disposal sites:

- mandatory use of either requires a public interest finding and FHWA's Division Administrator's concurrence,
- mandatory use of either may be based on environmental consideration where the environment will be substantially enhanced without excessive additional cost, and
- where the use is based on environmental considerations, the discussion in the environmental document may be used as the basis for the public interest finding.

Factors to justify a public interest finding should include such items as cost effectiveness, system integrity, and local shortages of material.

C. Standard FHWA Contract Provisions - FHWA 1273

Unless expressly otherwise provided in the Bid Documents, the following "Required Contract Provisions, Federal Aid Construction Contracts", FHWA-1273, are hereby incorporated into the Bid Documents and Contract.
****
Cargo Preference Act : Contractor and Subcontractor Clauses. "Use of United States-flag vessels: The contractor agrees—"(1) To utilize privately owned United States-flag commercial vessels to ship at least 50 percent of the gross tonnage (computed separately for dry bulk carriers, dry cargo liners, and tankers) involved, whenever shipping any equipment, material, or commodities pursuant to this contract, to the extent such vessels are available at fair and reasonable rates for United States-flag commercial vessels."(2) To furnish within 20 days following the date of loading for shipments originating within the United States or within 30 working days following the date of loading for shipments originating outside the United States, a legible copy of a rated, 'on-board' commercial ocean bill-of-lading in English for each shipment of cargo described in paragraph (1) of this section to both the Contracting Officer (through the prime contractor in the case of subcontractor bills-of-lading) and to the Division of National Cargo, Office of Market Development, Maritime Administration, Washington, DC 20590."(3) To insert the substance of the provisions of this clause in all subcontracts issued pursuant to this contract."(Reorganization Plans No. 21 of 1950 (64 Stat. 1273) and No. 7 of 1961 (75 Stat. 840) as amended by Pub. L. 91-469 (84 Stat. 1036) and Department of Commerce Organization Order 10-8 (38 FR 19707, July 23, 1973)) [42 FR 57126, Nov. 1, 1977]

The Cargo Preference Act requirements apply to materials or equipment that are acquired for a specific Federal-aid highway project. In general, the requirements are not applicable to goods or materials that come into inventories independent of an FHWA funded-contract. For example, the requirements would not apply to shipments of Portland cement, asphalt cement, or aggregates, as industry suppliers and contractors use these materials to replenish existing inventories. In general, most of the materials used for highway construction originate from existing inventories and are not acquired solely for a specific Federal-aid project. However, if materials or equipment are acquired solely for a Federal-aid project, then the Cargo Preference Act requirements apply."
****

Start of FHWA 1273 REQUIRED CONTRACT PROVISIONS
FEDERAL-AID CONSTRUCTION CONTRACTS (As revised through May 1, 2012)

FHWA-1273 -- Revised May 1, 2012

REQUIRED CONTRACT PROVISIONS
FEDERAL-AID CONSTRUCTION CONTRACTS

I. General
II. Nondiscrimination
III. Nonsegregated Facilities
IV. Davis-Bacon and Related Act Provisions
V. Contract Work Hours and Safety Standards Act Provisions
VI. Subletting or Assigning the Contract
VII. Safety: Accident Prevention
VIII. False Statements Concerning Highway Projects
IX. Implementation of Clean Air Act and Federal Water Pollution Control Act
X. Compliance with Governmentwide Suspension and Debarment Requirements
XI. Certification Regarding Use of Contract Funds for Lobbying

ATTACHMENTS

A. Employment and Materials Preference for Appalachian Development Highway System or Appalachian Local Access Road Contracts (included in Appalachian contracts only)

I. GENERAL

1. Form FHWA-1273 must be physically incorporated in each construction contract funded under Title 23 (excluding emergency contracts solely intended for debris removal). The contractor (or subcontractor) must insert this form in each subcontract and further require its inclusion in all lower tier subcontracts (excluding purchase orders, rental agreements and other agreements for supplies or services).

The applicable requirements of Form FHWA-1273 are incorporated by reference for work done under any purchase order, rental agreement or agreement for other services. The prime contractor shall be responsible for compliance by any subcontractor, lower-tier subcontractor or service provider.

Form FHWA-1273 must be included in all Federal-aid design-build contracts, in all subcontracts and in lower tier subcontracts (excluding subcontracts for design services, purchase orders, rental agreements and other agreements for supplies or services). The design-builder shall be responsible for compliance by any subcontractor, lower-tier subcontractor or service provider.

Contracting agencies may reference Form FHWA-1273 in bid proposal or request for proposal documents, however, the Form FHWA-1273 must be physically incorporated (not referenced) in all contracts, subcontracts and lower-tier subcontracts (excluding purchase orders, rental agreements and other agreements for supplies or services related to a construction contract).

2. Subject to the applicability criteria noted in the following sections, these contract provisions shall apply to all work performed on the contract by the contractor's own organization and with the assistance of workers under the contractor's immediate superintendence and to all work performed on the contract by piecework, station work, or by subcontract.

3. A breach of any of the stipulations contained in these Required Contract Provisions may be sufficient grounds for withholding of progress payments, withholding of final payment,

termination of the contract, suspension / debarment or any other action determined to be appropriate by the contracting agency and FHWA.

4. Selection of Labor: During the performance of this contract, the contractor shall not use convict labor for any purpose within the limits of a construction project on a Federal-aid highway unless it is labor performed by convicts who are on parole, supervised release, or probation. The term Federal-aid highway does not include roadways functionally classified as local roads or rural minor collectors.

II. NONDISCRIMINATION

The provisions of this section related to 23 CFR Part 230 are applicable to all Federal-aid construction contracts and to all related construction subcontracts of $10,000 or more. The provisions of 23 CFR Part 230 are not applicable to material supply, engineering, or architectural service contracts.

In addition, the contractor and all subcontractors must comply with the following policies: Executive Order 11246, 41 CFR 60, 29 CFR 1625-1627, Title 23 USC Section 140, the Rehabilitation Act of 1973, as amended (29 USC 794), Title VI of the Civil Rights Act of 1964, as amended, and related regulations including 49 CFR Parts 21, 26 and 27; and 23 CFR Parts 200, 230, and 633.

The contractor and all subcontractors must comply with: the requirements of the Equal Opportunity Clause in 41 CFR 60-1.4(b) and, for all construction contracts exceeding $10,000, the Standard Federal Equal Employment Opportunity Construction Contract Specifications in 41 CFR 60-4.3.

Note: The U.S. Department of Labor has exclusive authority to determine compliance with Executive Order 11246 and the policies of the Secretary of Labor including 41 CFR 60, and 29 CFR 1625-1627. The contracting agency and the FHWA have the authority and the responsibility to ensure compliance with Title 23 USC Section 140, the Rehabilitation Act of 1973, as amended (29 USC 794), and Title VI of the Civil Rights Act of 1964, as amended, and related regulations including 49 CFR Parts 21, 26 and 27; and 23 CFR Parts 200, 230, and 633.

The following provision is adopted from 23 CFR 230, Appendix A, with appropriate revisions to conform to the U.S. Department of Labor (US DOL) and FHWA requirements.

1. Equal Employment Opportunity: Equal employment opportunity (EEO) requirements not to discriminate and to take affirmative action to assure equal opportunity as set forth under laws, executive orders, rules, regulations (28 CFR 35, 29 CFR 1630, 29 CFR 1625-1627, 41 CFR 60 and 49 CFR 27) and orders of the Secretary of Labor as modified by the provisions prescribed herein, and imposed pursuant to 23 U.S.C. 140 shall constitute the EEO and specific affirmative action standards for the contractor's project activities under this contract. The provisions of the Americans with Disabilities Act of 1990 (42 U.S.C. 12101 et seq.) set forth under 28 CFR 35 and 29 CFR 1630 are incorporated by reference in this contract. In the execution of this contract, the contractor agrees to comply with the following minimum specific requirement activities of EEO:

a. The contractor will work with the contracting agency and the Federal Government to ensure that it has made every good faith effort to provide equal opportunity with respect to all of its terms and conditions of employment and in their review of activities under the contract.

b. The contractor will accept as its operating policy the following statement:

"It is the policy of this Company to assure that applicants are employed, and that employees are treated during employment, without regard to their race, religion, sex, color, national origin, age or disability. Such action shall include: employment, upgrading, demotion, or transfer; recruitment or recruitment advertising; layoff or termination; rates of pay or other forms of compensation; and selection for training, including apprenticeship, pre-apprenticeship, and/or on-the-job training."

2. EEO Officer: The contractor will designate and make known to the contracting officers an EEO Officer who will have the responsibility for and must be capable of effectively administering and promoting an active EEO program and who must be assigned adequate authority and responsibility to do so.

3. Dissemination of Policy: All members of the contractor's staff who are authorized to hire, supervise, promote, and discharge employees, or who recommend such action, or who are substantially involved in such action, will be made fully cognizant of, and will implement, the contractor's EEO policy and contractual responsibilities to provide EEO in each grade and classification of employment. To ensure that the above agreement will be met, the following actions will be taken as a minimum:

a. Periodic meetings of supervisory and personnel office employees will be conducted before the start of work and then not less often than once every six months, at which time the contractor's EEO policy and its implementation will be reviewed and explained. The meetings will be conducted by the EEO Officer.

b. All new supervisory or personnel office employees will be given a thorough indoctrination by the EEO Officer, covering all major aspects of the contractor's EEO obligations within thirty days following their reporting for duty with the contractor.

c. All personnel who are engaged in direct recruitment for the project will be instructed by the EEO Officer in the contractor's procedures for locating and hiring minorities and women.

d. Notices and posters setting forth the contractor's EEO policy will be placed in areas readily accessible to employees, applicants for employment and potential employees.

e. The contractor's EEO policy and the procedures to implement such policy will be brought to the attention of employees by means of meetings, employee handbooks, or other appropriate means.

4. Recruitment: When advertising for employees, the contractor will include in all advertisements for employees the notation: "An Equal Opportunity Employer." All such advertisements will be placed in publications having a large circulation among minorities and women in the area from which the project work force would normally be derived.

a. The contractor will, unless precluded by a valid bargaining agreement, conduct systematic and direct recruitment through public and private employee referral sources likely to yield qualified minorities and women. To meet this requirement, the contractor will identify sources of potential minority group employees, and establish with such identified sources procedures whereby minority and women applicants may be referred to the contractor for employment consideration.

b. In the event the contractor has a valid bargaining agreement providing for exclusive hiring hall referrals, the contractor is expected to observe the provisions of that agreement to the extent that the system meets the contractor's compliance with EEO contract provisions. Where implementation of such an agreement has the effect of discriminating against minorities or women, or obligates the contractor to do the same, such implementation violates Federal nondiscrimination provisions.

c. The contractor will encourage its present employees to refer minorities and women as applicants for employment. Information and procedures with regard to referring such applicants will be discussed with employees.

5. Personnel Actions: Wages, working conditions, and employee benefits shall be established and administered, and personnel actions of every type, including hiring, upgrading, promotion, transfer, demotion, layoff, and termination, shall be taken without regard to race, color, religion, sex, national origin, age or disability.

The following procedures shall be followed:

a. The contractor will conduct periodic inspections of project sites to insure that working conditions and employee facilities do not indicate discriminatory treatment of project site personnel.

b. The contractor will periodically evaluate the spread of wages paid within each classification to determine any evidence of discriminatory wage practices.

c. The contractor will periodically review selected personnel actions in depth to determine whether there is evidence of discrimination. Where evidence is found, the contractor will promptly take corrective action. If the review indicates that the discrimination may extend beyond the actions reviewed, such corrective action shall include all affected persons.

d. The contractor will promptly investigate all complaints of alleged discrimination made to the contractor in connection with its obligations under this contract, will attempt to resolve such complaints, and will take appropriate corrective action within a reasonable time. If the investigation indicates that the discrimination may affect persons other than the complainant, such corrective action shall include such other persons. Upon completion of each investigation, the contractor will inform every complainant of all of their avenues of appeal.

6. Training and Promotion:

a. The contractor will assist in locating, qualifying, and increasing the skills of minorities and women who are applicants for employment or current employees. Such efforts should be aimed at developing full journey level status employees in the type of trade or job classification involved.

b. Consistent with the contractor's work force requirements and as permissible under Federal and State regulations, the contractor shall make full use of training programs, i.e., apprenticeship, and on-the-job training programs for the geographical area of contract performance. In the event a special provision for training is provided under this contract, this subparagraph will be superseded as indicated in the special provision. The contracting agency may reserve training positions for persons who receive welfare assistance in accordance with 23 U.S.C. 140(a).

c. The contractor will advise employees and applicants for employment of available training programs and entrance requirements for each.

d. The contractor will periodically review the training and promotion potential of employees who are minorities and women and will encourage eligible employees to apply for such training and promotion.

7. Unions: If the contractor relies in whole or in part upon unions as a source of employees, the contractor will use good faith efforts to obtain the cooperation of such unions to increase opportunities for minorities and women.

Actions by the contractor, either directly or through a contractor's association acting as agent, will include the procedures set forth below:

a. The contractor will use good faith efforts to develop, in cooperation with the unions, joint training programs aimed toward qualifying more minorities and women for membership in the unions and increasing the skills of minorities and women so that they may qualify for higher paying employment.

b. The contractor will use good faith efforts to incorporate an EEO clause into each union agreement to the end that such union will be contractually bound to refer applicants without regard to their race, color, religion, sex, national origin, age or disability.

c. The contractor is to obtain information as to the referral practices and policies of the labor union except that to the extent such information is within the exclusive possession of the labor union and such labor union refuses to furnish such information to the contractor, the contractor shall so certify to the contracting agency and shall set forth what efforts have been made to obtain such information.

d. In the event the union is unable to provide the contractor with a reasonable flow of referrals within the time limit set forth in the collective bargaining agreement, the contractor will, through independent recruitment efforts, fill the employment vacancies without regard to race, color, religion, sex, national origin, age or disability; making full efforts to obtain qualified and/or qualifiable minorities and women. The failure of a union to provide sufficient referrals (even

though it is obligated to provide exclusive referrals under the terms of a collective bargaining agreement) does not relieve the contractor from the requirements of this paragraph. In the event the union referral practice prevents the contractor from meeting the obligations pursuant to Executive Order 11246, as amended, and these special provisions, such contractor shall immediately notify the contracting agency.

8. Reasonable Accommodation for Applicants / Employees with Disabilities: The contractor must be familiar with the requirements for and comply with the Americans with Disabilities Act and all rules and regulations established there under. Employers must provide reasonable accommodation in all employment activities unless to do so would cause an undue hardship.

9. Selection of Subcontractors, Procurement of Materials and Leasing of Equipment: The contractor shall not discriminate on the grounds of race, color, religion, sex, national origin, age or disability in the selection and retention of subcontractors, including procurement of materials and leases of equipment. The contractor shall take all necessary and reasonable steps to ensure nondiscrimination in the administration of this contract.

a. The contractor shall notify all potential subcontractors and suppliers and lessors of their EEO obligations under this contract.

b. The contractor will use good faith efforts to ensure subcontractor compliance with their EEO obligations.

10. Assurance Required by 49 CFR 26.13(b):

a. The requirements of 49 CFR Part 26 and the State DOT's U.S. DOT-approved DBE program are incorporated by reference.

b. The contractor or subcontractor shall not discriminate on the basis of race, color, national origin, or sex in the performance of this contract. The contractor shall carry out applicable requirements of 49 CFR Part 26 in the award and administration of DOT-assisted contracts. Failure by the contractor to carry out these requirements is a material breach of this contract, which may result in the termination of this contract or such other remedy as the contracting agency deems appropriate.

11. Records and Reports: The contractor shall keep such records as necessary to document compliance with the EEO requirements. Such records shall be retained for a period of three years following the date of the final payment to the contractor for all contract work and shall be available at reasonable times and places for inspection by authorized representatives of the contracting agency and the FHWA.

a. The records kept by the contractor shall document the following:

(1) The number and work hours of minority and non-minority group members and women employed in each work classification on the project;

(2) The progress and efforts being made in cooperation with unions, when applicable, to increase employment opportunities for minorities and women; and

(3) The progress and efforts being made in locating, hiring, training, qualifying, and upgrading minorities and women;

b. The contractors and subcontractors will submit an annual report to the contracting agency each July for the duration of the project, indicating the number of minority, women, and non-minority group employees currently engaged in each work classification required by the contract work. This information is to be reported on Form FHWA-1391. The staffing data should represent the project work force on board in all or any part of the last payroll period preceding the end of July. If on-the-job training is being required by special provision, the contractor will be required to collect and report training data. The employment data should reflect the work force on board during all or any part of the last payroll period preceding the end of July.

III. NONSEGREGATED FACILITIES

This provision is applicable to all Federal-aid construction contracts and to all related construction subcontracts of $10,000 or more.

The contractor must ensure that facilities provided for employees are provided in such a manner that segregation on the basis of race, color, religion, sex, or national origin cannot result. The contractor may neither require such segregated use by written or oral policies nor tolerate such use by employee custom. The contractor's obligation extends further to ensure that its employees are not assigned to perform their services at any location, under the contractor's control, where the facilities are segregated. The term "facilities" includes waiting rooms, work areas, restaurants and other eating areas, time clocks, restrooms, washrooms, locker rooms, and other storage or dressing areas, parking lots, drinking fountains, recreation or entertainment areas, transportation, and housing provided for employees. The contractor shall provide separate or single-user restrooms and necessary dressing or sleeping areas to assure privacy between sexes.

IV. DAVIS-BACON AND RELATED ACT PROVISIONS

This section is applicable to all Federal-aid construction projects exceeding $2,000 and to all related subcontracts and lower-tier subcontracts (regardless of subcontract size). The requirements apply to all projects located within the right-of-way of a roadway that is functionally classified as Federal-aid highway. This excludes roadways functionally classified as local roads or rural minor collectors, which are exempt. Contracting agencies may elect to apply these requirements to other projects.

The following provisions are from the U.S. Department of Labor regulations in 29 CFR 5.5 “Contract provisions and related matters” with minor revisions to conform to the FHWA-1273 format and FHWA program requirements.

1. Minimum wages

a. All laborers and mechanics employed or working upon the site of the work, will be paid unconditionally and not less often than once a week, and without subsequent deduction or rebate on any account (except such payroll deductions as are permitted by regulations issued by the Secretary of Labor under the Copeland Act (29 CFR part 3)), the full amount of wages and bona fide fringe benefits (or cash equivalents thereof) due at time of payment computed at rates not less than those contained in the wage determination of the Secretary of Labor which is attached hereto and made a part hereof, regardless of any contractual relationship which may be alleged to exist between the contractor and such laborers and mechanics.

Contributions made or costs reasonably anticipated for bona fide fringe benefits under section 1(b)(2) of the Davis-Bacon Act on behalf of laborers or mechanics are considered wages paid to such laborers or mechanics, subject to the provisions of paragraph 1.d. of this section; also, regular contributions made or costs incurred for more than a weekly period (but not less often than quarterly) under plans, funds, or programs which cover the particular weekly period, are deemed to be constructively made or incurred during such weekly period. Such laborers and mechanics shall be paid the appropriate wage rate and fringe benefits on the wage determination for the classification of work actually performed, without regard to skill, except as provided in 29 CFR 5.5(a)(4). Laborers or mechanics performing work in more than one classification may be compensated at the rate specified for each classification for the time actually worked therein: Provided, That the employer's payroll records accurately set forth the time spent in each classification in which work is performed. The wage determination (including any additional classification and wage rates conformed under paragraph 1.b. of this section) and the Davis-Bacon poster (WH–1321) shall be posted at all times by the contractor and its subcontractors at the site of the work in a prominent and accessible place where it can be easily seen by the workers.

b. (1) The contracting officer shall require that any class of laborers or mechanics, including helpers, which is not listed in the wage determination and which is to be employed under the contract shall be classified in conformance with the wage determination. The contracting officer shall approve an additional classification and wage rate and fringe benefits therefore only when the following criteria have been met:

(i) The work to be performed by the classification requested is not performed by a classification in the wage determination; and

(ii) The classification is utilized in the area by the construction industry; and

(iii) The proposed wage rate, including any bona fide fringe benefits, bears a reasonable relationship to the wage rates contained in the wage determination.

(2) If the contractor and the laborers and mechanics to be employed in the classification (if known), or their representatives, and the contracting officer agree on the classification and wage rate (including the amount designated for fringe benefits where appropriate), a report of the action taken shall be sent by the contracting officer to the Administrator of the Wage and Hour Division, Employment Standards Administration, U.S. Department of Labor, Washington, DC 20210. The Administrator, or an authorized representative, will approve, modify, or disapprove every additional classification action within 30 days of receipt and so advise the contracting officer or will notify the contracting officer within the 30-day period that additional time is necessary.

(3) In the event the contractor, the laborers or mechanics to be employed in the classification or their representatives, and the contracting officer do not agree on the proposed classification and wage rate (including the amount designated for fringe benefits, where appropriate), the contracting officer shall refer the questions, including the views of all interested parties and the recommendation of the contracting officer, to the Wage and Hour Administrator for determination. The Wage and Hour Administrator, or an authorized representative, will issue a determination within 30 days of receipt and so advise the contracting officer or will notify the contracting officer within the 30-day period that additional time is necessary.

(4) The wage rate (including fringe benefits where appropriate) determined pursuant to paragraphs 1.b.(2) or 1.b.(3) of this section, shall be paid to all workers performing work in the classification under this contract from the first day on which work is performed in the classification.

c. Whenever the minimum wage rate prescribed in the contract for a class of laborers or mechanics includes a fringe benefit which is not expressed as an hourly rate, the contractor shall either pay the benefit as stated in the wage determination or shall pay another bona fide fringe benefit or an hourly cash equivalent thereof.

d. If the contractor does not make payments to a trustee or other third person, the contractor may consider as part of the wages of any laborer or mechanic the amount of any costs reasonably anticipated in providing bona fide fringe benefits under a plan or program, Provided, That the Secretary of Labor has found, upon the written request of the contractor, that the applicable standards of the Davis-Bacon Act have been met. The Secretary of Labor may require the contractor to set aside in a separate account assets for the meeting of obligations under the plan or program.

2. Withholding

The contracting agency shall upon its own action or upon written request of an authorized representative of the Department of Labor, withhold or cause to be withheld from the contractor under this contract, or any other Federal contract with the same prime contractor, or any other federally-assisted contract subject to Davis-Bacon prevailing wage requirements, which is held by the same prime contractor, so much of the accrued payments or advances as may be considered necessary to pay laborers and mechanics, including apprentices, trainees, and helpers, employed by the contractor or any subcontractor the full amount of wages required by the contract. In the event of failure to pay any laborer or mechanic, including any apprentice, trainee, or helper, employed or working on the site of the work, all or part of the wages required by the contract, the contracting agency may, after written notice to the contractor, take such action as may be necessary to cause the suspension of any further payment, advance, or guarantee of funds until such violations have ceased.

3. Payrolls and basic records

a. Payrolls and basic records relating thereto shall be maintained by the contractor during the course of the work and preserved for a period of three years thereafter for all laborers and mechanics working at the site of the work. Such records shall contain the name, address, and social security number of each such worker, his or her correct classification, hourly rates of wages paid (including rates of contributions or costs anticipated for bona fide fringe benefits or cash equivalents thereof of the types described in section 1(b)(2)(B) of the Davis-Bacon Act),

daily and weekly number of hours worked, deductions made and actual wages paid. Whenever the Secretary of Labor has found under 29 CFR 5.5(a)(1)(iv) that the wages of any laborer or mechanic include the amount of any costs reasonably anticipated in providing benefits under a plan or program described in section 1(b)(2)(B) of the Davis-Bacon Act, the contractor shall maintain records which show that the commitment to provide such benefits is enforceable, that the plan or program is financially responsible, and that the plan or program has been communicated in writing to the laborers or mechanics affected, and records which show the costs anticipated or the actual cost incurred in providing such benefits. Contractors employing apprentices or trainees under approved programs shall maintain written evidence of the registration of apprenticeship programs and certification of trainee programs, the registration of the apprentices and trainees, and the ratios and wage rates prescribed in the applicable programs.

b. (1) The contractor shall submit weekly for each week in which any contract work is performed a copy of all payrolls to the contracting agency. The payrolls submitted shall set out accurately and completely all of the information required to be maintained under 29 CFR 5.5(a)(3)(i), except that full social security numbers and home addresses shall not be included on weekly transmittals. Instead the payrolls shall only need to include an individually identifying number for each employee (e.g. , the last four digits of the employee's social security number). The required weekly payroll information may be submitted in any form desired. Optional Form WH–347 is available for this purpose from the Wage and Hour Division Web site at http://www.dol.gov/esa/whd/forms/wh347instr.htm or its successor site. The prime contractor is responsible for the submission of copies of payrolls by all subcontractors. Contractors and subcontractors shall maintain the full social security number and current address of each covered worker, and shall provide them upon request to the contracting agency for transmission to the State DOT, the FHWA or the Wage and Hour Division of the Department of Labor for purposes of an investigation or audit of compliance with prevailing wage requirements. It is not a violation of this section for a prime contractor to require a subcontractor to provide addresses and social security numbers to the prime contractor for its own records, without weekly submission to the contracting agency..

(2) Each payroll submitted shall be accompanied by a “Statement of Compliance,” signed by the contractor or subcontractor or his or her agent who pays or supervises the payment of the persons employed under the contract and shall certify the following:

(i) That the payroll for the payroll period contains the information required to be provided under §5.5 (a)(3)(ii) of Regulations, 29 CFR part 5, the appropriate information is being maintained under §5.5 (a)(3)(i) of Regulations, 29 CFR part 5, and that such information is correct and complete;

(ii) That each laborer or mechanic (including each helper, apprentice, and trainee) employed on the contract during the payroll period has been paid the full weekly wages earned, without rebate, either directly or indirectly, and that no deductions have been made either directly or indirectly from the full wages earned, other than permissible deductions as set forth in Regulations, 29 CFR part 3;

(iii) That each laborer or mechanic has been paid not less than the applicable wage rates and fringe benefits or cash equivalents for the classification of work performed, as specified in the applicable wage determination incorporated into the contract.

(3) The weekly submission of a properly executed certification set forth on the reverse side of Optional Form WH–347 shall satisfy the requirement for submission of the "Statement of Compliance" required by paragraph 3.b.(2) of this section.

(4) The falsification of any of the above certifications may subject the contractor or subcontractor to civil or criminal prosecution under section 1001 of title 18 and section 231 of title 31 of the United States Code.

c. The contractor or subcontractor shall make the records required under paragraph 3.a. of this section available for inspection, copying, or transcription by authorized representatives of the contracting agency, the State DOT, the FHWA, or the Department of Labor, and shall permit such representatives to interview employees during working hours on the job. If the contractor or subcontractor fails to submit the required records or to make them available, the FHWA may, after written notice to the contractor, the contracting agency or the State DOT, take such action as may be necessary to cause the suspension of any further payment, advance, or guarantee of funds. Furthermore, failure to submit the required records upon request or to make such records available may be grounds for debarment action pursuant to 29 CFR 5.12.

4. Apprentices and trainees

a. Apprentices (programs of the USDOL).

Apprentices will be permitted to work at less than the predetermined rate for the work they performed when they are employed pursuant to and individually registered in a bona fide apprenticeship program registered with the U.S. Department of Labor, Employment and Training Administration, Office of Apprenticeship Training, Employer and Labor Services, or with a State Apprenticeship Agency recognized by the Office, or if a person is employed in his or her first 90 days of probationary employment as an apprentice in such an apprenticeship program, who is not individually registered in the program, but who has been certified by the Office of Apprenticeship Training, Employer and Labor Services or a State Apprenticeship Agency (where appropriate) to be eligible for probationary employment as an apprentice.

The allowable ratio of apprentices to journeymen on the job site in any craft classification shall not be greater than the ratio permitted to the contractor as to the entire work force under the registered program. Any worker listed on a payroll at an apprentice wage rate, who is not registered or otherwise employed as stated above, shall be paid not less than the applicable wage rate on the wage determination for the classification of work actually performed. In addition, any apprentice performing work on the job site in excess of the ratio permitted under the registered program shall be paid not less than the applicable wage rate on the wage determination for the work actually performed. Where a contractor is performing construction on a project in a locality other than that in which its program is registered, the ratios and wage rates (expressed in percentages of the journeyman's hourly rate) specified in the contractor's or subcontractor's registered program shall be observed.

Every apprentice must be paid at not less than the rate specified in the registered program for the apprentice's level of progress, expressed as a percentage of the journeymen hourly rate specified in the applicable wage determination. Apprentices shall be paid fringe benefits in accordance with the provisions of the apprenticeship program. If the apprenticeship program does not specify fringe benefits, apprentices must be paid the full amount of fringe benefits listed on the wage determination for the applicable classification. If the Administrator determines that a

different practice prevails for the applicable apprentice classification, fringes shall be paid in accordance with that determination.

In the event the Office of Apprenticeship Training, Employer and Labor Services, or a State Apprenticeship Agency recognized by the Office, withdraws approval of an apprenticeship program, the contractor will no longer be permitted to utilize apprentices at less than the applicable predetermined rate for the work performed until an acceptable program is approved.

b. Trainees (programs of the USDOL).

Except as provided in 29 CFR 5.16, trainees will not be permitted to work at less than the predetermined rate for the work performed unless they are employed pursuant to and individually registered in a program which has received prior approval, evidenced by formal certification by the U.S. Department of Labor, Employment and Training Administration.

The ratio of trainees to journeymen on the job site shall not be greater than permitted under the plan approved by the Employment and Training Administration.

Every trainee must be paid at not less than the rate specified in the approved program for the trainee's level of progress, expressed as a percentage of the journeyman hourly rate specified in the applicable wage determination. Trainees shall be paid fringe benefits in accordance with the provisions of the trainee program. If the trainee program does not mention fringe benefits, trainees shall be paid the full amount of fringe benefits listed on the wage determination unless the Administrator of the Wage and Hour Division determines that there is an apprenticeship program associated with the corresponding journeyman wage rate on the wage determination which provides for less than full fringe benefits for apprentices. Any employee listed on the payroll at a trainee rate who is not registered and participating in a training plan approved by the Employment and Training Administration shall be paid not less than the applicable wage rate on the wage determination for the classification of work actually performed. In addition, any trainee performing work on the job site in excess of the ratio permitted under the registered program shall be paid not less than the applicable wage rate on the wage determination for the work actually performed.

In the event the Employment and Training Administration withdraws approval of a training program, the contractor will no longer be permitted to utilize trainees at less than the applicable predetermined rate for the work performed until an acceptable program is approved.

c. Equal employment opportunity. The utilization of apprentices, trainees and journeymen under this part shall be in conformity with the equal employment opportunity requirements of Executive Order 11246, as amended, and 29 CFR part 30.

d. Apprentices and Trainees (programs of the U.S. DOT).

Apprentices and trainees working under apprenticeship and skill training programs which have been certified by the Secretary of Transportation as promoting EEO in connection with Federal-aid highway construction programs are not subject to the requirements of paragraph 4 of this Section IV. The straight time hourly wage rates for apprentices and trainees under such programs will be established by the particular programs. The ratio of apprentices and trainees to journeymen shall not be greater than permitted by the terms of the particular program.

5. Compliance with Copeland Act requirements. The contractor shall comply with the requirements of 29 CFR part 3, which are incorporated by reference in this contract.

6. Subcontracts. The contractor or subcontractor shall insert Form FHWA-1273 in any subcontracts and also require the subcontractors to include Form FHWA-1273 in any lower tier subcontracts. The prime contractor shall be responsible for the compliance by any subcontractor or lower tier subcontractor with all the contract clauses in 29 CFR 5.5.

7. Contract termination: debarment. A breach of the contract clauses in 29 CFR 5.5 may be grounds for termination of the contract, and for debarment as a contractor and a subcontractor as provided in 29 CFR 5.12.

8. Compliance with Davis-Bacon and Related Act requirements. All rulings and interpretations of the Davis-Bacon and Related Acts contained in 29 CFR parts 1, 3, and 5 are herein incorporated by reference in this contract.

9. Disputes concerning labor standards. Disputes arising out of the labor standards provisions of this contract shall not be subject to the general disputes clause of this contract. Such disputes shall be resolved in accordance with the procedures of the Department of Labor set forth in 29 CFR parts 5, 6, and 7. Disputes within the meaning of this clause include disputes between the contractor (or any of its subcontractors) and the contracting agency, the U.S. Department of Labor, or the employees or their representatives.

10. Certification of eligibility.

a. By entering into this contract, the contractor certifies that neither it (nor he or she) nor any person or firm who has an interest in the contractor's firm is a person or firm ineligible to be awarded Government contracts by virtue of section 3(a) of the Davis-Bacon Act or 29 CFR 5.12(a)(1).

b. No part of this contract shall be subcontracted to any person or firm ineligible for award of a Government contract by virtue of section 3(a) of the Davis-Bacon Act or 29 CFR 5.12(a)(1).

c. The penalty for making false statements is prescribed in the U.S. Criminal Code, 18 U.S.C. 1001.

V. CONTRACT WORK HOURS AND SAFETY STANDARDS ACT

The following clauses apply to any Federal-aid construction contract in an amount in excess of $100,000 and subject to the overtime provisions of the Contract Work Hours and Safety Standards Act. These clauses shall be inserted in addition to the clauses required by 29 CFR 5.5(a) or 29 CFR 4.6. As used in this paragraph, the terms laborers and mechanics include watchmen and guards.

1. Overtime requirements. No contractor or subcontractor contracting for any part of the contract work which may require or involve the employment of laborers or mechanics shall require or permit any such laborer or mechanic in any workweek in which he or she is employed on such work to work in excess of forty hours in such workweek unless such laborer or mechanic receives compensation at a rate not less than one and one-half times the basic rate of pay for all hours worked in excess of forty hours in such workweek.

2. Violation; liability for unpaid wages; liquidated damages. In the event of any violation of the clause set forth in paragraph (1.) of this section, the contractor and any subcontractor responsible therefor shall be liable for the unpaid wages. In addition, such contractor and subcontractor shall be liable to the United States (in the case of work done under contract for the District of Columbia or a territory, to such District or to such territory), for liquidated damages. Such liquidated damages shall be computed with respect to each individual laborer or mechanic, including watchmen and guards, employed in violation of the clause set forth in paragraph (1.) of this section, in the sum of $10 for each calendar day on which such individual was required or permitted to work in excess of the standard workweek of forty hours without payment of the overtime wages required by the clause set forth in paragraph (1.) of this section.

3. Withholding for unpaid wages and liquidated damages. The FHWA or the contacting agency shall upon its own action or upon written request of an authorized representative of the Department of Labor withhold or cause to be withheld, from any moneys payable on account of work performed by the contractor or subcontractor under any such contract or any other Federal contract with the same prime contractor, or any other federally-assisted contract subject to the Contract Work Hours and Safety Standards Act, which is held by the same prime contractor, such sums as may be determined to be necessary to satisfy any liabilities of such contractor or subcontractor for unpaid wages and liquidated damages as provided in the clause set forth in paragraph (2.) of this section.

4. Subcontracts. The contractor or subcontractor shall insert in any subcontracts the clauses set forth in paragraph (1.) through (4.) of this section and also a clause requiring the subcontractors to include these clauses in any lower tier subcontracts. The prime contractor shall be responsible for compliance by any subcontractor or lower tier subcontractor with the clauses set forth in paragraphs (1.) through (4.) of this section.

VI. SUBLETTING OR ASSIGNING THE CONTRACT

This provision is applicable to all Federal-aid construction contracts on the National Highway System.

1. The contractor shall perform with its own organization contract work amounting to not less than 30 percent (or a greater percentage if specified elsewhere in the contract) of the total original contract price, excluding any specialty items designated by the contracting agency. Specialty items may be performed by subcontract and the amount of any such specialty items performed may be deducted from the total original contract price before computing the amount of work required to be performed by the contractor's own organization (23 CFR 635.116).

a. The term “perform work with its own organization” refers to workers employed or leased by the prime contractor, and equipment owned or rented by the prime contractor, with or without operators. Such term does not include employees or equipment of a subcontractor or lower tier subcontractor, agents of the prime contractor, or any other assignees. The term may include payments for the costs of hiring leased employees from an employee leasing firm meeting all relevant Federal and State regulatory requirements. Leased employees may only be included in this term if the prime contractor meets all of the following conditions:

(1) the prime contractor maintains control over the supervision of the day-to-day activities of the leased employees;
(2) the prime contractor remains responsible for the quality of the work of the leased employees;
(3) the prime contractor retains all power to accept or exclude individual employees from work on the project; and
(4) the prime contractor remains ultimately responsible for the payment of predetermined minimum wages, the submission of payrolls, statements of compliance and all other Federal regulatory requirements.

b. "Specialty Items" shall be construed to be limited to work that requires highly specialized knowledge, abilities, or equipment not ordinarily available in the type of contracting organizations qualified and expected to bid or propose on the contract as a whole and in general are to be limited to minor components of the overall contract.

2. The contract amount upon which the requirements set forth in paragraph (1) of Section VI is computed includes the cost of material and manufactured products which are to be purchased or produced by the contractor under the contract provisions.

3. The contractor shall furnish (a) a competent superintendent or supervisor who is employed by the firm, has full authority to direct performance of the work in accordance with the contract requirements, and is in charge of all construction operations (regardless of who performs the work) and (b) such other of its own organizational resources (supervision, management, and engineering services) as the contracting officer determines is necessary to assure the performance of the contract.

4. No portion of the contract shall be sublet, assigned or otherwise disposed of except with the written consent of the contracting officer, or authorized representative, and such consent when given shall not be construed to relieve the contractor of any responsibility for the fulfillment of the contract. Written consent will be given only after the contracting agency has assured that each subcontract is evidenced in writing and that it contains all pertinent provisions and requirements of the prime contract.

5. The 30% self-performance requirement of paragraph (1) is not applicable to design-build contracts; however, contracting agencies may establish their own self-performance requirements.

VII. SAFETY: ACCIDENT PREVENTION

This provision is applicable to all Federal-aid construction contracts and to all related subcontracts.

1. In the performance of this contract the contractor shall comply with all applicable Federal, State, and local laws governing safety, health, and sanitation (23 CFR 635). The contractor shall provide all safeguards, safety devices and protective equipment and take any other needed actions as it determines, or as the contracting officer may determine, to be reasonably necessary to protect the life and health of employees on the job and the safety of the public and to protect property in connection with the performance of the work covered by the contract.

2. It is a condition of this contract, and shall be made a condition of each subcontract, which the contractor enters into pursuant to this contract, that the contractor and any subcontractor shall not permit any employee, in performance of the contract, to work in surroundings or under conditions which are unsanitary, hazardous or dangerous to his/her health or safety, as determined under construction safety and health standards (29 CFR 1926) promulgated by the Secretary of Labor, in accordance with Section 107 of the Contract Work Hours and Safety Standards Act (40 U.S.C. 3704).

3. Pursuant to 29 CFR 1926.3, it is a condition of this contract that the Secretary of Labor or authorized representative thereof, shall have right of entry to any site of contract performance to inspect or investigate the matter of compliance with the construction safety and health standards and to carry out the duties of the Secretary under Section 107 of the Contract Work Hours and Safety Standards Act (40 U.S.C.3704).

VIII. FALSE STATEMENTS CONCERNING HIGHWAY PROJECTS

This provision is applicable to all Federal-aid construction contracts and to all related subcontracts.

In order to assure high quality and durable construction in conformity with approved plans and specifications and a high degree of reliability on statements and representations made by engineers, contractors, suppliers, and workers on Federal-aid highway projects, it is essential that all persons concerned with the project perform their functions as carefully, thoroughly, and honestly as possible. Willful falsification, distortion, or misrepresentation with respect to any facts related to the project is a violation of Federal law. To prevent any misunderstanding regarding the seriousness of these and similar acts, Form FHWA-1022 shall be posted on each Federal-aid highway project (23 CFR 635) in one or more places where it is readily available to all persons concerned with the project:

18 U.S.C. 1020 reads as follows:

"Whoever, being an officer, agent, or employee of the United States, or of any State or Territory, or whoever, whether a person, association, firm, or corporation, knowingly makes any false statement, false representation, or false report as to the character, quality, quantity, or cost of the material used or to be used, or the quantity or quality of the work performed or to be performed, or the cost thereof in connection with the submission of plans, maps, specifications, contracts, or costs of construction on any highway or related project submitted for approval to the Secretary of Transportation; or

Whoever knowingly makes any false statement, false representation, false report or false claim with respect to the character, quality, quantity, or cost of any work performed or to be performed, or materials furnished or to be furnished, in connection with the construction of any highway or related project approved by the Secretary of Transportation; or

Whoever knowingly makes any false statement or false representation as to material fact in any statement, certificate, or report submitted pursuant to provisions of the Federal-aid Roads Act approved July 1, 1916, (39 Stat. 355), as amended and supplemented;

Shall be fined under this title or imprisoned not more than 5 years or both."

IX. IMPLEMENTATION OF CLEAN AIR ACT AND FEDERAL WATER POLLUTION CONTROL ACT

This provision is applicable to all Federal-aid construction contracts and to all related subcontracts.

By submission of this bid/proposal or the execution of this contract, or subcontract, as appropriate, the bidder, proposer, Federal-aid construction contractor, or subcontractor, as appropriate, will be deemed to have stipulated as follows:

1. That any person who is or will be utilized in the performance of this contract is not prohibited from receiving an award due to a violation of Section 508 of the Clean Water Act or Section 306 of the Clean Air Act.
2. That the contractor agrees to include or cause to be included the requirements of paragraph (1) of this Section X in every subcontract, and further agrees to take such action as the contracting agency may direct as a means of enforcing such requirements.

X. CERTIFICATION REGARDING DEBARMENT, SUSPENSION, INELIGIBILITY AND VOLUNTARY EXCLUSION

This provision is applicable to all Federal-aid construction contracts, design-build contracts, subcontracts, lower-tier subcontracts, purchase orders, lease agreements, consultant contracts or any other covered transaction requiring FHWA approval or that is estimated to cost $25,000 or more – as defined in 2 CFR Parts 180 and 1200.

1**. Instructions for Certification – First Tier Participants:**

a. By signing and submitting this proposal, the prospective first tier participant is providing the certification set out below.

b. The inability of a person to provide the certification set out below will not necessarily result in denial of participation in this covered transaction. The prospective first tier participant shall submit an explanation of why it cannot provide the certification set out below. The certification or explanation will be considered in connection with the department or agency's determination whether to enter into this transaction. However, failure of the prospective first tier participant to furnish a certification or an explanation shall disqualify such a person from participation in this transaction.

c. The certification in this clause is a material representation of fact upon which reliance was placed when the contracting agency determined to enter into this transaction. If it is later determined that the prospective participant knowingly rendered an erroneous certification, in addition to other remedies available to the Federal Government, the contracting agency may terminate this transaction for cause of default.

d. The prospective first tier participant shall provide immediate written notice to the contracting agency to whom this proposal is submitted if any time the prospective first tier participant learns that its certification was erroneous when submitted or has become erroneous by reason of changed circumstances.

e. The terms "covered transaction," "debarred," "suspended," "ineligible," "participant," "person," "principal," and "voluntarily excluded," as used in this clause, are defined in 2 CFR Parts 180 and 1200. “First Tier Covered Transactions” refers to any covered transaction between a grantee or subgrantee of Federal funds and a participant (such as the prime or general contract). “Lower Tier Covered Transactions” refers to any covered transaction under a First Tier Covered Transaction (such as subcontracts). “First Tier Participant” refers to the participant who has entered into a covered transaction with a grantee or subgrantee of Federal funds (such as the prime or general contractor). “Lower Tier Participant” refers any participant who has entered into a covered transaction with a First Tier Participant or other Lower Tier Participants (such as subcontractors and suppliers).

f. The prospective first tier participant agrees by submitting this proposal that, should the proposed covered transaction be entered into, it shall not knowingly enter into any lower tier covered transaction with a person who is debarred, suspended, declared ineligible, or voluntarily excluded from participation in this covered transaction, unless authorized by the department or agency entering into this transaction.

g. The prospective first tier participant further agrees by submitting this proposal that it will include the clause titled "Certification Regarding Debarment, Suspension, Ineligibility and Voluntary Exclusion-Lower Tier Covered Transactions," provided by the department or contracting agency, entering into this covered transaction, without modification, in all lower tier covered transactions and in all solicitations for lower tier covered transactions exceeding the $25,000 threshold.

h. A participant in a covered transaction may rely upon a certification of a prospective participant in a lower tier covered transaction that is not debarred, suspended, ineligible, or voluntarily excluded from the covered transaction, unless it knows that the certification is erroneous. A participant is responsible for ensuring that its principals are not suspended, debarred, or otherwise ineligible to participate in covered transactions. To verify the eligibility of its principals, as well as the eligibility of any lower tier prospective participants, each participant may, but is not required to, check the Excluded Parties List System website (https://www.epls.gov/), which is compiled by the General Services Administration.

i. Nothing contained in the foregoing shall be construed to require the establishment of a system of records in order to render in good faith the certification required by this clause. The knowledge and information of the prospective participant is not required to exceed that which is normally possessed by a prudent person in the ordinary course of business dealings.

j. Except for transactions authorized under paragraph (f) of these instructions, if a participant in a covered transaction knowingly enters into a lower tier covered transaction with a person who is suspended, debarred, ineligible, or voluntarily excluded from participation in this transaction, in addition to other remedies available to the Federal Government, the department or agency may terminate this transaction for cause or default.

* * * * *

2. Certification Regarding Debarment, Suspension, Ineligibility and Voluntary Exclusion – First Tier Participants:

a. The prospective first tier participant certifies to the best of its knowledge and belief, that it and its principals:

(1) Are not presently debarred, suspended, proposed for debarment, declared ineligible, or voluntarily excluded from participating in covered transactions by any Federal department or agency;

(2) Have not within a three-year period preceding this proposal been convicted of or had a civil judgment rendered against them for commission of fraud or a criminal offense in connection with obtaining, attempting to obtain, or performing a public (Federal, State or local) transaction or contract under a public transaction; violation of Federal or State antitrust statutes or commission of embezzlement, theft, forgery, bribery, falsification or destruction of records, making false statements, or receiving stolen property;

(3) Are not presently indicted for or otherwise criminally or civilly charged by a governmental entity (Federal, State or local) with commission of any of the offenses enumerated in paragraph (a)(2) of this certification; and

(4) Have not within a three-year period preceding this application/proposal had one or more public transactions (Federal, State or local) terminated for cause or default.

b. Where the prospective participant is unable to certify to any of the statements in this certification, such prospective participant shall attach an explanation to this proposal.

2. **Instructions for Certification - Lower Tier Participants:**

(Applicable to all subcontracts, purchase orders and other lower tier transactions requiring prior FHWA approval or estimated to cost $25,000 or more - 2 CFR Parts 180 and 1200)

a. By signing and submitting this proposal, the prospective lower tier is providing the certification set out below.

b. The certification in this clause is a material representation of fact upon which reliance was placed when this transaction was entered into. If it is later determined that the prospective lower tier participant knowingly rendered an erroneous certification, in addition to other remedies available to the Federal Government, the department, or agency with which this transaction originated may pursue available remedies, including suspension and/or debarment.

c. The prospective lower tier participant shall provide immediate written notice to the person to which this proposal is submitted if at any time the prospective lower tier participant learns that its certification was erroneous by reason of changed circumstances.

d. The terms "covered transaction," "debarred," "suspended," "ineligible," "participant," "person," "principal," and "voluntarily excluded," as used in this clause, are defined in 2 CFR Parts 180 and 1200. You may contact the person to which this proposal is submitted for assistance in obtaining a copy of those regulations. “First Tier Covered Transactions” refers to any covered transaction between a grantee or subgrantee of Federal funds and a participant (such as the prime or general contract). “Lower Tier Covered Transactions” refers to any covered transaction under a First Tier Covered Transaction (such as subcontracts). “First Tier Participant” refers to the participant who has entered into a covered transaction with a grantee or subgrantee of Federal funds (such as the prime or general contractor). “Lower Tier Participant” refers any participant who has entered into a covered transaction with a First Tier Participant or other Lower Tier Participants (such as subcontractors and suppliers).

e. The prospective lower tier participant agrees by submitting this proposal that, should the proposed covered transaction be entered into, it shall not knowingly enter into any lower tier covered transaction with a person who is debarred, suspended, declared ineligible, or voluntarily excluded from participation in this covered transaction, unless authorized by the department or agency with which this transaction originated.

f. The prospective lower tier participant further agrees by submitting this proposal that it will include this clause titled "Certification Regarding Debarment, Suspension, Ineligibility and Voluntary Exclusion-Lower Tier Covered Transaction," without modification, in all lower tier covered transactions and in all solicitations for lower tier covered transactions exceeding the $25,000 threshold.

g. A participant in a covered transaction may rely upon a certification of a prospective participant in a lower tier covered transaction that is not debarred, suspended, ineligible, or voluntarily excluded from the covered transaction, unless it knows that the certification is erroneous. A participant is responsible for ensuring that its principals are not suspended, debarred, or otherwise ineligible to participate in covered transactions. To verify the eligibility of its principals, as well as the eligibility of any lower tier prospective participants, each participant may, but is not required to, check the Excluded Parties List System website (https://www.epls.gov/), which is compiled by the General Services Administration.

h. Nothing contained in the foregoing shall be construed to require establishment of a system of records in order to render in good faith the certification required by this clause. The knowledge and information of participant is not required to exceed that which is normally possessed by a prudent person in the ordinary course of business dealings.

i. Except for transactions authorized under paragraph e of these instructions, if a participant in a covered transaction knowingly enters into a lower tier covered transaction with a person who is suspended, debarred, ineligible, or voluntarily excluded from participation in this transaction, in addition to other remedies available to the Federal Government, the department or agency with which this transaction originated may pursue available remedies, including suspension and/or debarment.

* * * * *

Certification Regarding Debarment, Suspension, Ineligibility and Voluntary Exclusion--Lower Tier Participants:

1. The prospective lower tier participant certifies, by submission of this proposal, that neither it nor its principals is presently debarred, suspended, proposed for debarment, declared ineligible, or voluntarily excluded from participating in covered transactions by any Federal department or agency.

2. Where the prospective lower tier participant is unable to certify to any of the statements in this certification, such prospective participant shall attach an explanation to this proposal.

* * * * *

XI. CERTIFICATION REGARDING USE OF CONTRACT FUNDS FOR LOBBYING

This provision is applicable to all Federal-aid construction contracts and to all related subcontracts which exceed $100,000 (49 CFR 20).

1. The prospective participant certifies, by signing and submitting this bid or proposal, to the best of his or her knowledge and belief, that:

a. No Federal appropriated funds have been paid or will be paid, by or on behalf of the undersigned, to any person for influencing or attempting to influence an officer or employee of any Federal agency, a Member of Congress, an officer or employee of Congress, or an employee of a Member of Congress in connection with the awarding of any Federal contract, the making of any Federal grant, the making of any Federal loan, the entering into of any cooperative agreement, and the extension, continuation, renewal, amendment, or modification of any Federal contract, grant, loan, or cooperative agreement.

b. If any funds other than Federal appropriated funds have been paid or will be paid to any person for influencing or attempting to influence an officer or employee of any Federal agency, a Member of Congress, an officer or employee of Congress, or an employee of a Member of Congress in connection with this Federal contract, grant, loan, or cooperative agreement, the undersigned shall complete and submit Standard Form-LLL, "Disclosure Form to Report Lobbying," in accordance with its instructions.

2. This certification is a material representation of fact upon which reliance was placed when this transaction was made or entered into. Submission of this certification is a prerequisite for making or entering into this transaction imposed by 31 U.S.C. 1352. Any person who fails to file the required certification shall be subject to a civil penalty of not less than $10,000 and not more than $100,000 for each such failure.

3. The prospective participant also agrees by submitting its bid or proposal that the participant shall require that the language of this certification be included in all lower tier subcontracts, which exceed $100,000 and that all such recipients shall certify and disclose accordingly.

ATTACHMENT A - EMPLOYMENT AND MATERIALS PREFERENCE FOR APPALACHIAN DEVELOPMENT HIGHWAY SYSTEM OR APPALACHIAN LOCAL ACCESS ROAD CONTRACTS

This provision is applicable to all Federal-aid projects funded under the Appalachian Regional Development Act of 1965.

1. During the performance of this contract, the contractor undertaking to do work which is, or reasonably may be, done as on-site work, shall give preference to qualified persons who regularly reside in the labor area as designated by the DOL wherein the contract work is situated, or the subregion, or the Appalachian counties of the State wherein the contract work is situated, except:

a. To the extent that qualified persons regularly residing in the area are not available.

b. For the reasonable needs of the contractor to employ supervisory or specially experienced personnel necessary to assure an efficient execution of the contract work.

c. For the obligation of the contractor to offer employment to present or former employees as the result of a lawful collective bargaining contract, provided that the number of nonresident persons employed under this subparagraph (1c) shall not exceed 20 percent of the total number of employees employed by the contractor on the contract work, except as provided in subparagraph (4) below.

2. The contractor shall place a job order with the State Employment Service indicating (a) the classifications of the laborers, mechanics and other employees required to perform the contract work, (b) the number of employees required in each classification, (c) the date on which the participant estimates such employees will be required, and (d) any other pertinent information required by the State Employment Service to complete the job order form. The job order may be placed with the State Employment Service in writing or by telephone. If during the course of the contract work, the information submitted by the contractor in the original job order is substantially modified, the participant shall promptly notify the State Employment Service.

3. The contractor shall give full consideration to all qualified job applicants referred to him by the State Employment Service. The contractor is not required to grant employment to any job applicants who, in his opinion, are not qualified to perform the classification of work required.

4. If, within one week following the placing of a job order by the contractor with the State Employment Service, the State Employment Service is unable to refer any qualified job applicants to the contractor, or less than the number requested, the State Employment Service will forward a certificate to the contractor indicating the unavailability of applicants. Such certificate shall be made a part of the contractor's permanent project records. Upon receipt of this certificate, the contractor may employ persons who do not normally reside in the labor area to fill positions covered by the certificate, notwithstanding the provisions of subparagraph (1c) above.

5. The provisions of 23 CFR 633.207(e) allow the contracting agency to provide a contractual preference for the use of mineral resource materials native to the Appalachian region.

6. The contractor shall include the provisions of Sections 1 through 4 of this Attachment A in every subcontract for work which is, or reasonably may be, done as on-site work.

End of FHWA 1273

The United States Department of Transportation (USDOT)

FHWA STANDARD TITLE VI/NONDISCRIMINATION ASSURANCES

DOT Order No. 1050.2A

The Maine Department of Transportation (herein referred to as the "Recipient"), **HEREBY AGREES THAT**, as a condition to receiving any Federal financial assistance from the U.S. Department of Transportation (DOT), through The Federal Highway Administration (FHWA), is subject to and will comply with the following:

Statutory/Regulatory Authorities

- Title VI of the Civil Rights Act of 1964 (42 U.S.C. § 2000d *et seq*., 78 stat. 252), (prohibits discrimination on the basis of race, color, national origin);
- 49 C.F.R. Part 21 (entitled *Nondiscrimination In Federally-Assisted Programs Of The Department Of Transportation—Effectuation Of Title VI Of The Civil Rights Act Of 1964*);
- 28 C.F.R. section 50.3 (U.S. Department of Justice Guidelines for Enforcement of Title VI of the Civil Rights Act of 1964);

FHWA may include additional Statutory/Regulatory Authorities here.

The preceding statutory and regulatory cites hereinafter are referred to as the "Acts" and "Regulations," respectively.

General Assurances

In accordance with the Acts, the Regulations, and other pertinent directives, circulars, policy, memoranda, and/or guidance, the Recipient hereby gives assurance that it will promptly take any measures necessary to ensure that:

No person in the United States shall, on the grounds of race, color, or national origin, be excluded from participation in, be denied the benefits of, or be otherwise subjected to discrimination under any program or activity," for which the Recipient receives Federal financial assistance from DOT, including FHWA..

The Civil Rights Restoration Act of 1987 clarified the original intent of Congress, with respect to Title VI and other Nondiscrimination requirements (The Age Discrimination Act of 1975, and Section 504 of the Rehabilitation Act of 1973), by restoring the broad, institutional-wide scope and coverage of these nondiscrimination statutes and requirements to include all programs and activities of the Recipient, so long as any portion of the program is Federally assisted.

FHWA may include additional General Assurances in this section, or reference an addendum here.

Specific Assurances

More specifically, and without limiting the above general Assurance, the Recipient agrees with and gives the following Assurances with respect to its federally assisted programs:

1. The Recipient agrees that each "activity," "facility," or "program," as defined in §§ 21.23 (b) and 21.23 (e) of 49 C.F.R. § 21 will be (with regard to an "activity") facilitated, or will be (with regard to a "facility") operated, or will be (with regard to a "program") conducted in compliance with all requirements imposed by, or pursuant to the Acts and the Regulations.
2. The Recipient will insert the following notification in all solicitations for bids, Requests For Proposals for work, or material subject to the Acts and the Regulations made in connection with all Federal Highway Programs and, in adapted form, in all proposals for negotiated agreements regardless of funding source:

   The (Agency), in accordance with the provisions of Title VI of the Civil Rights Act of 1964 (78 Stat. 252, 42 U.S.C. §§ 2000d to 2000d-4) and the Regulations, hereby notifies all bidders that it will affirmatively insure that any contract entered into pursuant to this advertisement, disadvantaged business enterprises will be afforded full opportunity to submit bids in response to this invitation and will not be discriminated against on the grounds of race, color, or national origin in consideration for an award.

3. The Recipient will insert the clauses of Appendix A and E of this Assurance in every contract or agreement subject to the Acts and the Regulations.
4. The Recipient will insert the clauses of Appendix B of this Assurance, as a covenant running with the land, in any deed from the United States effecting or recording a transfer of real property, structures, use, or improvements thereon or interest therein to a Recipient.
5. That where the Recipient receives Federal financial assistance to construct a facility, or part of a facility, the Assurance will extend to the entire facility and facilities operated in connection therewith.
6. That where the Recipient receives Federal financial assistance in the form, or for the acquisition of real property or an interest in real property, the Assurance will extend to rights to space on, over, or under such property.
7. That the Recipient will include the clauses set forth in Appendix C and Appendix D of this Assurance, as a covenant running with the land, in any future deeds, leases, licenses, permits, or similar instruments entered into by the Recipient with other parties:
   a. for the subsequent transfer of real property acquired or improved under the applicable activity, project, or program; and
   b. for the construction or use of, or access to, space on, over, or under real property acquired or improved under the applicable activity, project, or program.
8. That this Assurance obligates the Recipient for the period during which Federal financial assistance is extended to the program, except where the Federal financial assistance is to provide, or is in the form of, personal property, or real property, or interest therein, or structures or improvements thereon, in which case the Assurance obligates the Recipient, or any transferee for the longer of the following periods:

a. the period during which the property is used for a purpose for which the Federal financial assistance is extended, or for another purpose involving the provision of similar services or benefits; or
b. the period during which the Recipient retains ownership or possession of the property.

9. The Recipient will provide for such methods of administration for the program as are found by the Secretary of Transportation or the official to whom he/she delegates specific authority to give reasonable guarantee that it, other recipients, sub-recipients, sub-grantees, contractors, subcontractors, consultants, transferees, successors in interest, and other participants of Federal financial assistance under such program will comply with all requirements imposed or pursuant to the Acts, the Regulations, and this Assurance.
10. The Recipient agrees that the United States has a right to seek judicial enforcement with regard to any matter arising under the Acts, the Regulations, and this Assurance.

FHWA may include additional Specific Assurances in this section.

By signing this ASSURANCE, Maine Department of Transportation also agrees to comply (and require any subrecipients, sub-grantees, contractors, successors, transferees, and/or assignees to comply) with all applicable provisions governing the FHWA access to records, accounts, documents, information, facilities, and staff. You also recognize that you must comply with any program or compliance reviews, and/or complaint investigations conducted by *FHWA*. You must keep records, reports, and submit the material for review upon request to FHWA, or their designees in a timely, complete, and accurate way. Additionally, you must comply with all other reporting, data collection, and evaluation requirements, as prescribed by law or detailed in program guidance.

Maine Department of Transportation gives this ASSURANCE in consideration of and for obtaining any Federal grants, loans, contracts, agreements, property, and/or discounts, or other Federal-aid and Federal financial assistance extended after the date hereof to the recipients by the U.S. Department of Transportation. This ASSURANCE is binding on Maine Department of Transportation, other recipients, sub-recipients, sub-grantees, contractors, subcontractors and their subcontractors', transferees, successors in interest, and any other participants in it programs. . The person(s) signing below is authorized to sign this ASSURANCE on behalf of the Recipient.

Name of Recipient: Maine Department of Transportation

David Bernhardt, Commissioner

DATED: 9/18/14

APPENDIX A

During the performance of this contract, the contractor, for itself, its assignees, and successors in interest (hereinafter referred to as the "contractor") agrees as follows:

1. **Compliance with Regulations:** The contractor (hereinafter includes consultants) will comply with the Acts and the Regulations relative to Nondiscrimination in Federally-assisted programs of the U.S. Department of Transportation, **Federal Highway Administration**, as they may be amended from time to time, which are herein incorporated by reference and made a part of this contract.

2. **Nondiscrimination:** The contractor, with regard to the work performed by it during the contract, will not discriminate on the grounds of race, color, or national origin in the selection and retention of subcontractors, including procurements of materials and leases of equipment. The contractor will not participate directly or indirectly in the discrimination prohibited by the Acts and the Regulations as set forth in Appendix E, including employment practices when the contract covers any activity, project, or program set forth in Appendix B of 49 CFR Part 21.

3. **Solicitations for Subcontracts, Including Procurements of Materials and Equipment:** In all solicitations, either by competitive bidding, or negotiation made by the contractor for work to be performed under a subcontract, including procurements of materials, or leases of equipment, each potential subcontractor or supplier will be notified by the contractor of the contractor's obligations under this contract and the Acts and the Regulations relative to Non-discrimination on the grounds of race, color, or national origin.

4. **Information and Reports:** The contractor will provide all information and reports required by the Acts, the Regulations and directives issued pursuant thereto and will permit access to its books, records, accounts, other sources of information, and its facilities as may be determined by the Recipient or the **Federal Highway Administration**, to be pertinent to ascertain compliance with such Acts, Regulations, and instructions. Where any information required of a contractor is in the exclusive possession of another who fails or refuses to furnish the information, the contractor will so certify to the Recipient or the **Federal Highway Administration**,, as appropriate, and will set forth what efforts it has made to obtain the information.

5. **Sanctions for Noncompliance:** In the event of a contractor's noncompliance with the Non-discrimination provisions of this contract, the Recipient will impose such contract sanctions as it or the **Federal Highway Administration**, may determine to be appropriate, including, but not limited to:

    a. withholding payments to the contractor under the contract until the contractor complies; and/or
    b. cancelling, terminating, or suspending a contract, in whole or in part.

Incorporation of Provisions: The contractor will include the provisions of paragraphs one through six in every subcontract, including procurements of materials and leases of equipment, unless exempt by the Acts, the Regulations and directives issued pursuant thereto. The contractor will take action with respect to any subcontract or procurement as the Recipient or the **Federal Highway Administration**, may direct as a means of enforcing such provisions including sanctions for noncompliance. Provided, that if the contractor becomes involved in, or is threatened with litigation by a subcontractor, or supplier because of such direction, the contractor may request the Recipient to enter into any litigation to protect the interests of the Recipient. In addition, the contractor may request the United States to enter into the litigation to protect the interests of the United States.

(APPENDIX C TO MAINEDOT TITLE VI ASSURANCE)

FEDERAL HIGHWAY ADMINISTRATION ASSISTED PROGRAMS

The following clauses shall be included in all deeds, licenses, leases, permits, or similar instruments entered into

by the Maine Department of Transportation pursuant to the provisions of Assurance 7(a).

The (grantee, licensee, lessee, permitee, etc., as appropriate) for herself/himself, his/her heirs, personal representatives, successors in interest, and assigns, as a part of the consideration hereof, does hereby covenant and agree [in the case of deeds and leases add "as a covenant running with the land"] that in the event facilities are constructed, maintained, or otherwise operated on the said property described in this (deed, license, lease, permit, etc.) for a purpose for which a Department of Transportation program or activity is extended or for another purpose involving the provision of similar services or benefits, the (grantee, licensee lessee, permitee, etc.) shall maintain and operate such facilities and services in compliance with all other requirements imposed pursuant to Title 49, Code of Federal Regulations, Department of Transportation, Subtitle A, Office of the Secretary, Part 21, Nondiscrimination of Federally-Assisted Programs of the Department of Transportation - Effectuation of Title VI of the Civil Rights Act of 1964, and as said Regulations may be amended.

[Include in licenses, leases, permits, etc.]*

That in the event of breach of any of the above nondiscrimination covenants, Maine Department of Transportation shall have the right to terminate the [license, lease, permit, etc.] and to re-enter and repossess said land and the facilities thereon, and hold the same as if said [licenses, lease, permit, etc.] had never been made or issued.

[Include in deeds]*

That in the event of breach of any of the above nondiscrimination covenants, Maine Department of Transportation shall have the right to re-enter said lands and facilities thereon, and the above described lands and facilities shall thereupon revert to and vest in and become the absolute property of Maine Department of Transportation and its assigns.

The following shall be included in all deeds, licenses, leases, permits, or similar agreements entered into by Maine Department of Transportation pursuant to the provisions of Assurance 7(b).

The (grantee, licensee, lessee, permitee, etc., as appropriate) for herself/himself, his/her personal representatives, successors in interest, and assigns, as a part of the consideration hereof, does hereby covenant and agree (in case of deeds, and leases add "as a covenant running with the land") that (1) no person on the grounds of race, color, or national origin shall be excluded from participation in, be denied the benefits of, or be otherwise subjected to discrimination in the use of said facilities, (2) that in the construction of any improvements on, over or under such land and the furnishing services thereon, no person on the grounds of race, color, or national origin shall be excluded from the participation in, be denied the benefits of, or be otherwise subjected to discrimination, and (3) that the (grantee, licensee, lessee, permitee, etc.) shall use the premises in compliance with all other requirements imposed by or pursuant to Title 49, Code of Federal Regulations, Department of Transportation, Subtitle A, Office of the Secretary, Part 21, Nondiscrimination in Federally-Assisted Programs of the Department of Transportation - Effectuation of Title VI of the Civil Rights Act of 1964, and as said Regulations may be amended.

[Include in licenses, leases, permits, etc.]*

That in the event of breach of any of the above nondiscrimination covenants, Maine Department of Transportation shall have the right to terminate the [license, lease, permit, etc.] and to re-enter and repossess said land and the facilities thereon, and hold the same as if said [license, lease, permit, etc.] had never been made or issued.

[Include in deeds]*

That in the event of breach of any of the above nondiscrimination covenants, Maine Department of Transportation shall have the right to re-enter said land and facilities thereon, and the above described lands and facilities shall thereupon revert to and vest in and become the absolute property of Maine Department of Transportation and its assigns.

* Reverter clause and related language to be used only when it is determined that such a clause is necessary inorder to effectuate the purpose of Title VI of the Civil Rights Act of 1964.

APPENDIX D

CLAUSES FOR CONSTRUCTION/USE/ACCESS TO REAL PROPERTY

ACQUIRED UNDER THE ACTIVITY, FACILITY OR PROGRAM

The following clauses will be included in deeds, licenses, permits, or similar instruments/agreements entered into by The Maine Department of Transportation pursuant to the provisions of Assurance 7(b):

A. The (grantee, licensee, permittee, etc., as appropriate) for himself/herself, his/her heirs, personal representatives, successors in interest, and assigns, as a part of the consideration hereof, does hereby covenant and agree (in the case of deeds and leases add, "as a covenant running with the land") that (1) no person on the ground of race, color, or national origin, will be excluded from participation in, denied the benefits of, or be otherwise subjected to discrimination in the use of said facilities, (2) that in the construction of any improvements on, over, or under such land, and the furnishing of services thereon, no person on the ground of race, color, or national origin, will be excluded from participation in, denied the benefits of, or otherwise be subjected to discriminations, (3) that the (grantee, licensees, lessee, permittee, etc.) will use the premises in compliance with all other requirements imposed by or pursuant to the Acts and Regulations, as amended, set forth in this Assurance.

B. With respect to (licenses, leases, permits, etc.), in the event of breach of any of the above Non-discrimination covenants, (***The Maine Department of Transportation***) will have the right to terminate the (license, permit, etc., as appropriate) and to enter or re-enter and repossess said land and the facilities thereon, and hold the same as if said (license, permit, etc., as appropriate) had never been made or issued.*

C. With respect to deeds, in the event of breach of any of the above Non-discrimination covenants, (***The Maine Department of Transportation***) will there upon revert to and vest in and become the absolute property of (***The Maine Department of Transportation***) and its assigns.*

(*Reverter clause and related language to be used only when it is determined that such a clause is necessary to make clear the purpose of Title VI.)

APPENDIX E

During the performance of this contract, the contractor, for itself, its assignees, and successors in interest (hereinafter referred to as the "contractor") agrees to comply with the following non-discrimination statutes and authorities; including but not limited to:

Pertinent Non-Discrimination Authorities:

- Title VI of the Civil Rights Act of 1964 (42 U.S.C. §2000d *et seq*., 78 stat. 252), (prohibits discrimination on the basis of race, color, national origin); and 49 CFR Part 21.
- The Uniform Relocation Assistance and Real Property Acquisition Policies Act of 1970, (42 U.S.C. §4601), (prohibits unfair treatment of persons displaced or whose property has been acquired because of Federal or Federal-aid programs and projects);
- Federal-Aid Highway Act of 1973, (23 U.S.C. §324 *et seq*.), (prohibits discrimination on the basis of sex);
- Section 504 of the Rehabilitation Act of 1973, (29 U.S.C. §794 *et seq*.), as amended, (prohibits discrimination on the basis of disability); and 49 CFR Part 27;
- The Age Discrimination Act of 1975, as amended, (42 U.S.C. §6101 *et seq*.), (prohibits discrimination on the basis of age);
- Airport and Airway Improvement Act of 1982, (49 U.S.C. §471, Section 47123), as amended, (prohibits discrimination based on race, creed, color, national origin, or sex);
- The Civil Rights Restoration Act of 1987, (PL 100-209), (Broadened the scope, coverage and applicability of Title VI of the Civil Rights Act of 1964, The Age Discrimination Act of 1975 and Section 504 of the Rehabilitation Act of 1973, by expanding the definition of the terms "programs or activities" to include all of the programs or activities of the Federal-aid recipients, sub-recipients and contractors, whether such programs or activities are Federally funded or not);
- Titles II and III of the Americans with Disabilities Act, which prohibit discrimination on the basis of disability in the operation of public entities, public and private transportation systems, places of public accommodation, and certain testing entities (42 U.S.C. §§12131-12189) as implemented by Department of Transportation regulations at 49 C.F.R. Parts 37 and 38;
- The Federal Aviation Administration's Non-discrimination statute (49 U.S.C. §47123) (prohibits discrimination on the basis of race, color, national origin and sex);
- Executive Order 12898, Federal Actions to Address Environmental Justice in Minority Populations and Low-Income Populations, which ensures discrimination against minority populations by discouraging programs, policies, and activities with disproportionately high and adverse human health or environmental effects on minority and low-income populations;
- Executive Order 13166, Improving Access to Services for Persons with Limited English Proficiency, and resulting agency guidance, national origin discrimination includes discrimination because of limited English proficiency (LEP). To ensure compliance with Title VI, you must take reasonable steps to ensure that LEP persons have meaningful access to your programs (70 Fed. Reg. at 74087 to 74100);
- Title IX of the Education Amendments of 1972, as amended, which prohibits you from discriminating of sex in education programs or activities (20 U.S.C. 1681 et seq.).

Environmental Summary Sheet

WIN: 18796.00 **Date Submitted: 2/4/16**
Town: Sherman-Patten
CPD Team Leader: Colin Greenan
ENV Field Contact: Jamey Reitmeyer

NEPA Complete: 2/4/16 Programmatic Categorical Exclusion

☒ **Section 106**
PA-C
Section 106 Resources: None

☒ **Section 4(f) and 6(f)**
Section 4(f)
Review Complete - No Use
Section 6(f)
Not Applicable - No Takes

☒ **Maine Department of Inland Fisheries and Wildlife Essential Habitat**

Not Applicable Timing Window: Not Applicable

☒ **Section 7**
No Effect
Species of Concern: Northern long-eared bat/Canada lynx/Atlantic salmon
Comments/References: No tree clearing/no in-water work proposed

☒ **Essential Fish Habitat**
No Effect-No in-water work

☒ **Maine Department of Conservation/Public Lands, Submerged Land Lease**
Not Applicable

☒ **Maine Land Use Regulation Commission**

**Applicable Standards and Permits are included with the contract*

☒ **Maine Department of Environmental Protection**
Not Applicable - No in-water work
**Applicable Standards and Permits are included with the contract*

☒ **Army Corps of Engineers, Section 10 of the Rivers and Harbors Act and Section 404 of the Clean Water Act.**
Not Applicable - No in-water work
**Applicable Standards and Permits are included with the contract*

☒ **Stormwater Review**
N/A

☒ **Special Provisions Required**

Special Provision 105-Timing of Work Restriction	N/A☒	Applicable☐
Special Provision 656-Minor Soil Disturbance	N/A☒	Applicable☐
Standard Specification 656-Erosion Control Plan	**N/A☐**	**Applicable☒**
Special Provision 203-Dredge Spec	N/A☒	Applicable☐
General Note for Hazardous Waste	N/A☒	Applicable☐
Special Provision 203-Hazardous Waste	N/A☒	Applicable☐
Special Provision 105.9	N/A☒	Applicable☐

**All permits and approvals based on plans/scope as of: 1/29/16*