Allied Engineering
Structural Mechanical Electrical Commissioning

SHOP DRAWING REVIEW COVER SHEET

Project Name, Project #: **MDOT 66 Industrial Drive – Phase II / 13057**

Date Received: 8/7/14 Date Due: ASAP

AEI Shop Drawing #: 152.2 Contractor Shop Drawing #: 152-02

AEI Project Manager: William Faucher

Contractor: Sheridan

Item Description: ATC Controls Resubmittal 2

Spec. Section Number(s): 230900 [X] email Date Returned 8-13-14

\\Allied\cad\Projects\2013\13057 ~ BGS_MDOT Fleet Services Building\40 Construction\Shops phase 2\Electronic Submittals from contractor\152.2 ATC Controls Resubmittal 2\152.2 ATC Controls Resubmittal 2 Review Letter.doc

---

CHECKING IS ONLY FOR GENERAL CONFORMANCE WITH THE DESIGN CONCEPT OF THE PROJECT AND COMPLIANCE WITH THE INFORMATION GIVEN IN THE CONTRACT DOCUMENTS. CONTRACTOR IS RESPONSIBLE FOR QUANTITIES; DIMENSIONS TO BE CONFIRMED AND CORRELATED AT THE JOB SITE; INFORMATION THAT PERTAINS SOLELY TO THE FABRICATION PROCESS FOR TECHNIQUES OF CONSTRUCTION; COORDINATION OF THE WORK OF ALL TRADES; AND PERFORMING ALL WORK IN A SAFE AND SATISFACTORY MANNER. THIS REVIEW DOES NOT MODIFY CONTRACTOR'S DUTY TO COMPLY WITH THE CONTRACT DOCUMENTS.

___ REVIEWED
X REVIEWED W/NOTES, ***No Resubmission*** Required
___ REVIEWED W/NOTES, ***Resubmission*** *Required*
___ NOT ACCEPTABLE
___ FOR OWNER REVIEW

NOTES:

1. Substitution has been accepted with the attached documentation requested in the original submittal.

2 note network Guid, Tridium 3.5 back net, and 3.6 back net PDF's are pass word protected so are part of the submittal but sent separately

Reviewed by: Allied Engineering, Inc.

Reviewer: HAG

160 Veranda Street
Portland, ME 04103

T 207.221.2260
F 207.221.2266
www.allied-eng.com

The Sheridan Corporation
PO Box 359, 33 Sheridan Dr., Fairfield, ME 04937
(207) 453-9311 (207) 453-2820

Submittal Record Sheet

Project **MDOT 66 Industrial Drive - Phase 2, Augusta, ME**

SCC Project No 140001

Submitted by SCC to (A/E) Allied Engineering, Inc., *ATTN: James Hodsdon*
160 Veranda Street, Portland, ME 04103
PH: 207.221.2260 x109 FX: 207.221.2266

A/E Project #: WIN #20118.20

Submittal No **152-02** **Submittal Date** 08/07/14

Submittal Title **ATC Controls (RESUBMITTAL 01) (RESUBMITTAL 02)**

Related Specification(s) 23 09 00

Related Drawing(s)

Submitted to SCC by (SUBCONTRACTOR) Warren Mechanical
P.O. Box 149, Westbrook, ME 04098
PH: (207) 856-6746 FX: (207) 854-3701

Submittal Contents

1. Substitution Request Lynxspring No Cost Change Order.
2. JENEsys Niagara Compatibility Statement.
3. Agency Listings and Approvals for JENEsys Hardware Products.
4. MDOT Resubmittal 7-31-14.
5. Networking IT Guide.
6. Tridium NiagaraAX-3.5 BACnet Supervisor Pics.
7. Tridium NiagaraAX-3.6 BACnet Pics.

Sheridan Review	*Reviewed*

SIGNATURE (D. Wildes) 08/07/14 DATE

The Subcontractor represents that they have determined and verified all materials, field measurements, and field construction criteria related thereto, or will do so, and that they have checked and coordinated the information contained within such submittals with the requirements of the Work and of the Contract Documents. Subcontractor is not relieved from their sole responsibility regarding checking of dimensions, coordination of the work of all trades, correlation of design documents that may contain contradictory information, and for information that pertains to the fabrication or construction processes or to safety.

A/E Review

- ☐ APPROVED
- ☐ APPROVED AS NOTED
- ☐ REVISE AND RESUBMIT
- ☐ REJECTED

SIGNATURE DATE

Submittal review is for general conformance with the design concept of the project, and general compliance with the information and data indicated in the Contract Documents. Any action indicated is subject to the requirements of the Plans and Specifications. The Contractor is responsible for all dimensions, field verification, fabrication processes, means and methods, and the satisfactory performance of the work.

Allied Engineering
Structural Mechanical Electrical Commissioning

SHOP DRAWING REVIEW COVER SHEET

Project Name, Project #: **MDOT 66 Industrial Drive – Phase II / 13057**

Date Received: 8/7/14 Date Due: ASAP

AEI Shop Drawing #: 152.2 Contractor Shop Drawing #: 152-02

AEI Project Manager: William Faucher

Contractor: Sheridan

Item Description: ATC Controls Resubmittal 2

Spec. Section Number(s): 230900 [X] email Date Returned 8-13-14

\\Allied\cad\Projects\2013\13057 – BGS_MDOT Fleet Services Building\40 Construction\Shops phase 2\Electronic Submittals from contractor\152.2 ATC Controls Resubmittal 2\152.2 ATC Controls Resubmittal 2 Review Letter.doc

---

CHECKING IS ONLY FOR GENERAL CONFORMANCE WITH THE DESIGN CONCEPT OF THE PROJECT AND COMPLIANCE WITH THE INFORMATION GIVEN IN THE CONTRACT DOCUMENTS. CONTRACTOR IS RESPONSIBLE FOR QUANTITIES; DIMENSIONS TO BE CONFIRMED AND CORRELATED AT THE JOB SITE; INFORMATION THAT PERTAINS SOLELY TO THE FABRICATION PROCESS FOR TECHNIQUES OF CONSTRUCTION; COORDINATION OF THE WORK OF ALL TRADES; AND PERFORMING ALL WORK IN A SAFE AND SATISFACTORY MANNER. THIS REVIEW DOES NOT MODIFY CONTRACTOR'S DUTY TO COMPLY WITH THE CONTRACT DOCUMENTS.

___ REVIEWED
X REVIEWED W/NOTES, ***No Resubmission*** Required
___ REVIEWED W/NOTES, ***Resubmission*** *Required*
___ NOT ACCEPTABLE
___ FOR OWNER REVIEW

NOTES:

1. Substitution has been accepted with the attached documentation requested in the original submittal.

2 note network Guid, Tridium 3.5 back net, and 3.6 back net PDF's are pass word protected so are part of the submittal but sent separately

Reviewed by: Allied Engineering, Inc.

Reviewer: HAG

160 Veranda Street
Portland, ME 04103

T 207.221.2260
F 207.221.2266
www.allied-eng.com

The Sheridan Corporation
PO Box 359, 33 Sheridan Dr., Fairfield, ME 04937
(207) 453-9311 (207) 453-2820

Submittal Record Sheet

Project **MDOT 66 Industrial Drive - Phase 2, Augusta, ME**

SCC Project No 140001

Submitted by SCC to (A/E)
Allied Engineering, Inc., *ATTN: James Hodsdon*
160 Veranda Street, Portland, ME 04103
PH: 207.221.2260 x109 FX: 207.221.2266

A/E Project #: WIN #20118.20

Submittal No **152-02** **Submittal Date** 08/07/14

Submittal Title **ATC Controls (RESUBMITTAL 01) (RESUBMITTAL 02)**

Related Specification(s) 23 09 00

Related Drawing(s)

Submitted to SCC by (SUBCONTRACTOR)
Warren Mechanical
P.O. Box 149, Westbrook, ME 04098
PH: (207) 856-6746 FX: (207) 854-3701

Submittal Contents

1. Substitution Request Lynxspring No Cost Change Order.
2. JENEsys Niagara Compatibility Statement.
3. Agency Listings and Approvals for JENEsys Hardware Products.
4. MDOT Resubmittal 7-31-14.
5. Networking IT Guide.
6. Tridium NiagaraAX-3.5 BACnet Supervisor Pics.
7. Tridium NiagaraAX-3.6 BACnet Pics.

Sheridan Review	*Reviewed*

SIGNATURE (D. Wildes) 08/07/14 DATE

The Subcontractor represents that they have determined and verified all materials, field measurements, and field construction criteria related thereto, or will do so, and that they have checked and coordinated the information contained within such submittals with the requirements of the Work and of the Contract Documents. Subcontractor is not relieved from their sole responsibility regarding checking of dimensions, coordination of the work of all trades, correlation of design documents that may contain contradictory information, and for information that pertains to the fabrication or construction processes or to safety.

A/E Review

☐ APPROVED
☐ APPROVED AS NOTED
☐ REVISE AND RESUBMIT
☐ REJECTED

SIGNATURE DATE

Submittal review is for general conformance with the design concept of the project, and general compliance with the information and data indicated in the Contract Documents. Any action indicated is subject to the requirements of the Plans and Specifications. The Contractor is responsible for all dimensions, field verification, fabrication processes, means and methods, and the satisfactory performance of the work.

Trane
860 Spring St. Unit # 1
Westbrook, ME 04092

207-828-1777 (tel)
207-828-1511 (fax)

8/6/14

Warren Mechanical
39 Warren Ave.
Westbrook, ME 04092

Attn: Dave Metivier

Re: DOT Industrial Drive
Substitution request Lynxspring No Cost Change Order

Dear Dave,

Trane is pleased to quote the provision of Lynxspring JENEsys powered by Niagara.

The scope of work includes the following:

- Provision of one Lynxspring JENEsys controller that meets or exceeds all portions of the specification. See attached documentation for detail.

Cost of Change:

No change from original contract.

Exceptions:

- Change Order Impact To Schedule: None if decided on immediately.

Should you have any questions or require additional information please do not hesitate to call. I can be reached at 207-828-1777 ext. 3405.

Sincerely,
Michael House PM

Acceptance

Warren Mech Dave Metivier	New England Trane
By:	By:
Date:	Date:

Trane
860 Spring St. Unit # 1
Westbrook, ME 04092

207-828-1777 (tel)
207-828-1511 (fax)

SECTION 01 25 00 - SUBSTITUTION PROCEDURES

PART 1 - GENERAL

1.1 RELATED DOCUMENTS

A. State of Maine Department of Transportation, "Standard Specifications," Revision December 2002, and any corrections, additions and revisions thereto, apply to this Section. If the Contractor discovers any ambiguity, error, omission, conflict, or discrepancy, Section 10 1. 3.6 Priority of Conflicting Contract Documents shall control.

1. Drawings and general provisions of the Contract, and Division 1 Specification Sections, apply to this Section.
2. Any supplements to any of the above specifications and or standards issued prior to issuance of this Project Manual, apply to this section.

1,2 SUMMARY

A. Section includes administrative and procedural requirements for substitutions.

B. Related Requirements:

1. Section 01 21 00 "Allowances" for products selected under an allowance.
2. Section 01 60 00 "Product Requirements" for requirements for submitting comparable product submittals for products by listed manufacturers.

1.3 DEFINITIONS

A. Substitutions: Changes in products, materials, equipment, and methods of construction from those required by the Contract Documents and proposed by Contractor.

1. Substitutions for Cause: Changes proposed by Contractor that are required due to changed Project conditions, such as unavailability of product, regulatory changes, or unavailability of required warranty terms.
2. Substitutions for Convenience: Changes proposed by Contractor or Owner that are not required in order to meet other Project requirements but may offer advantage to Contractor or Owner.

1.4 ACTION SUBMITTALS

A. Substitution Requests: Submit three copies of each request for consideration. Identify product or fabrication or installation method to be replaced. Include Specification Section number and title and Drawing numbers and titles.

1. Substitution Request Form: Use CSI Form 13.1A.
2. Documentation: Show compliance with requirements for substitutions and the following, as applicable:

a. Statement indicating why specified product or fabrication or installation cannot be provided, if applicable.

Trane has a partnership with Lynxspring to provide a completely open and territory free Niagara system as specified.

b. Coordination information, including a list of changes or revisions needed to other parts of the Work and to construction performed by Owner and separate contractors, that will be necessary to accommodate proposed substitution.

None necessary

c. Detailed comparison of significant qualities of proposed substitution with those of the Work specified. Include annotated copy of applicable Specification Section. Significant qualities may include attributes such as performance, weight, size, durability, visual effect, sustainable design characteristics, warranties, and specific features and requirements indicated. Indicate deviations, if any, from the Work specified.

All data has been provided and is included again in this substitution show Lynxspring is an equal product.

d. Product Data, including drawings and descriptions of products and fabrication and installation procedures.

Provided in documentation.

e. Samples, where applicable or requested.

N/A

f. Certificates and qualification data, where applicable or requested

See documentation for data.

g. List of similar installations for completed projects with project names and addresses and names and addresses of architects and owners.

One City Center, Portland, Maine
One City Center Portland, Maine 04101
Engineer: Johnson and Jordan
Owner: Mike Freed

Caribou High School
308 Sweden St. Caribou Maine, 04736
Engineer: Trane Design Build
Owner: Frank McElwain

Maine Health Professional Park
301 US Rt. 1 Scarborough, ME 04070
Engineer: SMRT
Owner: Maine Health Partners

h. Material test reports from a qualified testing agency indicating and interpreting test results for compliance with requirements indicated.

N/A

i. Research reports evidencing compliance with building code in effect for Project, from ICC-ES. Product does not affect building codes

N/A

j. Detailed comparison of Contractor's construction schedule using proposed substitution with products specified for the Work, including effect on the overall Contract Time. If specified product or method of construction cannot be provided within the Contract Time, include letter from manufacturer, on manufacturer's letterhead, stating date of receipt of purchase order, lack of availability, or delays in delivery.

No impact to schedule for substitution. Readily available

k. Cost information, including a proposal of change, if any, in the Contract Sum.

No cost change necessary.

l. Contractor's certification that proposed substitution complies with requirements in the Contract Documents except as indicated in substitution request, is compatible with related materials, and is appropriate for applications indicated.

In. Contractor's waiver of rights to additional payment or time that may subsequently become necessary because of failure of proposed substitution to produce indicated results.

See attached material that shows the product meets or exceeds the requirements.

3. Departments Action: If necessary, the Department will request additional information or documentation for evaluation within seven days of receipt of a request for substitution. Department will notify Contractor of acceptance or rejection of proposed substitution within 15 days of receipt of request, or seven days of receipt of additional information or documentation, whichever is later.

a. Forms of Acceptance: Change Order, Construction Change Directive, or Architect's Supplemental Instructions for minor changes in the Work.

b. Use product specified if Department does not issue a decision on use of a proposed substitution within time allocated.

Please see attached no cost change order.

1.5 QUALITY ASSURANCE

A. Compatibility of Substitutions: Investigate and document compatibility of proposed substitution with related products and materials. Engage a qualified testing agency to perform compatibility tests recommended by manufacturers.

1.6 PROCEDURES

A. Coordination: Revise or adjust affected work as necessary to integrate work of the approved substitutions.

PART 2 - PRODUCTS

2.1 SUBSTITUTIONS

A. Substitutions for Cause: Submit requests for substitution immediately on discovery of need for change, but not later than 15 days prior to time required for preparation and review of related submittals.

1. Conditions: Department will consider Contractor's request for substitution when the following conditions are satisfied. If the following conditions are not satisfied, department will return requests without action, except to record noncompliance with these requirements:

a. Requested substitution is consistent with the Contract Documents and will produce indicated results.
b. Substitution request is fully documented and properly submitted.
c. Requested substitution will not adversely affect Contractor's construction schedule.
d. Requested substitution has received necessary approvals of authorities having jurisdiction.
e. Requested substitution is compatible with other portions of the Work.
f. Requested substitution has been coordinated with other portions of the Work.
g. Requested substitution provides specified warranty.
h. If requested substitution involves more than one contractor, requested substitution has been coordinated with other portions of the Work, is uniform and consistent, is compatible with other products, and is acceptable to all contractors involved.

B. Substitutions for Convenience: Department will consider requests for substitution if received within 30 days after the Notice of Award. Requests received after that time may be considered or rejected at discretion of Department.

1. Conditions: Department will consider Contractor's request for substitution when the following conditions are satisfied. If the following conditions are not satisfied, Department will return requests without action, except to record noncompliance with these requirements:

a. Requested substitution offers Owner a substantial advantage in cost, time, energy conservation, or other considerations, after deducting additional responsibilities Owner must assume. Owner's additional responsibilities may include compensation to Department for redesign and evaluation services, increased cost of other construction by Owner, and similar considerations.
b. Requested substitution does not require extensive revisions to the Contract Documents.
c. Requested substitution is consistent with the Contract Documents and will produce indicated results.
d. Substitution request is fully documented and properly submitted.
e. Requested substitution will not adversely affect Contractor's construction schedule.
f. Requested substitution has received necessary approvals of authorities having jurisdiction.
g. Requested substitution is compatible with other portions of the Work.
h. Requested substitution has been coordinated with other portions of the Work.
i. Requested substitution provides specified warranty.
j. If requested substitution involves more than one contractor, requested substitution has been coordinated with other portions of the Work, is uniform and consistent, is compatible with other products, and is acceptable to all contractors involved.

JENEsys® Niagara^AX Compatibility Statement

Includes all JENEsys branded JENE and Software products

The following information describes Lynxspring's JENEsys branded Niagara^AX product licensing.

Lynxspring's JENEsys branded products utilizes an open access licensing procedure. JENEsys branded products can be connected to and managed by any Niagara^AX based tools or systems without the need to modify the license. This means the end user does not have to authorize changes to a JENEsys license for another systems integrator to gain access to the system. The end user does need to have the necessary user names and passwords installed by the original Lynxspring Business Partner so they can be used by anther Niagara^AX trained system integrator.

The following is an explanation of the JENEsys licensing scheme.

BrandID

Every licensed station and tool has a Brand Identifier (BrandID). This field holds a text descriptor that the OEM chooses as the identifier for its product line. Each station or tool can have only one BrandID entry. Lynxspring's JENEsys products have the following:

BrandID = JENESYS

Station Compatibility In

This field is a list of brands that this local station will allow Niagara^AX data to come in from. Simply stated from the point of view of a JENE, "This is the list of brands that can I can accept data from." Lynxspring's JENEsys products contain:

Station Compatibility In = All (In the actual license "ALL" is defined by an *)

Note: The compatibility fields can contain; a single brand "ABC", a list of multiple brands "ABC, XYZ", or no brand.

"None" or all brands "ALL"

Station Compatibility Out

This field is a list of brands that this local station will allow Niagara^AX data to be shared with. Simply stated, "This is the list of brands that I can share data with." Lynxspring's JENEsys products contain:

Station Compatibility Out = All

Tool Compatibility In

This field is a list of brands that this station will allow to be connected to it for engineering of its application. Simply stated, "This is the list of brands that can engineer me." Lynxspring's JENEsys products contain:

Tool Compatibility In = All

Tool Compatibility Out

This field is a list of brands that this tool is allowed to connect to and engineer. Simply stated, This is the list of brands that I can engineer." Lynxspring's JENEsys products contain:

Tool Compatibility Out = All

As long as JENEsys branded products are purchased by the end user any Niagara^AX certified (NTCP) system integrator can provide support for the end user without the need for the owner to be involved in the licensing process. For more information on Niagara Connectivity and Security visit our website at www.lynxspring.com.

Agency Listings and Approvals for JENEsys® Hardware Products

NOTE: This document is subject to frequent change. For the latest update, see Agency Listings and Approvals for JENEsys Hardware Products on the Lynxspring Corporate Website.

The agency listings and approvals provided are for Tridium controllers (JACEs) **and Lynxspring's JENEsys controllers (JENEs).** Modules and option cards do not have their own section, but can be listed as part of the equipment tested in some of the controller CE Declaration of Conformity statements. The index includes module and option card entries that point to the controller with which each was tested.

DISCLAIMER: It is not possible to test every permutation and, in some cases, an accessory (IO, power supply, or option card) may be tested with only one version of the JACE/JENE. Tridium and Lynxspring try to get every accessory on at least one report, but this document may not reference every module or option.

The source MS Word file used to create this document is available upon request.

© 2014 Lynxspring, Inc.

Lynxspring, Inc.
1210 NE Windsor Drive
Lee's Summit, MO 64086

Information and/or specifications published here are current as of the date of publication of this document. Lynxspring, Inc. reserves the right to change or modify specifications without prior notice. The latest product specifications can be found by contacting our corporate headquarters, Lee's Summit, Missouri. Products or features contained herein are covered by one or more U.S. or foreign patents. This document may be copied by parties who are authorized to distribute Tridium products in connection with distribution of those products, subject to the contracts that authorize such distribution. It may not otherwise, in whole or in part, be copied, photocopied, reproduced, translated, or reduced to any electronic medium or machine-readable form without prior written consent from Lynxspring, Inc. Complete confidentiality, trademark, copyright and patent notifications can be found at: http://resources.lynxspring.com/index.php/marketing?task=document.viewdoc&id=345.

JACE, Niagara Framework, Niagara AX Framework and the Sedona Framework are trademarks of Tridium, Inc.
JENEsys and JENE are registered trademarks of Lynxspring, Inc.

Table of Contents

TABLE OF CONTENTS 2

JENE-PC1000 4

UNDERWRITERS LABORATORIES (UL) / CANADIAN STANDARDS ASSOCIATION (CSA) 4
FEDERAL COMMUNICATIONS COMMISSION (FCC) 4
CANADIAN DEPARTMENT OF COMMUNICATIONS (DOC) 4
DECLARATION OF ROHS COMPLIANCE 4
C-TICK (RADIOCOMMUNICATIONS DETERMINATION 1988) 4
CE DECLARATION OF CONFORMITY CROSS REFERENCE TABLE 4
CE DECLARATION OF CONFORMITY 5

JENE-PC3000E 6

UNDERWRITERS LABORATORIES (UL) / CANADIAN STANDARDS ASSOCIATION (CSA) 6
FEDERAL COMMUNICATIONS COMMISSION (FCC) 6
INDUSTRY CANADA INTERFERENCE-CAUSING EQUIPMENT STANDARD (ICES) 6
DECLARATION OF ROHS COMPLIANCE 6
C-TICK (RADIOCOMMUNICATIONS DETERMINATION 1988) 6
CE DECLARATION OF CONFORMITY CROSS REFERENCE TABLE 6
CE DECLARATION OF CONFORMITY 7

JENE-PC6000 / JENE-PC6000E 8

UNDERWRITERS LABORATORIES (UL) / CANADIAN STANDARDS ASSOCIATION (CSA) 8
FEDERAL COMMUNICATIONS COMMISSION (FCC) 8
INDUSTRY CANADA INTERFERENCE-CAUSING EQUIPMENT STANDARD (ICES) 8
DECLARATION OF ROHS COMPLIANCE 8
C-TICK (RADIOCOMMUNICATIONS DETERMINATION 1988) 8
CE DECLARATION OF CONFORMITY CROSS REFERENCE TABLE 8
CE DECLARATION OF CONFORMITY 9

JENE-PC603 / JENE-PC645 10

UNDERWRITERS LABORATORIES (UL) / CANADIAN STANDARDS ASSOCIATION (CSA) 10
FEDERAL COMMUNICATIONS COMMISSION (FCC) 10
INDUSTRY CANADA INTERFERENCE-CAUSING EQUIPMENT STANDARD (ICES) 10
DECLARATION OF ROHS COMPLIANCE 10

JENE-PC7000 11

UNDERWRITERS LABORATORIES (UL) / CANADIAN STANDARDS ASSOCIATION (CSA) 11
FEDERAL COMMUNICATIONS COMMISSION (FCC) 11
CANADIAN DEPARTMENT OF COMMUNICATIONS (DOC) 11
DECLARATION OF ROHS COMPLIANCE 11
C-TICK (RADIOCOMMUNICATIONS DETERMINATION 1988) 11
CE DECLARATION OF CONFORMITY CROSS REFERENCE TABLE 11
CE DECLARATION OF CONFORMITY 12

JENE-NXT **13**

UNDERWRITER LABORATORIES INC. 13
FEDERAL COMMUNICATIONS COMMISSION (FCC) 13
CANADIAN DEPARTMENT OF COMMUNICATIONS (DOC) 13
CE DECLARATION OF CONFORMITY 13
DECLARATION OF ROHS COMPLIANCE 13
C-TICK (RADIOCOMMUNICATIONS DETERMINATION 1988) 13

WASTE OF ELECTRICAL AND ELECTRONIC EQUIPMENT (WEEE) **14**

INDEX **15**

JENE-PC1000

Underwriters Laboratories (UL) / Canadian Standards Association (CSA)

This equipment has been tested and is recognized:

- UL 916 Standard For Energy Management Equipment – Edition 4- Revision Date 2010/06/04, File E207782
- CSA C22.2 No. 205 Signal Equipment – Edition 1 – Issue Date 1983/06/01

Federal Communications Commission (FCC)

This equipment generates, uses, and can radiate radio frequency energy, and if not installed and used in accordance with the instruction manual, may cause interference with radio communications. It has been tested and found to comply with the limits for a Class A computing device pursuant to Subpart J of Part 15 of FCC Rules, which are designed to provide reasonable protection against such interference when operated in a commercial environment. Operation of this equipment in a residential area may cause interference, in which case, users at their own expense will be required to take whatever measures may be required to correct the interference. Any unauthorized modification of this equipment may result in the revocation of the owner's authority to continue its operation.

Canadian Department of Communications (DOC)

This Class A digital apparatus meets all requirements of the Canadian Interference-Causing Equipment Regulations.

Cet appareil numerique de la classe A respecte toutes les exigencies du Reglement sur le material broilleur du Canada.

Declaration of RoHS Compliance

This product meets all requirements of RoHS Directive (EU 202/95/EC). All components used in this product are RoHS compliant, and there have been no leaded solders used in manufacture.

Related to the RoHS (Restriction of Hazardous Substances) Directive is another European Directive 2002/96/EC on Waste Electrical and Electronic Equipment (WEEE). The WEEE Directive aims to reduce the waste arising from electrical and electronic equipment, and improve the environmental performance of everything involved in the life cycle of electrical and electronic equipment.

For related details, see "**Waste of electrical and electronic equipment (WEEE)**" on page 13.

C-Tick (Radiocommunications determination 1988)

This product meets Australian electromagnetic compatibility requirements and radiocommunications standards, and may be legally sold in Australia. Honeywell's ACMA (Australian Communications Authority) supplier code is N314.

CE Declaration of Conformity Cross Reference Table

Tridium Part Number (UL Listing)	Lynxspring Part Number (UL Listing)
JACE-200	JENE-PC1000 (10515)
IO-16 (10519)	JM16-080404
NPB-PWR-UN	JENE-PC-PWR-UN
NPB-LON	JENE-PC-LONCARD
NPB-232	JENE-PC-232

CE Declaration of Conformity

Application of Council Directive: 2004-108-EC

Manufacturer:	Tridium Inc. 3951 Westerre Parkway, Suite 350 Richmond, Virginia 23233 United States of America
Manufacturer's Representative:	Nino DiCosmo, President Tridium Inc.
Product Model Number:	JACE-200, IO-16, NPB-PWR-UN, NPB-LON, NPB-232
Type of Equipment:	Electrical Equipment for Measurement, Control and Laboratory Use

	Standard	Description	Criteria Met
EMS Standards Applied:	EN 61326-1: 2006 Class A	Electro-Magnetic Compatibility Emissions, Generic	Complies as documented below
	EN 55011: 2007 +A1: 2007	Conducted Emissions - Voltage Class A	Pass Class A
	EN 55011: 2007 +A2: 2007	Radiated Emissions- Class A	Pass Class A
	IEC 61000-4-2:1995 +A1:1998 +A2:2001	Electrostatic Discharge Immunity	Pass Criteria A
	IEC 61000-4-3: 2006	Radiated Electromagnetic Field Immunity	Pass Criteria A
	IEC 61000-4-4: 2004	Electrical Fast Transient / Burst Immunity	Pass Criteria A*
	IEC 61000-4-5: 2006	Surge Immunity	Pass Criteria A
	IEC 61000-4-6: 2007	Conducted Radio Frequency Immunity	Pass Criteria A
	IEC 61000-4-11: 2004	Voltage Dips Interruptions and Variations	Pass Criteria A, A, A, C
	IEC 61010-1:2010	Safety requirement for electrical equipment for measurement, control, and laboratory use	Pass

* Note 1, A ferrite (Fair-Rite part #0431164181) was placed around a shielded power cord.

I, **Nino DiCosmo**, President of Tridium Inc., hereby declare that the equipment specified above conforms to the above Directives and Standards.

June, 2013

Nino Dicosmo
President, Tridium

JENE-PC3000e

This documents various agency listings and compliances for the Tridium® hardware products listed above.

Underwriters Laboratories (UL) / Canadian Standards Association (CSA)

This equipment has been tested and is recognized:

- UL 916 Standard For Energy Management Equipment – Edition 4- Revision Date 2010/06/04, File E207782
- CSA C22.2 No. 205 Signal Equipment – Edition 1 – Issue Date 1983/06/01

Federal Communications Commission (FCC)

This equipment has been tested and found to comply with the limits for a Class B digital device, pursuant to part 15 of the FCC Rules. These limits are designed to provide reasonable protection against harmful interference in a residential installation. This equipment generates uses and can radiate radio frequency energy and, if not used in accordance with the instructions, may cause harmful interference to radio communications. However, there is no guarantee that interference will not occur in a particular installation. If this equipment does cause harmful interference to radio or television reception, which can be determined by turning the equipment off and on, the user is encouraged to try to correct the interference by one or more of the following measures:

- Reorient or relocate the receiving antenna.
- Increase the separation between the equipment and receiver.
- Connect the equipment into an outlet on a circuit different from that to which the receiver is connected.
- Consult the dealer or an experienced radio/TV technician for help.

Industry Canada Interference-Causing Equipment Standard (ICES)

This Class B digital apparatus complies with Canadian ICES-003.

Cet appareil numerique de la classe B est conforme a la norme NMB-003 du Canada.

Declaration of RoHS Compliance

This product meets all requirements of RoHS Directive (EU 2002/95/EC).

Related to the RoHS (Restriction of Hazardous Substances) Directive is another European Directive 2002/96/EC on Waste Electrical and Electronic Equipment (WEEE). The WEEE Directive aims to reduce the waste arising from electrical and electronic equipment, and improve the environmental performance of everything involved in the life cycle of electrical and electronic equipment.

For related details, see **"Waste of electrical and electronic equipment (WEEE)"** on page 13.

C-Tick (Radiocommunications Determination 1988)

This product meets Australian electromagnetic compatibility requirements and radiocommunications standards, and may be legally sold in Australia. Honeywell's ACMA (Australian Communications Authority) supplier code is N314.

CE Declaration of Conformity Cross Reference Table

Tridium Part Number (UL Listing)	Lynxspring Part Number (UL Listing)
T-300E (12466)	JENE-PC3000E (12466)
IO-16 (10519)	JM16-080404
NPB-PWR-UN	JENE-PC-PWR-UN
NPB-LON	JENE-PC-LONCARD
NPB-2X-485	JENE-PC-485

CE Declaration of Conformity

Date: July, 2012

Application of Council Directive:	EMC Directive 2004-108-EC		
Manufacturer:	Tridium Inc. 3951 Westerre Parkway, Suite 350 Richmond, Virginia 23233 United States of America		
Manufacturer's Representative:	Nino DiCosmo, President Tridium Inc.		
Product Model Number:	T-300E (12466), IO-16 (10519), NPB-PWR, NPB-LON, NPB-2X-485		
Type of Equipment:	Electrical Equipment for Measurement, Control and Laboratory Use		
	Standard	**Description**	**Criteria Met**
EMS Standards Applied:	Standard 61326-1: 2006 Class B	Electro-Magnetic Compatibility Emissions, Generic	Complies as listed below
	EN 55011: 2009	Conducted Emissions - Voltage Class B	Pass
	EN 55011: 2009	Radiated Emissions- Class B	Pass
	EN 61000-3-2: 2006	Harmonic Current Emissions	Pass
	EN 61000-3-3: 2008	Voltage Fluctuations and Flicker	Pass
	EN 61000-4-2: 1995 +A1: 1998 +A2: 2001	Electrostatic Discharge Immunity	Pass Criteria B
	EN 61000-4-3: 2006	Radiated Electromagnetic Field Immunity	Pass Criteria A
	EN 61000-4-4: 2004	Electrical Fast Transient / Burst Immunity	Pass Criteria B
	EN 61000-4-5: 2006	Surge Immunity	Pass Criteria B
	EN 61000-4-6: 2007	Conducted Radio Frequency Immunity	Pass Criteria A
	EN 61000-4-8: 1998 +A1: 2001	Magnetic Immunity	No magnetically sensitive components
	EN 61000-4-11: 2004	Voltage Dips Interruptions and Variations	Pass B, B, C, C
	IEC 61010-1:2010	Safety requirement for electrical equipment for measurement, control, and laboratory use	Pass

I, **Nino DiCosmo**, President of Tridium Inc., hereby declare that the equipment specified above conforms to the above Directives and Standards.

June, 2013

Nino Dicosmo
President, Tridium

JENE-PC6000 / JENE-PC6000e

This documents various agency listings and compliances for the Tridium® hardware products listed above.

Underwriters Laboratories (UL) / Canadian Standards Association (CSA)

This equipment has been tested and is recognized:

- UL 916 Standard For Energy Management Equipment – Edition 4- Revision Date 2010/06/04, File E207782
- CSA C22.2 No. 205 Signal Equipment – Edition 1 – Issue Date 1983/06/01

Federal Communications Commission (FCC)

This equipment has been tested and found to comply with the limits for a Class B digital device, pursuant to part 15 of the FCC Rules. These limits are designed to provide reasonable protection against harmful interference in a residential installation. This equipment generates uses and can radiate radio frequency energy and, if not used in accordance with the instructions, may cause harmful interference to radio communications. However, there is no guarantee that interference will not occur in a particular installation. If this equipment does cause harmful interference to radio or television reception, which can be determined by turning the equipment off and on, the user is encouraged to try to correct the interference by one or more of the following measures:

- Reorient or relocate the receiving antenna.
- Increase the separation between the equipment and receiver.
- Connect the equipment into an outlet on a circuit different from that to which the receiver is connected.
- Consult the dealer or an experienced radio/TV technician for help.

Industry Canada Interference-Causing Equipment Standard (ICES)

This Class B digital apparatus complies with Canadian ICES-003.

Cet appareil numerique de la classe B est conforme a la norme NMB-003 du Canada.

Declaration of RoHS Compliance

This product meets all requirements of RoHS Directive (EU 2002/95/EC).

Related to the RoHS (Restriction of Hazardous Substances) Directive is another European Directive 2002/96/EC on Waste Electrical and Electronic Equipment (WEEE). The WEEE Directive aims to reduce the waste arising from electrical and electronic equipment, and improve the environmental performance of everything involved in the life cycle of electrical and electronic equipment.

For related details, see **"Waste of electrical and electronic equipment (WEEE)"** on page 13.

C-Tick (Radiocommunications Determination 1988)

This product meets Australian electromagnetic compatibility requirements and radiocommunications standards, and may be legally sold in Australia. Honeywell's ACMA (Australian Communications Authority) supplier code is N314.

CE Declaration of Conformity Cross Reference Table

Tridium Part Number (UL Listing)	Lynxspring Part Number (UL Listing)
JACE-600 / JACE-600E	JENE-PC6000 (10820) / JENE-PC6000e(10820E)
IO-34	JM34-080404
NPB-PWR-UN	JENE-PC-PWR-UN
NPB-LON	JENE-PC-LONCARD
NPB-2X-485	JENE-PC-485

CE Declaration of Conformity

Application of Council Directive: 2004-108-EC

Manufacturer:	Tridium Inc. 3951 Westerre Parkway, Suite 350 Richmond, Virginia 23233 United States of America
Manufacturer's Representative:	Nino DiCosmo, President Tridium Inc.
Product Model Number:	JACE-600/JACE-600E, IO-34, NPB-ZWAVE, NPB-SRAM
Type of Equipment:	Electrical Equipment for Measurement, Control and Laboratory Use

	Standard	Description	Criteria Met
EMS Standards Applied:	EN 61326-1: 2006 Class B	Electro-Magnetic Compatibility Emissions, Generic	Complies as listed below
	EN 55011: 2007 +A1: 2007	Conducted Emissions - Voltage Class B	Pass Class B
	EN 55011: 2007 +A2: 2007	Radiated Emissions- Class B	Pass Class B
	EN 61000-3-2: 2006	Harmonic Current Emissions	Pass
	EN 61000-3-3: 2005 +A1: 2001 +A2: 2005	Voltage Fluctuations/Flicker	Pass
	EN 61000-4-2: 1995 +A1: 1998 +A2: 2001	Electrostatic Discharge Immunity	Pass Criteria A
	IEC 61000-4-3: 2006	Radiated Electromagnetic Field Immunity	Pass Criteria A
	IEC 61000-4-4: 2004	Electrical Fast Transient/Burst Immunity	Pass Criteria A*
	IEC 61000-4-5: 2006	Surge Immunity	Pass Criteria A
	IEC 61000-4-6: 2007	Conducted Radio Frequency Immunity	Pass Criteria A
	IEC 61000-4-11: 2004	Voltage Dips Interruptions and Variations	Pass Criteria A
	IEC 61010-1:2010	Safety requirement for electrical equipment for measurement, control, and laboratory use	Pass

* Note 1, A ferrite (Fair-Rite part #0431164181) was placed around a shielded power cord.

I, **Nino DiCosmo**, President of Tridium Inc., hereby declare that the equipment specified above conforms to the above Directives and Standards.

June, 2013

Nino Dicosmo
President, Tridium

JENE-PC603 / JENE-PC645

Underwriters Laboratories (UL) / Canadian Standards Association (CSA)

This equipment has been tested and is recognized:

- UL 916 Standard For Energy Management Equipment – Edition 4- Revision Date 2010/06/04, File E207782
- CSA C22.2 No. 205 Signal Equipment – Edition 1 – Issue Date 1983/06/01

Federal Communications Commission (FCC)

This equipment has been tested and found to comply with the limits for a Class B digital device, pursuant to part 15 of the FCC Rules. These limits are designed to provide reasonable protection against harmful interference in a residential installation. This equipment generates, uses, and can radiate radio frequency energy and, if not used in accordance with the instructions, may cause harmful interference to radio communications. However, there is no guarantee that interference will not occur in a particular installation. If this equipment does cause harmful interference to radio or television reception, which can be determined by turning the equipment off and on, the user is encouraged to try to correct the interference by one or more of the following measures:

- Reorient or relocate the receiving antenna.
- Increase the separation between the equipment and receiver.
- Connect the equipment into an outlet on a circuit different from that to which the receiver is connected.
- Consult the dealer or an experienced radio/TV technician for help.

Industry Canada Interference-Causing Equipment Standard (ICES)

This Class B digital apparatus complies with Canadian ICES-003.

Cet appareil numerique de la classe B est conforme a la norme NMB-003 du Canada.

Declaration of RoHS Compliance

This product meets all requirements of RoHS Directive (EU 2002/95/EC). All components used in this product are RoHS compliant and there have been no leaded solders used in manufacture.

Related to the RoHS (Restriction of Hazardous Substances) Directive is another European Directive 2002/96/EC on Waste Electrical and Electronic Equipment (WEEE). The WEEE Directive aims to reduce the waste arising from electrical and electronic equipment, and improve the environmental performance of everything involved in the life cycle of electrical and electronic equipment.

For related details, see **"Waste of electrical and electronic equipment (WEEE)"** on page 13.

JENE-PC7000

Underwriters Laboratories (UL) / Canadian Standards Association (CSA)

This equipment has been tested and is recognized:

- UL 916 Standard For Energy Management Equipment – Edition 4- Revision Date 2010/06/04, File E207782
- CSA C22.2 No. 205 Signal Equipment – Edition 1 – Issue Date 1983/06/01

Federal Communications Commission (FCC)

This equipment generates, uses, and can radiate radio frequency energy, and if not installed and used in accordance with the instruction manual, may cause interference with radio communications. It has been tested and found to comply with the limits for a Class A computing device pursuant to Subpart J of Part 15 of FCC Rules, which are designed to provide reasonable protection against such interference when operated in a commercial environment. Operation of this equipment in a residential area may cause interference, in which case, users at their own expense will be required to take whatever measures may be required to correct the interference. Any unauthorized modification of this equipment may result in the revocation of the owner's authority to continue its operation.

Canadian Department of Communications (DOC)

This Class A digital apparatus meets all requirements of the Canadian Interference-Causing Equipment Regulations.

Cet appareil numerique de la classe A respecte toutes les exigencies du Reglement sur le material broilleur du Canada.

Declaration of RoHS Compliance

This product meets all requirements of RoHS Directive (EU 2002/95/EC). All components used in this product are RoHS compliant and there have been no leaded solders used in manufacture.

Related to the RoHS (Restriction of Hazardous Substances) Directive is another European Directive 2002/96/EC on Waste Electrical and Electronic Equipment (WEEE). The WEEE Directive aims to reduce the waste arising from electrical and electronic equipment, and improve the environmental performance of everything involved in the life cycle of electrical and electronic equipment.

For related details, see **"Waste of electrical and electronic equipment (WEEE)"** on page 13.

C-Tick (Radiocommunications Determination 1988)

This product meets Australian electromagnetic compatibility requirements and radiocommunications standards, and may be legally sold in Australia. Honeywell's ACMA (Australian Communications Authority) supplier code is N314.

CE Declaration of Conformity Cross Reference Table

Tridium Part Number (UL Listing)	Lynxspring Part Number (UL Listing)
JACE-700	JENE-PC7000

CE Declaration of Conformity

Date: December, 2009

Application of Council Directive:	89/336/EEC, 92/31/EEC, 73/23/EEC, 93/68/EEC		
Manufacturer:	Tridium Inc. 3951 Westerre Parkway, Suite 350 Richmond, Virginia 23233 United States of America		
Manufacturer's Representative:	Steve Fey, President Tridium Inc.		
Product Model Number:	JACE-700		
Type of Equipment:	Electrical Equipment for Measurement, Control and Laboratory Use		
	Standard	**Description**	**Criteria Met**
EMS Standards Applied:	CISPR 16-2-3:2006	Radiated Emissions – Class A	Complies
	IEC 61000-4-2	Electrostatic Discharge Immunity	PASS Criteria B
	IEC 61000-4-3	Radiated Electromagnetic Field Immunity	PASS Criteria A
	IEC 61000-4-4	Electrical Fast Transient/Burst Immunity	PASS Criteria B
	IEC 61000-4-6	Conducted Radio-Frequency Immunity	PASS-Criteria A
	IEC 61010-1/;2001 rev. 9/19/03	Safety requirement for electrical equipment For measurement, control and laboratory use	PASS

I, **Steve Fey**, President of Tridium Inc., hereby declare that the equipment specified above conforms to the above Directives and Standards.

June, 2013

Steve Fey
President, Tridium

JENE-NXT

Underwriter Laboratories Inc.

This device has approvals to Standard UL 60950-1, File E115352 and Canadian National Standard CAN/CSA-C22.2 No. 60950-1 (I.T.E) or according to UL508, File E85972 and Canadian National Standard CAN/CSA-C22.2 No. 142 (IND.CONT.EQ) or according to Canadian National Standard CAN/CSA-C22.2 No. 14-05.

Federal Communications Commission (FCC)

This device complies with Part 15 of the FCC Rules. Operation is subject to the following two conditions: (1) this device may not cause harmful interference, and (2) this device must accept any interference received including interference that may cause undesired operation.

This equipment has been tested and found to comply with the limits for a Class A digital device, pursuant to Part 15 of the FCC Rules. These limits are designed to provide reasonable protection against harmful interference when the equipment is operated in a commercial environment. This equipment generates, uses, and can radiate radio frequency energy and, if not installed and used in accordance with the instruction manual, may cause harmful interference to radio communications.

Operation of this equipment in a residential area is likely to cause harmful interference in which case the user will be required to correct the interference at his expense.

Canadian Department of Communications (DOC)

This Class A digital apparatus complies with Canadian ICES-003.

Cet appareil numérique de la classe B est conforme à la norme NMB-003 du Canada.

CE Declaration of Conformity

This device fulfills the requirements for the EC directive "204/108/EEC Electromagnetic Compatibility," and the following fields of application apply according to its CE label.

Area of Application	Requirements for Emitted Interference	Noise Immunity
Residential area, business and trade areas and small business	EN 61000-6-3: 2007	EN 61000-6-1: 2007
Industry	EN 61000-6-4: 2007	EN 61000-6-2: 2005

Requirements regarding noise immunity to EN 61000-6-2 / IEC 61000-6-2 are met if connected peripherals are suitable for industrial applications. Peripheral devices are only to be connected via shielded cables.

Declaration of RoHS Compliance

This product meets all requirements of RoHS Directive (EU 2002/95/EC). All components used in this product are RoHS compliant and there have been no leaded solders used in manufacture.

Related to the RoHS (Restriction of Hazardous Substances) Directive is another European Directive 2002/96/EC on Waste Electrical and Electronic Equipment (WEEE). The WEEE Directive aims to reduce the waste arising from electrical and electronic equipment, and improve the environmental performance of everything involved in the life cycle of electrical and electronic equipment.

For related details, see **"Waste of electrical and electronic equipment (WEEE)"** on page 13.

C-Tick (Radiocommunications Determination 1988)

This product meets Australian electromagnetic compatibility requirements and radiocommunications standards, and may be legally sold in Australia. The ACMA (Australian Communications Authority) supplier code is N117.

Waste of electrical and electronic equipment (WEEE)

Recycling of Electronic Products: (International Installations)

In 2006 the European Union adopted regulations (WEEE) for the collection and recycling of all waste electrical and electronic equipment. It is no longer allowable to simply throw away such equipment. Instead, these products must enter the recycling process. To properly dispose of this product, please take it to a local recycling center. If a local recycling center cannot be found, please return it to one of these offices:

Tridium Europe Ltd
1, The Grainstore
Brooks Green Road
Coolham, West Sussex
RH13 8GR United Kingdom

Tridium AP Sales and Technical Service Center (Beijing)
2206F Building-B, Eagle Plaza,
No. 26 Xiaoyun Road,
Chaoyang District, Beijing,
P.R.China (100125)

Tridium, Inc.
2256 Dabney Road, Suite C
Richmond, VA 23230
United States of America

Lynxspring, Inc.
1210 NE Windsor Drive
Lee's Summit, MO 64086
United States of America

Index

J

JENE-NXT 13
JENE-PC1000 ..... 4, 11
JENE-PC-232 4
JENE-PC3000E 6
JENE-PC-485 ..... 6, 8
JENE-PC6000 8
JENE-PC6000e 8
JENE-PC603 10
JENE-PC645 10
JENE-PC7000 11
JENE-PC-LONCARD 4, 6, 8
JENE-PC-PWR-UN 4, 6, 8
JM16-080404 ..... 4, 6
JM34-080404 8

Technical Document

Niagara^{AX} Networking and IT Guide

October 9, 2006

Powered by niagara AX FRAMEWORK®

Networking and IT Guide

Copyright © 2006 Tridium, Inc.
All rights reserved.
3951 Westerre Pkwy., Suite 350
Richmond
Virginia
23233
U.S.A.

Copyright Notice

The software described herein is furnished under a license agreement and may be used only in accordance with the terms of the agreement.
This document may not, in whole or in part, be copied, photocopied, reproduced, translated, or reduced to any electronic medium or machine-readable form without prior written consent from Tridium, Inc.
The confidential information contained in this document is provided solely for use by Tridium employees, licensees, and system owners; and is not to be released to, or reproduced for, anyone else; neither is it to be used for reproduction of this Control System or any of its components.
All rights to revise designs described herein are reserved. While every effort has been made to assure the accuracy of this document, Tridium shall not be held responsible for damages, including consequential damages, arising from the application of the information contained herein. Information and specifications published here are current as of the date of this publication and are subject to change without notice.
The release and technology contained herein may be protected by one or more U.S. patents, foreign patents, or pending applications.

Trademark Notices

BACnet and ASHRAE are registered trademarks of American Society of Heating, Refrigerating and Air-Conditioning Engineers. Microsoft and Windows are registered trademarks, and Windows NT, Windows 2000, Windows XP Professional, and Internet Explorer are trademarks of Microsoft Corporation. Java and other Java-based names are trademarks of Sun Microsystems Inc. and refer to Sun's family of Java-branded technologies. Mozilla and Firefox are trademarks of the Mozilla Foundation. Echelon, LON, LonMark, LonTalk, and LonWorks are registered trademarks of Echelon Corporation. Tridium, JACE, Niagara Framework, Niagara^{AX} and Vykon are registered trademarks, and Workbench, WorkPlace^{AX}, and ^{AX}Supervisor, are trademarks of Tridium Inc. All other product names and services mentioned in this publication that is known to be trademarks, registered trademarks, or service marks are the property of their respective owners.The software described herein is furnished under a license agreement and may be used only in accordance with the terms of the agreement.

Contents

Preface contents

Document change log iii
About this document iii
Related documentation iv

NiagaraAX introduction

NiagaraAX architecture 1–2
Types of NiagaraAX programs 1–2
Types of NiagaraAX protocols 1–3
About the Fox protocol *1–3*
Types of NiagaraAX platforms 1–4
Types of JACE controllers *1–5*
NiagaraAX Supervisor *1–6*
WorkPlaceAX (and the NiagaraAX platform) *1–6*
Browser user interface *1–6*

NiagaraAX and networking

About IP addressing 2–1
Private IP addresses 2–1
Network address translation (NAT) 2–2
IP routing and default gateway 2–2
Routing example 2–3
Static and dynamic IP addressing in NiagaraAX 2–4
NiagaraAX and DHCP 2–5
About the HOSTS file 2–6
About DNS 2–6
Domain names 2–6
Name Servers 2–6
NiagaraAX and DNS 2–7
About WINS 2–7
About DDNS 2–7
About the NiagaraAX network 2–8
About non-NiagaraAX networks 2–8
Protocols 2–9
Types of NiagaraAX hosts 2–10
QNX-based NiagaraAX hosts 2–10
Win32-based NiagaraAX hosts 2–10
NiagaraAX host networking technologies 2–11
NiagaraAX network examples 2–12

NiagaraAX single-site network application **2–12**
NiagaraAX multi-site network application **2–14**
Managing NiagaraAX hosts **2–15**
AXSupervisor 2–16
NiagaraAX platform 2–16
About the platform connection *2–17*
Types of platform administration functions *2–17*
About the platform daemon on a PC *2–18*
Other host administration tools 2–19
NiagaraAX backups 2–20
NiagaraAX hosts and network communication 2–21

NiagaraAX security

NiagaraAX security model **3–1**
NiagaraAX and Niagara R2 security comparison 3–4
NiagaraAX security considerations **3–4**
General Security Guidelines 3–5
Guidelines for QNX-based NiagaraAX hosts 3–5
Guidelines for Win32-based NiagaraAX hosts 3–5
Creating a strong password 3–6
Firewalls and proxy servers **3–7**
About virtual private networks **3–7**
Example NiagaraAX VPN network **3–8**
About NiagaraAX ports **3–11**

Network traffic considerations

NiagaraAX network communications considerations **4–2**
Types of browser communications **4–3**
About the wbapplet 4–3
Workbench-to-station communications **4–5**
Station-to-station communications **4–7**
Fox service 4–9
Network tuning policies 4–10
Tuning Policy properties *4–11*
Network polling policies 4–13
Common control properties 4–14
History policies 4–16
History import and export 4–16
History import *4–17*
History export *4–18*
Schedule import and export 4–18
Types of alarm service communication controls 4–19
Time sync service 4–20
Email service 4–21
Platform connection communications **4–22**

PREFACE

Preface contents

- Document change log
  This section provides a list of significant changes to this document, listed in order of document publishing and revision date.
- About this document
  This section describes this document in terms of its purpose, content, and target audience.
- Related documentation
  This section contains a list of other relevant NiagaraAX documentation.

Document change log

Updates (changes and additions) to this document are listed as follows:

- *NiagaraAX Networking and IT Guide*: October 9, 2006
  Initial Release

About this document

This document is intended to help you understand the parts that comprise the NiagaraAX framework product and help you understand how to integrate NiagaraAX devices into your network environment efficiently and securely. Included are topics that describe the NiagaraAX architecture in general, descriptions of many of the standard networking technologies and how they relate to NiagaraAX. This document also includes discussion and examples of networking security strategies that may be appropriate for your network application. This includes standard security practices and technologies, as well as descriptions of how NiagaraAX provides application security.

The following people should use this document:

- Systems integrators and installers
- Application programmers
- Corporate IT managers or IT personnel

Although this document includes basic descriptions of some networking principles and technologies, it is assumed that the reader has a basic understanding of NiagaraAX and networking in general.

It is important to use professional network security personnel to make sure that your network is secure when exposed on the Internet. It is also important to communicate and coordinate with the Information Technology (IT) department of the organization that owns the network resources you are using.

Related documentation

The following documents contain important information that pertains to NiagaraAX:

- *NiagaraAX User Guide*
- *NiagaraAX Developer Guide*
- *JACE NiagaraAX Install & Startup Guide*

CHAPTER 1

NiagaraAX introduction

The NiagaraAX framework includes integrated network management tools and a comprehensive toolset that enables non-programmers to build rich applications in a drag-and-drop environment. The primary characteristics of the NiagaraAX Framework are listed and described below:

Java-based The NiagaraAX framework uses the Java VM as a common runtime environment across various operating systems and hardware platforms. The core framework scales from small embedded controllers to high end servers. The framework runtime is targeted for J2ME compliant VMs. The user interface toolkit and graphical programming tools are targeted for J2SE 1.4 VMs.

Heterogeneous system integration NiagaraAX is designed from the ground up to assume that there will never be any one "standard" network protocol, distributed architecture, or fieldbus. NiagaraAX's design center is to integrate cleanly with all networks and protocols. The Niagara Framework standardizes what's inside the box, not what the box talks to.

Programming for non-programmers Most features in the Niagara Framework are designed for dual use. These features are designed around a set of Java APIs to be accessed by developers writing Java code. At the same, most features are also designed to be used through high level graphical programming and configuration tools. This vastly increases the scope of users capable of building applications on the NiagaraAX platform.

Embedded systems NiagaraAX is designed to run across the entire range of processors from small embedded devices to server class machines. Niagara is targeted for embedded systems capable of running a Java VM. This excludes some very low-end devices that lack 32-bit processors or have only several megabytes of RAM, but opens up a wide range of processor platforms. Embedded systems with the power of low end workstations have special needs. They have no integral display monitor and require remote administration. Embedded systems also tend to use solid state storage with limited write cycles and much smaller volume capacities than hard drives.

Distributed systems The framework is designed to provide scalability to highly distributed systems composed of 10,000s of nodes running the Niagara Framework software. Systems of this size span a wide range of network topologies and usually communicate over unreliable Internet connections. NiagaraAX is designed to provide an infrastructure for managing systems of this scale.

NiagaraAX architecture

The following topics provide an introduction to NiagaraAX, including descriptions of some of the basic terms and concepts that are associated with the NiagaraAX architecture.

- Types of NiagaraAX programs (or processes)
- Types of NiagaraAX protocols
- Types of NiagaraAX platforms

Types of NiagaraAX programs

There are typically four different programs (or processes) associated with a NiagaraAX system. These programs and their network communication are illustrated in the Figure 1

Figure 1 *NiagaraAX communications*

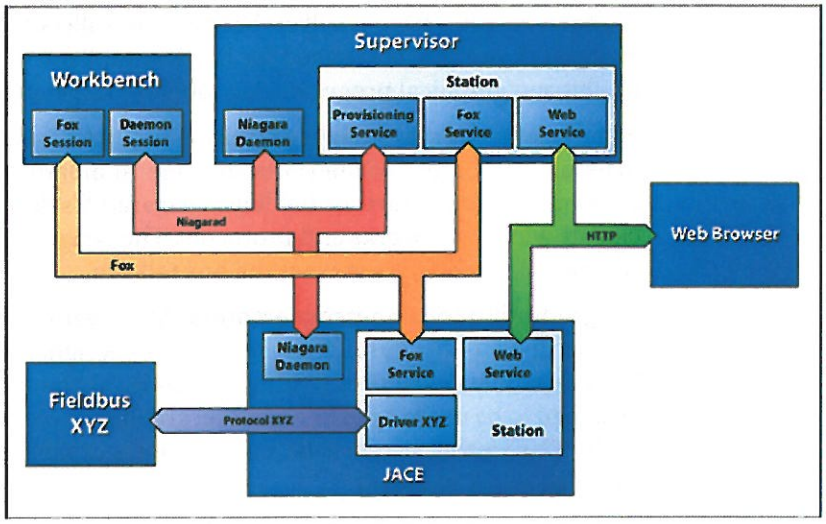

Station: This is the NiagaraAX runtime – a Java VM which runs a NiagaraAX component application. Often the term Supervisor or JACE will be used interchangeably with "station." Technically, the term station describes the component runtime environment common all to all platforms, and Supervisor and JACE describe the hosting platform.

Workbench: This the NiagaraAX engineering tool – a Java VM which hosts NiagaraAX plugin components.

Daemon: This is a native daemon process. The daemon is used to boot stations and to manage platform configuration such as IP settings. On Windows platforms, the daemon is run in the background as a Window's service. On QNX it is run as a daemon process on startup. The most common way to access daemon functionality is through Workbench. A connection to the daemon is established via the "Open Platform" command which opens a PlatformSession to the remote machine. Workbench provides a means for accomplishing platform tasks, such as the following:

- installing and backing up station databases
- launching and monitoring stations
- configuration of TCP/IP settings (QNX, Windows XP, Server 2003)
- installation and upgrades of the operating system (QNX only)
- installation and upgrades of the Java virtual machine (JVM)
- installation and upgrades of the NiagaraAX software
- installation of lexicons for localization
- installation of licenses

Web Browser: This is a standard web browser such as IE or FireFox that hosts one of NiagaraAX's web user interfaces. NiagaraAX provides both server side and client side technologies to build web UIs:

- On the server side, the WebService component provides HTTP and HTTPS support in a station runtime. The NiagaraAX WebService provides a standard servlet engine.
- There are two client side technologies provided by NiagaraAX to support the browser user interface (BUI). The first is Web Workbench, which allows the standard Workbench software to be run inside a web browser using the Java Plugin. Web Workbench uses a small applet (wbapplet) to download modules as needed to the client machine and to host Workbench shell. These modules are cached locally on the browser's hard drive.
- In addition to Web Workbench, a suite of technology called Hx is available. The Hx framework is a set of server side servlets and a client side JavaScript library. Hx allows a real-time user interface to be built without use of the Java Plugin. It requires only web standards: HTML (Hypertext Markup Language), CSS (Cascading Stylesheets), and JavaScript.

Types of NiagaraAX protocols

There are three primary types of network protocols that NiagaraAX uses to integrate the four programs described above and illustrated in Figure 1:

Fox: is the proprietary TCP/IP protocol used for station-to-station and Workbench-to-station communication.

HTTP: is the standard protocol used by web browsers to access web pages from a station.

Niagarad: is the proprietary protocol used for Workbench-to-daemon communication.

In addition to these protocols, other protocols are available as drivers (for example, SNMP).

About the Fox protocol

The Niagara Framework includes a proprietary protocol called Fox which is used for all network communication between stations as well as between Workbench and stations. Fox is a multiplexed peer to peer protocol that sits on top of a TCP connection. The default port for Fox connections is 1911.

Fox features include:

- Layered over a single TCP socket connection
- Digest authentication (username/passwords are encrypted)
- Peer to peer
- Request / response
- Asynchronous eventing
- Streaming
- Ability to support multiple applications over a single socket via channel multiplexing
- Text based framing and messaging for easy debugging
- Unified message payload syntax
- High performance
- Java implementation of the protocol stack

Types of NiagaraAX platforms

NiagaraAX is hosted on a wide range of platforms from small embedded controllers to high end servers. Instances of NiagaraAX software that run on these platforms are referred to as "stations." Depending on the platform used, a station can offer different features and capabilities and be complemented with different options. In describing the NiagaraAX platforms, the following information also provides a general overview of the NiagaraAX product model (see Figure 2) and the various standard functions and options available.

The NiagaraAX installation may consist of one or more of the following devices that may connect to or communicate on a NiagaraAX installation network:

- JACE Controllers
- NiagaraAX Supervisor
- WorkPlaceAX (and platform tools)
- Browser User Interface (BUI)

JACE: the term JACE (Java Application Control Engine) is used to describe a variety of dedicated host platforms. Typically a JACE runs on a Flash file system and provides battery backup. JACEs usually host a station and a daemon process, but not the NiagaraAX Workbench. JACEs typically run QNX or embedded Windows XP as their operating system.

Supervisor: the term Supervisor is applied to a station running on a workstation or server class machine. Supervisors are typically stations that provide support services to other stations within a system such as graphics, history, or alarm concentration. Supervisors by definition run a station, and may potentially run the daemon or Workbench.

Client: most often clients running a desktop OS such as Windows or Linux access NiagaraAX using Workbench or a web browser.

Figure 2 *NiagaraAX product model*

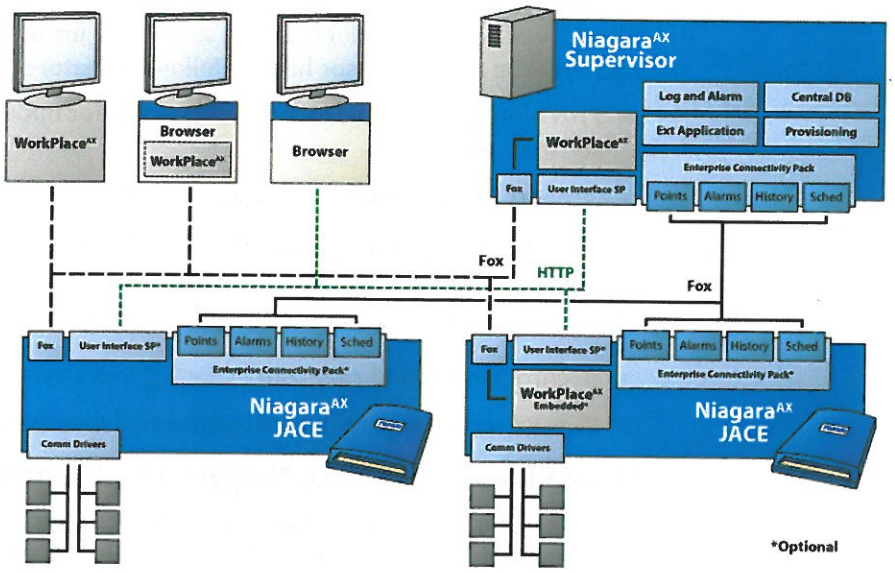

Types of JACE controllers

JACE (Java Application Control Engine) controllers are dedicated host platforms that provide integrated control, supervision, and network management services for networks of building monitoring and control devices. When JACEs are connected over an ethernet network using TCP/IP, they can communicate with each other on a peer-to-peer basis as well as communicate with other ethernet-based devices. Using the User Interface Station Pack (UI-SP), the JACE can also serve dynamic displays of the information contained in the connected devices to any standard web browser. JACE controllers run either the QNX operating system or a Win32 operating system. JACEs include the following:

- JACE-2
  This device is a compact embedded controller and server platform with battery backup. It runs QNX RTOS, IBM J9 JVM, and NiagaraAX.
- JACE-4 and JACE-5
  These devices are compact embedded processor platforms with flash memory, running QNX RTOS.
- JACE NX
  This device is a compact PC with a conventional hard drive that runs an embedded version of Microsoft Windows XP and the Sun Hotspot VM.
- SoftJACE
  The AX SoftJACE (Java Application Control Engine) is NiagaraAX Framework software that runs on a user-supplied PC, providing many of the same benefits as a JACE controller. The PC must meet the minimum requirements stated in the AX SoftJACE data sheet (Windows XP OS), and be dedicated to the SoftJACE application (single-purpose host).

NiagaraAX Supervisor

This "device" is a network PC acting as a server for multiple connected JACE stations. The AXSupervisor has the following features:

- Provisioning of multi-JACE systems (tools for updating and installation of software modules)
- Support for integration with standard RDBMS (MS SQL, Oracle, DB2, etc.)
- Platform for enterprise applications (Vykon Energy Suite) and others in the future
- Central database storage for attached JACEs
- Archive destination / repository for log and alarm data
- Central server of graphics and aggregated data (single IP address)

WorkPlaceAX (and the NiagaraAX platform)

This is the engineering tool that is used to create applications by defining components and linking them together to create logic and displays. It allows the user to develop comprehensive applications for control, monitoring, alarming, data logging, reporting, and real-time data visualization using a single graphical tool. WorkplaceAX can run as a standalone application on a PC, can be bundled with an AXSupervisor, or be served up to a browser from an embedded JACE platform.

"Platform" is the name for everything that is installed on a NiagaraAX host that is not part of a NiagaraAX station. The platform interface provides a way to address all the support tasks that allow you to setup and support and troubleshoot a NiagaraAX host. The platform daemon is a compact executable written in native code, meaning the daemon does not require the NiagaraAX core runtime, or even a Java VM. The platform daemon is pre-installed on every JACE controller (even as factory-shipped), and runs whenever the JACE is booted up.

Platform tools require a platform connection, which is different from a station connection. When connected to a NiagaraAX platform, Workbench communicates (as a client) to that host's platform daemon (also known as "niagarad" for Niagara daemon), a server process. Unlike a station connection, which uses the Fox protocol, a client platform connection requires Workbench, meaning it is unavailable using a standard Web browser.

A NiagaraAX host's platform daemon monitors a different TCP/IP port for client connections than does any running station (if any). By default, this is port 3011. Finally, the platform daemon uses "host-level" authentication for signon access. This means a user account and password separate from any station user account, and should be considered the highest level access to that host.

Browser user interface

The term "browser user interface" or "BUI" simply indicates user access of a NiagaraAX station (JACE controller or AXSupervisor) using a standard web browser. The BUI interface provides remote administration and monitoring of building control systems on an intranet or over the Internet.

CHAPTER 2

NiagaraAX and networking

About IP addressing

In the most widely installed level of the Internet Protocol (IP) today, an IP address is a 32-bit number that identifies each sender or receiver of information that is sent in packets across the network. IP addresses are actually made up of two parts, the network portion (identifies a particular network) and the host portion (identifies a particular device).

The network portion is used to determine whether other IP addresses are on the local network or a remote network. On the network, between the router that moves packets from one point to another along the route - only the network part of the address is looked at. All hosts on a given network share the same network number and can communicate with one another without being routed through an IP router.

In addition to the network address or number, information is needed about which specific machine (or host) on the network is sending or receiving a message. So the IP address needs both the unique network number and a host number (the host number must be unique within the network). The host number is sometimes called a local or machine address.

All NiagaraAX devices are configured with an IP address. An IP address is assigned to a host by an administrator and is not hardware specific, but rather is configured through a software interface on each host.

Private IP addresses

There are three blocks of IP addresses set aside for use in private networks. This allows organizations to implement IP addressing without having to apply to an ISP for unique global IP addresses for every host. Because these addresses are blocked by the global Internet routing system (the routers will drop packets from these addresses), the address space can simultaneously be used by many different organizations. However, hosts using these private addresses cannot be reached directly from the Internet (nor can they communicate to the Internet). If your NiagaraAX devices are on a VPN or all on the same LAN/WAN, you can assign private IP addresses to them, as required. The following list includes the sanctioned private addresses for each class.

- Class A - 10.0.0.0 to 10.255.255.255
  This provides one network of 16,777,216 hosts
- Class B - 172.16.0.0 to 172.31.255.255
  This range provides 16 networks, each with 65,534 hosts
- Class C - 192.168.0.0 to 192.168.255.255
  This address range provides 254 networks, each with 254 hosts

To use the security of private IP addressing and the flexibility of public addressing, NiagaraAX devices and networks may be configured to use network address translation with one or more of the following: proxy servers, firewalls, or routers.

Network address translation (NAT)

To overcome IP address limitations, the use of private addresses is commonly teamed with a technique called Network Address Translation (NAT) to provide access to the Internet by hosts that require it. Typically, some device (such as a router, firewall, or proxy server) has a supply of legitimate addresses and translates between a private address and a public one for a host that needs access to or from the Internet.

Note: *Some administrators choose to implement IP addressing on their private networks using legitimate addresses (such as 205.254.1.0) that have not been assigned to them. They use NAT to translate between the legitimate external address and the illegitimate internal address. Depending on how the Internet connection works, this may cause problems in the event of a failure in the connection. It is always best to use private address ranges instead.*

See Figure 3 for examples of private networks and routers using NAT to translate between private and public IP addresses.

IP routing and default gateway

Any NiagaraAX host on a network can communicate with another host on the same network. However, if a host wants to communicate outside its network, the administrator sets a default gateway on the host which is the IP address of a router used for communication with other networks.

The router examines an IP packet from the host and compares the destination address with a table of addresses it holds in memory. If it finds a match, it forwards the packet to the address associated with the table entry. This address could be on another network attached directly to the router, or the router may forward it to another router that knows about the network of the destination address.

Routers build these tables of destinations in a number of different ways. For simple networks, the router may load a table during start-up that was manually created by the administrator. However, more typically, routers use a broadcasting protocol to advertise the networks that they know about. Routers use other protocols to discover the shortest path between networks (the least number of hops from router to router). Routes are updated periodically to reflect changes in the availability of a route.

Routing example

This example illustrates a typical network architecture of routers and default gateways in several networks. The following points are illustrated in Figure 3

- Company XYZ has a single network using the private class C address of 192.168.1.0.
- The router is performing NAT to translate the address of Host C to a legitimate address on the external network when Host C uses the Internet.
- The network is not subnetted.
- Company ABC uses the same private class C network, but has subnetted it to provide two networks, one at each site.
- The router is performing NAT to translate the addresses of hosts from both private networks to addresses on the external network when the hosts access the Internet.

Figure 3 *Typical IP configuration*

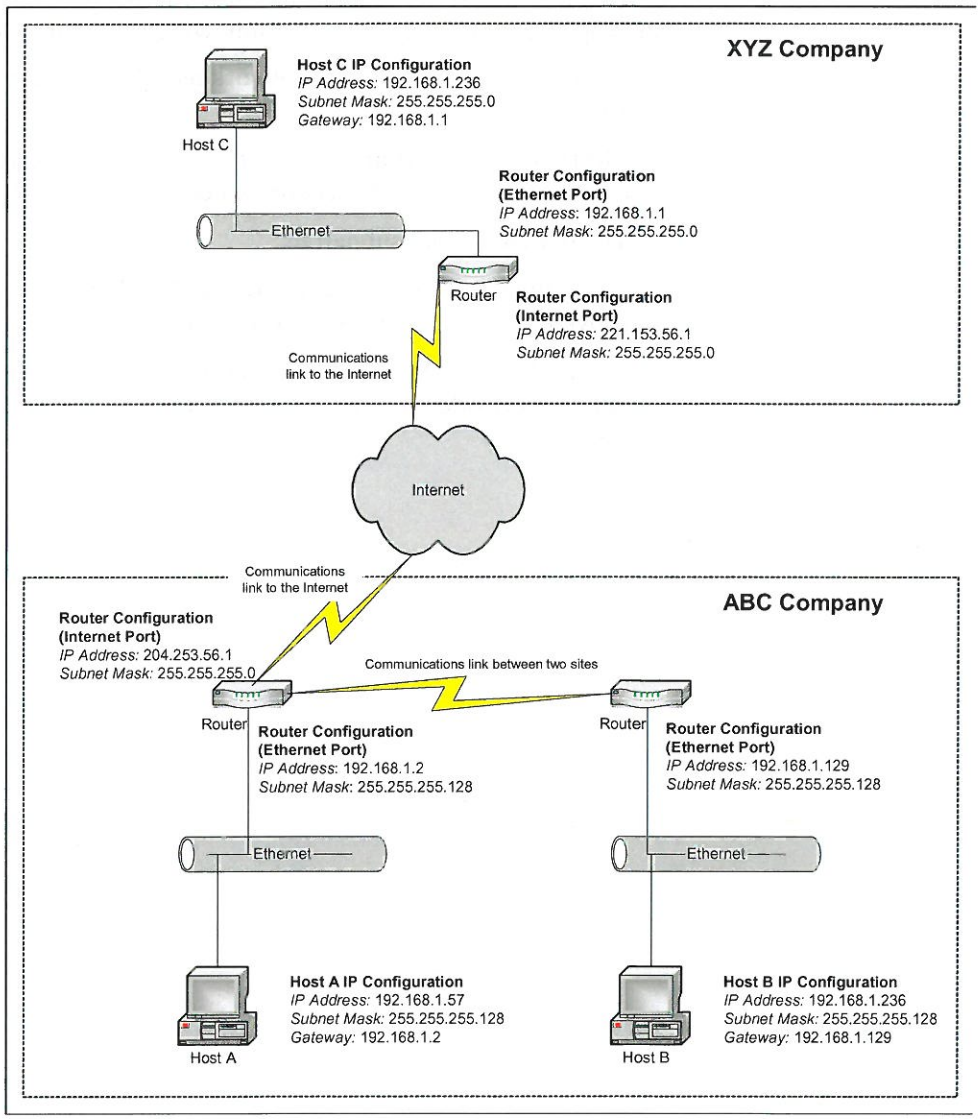

Static and dynamic IP addressing in NiagaraAX

Once the administrator has decided exactly what IP addressing scheme to implement, there are a number of methods to actually get the IP address (and subnet mask and default gateway information) onto the host. The simplest method is to configure this information manually on each machine, using the software provided by the operating system. However, this is quite time consuming in a network of more than a few hosts.

Most larger networks are made up of two types of devices: those that need a static (non-changing) IP address because they are accessed frequently by other devices, and most other hosts, which are rarely accessed by others. Hosts that are accessed

frequently (like servers and printers) are typically configured manually with a static IP address. The remaining hosts are configured to receive a dynamic address using a protocol such as Boot Protocol (BOOTP) or Dynamic Host Configuration Protocol (DHCP). Servers are set up with a pool of addresses to randomly distribute to clients (the host). They can also provide subnet mask, default gateway information, and DNS server information. The host is configured to request this information from the server using BOOTP or DHCP. When the host boots, it sends a broadcast message requesting an IP address, and a server responds with one of the numbers from the pool (and the remaining information). However, since the host is not necessarily guaranteed to receive the same IP address every time it boots, if a static IP is required, DHCP servers can be configured to provide a static IP address to a particular host.

You should provide a stable IP address for your NiagaraAX hosts. You can do this by making the address "static" (permanent) or by reserving the address on a DHCP server using the MAC address of the NiagaraAX host.

NiagaraAX and DHCP

DHCP is supported by the operating systems used by all NiagaraAX hosts, though static IP addresses provide the most reliable connectivity. To reliably use DHCP, it is better to reserve an IP address in the DHCP server for the MAC address of each NiagaraAX device. This ensures that the NiagaraAX device receives the same IP address whenever it requests one from the DHCP server.

Consider the following points concerning DHCP and NiagaraAX networking:

- Static IP addresses provide the most reliable connectivity between NiagaraAX hosts. Problems can develop, for example, if one station is assigned a new IP by the DHCP server and it has links to other stations. Those links stop working until those stations are restarted. The DHCP server should be configured to allocate the same IP address to the NiagaraAX host whenever it requests one. Note that this address is not really a static IP address, but rather is a dynamic one reserved by the DHCP server for the particular host.
- For the DHCP administrator to set up the reserved IP address, you will need to provide the MAC address of the NiagaraAX host to the DHCP administrator.
- You can set up DHCP on a JACE-4/5 or a JACE-2 using the TCP/IP Configuration view of the Workbench platform but you must use Windows networking tools to set up DHCP on any NiagaraAX host running the Windows OS.
- Windows 2000 and Windows XP DHCP servers can be configured to update DNS servers on behalf of devices that do not support dynamic update. NiagaraAX does not support Dynamic DNS.

About the HOSTS file

HOSTS files were the original mechanism used to resolve an IP address to a name. The HOSTS file is a text file residing on each local machine. Each line of the text file typically contains an IP address of a host and a name for it.

The primary limitation of this name resolution technique is that the HOSTS file is only usable by the machine on which it resides. For example, you could add an entry to Host A's HOSTS file mapping Host B's IP address to a name of "Pluto". Any application running on Host A could then contact Host B using the name "Pluto". However, Host B would not be addressable with "Pluto" by other hosts since the mapping only resides in Host A's local HOSTS file. That means another host wanting to contact "Pluto" would need a similar entry in its local HOSTS file. Therefore, HOSTS files are difficult to maintain when you have more than a few hosts, and other technologies such as DNS, DDNS and WINS are often used instead.

One of the advantages of using a HOSTS file is that it is not dependent on a server for name resolution, as is required in the other resolution protocols. For a higher degree of stability it is good to use a HOSTS file on all NiagaraAX hosts.

The HOSTS file is always the first place a host looks for name resolution, and if it finds an entry it uses it and does not check other name sources.

About DNS

The domain name system (DNS) is the mechanism used by hosts to resolve names on the Internet, and on some private networks as well. Hosts that participate in the DNS system have names like "www.tridium.com". This is referred to as the fully qualified domain name. These names must be globally unique so the data intended for that domain is accurately routed. To accomplish this, the domain names are controlled by ICANN, and governed like the IP address system with authority granted to accredited name registrars located throughout the world.

Domain names

As with IP addresses, the name is comprised of two parts: the domain name (tridium.com) and the host portion (for example, "www").

Name Servers

The first level of the domain naming system is organized into classes such as .info, .com, and .org, and countries, such as .uk, and .bm. Top-level domains are then divided into second-level domains such as va.us, co.uk, and tridium.com. A second level domain can then be subdivided into a third level (such as bbc.co.uk) and so forth. Domains can actually be subdivided into 127 levels, but it is rare to see a name with more than 4 levels.

NiagaraAX and DNS

NiagaraAX supports DNS as an alternative to the HOSTS file, although the most reliable connectivity to other NiagaraAX hosts is provided through the use of a HOSTS file on each NiagaraAX station. With HOSTS files, there is no dependency on a remote DNS server for name resolution.

Many host operating systems (OSs), support DNS. Administrators configure the host to look up entries in one or more DNS servers. The host can be configured manually, or it can dynamically receive this setting with DHCP.

When a host tries to contact a particular name (for example, trying to browse www.bbc.co.uk), it first looks in the local HOSTS file, and upon finding no entry, checks with its name server. The name server either returns the information if it knows it, or contacts a root name server, which passes it the address of one of the name servers responsible for the .uk domain. Then that server returns the address of a second-level server handling co.uk, which returns the address of the bbc.co.uk server, which finally returns the IP address for the host named "www". The browser uses the IP address to fetch the data to open the page.

About WINS

WINS is Microsoft's Windows-only name resolution protocol used by Windows machines prior to Windows 2000. Like DNS, WINS is also implemented with a series of servers that maintain databases of host names to IP addresses. However, setting up WINS is easier than setting up a DNS because WINS actually receives most address records automatically. Administrators name hosts and set one or more WINS server as part of the machine configuration. When a host boots it tells the WINS server its name and current IP address. However, the name that is registered is not in the DNS format of host.domain.xxx, but is in a proprietary format.

WINS is typically used within a company to provide host name resolution of company-specific Windows hosts. It is often teamed with DNS to provide external resolution.

A pre-Windows 2000 Microsoft host that needs to do a name lookup first looks it up on a WINS server, and if a match is not returned, then the DNS server is checked.

About DDNS

The dynamic domain name service (DDNS) allows a device with a dynamic IP address to be accessed using a well-known domain name. DNS servers handle mapping a name (such as MyJACE.EasyIP.net) to an IP address. With DDNS, each time a host receives a new IP address, it sends an update to the name-to-IP-address mapping on the DDNS server. The DDNS function can be implemented on hosts connecting to an internal LAN (with company DDNS servers) and the Internet (with third-party DDNS services). When configuring a JACE with captive ISP, many times you cannot obtain a static IP address for the JACE from the ISP. The DDNS may be implemented on Win32-based controllers with an Internet DDNS provider.

About the NiagaraAX network

Currently, by default, every NiagaraAX station has a *Niagara Network* under its *Drivers* container. The Niagara Network is where data is modeled that originates from other stations. Generally, this is done using the same driver architecture used by other (non-Niagara) drivers. However, a Niagara Network has the following unique differences:

- Data points under a Niagara Station are "read only" points of the types: Boolean Point, Enum Point, Numeric Point, or String Point.
- Connections between stations occur as client and server sessions using the Fox protocol. The requesting station is the client, and target (responding) station is the server. A Workbench connection to a station operates identically, where Workbench is the client, and station is server. Client authentication (performed by the server) is required in all Fox connections.

Figure 4 shows how the NiagaraAX network is represented in Workbench.

Figure 4 *Niagara Network in Workbench*

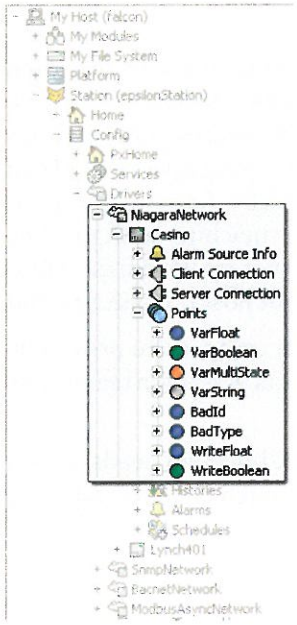

About non-NiagaraAX networks

In any NiagaraAX station, one or more driver networks are used to fetch and model data values using proxy points, lower-tier components in that particular driver's architecture. To support a driver's proxy points, the station must have that driver's network architecture.

Networks are the top-level component for any NiagaraAX driver. For drivers that use field bus communications, such as Lonworks, BACnet, and Modbus (among many others), this often corresponds directly to a physical network of devices.

Often (except for BACnet), the network component matches one-to-one with a specific comm port on the NiagaraAX host platform, such as a serial (RS-232 or RS-485) port, Lonworks FTT-10 port, or Ethernet port.

Note: *A BACnetNetwork component is unique because it supports multiple logical BACnet networks, which sometimes use different comm ports (e.g. if a JACE-4/5 with BACnet MS/TP, one or more RS-485 ports). See the BACnet Guide for more details.*

Other "non field bus" drivers also use a network architecture, for example the Ndio (Niagara Direct Input / Output) driver has an NdioNetwork to interface to physical I/O points on the host JACE (Ndio applies only to a JACE model with onboard I/O or with an attached hardware I/O board). Also, "database" drivers also use a network architecture, for example the "rdbSqlServer" driver includes an RdbmsNetwork. (Database drivers apply only to Supervisor or SoftJACE hosts.).

Within a driver architecture are a hierarchy of components that have properties that affect network activity. These component properties are used to monitor and control the network status (enabled, disabled, health, and similar items) and communication schedules, including polling updates and refresh rates.

Protocols

There are typically three network protocols that are used to integrate the four programs that are internal to Niagara (see Types of NiagaraAX programs):

Fox is the proprietary TCP/IP protocol used for station-to-station and workbench-to-station communication.

HTTP is the standard protocol used by web browsers to access web pages from a station.

Niagarad is the proprietary protocol used for workbench-to-daemon communication.

Niagara's design goal is to integrate cleanly with all networks and protocols. The Niagara software suite implements a highly efficient adaptation of the JavaBean component software model and Internet technologies to provide true interoperability across a wide range of automation products. The Niagara object model can be used to integrate a wide range of physical devices, controllers, and primitive control applications including lonMark profiles, BACnet objects, and legacy control points. The architecture supports future enhancements by allowing legacy systems to be brought forward, where they can readily adopt new standards, solutions, and applications.

Enterprise-level software standards include Transmission Control Protocol/Internet Protocol (TCP/IP), eXtensible Markup Language (XML), Hyper Text Transfer Protocol (HTTP), and others. These standards provide the foundation on which to build solutions that allow information to be shared between the control system and the enterprise information system.

Types of NiagaraAX hosts

NiagaraAX hosts may be classified as either QNX-based hosts or Win32-based hosts, depending on the operating system that they use. The following topics describe the characteristics of both host types:

- QNX-based NiagaraAX hosts
- Win32-based NiagaraAX hosts

QNX-based NiagaraAX hosts

Sometimes called "embedded" JACE controllers, these include JACE-2, -4, and -5 series controllers shipped with the QNX operating system. These devices use onboard flash memory for file storage. An option for an onboard dialup modem is available, or if needed, an external modem can be used.

The QNX-based controllers are not Windows hosts and therefore do not support WINS for name resolution of Windows hosts. They have the following characteristics:

- used to integrate legacy, LonWorks, and BACnet devices
- optionally provide browser user interface to NiagaraAX installation (JACE-2, JACE-4, and JACE-5 with UI option)
- support host name lookup on a DNS server
- can be a DHCP client
- cannot be a Windows DDNS or Active Directory client
- primary communication port is a 10/100mbps ethernet port with an RJ-45 connector. Other connections may include serial ports (RS-232, RS-485) and specialized ports, such as LonWorks FTT-10, depending on host.

All QNX-based JACE models have an integral backup battery. The backup battery allows continuous operation during brief power outages. The "JACE power monitoring" feature allows monitoring AC power and backup battery level, and a configurable delay for orderly shutdown of the JACE upon AC power failures. You can access power monitoring of a QNX-based JACE in the PowerMonitorService in a running station.

Win32-based NiagaraAX hosts

Win32 (Windows 32 bit) platforms include the JACE-NX, and any "Supervisor" PC host. As their operating system, Windows XP (if a Supervisor, possibly Windows 2000) is used, and file storage uses a hard drive. A JACE-NX has an option for an internal dialup modem, or it can use an external modem. If needed, a Supervisor PC's dialup modem can be an either internal or external type. They have the following characteristics:

- operate in a Windows environment just like any other Windows host
- used as a server for NiagaraAX integrations
- provides GUI to NiagaraAX integrations

- can be used to engineer and maintain NiagaraAX integrations
- can be a Windows DDNS client
- supports host name lookup on a DNS server
- can be a DHCP client
- primary communication port is ethernet; one or more RS-232 serial port connections

NiagaraAX host networking technologies

Networking technologies that are associated with NiagaraAX hosts, include the following:

Ethernet: QNX-based and Win32-based hosts Ethernet is required for NiagaraAX hosts for configuration.

TCP/IP (IPv4): QNX-based and Win32-based hosts TCP/IP is required for NiagaraAX hosts for configuration. TCP/IP use includes:

- IP Address (x.x.x.x)
- Subnet Mask
- Default Gateway

Public IP Address: QNX-based and Win32-based hosts Public IP Address is required for any NiagaraAX host that must be reached from the Internet.

DHCP: QNX-based and Win32-based hosts DHCP is supported on these hosts, however, in most NiagaraAX architectures, hosts require a static IP address to facilitate data passing.

HOSTS file: QNX-based and Win32-based hosts HOSTS files are local to each host, so they do not require dependency on a remote server for name resolution. Therefore, they are the recommended method for name resolution for NiagaraAX hosts.

DNS: Win32-based hosts DNS is supported in NiagaraAX, Win32-based hosts. However, the most reliable connectivity to other NiagaraAX hosts is provided through the use of a HOSTS file on each NiagaraAX station.

WINS: Win32-based hosts WINS is supported in NiagaraAX, Win32-based hosts. However, the most reliable connectivity to other NiagaraAX hosts is provided through the use of a HOSTS file on each NiagaraAX station.

DDNS: QNX-based and Win32-based hosts DDNS is available for NiagaraAX, Win32-based hosts (using Windows DDNS) and for QNX JACEs using a third party DDNS such as tzo.com.

Network Address Translation (NAT): QNX-based and Win32-based hosts Network Address Translation is supported on all NiagaraAX host operating systems.

Proxy Servers: QNX-based and Win32-based hosts Communication via proxy servers are supported on all NiagaraAX host operating systems.

Firewalls: QNX-based and Win32-based hosts NiagaraAX hosts operate well in many firewall environments, provided that are configured properly.

NiagaraAX network examples

There are many different ways to design and configure NiagaraAX networks. It is possible for each individual networking environment to combine with the project requirements to present a unique challenge for maximizing network efficiency. In addition to understanding general networking principles, it is important to understand NiagaraAX networking.

Please note the following general information points about connecting NiagaraAX devices to a LAN or WAN:

- Connection between NiagaraAX hosts on a LAN/WAN will be faster and more reliable than connection via modem (either direct dial or through an ISP).
- Niagara proxy points are designed to be used across connections that are always available. The design assumes that connections between linked hosts go up or down infrequently. Therefore, proxy points should only be used on a LAN or WAN, and only on a LAN/WAN that provides reliable connection between hosts.
- Access to hosts with private IP addresses can be made from hosts on the same LAN/WAN. Any host (NiagaraAX or other) that needs to be accessed directly from the Internet must have a public IP address. External hosts can only access privately-addressed internal hosts through a virtual private network (VPN).
- When connecting to NiagaraAX hosts behind a firewall, certain ports need to be opened on the firewall for access by a BUI client or by an engineering station running Workbench or the platform tools. For more information on ports in the NiagaraAX environment, see About NiagaraAX ports.
- The key to success in many installations is early involvement by the IT department at the site. If you are going to connect devices to their LAN/WAN you need to check with them before implementing to learn about their policies so you can follow them.

The following examples represent some of the major characteristics of typical NiagaraAX system architectures and provide some common practices for engineering NiagaraAX environments in both single-site and multiple-site applications.

NiagaraAX single-site network application

In this example, a customer has a single site with a LAN, connecting to the Internet through a firewall (refer to Figure 5). The firewall provides security, as well as network address translation (NAT), which provides company devices with public IP addresses so that they are accessible from the Internet.

The site has multiple JACE controllers controlling field devices. These JACEs have private IP addresses so they are not accessible by the browser user interface (BUI) user located across the Internet. However, they are available to the BUI user located on the same LAN.

The AXSupervisor has a public IP address assigned to it in the firewall. It can be reached by the BUI user located across the Internet (the external user) and also the internal BUI user. In this example, the AXSupervisor has been engineered to include Px pages that show real-time information originating from the JACEs. To accomplish this, The AXSupervisor proxies data in the different JACE stations. In addition, the AXSupervisor functions as a supervisory station, archiving the other stations' data logs, alarms, and so on. This data is available to either BUI user.

The network site administrator chooses to place the AXSupervisor outside the enterprise LAN but just behind the firewall. This allows faster access by the external BUI user because the network traffic between the external host and the AXSupervisor does not come onto the customer's enterprise LAN (which may be congested).

Figure 5 *Typical single-site (LAN) architecture*

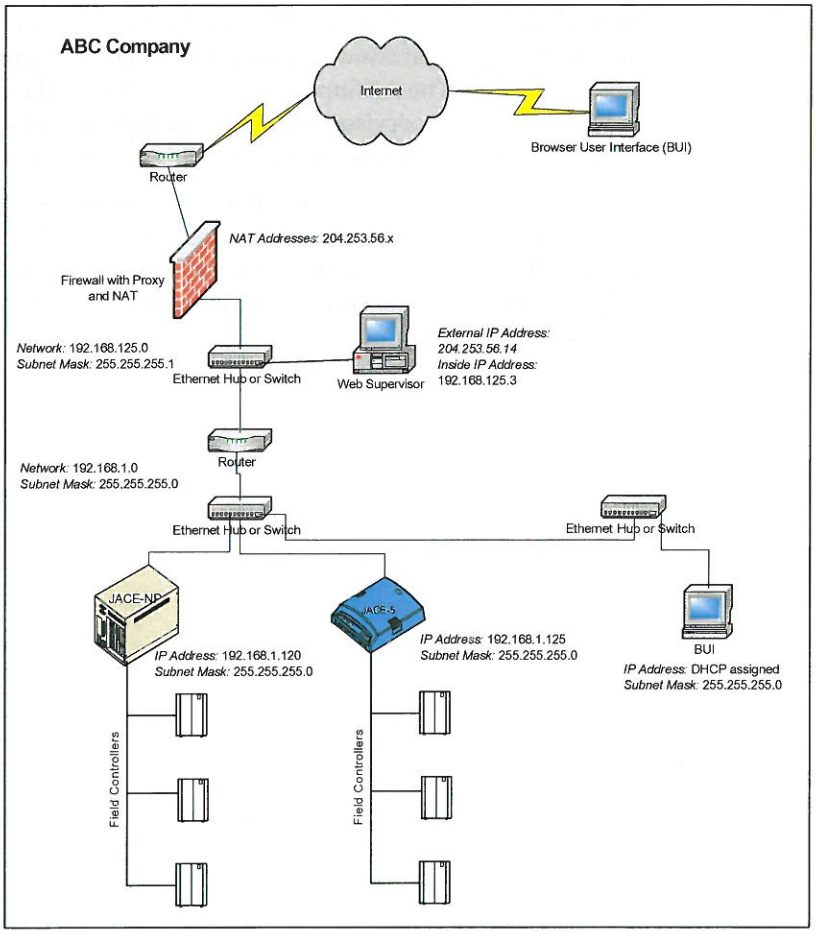

NiagaraAX multi-site network application

In the example presented in Figure 6, ABC Company has added a JACE to a LAN at another site. The sites connect to each other using a private data line that is leased from a phone company, thereby creating an enterprise-wide WAN.

Niagara proxy points are used to update the "live" graphic (Px) page presentations on the AXSupervisor. However, the network site administrator decided to move the AXSupervisor onto the enterprise LAN at the primary site, since there is more data traffic generated internally than the occasional external BUI use. The internal IP address of the AXSupervisor changed to one in the IP range of the new network to which it is attached, but the external address (because of NAT) did not change.

Figure 6 *Typical multi-site (WAN) architecture*

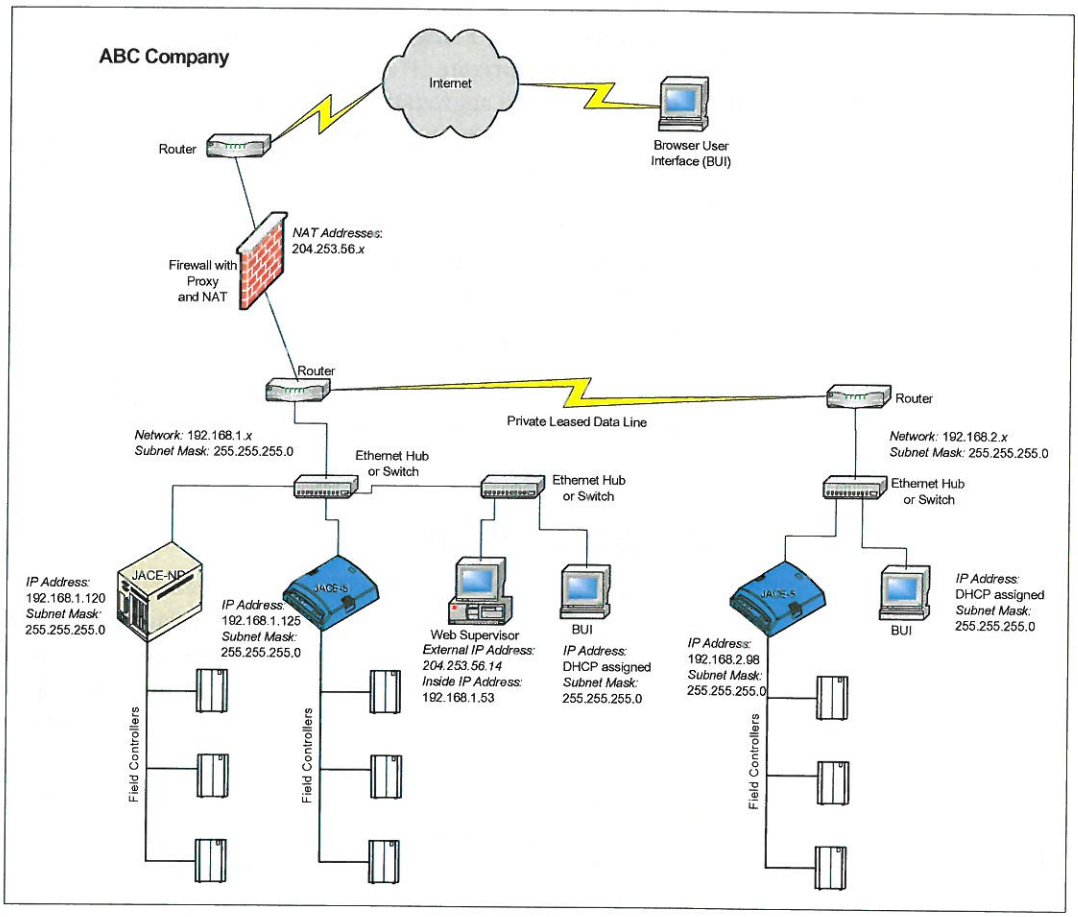

Managing NiagaraAX hosts

All of Tridium's NiagaraAX products can co-exist on a Windows 2000 or Windows XP infrastructure. Since all of the Win32-based controllers are built on the Windows platform, they appear in the Windows Network Neighborhood and can be browsed. At your discretion, these Win32-based devices can be members of the Windows domain or Active Directory.

The tools and methods that you choose to use for managing a NiagaraAX environment depend not only on the network design, but also on your access to the network and the tools that you have available to take advantage of that access. Moreover, each management task may be more specifically suited to one network management tool than another. Some of the specific NiagaraAX network management tools include the following:

- AXSupervisor
- NiagaraAX platform
- Other tools

AXSupervisor

You can design a NiagaraAX system so that it allows you to manage a facility's control equipment using a single AXSupervisor with a public IP address. Proxies of data in JACEs with private IP addresses to the exposed AXSupervisor can provide integration and aggregation of the information contained in the JACEs. However, if you need to maintain individual JACEs that are using private IP addresses on the network, you need to have access to at least one of the following:

- on-site network connectivity
- telephone line for direct dial into Windows RAS on a AXSupervisor or JACE. Once dialed in, you can reach the additional NiagaraAX devices.
- another non-NiagaraAX dialup solution into the network
- access to the AXSupervisor via remote control software. You can use Workbench on the AXSupervisor to manage the other hosts.
- VPN connectivity

NiagaraAX platform

Platform is the name for everything that is installed on a NiagaraAX host that is not part of a NiagaraAX station. The platform interface provides a way to address all the support tasks that allow you to setup, support and troubleshoot a NiagaraAX host. The following list includes a summary description of what you can do with the platform, including the functions, views, and typical usage of the platform.

Dialup Configuration This view is used to configure the platform's dialup modem, including settings for a "captive network." If a QNX-based JACE, separate "listening" settings apply for receiving dialup connections.

User Manager This view applies to remote Win32 platforms (JACE-NX). To access host Windows OS user and group accounts, including ability to add or delete users/groups, change passwords and group members.

Distribution File Installer This view is used to compare the remote platform's NiagaraAX runtime environment (nre) to locally available distribution (.dist) files, and if desired, to update the remote platform. The nre is divided into two separate .dist files: a "config" and a "core," where the config is customizable after installation.

File Transfer Client This view is used to copy files between your Workbench PC and the remote NiagaraAX platform (in either direction).

Lexicon Installer This view is used to install NiagaraAX lexicon files from your Workbench PC to the remote NiagaraAX platform, in order to provide non-English language support.

License Manager This view is used to review, install, save, or delete licenses and certificates on the remote NiagaraAX platform.

Software Manager This view is used to review, install, update, or uninstall "installable software" on the remote NiagaraAX platform. This includes NiagaraAX modules (.jars) as well as separate .dist files for NRE core, Java VM, and (QNX) OS. The Software Manager compares software installed on the connected platform against that available (locally) on your Workbench PC.

Platform Administration This view is used to perform configuration, status, and troubleshooting of the NiagaraAX platform daemon. Included are commands to change time/date, backup all remote configuration, and reboot the host platform.

Station Copier This view is used to install (copy) a station from your Workbench PC and the remote NiagaraAX platform, including different file-level options. Also to backup (copy) a station in a remote platform to your Workbench PC, or to delete a remote station. You can easily rename any copied stations.

Station Director This view is used to start, stop, restart, or kill a station on the NiagaraAX platform. Output from the station displays in the view pane, useful for monitoring and troubleshooting. You also configure a station's "Auto-Start" and "Restart on Failure" settings from this view.

TCP/IP Configuration This view is used to review and configure the TCP/IP settings for the network adapter(s) of the NiagaraAX platform.

Remote File System This view is used to navigate among all files and folders under the platform's Niagara root (system home) directory, including the ability to make local copies on your PC.

About the platform connection

A platform connection is different than a station connection. When connected to a NiagaraAX platform, Workbench communicates (as a client) to that host's platform daemon (also known as "niagarad" for Niagara daemon), a server process. Unlike a station connection, which uses the Fox protocol, a client platform connection requires the full Workbench application, therefore it is unavailable when you are running Workbench in a standard web browser.

The platform daemon is a compact executable written in native code, meaning the daemon does not require the NiagaraAX core runtime, or even a Java VM. The platform daemon is pre-installed on every JACE controller (even as factory-shipped), and runs whenever the JACE has booted up.

Also, a NiagaraAX host's platform daemon monitors a different TCP/IP port for client connections than does any running station (if any). By default, this is port 3011. Finally, the platform daemon uses "host-level" authentication for signon access. This means a user account and password separate from any station user account, and should be considered the highest level access to that host.

Types of platform administration functions

The following list provides a summary description of platform administration functions that are available using the platform connection in Workbench:

- View Details
  Provides platform summary data, available to the Windows clipboard.

Includes all summary information shown in main Platform Administration view, plus installed modules, and so on.

- Update Authentication
  For dialog boxes to change platform login access (user name and password). In "QNX-based" platforms this is simple, as there is only one platform administrator. "Win32-based" platforms offer a choice of a single (digest) platform account, or use of Windows OS user accounts (basic authentication).
- Change HTTP Port
  For a dialog box to change the HTTP port for the host's platform daemon from (default) port 3011 to some other port.
- Change Date/Time
  For a dialog box to change the hosts's current date, time, and time zone, as used by that host's OS.
- FTP/Telnet (QNX-based only)
  For a dialog box to enable/disable both FTP and Telnet access to the JACE, or change the default port number used by each one.
- Change Output Settings
  Provides a dialog box to change the log level of different processes that can appear in the platform daemon output.
- View Daemon Output
  Provides a window in which you can observe debug messages from the platform daemon in real time, including the ability to pause the output and stream output to a file.
- Set Module Filter
  Provides a dialog box to change the module content level of the host. Used very infrequently.
- Backup
  Make a complete backup of all configuration on the connected host platform, including all station files as well as other NiagaraAX configuration.
- Commissioning
  One way to launch the Commissioning Wizard, as an alternative to right-clicking on Platform in the Nav tree.
- Reboot
  Provides a method to reboot a JACE platform, which restarts all software including the OS and JVM, then the platform daemon, then (if so configured in the Station Director) the installed station. If you click this, a confirmation dialog box appears. If you answer yes, the JACE is rebooted and the platform connection drops.

About the platform daemon on a PC

When you install NiagaraAX on your PC, you have the option to install and start Platform Daemon The default selection is to install.

Important: *It is important to understand that you need the platform daemon locally installed and running in order to do any of the following:*

- host a NiagaraAX station on your local PC, such as for a Supervisor. This lets you open a Workbench client platform connection to your local ("My Host") platform.
- use Workbench to open a remote JACE platform (or station) using a dialup connection, that is, using your PC's modem. (The platform daemon is not used to open a LAN-connected platform).

Once installed and started on your PC, you can see the platform daemon listed as a Niagara service from your Windows Control Panel, by selecting Administrative Tools->Services.

Note: *Following NiagaraAX installation on your PC, you can alternately install and start the platform daemon at a later time, if needed. Under the Windows Start menu, do this by selecting Start->All Programs->Niagara <3.x.x>->Install Platform Daemon*

In summary (except for dial-out support), your PC's local platform daemon is not used in making client connections to other NiagaraAX hosts, only to provide the ability to run a station locally.

Other host administration tools

Following, is a list of some of the other NiagaraAX tools that are available for host administration tasks.

Platform Services This service allows access from a running station–in other words, from the station's perspective on its host platform. Unlike the various other platform views, a platform connection is not needed to access the platform services. Instead, you need only a standard station (Fox) connection. Platform services do not provide the full set of functions available in Workbench, as when you have a platform connection. For example, you cannot install or upgrade software, or transfer stations and files. However, a number of important configuration views for the platform are made available under a station's PlatformServices.

Included under PlatformServices are a TcpIpService and LicenseService, providing station (Fox) access to dialogs used in platform views, for instance the TCP/IP Configuration dialog box. These services support installations where all configuration must be possible using only a browser connection (and not Workbench connected to the JACE's platform daemon). Also included under PlatformServices, for any QNX-based JACE, is a serial port and power monitoring service.

System shell Any QNX-based JACE (JACE-2, -4, and -5 series) has a "system shell," providing low-level access to a few basic platform settings. Using a special JACE power-up mode, you can access this system shell using a serial connection to the JACE's onboard RS-232 port. Typical usage is for troubleshooting. However, in the case of IP address mis-configuration, you may need to use this shell in order to regain access to the unit.

Tip: *Depending on your preference, as an alternative to reconfiguring your PC's IP address in Windows (to initially connect to a new JACE), you may wish to use the serial system shell to set the JACE's IP address. If done as the first step, afterwards you could connect normally (Ethernet/IP) and perform all other NiagaraAX software installation/platform configuration using Workbench and the Commissioning Wizard. This method would save you from having to re-configure your PC's IP address settings in Windows: first to connect to the JACE as shipped from the factory, and then back again to its original settings.*

Serial tunneling A NiagaraAX station running one or more serial-based drivers can provide "tunneling" access to its connected devices. This allows you to use a vendor's Windows serial-based application (via the serial tunnel client) to perform device-specific operations. Examples include application downloads or other device configuration.

The tunneling client is separate from NiagaraAX Workbench–meaning that you can install it on various PCs, as needed. The key advantage is that serial tunneling requires only a standard IP connection (to the station), yet provides access as if the client PC was attached to the target serial network via a physical COM port, for example RS-232.

Note: *No special licensing is required to use tunneling features in NiagaraAX.*

NiagaraAX backups

A NiagaraAX station includes a Backup Service. The BackupService provides for complete configuration backup of a JACE to your local Workbench PC or a to a browser PC (for users with Wb web or default Hx profile). By default, the BackupService is included when you create a new station using the New Station wizard. The remote Niagara host (JACE, Supervisor) must have the backup module installed.

A backup is a dist file (a zipped format) including, minimally, the station's config.bog, current station console output (.txt file), and backup.log file. If other station file types and subfolders are not excluded (in the "BackupService configuration"), the backup dist file contains them too–for example, files of type: Px, nav, html, jpg, png, and so forth. Also, the backup dist contains the zipped "nre-config" for that host (including license and certificates files), as well as pointers to the installed "nre-core," OS, and JVM, each by version. Essentially, a backup dist provides a "configuration snapshot" of the entire JACE platform in zipped "dist" file format. This allows for a complete image restoration.

Note: *Not included in a backup is runtime data that is actively managed by the station, such as the alarm and history databases. This data should be "backed up" using standard alarm routing and history archiving to a Supervisor host.*

To restore a backup dist from Workbench, you open a platform connection to the JACE, then use the platform Distribution File Installer to install. Restoring from a backup may be necessary if the host hardware was replaced.

NiagaraAX hosts and network communication

In a NiagaraAX installation there is a wide variety of possible communications between NiagaraAX hosts. The following list presents common types of NiagaraAX host network communication and a description of the communication:

Browser User Interface The BUI is used to initiate communication from any client host to any NiagaraAX host for the purpose of:

- viewing real-time control information
- maintaining a station (through the use of servlets)
- viewing station data (logs, alarms, schedules, and other information

Station and host administration These are communications that are typically initiated by a Systems Integrator (SI) from an AXSupervisor or remote PC using Workbench or platform tools. The receiving host (or server) could be any NiagaraAX host. The communication could be initiated to perform any of the following tasks:

- create a new station
- maintain or administer a live station
- change host configuration
- add users to the host
- install a station
- install software or licenses
- perform database administration

Archiving this is communication that is initiated by any NiagaraAX host that is set up to archive logs (histories). These logs are either "pushed" (exported) to or "pulled" (imported) by a remote AXSupervisor for long term storage.

Alarming archiving This is communication initiated from any NiagaraAX host that is set up to remotely archive alarms. These alarms may be sent to any AXSupervisor that is set up to archive the alarms. Usually the recipient host runs the Alarm Console for the purpose of acknowledging the alarms.

Alarm console acknowledgement This is communication initiated from an AXSupervisor to acknowledge an alarm on the NiagaraAX host that is archiving the alarm.

Global data passing This is communication that may be initiated from any NiagaraAX host to any other NiagaraAX host for the purpose of exchanging real-time data via the Niagara proxy points.

Station monitor This communication is a timed ping that may be initiated from any NiagaraAX host to the IP address of any other NiagaraAX host for the purpose verifying network connectivity. If the ping fails over a specified time, the initiating host generates a station alarm.

Other Other communications could include the following:

- Telnet, FTP, or Hyperterminal communications from Win32-based hosts to QNX-based hosts, as "alternative" means to accomplish host or station maintenance.
- Email alarm notification (notifications or acknowledgements) from any NiagaraAX host that is running the email service to any SMTP mail server.
- Remote printer alarm notification from any AXSupervisor to a networked printer.
- Time synchronization from any NiagaraAX host with the TimeSync service to a time server in order to synchronize the host time. The server could be a NiagaraAX host providing this function or any other server running the Internet Time Protocol.
- Station backups using a connection from a NiagaraAX Workbench that has the backup service installed. The target NiagaraAX host (JACE, Supervisor) must have the backup module installed.

CHAPTER 3

NiagaraAX security

NiagaraAX security model

NiagaraAX includes a comprehensive security model that provides a high degree of flexibility in managing access privileges to a NiagaraAX station (a JACE, AXSupervisor, or a Workbench-based tool such as WorkPlaceAX). The security model addresses both the platform connection and a station connection.

Platform connection Platform connection refers to a connection from a Workbench-based engineering tool (e.g., the Vykon WorkPlaceAX) to the host's "platform daemon". The platform daemon is a compact executable that is pre-installed on every JACE controller. It provides support for tasks that allow setup and management of a NiagaraAX host. The platform daemon monitors a different TCP/IP port for client connections than does a NiagaraAX station and uses "host-level" authentication for access. Host-level access is controlled by a set of user accounts and passwords which are separate from any station user account and are part of the host operating system. On an AXSupervisor running on a Windows host, for example, platform user accounts would be part of the Windows user accounts.

The host-level user account provides Administrator Level access making the platform connection the highest level of access to a NiagaraAX host. It is used to copy a new station database to the host, or start and stop the station on the host, among other management functions. Note that the actual user name and password for the platform daemon account can be same as a station user name and password, but the accounts are different. For example, the user would need to enter the user name and password into the logon dialog for the platform even if that user was logged into the station.

Station connection Station connection refers to a connection by a person using either a Workbench-based tool or a web browser to a NiagaraAX station, or connection by one station to another station. The NiagaraAX security mechanism determines if a station connection is allowed, what can be accessed, and what operations can be performed.

The NiagaraAX security model is based on the concept of Users, Permissions, and Categories. Anything that needs to be protected (components, files, histories) is grouped into one or more categories. Each user is granted a set of permissions in each category. This combination of categories and permissions then defines exactly what each user can do with each object in the system. The following sections explain the various aspects of NiagaraAX station security:

Users Typically a "User" represents a human user who needs to connect to a NiagaraAX station, but it can also be used to represent machine accounts for machine to machine (station to station) connections. Every station has two built-in users that cannot be deleted or renamed: "admin" and "guest". User "admin" is always a super user, meaning it has all permissions in every category and can thus access everything in a station. User "guest" is disabled by default. If enabled it provides station access from a web browser with no authentication (user is not prompted to login). User "guest" can then navigate to any object that has been assigned read permission for the user account "guest". Every user of the system should be given a unique user name and password to make the audit logs more valuable.

Users have properties that define how the user navigates around the station, their language preferences, time and unit preference, etc. The main properties of a User related to security and station connection are their login credentials (e.g., user name, and password). Whenever a connection attempt is made, these credentials are checked against the users that have been configured in the station. This process is called Authentication (more detail is provided on this topic below).

Users are stored in the station's local database by default and looked up by the station's User Service. Alternatively, users can be looked up using the Lightweight Directory Access Protocol (LDAP). LDAP provides a central location for administering users of a NiagaraAX system. In addition to storing the login credentials, a user profile can be stored in the LDAP server. This user profile can then be matched to a "prototype user" in the NiagaraAX system to grant the user who is logging in the same privileges as the prototype user. For example, a NiagaraAX station could be configured with a prototype user called "Engineering". This user "Engineering" could then be assigned as a profile to User1, User2, etc. in the LDAP server. When any user who has been assigned this "Engineering" profile in the LDAP server is logged into the NiagaraAX station and authenticated via LDAP, they will have the same access rights and privileges that the "Engineering" user has in the NiagaraAX station.

Authentication Whenever a station connection attempt is made, the user's login credentials are authenticated. There are three authentication points in the NiagaraAX framework:

- Workbench-to-station via the Fox protocol:
  The user is prompted for a user name and password which is used to authenticate the Fox connection. The default authentication mechanism is Digest authentication which encrypts the password so that it is not passed in clear text. If LDAP is used then basic authentication must be configured between Workbench and the station because the station needs the password in text to pass on to the LDAP server. Secure Sockets Layer (SSL) can be used between the station and the LDAP server to connect to the SSL port of the LDAP server.
- Station-to-station via Fox:
  The concept is the same as Workbench-to-station connection but instead of prompting for a user name and password, a pre-configured user name and password stored under the proxy for the station being connected to is used. This pre-configured user name and password (typically with super user

permissions) must correspond to a valid user in the station being connected to.

- Web browser-to-station (HTTP):
  The user is prompted for a user name and password unless the "guest" user account is enabled. The default authentication mechanism is a cookie. Note that in a multi-station installation if the NiagaraAX stations are installed on a DNS domain and accessed using the full DNS name, you can configure stations so that a browser user is authenticated only once (upon initial station connection). In this scenario the same credentials used in the initial login are used in other station connections that the user navigates to via hyperlinks from the original station.

Secure Connections via SSL NiagaraAX supports SSL (Secure Sockets Layer) to provide secure communications between a web browser and the station. SSL works by using a private key to encrypt data that's transferred over the SSL connection between the web browser and the NiagaraAX station thus providing privacy, authentication and message integrity over the public Internet. URLs that begin with HTTPS indicate that an SSL connection will be used. HTTPS can be enabled from the Web Service in the NiagaraAX station if required.

Categories A Category is simply a name for a logical grouping of items or components. Categories are typically named to reflect what the grouping contains. For example, the "Lighting" category group might contain objects related to lighting and the "Floor 1" category might contain objects related to Floor 1. Any object that needs to be protected with individual security rules can be assigned to one or more categories. If an object is not explicitly assigned to any category it inherits the categories of its parent.

Objects store the categories they belong to as a variable length bit string so they can belong to as many categories as needed. Since each object stores the categories it belongs to the NiagaraAX security model provides excellent performance and scalability.

Permissions Permissions define what rights a user has within each of the categories in the station. There are two NiagaraAX permission levels: operator and admin. Within each level, separate options exist for read access, write access and invoke (action) access.

Every user in the station is configured with a permissions map. This map grants the user permissions for each category defined in the station, thereby granting the user permissions for objects assigned to that category. This provides tremendous flexibility. For example, if a user lacks read permissions on any object, that object is not be visible in the client display. If that object contains other components, then none of the child components are visible (regardless of their individual permission level). If a user has read permission on a component but only has read permission of *some* of its child components, then all of those child components are visible but access to the properties and any lower-level components are prohibited on those child components lacking read privilege. Super users are automatically assigned every permission in every category for every object.

NiagaraAX and Niagara R2 security comparison

Niagara R2 provides a robust security model. NiagaraAX builds on the R2 security model and provides better performance and scalability. Niagara R2 allowed for only eight "Security Groups". NiagaraAX provides unlimited (limited by host memory of course) categories.

Also, NiagaraAX provides the following additional features related to security:

- Digest authentication
- LDAP support
- HTTPS support
- Single signon from a web browser if using DNS configuration
- User-friendly graphical tools to manage security in a NiagaraAX system

NiagaraAX security considerations

Any host connected to the Internet is vulnerable to attacks by someone else in the Internet community. This is especially true of any host that stays connected to the Internet virtually full time. NiagaraAX hosts that may be vulnerable include:

- Any NiagaraAX host connected to a company's LAN and which has a public IP address.
- Any NiagaraAX host directly connected to an ISP and which has a public IP address.
- NiagaraAX devices function as proprietary web servers, not typical client machines. As part of normal station operations, they do not download any files. However, you may want to install virus protection for an AXSupervisor PC if it is used for other (non-NiagaraAX functions).
- The NiagaraAX framework does not use the Microsoft IIS server, instead it is a pure Java web server developed by Tridium. This eliminates many security holes associated with the Microsoft IIS server. The Fox protocol is a proprietary HTTP protocol which makes it highly unlikely that someone could hack the system without reverse engineering the product.

Typically, Win32-based hosts are more vulnerable than QNX-based hosts. This is a function of two factors:

- in Windows, there are many access points open by default that attackers can exploit. In contrast, the QNX OS has fewer access points enabled by default.
- the widespread availability of the Windows OS itself. Because the QNX OS is less common, people have not taken the time to figure out how to attack it.

Another common point of attack for Internet hosts is the web server that runs on many Internet hosts (including NiagaraAX hosts). However, the NiagaraAX web server implementation is proprietary and not subject to the well-advertised attacks on Microsoft Internet Information Server and the Apache HTTP Server.

The following security suggestions are provided to help you secure NiagaraAX hosts when connecting them to the Internet. You should evaluate the suggestions to see if they are applicable for each job that you architect.

Note: *Many of these suggestions are also good guidelines for connecting hosts even in a LAN/WAN or direct-dial environment. Anyone with physical (or network) access to a host can be considered a security threat. You may want to consider implementing some of these, regardless of Internet connectivity.*

General Security Guidelines

- Architect a LAN/WAN-only or LAN/WAN plus direct-dial solution
  The most obvious way to protect hosts is to avoid connecting them to the Internet at all. However, that limits connectivity from other hosts already connected to the Internet (typically BUI users or other NiagaraAX hosts).
- Implement a firewall between your NiagaraAX host and the rest of the Internet community. Firewalls provide a barrier between the Internet community and protected hosts
- Implement a VPN between NiagaraAX hosts
- Implement strong passwords on each NiagaraAX host and station
  Implementing strong passwords may prevent an attacker from guessing a NiagaraAX host or station password
- Change the default administrator password or establish a new administrator account on each host and delete or disable the default one that ships with the product. Each JACE ships with at least one default host administrator user name and password (typically tridium/niagara). If you do not change or disable this account, any person familiar with NiagaraAX software can gain administrative access to the host.
- If you change the password (or create a new account and disable the default), be sure to record your changes and store them in a place you (and your colleagues) can find them again. If you forget or lose the name or password you must ship the unit back for recovery.
- Change the default HTTP port (and other ports)—Changing server-side ports keeps out novice attackers, but may not stop more sophisticated ones.

Guidelines for QNX-based NiagaraAX hosts

- Do not enable FTP or telnet—FTP and telnet are standard Internet protocols with well-documented attack points. If you must enable FTP or telnet on an QNX-based host, consider changing the port to keep the novice attacker out. This may not stop a more sophisticated attacker who uses port scanning software to learn about all the open ports on a host.

Guidelines for Win32-based NiagaraAX hosts

- Implement and maintain virus protection on any AXSupervisor that will connect to non-NiagaraAX resources on the Internet—If your AXSupervisor connects to other Internet resources (i.e., web pages, e-mail) you should

implement and maintain virus protection. Viruses can make your AXSupervisor inoperable.

- Do not share folders on any Windows-based host—Windows shares provide file-level access to the Windows host. Since they advertise themselves, once an attacker has deciphered a host password they are very vulnerable. If you must use Windows shares, make sure to assign permissions only to accounts using strong passwords.
- Implement any security patches available from the OS vendor—Be sure to periodically review and update patches when new vulnerabilities are patched. For more information on securing Windows-based hosts, see the Microsoft Security Resource Center at http://www.microsoft.com/security/default.asp.

Creating a strong password

The best secure password is difficult to guess and difficult to crack, but easy for you to remember. To provide the highest level of security, the password should challenge password cracking software so that it takes more time to crack than most people would be willing to devote to it.

The following types of passwords are insecure because they are easy to guess by people you know or easy to crack by people you do not know:

- Any word, common or not, even one in a foreign language
- Any name (yours, your spouse or children, your boss, your pet)
- Any password made up of all numbers (bank card number, house numbers, telephone numbers, US Social Security number, or car license plate number)

A secure password should contain at least three of the following elements:

- Have at least eight characters (the more characters, the longer it takes to crack)
- Have both upper and lower case letters
- Contain both letters and numbers
- Contain special characters (interspersed between letters and numbers)

In addition, a secure host password should also be easy for you to remember so that you are not tempted to write it down and leave it in an insecure area (such as taping it to the unit). As mentioned in the previous section it is a good idea to note any password (or name) that you create or change and keep it in a secure area that is still accessible to the rest of your team members.

Note: *One common method for creating a strong password entails swapping out alphabetic characters with numeric or special-character equivalents. For example:*

- the word baseball becomes b@s3B@11
- the phrase playmahjong becomes p!@yM@4j0nG

For more information on securing hosts on the Internet, see http://www.cert.org/.

Firewalls and proxy servers

Note: *You should consult the system owner's IT department on these issues during the planning phase of the installation to avoid unnecessary delays and rework resulting from a lack of adequate communication.*

Both JACE and AXSupervisor can use NAT (name / address translation) through a firewall to expose them to the Internet. The firewall should be used to filter traffic at the port level to any exposed NiagaraAX device.

NiagaraAX hosts function well in many firewall environments, with the following conditions:

- In order to use the BUI in some profiles, Java applets must be permitted to download through the firewall. Any NiagaraAX host serving up non-Hx pages in the browser must be able to send the applets associated with these servlet pages to a BUI client.
- BUI to station communications uses HTTP protocol.
- On any firewall, application ports may need to be opened to allow communication between any two NiagaraAX hosts on opposite sides of the firewall.
- The following connections are created using the Fox protocol. Proxy servers and firewalls need to allow Fox traffic to pass between NiagaraAX hosts to enable these features:
  - Niagara proxy points (station to station data exchange)
  - alarm console to monitor alarms on a remote station
  - station monitoring function to monitor a remote host
  - pushed (exported) or pulled (imported) archiving
  - using Workbench to engineer a remote station

Note: *If you are implementing a firewall in lieu of using one already in place, a good security practice is to grant the most limited permissions you can on the firewall, while still following the guidelines for communication listed above.*

About virtual private networks

An alternate method of securely connecting Internet-attached NiagaraAX hosts is through the use of a virtual private network (VPN).

A VPN is an encrypted IP connection between hosts over a public infrastructure such as the Internet or the public telephone network. A VPN embeds a special protocol within the TCP/IP packets carried over the Internet. This concept of a second network protocol within a primary protocol is called tunneling. The following tunneling protocols are commonly found in VPN installations:

- PPTP (point-to-point tunneling protocol)
- IPSec (IP security protocol)
- L2TP (layer 2 tunneling protocol)

Along with encryption, many VPNs also include strong authentication of remote users or hosts and ways to hide information about the private LAN from hosts on the public network. A VPN can be between an individual computer and a LAN or can be LAN-to-LAN. Many companies use a VPN for connecting traveling or teleworking users, or for connecting small, remote sites to the corporate LAN.

Typically, a VPN architecture is comprised of:

- a client running software that is configured with parameters such as server IP address and tunneling protocol. The client could be an individual workstation (for computer-to-LAN VPNs), or another router or server (for LAN-to-LAN VPNs).
- a server device that handles the client connection, authentication, and decryption of the information from the client. A VPN server could be part of a firewall, or be a separate device.

Some advantages of using VPNs include:

- the client actually becomes part of the remote LAN (it receives an IP address on the remote LAN) and therefore has access to any resources on the LAN.
- cost can be lower than direct-dial (no extra telephone lines, RAS equipment to maintain, or long distance charges).
- if using cable or DSL connection, transmission speed can be faster than using direct-dial.

Some disadvantages include:

- overhead makes any VPN connection slower than a native (no VPN) dialup or cable/DSL connection.
- host will not connect if the Internet connection to the ISP or from the ISP to primary site is down.

Example NiagaraAX VPN network

Figure 7 provides examples of typical NiagaraAX job configurations (system architectures) for connecting NiagaraAX hosts with a VPN.

In this example, Company ABC has implemented VPN server software on their firewall, and added a new site (site 3). The router in site 3 has VPN client software, which has been configured to provide a persistent VPN connection to the firewall in site 1. After the router connects to the Internet, the client software connects to the VPN at site 1, receiving new network settings as defined by the VPN server. The router (and by extension, the JACE-NX) are now part of the LAN.

The company has also loaded and configured client software on the remote engineering station to allow the off-site SI to maintain NiagaraAX stations and hosts. Formerly, this maintenance was handled through dialup to the JACE-NX in site 1.

The engineering station connects to the Internet through its ISP, then initiates the VPN client. The client connects to the company firewall and the engineering host receives an IP address belonging to ABC company, joining its network. Until the

remote host disconnects the client software, all packets from the engineering host are routed onto the ABC company's network. The firewall has been configured to allow the remote engineering station access only to the NiagaraAX hosts available on the company network, including those in sites 1, 2, and 3.

Figure 7 *Example VPN architecture*

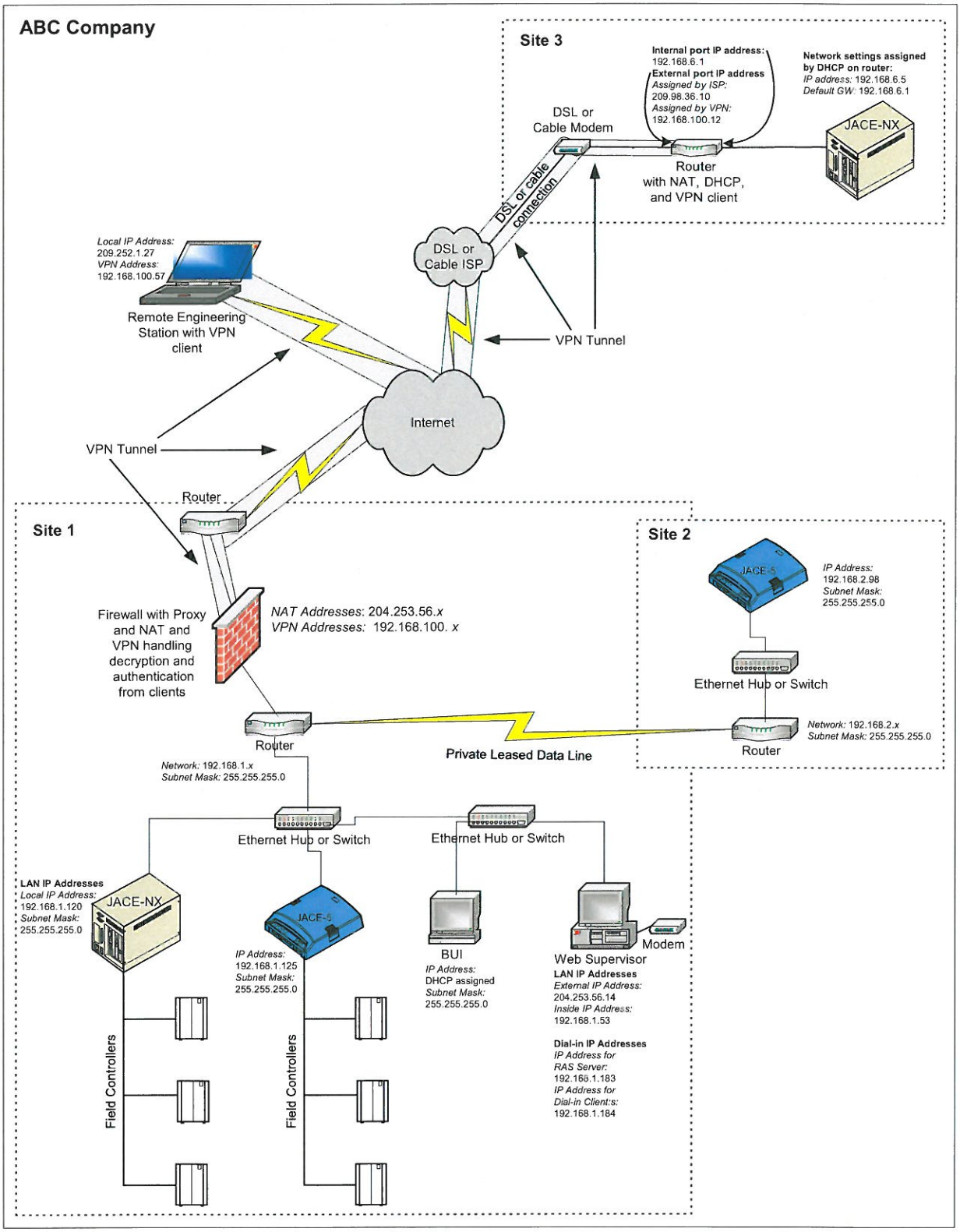

You should note the following things about using NiagaraAX hosts with a VPN:

- You cannot use a VPN with a QNX-based JACE connected directly to an ISP. That is because you cannot load VPN client software on a QNX-based JACE. You can use a QNX-based JACE with a VPN if the JACE connects to the Internet through an on-site router that provides VPN services (as well as DHCP and NAT). This is similar to the setup shown in site 3.
- This scenario has not been tested by Systems Engineering. We recommend that you set up a pilot to test them before implementing in a live job.
- Exact details on how to connect NiagaraAX hosts using VPNs cannot be provided due the many differences in VPN connection devices.

About NiagaraAX ports

As with most Internet-enabled applications, the applications running on NiagaraAX hosts also use default ports for communication with clients (typically other NiagaraAX hosts, or BUI users). For instance:

- a browser client that connects to a Px Page does so on port 80 of a NiagaraAX host running WebUI services (the port is configurable in the station's WebService properties).
- an engineering PC (the client) uses workbench to connect to a station for maintenance, by default Fox port is 1911.
- an engineering PC (the client) uses the Platform Tool to change an IP address on the host, and connects on the host's daemon port 3011.

Table 1 provides a list of the types of communication used by NiagaraAX hosts, and the default server ports used. Unless otherwise noted:

- the client randomly chooses an available client-side port (1024 or greater) to talk to the listed server port
- the server port listed is a TCP port (rather than a UDP port)
- most of the ports in the table are constantly open. Some applications (such as FTP, or the NiagaraAX web server) may constantly keep a port open, which means the port is scannable by a port scanner. Other ports (such as the host Admin port) only are shown when they are in use.

Table 1 *TCP/IP ports used in NiagaraAX, various drivers, features, and functions*

Function	TCP Port	UDP Port	IP Protocols	Notes
NiagaraAX				
Fox Service (Workbench)	1911	—	Fox, HTTP	Default port for a station's FoxService Used for Workbench-to-station and also station-to-station communications
Web Service	80	—	HTTP	Default port for a station's Web Service. Used in browser access (Hx, WB)
Encrypted Web Service	443	—	HTTPS	Default port for a station's Secure Web Service. Used in browser access (Hx, WB)
Platform daemon (access of)	80, 3011	—	HTTP	Default ports for WB platform connection.
Optional Functions				
FTP	21	—	—	
FTP-data	20	—	—	
Telnet	23	—	—	
Client connection to mail server for e-mail notifications	25	—	SMTP	In NiagaraAX or r2.3.5 and later, the MailService lets you specify a TCP port other than 25 (default).
Microsoft Remote Desktop	3389	—	—	JACE NX with Win XP (Full or Emb) only
Internet Time Protocol service	37	—	—	
DHCP	—	67, 68	—	
NiagaraAX Drivers * *Theses are "conventional" ports used by this particular protocol and driver. It is possible that another that another port is used on a particular job. If so, this other port must be unlocked, and also specified within the configuration of the corresponding NiagaraAX driver.				
SNMP	—	161	SNMP	SNMP protocol
SNMP Trap	—	162	SNMP	
Modbus TCP	502	—	—	
BACnet Ethernet	—	—	—	TCP/IP not used (raw Ethernet)
BACnet/IP	—	47808	—	
BmsAdc	25020	—	—	
AreaDAT	—	20028	—	
CCN	—	50005, 50006	—	ComfortWorks Tunneling only
OPC Client (uses DCOM)	135	135	—	DCOM, using RPC (below). Filtering is hard because of dynamically assigned ports.
Others				
RPC, used by NetBIOS (browsing, file shares, etc.) also Windows Update, Browser, OPC client & server	137, 138, 139	137, 138, 139	—	Required if JACE to appear in browser lists and for network shares. Used to copy future update files. Required by OPC client driver too.
PING	—	—	ICMP	Basic "ping" test of connection.
DCOM	135	135	—	See notes above for OPC Client driver.
Microsoft SQL Server	1433	1433	—	If R2 MS SQL or MSDE database option.
Microsoft SQL Monitor	1434	1434	—	SQL management only
Win XP Internet Time function	—	123	—	Win XP only, sync with NIST time server.

CHAPTER 4

Network traffic considerations

Network traffic and bandwidth considerations are an important aspect of designing and implementing any NiagaraAX application. The purpose of this section is to provide information that can help you design a network architecture using a NiagaraAX application that is appropriate for your networking environment. There is an unlimited number of variations and many possible scenarios for a NiagaraAX networking environment. The following sections simply provide some information and guidelines that may help you understand how to design and manage network communications in order to optimize your NiagaraAX application. Each networking environment must be evaluated on an individual basis, monitored, and adjusted, as necessary to provide the optimum NiagaraAX networking environment.

The following sections address bandwidth and communication parameters that affect the overall efficiency of network communications. Use the information as a general guide only for designing and tuning the NiagaraAX network environment.

NiagaraAX network communications considerations

NiagaraAX communication may involve using different types of:

- programs or processes
- protocols
- platforms

These programs, protocols, and platforms are discussed in the NiagaraAX architecture section. All types of communication take place over the network at intervals that can be controlled to some degree by station and driver-specific "tuning" and "polling" controls in NiagaraAX. These communication parameters provide you with the ability to "loosen" or "tighten" the communication requirements that occur across a network. The total amount of information that exists as network "traffic" is largely dependent on how many points of information reside at host stations (in terms of points, alarms, histories, schedules, and more), how many clients are sharing that information, and how often it is updated. In order to effectively manage network communications, you need to understand where message and file transfers (downloading) exist and understand how often they occur.

The following sections provide some information that can be used as a guideline for gaining an understanding of how to control and adjust the amount of traffic that a NiagaraAX host and client may put on a network.

- Types of browser communications
- Workbench-to-station communications
- Station-to-station communications
- Platform connection communications

Types of browser communications

Browser communication can occur between any host that supports a standard web browser and any NiagaraAX host.

Traffic is created by both the initial page download and by page updates that occur using HTTP and Fox protocol. The size of each page in a browser is dependent on the individual page content, whether you are using web workbench or the Hx browser view.

HTTP communication HTTP protocol is used to download the workbench applet (wbapplet) and modules that are required for running workbench in the browser. Other HTTP traffic may be for graphics and widget downloads from various modules, as well as value updates when using Hx technology (non web workbench view). Each page and module download is cached so that they are a one-time traffic source, whereas the traffic involved with repetitive data value traffic is ongoing and dependent on the quantity and update frequency of information on a viewed page.

Fox communication Fox protocol communication occurs in a browser context only when you are using workbench in the browser (wbapplet). This web workbench tool handles communication between the host and client using the Fox protocol and port 1911. If you are using the Hx (non-applet) view, then value updates in the browser are made using Hx technology, via HTTP, and not the Fox protocol.

About the wbapplet

The workbench applet (`wbapplet.jar`) allows the full Niagara stack (or a subset of it) to download to a client machine using a web browser with the Java plug-in (required). Once loaded to the client, workbench runs as an applet within an HTML page. To create this full-featured workbench browser, the primary network traffic involved is the initial applet and module download. The download sequence is as follows:

- Based on the login-identity, an html file (see Figure 4-1) is opened in the browser.

Figure 4-1 *WbApplet call embedded in html file*

```
<html><body style='margin: 0; padding: 0;' bgcolor='#ffffff'>
<embed type='application/x-java-applet;version=1.4'
  width='100%' height='100%' align='baseline'
  pluginspage='http://java.sun.com/j2se/1.4/download.html'
  boxbgcolor='#ffffff'
  boxmessage='Loading Niagara...'
  image=''
  codebase='/'
  archive='wbapplet.jar'
  code='WbApplet.class'
  ord='station:|slot:/'
  locale='en'
  profile='workbench:DefaultWbWebProfile'
  user='admin'
><noembed>
Java Plug-In support is required
</noembed>
</embed>
</body></html>
```

- The `wbapplet.jar` file downloads to the browser host and directs the required modules to download to the browser cache, as shown in Figure 4-2.

Figure 4-2 *WbApplet call embedded in html file*

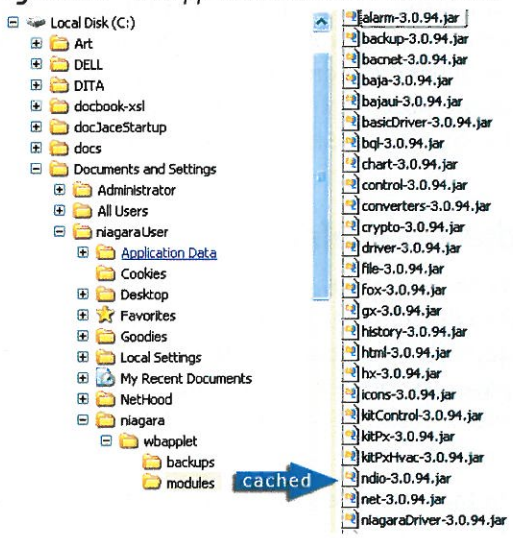

The total number of modules that are downloaded is variable, depending on the workbench profile that is downloaded. For example, if the host station does not have the weather service loaded, then the weather module is not downloaded. Additional modules may be downloaded and cached as you navigate to different pages in the browser. However, each module only needs to download once, since it is cached. Module file sizes vary from 2 kilobytes for the smaller ones to over a megabyte for some of the larger modules. You can see the individual file sizes under the NiagaraAX installation `modules` directory of your AXSupervisor workstation.

Workbench-to-station communications

Workbench-to-station communications (non-platform communications) occur when you view a remote station from workbench. Typically, this is during remote station engineering operations. Workbench-to-station traffic uses the Fox protocol and port 1911. Using the web workbench (embedded Workbench) both ports 80 and 1911 are used for HTTP access.

Remote programming can be a major consumer of both bandwidth and CPU resources. Proxy points in workbench represent source points in a station. Following, are some of the workbench features that enhance remote programming and can have a big influence on network traffic and CPU usage:

"Lazy loading" of proxy points. Proxy points are not "loaded" (created in the remote workbench) until they (or one of their child components) are actually viewed in workbench. When a remote station is initially opened in workbench, components are not loaded automatically, but they load when you view the component. This prevents a large initial surge in communication between the remote station and workbench. When a point is loaded, all its ancestors are loaded and they are both cached for the life of the workbench session. A loaded state does not mean that the component status and values are "current" with the master component in the remote station. To make sure that the component values are synchronized and up to date with the master, the proxy component must be in a "subscribed" state.

Subscriptions Subscription is a mechanism that allows proxy components to be notified when they need to be synchronized. This allows for savings in CPU, memory, and bandwidth resources because components that are not of current interest may be released from subscription (unsubscribed), thus saving resources. A subscribed state usually involves polling or eventing in order to maintain synchronization.

Note: *It is possible to chain subscriptions across multiple tiers–causing delays and stale information in the proxy point. For example, you could subscribe to a component in workbench that subscribes to the master in a station. In turn, that station component could be a proxy point for a piece of data that is running in a JACE. The JACE component could be modeling an external device, thus involving another polling operation. This could continue or be multiplied so that update delays are caused and network traffic increased.*

Nav tree synchronization NavEvents communicate across the network to maintain the proxy tree structure in a remote workbench view independent of the complete set of component information. This allows the proxy points to maintain their structure and identity in the nav tree without passing all component information every time the proxy component is changed or moved in the tree.

Leasing NiagaraAX provides a feature called "Leasing" that ensures that a proxy component is synchronized, but only as a snapshot for immediate use. A lease is a temporary subscription, typically for a minute, that reverts back to an unsubscribed state at the end of its lease time. This concept provides savings in resources by minimizing the time the subscribed state is maintained.

Batch calls It is very easy to create an undesirable situation with many round-robin network calls in your application environment. This can lead to excessive network traffic and result in poor application performance as well. It is almost always more efficient to use one large batch network call than many small network calls. NiagaraAX provides APIs to batch many common operations, including resolving multiple ORDs to a component or batching subscriptions. For more details about batching calls, refer to the *NiagaraAX Developer Guide.*

Station-to-station communications

Station to station communications occur over port 1911 using the Fox protocol and primarily involve messaging for point, alarms, histories, and schedules.

Station-to-station communications can include communications from remote stations to a supervisor station as well as peer-to-peer station communications. It is possible to have a large number of stations communicating with a supervisor or involved in peer communications, or very likely, both types of communication occurring. When you are working with many stations and especially when a large number of points, alarms, histories, or schedules are involved, it is critical to look at the overall communications architecture of your application. There are many possible communication scenarios that can create a large volume of message traffic on the network. It is important to understand how to use NiagaraAX features that allow you to control and schedule the generation and quantity of station-to-station traffic.

In the Network component property sheet there are properties that display in most drivers, as shown in Figure 4-3.

Figure 4-3 *Network parameters in the property sheet view*

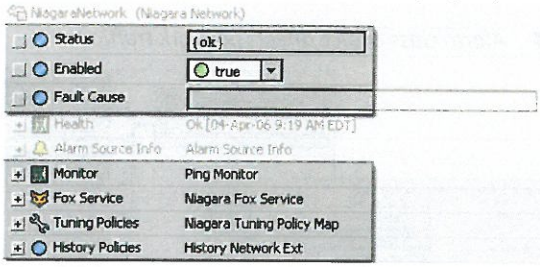

Status This is a read-only property that indicates if the driver is capable of communications. For any configured driver, network `Status` is typically `{ok}`. However, when adding some networks, the initial Status may be `{fault}`. This might mean a communications port is unassigned, or there is a port conflict.

A fault status also occurs if the host platform is not properly licensed for the driver being used. If you have a network fault, see the `Fault Cause` property value for more details. If you set the Enabled property to `false`, the status reads `{disabled}`.

Enabled By default, network `Enabled` is true--you can toggle this in the property sheet, or in the **Driver Manager** (by selecting the network and using the **Edit** button).

Whenever you set a network to disabled (`Enabled = false`), the network component and all child driver components (all devices, proxy points, etc.) change to a disabled status. If this is a field bus driver, communications routines like polling and device status pings also suspend. By default, disabled status color is gray text on a light gray background. This network-wide action may be useful for maintenance purposes to shut down communications across the driver network.

Note that `Enabled` is also individually available at the device-level and proxy point-level, using the **Edit** button or dialog box in the **Device Manager** or **Point Manager**, respectively. A disable at the device-level disables all child (proxy points), as well as polling to that points under that device. A disable at the proxy-point level disables the single point.

Health This property simply displays advisory information about the "health" of the particular driver network. These read-only properties can help you recognize and troubleshoot a network problem but they provide no direct network management controls.

Alarm Source Info A network's Alarm Source Info slot holds a number of common alarm properties that are used to populate an alarm if the network does not respond to a monitor ping. The `Alarm Class` option property may have impact on the network traffic since different alarm classes may be configured to impact network traffic to different degrees. For example, you may have an alarm class configured to route alarms simultaneously to multiple recipients across the network, including email, lineprinter and remote station recipients.

Each child device object also has its own Alarm Source Info slot, with identical (but independently maintained) properties.

Figure 4-4 *Alarm class choice affects network traffic*

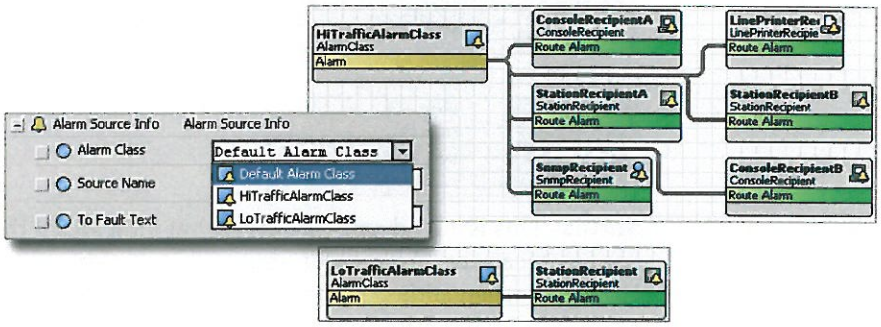

Monitor Monitor provides verification of the general health of the network, plus the network's "pingables" (typically, devices) by ensuring that each device is minimally "pinged" at some repeating interval.

- **Ping Enabled** You should leave `Ping Enabled` set to `true` in almost all cases. In this state, a ping occurs for each device under the network, as needed. While set to `false`, device status pings do not occur and device status message displays cannot change.

- **Ping Frequency** Specifies the interval between periodic pings of all devices. Typical default value is every 5 minutes (05m 00s), you can adjust differently if needed.

The network ping Monitor will only "ping" the device if the time of last health verification is older than the ping frequency. Therefore, in normal operation with most drivers, the proxy point polling mechanism actually alleviates the need for the monitor ping, providing that the ping frequency is long enough. The default

setting of 5 minutes between "pings" should be good for most situations. If the ping frequency is set to some very low setting and you have a lot of devices on the network, the message traffic for pinging could be significantly higher.

- **Alarm On Failure** If this is property is set to `true` (default), an alarm is recorded in the station's AlarmHistory upon each ping-detected device event ("down" or subsequent "up"). If `false`, device "down" and "up" events are not recorded in the station's AlarmHistory.

- **Startup Alarm Delay** Specifies the period a station must wait after restarting before device "down" or "up" alarms are generated. Applies only if the Monitor's property `Alarm On Failure` is `true`.

Following, is a list of some of the network-level control options that are common across many of the drive networks. Each one of these child components has properties that are adjustable and can have network-wide impact.

- Fox service
- Network tuning policies
- Network polling policies
- Common control properties
- History policies
- History import and export
- Schedule import and export
- Types of alarm service communication controls
- Time sync service
- Email service

Fox service

The NiagaraNetwork's `Fox Service` holds configuration properties for the local station's Fox settings. Some of these settings can affect traffic between the local station and other stations. Often in a multi-station job, in each station you create a user account specifically for station-to-station communications, with an assigned profile type of "super user." This is the account that you reference when you edit a NiagaraStation's Client Connection properties, entering its username and password.

The Fox Service also has a `Server Connections` container slot with a default **ServerConnectionsSummary** view. Client connections to the station's Fox server are dynamically modeled as "SessionN" child components. The summary view allows you to see *all current connections*, and if necessary, perform a right-click **Force Disconnect** action on one or more connected users.

Fox Service properties are shown in Figure 4-5 and completely described in the *User Guide*.

Figure 4-5 *Fox service*

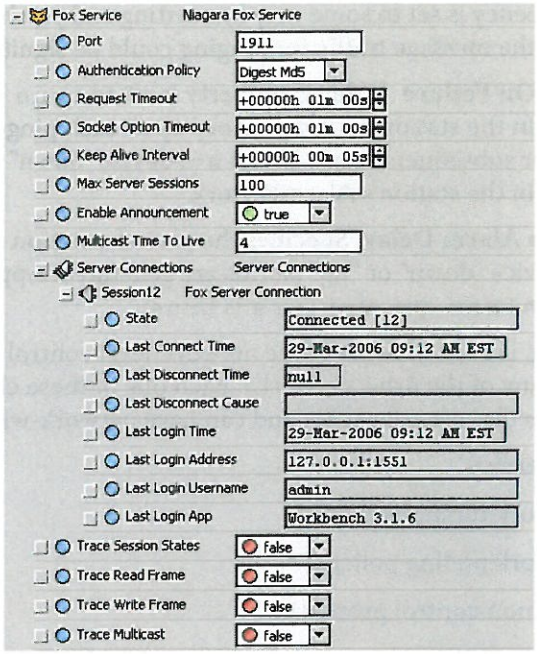

The Fox service parameters that are more likely to significantly affect network traffic are mentioned below:

Max server connections This property limits the number of server connections that are allowed on the local station. When the maximum number of connections is reached, any successive attempts to logon to the station will fail. The default setting is 100 sessions. Adjust this parameter, as needed, to fit your requirements.

Trace settings The four `Trace` components allow you to return all message activity (verbose) on those parameters you set to `True`. This includes all transactional messages, which may result in too many messages to be useful. Increasing station output by assigning trace levels consumes extra station resources and exacts a performance penalty.

Note: *Be careful using Trace! After troubleshooting, remember to return log levels to default values.*

Network tuning policies

Tuning policies are important for providing network-wide controls for a particular network driver. Figure 4-6 shows network level tuning options that are available from a driver property sheet view in workbench.

A network's Tuning Policies view holds one or more collections of "rules" for evaluating both write requests (e.g. to writable proxy points) as well as the acceptable "freshness" of read requests from polling. Some drivers also support different poll frequency groups (Slow, Normal, Fast) within their network tuning policies or under their poll scheduler component.

Figure 4-6 *Network tuning policies – NiagaraNetwork*

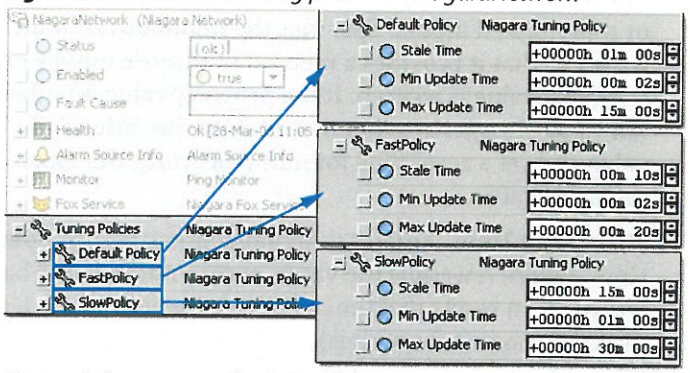

Note: *Some driver networks do not have Tuning Policies. For example, an RdbmsNetwork for a database driver. Also, the NiagaraNetwork has greatly simplified Tuning Policies.*

In the network's property sheet, expand the Tuning Policies (Map) slot to see one or more contained Tuning Policies. Expand a Tuning Policy to see its configuration properties as shown in Figure 4-7.

Figure 4-7 *Example tuning policies map (Bacnet)*

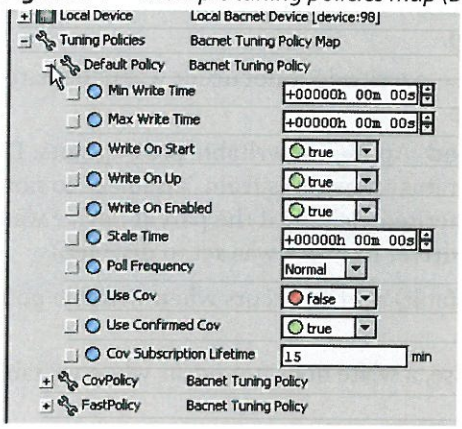

By default, a driver's Tuning Policy Map contains just a single `TuningPolicy` ("`Default Policy`"). However, you typically create *multiple* tuning policies, changing those items needed differently in each one. Then, when you create proxy points under a device in that network, you can assign each point (as needed) to the proper set of "rules" by associating it with a *specific* tuning policy.

As a simple example (under a BacnetNetwork), you could *duplicate* the default tuning policy *twice*, naming the first copy "Slow Policy" and the second copy "Fast Policy." Then, in each copy change the "Poll Frequency" property from "Normal" to "Slow" or "Fast," respectively. You would then have 3 available (and different) poll frequency groups to pick from when you create and edit proxy points.

Tuning Policy properties

Tuning Policy properties for typical field bus drivers are as follows:

Min Write Time Applies to writable proxy points, especially ones that have one or more linked inputs. Specifies the minimum amount of time allowed between writes so that it provides a method to throttle rapidly changing value so that only the latest value is written. If the property value is 0 (default), this rule is disabled (all value changes attempt to write). In this case, if you have a rapidly changing value and set a zero value for min write time, this single point can create frequent message traffic.

Max Write Time Applies to writable proxy points. Specifies the maximum "wait time" before *rewriting* the value, in case nothing else has triggered a write. Any write action resets this timer. If the property value is 0 (default), this rule is disabled (no timed rewrites). Larger values in this property *allow for* less message traffic by not *forcing* a write but they do not cause the write to occur.

Write On Start Applies to writable proxy points. Determines behavior at *station startup*.

- If true, (default) a write occurs when the station first reaches "steady state."
- If set to false, a write does not occur when the station reaches "steady state."

Write On Up Applies to writable proxy points. Determines behavior when proxy point (and parent device) transitions from "down" to "up."

- If true, (default) a write occurs when the parent device transitions from down to up.
- If set to false, a write does not occur when the parent device transitions from down to up.

Write On Enabled Applies to writable proxy points. Determines behavior when a proxy point's status transitions from "disabled" to normal (enabled). Note this status can be inherited globally if the parent device was set to disabled (or *network-wide* if driver network was set to disabled).

- If true, (default) a write occurs when writable point transitions from disabled.
- If set to false, a write does not occur when writable point transitions from disabled.

Stale Time Applies to all proxy points.

- If set to a non-zero value, points become "stale" (status stale) if the configured time elapses without a successful read, indicated by Read Status "ok."
- If set to zero (default), the stale timer is disabled, and points become stale immediately when unsubscribed.

Note: *By default, proxy point status "stale" is indicated by tan background color. In addition, stale status is considered "invalid" for any downstream-linked control logic.*

Poll Frequency In the BacnetNetwork (only) TuningPolicy. Applies to all proxy points. Provides a method to associate the tuning policy with one of 3 Poll Rates available in the network's Poll Service: Fast Rate, Normal Rate, or Slow Rate. The default poll frequency is "Normal."

Depending on the driver, there may be a single "Poll Service" (or "Poll Scheduler") slot under the network, or as in the case of a BacnetNetwork, a separate "Poll Service" for each configured port (IP, Ethernet, Mstp) under its BacnetComm > Network container. The NiagaraNetwork uses subscriptions instead of polling.

Cov Subscription Lifetime In the BacnetNetwork (only) TuningPolicy. Applies to all proxy points under this driver. Provides a method to limit the time that a Cov will maintain a Subscription state. The default time is 15 minutes.

Note: *Depending on the driver, there may be a single "Poll Service" (or "Poll Scheduler") slot under the network, or as in the case of a BacnetNetwork, a separate "Poll Service" for each configured port (IP, Ethernet, Mstp) under its BacnetComm > Network container. The NiagaraNetwork uses subscriptions instead of polling.*

Tuning policies used by a specific driver may have unique characteristics. For example, under a NiagaraNetwork, TuningPolicy has only two properties: `Min Update Time` and `Max Update Time`.

Other drivers may have specific considerations for tuning policies. For more information, refer to the "Tuning Policy Notes" section within any NiagaraAX driver document.

Network polling policies

Some driver networks use a single polling mechanism (a poll component, named "Poll Service" or "Poll Scheduler") adjusted at the *network level* in the station. Regardless of driver type, the Poll Service provides a "poll scheduler" that scans four polling-rate categories to service pollable items, as follows:

- The Poll Scheduler allocates three rate categories (for example: Slow, Normal, Fast). Pollable items (mainly proxy points) are associated with one of these three rate groups. The rates are assigned by choosing a Tuning Policy in each point's proxy extension (BacnetNetwork and SnmpNetwork) or by using a Poll Frequency setting (drivers other than BacNet and Snmp).
- A fourth "dibs stack" category is allocated for pollable items that transition to a subscribed state. This may be a "temporary subscription," such as results when viewing unlinked proxy points (without alarm or history extensions) in workbench or a browser. Or, it may occur when a permanently subscribed point is first polled (thereafter, it is no longer "dibs stack-polled").

Figure 4-8 *Polling scheduler*

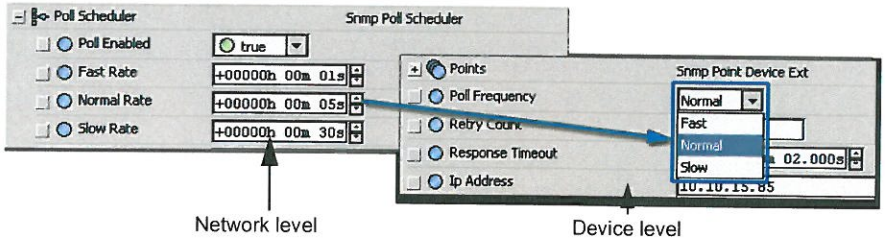

For more information about polling and the priority of polling by the scheduler, refer to the *NiagaraAX User Guide*.

Common control properties

Several network control parameters are common to Schedule, History, and other network features provided under station to station communications. The following descriptions may apply to Niagara Network and other drivers.

Enabled An `Enabled` property is available at the network level, device (or station) level, and as part of the schedule and history import and export extensions. Setting `Enabled` to `true` allows the network, device, or component to operate and communicate. Changing the setting to `false` disables the network device, or component functions, thereby stopping any related network traffic that they might initiate.

Retry Trigger By default, device extensions Histories and Schedules contain a "Retry Trigger" component, appearing in the property sheet view but not in any Manager view. The retry trigger can have a significant impact on traffic if there are one or more unsuccessful import or export actions attempted.

Figure 4-9 *Retry trigger settings*

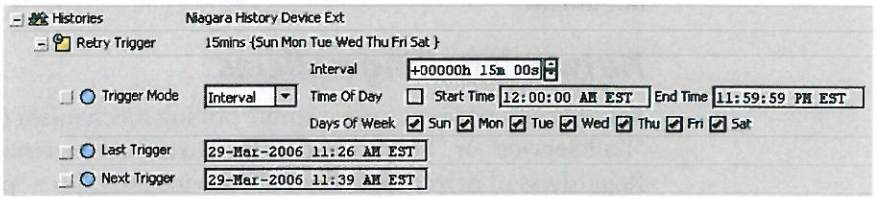

Upon any *unsuccessful* execution of a history import or export descriptor or schedule import or export descriptor contained in that same device extension, the Retry Trigger defines subsequent "retries" that will automatically occur upon the interval period defined (default value is 15 minutes). This continues until successful execution occurs. Obviously, a smaller time interval creates more "retry" traffic when communication between the remote and supervisor station is interrupted for an extended period.

Execution Time By default, import and export descriptors (associated with both Histories and Schedules) contain the `Execution Time` component. This component provides for flexible timing for executing an import or an export. Options for `Execution Time` settings are described under the "Trigger Mode" topic.

Figure 4-10 *Execution time*

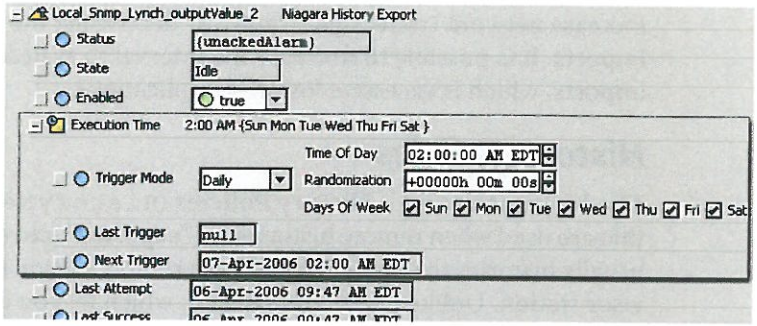

If an Execution Time trigger fails, the Retry Trigger settings are invoked. The difference between the Retry Trigger and Execution Time component is that the the Execution Time component fires at the defined "Execution Time(s)" whereas the Retry Trigger fires whenever a subordinate execution fails. It is possible to set an Execution Time to an interval as low as 1 second, thus creating constant import or export traffic. If an unusually low setting (frequent firing) is multiplied over many histories and calendars, it can be a source of excessive network traffic.

Trigger Mode This property allows you to choose a triggering mode for a "Retry Trigger" or an "Execution Time". Trigger mode options are shown in Figure 4-11 and described in the following list:

Figure 4-11 *Trigger modes (shown in Execution Time component)*

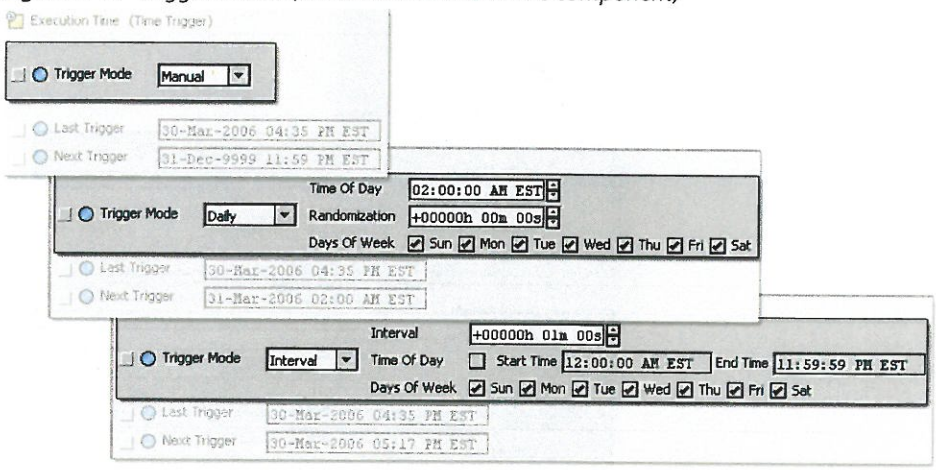

- **Manual:** requires a manual execution action in order to perform the import. No import takes place until a user takes an action to execute it.
- **Daily:** allows you to specify a time for import to occur on a once-daily basis.

You may consider scheduling imports at different times across a network–possibly staggering the times if large history files are anticipated.

- **Interval:** allows you to specify a frequency and time period when imports occur.

This option allows you the most flexible control options, but also allows you to increase network traffic significantly by decreasing the time interval between imports. It is possible to decrease the interval to as little as 1 second between imports, which is excessive for most applications.

History policies

The NiagaraNetwork's **History Policies** (`HistoryNetworkExt`) holds rules that are used when remote histories are "exported" into the local station. These are usually histories that are pushed from a remote station for archiving onto a supervisor station. Unlike *imported* histories, which let you define and adjust the `capacity` and `full policy` settings in each HistoryImportDescriptor, histories that are exported from one station into another station have no associated self-limiting parameters available at the exporting station. The `capacity` and `full policy` for each history is set at creation time, using the **local history policies** of the target station. These parameters affect the size of the history logs that are archived over the network. Usually the supervisor station is set to archive at a higher capacity than a remote station.

Figure 4-12 shows three different history policies under a NiagaraNetwork. These rules are all applied, in sequential order. Refer to the *User Guide* for more details about how the history policy rules are applied.

Figure 4-12 *History policies under a Niagara Network*

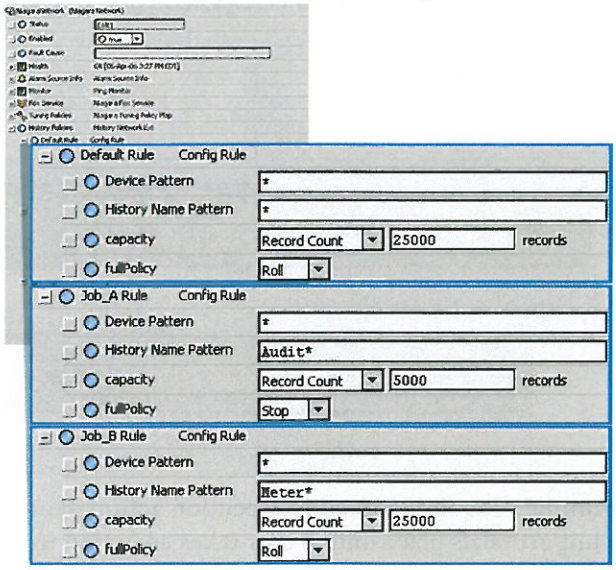

History import and export

Under the **NiagaraNetwork** and the **BacnetNetwork**, local data logging provides the ability to use the `HistoryDeviceExt`. This device-level extension serves as the parent container for history descriptors--components that specify how history-type collections (log data) are imported or exported. The `HistoryDeviceExt` property sheet, shown in Figure 4-13, has the following properties that you can use to adjust history-related communications:

Retry Trigger Refer to "Retry Trigger," page 4-14 for details.

Retry Interval The retry interval property also includes the ability to schedule "retries" at specific times or manually. This allows you to consider when and how often to allow import and export attempts across the network.

Figure 4-13 *HistoryDeviceExt*

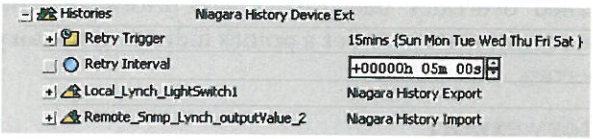

Creating history import and history export descriptors is how you save a history to a different location (station) from where it originated. In a typical application, this is considered "archiving." For example, an originating history (with a limited record count) may be in a JACE station. If imported to a supervisor station, its history import descriptor can be configured such that the imported history in the supervisor has "unlimited" record capacity. The JACE history can run collecting only the last 500 records, while the imported history in the supervisor will collect all (unlimited) records. These settings affect the size of the history logs that are archived over the network.

History import

History import provides some controls that allow you to limit or expand the size of the files that are archived to the local station. These properties are shown in Figure 4-14 and described as follows:

Figure 4-14 *Selected history device extension parameters*

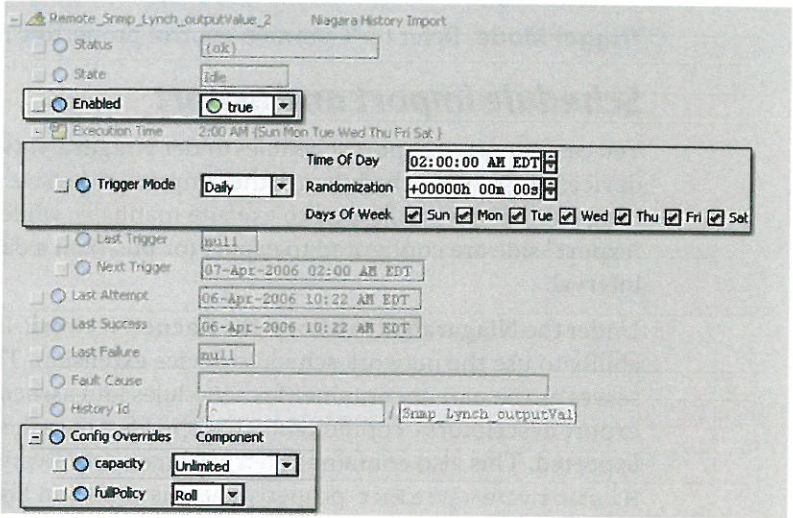

Enabled Refer to "Common control properties", for details.

Trigger Mode Refer to "Common control properties", for details.

Config Overrides: This component allows you to specify a number for `Capacity` and `Full Policy`. These parameters allow you to control the number of records that you pull in on an import (`Capacity`) and (if a capacity number is set) to specify what to do when that number is reached (`Full Policy`).

These "override" options provide a way to limit import file size and bandwidth and are called "overrides" because they take priority over the values that are specified in the remote station under a point's individual **History Ext**, **History Config** properties.

History export

History export provides controls that allow you archive history files at defined times and intervals. To limit or expand the size of the files that are archived to the local station. These properties are shown in Figure 4-15 and described as follows:

Figure 4-15 *Selected history device extension parameters*

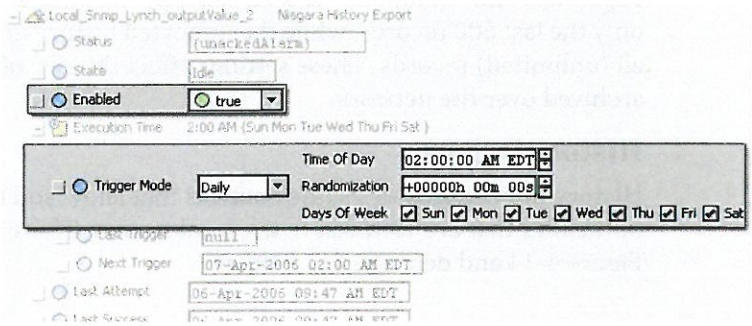

Enabled Refer to "Common control properties", for details.

Trigger Mode Refer to "Common control properties", for details.

Schedule import and export

You can import or export schedules under **NiagaraNetwork** and **BacnetNetwork** devices. Typically, schedules on the "import" side have "Execution Times" (time triggers) that are configured to execute manually, while those that are on the "export" side are configured to export (or push) on a daily basis or on a recurring interval.

Under the **NiagaraNetwork** and the **BacnetNetwork**, local schedules provide the ability to use the network schedule device extension. This device-level extension serves as the parent container for schedules and associated schedule import and export descriptors--components that specify how schedules are imported or exported. This also contains a Retry Trigger, see "Retry Trigger," page 4-14. The `HistoryDeviceExt` property sheet is shown in Figure 4-13.

Figure 4-16 shows the options available for setting update method and intervals.

Figure 4-16 *Schedule device extension*

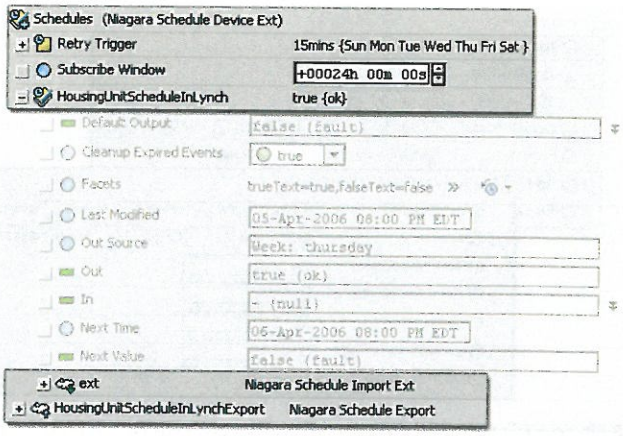

To avoid unnecessary network traffic and use of CPU resources, it is important to be aware of the execution frequency and fixed execution times so that you avoid unnecessarily short execution times and duplicated (or simultaneous) network-level updates.

Schedule import and history export descriptors allow you to save a schedule to a location (station) different from where it originated. In addition to the individual import and export descriptors, this component has the following controls that can affect your network traffic.

Retry Trigger Refer to "Common control properties", for details.

Subscribe Window At a random time after station startup and within the time specified by the SubscribeWindow property value, all subordinate schedules who have not communicated with their supervisor will have their execute action invoked. For drivers where remote supervisors do not persist information about local subordinates, the subscribe window should be some small value rather than the default of a day. If you have many subordinate schedules, a larger Subscribe Window time decreases the chance of simultaneous schedule import or export execution.

Types of alarm service communication controls

The alarm service has the certain types of controls that can affect network traffic levels. Most of these parameters work so that they either allow or disallow communication at certain times

Figure 4-17 Common alarm service controls

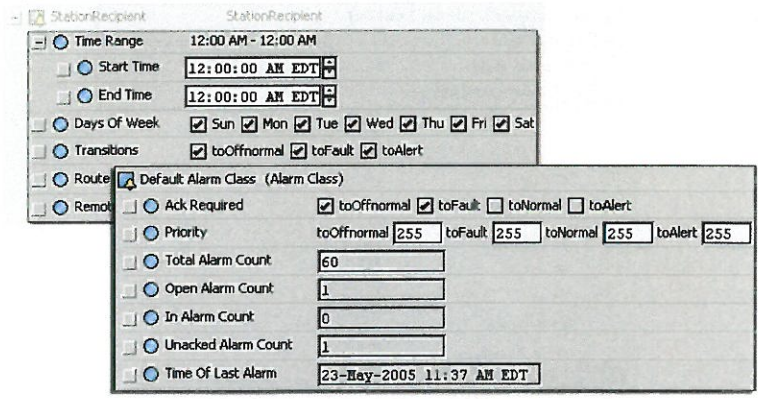

Ack required This control gives you the option of selecting or clearing the alarm acknowledgement requirement associated with the alarm generation conditions in an alarm class or an alarm recipient, as shown in Figure 4-17.

If alarm acknowledgement is set (box is checked) for any one of the following alarm types, an alarm acknowledgement is routed back to the alarm source when that alarm is acknowledged–thus creating network traffic.

Time range The `Time Range` parameter applies to several components related to the alarm service. Setting the time range allows you to limit when communications can occur using the parent component. For example, an alarm class or alarm recipient type can only communicate during the time set in the Time Range window. Figure 4-17 shows the `Time Range` component.

Days of week The Days of Week parameter allows you to limit the alarm communications to certain days of the week.

Remote station This parameter allows you to route alarms to a remote station. Alarms that are sent to a remote station are routed according to the parameters defined in the Alarm class that is selected in the Alarm component under the remote station's NiagaraNetwork.

Rout acks This parameter allows you to enable alarm routing acknowledgments (`true`) or disable alarm acknowledgments (`false`).

Time sync service

The TimeSyncService has certain parameters that you can adjust to increase or decrease the frequency of its polling. This includes the following:

Client Schedule (Time Trigger) This control works the same as other time triggers. Refer to "Common control properties," page 4-14 for a description of the properties associated with the TimeTrigger component.

TimeSyncClient This control has 2 parameters that allows you to set the number of retries for a client (`Retries`) and the time for a client connection to time out (`Timeout`). The default numbers 5 (for retries) and 250ms (for timeout) should be sufficient for most applications. If a relatively large number is used here, unnecessary traffic could be generated with unnecessary retries.

Email service

The email service has an outgoing account component that you can configure. The following properties may affect traffic on the network:

Pollrate This property controls how often the host is polled. Increasing the `pollrate` value increases the time between polls. During the time between polls, emails may be queued (up to the max queue size) until the next poll time. At the next poll time all queued emails are sent.

Max queue size This is the maximum number of emails that are allowed to be in the queue. This allows you to limit the number of emails that can be queued, so that there is a limited amount of email traffic when polling is enabled and the queued emails are sent. If you have a very high number set here, a large amount of email traffic could be generated when email is enabled.

Max sendable per day This property allows you to limit the number of emails that are sent in one day.

Platform connection communications

A platform connection is different than a station connection. When connected to a Niagara platform, Workbench communicates (as a client) to that host's platform daemon (also known as "niagarad" for Niagara daemon), a server process. Unlike a station connection, which uses the Fox protocol, a client platform connection requires workbench, meaning it is unavailable using a standard Web browser. The default ports for platform communications are ports 3011 and port 80.

Communication at a platform level may occur when a platform connection exists via the platform daemon. Maintaining a simple view of the platform director does not create any regular traffic, however, any views that have updates create update traffic proportionate to the number of updating fields that are on the view.

Figure 4-18 shows the platform view. Most of the functions available from this view create traffic and bandwidth usage directly related to the number and size of files involved. For file transfers (including modules) you can look at the file sizes before making the changes to assess how much traffic will be hitting the network and to decide if the target JACE (for example) has enough storage space to handle the transfer. Several platform functions cause insignificant amount of network traffic.

Figure 4-18 *Platform view*

Platform	
Name	**Description**
Dialup Configuration	Configure the way the remote host uses dialup networking
Distribution File Installer	Install distribution files to the remote host
File Transfer Client	Transfer files to and from the remote host
Lexicon Installer	Install lexicons to support additional languages
License Manager	Manage licenses and certificates
Platform Administration	Update the platform daemon's port or credentials, or set its date and time
Software Manager	Install software to the remote host
Station Copier	Transfer stations to and from the remote host
Station Director	Control stations and access console output
TCP/IP Configuration	Manage the host's TCP/IP settings
User Manager	Manage the local OS users and groups
Remote File System	The remote host's file system

Note: *The provisioning service has the potential to put a greater amount of traffic on the network due to the ability to target multiple platforms.*

TRIDIUM
Connecting minds and machines

3951 Westerre Parkway, Suite 350
Richmond, Virginia 23233 USA
1.804.747.4771 Phone
1.804.747.5204 Fax

Powered by niagara AX FRAMEWORK®

TRIDIUM NIAGARA^{AX} 3.5 BACNET SUPERVISOR PICS

BACnet Protocol Implementation Conformance Statement

Date: August 8, 2011
Vendor Name: Tridium
Product Name: Niagara AX BACnet Supervisor
Product Model Number: T-S-AX with DR-S-BAC-AX driver
Application Software Version: 3.5.24 or higher
Firmware Revision: 3.5.24 or higher
BACnet Protocol Revision: 4

Product Description:
Niagara AX provides the ability to view, monitor, and control BACnet devices over IP, raw Ethernet, or MS/TP media. Devices, points, schedules, alarms, and logs can be learned and managed from Niagara AX. In addition, Niagara points, schedules, histories, and alarming can be exposed to BACnet for monitor and control by foreign BACnet clients.

BACnet Standardized Device Profile (Annex L):

☐ **BACnet Advanced Operator Workstation (B-AWS)**
☒ **BACnet Operator Workstation (B-OWS)**
☐ **BACnet Operator Display (B-OD)**
☐ **BACnet Building Controller (B-BC)**
☐ **BACnet Advanced Application Controller (B-AAC)**
☐ **BACnet Application Specific Controller (B-ASC)**
☐ **BACnet Smart Sensor (B-SS)**
☐ **BACnet Smart Actuator (B-SA)**

Additional BACnet Interoperability Building Blocks Supported (Annex K):

Data Sharing	Device & Network Management
DS-RP-A, B	DM-DDB-A, B
DS-RPM-A, B	DM-DOB-A, B
DS-WP-A, B	DM-DCC-A,B
DS-WPM-A,B	DM-RD-A,B
DS-COV-A, B	DM-TS-A,B
DS-COVU-A, B	DM-UTC-A,B
DS-V-A	DM-LM-A, B
DS-M-A	DM-BR-A,B
DS-COVP-B	DM-ANM-A
	DM-ADM-A
	DM-ATS-A
	DM-MTS-A

Alarm & Event Management	Trending
AE-N-A, I-B AE-ACK-A, B AE-ASUM-A,B AE-ESUM-A,B AE-INFO-A,B AE-VN-A AE-VM-A AE-AS-A AE-AVN-A	T-VMT-A, I-B, E-B T-ATR-A, B T-V-A T-A-A
Scheduling	**Network Management**
SCHED-A, I-B, E-B SCHED-VM-A SCHED-WS-I-B	NM-CE-A

Segmentation Capability:

Feature	Supported	Window size
Transmit Segmented Messages	yes	10
Receive Segmented Messages	yes	any

Standard Object Types Supported:

- The CreateObject and DeleteObject services are not supported, so no objects are dynamically creatable or deletable through BACnet service requests, although these objects are dynamically creatable and deletable through Niagara.
- No general range restrictions exist; however, certain specific applications may have specific range restrictions.
- All potentially available properties are listed for each object type.
- Optional properties are listed in *italics*. Not all instances support all optional properties.
- Writable properties are listed in **bold**. Any range limitations are expressed in parentheses following the property name.

Notes from Table

1. The File_Size property of File objects is only writable if the underlying system file is changeable.
2. The Setpoint property of Loop objects is writable only if the setpoint is not linked from within Niagara.
3. The Recipient_List property of the Notification Class object will maintain entries that are internally configured within Niagara.
4. The List_Of_Object_Property_References property of the Schedule object will maintain entries that are internally configured within Niagara.
5. The Priority_For_Writing property of Schedule objects is not important for internal Niagara operation, as the priority at which a point is commanded is determined by the input to which the Schedule output is linked.

6. These Trend Log object properties are not writable if the backing history for the exported Trend Log is a Niagara-generated history. If the history is created as a BACnet Trend Log, then they are writable.
7. Trend Logs in Niagara are either COV or Interval. So the Log_Interval property cannot be written to a value other than 0 for COV logs, or to 0 for interval logs.

Object Type	Properties	
Analog Input	Object_Identifier **Object_Name** Object_Type Present_Value ***Description*** *Device_Type* Status_Flags Event_State *Reliability* **Out_Of_Service** Units *Min_Pres_Value* *Max_Pres_Value*	*Resolution* ***COV_Increment*** ***Time_Delay*** ***Notification_Class*** ***High_Limit*** ***Low_Limit*** ***Deadband*** ***Limit_Enable*** *Event_Enable* *Acked_Transitions* ***Notify_Type*** *Event_Time_Stamps*
Analog Output	Object_Identifier **Object_Name** Object_Type Present_Value ***Description*** *Device_Type* Status_Flags Event_State *Reliability* **Out_Of_Service** Units *Min_Pres_Value* *Max_Pres_Value* *Resolution*	Priority_Array **Relinquish_Default** ***COV_Increment*** ***Time_Delay*** ***Notification_Class*** ***High_Limit*** ***Low_Limit*** ***Deadband*** ***Limit_Enable*** *Event_Enable* *Acked_Transitions* ***Notify_Type*** *Event_Time_Stamps*
Analog Value	Object_Identifier **Object_Name** Object_Type Present_Value ***Description*** Status_Flags Event_State *Reliability* **Out_Of_Service** Units *Priority_Array* ***Relinquish_Default***	***COV_Increment*** ***Time_Delay*** ***Notification_Class*** ***High_Limit*** ***Low_Limit*** ***Deadband*** ***Limit_Enable*** *Event_Enable* *Acked_Transitions* ***Notify_Type*** *Event_Time_Stamps*

Object Type	Properties	
Binary Input	Object_Identifier **Object_Name** Object_Type Present_Value ***Description*** *Device_Type* Status_Flags Event_State *Reliability* **Out_Of_Service** Polarity ***Inactive_Text*** ***Active_Text***	*Change_Of_State_Time* ***Change_Of_State_Count*** (0) *Time_Of_State_Count_Reset* ***Elapsed_Active_Time*** (0) *Time_Of_Active_Time_Reset* ***Time_Delay*** ***Notification_Class*** ***Alarm_Value*** *Event_Enable* *Acked_Transitions* ***Notify_Type*** *Event_Time_Stamps*
Binary Output	Object_Identifier **Object_Name** Object_Type Present_Value ***Description*** *Device_Type* Status_Flags Event_State *Reliability* **Out_Of_Service** Polarity ***Inactive_Text*** ***Active_Text*** *Change_Of_State_Time* ***Change_Of_State_Count*** (0)	*Time_Of_State_Count_Reset* ***Elapsed_Active_Time*** (0) *Time_Of_Active_Time_Reset* ***Minimum_Off_Time*** ***Minimum_On_Time*** Priority_Array **Relinquish_Default** ***Time_Delay*** ***Notification_Class*** *Feedback_Value* *Event_Enable* *Acked_Transitions* ***Notify_Type*** *Event_Time_Stamps*
Binary Value	Object_Identifier **Object_Name** Object_Type Present_Value ***Description*** Status_Flags Event_State *Reliability* **Out_Of_Service** ***Inactive_Text*** ***Active_Text*** *Change_Of_State_Time* **Change_Of_State_Count** *(0)* *Time_Of_State_Count_Reset*	***Elapsed_Active_Time*** (0) *Time_Of_Active_Time_Reset* ***Minimum_Off_Time*** ***Minimum_On_Time*** *Priority_Array* ***Relinquish_Default*** ***Time_Delay*** ***Notification_Class*** ***Alarm_Value*** *Event_Enable* *Acked_Transitions* ***Notify_Type*** *Event_Time_Stamps*
Calendar	Object_Identifier **Object_Name** Object_Type	***Description*** Present_Value **Date_List**

Object Type	Properties	
Device	Object_Identifier Object_Name Object_Type System_Status Vendor_Name Vendor_Identifier Model_Name Firmware_Revision Application_Software_Revision ***Location*** ***Description*** Protocol_Version Protocol_Revision Protocol_Services_Supported *Protocol_Object_Types_Supported* Object_List Max_APDU_Length_Accepted	Segmentation_Supported *Max_Segments_Accepted* *Local_Time* *Local_Date* *UTC_Offset* *Daylight_Savings_Status* *APDU_Segment_Timeout* APDU_Timeout Number_Of_APDU_Retries *Max_Master* *Max_Info_Frames* Device_Address_Binding Database_Revision *Configuration_Files* *Last_Restore_Time* ***Backup_Failure_Timeout*** *Active_COV_Subsriptions*
File (Stream Access Only)	Object_Identifier **Object_Name** Object_Type ***Description*** File_Type	**File_Size**[1] Modification_Date **Archive** Read_Only File_Access_Method
Loop	Object_Identifier **Object_Name** Object_Type Present_Value ***Description*** Status_Flags Event_State *Reliability* **Out_Of_Service** Output_Units Manipulated_Variable_Reference Controlled_Variable_Reference Controlled_Variable_Value Controlled_Variable_Units Setpoint_Reference **Setpoint**[2] Action ***Proportional_Constant***	*Proportional_Constant_Units* ***Integral_Constant*** *Integral_Constant_Units* ***Derivative_Constant*** *Derivative_Constant_Units* ***Bias*** ***Maximum_Output*** ***Minimum_Output*** Priority_For_Writing ***COV_Increment*** ***Time_Delay*** *Notification_Class* ***Error_Limit*** *Event_Enable* *Acked_Transitions* *Notify_Type* *Event_Time_Stamps*

Object Type	Properties	
Multi-state Input	Object_Identifier **Object_Name** Object_Type Present_Value ***Description*** *Device_Type* Status_Flags Event_State *Reliability* **Out_Of_Service**	Number_Of_States ***State_Text*** ***Time_Delay*** ***Notification_Class*** ***Alarm_Values*** *Fault_Values* *Event_Enable* *Acked_Transitions* ***Notify_Type*** *Event_Time_Stamps*
Multi-state Output	Object_Identifier **Object_Name** Object_Type Present_Value ***Description*** *Device_Type* Status_Flags Event_State *Reliability* **Out_Of_Service** Number_Of_States	***State_Text*** Priority_Array **Relinquish_Default** ***Time_Delay*** ***Notification_Class*** *Feedback_Value* *Event_Enable* *Acked_Transitions* ***Notify_Type*** *Event_Time_Stamps*
Multi-state Value	Object_Identifier **Object_Name** Object_Type Present_Value ***Description*** Status_Flags Event_State *Reliability* **Out_Of_Service** Number_Of_States	***State_Text*** *Priority_Array* ***Relinquish_Default*** ***Time_Delay*** ***Notification_Class*** ***Alarm_Values*** *Fault_Values* *Event_Enable* *Acked_Transitions* ***Notify_Type*** *Event_Time_Stamps*
Notification Class	Object_Identifier **Object_Name** Object_Type ***Description***	Notification_Class **Priority** **Ack_Required** **Recipient_List**[3]
Schedule	Object_Identifier **Object_Name** Object_Type ***Description*** **Effective_Period** ***Weekly_Schedule*** ***Exception_Schedule***	**Schedule_Default** **List_Of_Object_Property_References**[4] **Priority_For_Writing**[5] Status_Flags Reliability **Out_Of_Service**

Object Type	Properties	
Trend Log	Object_Identifier **Object_Name** Object_Type ***Description*** **Log_Enable**[6] ***Start_Time*** ***Stop_Time*** *Log_DeviceObjectProperty* ***Log_Interval***[6, 7] *COV_Resubscription_Interval* *Client_COV_Increment* Stop_When_Full Buffer_Size	Log_Buffer **Record_Count** (0)[6] Total_Record_Count *Notification_Threshold* *Records_Since_Notification* *Last_Notify_Record* Event_State ***Notification_Class*** *Event_Enable* *Acked_Transitions* ***Notify_Type*** *Event_Time_Stamps*

Data Link Layer Options:

☒ BACnet IP, (Annex J)
☒ BACnet IP, (Annex J), Foreign Device
☒ ISO 8802-3, Ethernet (Clause 7)
☐ ANSI/ATA 878.1, 2.5 Mb. ARCNET (Clause 8)
☐ ANSI/ATA 878.1, RS-485 ARCNET (Clause 8), baud rate(s) _____
☒ MS/TP master (Clause 9), baud rate(s): 9600, 19200, 38400, 76800
☐ MS/TP slave (Clause 9), baud rate(s): _____
☐ Point-To-Point, EIA 232 (Clause 10), baud rate(s):_____
☐ Point-To-Point, modem, (Clause 10), baud rate(s): _____
☐ LonTalk, (Clause 11), medium: _____
☐ Other:

Device Address Binding:

Is static device binding supported? (This is currently necessary for two-way communication with MS/TP slaves and certain other devices.) ☒Yes ☐ No

Networking Options:

☒ Router, Clause 6 – Routing configurations: Ethernet-IP, Ethernet-MS/TP, IP-MS/TP
☐ Annex H, BACnet Tunneling Router over IP
☒ BACnet/IP Broadcast Management Device (BBMD)
Does the BBMD support registrations by Foreign Devices? ☒ Yes ☐ No

Character Sets Supported:

Indicating support for multiple character sets does not imply that they can all be supported simultaneously.

☒ ANSI X3.4 ☐ IBM™/Microsoft™ DBCS ☒ ISO 8859-1
☒ ISO 10646 (UCS-2) ☐ ISO 10646 (UCS-4) ☐ JIS C 6226

If this product is a communication gateway, describe the types of non-BACnet equipment/networks(s) that the gateway supports:
This product supports communications between BACnet and any third-party system to which Niagara can connect. Contact Tridium for a list of supported protocols.

Information and/or specifications published here are current as of the date of publication of this document. Tridium, Inc. reserves the right to change or modify specifications without prior notice. The latest product specifications can be found by contacting our corporate headquarters, Richmond, Virginia. Products or features contained herein are covered by one or more U.S. or foreign patents. This document may be copied by parties who are authorized to distribute Tridium products in connection with distribution of those products, subject to the contracts that authorize such distribution. It may not otherwise, in whole or in part, be copied, photocopied, reproduced, translated, or reduced to any electronic medium or machine-readable form without prior written consent from Tridium, Inc. Complete confidentiality, trademark, copyright and patent notifications can be found at: http://www.tridium.com/galleries/SignUp/Confidentiality.pdf. Copyright © 2011 Tridium, Inc.

JACE, Niagara Framework, Niagara AX Framework and the Sedona Framework are trademarks of Tridium, Inc.

TRIDIUM
Connecting minds and machines

3951 Westerre Parkway, Suite 350
Richmond, Virginia 23233 USA
1.804.747.4771 Phone
1.804.747.5204 Fax

Powered by niagara AX FRAMEWORK®

TRIDIUM NIAGARA^{AX} 3.6 BACNET PICS

BACnet Protocol Implementation Conformance Statement

Date: August 12, 2011
Vendor Name: Tridium
Product Name: Niagara AX BACnet Integration
Product Model Number: Tridium JACE models T-2xx, T-6xx, T-7xx , T-SEC-J-2xx, T-SEC-J-6xx, T-J-NXS-AX-x, T-NXT-xx (T-J-NXS-AX-x and T-NXT-xx are IP or Ethernet only), JACE models JACE-4xx, JACE-5xx, JACE-NX (J-NX-AX, IP or Ethernet only), SoftJACE (SJ-XX-x, IP or Ethernet only)
Application Software Version: 3.6.35 or higher
Firmware Revision: 3.6.35 or higher
BACnet Protocol Revision: 7

Product Description:
Niagara AX provides the ability to view, monitor, and control BACnet devices over IP, raw Ethernet, or MS/TP media. Devices, points, schedules, alarms, and logs can be learned and managed from Niagara AX. In addition, Niagara points, schedules, histories, and alarming can be exposed to BACnet for monitor and control by foreign BACnet clients.

BACnet Standardized Device Profile (Annex L):

☐ **BACnet Advanced Operator Workstation (B-AWS)**
☐ **BACnet Operator Workstation (B-OWS)**
☐ **BACnet Operator Display (B-OD)**
☒ **BACnet Building Controller (B-BC)**
☐ **BACnet Advanced Application Controller (B-AAC)**
☐ **BACnet Application Specific Controller (B-ASC)**
☐ **BACnet Smart Sensor (B-SS)**
☐ **BACnet Smart Actuator (B-SA)**

Additional BACnet Interoperability Building Blocks Supported (Annex K):

Data Sharing	Device & Network Management
DS-RP-A, B	DM-DDB-A, B
DS-RPM-A, B	DM-DOB-A, B
DS-WP-A, B	DM-DCC-B
DS-WPM-A, B	DM-RD-B
DS-COV-A, B	DM-TS-B
DS-COVU-A, B	DM-UTC-B
DS-V-A	DM-LM-A, B
DS-M-A	DM-BR-B
DS-COVP-B	DM-ANM-A
	DM-ADM-A
	DM-ATS-A
	DM-MTS-A

Alarm & Event Management AE-N-A, -I-B AE-ACK-A, B AE-ASUM-B AE-ESUM-B AE-INFO-B AE-VN-A AE-VM-A	**Trending** T-VMT-A, I-B, -E-B T-ATR-A, B T-V-A
Scheduling SCHED-A, I-B, -E-B SCHED-VM-A SCHED-WS-I-B	**Network Management** NM-CE-A

Segmentation Capability:

Feature	Supported	Window size
Transmit Segmented Messages	yes	10
Receive Segmented Messages	yes	any

Standard Object Types Supported:

- The CreateObject and DeleteObject services are not supported, so no objects are dynamically creatable or deletable through BACnet service requests, although these objects are dynamically creatable and deletable through Niagara.
- No general range restrictions exist; however, certain specific applications may have specific range restrictions.
- All potentially available properties are listed for each object type.
- Optional properties are listed in *italics*. Not all instances support all optional properties.
- Writable properties are listed in **bold**. Any range limitations are expressed in parentheses following the property name.

Notes from Table

1. The File_Size property of File objects is only writable if the underlying system file is changeable.
2. The Setpoint property of Loop objects is writable only if the setpoint is not linked from within Niagara.
3. The Recipient_List property of the Notification Class object will maintain entries that are internally configured within Niagara.
4. The List_Of_Object_Property_References property of the Schedule object will maintain entries that are internally configured within Niagara.
5. The Priority_For_Writing property of Schedule objects is not important for internal Niagara operation, as the priority at which a point is commanded is determined by the input to which the Schedule output is linked.
6. These Trend Log object properties are not writable if the backing history for the exported Trend Log is a Niagara-generated history. If the history is created as a BACnet Trend Log, then they are writable.

7. Trend Logs in Niagara are either COV or Interval. So the Log_Interval property cannot be written to a value other than 0 for COV logs, or to 0 for interval logs.

Object Type	Properties	
Analog Input	Object_Identifier **Object_Name** Object_Type Present_Value ***Description*** *Device_Type* Status_Flags Event_State *Reliability* **Out_Of_Service** Units *Min_Pres_Value* *Max_Pres_Value*	*Resolution* ***COV_Increment*** ***Time_Delay*** ***Notification_Class*** ***High_Limit*** ***Low_Limit*** ***Deadband*** ***Limit_Enable*** *Event_Enable* *Acked_Transitions* ***Notify_Type*** *Event_Time_Stamps*
Analog Output	Object_Identifier **Object_Name** Object_Type Present_Value ***Description*** *Device_Type* Status_Flags Event_State *Reliability* **Out_Of_Service** Units *Min_Pres_Value* *Max_Pres_Value* *Resolution*	Priority_Array **Relinquish_Default** ***COV_Increment*** ***Time_Delay*** ***Notification_Class*** ***High_Limit*** ***Low_Limit*** ***Deadband*** ***Limit_Enable*** *Event_Enable* *Acked_Transitions* ***Notify_Type*** *Event_Time_Stamps*
Analog Value	Object_Identifier **Object_Name** Object_Type Present_Value ***Description*** Status_Flags Event_State *Reliability* **Out_Of_Service** Units *Priority_Array* ***Relinquish_Default***	***COV_Increment*** ***Time_Delay*** ***Notification_Class*** ***High_Limit*** ***Low_Limit*** ***Deadband*** ***Limit_Enable*** *Event_Enable* *Acked_Transitions* ***Notify_Type*** *Event_Time_Stamps*

Object Type	Properties	
Binary Input	Object_Identifier **Object_Name** Object_Type Present_Value ***Description*** *Device_Type* Status_Flags Event_State *Reliability* **Out_Of_Service** Polarity ***Inactive_Text*** ***Active_Text***	*Change_Of_State_Time* ***Change_Of_State_Count*** (0) *Time_Of_State_Count_Reset* ***Elapsed_Active_Time*** (0) *Time_Of_Active_Time_Reset* ***Time_Delay*** ***Notification_Class*** ***Alarm_Value*** *Event_Enable* *Acked_Transitions* ***Notify_Type*** *Event_Time_Stamps*
Binary Output	Object_Identifier **Object_Name** Object_Type Present_Value ***Description*** *Device_Type* Status_Flags Event_State *Reliability* **Out_Of_Service** Polarity ***Inactive_Text*** ***Active_Text*** *Change_Of_State_Time* ***Change_Of_State_Count*** (0)	*Time_Of_State_Count_Reset* ***Elapsed_Active_Time*** (0) *Time_Of_Active_Time_Reset* ***Minimum_Off_Time*** ***Minimum_On_Time*** Priority_Array **Relinquish_Default** ***Time_Delay*** ***Notification_Class*** *Feedback_Value* *Event_Enable* *Acked_Transitions* ***Notify_Type*** *Event_Time_Stamps*
Binary Value	Object_Identifier **Object_Name** Object_Type Present_Value ***Description*** Status_Flags Event_State *Reliability* **Out_Of_Service** ***Inactive_Text*** ***Active_Text*** *Change_Of_State_Time* **Change_Of_State_Count** *(0)* *Time_Of_State_Count_Reset*	***Elapsed_Active_Time*** (0) *Time_Of_Active_Time_Reset* ***Minimum_Off_Time*** ***Minimum_On_Time*** *Priority_Array* ***Relinquish_Default*** ***Time_Delay*** ***Notification_Class*** ***Alarm_Value*** *Event_Enable* *Acked_Transitions* ***Notify_Type*** *Event_Time_Stamps*
Calendar	Object_Identifier **Object_Name** Object_Type	***Description*** Present_Value **Date_List**

Object Type	Properties	
Device	Object_Identifier Object_Name Object_Type System_Status Vendor_Name Vendor_Identifier Model_Name Firmware_Revision Application_Software_Revision ***Location*** ***Description*** Protocol_Version Protocol_Revision Protocol_Services_Supported Protocol_Object_Types_Supported Object_List Max_APDU_Length_Accepted	Segmentation_Supported *Max_Segments_Accepted* *Local_Time* *Local_Date* *UTC_Offset* *Daylight_Savings_Status* *APDU_Segment_Timeout* APDU_Timeout Number_Of_APDU_Retries *Max_Master* *Max_Info_Frames* Device_Address_Binding Database_Revision *Configuration_Files* *Last_Restore_Time* ***Backup_Failure_Timeout*** *Active_COV_Subsriptions*
File (Stream Access Only)	Object_Identifier **Object_Name** Object_Type ***Description*** File_Type	**File_Size**[1] Modification_Date **Archive** Read_Only File_Access_Method
Loop	Object_Identifier **Object_Name** Object_Type Present_Value ***Description*** Status_Flags Event_State *Reliability* **Out_Of_Service** Output_Units Manipulated_Variable_Reference Controlled_Variable_Reference Controlled_Variable_Value Controlled_Variable_Units Setpoint_Reference **Setpoint**[2] Action ***Proportional_Constant***	*Proportional_Constant_Units* ***Integral_Constant*** *Integral_Constant_Units* ***Derivative_Constant*** *Derivative_Constant_Units* ***Bias*** ***Maximum_Output*** ***Minimum_Output*** Priority_For_Writing ***COV_Increment*** ***Time_Delay*** *Notification_Class* ***Error_Limit*** *Event_Enable* *Acked_Transitions* *Notify_Type* *Event_Time_Stamps*

Object Type	Properties	
Multi-state Input	Object_Identifier **Object_Name** Object_Type Present_Value ***Description*** *Device_Type* Status_Flags Event_State *Reliability* **Out_Of_Service**	Number_Of_States ***State_Text*** ***Time_Delay*** ***Notification_Class*** ***Alarm_Values*** *Fault_Values* *Event_Enable* *Acked_Transitions* ***Notify_Type*** *Event_Time_Stamps*
Multi-state Output	Object_Identifier **Object_Name** Object_Type Present_Value ***Description*** *Device_Type* Status_Flags Event_State *Reliability* **Out_Of_Service** Number_Of_States	***State_Text*** Priority_Array **Relinquish_Default** ***Time_Delay*** ***Notification_Class*** *Feedback_Value* *Event_Enable* *Acked_Transitions* ***Notify_Type*** *Event_Time_Stamps*
Multi-state Value	Object_Identifier **Object_Name** Object_Type Present_Value ***Description*** Status_Flags Event_State *Reliability* **Out_Of_Service** Number_Of_States	***State_Text*** *Priority_Array* ***Relinquish_Default*** ***Time_Delay*** ***Notification_Class*** ***Alarm_Values*** *Fault_Values* *Event_Enable* *Acked_Transitions* ***Notify_Type*** *Event_Time_Stamps*
Notification Class	Object_Identifier **Object_Name** Object_Type ***Description***	Notification_Class **Priority** **Ack_Required** **Recipient_List**[3]
Schedule	Object_Identifier **Object_Name** Object_Type ***Description*** **Effective_Period** ***Weekly_Schedule*** ***Exception_Schedule***	**Schedule_Default** **List_Of_Object_Property_References**[4] **Priority_For_Writing**[5] Status_Flags Reliability **Out_Of_Service**

Object Type	Properties	
Trend Log	Object_Identifier **Object_Name** Object_Type ***Description*** **Log_Enable**[6] ***Start_Time*** ***Stop_Time*** *Log_DeviceObjectProperty* ***Log_Interval***[6, 7] *COV_Resubscription_Interval* *Client_COV_Increment* Stop_When_Full Buffer_Size	Log_Buffer **Record_Count** (0)[6] Total_Record_Count *Notification_Threshold* *Records_Since_Notification* *Last_Notify_Record* Event_State ***Notification_Class*** *Event_Enable* *Acked_Transitions* ***Notify_Type*** *Event_Time_Stamps*

Data Link Layer Options:

☒ BACnet IP, (Annex J)
☒ BACnet IP, (Annex J), Foreign Device
☒ ISO 8802-3, Ethernet (Clause 7)
☐ ANSI/ATA 878.1, 2.5 Mb. ARCNET (Clause 8)
☐ ANSI/ATA 878.1, RS-485 ARCNET (Clause 8), baud rate(s) _____
☒ MS/TP master (Clause 9), baud rate(s): 9600, 19200, 38400, 76800
☐ MS/TP slave (Clause 9), baud rate(s): _____
☐ Point-To-Point, EIA 232 (Clause 10), baud rate(s):_____
☐ Point-To-Point, modem, (Clause 10), baud rate(s): _____
☐ LonTalk, (Clause 11), medium: _____
☐ Other:

Device Address Binding:

Is static device binding supported? (This is currently necessary for two-way communication with MS/TP slaves and certain other devices.) ☒Yes ☐ No

Networking Options:

☒ Router, Clause 6 – Routing configurations: Ethernet-IP, Ethernet-MS/TP, IP-MS/TP
☐ Annex H, BACnet Tunneling Router over IP
☒ BACnet/IP Broadcast Management Device (BBMD)
Does the BBMD support registrations by Foreign Devices? ☒ Yes ☐ No

Character Sets Supported:

Indicating support for multiple character sets does not imply that they can all be supported simultaneously.

☒ ANSI X3.4 ☐ IBM™/Microsoft™ DBCS ☒ ISO 8859-1
☒ ISO 10646 (UCS-2) ☐ ISO 10646 (UCS-4) ☐ JIS C 6226

If this product is a communication gateway, describe the types of non-BACnet equipment/networks(s) that the gateway supports:
This product supports communications between BACnet and any third-party system to which Niagara can connect. Contact Tridium for a list of supported protocols.

Information and/or specifications published here are current as of the date of publication of this document. Tridium, Inc. reserves the right to change or modify specifications without prior notice. The latest product specifications can be found by contacting our corporate headquarters, Richmond, Virginia. Products or features contained herein are covered by one or more U.S. or foreign patents. This document may be copied by parties who are authorized to distribute Tridium products in connection with distribution of those products, subject to the contracts that authorize such distribution. It may not otherwise, in whole or in part, be copied, photocopied, reproduced, translated, or reduced to any electronic medium or machine-readable form without prior written consent from Tridium, Inc. Complete confidentiality, trademark, copyright and patent notifications can be found at: http://www.tridium.com/galleries/SignUp/Confidentiality.pdf. Copyright © 2011 Tridium, Inc.

JACE, Niagara Framework, Niagara AX Framework and the Sedona Framework are trademarks of Tridium, Inc.

Record Drawing

Date: November 12, 2014

***Project Number*:**
A223621
Project Name:
DOT - 66 INDUSTRIAL DRIVE
66 INDUSTRIAL DRIVE
AUGUSTA, ME 04330
Prepared For:
WARREN MECHANICAL INC
P O BOX 149
WESTBROOK, ME, USA 04098

Sold To:

Customer P.O. Number:
MDOT-06
Customer Project Number:

Trane Sales Office:
PORTLAND ME
860 SPRING STREET, UNIT 1
WESTBROOK, ME 04092

Phone: 207-828-1777
Fax: 978-737-3800
Web:

Architect:

Mechanical Contractor:

Mechanical Engineer:

Trane Contracting Team:

Account Manager: DON TAYLOR
DWTAYLOR@TRANE.COM

Project Manager: DAVE RYNNE
DRYNNE@TRANE.COM

Designed By: DAN MACLAUCHLAN
DANIEL.MACLAUCHLAN@TRANE.COM

Data Sheet Index

Following is a list of data sheets included in this submittal in the order that they appear.

APPLICATION CONTROLLERS

TRANE	BMUC400AAA0100011	BAS-PRC033-EN_05142009H.pdf	1 - 4
TRANE	BMUC600AAA0100011	BAS-PRC063-EN_03042011.pdf	5 - 8

END DEVICES AND ACCESSORIES

TRANE	4190-1108	32703289D_4190-1108.pdf	9
TRANE	41901132	32703280H_4190-1132.pdf	10 - 11
TRANE	4190-7020	32703262H_4190-7020_21.pdf	12 - 15
TRANE	X1351152701, X1351153001	BAS-PRC027-EN.pdf	16 - 17
TRANE	X13651537010	BAS-PRC035-EN.pdf	18 - 19
TRANE	X13651559010	X39641180-01C_05092011.pdf	20 - 21
TRANE	X19091354010	X39641209-01B.pdf	22 - 23
BELIMO	LF24-S US	LF24_S.pdf	24 - 25
DWYER	ADPS-03-2-N	ADPS_cat (2).pdf	26
KELE	A-302-K	a-300_rps_21121_sd-01.pdf	27
KELE	A70HA-2	A70Series.pdf	28
KELE	ETD5-S-1S	et_ut8001.pdf	29
KELE	RIBU1C	RIB_RIBT-Pilot.pdf	30 - 31
KELE	RIBXGTFL	RIBXK_RIBXG_RIBXK420.pdf	32
KELE	ST-D24-XH	ST-D.pdf	33 - 34
KELE	TR75VA001, TR50VA005	RIB TR Series.pdf	35 - 36

Product Data Sheet

Tracer™ UC400 Programmable Controller

Ordering Number: BMUC400AAA0100011

The Tracer UC400 controller is a multi-purpose, programmable, wireless sensor support device. This field- or factory-installed device is designed to control the following equipment:

- Single- and dual-duct variable-air-volume (VAV) units
- Fan coils
- Unit ventilators
- Blower coils
- Water-source heat pumps (WSHP)
- Small air handlers

Features and Benefits

Feature	Benefit
BACnet MS/TP	An open standard building automation communications protocol which enables connections to other BAS systems and controllers
Configurable and fully programmable	• Factory programs available through quick configuration for lowest setup time • Programmable for flexibility to meet unique sequence or hardware needs
Total of 23 I/O points built in	Meets most terminal unit needs with extra built-in I/O available to network or additional programming on controller
Expandable to 31 points	Flexibility to meet additional equipment needs
Data logging—25,000 samples	Easier investigation of equipment, zone, or building problems
Factory and field mounting options	Options to best meet job schedule and bidding process
Removable connectors, DIN rail mounting, multiple service tool connections	Ease of installation and service

June 2009

© 2009 Trane All rights reserved

BAS-PRC033-EN

Controller Specifications and Agency Compliance

Storage	
Temperature:	-48°F to 203°F (-55°C to 95°C)
Relative humidity:	Between 5% to 95% (noncondensing)
Operating	
Temperature:	-40°F to 158°F (-40°C to 70°C)
Humidity:	Between 5% to 95% (noncondensing)
Power:	20.4–27.6 Vac (24 Vac, ±15% nominal) 50–60 Hz 24 VA (24 VA plus binary output loads for a maximum of 12 VA for each binary output)
Mounting weight of controller:	Mounting surface must support .80 lb. (.364 kg)
Environmental rating (enclosure):	NEMA 1
Altitude:	6,500 ft maximum (1,981 m)
Installation:	UL 840: Category 3
Pollution	UL 840: Degree 2
Wiring/Transformer	
16 AWG (recommended) copper wire	
• UL Listed, Class 2 power transformer 20.4–27.6 Vac (24 Vac, ±15% nominal) • The transformer must be sized to provide adequate power to the UC400 controller (12 VA) and outputs (maximum 12 VA per binary output)	
Agency Compliance	
• UL916 PAZX- Open Energy Management Equipment • UL94-5V Flammability • CE Marked • FCC Part 15, Subpart B, Class B Limit • AS/NZS CISPR 22:2006 • VCCI V-3/2008.04 • ICES-003, Issue 4:2004 • Communications BACnet MS/TP, supports BACnet protocol ASHRAE 135-2004 and meets BACnet Testing Laboratory (BTL) as an Application Specific Controller (ASC) profile device	

Controller dimensions

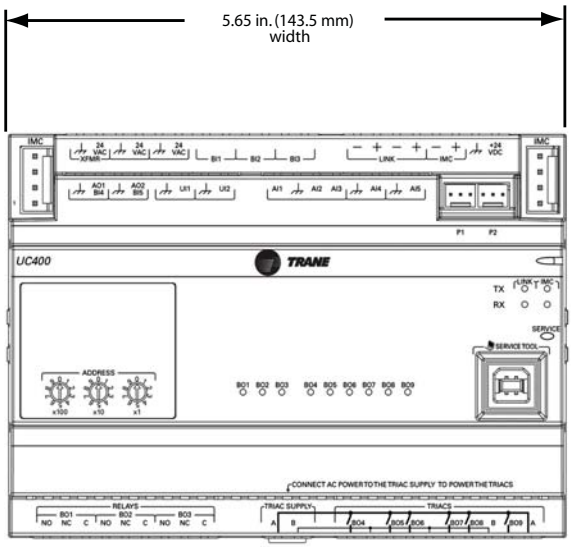

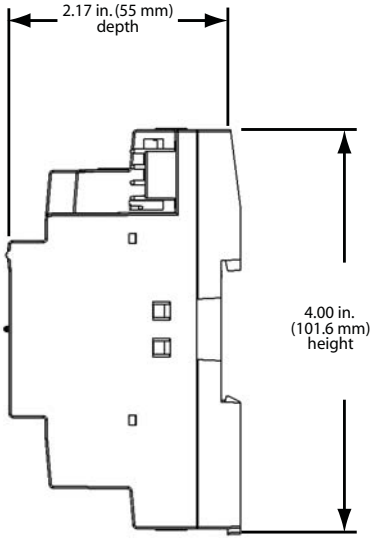

Device Connections

Table 1. Device connections

Connection	Quantity	Types	Range	Notes
*Analog input (AI1 to AI5)	5	Temperature	10 kΩ thermistor	
		Setpoint	0 Ω to 1,000 Ω	
		Resistive	200 Ω to 20 kΩ	Typically used for fan speed switch
Universal input (UI1 and UI2)	2	Linear	0–20 mA	These inputs may be configured to be thermistor inputs, 0–10 Vdc inputs, or 4–20 mA inputs.
		Linear	0–10 Vdc	
		Resistive	** Refer to analog input connection for ranges and types above*	
		Binary	Solid state open collector	
		Pulse	Solid state open collector	Minimum dwell time is 10 milliseconds (ms) ON and 10 milliseconds OFF.
Binary input[a] (BI1 to BI3)	3		24 Vac detect	The UC400 controller provides the 24 Vac that is required to drive the binary inputs when using the recommended connections.
Binary output[a] (BO1 to BO3)	3	Relay	2.88 A @24 Vac pilot duty (For further power ratings, refer to the Tracer UC400 Installation, Operation, and Maintenance Manual [BAS-SVX20]).	Power needs to be wired to the binary output. All outputs are isolated from each other and from ground or power. ***Ranges given are per contact***.
Binary output[a] (BO4 to BO9)	6	TRIAC	0.5 A max @24-277 Vac, resistive and pilot duty (For further power ratings, refer to the Tracer UC400 Installation, Operation, and Maintenance Manual [BAS-SVX20]).	Use for modulating TRIAC. User determines whether closing high side (providing voltage to the grounded load) or low side (providing ground to the power load). ***Ranges given are per contact and power comes from TRIAC SUPPLY circuit***.
Analog output/binary input (AO1/BI4 and AO2/BI5)	2	Linear output	0–20 mA	Each termination must be configured as either an analog output or binary input.
		Linear output	0–10 Vdc	
		Binary input	Dry contact	
Pressure inputs (PI1 and PI2)	2	3-wire	0–5 in H_2O	Pressure inputs supplied with 5 volts of power. Designed for Kavlico™ pressure transducers.
Overall Point Total	**23**			

(a) Binary Inputs, Binary Outputs, and TRIACs: ***For safety precautions, do not mix Class 1 and Class 2 voltages in an enclosure or on a controller without a physical barrier between these units.***

Trane and the Trane logo are trademarks of Trane in the United States and other countries. All trademarks referenced in this document are the trademarks of their respective owners.

Literature Order Number	BAS-PRC033-EN
Date	June 2009
Supersedes	NEW

www.trane.com

For more information, contact your local Trane office or e-mail us at comfort@trane.com

Trane has a policy of continuous product and product data improvement and reserves the right to change design and specifications without notice.

Product Data Sheet

Tracer™ UC600 Programmable Controller

Ordering number: BMUC600AAA0100011

The Tracer UC600 controller is a multi-purpose, programmable, wireless-compatible device. This field-installed device is designed to control the following types of equipment:

- Air-handling units (AHUs)
- Central heating and cooling plants
- Cooling towers
- Generic input/output (I/O) control

Features and Benefits

Feature	Benefit
BACnet MS/TP	An open standard building automation communications protocol which enables connections to other BAS systems and controllers
Configurable and fully programmable	• Factory programs available through quick configuration for lowest setup time • Programmable for flexibility to meet unique sequence or hardware needs
Total of 19 built-in I/O hardware terminations	Meets most applied product needs with built-in I/O or with additional custom programming on the controller
Expandable up to 120 hardware terminations	Flexibility to meet additional equipment needs
Data logging—25,000 samples	Easier investigation of equipment, zone, or building problems
Removable connectors, DIN rail mounting, multiple service tool connections	Ease of installation and service

Controller Specifications and Agency Compliance

Storage	
Temperature:	-67°F to 203°F (-55°C to 95°C)
Relative humidity:	Between 5% to 95% (noncondensing)
Operating	
Temperature:	-40°F to 158°F (-40°C to 70°C)
Humidity:	Between 5% to 95% (noncondensing)
Power:	20.4–27.6 Vac (24 Vac, ±15% nominal) 50 or 60 Hz, 26 VA (26 VA plus a maximum of 12 VA for each binary output) 24 Vdc, ±10%, device max load 600 mA
Mounting weight of controller:	Mounting surface must support 1.3 lb. (0.6 kg)
Environmental rating (enclosure):	NEMA 1
Installation:	UL 840: Category 3
Pollution	UL 840: Degree 2
Wiring / Transformer	
18 AWG is recommended for the circuit between the transformer and the controller.	
• UL listed, Class 2 power transformer, 24 Vac ±10%, device max load 26 VA. • The transformer must be sized to provide adequate power to the UC600 controller (26 VA) and external device outputs. • UC600 requires 26VA: 26VA is for UC600+ IO + two expansion modules (XM30 or XM32).	
Agency Compliance	
• UL916 PAZX, Open Energy Management Equipment • UL94-5V, Flammability • CE Marked • FCC Part 15, Subpart B, Class B Limit	

Controller dimensions

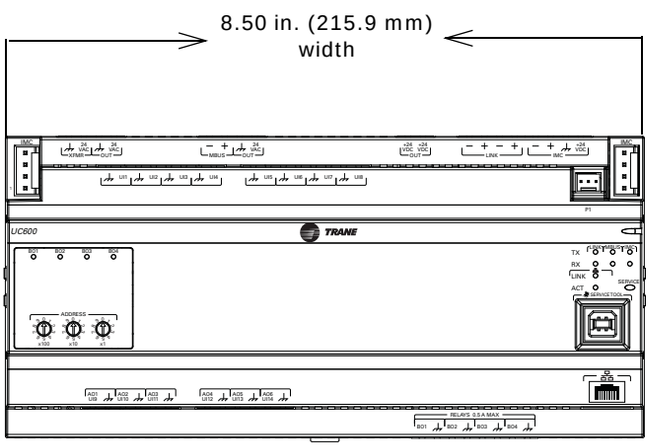

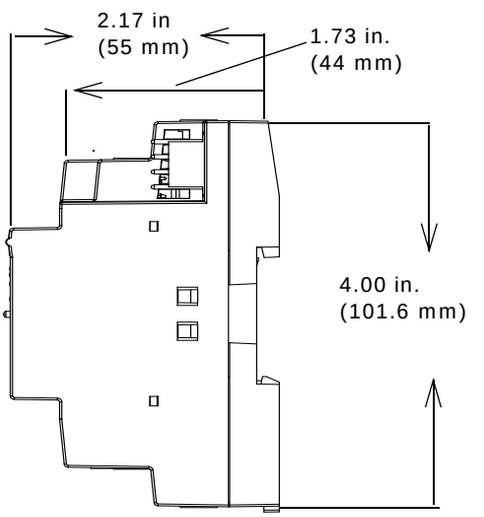

Input and Output Specifications

Input/Output type	Quantity	Types	Range	Notes
Universal Input	8	Thermistor	10kΩ – Type II, 10kΩ –Type III, 2252Ω – Type II, 20kΩ – Type IV, 100 kΩ	The UC600 is limited to 10 combined 0–20 mA inputs and/or outputs.
		Resistive (setpoint)	100Ω – 1MΩ	
		RTD	Balco™ (Ni-Fe), 1kΩ; 375 (Pt), 1kΩ	
		Current	0–20 mA (linear)	
		Voltage	0–20 Vdc (linear)	
		Binary	Dry contact	
		Pulse Accumulator	Minimum 20 ms, opened or closed	
Universal Input/ Analog Output	Configure using any combination of analog or binary inputs/analog outputs			
Inputs	6	Thermistor	10kΩ – Type II, 10kΩ –Type III, 2252Ω – Type II, 20kΩ – Type IV, 100 kΩ	
		Resistive (setpoint)	100Ω –1MΩ	
		RTD	Balco™ (Ni-Fe), 1kΩ; 375 (Pt), 1kΩ	
		Current	0–20 mA (linear)	
		Voltage	0–20 Vdc (linear)	
		Binary	Dry contact	
		Pulse accumulator	Minimum 20 ms, opened or closed	
Outputs		Current	0–20 mA @16 V	
		Voltage	0–10 Vdc @20 mA	
		Pulse	12.5ms to 1 second (12.5ms resolution), 1 second to 60 seconds (0.5 second resolution)	
Binary Output	4	Relay (form A) wet	24 VAC, 0.5A maximum	Ranges are given per contact.
Pressure Input	1	3-wire	0–5 in H_2O	Pressure input supplied with 5 Vdc. Designed for Kavlico™ pressure transducers.
Point total	**19**			

Trane optimizes the performance of homes and buildings around the world. A business of Ingersoll Rand, the leader in creating and sustaining safe, comfortable and energy efficient environments, Trane offers a broad portfolio of advanced controls and HVAC systems, comprehensive building services, and parts. For more information, visit www.Trane.com.

Trane has a policy of continuous product and product data improvement and reserves the right to change design and specifications without notice.

© 2011 Trane All rights reserved

BAS-PRC063-EN 04 Mar 2011

New

4 in. Stainless Steel Immersion Well

Ordering number: 4190 1108

Description

The immersion well (see Figure 1) is made of one-piece stainless steel to ensure reliability and durability.

It is 4¼ in. in length and extends approximately 2½ in. into a pipe. Sensors (4190 1102, 4190 1103, and 4190 1105) are shipped with a ½ in. fitting, allowing the sensors to screw directly into the well. A small amount of thermal compound (4190 1114) is recommended to assure optimal results.

Figure 1: Immersion well

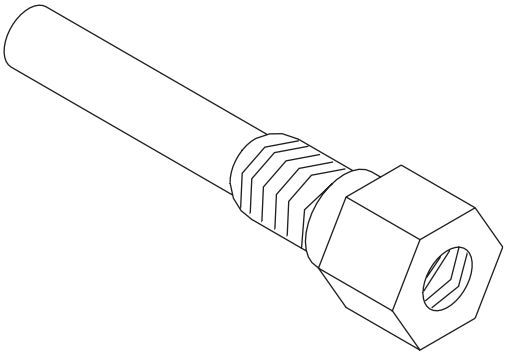

Figure 2: Well installation

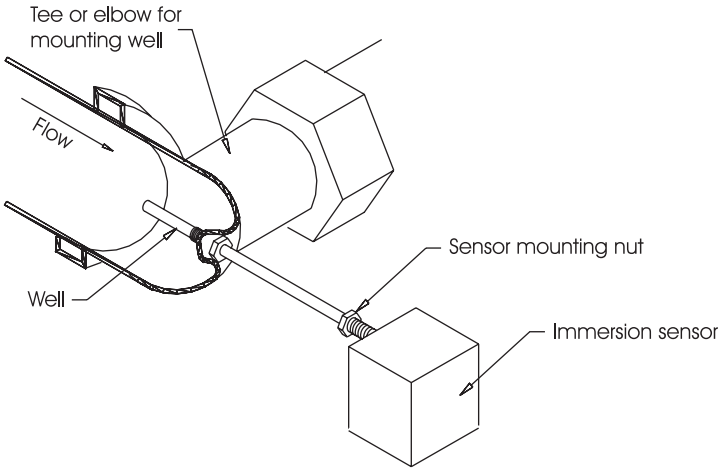

Specifications

Construction	Stainless steel

Mounting

Complete the following steps to mount the well:

1. Install the well into the pipe using a ¾ in. FNPT saddle or Thredolet®, supplied by others.

   Note:
   To ensure maximum strength, install the well at an angle facing into the flow (see Figure 2).

2. Fill well with thermal compound (4190 1114) for optimum temperature sensing.
3. Screw the sensor into the well using the ½ in. MNPT fitting supplied with each sensor (4190 1102, 4190 1103, and 4190 1105).

© 2008 Trane All rights reserved

4 in. Duct/Immersion Thermistor Temperature Sensor

Ordering number: 4190 1132

Description

The 4 in. duct/immersion temperature sensor (Figure 1) with conduit box monitors duct temperature or water temperature. A neoprene gasket seal and ½ in. MNPT well fitting are provided for your convenience. Use one or the other accordingly for duct- or well-mounted applications. If this sensor is used to monitor water temperature, an immersion well (4190 1104 or 4190 1108) is required.

Figure 1: Duct/immersion temperature sensor

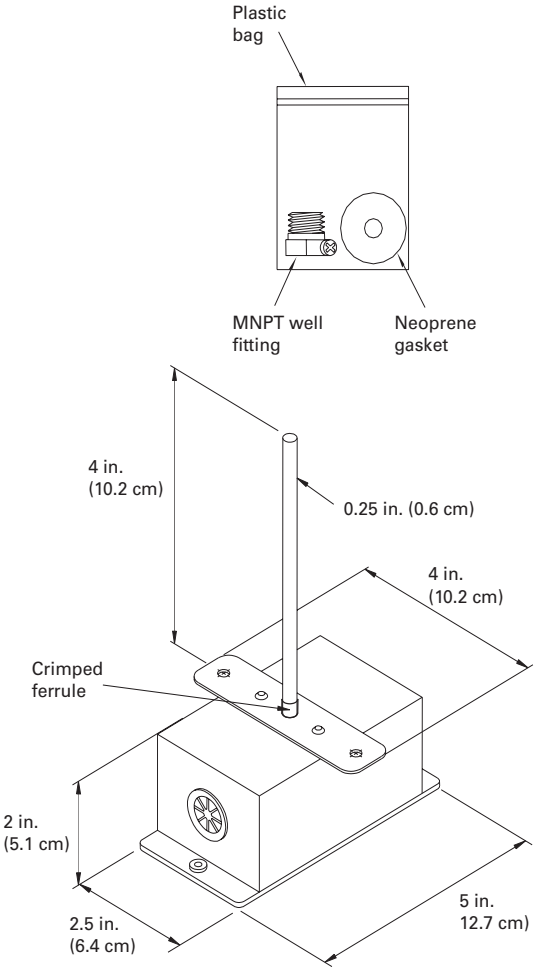

Specifications

Operating temperature range	-30°F to 220°F (-34°C to 104°C)
Sensing element	Thermistor
Resistance	10,000 Ω at 77°F (25°C)
Accuracy	±0.36°F (0.2°C), from 32°F to 158°F (0°C to 70°C)
Drift	0.04°F (0.02°C) after 10 years within temperature range

Duct mounting

If the sensor is used to monitor duct temperatures, complete the following steps:

IMPORTANT

For proper sensor operation, the gasket seal must be used when mounting the sensor in a duct.

1. Hold the sticky side of the neoprene gasket seal down and slide the gasket seal over the sensor probe.
2. Press the gasket securely to the sensor housing.
3. Drill a 3/8-inch hole on a flat surface of the duct where air stream temperature is typical of the ambient air temperature.
4. Insert the probe into the hole and fasten the sensor to the duct with two No. 8 sheet metal screws (not provided).
5. Connect the sensor leads to the controller analog input (Figure 2).

Figure 2: Wiring diagram

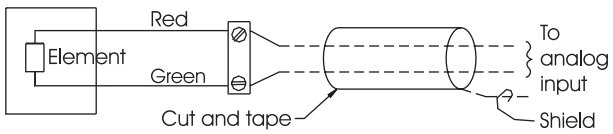

© 2008 Trane All rights reserved.

Immersion well mounting

If the sensor is used to monitor water temperature, an immersion well (4190 1104 or 4190 1108) is required. Complete the following steps for well mounting:

1. Locate both the MNPT well fitting provided with the sensor and the appropriate immersion well.

CAUTION
Avoid Equipment Damage

When using an immersion well, do not use the gasket seal. The seal will prevent the well from engaging completely with the crimped ferrule at the base of the probe.

2. Discard neoprene gasket seal provided with the sensor.
3. Loosen the set screw on the well fitting and thread the fitting into the immersion well. Tighten the fitting securely to the well.
4. Apply thermal compound (4190 1114) to the probe tip and inside the immersion well.
5. Slide the probe into the immersion well until:
   - Well fitting engages crimped ferrule at the base of the probe (Figure 1 on page 1)
   - Junction box seats against the well fitting
6. Tighten the set screw to hold the sensor in place.
7. Connect the sensor leads to the controller analog input (Figure 2 on page 1).

™ ® The following are trademarks or registered trademarks of Trane: Trane.

Installation Sheet

±3% Relative Humidity and Temperature Sensor

Order numbers: X13790444010, 4190 7020, X13790445010, 4190 7021

The ±3% relative humidity (RH) and temperature sensor utilizes a polymer capacitive-sensing element that provides superior performance and longevity. The polymer capacitive element has excellent recovery from saturation compared to other humidity sensing technologies.

Before installation, verify receiving one of the four following sensors:

Room humidity and temperature sensor (ordering number X13790444010)

Duct humidity sensor (ordering number 4190 7020)

Outdoor air humidity sensor, 4–20 mA (ordering number 4190 7021)

Outdoor air humidity sensor without temperature sensor, 20–4 mA (ordering number X13790445010)

Note: All sensors have a range of 0–100% RH and ±3% RH sensing accuracy. A 10 kΩ thermistor is available for temperature sensing.

Power Requirements

The relative humidity sensor requires 24 Vdc to operate.

Warnings, Cautions, and Notices

Warnings, cautions, and notices are provided in appropriate places throughout this document:

⚠ **WARNING**: Indicates a potentially hazardous situation which, if not avoided, could result in death or serious injury.

⚠ **CAUTION**: Indicates a potentially hazardous situation which, if not avoided, may result in minor or moderate injury. It may also be used to alert against unsafe practices.

NOTICE: Indicates a situation that may result in equipment or property-damage only accidents.

© 2008 Trane All rights reserved

Sensor Specifications

Accuracy:	±3% RH over 20–95% RH at 77°F (25°C). Includes hysteresis, linearity, and repeatability.
Operating temperature range:	From -20°F to 140°F (-29°C to 60°C)
Supply voltage:	18-36 Vdc
Drift rate:	Less than 1% per year
Operating measurement range:	0-99% RH, noncondensing
Sensing element:	Polymer capacitive
Output characteristics:	4-20 mA for 0-100% RH (*X13790486010 is 20- mA for 0-100% RH*)
Repeatability:	0.5% RH
Hysteresis:	Less that 1% RH
Sensitivity:	0.1% RH
Storage temperature:	From -85°F to 158°F (-65°C to 70°C)
Thermistor resistance:	10 kΩ at 77°F
Temperature accuracy:	±0.36°F (±0.2°C)

Sensor Dimensions and Locating Best Practices

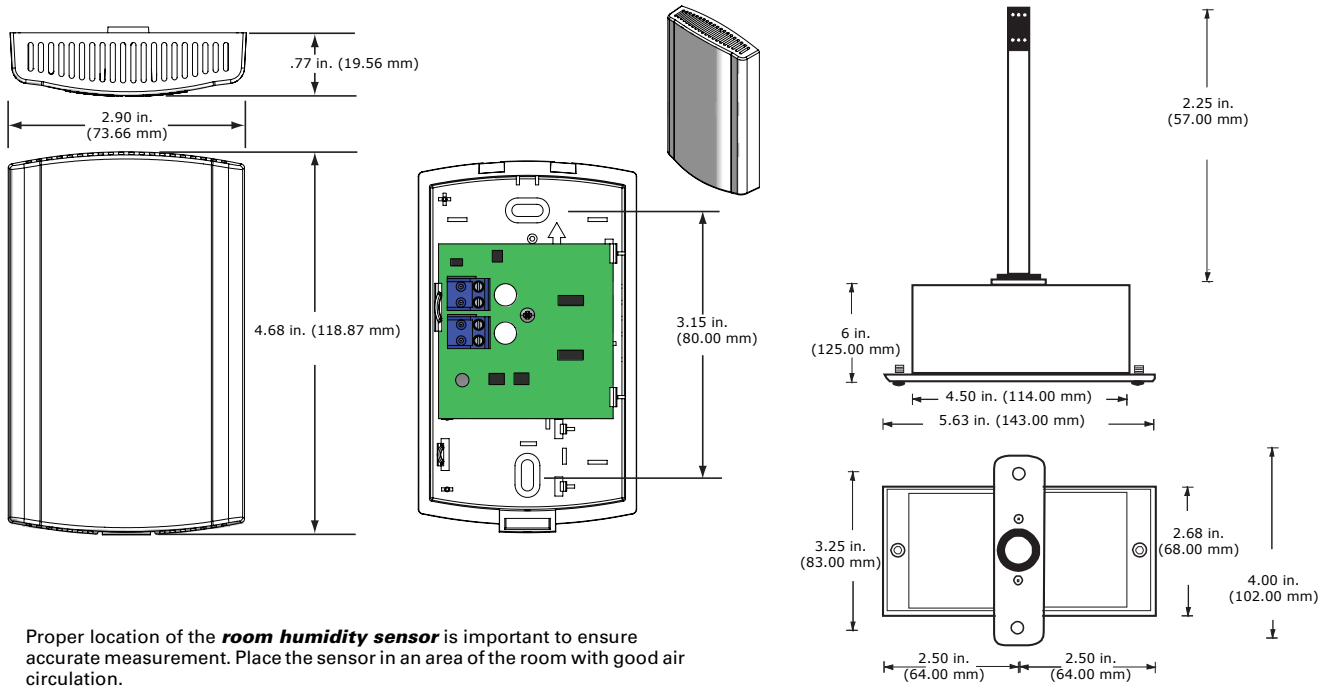

Proper location of the ***room humidity sensor*** is important to ensure accurate measurement. Place the sensor in an area of the room with good air circulation.

Places to avoid when locating the sensor:

- Locations subject to draft from windows, doors, or diffusers
- Surfaces with an uncooled or unheated area behind them, such as an outside wall or the wall of an unoccupied store room
- Near heat sources, such as radiant heat from the sun, heat from appliances, or heat from concealed pipes or chimneys
- Dead spots behind doors, draperies, or in corners
- Walls having excessive vibration
- Corrosive environments such as near swimming pools or in hospital rooms

Place the ***duct humidity sensor*** in an area of the duct that has good air flow. Mount the sensor so that the 6-inch probe is located in the center of the duct. The transmitter should be mounted away from fans, corners, heating and cooling coils, sparging valves, and other equipment that will affect the relative humidity measurement.

Sensor Dimensions and Locating Best Practices (continued)

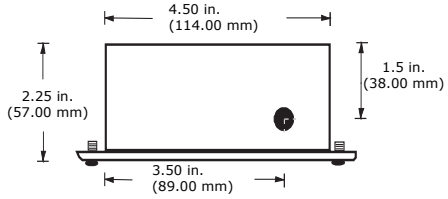

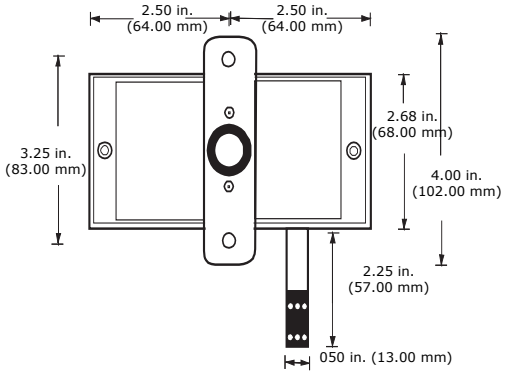

Place the ***outdoor air humidity sensor*** on an outside wall, preferably on the north side of the building. Mount the sensor in a sheltered area under an roof overhang that is protected from rain and sun-heated air rising up the wall of the building.

Mounting

To mount the ***room humidity sensor***, first choose a flat interior surface that is approximately 54 inches (1.4 m) from the floor and then:

1. Remove sensor cover by pressing on the thumb tab at the bottom of the enclosure. Tilt the cover forward and raise it over the top of the back plate.
2. Feed the wires through the base.
3. Attach sensor to drywall or plaster (hardware not included with the sensor).
   Note: For a 2 × 4 junction box, mount the sensor using two #6-32 screws.
4. Connect the controller wires to the terminals on the sensor (refer to the next section about wiring).
5. Replace cover by engaging tab hinges on top of the unit and then push to snap in place.

—or—

To mount the ***duct humidity sensor***:

1. Drill a 5/8″ hole through a flat vertical surface of the duct.
2. Using #8 self-tapping screws (not provided), mount the sensor on the duct surface with the knockout pointing downwards.
3. Feed wires through the knockout and connect as described in the next section, "Wiring".

—or—

To mount the ***outdoor air humidity sensor***:

1. Orient the sensor with the probe pointing downward.
2. Using corrosion-resistant screws, attach sensor to the building.
3. Feed wires through the knockout and connect as described in the next section, "Wiring".

Wiring

Note: Analog input wire must be 18-gauge shielded twisted pair (equivalent to Trane wire number 400 2028). Cut back and tape the shield at the sensor. Ground the shield at the controller. Before starting wiring, refer to the illustration, "Specific Controller-type Wiring, p 4".

NOTICE

Equipment malfunction!

Do not run sensor wires and ac power wires together in the same conduit or wire bundle. This may cause malfunction due to electrical noise.

Connect the controller wires to the terminals on the sensor as follows:

1. Remove the blue terminal block **(A)** by carefully pulling it off the circuit board.
2. Locate the (+) and (-) terminal markings **(B)** on the board.
3. Attach the supply voltage to the (+) lead and the signal wire to the (-) lead.
4. Complete the wiring.
5. Replace the terminal block **(C)** on the circuit board and apply power to the unit.
6. Check for appropriate output signal using a digital volt meter (DVM) set on the dc milliamperes connected in series with the (-) terminal.

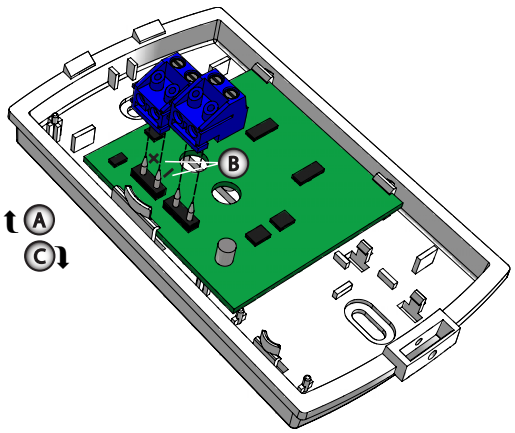

Specific Controller-type Wiring

Tracer ZN520 sensor

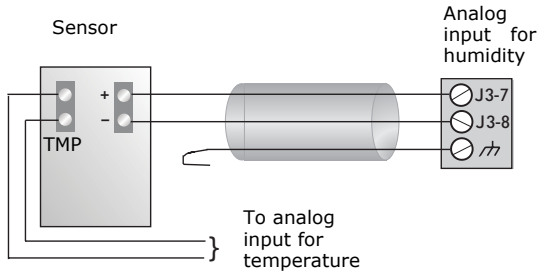

Tracer ZN521 sensor

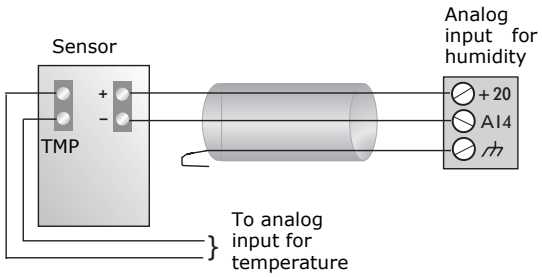

PCM/UPCM sensor

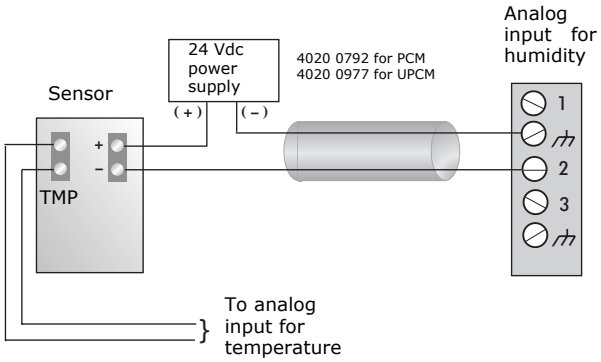

MP581 sensor

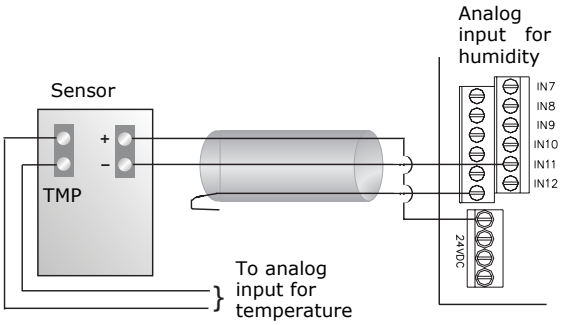

Voyager or Precedent ReliaTel sensor

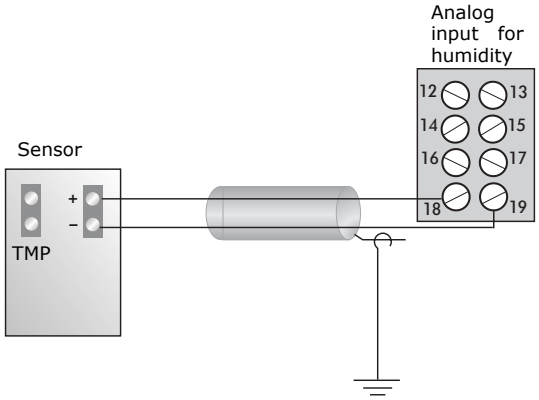

Intellipak II sensor

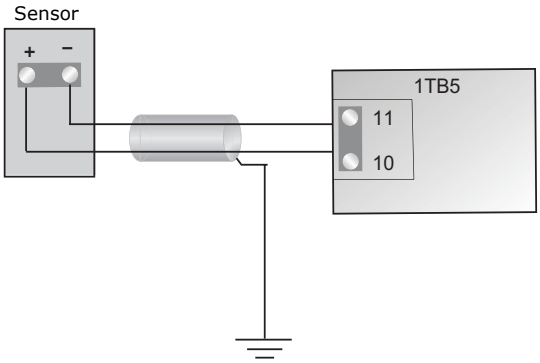

Trane, the Trane logo, IntelliPak, Precedent, ReliaTel, and Voyager are trademarks of Trane in the United States and other countries. All trademarks referenced in this document are the trademarks of their respective owners.

www.trane.com

For more information, contact your local Trane office or e-mail us at comfort@trane.com

Literature Order Number	3270 3262 Rev H
Date	March 2008
Supersedes	3270 3262 Rev G

Trane has a policy of continuous product and product data improvement and reserves the right to change design and specifications without notice.

Product Data Sheet

Zone Sensors

Trane™ offers a full line of wireless and wired temperature sensors. Wireless temperature sensors are an ideal and cost-effective alternative to wired sensors that provide easy and flexible installation. Conventional wired sensors are best suited where wireless sensors are not allowed or when a wired connection to a service tool is required.

Features, Benefits, and Part Numbers:

Features	Benefits
Temperature-only sensors	Simplifies tenant interaction by moving the temperature setpoint to a centralized source.
Temperature setpoint control	Allows the tenant to choose a temperature setpoint that satisfies their personal preference.
Occupancy override	Allows the tenant to request temporary timed override system operation that permits the building conditions to remain in occupied comfort conditions.
COMM module (optional)	Compatible with all Trane-wired temperature sensors. This optional accessory provides local RJ22 connection to Trane service tools for easy, low cost maintenance.
Hot/cold thumbwheel (optional)	Allows the tenant to choose a temperature setpoint relative to their zone of comfort as opposed to exact numbers.

Part Numbers				
Description				
Setpoint	Occupancy	Part Number	BAYSENS	Global Parts
Single	Yes	X1351152701	BAYSENS074A	SEN01447
NA	No	X1351152801	BAYSENS077A	SEN01448
Single	No	X1351152901	BAYSENS075A	SEN01449
NA	Yes	X1351153001	BAYSENS073A	SEN01450
COMM Module (Box of 12)		X1365146702	BAYCOMM005A	CON01313
Thumbwheel; Hot/Cold (Box of 12)		X1316105702	NA	KNB00182

© 2007 Trane All rights reserved

Specifications

Description	
Sensor operating temperature	From 32°F to 122°F (0°C to 50°C)
Storage temperature	From -40°F to 185°F (-40°C to 85°C)
Storage/operating humidity range	5% to 95% relative humidity (RH), noncondensing
Thermistor accuracy	0.2°C at 25°C, 1%
Setpoint functional range	45°F to 90°F (7.2°C to 32.2°C)
Setpoint thumbwheel markings	50°F to 85°F (in 5°F increments) with */** icons on thumbwheel 11°C to 29°C (in 3°C increments) with */** icons on thumbwheel
Housing material	Polycarbonate/ABS (suitable for plenum mounting), UV protection, UL 94: 5 VA flammability rating
Mounting	Fits a standard 2 in. by 4 in. junction box (vertical mount only). Mounting holes are spaced 3.2 in. (83 mm) apart on vertical center line. Includes mounting screws for junction box or wall anchors for sheet-rock walls. Overall dimensions: 2.9 in (74 mm) by 4.7 in. (119 mm)

Schematic (Typical)

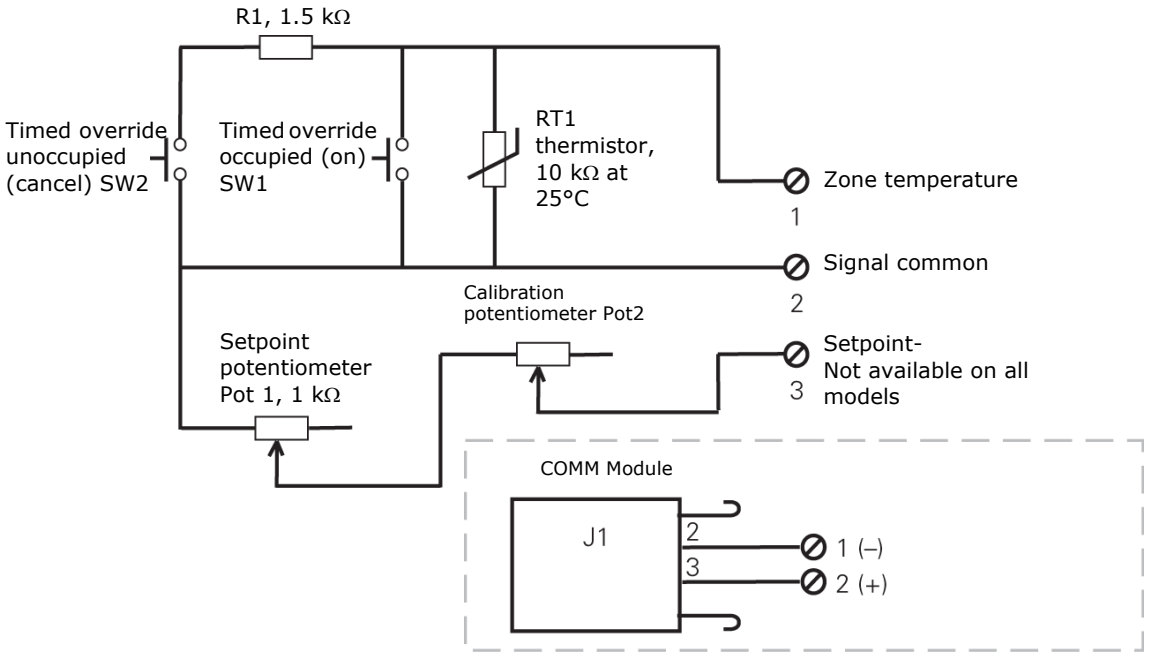

Trane and the Trane logo are trademarks of Trane in the United States and other countries. All trademarks referenced in this document are the trademarks of their respective owners.

www.trane.com

For more information, contact your local Trane office or e-mail us at comfort@trane.com

Literature Order Number	BAS-PRC027-EN
Date	November 2007
Supersedes	New

Trane has a policy of continuous product and product data improvement and reserves the right to change design and specifications without notice.

Product Data Sheet

Tracer™ XM30 Expansion Module

Ordering Number: X13651537010

The Tracer XM30 Expansion Module provides additional points when needed for Tracer UC400 applications. Each expansion module has a total of 4 points that can be configured using any combination of inputs/outputs (refer to the table below). A maximum of eight (8) expansion modules can be added to a Tracer UC400. Use of a PM014 DC power supply is required for applications requiring more than two XM30 modules.

Packaged Contents

- One (1) XM30 expansion module
- One (1) bag of 2-pin and 4-pin terminal connectors
- One (1) IMC cable harness

Important: *Visually inspect contents for obvious defects or damage. All components have been thoroughly inspected before leaving the factory. Any claims for damage incurred during shipment should be filed immediately with the carrier.*

XM30 Configurable Connections

The table below provides information about the XM30 configurable connections.

Connection	Quantity	Types	Range
Inputs	**Can be configured using any combination of analog or binary inputs / analog outputs**	Thermistor	2252 Ω, 10k, 20k, 100kΩ
		Resistive (Setpoint)	100 Ω to 1 MΩ
		RTD	1 kΩ; platinum, Balco™ or nickel
		Current	0–20 mA (linear)
		Voltage	0–20 Vdc (linear)
		Binary	Dry Contact
		Pulse Accumulator	Minimum 20 milliseconds open or closed
Outputs		Current	0–20 mA @ 16V
		Voltage	0–16 Vdc @ 20mA
Overall Point Total	**4**		

© 2009 Trane. All rights reserved.

Storage/Operating Environment Specifications and Agency Compliance

Storage	
Temperature:	-67°F to 203°F (-55°C to 95°C)
Relative humidity:	5% to 95% (noncondensing)
Operating	
Temperature:	-40°F to 158°F (-40°C to 70°C)
Humidity:	5% to 95% (noncondensing)
Power:	24 Vdc ±10%, 120 mA
• Mounting weight of controller: • Mounting weight of controller with terminal connectors:	• Mounting surface must support .27 lb. (.122 kg) • Mounting surface must support .31 lb. (.142 kg)
Environmental rating (enclosure):	NEMA 1
Installation:	UL 840: Category 3
Pollution:	UL 840: Degree 2
Agency Compliance	
• UL916 PAZX- Open Energy Management Equipment • UL94-5V Flammability • CE Marked • FCC Part 15, Subpart B, Class B Limit	

XM30 Dimensions

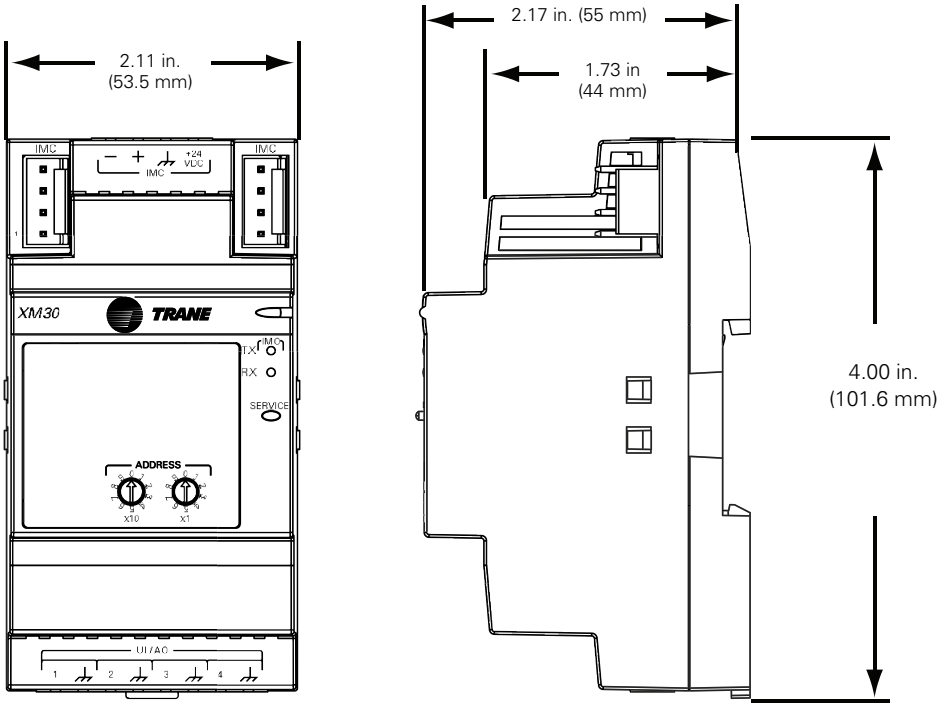

Tracer, Trane and the Trane logo are trademarks of Trane in the United States and other countries. All trademarks referenced in this document are the trademarks of their respective owners.

Literature Order Number	BAS-PRC035-EN
Date	December 2009
Supersedes	July 2009

www.trane.com

For more information, contact your local Trane office or e-mail us at comfort@trane.com

Trane has a policy of continuous product and product data improvement and reserves the right to change design and specifications without notice.

Installation Instructions

Enclosure for Tracer DIN-mounted Controllers

Order Number: X13651559010 (120 Vac, w/outlet)

1

Packaged Contents

- One (1) enclosure with 120 Vac outlet (5 A max.)
- Four (4) #10 (5mm) screws with anchors
- One copy of the installation instructions

Model Numbers

Before installing the controller, verify the correct model for local power requirements. The model number is on the shipping label or on the product label inside the enclosure.

May 2011 © 2011 Trane. All rights reserved. **X39641180-01C**

2

Warnings, Cautions, and Notices

⚠ **WARNING:** Indicates a potentially hazardous situation which, if not avoided, could result in death or serious injury.

⚠ **CAUTION:** Indicates a potentially hazardous situation which, if not avoided, could result in minor or moderate injury. It may also be used to alert against unsafe practices.

NOTICE: Indicates a situation that could result in equipment or property-damage only accidents.

⚠ CAUTION

Use the equipment only as specified!

The use of the enclosure in a manner not specified in this document may impair the protection provided by the enclosure.

Notice:

Avoid Equipment Damage!

Install and use the controllers as specified by the manufacturer. Failure to do so could result in equipment damage.

⚠ SAFETY WARNING

Only qualified personnel should install and service the equipment. The installation, starting up, and servicing of heating, ventilating, and air-conditioning equipment can be hazardous and requires specific knowledge and training. Improperly installed, adjusted or altered equipment by an unqualified person could result in death or serious injury. When working on the equipment, observe all precautions in the literature and on the tags, stickers, and labels that are attached to the equipment.

3

Specifications and Dimensions

Operating Environment Specifications

Make sure that the operating environment conforms to the specifications listed in Table 1.

Table 1. Specifications

Temperature	From 32°F to 122°F (0°C to 50°C)
Humidity	5–95% non-condensing
Power requirements	120 Vac, 6A maximum, 1 phase, 50/60 Hz
Weight	Mounting surface must be able to support 60 lb. (28 kg)
Dimensions	16 ½ in. × 14 ¾ in. × 5 ½ in. (418 mm × 373 mm × 140 mm)
Installation	U.L. 840: Category 3
Pollution	U.L. 840: Degree 2

The power output of the panel is de-rated at higher ambient temperatures to account for the heat rise in the panel. Table 2 shows the ratings.

Table 2. Power Output

VA at 24 Vac	Temperature Range C°/F°
85	up to 35°C (95°F)
75	up to 45°C (113°F)
50	up to 50°C (122°F)

4

DIN Unit Width

The following table provides DIN unit width measurements for Trane devices.

Table 3. DIN unit width measurements

Device	Device Width (mm/in)	DIN Unit Width (1 unit = 18 mm)
Tracer SC system controller	143.6 mm/5.6 in	8
Tracer UC400 controller	143.6 mm/5.6 in	8
Tracer UC600 controller	215.5 mm/8.5 in	12
Tracer UC800 controller	71.6 mm/2.8 in	4
Tracer XM30 expansion module	53.6 mm/2.1 in	3
Tracer XM32 expansion module	71.6 mm/2.8 in	4
PM014 power supply module	107.6 mm/4.2 in	6
Tracer BACnet terminator	35.6 mm/1.4 in	2

5

Minimum clearances and internal enclosure dimensions are provided in Figure 1. Ensure that the selected location provides enough space for the minimum clearances. External dimensions are shown in Figure 2, panel 6.

Figure 1. Minimum clearances and internal dimensions

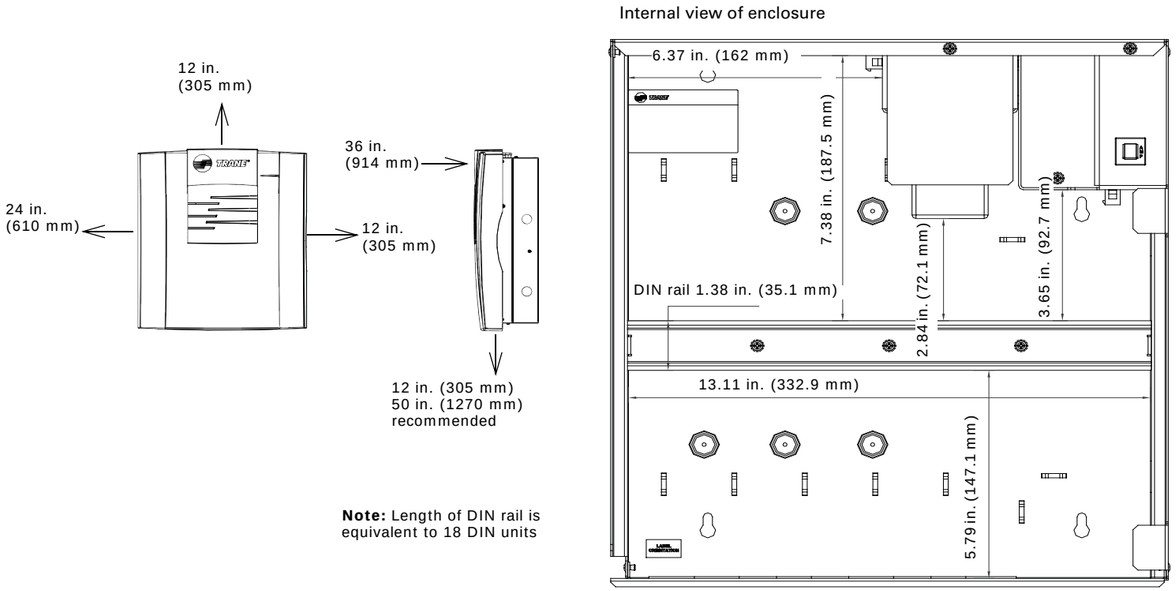

Note: Length of DIN rail is equivalent to 18 DIN units

6

Figure 2. External dimensions

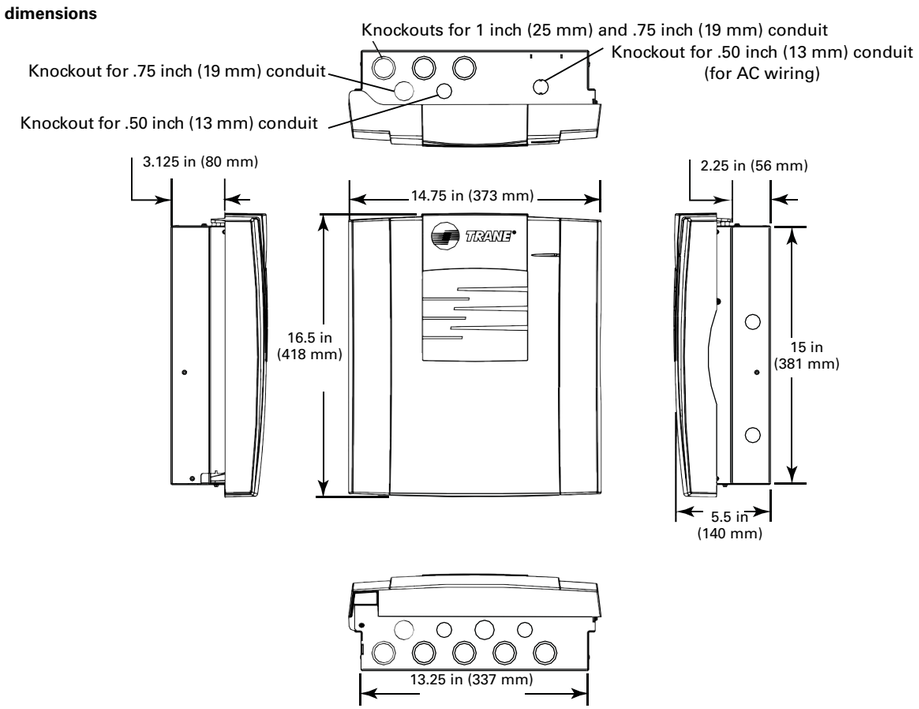

7

Mounting and Wiring

Location

Ensure that the location meets the operating environment requirements and clearance requirements described in the previous sections. The controller must be installed indoors. Trane recommends locating the controller:

- Near the controlled equipment to reduce wiring
- Where service personnel have easy access
- Where public access is restricted to minimize the possibility of tampering or vandalism

Mounting Instructions

To mount the enclosure:

1. Use the enclosure as a template and mark the location of the four mounting holes on the mounting surface.
2. Set aside the enclosure and drill holes for the screws at the marked locations.

   Note: *Drill holes for #10 (5 mm) screws or #10 wall anchors. Use wall anchors if the mounting surface is dry wall or masonry.*
3. Secure the enclosure to the mounting surface with the enclosed #10 (5 mm) screws or #10 wall anchors.

Wiring High-voltage AC Power

⚠ WARNING

Hazardous Voltage!

Disconnect all electrical power, including remote disconnects, before servicing. Follow proper lockout/tagout procedures to ensure the power cannot be inadvertently energized. Failure to disconnect power before servicing could result in death or serious injury.

8

⚠WARNING

Proper Field Wiring and Grounding Required!

All field wiring MUST be performed by qualified personnel. Improperly installed and grounded field wiring poses FIRE and ELECTROCUTION hazards. To avoid these hazards, you MUST follow requirements for field wiring installation and grounding as described in NEC and your local/state electrical codes. Failure to follow code could result in death or serious injury.

Notice:

Use Copper Conductors Only!

Unit terminals are designed to accept copper conductors only. Other conductors could cause equipment damage.

To ensure proper operation of the controller, install the power supply circuit in accordance with the following guidelines:

- The panel must receive power from a dedicated power circuit. Failure to comply could cause panel malfunctions.
- A disconnect switch for the dedicated power circuit must be near the panel, within easy reach of the operator, and marked as the disconnecting device for the panel.
- 24 Vac or higher power-wire conduits or wire bundles must not contain input/output wires. Failure to comply could cause the controller to malfunction due to electrical noise.
- Power wiring must comply with the National Electrical Code™ (NEC) and applicable local electrical codes.
- 120 Vac wiring requires three-wire service (line, neutral, ground).

  Note: *The transformer voltage utilization range is 98–132 Vac (120 Vac nominal). The panel automatically detects whether the current is 50 or 60 cycle.*

9

To connect 120 Vac power wires:

1. Lock open the supply-power disconnect switch.
2. At the top-right corner of the enclosure, remove the knockout for .50 inch (13 mm) conduit.
3. Open or remove the enclosure door if it is already installed.
4. Inside of the enclosure at the top-right corner, remove the line voltage area cover plate.
5. Feed the high-voltage power wire into the enclosure.
6. Connect the line wire to the **'L'** terminal as shownin Figure 3.

Figure 3. AC wiring for 120 Vac

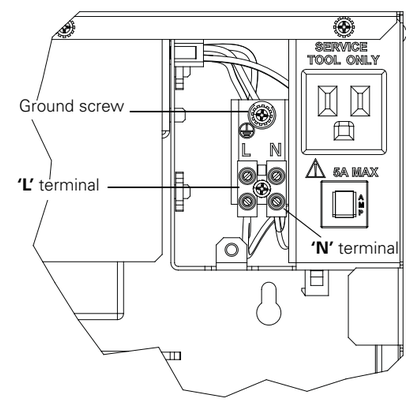

10

7. Connect the neutral wire to the **'N'** terminal as shown above.
8. Connect the green ground wire to the chassis ground screw as shown above.

   Note: *The ground wire should be continuous back to the circuit breaker panel.*

⚠ Warning

Hazardous Voltage!

The cover plate must be in place when the controller is operating. Failure to replace the cover plate could result in death or serious injury.

9. Replace the cover plate.
10. On a field-supplied label, record the location of the circuit breaker panel and the electrical circuit. Attach the label to the cover plate.

11

Installing the Enclosure Door

Note: *Before installing the enclosure door, unpack the door and check for missing or damaged parts and any cracks in the plastic. Then, ensure that the magnetic catch is installed.*

To install the enclosure door:

1. Hold the door at a 90° angle from the enclosure as shown in Figure 4.
2. Align the hinge pegs on the door with the hinge holes on the enclosure.
3. Gently lower the door until it rests securely in the hinge holes.
4. Verify that the door swings freely on the hinges and that the magnetic catch holds the door securely when it is closed.

12

Figure 4. Proper door alignment

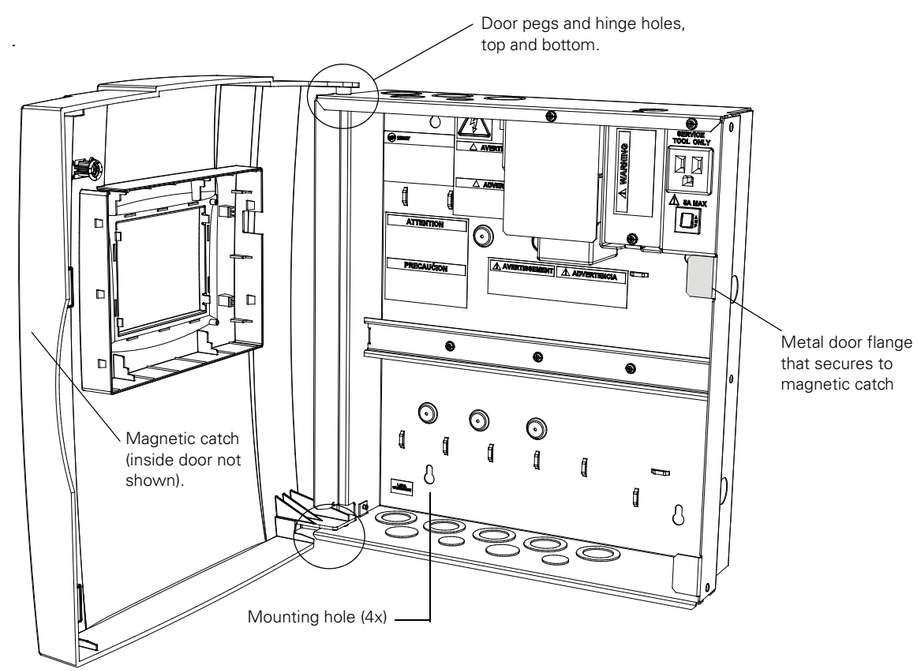

14

Agency Listings/Compliance

United States compliance

- UL Listed — UL 916 Energy Management Accessory

Canada compliance

- CUL Listed — CSA C22.2 No. 205

Trane optimizes the performance of homes and buildings around the world. A business of Ingersoll Rand, the leader in creating and sustaining safe, comfortable and energy efficient environments, Trane offers a broad portfolio of advanced controls and HVAC systems, comprehensive building services, and parts.
For more information, visit www.Trane.com.

Trane has a policy of continuous product and product data improvement and reserves the right to change design and specifications without notice

© 2010 Trane All rights reserved
X39641180-01C 09 May 2011
Supersedes X39641180-01B
(08 Dec 2010)

Ingersoll Rand

Installation Instructions

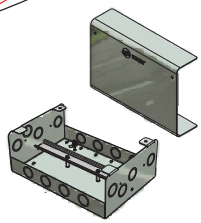

Non-powered Enclosure for *DIN-mounted Tracer Controllers*

Order Number: X19091354010

Packaged Contents

- One (1) enclosure
- Two (2) #10 [5 mm] screws with anchors

Model Numbers

Before installing the controller, verify the correct model for local power requirements. The model number is on the shipping label or on the product label inside the enclosure.

SAFETY WARNING

Only qualified personnel should install and service the equipment. The installation, starting up, and servicing of heating, ventilating, and air-conditioning equipment can be hazardous and requires specific knowledge and training. Improperly installed, adjusted or altered equipment by an unqualified person could result in death or serious injury. When working on the equipment, observe all precautions in the literature and on the tags, stickers, and labels that are attached to the equipment.

September 2011 **X39641209-01B**

© 2011 Trane.
All rights reserved.

1

Cautions, Warnings and Notices

WARNING

Indicates a potentially hazardous situation which, if not avoided, could result in death or serious injury

CAUTION

Indicates a potentially hazardous situation which, if not avoided, could result in minor or moderate injury. It may also be used to alert against unsafe practices.

NOTICE

Indicates a situation that could result in equipment or property-damage only accidents.

Shipment

Visually inspect all parts for obvious defects or damage. All components have been thoroughly inspected before leaving the factory. Any claims for damage incurred during shipment should be filed immediately with the carrier.

2

CAUTION

Use the equipment only as specified!
The use of the enclosure in a manner not specified in this document may impair the protection provided by the enclosure.

NOTICE

Avoid Equipment Damage!
Install and use the controllers as specified by the manufacturer. Failure to do so could result in equipment damage.

DIN Unit Width

The following table provides DIN unit width measurements for Trane devices.

Table 1. DIN unit width measurements

Device	Device Width (mm/in)	DIN Unit Width (1 unit = 18 mm)
Tracer UC400 controller	143.6 mm/5.6 in	8
Tracer UC600 controller	215.5 mm/8.5 in	12
Tracer XM30 expansion module	53.6 mm/2.1 in	3
Tracer XM32 expansion module	71.6 mm/2.8 in	4
Tracer BACnet terminator	35.6 mm/1.4 in	2

3

External Enclosure Clearances and Dimensions

Note: *Ensure that the selected location provides adequate space for the minimum clearances.*

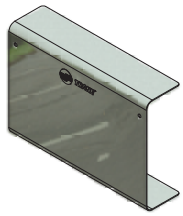

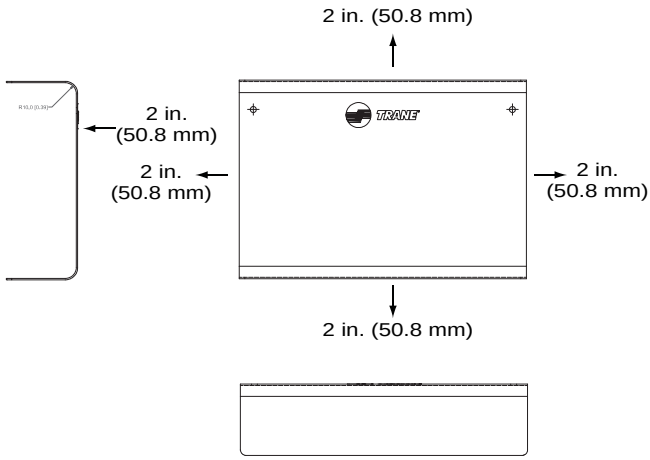

4

External/Internal Enclosure Dimensions

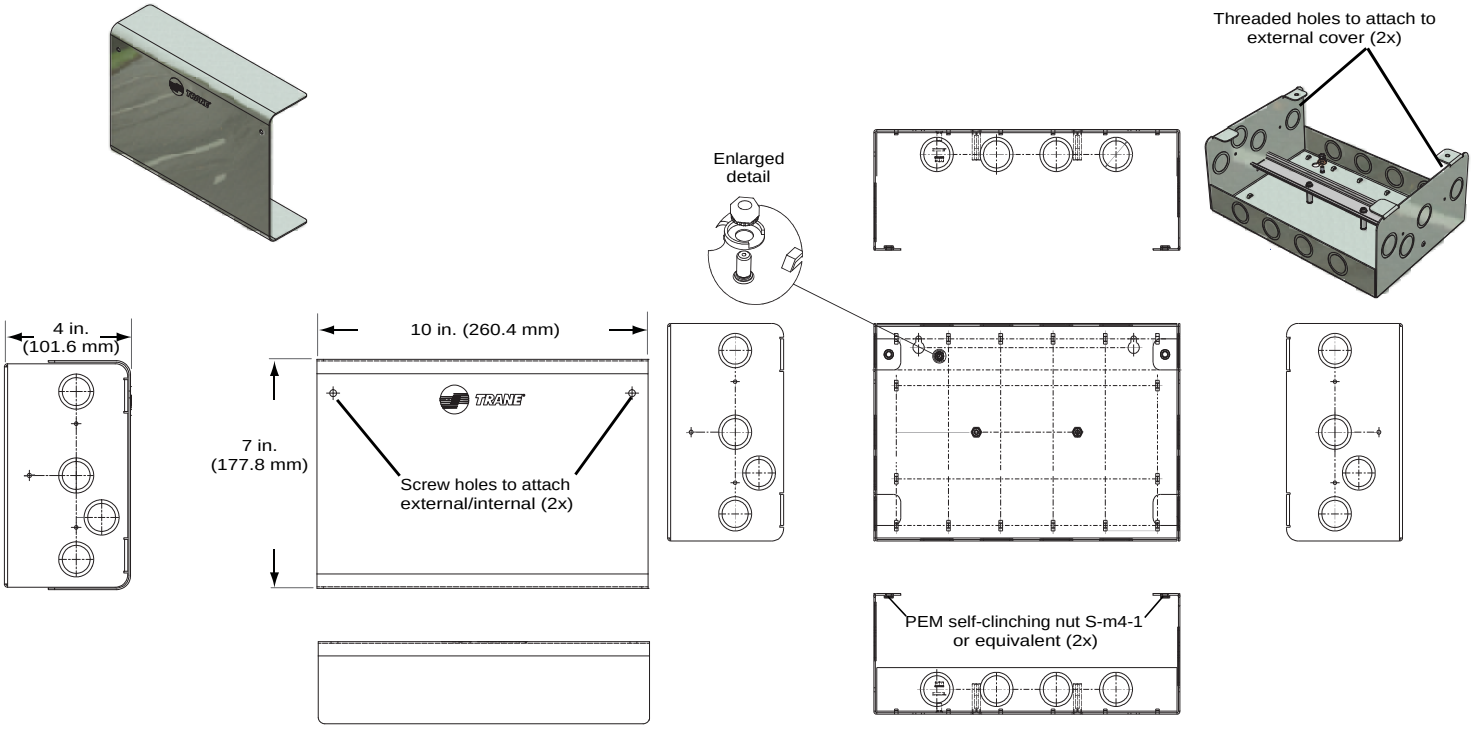

5

Mounting

Prior to mounting, ensure that the location meets the clearance requirements described in Panel 3. Trane recommends locating the controller:

- Near the controlled equipment to reduce wiring
- Where service personnel have easy access
- Where public access is restricted to minimize the possibility of tampering or vandalism

To mount the enclosure:

1. Using the enclosure as a template, mark the location of the two mounting holes on the mounting surface.
2. Set aside the enclosure and drill two holes for the screws at the marked locations.

   Note: *Drill holes for #10 (5 mm) screws or #10 wall anchors. Use wall anchors if the mounting surface is dry wall or masonry.*
3. Secure the enclosure to the mounting surface with the enclosed #10 (5 mm) screws or #10 wall anchors.

Installing the Enclosure Cover

To install the enclosure cover:

1. Place the cover over the base and ensure to line up the two screw holes.
2. Install the two screws and do not overtighten the screws.

The manufacturer optimizes the performance of homes and buildings around the world. A business of Ingersoll Rand, the leader in creating and sustaining safe, comfortable and energy efficient environments, the manufacturer offers a broad portfolio of advanced controls and HVAC systems, comprehensive building services, and parts. For more information, visit www.IRCO.com.

The manufacturer has a policy of continuous product and product data improvement and reserves the right to change design and specifications without notice.

© 2011 Trane. All rights reserved.
X39641209-01B 8 Sep 2011
NEW

We are committed to using environmentally conscious print practices that reduce waste.

Torque min. 35 in-lb, for control of air dampers

Application

For On/Off, fail-safe control of dampers in HVAC systems. Actuator sizing should be done in accordance with the damper manufacturer's specifications. Control is On/Off from an auxiliary contact, digital output, or a manual switch.

The actuator is mounted directly to a damper shaft from 3/8" up to 1/2" in diameter by means of its universal clamp, 1/2" shaft centered at delivery. For shafts up to 3/4" use K6-1 accessory. A crank arm and several mounting brackets are available for applications where the actuator cannot be direct coupled to the damper shaft.

Operation

The LF series actuators provide true spring return operation for reliable fail-safe application and positive close off on air tight dampers. The spring return system provides consistent torque to the damper with, and without, power applied to the actuator.

The LF series provides 95° of rotation and is provided with a graduated position indicator showing 0° to 95°.

The actuator may be stalled anywhere in its normal rotation without the need of mechanical end switches. Power consumption is reduced in holding mode.

The LF24-S US version is provided with 1 built in auxiliary switch. This SPDT switch is provided for safety interfacing or signaling, for example, for fan start-up. The switching function is adjustable between 0° and 95°. The auxiliary switch in the LF24-S is double insulated so an electrical ground connection is not necessary.

Technical Data		LF24(-S) US
Power supply		24 VAC ± 20% 50/60 Hz 24 VDC ± 10%
Power consumption	running	5 W
	holding	2.5 W
Transformer sizing		7 VA (class 2 power source)
Electrical connection (LF24-S US has 2 cables)		3 ft, 18 GA appliance cable 1/2" conduit connector
Overload protection		electronic throughout 0 to 95° rotation
Angle of rotation		max. 95°, adjust. with mechanical stop
Torque		35 in-lb [4 Nm]
Direction of rotation		reversible with cw/ccw mounting
Position indication		visual indicator, 0° to 95° (0° is spring return position)
Running time (nominal)	motor	< 40 to 75 sec
	spring	< 25 sec @-4°F to 122°F [-20°C to 50°C] < 60 sec @-22°F [-30°C]
Humidity		5 to 95% RH non-condensing
Ambient temperature		-22°F to 122°F [-30°C to 50°C]
Storage temperature		-40°F to 176°F [-40°C to 80°C]
Housing		NEMA type 2 / IP54
Housing material		zinc coated steel
Agency listings		cULus acc. to UL 873 and CAN/CSA C22.2 No. 24-93
Noise level (max)	running	< 50 db (A)
	spring return	62 dB (A)
Servicing		maintenance free
Quality standard		ISO 9001
Weight	LF24 LF24-S	3.1 lbs (1.40 kg) 3.2 lbs (1.45 kg)
LF24-S US		
Auxiliary switch		1 x SPDT 3A (0.5A) @ 250 VAC, UL Approved adjustable 0° to 95° (double insulated)

Dimensions (Inches [mm])

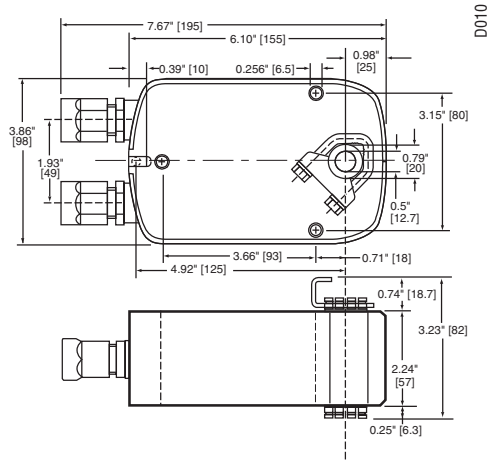

K20901 - 01/09 - Subject to change. © Belimo Aircontrols (USA), Inc.

Accessories

AV 10-18	Shaft extension (K6-1 is required)
IND-LF	Damper position indicator
K6-1	Universal clamp for up to 3/4” diameter shafts
KH-LF	Crankarm for up to 1/2” round shaft
Tool-06	8mm and 10 mm wrench
ZG-LF2	Crankarm adaptor kit for LF
ZG-112	Mounting bracket for Honeywell Mod IV, M6415 type actuators, and new installations
ZG-LF112	Crankarm adaptor kit for Honeywell Mod IV, M6415 type actuators, and new installations
ZS-100	Weather shield (metal)
ZS-150	Weather shield (polycarbonate)
ZS-260	Explosion-proof housing

NOTE: When using LF24 US and LF24-S US actuators, only use accessories listed on this page.
For Actuator Wiring Information and Diagrams, Please See Belimo Wiring Guide (pg 349).

Typical Specification

On/Off spring return damper actuators shall be direct coupled type which require no crankarm and linkage and be capable of direct mounting to a shaft up to a 3/4” diameter and center a 1/2” shaft. The actuators must be designed so that they may be used for either clockwise or counterclockwise fail-safe operation. Actuators shall be protected from overload at all angles of rotation. If required, 1 SPDT auxiliary switch shall be provided having the capability of being adjustable. Actuators with auxiliary switch must be constructed to meet the requirements for Double Insulation so an electrical ground is not required to meet agency listings. Actuators shall be UL Approved and CSA certified, have a 5 year warranty, and be manufactured under ISO 9001 International Quality Control Standards. Actuators shall be as manufactured by Belimo.

Wiring Diagrams

INSTALLATION NOTES

1. Provide overload protection and disconnect as required.
2. ***CAUTION*** *Equipment damage!*
   Actuators may be connected in parallel.
   Power consumption and input impedance must be observed.
3. Actuators may also be powered by 24 VDC.
4. For end position indication, interlock control, fan startup, etc., LF24-S US incorporates a built-in auxiliary switch: 1 x SPDT, 3A (0.5A) @250 VAC, UL Approved, adjustable 0° to 95°.

APPLICATION NOTES

- Meets cULus requirements without the need of an electrical ground connection.

WARNING *Live Electrical Components!*
During installation, testing, servicing and troubleshooting of this product, it maybe necessary to work with live electrical components. Have a qualified licensed electrician or other individual who has been properly trained in handling live electrical components perform these tasks. Failure to follow all electrical safety precautions when exposed to live electrical components could result in death or serious injury.

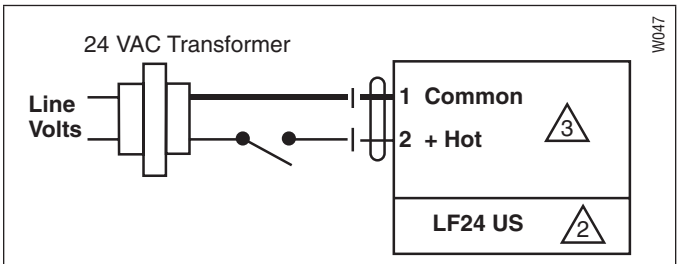

On/Off wiring for LF24 US

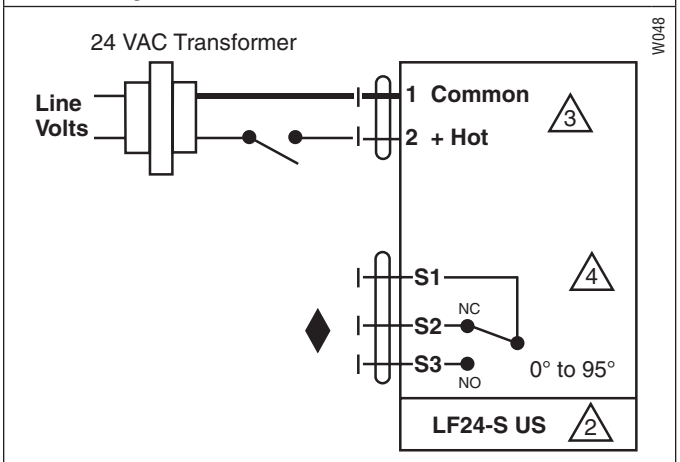

On/Off wiring for LF24-S US

K20901 - 01/09 - Subject to change. © Belimo Aircontrols (USA), Inc.

Series ADPS

H.V.A.C. Differential Pressure Switch

With Dual Scale Field Adjustable Set Point Knob

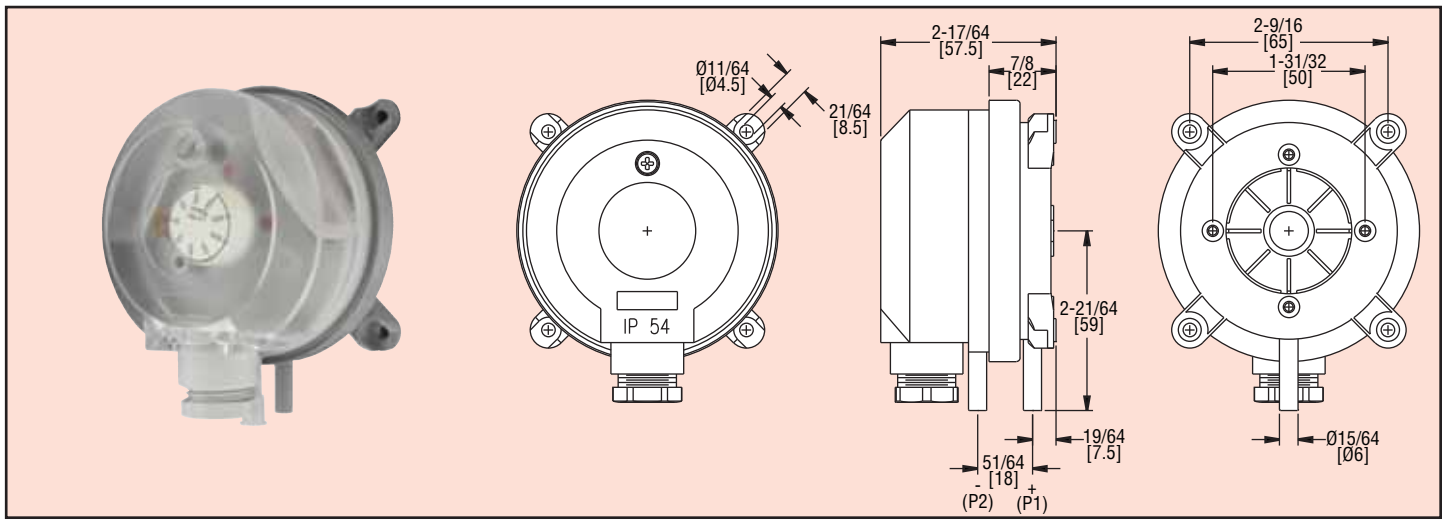

The Series ADPS Adjustable Differential Pressure Switch is designed for pressure, vacuum, and differential pressures. The dual scaled adjustment knob in inches water column and pascals allows changes to the switching pressure to be made without a pressure gage. The ADPS is available with settings from 0.08˝ w.c. (20 Pa) up to 16˝ w.c. (4000 Pa). The silicone diaphragm and PA 6.6 body make the series ADPS ideal for use with air and other noncombustible gases. The compact size, adjustment knob and low cost make the ADPS the perfect choice for H.V.A.C. applications.

APPLICATIONS

- Monitoring air filters and ventilators.
- Monitoring industrial cooling-air circuits.
- Overheating protection for fan heaters.
- Monitoring flows in ventilation ducts.
- Controlling air and fire-protection dampers.
- Frost protection for heat exchanges.

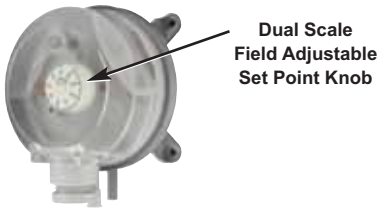

A-480

SPECIFICATIONS

Service: Air and non-combustible, compatible gases.
Wetted Materials: Diaphragm Material: Silicone. Housing Material: POM switch body: PA 6.6; Cover: Polystyrene.
Temperature Limits: Process ambient temperature from -4 to 185˚F (-20 to 85˚C).
Pressure Limits: Max. Operating Pressure: 40” W.C. (10 kPa) for all pressure ranges.
Switch Type: Single-pole double-throw (SPDT).
Electrical Rating: Standard: Max., 1.5A/250 VAC, max. switching rate: 6 cycles/min.; Gold Contact Option: 0.4 A/ 250 VAC.
Electrical Connections: Push-on screw terminals. M20x1.5 with cable strain relief or optional 1/2˝ NPT connection.
Process Connections: 5/16˝ (7.94 mm) outside diameter tubing, 1/4˝ (6.0 mm) inside diameter tubing.
Mounting Orientation: Vertically, with pressure connections pointing downwards.
Mechanical Working Life: Over 10^6 switching operations.
Weight: 5.6 oz (160 g).
Enclosure Rating: NEMA 13, IP54.
Agency Approvals: CE.

Model	Set Point Range IN W.C. (Pa)	Approx. Dead Band @ Min Set Point IN W.C. (Pa)	Approx. Dead Band @ Max Set Point IN W.C. (Pa)
ADPS-01-2-N	0.08 to 0.80 (20-200)	0.04 (10)	0.05 (12)
ADPS-04-2-N	0.12 to 1.60 (30-400)	0.06 (15)	0.09 (22)
ADPS-03-2-N	0.20 to 2.00 (50-500)	0.08 (20)	0.09 (23)
ADPS-05-2-N	0.80 to 4.00 (200-1000)	0.4 (100)	0.5 (130)
ADPS-06-2-N	2.00 to 10.00 (500-2500)	0.6 (150)	0.8 (200)
ADPS-07-2-N	4.00 to 16.00 (1000-4000)	1.0 (250)	1.4 (350)

Note: Models that include installer kit add -C to the end of the model number
Installer kit includes two static tips and 7 ft or PVC tubing.
For optional 1/2˝ NPT conduit connection, change -2-N to -1-N.

ACCESSORIES

A-288, “L” type metal mounting bracket with screws
A-289, “S” type metal mounting bracket with screws
A-480, Plastic static pressure tip
A-481, Installer kit. Includes 2 plastic static pressure tips and 7 ft (2.1) of PVC tubing

NEW PRODUCT!

AIR PRESSURE SENSORS, SURGE DAMPENERS

A-300 SERIES, RPS, 21121, SD-01

DESCRIPTION

Static Pressure Sensors
A-300 Series Sensors are used with pressure transmitters and pressure switches to sense duct pressures. Two sensors are required to monitor pressure across coils, filters, and blowers. **A-301** and **A-302** have four radial sensing holes and a 4" (10.2 cm) insertion depth. The **A-308** should be used only where accuracy is not critical. All mount in a 3/8" hole in the duct. If the interior of the duct is not accessible, an optional **A-345** flange mounting kit may be used.

Outdoor Static Pressure Sensor
The **A-306 Outdoor Static Pressure Sensor** provides an outdoor pressure signal for reference in building pressurization applications. The **A-306** includes the sensor, 50' (15.24m) of vinyl tubing, mounting bracket, and hardware.

Room Static Pressure Sensors
Model RPS is a stainless steel room static pressure sensor. It mounts directly to the wall or to a ceiling using a standard electrical box. **Model RPS-W** is the same as the **RPS** except with a white plastic wall plate. **RPS-I** (ivory) is also available.

Total Pressure Sensor
Model 21121 Sensor is used primarily for proving airflow in ducts. The opening in the tip of the 4" (10.2 cm) aluminum tube faces upstream and senses impact (total) pressure.

Surge Dampener
Surge Dampeners absorb rapid pressure fluctuations in order to steady a pressure signal. Each surge dampener has two independent channels – one for the low-pressure tubing and one for the high-pressure tubing. Surge dampeners are typically used with outdoor pressure sensors, which are subject to wind gusts, isolation rooms, clean rooms, or operating rooms where opening or closing doors creates sudden pressure changes.

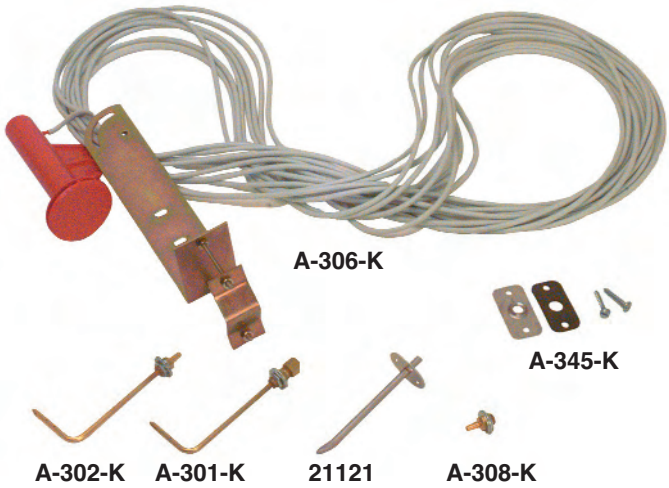

RPS-W

RPS

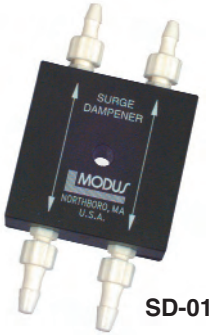

SD-01

ORDERING INFORMATION

MODEL	DUCT STATIC PRESSURE SENSORS
A-301-K	Static pressure tip, 1/4" compression
A-302-K	Static pressure tip, 1/4" barb
A-308-K	Static pressure fitting, 1/4" barb
A-345-K	Flange mounting kit
	OUTDOOR STATIC PRESSURE SENSOR
A-306-K	Outdoor air static pressure kit
	DUCT TOTAL PRESSURE SENSOR
21121	4" aluminum impact tube for 3/8" OD plastic tubing
B-137	1/4" barb adapter for #21121 (standard pack-100)
	ROOM STATIC PRESSURE SENSOR
RPS	Stainless steel room pressure sensor, 1/4" barb
RPS-W	White plastic room pressure sensor, 1/4" barb
RPS-I	Ivory plastic room pressure sensor, 1/4" barb
	SURGE DAMPENERS
SD-01	Surge dampener
	FILTER KIT
A-605	Mounting kit for air filter applications

LOW AND HIGH TEMPERATURE LIMIT CONTROLS

A70 SERIES

JOHNSON CONTROLS

DESCRIPTION

The **A70 Series Heavy-duty Temperature Limit Controls** incorporate a vapor-charged sensing element. The **A70G, A70H,** and **A70K** have a four-wire, two-circuit contact block that contains two isolated sets of contacts. The contacts are designed to transfer at setpoint so that when the main contact opens, the auxiliary contact closes simultaneously. Typical applications include shutdown of a ventilation system and BAS alarm indication upon low- or high-temperature limit.

FEATURES

- ***Automatic or manual reset models***
- ***Long-life, snap-acting contacts***
- ***Easy setpoint adjust***

A70HA-1

SPECIFICATIONS

MODEL	SWITCH ACTION (Main contacts) LINE-M2	TEMP RANGE °F (°C)	RESET °F (°C)	BULB/ CAPILLARY	MAX BULB TEMP °F (°C)	RANGE ADJUSTER
A70GA-1* Low Limit	Open Low	15 to 55* (-10 to 13)	Auto 5 (2.8)	20' of 1/8" (6m of 0.32 cm) OD tubing	400 (260)	Screwdriver Slot
A70HA-1* Low Limit	Open Low	15 to 55* (-10 to 13)	Manual Reset	20' of 1/8" (6m of 0.32 cm) OD tubing	400 (260)	Screwdriver Slot
A70HA-2 Low Limit	Open Low	35 to 80 (1.7 to 27)	Manual Reset	3/8" x 3" (0.95 x 7.6 cm) 6' (1.9m)cap	250 (121)	Screwdriver Slot
A70KA-1 High Limit	Open High	100 to 170 (38 to 77)	Manual Reset	3/8" x 10" (0.95 x 25.4 cm) 6' (1.9m) cap	240 (116)	Screwdriver Slot

ELECTRICAL RATING								
MOTOR RATINGS (VAC)	LINE-M2 (Main)				LINE-M1 (Auxiliary)			
	120	208	240	277	120	208	240	277
AC Full Load Amp	16.0	9.2	8.0	–	6.0	3.3	3.0	–
AC Non-Inductive Amp	16.0	9.2	8.0	7.2	6.0	6.0	6.0	6.0
Pilot Duty	125 VA, 24-600 VAC 57.5 VA, 120-300 VDC							

*The low cut-out stop is set and sealed at 35°F (1.6°C). The control responds to the lowest temperature along any 1' (30.5 cm) section of the 20' (6m) element.

WIRING

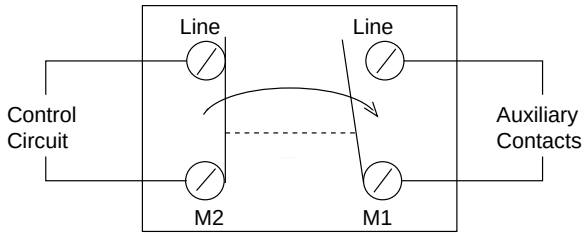

A70 Series

Low Limit - Action on temperature decrease
High Limit - Action on temperature increase

INSTALLATION

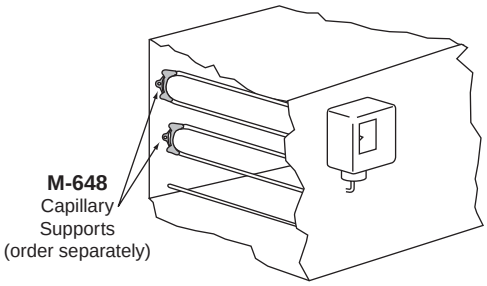

Mount sensor horizontally for proper measurement.Typically mounted downstream of a coil with capillary exposed to all areas likely to encounter low or high temperatures as required.

ORDERING INFORMATION

MODEL	DESCRIPTION
A70GA-1	Low-limit temperature control, automatic reset, 20' (6m) element
A70HA-1	Low-limit temperature control, manual reset, 20' (6m) element
A70HA-2	Low-limit temperature control, manual reset, 3" (7.6 cm) element, 6' (1.9m) capillary
A70KA-1	High-limit temperature control, manual reset, 10" (25.4 cm) element, 6' (1.9m) capillary

RELATED PRODUCTS

M-648	Capillary mounting clip
CC-1G	Non-metallic capillary mounting clip
ES-1051	Freeze spray

TWO-POSITION ROOM THERMOSTATS

ET SERIES, MODEL UT8001

DESCRIPTION

The **ET Series** and **Model UT8001 Two-position Room Thermostats** are designed for on/off control with setpoints from 50° to 90°F (10° to 32°C). The **Model UT8001** has a bimetal element and magnetic reed switch and is designed for low-voltage control applications with a heat anticipator. The **ET5-S-1S Series** is a heating-only thermostat and uses a snap-acting switch for line- or low-voltage applications. The **ETD5-S-1S Series** is a heating/cooling thermostat and uses a snap-acting switch for line- or low-voltage applications.

FEATURES

- ***Line- or low-voltage ET5 heating***
- ***Line- or low-voltage ETD5 heating/cooling***
- ***Low-voltage UT8001 with fan and system switch***
  - ***~ Single or dual transformer with adjustable anticipator or mV operation and thermometer***
  - ***~ Vertical or horizontal mounting***

NEW!

ETD5-S-1S

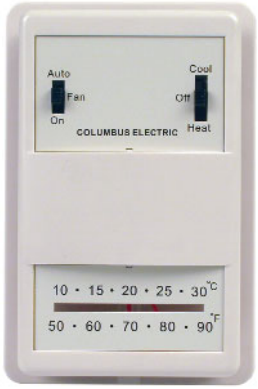

UT8001

SPECIFICATIONS

Model	Voltage/Current	Differential	Switch	Contact	Dimensions
ET5-S-1S	24-277 VAC/22A	Htg 2°F	None	SPST, snap acting	4.75"H x 2.75"W x 2.75"D (12.1 x 7.0 x 7.0 cm)
ETD5-S-1S	24-277 VAC/22A	Htg 2°F, Clg 4°F	None	SPDT, snap acting	4.75"H x 2.75"W x 2.75"D (12.1 x 7.0 x 7.0 cm)
UT8001	24 VAC/1A	Htg 3°F, Clg 3°F	Fan and system	SPDT, magnetic reed	4.75"H x 2.75"W x 1.5"D (12.1 x 7.0 x 3.8 cm)

Setpoint range	50° to 90°F (10° to 32°C)	**Mounting**	2" x 4" (5.1 x 10.2 cm) vertical switch box
Control type	Two-position, on/off	**Agency approvals**	UL listed; CSA (**ET5**), ULC (**UT8001**)
Weight	0.5 lb (0.23 kg)	**Anticipator**	**UT8001** only (0.1A to 2A)

WIRING

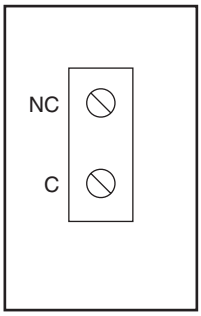

Open on temp rise
ET5-S-1S

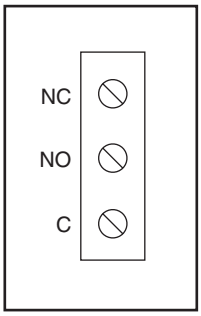

C-N.C. open on temp rise
C-N.O. close on temp rise
ETD5-S-1S

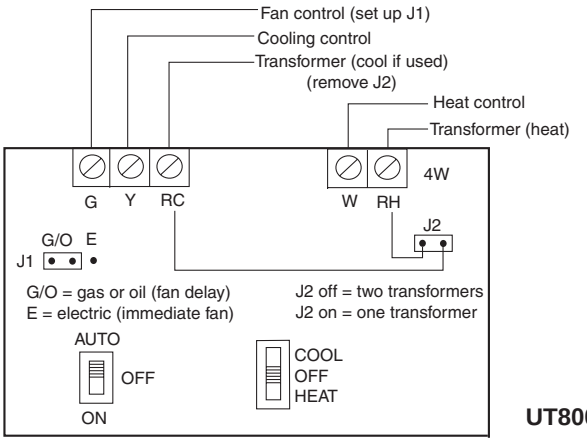

UT8001

ORDERING INFORMATION

MODEL	DESCRIPTION
ET5-S-1S	**Line- or low-voltage heating thermostat**
ETD5-S-1S	**Line- or low-voltage heating or cooling thermostat**
UT8001	**Low-voltage thermostat with fan and system switch**

RELAY IN A BOX
RIB, RIBT PILOT SERIES

DESCRIPTION

The **Relay In A Box (RIB) Pilot Series** controls most BAS, HVAC, low-horsepower motor, and lighting applications. The relays come mounted and prewired in a housing, which saves the installer the time, trouble, and expense of buying separate components (relay, socket, mounting rail, and enclosure) and assembling them on the job or at the shop.

The **RIB Pilot Series** has a protruding 1/2" or 3/4" NPT nipple from which all wires exit (except **T Series**). To install, remove a conduit knockout in the equipment, insert the wires and nipple through the hole, tighten the locknut, and connect the wires.

RIB Pilot Series - 10A Relays
The **RIB Pilot Series** has relay contacts rated for 10A and is used to control light electrical loads, drive power relays/contactors, or sense the voltage being fed to electrical loads. The **RIB Pilot Series** requires a low coil drive current and is provided with circuitry to allow powering the relay coil from a wide range of AC or DC voltages.

RIBT Series - High/Low Voltage Separation
The **RIBT Series** is designed to provide physically separate entrances for connections to the relay input coil and output contacts. Relay contact wires exit the housing through a 1/2" or 3/4" NPT nipple. The cover of the **RIBT Series** is removable, and the coil drive wires can enter the housing through one of two convenient openings with star bushings or 1/2" conduit. The coil drive wires are secured to screw terminals within a separate wiring compartment in the **RIBT Series**. Most of the **RIBs** in the **Pilot Series** are also available in the **T Series**.

NEW!

Functional Devices, Inc. RIB

RIBU1C

RIBU1S

c UL us

FEATURES

- ***Convenient and economical to use***
- ***Relay status indicator via LED***
- ***Coil uses low current and accepts a wide range of AC and DC voltages***
- ***Closed/Open/Auto switch option available***
- ***Nipple- or screw-mountable***
- ***Compact, gray plastic enclosure***
- ***Color-coded wires for eliminating errors***
- ***UL listed for UL 916 Energy Management and UL 864 Fire***
- ***Made in the USA***

SPECIFICATIONS - GENERAL

Enclosure size

A	1.7"H x 2.8"W x 1.5"D (4.32 x 7.11 x 3.81 cm)
B	4.0"H x 4.0"W x 1.8"D (10.16 x 10.16 x 4.57 cm)
G	2.3"H x 3.2"W x 1.8"D (5.84 x 8.13 x 4.57 cm)
Operating temp	-30° to 140°F (-34° to 60°C)
Humidity	5% to 95% non-condensing
Life rating (all relays)	10 million cycles min mechanical
Relay status	LED, ON - relay activated
Housing	Plenum rated, NEMA 1, optional NEMA 4

Coil pull-in/drop-out (nominal values)

	PULL-IN		DROP-OUT	
COIL DRIVE	**DC**	**AC**	**DC**	**AC**
10-30 VAC/VDC	10	9	2.8	2.1
24 VAC/VDC	20	18	3.8	3
120 VAC	–	102	–	9
208-277 VAC	–	176	–	13

Wire length	16" (40.6 cm)
Agency approvals	UL listed, UL 916 Energy Management UL 864 Fire, ULC listed, CSFM
Weight	Approx. 1.0 lb (0.45 kg)
Warranty	1 year

RELAY IN A BOX

RIB, RIBT PILOT SERIES

SPECIFICATIONS - PILOT SERIES

MODEL	TYPE	COIL DRIVE	SIZE/ HUB	OVR SW	RELAY CONTACT RATINGS	RELAY CONTACT WIRING	RELAY COIL DRIVE DATA
RIBU1C* **RIBU1C-N4†**	1-SPDT	10-30 VAC/VDC 120 VAC 50/60 Hz	A-1/2	–	10A resistive 120/240/277 VAC 10A resistive 28 VDC 480 VA pilot duty 240/277 VAC 480 VA ballast 277 VAC 600W tungsten 120 VAC N.O. 240W tungsten 120 VAC N.C. 1/3 hp for N.O. 120/240 VAC 1/6 hp for N.C. 120/240 VAC 1/4 hp for N.O. 277 VAC 1/8 hp for N.C. 277 VAC	**Relay #1** NC (blue) COM (yellow) NO (orange) **Relay #2** (if present) NC (gray) COM (purple) NO (brown)	**Wiring** **Relay #1** Common - White/Yellow wire 10-30 VAC/VDC - White/Blue wire 120 VAC - White/Black wire 208-277 VAC - White/Brown wire **Relay #2** (if present) Common - White/Purple wire 10-30 VAC/VDC - Gray/White wire 120 VAC - White/Red wire 208-277 VAC - White/Orange wire **Input Current** 30 mA @ 10 VAC 32 mA @ 12 VAC 42 mA @ 24 VAC 50 mA @ 30 VAC 25 mA @ 120 VAC 35 mA @ 208-277 VAC 12 mA @ 10 VDC 14 mA @ 12 VDC 16 mA @ 24 VDC 18 mA @ 30 VDC
RIBU2C*	2-SPDT		G-3/4	–			
RIBH1C* **RIBH1C-N4†**	1-SPDT	10-30 VAC 208-277 VAC 50/60 Hz	A-1/2	–			
RIBH2C*	2-SPDT		G-3/4	–			
RIBU1SC*	1-SPDT	10-30 VAC/VDC 120 VAC 50/60 Hz	G-1/2	Yes-2	10A resistive 277 VAC 480 VA pilot duty 277 VAC 480 VA ballast 277 VAC 600W tungsten 120 VAC N.O. 240W tungsten 120 VAC N.C. 1/3 hp for N.O. 120-240 VAC 1/6 hp for N.C. 120-240 VAC 1/4 hp for N.O. 277 VAC 1/8 hp for N.C. 277 VAC Status Contact on **RIBU1SM** and **RIBH1SM**: 5A max @ 277 VAC	Auto Manual (yellow) Common N.C. - Closed Open N.O. - Closed (blue) N.C. (orange) N.O. **Relay #1** (orange) Closed (orange) Open Auto **Relay #2 of RIBU2S2** Closed (brown) Open (brown) Auto **Relay #2 of RIBU2SC** NC (gray) COM (purple) NO (brown) **STATUS** = 2nd Pole of switch of **RIBU1SM**, **RIBH1SM** Closed (brown) Open (purple) Auto (gray)	
RIBH1SC*	1-SPDT	10-30 VAC 208-277 VAC 50/60 Hz	G-1/2	Yes-2			
RIBU1S*	1-SPST-NO**	10-30 VAC/VDC 120 VAC 50/60 Hz	G-1/2	Yes			
RIBU2SC	1-SPST-NO** 1-SPDT		G-3/4	Yes			
RIBU2S2	2-SPST-NO**		B-3/4	Yes-2			
RIBU1SM	1-SPST-NO**		G-1/2	Yes + Status			
RIBH1S*	1-SPST-NO**	10-30 VAC/VDC 208-277 VAC 50/60 Hz	G-1/2	Yes			
RIBH1SM	1-SPST-NO**		G-1/2	Yes + Status			
RIB2401D* **RIB2401D-N4†**	1-DPDT	24 VAC/VDC 120 VAC 50/60- Hz	A-1/2	–	10A resistive 30 VDC 10A resistive 277 VAC 1/2 hp for N.O. 120/240 VAC 1/3 hp for N.C. 120/240 VAC	NC (blue) COM (yellow) NO (orange)	**Wiring** Common - White/Yellow wire 24 VAC/VDC - White/Blue wire 120 VAC - White/Black wire 208-277 VAC - White/Brown wire **Input Current** 29 mA @ 24 VAC 22 mA @ 24 VDC 28 mA @ 120 VAC 32 mA @ 208-277 VAC
RIB2402D **RIB2402D-N4†**	1-DPDT	24 VAC/VDC 208-277 VAC 50/60 Hz	A-1/2	–	10A resistive 30 VDC 10A resistive 277 VAC 180 VA pilot duty 120 VAC 1/8 hp for N.C. 120 VAC	NC (gray) COM (purple) NO (brown)	
RIBL3C	3-SPST-NO	10-30 VAC/VDC 50/60 Hz	B-1/2	–	10A resistive 120-277 VAC 10A resistive 28 VDC 480 VA pilot duty 240-277 VAC 480 VA ballast 277 VAC 600W tungsten 120 VAC N.O. 240W tungsten 120 VAC N.C. 1/3 hp for N.O. 120-240 VAC 1/6 hp for N.C. 120-240 VAC 1/4 hp for N.O. 277 VAC 1/8 hp for N.C. 277 VAC	**Relay #1** (black) (black) **Relay #2** (blue) (blue) **Relay #3** (yellow) (yellow) **Relay #4 (if present)** NC (gray) COM (purple) NO (brown)	**Wiring** Common - White/Red wire Relay#1 - White/Black wire Relay#2 - White/Blue wire Relay#3 - White/Yellow wire Relay#4 - White/Brown wire (if present) **Input Current** 30 mA @ 10 VAC 12 mA @ 10 VDC 32 mA @ 12 VAC 14 mA @ 12 VDC 42 mA @ 24 VAC 16 mA @ 24 VDC 50 mA @ 30 VAC 18 mA @ 30 VDC
RIBL4C	3-SPST-NO 1-SPDT		B-1/2	–			
SIB02S	SPDT Manual Switch	–	A-1/2	Yes	Switch ratings 20A 277 VAC	(blue) (yellow) (orange)	No Relay Switch Only

ORDERING INFORMATION

Order by model number

* Models may be ordered in **RIBT Series** with high/low voltage separation.

** Can be ordered normally closed by adding - **NC** after the model number. Contact Kele.

† N4 has NEMA 4 housing

CURRENT-OPERATED SWITCHES AND TRANSDUCERS

RIBXK, RIBXG, RIBXK420 SERIES

DESCRIPTION

The **RIBXK, RIBXG,** and **RIBXK420 Series** include both current-operated switches and current transducers. Solid-core and split-core current-operated switch models have a solid-state switch that operates when the current level sensed by the internal current transformer exceeds a fixed or adjustable set-point. Solid-core current transducer models output a 4-20 mA signal proportional to the line current being monitored.

FEATURES

- ***Solid- and split-core switch models have fixed (Go/No go) or adjustable trip points***
- ***Solid-wire transducer models have a 4-20 mA output***
- ***Low cost***
- ***Ratcheting cam clamp to secure switch to wire***
- ***Removable mounting tab***

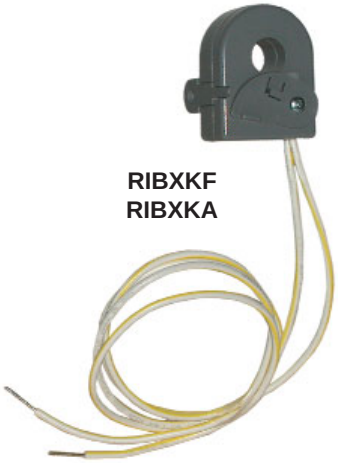

RIBXKF
RIBXKA

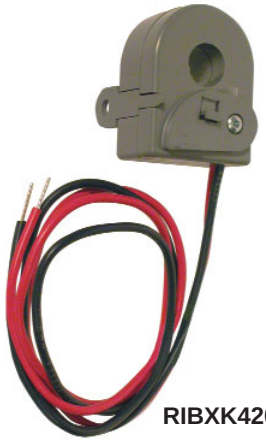

RIBXK420

RIBXKTF
RIBXKTA

RIBXGTF

c UL us LISTED

SPECIFICATIONS

RIBXK, RIBXG SERIES	
Monitored AC current	
RIBXKF, RIBXKTF	0.25-150A
RIBXKA, RIBXKTA	0.5-150A
RIBXGF, RIBXGTF	0.35-150A
RIBXGA, RIBXGTA	0.75-150A
Switch trip point	
RIBXKF, RIBXKTF	0.25A, fixed
RIBXKA, RIBXKTA	0.5-150A, adjustable
RIBXGF, RIBXGTF	0.35A, fixed
RIBXGFL, RIBXGTFL	0.75A, fixed
RIBXGA, RIBXGTA	0.75-150A, adjustable
Switch type	Solid state, normally open
Switch rating	30 VAC/VDC, 0.4A max
Off-state leakage	<30 µA @ 30 VAC/VDC
On-state voltage drop	<0.3 VAC/VDC @ 0.1A, <1.6 VAC/VDC @ 0.4A
RIBXK420 SERIES	
Output	4-20 mA, 30 mA max
Accuracy	±5% FS
Linearity	±1% FS
Power	24 VDC
Max loop resistance	500Ω@ 24 VDC
Input range	20, 50, or 100A
General	
Connections	16" (40.6 cm), 18 AWG, 600V wires or terminals for 14-22 AWG
Temp	-30° to 140°F (-34.4° to 60°C)
Max sense voltage	600 VAC
Weight	0.3 lb (0.13 kg)
Agency approvals	UL listed, UL916, UL864

DIMENSIONS/WIRING

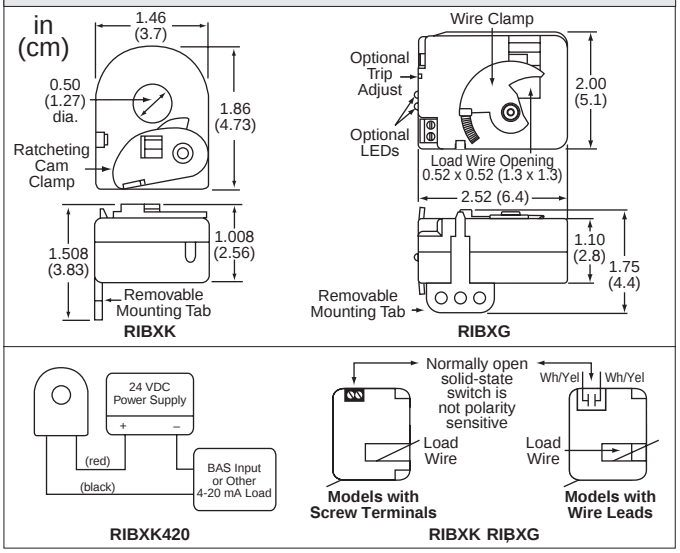

ORDERING INFORMATION

MODEL	DESCRIPTION
RIBXKF	Solid-core current-operated switch, wire leads, fixed trip
RIBXKTF	Solid-core current-operated switch, terminals, fixed trip
RIBXKA	Solid-core current-operated switch, wire leads, adjustable trip
RIBXKTA	Solid-core current-operated switch, terminals, adjustable trip
RIBXK420-20	Solid-core current transducer, 0-20A
RIBXK420-50	Solid-core current transducer, 0-50A
RIBXK420-100	Solid-core current transducer, 0-100A
RIBXGF	Split-core current-operated switch, fixed 0.35A trip, wire leads
RIBXGTF	Split-core current-operated switch, fixed 0.35A trip, terminal strip
RIBXGFL	Split-core current-operated switch, fixed 0.75A trip, wire leads, LEDs
RIBXGTFL	Split-core current-operated switch, fixed 0.75A trip, terminal strip, LEDs
RIBXGA	Split-core current-operated switch, adjustable trip, wire leads, LEDs
RIBXGTA	Split-core current-operated switch, adjustable trip, terminal strip, LEDs

DUCT THERMISTOR AND RTD SENSORS

ST-D* SERIES

DESCRIPTION

The Precon **ST-D* Series Duct Sensors** provide precision remote temperature sensing for building automation systems and mechanical equipment room instrumentation. The active sensing element is a highly stable precision thermistor material or platinum RTD.

The sensing element is sealed with a thermally conductive compound in a 9" (22.8 cm) long 304 stainless steel tube attached to a 4" (10 cm) electrical strap. The slots in the mounting bracket form mounting ears for direct duct mounting and standard electrical boxes. The grommet on the tube fitting seals a 9/16" (1.43 cm) insertion hole.

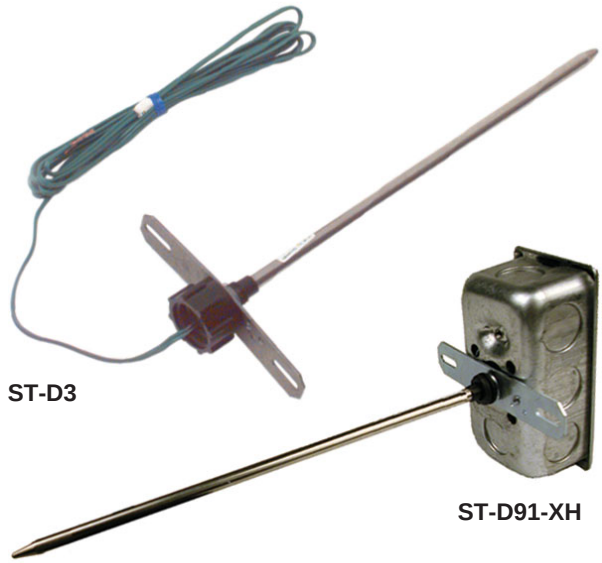

ST-D3

ST-D91-XH

FEATURES

- ***Lifetime warranty***
- ***±0.36°F (0.2°C) thermistor accuracy***
- ***±1°F (0.53°C) RTD accuracy***
- ***Wide selection of thermistor and RTD curves***
- ***Tip sensitive for precise temperature response***
- ***Adaptable with many options***
- ***304 stainless steel probe***
- ***Easy to mount to duct or back box***
- ***Waterproof probe***

OPTIONS

- ***Custom lengths up to 9' (2.74m)***
- ***Matched sensor pair***
- ***Many mounting options: handy box, Greenfield fitting, non-metallic box, weatherproof box***
- ***Dual sensor probes***
- ***NIST traceable***

APPLICATION

The **ST-D* Series** sensors are designed for direct mounting on sheet metal duct systems. Where conduit is required, the duct sensors have a universal nylon mounting connector that adapts to a 1/2" knockout in a standard handy box. The nylon fitting has a 1/2" NPT female conduit fitting.

The duct temperature sensors are waterproof and can be used in high humidity and condensing air. The sensors are point-sensitive and come standard with 9" (22.8 cm) insertion depth. The **XL** option provides custom lengths.

SPECIFICATIONS

Sensors	Thermistor (thermal resistor) RTD (resistance temperature device)
Accuracy	
Thermistor	±0.36°F (0.2°C)
RTD	±1°F (0.53°C)
Sensor types available	
Thermistor @ 77˚F	2.252 kΩ, 3 kΩ, 10 kΩ, 20 kΩ, 100 kΩ
RTD @ 32˚F	Platinum 100Ω, 385 curve Platinum 1000Ω, 385 curve Platinum 1000Ω, 375 curve
Temp range	
Thermistor	-30° to 160°F (-34° to 71°C)
RTD	-67° to 240°F (-55° to 115°C)
Temp response	
Thermistor	Negative temperature coefficient
RTD	Positive temperature coefficient
Sensitivity	See Sensor Resistance Charts in the Technical Reference section
Stability	
Thermistor	0.24°F (0.13°C) over five years
RTD	<0.09°F (0.05°C) over five years
Heat dissipation	2.7 mW/°C (power needed to raise the temperature by 1°C)
Connection	8' (2.4m) of 24 AWG pigtails prestripped ends
Mounting	Directly to duct, wall, or customer-supplied back box, no adapters needed for standard boxes

DUCT THERMISTOR AND RTD SENSORS

ST-D* SERIES

MOUNTING

Direct duct-mount screws can be used where conduit is not required. Adapters are not required when mounting directly to outlet boxes. Install grommet in the 9/16" (1.43 cm) insertion hole. Use full 8' (2.4m) lead length provided to avoid moisture migration at the field connection.

Basic model comes with 8' (2.4m) of 24 AWG, 9" (22.86 cm) probe with T-bar, grommet, and #6 x 1 screws for direct duct mounting.

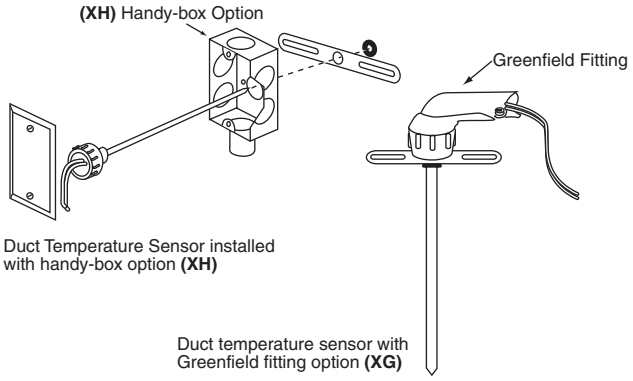

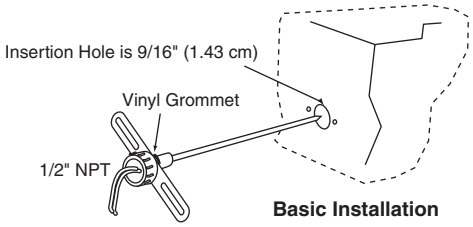

Basic Installation

DIMENSIONS

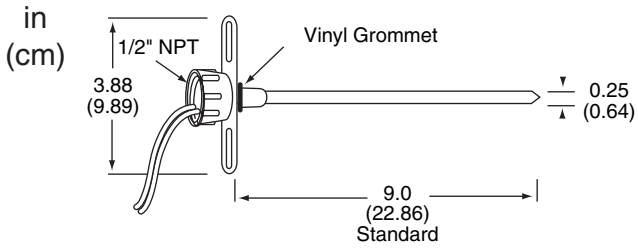

ORDERING INFORMATION

MODEL	DESCRIPTION
ST-D3	10,000Ω duct thermistor @ 77°F (25°C), Type III (gray leads)
ST-D21	2252Ω duct thermistor @ 77°F (25°C), Type II (green leads)
ST-D22	3000Ω duct thermistor @ 77°F (25°C), Type II (blue leads)
ST-D24	10,000Ω duct thermistor @ 77°F (25°C), Type II (yellow leads)
ST-D27	100,000Ω duct thermistor @ 77°F (25°C), Type II (gray leads)
ST-D42	20,000Ω duct thermistor @ 77°F (25°C), Type IV (green leads)
ST-D81	100Ω duct RTD @ 32°F (0°C), 385 platinum curve (yellow leads)
ST-D85	1000Ω duct RTD @ 32°F (0°C), 385 platinum curve (blue leads)
ST-D91	1000Ω duct RTD @ 32°F (0°C), 375 platinum curve (green leads)

OPTIONS (see Sensor Options page for option details)	
XCO	1/2" LB conduit fitting
XD	Dual sensors in one probe
XG	Greenfield fitting (factory installed)
XH	Handy-box housing (factory installed)
XHP	Non-metallic handy-box housing (factory installed)
XL	Custom length insertion probe, available 2" to 9' (5.08 cm to 2.74m)
XL2	Custom length insertion probe, 4-7/8" (12.38 cm)
XNP	1/2" MNPT plastic male close nipple
XNB	1/2" MNPT brass male close nipple
XN1	NIST certificate, one reference point 32°F (0°C)
XN2	NIST certificate, two reference points 32°F/158°F (0°/70°C)
XP	Matched sensor pair matched to ±0.1°F/0.055°C (must order two sensors)
XW	Weatherproof housing (factory installed)
X25	25' (7.62m) lead length
XZ	Three-wire RTD connections (Type 81 only)

ST-D3 – **XG**

Example: **ST-D3-XG** 10,000Ω Type III duct temperature sensor with Greenfield fitting

RELATED PRODUCTS

UR	**Moisture-resistant three-wire butt splice**
KT1	**Mounting screwdriver 1/16" Allen key**

FUNCTIONAL DEVICES CONTROL TRANSFORMERS

RIB TR SERIES

DESCRIPTION

The **RIB TR Series** offers a complete line of control transformers for use in building automation and temperature control systems. The series includes transformer VA ratings from 20 VA up through 375 VA and primary voltages of 120, 208, 240, 277, and 480 VAC. Isolation transformers for 24 VAC circuits are also included. All RIB TR Series transformers are UL listed and feature split-bobbin construction. Some also have a secondary circuit breaker.

RIB TR Series

FEATURES

- ***Complete line of control transformers from 20 VA to 375 VA***
- ***Foot and hub mounting on most models***
- ***All models UL listed, many are Class 2 rated***
- ***Ambient temp 32° to 104°F (0° to 40°C)***
- ***Color-coded wire leads***
- ***One-year warranty***

SPECIFICATIONS

MODEL	VA RATING	PRIMARY: SECONDARY VOLTAGE (VAC)	FREQ (Hz)	CIRCUIT BREAKER	MOUNTING H = Hub	AGENCY APPROVALS
TR20VA001	20	120:24	50/60	No	1H + Foot	Class 2 UL1585 listed US/Canada, E197146
TR20VA002	20	208:24	50/60	No	2H + Foot	Class 2 UL1585 listed US/Canada, E197146
TR20VA003	20	24:24 (isolation)	50/60	No	1H + Foot	UL506 listed US/Canada, E197147
TR20VA007	20	277:24	50/60	No	1H + Foot	Class 2 UL1585 listed US/Canada, E197146
TR40VA001	40	120:24	50/60	No	1H + Foot	Class 2 UL1585 listed US/Canada, E197146
TR40VA002	40	120:24	50/60	No	2H + Foot	Class 2 UL1585 listed US/Canada, E197146
TR40VA003	40	24:24 (isolation)	50/60	No	1H + Foot	Class 2 UL1585 listed US/Canada, E197146
TR40VA004	40	120/208/240/277:24	50/60	No	2H + Foot	Class 2 UL1585 listed US/Canada, E197146
TR40VA015	40	120/208/240:24	50/60	No	1H + Foot	Class 2 UL1585 listed US/Canada, E197146
TR40VA040	40	120/208/240:24 (terminals)	50/60	No	1H + Foot	Class 2 UL1585 listed US/Canada, E197146
TR50VA001	50	120:24	50/60	No	1H + Foot	Class 2 UL1585 listed US/Canada, E197146
TR50VA002	50	120:24	50/60	No	2H + Foot	Class 2 UL1585 listed US/Canada, E197146
TR50VA003	50	208/240:24	50/60	No	2H + Foot	Class 2 UL1585 listed US/Canada, E197146
TR50VA004	50	120/240/277/480:24	50/60	Yes	2H + Foot	Class 2 UL1585 listed US/Canada, E197146
TR50VA005	50	120:24	50/60	Yes	1H + Foot	Class 2 UL1585 listed US/Canada, E197146
TR50VA006	50	277:24	50/60	No	1H + Foot	Class 2 UL1585 listed US/Canada, E197146
TR50VA007	50	277:24	50/60	No	2H + Foot	Class 2 UL1585 listed US/Canada, E197146
TR50VA009	50	120/208/240	50/60	Yes	2H + Foot	Class 2 UL1585 listed US/Canada, E197146
TR50VA014	50	277:24	50/60	Yes	1H + Foot	Class 2 UL1585 listed US/Canada, E197146
TR50VA015	50	120/208/240/277/480:24	50/60	Yes	1H + Foot	Class 2 UL1585 listed US/Canada, E197146
TR50VA016	50	120/208/240:24	50/60	Yes	1H + Foot	Class 2 UL1585 listed US/Canada, E197146
TR50VA017	50	208/277/480:24	50/60	Yes	1H + Foot	Class 2 UL1585 listed US/Canada, E197146
TR75VA001	75	120:24	50/60	Yes	1H + Foot	Class 2 UL1585 listed US/Canada, E197146
TR75VA002	75	120:24	50/60	Yes	2H + Foot	Class 2 UL1585 listed US/Canada, E197146
TR75VA003	75	277:24	50/60	Yes	1H + Foot	Class 2 UL1585 listed US/Canada, E197146
TR75VA004	75	120/208/240/480:24	50/60	Yes	1H + Foot	Class 2 UL1585 listed US/Canada, E197146
TR75VA005	75	120/208/240/480:24	50/60	Yes	1H + Foot	Class 2 UL1585 listed US/Canada, E197146
TR85VA002	85	120:24	50/60	No	1H + Foot	UL506 listed US/Canada, E197147
TR100VA001	96	120:24	50/60	Yes	1H + Foot	Class 2 UL1585 listed US/Canada, E197146
TR100VA002	96	120:24	50/60	Yes	2H + Foot	Class 2 UL1585 listed US/Canada, E197146
TR100VA004	96	120/240/277/480:24	50/60	Yes	2H + Foot	Class 2 UL1585 listed US/Canada, E197146
TR150VA001	150	120:24	50/60	Yes	1H + Foot	UL506 listed US/Canada, E197147
TR175VA001	175	208/240:24	50/60	No	Foot	UL506 listed US/Canada, E197147
TR175VA002	175	120:24	50/60	No	2H + Foot	UL506 listed US/Canada, E197147
TR240VA001	240	120:24	50/60	No	1H + Foot	UL506 listed US/Canada, E197147
TR300VA002	300	120/208/240/480:24	50/60	Yes	Foot	UL506 listed US/Canada, E197147
TR375VA001	375	120:24	50/60	No	Foot	UL506 listed US/Canada, E197147

 © 2012 Kele, Inc. All rights reserved. The Kele name and logo are registered trademarks of Kele, Inc.

FUNCTIONAL DEVICES CONTROL TRANSFORMERS

RIB TR SERIES

DIMENSIONS

in
(cm)

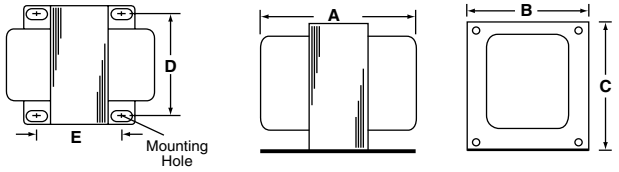

MODEL	DIMENSIONS A	B	C	D	E	WIRES	WEIGHT lb (kg)	STYLE
TR20VA001	2.13 (5.4)	1.90 (4.8)	2.6 (6.6)	1.63 (4.1)	1.54 (3.9)	8.0 (20.3)	1.35 (0.61)	1
TR20VA002	2.31 (5.86)	1.89 (4.80)	2.63 (6.68)	1.63 (4.1)	1.54 (3.9)	8.0 (20.3)	1.32 (0.61)	4
TR20VA003	2.13 (5.4)	1.90 (4.8)	2.6 (6.6)	1.63 (4.1)	1.54 (3.9)	8.0 (20.3)	1.39 (0.63)	1
TR20VA007	2.13 (5.4)	1.90 (4.8)	2.6 (6.6)	1.63 (4.1)	1.54 (3.9)	8.0 (20.3)	1.38 (0.63)	1
TR40VA001	2.7 (6.9)	2.2 (5.6)	2.9 (7.4)	1.75 (4.4)	1.93 (4.9)	8.0 (20.3)	2.02 (0.92)	1
TR40VA002	2.7 (6.9)	2.2 (5.6)	2.9 (7.4)	1.75 (4.4)	1.93 (4.9)	8.0 (20.3)	2.05 (0.93)	4
TR40VA003	2.7 (6.9)	2.2 (5.6)	2.9 (7.4)	1.75 (4.4)	1.93 (4.9)	8.0 (20.3)	2.05 (0.93)	1
TR40VA004	2.75 (7.0)	2.2 (5.6)	2.88 (7.31)	1.75 (4.4)	2.06 (5.23)	8.0 (20.3)	2.02 (0.92)	4
TR40VA015	2.7 (6.9)	2.2 (5.6)	2.88 (7.31)	1.75 (4.4)	1.95 (4.95)	8.0 (20.3)	1.96 (0.89)	1
TR40VA040	2.7 (6.9)	2.2 (5.6)	2.88 (7.31)	1.75 (4.4)	1.95 (4.95)	8.0 (20.3)	1.96 (0.89)	9
TR50VA001	2.75 (7.0)	2.2 (5.6)	2.9 (7.4)	1.75 (4.4)	1.93 (4.9)	8.0 (20.3)	2.14 (0.97)	1
TR50VA002	2.75 (7.0)	2.2 (5.6)	2.9 (7.4)	1.75 (4.4)	1.93 (4.9)	8.0 (20.3)	2.18 (0.99)	4
TR50VA003	2.75 (7.0)	2.2 (5.6)	2.9 (7.4)	1.75 (4.4)	2.01 (5.1)	8.0 (20.3)	2.17 (0.98)	4
TR50VA004	3.48 (8.8)	2.52 (6.4)	3.0 (7.6)	2.0 (5.1)	1.95 (5.0)	9.5 (24.1)	3.04 (1.38)	5
TR50VA005	3.5 (8.9)	2.52 (6.4)	3.0 (7.6)	2.0 (5.1)	2.0 (5.1)	9.0 (22.9)	2.6 (1.18)	2
TR50VA006	2.79 (7.1)	2.2 (5.6)	2.9 (7.4)	1.75 (4.4)	2.01 (5.1)	8.0 (20.3)	2.16 (0.98)	1
TR50VA007	2.79 (7.1)	2.2 (5.6)	2.9 (7.4)	1.75 (4.4)	2.01 (5.1)	8.0 (20.3)	2.17 (0.98)	4
TR50VA009	3.48 (8.8)	2.52 (6.4)	3.0 (7.6)	2.0 (5.1)	1.95 (5.0)	9.5 (24.1)	3.04 (1.38)	5
TR50VA014	3.45 (8.76)	2.5 (6.4)	3.05 (7.74)	2.0 (5.1)	1.95 (4.95)	9.0 (22.9)	2.8 (1.27)	2
TR50VA015	3.475 (8.82)	2.53 (6.42)	3.04 (7.72)	2.0 (5.1)	1.95 (4.95)	9.5 (24.1)	2.98 (1.35)	2
TR50VA016	3.475 (8.82)	2.53 (6.42)	3.06 (7.77)	2.0 (5.1)	1.95 (4.95)	9.5 (24.1)	2.90 (1.32)	2
TR50VA017	3.475 (8.82)	2.53 (6.42)	3.05 (7.74)	2.0 (5.1)	1.95 (4.95)	9.5 (24.1)	2.86 (1.29)	2
TR75VA001, 005	3.9 (9.9)	2.5 (6.4)	3.0 (7.6)	2.0 (5.1)	2.4 (6.1)	9.5 (24.1)	3.66 (1.66)	2
TR75VA002	3.9 (9.9)	2.5 (6.4)	3.0 (7.6)	2.0 (5.1)	2.4 (6.1)	9.5 (24.1)	3.70 (1.68)	5
TR75VA003	3.875 (9.84)	2.5 (6.4)	3.06 (7.77)	2.0 (5.1)	2.4 (6.1)	9.5 (24.1)	3.60 (1.63)	2
TR75VA004	3.9 (9.9)	2.5 (6.4)	3.0 (7.6)	2.0 (5.1)	2.4 (6.1)	9.5 (24.1)	3.78 (1.71)	6
TR85VA002	2.80 (7.1)	3.75 (9.5)	3.18 (8.1)	3.10 (7.9)	2.0 (5.1)	9.5 (24.1)	4.35 (1.97)	1
TR100VA001	4.0 (10.2)	2.5 (6.4)	3.0 (7.6)	2.0 (5.1)	2.55 (6.4)	9.5 (24.1)	4.06 (1.84)	2
TR100VA002	4.0 (10.2)	2.5 (6.4)	3.0 (7.6)	2.0 (5.1)	2.55 (6.5)	9.5 (24.1)	4.13 (1.87)	5
TR100VA004	4.25 (10.8)	2.5 (6.4)	3.0 (7.6)	1.97 (5.0)	2.75 (7.0)	9.5 (24.1)	4.60 (2.08)	5
TR150VA001	3.5 (8.9)	3.75 (9.5)	3.25 (8.3)	3.23 (8.2)	2.0 (5.1)	9.5 (24.1)	4.92 (2.23)	3
TR175VA001	3.8 (9.7)	3.8 (9.7)	3.2 (8.1)	3.1 (7.9)	3.0 (7.6)	9.5 (24.1)	7.05 (3.19)	7
TR175VA002	3.9 (9.9)	3.75 (9.5)	3.18 (8.1)	3.1 (7.9)	3.0 (7.6)	9.5 (24.1)	7.10 (3.22)	4
TR240VA001	3.75 (9.5)	3.75 (9.5)	4.5 (11.4)	3.13 (8.0)	3.23 (8.2)	9.5 (24.1)	9.12 (4.13)	8
TR300VA002	5.4 (13.7)	3.75 (9.5)	4.5 (11.4)	3.18 (8.07)	3.84 (9.75)	8.5 (21.6)	12.1 (5.49)	10
TR375VA001	4.33 (11.0)	3.75 (9.5)	4.5 (11.4)	3.15 (8.0)	3.83 (9.7)	7.0 (17.8)	11.44 (5.18)	7

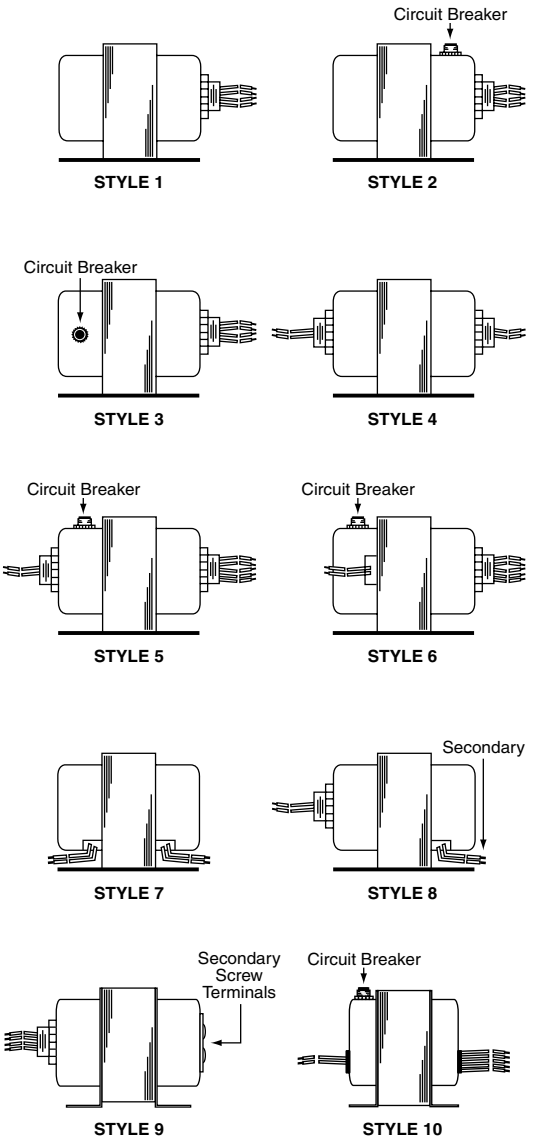

TRANSFORMER STYLES

WIRING

Primary Wires

480 VAC	Gray	**120 VAC**	White
277 VAC	Brown	**24 VAC**	Black
240 VAC	Orange	**Common**	Black
208 VAC	Red		

Secondary Wires*

24 VAC	Yellow
24 VAC	Yellow or Yellow/White

*Transformer Style 9 has secondary screw terminals.

ORDERING INFORMATION

Order by transformer model as listed under Specifications on the previous page.

© 2012 Kele, Inc. All rights reserved. The Kele name and logo are registered trademarks of Kele, Inc.

DOT - 66 INDUSTRIAL DRIVE
66 INDUSTRIAL DRIVE
AUGUSTA, ME 04330

Customer Contact

WARREN MECHANICAL INC
P O BOX 149
WESTBROOK, ME, USA 04098

RECORD DOCUMENT
NOVEMBER 12, 2014

TRANE PROJECT TEAM

SALESPERSON:
DON TAYLOR
TRANE PORTLAND
860 SPRING STREET
WESTBROOK, ME 04092

PROJECT MANAGER:
DAVE RYNNE
TRANE PORTLAND
860 SPRING STREET
WESTBROOK, ME 04092

DESIGNED BY:
DAN MACLAUCHLAN
TRANE BOSTON
181 BALLARDVALE STREET
WILMINGTON, MA 01887

THIS DRAWING SET IS THE PROPERTY OF TRANE. DESIGN INFORMATION, DRAWINGS, DETAILS OR SPECIFICATION DATA MAY NOT BE REPRODUCED OR DUPLICATED NOR MAY ANY WORK BE EXECUTED HEREFROM WITHOUT THE WRITTEN AUTHORIZATION OF TRANE.

TITLE PAGE

CID:	PID:	PROJECT ID:	NUM.	REVISION	DATE:	BY:
CID00029357	PID00031284	A223621	5			
PROJECT:			4			
DOT - 66 INDUSTRIAL DRIVE			3			
66 INDUSTRIAL DRIVE			2			
AUGUSTA, ME 04330			1	RECORD DOCUMENT	11/12/2014	MSH

PORTLAND ME 860 SPRING STREET, UNIT 1 WESTBROOK, ME 04092 207-828-1777	SALESPERSON: D TAYLOR	DESIGNED BY: D MACLAUCHLAN	CHECKED BY:
	FILE NAME: A223621.AXD		DWG: 1

INDEX OF CONTROL SYSTEM DRAWINGS				
DRAWING NUMBER	DRAWING TITLE	REVISION LEVEL	REVISION DATE	COMMENTS
1	TITLE PAGE	RECORD DOCUMENT	11/12/2014	
2	DRAWING INDEX	RECORD DOCUMENT	11/12/2014	
3	DRAWING INDEX-2	RECORD DOCUMENT	11/12/2014	
4	DRAWING INDEX-3	RECORD DOCUMENT	11/12/2014	
5	LEGEND	RECORD DOCUMENT	11/12/2014	
6	SYSTEM COMMUNICATION RISER	RECORD DOCUMENT	11/12/2014	
7	HW SYSTEM FLOW DIAGRAM	RECORD DOCUMENT	11/12/2014	
8	HW SYSTEM SEQUENCE OF OPERATION	RECORD DOCUMENT	11/12/2014	
9	HW SYSTEM UC600 - 1WIRING DETAIL	RECORD DOCUMENT	11/12/2014	
10	RADIANT FLOOR SYSTEM FLOW DIAGRAM	RECORD DOCUMENT	11/12/2014	
11	RTU - 1FLOW DIAGRAM	RECORD DOCUMENT	11/12/2014	
12	RTU - 1SEQUENCE OF OPERATION	RECORD DOCUMENT	11/12/2014	
13	RTU - 1WIRING DETAIL	RECORD DOCUMENT	11/12/2014	
14	RTU - 2 FLOW DIAGRAM	RECORD DOCUMENT	11/12/2014	
15	RTU - 2 SEQUENCE OF OPERATION	RECORD DOCUMENT	11/12/2014	
16	RTU - 2 WIRING DETAIL	RECORD DOCUMENT	11/12/2014	
17	RTU - 3/ERU - 1FLOW DIAGRAM	RECORD DOCUMENT	11/12/2014	
18	RTU - 3/ERU - 1SEQUENCE OF OPERATION	RECORD DOCUMENT	11/12/2014	
19	RTU - 3 WIRING DETAIL	RECORD DOCUMENT	11/12/2014	
20	ERU - 1UC400 - 5WIRING DETAIL	RECORD DOCUMENT	11/12/2014	
21	AHU - 1FLOW DIAGRAM	RECORD DOCUMENT	11/12/2014	
22	AHU - 1SEQUENCE OF OPERATION	RECORD DOCUMENT	11/12/2014	
23	AHU - 1UC600 - 2 WIRING DETAIL	RECORD DOCUMENT	11/12/2014	

TRANE

DRAWING INDEX

CID:	PID:	PROJECT ID:	NUM.	REVISION	DATE:	BY:
CID00029357	PID00031284	A223621	5			
PROJECT:			4			
DOT - 66 INDUSTRIAL DRIVE			3			
66 INDUSTRIAL DRIVE			2			
AUGUSTA, ME 04330			1	RECORD DOCUMENT	11/12/2014	MSH

PORTLAND ME	SALESPERSON:	DESIGNED BY:	CHECKED BY:
860 SPRING STREET, UNIT 1	D TAYLOR	D MACLAUCHLAN	
WESTBROOK, ME 04092	FILE NAME: A223621.AXD		DWG: 2
207-828-1777			

INDEX OF CONTROL SYSTEM DRAWINGS				
DRAWING NUMBER	DRAWING TITLE	REVISION LEVEL	REVISION DATE	COMMENTS
24	AHU - 1XM30 - 1, XM30 - 2, XM32 - 1 WIRING DETAIL	RECORD DOCUMENT	11/12/2014	
25	AHU - 2 FLOW DIAGRAM	RECORD DOCUMENT	11/12/2014	
26	AHU - 2 SEQUENCE OF OPERATION	RECORD DOCUMENT	11/12/2014	
27	AHU - 2 UC600 - 3 WIRING DETAIL	RECORD DOCUMENT	11/12/2014	
28	AHU - 2 XM30 - 3, XM30 - 4, XM32 - 2 WIRING DETAIL	RECORD DOCUMENT	11/12/2014	
29	MAU - 1FLOW DIAGRAM	RECORD DOCUMENT	11/12/2014	
30	MAU - 1UC400 - 1WIRING DETAIL	RECORD DOCUMENT	11/12/2014	
31	MAU - 2 FLOW DIAGRAM	RECORD DOCUMENT	11/12/2014	
32	MAU - 2 SEQUENCE OF OPERATION	RECORD DOCUMENT	11/12/2014	
33	MAU - 2 UC400 - 2 WIRING DETAIL	RECORD DOCUMENT	11/12/2014	
34	MAU - 2 XM30 - 5 WIRING DETAIL	RECORD DOCUMENT	11/12/2014	
35	MAU - 3 FLOW DIAGRAM	RECORD DOCUMENT	11/12/2014	
36	MAU - 3 SEQUENCE OF OPERATION	RECORD DOCUMENT	11/12/2014	
37	MAU - 3 UC400 - 3 WIRING DETAIL	RECORD DOCUMENT	11/12/2014	
38	MAU - 4 FLOW DIAGRAM	RECORD DOCUMENT	11/12/2014	
39	MAU - 4 UC400 - 4 WIRING DETAIL	RECORD DOCUMENT	11/12/2014	
40	ERU - 2 FLOW DIAGRAM	RECORD DOCUMENT	11/12/2014	
41	ERU - 3 FLOW DIAGRAM	RECORD DOCUMENT	11/12/2014	
42	ERU - 3 UC400 - 6 WIRING DETAIL	RECORD DOCUMENT	11/12/2014	
43	SINGLE DUCT VAV W/ REHEAT UC210 WIRING DETAIL	RECORD DOCUMENT	11/12/2014	
44	SINGLE DUCT VAV W/ REHEAT SEQUENCE OF OPERATION	RECORD DOCUMENT	11/12/2014	
45	SINGLE DUCT VAV W/ REHEAT SCHEDULE	RECORD DOCUMENT	11/12/2014	
46	CONVECTORS FLOW DIAGRAM	RECORD DOCUMENT	11/12/2014	

DRAWING INDEX-2

CID:	PID:	PROJECT ID:	NUM.	REVISION	DATE:	BY:
CID00029357	PID00031284	A223621	5			
PROJECT:			4			
DOT - 66 INDUSTRIAL DRIVE			3			
66 INDUSTRIAL DRIVE			2			
AUGUSTA, ME 04330			1	RECORD DOCUMENT	11/12/2014	MSH

PORTLAND ME	SALESPERSON:	DESIGNED BY:	CHECKED BY:
860 SPRING STREET, UNIT 1 WESTBROOK, ME 04092 207-828-1777	D TAYLOR	D MACLAUCHLAN	
	FILE NAME: A223621.AXD		DWG: 3

INDEX OF CONTROL SYSTEM DRAWINGS				
DRAWING NUMBER	DRAWING TITLE	REVISION LEVEL	REVISION DATE	COMMENTS
47	EXHAUST FAN FLOW DIAGRAM	RECORD DOCUMENT	11/12/2014	
48	EXHAUST FAN SEQUENCE OF OPERATION	RECORD DOCUMENT	11/12/2014	
49	EF - 9, EF - 10, EF - 11 & CONV'S UC400 - 7 WIRING DETAIL	RECORD DOCUMENT	11/12/2014	
50	EMERGENCY VENTILATION SYSTEM FLOW DIAGRAM	RECORD DOCUMENT	11/12/2014	
51	EMERGENCY VENTILATION SYSTEM WIRING DETAIL	RECORD DOCUMENT	11/12/2014	
52	EMERGENCY VENTILATION SYSTEM UC400 - 8 WIRING DETAIL	RECORD DOCUMENT	11/12/2014	
53	KITCHEN HOOD SYSTEM FLOW DIAGRAM	RECORD DOCUMENT	11/12/2014	
54	MISCELLANEOUS POINTS FLOW DIAGRAM	RECORD DOCUMENT	11/12/2014	
55	PAINT BOOTH MAU & EF XM30 - 6 WIRING DETAIL	RECORD DOCUMENT	11/12/2014	
56	GUH FLOW DIAGRAM	RECORD DOCUMENT	11/12/2014	
57	UH/CUH FLOW DIAGRAM	RECORD DOCUMENT	11/12/2014	
58	DUCTLESS SPLIT AC UNITS FLOW DIAGRAM	RECORD DOCUMENT	11/12/2014	
59	BILL OF MATERIALS	RECORD DOCUMENT	11/12/2014	
60	BILL OF MATERIALS-2	RECORD DOCUMENT	11/12/2014	
61	DAMPER SCHEDULE	RECORD DOCUMENT	11/12/2014	
62	VALVE SCHEDULE	RECORD DOCUMENT	11/12/2014	
63	VALVE SCHEDULE-2	RECORD DOCUMENT	11/12/2014	

TRANE

DRAWING INDEX-3

CID:	PID:	PROJECT ID:	NUM.	REVISION	DATE:	BY:
CID00029357	PID00031284	A223621	5			
PROJECT:			4			
DOT - 66 INDUSTRIAL DRIVE			3			
66 INDUSTRIAL DRIVE			2			
AUGUSTA, ME 04330			1	RECORD DOCUMENT	11/12/2014	MSH

PORTLAND ME	SALESPERSON:	DESIGNED BY:	CHECKED BY:
860 SPRING STREET, UNIT 1 WESTBROOK, ME 04092 207-828-1777	D TAYLOR	D MACLAUCHLAN	
	FILE NAME: A223621.AXD		DWG: 4

Symbol Legend

AFS AIR FLOW STATION	AFS AIR FLOW STATION, FAN MOUNTED	ALM ALARM, BELL	ALM ALARM, STROBE
ALM ALARM, PIEZIO	BLENDER, AIR	BURNER, FUEL-FIRED DIRECT	COIL, COAXIAL
C / C COIL, CHW, DX, HW, STEAM, ETC.	CONTROL POINT	CS OR CSR CS - CURRENT SENSOR CSR - CURRENT SENSOR W/RELAY	D DAMPER, OPPOSED OR PARALLEL
D TRAQ DAMPER	DA ACTUATOR, DAMPER	DPS SENSOR, DIFFERENTIAL PRESSURE	DPS, DPT AIR DIFFERENTIAL SWITCH OR SENSOR
H L DPT, DPS DIFFERENTIAL PRESSURE SWITCH OR SENSOR	EXCHANGER, FUEL FIRE HEAT	EXCHANGER, FLUID HEAT	FAN OR PUMP
FAN, ROOF TOP	FILTER, AIR	FILTER, AIR BAG	FILTER, AIR HEPA
FILTER, AIR ROLL	FLT SWITCH, FLOAT	FS FIRESTAT	FS SENSOR, FLOW
HEATER, ELECTRIC DUCT	HDW SENSOR, ROOM STATIC PRESSURE	HDW TUBE, STATIC PRESSURE	HE, TEH SENSOR, DUCT HUMIDITY AND TEMPERATURE
HE, TEH SENSOR, HUMIDITY OR TEMPERATURE AND HUMIDITY	IAQ SENSOR, INDOOR AIR QUALITY	IRQ SENSOR, INDOOR AIR QUALITY (CO2)	LLT THERMOSTAT, LOW LIMIT
MS STARTER, MOTOR	OCC SENSOR, OCCUPANCY	PT TRANSMITTER, PRESSURE	R RELAY
R RELAY, SOCKET	RB SENSOR, OUTDOOR PRESSURE	RST SWITCH, RESET STATION	SD DETECTOR, SMOKE
SEQ SEQUENCER	SW ON / OFF SWITCH	SOL SOLENOID, AIR	SW SWITCH, BUTTON
T THERMOSTAT, WALL	TC COMPOUND, THERMAL	TE SENSOR, AVERAGING TEMPERATURE	TE SENSOR, STRAP ON TEMPERATURE
SW SWITCH, ROTARY	TE SENSOR, TEMPERATURE	TE SENSOR, ZONE	TMR TIMER, ELECTRONIC WALL
TMR TIMER, WALL	TW WELL, THERMAL	TX TRANSFORMER	UV LIGHT, ULTRAVIOLET
VAL VALVE, 2-WAY COIL	VAL VALVE, 3-WAY COIL	VAL VALVE, DUCT HUMIDIFIER	VFD VARIABLE FREQUENCY DRIVE

Wiring and Project Notes

ELECTRICAL CONTRACTOR FOR TRANE:

1. REFER TO DEVICE INSTALLATION MANUALS FOR SPECIFIC WIRING REQUIREMENTS.
2. FIELD WIRING MUST BE IN ACCORDANCE WITH NATIONAL ELECTRICAL CODE, STATE AND LOCAL BUILDING CODES, AND DIVISION 16 OF SPECIFICATIONS.
3. TAG ALL CONTROL WIRING AT EACH END OF THE CABLE OR WIRE PER TAGS SHOWN IN ATTACHED DRAWINGS.
4. AVOID OVER TIGHTENING CABLE TIES AND OTHER FORMS OF CABLE WRAPS. THIS CAN DAMAGE THE WIRES INSIDE THE CABLES.
5. DO NOT CABLE TIE TO INSULATED WATER, STEAM OR OTHER LINES.
6. IN OPEN PLENUMS, AVOID RUNNING WIRE NEAR LIGHTING BALLASTS, ESPECIALLY THOSE USING 277 VAC.
7. ALL PANELS AND FIELD DEVICES LISTED IN THIS DOCUMENT ARE TO BE INSTALLED BY CONTROLS ELECTRICAL SUBCONTRACTOR UNLESS OTHERWISE NOTED ON DRAWINGS.
8. MOUNT ALL ROOM SENSORS AND SWITCHES AS SHOWN ON THE CONSTRUCTION DOCUMENTS, UNLESS OTHERWISE DIRECTED IN WRITING BY THE OWNER AND/OR ENGINEER.
9. FLEXIBLE CONDUIT IS NOT TO EXCEED 24" IN LENGTH.
10. CONTROL PANELS ARE NOT TO BE USED AS JUNCTION BOXES OR RACEWAYS. WIRING THAT DOES NOT TERMINATE IN A CONTROL PANEL IS NOT TO BE RUN WITHIN THE PANEL.
11. BINARY INPUT LIMITS: 1000 FT (300 M).
12. 0~10 VDC ANALOG INPUT LIMITS: 300 FT (100 M).
13. 0~20 MA ANALOG INPUT LIMITS: 1000 FT (300 M).
14. VARIABLE RESISTANCE ANALOG INPUT LIMITS: 300 FT (100 M).
15. ANALOG OUTPUT LIMITS: 1000 FT (300 M).
16. BINARY OUTPUT LIMITS: 1000 FT (300 M).
17. WIRING POWER FROM THE AC OUT TERMINALS TO POWER ANALOG INPUT DEVICES WILL CAUSE IMMEDIATE CONTROLLER FAILURE IF INPUT DEVICE USES HALF-WAVE RECTIFICATION. WHEN UNSURE, USE A SEPARATE POWER SUPPLY FOR DEVICE.
18. **GENERAL COMMUNICATION GUIDE:** DO NOT RUN COMMUNICATION LINK WIRING IN THE SAME CONDUIT OR WIRE BUNDLE WITH AC-POWER WIRES (INCLUDING CONDUCTORS RUNNING FROM TRIAC-TYPE OUTPUTS). KEEP POLARITY CONSISTENT THROUGHOUT THE SITE. MAKE SURE THAT THE 24 VAC POWER SUPPLIES ARE CONSISTENT IN HOW THEY ARE GROUNDED. AVOID SHARING 24 VAC BETWEEN CONTROLLERS. USE ONLY ONE TYPE OF COMMUNICATION CABLE; DO NOT MIX CABLE. IF AN EXISTING JOB USED ALTERNATE CABLE, CONTINUE USING THE SAME CABLE AFTER APPROVAL FROM THE PROJECT MANAGER.
19. **BACNET MS/TP COMMUNICATION** CABLE MUST BE SHIELDED TWISTED PAIR, 18 AWG MINIMUM, STRANDED, TINNED COPPER CONDUCTORS. SHIELD MUST BE CONTINUOUS THROUGHOUT, ISOLATED FROM OTHER CONDUCTORS OR GROUND, AND GROUNDED AT THE SYSTEM CONTROLLER ONLY. MAXIMUM CAPACITANCE BETWEEN CONDUCTORS IS 24 PICOFARADS PER FOOT. MAXIMUM DISTANCE IS 4000 FT (1372 M). MAXIMUM OF 60 TRANE DEVICES PER LINK BUT LESS WHEN COMBINED WITH NON-TRANE DEVICES. EXPANSION MODULE LINK LIMIT IS 656 FT (200 M). A TRACER BACNET TERMINATOR IS REQUIRED AT EACH END OF THE COMMUNICATION LINK. TOPOLOGY MUST BE DAISY CHAINED.
20. **LONTALK (COMM 5) COMMUNICATION** CABLE MUST BE LEVEL 4 UNSHIELDED, 22 AWG WITH MAXIMUM CAPACITANCE BETWEEN CONDUCTORS OF 17 PICOFARADS PER FOOT. MAXIMUM DISTANCE IS 4500 FT (1400 M). MAXIMUM DEVICES IS 60 DEVICES WITHOUT REPEATER AND 120 WITH REPEATER. ONE REPEATER PER LINK CAN BE USED FOR AN ADDITIONAL 4500 FT (1400 M), 60 DEVICES. EX2 LINK LIMIT IS 1000 FT (300 M). CCP III LINK LIMIT IS 3500 FT (1090 M). 105 OHMS, 1%, ¼ WATT TERMINATION RESISTORS ARE REQUIRED AT EACH END FOR LEVEL 4 WIRE AND 82 OHMS, 1%, ¼ WATT AT EACH END FOR 18 AWG SHIELDED (PURPLE) WIRE. TOPOLOGY MUST BE DAISY CHAINED
21. **COMM 3 AND COMM 4 COMMUNICATION** CABLE MUST BE SHIELDED TWISTED PAIR, 18 AWG MINIMUM, STRANDED, TINNED COPPER CONDUCTORS. SHIELD MUST BE CONTINUOUS THROUGHOUT, ISOLATED FROM OTHER CONDUCTORS OR GROUND, AND GROUNDED AT BCU ONLY. MAXIMUM CAPACITANCE BETWEEN CONDUCTORS IS 24 PICOFARADS PER FOOT. MAXIMUM DISTANCE IS 5000 FT (1715 M). UNDER CERTAIN CONDITIONS, TERMINATION RESISTORS ARE REQUIRED ON A COMM 3 COMMUNICATION LINK.
22. **ETHERNET LAN COMMUNICATION** CABLE MAXIMUM DISTANCE IS 295 FT (90 M) PLUS 33 FT (10 M) FOR PATCH CABLES.
23. **TRANE WCI WIRELESS COMMUNICATION**

    SIGNAL RANGE TYPICALLY HAS A RADIUS OF 200 FT (60 M) - POTENTIALLY MORE FOR LINE-OF-SIGHT INSTALLATIONS, AND LESS FOR OBSTRUCTED INSTALLATIONS.

    EACH NETWORK SHALL HAVE 1 WCI NETWORK COORDINATOR AND UP TO 30 WCI NETWORK MEMBERS.

    THE TRACER SC SUPPORTS UP TO 8 NETWORK COORDINATORS AND UP TO 120 WCI NETWORK MEMBERS.

    MAXIMUM IMC WIRING LENGTH BETWEEN A WCI AND A CONTROLLER IS 656 FT (200 M).

MECHANICAL CONTRACTOR:

1. DAMPERS ARE TO BE INSTALLED BY SHEET METAL CONTRACTOR UNLESS OTHERWISE NOTED.
2. CONTROL VALVES AND ACCESSORIES INSTALLED DIRECTLY INTO PIPING (SENSOR WELLS, THREADOLETS, ETC.) ARE TO BE INSTALLED BY MECHANICAL CONTRACTOR.
3. FLOW DIAGRAMS SHALL NOT BE A GUIDE FOR PIPE AND VALVE INSTALLATION. REFER TO THE VALVE MANUFACTURER'S INSTALLATION INSTRUCTIONS FOR INSTALLATION GUIDANCE.

Cable Matrix

CT	TRANE NUMBER*	DESCRIPTION	WIRE COLORS
A	052003	18/2 TWIST SHLD PURPLE COMM CABLE	WHT, BLK
B		FACTORY PROVIDED CABLE	
C	105500	22/2 TWIST NON-SHLD BLUE COMM CABLE	WHT, BLK
D	002320	18/2 TWIST SHLD PLEN WHITE CABLE	WHT, BLK
E	002330	18/3 TWIST SHLD PLEN WHITE CABLE	WHT, BLK, RED
F	002340	18/4 TWIST SHLD PLEN WHITE CABLE	WHT, BLK, RED, GRN
J		1 PAIR #14 THHN STRANDED IN CONDUIT	WHT, BLK
L		ETHERNET RG58 THNNET PLEN CABLE	
M	555619	ETHERNET CAT-5 PLEN CABLE	
O	002352	18/8 TWIST SHLD PLEN WHITE CABLE	WHT, BLK, RED, ORN, YEL, GRN, BLU, BRN
P	106502	22/2 TWIST SHLD PLEN ORANGE COMM CABLE	WHT, BLK
Q	761360	16/2 SOLID RED SMOKE DETECTOR CABLE	WHT, BLK
2C	510001	18/2 SOLID PLENUM THERMOSTAT CABLE	WHT, RED
3C	51002-04	18/3 SOLID PLENUM THERMOSTAT CABLE	WHT, RED, GRN
5C	510004	18/5 SOLID PLENUM THERMOSTAT CABLE	WHT, RED, GRN, YEL, BLU
8C	510007	18/8 SOLID PLENUM THERMOSTAT CABLE	WHT, RED GRN, YEL, BLU, ORN, BLK, BRN
10C		18/10 SOLID PLENUM THERMOSTAT CABLE	WHT, RED, GRN, YEL, BLU, ORN, BLK, BRN, GRY, PNK
12C		18/12 SOLID PLENUM THERMOSTAT CABLE	WHT, RED, GRN, YEL, BLU, ORN, BLK, BRN, GRY, PNK, PUR, TAN

* When ordering cable specify jacket color. Part numbers are subject to change without notice.

CABLE MATRIX NOTES:
KEEP ALL COMMUNICATION LINK WIRING IN A DAISY CHAIN CONFIGURATION. ALL CABLE WIRING MUST BE TRANE RECOMMENDED WIRING , ESPECIALLY COMMUNICATION CABLES. CONTACT TRANE FOR RECOMMENDED CABLES AND SPECIFICATIONS.

CABLE INFORMATION SHAPE (CIS):
EACH CABLE CONNECTION HAS A CIS WHICH PROVIDES SOME OR ALL OF THE INFORMATION INDICATED BELOW:

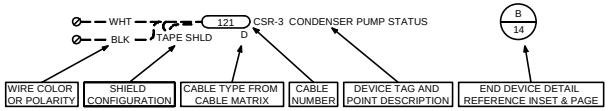

SHIELDING NOTE:

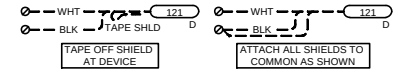

FLOW SHAPE NOTES:

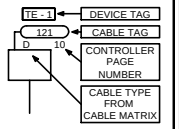

FIELD WIRING NOTE:

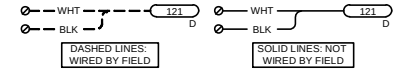

Field, Factory And Existing Device Note:

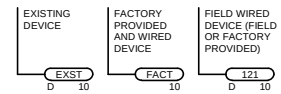

RISER 'WIRING BY' NOTE:

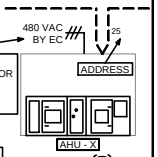

FACTORY MOUNTED DEVICE WITH FIELD MOUNTED CONTROLLER:

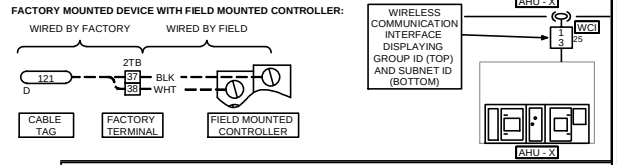

LEGEND

CID:	PID:	PROJECT ID:	NUM.	REVISION	DATE:	BY:
CID00029357	PID00031284	A223621	5			
PROJECT:			4			
DOT - 66 INDUSTRIAL DRIVE			3			
66 INDUSTRIAL DRIVE			2			
AUGUSTA, ME 04330			1	RECORD DOCUMENT	11/12/2014	MSH
PORTLAND ME	SALESPERSON:	DESIGNED BY:	CHECKED BY:			
860 SPRING STREET, UNIT 1	D TAYLOR	D MACLAUCHLAN				
WESTBROOK, ME 04092	FILE NAME: A223621.AXD				DWG: 5	
207-828-1777						

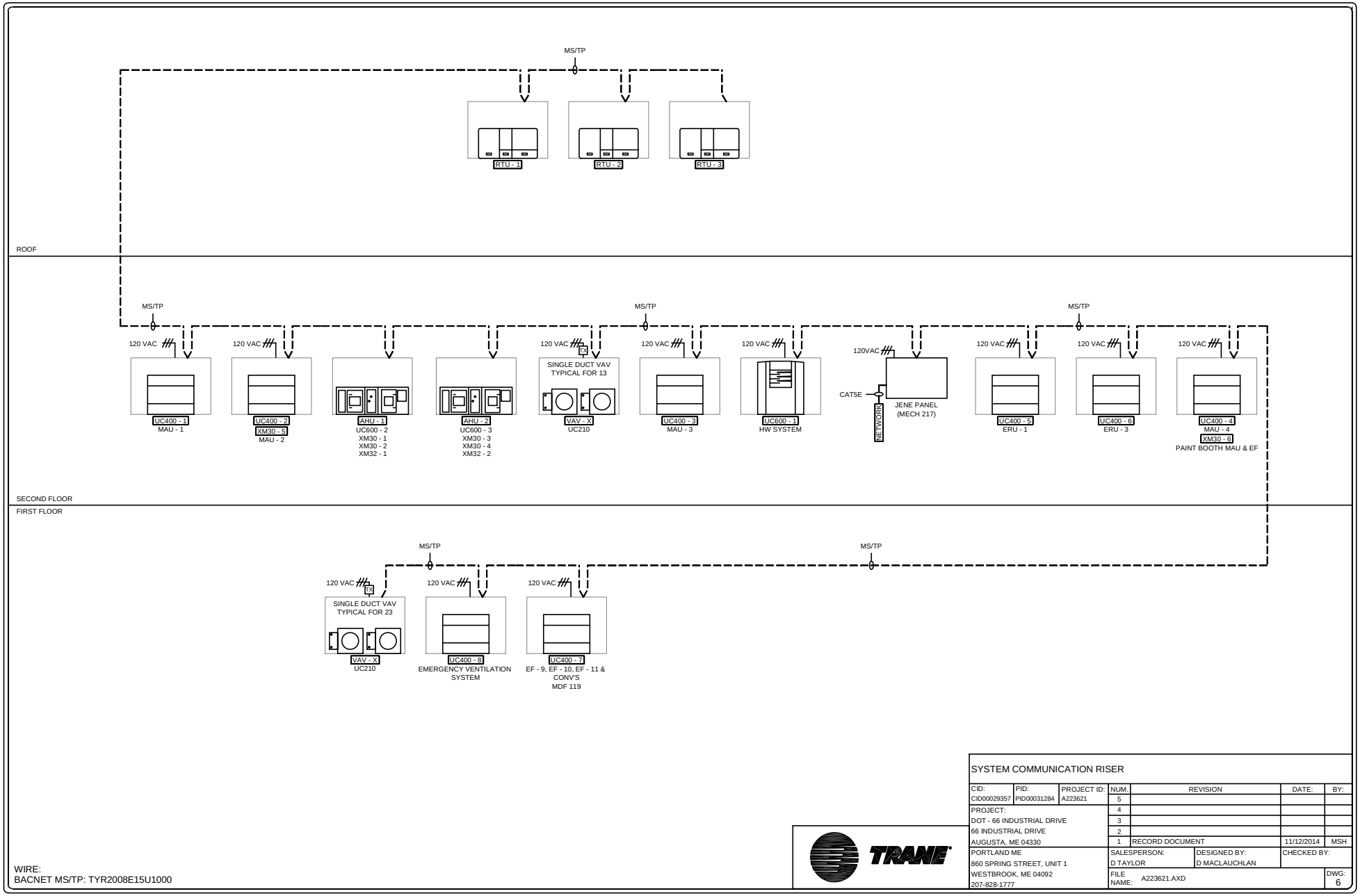

WIRE:
BACNET MS/TP: TYR2008E15U1000

SYSTEM COMMUNICATION RISER

CID:	PID:	PROJECT ID:	NUM.	REVISION	DATE:	BY:
CID00029357	PID00031284	A223621	5			
PROJECT:			4			
DOT - 66 INDUSTRIAL DRIVE			3			
66 INDUSTRIAL DRIVE			2			
AUGUSTA, ME 04330			1	RECORD DOCUMENT	11/12/2014	MSH

PORTLAND ME 860 SPRING STREET, UNIT 1 WESTBROOK, ME 04092 207-828-1777	SALESPERSON: D TAYLOR	DESIGNED BY: D MACLAUCHLAN	CHECKED BY:
	FILE NAME: A223621.AXD		DWG: 6

TYPICAL FOR 1
(HW SYSTEM)

BILL OF MATERIALS				
TAG	QTY	VENDOR	PART NO	DESCRIPTION
TE - 1, TE - 2	2	TRANE	4190-1132	TEMP SENS, DUCT/IMM, THERM 4 IN
WEL - 1, WEL - 2	2	TRANE	4190-1108	WELL, 4IN X 1/2IN FPT X 3/4IN MPT, SS
TEH - 1	1	BAPI	BA/10K-2-H300-O-BB	OUTSIDE AIR TEMP & RH 3%
CS - 1, CS - 2	2	KELE	RIBXGTFL	CUR SW, 0.75A, SPLIT, NO, LED
R - 1, R - 2	4	KELE	RIBU1C	RLY SPDT, LED, 10-30 VAC/DC/120 VAC

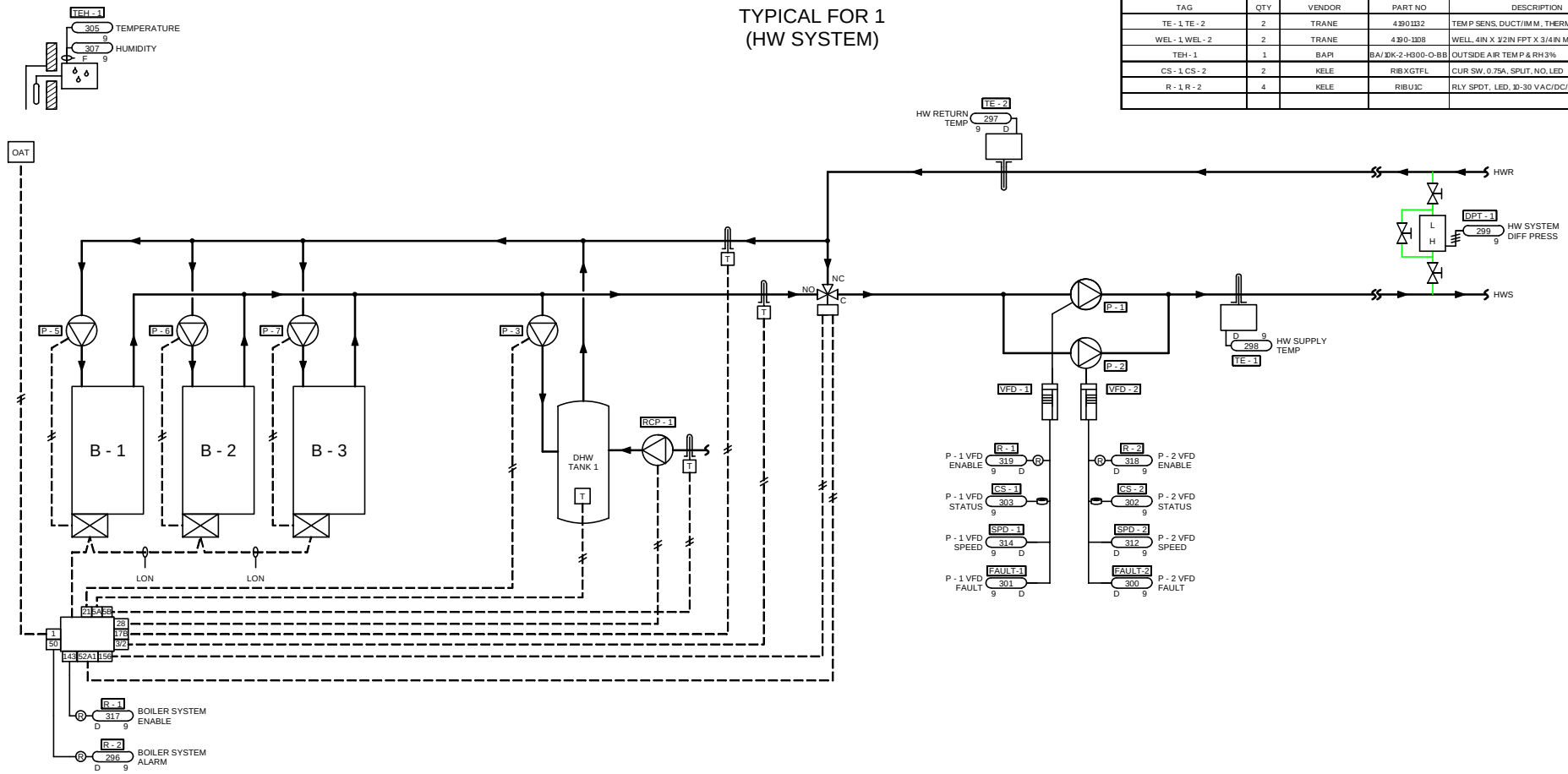

Term #	Point Name
1	Outdoor temperature sensor
3/2	Common supply temperature sensor
5A	DHW tank temperature sensor
5B	DHW return temperature sensor
17B	Return temperature sensor
21	DHW circulation pump
28	DHW recirculation pump
50	Central fault message (Alarm)
52A1	Motor for 3-way valve (Signal)
143	External hook-ups (Enable Signal)
156	Internal power supply for mixing valve (Power)

HW SYSTEM FLOW DIAGRAM

CID:	PID:	PROJECT ID:	NUM.	REVISION	DATE:	BY:
CID00029357	PID00031284	A223621	5			
PROJECT:			4			
DOT - 66 INDUSTRIAL DRIVE			3			
66 INDUSTRIAL DRIVE			2			
AUGUSTA, ME 04330			1	RECORD DOCUMENT	11/12/2014	MSH

PORTLAND ME	SALESPERSON:	DESIGNED BY:	CHECKED BY:
860 SPRING STREET, UNIT 1	D TAYLOR	D MACLAUCHLAN	
WESTBROOK, ME 04092	FILE NAME: A223621.AXD		DWG: 7
207-828-1777			

TRANE

Sequence of Operation:

Primary/Secondary Boiler Plant: System will be enabled between October and May anytime the outside air temperature is below 60°F (adj.) for more than 30 minutes and a zone is calling for heat. The Trane system will enable the boiler controller and the boilers will control HW supply temperature setpoint via the manufacturer controls. Boiler controller will stage boilers and associated pumps to maintain supply water temperature setpoint. If boiler is in alarm an alarm will be initiated and the boiler will be removed from the rotation cycle via the boiler controller. Boilers will be rotated weekly to equalize runtime.

Secondary Pumps (P – 1 & P – 2): Pumps will be enabled upon a call for heat during occupied time. Pumps will operate in a lead/lag configuration. If P – 1 (lead) is called to run and status is not confirmed an alarm will be initiated and P – 2 (lag) will be become the lead. P – 1 will modulate to maintain HW system differential pressure setpoint. Pumps will be rotated weekly to equalize runtime.

DHW System: The boiler plant will be enabled and will stage to provide 180°F (adj.) water to DHW tank whenever there is a call for DHW. Boiler controller will modulate 3-way mixing valve to ensure secondary HW supply temperature does not exceed setpoint. When aquastat is satisfied normal operation of HW system will resume.

DHW Recirc Pump: Recirc pump will be enabled by boiler controller whenever return water temperature falls below setpoint.

HW SYSTEM SEQUENCE OF OPERATION

CID:	PID:	PROJECT ID:	NUM.	REVISION	DATE:	BY:
CID00029357	PID00031284	A223621	5			
PROJECT:			4			
DOT - 66 INDUSTRIAL DRIVE			3			
66 INDUSTRIAL DRIVE			2			
AUGUSTA, ME 04330			1	RECORD DOCUMENT	11/12/2014	MSH

PORTLAND ME 860 SPRING STREET, UNIT 1 WESTBROOK, ME 04092 207-828-1777	SALESPERSON: D TAYLOR	DESIGNED BY: D MACLAUCHLAN	CHECKED BY:
	FILE NAME: A223621.AXD		DWG: 8

TYPICAL FOR 1
(HW SYSTEM)

BILL OF MATERIALS				
TAG	QTY	VENDOR	PART NO	DESCRIPTION
ENC - 1	1	TRANE	X13651559010	ENC, TRACER UC MEDIUM, 120 VAC OUTLET
UC600 - 1	1	TRANE	BMUC600AAA01D001	UC600 CONTROLLER, FRAME MOUNT

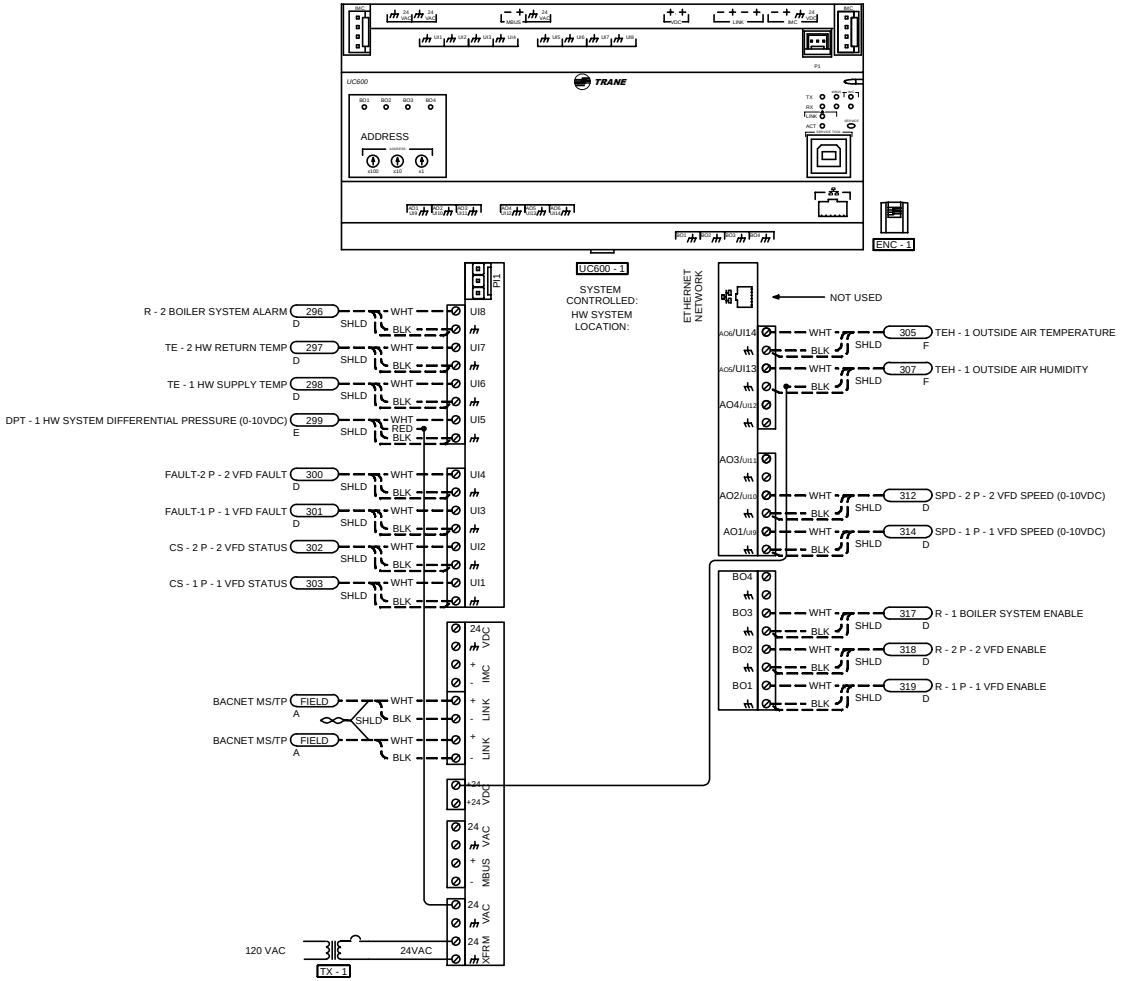

1 DEVICE MUST BE GROUNDED WITH FACTORY PROVIDED GROUND WIRE AS DETAILED IN THE DEVICE INSTALLATION LITERATURE.

HW SYSTEM UC600 - 1 WIRING DETAIL

CID:	PID:	PROJECT ID:	NUM.	REVISION	DATE:	BY:
CID00029357	PID00031284	A223621	5			
PROJECT:			4			
DOT - 66 INDUSTRIAL DRIVE			3			
66 INDUSTRIAL DRIVE			2			
AUGUSTA, ME 04330			1	RECORD DOCUMENT	11/12/2014	MSH

PORTLAND ME
860 SPRING STREET, UNIT 1
WESTBROOK, ME 04092
207-828-1777

SALESPERSON: D TAYLOR
DESIGNED BY: D MACLAUCHLAN
CHECKED BY:
FILE NAME: A223621.AXD
DWG: 9

TYPICAL FOR 1
(RADIANT FLOOR SYSTEM)

BILL OF MATERIALS				
TAG	QTY	VENDOR	PART NO	DESCRIPTION
TE - 1 TE - 2	2	TRANE	4190-1132	TEMP SENS, DUCT/IMM, THERM 4 IN
WEL - 1 WEL - 2	2	TRANE	4190-1108	WELL, 4IN X 1/2IN FPT X 3/4IN MPT, SS
V1	1	BELIMO	-	REFER TO VALVE SCHEDULE
CS - 4	1	KELE	RIBXGTFL	CUR SW, 0.75A, SPLIT, NO, LED
R - 4	1	KELE	RIBU1C	RLY SPDT, LED, 10-30 VAC/DC/120 VAC
TE - 3	1	KELE	ST-R24S-C	SLAB TEMP

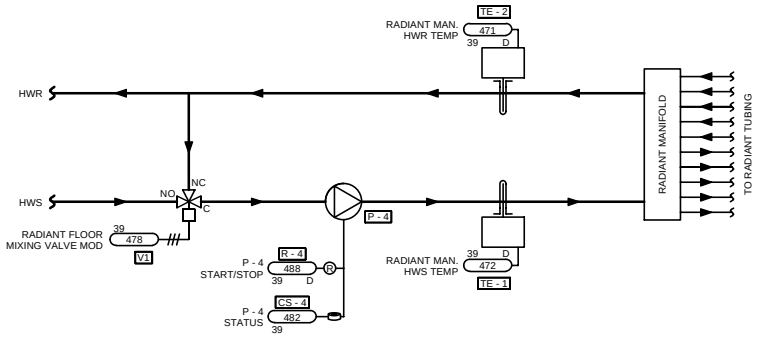

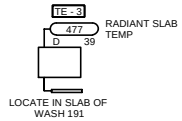

Sequence of Operation:

Radiant Floor System: Radiant floor pump (P – 4) will be enabled during Occupied Mode whenever the outside air temperature is below 65°F (adj.). Trane will monitor floor slab temperature. The 3-way valve will modulate to maintain space temperature setpoint of 60°F (adj.). Supply water temperature to manifold not to exceed 135°F (adj.), 3-way valve will modulate to ensure supply water temperature does not exceed 135°F.

1 SPACE TEMP SENSOR LOCATED ON MAU - 4 FLOW DIAGRAM.

RADIANT FLOOR SYSTEM FLOW DIAGRAM

CID:	PID:	PROJECT ID:	NUM.	REVISION	DATE:	BY:
CID00029357	PID00031284	A223621	5			
PROJECT:			4			
DOT - 66 INDUSTRIAL DRIVE			3			
66 INDUSTRIAL DRIVE			2			
AUGUSTA, ME 04330			1	RECORD DOCUMENT	11/12/2014	MSH

PORTLAND ME
860 SPRING STREET, UNIT 1
WESTBROOK, ME 04092
207-828-1777

SALESPERSON: D TAYLOR
DESIGNED BY: D MACLAUCHLAN
CHECKED BY:
FILE NAME: A223621.AXD
DWG: 10

TYPICAL FOR 1
(RTU - 1)

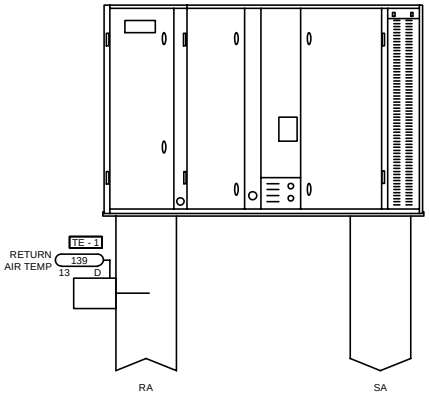

BILL OF MATERIALS				
TAG	QTY	VENDOR	PART NO	DESCRIPTION
TE - 1	1	KELE	ST-D24-XH	TEMP SENS, DUCT/IMM, THERM, 9 IN, HB

1 UNIT SERVES VAV BOXES (FIRST FLOOR AREA A).

RTU - 1 FLOW DIAGRAM

CID:	PID:	PROJECT ID:	NUM.	REVISION	DATE:	BY:
CID00029357	PID00031284	A223621	5			
PROJECT:			4			
DOT - 66 INDUSTRIAL DRIVE			3			
66 INDUSTRIAL DRIVE			2			
AUGUSTA, ME 04330			1	RECORD DOCUMENT	11/12/2014	MSH

PORTLAND ME
860 SPRING STREET, UNIT 1
WESTBROOK, ME 04092
207-828-1777

SALESPERSON: D TAYLOR
DESIGNED BY: D MACLAUCHLAN
CHECKED BY:
FILE NAME: A223621.AXD
DWG: 11

Sequence of Operation:

Building Automation System Interface: The Building Automation System (BAS) will send the controller Occupied Bypass, Morning Warm-up / Pre-Cool, Occupied / Unoccupied and Heat / Cool modes. If a BAS is not present, or communication is lost with the BAS the controller will operate using default modes and setpoints.

Occupied Mode: During occupied periods, the supply fan will run continuously and the outside air damper will open to maintain minimum ventilation requirements. The unit controller will control the supply fan speed to maintain the current duct static pressure setpoint (adj.).The DX cooling will stage and gas heat will modulate to maintain the current discharge air temperature setpoint. If economizing is enabled the outside air damper will modulate to maintain the current discharge air temperature setpoint.

Unoccupied Mode: When the space temperature is below the unoccupied heating setpoint of 60°F (adj.) the supply fan will modulate as necessary to maintain duct static pressure setpoint (adj.), the outside air damper will remain closed and the gas heat will be enabled. When the space temperature rises above the unoccupied heating setpoint of 60°F (adj.) plus the unoccupied differential of 4°F (adj.) the supply fan will stop and the gas heat will be disabled.

When the space temperature is above the unoccupied cooling setpoint of 85°F (adj.) the supply fan will modulate as necessary to maintain duct static pressure setpoint (adj.), the outside air damper will open if economizing is enabled and remain closed if economizing is disabled and the DX cooling will be enabled. When the space temperature falls below the unoccupied cooling setpoint of 85°F (adj.) minus the unoccupied differential of 4°F (adj.) the supply fan will stop, the DX cooling will be disabled and the outside air damper will close.

Optimal Start: The BAS will monitor the scheduled occupied time, occupied space setpoints and space temperature to calculate when the optimal start occurs.

Morning Warm-Up Mode: During optimal start, if the average space temperature is below the occupied heating setpoint a morning warm-up mode will be activated. When morning warm-up is initiated the unit will enable the heating and supply fan. The outside air damper will remain closed. When the average space temperature reaches the occupied heating setpoint (adj.), the unit will transition to the occupied mode.

Pre-Cool Mode: During optimal start, if the average space temperature is above the occupied cooling setpoint, pre-cool mode will be activated. When pre-cool is initiated the unit will enable the fan and cooling or economizer. The outside air damper will remain closed, unless economizing. When the average space temperature reaches occupied cooling setpoint (adj.), the unit will transition to the occupied mode.

Occupied Bypass: The BAS will monitor the status of the “on” and “cancel” buttons of the space temperature sensors. When an occupied bypass request is received from a space sensor, the unit will transition from its current occupancy mode to occupied bypass mode and the unit will maintain the space temperature to the occupied setpoints (adj.).

Economizer: The supply air sensor will measure the dry bulb temperature of the air leaving the evaporator coil while economizing. When economizing is enabled and the unit is operating in the cooling mode, the economizer damper will be modulated between its minimum position and 100% to maintain the discharge air temperature setpoint. The economizer damper will modulate toward minimum position in the event the mixed air temperature falls below the low limit temperature setting. Compressors will be delayed from operating until the economizer has opened to 100%.

> Comparative Enthalpy: Outside air (OA) enthalpy will be compared with Return air (RA) enthalpy point. The economizer will enable when OA enthalpy is less than RA enthalpy - 3.0 BTU/LB. The economizer will disable when OA enthalpy is greater than RA enthalpy.

Supply Fan: The supply fan will be enabled while in the occupied mode and cycled on during the unoccupied mode. A differential pressure switch will monitor the differential pressure across the fan. If the switch does not open within 40 seconds after a request for fan operation a fan failure alarm will be annunciated at the BAS, the unit will stop, requiring a manual reset.

Supply Duct Static Pressure Control: The unit controller will modulate the supply fan output as required to maintain the duct static pressure setpoint. If the duct static pressure falls below the supply air static setpoint + deadband, the unit controller will increase the output to the supply fan to maintain setpoint. If the duct static pressure rises above the supply air static setpoint + deadband, the unit controller will decrease the output to the supply fan to maintain setpoint.

Building Pressure Control: The barometric relief dampers will open with increased building pressure. As the building pressure increases, the pressure in the unit return section also increases, opening the dampers and relieving air.

Filter Status: A differential pressure switch will monitor the differential pressure across the filter when the fan is running. If the switch closes for 2 minutes after a request for fan operation a dirty filter alarm will be annunciated at the BAS.

RTU - 1 SEQUENCE OF OPERATION

CID:	PID:	PROJECT ID:	NUM.	REVISION	DATE:	BY:
CID00029357	PID00031284	A223621	5			
PROJECT:			4			
DOT - 66 INDUSTRIAL DRIVE			3			
66 INDUSTRIAL DRIVE			2			
AUGUSTA, ME 04330			1	RECORD DOCUMENT	11/12/2014	MSH

PORTLAND ME 860 SPRING STREET, UNIT 1 WESTBROOK, ME 04092 207-828-1777	SALESPERSON: D TAYLOR	DESIGNED BY: D MACLAUCHLAN
	CHECKED BY:	
	FILE NAME: A223621.AXD	DWG: 12

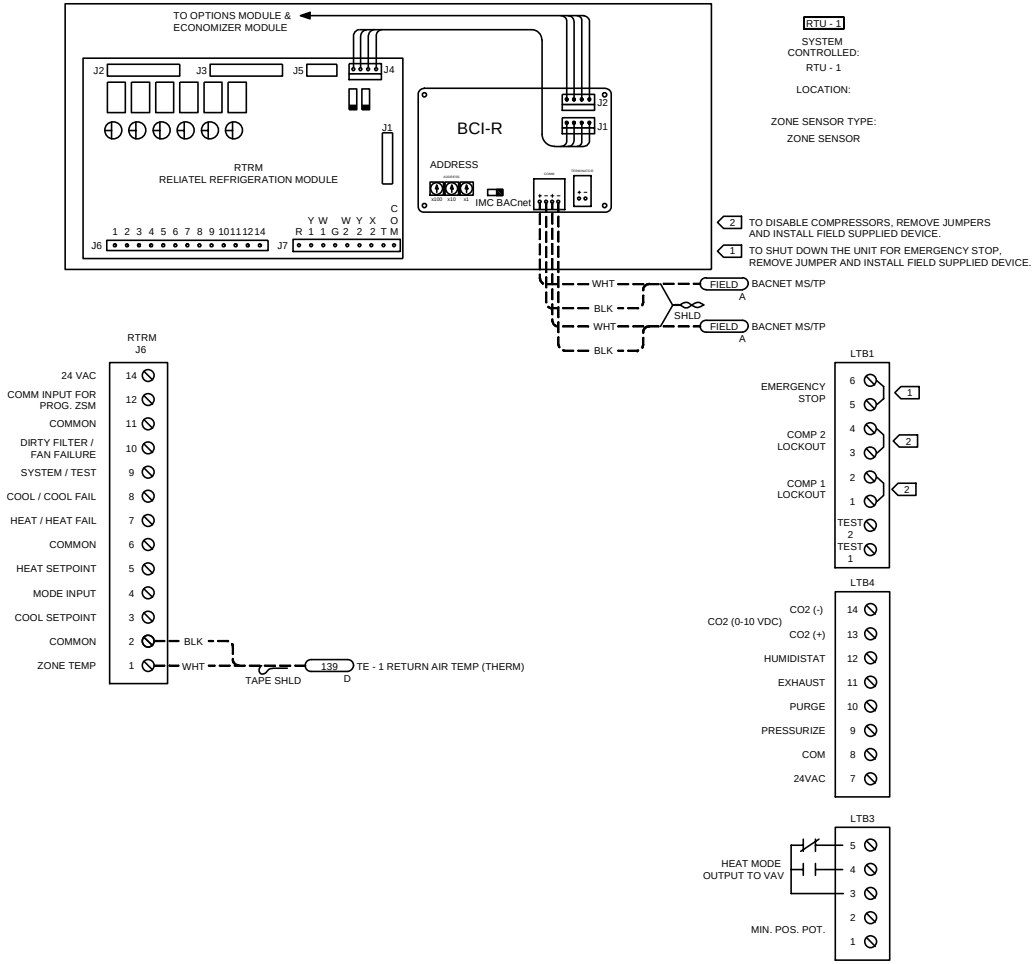

RTU - 1

SYSTEM CONTROLLED:
RTU - 1

LOCATION:

ZONE SENSOR TYPE:
ZONE SENSOR

2 TO DISABLE COMPRESSORS, REMOVE JUMPERS AND INSTALL FIELD SUPPLIED DEVICE.

1 TO SHUT DOWN THE UNIT FOR EMERGENCY STOP, REMOVE JUMPER AND INSTALL FIELD SUPPLIED DEVICE.

BILL OF MATERIALS

TAG	QTY	VENDOR	PART NO	DESCRIPTION

RTU - 1 WIRING DETAIL

CID:	PID:	PROJECT ID:	NUM.	REVISION	DATE:	BY:
CID00029357	PID00031284	A223621	5			
PROJECT:			4			
DOT - 66 INDUSTRIAL DRIVE			3			
66 INDUSTRIAL DRIVE			2			
AUGUSTA, ME 04330			1	RECORD DOCUMENT	11/12/2014	MSH

PORTLAND ME	SALESPERSON:	DESIGNED BY:	CHECKED BY:
860 SPRING STREET, UNIT 1	D TAYLOR	D MACLAUCHLAN	
WESTBROOK, ME 04092	FILE NAME: A223621.AXD		DWG: 13
207-828-1777			

TRANE

TYPICAL FOR 1
(RTU - 2)

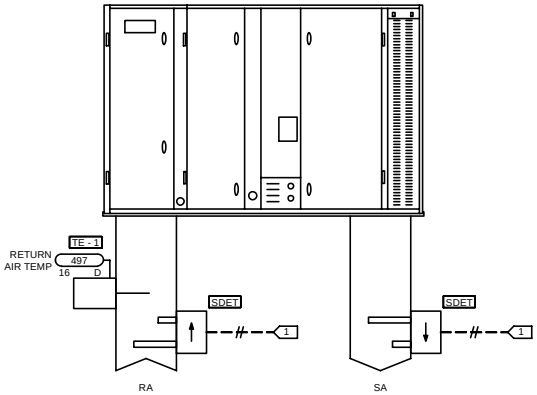

BILL OF MATERIALS				
TAG	QTY	VENDOR	PART NO	DESCRIPTION
TE - 1	1	KELE	ST-D24-XH	TEMP SENS, DUCT/IMM, THERM, 9 IN, HB

2 UNIT SERVES VAV BOXES (SECOND FLOOR AREA D).

1 WIRE SMOKE DETECTORS IN SERIES AT RTU EMER STOP. SENSORS BY OTHERS.

RTU - 2 FLOW DIAGRAM

CID:	PID:	PROJECT ID:	NUM.	REVISION	DATE:	BY:
CID00029357	PID00031284	A223621	5			
			4			
			3			
			2			
			1	RECORD DOCUMENT	11/12/2014	MSH

PROJECT:
DOT - 66 INDUSTRIAL DRIVE
66 INDUSTRIAL DRIVE
AUGUSTA, ME 04330

PORTLAND ME
860 SPRING STREET, UNIT 1
WESTBROOK, ME 04092
207-828-1777

SALESPERSON: D TAYLOR
DESIGNED BY: D MACLAUCHLAN
CHECKED BY:
FILE NAME: A223621.AXD
DWG: 14

Sequence of Operation:

Building Automation System Interface: The Building Automation System (BAS) will send the controller Occupied Bypass, Morning Warm-up / Pre-Cool, Occupied / Unoccupied and Heat / Cool modes. If a BAS is not present, or communication is lost with the BAS the controller will operate using default modes and setpoints.

Occupied Mode: During occupied periods, the supply fan will run continuously and the outside air damper will open to maintain minimum ventilation requirements. The unit controller will control the supply fan speed to maintain the current duct static pressure setpoint (adj.).The DX cooling will stage and gas heat will modulate to maintain the current discharge air temperature setpoint. If economizing is enabled the outside air damper will modulate to maintain the current discharge air temperature setpoint.

Unoccupied Mode: When the space temperature is below the unoccupied heating setpoint of 60°F (adj.) the supply fan will modulate as necessary to maintain duct static pressure setpoint (adj.), the outside air damper will remain closed and the gas heat will be enabled. When the space temperature rises above the unoccupied heating setpoint of 60°F (adj.) plus the unoccupied differential of 4°F (adj.) the supply fan will stop and the gas heat will be disabled.

When the space temperature is above the unoccupied cooling setpoint of 85°F (adj.) the supply fan will modulate as necessary to maintain duct static pressure setpoint (adj.), the outside air damper will open if economizing is enabled and remain closed if economizing is disabled and the DX cooling will be enabled. When the space temperature falls below the unoccupied cooling setpoint of 85°F (adj.) minus the unoccupied differential of 4°F (adj.) the supply fan will stop, the DX cooling will be disabled and the outside air damper will close.

Optimal Start: The BAS will monitor the scheduled occupied time, occupied space setpoints and space temperature to calculate when the optimal start occurs.

Morning Warm-Up Mode: During optimal start, if the average space temperature is below the occupied heating setpoint a morning warm-up mode will be activated. When morning warm-up is initiated the unit will enable the heating and supply fan. The outside air damper will remain closed. When the average space temperature reaches the occupied heating setpoint (adj.), the unit will transition to the occupied mode.

Pre-Cool Mode: During optimal start, if the average space temperature is above the occupied cooling setpoint, pre-cool mode will be activated. When pre-cool is initiated the unit will enable the fan and cooling or economizer. The outside air damper will remain closed, unless economizing. When the average space temperature reaches occupied cooling setpoint (adj.), the unit will transition to the occupied mode.

Occupied Bypass: The BAS will monitor the status of the “on” and “cancel” buttons of the space temperature sensors. When an occupied bypass request is received from a space sensor, the unit will transition from its current occupancy mode to occupied bypass mode and the unit will maintain the space temperature to the occupied setpoints (adj.).

Economizer: The supply air sensor will measure the dry bulb temperature of the air leaving the evaporator coil while economizing. When economizing is enabled and the unit is operating in the cooling mode, the economizer damper will be modulated between its minimum position and 100% to maintain the discharge air temperature setpoint. The economizer damper will modulate toward minimum position in the event the mixed air temperature falls below the low limit temperature setting. Compressors will be delayed from operating until the economizer has opened to 100%.

> Comparative Enthalpy: Outside air (OA) enthalpy will be compared with Return air (RA) enthalpy point. The economizer will enable when OA enthalpy is less than RA enthalpy - 3.0 BTU/LB. The economizer will disable when OA enthalpy is greater than RA enthalpy.

Supply Fan: The supply fan will be enabled while in the occupied mode and cycled on during the unoccupied mode. A differential pressure switch will monitor the differential pressure across the fan. If the switch does not open within 40 seconds after a request for fan operation a fan failure alarm will be annunciated at the BAS, the unit will stop, requiring a manual reset.

Supply Duct Static Pressure Control: The unit controller will modulate the supply fan output as required to maintain the duct static pressure setpoint. If the duct static pressure falls below the supply air static setpoint + deadband, the unit controller will increase the output to the supply fan to maintain setpoint. If the duct static pressure rises above the supply air static setpoint + deadband, the unit controller will decrease the output to the supply fan to maintain setpoint.

Building Pressure Control: The barometric relief dampers will open with increased building pressure. As the building pressure increases, the pressure in the unit return section also increases, opening the dampers and relieving air.

Filter Status: A differential pressure switch will monitor the differential pressure across the filter when the fan is running. If the switch closes for 2 minutes after a request for fan operation a dirty filter alarm will be annunciated at the BAS.

RTU - 2 SEQUENCE OF OPERATION

CID:	PID:	PROJECT ID:	NUM.	REVISION	DATE:	BY:
CID00029357	PID00031284	A223621	5			
PROJECT:			4			
DOT - 66 INDUSTRIAL DRIVE			3			
66 INDUSTRIAL DRIVE			2			
AUGUSTA, ME 04330			1	RECORD DOCUMENT	11/12/2014	MSH

PORTLAND ME 860 SPRING STREET, UNIT 1 WESTBROOK, ME 04092 207-828-1777	SALESPERSON: D TAYLOR	DESIGNED BY: D MACLAUCHLAN
	FILE NAME: A223621.AXD	CHECKED BY:
		DWG: 15

TYPICAL FOR 1 (RTU - 2)

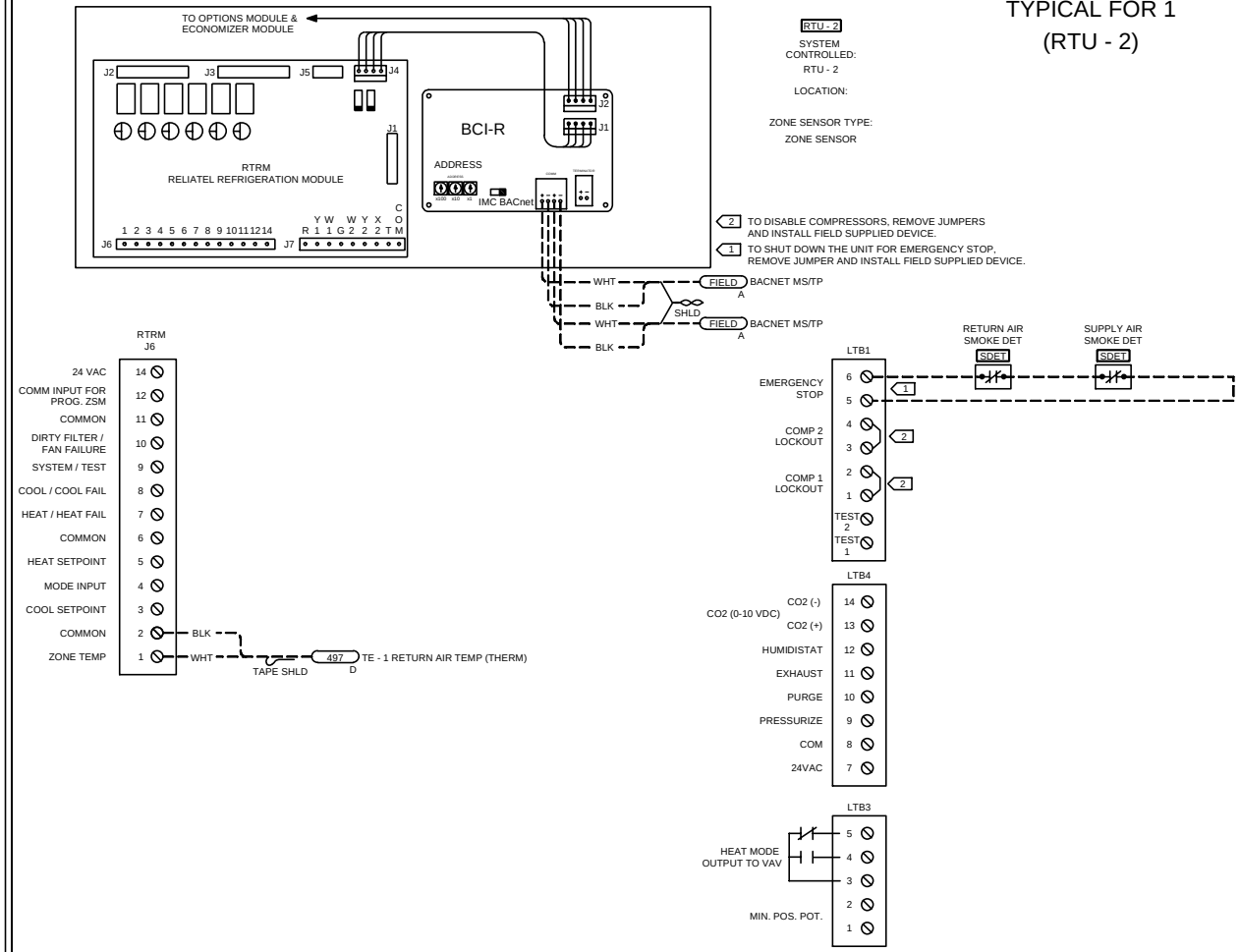

RTU - 2

SYSTEM CONTROLLED:
RTU - 2

LOCATION:

ZONE SENSOR TYPE:
ZONE SENSOR

2 TO DISABLE COMPRESSORS, REMOVE JUMPERS AND INSTALL FIELD SUPPLIED DEVICE.

1 TO SHUT DOWN THE UNIT FOR EMERGENCY STOP, REMOVE JUMPER AND INSTALL FIELD SUPPLIED DEVICE.

BILL OF MATERIALS

TAG	QTY	VENDOR	PART NO	DESCRIPTION

RTU - 2 WIRING DETAIL

CID:	PID:	PROJECT ID:	NUM.	REVISION	DATE:	BY:
CID00029357	PID00031284	A223621	5			
PROJECT:			4			
DOT - 66 INDUSTRIAL DRIVE			3			
66 INDUSTRIAL DRIVE			2			
AUGUSTA, ME 04330			1	RECORD DOCUMENT	11/12/2014	MSH

PORTLAND ME
860 SPRING STREET, UNIT 1
WESTBROOK, ME 04092
207-828-1777

SALESPERSON: D TAYLOR
DESIGNED BY: D MACLAUCHLAN
CHECKED BY:
FILE NAME: A223621.AXD
DWG: 16

TYPICAL FOR 1
(RTU - 3/ERU - 1)

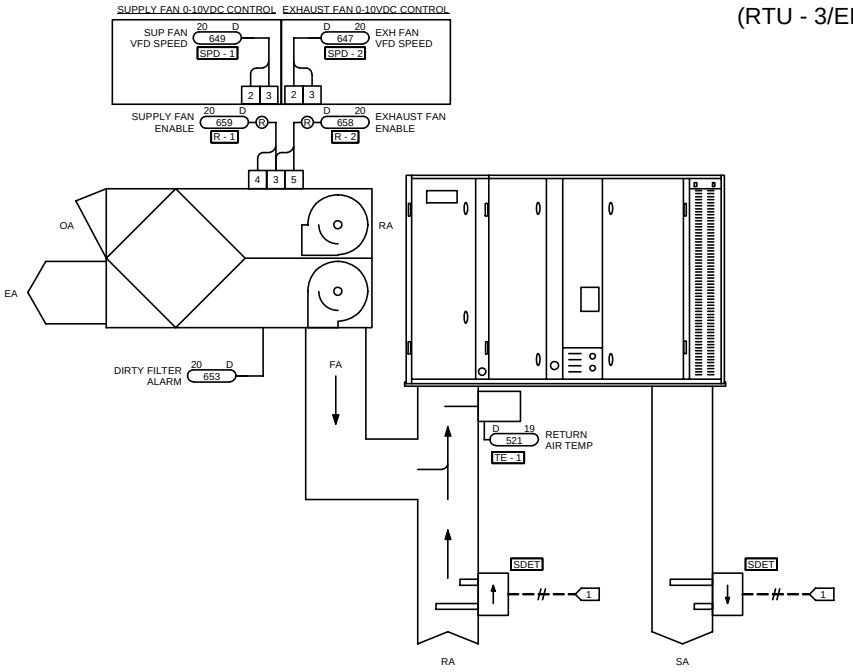

BILL OF MATERIALS				
TAG	QTY	VENDOR	PART NO	DESCRIPTION
R - 2, R - 1	2	KELE	RIBU3C	RLY SPDT, LED, 10-30 VAC/DC/120 VAC
TE - 1	1	KELE	ST-D24-XH	TEMP SENS, DUCT/IMM., THERM., 9 IN, HB

1 WIRE SMOKE DETECTORS IN SERIES AT RTU EMER STOP. SENSORS BY OTHERS.

RTU - 3/ERU - 1 FLOW DIAGRAM

CID:	PID:	PROJECT ID:	NUM.	REVISION	DATE:	BY:
CID00029357	PID00031284	A223621	5			
PROJECT:			4			
DOT - 66 INDUSTRIAL DRIVE			3			
66 INDUSTRIAL DRIVE			2			
AUGUSTA, ME 04330			1	RECORD DOCUMENT	11/12/2014	MSH

PORTLAND ME	SALESPERSON:	DESIGNED BY:	CHECKED BY:
860 SPRING STREET, UNIT 1 WESTBROOK, ME 04092 207-828-1777	D TAYLOR	D MACLAUCHLAN	
	FILE NAME: A223621.AXD		DWG: 17

Sequence of Operation:

Building Automation System Interface: The Building Automation System (BAS) will send the controller Occupied Bypass, Morning Warm-up / Pre-Cool, Occupied / Unoccupied and Heat / Cool modes. If a BAS is not present, or communication is lost with the BAS the controller will operate using default modes and setpoints.

Occupied Mode: During occupied periods, the supply fan will run continuously and the outside air damper will open to maintain minimum ventilation requirements. The unit controller will control the supply fan speed to maintain the current duct static pressure setpoint (adj.).The DX cooling will stage and gas heat will modulate to maintain the current discharge air temperature setpoint. If economizing is enabled the outside air damper will modulate to maintain the current discharge air temperature setpoint.

During Occupied Mode the ERU will energize and provide minimum outside air to the space. OA damper closed at unit, RA damper 100% open, power vent is off and the ERU fan speed is at 20%.

Unoccupied Mode: When the space temperature is below the unoccupied heating setpoint of 60°F (adj.) the supply fan will modulate as necessary to maintain duct static pressure setpoint (adj.), the outside air damper will remain closed and the gas heat will be enabled. When the space temperature rises above the unoccupied heating setpoint of 60°F (adj.) plus the unoccupied differential of 4°F (adj.) the supply fan will stop and the gas heat will be disabled. ERU will be disabled in Unoccupied Mode.

When the space temperature is above the unoccupied cooling setpoint of 85°F (adj.) the supply fan will modulate as necessary to maintain duct static pressure setpoint (adj.), the outside air damper will open if economizing is enabled and remain closed if economizing is disabled and the DX cooling will be enabled. When the space temperature falls below the unoccupied cooling setpoint of 85°F (adj.) minus the unoccupied differential of 4°F (adj.) the supply fan will stop, the DX cooling will be disabled and the outside air damper will close.

Optimal Start: The BAS will monitor the scheduled occupied time, occupied space setpoints and space temperature to calculate when the optimal start occurs.

Morning Warm-Up Mode: During optimal start, if the average space temperature is below the occupied heating setpoint a morning warm-up mode will be activated. When morning warm-up is initiated the unit will enable the heating and supply fan. The outside air damper will remain closed. When the average space temperature reaches the occupied heating setpoint (adj.), the unit will transition to the occupied mode.

Pre-Cool Mode: During optimal start, if the average space temperature is above the occupied cooling setpoint, pre-cool mode will be activated. When pre-cool is initiated the unit will enable the fan and cooling or economizer. The outside air damper will remain closed, unless economizing. When the average space temperature reaches occupied cooling setpoint (adj.), the unit will transition to the occupied mode.

Occupied Bypass: The BAS will monitor the status of the “on” and “cancel” buttons of the space temperature sensors. When an occupied bypass request is received from a space sensor, the unit will transition from its current occupancy mode to occupied bypass mode and the unit will maintain the space temperature to the occupied setpoints (adj.).

Economizer: The supply air sensor will measure the dry bulb temperature of the air leaving the evaporator coil while economizing. When economizing is enabled and the unit is operating in the cooling mode, the ERU supply fan will be disabled, the ERU exhaust fan will be enabled and the OA and RA dampers will modulate to increase OA through RTU - 3. Compressors will be delayed from operating until the economizer has opened to 100%.

> Comparative Enthalpy: Outside air (OA) enthalpy will be compared with Return air (RA) enthalpy point. The economizer will enable when OA enthalpy is less than RA enthalpy - 3.0 BTU/LB. The economizer will disable when OA enthalpy is greater than RA enthalpy.

CO2 Ventilation: As CO2 levels rise in the referenced spaces the supply and exhaust fan speeds at the ERU modulate from 20% to 100% to maintain CO2 at setpoint.

Supply Fan: The supply fan will be enabled while in the occupied mode and cycled on during the unoccupied mode. A differential pressure switch will monitor the differential pressure across the fan. If the switch does not open within 40 seconds after a request for fan operation a fan failure alarm will be annunciated at the BAS, the unit will stop, requiring a manual reset.

Supply Duct Static Pressure Control: The unit controller will modulate the supply fan output as required to maintain the duct static pressure setpoint. If the duct static pressure falls below the supply air static setpoint + deadband, the unit controller will increase the output to the supply fan to maintain setpoint. If the duct static pressure rises above the supply air static setpoint + deadband, the unit controller will decrease the output to the supply fan to maintain setpoint.

Filter Status: A differential pressure switch will monitor the differential pressure across the filter when the fan is running. If the switch closes for 2 minutes after a request for fan operation a dirty filter alarm will be annunciated at the BAS.

RTU - 3/ERU - 1 SEQUENCE OF OPERATION

CID:	PID:	PROJECT ID:	NUM.	REVISION	DATE:	BY:
CID00029357	PID00031284	A223621	5			
PROJECT:			4			
DOT - 66 INDUSTRIAL DRIVE			3			
66 INDUSTRIAL DRIVE			2			
AUGUSTA, ME 04330			1	RECORD DOCUMENT	11/12/2014	MSH

PORTLAND ME 860 SPRING STREET, UNIT 1 WESTBROOK, ME 04092 207-828-1777	SALESPERSON: D TAYLOR	DESIGNED BY: D MACLAUCHLAN
	FILE NAME: A223621.AXD	CHECKED BY:
		DWG: 18

TYPICAL FOR 1
(RTU - 3)

RTU - 3

SYSTEM CONTROLLED:
RTU - 3

LOCATION:

ZONE SENSOR TYPE:
ZONE SENSOR

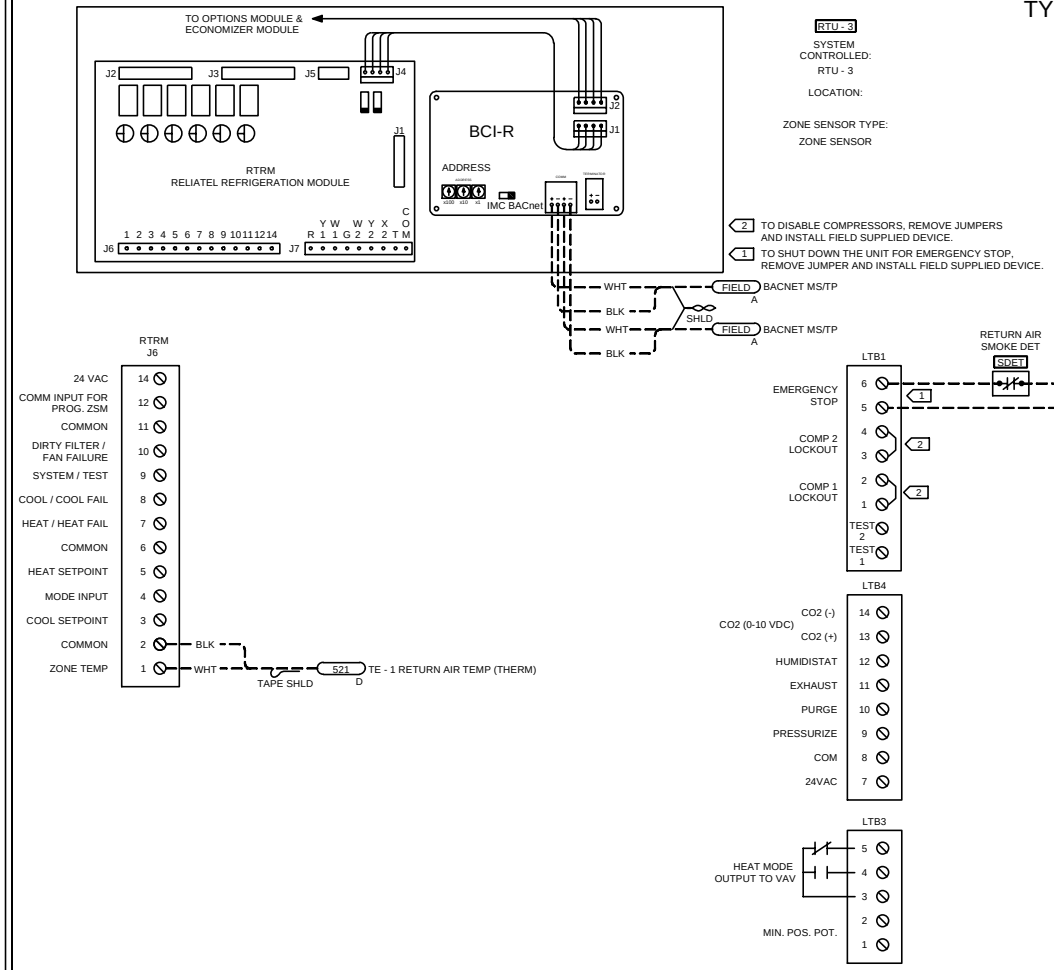

2 TO DISABLE COMPRESSORS, REMOVE JUMPERS AND INSTALL FIELD SUPPLIED DEVICE.

1 TO SHUT DOWN THE UNIT FOR EMERGENCY STOP, REMOVE JUMPER AND INSTALL FIELD SUPPLIED DEVICE.

BILL OF MATERIALS

TAG	QTY	VENDOR	PART NO	DESCRIPTION

RTU - 3 WIRING DETAIL

CID:	PID:	PROJECT ID:	NUM.	REVISION	DATE:	BY:
CID00029357	PID00031284	A223621	5			
PROJECT:			4			
DOT - 66 INDUSTRIAL DRIVE			3			
66 INDUSTRIAL DRIVE			2			
AUGUSTA, ME 04330			1	RECORD DOCUMENT	11/12/2014	MSH

PORTLAND ME
860 SPRING STREET, UNIT 1
WESTBROOK, ME 04092
207-828-1777

SALESPERSON: D TAYLOR
DESIGNED BY: D MACLAUCHLAN
CHECKED BY:

FILE NAME: A223621.AXD

DWG: 19

TYPICAL FOR 1
(ERU - 1)

BILL OF MATERIALS				
TAG	QTY	VENDOR	PART NO	DESCRIPTION
ENC - 5	1	TRANE	X19091354010	ENC, TRACER UC SMALL, NON-POWERED
UC400 - 5	1	TRANE	BMUC400AAA01000	UC400 CONTROLLER, FRAME MOUNT
TX - 5	1	KELE	TR75VA001	XFR 120:24VAC, 75VA, CB

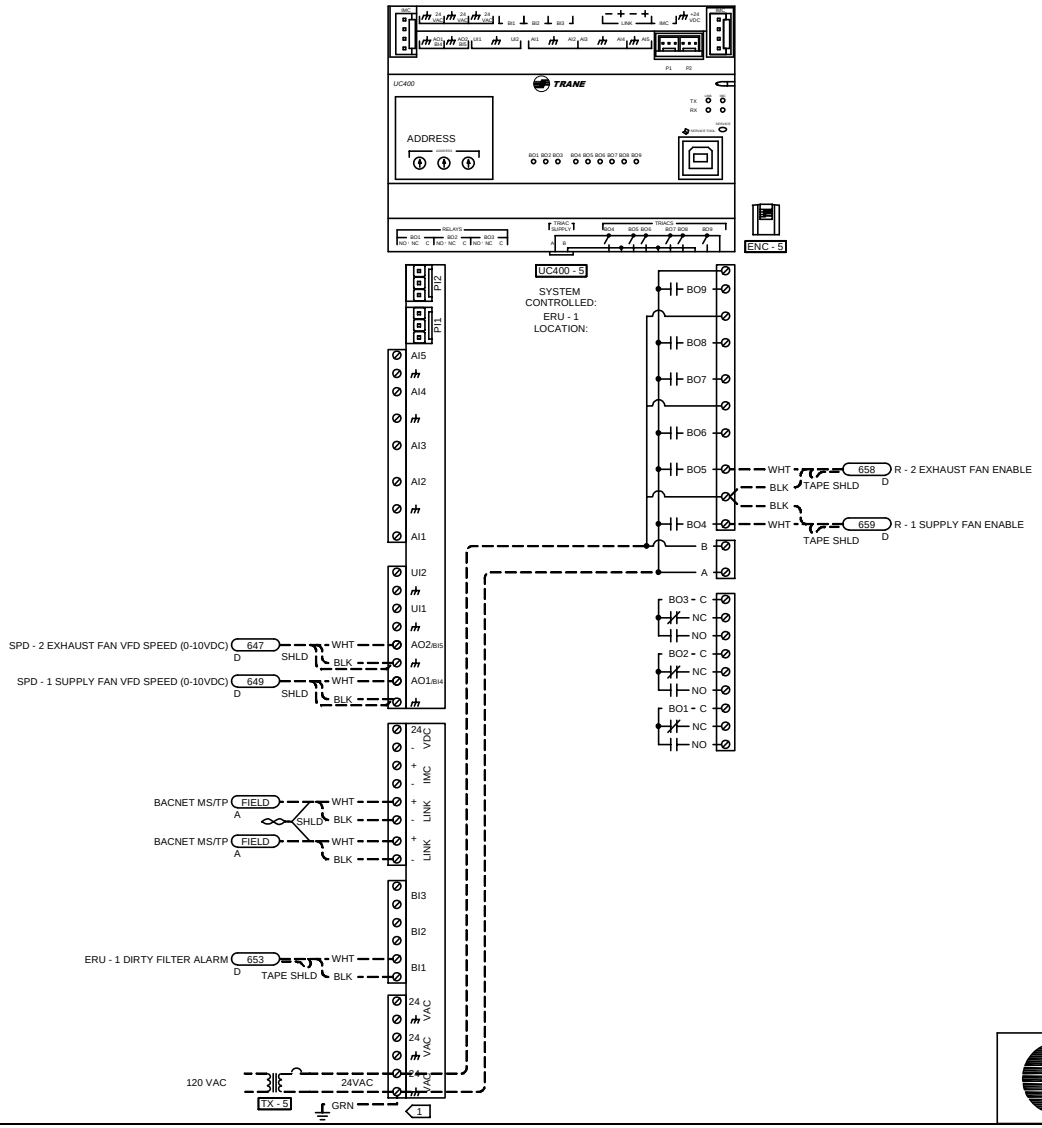

1 DEVICE MUST BE GROUNDED WITH FACTORY PROVIDED GROUND WIRE AS DETAILED IN THE DEVICE INSTALLATION LITERATURE.

ERU - 1 UC400 - 5 WIRING DETAIL

CID:	PID:	PROJECT ID:	NUM.	REVISION	DATE:	BY:
CID00029357	PID00031284	A223621	5			
PROJECT:			4			
DOT - 66 INDUSTRIAL DRIVE			3			
66 INDUSTRIAL DRIVE			2			
AUGUSTA, ME 04330			1	RECORD DOCUMENT	11/12/2014	MSH

PORTLAND ME
860 SPRING STREET, UNIT 1
WESTBROOK, ME 04092
207-828-1777

SALESPERSON: D TAYLOR
DESIGNED BY: D MACLAUCHLAN
CHECKED BY:
FILE NAME: A223621.AXD
DWG: 20

TYPICAL FOR 1 (AHU - 1)

BILL OF MATERIALS				
TAG	QTY	VENDOR	PART NO	DESCRIPTION
TEH - 1	1	TRANE	4190-7020	3%DUCT RH SENS, TEMP
V1	1	BELIMO	-	REFER TO VALVE SCHEDULE
CS - 15	1	KELE	RIBXGTFL	CUR SW, 0.75A, SPLIT, NO, LED
FXP - 1	1	KELE	FXP-22	AIRFLOW SENSING ELEMENT
HDW - 1	1	KELE	A-302-K	STAT PRESS TIP, 1/4 BARB
HDW - 2	1	KELE	A-345-K	FLANGE MOUNTING KIT
R - 1, R - 15	2	KELE	RIBU1C	RLY SPDT, LED, 10-30 VAC/DC/120 VAC
D - 3, D - 4	2	RUSKIN	-	REFER TO DAMPER SCHEDULE
DPT - 1	1	SETRA	2601-MS1-N	OUTSIDE AIRFLOW SENSOR

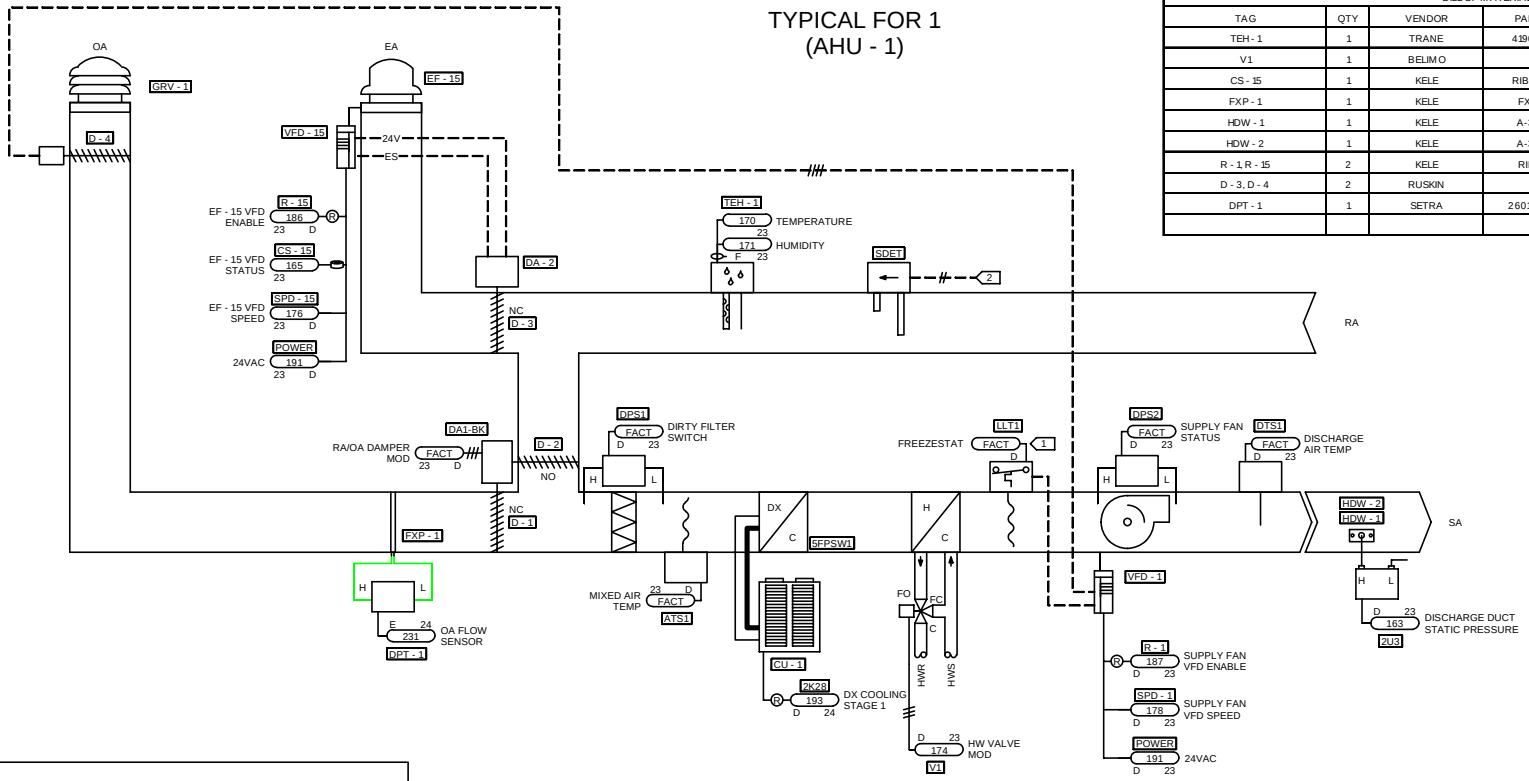

VFD WIRING DETAIL

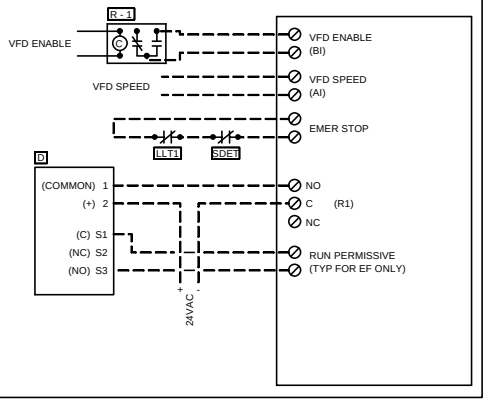

2 WIRE SMOKE DETECTOR TO EMER STOP AT VFD.

1 HARDWIRE INTERLOCK N.C. CONTACTS OF LOW LIMIT THERMOSTAT TO VFD. WIRE INTERLOCK TO SHUT DOWN UNIT INDEPENDENT OF H-O-A POSITION.

AHU - 1 FLOW DIAGRAM

CID:	PID:	PROJECT ID:	NUM.	REVISION	DATE:	BY:
CID00029357	PID00031284	A223621	5			
PROJECT:			4			
DOT - 66 INDUSTRIAL DRIVE			3			
66 INDUSTRIAL DRIVE			2			
AUGUSTA, ME 04330			1	RECORD DOCUMENT	11/12/2014	MSH

PORTLAND ME	SALESPERSON:	DESIGNED BY:	CHECKED BY:
860 SPRING STREET, UNIT 1	D TAYLOR	D MACLAUCHLAN	
WESTBROOK, ME 04092	FILE NAME: A223621.AXD		DWG: 21
207-828-1777			

Sequence of Operation:

Building Automation System Interface: The Building Automation System (BAS) will send the controller Occupied Bypass, Morning Warm-up, Occupied / Unoccupied and Heat / Cool modes. If a BAS is not present, or communication is lost with the BAS the controller will operate using default modes and setpoints.

Occupied Mode: During occupied periods, the supply fan will run continuously and the outside air damper will open to maintain minimum ventilation requirements. The unit controller will control the supply fan speed to maintain the current duct static pressure setpoint (adj.). The DX cooling will stage and the HW valve will modulate to maintain the current discharge air temperature setpoint. If economizing is enabled the outside air damper will modulate to maintain the current discharge air temperature setpoint.

Unoccupied Mode: When the space temperature is below the unoccupied heating setpoint of 62°F (adj.) the supply fan will modulate as necessary to maintain duct static pressure setpoint (adj.), the outside air damper and exhaust air damper will remain closed, the exhaust fan will be disabled and the HW valve will be modulate. When the space temperature rises above the unoccupied heating setpoint of 62°F (adj.) plus the unoccupied differential of 4°F (adj.) the supply fan will stop and the HW valve will close.

Optimal Start: The BAS will monitor the scheduled occupied time, occupied space setpoints and space temperature to calculate when the optimal start occurs.

Morning Warm-Up Mode: During optimal start, if the average space temperature is below the occupied heating setpoint a morning warm-up mode will be activated. When morning warm-up is initiated the unit will enable the heating and supply fan. The outside air damper will remain closed. When the average space temperature reaches the occupied heating setpoint (adj.), the unit will transition to the occupied mode.

Occupied Bypass: The BAS will monitor the status of the “on” and “cancel” buttons of the space temperature sensors. When an occupied bypass request is received from a space sensor, the unit will transition from its current occupancy mode to occupied bypass mode and the unit will maintain the space temperature to the occupied setpoints (adj.).

Economizer (Comparative Enthalpy): Outside air (OA) enthalpy will be compared with Return air (RA) enthalpy point. The economizer will enable when OA enthalpy is less than RA enthalpy - 3.0 BTU/LB. The economizer will disable when OA enthalpy is greater than RA enthalpy.

Heat/Cool Mode: If cooling cannot be achieved by economizing then mechanical cooling will be enabled. Unit will stage on and off the DX cooling to maintain discharge air temperature setpoint. When setpoint has been satisfied the DX cooling will be disabled.

If discharge air temperature falls below setpoint the HW valve will modulate to maintain setpoint. When setpoint has been satisfied the HW valve will close.

Supply Fan: The supply fan will be enabled while in the occupied mode and cycled on during the unoccupied mode. A differential pressure switch will monitor the differential pressure across the fan. If the switch does not open within 40 seconds after a request for fan operation a fan failure alarm will be annunciated at the BAS, the unit will stop, requiring a manual reset.

Supply Duct Static Pressure Control: The unit controller will modulate the supply fan output as required to maintain the duct static pressure setpoint. If the duct static pressure falls below the supply air static setpoint + deadband, the unit controller will increase the output to the supply fan to maintain setpoint. If the duct static pressure rises above the supply air static setpoint + deadband, the unit controller will decrease the output to the supply fan to maintain setpoint.

Exhaust Fan: The exhaust fan will be enabled whenever the supply fan is enabled and the mode is Occupied. When fan is called to run the EA damper will open and fan will be enabled, only when damper is confirmed open by end switch. Exhaust fan will modulate based on OA damper position to prevent over or under pressurization in space. If fan is called to run and status is not confirmed an alarm will be initiated.

Minimum Outside Air Control: When in Occupied Mode, the controller will measure the outside airflow and modulate the outside air dampers to maintain the proper minimum outside air ventilation, overriding normal damper control. On dropping outside airflow, the controller will modulate the outside air dampers open to maintain the outside airflow setpoint (adj.).

Safeties: If any of the following end devices trip an alarm will initiated and the unit will be disabled until alarm condition is resolved:

- Freezestat (38°F adj.)
- Return Air Smoke Detector (Not by Trane)

AHU - 1 SEQUENCE OF OPERATION

CID:	PID:	PROJECT ID:	NUM.	REVISION	DATE:	BY:
CID00029357	PID00031284	A223621	5			
PROJECT:			4			
DOT - 66 INDUSTRIAL DRIVE			3			
66 INDUSTRIAL DRIVE			2			
AUGUSTA, ME 04330			1	RECORD DOCUMENT	11/12/2014	MSH

PORTLAND ME 860 SPRING STREET, UNIT 1 WESTBROOK, ME 04092 207-828-1777	SALESPERSON: D TAYLOR	DESIGNED BY: D MACLAUCHLAN	CHECKED BY:
	FILE NAME: A223621.AXD		DWG: 22

TYPICAL FOR 1
(AHU - 1)

BILL OF MATERIALS				
TAG	QTY	VENDOR	PART NO	DESCRIPTION

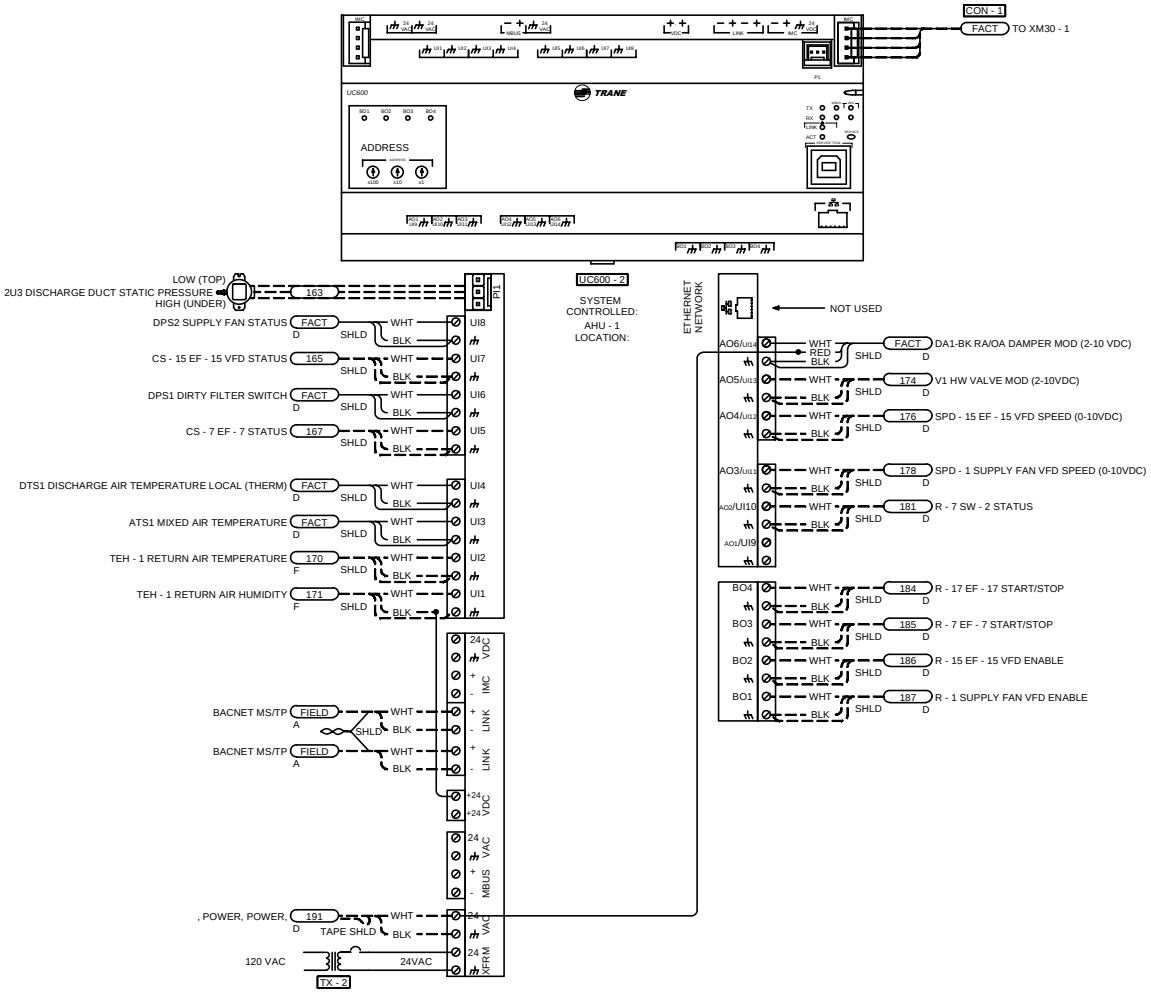

1 DEVICE MUST BE GROUNDED WITH FACTORY PROVIDED GROUND WIRE AS DETAILED IN THE DEVICE INSTALLATION LITERATURE.

AHU - 1 UC600 - 2 WIRING DETAIL

CID:	PID:	PROJECT ID:	NUM.	REVISION	DATE:	BY:
CID00029357	PID00031284	A223621	5			
PROJECT:			4			
DOT - 66 INDUSTRIAL DRIVE			3			
66 INDUSTRIAL DRIVE			2			
AUGUSTA, ME 04330			1	RECORD DOCUMENT	11/12/2014	MSH

PORTLAND ME 860 SPRING STREET, UNIT 1 WESTBROOK, ME 04092 207-828-1777	SALESPERSON: D TAYLOR	DESIGNED BY: D MACLAUCHLAN
	FILE NAME: A223621.AXD	CHECKED BY:

DWG: 23

TYPICAL FOR 1
(AHU - 1)

BILL OF MATERIALS				
TAG	QTY	VENDOR	PART NO	DESCRIPTION

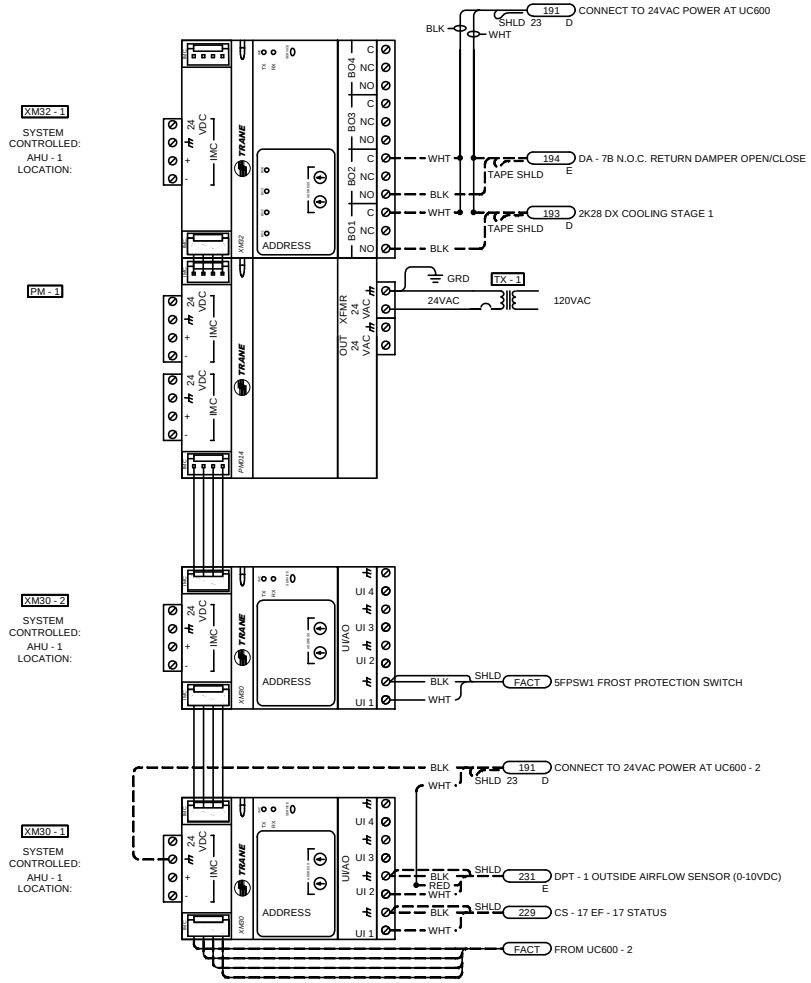

AHU - 1 XM30 - 1, XM30 - 2, XM32 - 1 WIRING DETAIL

CID:	PID:	PROJECT ID:	NUM.	REVISION	DATE:	BY:
CID00029357	PID00031284	A223621	5			
PROJECT:			4			
DOT - 66 INDUSTRIAL DRIVE			3			
66 INDUSTRIAL DRIVE			2			
AUGUSTA, ME 04330			1	RECORD DOCUMENT	11/12/2014	MSH

PORTLAND ME	SALESPERSON:	DESIGNED BY:	CHECKED BY:
860 SPRING STREET, UNIT 1 WESTBROOK, ME 04092 207-828-1777	D TAYLOR	D MACLAUCHLAN	
	FILE NAME: A223621.AXD		DWG: 24

TYPICAL FOR 1 (AHU - 2)

BILL OF MATERIALS				
TAG	QTY	VENDOR	PART NO	DESCRIPTION
TEH - 1	1	TRANE	4190-7020	3%DUCT RH SENS, TEMP
V1	1	BELIMO	-	REFER TO VALVE SCHEDULE
CS - 2	1	KELE	RIBXGTFL	CUR SW, 0.75A, SPLIT, NO, LED
FXP - 1	1	KELE	FXP-35	AIRFLOW SENSING ELEMENT
HDW - 1	1	KELE	A-302-K	STAT PRESS TIP, 1/4 BARB
HDW - 2	1	KELE	A-345-K	FLANGE MOUNTING KIT
R - 1 R - 2	2	KELE	RIBU1C	RLY SPDT, LED, 10-30 VAC/DC/120 VAC
D - 3, D - 4	2	RUSKIN	-	REFER TO DAMPER SCHEDULE
DPT - 1	1	SETRA	2601-MS1-N	OUTSIDE AIRFLOW SENSOR

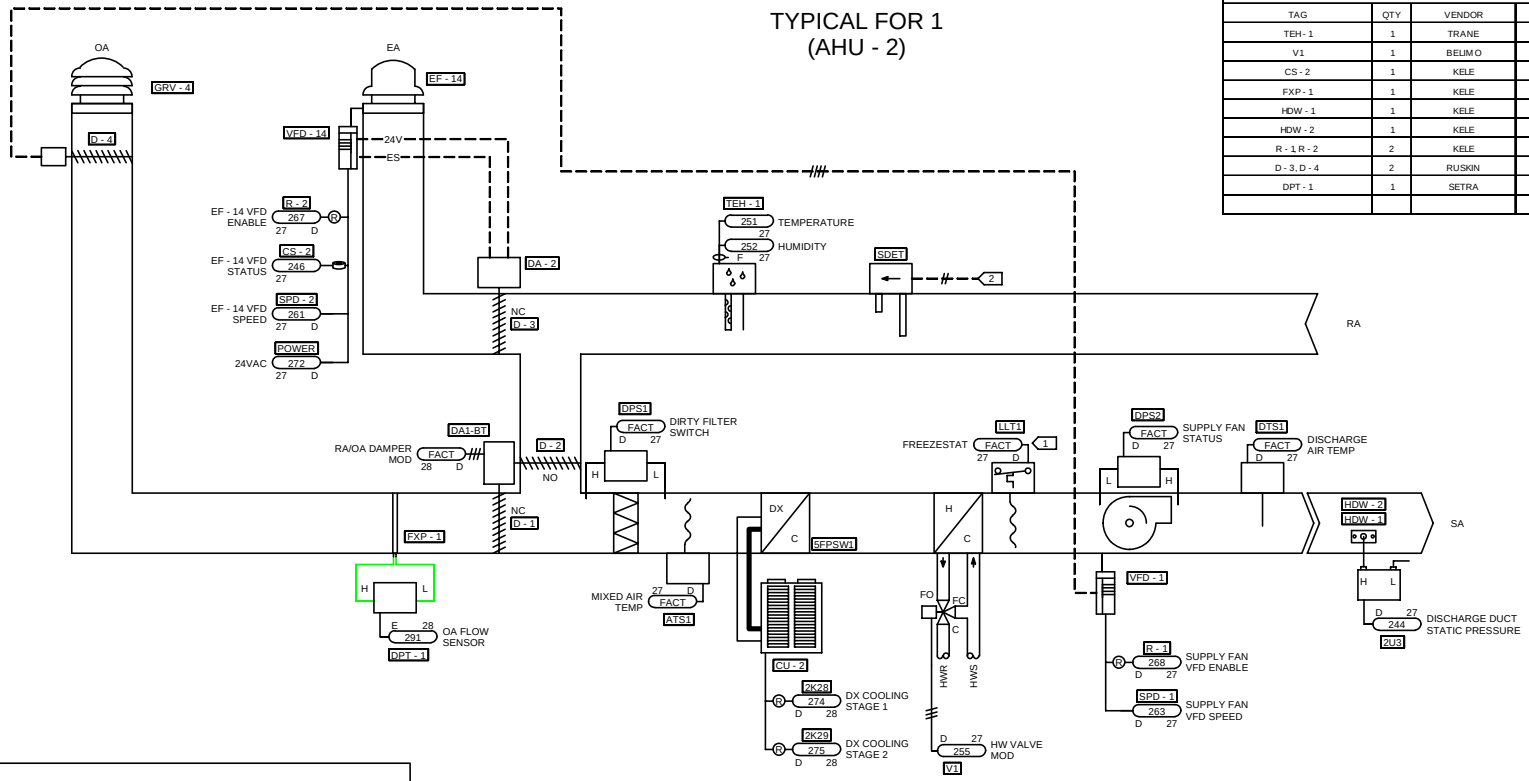

VFD WIRING DETAIL

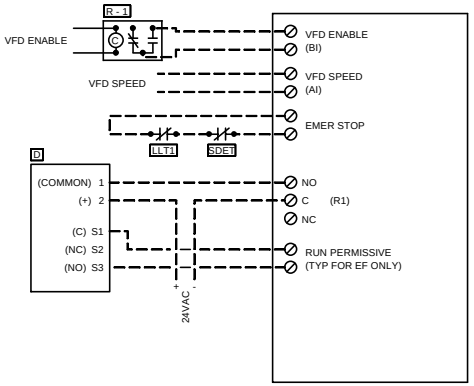

2 WIRE SMOKE DETECTOR TO EMER STOP AT VFD.

1 HARDWIRE INTERLOCK N.C. CONTACTS OF LOW LIMIT THERMOSTAT TO MOTOR STARTER. WIRE INTERLOCK TO SHUT DOWN UNIT INDEPENDENT OF H-O-A POSITION.

AHU - 2 FLOW DIAGRAM

CID:	PID:	PROJECT ID:	NUM.	REVISION	DATE:	BY:
CID00029357	PID00031284	A223621	5			
PROJECT:			4			
DOT - 66 INDUSTRIAL DRIVE			3			
66 INDUSTRIAL DRIVE			2			
AUGUSTA, ME 04330			1	RECORD DOCUMENT	11/12/2014	MSH

PORTLAND ME	SALESPERSON:	DESIGNED BY:	CHECKED BY:
860 SPRING STREET, UNIT 1	D TAYLOR	D MACLAUCHLAN	
WESTBROOK, ME 04092	FILE NAME: A223621.AXD		DWG: 25
207-828-1777			

TRANE

Sequence of Operation:

Building Automation System Interface: The Building Automation System (BAS) will send the controller Occupied Bypass, Morning Warm-up, Occupied / Unoccupied and Heat / Cool modes. If a BAS is not present, or communication is lost with the BAS the controller will operate using default modes and setpoints.

Occupied Mode: During occupied periods, the supply fan will run continuously and the outside air damper will open to maintain minimum ventilation requirements. The unit controller will control the supply fan speed to maintain the current duct static pressure setpoint (adj.). The DX cooling will stage and the HW valve will modulate to maintain the current discharge air temperature setpoint. If economizing is enabled the outside air damper will modulate to maintain the current discharge air temperature setpoint.

Unoccupied Mode: When the space temperature is below the unoccupied heating setpoint of 62°F (adj.) the supply fan will modulate as necessary to maintain duct static pressure setpoint (adj.), the outside air damper and exhaust air damper will remain closed, the exhaust fan will be disabled and the HW valve will be modulate. When the space temperature rises above the unoccupied heating setpoint of 62°F (adj.) plus the unoccupied differential of 4°F (adj.) the supply fan will stop and the HW valve will close.

Optimal Start: The BAS will monitor the scheduled occupied time, occupied space setpoints and space temperature to calculate when the optimal start occurs.

Morning Warm-Up Mode: During optimal start, if the average space temperature is below the occupied heating setpoint a morning warm-up mode will be activated. When morning warm-up is initiated the unit will enable the heating and supply fan. The outside air damper will remain closed. When the average space temperature reaches the occupied heating setpoint (adj.), the unit will transition to the occupied mode.

Occupied Bypass: The BAS will monitor the status of the “on” and “cancel” buttons of the space temperature sensors. When an occupied bypass request is received from a space sensor, the unit will transition from its current occupancy mode to occupied bypass mode and the unit will maintain the space temperature to the occupied setpoints (adj.).

Economizer (Comparative Enthalpy): Outside air (OA) enthalpy will be compared with Return air (RA) enthalpy point. The economizer will enable when OA enthalpy is less than RA enthalpy - 3.0 BTU/LB. The economizer will disable when OA enthalpy is greater than RA enthalpy.

Heat/Cool Mode: If cooling cannot be achieved by economizing then mechanical cooling will be enabled. Unit will stage on and off the DX cooling to maintain discharge air temperature setpoint. When setpoint has been satisfied the DX cooling will be disabled.

If discharge air temperature falls below setpoint the HW valve will modulate to maintain setpoint. When setpoint has been satisfied the HW valve will close.

Supply Fan: The supply fan will be enabled while in the occupied mode and cycled on during the unoccupied mode. A differential pressure switch will monitor the differential pressure across the fan. If the switch does not open within 40 seconds after a request for fan operation a fan failure alarm will be annunciated at the BAS, the unit will stop, requiring a manual reset.

Supply Duct Static Pressure Control: The unit controller will modulate the supply fan output as required to maintain the duct static pressure setpoint. If the duct static pressure falls below the supply air static setpoint + deadband, the unit controller will increase the output to the supply fan to maintain setpoint. If the duct static pressure rises above the supply air static setpoint + deadband, the unit controller will decrease the output to the supply fan to maintain setpoint.

Exhaust Fan: The exhaust fan will be enabled whenever the supply fan is enabled and the mode is Occupied. When fan is called to run the EA damper will open and fan will be enabled, only when damper is confirmed open by end switch. Exhaust fan will modulate based on OA damper position to prevent over or under pressurization in space. If fan is called to run and status is not confirmed an alarm will be initiated.

Minimum Outside Air Control: When in Occupied Mode, the controller will measure the outside airflow and modulate the outside air dampers to maintain the proper minimum outside air ventilation, overriding normal damper control. On dropping outside airflow, the controller will modulate the outside air dampers open to maintain the outside airflow setpoint (adj.).

Safeties: If any of the following end devices trip an alarm will initiated and the unit will be disabled until alarm condition is resolved:

- Freezestat (38°F adj.)
- Return Air Smoke Detector (Not by Trane)

AHU - 2 SEQUENCE OF OPERATION

CID:	PID:	PROJECT ID:	NUM.	REVISION	DATE:	BY:
CID00029357	PID00031284	A223621	5			
PROJECT:			4			
DOT - 66 INDUSTRIAL DRIVE			3			
66 INDUSTRIAL DRIVE			2			
AUGUSTA, ME 04330			1	RECORD DOCUMENT	11/12/2014	MSH

PORTLAND ME 860 SPRING STREET, UNIT 1 WESTBROOK, ME 04092 207-828-1777	SALESPERSON: D TAYLOR	DESIGNED BY: D MACLAUCHLAN
	CHECKED BY:	
	FILE NAME: A223621.AXD	DWG: 26

TYPICAL FOR 1
(AHU - 2)

BILL OF MATERIALS				
TAG	QTY	VENDOR	PART NO	DESCRIPTION

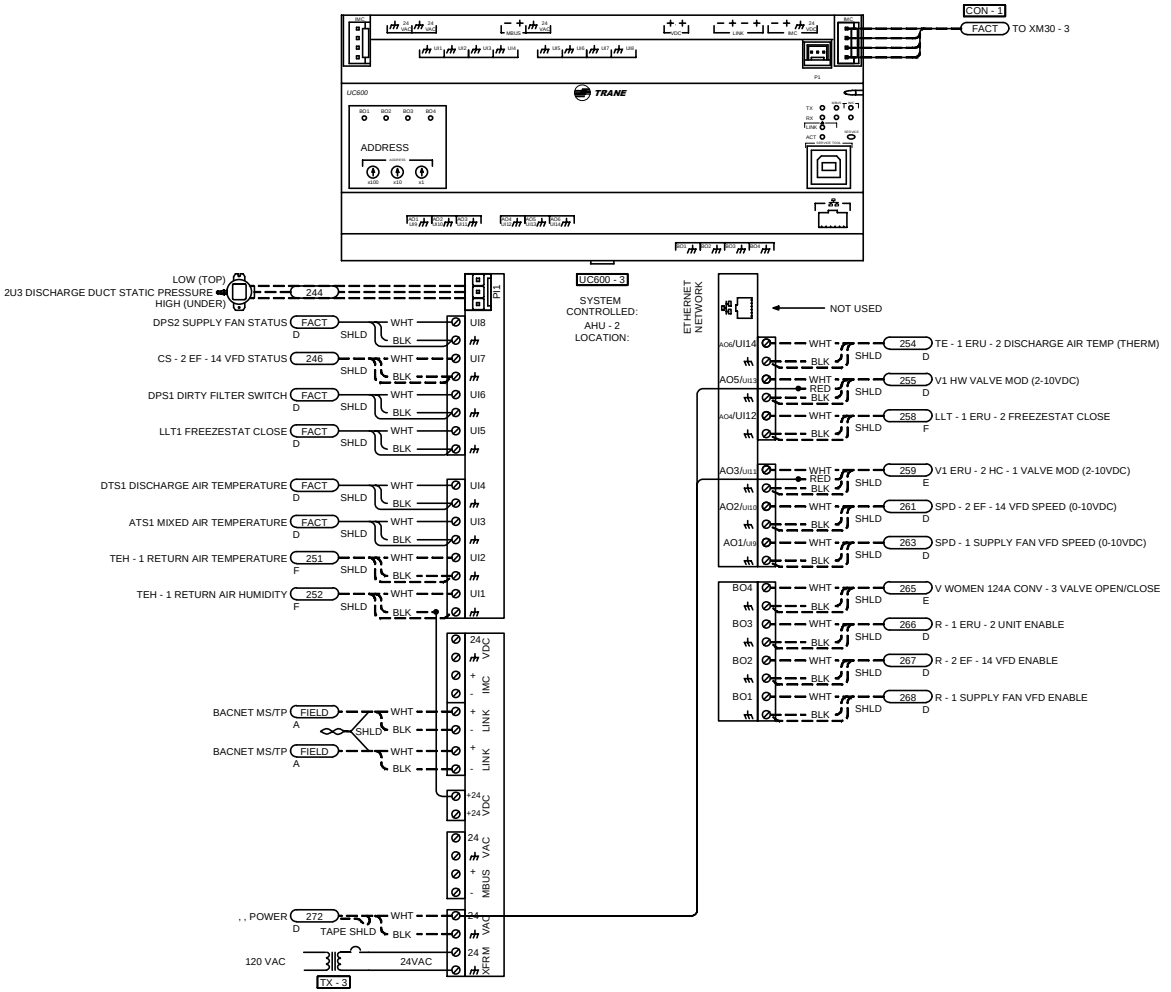

1 DEVICE MUST BE GROUNDED WITH FACTORY PROVIDED GROUND WIRE AS DETAILED IN THE DEVICE INSTALLATION LITERATURE.

AHU - 2 UC600 - 3 WIRING DETAIL

CID:	PID:	PROJECT ID:	NUM.	REVISION	DATE:	BY:
CID00029357	PID00031284	A223621	5			
			4			
			3			
			2			
			1	RECORD DOCUMENT	11/12/2014	MSH

PROJECT:
DOT - 66 INDUSTRIAL DRIVE
66 INDUSTRIAL DRIVE
AUGUSTA, ME 04330

PORTLAND ME
860 SPRING STREET, UNIT 1
WESTBROOK, ME 04092
207-828-1777

SALESPERSON: D TAYLOR
DESIGNED BY: D MACLAUCHLAN
CHECKED BY:

FILE NAME: A223621.AXD

DWG: 27

TYPICAL FOR 1
(AHU - 2)

BILL OF MATERIALS				
TAG	QTY	VENDOR	PART NO	DESCRIPTION

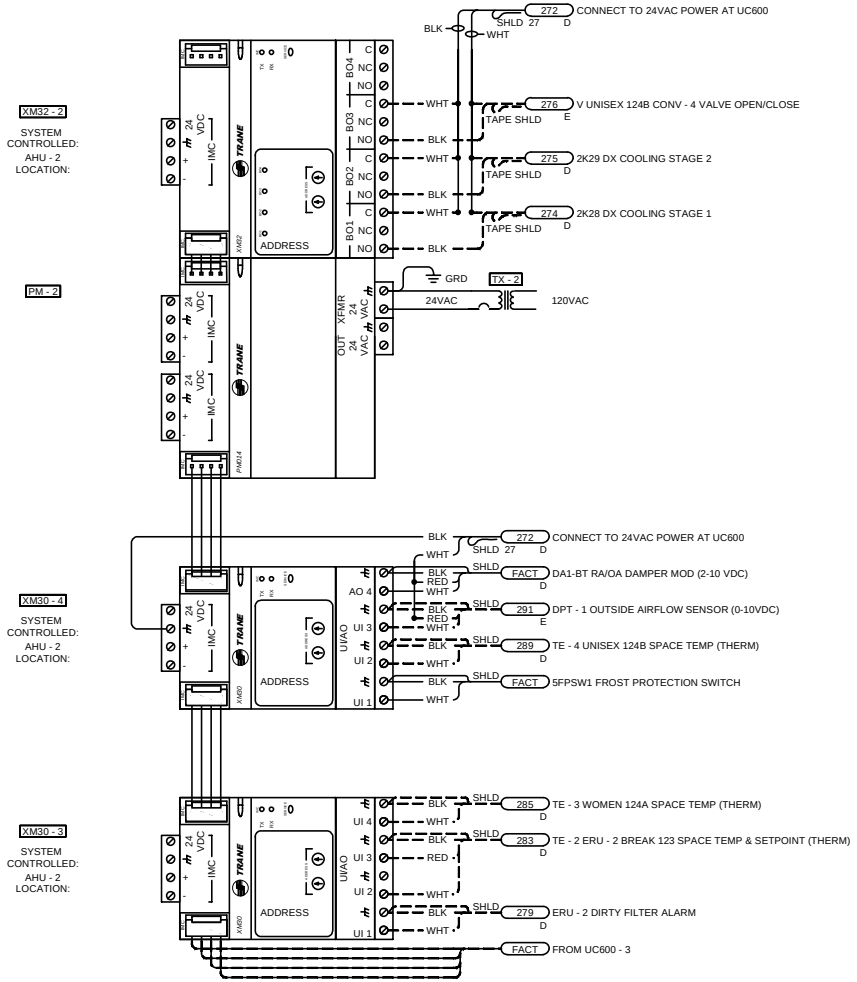

AHU - 2 XM30 - 3, XM30 - 4, XM32 - 2 WIRING DETAIL

CID:	PID:	PROJECT ID:	NUM.	REVISION	DATE:	BY:
CID00029357	PID00031284	A223621	5			
			4			
			3			
			2			
			1	RECORD DOCUMENT	11/12/2014	MSH

PROJECT:
DOT - 66 INDUSTRIAL DRIVE
66 INDUSTRIAL DRIVE
AUGUSTA, ME 04330

PORTLAND ME
860 SPRING STREET, UNIT 1
WESTBROOK, ME 04092
207-828-1777

SALESPERSON: D TAYLOR
DESIGNED BY: D MACLAUCHLAN
CHECKED BY:
FILE NAME: A223621.AXD
DWG: 28

TYPICAL FOR 1
(MAU - 1)

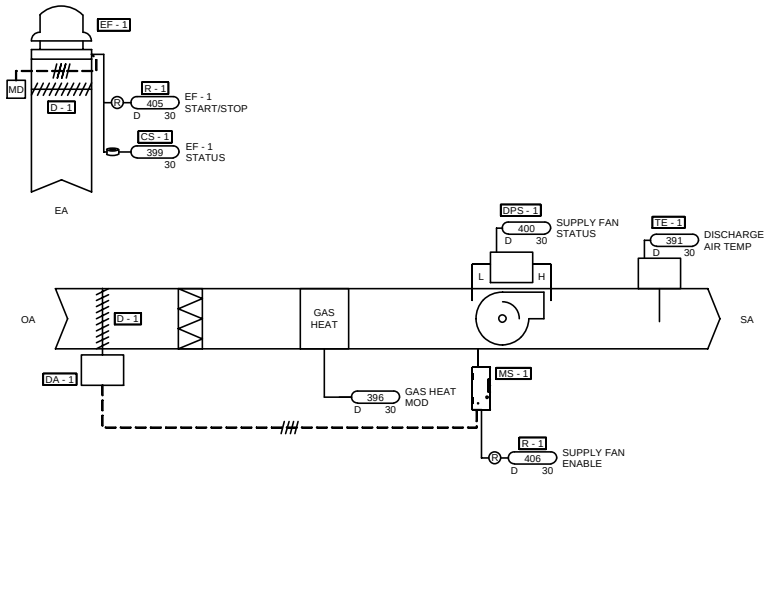

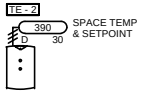

BILL OF MATERIALS				
TAG	QTY	VENDOR	PART NO	DESCRIPTION
TE - 2	1	TRANE	X1351152701	TEMP SENS ZONE THERM O/U SP
DPS - 1	1	DWYER	ADPS-03-2-N	DIFF PRES SW, 0.02-2.01IN WC
CS - 1	1	KELE	RIBXGTFL	CUR SW, 0.75A, SPLIT, NO, LED
R - 1	2	KELE	RIBU1C	RLY SPDT, LED, 10-30 VAC/DC/120 VAC
TE - 1	1	KELE	ST-D24-XH	TEMP SENS, DUCT/IMM, THERM, 9 IN, HB
D - 1	1	RUSKIN	-	REFER TO DAMPER SCHEDULE

SUPPLY FAN START/STOP & DAMPER INTERLOCK

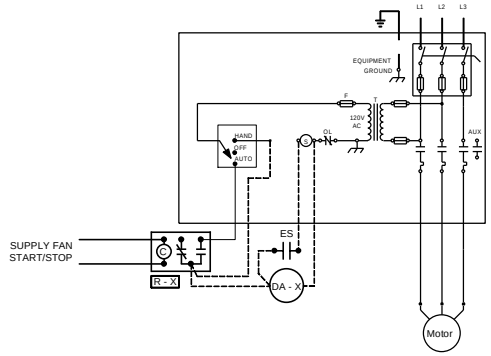

EF - 1 W/ DAMPER WIRING DETAIL

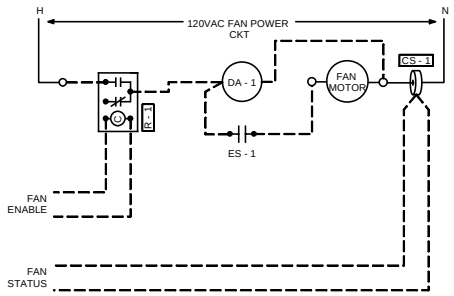

Sequence of Operation:

Occupied Mode: Unit will run continuously in Occupied Mode. When unit is enabled the outside air damper will open 100% and EF – 1 will run continuously. If unit is called to run and supply fan status and/or exhaust fan status is not confirmed an alarm will be initiated. If space temperature falls below setpoint the gas heat will modulate to maintain setpoint. Discharge air temperature setpoint will reset as space temperature approaches setpoint.

Unoccupied Mode: Unit will be disabled in Unoccupied Mode. Unit outside air damper will be closed and EF – 1 will be disabled.

MAU - 1 FLOW DIAGRAM

CID:	PID:	PROJECT ID:	NUM.	REVISION	DATE:	BY:
CID00029357	PID00031284	A223621	5			
PROJECT:			4			
DOT - 66 INDUSTRIAL DRIVE			3			
66 INDUSTRIAL DRIVE			2			
AUGUSTA, ME 04330			1	RECORD DOCUMENT	11/12/2014	MSH

PORTLAND ME	SALESPERSON:	DESIGNED BY:	CHECKED BY:
860 SPRING STREET, UNIT 1	D TAYLOR	D MACLAUCHLAN	
WESTBROOK, ME 04092	FILE NAME: A223621.AXD		DWG: 29
207-828-1777			

TYPICAL FOR 1
(MAU - 1)

BILL OF MATERIALS				
TAG	QTY	VENDOR	PART NO	DESCRIPTION
ENC - 1	1	TRANE	X19091354010	ENC, TRACER UC SMALL, NON-POWERED
UC400 - 1	1	TRANE	BMUC400AAA01D001	UC400 CONTROLLER, FRAME MOUNT
TX - 1	1	KELE	TR75VA001	XFR 120:24VAC, 75VA, CB

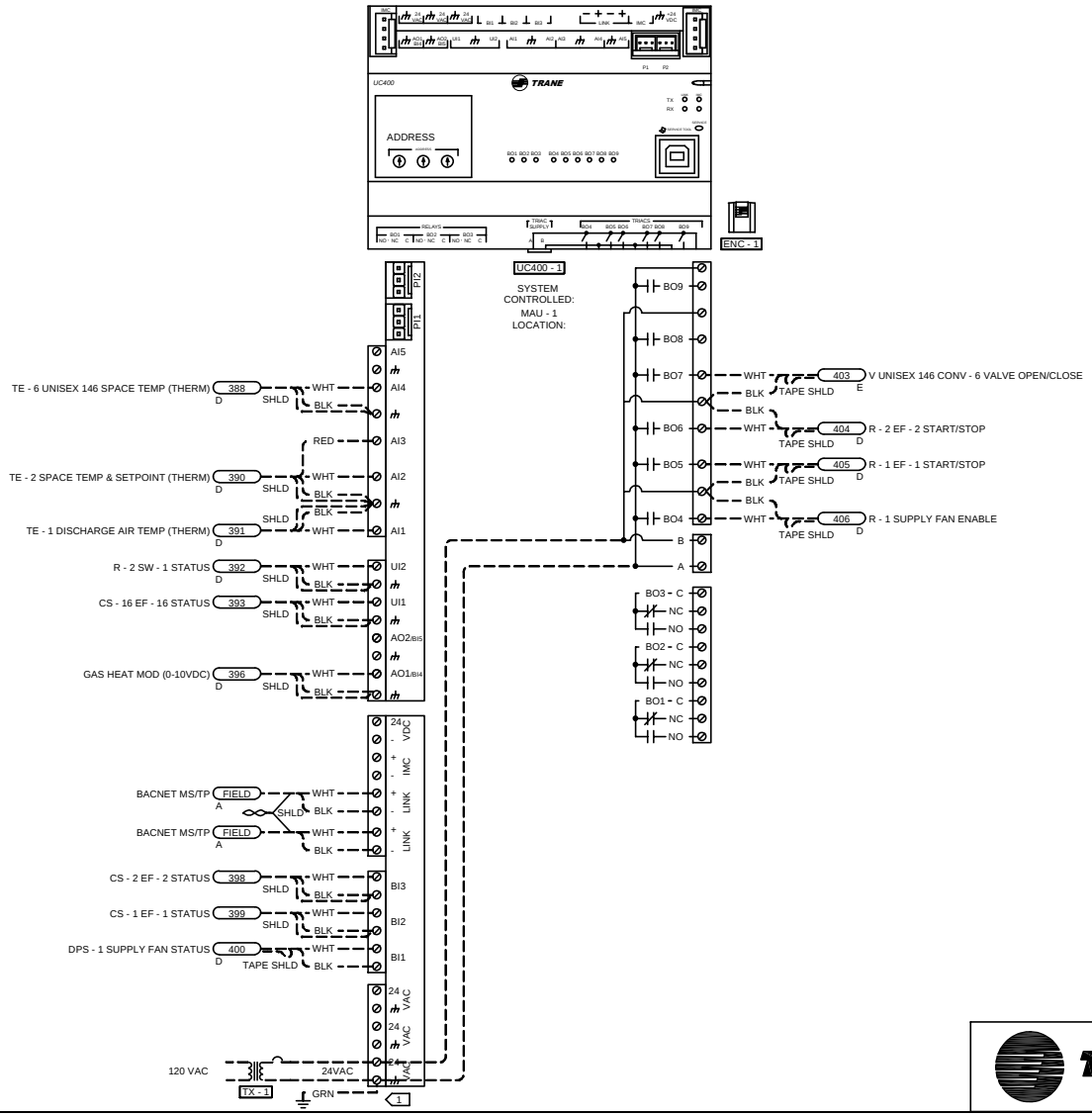

1 DEVICE MUST BE GROUNDED WITH FACTORY PROVIDED GROUND WIRE AS DETAILED IN THE DEVICE INSTALLATION LITERATURE.

MAU - 1 UC400 - 1 WIRING DETAIL

CID:	PID:	PROJECT ID:	NUM.	REVISION	DATE:	BY:
CID00029357	PID00031284	A223621	5			
PROJECT:			4			
DOT - 66 INDUSTRIAL DRIVE			3			
66 INDUSTRIAL DRIVE			2			
AUGUSTA, ME 04330			1	RECORD DOCUMENT	11/12/2014	MSH

PORTLAND ME
860 SPRING STREET, UNIT 1
WESTBROOK, ME 04092
207-828-1777

SALESPERSON: D TAYLOR
DESIGNED BY: D MACLAUCHLAN
CHECKED BY:
FILE NAME: A223621.AXD
DWG: 30

TYPICAL FOR 1
(MAU - 2)

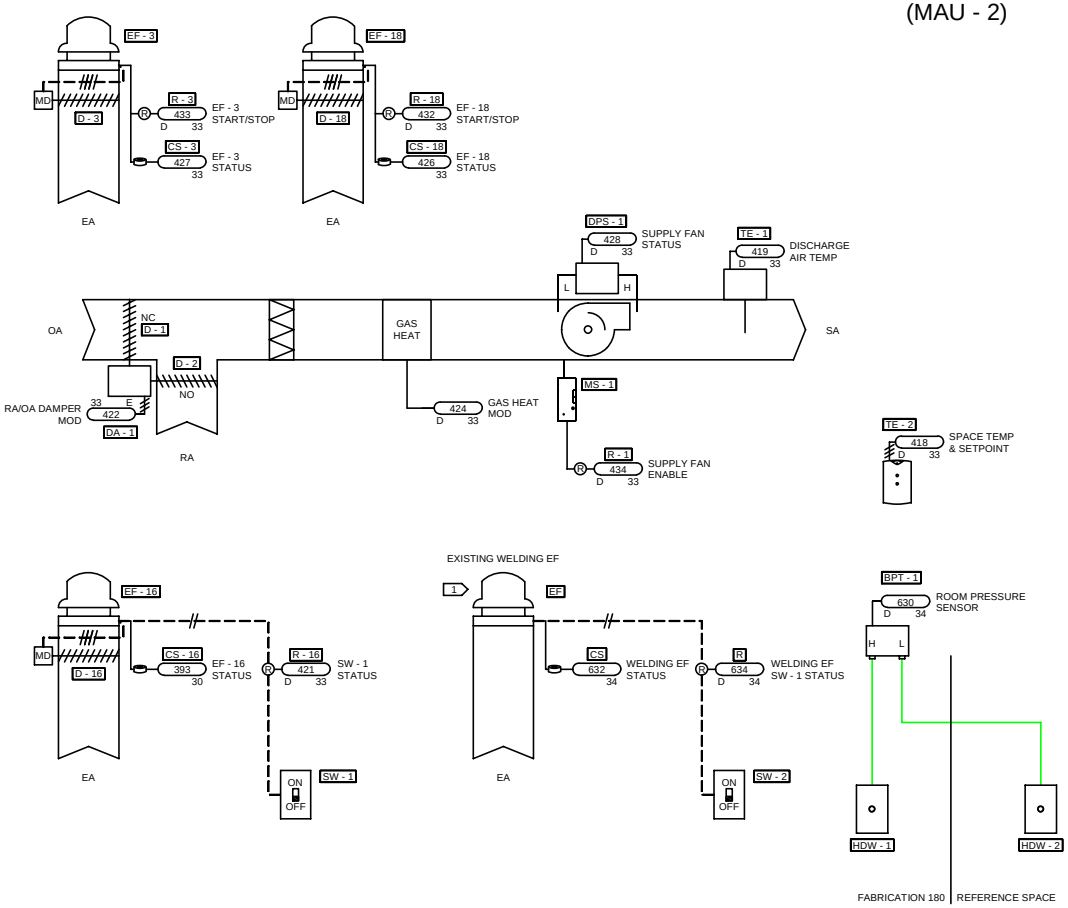

BILL OF MATERIALS				
TAG	QTY	VENDOR	PART NO	DESCRIPTION
TE - 2	1	TRANE	X13511527 01	TEMP SENS ZONE THERM O/U SP
DPS - 1	1	DWYER	ADPS-03-2-N	DIFF PRES SW, 0.02-2.01 IN WC
CS - 3, CS - 18, CS - 16, CS	4	KELE	RIBXGTFL	CUR SW, 0.75A, SPLIT, NO, LED
HDW - 1, HDW - 2	2	KELE	RPS	WALL-MOUNT ROOM PRESSURE SENSOR W/ 1/
R - 1, R - 3, R - 18, R - 16, R	5	KELE	RIBU1C	RLY SPDT, LED, 10-30 VAC/DC/120 VAC
TE - 1	1	KELE	ST-D24-XH	TEMP SENS, DUCT/IMM, THERM, 9 IN, HB
D - 3, D - 18, D - 16	3	RUSKIN	-	REFER TO DAMPER SCHEDULE
BPT - 1	1	SETRA	2601-MS1-N	BUILDING STATIC PRESSURE SENSOR

EXHAUST FAN W/ DAMPER WIRING DETAIL

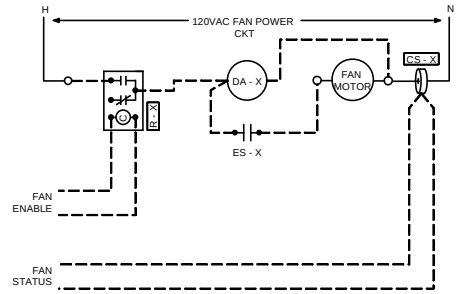

EF - 16 WIRING DETAIL

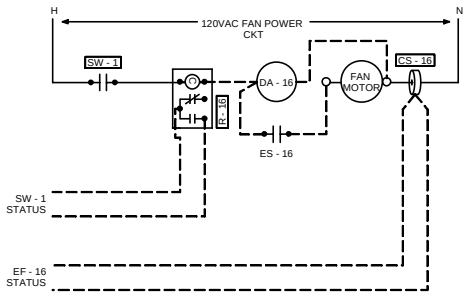

1 EXISTING WELDING FAN TO BE RELOCATED.

MAU - 2 FLOW DIAGRAM

CID:	PID:	PROJECT ID:	NUM.	REVISION	DATE:	BY:
CID00029357	PID00031284	A223621	5			
PROJECT:			4			
DOT - 66 INDUSTRIAL DRIVE			3			
66 INDUSTRIAL DRIVE			2			
AUGUSTA, ME 04330			1	RECORD DOCUMENT	11/12/2014	MSH

PORTLAND ME 860 SPRING STREET, UNIT 1 WESTBROOK, ME 04092 207-828-1777	SALESPERSON: D TAYLOR	DESIGNED BY: D MACLAUCHLAN
	FILE NAME: A223621.AXD	CHECKED BY:
		DWG: 31

TRANE

Sequence of Operation:

Occupied Mode: Unit will run continuously in Occupied Mode. When unit is enabled the outside air and return damper will open to maintain minimum scheduled outside air at 2,500 cfm (set by Balancer) and EF – 3 and EF - 18 will run continuously. If unit is called to run and supply fan status and/or exhaust fan status is not confirmed an alarm will be initiated. If space temperature falls below setpoint the gas heat will modulate to maintain setpoint. Discharge air temperature setpoint will reset as space temperature approaches setpoint.

Existing Welding exhaust fan will be relocated and will operate via wall mounted switch. Trane will monitor switch status and fan status. If switch status is confirmed and fan status is not an alarm will be initiated. If Welding exhaust fan is in operation the OA and RA dampers at MAU – 2 will modulate to maintain negative pressure between the Fabrication 180 shop and the adjacent office suite.

Unoccupied Mode: Unit will be disabled in Unoccupied Mode. Unit outside air damper will close, return air damper will open and EF – 3 and EF - 18 will be disabled.

EF – 16: Exhaust fan will be enabled via wall mounted switch. Trane will monitor switch status and fan status. If switch status is confirmed and fan status is not an alarm will be initiated.

MAU - 2 SEQUENCE OF OPERATION

CID:	PID:	PROJECT ID:	NUM.	REVISION	DATE:	BY:
CID00029357	PID00031284	A223621	5			
PROJECT:			4			
DOT - 66 INDUSTRIAL DRIVE			3			
66 INDUSTRIAL DRIVE			2			
AUGUSTA, ME 04330			1	RECORD DOCUMENT	11/12/2014	MSH

PORTLAND ME 860 SPRING STREET, UNIT 1 WESTBROOK, ME 04092 207-828-1777	SALESPERSON: D TAYLOR	DESIGNED BY: D MACLAUCHLAN	CHECKED BY:
	FILE NAME: A223621.AXD		DWG: 32

TYPICAL FOR 1
(MAU - 2)

BILL OF MATERIALS				
TAG	QTY	VENDOR	PART NO	DESCRIPTION
ENC - 2	1	TRANE	X13091354010	ENC, TRACER UC SMALL, NON-POWERED
UC400 - 2	1	TRANE	BMUC400AAA01D001	UC400 CONTROLLER, FRAME MOUNT
TX - 2	1	KELE	TR75VA001	XFR 120:24VAC, 75VA, CB

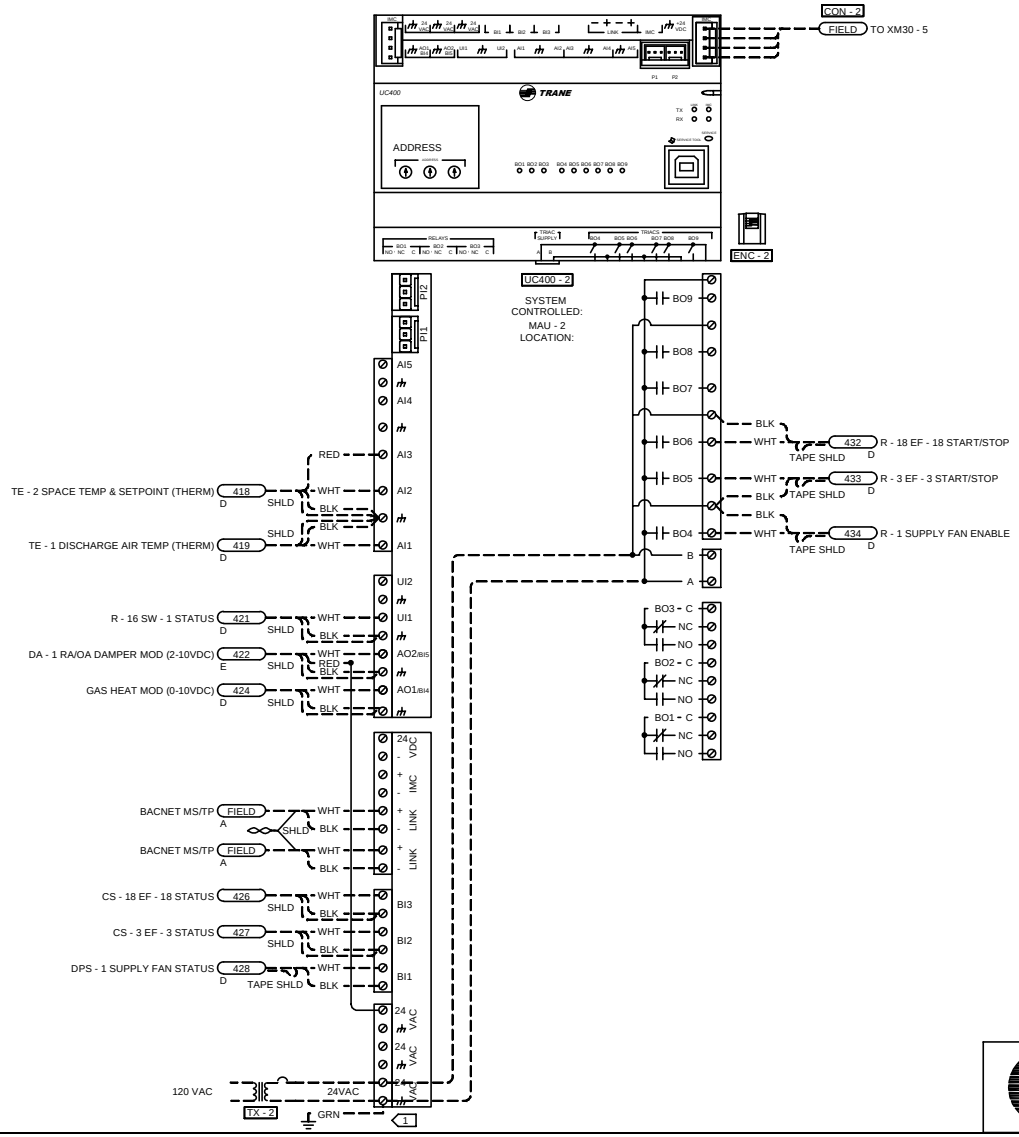

1 DEVICE MUST BE GROUNDED WITH FACTORY PROVIDED GROUND WIRE AS DETAILED IN THE DEVICE INSTALLATION LITERATURE.

MAU - 2 UC400 - 2 WIRING DETAIL

CID:	PID:	PROJECT ID:	NUM.	REVISION	DATE:	BY:
CID00029357	PID00031284	A223621	5			
PROJECT:			4			
DOT - 66 INDUSTRIAL DRIVE			3			
66 INDUSTRIAL DRIVE			2			
AUGUSTA, ME 04330			1	RECORD DOCUMENT	11/12/2014	MSH

PORTLAND ME
860 SPRING STREET, UNIT 1
WESTBROOK, ME 04092
207-828-1777

SALESPERSON: D TAYLOR
DESIGNED BY: D MACLAUCHLAN
CHECKED BY:
FILE NAME: A223621.AXD
DWG: 33

TYPICAL FOR 1
(MAU - 2)

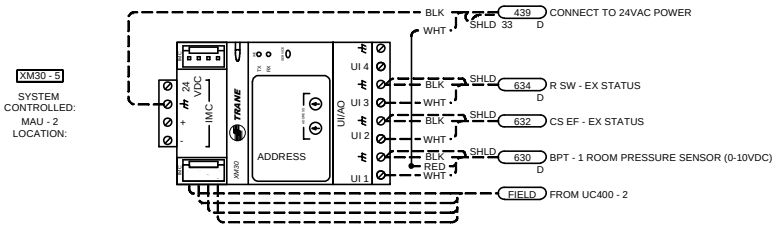

BILL OF MATERIALS

TAG	QTY	VENDOR	PART NO	DESCRIPTION
XM30 - 5	1	TRANE	X13651537010	4 POINT UI/AO EXPANSION MODULE

MAU - 2 XM30 - 5 WIRING DETAIL

CID:	PID:	PROJECT ID:	NUM.	REVISION	DATE:	BY:
CID00029357	PID00031284	A223621	5			
			4			
			3			
			2			
			1	RECORD DOCUMENT	11/12/2014	MSH

PROJECT:
DOT - 66 INDUSTRIAL DRIVE
66 INDUSTRIAL DRIVE
AUGUSTA, ME 04330

PORTLAND ME
860 SPRING STREET, UNIT 1
WESTBROOK, ME 04092
207-828-1777

SALESPERSON: D TAYLOR
DESIGNED BY: D MACLAUCHLAN
CHECKED BY:

FILE NAME: A223621.AXD

DWG: 34

TYPICAL FOR 1
(MAU - 3)

BILL OF MATERIALS				
TAG	QTY	VENDOR	PART NO	DESCRIPTION
TE - 2	1	TRANE	X13511527 01	TEMP SENS ZONE THERM O/U SP
DPS - 1	1	DWYER	ADPS-03-2-N	DIFF PRES SW, 0.02-2.01IN WC
CS - 12, CS - 13, CS - 4, CS - 5	4	KELE	RIBXGTFL	CUR SW, 0.75A, SPLIT, NO, LED
R - 1, R - 4, R - 5, R - 12, R - 13	5	KELE	RIBU1C	RLY SPDT, LED, 10-30 VAC/DC/120 VAC
TE - 1	1	KELE	ST-D24-XH	TEMP SENS, DUCT/IMM, THERM, 9 IN, HB
D - 12, D - 13	2	RUSKIN	-	REFER TO DAMPER SCHEDULE

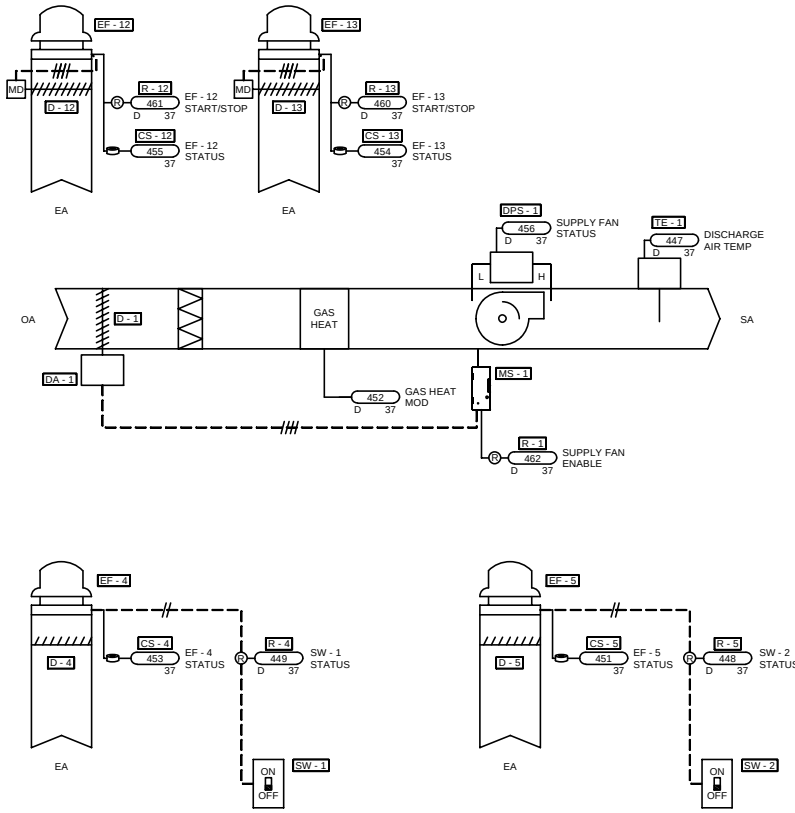

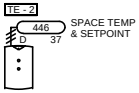

SUPPLY FAN START/STOP & DAMPER INTERLOCK

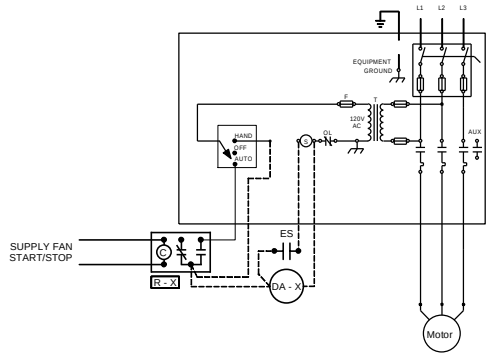

EXHAUST FAN W/ DAMPER WIRING DETAIL

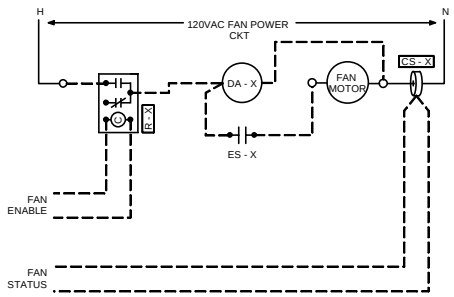

EF - 4 & 5 WIRING DETAIL

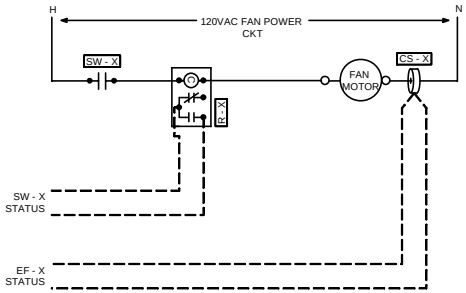

MAU - 3 FLOW DIAGRAM

CID:	PID:	PROJECT ID:	NUM.	REVISION	DATE:	BY:
CID00029357	PID00031284	A223621	5			
PROJECT:			4			
DOT - 66 INDUSTRIAL DRIVE			3			
66 INDUSTRIAL DRIVE			2			
AUGUSTA, ME 04330			1	RECORD DOCUMENT	11/12/2014	MSH

PORTLAND ME	SALESPERSON:	DESIGNED BY:	CHECKED BY:
860 SPRING STREET, UNIT 1	D TAYLOR	D MACLAUCHLAN	
WESTBROOK, ME 04092	FILE NAME: A223621.AXD		DWG: 35
207-828-1777			

Sequence of Operation:

Occupied Mode: Unit will run continuously in Occupied Mode. When unit is enabled the outside air damper will open 100% and EF – 12 and EF – 13 (General Exhaust Fans) will run continuously. If unit is called to run and supply fan status and/or exhaust fan status is not confirmed an alarm will be initiated. If space temperature falls below setpoint the gas heat will modulate to maintain setpoint. Discharge air temperature setpoint will reset as space temperature approaches setpoint. If vehicle exhaust fan EF – 4 is enabled general exhaust EF – 13 will be disabled. If vehicle exhaust fan EF – 5 is enabled general exhaust EF – 12 will be disabled.

Unoccupied Mode: Unit will be disabled in Unoccupied Mode. Unit outside air damper will be closed and EF – 12 and EF - 13 will be disabled.

MAU - 3 SEQUENCE OF OPERATION

CID:	PID:	PROJECT ID:	NUM.	REVISION	DATE:	BY:
CID00029357	PID00031284	A223621	5			
PROJECT:			4			
DOT - 66 INDUSTRIAL DRIVE			3			
66 INDUSTRIAL DRIVE			2			
AUGUSTA, ME 04330			1	RECORD DOCUMENT	11/12/2014	MSH

PORTLAND ME 860 SPRING STREET, UNIT 1 WESTBROOK, ME 04092 207-828-1777	SALESPERSON: D TAYLOR	DESIGNED BY: D MACLAUCHLAN	CHECKED BY:
	FILE NAME: A223621.AXD		DWG: 36

TYPICAL FOR 1
(MAU - 3)

BILL OF MATERIALS				
TAG	QTY	VENDOR	PART NO	DESCRIPTION
ENC - 3	1	TRANE	X13091354010	ENC, TRACER UC SMALL, NON-POWERED
UC400 - 3	1	TRANE	BMUC400AAA01D001	UC400 CONTROLLER, FRAME MOUNT
TX - 3	1	KELE	TR75VA001	XFR 120:24VAC, 75VA, CB

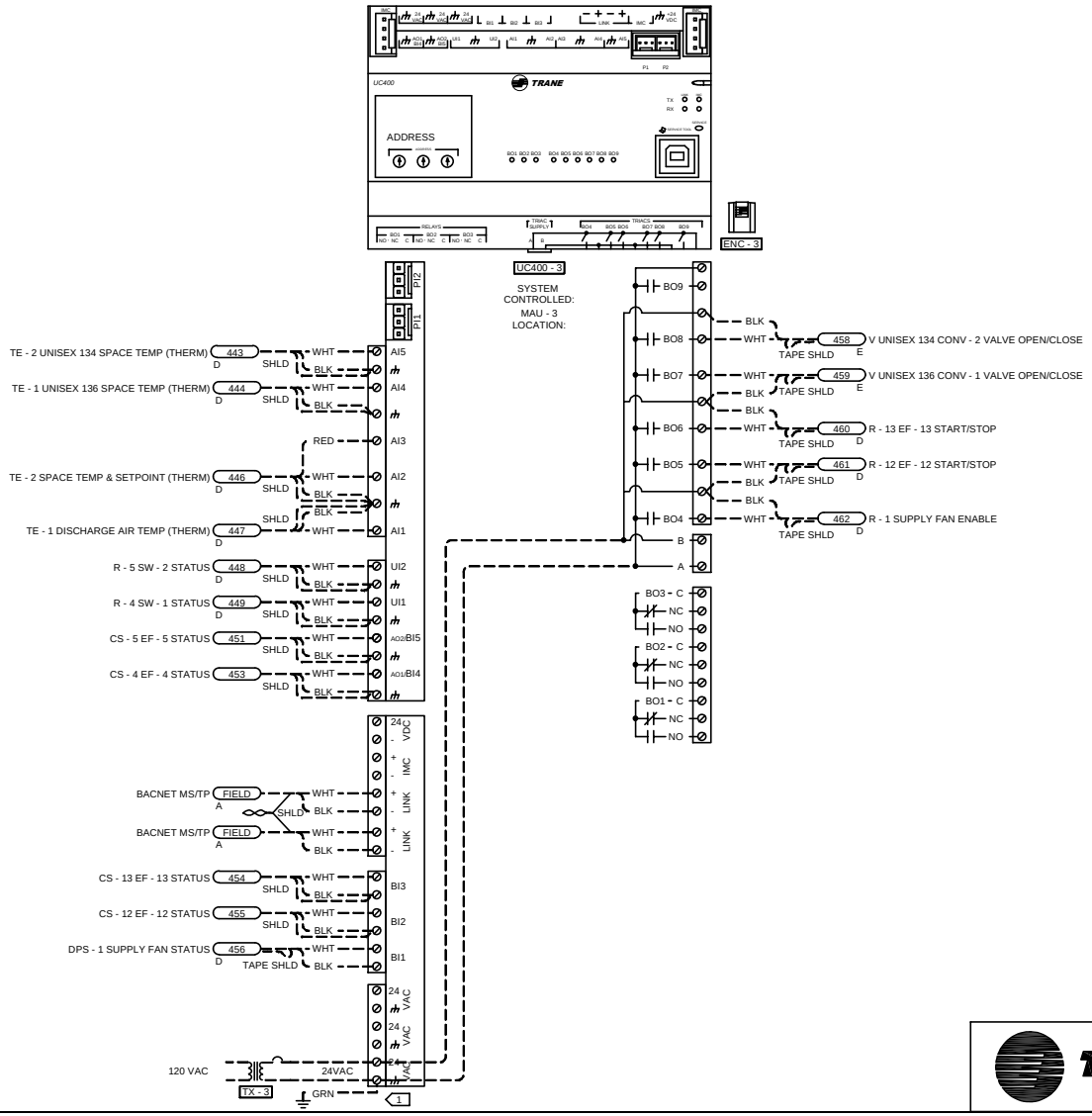

1 DEVICE MUST BE GROUNDED WITH FACTORY PROVIDED GROUND WIRE AS DETAILED IN THE DEVICE INSTALLATION LITERATURE.

MAU - 3 UC400 - 3 WIRING DETAIL

CID:	PID:	PROJECT ID:	NUM.	REVISION	DATE:	BY:
CID00029357	PID00031284	A223621	5			
PROJECT:			4			
DOT - 66 INDUSTRIAL DRIVE			3			
66 INDUSTRIAL DRIVE			2			
AUGUSTA, ME 04330			1	RECORD DOCUMENT	11/12/2014	MSH

PORTLAND ME	SALESPERSON:	DESIGNED BY:	CHECKED BY:
860 SPRING STREET, UNIT 1	D TAYLOR	D MACLAUCHLAN	
WESTBROOK, ME 04092	FILE NAME: A223621.AXD		DWG: 37
207-828-1777			

TYPICAL FOR 1
(MAU - 4)

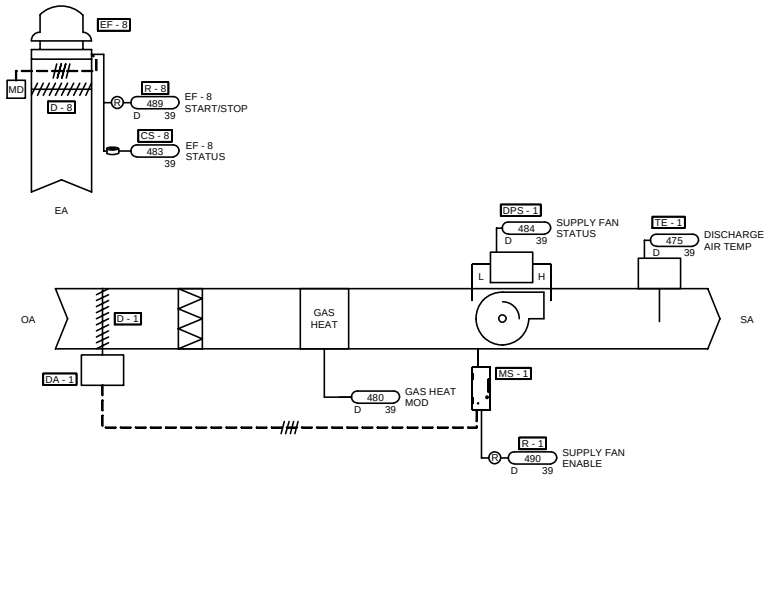

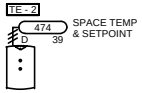

BILL OF MATERIALS				
TAG	QTY	VENDOR	PART NO	DESCRIPTION
TE - 2	1	TRANE	X135115270 1	TEMP SENS ZONE THERM O/U SP
DPS - 1	1	DWYER	ADPS-03-2-N	DIFF PRES SW, 0.02-2.01IN WC
CS - 8	1	KELE	RIBXGTFL	CUR SW, 0.75A, SPLIT, NO, LED
R - 1 R - 8	2	KELE	RIBU3C	RLY SPDT, LED, 10-30 VAC/DC/120 VAC
TE - 1	1	KELE	ST-D24-XH	TEMP SENS, DUCT/IMM., THERM, 9 IN, HB
D - 8	1	RUSKIN	-	REFER TO DAMPER SCHEDULE

SUPPLY FAN START/STOP & DAMPER INTERLOCK

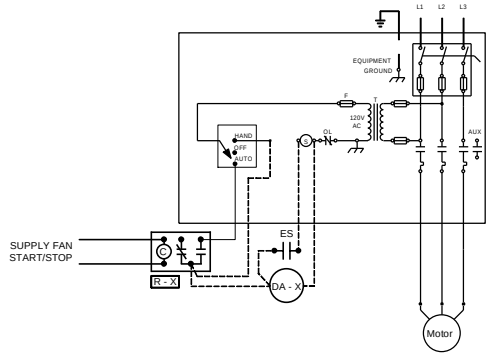

EF - 8 W/ DAMPER WIRING DETAIL

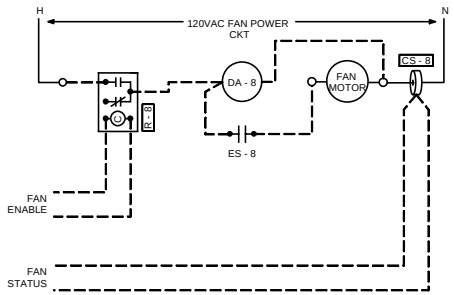

Sequence of Operation:

Occupied Mode: Unit will run continuously in Occupied Mode. When unit is enabled the outside air damper will open 100% and EF – 8 will run continuously. If unit is called to run and supply fan status and/or exhaust fan status is not confirmed an alarm will be initiated. If space temperature falls below setpoint the gas heat will modulate to maintain setpoint. Discharge air temperature setpoint will reset as space temperature approaches setpoint.

Unoccupied Mode: Unit will be disabled in Unoccupied Mode. Unit outside air damper will be closed and EF – 8 will be disabled.

MAU - 4 FLOW DIAGRAM

CID:	PID:	PROJECT ID:	NUM.	REVISION	DATE:	BY:
CID00029357	PID00031284	A223621	5			
PROJECT:			4			
DOT - 66 INDUSTRIAL DRIVE			3			
66 INDUSTRIAL DRIVE			2			
AUGUSTA, ME 04330			1	RECORD DOCUMENT	11/12/2014	MSH

PORTLAND ME	SALESPERSON:	DESIGNED BY:	CHECKED BY:
860 SPRING STREET, UNIT 1 WESTBROOK, ME 04092 207-828-1777	D TAYLOR	D MACLAUCHLAN	
	FILE NAME: A223621.AXD		DWG: 38

TYPICAL FOR 1
(MAU - 4)

BILL OF MATERIALS				
TAG	QTY	VENDOR	PART NO	DESCRIPTION
ENC - 4	1	TRANE	X13091354010	ENC, TRACER UC SMALL, NON-POWERED
UC400 - 4	1	TRANE	BMUC400AAA01D001	UC400 CONTROLLER, FRAME MOUNT
TX - 4	1	KELE	TR75VA001	XFR 120:24VAC, 75VA, CB

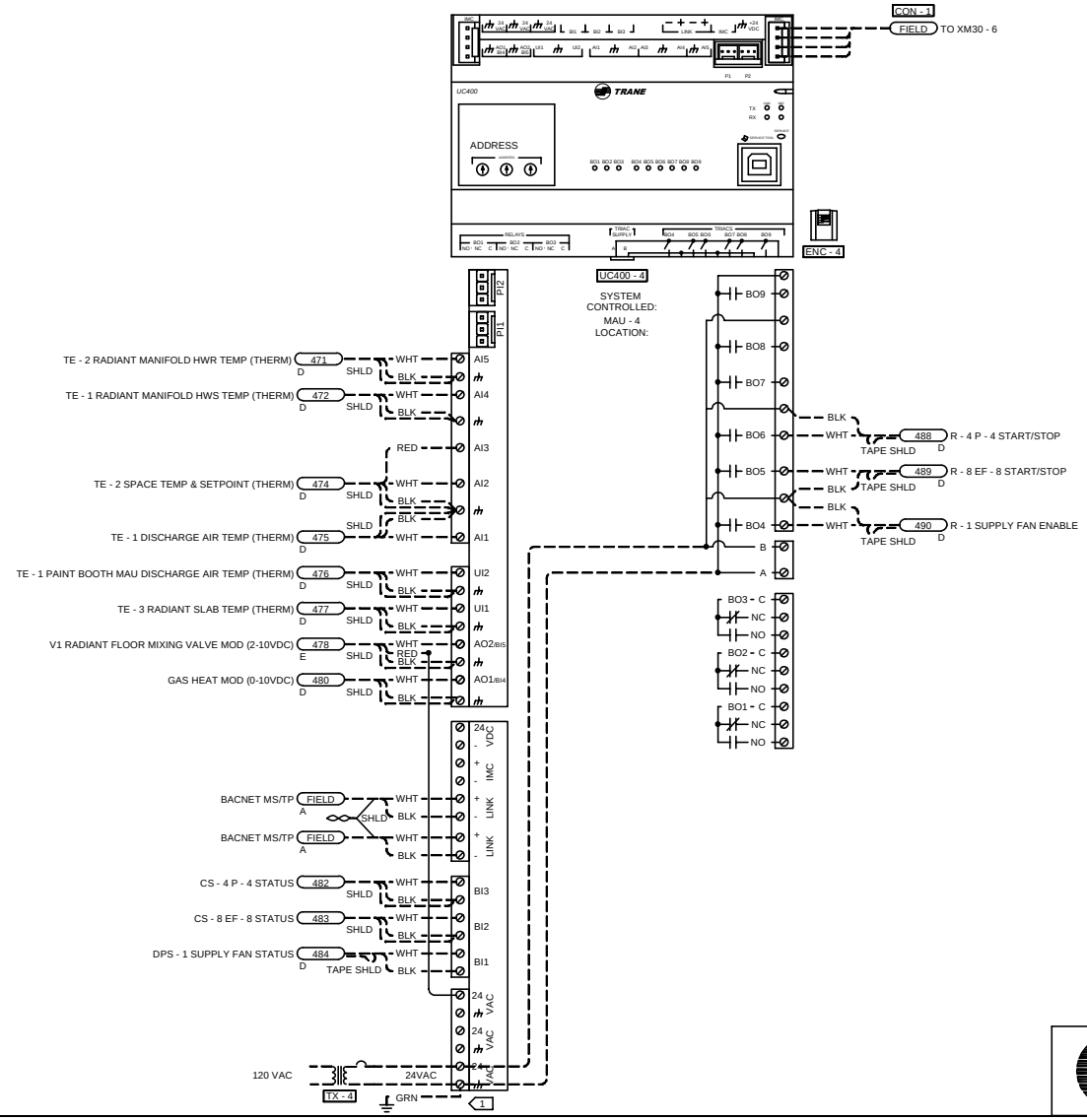

1 DEVICE MUST BE GROUNDED WITH FACTORY PROVIDED GROUND WIRE AS DETAILED IN THE DEVICE INSTALLATION LITERATURE.

MAU - 4 UC400 - 4 WIRING DETAIL

CID:	PID:	PROJECT ID:	NUM.	REVISION	DATE:	BY:
CID00029357	PID00031284	A223621	5			
PROJECT:			4			
DOT - 66 INDUSTRIAL DRIVE			3			
66 INDUSTRIAL DRIVE			2			
AUGUSTA, ME 04330			1	RECORD DOCUMENT	11/12/2014	MSH

PORTLAND ME
860 SPRING STREET, UNIT 1
WESTBROOK, ME 04092
207-828-1777

SALESPERSON: D TAYLOR
DESIGNED BY: D MACLAUCHLAN
CHECKED BY:
FILE NAME: A223621.AXD
DWG: 39

TYPICAL FOR 1 (ERU - 2)

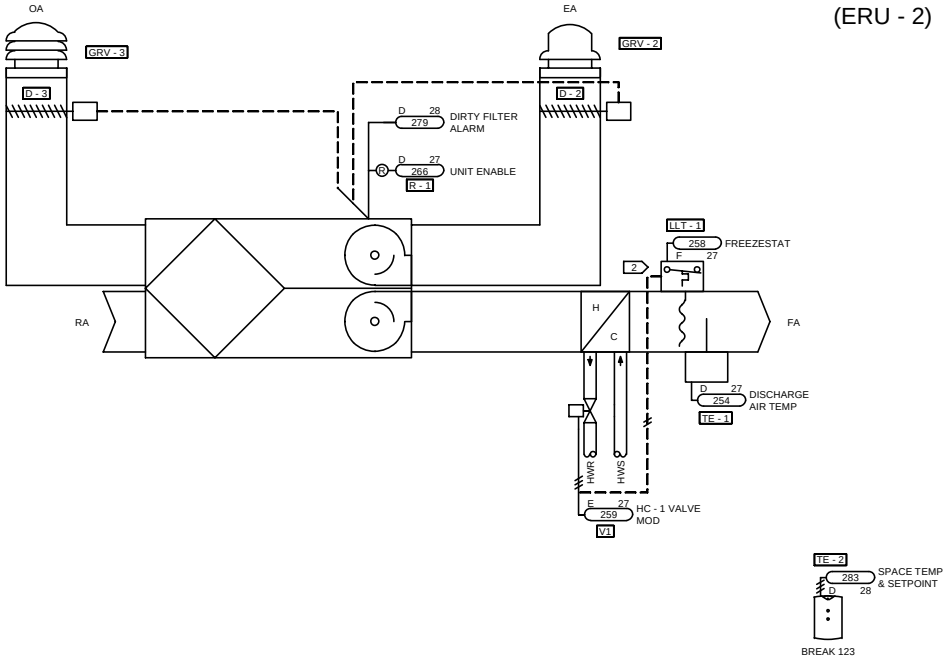

BILL OF MATERIALS				
TAG	QTY	VENDOR	PART NO	DESCRIPTION
TE - 2	1	TRANE	X13511152701	TEMP SENS ZONE THERM O/U SP
V1	1	BELIMO	-	REFER TO VALVE SCHEDULE
LLT - 1	1	KELE	A70HA-2	LOW TSTAT, 35-80F, MAN'L, SPST, AUX, 6 FT
R - 1	1	KELE	RIBU3C	RLY SPDT, LED, 10-30 VAC/DC/120 VAC
TE - 1	1	KELE	ST-D24-XH	TEMP SENS, DUCT/IMM., THERM, 9 IN, HB
D - 3, D - 2	2	RUSKIN	-	REFER TO DAMPER SCHEDULE

Sequence of Operation:

Occupied Mode: In Occupied Mode unit fans will be enabled and OA and EA dampers will open. Unit will modulate HW valve to maintain space temperature setpoint of 72°F (adj.).

Unoccupied Mode: Unit will operate to maintain setback temperature of 60°F (adj.). If space temperature setpoint is satisfied the OA and EA damper will close and unit fans will be disabled.

Safeties: If HC – 1 freezestat trips (38°F) the HW valve will open 100%, OA and EA dampers will close and unit will be shut down. Unit will resume operation when freezestat is reset.

If dirty filter switch trips an alarm will be initiated.

2 INTERLOCK 2ND SET OF N.C. CONTACTS W/ 24VAC POWER TO VALVE.

1 POINTS TO BE WIRED TO AHU - 2 UC600 & XM30.

ERU - 2 FLOW DIAGRAM

CID:	PID:	PROJECT ID:	NUM.	REVISION	DATE:	BY:
CID00029357	PID00031284	A223621	5			
PROJECT:			4			
DOT - 66 INDUSTRIAL DRIVE			3			
66 INDUSTRIAL DRIVE			2			
AUGUSTA, ME 04330			1	RECORD DOCUMENT	11/12/2014	MSH

PORTLAND ME
860 SPRING STREET, UNIT 1
WESTBROOK, ME 04092
207-828-1777

SALESPERSON: D TAYLOR
DESIGNED BY: D MACLAUCHLAN
CHECKED BY:
FILE NAME: A223621.AXD
DWG: 40

TYPICAL FOR 1
(ERU - 3)

BILL OF MATERIALS				
TAG	QTY	VENDOR	PART NO	DESCRIPTION
TE - 2	1	TRANE	X1351152701	TEMP SENS ZONE THERM O/U SP
V1	1	BELIMO	-	REFER TO VALVE SCHEDULE
LLT - 1	1	KELE	A70HA-2	LOW TSTAT, 35-80F, MAN'L, SPST, AUX, 6 FT
R - 1	1	KELE	RIBU3C	RLY SPDT, LED, 10-30 VAC/DC/120 VAC
TE - 1	1	KELE	ST-D24-XH	TEMP SENS, DUCT/IMM., THERM, 9 IN, HB
D - 1 D - 2	2	RUSKIN	-	REFER TO DAMPER SCHEDULE

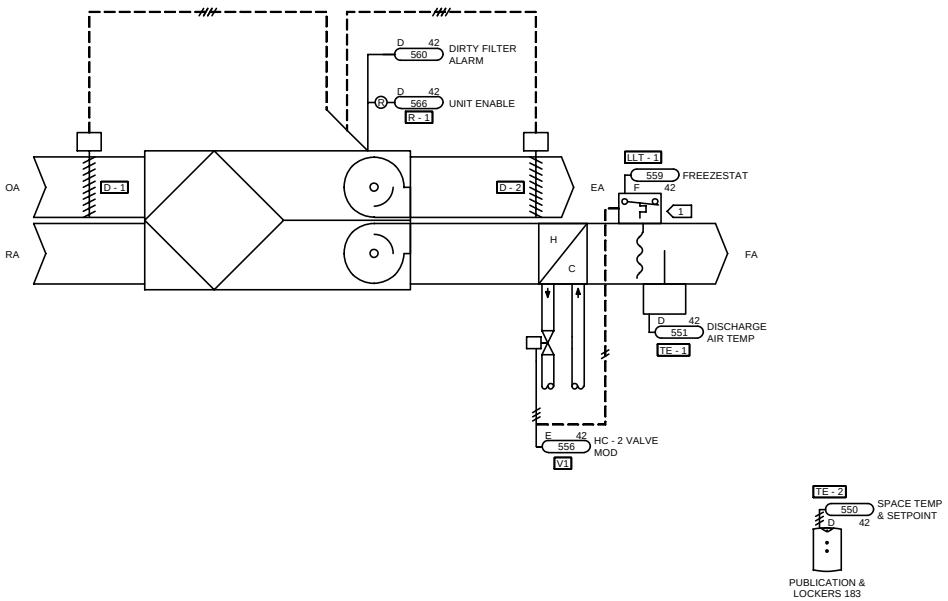

Sequence of Operation:

Occupied Mode: In Occupied Mode unit fans will be enabled and OA and EA dampers will open. Unit will modulate HW valve to maintain space temperature setpoint of 72°F (adj.).

Unoccupied Mode: Unit will operate to maintain setback temperature of 60°F (adj.). If space temperature setpoint is satisfied the OA and EA damper will close and unit fans will be disabled.

Safeties: If HC – 2 freezestat trips (38°F) the HW valve will open 100%, OA and EA dampers will close and unit will be shut down. Unit will resume operation when freezestat is reset.

If dirty filter switch trips an alarm will be initiated.

1 INTERLOCK 2ND SET OF N.C. CONTACTS W/ 24VAC POWER TO VALVE.

ERU - 3 FLOW DIAGRAM

CID:	PID:	PROJECT ID:	NUM.	REVISION	DATE:	BY:
CID00029357	PID00031284	A223621	5			
PROJECT:			4			
DOT - 66 INDUSTRIAL DRIVE			3			
66 INDUSTRIAL DRIVE			2			
AUGUSTA, ME 04330			1	RECORD DOCUMENT	11/12/2014	MSH

PORTLAND ME	SALESPERSON:	DESIGNED BY:	CHECKED BY:
860 SPRING STREET, UNIT 1	D TAYLOR	D MACLAUCHLAN	
WESTBROOK, ME 04092	FILE NAME: A223621.AXD		DWG: 41
207-828-1777			

TYPICAL FOR 1
(ERU - 3)

BILL OF MATERIALS				
TAG	QTY	VENDOR	PART NO	DESCRIPTION
ENC - 6	1	TRANE	X19091354010	ENC, TRACER UC SMALL, NON-POWERED
UC400 - 6	1	TRANE	BMUC400AAA01D001	UC400 CONTROLLER, FRAME MOUNT
TX - 6	1	KELE	TR75VA001	XFR 120:24VAC, 75VA, CB

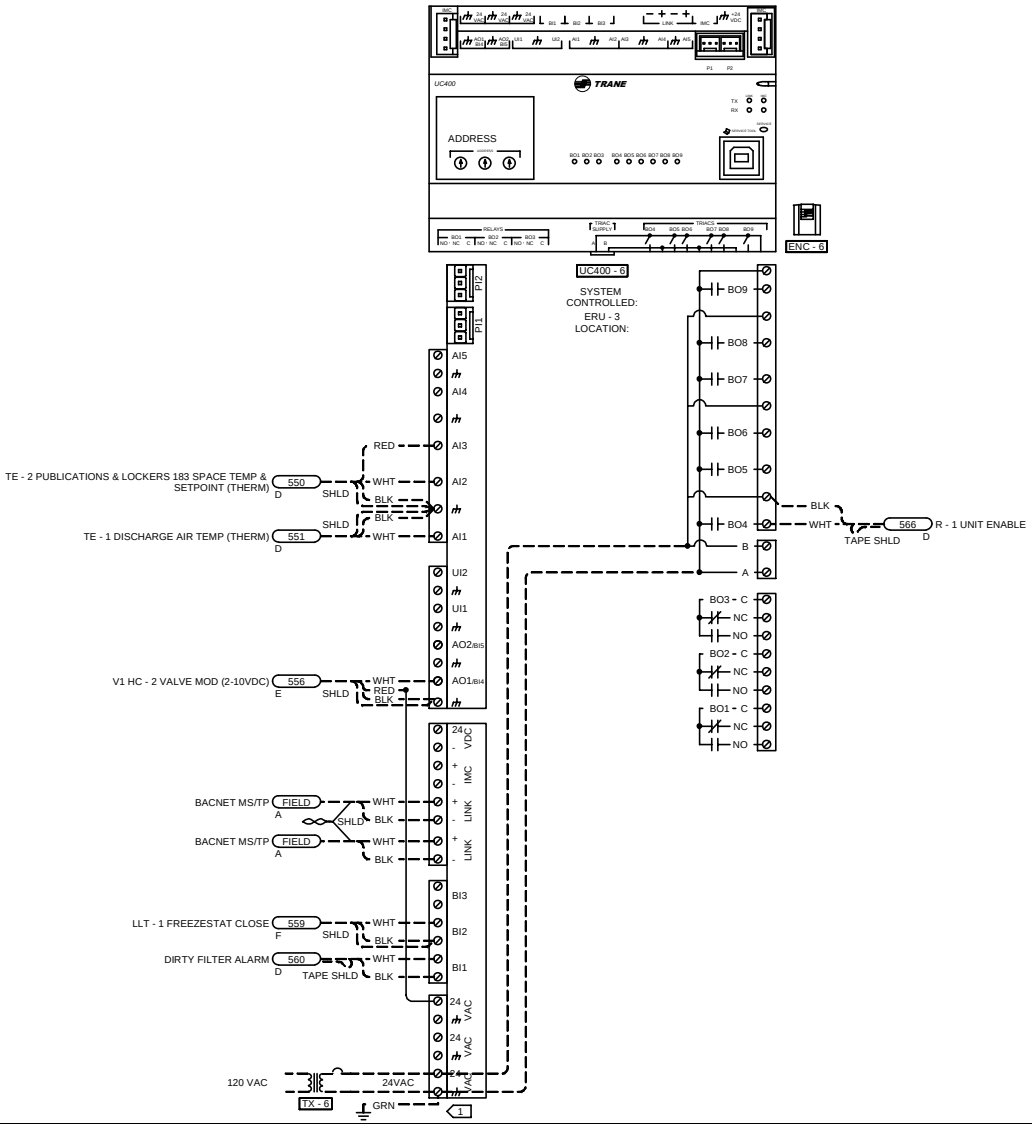

1 DEVICE MUST BE GROUNDED WITH FACTORY PROVIDED GROUND WIRE AS DETAILED IN THE DEVICE INSTALLATION LITERATURE.

ERU - 3 UC400 - 6 WIRING DETAIL

CID:	PID:	PROJECT ID:	NUM.	REVISION	DATE:	BY:
CID00029357	PID00031284	A223621	5			
PROJECT:			4			
DOT - 66 INDUSTRIAL DRIVE			3			
66 INDUSTRIAL DRIVE			2			
AUGUSTA, ME 04330			1	RECORD DOCUMENT	11/12/2014	MSH

PORTLAND ME
860 SPRING STREET, UNIT 1
WESTBROOK, ME 04092
207-828-1777

SALESPERSON: D TAYLOR
DESIGNED BY: D MACLAUCHLAN
CHECKED BY:
FILE NAME: A223621.AXD
DWG: 42

TYPICAL FOR 36
(SINGLE DUCT VAV W/ REHEAT)

BILL OF MATERIALS				
TAG	QTY	VENDOR	PART NO	DESCRIPTION
CO2 - 1	2	TRANE	X1379042201	CO2 SENS, DEMAND-CONTROLLED VENT
V	36	BELIMO	-	REFER TO VALVE SCHEDULE
TE - 2	36	KELE	KTV-24	VAV BOX DUCT TEMPERATURE SENSOR
TX - 1	36	KELE	TR50VA005	XFR 120:24VAC, 50VA, CB

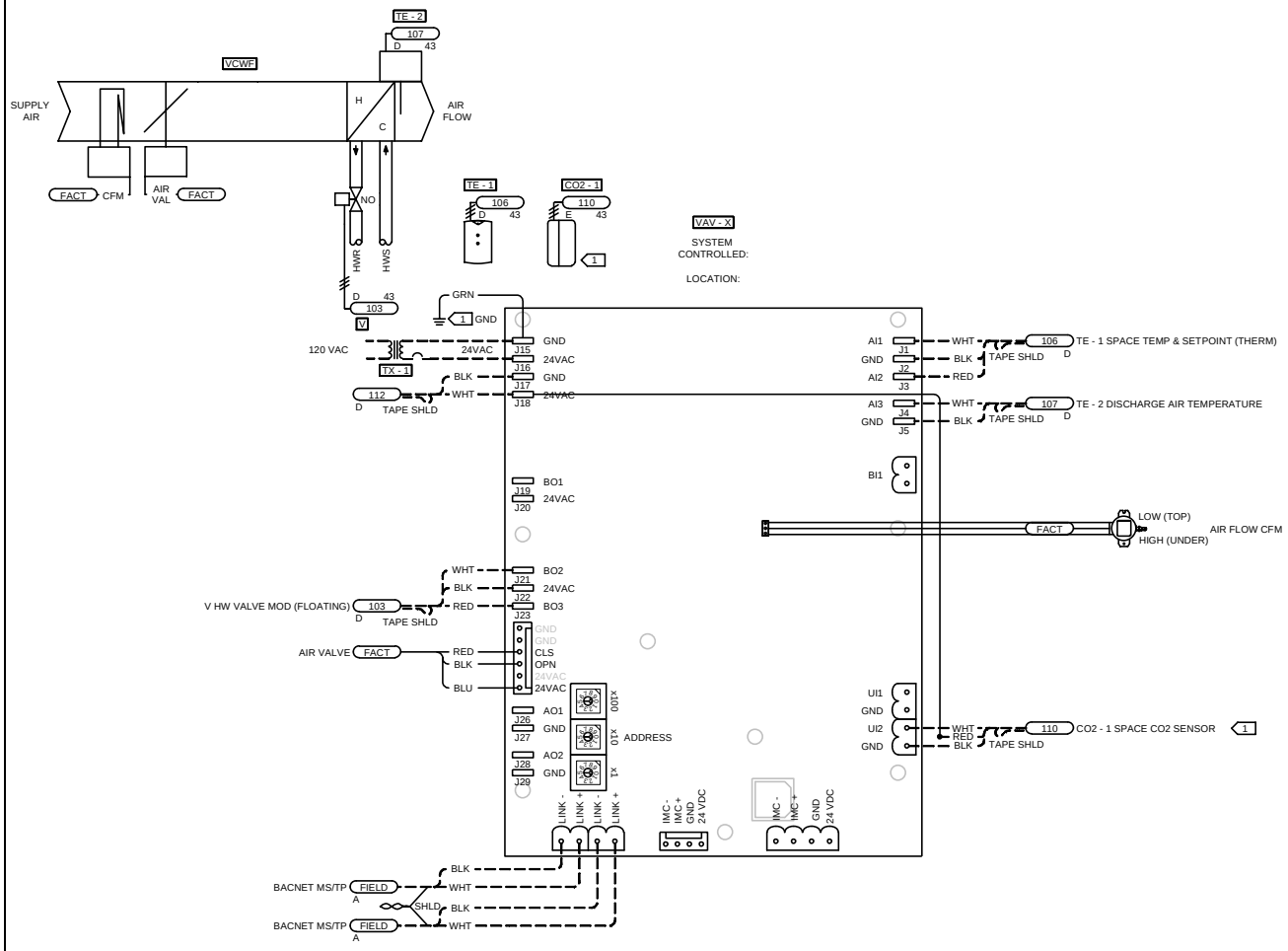

1 TYPICAL FOR VAV - 36 & VAV - 37 ONLY.

1 DEVICE MUST BE GROUNDED WITH FACTORY PROVIDED GROUND WIRE AS DETAILED IN THE DEVICE INSTALLATION LITERATURE.

SINGLE DUCT VAV W/ REHEAT UC210 WIRING DETAIL

CID:	PID:	PROJECT ID:	NUM.	REVISION	DATE:	BY:
CID00029357	PID00031284	A223621	5			
PROJECT:			4			
DOT - 66 INDUSTRIAL DRIVE			3			
66 INDUSTRIAL DRIVE			2			
AUGUSTA, ME 04330			1	RECORD DOCUMENT	11/12/2014	MSH

PORTLAND ME	SALESPERSON:	DESIGNED BY:	CHECKED BY:
860 SPRING STREET, UNIT 1	D TAYLOR	D MACLAUCHLAN	
WESTBROOK, ME 04092	FILE NAME: A223621.AXD		DWG: 43
207-828-1777			

Sequence of Operation:

Building Automation System Interface: The Building Automation System (BAS) will send the controller Occupied and Unoccupied commands. The BAS may also send a Heat/Cool mode, priority shutdown commands, space temperature and/or space temperature setpoint. If communication is lost with the BAS, the VAV controller will operate using its local setpoints.

Occupancy Mode: The occupancy mode will be communicated or hardwired to the VAV via a binary input. Valid Occupancy modes for the VAV will be:

Occupied: Normal operating mode for occupied spaces or daytime operation. When the unit is in the occupied mode the VAV will maintain the space temperature at the active occupied heating or cooling setpoint. Applicable ventilation and airflow setpoints will be enforced. The occupied mode will be the default mode of the VAV.

Unoccupied: Normal operating mode for unoccupied spaces or nighttime operation. When the unit is in unoccupied mode the VAV controller will maintain the space temperature at the stored unoccupied heating or cooling setpoint regardless of the presence of a hardwired or communicated setpoint. When the space temperature exceeds the active unoccupied setpoint the VAV will modulate fully closed.

Heat/Cool Mode: The Heat/Cool mode will be set by a communicated value or automatically by the VAV. In standalone or auto mode the VAV will compare the primary air temperature with the configured auto changeover setpoint to determine if the air is "hot" or "cold". Heating mode will command the VAV to heat only; it implies the primary air temperature is hot. Cooling mode will command the VAV to cool only; it implies the primary air temperature is cold.

Heat/Cool Setpoint: The space temperature setpoint will be determined either by a local (e.g., thumbwheel) setpoint, the VAV default setpoint or a communicated value. The VAV will use the locally stored default setpoints when neither a local setpoint nor communicated setpoint is present. If both a local setpoint and communicated setpoint exist, the VAV will use the communicated value.

Cooling Mode: When the unit is in cooling mode, the VAV controller will maintain the space temperature at the active cooling setpoint by modulating the airflow between the active cooling minimum airflow setpoint to the maximum cooling airflow setpoint. Based on the VAV controller occupancy mode, the active cooling setpoint will be one of the following:

Setpoint	**Default Value**
Occupied Cooling Setpoint	74°F
Unoccupied Cooling Setpoint	85°F
Occupied Min Cooling Airflow Setpoint	See VAV Schedule
Occupied Max Cooling Airflow Setpoint	See VAV Schedule

The VAV will use the measured space temperature and the active cooling setpoint to determine the requested cooling capacity of the unit. The outputs will be controlled based on the unit configuration and the requested cooling capacity.

Heating Mode: When the unit is in heating mode, the VAV controller will maintain the space temperature at the active heating setpoint by modulating the airflow between the active heating minimum airflow setpoint to the maximum heating airflow setpoint. Based on the VAV controller occupancy mode, the active heating setpoint will be one of the following:

Setpoint	**Default Value**
Occupied Heating Setpoint	71°F
Unoccupied Heating Setpoint	60°F
Occupied Min Heating Airflow Setpoint	See VAV Schedule
Occupied Max Heating Airflow Setpoint	See VAV Schedule

The VAV controller will use the measured space temperature and the active heating setpoint to determine the requested heating capacity of the unit. The outputs will be controlled based on the unit configuration and the requested heating capacity.

Reheat Control: Reheat will only be allowed when the primary air temperature is 5.0 deg. F below the configured reheat enable setpoint of 70.0 deg. F (adj.). The reheat will be enabled when the space temperature drops below the active cooling setpoint and the airflow is at the minimum cooling airflow setpoint. During reheat the VAV will operate at its minimum heating airflow setpoint and energize the heat as follows:

Proportional Hot Water Reheat: If the space temperature is below the heating setpoint the hot water reheat valve will modulate as required to maintain the active heating setpoint.

Space Sensor Failure: If there is a fault with the operation of the zone sensor an alarm will be annunciated at the BAS. Space sensor failure will cause the VAV to drive the damper to minimum airflow if the VAV is in the occupied mode, or drive it closed if the VAV is in the unoccupied mode.

SINGLE DUCT VAV W/ REHEAT SEQUENCE OF OPERATION

CID:	PID:	PROJECT ID:	NUM.	REVISION	DATE:	BY:
CID00029357	PID00031284	A223621	5			
PROJECT:			4			
DOT - 66 INDUSTRIAL DRIVE			3			
66 INDUSTRIAL DRIVE			2			
AUGUSTA, ME 04330			1	RECORD DOCUMENT	11/12/2014	MSH

PORTLAND ME 860 SPRING STREET, UNIT 1 WESTBROOK, ME 04092 207-828-1777	SALESPERSON: D TAYLOR	DESIGNED BY: D MACLAUCHLAN
	CHECKED BY:	
	FILE NAME: A223621.AXD	DWG: 44

Tag	Location Served	Max CFM	Min CFM	Inlet Size (in)	Floor	Served By
VAV - 1	Sign Workshop 142	1000	700	10"	First Floor	RTU - 1
VAV - 2	Sign Shop Office 141	500	350	8"	First Floor	RTU - 1
VAV - 3	Office 143	150	105	5"	First Floor	RTU - 1
VAV - 4	Office 144	110	75	5"	First Floor	RTU - 1
VAV - 6	Office 121	300	210	6"	First Floor	AHU - 2
VAV - 7	Storage 116	200	100	5"	First Floor	AHU - 2
VAV - 8	Women 117	700	490	8"	First Floor	AHU - 2
VAV - 9	Office 114	400	280	6"	First Floor	AHU - 2
VAV - 10	Office 113	500	350	8"	First Floor	AHU - 2
VAV - 11	Office 106	100	70	5"	First Floor	AHU - 2
VAV - 12	Break 111	800	550	8"	First Floor	AHU - 2
VAV - 13	Office 105	160	110	5"	First Floor	AHU - 2
VAV - 14	Office 100	750	525	8"	First Floor	AHU - 2
VAV - 15	Office 104	125	90	5"	First Floor	AHU - 2
VAV - 16	Office 101	200	140	5"	First Floor	AHU - 2
VAV - 17	Office 103	150	105	5"	First Floor	AHU - 2
VAV - 18	Office 135	300	250	6"	First Floor	AHU - 1
VAV - 19	Office 133	310	220	6"	First Floor	AHU - 1
VAV - 20	N.O.C. 132	300	210	6"	First Floor	AHU - 1
VAV - 21	Office 138	100	75	5"	First Floor	AHU - 1
VAV - 22	Office 131	600	420	8"	First Floor	AHU - 1
VAV - 23	Storage 214	400	280	6"	Second Floor	RTU - 2
VAV - 24	Open Office	1500	1350	12"	Second Floor	RTU - 2
VAV - 25	Conference Room 212	450	315	6"	Second Floor	RTU - 2
VAV - 26	Office 211	125	90	5"	Second Floor	RTU - 2
VAV - 27	Office 210	125	90	5"	Second Floor	RTU - 2
VAV - 28	Office 209	145	100	5"	Second Floor	RTU - 2
VAV - 29	Office 208	130	90	5"	Second Floor	RTU - 2
VAV - 30	Conference Room 207	160	150	5"	Second Floor	RTU - 2
VAV - 31	Office 206	450	405	6"	Second Floor	RTU - 2
VAV - 32	Office 205	110	75	5"	Second Floor	RTU - 2
VAV - 33	Office 204	110	75	5"	Second Floor	RTU - 2
VAV - 34	Office 203	110	75	5"	Second Floor	RTU - 2
VAV - 35	Office 201	1200	850	10"	Second Floor	RTU - 2
VAV - 36	Conference 112A	1200	600	10"	First Floor	AHU - 2
VAV - 37	Conference 112B	1200	600	10"	First Floor	AHU - 2

SINGLE DUCT VAV W/ REHEAT SCHEDULE

CID:	PID:	PROJECT ID:	NUM.	REVISION	DATE:	BY:
CID00029357	PID00031284	A223621	5			
PROJECT:			4			
DOT - 66 INDUSTRIAL DRIVE			3			
66 INDUSTRIAL DRIVE			2			
AUGUSTA, ME 04330			1	RECORD DOCUMENT	11/12/2014	MSH

PORTLAND ME
860 SPRING STREET, UNIT 1
WESTBROOK, ME 04092
207-828-1777

SALESPERSON: D TAYLOR
DESIGNED BY: D MACLAUCHLAN
CHECKED BY:
FILE NAME: A223621.AXD
DWG: 45

TYPICAL FOR 1 (CONVECTORS)

BILL OF MATERIALS				
TAG	QTY	VENDOR	PART NO	DESCRIPTION
- 3, TE - 4, TE - 5, TE - 6, TE - 7, TE -	10	TRANE	X13513153001	TEMP SENS ZONE THERM O/U
V	10	BELIMO	-	REFER TO VALVE SCHEDULE

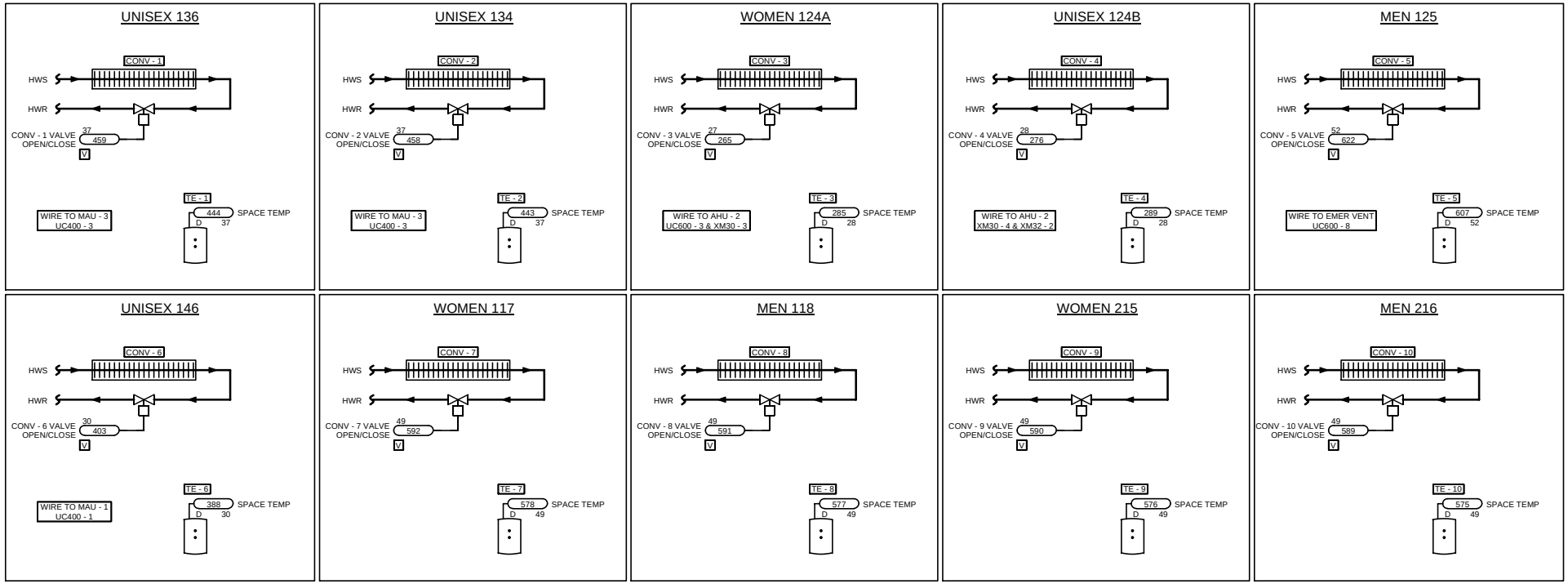

Sequence of Operation:

If space temperature falls below setpoint as sensed by wall sensor the HW valve will open.
When space temperature setpoint has been satisfied the HW valve will close.

TRANE

CONVECTORS FLOW DIAGRAM

CID:	PID:	PROJECT ID:	NUM.	REVISION	DATE:	BY:
CID00029357	PID00031284	A223621	5			
PROJECT:			4			
DOT - 66 INDUSTRIAL DRIVE			3			
66 INDUSTRIAL DRIVE			2			
AUGUSTA, ME 04330			1	RECORD DOCUMENT	11/12/2014	MSH

PORTLAND ME	SALESPERSON:	DESIGNED BY:	CHECKED BY:
860 SPRING STREET, UNIT 1	D TAYLOR	D MACLAUCHLAN	
WESTBROOK, ME 04092	FILE NAME: A223621.AXD		DWG: 46
207-828-1777			

TYPICAL FOR 1
(EXHAUST FANS)

BILL OF MATERIALS				
TAG	QTY	VENDOR	PART NO	DESCRIPTION
TE - 9	1	TRANE	X13511153001	TEMP SENS ZONE THERM O/U
DA - 7B	1	BELIMO	LF24-S US	ACT ON-OFF 24VAC SR 35IN-LB
CS - 2, CS - 11, CS - 7, CS - 17, CS - 9	5	KELE	RIBXGTFL	CUR SW, 0.75A, SPLIT, NO, LED
R - 2, R - 11, R - 7, R - 17, R - 9	7	KELE	RIBU1C	RLY SPDT, LED, 10-30 VAC/DC/120 VAC
- 2, D - 11, D - 7A, D - 17, D - 9, D - 7	6	RUSKIN	-	REFER TO DAMPER SCHEDULE

SIGN WORKSHOP 142

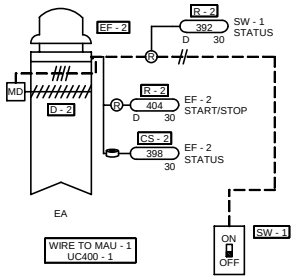

N.O.C.

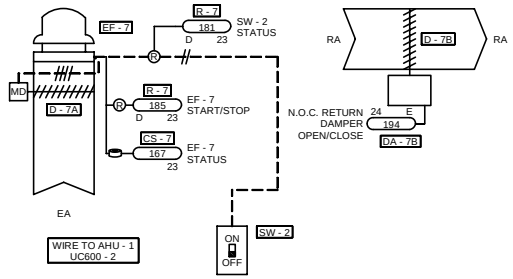

ELEV MACHINE RM 115

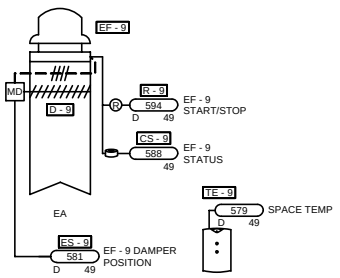

EXHAUST FAN W/ DAMPER & SWITCH WIRING DETAIL

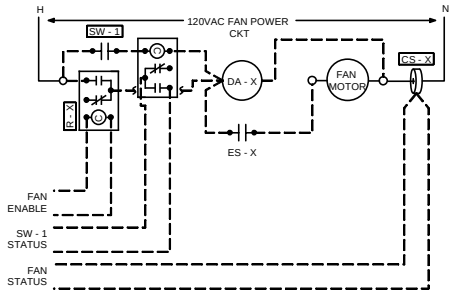

TOILETS 117/118/215/216

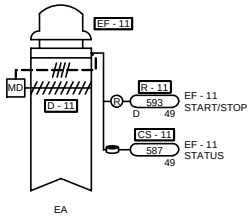

UNISEX 134/136

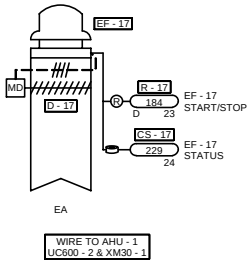

EXHAUST FAN W/ DAMPER WIRING DETAIL

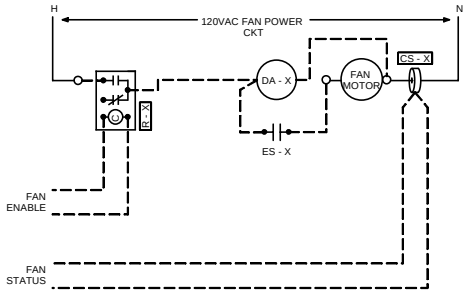

EXHAUST FAN FLOW DIAGRAM

CID:	PID:	PROJECT ID:	NUM.	REVISION	DATE:	BY:
CID00029357	PID00031284	A223621	5			
PROJECT:			4			
DOT - 66 INDUSTRIAL DRIVE			3			
66 INDUSTRIAL DRIVE			2			
AUGUSTA, ME 04330			1	RECORD DOCUMENT	11/12/2014	MSH

PORTLAND ME 860 SPRING STREET, UNIT 1 WESTBROOK, ME 04092 207-828-1777	SALESPERSON: D TAYLOR	DESIGNED BY: D MACLAUCHLAN	CHECKED BY:
	FILE NAME: A223621.AXD		DWG: 47

TRANE

Sequence of Operation:

EF – 2 will operate continuously with RTU – 1, in occupied mode. When fan is enabled the OA damper will open when end switch confirms damper is open. If fan is called to run and status is not confirmed an alarm will be initiated.

EF – 7 and EF – 17 will operate continuously with AHU – 1 in occupied mode. When fan is enabled the OA damper will open when end switch confirms damper is open. If fan is called to run and status is not confirmed an alarm will be initiated.

EF – 9 Elevator Machine Rm: If space temperature rises above setpoint EF – 9 damper will open upon confirmation from end switch and fan will be enabled. If fan is called to run and status is not confirmed an alarm will be initiated. When space temperature setpoint is satisfied the EA damper will close and the exhaust fan will be disabled.

EF – 11: Exhaust fan will operate continuously when either RTU – 2 or AHU – 2 is in occupied mode. When fan is enabled the OA damper will open when end switch confirms damper is open. If fan is called to run and status is not confirmed an alarm will be initiated.

Manual switched fans:

Wall Switch enables fan when switch ON.

a. EF – 2 (damper opens and fan starts).
b. EF – 7 (Fan damper opens and room return duct damper closes then fan starts).

EXHAUST FAN SEQUENCE OF OPERATION

CID:	PID:	PROJECT ID:	NUM.	REVISION	DATE:	BY:
CID00029357	PID00031284	A223621	5			
PROJECT:			4			
DOT - 66 INDUSTRIAL DRIVE			3			
66 INDUSTRIAL DRIVE			2			
AUGUSTA, ME 04330			1	RECORD DOCUMENT	11/12/2014	MSH

PORTLAND ME	SALESPERSON:	DESIGNED BY:	CHECKED BY:
860 SPRING STREET, UNIT 1 WESTBROOK, ME 04092 207-828-1777	D TAYLOR	D MACLAUCHLAN	
	FILE NAME: A223621.AXD		DWG: 48

TYPICAL FOR 1
(EF - 9, EF - 10, EF - 11 & CONV'S)

BILL OF MATERIALS				
TAG	QTY	VENDOR	PART NO	DESCRIPTION
ENC - 7	1	TRANE	X13091354010	ENC, TRACER UC SMALL, NON-POWERED
UC400 - 7	1	TRANE	BMUC400AAA01D001	UC400 CONTROLLER, FRAME MOUNT
TX - 7	1	KELE	TR75VA001	XFR 120:24VAC, 75VA, CB

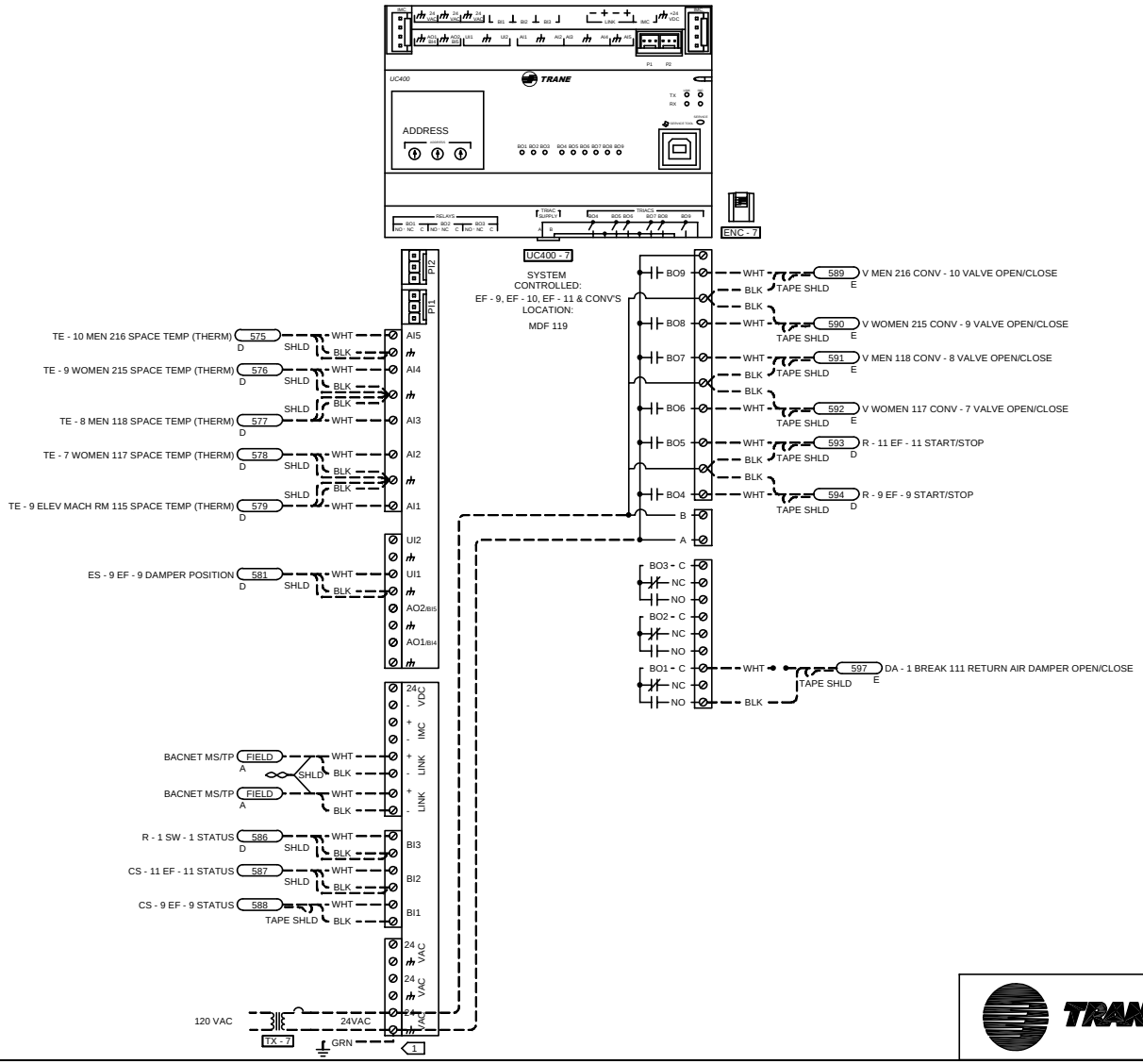

1 DEVICE MUST BE GROUNDED WITH FACTORY PROVIDED GROUND WIRE AS DETAILED IN THE DEVICE INSTALLATION LITERATURE.

EF - 9, EF - 10, EF - 11 & CONV'S UC400 - 7 WIRING DETAIL

CID:	PID:	PROJECT ID:	NUM.	REVISION	DATE:	BY:
CID00029357	PID00031284	A223621	5			
PROJECT:			4			
DOT - 66 INDUSTRIAL DRIVE			3			
66 INDUSTRIAL DRIVE			2			
AUGUSTA, ME 04330			1	RECORD DOCUMENT	11/12/2014	MSH

PORTLAND ME	SALESPERSON:	DESIGNED BY:	CHECKED BY:
860 SPRING STREET, UNIT 1	D TAYLOR	D MACLAUCHLAN	
WESTBROOK, ME 04092	FILE NAME: A223621.AXD		DWG: 49
207-828-1777			

TYPICAL FOR 1
(EMERGENCY VENTILATION SYSTEM)

BILL OF MATERIALS				
TAG	QTY	VENDOR	PART NO	DESCRIPTION
DA - 1, DA - 6	2	BELIMO	AFB24-S US	SPRING, 180IN-LB, ON/OFF, 24V, SW
CS - 6, CS - 1	2	KELE	RIBXGTFL	CUR SW, 0.75A, SPLIT, NO, LED
R - 1	1	KELE	RIBL3C	3PST RELAY
TMR - 1	1	KELE	FF60MHC	60 MINUTE TIMER SWITCH W/ HOLD
TX - 1	1	KELE	TR150VA001	150VA CONTROL TRANSFORMER 120:24VAC
D - 6, D - 1	2	RUSKIN	-	REFER TO DAMPER SCHEDULE
- 1, CO - 2, CO - 3, CO - 4, CO - 5, CO	6	VULCAIN	E3SCO	PLUG-IN CO CARTRIDGE (FOR USE WITH E3SM
M - 5, E3SM - 6, E3SM - 7, E3SM -	12	VULCAIN	E3SM	E³POINT W/O SENSOR, WALL MOUNT, MODBUS
NO2 - 2, NO2 - 3 NO2 - 4, NO2 - 5,	6	VULCAIN	E3NO2	PLUG-IN NO2 CARTRIDGE (FOR USE WITH E3SM
VA301C	1	VULCAIN	301-C-DLC	301C CONTROLLER WITH DATALOGGER, (4) DP

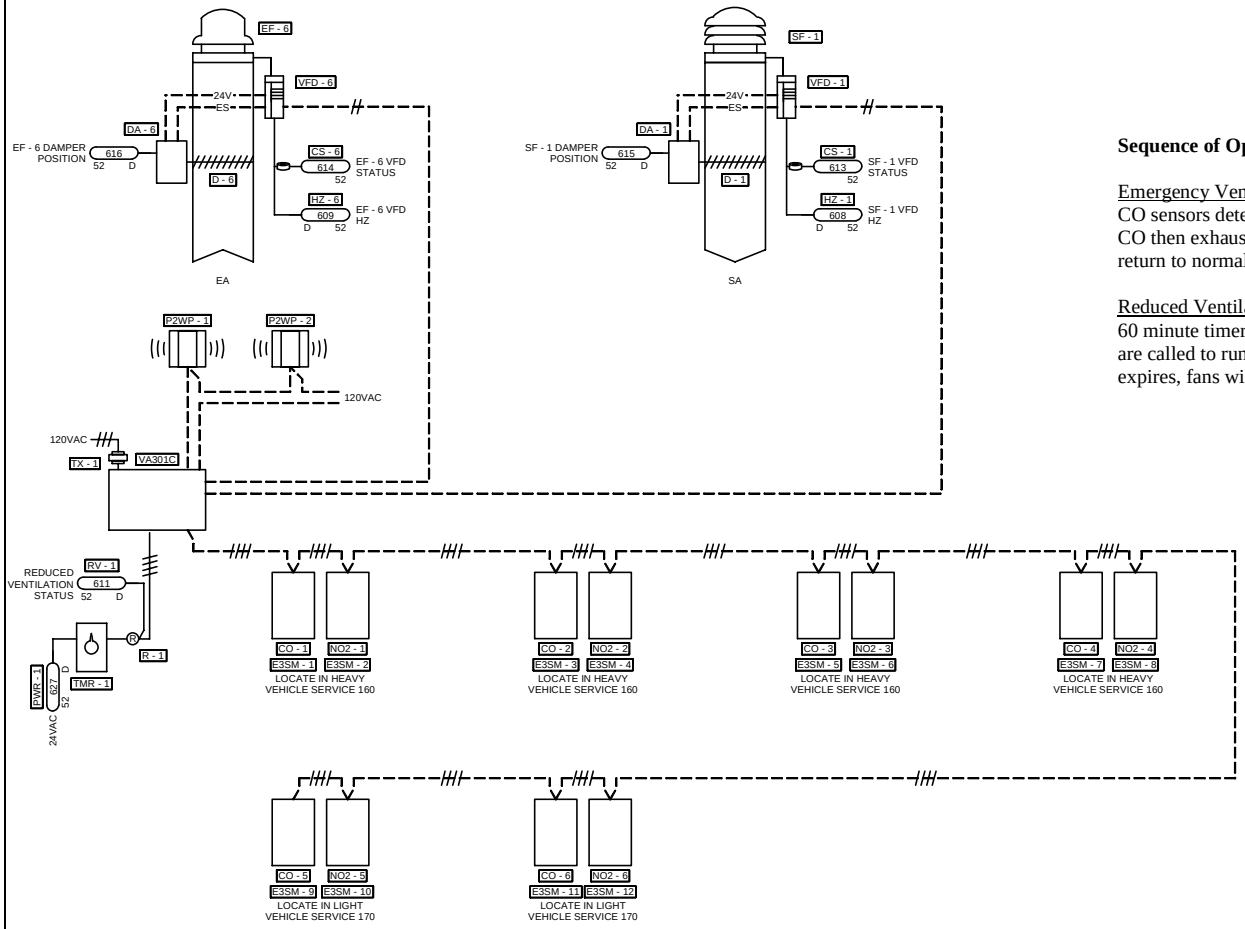

Sequence of Operation:

Emergency Ventilation: EF – 6 and SF – 1 will be enabled if NO2 sensors detect 3ppm and/or CO sensors detect 25ppm. If gas levels continue to rises above 5ppm of NO2 and/or 35ppm of CO then exhaust fans will continue to operate and an audible alarm will sound. When conditions return to normal EF – 6 and SF – 1 will be disabled and associated dampers will close.

Reduced Ventilation: EF – 6 and SF – 1 will be enabled and associated dampers will open when 60 minute timer switch is enabled. When timer is in use a signal will be sent to Trane. If fans are called to run by timer and status is not confirmed an alarm will be initiated. When timer expires, fans will be disabled and dampers will close.

EMERGENCY VENTILATION SYSTEM FLOW DIAGRAM

CID:	PID:	PROJECT ID:	NUM.	REVISION	DATE:	BY:
CID00029357	PID00031284	A223621	5			
PROJECT:			4			
DOT - 66 INDUSTRIAL DRIVE			3			
66 INDUSTRIAL DRIVE			2			
AUGUSTA, ME 04330			1	RECORD DOCUMENT	11/12/2014	MSH

PORTLAND ME
860 SPRING STREET, UNIT 1
WESTBROOK, ME 04092
207-828-1777

SALESPERSON: D TAYLOR
DESIGNED BY: D MACLAUCHLAN
CHECKED BY:
FILE NAME: A223621.AXD
DWG: 50

TYPICAL FOR 1
(EMERGENCY VENTILATION SYSTEM)

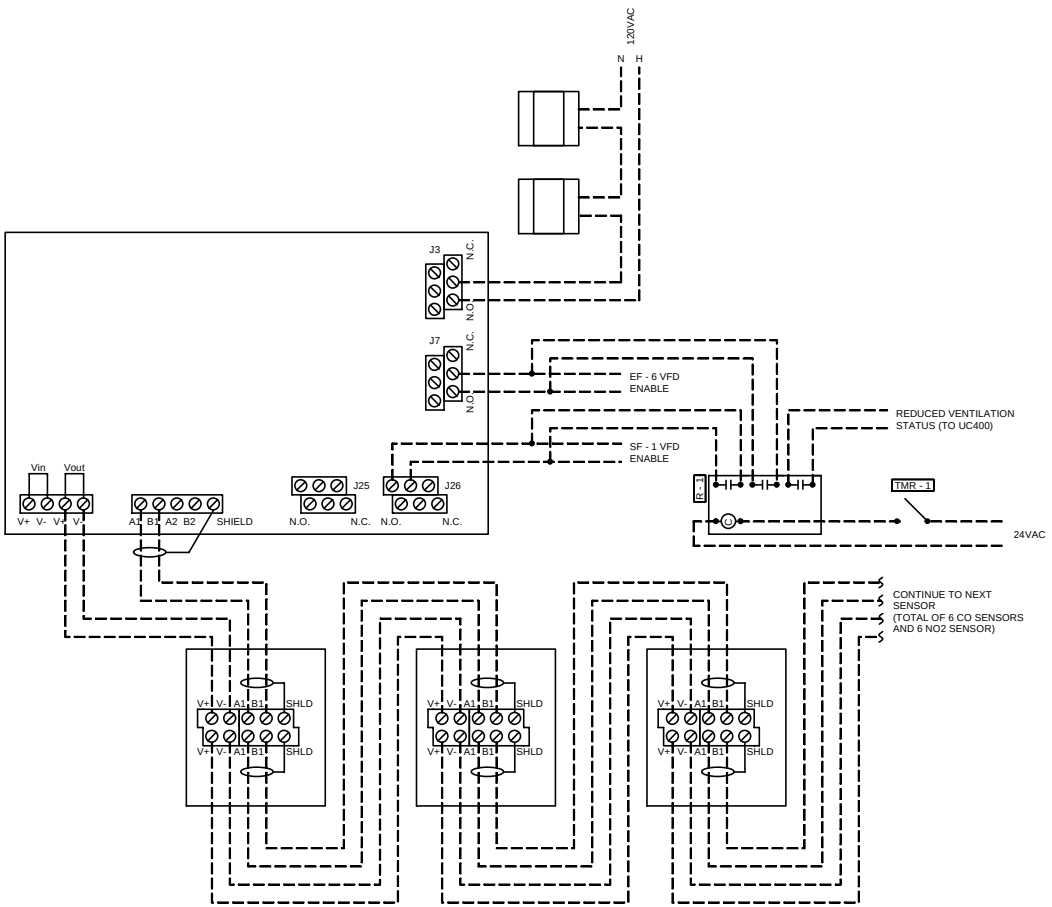

VFD WIRING DETAIL

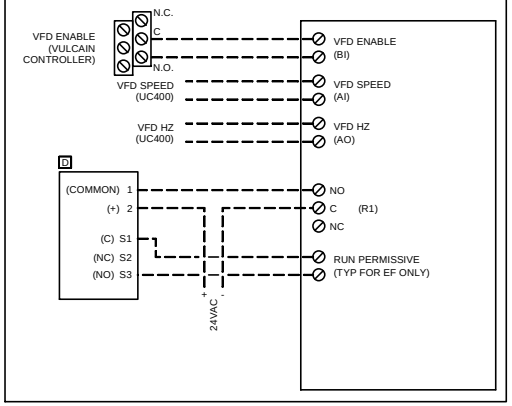

EMERGENCY VENTILATION SYSTEM WIRING DETAIL

CID:	PID:	PROJECT ID:	NUM.	REVISION	DATE:	BY:
CID00029357	PID00031284	A223621	5			
PROJECT:			4			
DOT - 66 INDUSTRIAL DRIVE			3			
66 INDUSTRIAL DRIVE			2			
AUGUSTA, ME 04330			1	RECORD DOCUMENT	11/12/2014	MSH

PORTLAND ME
860 SPRING STREET, UNIT 1
WESTBROOK, ME 04092
207-828-1777

SALESPERSON: D TAYLOR
DESIGNED BY: D MACLAUCHLAN
CHECKED BY:
FILE NAME: A223621.AXD
DWG: 51

TYPICAL FOR 1
(EMERGENCY VENTILATION SYSTEM)

BILL OF MATERIALS				
TAG	QTY	VENDOR	PART NO	DESCRIPTION
ENC - 8	1	TRANE	X19091354010	ENC, TRACER UC SMALL, NON-POWERED
UC400 - 8	1	TRANE	BMUC400AAA01D001	UC400 CONTROLLER, FRAME MOUNT
TX - 8	1	KELE	TR75VA001	XFR 120:24VAC, 75VA, CB

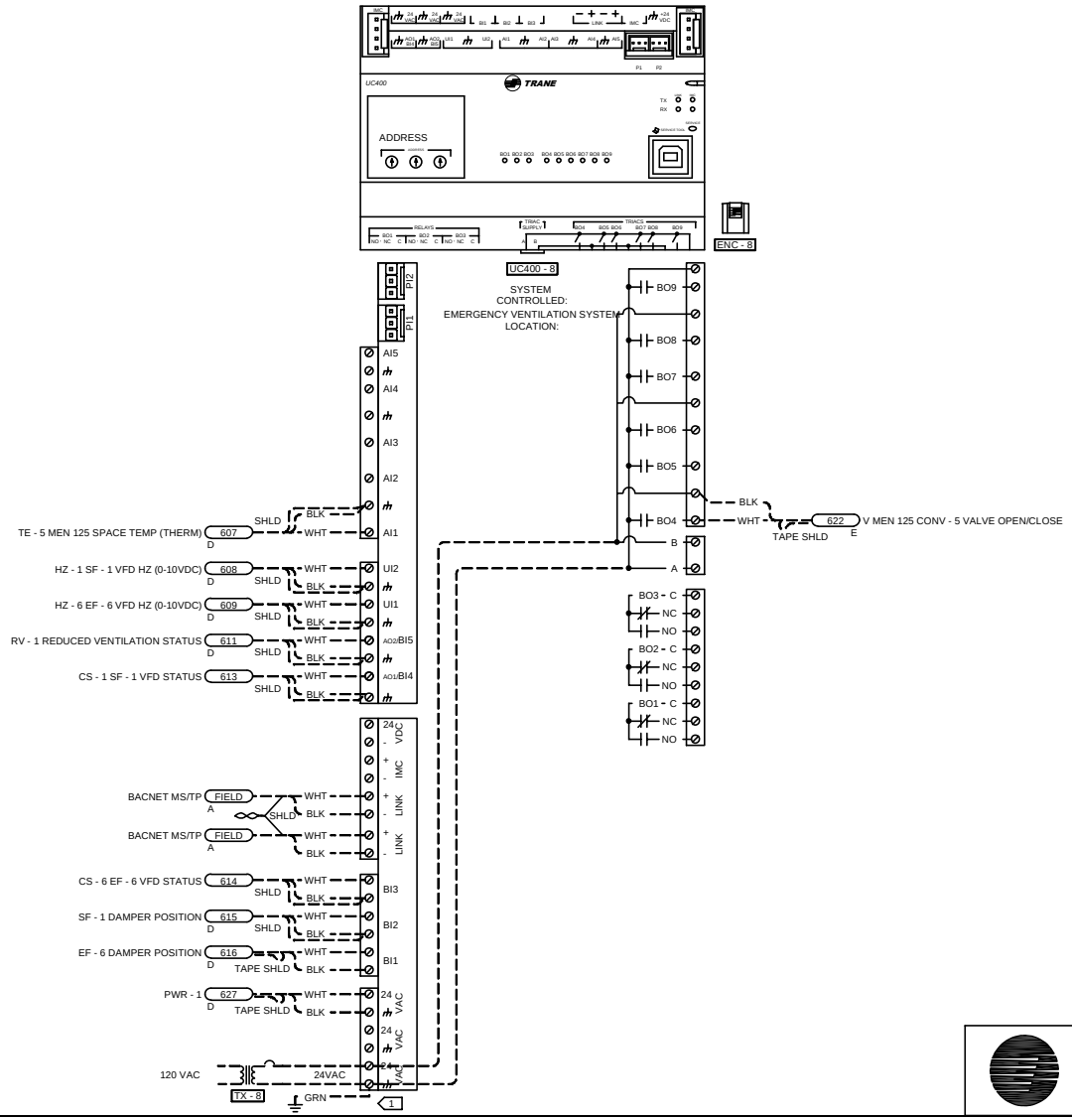

1 DEVICE MUST BE GROUNDED WITH FACTORY PROVIDED GROUND WIRE AS DETAILED IN THE DEVICE INSTALLATION LITERATURE.

EMERGENCY VENTILATION SYSTEM UC400 - 8 WIRING DETAIL

CID:	PID:	PROJECT ID:	NUM.	REVISION	DATE:	BY:
CID00029357	PID00031284	A223621	5			
PROJECT:			4			
DOT - 66 INDUSTRIAL DRIVE			3			
66 INDUSTRIAL DRIVE			2			
AUGUSTA, ME 04330			1	RECORD DOCUMENT	11/12/2014	MSH

PORTLAND ME 860 SPRING STREET, UNIT 1 WESTBROOK, ME 04092 207-828-1777	SALESPERSON: D TAYLOR	DESIGNED BY: D MACLAUCHLAN
	FILE NAME: A223621.AXD	CHECKED BY:
		DWG: 52

TYPICAL FOR 1
(KITCHEN HOOD EXHAUST)

BILL OF MATERIALS				
TAG	QTY	VENDOR	PART NO	DESCRIPTION
DA - 1	1	BELIMO	LF24-SR US	ACT ON-OFF 24VAC SR 35IN-LB
R - 1	1	KELE	RIBU1C	RLY SPDT, LED, 10-30 VAC/DC/120 VAC
D - 1	1	RUSKIN	-	REFER TO DAMPER SCHEDULE

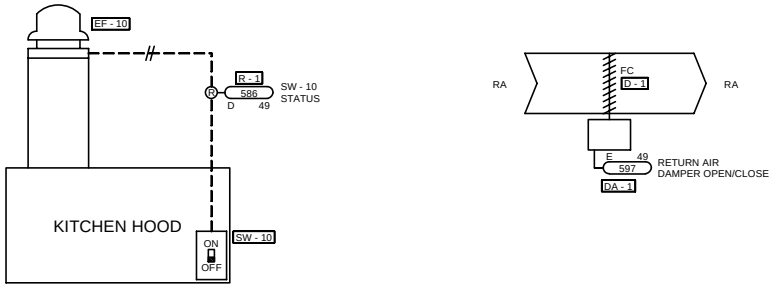

Sequence of Operation:

When fan switch located at the Kitchen Hood is in the ON position the fan will be enabled and the Trane system will receive status that fan switch is in the ON position. When fan is enabled the return damper will close 90%. When fan switch is in the OFF position the return damper will open and fan will be disabled.

KITCHEN HOOD SYSTEM FLOW DIAGRAM

CID:	PID:	PROJECT ID:	NUM.	REVISION	DATE:	BY:
CID00029357	PID00031284	A223621	5			
PROJECT:			4			
DOT - 66 INDUSTRIAL DRIVE			3			
66 INDUSTRIAL DRIVE			2			
AUGUSTA, ME 04330			1	RECORD DOCUMENT	11/12/2014	MSH

PORTLAND ME	SALESPERSON:	DESIGNED BY:	CHECKED BY:
860 SPRING STREET, UNIT 1	D TAYLOR	D MACLAUCHLAN	
WESTBROOK, ME 04092	FILE NAME: A223621.AXD		DWG: 53
207-828-1777			

TYPICAL FOR 1
(MISCELLANEOUS POINTS)

BILL OF MATERIALS				
TAG	QTY	VENDOR	PART NO	DESCRIPTION
CS - 1 CS - 2	2	KELE	RIBXGTFL	CUR SW, 0.75A, SPLIT, NO, LED
TE - 1	1	KELE	ST-D24-XH	TEMP SENS, DUCT/IMM., THERM., 9 IN, HB

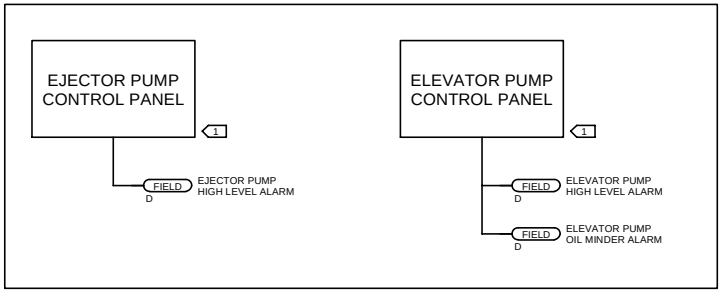

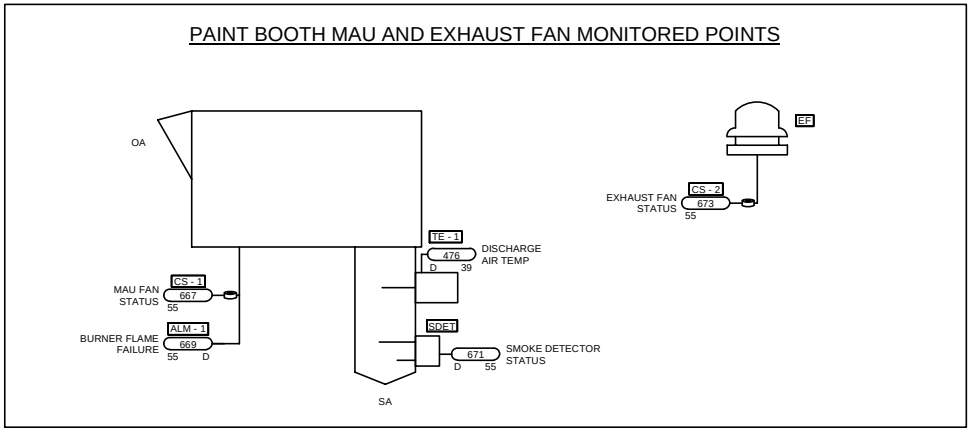

Sequence of Operation:

Miscellaneous points to be monitored by Trane for alarm conditions. If condition is active an alarm will be initiated to Trane system.

1 WIRE POINTS TO NEAREST CONTROLLER.

MISCELLANEOUS POINTS FLOW DIAGRAM

CID:	PID:	PROJECT ID:	NUM.	REVISION	DATE:	BY:
CID00029357	PID00031284	A223621	5			
PROJECT:			4			
DOT - 66 INDUSTRIAL DRIVE			3			
66 INDUSTRIAL DRIVE			2			
AUGUSTA, ME 04330			1	RECORD DOCUMENT	11/12/2014	MSH

PORTLAND ME
860 SPRING STREET, UNIT 1
WESTBROOK, ME 04092
207-828-1777

SALESPERSON: D TAYLOR
DESIGNED BY: D MACLAUCHLAN
CHECKED BY:
FILE NAME: A223621.AXD
DWG: 54

TYPICAL FOR 1
(PAINT BOOTH MAU & EF)

BILL OF MATERIALS				
TAG	QTY	VENDOR	PART NO	DESCRIPTION
XM30 - 6	1	TRANE	X13651537010	4 POINT UI/AO EXPANSION MODULE

XM30 - 6

SYSTEM
CONTROLLED:
PAINT BOOTH MAU & EF
LOCATION:

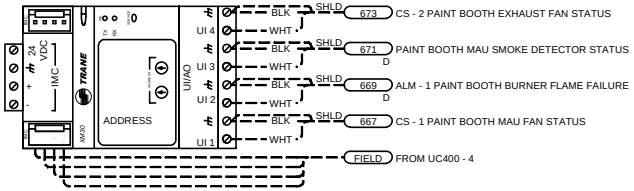

PAINT BOOTH MAU & EF XM30 - 6 WIRING DETAIL

CID:	PID:	PROJECT ID:	NUM.	REVISION	DATE:	BY:
CID00029357	PID00031284	A223621	5			
PROJECT:			4			
DOT - 66 INDUSTRIAL DRIVE			3			
66 INDUSTRIAL DRIVE			2			
AUGUSTA, ME 04330			1	RECORD DOCUMENT	11/12/2014	MSH

PORTLAND ME
860 SPRING STREET, UNIT 1
WESTBROOK, ME 04092
207-828-1777

SALESPERSON: D TAYLOR
DESIGNED BY: D MACLAUCHLAN
CHECKED BY:
FILE NAME: A223621.AXD
DWG: 55

TYPICAL FOR 17
(GAS FIRED UNIT HEATERS)

BILL OF MATERIALS				
TAG	QTY	VENDOR	PART NO	DESCRIPTION

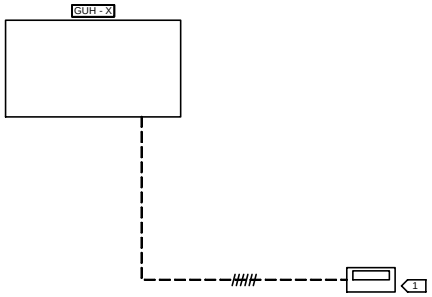

Tag	Location Served
GUH - 1	Sign Shop Floor 140
GUH - 2	Sign Shop Floor 140
GUH - 3	Fabrication 180
GUH - 4	Fabrication 180
GUH - 5	Heavy Vehicle Service 160
GUH - 6	Heavy Vehicle Service 160
GUH - 7	Fast Lane 150
GUH - 8	Fast Lane 150
GUH - 9	NAPA 193
GUH - 10	Light Vehicle Service 170
GUH - 11	Light Vehicle Service 170
GUH - 12	Fabrication 181
GUH - 13	Fabrication 180
GUH - 14	Fabrication 180
GUH - 15	Light Vehicle Service 170
GUH - 16	Light Vehicle Service 170
GUH - 17	Prep 193

Sequence of Operation:

Occupied Mode: If space temperature falls below setpoint (70°F adj.) as sensed by unit provided thermostat the unit heater will be enabled. When space temperature is satisfied the unit will be disabled.

Unoccupied Mode (night setback): If space temperature falls below setpoint (65°F adj.) as sensed by unit provided thermostat the unit heater will be enabled. When space temperature is satisfied the unit will be disabled.

1 THERMOSTAT PROVIDED W/ UNIT. WIRING BY TRANE.

GUH FLOW DIAGRAM

CID:	PID:	PROJECT ID:	NUM.	REVISION	DATE:	BY:
CID00029357	PID00031284	A223621	5			
PROJECT:			4			
DOT - 66 INDUSTRIAL DRIVE			3			
66 INDUSTRIAL DRIVE			2			
AUGUSTA, ME 04330			1	RECORD DOCUMENT	11/12/2014	MSH

PORTLAND ME	SALESPERSON:	DESIGNED BY:	CHECKED BY:
860 SPRING STREET, UNIT 1	D TAYLOR	D MACLAUCHLAN	
WESTBROOK, ME 04092	FILE NAME: A223621.AXD		DWG: 56
207-828-1777			

TYPICAL FOR 5
(UNIT HEATERS/CABINET UNIT HEATERS)

BILL OF MATERIALS				
TAG	QTY	VENDOR	PART NO	DESCRIPTION
V	5	BELIMO	-	REFER TO VALVE SCHEDULE
A	5	KELE	A19DAC-1C	STRAP ON AQUASTAT
TS	5	KELE	ETD5-S-1S	H/C TSTAT; 50-90F, LINE VOLT

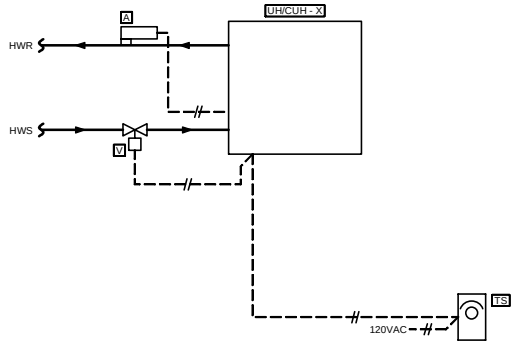

Tag	Location Served
UH - 1	Mech 196
CUH - 1	Entry 196
CUH - 2	Stair 1 ST12
CUH - 3	Corridor 110
CUH - 4	Stair 2 ST22

UH/CUH WIRING DETAIL

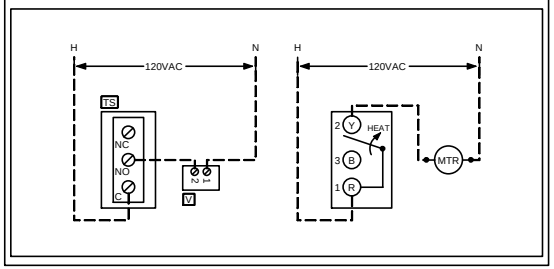

Sequence of Operation:

Occupied Mode: If space temperature falls below setpoint (70°F adj.) as sensed by space thermostat the NO contact will open and the HW valve will open. When aquastat confirms HW flow (135°F adj.) the unit will be enabled. When space temperature setpoint is satisfied the NO contact will close, HW valve will close and when aquastat no longer senses flow the unit will be disabled.

Unoccupied Mode (night setback): If space temperature falls below setpoint (65°F adj.) as sensed by space thermostat the NO contact will open and the HW valve will open. When aquastat confirms HW flow (135°F adj.) the unit will be enabled. When space temperature setpoint is satisfied the NO contact will close, HW valve will close and when aquastat no longer senses flow the unit will be disabled.

UH/CUH FLOW DIAGRAM

CID:	PID:	PROJECT ID:	NUM.	REVISION	DATE:	BY:
CID00029357	PID00031284	A223621	5			
PROJECT:			4			
DOT - 66 INDUSTRIAL DRIVE			3			
66 INDUSTRIAL DRIVE			2			
AUGUSTA, ME 04330			1	RECORD DOCUMENT	11/12/2014	MSH

PORTLAND ME	SALESPERSON:	DESIGNED BY:	CHECKED BY:
860 SPRING STREET, UNIT 1	D TAYLOR	D MACLAUCHLAN	
WESTBROOK, ME 04092	FILE NAME: A223621.AXD		DWG: 57
207-828-1777			

TYPICAL FOR 2
(DUCTLESS SPLIT AC UNITS)

BILL OF MATERIALS				
TAG	QTY	VENDOR	PART NO	DESCRIPTION

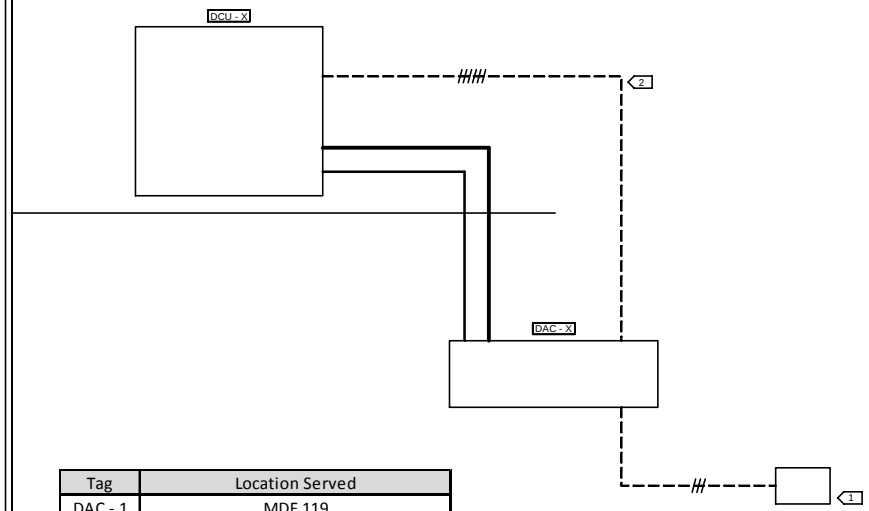

Tag	Location Served
DAC - 1	MDF 119
DAC - 2	Break 123

LG THERMOSTAT WIRING DETAIL

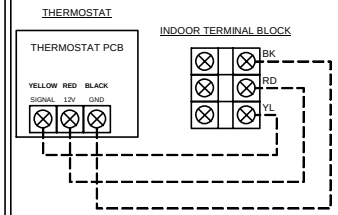

Thermostat PCB Terminal block Remark	Indoor Terminal block	Function
YELLOW	YL	Signal
RED	RD	12V
BLACK	BK	GND

Sequence of Operation:

If space temperature rises above setpoint as sensed by unit provided thermostat the unit will be enabled. When space temperature setpoint is satisfied the unit will be disabled.

2 WIRING BETWEEN INDOOR AND OUTDOOR UNIT TO BE CONFIRMED IN FIELD WITH UNIT PROVIDED SUBMITTAL.

1 THERMOSTAT PROVIDED W/ UNIT. SEE DETAIL FOR WIRING.

DUCTLESS SPLIT AC UNITS FLOW DIAGRAM

CID:	PID:	PROJECT ID:	NUM.	REVISION	DATE:	BY:
CID00029357	PID00031284	A223621	5			
PROJECT:			4			
DOT - 66 INDUSTRIAL DRIVE			3			
66 INDUSTRIAL DRIVE			2			
AUGUSTA, ME 04330			1	RECORD DOCUMENT	11/12/2014	MSH

PORTLAND ME	SALESPERSON:	DESIGNED BY:	CHECKED BY:
860 SPRING STREET, UNIT 1	D TAYLOR	D MACLAUCHLAN	
WESTBROOK, ME 04092	FILE NAME: A223621.AXD		DWG: 58
207-828-1777			

TRANE

BILL OF MATERIALS				
TAG PREFIX	QTY	VENDOR	PART NO	DESCRIPTION
WEL	4	TRANE	4190-1108	WELL, 4IN X 1/2IN FPT X 3/4IN MPT, SS
TEH	2	TRANE	4190-7020	3%DUCT RH SENS, TEMP
TE	4	TRANE	41901132	TEMP SENS, DUCT/IMM, THERM 4 IN
UC400	8	TRANE	BMUC400AAA0100011	UC400 CONTROLLER, FRAME MOUNT
UC600	1	TRANE	BMUC600AAA0100011	UC600 CONTROLLER, FRAME MOUNT
TE	6	TRANE	X1351152701	TEMP SENS ZONE THERM O/U SP
TE	11	TRANE	X1351153001	TEMP SENS ZONE THERM O/U
XM30	2	TRANE	X13651537010	4 POINT UI/AO EXPANSION MODULE
ENC	1	TRANE	X13651559010	ENC, TRACER UC MEDIUM, 120 VAC OUTLET
CO2 - 1	2	TRANE	X1379042201	CO2 SENS, DEMAND-CONTROLLED VENT
ENC	8	TRANE	X19091354010	ENC, TRACER UC SMALL, NON-POWERED
TEH	1	BAPI	BA/10K-2-H300-O-BB	OUTSIDE AIR TEMP & RH 3%
V1, V	51	BELIMO	-	REFER TO VALVE SCHEDULE
V	5	BELIMO	-	REFER TO VALVE SCHEDULE
DA - 1, DA - 6	2	BELIMO	AFB24-S US	SPRING, 180IN-LB, ON/OFF, 24V, SW
DA	2	BELIMO	LF24-S US	ACT ON-OFF 24VAC SR 35IN-LB
DPS	4	DWYER	ADPS-03-2-N	DIFF PRES SW, 0.02-2.01IN WC
HDW	2	KELE	A-302-K	STAT PRESS TIP, 1/4 BARB
HDW	2	KELE	A-345-K	FLANGE MOUNTING KIT
A	5	KELE	A19DAC-1C	STRAP ON AQUASTAT
LLT	2	KELE	A70HA-2	LOW TSTAT, 35-80F, MAN'L, SPST, AUX, 6 FT
TS	5	KELE	ETD5-S-1S	H/C TSTAT; 50-90F, LINE VOLT
TMR	1	KELE	FF60MHC	60 MINUTE TIMER SWITCH W/ HOLD

BILL OF MATERIALS

CID:	PID:	PROJECT ID:	NUM.	REVISION	DATE:	BY:
CID00029357	PID00031284	A223621	5			
PROJECT:			4			
DOT - 66 INDUSTRIAL DRIVE			3			
66 INDUSTRIAL DRIVE			2			
AUGUSTA, ME 04330			1	RECORD DOCUMENT	11/12/2014	MSH

PORTLAND ME	SALESPERSON:	DESIGNED BY:	CHECKED BY:
860 SPRING STREET, UNIT 1 WESTBROOK, ME 04092 207-828-1777	D TAYLOR	D MACLAUCHLAN	
	FILE NAME: A223621.AXD		DWG: 59

BILL OF MATERIALS				
TAG PREFIX	QTY	VENDOR	PART NO	DESCRIPTION
FXP - 1	1	KELE	FXP-22	AIRFLOW SENSING ELEMENT
FXP - 1	1	KELE	FXP-35	AIRFLOW SENSING ELEMENT
TE	36	KELE	KTV-24	VAV BOX DUCT TEMPERATURE SENSOR
R	1	KELE	RIBL3C	3PST RELAY
R	35	KELE	RIBU1C	RLY SPDT, LED, 10-30 VAC/DC/120 VAC
CS	24	KELE	RIBXGTFL	CUR SW, 0.75A, SPLIT, NO, LED
HDW	2	KELE	RPS	WALL-MOUNT ROOM PRESSURE SENSOR W/1/4 IN BARB
TE	10	KELE	ST-D24-XH	TEMP SENS, DUCT/IMM, THERM, 9 IN, HB
TE	1	KELE	ST-R24S-C	SLAB TEMP
TX - 1	1	KELE	TR150VA001	150VA CONTROL TRANSFORMER 120:24VAC
TX	36	KELE	TR50VA005	XFR 120:24VAC, 50VA, CB
TX	8	KELE	TR75VA001	XFR 120:24VAC, 75VA, CB
D	24	RUSKIN	-	REFER TO DAMPER SCHEDULE
DPT	2	SETRA	2601-MS1-N	OUTSIDE AIRFLOW SENSOR
BPT	1	SETRA	2601-MS1-N	BUILDING STATIC PRESSURE SENSOR
VA301C	1	VULCAIN	301-C-DLC	301C CONTROLLER WITH DATALOGGER, (4) DPDT RELAYS, NEMA 4X ENCLOSURE
2, NO2 - 3 NO2 - 4, N	6	VULCAIN	E3NO2	PLUG-IN NO2 CARTRIDGE (FOR USE WITH E3SM)
- 2, CO - 3, CO - 4, CC	6	VULCAIN	E3SCO	PLUG-IN CO CARTRIDGE (FOR USE WITH E3SM)
E3SM - 6, E3SM - 7, E	12	VULCAIN	E3SM	E3POINT W/O SENSOR, WALL MOUNT, MODBUS/BACNET, 24VAC/VDC

BILL OF MATERIALS-2

CID:	PID:	PROJECT ID:	NUM.	REVISION	DATE:	BY:
CID00029357	PID00031284	A223621	5			
PROJECT:			4			
DOT - 66 INDUSTRIAL DRIVE			3			
66 INDUSTRIAL DRIVE			2			
AUGUSTA, ME 04330			1	RECORD DOCUMENT	11/12/2014	MSH

PORTLAND ME 860 SPRING STREET, UNIT 1 WESTBROOK, ME 04092 207-828-1777	SALESPERSON: D TAYLOR	DESIGNED BY: D MACLAUCHLAN	CHECKED BY:
	FILE NAME: A223621.AXD		DWG: 60

Item	Service	Tag	Drawing Dimensions Width (in)	Drawing Dimensions Height (in)	Damper Diam. (in)	Area (SQFT)	Type	Vendor	Model	Control Type	Fail Position	Signal	Required Voltage	Actuator(s)	Vendor	Comments
	Control Dampers															
	Exhaust Fan Dampers															
1	EF - 1 Damper	D - 1	12.0	14.0	-	1.17	PB	Ruskin	CD-60	Electric	fail closed	on/off	24vac	LF24-S US NC/FC	Belimo	
2	EF - 2 Damper	D - 2	10.0	8.0	-	0.56	PB	Ruskin	CD-60	Electric	fail closed	on/off	24vac	LF24-S US NC/FC	Belimo	
3	EF - 3 Damper	D - 3	14.0	14.0	-	1.36	PB	Ruskin	CD-60	Electric	fail closed	on/off	24vac	LF24-S US NC/FC	Belimo	
4	EF - 6 Damper	D - 6	60.0	60.0	-	25.00	PB	Ruskin	CD-60	Electric	fail closed	on/off	24vac	AFB24-S US NC/FC	Belimo	
5	EF - 7 Damper	D - 7A	-	-	8	0.35	PB	Ruskin	CDRS25	Electric	fail closed	on/off	24vac	LF24-S US NC/FC	Belimo	
6	EF - 7 Room Return Damper	D - 7B	-	-	9	0.44	PB	Ruskin	CDRS25	Electric	fail closed	on/off	24vac	LF24-S US NC/FC	Belimo	
7	EF - 8 Damper	D - 8	14.0	14.0	-	1.36	PB	Ruskin	CD-60	Electric	fail closed	on/off	24vac	LF24-S US NC/FC	Belimo	
8	EF - 9 Damper	D - 9	-	-	8	0.35	PB	Ruskin	CDRS25	Electric	fail closed	on/off	24vac	AFB24-S US NC/FC	Belimo	
9	EF - 10 Return Air Damper	D - 1	12.0	12.0		1.00	PB	Ruskin	CD-60	Electric	fail closed	on/off	24vac	LF24-S US NC/FC	Belimo	
10	EF - 11 Damper	D - 11	16.0	16.0	-	1.78	PB	Ruskin	CD-60	Electric	fail closed	on/off	24vac	LF24-S US NC/FC	Belimo	
11	EF - 12 Damper	D - 12	16.0	16.0	-	1.78	PB	Ruskin	CD-60	Electric	fail closed	on/off	24vac	LF24-S US NC/FC	Belimo	
12	EF - 13 Damper	D - 13	16.0	14.0	-	1.56	PB	Ruskin	CD-60	Electric	fail closed	on/off	24vac	LF24-S US NC/FC	Belimo	
13	EF - 14 Damper	D - 14	20.0	20.0	-	2.78	PB	Ruskin	CD-60	Electric	fail closed	on/off	24vac	LF24-S US NC/FC	Belimo	
14	EF - 15 Damper	D - 15	12.0	16.0	-	1.33	PB	Ruskin	CD-60	Electric	fail closed	on/off	24vac	LF24-S US NC/FC	Belimo	
15	EF - 16 Damper	D - 16	12.0	12.0	-	1.00	PB	Ruskin	CD-60	Electric	fail closed	on/off	24vac	LF24-S US NC/FC	Belimo	
16	EF - 17 Damper	D - 17	-	-	8	0.35	PB	Ruskin	CDRS25	Electric	fail closed	on/off	24vac	LF24-S US NC/FC	Belimo	
17	EF - 18 Damper	D - 18	18.0	18.0	-	2.25	PB	Ruskin	CD-60	Electric	fail closed	on/off	24vac	LF24-S US NC/FC	Belimo	
	Supply Fan Damper															
18	SF - 1	D - 1	50.0	70.0	-	24.31	PB	Ruskin	CD-60	Electric	fail closed	on/off	24vac	AFB24-S US NC/FC	Belimo	
	GRV Dampers															
19	GRV - 1 Damper	D - 4	12.0	22.0	-	1.83	PB	Ruskin	CD-60	Electric	fail closed	on/off	24vac	LF24-S US NC/FC	Belimo	
20	GRV - 2 Damper	D - 2	12.0	12.0	-	1.00	PB	Ruskin	CD-60	Electric	fail closed	on/off	24vac	LF24-S US NC/FC	Belimo	
21	GRV - 3 Damper	D - 3	12.0	12.0	-	1.00	PB	Ruskin	CD-60	Electric	fail closed	on/off	24vac	LF24-S US NC/FC	Belimo	
22	GRV - 4 Damper	D - 4	35.0	17.0	-	4.13	PB	Ruskin	CD-60	Electric	fail closed	on/off	24vac	LF24-S US NC/FC	Belimo	
	ERU - 3 Dampers															
23	OA Damper	D - 1	16.0	16.0	-	1.78	PB	Ruskin	CD-60	Electric	fail closed	on/off	24vac	LF24-S US NC/FC	Belimo	
24	EA Damper	D - 2	16.0	16.0	-	1.78	PB	Ruskin	CD-60	Electric	fail closed	on/off	24vac	LF24-S US NC/FC	Belimo	

TRANE

DAMPER SCHEDULE

CID:	PID:	PROJECT ID:	NUM.	REVISION	DATE:	BY:
CID00029357	PID00031284	A223621	5			
PROJECT:			4			
DOT - 66 INDUSTRIAL DRIVE			3			
66 INDUSTRIAL DRIVE			2			
AUGUSTA, ME 04330			1	RECORD DOCUMENT	11/12/2014	MSH

PORTLAND ME 860 SPRING STREET, UNIT 1 WESTBROOK, ME 04092 207-828-1777	SALESPERSON: D TAYLOR	DESIGNED BY: D MACLAUCHLAN
	FILE NAME: A223621.AXD	CHECKED BY:
		DWG: 61

Label					Valve Data					inches	inches								Actuator Data			
Item	Equipment	Room Name	Tag	Medium	Qty.	Manuf.	Model No.	Type	Fail Position	Pipe Size	Valve Size	Conn	Closeoff Pressure	GPM	Valve Cv	Design Cv	Design Delta P	Actual Delta P	Model No.	Power	Control Signal	Comment
	Radiant Floor Valve																					
1	3-way Manifold Valve	Wash 191 Radiant Floor	V1	HW	1	Belimo	B329 +	3 way	fail last	1-1/4"	1-1/4"	screwed	200	6.00	10.00	2.683	5.00	0.36	ARB24-SR NO	24vac	2-10vdc	
	AHU Valves																					
2	AHU - 1 HW Valve	-	V1	HW	1	Belimo	B211 +	2 way	fail open	3/4"	1/2"	screwed	200	2.63	1.90	1.176	5.00	1.92	LF24-SR US NO/FO	24vac	2-10vdc	
3	AHU - 2 HW Valve	-	V1	HW	1	Belimo	B222 +	2 way	fail open	1-1/4"	1"	screwed	200	7.66	7.40	3.426	5.00	1.07	LF24-SR US NO/FO	24vac	2-10vdc	
	Heating Coil Valves																					
4	HC - 1 HW Valve	Break 123	V	HW	1	Belimo	B210 +	2 way	fail open	-	1/2"	screwed	200	1.90	1.20	0.850	5.00	2.51	LF24-SR US NO/FO	24vac	2-10vdc	
5	HC - 2 HW Valve	ERU - 3 Publications and Lockers 183	V	HW	1	Belimo	B210 +	2 way	fail open	3/4"	1/2"	screwed	200	1.09	1.20	0.487	5.00	0.83	LF24-SR US NO/FO	24vac	2-10vdc	
	VAV HW Valves																					
6	VAV - 1 HW Valve	Sign Workshop 142	V	HW	1	Belimo	B211 +	2 way	fail last	-	1/2"	screwed	200	2.82	1.90	1.261	5.00	2.20	TR24-3 US NO	24vac	floating	
7	VAV - 2 HW Valve	Sign Shop Office 141	V	HW	1	Belimo	B210 +	2 way	fail last	-	1/2"	screwed	200	1.69	1.20	0.756	5.00	1.98	TR24-3 US NO	24vac	floating	
8	VAV - 3 HW Valve	Office 143	V	HW	1	Belimo	B209 +	2 way	fail last	-	1/2"	screwed	200	0.50	0.80	0.224	5.00	0.39	TR24-3 US NO	24vac	floating	
9	VAV - 4 HW Valve	Office 144	V	HW	1	Belimo	B209 +	2 way	fail last	-	1/2"	screwed	200	0.50	0.80	0.224	5.00	0.39	TR24-3 US NO	24vac	floating	
10	VAV - 6 HW Valve	Office 121	V	HW	1	Belimo	B209 +	2 way	fail last	-	1/2"	screwed	200	1.11	0.80	0.496	5.00	1.93	TR24-3 US NO	24vac	floating	
11	VAV - 7 HW Valve	Storage 116	V	HW	1	Belimo	B209 +	2 way	fail last	-	1/2"	screwed	200	0.50	0.80	0.224	5.00	0.39	TR24-3 US NO	24vac	floating	
12	VAV - 8 HW Valve	Women 117	V	HW	1	Belimo	B209 +	2 way	fail last	-	1/2"	screwed	200	0.91	0.80	0.407	5.00	1.29	TR24-3 US NO	24vac	floating	
13	VAV - 9 HW Valve	Office 114	V	HW	1	Belimo	B209 +	2 way	fail last	-	1/2"	screwed	200	0.85	0.80	0.380	5.00	1.13	TR24-3 US NO	24vac	floating	
14	VAV - 10 HW Valve	Office 113	V	HW	1	Belimo	B209 +	2 way	fail last	-	1/2"	screwed	200	0.84	0.80	0.376	5.00	1.10	TR24-3 US NO	24vac	floating	
15	VAV - 11 HW Valve	Office 106	V	HW	1	Belimo	B209 +	2 way	fail last	-	1/2"	screwed	200	0.50	0.80	0.224	5.00	0.39	TR24-3 US NO	24vac	floating	
16	VAV - 12 HW Valve	Break 111	V	HW	1	Belimo	B209 +	2 way	fail last	-	1/2"	screwed	200	1.51	0.80	0.675	5.00	3.56	TR24-3 US NO	24vac	floating	
17	VAV - 13 HW Valve	Office 105	V	HW	1	Belimo	B209 +	2 way	fail last	-	1/2"	screwed	200	0.50	0.80	0.224	5.00	0.39	TR24-3 US NO	24vac	floating	
18	VAV - 14 HW Valve	Office 100	V	HW	1	Belimo	B209 +	2 way	fail last	-	1/2"	screwed	200	1.37	0.80	0.613	5.00	2.93	TR24-3 US NO	24vac	floating	
19	VAV - 15 HW Valve	Office 104	V	HW	1	Belimo	B209 +	2 way	fail last	-	1/2"	screwed	200	0.50	0.80	0.224	5.00	0.39	TR24-3 US NO	24vac	floating	
20	VAV - 16 HW Valve	Office 101	V	HW	1	Belimo	B209 +	2 way	fail last	-	1/2"	screwed	200	0.67	0.80	0.300	5.00	0.70	TR24-3 US NO	24vac	floating	
21	VAV - 17 HW Valve	Office 103	V	HW	1	Belimo	B209 +	2 way	fail last	-	1/2"	screwed	200	0.87	0.80	0.389	5.00	1.18	TR24-3 US NO	24vac	floating	
22	VAV - 18 HW Valve	Office 135	V	HW	1	Belimo	B209 +	2 way	fail last	-	1/2"	screwed	200	1.28	0.80	0.572	5.00	2.56	TR24-3 US NO	24vac	floating	
23	VAV - 19 HW Valve	Office 133	V	HW	1	Belimo	B209 +	2 way	fail last	-	1/2"	screwed	200	1.05	0.80	0.470	5.00	1.72	TR24-3 US NO	24vac	floating	
24	VAV - 20 HW Valve	N.O.C. 132	V	HW	1	Belimo	B209 +	2 way	fail last	-	1/2"	screwed	200	0.50	0.80	0.224	5.00	0.39	TR24-3 US NO	24vac	floating	
25	VAV - 21 HW Valve	Office 138	V	HW	1	Belimo	B209 +	2 way	fail last	-	1/2"	screwed	200	0.50	0.80	0.224	5.00	0.39	TR24-3 US NO	24vac	floating	
26	VAV - 22 HW Valve	Office 131	V	HW	1	Belimo	B210 +	2 way	fail last	-	1/2"	screwed	200	1.92	1.20	0.859	5.00	2.56	TR24-3 US NO	24vac	floating	
27	VAV - 23 HW Valve	Storage 214	V	HW	1	Belimo	B209 +	2 way	fail last	-	1/2"	screwed	200	0.72	0.80	0.322	5.00	0.81	TR24-3 US NO	24vac	floating	
28	VAV - 24 HW Valve	Open Office	V	HW	1	Belimo	B210 +	2 way	fail last	-	1/2"	screwed	200	2.11	1.20	0.944	5.00	3.09	TR24-3 US NO	24vac	floating	
29	VAV - 25 HW Valve	Conference Room 212	V	HW	1	Belimo	B209 +	2 way	fail last	-	1/2"	screwed	200	0.81	0.80	0.362	5.00	1.03	TR24-3 US NO	24vac	floating	
30	VAV - 26 HW Valve	Office 211	V	HW	1	Belimo	B209 +	2 way	fail last	-	1/2"	screwed	200	0.50	0.80	0.224	5.00	0.39	TR24-3 US NO	24vac	floating	
31	VAV - 27 HW Valve	Office 210	V	HW	1	Belimo	B209 +	2 way	fail last	-	1/2"	screwed	200	0.50	0.80	0.224	5.00	0.39	TR24-3 US NO	24vac	floating	
32	VAV - 28 HW Valve	Office 209	V	HW	1	Belimo	B209 +	2 way	fail last	-	1/2"	screwed	200	0.63	0.80	0.282	5.00	0.62	TR24-3 US NO	24vac	floating	
33	VAV - 29 HW Valve	Office 208	V	HW	1	Belimo	B209 +	2 way	fail last	-	1/2"	screwed	200	0.50	0.80	0.224	5.00	0.39	TR24-3 US NO	24vac	floating	
34	VAV - 30 HW Valve	Conference Room 207	V	HW	1	Belimo	B209 +	2 way	fail last	-	1/2"	screwed	200	0.50	0.80	0.224	5.00	0.39	TR24-3 US NO	24vac	floating	
35	VAV - 31 HW Valve	Office 206	V	HW	1	Belimo	B209 +	2 way	fail last	-	1/2"	screwed	200	1.39	0.80	0.622	5.00	3.02	TR24-3 US NO	24vac	floating	
36	VAV - 32 HW Valve	Office 205	V	HW	1	Belimo	B209 +	2 way	fail last	-	1/2"	screwed	200	0.50	0.80	0.224	5.00	0.39	TR24-3 US NO	24vac	floating	
37	VAV - 33 HW Valve	Office 204	V	HW	1	Belimo	B209 +	2 way	fail last	-	1/2"	screwed	200	0.50	0.80	0.224	5.00	0.39	TR24-3 US NO	24vac	floating	
38	VAV - 34 HW Valve	Office 203	V	HW	1	Belimo	B209 +	2 way	fail last	-	1/2"	screwed	200	0.50	0.80	0.224	5.00	0.39	TR24-3 US NO	24vac	floating	
39	VAV - 35 HW Valve	Office 201	V	HW	1	Belimo	B210 +	2 way	fail last	-	1/2"	screwed	200	1.60	1.20	0.716	5.00	1.78	TR24-3 US NO	24vac	floating	
40	VAV - 36 HW Valve	Conference 112A	V	HW	1	Belimo	B209 +	2 way	fail last	-	1/2"	screwed	200	0.83	0.80	0.371	5.00	1.08	TR24-3 US NO	24vac	floating	
41	VAV - 37 HW Valve	Conference 112B	V	HW	1	Belimo	B209 +	2 way	fail last	-	1/2"	screwed	200	0.83	0.80	0.371	5.00	1.08	TR24-3 US NO	24vac	floating	
	Convectors																					
42	CONV - 1	Unisex 136	V	HW	1	Belimo	ZONE215N-10 +	2 way	fail last	-	1/2"	screwed	200	1.00	1.00	0.447	5.00	1.00	ZONE24NO	24vac	on/off	
43	CONV - 2	Unisex 134	V	HW	1	Belimo	ZONE215N-10 +	2 way	fail last	-	1/2"	screwed	200	1.00	1.00	0.447	5.00	1.00	ZONE24NO	24vac	on/off	
44	CONV - 3	Woman 124A	V	HW	1	Belimo	ZONE215N-10 +	2 way	fail last	-	1/2"	screwed	200	1.00	1.00	0.447	5.00	1.00	ZONE24NO	24vac	on/off	
45	CONV - 4	Unisex 124B	V	HW	1	Belimo	ZONE215N-10 +	2 way	fail last	-	1/2"	screwed	200	1.00	1.00	0.447	5.00	1.00	ZONE24NO	24vac	on/off	
46	CONV - 5	Men 125	V	HW	1	Belimo	ZONE215N-10 +	2 way	fail last	-	1/2"	screwed	200	1.00	1.00	0.447	5.00	1.00	ZONE24NO	24vac	on/off	
47	CONV - 6	Unisex 146	V	HW	1	Belimo	ZONE215N-10 +	2 way	fail last	1/2"	1/2"	screwed	200	1.00	1.00	0.447	5.00	1.00	ZONE24NO	24vac	on/off	
48	CONV - 7	Women 117	V	HW	1	Belimo	ZONE215N-10 +	2 way	fail last	-	1/2"	screwed	200	1.00	1.00	0.447	5.00	1.00	ZONE24NO	24vac	on/off	
49	CONV - 8	Men 118	V	HW	1	Belimo	ZONE215N-10 +	2 way	fail last	-	1/2"	screwed	200	1.00	1.00	0.447	5.00	1.00	ZONE24NO	24vac	on/off	
50	CONV - 9	Women 215	V	HW	1	Belimo	ZONE215N-10 +	2 way	fail last	-	1/2"	screwed	200	1.00	1.00	0.447	5.00	1.00	ZONE24NO	24vac	on/off	
51	CONV - 10	Men 216	V	HW	1	Belimo	ZONE215N-10 +	2 way	fail last	-	1/2"	screwed	200	1.00	1.00	0.447	5.00	1.00	ZONE24NO	24vac	on/off	

VALVE SCHEDULE

CID:	PID:	PROJECT ID:	NUM.	REVISION	DATE:	BY:
CID00029357	PID00031284	A223621	5			
			4			
			3			
			2			
			1	RECORD DOCUMENT	11/12/2014	MSH

PROJECT:
DOT - 66 INDUSTRIAL DRIVE
66 INDUSTRIAL DRIVE
AUGUSTA, ME 04330

PORTLAND ME
860 SPRING STREET, UNIT 1
WESTBROOK, ME 04092
207-828-1777

SALESPERSON: D TAYLOR
DESIGNED BY: D MACLAUCHLAN
CHECKED BY:

FILE NAME: A223621.AXD

DWG: 62

Label					Valve Data					inches	inches									Actuator Data			
Item	Equipment	Room Name	Tag	Medium	Qty.	Manuf.	Model No.	Type	Fail Position	Pipe Size	Valve Size	Conn	Closeoff Pressure	GPM	Valve Cv	Design Cv	Design Delta P	Actual Delta P	Model No.	Power	Control Signal	Comment
	UH/CUH HW Valves																					
52	UH - 1	Mech 196	V	HW	1	Belimo	ZONE220N-35 +	2 way	fail open	3/4"	3/4"	screwed	30	1.30	3.50	0.581	5.00	0.14	ZONE120NO	120vac	on/off	
53	CUH - 1	Entry 110A	V	HW	1	Belimo	ZONE220N-35 +	2 way	fail open	3/4"	3/4"	screwed	30	2.00	3.50	0.894	5.00	0.33	ZONE120NO	120vac	on/off	
54	CUH - 2	Stair 1 S111	V	HW	1	Belimo	ZONE220N-35 +	2 way	fail open	3/4"	3/4"	screwed	30	3.00	3.50	1.342	5.00	0.73	ZONE120NO	120vac	on/off	
55	CUH - 3	Corridor 110	V	HW	1	Belimo	ZONE220N-35 +	2 way	fail open	3/4"	3/4"	screwed	30	1.50	3.50	0.671	5.00	0.18	ZONE120NO	120vac	on/off	
56	CUH - 4	Stair 2 ST22	V	HW	1	Belimo	ZONE220N-35 +	2 way	fail open	3/4"	3/4"	screwed	30	3.00	3.50	1.342	5.00	0.73	ZONE120NO	120vac	on/off	

VALVE SCHEDULE-2

CID:	PID:	PROJECT ID:	NUM.	REVISION	DATE:	BY:
CID00029357	PID00031284	A223621	5			
PROJECT:			4			
DOT - 66 INDUSTRIAL DRIVE			3			
66 INDUSTRIAL DRIVE			2			
AUGUSTA, ME 04330			1	RECORD DOCUMENT	11/12/2014	MSH

PORTLAND ME
860 SPRING STREET, UNIT 1
WESTBROOK, ME 04092
207-828-1777

SALESPERSON: D TAYLOR
DESIGNED BY: D MACLAUCHLAN
CHECKED BY:
FILE NAME: A223621.AXD
DWG: 63