Updated **10/15/15**

FEDERAL PROJECT

Effective November 05, 2014
Supersedes January 19, 2012

BIDDING INSTRUCTIONS

FOR ALL PROJECTS:

1. Use pen and ink to complete all paper Bids.
2. As a minimum, the following must be received prior to the time of Bid opening:

For a Paper Bid:

a) a copy of the Notice to Contractors, b) the completed Acknowledgement of Bid Amendments form, c) the completed Schedule of Items, d) two copies of the completed and signed Contract Offer, Agreement & Award form, e) a Bid Guaranty, (if required), and f) any other certifications or Bid requirements listed in the Bid Documents as due by Bid opening.

For an Electronic Bid:

a) a completed Bid using Expedite® software and submitted via the Bid Express™ web-based service, b) an electronic Bid Guaranty (if required) or a faxed copy of a Bid Bond (with original to be delivered within 72 hours), and c) any other Certifications or Bid requirements listed in the Bid Documents as due by Bid opening.

3. Include prices for all items in the Schedule of Items (<u>excluding non-selected alternates</u>).
4. Bid Guaranty acceptable forms are:
   a) a properly completed and signed Bid Bond on the Department's prescribed form (or on a form that does not contain any significant variations from the Department's form as determined by the Department) for 5% of the Bid Amount or
   b) an Official Bank Check, Cashier's Check, Certified Check, U.S. Postal Money Order or Negotiable Certificate of Deposit in the amount stated in the Notice to Contractors or
   c) an electronic bid bond submitted with an electronic bid.

5. If a paper Bid is to be sent, "FedEx First Overnight" delivery is suggested as the package is delivered directly to the DOT Headquarters Building located at 16 Child Street in Augusta. Other means, such as U.S. Postal Service's Express Mail has proven not to be reliable.

IN ADDITION, FOR FEDERAL AID PROJECTS:

6. Complete the DBE Proposed Utilization form, and submit with your bid. If you are submitting your bid electronically, you must FAX the form to (207) 624-3431. This is a curable defect.

If you need further information regarding Bid preparation, call the DOT Contracts Section at (207) 624-3410.

For complete bidding requirements, refer to Section 102 of the Maine Department of Transportation, Standard Specifications, November 2014 Edition.

October 15, 2015
Supersedes November 05, 2014

NOTICE

The Maine Department of Transportation is attempting to improve the way Bid Amendments/Addendums are handled, and allow for an electronic downloading of bid packages from our website, while continuing to maintain an optional plan holders list.

Prospective bidders, subcontractors or suppliers who wish to download a copy of the bid package and receive a courtesy notification of project specific bid amendments must fill out the on-line plan holder registration form and provide an email address to the MDOT Contracts mailbox at: MDOT.contracts@maine.gov. Each bid package will require a separate request.

Additionally, interested parties will be responsible for reviewing and retrieving the Bid Amendments from our web site, and acknowledging receipt and incorporating those Bid Amendments in their bids using the Acknowledgement of Bid Amendment Form.

The downloading of bid packages from the MDOT website is not the same as providing an electronic bid to the Department. Electronic bids must be submitted via http://www.BIDX.com. For information on electronic bidding contact Robert Skehan at robert.skehan@maine.gov , Rebecca Snowden at rebecca.snowden@maine.gov or Diane Barnes at diane.barnes@maine.gov.

NOTICE

For security and other reasons, all Bid Packages which are mailed, shall be provided in double (one envelope inside the other) envelopes. The *Inner Envelope* shall have the following information provided on it:

Bid Enclosed - Do Not Open
PIN:
Town:
Date of Bid Opening:
Name of Contractor with mailing address and telephone number:

In Addition to the usual address information, the *Outer Envelope* should have written or typed on it:

Double Envelope: Bid Enclosed
PIN:
Town:
Date of Bid Opening:
Name of Contractor:
This should not be much of a change for those of you who use Federal Express or similar services.

Hand-carried Bids may be in one envelope as before, and should be marked with the following infrormation:

Bid Enclosed: Do Not Open
PIN:
Town:
Name of Contractor:

October 16, 2001

STATE OF MAINE DEPARTMENT OF TRANSPORTATION

Bid Guaranty-Bid Bond Form

KNOW ALL MEN BY THESE PRESENTS THAT_____

_____, of the City/Town of _____and State of_____

as Principal, and _____as Surety, a

Corporation duly organized under the laws of the State of_____and having a usual place of

Business in _____and hereby held and firmly bound unto the Treasurer of

the State of Maine in the sum of_____,for payment which Principal and Surety bind

themselves, their heirs, executers, administrators, successors and assigns, jointly and severally.

The condition of this obligation is that the Principal has submitted to the Maine Department of Transportation, hereafter Department, a certain bid, attached hereto and incorporated as a part herein, to enter into a written contract for the construction of _____

_____

_____and if the Department shall accept said bid and the Principal shall execute and deliver a contract in the form attached hereto (properly completed in accordance with said bid) and shall furnish bonds for this faithful performance of said contract, and for the payment of all persons performing labor or furnishing material in connection therewith, and shall in all other respects perform the agreement created by the acceptance of said bid, then this obligation shall be null and void; otherwise it shall remain in full force, and effect.

Signed and sealed this_____day of _____20_____

WITNESS:

_____

_____

_____

WITNESS

_____

_____

_____

PRINCIPAL:

By_____

By:_____

By:_____

SURETY:

By_____

By:_____

Name of Local Agency: _____

SAMPLE

NOTICE

Bidders:

Please use the attached "Request for Information" form when submitting questions concerning specific Contracts that have been advertised for Bid, include additional numbered pages as required. RFI's may be faxed to 207-624-3431, submitted electronically through the Departments web page of advertised projects by selecting the RFI tab on the project details page or via e-mail to RFI-Contracts.MDOT@maine.gov.

These are the only allowable mechanisms for answering Project specific questions. Maine DOT will not be bound to any answers to Project specific questions received during the Bidding phase through other processes.

When submitting RFIs by Email please follow the same guidelines as stated on the "Request for Information" form and include the word "RFI" along with the Project name and Identification number in the subject line.

State of Maine
Department of Transportation

RFI No: _____

REQUEST FOR INFORMATION

Date _____ Time _____

Information Requested for:

WIN(S): _____ Town(s): _____ Bid Date: _____

Question(s):_____

_____

_____

_____

_____

_____

_____

_____

_____

_____

_____

_____

_____

_____

_____

_____

Request by:

Company Name:_____**Phone:(_____)**_____

Email: _____ Fax: (_____)_____

Complete this form and fax to 207-624-3431, Attn: Project Manager (name listed on the "Notice to Contractors"), or Email questions to RFI-Contracts.MDOT@maine.gov, Please include the word "RFI" along with the Project Name and Identification Number in the Subject line, or electronically by using the RFI Tab located on the Individual Projects Detail page.

NOTICE

Disadvantaged Business Enterprise Proposed Utilization

The Apparent Low Bidder shall submit the Disadvantaged Business Enterprise Proposed Utilization form with their bid. This is a curable bid defect.

The Contractor's Disadvantaged Business Enterprise Proposed Utilization Plan form contains additional information that is required by USDOT.

The Contractor's Disadvantaged Business Enterprise Proposed Utilization Plan form should be used.

A copy of the new Contractor's Disadvantaged Business Enterprise Proposed Utilization Plan and instructions for completing it are attached.

Note: Questions about DBE firms, or to obtain a printed copy of the DBE Directory, contact The Office of Civil Rights at (207) 624-3066.

MDOTs DBE Directory of Certified firms can also be obtained at http://www.maine.gov/mdot/civilrights/dbe.htm

INSTRUCTIONS FOR PREPARING THE MaineDOT CONTRACTOR'S DBE/SUBCONTRACTOR UTILIZATION FORM

The Contractor Shall Extend equal opportunity to MaineDOT certified DBE firms (as listed in MaineDOT's DBE Directory of Certified Businesses) in the selection and utilization of Subcontractors and Suppliers.

SPECIFIC INSTRUCTIONS FOR COMPLETING THE FORM:

Insert Contractor name, the name of the person(s) preparing the form, and that person(s) telephone, fax number and e-mail address.

Calculate and provide percentage of your bid that will be allocated to DBE firms, Federal Project Identification Number, and location of the Project work.

In the columns, name each subcontractor, DBE and non-DBE firm to be used, provide the Unit/Item cost of the work/product to be provided by the subcontractor, give a brief description and the dollar value of the work.

Revised 1/12

FHWA DBE GOAL NOTICE FFY 2016-18
Maine Department of Transportation
Disadvantaged Business Enterprise Program

Notice is hereby given that in accordance with US DOT regulation 49 CFR Part 26, the Maine Department of Transportation has established a DBE Program for disadvantaged business participation in the federal-aid highway and bridge construction program; MaineDOT contracts covered by the program include consulting, construction, supplies, manufacturing, and service contracts.

For FFY 2016-18 (October 1, 2015 through September 30, 2018) MaineDOT has established an annual DBE participation goal of **2.0%** to be achieved through race/gender neutral means. This goal has been approved by the Federal Highway Administration and remains in effect through September 30, 2018. Maine DOT must meet this goal each federal fiscal year. If the goal is not met, MaineDOT must provide a justification for not meeting the goal and provide a plan to ensure the goal is met, which may include contract goals on certain projects that contractors will be required to meet.

MaineDOT asks all contractors, consultants and subcontractors to seek certified DBE firms for projects and to work to meet the determined 2.0% goal without the need to impose contract goals. DBE firms are listed on the MaineDOT website at:

http://www.maine.gov/mdot/civilrights/dbe/

Interested parties may view MaineDOT's DBE goal setting methodology also posted on this website. If you have questions regarding this goal or the DBE program you may contact Sherry Tompkins at the Maine Department of Transportation, Civil Rights Office by telephone at (207) 624-3066 or by e-mail at: sherry.tompkins@maine.gov

.

MaineDOT CONTRACTOR'S DBE/SUBCONTRACTOR PROPOSED UTILIZATION FORM

All Bidders must furnish this form with their bid on Bid Opening day

Contractor: _____ **Telephone:** _____ **Ext** _____

Contact Person: _____ **Fax:** _____

E-mail: _____

BID DATE: _____

FEDERAL PROJECT PIN # _____ **PROJECT LOCATION:** _____

TOTAL ANTICIPATED DBE ____ % PARTICIPATION FOR THIS CONTRACT

WBE	DBE	Non DBE	Firm Name	Item Number & Description of Work	Quantity	Cost Per Unit/Item	Anticipated $ Value
						Subcontractor Total>	
						DBE Total >	

NOTE: THIS INFORMATION IS USED TO TRACK AND REPORT ANTICIPATED DBE PARTICIPATION IN ALL FEDERALLY FUNDED MAINE DOT CONTRACTS. THE ANTICIPATED DBE AMOUNT IS VOLUNTARY AND WILL NOT BECOME A PART OF THE CONTRACTUAL TERMS.

Equal Opportunity Use:

Form received: ___/___/___ Verified by: _____

FHWA ☐ FTA ☐ FAA ☐

For a complete list of certified firms and company designation (WBE/DBE) go to http://www.maine.gov/mdot

Rev. 05/13

Maine Department of Transportation Civil Rights Office

Directory of Certified Disadvantaged Business Enterprises

Listing can be found at:

http://www.maine.gov/mdot/civilrights/dbe.htm

For additional information and guidance contact:

Civil Rights Office at (207) 624-3066

It is the responsibility of the Contractor to access the DBE Directory at this site in order to have the most current listing.

Vendor Registration

Prospective Bidders must register as a vendor with the Department of Administrative & Financial Services if the vendor is awarded a contract. Vendors will not be able to receive payment without first being registered. Vendors/Contractors will find information and register through the following link –
http://www.maine.gov/purchases/venbid/index.shtml

STATE OF MAINE DEPARTMENT OF TRANSPORTATION
NOTICE TO CONTRACTORS

Sealed Bids addressed to the Maine Department of Transportation, Augusta, Maine 04333 and endorsed on the wrapper "Bids for Morse Bridge Painting in the town of **RUMFORD**" will be received from contractors at the Reception Desk, Maine DOT Building, Capitol Street, Augusta, Maine, until 11:00 o'clock A.M. (prevailing time) on January 6, 2016 and at that time and place publicly opened and read. Bids will be accepted from all bidders. The lowest responsive bidder must demonstrate previous successful completion of projects of a similar size and scope to be considered for the award of this contract. **We now accept electronic bids for those bid packages posted on the bidx.com website. Electronic bids do not have to be accompanied by paper bids. Please note: the Department will accept a facsimile of the bid bond; however, the original bid bond must then be received at the MDOT Contract Section within 72 hours of the bid opening. Until further notice, dual bids (one paper, one electronic) will be accepted, with the paper copy taking precedence.**

Description: Maine Federal Aid Project No. STP-2261(400), WIN 022614.00

Location: In Oxford County, Morse Bridge project is located on Bridge Street/ Route 108 over the Androscoggin River approximately 50 feet easterly of route 2 junction.

Scope of Work: Morse bridge painting plus other incidental work.

For general information regarding Bidding and Contracting procedures, contact George Macdougall at (207) 624-3410. Our webpage at http://www.maine.gov/mdot/contractors/ contains a copy of the Schedule of Items, Plan Holders List, written portions of bid amendments, drawings, bid results and an electronic form for RFI submittal. For Project-specific information fax all questions to **Project Manager Andrew Lathe** at (207) 624-3431, use electronic RFI form or email questions to RFI-Contracts.MDOT@maine.gov, project name and identification number should be in the subject line. Questions received after 12:00 noon of **Thursday** prior to bid date will not be answered. Bidders shall not contact any other Departmental staff for clarification of Contract provisions, and the Department will not be responsible for any interpretations so obtained. TTY users call Maine Relay 711.

Plans, specifications and bid forms may be seen at the Maine DOT Building in Augusta, Maine and at the Department of Transportation's Regional Office in Dixfield. They may be purchased from the Department between the hours of 8:00 a.m. to 4:30 p.m. by cash, credit card (Visa/Mastercard) or check payable to Treasurer, State of Maine sent to Maine Department of Transportation, Attn.: Mailroom, 16 State House Station, Augusta, Maine 04333-0016. They also may be purchased by telephone at (207) 624-3536 between the hours of 8:00 a.m. to 4:30 p.m. Bid Book $10 ($13 by mail), payment in advance, all non-refundable.

Each Bid must be made upon blank forms provided by the Department and must be accompanied by a bid bond at 5% of the bid amount or an official bank check, cashier's check, certified check, certificate of deposit, or United States postal money order in the amount of $50,000.00 payable to Treasurer, State of Maine as a Bid guarantee. A Contract Performance Surety Bond and a Contract Payment Surety Bond, each in the amount of 100 percent of the Contract price, will be required of the successful Bidder.

This Contract is subject to all applicable Federal Laws. This contract is subject to compliance with the Disadvantaged Business Enterprise program requirements as set forth by the Maine Department of Transportation.

All work shall be governed by "State of Maine, Department of Transportation, Standard Specifications, November 2014 Edition", price $10 [$15 by mail], and Standard Details, November 2014 Edition, price $10 [$15 by mail]. They also may be purchased by telephone at (207) 624-3536 between the hours of 8:00 a.m. to 4:30 p.m. Standard Detail updates can be found at http://www.maine.gov/mdot/contractors/publications/ .

The right is hereby reserved to the Maine DOT to reject any or all bids.

Augusta, Maine
December 16, 2015

Joyce Noel Taylor

JOYCE NOEL TAYLOR P.E.
CHIEF ENGINEER

STATE OF MAINE
Joyce
Noel Taylor
6997
LICENSED
PROFESSIONAL ENGINEER

Rumford
Morse Bridge
WIN 022614.00
April 14, 2011
Supersedes August 3, 2004

SPECIAL PROVISION 102.7.3
ACKNOWLEDGMENT OF BID AMENDMENTS

With this form, the Bidder acknowledges its responsibility to check for all Amendments to the Bid Package. For each Project under Advertisement, Amendments are located at http://www.maine.gov/mdot/contractors/ . It is the responsibility of the Bidder to determine if there are Amendments to the Project, to download them, to incorporate them into their Bid Package, and to reference the Amendment number and the date on the form below. The Maine DOT will not post Bid Amendments any later than noon the day before Bid opening without individually notifying all the planholders.

Amendment Number	Date

The Contractor, for itself, its successors and assigns, hereby acknowledges that it has received all of the above referenced Amendments to the Bid Package.

CONTRACTOR

_____ _____
Date Signature of authorized representative

_____
(Name and Title Printed)

Maine Department of Transportation

Proposal Schedule of Items

Proposal ID: 022614.00 **Project(s):** 022614.00

SECTION: 1 INITIAL GROUP

Alt Set ID: **Alt Mbr ID:**

Contractor: _____

Proposal Line Number	Item ID Description	Approximate Quantity and Units	Unit Price Dollars Cents	Bid Amount Dollars Cents
0010	504.709 BRIDGE HARDWARE TRUSS SCREEN PANEL	LUMP SUM	LUMP SUM	_____.____
0020	504.811 STRUCTURAL STEEL REPAIR	7,500.000 LB	_____.____	_____.____
0030	506.144 FIELD PAINTING NEW AND EXISTING STRUCTURAL STEEL	LUMP SUM	LUMP SUM	_____.____
0040	506.17 SURFACE PREPARATION OF EXISTING STRUCTURAL STEEL	LUMP SUM	LUMP SUM	_____.____
0050	506.18 CONTAINMENT AND POLLUTION CONTROL	LUMP SUM	LUMP SUM	_____.____
0060	506.191 DISPOSAL OF SPECIAL WASTE OR HAZARDOUS WASTE MATERIAL	LUMP SUM	LUMP SUM	_____.____
0070	629.05 HAND LABOR, STRAIGHT TIME	20.000 HR	_____.____	_____.____
0080	631.10 AIR COMPRESSOR (INCLUDING OPERATOR)	20.000 HR	_____.____	_____.____
0090	631.11 AIR TOOL (INCLUDING OPERATOR)	20.000 HR	_____.____	_____.____
0100	631.21 ROAD BROOM (INCLUDING OPERATORS AND HAULER)	20.000 HR	_____.____	_____.____
0110	652.33 DRUM	15.000 EA	_____.____	_____.____

Maine Department of Transportation

Proposal Schedule of Items

Proposal ID: 022614.00 **Project(s):** 022614.00

SECTION: 1 INITIAL GROUP

Alt Set ID: **Alt Mbr ID:**

Contractor: _____

Proposal Line Number	Item ID Description	Approximate Quantity and Units	Unit Price Dollars	Unit Price Cents	Bid Amount Dollars	Bid Amount Cents
0120	652.34 CONE	20.000 EA	_____	_____	_____	_____
0130	652.35 CONSTRUCTION SIGNS	25.000 SF	_____	_____	_____	_____
0140	652.361 MAINTENANCE OF TRAFFIC CONTROL DEVICES	LUMP SUM	LUMP SUM		_____	_____
0150	652.38 FLAGGER	130.000 HR	_____	_____	_____	_____
0160	659.10 MOBILIZATION	LUMP SUM	LUMP SUM		_____	_____

Section: 1 **Total:** _____.____

Total Bid: _____.____

STATE OF MAINE
DEPARTMENT OF TRANSPORTATION

RUMFORD
OXFORD COUNTY
MORSE BRIDGE
OVER
ANDROSCOGGIN RIVER
PROJECT NO. STP-2261(400)
BRIDGE NO. 2585

T·Y·LIN INTERNATIONAL

PROJECT INFORMATION	
PROGRAM	BRIDGE
PROJECT MANAGER	ANDREW LATHE
DESIGNER	JOSH OLUND
CONSULTANT	T.Y. LIN INTERNATIONAL
PROJECT RESIDENT	
CONTRACTOR	
PROJECT COMPLETION DATE	

PROJECT LOCATION:	Morse Bridge (#2585) over Androscoggin River, located on State Route 108 (Bridge St.). 0.10 miles NE of U.S. Route 2 in Rumford. 44°32'36.4"N 70°32'48.2"W
PROGRAM AREA:	Bridge
OUTLINE OF WORK:	Bridge Painting and Minor Rehab

SIGNATURE

12130
P.E. NUMBER

11/13/2015
DATE

STATE OF MAINE
JOSHUA K. OLUND
No. 12130
LICENSED
PROFESSIONAL ENGINEER

STATE OF MAINE
DEPARTMENT OF TRANSPORTATION

APPROVED	DATE
COMMISSIONER:	12/7/15
CHIEF ENGINEER:	12-2-15

STATE OF MAINE DEPARTMENT OF TRANSPORTATION	RUMFORD MORSE BRIDGE	SHEET NUMBER 1
WIN 22614.00	TITLE SHEET	OF 15

Filename:\00\BRIDGE\MSTA\001_Title.dgn Division: Bridge Username: Date:11/23/2015

TRAFFIC DATA

Current (2014) AADT	8020
Future (2034) AADT	9620
DHV - % of AADT	10%
Design Hour Volume	962
Heavy Trucks (% of AADT)	13%
Heavy Trucks (% of DHV)	10%
Directional Distribution (% of DHV)	52%
18 Kip Equivalent P 2.0	1461
18 Kip Equivalent P 2.5	1392
Design Speed	25

MATERIALS

Structural Steel:

All Material	ASTM A 709, Grade 50
High Strength Bolts	ASTM A 325, Type 1

UTILITIES

Central Maine Power
Fairpoint Communications
Time Warner Cable
Oxford Networks
Rumford Sewer
Rumford-Mexico Water District

MAINTENANCE OF TRAFFIC

Traffic to be maintain with one 11'-0" wide lane of westbound traffic for the project duration - eastbound traffic to be maintained on an offsite detour. See General Notes for additional Maintenance of Traffic information. Design speed limit is 25 MPH.

ESTIMATED QUANTITIES

ITEM NO.	DESCRIPTION		QUANTITY	UNIT
504.811	Structural Steel Repair		7,500	LB
504.709	Bridge Hardware, Truss Screen Panel	(750 SF)	1	LS
506.144	Field Painting of Existing and New Structural Steel	(831,000 LB) **	1	LS
506.17	Surface Preparation of Existing Structural Steel	(831,000 LB) **	1	LS
506.18	Containment and Pollution Control Measures	(831,000 LB) **	1	LS
506.191	Disposal of Special Waste or Hazardous Waste	(831,000 LB) **	1	LS
629.05	Hand Labor, Straight Time		20	HR
631.10	Air Compressor (including operator)		20	HR
631.11	Air Tool (including operator)		20	HR
631.21	Road Broom (including operators and hauler)		20	HR
652.33	Drum		15	EA
652.34	Cones		20	EA
652.35	Construction Signs		25	SF
652.361	Maintenance of Traffic Control Devices	(90 CD)	1	LS
652.38	Flaggers		130	HR
659.10	Mobilization		1	LS

** 764,000 LB Truss Span; 67,000 LB Approach Span.

Filename: ...\BRIDGE\MSTA\002_Estimate.dgn Division: Bridge Username: Date:11/23/2015

TYLIN INTERNATIONAL

STATE OF MAINE
DEPARTMENT OF TRANSPORTATION

STP-2261(400)

WIN
BRIDGE NO. 2585 22614.00 BRIDGE PLANS

MORSE BRIDGE
OVER ANDROSCOGGIN RIVER
RUMFORD OXFORD COUNTY

ESTIMATED QUANTITIES

SHEET NUMBER
2
OF 15

GENERAL CONSTRUCTION NOTES

1. Details and dimensions provided herein are based upon existing design plans and existing shop drawings; no field survey or verification measurements were obtained in preparation of these details. The Contractor is responsible for field verifying all dimensions prior to fabrication.

2. Structural Steel Repairs shall be completed prior to field painting.

3. All existing screening and associated attachments on the underside of the steel arch members shall be removed and discarded prior to field painting; reuse of existing screening will not be allowed. Payment for removal will be made under Item 506.17, Surface Preparation of Existing Structural Steel.

4. Surfaces of existing gusset plates that will come in contact with proposed filler plates shall be ground, cleaned, and prepared according to the requirements of Special Provision Item 506.17, Surface Preparation of Existing Structural Steel.

5. Prior to painting, remove all debris from the bridge bearings and bearing seat areas. This work shall be considered incidental to the related 506 Contract items.

6. Proposed Structural Steel and Truss Screen Panels may either be field painted after installation or primed and patined with an intermediate coat in the shop with the final topcoat applied in the field to ensure matching color. If the primer and intermediate coat are elected to be applied in the shop, the work shall be completed in accordance with Standard Specification 506 for Zinc Rich Coating. Regardless of where the proposed Structural Steel and Truss Screen Panels are prepared and painted, payment will be made under the appropriate 506 Special Provision Item.

7. The steel portions of the existing bridge are coated with a lead-based paint system. The Contractor is responsible for the containment, proper management and disposal of all lead-contaminated hazardous waste generated by the process of rehabilitating the bridge. The Contractor is responsible for implementing appropriate OSHA mandated personal protection standards related to this process. The Contractor is solely responsible for the care, custody and control of the components of the existing bridge and any hazardous waste generated as a result of the storage, recycling or disposal of the bridge components, including lead-coated steel. The Contractor shall recycle or reuse the steel in accordance with the Maine Department of Environmental Protection's "Maine Hazardous Waste Management Regulations," Chapter 850. A copy of this regulation is available at MaineDOT's offices on Child Street in Augusta.

8. Bolts shall be 7/8" ϕ A325, Type 1, unless otherwise noted.

9. Steel for proposed gusset plates shall conform to AASHTO M270 (ASTM A709), Grade 50. Steel for proposed filler plates shall conform to AASHTO M270 (ASTM A709), Grade 36 or Grade 50.

10. Quantities included for pay items measured and paid for by Lump Sum are estimated quantities and are provided by MaineDOT for informational purposes only. Lump Sum pay items will be paid for at the Contract Bid amount, with no addition or reduction in payment to the Contractor if the actual final quantities are different from the provided estimated quantities, except as follows:

    a. If a Lump Sum pay item is eliminated, the requirements of Standard Specifications Section 109.2, Elimination of Items, will take precedence.

    b. If other Contract Documents specifically allow a change in payment for a Lump Sum pay item, those requirements will be followed.

    c. If a design change results in changes to estimated quantities for Lump Sum pay items, price adjustments will be made in accordance with Standard Specifications Section 109.7, Equitable Adjustments to Compensation.

11. Project information referred to below may be accessed at the following MaineDOT web address: http://www.maine.gov/mdot/contractors/

12. The existing bridge plans may be accessed at the MaineDOT web address. The plans are reproductions of the original drawings as prepared for the construction of the bridge. It is very unlikely that the plans will show any construction field changes or any alterations which may have been made to the bridge during its life span.

13. Work required of this project shall be performed in phases to allow a single lane of westbound traffic and access to a single sidewalk at all times. The Contractor shall submit a Traffic Control Plan identifying methods of maintaining access noted including, but not limited to, channelizing devices and construction signing across the bridge and at the bridge limits.

14. The Contractor shall be made aware of a concurrent bridge rehabilitation project (WIN 19058.00, Upper Canal Bridge) approximately 500 ft east of this project. An offsite detour will be established as part of the concurrent project which will require westbound traffic to cross Morse Bridge, but not eastbound traffic. The Contractor shall coordinate work efforts, schedule, and layout of maintenance of traffic devices and signing with the contractor of the concurrent project to ensure an effective detour. Payment for such coordination will not be made separately and will be considered incidental to 652 Pay Items.

14. Work on this project may not begin until a detour and appropriate signing is installed by the contractor of the noted concurrent project. All work shall be completed prior to completion of the concurrent project and removal of the off site detour.

TYLIN INTERNATIONAL

Filename: ...\MSTA\004_Repair Plan.dgn Division: Bridge Username: Date:11/23/2015

STATE OF MAINE
DEPARTMENT OF TRANSPORTATION

STP-2261(400)

WIN 22614.00

BRIDGE NO. 2585

BRIDGE PLANS

MORSE BRIDGE
OVER ANDROSCOGGIN RIVER
RUMFORD OXFORD COUNTY

REPAIR PLAN

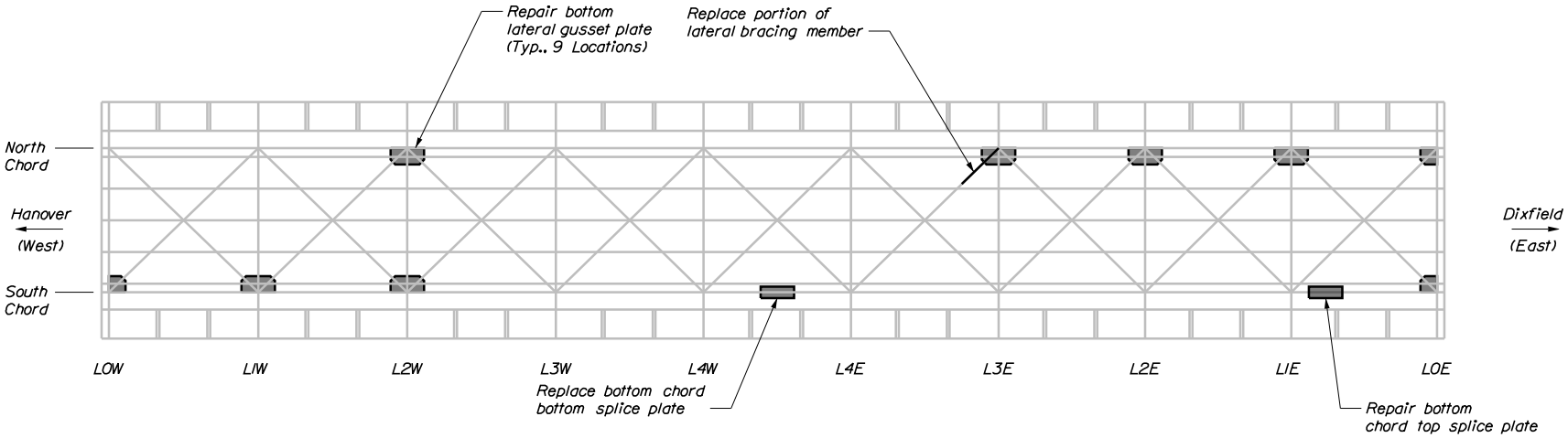

TRUSS SPAN FLOOR
AND
BOTTOM LATERAL BRACING PLAN

T·Y·LIN INTERNATIONAL

SHEET NUMBER 4 OF 15

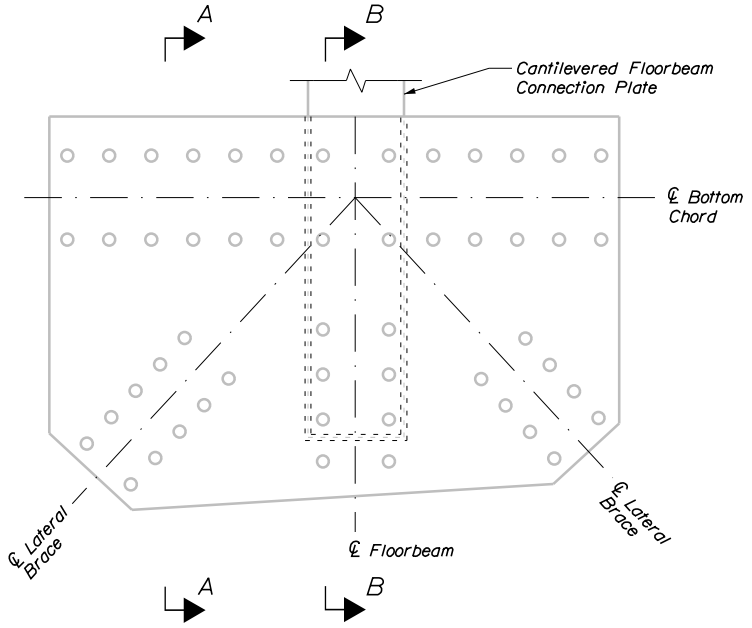

GUSSET PLATE PLAN

(Framing Members not shown for clarity)

NOTES:

1. Repair details shown this sheet are for the north and south chords at the bottom lateral bracing gusset plate locations L1W, L2W, L3E, L2E, and L1E. Bottom chord splice plates and lower bottom bracing gusset plates located at L0W and L0E are repaired similar to details shown here.

2. Any raised edges or other deformations caused by pack rust shall be ground to allow for flush contact surfaces as approved by the Resident.

3. Suggested sequence of work:
   a. Remove all loose rust and debris from gusset plates and framing members.
   b. Prepare contact surfaces.
   c. Tightly clamp proposed filler plates and gusset plate in their final locations against the existing gusset plate.
   d. Drill a 15/16" ϕ hole through an existing rivet and remove loose shavings.
   e. Install and finger tighten new bolt through previously drilled hole.
   f. Repeat steps d and e for all remaining bolts.
   g. Fully tighten all bolts.

4. The Contractor may submit an alternate sequence of work for approval.

5. A maximum of two rivets may be removed at any given time, per member, prior to installing new bolts.

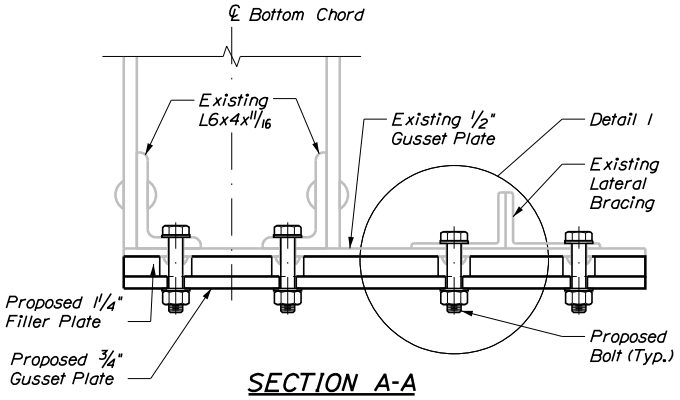

SECTION A-A

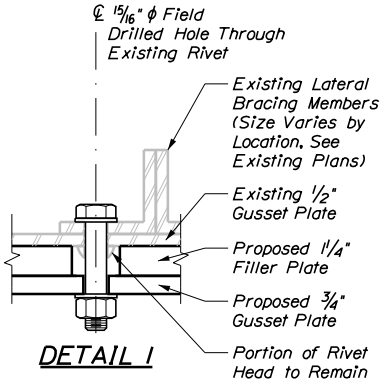

DETAIL 1

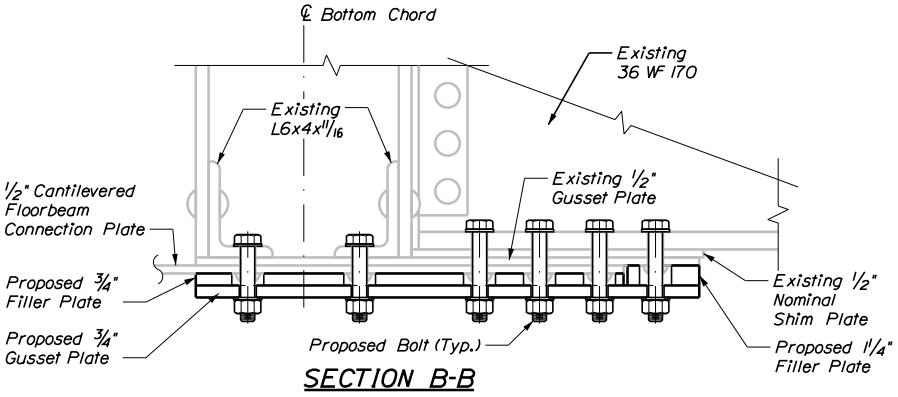

SECTION B-B

TYLIN INTERNATIONAL

STATE OF MAINE DEPARTMENT OF TRANSPORTATION	MORSE BRIDGE OVER ANDROSCOGGIN RIVER RUMFORD OXFORD COUNTY	SHEET NUMBER
STP-2261(400)	STRUCTURAL STEEL REPAIR DETAILS	5
BRIDGE NO. 2585 WIN 22614.00 BRIDGE PLANS		OF 15

22

Filename: ...\005_Structural_Steel_Repair_Dets.dgnDivision: Bridge Username: Date:11/23/2015

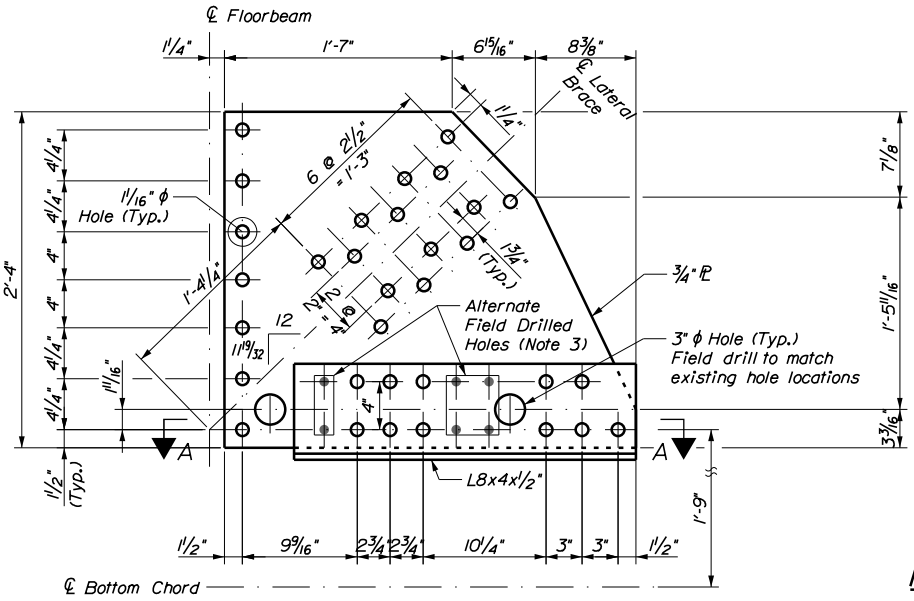

GUSSET PLATE DETAILS

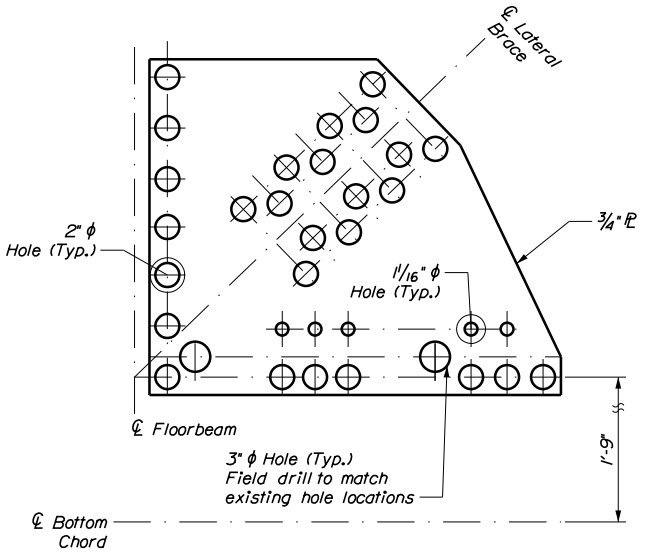

GUSSET FILLER PLATE DETAILS

NOTES:

1. Filler plate dimensions not shown shall be consistent with the respective gusset plate shown.

2. Existing L4x3½x⅜ attached to top chord side plates and corresponding rivets shall be removed. Payment will be made under Item 504.811, "Structural Steel Repair."

3. The existing gusset plate is significantly corroded. Additional field drilled holes and corresponding bolt installation may be needed to fully engage the existing gusset plate and proposed steel components. The need for field drilled holes will be coordinated with the Resident.

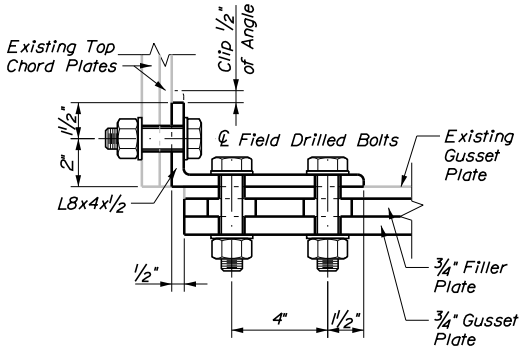

SECTION B-B

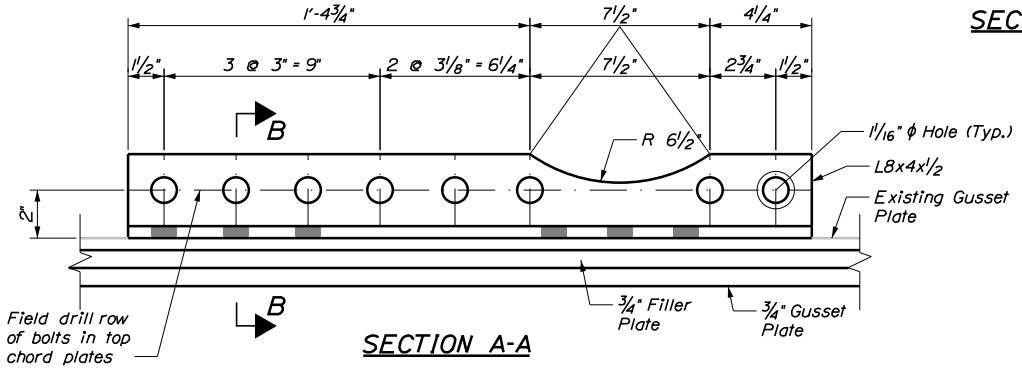

SECTION A-A

TYLIN INTERNATIONAL

STATE OF MAINE DEPARTMENT OF TRANSPORTATION	MORSE BRIDGE OVER ANDROSCOGGIN RIVER RUMFORD OXFORD COUNTY	SHEET NUMBER
STP-2261(400)	STRUCTURAL STEEL DETAILS LOW SOUTH	6
BRIDGE NO. 2585 WIN 22614.00 BRIDGE PLANS		OF 15

Filename: ...\006_Structural_Steel_Details_1.dgn Division: Bridge Username: Date:11/23/2015

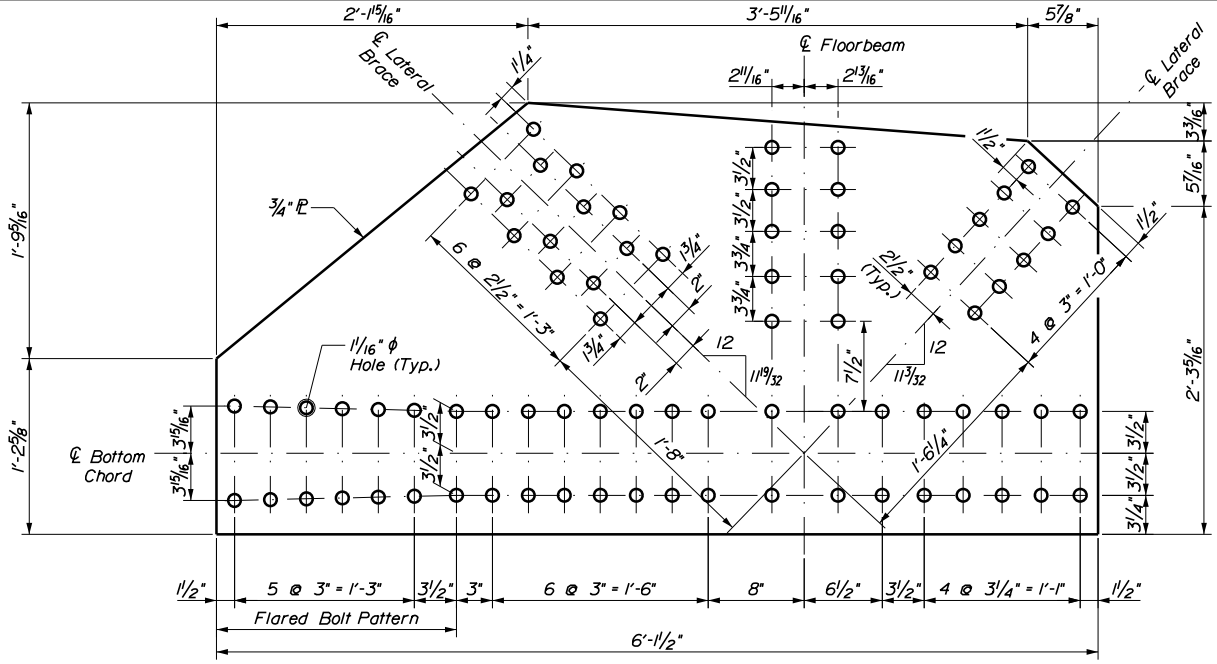

GUSSET PLATE DETAILS

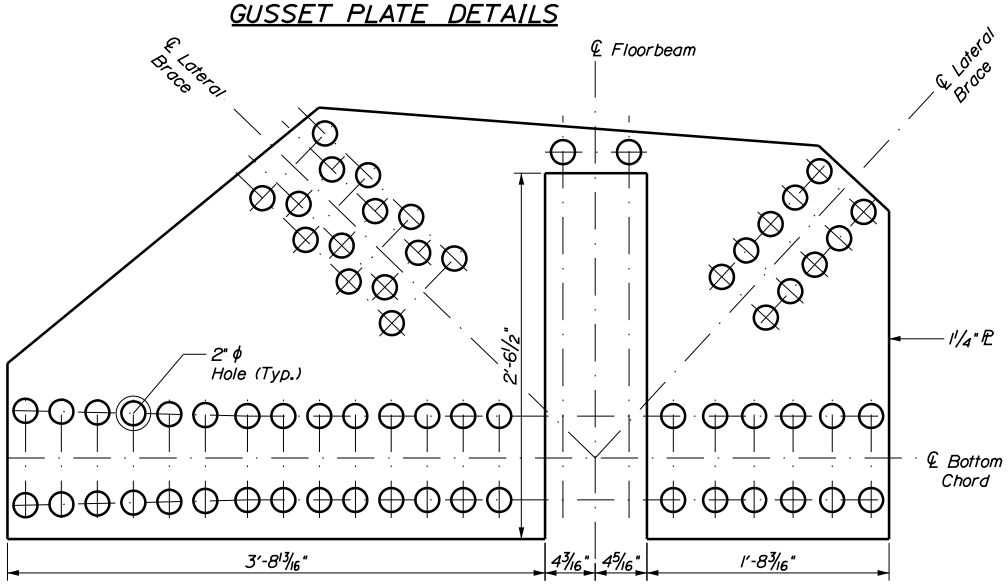

GUSSET FILLER PLATE DETAILS

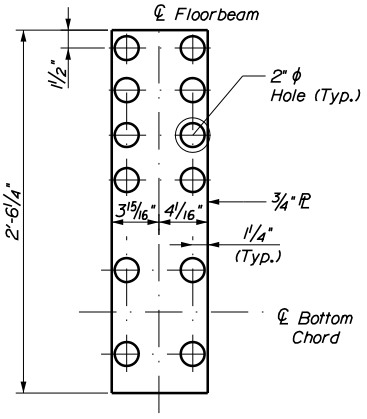

Note: Filler plate dimensions not shown shall be consistent with the respective gusset plate shown.

CANTILEVER FILLER PLATE DETAILS

TYLIN INTERNATIONAL

STATE OF MAINE DEPARTMENT OF TRANSPORTATION	MORSE BRIDGE OVER ANDROSCOGGIN RIVER RUMFORD OXFORD COUNTY	SHEET NUMBER
STP-2261(400)	STRUCTURAL STEEL DETAILS L1W SOUTH	7
BRIDGE NO. 2585 WIN 22614.00 BRIDGE PLANS		OF 15

Filename: ...\007_Structural_Steel_Details_2.dgn Division: Bridge Username: Date:11/23/2015

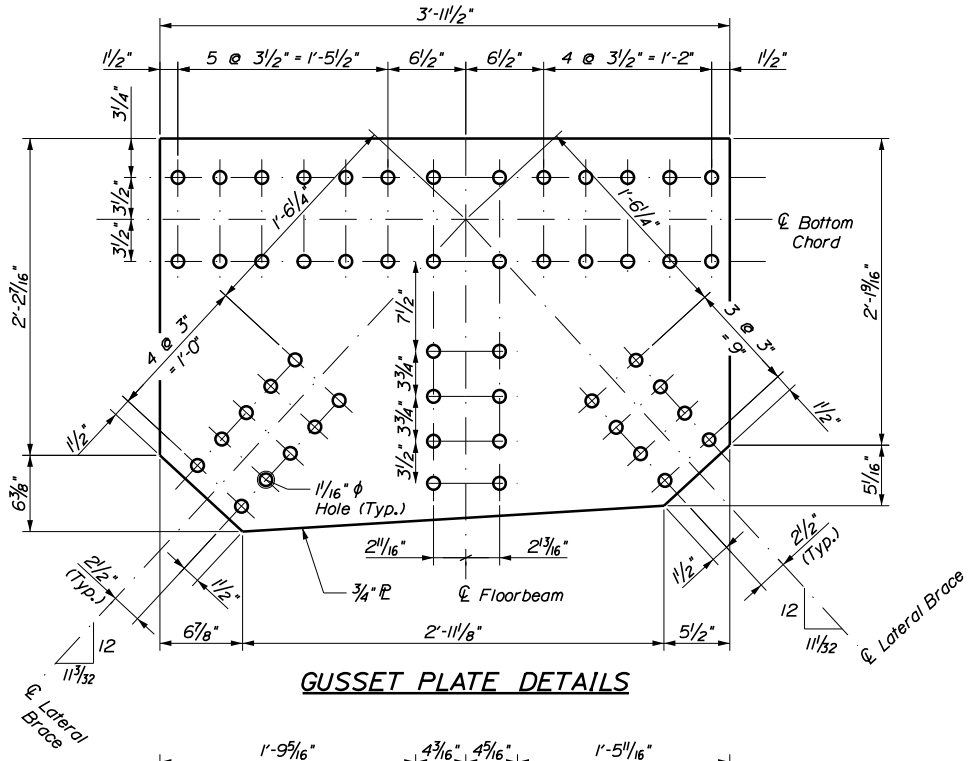

GUSSET PLATE DETAILS

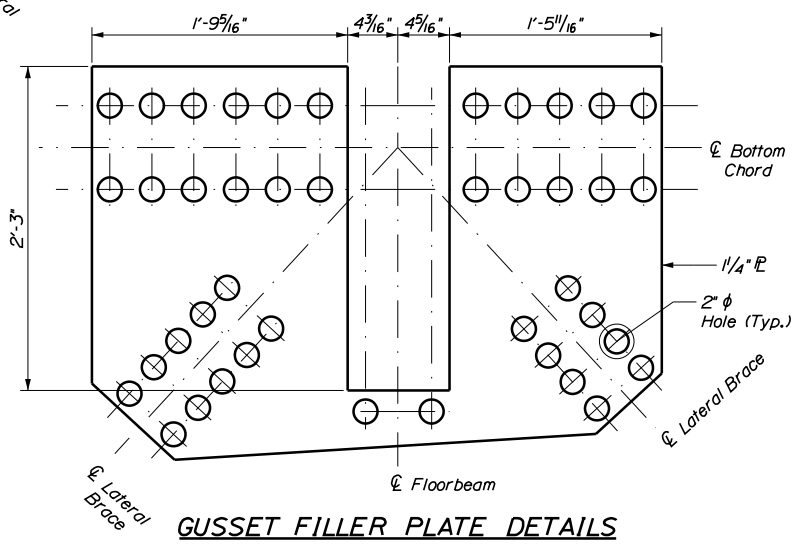

GUSSET FILLER PLATE DETAILS

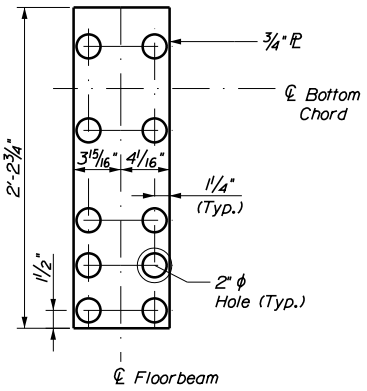

CANTILEVER FILLER PLATE DETAILS

NOTES:

1. Filler plate dimensions not shown shall be consistent with the respective gusset plate shown.

2. Structural steel details for L2W North are shown. L2W South are similar.

TYLIN INTERNATIONAL

STATE OF MAINE DEPARTMENT OF TRANSPORTATION	MORSE BRIDGE OVER ANDROSCOGGIN RIVER RUMFORD OXFORD COUNTY	SHEET NUMBER
STP-2261(400)	STRUCTURAL STEEL DETAILS L2W NORTH AND SOUTH	8
BRIDGE NO. 2585 WIN 22614.00 BRIDGE PLANS		OF 15

Filename: ...\008_Structural_Steel_Details_3.dgn Division: Bridge Username: Date:11/23/2015

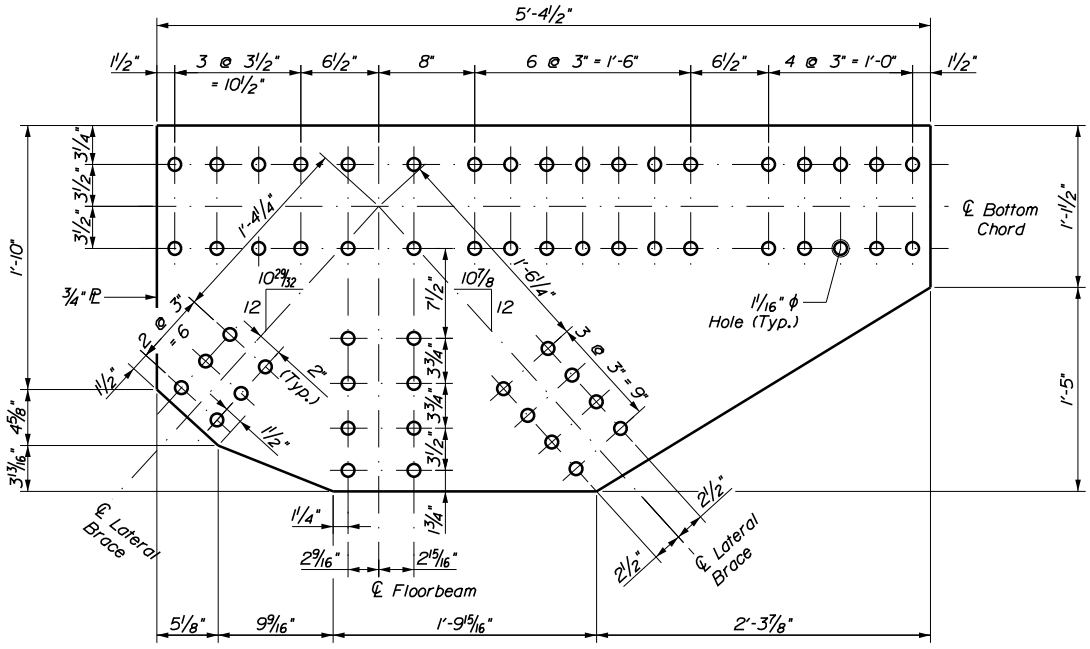

GUSSET PLATE DETAILS

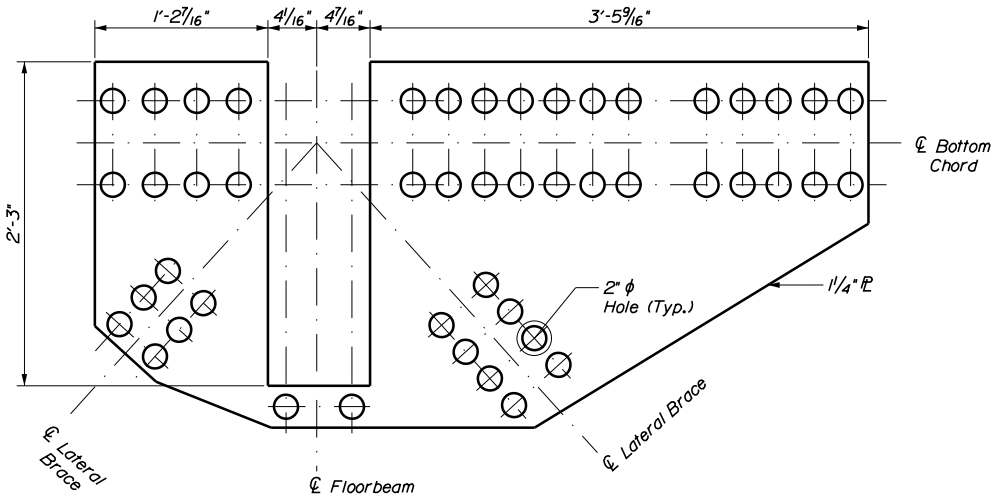

GUSSET FILLER PLATE DETAILS

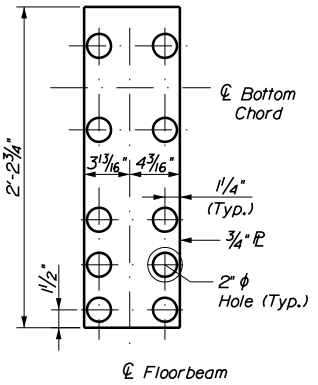

CANTILEVER FILLER PLATE DETAILS

Note: Filler plate dimensions not shown shall be consistent with the respective gusset plate shown.

TYLIN INTERNATIONAL

STATE OF MAINE DEPARTMENT OF TRANSPORTATION	MORSE BRIDGE OVER ANDROSCOGGIN RIVER RUMFORD OXFORD COUNTY	SHEET NUMBER
STP-2261(400)	STRUCTURAL STEEL DETAILS L3E NORTH	9
BRIDGE NO. 2585 WIN 22614.00 BRIDGE PLANS		OF 15

Filename: ...\009_Structural_Steel_Details_4.dgn Division: Bridge Username: Date:11/23/2015

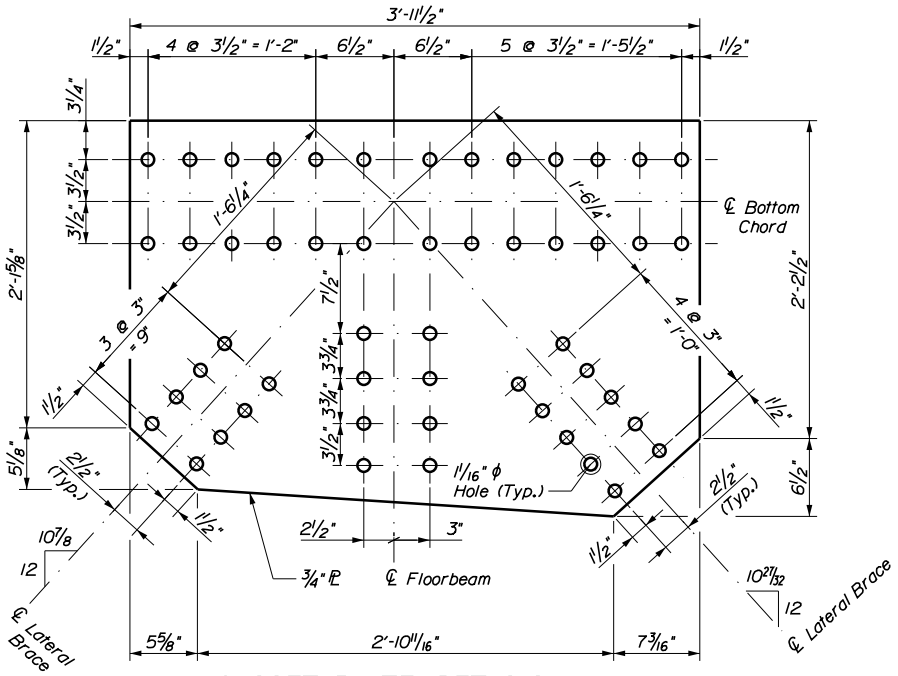

GUSSET PLATE DETAILS

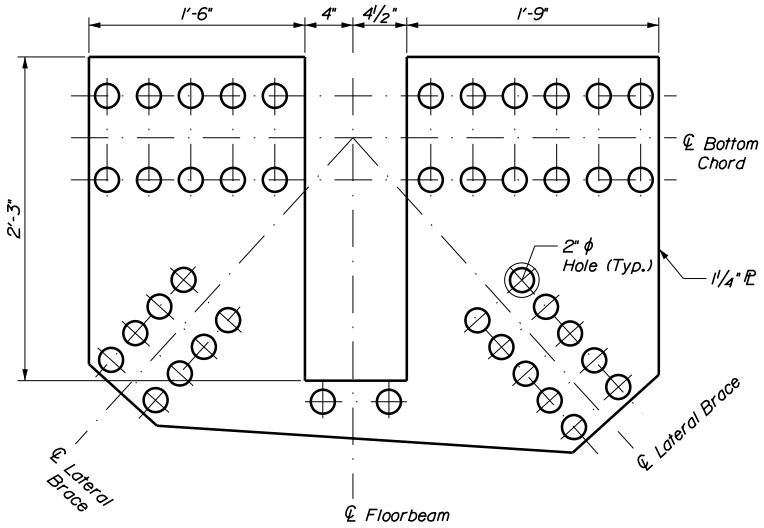

GUSSET FILLER PLATE DETAILS

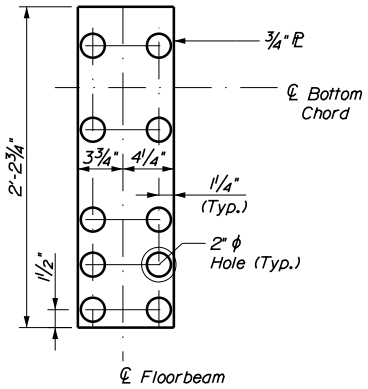

CANTILEVER FILLER PLATE DETAILS

Note: Filler plate dimensions not shown shall be consistent with the respective gusset plate shown.

TYLIN INTERNATIONAL

STATE OF MAINE DEPARTMENT OF TRANSPORTATION	MORSE BRIDGE OVER ANDROSCOGGIN RIVER RUMFORD OXFORD COUNTY	SHEET NUMBER
STP-2261(400)	STRUCTURAL STEEL DETAILS L2E NORTH	10
BRIDGE NO. 2585 WIN 22614.00 BRIDGE PLANS		OF 15

Filename: ...\010_Structural_Steel_Details_5.dgn Division: Bridge Username: Date:11/23/2015

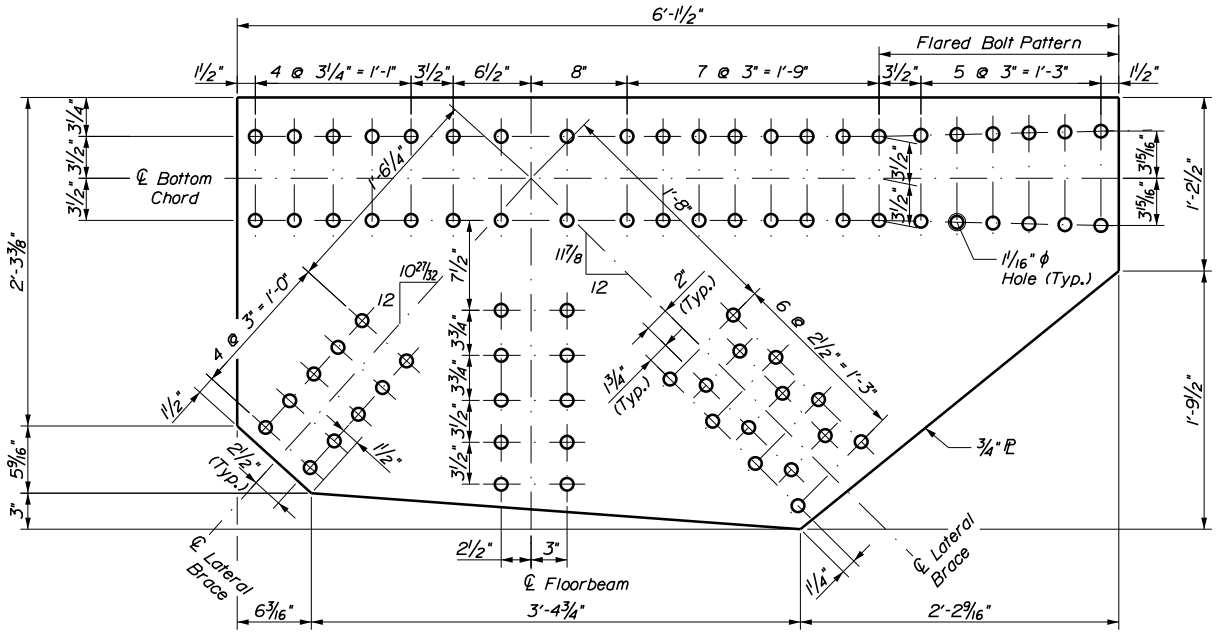

GUSSET PLATE DETAILS

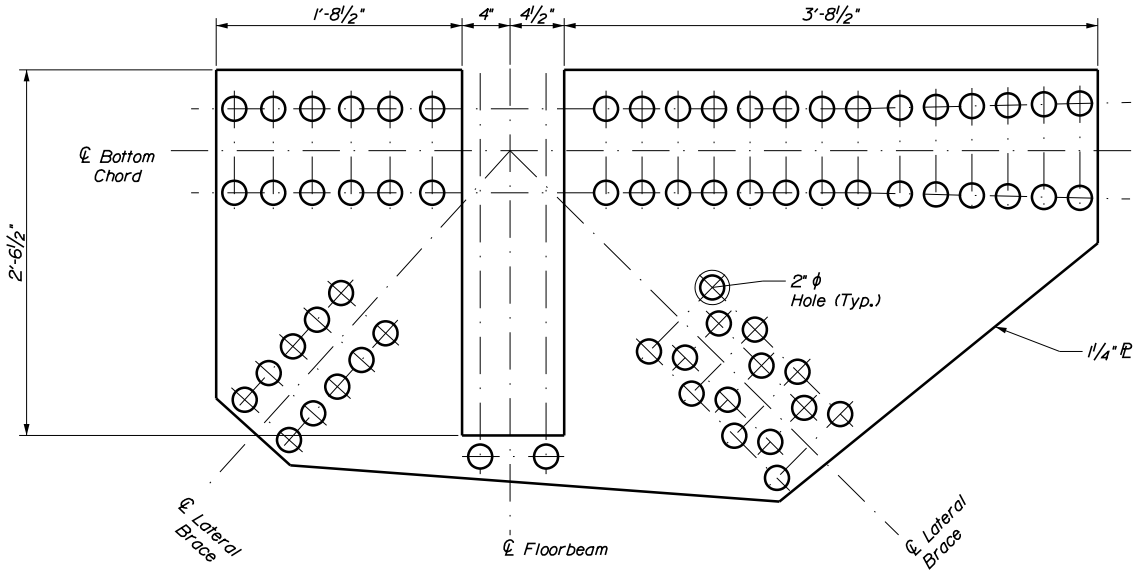

GUSSET FILLER PLATE DETAILS

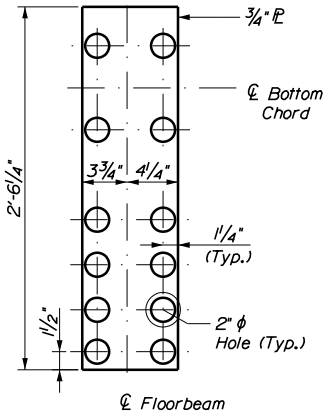

CANTILEVER FILLER PLATE DETAILS

Note: Filler plate dimensions not shown shall be consistent with the respective gusset plate shown.

TYLIN INTERNATIONAL

STATE OF MAINE DEPARTMENT OF TRANSPORTATION	MORSE BRIDGE OVER ANDROSCOGGIN RIVER RUMFORD OXFORD COUNTY	SHEET NUMBER
STP-2261(400)	STRUCTURAL STEEL DETAILS L1E NORTH	11
BRIDGE NO. 2585 WIN 22614.00 BRIDGE PLANS		OF 15

Filename: ...\011_Structural_Steel_Details_6.dgn Division: Bridge Username: Date:11/23/2015

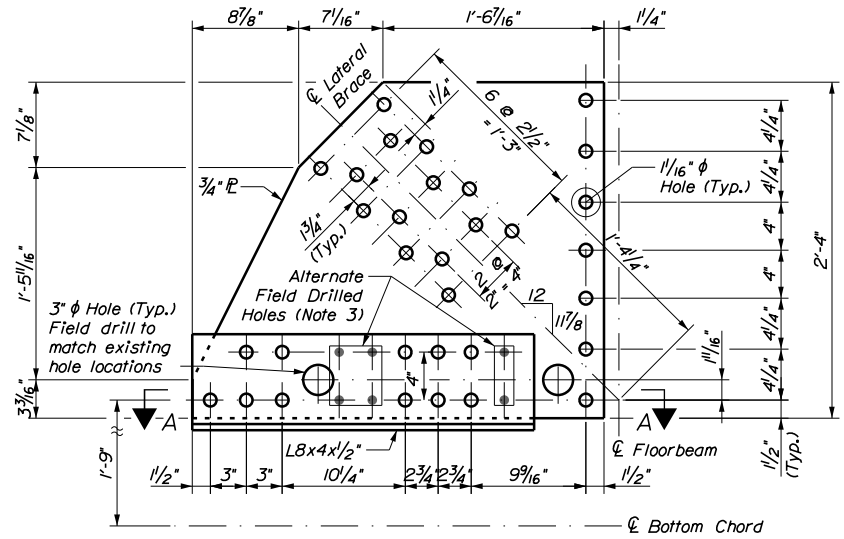

GUSSET PLATE DETAILS

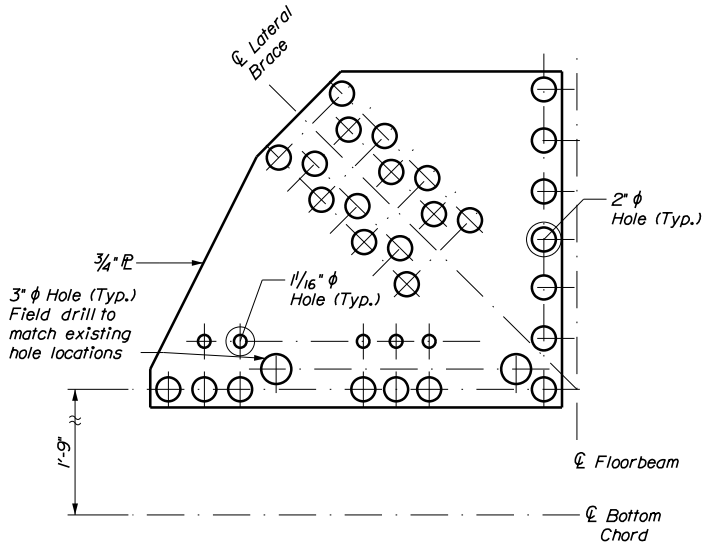

GUSSET FILLER PLATE DETAILS

NOTES:

1. Filler plate dimensions not shown shall be consistent with the respective gusset plate shown.

2. Existing L4x3 1/2 x 3/8 attached to top chord side plates and corresponding rivets shall be removed. Payment will be made under Item 504.811, "Structural Steel Repair."

3. The existing gusset plate is significantly corroded. Additional field drilled holes and corresponding bolt installation may be needed to fully engage the existing gusset plate and proposed steel components. The need for field drilled holes will be coordinated with the Resident.

4. Structural steel details for LOE South are shown. LOE North are similar.

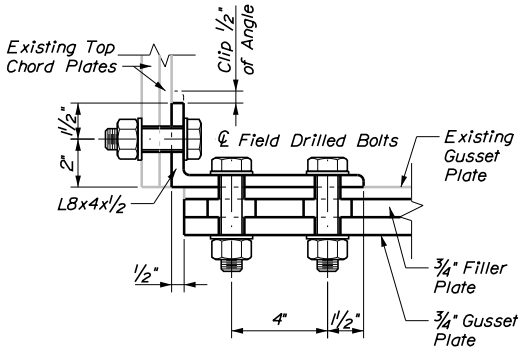

SECTION B-B

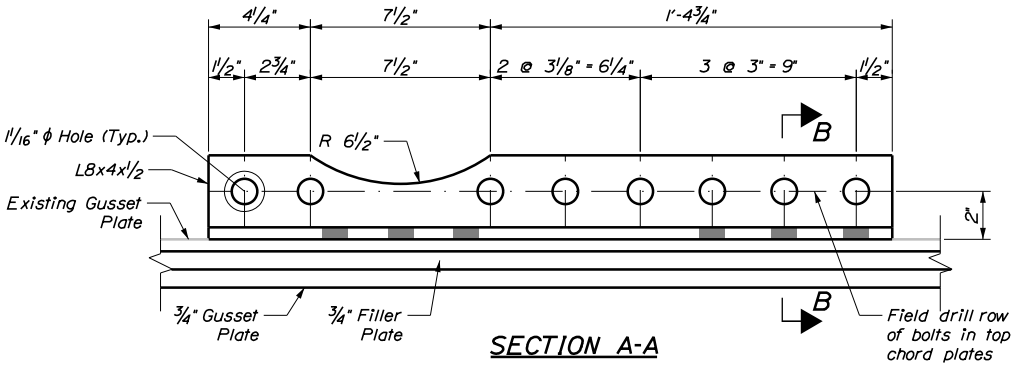

SECTION A-A

TYLIN INTERNATIONAL

STATE OF MAINE DEPARTMENT OF TRANSPORTATION	MORSE BRIDGE OVER ANDROSCOGGIN RIVER RUMFORD OXFORD COUNTY	SHEET NUMBER
STP-2261(400)	STRUCTURAL STEEL DETAILS LOE SOUTH AND LOE NORTH	12
BRIDGE NO. 2585 WIN 22614.00 BRIDGE PLANS		OF 15

Filename: ...\012_Structural_Steel_Details_7.dgn Division: Bridge Username: Date:11/23/2015

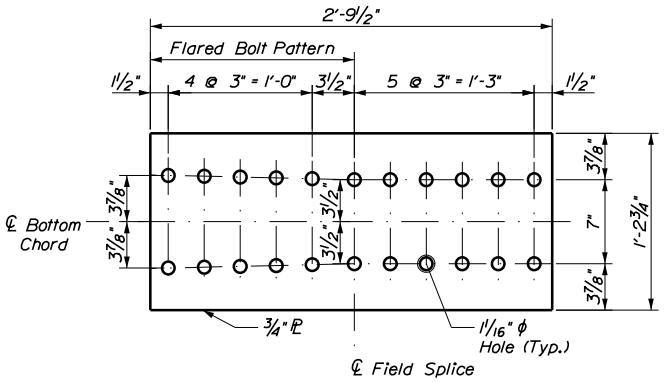

LIE-LOE SOUTH BOTTOM CHORD TOP SPLICE PLATE DETAILS

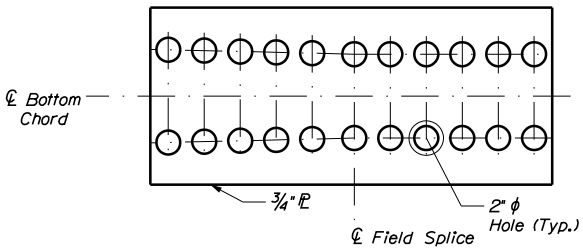

LIE-LOE SOUTH BOTTOM CHORD FILLER PLATE DETAILS

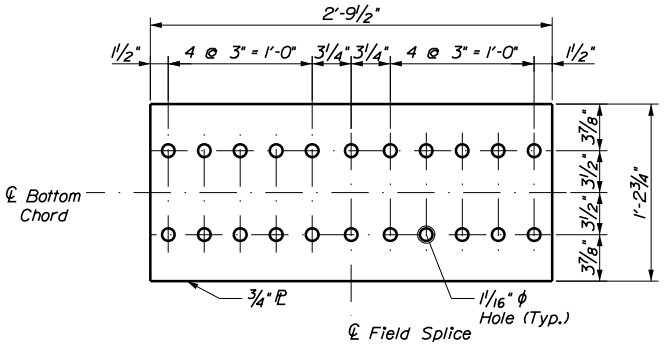

L4W-L4E SOUTH BOTTOM CHORD BOTTOM SPLICE PLATE DETAILS

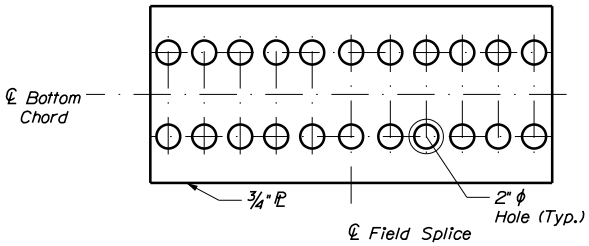

L4W-L4E SOUTH BOTTOM CHORD FILLER PLATE DETAILS

NOTES:

1. Filler plate dimensions not shown shall be consistent with the respective splice plate shown.

2. Any raised edges or other deformations caused by pack rust shall be ground to allow for flush contact surfaces.

TYLIN INTERNATIONAL

STATE OF MAINE DEPARTMENT OF TRANSPORTATION	MORSE BRIDGE OVER ANDROSCOGGIN RIVER RUMFORD OXFORD COUNTY	SHEET NUMBER
STP-2261(400)	STRUCTURAL STEEL DETAILS BOT. CHORD SPLICE PLATES	13
BRIDGE NO. 2585 WIN 22614.00 BRIDGE PLANS		OF 15

Filename: ...\013_Structural_Steel_Details_8.dgn Division: Bridge Username: Date:11/23/2015

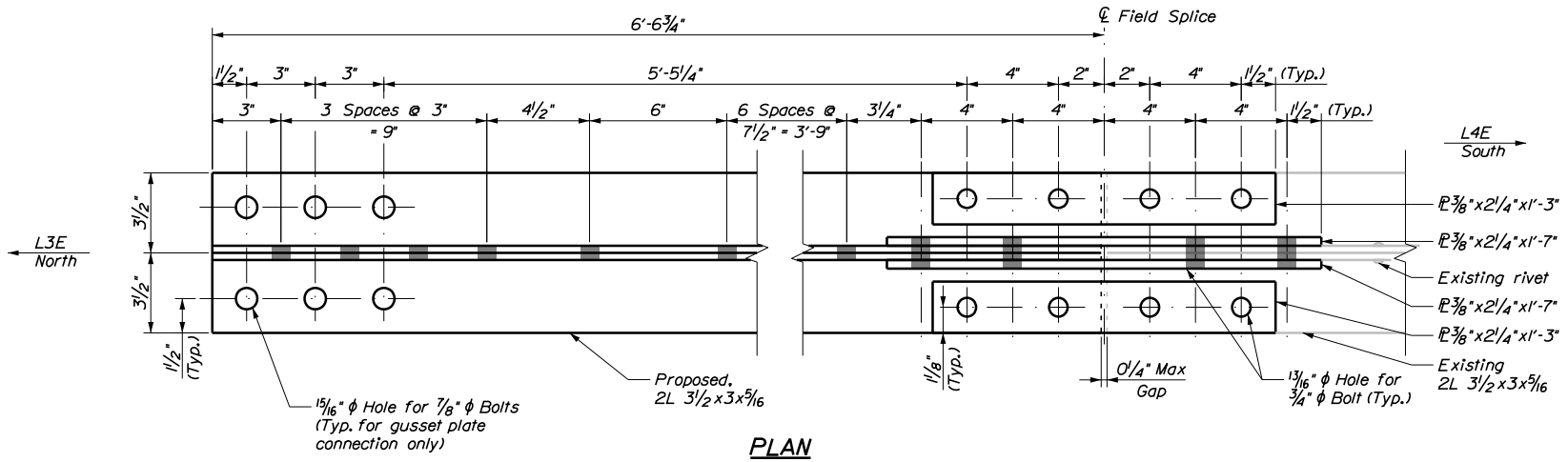

PLAN

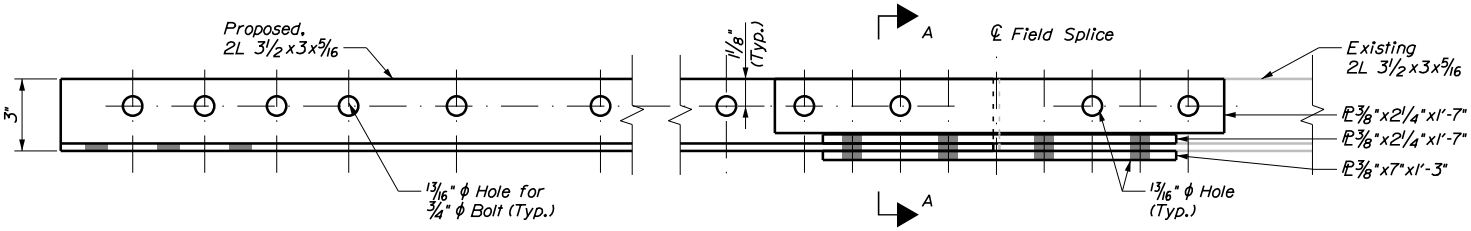

ELEVATION

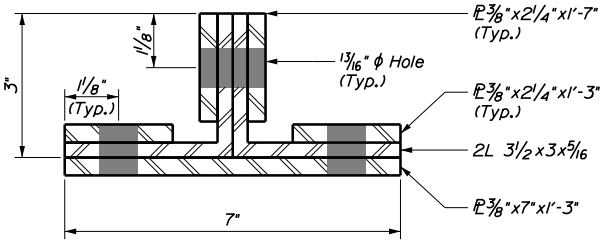

SECTION A-A

NOTE:

1. Existing 2L 3½x3x5/16 shall be removed to the limits shown. Payment will be made under Item 504.811, "Structural Steel Repair."

STATE OF MAINE
DEPARTMENT OF TRANSPORTATION

STP-2261(400)

WIN 22614.00

BRIDGE NO. 2585

BRIDGE PLANS

MORSE BRIDGE
OVER ANDROSCOGGIN RIVER
RUMFORD OXFORD COUNTY

STRUCTURAL STEEL DETAILS
LATERAL BRACE REPAIR

SHEET NUMBER 14 OF 15

31

T·Y·LIN INTERNATIONAL

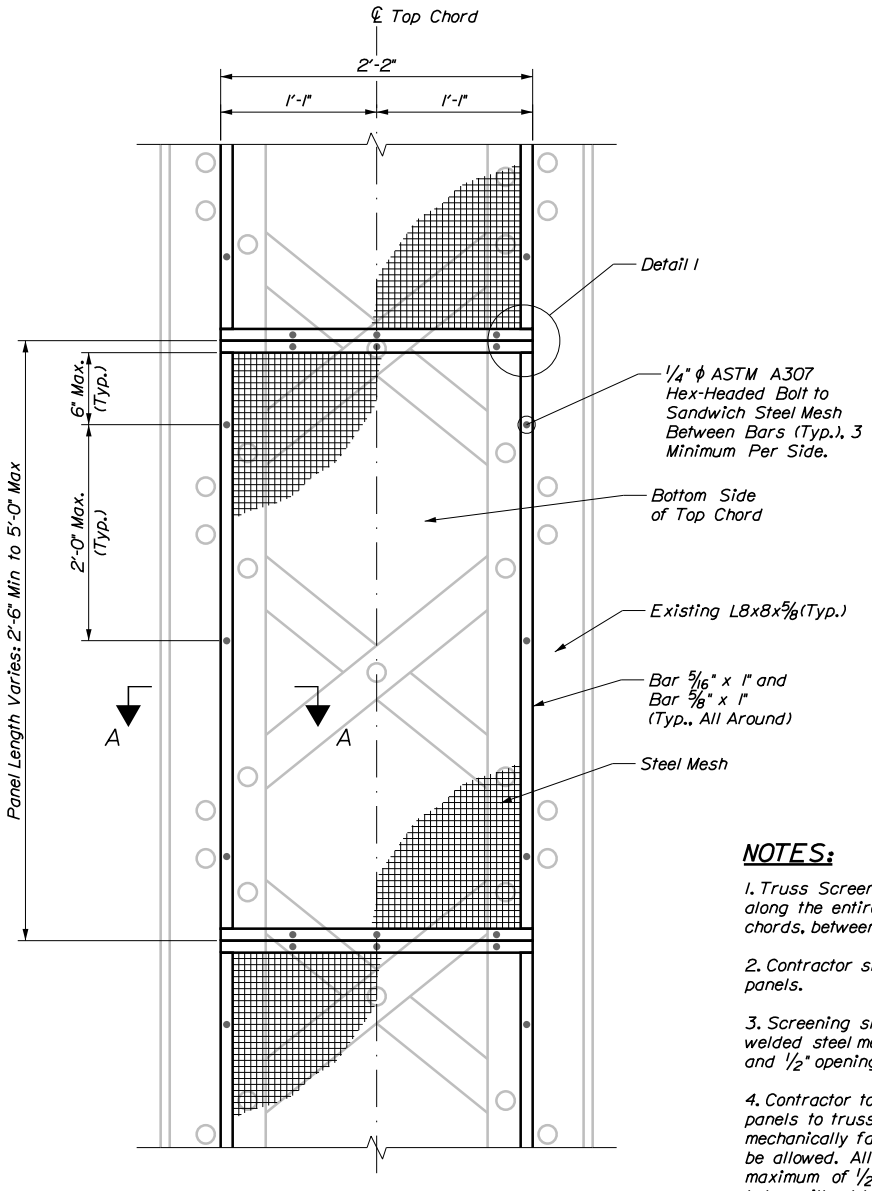

TRUSS SCREEN PANEL PLAN

(Connection between screen panel and truss member not shown)

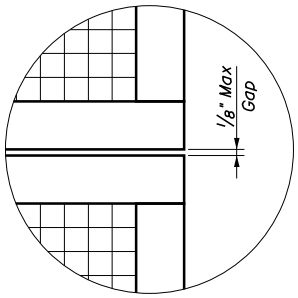

DETAIL 1

NOTES:

1. Truss Screen Panels shall be furnished and installed along the entire length of the bottom side of the top chords, between splice plates.

2. Contractor shall determine length of individual screen panels.

3. Screening shall be galvanized woven or galvanized after welded steel mesh with a nominal 12 Gage wire diameter and 1/2" opening.

4. Contractor to determine method of fastening screen panels to truss member. Screen panels shall be mechanically fastened to the truss member; no welding will be allowed. All holes required in truss members shall be a maximum of 1/2" ϕ and be drilled. Burning or punching of holes will not be allowed.

5. Truss Screen Panel elements, except steel mesh, shall be painted in accordance with Special Provision 506.

6. All fasteners and hardware shall be galvanized in accordance with ASTM A153.

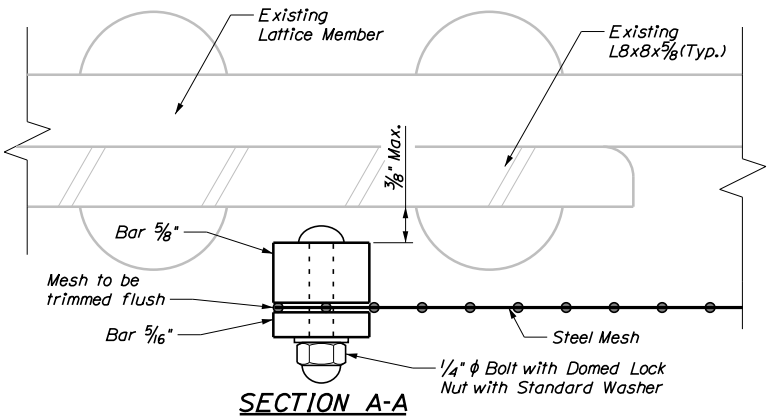

SECTION A-A

(Connection between screen panel and truss member not shown)

TYLIN INTERNATIONAL

Filename: ...\015_Steel_Screen_Details.dgn Division: Bridge Username: Date:11/23/2015

STATE OF MAINE DEPARTMENT OF TRANSPORTATION	MORSE BRIDGE OVER ANDROSCOGGIN RIVER RUMFORD OXFORD COUNTY	SHEET NUMBER
STP-2261(400)	STEEL SCREENING DETAILS	15
BRIDGE NO. 2585 WIN 22614.00 BRIDGE PLANS		OF 15

CONTRACT AGREEMENT, OFFER & AWARD

AGREEMENT made on the date last signed below, by and between the State of Maine, acting through and by its Department of Transportation (Department), an agency of state government with its principal administrative offices located at Child Street, Augusta, Maine, with a mailing address at 16 State House Station, Augusta, Maine 04333-0016, and _____ a corporation or other legal entity organized under the laws of the State of _____, with its principal place of business located at _____ _____

The Department and the Contractor, in consideration of the mutual promises set forth in this Agreement (the "Contract"), hereby agree as follows:

A. The Work.

The Contractor agrees to complete all Work as specified or indicated in the Contract including Extra Work in conformity with the Contract, WIN **022614.00**, for **Morse Bridge Painting** in the town of **Rumford**, County of **Oxford**, Maine. The Work includes construction, maintenance during construction, warranty as provided in the Contract, and other incidental work.

The Contractor shall be responsible for furnishing all supervision, labor, equipment, tools supplies, permanent materials and temporary materials required to perform the Work including construction quality control including inspection, testing and documentation, all required documentation at the conclusion of the project, warranting its work and performing all other work indicated in the Contract.

The Department shall have the right to alter the nature and extent of the Work as provided in the Contract; payment to be made as provided in the same.

B. Time.

The Contractor agrees to complete all Work, except warranty work, on or before **October 15, 2016.** Further, the Department may deduct from moneys otherwise due the Contractor, not as a penalty, but as Liquidated Damages in accordance with Sections 107.7 and 107.8 of the State of Maine Department of Transportation Standard Specifications, November 2014 Edition and related Special Provisions.

C. Price.

The quantities given in the Schedule of Items of the Bid Package will be used as the basis for determining the original Contract amount and for determining the amounts of the required Performance Surety Bond and Payment Surety Bond, and that the amount of this offer is _____

_____

$_ _____ Performance Bond and Payment Bond each being 100% of the amount of this Contract.

D. Contract.

This Contract, which may be amended, modified, or supplemented in writing only, consists of the Contract documents as defined in the Plans, Standard Specifications, November 2014 Edition, Standard Details November 2014 Edition as updated through advertisement, Supplemental Specifications, Special Provisions, Contract Agreement; and Contract Bonds. It is agreed and understood that this Contract will be governed by the documents listed above.

E. Certifications.

By signing below, the Contractor hereby certifies that to the best of the Contractor's knowledge and belief:

1. All of the statements, representations, covenants, and/or certifications required or set forth in the Bid and the Bid Documents, including those in the Federal Contract Provisions Supplement, and the Contract are still complete and accurate as of the date of this Agreement.

2. The Contractor knows of no legal, contractual, or financial impediment to entering into this Contract.

3. The person signing below is legally authorized by the Contractor to sign this Contract on behalf of the Contractor and to legally bind the Contractor to the terms of the Contract.

F. Offer.

The undersigned, having carefully examined the site of work, the Plans, Standard Specifications November 2014 Edition, Standard Details November 2014 Edition as updated through advertisement, Supplemental Specifications, Special Provisions, Contract Agreement; and Contract Bonds contained herein for construction of:
WIN 022614.00 Morse Bridge Painting plus other incidental work, State of Maine, on which bids will be received until the time specified in the "Notice to Contractors" do(es) hereby bid and offer to enter into this contract to supply all the materials, tools, equipment and labor to construct the whole of the Work in strict accordance with the terms and conditions of this Contract at the unit prices in the attached "Schedule of Items".

The Offeror agrees to perform the work required at the price specified above and in accordance with the bids provided in the attached "Schedule of Items" in strict accordance with the terms of this solicitation, and to provide the appropriate insurance and bonds if this offer is accepted by the Government in writing.

As Offeror also agrees:

First: To do any extra work, not covered by the attached "Schedule of Items", which may be ordered by the Resident, and to accept as full compensation the amount determined upon a "Force Account" basis as provided in the Standard Specifications, November 2014 Edition, and as addressed in the contract documents.

Second: That the bid bond at 5% of the bid amount or the official bank check, cashier's check, certificate of deposit or U. S. Postal Money Order in the amount given in the "Notice to Contractors", payable to the Treasurer of the State of Maine and accompanying this bid, shall be forfeited, as liquidated damages, if in case this bid is accepted, and the undersigned shall fail to abide by the terms and conditions of the offer and fail to furnish satisfactory insurance and Contract bonds under the conditions stipulated in the Specifications within 15 days of notice of intent to award the contract.

Third: To begin the Work as stated in Section 107.2 of the Standard Specifications November 2014 Edition and complete the Work within the time limits given in the Special Provisions of this Contract.

Fourth: The Contractor will be bound to the Disadvantaged Business Enterprise (DBE) Requirements contained in the attached Notice (Additional Instructions to Bidders) and submit a completed Contractor's Disadvantaged Business Enterprise Utilization Plan with their bid.

Fifth: That this offer shall remain open for 30 calendar days after the date of opening of bids.

Sixth: The Bidder hereby certifies, to the best of its knowledge and belief that: the Bidder has not, either directly or indirectly, entered into any agreement, participated in any collusion, or otherwise taken any action in restraint of competitive bidding in connection with its bid, and its subsequent contract with the Department.

IN WITNESS WHEREOF, the Contractor, for itself, its successors and assigns, hereby execute two duplicate originals of this Agreement and thereby binds itself to all covenants, terms, and obligations contained in the Contract Documents.

CONTRACTOR

_____	_____
Date	(Signature of Legally Authorized Representative of the Contractor)
_____	_____
Witness	(Name and Title Printed)

G. Award.

Your offer is hereby accepted. This award consummates the Contract, and the documents referenced herein.

MAINE DEPARTMENT OF TRANSPORTATION

_____	_____
Date	By: David Bernhardt, Commissioner
_____	
Witness	

CONTRACT AGREEMENT, OFFER & AWARD

AGREEMENT made on the date last signed below, by and between the State of Maine, acting through and by its Department of Transportation (Department), an agency of state government with its principal administrative offices located at Child Street, Augusta, Maine, with a mailing address at 16 State House Station, Augusta, Maine 04333-0016, and _____ a corporation or other legal entity organized under the laws of the State of _____, with its principal place of business located at _____ _____

The Department and the Contractor, in consideration of the mutual promises set forth in this Agreement (the "Contract"), hereby agree as follows:

A. The Work.

The Contractor agrees to complete all Work as specified or indicated in the Contract including Extra Work in conformity with the Contract, WIN **022614.00**, for **Morse Bridge Painting** in the town of **Rumford**, County of **Oxford**, Maine. The Work includes construction, maintenance during construction, warranty as provided in the Contract, and other incidental work.

The Contractor shall be responsible for furnishing all supervision, labor, equipment, tools supplies, permanent materials and temporary materials required to perform the Work including construction quality control including inspection, testing and documentation, all required documentation at the conclusion of the project, warranting its work and performing all other work indicated in the Contract.

The Department shall have the right to alter the nature and extent of the Work as provided in the Contract; payment to be made as provided in the same.

B. Time.

The Contractor agrees to complete all Work, except warranty work, on or before **October 15, 2016.** Further, the Department may deduct from moneys otherwise due the Contractor, not as a penalty, but as Liquidated Damages in accordance with Sections 107.7 and 107.8 of the State of Maine Department of Transportation Standard Specifications, November 2014 Edition and related Special Provisions.

C. Price.

The quantities given in the Schedule of Items of the Bid Package will be used as the basis for determining the original Contract amount and for determining the amounts of the required Performance Surety Bond and Payment Surety Bond, and that the amount of this offer is _____

_____

$_ _____ Performance Bond and Payment Bond each being 100% of the amount of this Contract.

D. Contract.

This Contract, which may be amended, modified, or supplemented in writing only, consists of the Contract documents as defined in the Plans, Standard Specifications, November 2014 Edition, Standard Details November 2014 Edition as updated through advertisement, Supplemental Specifications, Special Provisions, Contract Agreement; and Contract Bonds. It is agreed and understood that this Contract will be governed by the documents listed above.

E. Certifications.

By signing below, the Contractor hereby certifies that to the best of the Contractor's knowledge and belief:

1. All of the statements, representations, covenants, and/or certifications required or set forth in the Bid and the Bid Documents, including those in the Federal Contract Provisions Supplement, and the Contract are still complete and accurate as of the date of this Agreement.

2. The Contractor knows of no legal, contractual, or financial impediment to entering into this Contract.

3. The person signing below is legally authorized by the Contractor to sign this Contract on behalf of the Contractor and to legally bind the Contractor to the terms of the Contract.

F. Offer.

The undersigned, having carefully examined the site of work, the Plans, Standard Specifications November 2014 Edition, Standard Details November 2014 Edition as updated through advertisement, Supplemental Specifications, Special Provisions, Contract Agreement; and Contract Bonds contained herein for construction of:
WIN 022614.00 Morse Bridge Painting plus other incidental work, State of Maine, on which bids will be received until the time specified in the "Notice to Contractors" do(es) hereby bid and offer to enter into this contract to supply all the materials, tools, equipment and labor to construct the whole of the Work in strict accordance with the terms and conditions of this Contract at the unit prices in the attached "Schedule of Items".

The Offeror agrees to perform the work required at the price specified above and in accordance with the bids provided in the attached "Schedule of Items" in strict accordance with the terms of this solicitation, and to provide the appropriate insurance and bonds if this offer is accepted by the Government in writing.

As Offeror also agrees:

First: To do any extra work, not covered by the attached "Schedule of Items", which may be ordered by the Resident, and to accept as full compensation the amount determined upon a "Force Account" basis as provided in the Standard Specifications, November 2014 Edition, and as addressed in the contract documents.

Second: That the bid bond at 5% of the bid amount or the official bank check, cashier's check, certificate of deposit or U. S. Postal Money Order in the amount given in the "Notice to Contractors", payable to the Treasurer of the State of Maine and accompanying this bid, shall be forfeited, as liquidated damages, if in case this bid is accepted, and the undersigned shall fail to abide by the terms and conditions of the offer and fail to furnish satisfactory insurance and Contract bonds under the conditions stipulated in the Specifications within 15 days of notice of intent to award the contract.

Third: To begin the Work as stated in Section 107.2 of the Standard Specifications November 2014 Edition and complete the Work within the time limits given in the Special Provisions of this Contract.

Fourth: The Contractor will be bound to the Disadvantaged Business Enterprise (DBE) Requirements contained in the attached Notice (Additional Instructions to Bidders) and submit a completed Contractor's Disadvantaged Business Enterprise Utilization Plan with their bid.

Fifth: That this offer shall remain open for 30 calendar days after the date of opening of bids.

Sixth: The Bidder hereby certifies, to the best of its knowledge and belief that: the Bidder has not, either directly or indirectly, entered into any agreement, participated in any collusion, or otherwise taken any action in restraint of competitive bidding in connection with its bid, and its subsequent contract with the Department.

IN WITNESS WHEREOF, the Contractor, for itself, its successors and assigns, hereby execute two duplicate originals of this Agreement and thereby binds itself to all covenants, terms, and obligations contained in the Contract Documents.

CONTRACTOR

_____	_____
Date	(Signature of Legally Authorized Representative of the Contractor)
_____	_____
Witness	(Name and Title Printed)

G. Award.

Your offer is hereby accepted. This award consummates the Contract, and the documents referenced herein.

MAINE DEPARTMENT OF TRANSPORTATION

_____	_____
Date	By: David Bernhardt, Commissioner
_____	
Witness	

CONTRACT AGREEMENT, OFFER & AWARD

AGREEMENT made on the date last signed below, by and between the State of Maine, acting through and by its Department of Transportation (Department), an agency of state government with its principal administrative offices located at Child Street Augusta, Maine, with a mailing address at 16 State House Station, Augusta, Maine 04333-0016, and **(Name of the firm bidding the job)** a corporation or other legal entity organized under the laws of the State of Maine, with its principal place of business located at **(address of the firm bidding the job)**

The Department and the Contractor, in consideration of the mutual promises set forth in this Agreement (the "Contract"), hereby agree as follows:

SAMPLE

A. The Work.

The Contractor agrees to complete all Work as specified or indicated in the Contract including Extra Work in conformity with the Contract, PIN No.**1224.00**, for the **Hot Mix Asphalt Overlay** in the town/city of **South Nowhere,** County of **Washington**, Maine. The Work includes construction, maintenance during construction, warranty as provided in the Contract, and other incidental work.

The Contractor shall be responsible for furnishing all supervision, labor, equipment, tools supplies, permanent materials and temporary materials required to perform the Work including construction quality control including inspection, testing and documentation, all required documentation at the conclusion of the project, warranting its work and performing all other work indicated in the Contract.

The Department shall have the right to alter the nature and extent of the Work as provided in the Contract; payment to be made as provided in the same.

B. Time.

The Contractor agrees to complete all Work, except warranty work, on or before **November 15, 2006.** Further, the Department may deduct from moneys otherwise due the Contractor, not as a penalty, but as Liquidated Damages in accordance with Sections 107.7 and 107.8 of the State of Maine Department of Transportation Standard Specifications, November 2014 Edition and related Special Provisions.

C. Price.

The quantities given in the Schedule of Items of the Bid Package will be used as the basis for determining the original Contract amount and for determining the amounts of the required Performance Surety Bond and Payment Surety Bond, and that the amount of this offer is **____(Place bid here in alphabetical form such as One Hundred and Two dollars and 10 cents)** **$_ (repeat bid here in numerical terms, such as $102.10)**_____ Performance Bond and Payment Bond each being 100% of the amount of this Contract.

D. Contract.

This Contract, which may be amended, modified, or supplemented in writing only, consists of the Contract documents as defined in the Plans, Standard Specifications, November 2014 Edition, Standard Details November 2014 Edition, Supplemental Specifications, Special Provisions, Contract Agreement; and Contract Bonds. It is agreed and understood that this Contract will be governed by the documents listed above.

E. Certifications.

By signing below, the Contractor hereby certifies that to the best of the Contractor's knowledge and belief:

1. All of the statements, representations, covenants, and/or certifications required or set forth in the Bid and the Bid Documents, including those in Appendix A to Division 100 of the Standard Specifications November 2014 Edition (Federal Contract Provisions Supplement), and the Contract are still complete and accurate as of the date of this Agreement.

2. The Contractor knows of no legal, contractual, or financial impediment to entering into this Contract.

3. The person signing below is legally authorized by the Contractor to sign this Contract on behalf of the Contractor and to legally bind the Contractor to the terms of the Contract.

SAMPLE

F. Offer.

The undersigned, having carefully examined the site of work, the Plans, Standard Specifications, November 2014 Edition, Standard Details November 2014 Edition, Supplemental Specifications, Special Provisions, Contract Agreement; and Contract Bonds contained herein for construction of:

PIN 1234.00 South Nowhere, Hot Mix Asphalt Overlay,

State of Maine, on which bids will be received until the time specified in the "Notice to Contractors" do(es) hereby bid and offer to enter into this contract to supply all the materials, tools, equipment and labor to construct the whole of the Work in strict accordance with the terms and conditions of this Contract at the unit prices in the attached "Schedule of Items".

The Offeror agrees to perform the work required at the price specified above and in accordance with the bids provided in the attached "Schedule of Items" in strict accordance with the terms of this solicitation, and to provide the appropriate insurance and bonds if this offer is accepted by the Government in writing.

As Offeror also agrees:

First: To do any extra work, not covered by the attached "Schedule of Items", which may be ordered by the Resident, and to accept as full compensation the amount determined upon a "Force Account" basis as provided in the Standard Specifications, November 2014 Edition, and as addressed in the contract documents.

Second: That the bid bond at 5% of the bid amount or the official bank check, cashier's check, certificate of deposit or U. S. Postal Money Order in the amount given in the "Notice to Contractors", payable to the Treasurer of the State of Maine and accompanying this bid, shall be forfeited, as liquidated damages, if in case this bid is accepted, and the undersigned shall fail to abide by the terms and conditions of the offer and fail to furnish satisfactory insurance and Contract bonds under the conditions stipulated in the Specifications within 15 days of notice of intent to award the contract.

Third: To begin the Work as stated in Section 107.2 of the Standard Specifications November 2014 Edition and complete the Work within the time limits given in the Special Provisions of this Contract.

Fourth: The Contractor will be bound to the Disadvantaged Business Enterprise (DBE) Requirements contained in the attached Notice (Additional Instructions to Bidders) and submit a completed Contractor's Disadvantaged Business Enterprise Utilization Plan with their bid.

Fifth: That this offer shall remain open for 30 calendar days after the date of opening of bids.

SAMPLE

Sixth: The Bidder hereby certifies, to the best of its knowledge and belief that: the Bidder has not, either directly or indirectly, entered into any agreement, participated in any collusion, or otherwise taken any action in restraint of competitive bidding in connection with its bid, and its subsequent contract with the Department.

IN WITNESS WHEREOF, the Contractor, for itself, its successors and assigns, hereby execute two duplicate originals of this Agreement and thereby binds itself to all covenants, terms, and obligations contained in the Contract Documents.

CONTRACTOR

_____	**(Sign Here)**
Date	(Signature of Legally Authorized Representative of the Contractor)
____(**Witness Sign Here)**	**(Print Name Here)**
Witness	(Name and Title Printed)

SAMPLE

G. Award.

Your offer is hereby accepted. This award consummates the Contract, and the documents referenced herein.

MAINE DEPARTMENT OF TRANSPORTATION

_____	_____
Date	By: David Bernhardt, Commissioner

_____
(Witness)

BOND # _____

CONTRACT PERFORMANCE BOND
(Surety Company Form)

KNOW ALL MEN BY THESE PRESENTS: That _____ _____ **in the State of** _____, as principal, and…….....,
a corporation duly organized under the laws of the State of ..... and having a usual place of business ....,
as Surety, are held and firmly bound unto the Treasurer of the State of Maine in the sum of _____ **and 00/100 Dollars ($)**, to be paid said Treasurer of the State of Maine or his successors in office, for which payment well and truly to be made, Principal and Surety bind themselves, their heirs, executors and administrators, successors and assigns, jointly and severally by these presents.

The condition of this obligation is such that if the Principal designated as Contractor in the Contract to construct Project Number _____ in the Municipality of _____ promptly and faithfully performs the Contract, then this obligation shall be null and void; otherwise it shall remain in full force and effect.

The Surety hereby waives notice of any alteration or extension of time made by the State of Maine.

Signed and sealed this ..... day of ....., 20….. .

WITNESSES:	SIGNATURES:
	CONTRACTOR:
Signature.....	.....….....
Print Name Legibly	Print Name Legibly ...…….....
	SURETY:
Signature	....…….....
Print Name Legibly	Print Name Legibly .....
SURETY ADDRESS:	NAME OF LOCAL AGENCY:
.....	ADDRESS .....
.....	...…….....
.....	.....…….....
TELEPHONE.....	.....…….....

SAMPLE

BOND # _____

CONTRACT PAYMENT BOND
(Surety Company Form)

KNOW ALL MEN BY THESE PRESENTS: That _____ _____ **in the State of** _____, as principal, and.....….....
a corporation duly organized under the laws of the State of ..... and having a usual place of business in .....……., as Surety, are held and firmly bound unto the Treasurer of the State of Maine for the use and benefit of claimants as herein below defined, in the sum of _____ **and 00/100 Dollars ($)** for the payment whereof Principal and Surety bind themselves, their heirs, executors and administrators, successors and assigns, jointly and severally by these presents.

The condition of this obligation is such that if the Principal designated as Contractor in the Contract to construct Project Number _____ in the Municipality of _____ promptly satisfies all claims and demands incurred for all labor and material, used or required by him in connection with the work contemplated by said Contract, and fully reimburses the obligee for all outlay and expense which the obligee may incur in making good any default of said Principal, then this obligation shall be null and void; otherwise it shall remain in full force and effect.

A claimant is defined as one having a direct contract with the Principal or with a Subcontractor of the Principal for labor, material or both, used or reasonably required for use in the performance of the contract.

Signed and sealed this ..... day of ...……....., 20 ... .

WITNESS:	SIGNATURES:
	CONTRACTOR:
Signature…….....	.....….....
Print Name Legibly .....……..	Print Name Legibly ….....
	SURETY:
Signature.....	...….....
Print Name Legibly	Print Name Legibly ….....
SURETY ADDRESS:	NAME OF LOCAL AGENCY:
...….....	ADDRESS ….....
.....	…….....
TELEPHONE	…….....

SAMPLE

Maine DOT Map

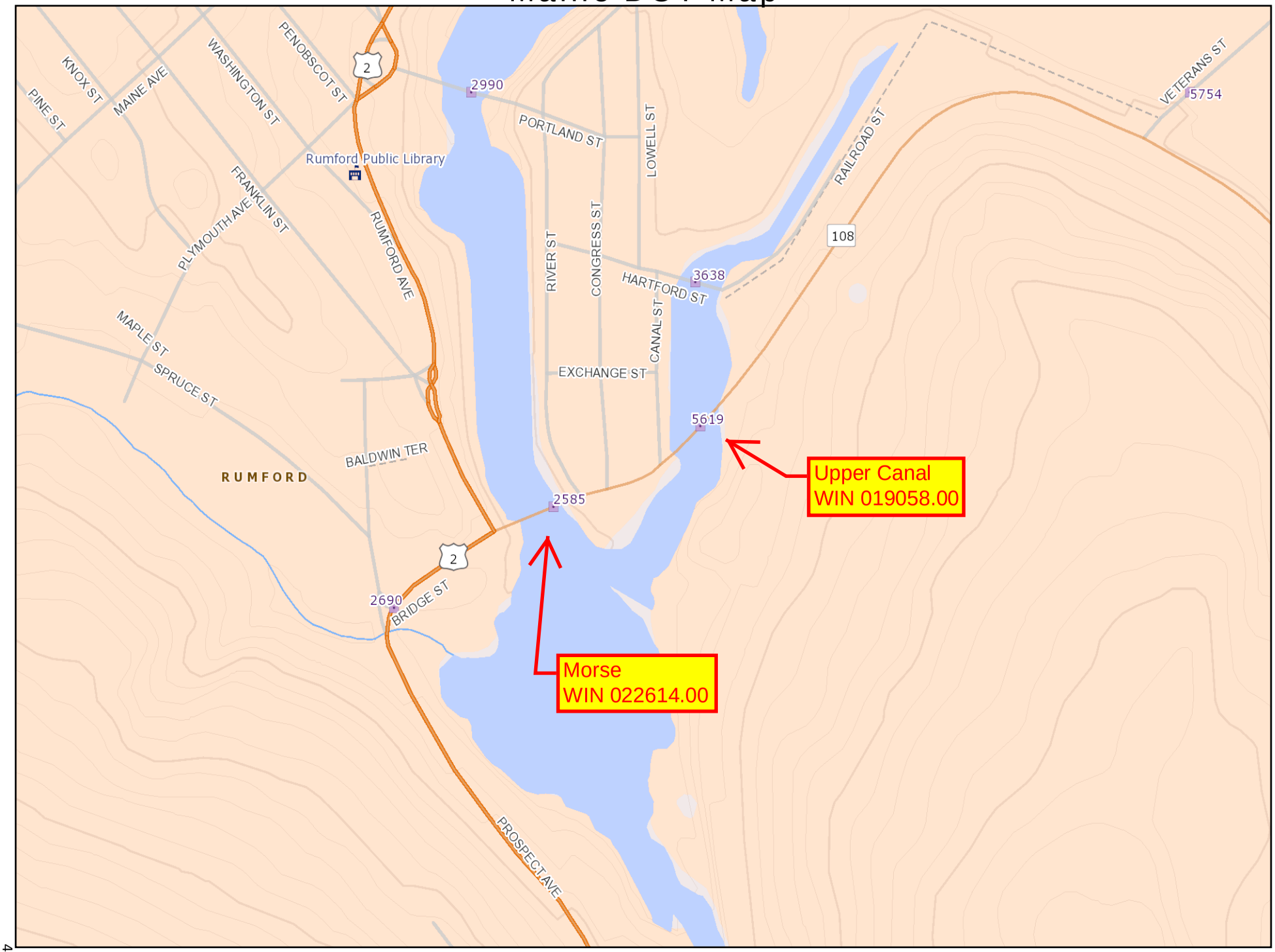

Map Generated on Wednesday, October 07, 2015 11:14:32 AM

Map Scale 1:5958

The Maine Department of Transportation provides this publication for information only. Reliance upon this information is at user risk. It is subject to revision and may be incomplete depending upon changing conditions. The Department assumes no liability if injuries or damages result from this information. This map is not intended to support emergency dispatch. Road names used on this map may not match official road names.

General Roads

- *Interstate*
- *US Routes*
- *State Routes*
- *Public Roads*

Bridges

MaineDOT Regions

State Urban

Water Bodies

Boundary Lines

- *coastline*
- *county*
- *state*
- *town*

Wetlands

Conserved Lands

General Decision Number: ME150044 01/02/2015 ME44

Superseded General Decision Number: ME20140044

State: Maine

Construction Type: Highway

County: Oxford County in Maine.

HIGHWAY CONSTRUCTION PROJECTS (excluding tunnels, building structures in rest area projects & railroad construction; bascule, suspension & spandrel arch bridges designed for commercial navigation, bridges involving marine construction; and other major bridges).

Note: Executive Order (EO) 13658 establishes an hourly minimum wage of $10.10 for 2015 that applies to all contracts subject to the Davis-Bacon Act for which the solicitation is issued on or after January 1, 2015. If this contract is covered by the EO, the contractor must pay all workers in any classification listed on this wage determination at least $10.10 (or the applicable wage rate listed on this wage determination, if it is higher) for all hours spent performing on the contract. The EO minimum wage rate will be adjusted annually. Additional information on contractor requirements and worker protections under the EO is available at www.dol.gov/whd/govcontracts.

Modification Number	Publication Date
0	01/02/2015

* TEAM0340-001 08/01/2013

	Rates	Fringes
TRUCK DRIVER		
Low Boy	$ 14.75	17.5825

---

* SUME2011-039 09/14/2011

	Rates	Fringes
CARPENTER, Includes Form Work	$ 18.34	2.84
INSTALLER - GUARDRAIL	$ 15.76	0.00
IRONWORKER, REINFORCING	$ 18.98	0.00
LABORER: Asphalt Raker	$ 14.71	2.95
LABORER: Flagger	$ 10.34	0.00
LABORER: Landscape	$ 14.42	1.42

LABORER: Pipelayer.....$ 14.40 1.87

LABORER: Common or General,
Including Highway/Parking Lot
Striping.....$ 14.90 1.08

OPERATOR: Asphalt Roller.....$ 18.76 8.90

OPERATOR: Backhoe.....$ 14.51 2.95

OPERATOR: Bobcat/Skid
Steer/Skid Loader.....$ 16.73 5.57

OPERATOR: Bulldozer.....$ 16.49 1.30

OPERATOR: Cold Planer.....$ 17.63 0.00

OPERATOR: Crane.....$ 20.99 6.40

OPERATOR: Excavator.....$ 16.87 1.33

OPERATOR: Grader/Blade.....$ 18.63 3.29

OPERATOR: Loader.....$ 15.14 2.11

OPERATOR: Mechanic.....$ 19.30 7.60

OPERATOR: Milling Machine
Reclaimer Combo.....$ 13.00 0.80

OPERATOR: Paver (Asphalt,
Aggregate, and Concrete).....$ 20.22 7.99

OPERATOR: Screed.....$ 16.92 5.36

OPERATOR: Roller (Earth).....$ 15.74 2.47

TRAFFIC CONTROL: LABORER
-Device Monitor.....$ 14.80 6.29

TRUCK DRIVER, Includes All
Dump Trucks.....$ 13.11 1.10

TRUCK DRIVER: Semi-Trailer
Truck.....$ 16.36 9.09

TRUCK DRIVER: 1, 2, 3 Axle
Truck.....$ 16.85 4.98

WELDERS - Receive rate prescribed for craft performing operation to which welding is incidental.

==========

Unlisted classifications needed for work not included within the scope of the classifications listed may be added after award only as provided in the labor standards contract clauses (29CFR 5.5 (a) (1) (ii)).

The body of each wage determination lists the classification and wage rates that have been found to be prevailing for the cited type(s) of construction in the area covered by the wage determination. The classifications are listed in alphabetical order of "identifiers" that indicate whether the particular rate is a union rate (current union negotiated rate for local), a survey rate (weighted average rate) or a union average rate (weighted union average rate).

Union Rate Identifiers

A four letter classification abbreviation identifier enclosed in dotted lines beginning with characters other than "SU" or "UAVG" denotes that the union classification and rate were prevailing for that classification in the survey. Example: PLUM0198-005 07/01/2014. PLUM is an abbreviation identifier of the union which prevailed in the survey for this classification, which in this example would be Plumbers. 0198 indicates the local union number or district council number where applicable, i.e., Plumbers Local 0198. The next number, 005 in the example, is an internal number used in processing the wage determination. 07/01/2014 is the effective date of the most current negotiated rate, which in this example is July 1, 2014.

Union prevailing wage rates are updated to reflect all rate changes in the collective bargaining agreement (CBA) governing this classification and rate.

Survey Rate Identifiers

Classifications listed under the "SU" identifier indicate that no one rate prevailed for this classification in the survey and the published rate is derived by computing a weighted average rate based on all the rates reported in the survey for that classification. As this weighted average rate includes all rates reported in the survey, it may include both union and non-union rates. Example: SULA2012-007 5/13/2014. SU indicates the rates are survey rates based on a weighted average calculation of rates and are not majority rates. LA indicates the State of Louisiana. 2012 is the year of survey on which these classifications and rates are based. The next number, 007

in the example, is an internal number used in producing the wage determination. 5/13/2014 indicates the survey completion date for the classifications and rates under that identifier.

Survey wage rates are not updated and remain in effect until a new survey is conducted.

Union Average Rate Identifiers

Classification(s) listed under the UAVG identifier indicate that no single majority rate prevailed for those classifications; however, 100% of the data reported for the classifications was union data. EXAMPLE: UAVG-OH-0010 08/29/2014. UAVG indicates that the rate is a weighted union average rate. OH indicates the state. The next number, 0010 in the example, is an internal number used in producing the wage determination. 08/29/2014 indicates the survey completion date for the classifications and rates under that identifier.

A UAVG rate will be updated once a year, usually in January of each year, to reflect a weighted average of the current negotiated/CBA rate of the union locals from which the rate is based.

WAGE DETERMINATION APPEALS PROCESS

1.) Has there been an initial decision in the matter? This can be:

* an existing published wage determination
* a survey underlying a wage determination
* a Wage and Hour Division letter setting forth a position on a wage determination matter
* a conformance (additional classification and rate) ruling

On survey related matters, initial contact, including requests for summaries of surveys, should be with the Wage and Hour Regional Office for the area in which the survey was conducted because those Regional Offices have responsibility for the Davis-Bacon survey program. If the response from this initial contact is not satisfactory, then the process described in 2.) and 3.) should be followed.

With regard to any other matter not yet ripe for the formal process described here, initial contact should be with the Branch of Construction Wage Determinations. Write to:

Branch of Construction Wage Determinations
Wage and Hour Division
U.S. Department of Labor

200 Constitution Avenue, N.W.
Washington, DC 20210

2.) If the answer to the question in 1.) is yes, then an interested party (those affected by the action) can request review and reconsideration from the Wage and Hour Administrator (See 29 CFR Part 1.8 and 29 CFR Part 7). Write to:

Wage and Hour Administrator
U.S. Department of Labor
200 Constitution Avenue, N.W.
Washington, DC 20210

The request should be accompanied by a full statement of the interested party's position and by any information (wage payment data, project description, area practice material, etc.) that the requestor considers relevant to the issue.

3.) If the decision of the Administrator is not favorable, an interested party may appeal directly to the Administrative Review Board (formerly the Wage Appeals Board). Write to:

Administrative Review Board
U.S. Department of Labor
200 Constitution Avenue, N.W.
Washington, DC 20210

4.) All decisions by the Administrative Review Board are final.

==========

END OF GENERAL DECISION

Rumford
Morse Bridge
WIN 022614.00
December 1, 2015

MaineDOT DBE Project Attainment Target (PAT)
for this Project is **.001 %**

The MaineDOT seeks to meet the specified annual Disadvantaged Business Enterprise (DBE) usage goal set out by 49 CFR 26.45 through the efforts of contractors seeking to employ qualified DBE subcontractors. We seek to meet this goal by race neutral means and do not, at this time, use contract specific requirements for each project. We do however, understand the capacity of Maine's DBE community and the unique characteristics a project may have that would differ from the broad annual goal.

Taking this into consideration, the MaineDOT will review each project and develop an anticipated attainment or Project Attainment Target (PAT) based on several factors that are project specific. Those factors include:

- ☐ Scope of Work
- ☐ DBE availability according to Specification Item
- ☐ Geographic location
- ☐ DBE capacity

This PAT is developed to assist contractors to better understand the DBE participation that the MaineDOT can reasonably expect for a specific project. The PAT is NOT a mandate but an assessment of the DBE opportunities that this project could meet or exceed. MaineDOT anticipates that each contractor will make the best effort to reach or exceed the PAT for this project.

Rumford
Morse Bridge
WIN 22614.00
November 10, 2015

SPECIAL PROVISION
SECTION 104
GENERAL RIGHTS & RESPONSIBILITIES
(Bridge Closure Notification)

Section 104, General Rights and Responsibilities, of the Standard Specifications is amended as follows:

104.4.10 Coordination of Road Closure/Bridge Closure/Bridge Width Restriction Notification:

Paragraph 2 is removed and replaced with the following:

A public notice shall be published in a local newspaper ten days prior to the closure.

April 10, 2013
Supersedes December 17, 2010

SPECIAL PROVISION
SECTION 104
GENERAL RIGHTS AND RESPONSIBILITIES
(Electronic Payroll Submission)
(Payment Tracking)

104.3.8.1 Electronic Payroll Submission The prime contractor and all subcontractors and lower-tier subcontractors will submit their certified payrolls electronically on this contract utilizing the Elation System web based reporting. There is no charge to the contracting community for the use of this service. The submission of paper payrolls will not be allowed or accepted. Additional information can be found at http://www.maine.gov/mdot/contractors/ under the "Quick Links".

104.3.8.2 Payment Tracking The prime contractor and all subcontractors and lower-tier subcontractors will track and confirm the delivery and receipt of all payments through the Elation System

Town: Rumford
Project: STP-2261(400)
WIN: 22614.00
Date: November 5, 2015

SPECIAL PROVISIONS
SECTION 104
Utilities

MEETING

A Preconstruction Utility Conference, as defined in Subsection 104.4.6 of the Standard Specifications **is** thereby called for.

GENERAL INFORMATION

These Special Provisions outline the arrangements that have been made by the Department for coordination of the work and for utility and/or railroad adjustments as defined in Subsection 104.4.6 and 104.4.8 of the Standard Specifications. The following list identifies all known utilities or railroads having facilities presently located within the limits of this project or intending to install facilities during project construction, unless otherwise provided.

RUMFORD, ME

Overview

Utility/Railroad	Aerial	Underground	Railroad
Central Maine Power Company	X	None	None
Fairpoint Communications	None	None	None
Time Warner Cable	X	None	None
Rumford-Mexico Sewerage District	None	X	None
Rumford Water District	None	X	None
Town of Rumford Fire Alarm	X	None	None

Temporary utility adjustments are not contemplated unless herein provided for.

The approximate locations of major items of existing and proposed (permanent and temporary) utility plant are shown on the highway construction plans.

All utility crossings over highways will provide not less than 20 feet vertical clearance over existing ground in cut or over finished grade in fill, during construction of this project.

Manholes, valve boxes, service connections, and similar incidental utility plant are to be adjusted in cooperation with work being done by the Contractor**.**

Unless otherwise provided, utilities will not be required to make underground installations in frozen ground.

Any times and dates mentioned are estimates only and are dependent upon favorable weather, working conditions, and freedom from emergencies. The Contractors shall have no claim against the Department if they are exceeded.

Utility working days are Monday through Friday, conditions permitting. Times are estimated on the basis of a single crew for each utility.

In all cases, the utilities shall be advised well in advance (generally three weeks) before work, dependent upon other work to be done by the Contractor, in any particular area, is to be commenced by them.

Unless otherwise specified, any underground utility facilities shown on the project plans represent approximate locations gathered from available information. The Department cannot certify the level of accuracy of this data. Underground facilities indicated on the topographic sheets (plan views) have been collected from historical records and/or on-site designations provided by the respective utility companies. Underground facilities indicated on the cross-sections have been carried over from the plan view data and may also include further approximations of the elevations (depths) based upon straight-line interpolation from the nearest manholes, gate valves, or test pits.

All clearing and tree removal which is a part of this contract in areas where utilities are involved must be completed by the Contractor before the utilities can relocate their facilities. The Contractor shall clear and remove all trees to the right-of-way limit on the left.

AERIAL

Central Maine Power Company has an existing 3 phase power line on the upstream side of this structure, with the near conductor to the centerline of the bridge being directly over the upstream fascia. This causes a problem for the installation of the encapsulating tarp for the whole structure.

The following options are dependent on the work undertaken by the contractor on WIN 19058.00 (Upper Canal Bridge). So it is the responsibility of the contractor on WIN 22614.00 to work in conjunction with the contractor on WIN 19058.00.

Option #1:

On WIN 22614.00 (Morse Bridge) with energized circuits on the upstream, only work and encapsulation can be accomplished on the downstream half of this structure until the powerline is de-energized.

Option #2:
On WIN 22614.00 (Morse Bridge) with de-energized circuits on the upstream side, the whole bridge can be encapsulated thus allowing work to proceed on the whole structure.

Option #3:
On WIN 19058.00 (Upper Canal Bridge) with power circuits de-energized, which means that the upstream power circuits on WIN 22614.00 have to remain energized.

Option #4:
On WIN 19058.00 (Upper Canal Bridge) with power circuits energized, which means that the upstream power circuits on WIN 22614.00 can be de-energized thus allowing for the total encapsulation of the bridge.

They also plan to remove their existing pole at Station 8+27 on the left. They hope to have this work completed before this project is advertised.

They also may be able to de-energize their existing three phase circuit on the right from Station 3+10 to Station 7+00. The de-energizing of this circuit may not happen if their existing line on WIN 22614 is de-energized. Please see Utility Special Provisions 104 WIN 22614 for more information. The reason is that one circuit has to remain energized to provide power to the island. These lines are going to stay in place. This will be discussed in greater detail at the pre-construction utility meeting.

Fairpoint Communications and Time Warner Cable both have existing facilities that are attached to the existing pole line along Route 108 (Upper Canal Bridge). They do not anticipate doing any work on these existing facilities at this time. This will be discussed in greater detail at the pre-construction utility meeting.

UNDERGROUND WORK
Rumford-Mexico Sewerage District and the Rumford Water District each have existing facilities attached to this bridge (Morse Bridge). These existing facilities shall be protected from sandblasting by the contractor.

RAILROAD
None

CONTRACTOR
The Contractor cannot start work until a pre-construction utility meeting has been held. The contractor's tarp has to keep a minimum clearance of 2 feet from the nearest conductor to the tarp.

Central Maine Power Company requires a minimum of 14 calendar days of advanced notice for the installation of the tarp on the upstream side.

UTILITY SPECIFIC ISSUES

Any tree removal or tree trimming required within ten feet of the electrical conductors must be done by a qualified contractor. A list of tree removal contractors qualified to remove trees or limbs within ten feet of the electrical conductors may be obtained from the power company.

DIG SAFE

The Contractor shall be responsible for determining the presence of underground utility facilities prior to commencing any excavating work and shall notify utilities of proposed excavation in accordance with M.R.S.A. Title 23 §3360-A, Maine "Dig Safe" System.

SAFE PRACTICES AROUND UTILITY FACILITIES

The Contractor shall be responsible for complying with M.R.S.A. Title 35-A, Chapter 7-A – Sections 751 – 761 Overhead High-Voltage Line Safety Act. Prior to commencing any work that may come within ten (10) feet of any aerial electrical line, the Contractor shall notify the aerial utilities as per Section 757 of the above act.

BLASTING

In addition to any other notice which may be required, the Contractor shall notify an authorized representative of each utility having plant close to the site not later than 3:00 p.m. on the working day (Monday through Friday) before he intends to blast. Notice shall state the approximate time of the blast.

THE CONTRACTOR SHALL PLAN AND CONDUCT HIS WORK ACCORDINGLY.

JQ

cc: Andrew Lathe, Project Manager
Coy Williams, Bridge Program
George Macdougall, Contracts

SPECIAL PROVISION
SECTION 105
CONTROL OF WORK
(Cooperation between Contractors - Periodic Progress Coordination Meeting)

It is hereby brought to the Contractor's attention that a deck replacement and bridge rehabilitation project on Upper Canal Bridge on Route 108, approximately 500 ft east of this Project, is being performed with a similar work window to the Morse Bridge painting project.

The Contractor shall attend periodic meetings for the other project(s) in the vicinity of this project. The project(s) in the vicinity include the following:

- Upper Canal Bridge Deck Replacement and Rehabilitation
  Project Manager: Andrew Lathe
  Phone: 207-441-7362
  Andrew.W.Lathe@maine.gov
  Description: Rehabilitation of Upper Canal Bridge on Route 108 over Upper Canal approximately 500 ft east of Morse Bridge.

The periodic meetings will be held in the project vicinity as directed by the Resident. The intent of these meetings is to ensure coordination between projects with respect to safety, traffic control, and schedule. Emergencies or incidents shall be coordinated with the above referenced project(s) in accordance with the incident management plan/emergency plan developed for the projects.

The Contractor shall cooperate with other Contractors at all times and provide project access as necessary and as directed by the Resident.

SPECIAL PROVISION
SECTION 107
PROSECUTION AND PROGRESS
(Contract Time)

The specified Contract completion date is October 15, 2016.

SPECIAL PROVISION
SECTION 107
TIME
(Limitation of Operations)

1. The Bridge shall remain open to one lane of westbound vehicular traffic and one sidewalk for pedestrian use at all times unless otherwise noted herein or approved by the Resident.

2. The Contractor shall progress the work in a manner that minimizes disruption to the public to the extent practical. A minimum 11 foot wide travel way shall be maintained on the bridge and approaches at all times.

3. An offsite detour will be established as part of a separate, concurrent project (WIN 19058.00, Upper Canal Bridge) which will require westbound traffic to cross Morse Bridge. Work on this project requiring lane closures may not begin until the detour and appropriate signing is installed by the contractor of the noted concurrent project which is anticipated to be on or before June 1, 2016. After mobilizing to the site the Contractor shall actively work on the project each working day until the specified work is completed.

Rumford
Morse Bridge
WIN 22614.00
November 13, 2015

SPECIAL PROVISION
SECTION 107
TIME
(Supplemental Liquidated Damages)

1. All work required of the project and necessitating a temporary or permanent lane or sidewalk closure shall be completed by October 15, 2016.

SPECIAL PROVISION
SECTION 504
STRUCTURAL STEEL
(Bridge Hardware, Truss Screen Panel)

504.01 Description The following paragraphs are added:

This work includes fabricating and installing screen panels as shown on the Plans and described in these Specifications. This work also includes providing the Resident with an acceptable means of access to all portions of the work for the purposes of project inspection and documentation.

504.12 Protective Coatings This subsection shall be deleted in its entirety and replaced with the following:

New steel surfaces shall be cleaned, prepared, and painted with a Zinc Rich Coating System in accordance with either Special Provision 506 or Standard Specification 506. Final coating (topcoat) of new steel shall occur in the field, after erection.

504.65 Method of Measurement This Subsection is amended by the addition of the following:

Bridge Hardware, Truss Screen Panels will be measured for payment as one lump sum fabricated, transported, installed, complete and accepted in place in accordance with the Plans and these Specifications. All hardware will not be paid for separately but will be considered incidental.

504.66 Basis of Payment This Subsection is amended by the addition of the following:

The accepted quantity of Bridge Hardware, Truss Screen Panel will be paid for at the Contract unit price per lump sum, which payment will be full compensation for all materials, equipment, labor, and incidentals including but not limited to field measurements, framing steel, mesh screen, fasteners, field drilling and tapping, and all tools, equipment and materials necessary to complete the work in accordance with the Plans and these Specifications.

Payment will be made under:

Pay Item		Pay Unit
504.709	Bridge Hardware, Truss Screen Panel	Lump Sum

SPECIAL PROVISION
SECTION 504
STRUCTURAL STEEL
(Structural Steel Repair)

504.01 Description The following paragraphs are added:

This work includes replacing existing lateral bracing, splice plates, and gusset plates as shown on the Plans and described in these Specifications. This work also includes providing the Resident with an acceptable means of access to all portions of the work for the purposes of project inspection and documentation.

504.02 Materials The following paragraphs are added:

Bolts shall be 7/8" diameter ASTM A325, Type 1 and galvanized in accordance with ASTM A153, unless otherwise noted on the plans.

All new structural steel shall meet requirements of ASTM A709 or AASHTO M 270, Grade 50, unless otherwise noted on the Plans.

504.12 Protective Coatings This subsection shall be deleted in its entirety and replaced with the following:

New steel surfaces shall be cleaned, prepared, and painted with a Zinc Rich Coating System in accordance with either Special Provision 506 or Standard Specification 506. Final coating (topcoat) of new steel shall occur in the field, after erection.

504.34 Holes for High Strength Bolts The second paragraph of this Subsection shall be deleted in its entirety and replaced with the following:

All holes shall be drilled full diameter to the size indicated on the Plans. Flame cutting or punching of holes is not permitted.

504.51 Installation This subsection is amended by adding the following:

1. When rivets are to be removed and replaced with high strength bolts, the Contractor shall remove no more rivets at one time than required to progress the work. Rivet removals will be limited to no more than two locations at any one time. High strength bolts should be installed and brought to a finger tight condition as soon as practicable before proceeding with subsequent rivet removals. Pretensioning of bolts need not be completed until all bolts at a repair location have been installed.

2. Rivets shall be removed by drilling, grinding, mechanically cutting or by shearing the rivet head using a pneumatically driven rivet buster (e.g.: Hell Dog). After the rivet head is removed the shank shall be driven out using a pneumatic punch.

3. Upon removal of each rivet the base metal shall be examined for surface irregularities and cracks. All cracks shall be immediately brought to the attention of the Resident. If the Resident so determines that remedial action is required, the Contractor shall perform the work in accordance with Subsection 109.3 - Extra Work and will be paid for in accordance with Subsection 109.7 - Equitable Adjustments to Compensation and Time. Nicks, burrs, and foreign substances which may interfere with the seating of bolt head, washer and/or nut shall be removed at no additional cost.

4. The replacement bolt shall be the same diameter as the rivet removed. If the bolt will not fit in the hole the hole shall be sufficiently reamed to accommodate the bolt. If the reaming results in a hole exceeding the tolerances in Standard Specification 504, a larger bolt shall be substituted at no additional cost.

5. The rivet removals and replacements required at each repair location shall be completed prior to moving onto a subsequent repair location.

504.65 Method of Measurement This Subsection is amended by the addition of the following:

Structural steel will be measured by the pound of steel fabricated, transported, erected, and accepted complete and in place in accordance with the Plans and these Specifications. All hardware will not be paid for separately but will be considered incidental to the Structural Steel Repair pay item.

504.66 Basis of Payment This Subsection is amended by the addition of the following:

The accepted quantity of Structural Steel Repair will be paid for at the Contract unit price per pound of steel, which payment shall be full compensation for all materials, equipment, labor, and incidentals including but not necessarily limited to field measurements, structural steel, fasteners, field drilling operations, existing steel removal, surface preparation, temporary work platforms, and all tools, equipment and materials necessary to complete the work in accordance with the Plans and these Specifications.

Payment will be made under:

Pay Item		Pay Unit
504.811	Structural Steel Repair	Pound

SPECIAL PROVISION
SECTION 506
LEAD ABATEMENT AND COATING APPLICATION

ALL REQUIREMENTS IN THIS SPECIFICATION ARE THE RESPONSIBILITY OF THE CONTRACTOR UNLESS NOTED OTHERWISE.

506.01 Description This specification covers the field cleaning of and application of a protective coating system to all existing structural steel including, but not limited to, girders, inner and outer exposed surfaces of arch and truss chords, cross-frames, lateral bracing, and bearings. The work shall consist of furnishing all supervisory personnel, including competent person(s), labor, tools, equipment, containment, scaffolding, protection of public and private property, Quality Control activities, materials, and incidentals necessary for satisfactory completion of the Work.

506.02 General All existing structural steel requires the complete removal of existing rust, mill scale and coatings which may contain lead and hexavalent chromium, by abrasive blast cleaning or power tool cleaning. It is the responsibility of the Contractor to test the existing coating to determine the toxic metal content and, based on those results, design and implement the appropriate plans for containment, environmental protection, waste disposal and worker safety.

Apply a coating system to the cleaned surfaces. The coating system shall be selected from the Northeast Protective Coating Committee (NEPCOAT) Qualified Products List B. Organic Primer, Three Coat System. The list may be found through NEPCOAT's web page: http://www.nepcoat.org.

Contractors and Subcontractors involved with the removal of lead based paint and the field application and touch-up of the coating systems shall be qualified in accordance with SSPC QUALIFICATION PROCEDURE NO. 1, Standard Procedure for Evaluating Painting Contractors (Field Application to Complex Industrial Structures) and SSPC QUALIFICATION PROCEDURE NO. 2, Standard Procedure for the Qualification of Painting Contractors (Field Removal of Hazardous Coatings from Complex Structures) prior to Bid opening and shall remain qualified throughout the duration of the Contract. Copies of current certificates issued by the Qualifying Agency shall be submitted with the Bid package.

Perform lead abatement in compliance with all applicable federal, state and local regulations, including the current version of 29 CFR 1926, OSHA Construction Industry Health and Safety Standards, and in particular, the OSHA Lead in Construction Standard (29 CFR 1926.62).

Assure that the latest copies of the following documents are on site and available at all times. Applicable parts of the documents are enforceable as part of the Contract:

- SSPC 05-03 Surface Preparation Specifications and Practices
- SSPC Vis 1, Visual Standard for Abrasive Blast Cleaned Steel.
- SSPC Vis 3, Visual Standard for Power and Hand-Tool Cleaned Steel.
- SSPC Guide 6, Guide for Containing Surface Preparation Debris Generated During Paint Removal.
- SSPC Guide 7, Guide to the Disposal of Lead-Contaminated Surface Preparation Debris.
- Maine Department of Environmental Protection's *Hazardous Waste Management Rules.*
- 40 CFR 60, Appendix A, Method 22, Visual Determination of Fugitive Emissions from Material Sources and Smoke Emissions from Fires.
- 40 CFR Part 50 Appendix B, Reference Method for the Determination of Suspended Particulate Matter in the Atmosphere (High-Volume Method).
- 40 CFR Part 50 Appendix G, Reference Method for the Determination of Lead in Suspended Particulate Matter Collected from Ambient Air.
- SSPC Guide 16, Guide to Specifying and Selecting Dust Collectors.
- SSPC Technical Update TU-7, Conducting Ambient Air, Soil, and Water Sampling During Surface Preparation and Paint Disturbance Activities.
- 29 CFR 1926, OSHA Construction Industry Health Standards.
- Maine Department of Environmental Protection's *Hazardous Waste Management Rules*.
- SW 846, Test Methods for Evaluating Solid Waste – Physical/Chemical Methods
- Method 1311, Toxicity Characteristic Leaching Procedure (TCLP)
- Department of Environmental Protection's *Handbook for Hazardous Waste Generators*.

Supply the Resident with the applicable product data sheets and material safety data sheets (MSDS) before any coating work is performed. Also obtain from the manufacturer written procedures for touch-up including acceptable coating materials. If the coating manufacturer recommends a coating material for touch-up that is different from the coating material chosen by the Contractor, it will be supplied at no additional cost to the Department. Obtain in writing from the coating manufacturer, and provide to the Resident, a chart or table listing minimum and maximum recoat times for the primer and intermediate coat over the expected range of temperatures and relative humidity.

The primer color and the blasted steel shall be contrasting colors and the primer and intermediate color shall be contrasting colors. The finish topcoat color shall be green and match the following Federal Standard 595C, light green, color number: **14272**.

<u>506.03 Quality Control</u> The Contractor is responsible for all aspects of the quality of the Work, including labor, equipment, materials, incidentals, processes, construction methods and Quality Control. Quality Control (QC) is the planned and specified actions or operations necessary to produce an end product that Conforms to the requirements of the Contract and includes

inspections and testing for process control to the extent determined necessary by the Contractor. All costs associated with QC activities shall be considered incidental to related Pay Items.

506.031 Submittals The Schedule of Work shall be in conformance with Standard Specification Section 107.4, Scheduling of Work, unless there is a Special Provision which supersedes the Standard Specification.

All Plans and submittals from the Contractor will be reviewed by the Department in accordance with Section 105.7, Working Drawings, of the Standard Specifications.

506.032 Quality Control Qualifications Provide QC personnel trained and certified by: The National Association of Corrosion Engineers (NACE) – International: Coating Inspector Program Level 1 (minimum); SSPC BCI Coatings Inspection Training and Certification for the Bridge Industry (Level I without certification), or Level II; or other training that is acceptable to the Department. If the Contractor's QC personnel do not follow and enforce the approved Quality Control Plan, the Resident may require the Contractor to retain the services of an independent, third party certified NACE/SSPC BCI inspector for the remainder of the Project, at no additional cost to the Department. If the Resident determines that the Contractor is not performing the QC function properly, the Resident will issue the Contractor a verbal warning. The second time the Resident finds that the QC function is being improperly performed, for the same reason, the Contractor will be given a written warning. The third time the Resident finds that the QC function is being improperly performed, for the same reason, the Contractor will be required to retain the services of a third party NACE/SSPC BCI certified inspector, at no additional cost to the Department. Discovery by the Department of a pattern of rework for the same items would be considered improper performance of the QC function.

506.033 Quality Control Plan Submit a QC Plan to the Department for review at least 21 days prior to the beginning of any removal of paint. The QC plan shall include: The names of all the Contractor's on-site representatives, including the NACE/SSPC BCI certified inspector, who will be responsible for the inspection and the acceptance of the Contractor's work; the definition of hold points, from pre-surface preparation inspection to final inspection; the format and submittal process for daily work reports and coating/DFT reports; and the process for rework.

Develop a Job Control Record (JCR) to systematically organize all reports, tests, test locations, test results, Non-Conformance Reports, final acceptance and other documents deemed necessary by the Resident.

Record the following in the JCR as applicable:

- Daily inspection reports including location of the work, personnel and equipment.
- Surface preparation - cleanliness and anchor profile.
- Environmental conditions – ambient temperature, surface temperature, relative humidity, dew point.
- Condition of the containment

- Coating batch and/or lot number, date of manufacture and shelf life.
- Mixing/thinning
- Dry Film Thickness (DFT) for each coat.
- Cure data-time/temperature/relative humidity.
- Final inspection and acceptance.
- All other job documentation generated by the Contractor.

Submit the format for the JCR and sample forms to the Resident for review prior to beginning application of protective coating.

Violation of the QC Plan may result in a suspension of work. If the Department orders a suspension, in writing, work shall not resume until the Contractor provides a plan, which is acceptable to the Department, describing how compliance will be restored and maintained. A suspension resulting from the Contractor's failure to adhere to the QC Plan shall be considered an Inexcusable Delay.

506.034 Surface Preparation/Coating Plan Provide written procedures (preparation plan) for the surface preparation, the remediation of soluble salts, and coating application and repair. The plan shall include a description of the equipment that will be used for surface preparation and coating. The plan shall also identify the type and brand name of abrasive proposed for use; provide Safety Data Sheets (SDS) sheets for proposed abrasive. Also include the surface preparation methods and materials to be used in "sensitive areas", e.g. areas in close proximity to galvanized members, bearings, utility hangers, & utilities, etc. If any of the areas that are determined to be sensitive by the Department are damaged due to surface preparation practices, the Contractor will be responsible for the repair of all damage at no additional cost to the Department. It is recommended that the Contractor explore alternative surface preparation methods for these "sensitive areas", such as power tool cleaning and the use of impregnated sponge and other less aggressive blast media. The Contractor shall receive approval from the Department before performing any removal methods when working in "sensitive areas".

The preparation plan shall identify the methods of protection or work isolation procedures that will be followed to protect surrounding structures, equipment, galvanized bridge deck members, utility cables, etc. and property from exposure to surface preparation and paint debris. The Contractor is responsible for any damage caused by surface preparation.

All grease, oil, chlorides, salts and any other foreign matter must be removed prior to removal of any existing paint.

506.035 Containment Plan Provide a containment plan to the Department for review. Do not begin the erection of containment system(s), or paint disturbance activities until review by the Department has been completed.

Prepare detailed drawings and structural analysis stamped by a Professional Engineer (PE) licensed in the State of Maine. Install the containment in accordance with the drawings stamped by the Contractor's PE. Do not begin surface preparation until the Contactor's PE has field verified the proper installation of the containment system(s). Perform all surface preparation and painting in the approved containment system, conforming to the latest SSPC Guide 6, Guide for Containing Surface Preparation Debris Generated During Paint Removal Operations, for the specified level of cleaning, as applicable.

The Contractor is responsible for ensuring the containment meets all OSHA, federal and state regulations. Throughout the entire Project, work shall only be conducted within approved containment enclosures. The proposal shall be sufficiently detailed to show conformance with the requirements of SSPC Guide 6, Class 1A containment specifications. The Containment Plan shall also describe, in detail, the Contractor's methods of protecting galvanized bridge members, existing utilities, etc. The Contractor shall be responsible for all damage incurred. The Containment Plan shall include the following information and requirements, at a minimum:

A. Detailed drawings and structural analysis, prepared and stamped by a PE licensed in the State of Maine.

B. Detailed design calculations stamped by a PE licensed in the State of Maine for the Contractor’s operation including all construction loads applied to the structure. The design shall use the latest editions of the AASHTO LRFD Bridge Design Specifications with HL-93 Live Load. The applied loads from the proposed paint containment system (enclosures, work platforms, collected waste product, equipment, etc.) shall not exceed the allowable resistance of any bridge member.

C. The Contractor shall determine the wind speed above which damage to the existing structure(s) will result from wind loading on the containment system. If actual wind speeds exceed this design wind speed, the Contractor shall immediately make provisions to properly relieve the containment wind loading. The process for relieving the wind loading shall not release any of the lead paint waste. The Contractor may redesign/reconfigure the containment enclosure(s) or suspend operations until the actual wind speeds fall to levels below the design wind speed. Any release of pollutants from the containment enclosure(s), in excess of applicable state or federal limits, to the surrounding environment due to containment failure will result in the immediate suspension of work. Prior to resuming work, the Contractor shall take appropriate actions to abate the discharge and obtain the Department's concurrence on a plan of action to prevent reoccurrence. The time and costs associated with any delays and clean-up, modifications, and rebuilding of the containment enclosure(s) resulting from wind damage or associated with any actions required to prevent any reoccurrence of release of pollutants caused by wind loads shall be borne by the Contractor. Any delays due to the suspension of work or due to containment failure, as the result of

wind loads, shall be considered Inexcusable Delays. The Contractor shall monitor and document actual wind speeds on the existing structure(s), as appropriate, to ensure the safety of the existing structure(s); the cost of all wind monitoring shall be incidental to related Contract Pay Items.

D. A plan for staging, installing, moving, and removing the containment and the methods of attachment that will be used. Attachment points to main framing members only (main girders, floorbeams, truss members may be allowed with prior approval from the Resident) will be allowed. The plan shall include the methods of access that will be provided to work areas inside containment, locations of safety lines, locations of containment entryways, etc. When the containment system is installed over navigable water, the containment system must comply with U.S. Coast Guard requirements.

E. Detailed plans for lighting the inside of the containment for surface preparation, painting, and inspection. Provide work area illumination as follows:

Work Area Illumination Requirements in Foot Candles		
Description of Work	Minimum	Recommended
General Work Area Illumination	10	20
Surface Preparation and Coating Application	20	50
Inspection	50	200

Provide a light meter that measures illumination in foot candles. Failure to provide at least the minimum illumination will be considered denial of access to the work and may result in rejection of the work by the Resident.

F. Detailed plans for maintaining the environmental conditions required during coating application and curing, including monitoring, measuring and documenting environmental conditions.

G. Detailed plans for the collection and removal of accidental spills or discharges.

H. Technical data sheets, specification sheets and any other information needed to thoroughly describe the containment plan, materials, and containment and ventilation equipment proposed for use.

506.036 Environmental Protection Plan Thirty days prior to the initiation of on site work, submit to the Department for review and acceptance an Environmental Protection Plan that establishes programs for the monitoring activities that will be undertaken on the Project. This plan shall include written programs to address the following:

A. *Regulated Area Monitoring and Maintenance.* For establishing and maintaining regulated areas around activities which could generate airborne emissions of lead or other toxic metals.

B. *High Volume Ambient Air Monitoring.* The Contractor shall contract with an independent environmental monitoring firm to conduct high volume ambient air monitoring for TSP-lead to assure compliance with this item and any applicable state and local regulations. Have the monitoring begin at least 24 hours prior to any abrasive blasting, for a baseline. Procedures for the monitoring which confirm that the monitoring equipment is properly calibrated, sited, and operated; filters are properly handled and transported; the laboratory analysis is performed correctly; and that all monitoring, calculations, documentation, and forms will be provided directly to the Department by the monitoring firm, with copies to the Contractor. Prior to any sampling, the Contractor shall clearly identify proposed monitor locations, including what corrective action will be implemented immediately, in the event of unacceptable results.

C. *Ground (Soil) Evaluations.* For inspection of the ground and soil prior to commencement and upon completion of the Work to assure that the ground has not been negatively impacted by Project activities. This shall include the bridge site and the areas used to store equipment and waste. Contract with an independent environmental monitoring firm, staffed with a Maine Certified Geologist, to conduct sampling and analysis of the soil to determine whether it has been impacted by Project activities. Environmental data captured from the waste storage areas prior to use will be incorporated into the required hazardous waste closure efforts described in Section 506.11.

The ground (soil) will be considered to have been impacted by project activities based on the analysis as described below:

1. Visible paint chips, spent abrasive, or debris are present on the ground.

2. The ground (soil) is considered to have been impacted by project activities at site specific locations based on 50 percent increases over the pre-job lead concentration. For example, if the pre-job total lead concentration is 200 parts per million (ppm) at a specific sampling location, an impact is considered to have occurred if the post-job lead concentration results in an increase of 100 ppm or more.

3. If the laboratory analysis or visual assessments show the soil to have been impacted by project activities, as directed by and at no additional cost to the Department, conduct the necessary cleanup or remediation.

The plan shall clearly identify proposed soil sampling locations and define the corrective action(s) that will be taken in the event of unacceptable results. Further information on the procedures that the Contractor will use to meet the requirements for closure of the hazardous waste storage areas as define by MDEP regulations in Chapter 851, shall also be included. All monitoring calculations, documentation, and forms will be provided directly to the Department by the monitoring firm.

D. *Water/Sediment Evaluations.* For visual inspection of the water and sediment along the river banks prior to commencement and upon completion of the Work to assure that the water and sediment along the river banks are not negatively impacted by Project activities. The visual inspection shall be completed by the Contractor with a representative of the Department. The inspection shall include photo documentation of existing water/sediment conditions.

E. *Remediation of Ground (Soil), Water, and Sediment.* In the event that post-Project inspection, sampling or analysis show unacceptable results, outline what steps will be taken to accomplish the necessary clean-up or remediation of the ground (soil), water, and sediment along the river banks, as appropriate, to satisfy all applicable regulatory agencies. Any clean up measures shall be at no additional cost to the Department.

F. *Final Cleaning/Clearance Evaluations.* Procedures and methods that will be used to conduct and document final Project clean-up, and final visual cleanliness inspections and evaluations. This process is to assure that the Project area and surrounding equipment, structures, soil, water, and sediment along the river banks have not been negatively impacted by Project activities.

G. *Laboratory Qualifications.* Provide the name of the laboratory and/or firm that will be used for analysis of regulated area exposure monitoring, worker exposure monitoring, high volume ambient air monitoring and waste and soil samples, as required. Provide documentation that this firm is American Industrial Hygiene Association (AIHA) accredited for metals analysis, and has successfully participated (previous 12 months at a minimum) in the AIHA ELPAT program.

H. *Worker Protection Compliance Program.* A Project-specific compliance program, prepared under the direction of, and signed and sealed by, a Certified Industrial Hygienist (CIH), for the protection of workers from lead, in accordance with 29 CFR 1926.62, and other toxic metals in the paint. Include the name, experience, and qualifications of the competent person who will be making routine inspections of Project activities to ensure compliance with the program. If Subcontractors are operating under a separate program, include the program with the submittals.

506.037 Pre-Production Meeting Coordinate a pre-production meeting with the Department's Resident at least two weeks prior to the beginning of the removal of the existing coating. Provide

two weeks notice to the Department prior to the meeting. The meeting agenda will include procedures to be used for all lead abatement, the coating application, the inspection hold points, the responsibilities and documentation methods of each party involved, all safety methods to be used, contingency plans, and all other areas relating to the adequate completion of the painting of this Contract, including coordination with the U.S. Coast Guard, when applicable. Present at this pre-production meeting shall be all parties directly involved in the lead abatement, paint application, and inspection of this Project including the Department, the Contractor and any Subcontractors, all Quality Control personnel, coating technical representatives, U.S. Coast Guard representatives, the Department's hazardous waste representative, a representative from the Contractor's hazardous waste transporter and any additional stakeholders who may have a direct impact on the completion of this Project. The Contractor shall be responsible for ensuring that all applicable personnel working directly, or indirectly, for the Contractor be present at this meeting.

506.04 Quality Assurance The Department will perform Quality Assurance (QA). QA may be accomplished by reviewing QC reports provided by the Contractor, by performing random inspections of work previously inspected by the Contractor and/or by randomly accompanying the Contractor's inspector during QC inspections and testing.

Provide the Department with the opportunity to perform QA inspections of the Work at the following hold points, as a minimum:

A. Prior to start of work.
B. Immediately following surface preparation.
C. Immediately prior to application of the first coat.
D. Prior to application of additional coats.
E. After final coat is applied and cured.
F. Any time the relative humidity is at, or above, 85% and the steel temperature is not 5 degrees above the dew point.

QA inspections are the prerogative of the Department. As such, the Department may, or may not, choose to perform inspections at hold points. Consequently, if any QA inspections performed at hold points result in no rework being identified or, if no QA inspections are performed at any hold points, this does not constitute Acceptance of the Work by the Department. If the Department discovers Unacceptable Work at any time prior to Final Acceptance, the Contractor shall repair, replace, or otherwise bring the Unacceptable Work into conformance with the Contract, at no additional cost to the Department. Refer to Standard Specification Section 107.9, Project Closeout, for procedures leading up to Final Acceptance.

Facilitate QA as required, by providing ample notice to the Department of availability for QA (minimum of ½ hour notice), adequate time for QA and by providing access to the work, along with all necessary safety equipment needed by the Department to perform the QA.

Provide all of the inspection and testing equipment needed to verify the quality of the surface preparation and coating process, including, but not limited to mirrors, flashlights and wet film thickness gauges. This equipment shall be made available for use by the Department at all times. All equipment shall be properly maintained and kept in working order by the Contractor.

Provide access and railing in compliance with OSHA standards for representatives of the Department to all work locations where cleaning or coating application may be in progress, for the purpose of QA. The Contractor is also responsible for providing adequate lighting for QA purposes, at no additional cost to the Department.

If the Contractor is dissatisfied in any way with the Department's management of its QA program, the Contractor shall bring this issue immediately to the attention of the Resident or, at the latest, to the next scheduled Progress Meeting.

506.05 Protective Measures During surface preparation and field painting of the existing structural steel, provide adequate safety measures for the protection of the public and surrounding area against damage due to paint drippings, paint spatter, over-spray, falling objects, etc. The Contractor is fully responsible for property damage or personal injury which may result from operations incidental to surface preparation of the structural steel and the field application of the coating system. The coating system shall be protected at all times during application and curing to prevent contamination caused by construction or traffic activities. No coating material shall be stored on the bridge structure, or under the bridge structure.

506.06 Surface Preparation Chloride and salts should be expected to be present, especially at corrosion sites. Before any existing coating can be removed, these salts must be reduced to acceptable levels. The acceptable Nonvisible Surface Cleanliness condition is NV-2 or better as defined in *SSPC-SP 12, Surface Preparation and Cleaning of Metals by Waterjetting* Prior to Recoating. Test for chlorides and soluble salts using a Bresle Test kit, or equal, as approved by the Resident. Reduce chlorides and soluble salts to acceptable levels by waterjetting, solvent cleaning or other methods acceptable to the Resident prior to abrasive blast cleaning or power tool cleaning of the steel.

Test for soluble salts at a minimum of five locations per bridge span or as directed by the Resident. If after the initial testing has been done, it appears that no unacceptable levels of chlorides and soluble salts are present, the Resident may require a diminished number of tests. The Resident is not obligated to require less testing.

The abrasive blast media shall meet the requirements *of SSPC-AB 1, AB 2 or AB 3*. The anchor profile shall be angular and meet the requirements of the coating manufacturer's published data sheet.

Abrasive blast clean the steel in accordance with *SSPC-SP 10, Near-White Blast Cleaning* except that inaccessible areas and sensitive areas as designated by the Resident shall be cleaned in

accordance with *SSPC-SP 11, Power Tool Cleaning to Bare Metal*. After abrasive blast cleaning visually inspect the substrate for fins, tears, delaminations and other unacceptable discontinuities. Remove unacceptable discontinuities with a grinder or other suitable power tool. Blast the affected area(s) to develop an acceptable anchor profile. The Contractor may propose an alternative method of developing an acceptable anchor profile on repair areas to the Resident.

Exercise care to avoid any nicking or gouging of the steel during rust removal. Nicks and gouges are cause for a suspension of activities until appropriate adjustments are made to prevent a reoccurrence. Repair damage to steel caused by surface preparation.

Measure the anchor profile of the substrate on every plane of each beam or girder. Record the location and results in the JCR. Label the replica tape (location, profile, etc) and affix the tape to the JCR. Provide copies to the Resident.

Double blow down or vacuum residual dust on the blasted substrate. Solvent clean any visible contamination that may result from handling, inspection or other activities that may inadvertently leave contaminants on the surface of the steel.

The allowable time between abrasive blast cleaning and primer application shall not exceed the Manufacturer's Product Data Sheet or 12 hours, whichever is less. If rust-back occurs, re-blast the entire prepared substrate prior to application of primer.

Newly fabricated steel members shall be cleaned in accordance with SSPC-SP 10.

Use *SSPC VIS.1* for abrasive blast cleaned substrate and *SSPC VIS.3* for hand or power tool cleaned substrate to determine acceptable surface cleanliness.

Measure the anchor profile in accordance with ASTM D 4417 Method C (replica tape). If the anchor profile fails to meet the minimum requirements, re-blast the substrate until the minimum required anchor profile is achieved. If the anchor profile exceeds the maximum allowed, generate a Non Conformance Report (NCR) describing the condition of the substrate and a proposed solution and submit it to the Resident for review.

If compressed air is used for abrasive blast cleaning, perform a blotter test ASTM D 4285 at the beginning of each shift and at any time requested by the QAI. Notify the QAI prior to performing the test so that the QA Inspector can witness the test.

<u>506.061 Pre-Production Surface Preparation Test Sections</u> Prepare test sections prior to production surface preparation. Prepare at least one test section for each specified degree of surface preparation. Test sections should be at least 1 square meter in size and include representative surfaces such as riveted and bolted connections. Prepare the test section surface preparation using the same equipment, materials and procedures that will be used for the duration of the Project. Perform the test cleaning in locations approved by the Department.

SSPC-Vis 1 and SSPC-Vis 3 photographic standards, as applicable, will be used by the Department to determine the level of cleanliness achieved. Do not proceed with production surface preparation activities until the Department agrees that the test section conforms to the applicable cleanliness requirements. The agreed upon test areas shall be masked off and left unpainted until the completion of the Project and will be used for calibration of gauges by both Department and Contractors personnel. A desiccant filled masking paper shall be used, all at no additional cost to the Department.

506.062 Removal of Existing Debris Remove and properly dispose of accumulated winter sand/salt, bird droppings, dirt, grease, and debris from all areas to be prepared and painted prior to undertaking any paint removal or surface preparation operations.

506.063 Sharp Edges and Steel Defects Remove by grinding all fins, tears, slivers, scabs, laminations, etc., that are present on any steel member, or that become apparent during the blasting operation. Re-blast areas that have been ground to achieve the specified profile. Immediately report to the Department any cracks or significant metal loss found in the structural steel.

506.064 Removal of Pack Rust Remove all rust scale on any surface and loose pack rust that has formed between structural members. Remove tight pack rust until the highest point is a minimum of 3 mm (1/8 inch) below the surface of the surrounding steel.

Exercise care to avoid any nicking or gouging of the steel during rust removal. Nicks and gouges are cause for a suspension of activities until appropriate adjustments are made to prevent a reoccurrence. Damage to steel by the Contractor shall be repaired by the Contractor as approved by, and at no cost to, the Department and no additional time will be added.

506.065 Compressed Air Cleanliness Provide compressed air that is free from moisture and oil contamination. Conduct a white blotter test in accordance with ASTM D 4285 to verify the cleanliness of the compressed air. Conduct the test at least once per shift for each compressor system. Sufficient freedom from oil and moisture is confirmed if soiling or discoloration is not visible on the paper.

If air contamination is identified, suspend operations and make adjustments as necessary to achieve clean, dry air.

506.07 Mixing Thoroughly mix the coating according to the manufacturer's recommendations. Thinning, if necessary shall be per the manufacturer's recommendations.

506.08 Conditions for Coating Apply and cure all coatings in accordance with the manufacturer's recommendations. Provide digital data recorders that measure and record temperature and relative humidity during the curing period for all coatings. Provide a minimum of two data recorders, which shall be placed in the immediate vicinity of the curing operation, and

shall also provide the Department with the software necessary to download the recorded data. The data recorders shall measure and record the temperature and relative humidity during the entire curing cycle. No subsequent coating shall be applied until the Contractor demonstrates that the curing has met the requirements of the manufacturer's product data sheets.

506.09 Paint Application Caulk all gaps between abutting surfaces and at areas of pack rust that cannot be removed, as between the intermediate and top coat. Apply caulking between the bearing plates and the concrete piers. Provide the name, generic type, technical data sheets, and application instructions for the material to the Resident. Provide written concurrence from the coating manufacturer that the caulking is compatible for use with the coating.

Measure the environmental conditions in the immediate vicinity of the piece(s) being coated during the coating operation and the entire cure period. Provide two data loggers capable of measuring ambient humidity and temperature. The data loggers shall come with software that can download the data onto a computer. Print the data. The data will become part of the JCR. Place the data loggers in the immediate vicinity of the coating operation during the entire application and curing cycle. The data will be used by the Resident to determine that the cure/recoat time requirements for each coat have been met. Failure to comply will result in the coating being cured for the maximum time necessary to assure adequate cure as determined by the Resident.

Apply each coat in a neat and workmanlike manner. Apply the coating inside the approved containment. Apply the coating smoothly and uniformly without film defects, in conformance with these specifications and applicable provisions of *SSPC-PA 1, Shop, Field and Maintenance Painting of Steel*. Correct skips, thin areas or other deficiencies before each succeeding coat is applied. The surface of the paint receiving additional coating shall be free from dust, grease, oil or any other contaminant that would prevent bonding.

Measure the DFT of each coat with a Type 2 Electronic Gauge in accordance with *SSPC-PA 2, Measurement of Dry Coating Thickness with Magnetic Gauges*. Record the following:

- Gauge type/manufacturer/model
- Serial number
- Coat/shim used for calibration (e.g. Primer Coat/5 mil. Shim, etc.)
- Measurements/spot average/location
- Cure time
- Non-conforming areas and determination for correction

Brushes, when used shall be of good quality so as not to leave bristles in the coating and have sufficient body and length of bristle to spread the coating in a uniform flow. Rollers, when used, shall be of a type which will not leave a stippled texture or roller particles on the coated surface.

Inform the Resident prior to mixing and thinning all coating. Record the batch and lot numbers of the coating, the type and amount of thinner used, the time and pot life of the coating in the JCR.

Mix and add thinner in conformance with the Manufacturer's Product Data Sheet. Measure the thinner with a graduated cup or other measuring device. Mix the paint using the method, equipment and for the amount of time recommended by the coating manufacturer. Coating that is not mixed and thinned in accordance with the Manufacturer's Product Data Sheet will be rejected.

Stripe coat the substrate with primer in accordance with *SSPC-PA 1*, Section 6. The stripe coat is to be applied to edges, welds, outside corners, bolt heads/threads and crevices as directed by the Resident. The stripe coat shall be brush and/or roller applied. Spray application of the stripe coat is only allowed only upon prior approval of the Resident. Whenever possible apply the stripe coat prior to application of the primer coat, however, in order to save the blast the Contractor may apply the stripe coat after the application of primer with the prior concurrence of the Resident. Failure to notify the Resident will render the work Non-Conforming Work.

Measure and record the DFT readings in the JCR. Document that minimum cure time has been achieved in the JCR. Include the data logger printout. Maintain environmental conditions to assure acceptable cure time between coats and after the top coat is applied. Coating that has been improperly cured will be rejected, removed and re-coated. The Resident will determine that the coating has been properly cured based on QC tests, measurements and documentation.

Identify areas on Non-Conformance and generate and Non-Conformance Report (NCR). Present the NCR to the Resident with a proposed repair. Examples of Non-Conformance are, but not limited to:

- Overspray
- Sags, drips, runs
- Thin coating
- Excessive film build
- Orange peel, mud cracking
- Blisters
- Surface contamination
- Discontinuities that may be reasonably expected to cause premature coating failure

Repair damaged coating or defectively applied coating (runs, sags, skips, misses, etc.). Remove the affected coating layers and reapply. If all coating layers are damaged or defective, remove all coating layers to the specified degree of cleanliness. Feather the edges of the remaining coating to create a smooth transition from the repaired area to the remaining coating. Reapply all affected coating layers.

506.10 Samples for Testing The Department may require random coating material samples from the Contractor. If necessary, the samples will be sent to an independent certified laboratory to obtain infrared spectra to check the formulation compared to that on the approved coatings list. Sampling and testing shall be at no additional cost to the Department. If the material fails the independent lab analysis, the Contractor shall remove and replace the coating to the Contract specified conditions, at no additional cost to the Department.

506.11 Waste Management. The Contractor shall collect, store and dispose of all hazardous, special and solid waste in compliance with relevant Federal, State and local laws and requirements. Special and hazardous wastes generated at each bridge shall be combined and managed together. The project will be considered as one waste generation site. The procedures used for management and disposal of lead paint and related waste shall conform to the latest requirements of Steel Structures Painting Council Guide 7, Guide for the Disposal of Lead-Contaminated Surface Preparation Debris. The Contractor shall have a copy of this guide available on site at all times. The Contractor shall also have a copy of the Maine Department of Environmental Protection's (DEP's) Handbook for Hazardous Waste Generators and a copy of the State of Maine Hazardous Waste Management Rules, 06-096 CMR Chapters 850-857, on site at all times. Thirty days prior to generating any waste, the Contractor shall submit their Waste Management Plan which shall include the Spill Prevention Control and Countermeasure Plan (SPCCP), to the Department for review and comment. Work shall not proceed until the Department has reviewed and commented on this plan.

The Department has Large Quantity Generator (LQG) hazardous waste status for all hazardous waste activities associated with this Contract, as defined by DEP in the Handbook for Hazardous Waste Generators. All waste generated as part of this initiative shall be stored and managed under one dedicated Environmental Protection Agency (EPA) waste identification number. The Contractor shall perform all work on behalf of the Department and comply with all Federal, State and local regulations.

The Contractor shall establish one hazardous waste storage area for this project. All hazardous waste shall be managed in US DOT approved containers and stored in an approved locking security structure which has a firm, impervious, floor surface and secondary containment that is either 110% of the largest container or 20% of all containers, whichever is larger. All waste containers must be labeled with the words "Hazardous Waste", the hazard (e.g., Toxic, flammable, etc.), the start date, full date, site location and generator information. The lockable security structure must be labeled "Danger-Unauthorized Personnel Keep Out" and shall be locked at all times when not being accessed. Waste containers in the waste storage security area must be inspected each operating day and a log must be maintained by the Contractor, and provided to the Department at the end of the Project. The Contractor shall store and manage all hazardous waste, in conformance with MDEP regulations as detailed in Chapters 850 – 857 and EPA regulations as defined in 40 CFR 260 – 268. All hazardous wastes are limited to an on-site storage time of 90 days based on the date of initial accumulation.

The Contractor shall test paint debris (including waste paint, personal protective equipment, gray water and spent solvents) to determine the appropriate disposal options. A minimum of one composite sample representative of each waste type must be collected and tested for Toxicity Characteristic Leaching Process (TCLP), constituents in accordance with the procedures outlined in EPA SW846 Method 1311. The Department must be notified at least one week in advance of the date of sampling activities and provided with the proposed protocol for sample collection. The Department shall witness the sampling. Chain-of-custody must be adhered to for sample removal. Certified TCLP test results shall be provided to the Department upon receipt by the Contractor.

The Contractor shall inform the Department at least one week in advance of planned date(s) for removal of hazardous waste from the job site. The EPA ID number for the project will be provided by the Department prior to the first shipment of waste. The Contractor shall secure a MaineDOT pre-approved transporter licensed by the MDEP for transportation of hazardous waste. Preparation of all necessary transportation forms is the responsibility of the Contractor. The Hazardous Waste Manifest must be approved and signed by the Department. A six part, pre-numbered Uniform Hazardous Waste Manifest (EPA Form 8700-22) shall be prepared when shipping hazardous waste. The appropriate original sheets of the multi-part hazardous waste manifest must be provided to the Department and must be sent to the Department's Director of Safety and Compliance, Office of Safety and Compliance, State House Station #16, Augusta, Maine, 04333-0016.

The Contractor shall select a Treatment, Storage or Disposal (TSD) facility as soon as the waste has been tested and the results are known. The Contractor will submit the selected TDS for MaineDOT approval. Following approval by MaineDOT, the Contractor shall obtain approval for acceptance of the waste from the selected facility prior to transport.

Hazardous/special paint debris and other waste shall not be placed or accumulated on unprotected ground or released to waters of the State. Work areas shall be adequately shielded at all times to prevent dispersion of debris by wind or rain. All of the Contractor's equipment and storage areas used for the handling and storage of hazardous waste and hazardous materials shall have impervious tarps placed under them. Any evidence of improper storage and handling shall be cause for immediate suspension of work in progress, and work will not be allowed until corrective actions are taken. Emergency procedures to be taken in the event of a release of hazardous/special waste or hazardous matter to the environment shall be part of the Contractor's Spill Prevention, Control and Countermeasures Plan that is required as part of the Contractor's Waste Management Plan and by the Department's Supplemental Specifications and Supplemental Standard Details for Construction, Section 656.3.4, f. Spill Prevention.

The Contractor shall have Aid Agreements with the local fire department, police department, hospital and hazardous waste spill responder. Copies of these agreements shall be provided to the department prior to generating any waste, in conformance with the DEP Rules, Chapter 851, Section 13, Part C (7)(c)(ii) and 40 CFR 264.37.

When the project no longer generates wastes, the Contractor shall ensure all waste and residuals are removed from the individual hazardous waste storage areas and transported to a licensed and approved TSD facility. The Contractor shall then move forward with closure of the hazardous waste storage areas as defined in Chapter 851 of MDEP's regulations. The Contractor shall ensure a Maine professional engineer oversees and approves of the closure process and submits a certification to the Department and MDEP when the closure is complete.

Failure of the Contractor to comply with this section shall result in the following:

- First finding of non-conformity shall be a written warning which will include deadline for compliance.

- Second finding of non-conformity shall be documented in writing, and all operations by the Contractor, except those needed to restore compliance, will be immediately suspended, until full compliance has been restored.

- Third and subsequent findings of non-conformity will be documented in writing and all operations shall be immediately suspended, except those needed to restore compliance, until full compliance has been fully restored, and the Contractor assessed a penalty of $10,000.00 per incident. If the Contractor fails to restore the Project into compliance, additional fines shall be assessed.

All penalties assessed shall be in addition to any fines assessed by DEP/EPA for failing to comply with the Federal, State, or local regulations. The Contractor shall not be granted additional time for suspensions of work due to noncompliance.

506.111 Visible Emission Observations

A. Visible Emission Assessments

1. Conduct visible emissions assessments as defined in this Section and in accordance with 40 CFR 60, Appendix A, Method 22. This assessment is based on total visible emissions regardless of the opacity of the emission. SSPC Technical Update No. 7 provides guidance on conducting visible emission assessments.
2. Conduct the visible emissions assessments to account for all locations where emissions of lead dust might be generated, including but not limited to, the containment or work area, dust collection and waste recovery equipment as applicable, and waste containerizing areas.
3. In addition to assessing airborne emissions, conduct visual inspections for releases or spills of dust and debris that have become deposited on surrounding property, structures, equipment or vehicles.
4. State and local regulations regarding visible emissions:

a) Note that State of Maine regulations regarding visible emissions, as well as any local requirements, are in addition to, but not in lieu of, the requirements of this Section.

B. Acceptance Criteria for Visible Emissions Assessments

1. For surface preparation activities, visible emissions in excess of SSPC Guide 6, Level 1 (1% of the workday) are unacceptable. This amounts to a maximum duration of 4 minutes and 48 seconds in an 8-hour workday, or 36 seconds per hour. This criterion applies to scattered, random emissions of short duration. Sustained emissions (e.g., 1 minute or longer) from a given location, regardless of the total length of emissions for the workday, are unacceptable. Immediately shut down the emission-producing operation, change work practices, extend the ground coverings, modify the containment, or take other appropriate corrective action to prevent similar releases from occurring in the future.
2. Visible emissions in excess of the above criteria are cause for immediate shutdown. Immediately stop the applicable operations if these criteria are violated. Correct and repair the deficiencies causing the emission, and undertake clean up with HEPA vacuums.
3. Violations of any high volume ambient air monitoring acceptance criteria is cause for immediate project shut down and the initiation of corrective action, even if the visible emissions results are acceptable.

C. Frequency and Location of Emissions Assessments

1. Conduct the specialized assessments as described in this Section at least four times (for a minimum of fifteen minutes each) during each shift in which paint disturbance operations are underway. Document all observations even if visible emissions are not observed.
2. Perform casual observations of emissions on an ongoing basis.

D. Assessment and Correction of Spills or Releases

1. Conduct all activities so that spills or releases of paint chips or spent abrasive do not occur.
2. On a daily basis, visually inspect the site for releases of dust, paint chips, and spent abrasive outside of the work area that have become deposited on surrounding property, structures, equipment, or vehicles and on the unprotected ground or in areas where rain water could carry the debris outside of the work area.
3. Clean up all visible paint chips and debris on a daily basis at the end of each shift, or more frequently if directed by the Department. Conduct the cleaning by manually removing paint chips or by HEPA vacuuming.

4. When releases are observed, in addition to cleaning the debris, immediately shut down the emission-producing operations, change work practices, extend the ground coverings, modify the containment, or take other appropriate corrective action to prevent similar releases from occurring in the future. Do not resume operations until the corrective measures have been inspected and approved by the Department.

E. Reporting of Visible Emissions and Releases

1. Document all visible emission observations and all cases where work has been halted due to unacceptable visible emissions or releases, the cleanup activities invoked, and the corrective action taken to avoid reoccurrence. Provide a report to the Department within 48 hours of the occurrence.
2. Maintain the results of the assessments in a log at the site. Identify the frequency of observations made, the methods of observation utilized, the name of the observer(s), and documentation completed. Include and summarize the documentation prepared for work stoppages due to unacceptable visible emissions or releases. Make the log available to the Department for review upon request.

506.112 High Volume Ambient Air Monitoring All ambient air monitoring shall be performed by the Contractor according to EPA regulations 40 CFR Part 50 Appendix B, Reference Method for the Determination of Suspended Particulate Matter in the Atmosphere (High-Volume Method), and 40 CFR Part 50 Appendix G, Reference Method for the Determination of Lead in Suspended Particulate Matter Collected from Ambient Air.

A. Conduct daily high volume ambient air monitoring for TSP-Lead during any dust producing operations (i.e., abrasive blast cleaning, containment movement, and/or vacuuming spent abrasive) to confirm that emissions do not impact the public.
B. Conduct ambient air monitoring at a minimum of three locations per jobsite or as directed by the Resident. The Contractor shall provide the monitors, and all necessary calibration and support equipment, power to operate the units, security (or arrangements to remove and replace the monitors daily), filters, and flow chart recorders. Provide operational high volume ambient air monitors for the duration of the project to account for each of the monitoring locations. Dust producing activities will not be permitted to begin if monitoring locations are not supported by the required number of monitors. Therefore, several back up monitors are recommended.
C. High volume ambient air sample results will be compared to the acceptance criteria of 1.5 micrograms per cubic meter over a 90-day period. Utilize the formulae of SSPC Guide 6 to extrapolate the acceptance criteria to an adjusted daily allowable concentration.
D. In the event that the TSP-Lead air monitoring results exceed the acceptance criteria on any one day of blasting, the Contractor shall suspend dust producing operations (e.g., paint removal and/or clean-up) and implement appropriate corrective action to control emissions.
E. Document all cases when work has been suspended due to emissions exceeding the ambient air monitoring criteria.

F. Background samples shall be collected for two days prior to the start of work while no dust producing operations are underway. The background monitoring shall be conducted-on one weekday and one weekend day. The background monitoring shall coincide with the anticipated working hours for the paint removal operations, but shall last for a minimum of 8 hours each day.
G. Calibrate the monitors according to the manufacturer's written instructions upon mobilization to the site, following any repairs or maintenance to the units, and quarterly.
H. Filters shall be placed in monitors prior to start of dust-producing operations and the filters removed upon completion of dust producing activities for that day. Advise the Department in advance when the filters will be removed and replaced. The monitor operator shall record the following information, at a minimum, on field data and laboratory chain-of-custody forms (or equivalent):

    1. Monitor location and serial number
    2. Flow rate, supported by flow charts
    3. Start, stop times and duration of monitoring
    4. Work activities and location of work during the monitoring period
    5. Wind direction/speed

I. Ambient Air Monitoring Results. The laboratory shall provide the results directly to the Department with a copy to the Contractor within 3 days of the sampling. The results shall include:

    1. Monitor identification and location
    2. Work location and activities performed during monitoring period
    3. Monitor flow rate, duration, and volume of air sampled
    4. Laboratory methods used for filter digestion / analysis
    5. Sample results for the actual duration of monitoring
    6. Sample results expressed in micrograms per cubic meter of air
    7. Comparison of the results with the the adjusted daily allowable concentration indicating whether the emissions are compliant
    8. Field data and chain-of-custody records used to derive results

<u>506.113 Regulated Areas</u> Physically demarcated regulated area(s) shall be established around exposure producing operations at the OSHA Action Level for the toxic metal(s) present in the coating. The Contractor shall provide all required protective clothing and equipment for personnel entering into a regulated area. Unprotected street clothing is not permitted within the regulated areas. Conduct air sampling at the boundaries of the regulated area for lead and any other toxic metals that may be present in the coating being removed. Use a minimum of two low flow pumps located at points on the perimeter of the regulated area, one upwind and one downwind from the work area. Until monitoring results are available, establish the regulated area a minimum of 15 feet from any equipment or operations that might generate airborne emissions of toxic metals. If the monitoring confirms that emissions at the boundary do not exceed the OSHA Action Level as

an 8-hour Time Weighted Average, discontinue monitoring. If the monitoring results exceed the OSHA Action Level, modify work practices and the containment to provide better controls over the emissions and repeat the monitoring until results are below the OSHA Action Level. Additional monitoring is not required unless directed by the Department, or if visible emissions occur or if there are changes to the work practices or equipment being used in the regulated area. Verify that cassettes are analyzed by an American Industrial Hygiene Association (AIHA) laboratory accredited for metals analysis. Have the laboratory provide results within 72 hours of the field sampling.

506.12 Method of Measurement Surface Preparation of Existing Structural Steel shall be measured for payment as one lump sum, complete and accepted.

Field Painting of Existing and New Structural Steel shall be measured for payment as one lump sum, complete and accepted.

Containment and Pollution Control Measures shall be measured for payment as one lump sum, complete and accepted.

Disposal of Special Waste or Hazardous Waste materials shall be measured for payment as one lump sum.

506.13 Basis of Payment The accepted quantity of Surface Preparation of Existing Structural Steel will be paid at the respective Contract lump sum price, which shall be full compensation for furnishing all materials, labor, tools, equipment, scaffolding, QC activities, and any other incidentals necessary for the satisfactory performance of the work.

The accepted quantity of Field Painting of Existing and New Structural Steel will be paid at the Contract lump sum price, which shall be full compensation for furnishing all material, labor, equipment, scaffolding, QC activities, and incidentals necessary for the satisfactory performance of the work.

Containment and pollution control will be paid for at the Contract lump sum price, which shall be full compensation for furnishing all materials, labor, equipment, and incidentals necessary for the satisfactory performance of the work.

Disposal of Special Waste or Hazardous Waste materials will be paid at the Contract lump sum price, which shall be full compensation for all permits, tests, transportation, tipping fees and incidentals necessary for the satisfactory performance of the work.

Payment will be made under:

Pay Item	Pay Unit

506.144	Field Painting of Existing and New Structural Steel	Lump Sum
506.17	Surface Preparation of Existing Structural Steel	Lump Sum
506.18	Containment and Pollution Control Measures	Lump Sum
506.191	Disposal of Special Waste or Hazardous Waste	Lump Sum

SPECIAL PROVISION
SECTION 656
Temporary Soil Erosion and Water Pollution Control

Standard Specification, Section 656.1 and 656.2 are deleted. All applicable Sections of Standard Specification 656 will remain in effect for this Contract.

The information and requirements set forth in this Special Provision will constitute the Soil Erosion and Water Pollution Control Plan (SEWPCP) for this Project. Any costs associated with this Special Provision will be considered incidental to the Contract.

All Work shall be done in accordance with the latest revision of the Maine Department of Transportation Best Management Practices for Erosion and Sediment Control (a.k.a. Best Management Practices manual or BMP Manual). The latest version is dated February 2008 and is available at:

http://www.maine.gov/mdot/env/docs/bmp/BMP2008full.pdf

The soil erosion and water pollution control measures associated with this Work are as follows:

1. The on-site person responsible for implementation of this plan, shall be the Contractor's Superintendent or other supervisory employee (the "Environmental Coordinator") with the authority to immediately remedy any deficient controls and shall provide the Resident with their numbers (telephone number, cellular phone and pager numbers, if applicable) where the Environmental Coordinator can be reached 24 hours a day.
2. All areas where soil is disturbed shall be permanently mulched on a daily basis and seeded on a weekly basis (if seeded by hand, it shall be done on a daily basis). All previously mulched areas shall be maintained and re-mulched on a daily basis if bare areas develop until an acceptable growth of grass has been obtained.
3. All disturbed ditches shall receive erosion control blanket or stone rip rap, as required, prior to the end of the working day.
4. Winter stabilization BMPs shall be applied in accordance with the MaineDOT BMP Manual between November 1 and April 15 or during frozen ground conditions.
5. All altered catch basin inlets shall utilize Storm Drain Inlet Protection in accordance with the MaineDOT BMP Manual.
6. If the Work includes the handling or storage of petroleum products or Hazardous Materials including the on site fueling of Equipment, the Resident must be provided with a Spill Prevention Control and Countermeasure Plan (SPCCP) plan from the Contractor. At a minimum, the SPCCP shall include:
    - The name and emergency response numbers (telephone number, cellular phone and pager numbers, if applicable) of the Contractor's representative responsible for spill prevention and response;

SPECIAL PROVISION
SECTION 656
Temporary Soil Erosion and Water Pollution Control

- General description and location of (1) handling, transfer, storage, and containment facilities of such products or hazardous Matter/Substances ("activities and facilities") and (2) potential receptors of such products or hazardous Matter/Substance including oceans, lakes, ponds, rivers, streams, wetlands, and sand and gravel aquifers ("sensitive resources") including the distances between said activities and facilities and said sensitive resources;
- Description of preventative measures to be used to minimize the possibility of a spill including Equipment and/or Materials to be used to prevent discharges including containment and diversionalry structures, inspections and personnel training;
- A contingency response plan to be implemented if a spill should occur including a list of emergency phone/pager numbers including the Contractor's representative, Maine DEP Spill Response, the National Response Center (if spill enters the water), the Resident, and local police and fire authorities, a list of emergency response equipment and locations and description of the capabilities of the equipment, a description of the general response and clean up protocols by product or Matter/Substances and an overview of the verbal and written notification procedures for federal, state and local officials. For a related provision, see *Standard Specification, Section, 105.2.3 - Project Specific Emergency Planning*.

7. The Environmental Coordinator must inspect and maintain, daily, all controls for the duration of the project.
8. If the Project Resident directs additional soil disturbance that requires temporary erosion and sedimentation control measures included within this Special Provision, all additional Work will be paid for as Changes Permitted
9. If the Project Resident directs additional soil disturbance that requires temporary erosion and Sedimentation control measures not included within this Special Provision, Standard Specification, Section 656.1 will be reinstituted and the Contractor shall prepare and submit a SEWPCP and properly implement its approved SEWPCP. All associate costs will be paid for as Extra Work. Any applicable permits shall be obtained by MaineDOT .

October 13, 2015
Supersedes August 06, 2015

STANDARD DETAIL UPDATES

Standard Details and Standard Detail updates are available at:
http://maine.gov/mdot/contractors/publications/standarddetail/

Detail #	Description	Revision Date
501(02)	Pipe Pile Splice	3/05/2015
501(03)	H – Pile Splice	3/05/2015
504(07)	Diaphragm & Crossframe Notes	10/13/2015
507(13)	Steel Bridge Railing	6/03/2015
507(14)	Steel Bridge Railing	6/03/2015
507(31)	Barrier – Mounted Steel Bridge	8/06/2015
526(02)	Temporary Concrete Barrier	8/06/2015

SUPPLEMENTAL SPECIFICATION
(Corrections, Additions, & Revisions to Standard Specifications - November 2014)

SECTION 101
CONTRACT INTERPRETATION

101.2 Definitions
Page 1-5 – Remove the definition of Bridge in its entirety and replace with:
"**Bridge A structure that is erected over a depression or an obstruction, such as water, a highway or a railway, and has an opening measured along the centerline of the Roadway of more than 20 feet between: The faces of abutments; spring line of arches; extreme ends of openings of box culverts, pipes or pipe arches; or the extreme ends of openings for multiple box culverts, pipes or pipe arches**."

Page 1-12 – Remove the definition of Large Culvert in its entirety and replace with:
"**Large Culvert Any structure not defined as a Culvert or Bridge that provides a drainage or non-drainage opening under the Roadway or Approaches to the Roadway, with an opening that is 5 feet but less than 10 feet**."

Remove the definition of Minor Span in its entirety and replace with:
"**Minor Span Same definition as Bridge, except having an opening of between 10 feet and 20 feet, inclusive**."

SECTION 104
GENERAL RIGHTS AND RESPONSIBILITES

104.5.5 Prompt Payment of Subcontractors Add the following paragraph to this subsection:

C. Payment Tracking Federal Projects On federally funded projects, the prime contractor, subcontractors and lower-tier subcontractors will track and confirm the delivery and receipt of all payments through the Elation System. They will be responsible for entering all payments to all sub and lower tier contractors. MaineDOT will run a query monthly to ensure that contractors are complying and generate an e-mail to contractors who have not responded to confirm receipt of MaineDOT payment or contractor payment to lower tier subcontractors.

SECTION 105
GENERAL SCOPE OF WORK

105.4.5 Special Detours Remove this subsection in its entirety and replace with:
"105.4.5 Maintenance of Existing Structures When a new Bridge or Minor Span is being installed on a new alignment and the existing structure is to remain in service, the Department will maintain the existing structure and the portions of the roadway required for maintaining traffic until such time that the new structure is opened to traffic and the existing structure is taken out of service. A similar situation exists when a new Bridge or Minor Span is being installed on the same alignment as the existing structure, requiring a temporary detour to be installed by the Contractor per Section 510, Special Detours,

prior to removal of the existing structure. In this case, the Department will maintain the existing structure and the portions of the existing roadway required for maintaining traffic until such time that either the temporary detour is opened to traffic or the Contractor begins any work on the existing structure, including, but not limited to, repairs, modifications, moving, demolition or removal. In either case, once the new structure or temporary detour is opened to traffic, or the Contractor begins any work on the existing structure, the Contractor shall be solely responsible for all maintenance of the existing structure and the portions of the existing approaches that lie outside the new roadway or the temporary detour, respectively. This specification is not intended to supersede Standard Specification Section 104.3.11, Responsibility for Property of Others."

105.6.2.4 Department Verification Add the following to the end of the first sentence:
"**or other approved method, such as reference staking, to allow the Department to independently verify the accuracy of the work, as approved by the Department."**

SECTION 108
PAYMENT

108.3 Retainage - Remove the paragraph beginning with " The Contractor may withdraw…" in its entirety.

SECTION 109
CHANGES

109.5.1 Definitions - Types of Delays In Paragraph 'A' delete "Equitable Adjustment" and replace with "adjustment of time".

APPENDIX A TO DIVISION 100

Remove Section D in its entirety as this is now covered in Section 105.10 EQUAL OPPORTUNITY AND CIVIL RIGHTS.

SECTION 203
EXCAVATION AND EMBANKMENT

203.02 Materials
At the bottom of page 2-12, add as the first item in the list:

Crushed Stone, ¾ inch 703.13

203.042 Rock Excavation and Blasting
On page 2-16, add the word "**No**" to the third sentence in Section 5 Submittals, Subsection V, 1 so that it reads:
"***No* blasting products will be allowed on the job site if the date codes are missing**."

SECTION 304
AGGREGATE BASE AND SUBBASE COURSE

304.02 Aggregate
Remove the sentence "Aggregate for base and subbase courses shall be material meeting the aggregate type requirements specified in the following table" in its entirety and the table that follows it with headings of 'Material' and 'Aggregate Type'.

304.02 – Aggregate Add the following sentence before the sentence starting with "When designated on the plans…": **"Aggregate Base Course – Type C will be capped with 2" of millings or Untreated Aggregate Surface Course – Type B. Payment for this material will be made under 304.16"**

SECTION 307
FULL DEPTH RECYCLED PAVEMENT

Remove this Section in its entirety and replace with:

SECTION 307
FULL DEPTH RECYCLING
(UNTREATED OR TREATED WITH EMULSIFIED ASPHALT STABILIZER)

307.01 Description This work shall consist of pulverizing a portion of the existing roadway structure into a homogenous mass, adding an emulsified asphalt stabilizer (if required) to the depth of the pulverized material specified in the contract, placing and compacting this material to the lines, grades, and dimensions shown on the plans or established by the Resident.

MATERIALS

307.02 Pulverized Material Pulverized material shall consist of the existing asphalt pavement layers and one inch or more as specified of the underlying gravel, pulverized and blended into a homogenous mass. Pulverized material will be processed to 100% passing a 2 inch square mesh sieve.

307.021 New Aggregate and Additional Recycled Material New aggregate, if required by the contract, shall meet the requirements of Subsection 703.10 - Aggregate for Untreated Surface Course and Leveling Course, Type A. Aggregate Subbase Course Gravel Type D processed to 100 percent passing a 2 inch square mesh sieve and meeting the requirements of 703.06 – Aggregate for Base and Subbase may be used in areas requiring depths greater than 2 inches. New aggregate, will be measured and paid for under the appropriate item.

Recycled material, if required, shall consist of salvaged asphalt material from the project or from off-site stockpiles that has been processed before use to 100 percent passing a 2 inch square mesh sieve. Recycled material shall be conditionally accepted at the source

by the Resident. It shall be free of winter sand, granular fill, construction debris, or other materials not generally considered asphalt pavement.

Recycled material generated and salvaged from the project shall be used within the roadway limits to the extent it is available as described in 307.09. No additional payment will be made for material salvaged from the project.

Recycled material supplied from off-site stockpiles shall be paid for as described in the contract, or by contract modification.

<u>307.022 Emulsified Asphalt Stabilizer</u>. If required, the emulsified asphalt stabilizer shall be grade MS-2, MS-4, SS-1, or CSS-1 meeting the requirements of Subsection 702.04 Emulsified Asphalt.

<u>307.023 Water</u> Water shall be clean and free from deleterious concentrations of acids, alkalis, salts or other organic or chemical substances.

<u>307.024 Portland Cement</u> If required, Portland Cement shall be Type I or II meeting the requirements of AASHTO M85.

<u>307.025 Hydrated Lime</u> If required, Hydrated Lime shall meet the requirements of AASHTO M216.

EQUIPMENT

<u>307.03 Pulverizer</u> The pulverizer shall be a self-propelled machine, specifically manufactured for full-depth recycling work and capable of reducing the required existing materials to a size that will pass a 2 inch square mesh sieve. The machine shall be equipped with standard automatic depth controls and must maintain a consistent cutting depth and width. The machine also shall be equipped with a gauge to show depth of material being processed.

<u>307.04 Liquid Mixer Unit or Distributor</u>. If treatment of the recycled layer with emulsified asphalt is required by the contract, a liquid mixing unit or distributor shall be used to introduce the emulsified asphalt stabilizer into the pulverized material. The mixing unit shall contain a liquid distribution and mixing system which has been specifically manufactured for full-depth recycling work, capable of mixing the pulverized material with an evenly metered distribution of emulsified asphalt into a homogeneous mixture, to the depth and width required.

The mixing unit shall be designed, equipped, maintained, and operated so that emulsified asphalt stabilizer at constant temperature may be applied uniformly on variable widths of pulverized material up to 6 feet at readily determined and controlled rates from 0.01 to 1.06 gal/yd^2 with uniform pressure and with an allowable variation from any specified rate not to exceed 0.01 gal/ yd^2. Mixing units shall include a tachometer, pressure gages, and accurate volume measuring devices or a calibrated tank and a thermometer for measuring temperatures of tank contents.

<u>307.041 Cement or Lime Spreader</u> If required by the contract, spreading of the Portland Cement or Hydrated Lime shall be done with a spreader truck designed to spread dry particulate (such as Portland Cement or Lime) or other approved means to insure a uniform distribution across the roadway and minimize fugitive dust. Pneumatic application, including through a slotted pipe, will not be permitted. Other systems that have been developed include fog systems, vacuum systems, etc. Slurry applications may also be accepted. The Department reserves the right to accept or reject the method of spreading cement. The Contractor shall provide a method for verifying that the correct amount of cement is being applied.

<u>307.05 Placement Equipment</u> Placement of the Full Depth recycled material to the required slope and grade shall be done with an approved highway grader or by another method approved by the Resident.

<u>307.06 Rollers</u> The full depth recycled material shall be rolled with a vibratory pad foot roller, a vibratory steel drum soil compactor and a pneumatic tire roller. The pad foot roller drum shall have a minimum of 112 tamping feet 3 inches in height, a minimum contact area per foot of 17 inch^2, and a minimum width of 84 inches. The vibratory steel drum roller shall have a minimum 84 inch width single drum. The pneumatic tire roller shall meet the requirements of Section 401.10 and the minimum allowable tire pressure shall be 85 psi.

MIX DESIGN

If treatment of the recycled layer with emulsified asphalt is required by the contract, the Department will supply a mix design for the emulsified asphalt stabilized material based on test results from pavement and soil analysis taken to the design depth. The Department will provide the following information prior to construction:

1. **Percent of emulsified asphalt to be used.**
2. **Quantity of lime or cement to be added.**
3. **Optimum moisture content for proper compaction.**
4. **Additional aggregate (if required).**

After a test strip has been completed or as the work progresses, it may be necessary for the Resident to make necessary adjustments to the mix design. Changes to compensation will be in accordance with the Mix Design Special Provision.

CONSTRUCTION REQUIREMENTS

<u>307.06 Pulverizing</u> The entire depth of existing pavement shall be pulverized together with 1 inch or more of the underlying gravel into a homogenous mass. All pulverizing shall be done with equipment that will provide a homogenous mass of pulverized material, processed in-place, which will pass a 2 inch square mesh sieve.

<u>307.07 Weather Limitations</u> Full depth recycled work shall be performed when;

A. Recycling operations will be allowed between May 15th and September 15th inclusive in Zone 1 - Areas north of US Route 2 from Gilead to Bangor and north of Route 9 from Bangor to Calais.
B. The atmospheric temperature, as determined by an approved thermometer placed in the shade at the recycling location, is 50°F and rising.
C. When there is no standing water on the surface.
D. During generally dry conditions, or when weather conditions are such that proper pulverizing, mixing, grading, finishing and curing can be obtained using proper procedures, and when compaction can be accomplished as determined by the Resident.
E. When the surface is not frozen and when overnight temperatures are expected to be above 32°F.
F. Wind conditions are such that the spreading of lime or cement on the roadway ahead of the recycling machine will not adversely affect the operation.

<u>307.08 Surface Tolerance</u> The complete surface of the Full Depth Recycled course shall be shaped and maintained to a tolerance, above or below the required cross sectional shape, of ⅜ inch.

<u>307.09 Full Depth Recycling Procedure</u> New aggregate or recycled material meeting the requirements of Section 307.021 - New Aggregate and Additional Recycled Material, shall be added as necessary to restore cross-slope and/or grade before pulverizing. Locations will be shown on the plans or described in the construction notes. The Resident may add other locations while construction of the project is in progress. The Contractor will use recycled material to the extent it is available, in lieu of new aggregate. The material shall then be pulverized, processed, and blended into a homogeneous mass passing a 2 inch square mesh sieve. Material found not pulverized down to a 2 inch size will be required to be reprocessed by the recycler with successive passes until approved by the Resident.

Should the Contractor be required to add new aggregate or recycled material to restore cross-slope and/or grade after the initial pulverizing process, those areas will require re-processing to blend into a homogenous mass passing a 2 in square mesh sieve.

Sufficient water shall be added during the recycling process to maintain optimum moisture for compaction.

The resultant material from the initial pulverizing processes shall be graded and compacted to the cross-slope and profile shown on the plans or as directed by the Resident. The Contractor will also be responsible for re-establishing the existing profile grade. The completed surface of the full depth recycled course shall be shaped and maintained to a tolerance, above or below the required cross sectional shape, of ⅜ inch. Areas not meeting this tolerance will be repaired as described in Section 307.091. The initial pulverizing process density requirements will be the same as Section 307.101 unless otherwise directed by the Resident.

Additives, if required, shall be introduced following completion of the initial pulverizing and blending process. Emulsified asphalt stabilizer shall be incorporated into the top of

the processed material as specified in section 307.04 to the depth specified in the contract by use of the liquid mixer unit or a distributor, at the rate specified in the mix design. The emulsified asphalt shall then be uniformly blended into a homogeneous mass until an apparent uniform distribution has occurred. The rate of application may be adjusted as necessary by the Resident. Cement or lime shall be introduced as described in section 307.041. The resultant material shall be graded and compacted to the cross-slope and profile shown on the plans or as directed by the Resident. The Contractor will also be responsible for re-establishing the existing profile grade.

After final compaction, the roadway surface shall be treated with a light application of water, and rolled with pneumatic-tired rollers to create a close-knit texture. The finished layer shall be free from:

A. Surface laminations.
B. Segregation of fine and coarse aggregate.
C. Corrugations, centerline differential, potholes, or any other defects that may adversely affect the performance of the layer, or any layers to be placed upon it.

The Contractor shall protect and maintain the recycled layer until a lift of pavement is applied. Any damage or defects in the layer shall be repaired immediately. An even and uniform surface shall be maintained. The recycled surface shall be swept prior to hot mix asphalt overlay placement.

307.091 Repairs Repairs and maintenance of the recycled layers, resulting from damage caused by traffic, weather or environmental conditions, or resulting from damage caused by the Contractor's operations or equipment, shall be completed at no additional cost to the Department.

For recycled layers stabilized with emulsified asphalt, low areas will be repaired using a hot mix asphalt shim. Areas up to 1 inch high can be repaired by milling or shimming with hot mix asphalt. Areas greater than 1 inch high will be repaired using a hot mix asphalt shim. All repair work will be done with the Resident's approval at the Contractor's expense.

TESTING REQUIREMENTS

307.10 Quality Control The Contractor shall operate in accordance with the approved Quality Control Plan (QCP) to assure a product meeting the contract requirements. The QCP shall meet the requirements of Section 106.4 - Quality Control and this Section. The Contractor shall not begin recycling operations until the Department approves the QCP in writing.

Prior to performing any recycling process, the Department and the Contractor shall hold a Pre-recycle conference to discuss the recycling schedule, type and amount of equipment to be used, sequence of operations, and traffic control. A copy of the QC random

numbers to be used on the project shall be provided to the Resident. All field supervisors including the responsible onsite recycling process supervisor shall attend this meeting.

The QCP shall address any items that affect the quality of the Recycling Process including, but not limited to, the following:

- **A. Sources for all materials, including New Aggregate and Additional Recycled Material.**
- **B. Make and type of rollers including weight, weight per inch of steel wheels, and average contact pressure for pneumatic tired rollers.**
- **C. Testing Plan.**
- **D. Recycling operations including recycling speed, methods to ensure that segregation is minimized, grading and compacting operations.**
- **E. Methods for protecting the finished product from damage and procedures for any necessary corrective action.**
- **F. Method of grade checks.**
- **G. Examples of Quality Control forms.**
- **H. Name, responsibilities, and qualifications of the Responsible onsite Recycling Supervisor experienced and knowledgeable with the process.**
- **I. A note that all testing will be done in accordance with AASHTO and MDOT/ACM procedures.**

The Project Superintendent shall be named in the QCP, and the responsibilities for successful implementation of the QCP shall be outlined.

The Contractor shall sample, test, and evaluate the full depth reclamation process in accordance with the following minimum frequencies:

MINIMUM QUALITY CONTROL FREQUENCIES

Test or Action	Frequency	Test Method
Density	1 per 1000 feet / lane	AASHTO T 310
Air Temperature	4 per day at even intervals	
Surface Temperature	At the beginning and end of each days operation	
Yield of all materials (Daily yield, yield since last test, and total project yield.)	1 per 1000 ft/lane	

The Department may view any QC test and request a QC test at any time. The Contractor shall submit all QC test reports and summaries in writing, signed by the appropriate technician, to the Department's onsite representative by 1:00 P.M. on the next working day, except when otherwise noted in the QCP due to local restrictions. The Contractor shall make all test results, including randomly sampled densities, available to the Department onsite.

The Contractor shall cease recycling operations whenever one of the following occurs:

A. The Contractor fails to follow the approved QCP.
B. The Contractor fails to achieve 98 percent density after corrective action has been taken.
C. The finished product is visually defective, as determined by the Resident.
D. The computed yield differs from the mix design by 10 percent or more.

Recycling operations shall not resume until the Department approves the corrective action to be taken.

<u>307.101 Test Strip</u> The contractor shall assemble all items of equipment for the recycling operation on the first day of the recycling work. The Contractor shall construct a test strip for the project at a location approved by the Resident. The Responsible onsite Recycling Supervisor will work with Department personnel to determine the suitability of the mixed material, moisture control within the mixed material, and compaction and surface finish. The test strip section is required to:

A. Demonstrate that the equipment and processes can produce recycled layers to meet the requirements specified in these special provisions.
B. Determine the effect on the gradation of the recycled material by varying the forward speed of the recycling machine and the rotation rate of the milling drum.
C. Determine the optimum moisture necessary to achieve proper compaction of the recycled layer.
D. Determine the sequence and manner of rolling necessary to obtain the compaction requirements and establish a target density. The Contractor and the Department will both conduct testing with their respective gauges at this time.

The test strip shall be at least 300 feet in length of a full lane-width (or a half-road width). Full recycling production will not start until a passing test strip has been accomplished. If a test strip fails to meet the requirements of this specification, the Contractor will be required to repair or replace the test strip to the satisfaction of the Resident. Any repairs, replacement, or duplication of the test strip will be at the Contractor's expense.

After the test strip has been pulverized, and the roadway brought to proper shape, the Contractor shall add water until it is determined that optimum moisture has been obtained. The test strip shall then be rolled using the specified compaction equipment as directed until the density readings show an increase in dry density of less than 1 pcf for the final four roller passes of each roller. The Contractor and Department will each determine a target density using their respective gauges by performing several additional density tests and averaging them. The average of these tests will be used as the target density of the recycled material for QC and Acceptance purposes.

Following completion of the test strip, compaction of the material shall continue until a density of not less than 98 percent of the test strip target density has been achieved for the full width and depth of the layer. During the construction and compaction of the Full Depth Recycled base, should three consecutive Acceptance test results for density fail to meet a minimum of 95 percent of the target density, or exceed 102 percent of target density, a new test strip shall be constructed.

ACCEPTANCE TEST FREQUENCY

Property	Frequency	Test Method
In-place Density	1 per 2000 ft / lane	AASHTO T 310

308.102 Curing. No new pavement shall be placed on the full depth recycled pavement until curing has reduced the moisture content to 1 percent or less by total weight of the mixture, or a curing period of 4 days has elapsed, whichever comes first.

307.11 Method of Measurement Full Depth Recycled Pavement (Untreated or Treated with Emulsified Asphalt Stabilizer) will be measured by the square yard.

307.12 Basis of Payment The accepted quantity of Full Depth Recycled Asphalt Pavement (Untreated or Treated with Emulsified Asphalt Stabilizer) will be paid for at the contract unit price per square yard, complete in-place which price will be full compensation for furnishing all equipment, materials and labor for pulverizing, blending, placing, grading, compacting, and for all incidentals necessary to complete the work.

The addition of materials to restore profile grade and/or cross-slope in areas shown on the plans or described in the construction notes will be paid separately under designated pay items within the contract. No additional payment will be made for materials salvaged from the project.

Payments will be made under:

Pay Item	Pay Unit
307.331 Full Depth Recycled Pavement (Untreated)	Square Yard
307.332 Full Depth Recycled Pavement (with Emulsified Asphalt Stabilizer) 5 in. depth	Square Yard
307.333 Full Depth Recycled Pavement (with Emulsified Asphalt Stabilizer) 6 in. depth	Square Yard

SECTION 411
UNTREATED AGGRAGATE SURFACE COURSE

411.02 – Aggregate Add the following to the end of the first sentence: **"- Type A"**

SECTION 502
STRUCTURAL CONCRETE

502.05 Composition and Proportioning

Replace Table 1 with

TABLE 1

Concrete CLASS	Minimum Compressive Strength (PSI)	Permeability as indicated by Surface Resistivity (KOhm-cm)	Entrained Air (%)		Notes
		LSL	LSL	USL	
S	3,000	N/A	N/A	N/A	4,5
A	4,000	14	6.0	9.0	1,4,5
P	-----	-----	5.5	7.5	1,2,3,4
LP	5,000	17	6.0	9.0	1,4,5
Fill	3,000	N/A	6.0	9.0	4,5

In the list of information submitted by the contractor for a mix design:

Item J Replace "Target Coulomb Value." with "Target KOhm-cm Value."

Note #1 - Remove, **"…Standard Specification Section 711.05, Protective Coating for Concrete Surfaces, and per the manufacturer's recommendations, at no additional cost to the Department."** and replace with, **"…Standard Specification Section 515, Protective Coating for Concrete Surfaces, at no additional cost to the Department."**

502.1703 Acceptance Methods A and B

In the paragraph that starts with "The Department will take Acceptance…" Remove the word chloride from chloride permeability in the last sentence.

Replace the paragraph starting with "Rapid Chloride Permeability specimens…" With the following:

"Surface Resistivity specimens will be tested by the Department in accordance with AASHTO TP-95 at an age ≥ 56 days. Four 4 inch x 8 inch cylinders will be cast per sublot placed. The average of three concrete specimens per sublot will constitute a test result and this average will be used to determine the permeability for pay adjustment computations."

502.1706 Acceptance Method C

Remove in its entirety and Replace with:

502.1706 Acceptance Method C The Department will determine the acceptability of the concrete through Acceptance testing. Acceptance tests will include compressive strength, air content and permeability. Method C concrete with a failing permeability as indicated by the surface resistivity test may be tested for permeability in accordance with the Rapid Chloride Permeability Test AASHTO T-277 averaging the results from two specimens cut from the samples prepared for the surface resistivity test. Method C concrete not meeting the requirements listed in Table 1 or if the Rapid Chloride Permeability test results in values exceeding 2000 coulombs for Class LP or 2400 for

Class A, shall be removed and replaced at no cost to the Department. At the Department's sole discretion, material not meeting requirements may be left in place and paid for at a reduced price as described in Section 502.195.

502.1707 Resolution of Disputed Acceptance Test Results
Section B

Remove "Rapid Chloride" from the section heading.
In paragraph 4 replace T-277 with TP-95

502.192 Pay Adjustment for Chloride Permeability
Remove "Chloride" from the heading and from the first sentence.

Replace the sentence that starts with "values greater than…" and replace with "values less than 10 KOhms-cm for Class A concrete or 11 KOhms-cm for Class LP concrete shall be subject to rejection and replacement, at no additional cost to the Department."

502.194 Pay Adjustments for Compressive Strength, Chloride Permeability and Air Content, Methods A and B

Remove the word "Chloride" from the section heading and from the equation for CPF.

502.195 Pay Adjustment Method C

Table 6: Method C Pay Reductions (page 5-53)
Under "Entrained Air" for "Class Fill", in the first line,
change from "< 4.0 (Removal)" to **"< 4.5 (Removal)**"

In Table 6: Method C PAY REDUCTIONS remove the word 'Chloride' from 'Chloride Permeability'.

SECTION 619
MULCH

619.07 Basis of Payment
In the list of Pay Items add "**619.12 Mulch**" with a Pay Unit of " **Unit** ".
Change the description of 619.1201 from "Mulch" to "**Mulch – Plan Quantity**"

In the list of Pay Items add "**619.13 Bark Mulch**" with a Pay Unit of " **CY** ".
Change the description of 619.1301 from "Bark Mulch" to "**Mulch – Plan Quantity**"

In the list of Pay Items add "**619.14 Erosion Control Mix**" with a Pay Unit of " **CY** ".
Change the description of 619.1401 from "Erosion Control Mix" to "**Mulch – Plan Quantity**"

SECTION 621
LANDSCAPING

621.0002 Materials - General
In the list of items change "Organic Humus" to "**Humus**".

621.0019 Plant Pits and Beds
c Class A Planting
In the third paragraph beginning with " The plant pit…" change "½ inch" to "**1 inch**"

SECTION 626
FOUNDATIONS, CONDUIT AND JUNTION BOXES FOR HIGHWAY SIGNING, LIGHTING AND SIGNALS

626.034 Concrete Foundations

On Page 6-85, add the following paragraph before the paragraph beginning with "Drilled shafts shall not be…".

No foundation design will be required for 18- and 24-inch diameter foundations for structures less than 30-feet tall and with no projecting arms. A foundation design prepared by a Professional Engineer licensed in accordance with the laws of the State of Maine will be required for all other foundations Precast foundations will be permitted for 18 and 24-inch diameter foundations for structures less than 30-feet tall and with no projecting arms. Where precast foundations are permitted flowable concrete fill shall be used as backfill in the annular space, and placed from the bottom up. Construction of precast foundations shall conform to the Standard Details and all requirements of Section 712.061 except that the concrete shall have a minimum permeability of 17 kOhm-cm and the use of calcium nitrite will not be required.

On Page 6-86, add the following to the paragraph beginning with "Concrete for drilled shafts…" so that it reads as follows:

"….The Contractor shall provide temporary dewatering of excavations for foundations such that concrete is placed in the dry. **Concrete for drilled shafts shall be placed in accordance with Section 502.10 as temporary casing is withdrawn to prevent debris from contaminating the foundation and to ensure concrete is cast against the surrounding soil. Concrete for drilled shafts and spread footings shall be Class A in accordance with Section 502 - Structural Concrete. Precast foundations will not be permitted except as specified above in this Section.** Backfill for spread footing foundations shall be Gravel Borrow meeting the requirements of Section 703.20 - Gravel Borrow….."

SECTION 652
MAINTENANCE OF TRAFFIC

652.3 Submittal of Traffic Control Plan On page **6-148**, note **f,** in the last sentence change the 105.2.2 to 105.2.3 so that the last sentence reads, "**For a related provision, see Section 105.2.3 – Project Specific Emergency Planning**.".

652.4 Flaggers In the first paragraph, change the fifth sentence which says:

For nighttime conditions, Class 3 apparel, meeting ANSI 107-2004, shall be worn along with a hardhat with 360˚ retro-refectivity.

So that it reads:

For nighttime conditions, Class 3 apparel, meeting ANSI 107-2004, including a Class 3 top (vest, shirt or jacket) and a Class E bottom (pants or coveralls), shall be worn along with a hardhat with 360 ˚ retro-reflectivity.

SECTION 656
TEMPORARY SOIL EROSION AND WATER POLLUTION CONTROL

656.5.2 If No Pay Item Add the following to the end of the first paragraph:
"Failure by the Contractor to follow Standard Specification or Special Provision - Section 656 will result in a violation letter and a reduction in payment as shown in the schedule list in 656.5.1. The Department's Resident or any other representative of The Department reserves the right to suspend the work at any time and request a meeting to discuss violations and remedies. The Department shall not be held responsible for any delay in the work due to any suspension under this item."

SECTION 660
ON-THE-JOB TRAINING

660.06 Method of Measurement

Remove the first sentence in its entirety and replace with " **The OJT item will be measured by the number of OJT hours by a trainee who has successfully completed an approved training program.**"

660.07 Basis of payment to the Contractor

Remove the last word in the first sentence so that the first sentence reads " The OJT shall be paid for once successfully completed at the contract unit price per **hour**."

Payment will be made under

Change the Pay Item from "660.22" to "**660.21**" and change the Pay Unit from "Each" to "**Hour**".

SECTION 677

On page 6 - 203 change "636.041" to "677.041"

SECTION 703
AGGREGATES

703,0201 Alkali Silica Reactive Aggregates
Remove this section in its entirety and replace with the following:

703.0201 Alkali Silica Reactive Aggregates. All coarse and fine aggregates proposed for use in concrete shall be tested for Alkali Silica Reactivity (ASR) potential under AASHTO T 303 (ASTM C 1260), Accelerated Detection of Potentially Deleterious Expansion of Mortar Bars Due to Alkali-Silica Reaction, prior to being accepted for use. Acceptance will be based on testing performed by an accredited independent lab submitted to the Department. Aggregate submittals will be required on a 5-year cycle, unless the source or character of the aggregate in question has changed within 5 years from the last test date.
As per AASHTO T 303 (ASTM C 1260): Use of a particular coarse or fine aggregate will be allowed with no restrictions when the mortar bars made with this aggregate expand less than or equal to 0.10 percent at 30 days from casting. Use of a particular coarse or fine aggregate will be classified as potentially reactive when the mortar bars made with this aggregate expand greater than 0.10 percent at 30 days from casting. Use of this aggregate will only be allowed with the use of cement-pozzolan blends and/or chemical admixtures that result in mortar bar expansion of less than 0.10 percent at 30 days from casting as tested under ASTM C 1567.

Acceptable pozzolans and chemical admixtures that may be used when an aggregate is classified as potentially reactive include, but are not limited to the following:

Class F Coal Fly Ash meeting the requirements of AASHTO M 295.
Ground Granulated Blast Furnace Slag (Grade 100 or 120) meeting the requirements of AASHTO M 302.

Densified Silica Fume meeting the requirements of AASHTO M 307.
Lithium based admixtures
Metakaolin

Pozzolans or chemical admixtures required to offset the effects of potentially reactive aggregates will be incorporated into the concrete at no additional cost to the Department.

703.06 Aggregate for Base and Subbase - Remove the first two paragraphs in their entirety and replace with these:

"**The following shall apply to Sections (a.) and (c.) below. The material shall have a Micro-Deval value of 25.0 or less as determined by AASHTO T 327. If the Micro- Deval value exceeds 25.0, the Washington State Degradation DOT Test Method T113, Method of Test for Determination of Degradation Value (January 2009 version) shall be performed, except that the test shall be performed on the portion of the sample that passes the ½ in sieve and is retained on the No. 10 sieve. If the material has a Washington Degradation value of less than 15, the material shall be rejected.**

The material used in Section (b.) below shall have a Micro-Deval value of 25.0 or less as determined by AASHTO T 327. If the Micro-Deval value exceeds 25.0 the material may be used if it does not exceed 25 percent loss on AASHTO T 96, Resistance to Degradation of Small-Size Coarse Aggregate by Abrasion and Impact in the Los Angeles Machine. "

703.19 Granular Borrow

Remove the gradation requirements table, and replace with the following:

Sieve Designation	Percentage by Weight Passing Square Mesh Sieves	
	Material for Underwater Backfill	Material for Embankment Construction
6 inch	100	
No. 40	0-70	0-70
No. 200	0-7.0	0-20.0

703.33 Stone Ballast - In the third paragraph, remove the words " less than" before 2.60 and add the words "**or greater**" after 2.60.

SECTION 717
ROADSIDE IMPROVEMENT MATERIAL

717.02 Agricultural Ground Limestone

In the table after the third paragraph which starts with "Liquid lime…" change the Specification for Nitrogen (N) from "15.5 percent of which 1% is from ammoniac nitrogen and

14.5 /5 is from Nitrate Nitrogen" to read "**15.5 % of which 1% is from Ammoniacal Nitrogen and 14.5 % is from Nitrate Nitrogen**"

APPENDIX A TO DIVISION 100

SECTION 1 - BIDDING PROVISIONS

A. Federally Required Certifications By signing and delivering a Bid, the Bidder certifies as provided in all certifications set forth in this Appendix A - Federal Contract Provisions Supplement including:

- Certification Regarding No Kickbacks to Procure Contract as provided on this page 1 below.
- Certification Regarding Non-collusion as provided on page 1 below.
- Certification Regarding Non-segregated Facilities as provided by FHWA Form 1273, section III set forth on page 21 below.
- "Certification Regarding Debarment, Suspension, Ineligibility and Voluntary Exclusion" as provided by FHWA Form 1273, section XI set forth on page 32 below.
- "Certification Regarding Use of Contract Funds for Lobbying" as provided by FHWA Form 1273, section XII set forth on page 35 below.

Unless otherwise provided below, the term "Bidder", for the purposes of these certifications, includes the Bidder, its principals, and the person(s) signing the Bid. Upon execution of the Contract, the Bidder (then called the Contractor) will again make all the certifications indicated in this paragraph above.

CERTIFICATION REGARDING NO KICKBACKS TO PROCURE CONTRACT Except expressly stated by the Bidder on sheets submitted with the Bid (if any), the Bidder hereby certifies, to the best of its knowledge and belief, that it has not:

(A) employed or retained for a commission, percentage, brokerage, contingent fee, or other consideration, any firm or person (other then a bona fide employee working solely for me) to solicit or secure this contract;

(B) agreed, as an express or implied condition for obtaining this contract, to employ or retain the services of any firm or person in connection with carrying out the contract, or;

C) paid, or agreed to pay, to any firm, organization, or person (other than a bona fide employee working solely for me) any fee, contribution, donation, or consideration of any kind for, or in connection with, procuring or carrying out the contract;

By signing and submitting a Bid, the Bidder acknowledges that this certification is to be furnished to the Maine Department of Transportation and the Federal Highway Administration, U.S. Department of Transportation in connection with this contract in anticipation of federal aid highway funds and is subject to applicable state and federal laws, both criminal and civil.

CERTIFICATION REGARDING NONCOLLUSION Under penalty of perjury as provided by federal law (28 U.S.C. §1746), the Bidder hereby certifies, to the best of its knowledge and belief, that:

the Bidder has not, either directly or indirectly, entered into any agreement, participated in any collusion, or otherwise taken any action in restraint of competitive bidding in connection with the Contract.

For a related provisions, see Section 102.7.2 (C) of the Standard Specifications - "Effects of Signing and Delivery of Bids" - "Certifications", Section 3 of this Appendix A entitled "Other Federal Requirements" including section XI - "Certification Regarding Debarment, Suspension, Ineligibility, and Voluntary Exclusion" and section XII. - "Certification Regarding Use of Contract Funds for Lobbying."

****

B. Bid Rigging Hotline To report bid rigging activities call: **1-800-424-9071**

The U.S. Department of Transportation (DOT) operates the above toll-free "hotline" Monday through Friday, 8:00 a.m. to 5:00 p.m., eastern time. Anyone with knowledge of possible bid rigging, bidder collusion, or other fraudulent activities should use the "hotline" to report such activities.

The "hotline" is part of the DOT's continuing effort to identify and investigate highway construction contract fraud and abuse and is operated under the direction of the DOT Inspector General. All information will be treated confidentially and caller anonymity will be respected.

****

SECTION 2 - FEDERAL EEO AND CIVIL RIGHTS REQUIREMENTS

Unless expressly otherwise provided in the Bid Documents, the provisions contained in this Section 2 of this "Federal Contract Provisions Supplement" are hereby incorporated into the Bid Documents and Contract.

A. Nondiscrimination & Civil Rights - Title VI The Contractor and its subcontractors shall not discriminate on the basis of race, color, national origin, or sex in the performance of this Contract. The Contractor shall carry out applicable requirements of 49 CFR Part 26 in the award and administration of DOT assisted contracts. Failure by the Contractor to carry out these requirements is a material breach of this contract, which may result in the termination of this contract or such other remedy as the Department deems appropriate. The Contractor and subcontractors shall comply with Title VI of the Civil Rights Act of 1964, as amended, and with all State of Maine and other Federal Civil Rights laws.

For related provisions, see Subsection B - "Nondiscrimination and Affirmative Action - Executive Order 11246" of this Section 2 and Section 3 - Other Federal Requirements of this "Federal Contract Provisions Supplement" including section II - "Nondiscrimination" of the "Required Contract Provisions, Federal Aid Construction Contracts", FHWA-1273.

B. Nondiscrimination and Affirmative Action - Executive Order 11246 Pursuant to Executive Order 11246, which was issued by President Johnson in 1965 and amended in 1967 and 1978, this Contract provides as follows.

The Contractor shall take specific affirmative actions to ensure equal employment opportunity. The evaluation of the Contractor's compliance with these specifications shall be based upon its efforts to achieve maximum results from its actions. The Contractor shall

document these efforts fully, and shall implement affirmative action steps at least as extensive as the following:

Ensure and maintain a working environment free of harassment, intimidations, and coercion at all sites, and in all facilities at which the Contractor's employees are assigned to work. The Contractor, where possible, will assign two or more women to each construction project. The Contractor shall specifically ensure that all forepersons, superintendents, and other on-site supervisory personnel are aware of and carry out the Contractor's obligation to maintain such a working environment, with specific attention to minority or female individuals working at such sites or in such facilities.

Establish and maintain a current list of minority and female recruitment sources, provide written notification to minority and female recruitment sources and to community organizations when the Contractor or its union have employment opportunities available, and to maintain a record of the organization's responses.

Maintain a current file of the names, addresses and telephone numbers of each minority and female off-the-street applicant and minority or female referral from a union, a recruitment source or community organization and of what action was taken with respect to each such individual. If such individual was sent to the union hiring hall for referral and was not referred back to the Contractor by the union or, if referred, not employed by the Contractor, this shall be documented in the file with the reason therefore, along with whatever additional actions the Contractor may have taken.

Provide immediate written notification to the Department's Civil Rights Office when the union or unions with which the Contractor has a collective bargaining agreement has not referred to the Contractor a minority person or woman sent by the Contractor, or when the Contractor has other information that the union referral process has impeded the Design-Builder's efforts to meet its obligations.

Develop on-the-job training opportunities and/or participate in training programs for the area which expressly include minorities and women, including upgrading programs and apprenticeship and trainee programs relevant to the Contractor's employment needs, especially those programs funded or approved by the Department of Labor. The Contractor shall provide notice of these programs to the sources compiled under B above.

Disseminate the Contractor's EEO policy by providing notice of the policy to unions and training programs and requesting their cooperation in assisting the Contractor in meeting its EEO obligation; by including it in any policy manual and collective bargaining agreement; by publicizing it in the company newspaper, annual report, etc.; by specific review of the policy with all management personnel and with all minority and female employees at least once a year; and by posting the company EEO policy on bulletin boards accessible to all employees at each location where construction work is performed.

Review, at least annually, the company's EEO policy and affirmative action obligations under these specifications with all employees having any responsibility for hiring, assignment, layoff, termination, or other employment decisions including specific review

of these items with on-site supervisory personnel such as Superintendents, General Forepersons, etc., prior to the initiation of construction work at any job site. A written record shall be made and maintained identifying the time and place of these meetings, persons attending, subject matter discussed, and disposition of the subject matter.

Disseminate the Contractor's EEO policy externally by including it in any advertising in the news media, specifically including minority and female news media, and providing written notification to and discussing the Contractor's EEO policy with other Contractor's and Subcontractors with whom the Contractor does or anticipates doing business.

Direct its recruitment efforts, both orally and written to minority, female and community organizations, to schools with minority and female students and to minority and female recruitment and training organizations serving the Contractor's recruitment area and employment needs. Not later that one month prior to the date for the acceptance of applications for apprenticeship or other training by any recruitment source, the Contractor shall send written notification to organizations such as the above describing the openings, screenings, procedures, and test to be used in the selection process.

Encourage present minority and female employees to recruit other minority persons and women and, where reasonable, provide after school, summer and vacation employment to minority and female youth, both on the site and in other areas of a Contractor's workforce.

Validate all tests and other selection requirements.

Conduct, at least annually, an inventory and evaluation at least of all minority and female personnel for promotional opportunities and encourage these employees to seek or to prepare for, through appropriate training, etc., such opportunities.

Ensure that seniority practices, job classifications, work assignments and other personnel practices, do not have a discriminatory effect by continually monitoring all personnel and employment related activities to ensure that the EEO policy and the Contractor's obligations under these specifications are being carried out.

Ensure that all facilities and company activities are non segregated except that separate or single-user toilet and necessary changing facilities shall be provided to assure privacy between the sexes.

Document and maintain a record of all solicitations of offers for subcontracts from minority and female construction Contractor's and suppliers, including circulation of solicitations to minority and female Contractor associations and other business associations.

Conduct a review, at least annually, of all supervisors' adherence to and performance under the Contractor's EEO policies and affirmative action obligations.

C. Goals for Employment of Women and Minorities Per Executive Order 11246, craft tradesperson goals are 6.9% women and .5% minorities employed. However, goals may be

adjusted upward at the mutual agreement of the Contractor and the Department. Calculation of these percentages shall not include On-the-Job Training Program trainees, and shall not include clerical or field clerk position employees.

For a more complete presentation of requirements for such Goals, see the federally required document "Goals for Employment of Females and Minorities" set forth in the next 6 pages below.

****

Start of GOALS FOR EMPLOYMENT OF FEMALES AND MINORITIES
Federally Required Contract Document

§60-4.2 Solicitations

(d) The following notice shall be included in, and shall be part of, all solicitations for offers and bids on all Federal and federally assisted construction contracts or subcontracts in excess of $10,000 to be performed in geographical areas designated by the Director pursuant to §60-4.6 of this part (see 41 CFR 60-4.2(a)):

Notice of Requirement for Affirmative Action to Ensure Equal Opportunity (Executive Order 11246)

1. The Offeror's or bidder's attention is called to the "Equal Opportunity Clause" and the "Standard Federal Equal Employment Specifications" set forth herein.

2. The goals and timetables for minority and female participation, expressed in percentage terms for the Contractor's aggregate work force in each trade on all construction work in the covered area, are as follows:

Goals for female participation in each trade 6.9%

Goals for minority participation for each trade
Maine
001 Bangor, ME 0.8%
Non-SMSA Counties (Aroostook, Hancock, Penobscot, Piscataquis, Waldo, Washington)

002 Portland-Lewiston, ME
SMSA Counties: 4243 Lewiston-Auburn, ME 0.5%
(Androscoggin)

6403 Portland, ME 0.6%
(Cumberland, Sagadahoc)

Non-SMSA Counties: 0.5%
(Franklin, Kennebec, Knox, Lincoln, Oxford, Somerset, York)

These goals are applicable to all the Contractor's construction work (whether or not it is Federal or federally assisted) performed in the covered area. If the contractor performs

construction work in a geographical area located outside of the covered area, it shall apply the goals established for such geographical area where the work is actually performed. With regard to this second area, the contractor also is subject to the goals for both its federally involved and non federally involved construction.

The contractor's compliance with the Executive Order and the regulations in 41 CFR Part 60-4 shall be based on its implementation of the Equal Opportunity Clause, specific affirmative action obligations required by the specifications set forth in 41 CFR 60-4.3(a), and its efforts to meet the goals. The hours of minority and female employment and training must be substantially uniform throughout the length of the contract, and in each trade, and the contractor shall make a good faith effort to employ minorities and women evenly on each of its projects. The transfer of minority or female employees or trainees from Contractor to Contractor or from project to project for the sole purpose of meeting the Contractor's goals shall be in violation of the contract, the Executive Order and the regulations in 41 CFR Part 60-4. Compliance with the goals will be measured against the total work hours performed.

3. The Contractor shall provide written notification to the Director of the Office of Federal Contract Compliance Programs within 10 working days of award of any construction subcontract in excess of $10,000 at any tier for construction work under the contract resulting from this solicitation. The notification shall list the name, address and telephone number of the subcontractor, employer identification number of the subcontractor, estimated dollar amount of the subcontract; estimated started and completion dates of the subcontract; and the geographical area in which the subcontract is to be performed.

4. As used in this Notice, and in the Contract resulting from this solicitation, the "covered area" is (insert description of the geographical areas where the contract is to be performed giving the state, county and city, if any).

STANDARD FEDERAL EQUAL EMPLOYMENT OPPORTUNITY CONSTRUCTION CONTRACT SPECIFICATIONS (EXECUTIVE ORDER 11246)

1. As used in these specifications:

   a. "Covered area" means the geographical area described in the solicitation from which this contract resulted;

   b. "Director" means Director, Office of Federal Contract Compliance Programs, United States Department of Labor, or any person to whom the Director delegates authority;

   c. "Employer identification number" means the Federal Social Security number used on the Employer's Quarterly Federal Tax Return, U.S. Treasury Department form 941;

   d. "Minority" includes:
      (i) Black (all persons having origins in any of the Black African racial groups not of Hispanic origin);
      (ii) Hispanic (all persons of Mexican, Puerto Rican, Cuban, Central or South American or other Spanish Culture or origin, regardless of race);

(iii) Asian and Pacific Islander (all persons having origins in any of the original peoples of the Far East, Southeast Asia, the Indian Subcontinent, or the Pacific Islands); and
(iv) American Indian or Alaskan Native (all persons having origins in any of the original peoples of the North America and maintaining identifiable tribal affiliations through membership and participation or community identification).

2. Whenever the Contractor, or any subcontractor at any tier, subcontracts a portion of the work involving any construction trade, it shall physically include in each subcontract in excess of $10,000 the provisions of these specifications and the Notice which contains the applicable goals for minority and female participation and which is set forth in the solicitations from which this contract resulted.

3. If the contractor, is participating (pursuant to 41 CFR 60-4.5) in a Hometown Plan approved by the U.S. Department of Labor in the covered area either individually or through an association, its affirmative action obligations on all work in the Plan area (including goals and timetables) shall be in accordance with that Plan for those trades which have unions participating in the Plan. Contractors must be able to demonstrate their participation in and compliance with the provisions of any such Hometown Plan. Each Contractor or Subcontractor participating in an approved Plan is individually required to comply with its obligations under the EEO clause, and to make a good faith effort to achieve each goal under the Plan in each trade in which it has employees. The overall good faith performance by other Contractors for Subcontractors toward a goal in an approved Plan does not excuse any covered Contractor's or Subcontractor's failure to take good faith efforts to achieve the Plan goals and timetables.

4. The Contractor shall implement the specific affirmative action standards provided in paragraphs 7 a. through p. of these specifications. The goals set forth in the solicitation from which this contract resulted are expressed as percentages of the total hours of employment and training of minority and female utilization the Contractor should reasonably be able to achieve in each construction trade in which it has employees in contractors performing construction work in geographical areas where they do not have a Federal or federally assisted construction contract shall apply the minority and female goals established for the geographical areas where the work is being performed. Goals are published periodically in the Federal Register in notice form and such notices may be obtained from any Office of Federal Contract Compliance Programs office or from Federal procurement contracting officers. The Contractor is expected to make substantially uniform progress in meeting its goals in each craft during the period specific.

5. Neither the provisions of any collective bargaining agreement, nor the failure by a union with whom the Contractor has a collective bargaining agreement, to refer either minorities or women shall excuse the Contractor's obligations under these specifications, Executive Order 11246, or the regulations promulgated pursuant, thereto.

6. In order for the non working training hours of apprentices and trainees to be counted in meeting the goals, such apprentices and trainees must be employed by the Contractor during the training period, and the Contractor must have made a commitment to employ the apprentices and trainees at the completion of their training, subject to the availability of

employment opportunities. Trainees must be trained pursuant to training programs approved by the U.S. Department of Labor.

7. The Contractor shall take specific affirmative actions to ensure equal employment opportunity. The evaluation of the Contractor's compliance with these specifications shall be based upon its effort to achieve maximum results from its actions. The Contractor shall document these efforts fully, and shall implement affirmative action steps at least as expensive as the following:

   a. Ensure and maintain a working environment free of harassment, intimidation, coercion at all sites, and in all facilities at which the Contractor's employees are assigned to work. The Contractor, when possible, will assign two or more women to each construction project. The Contractor shall specifically ensure that all foremen, superintendents, and other on-site supervisory personnel are aware of and carry out the Contractor's obligation to maintain such a working environment, with specific attention to minority or female individuals working at such sites or in such facilities.

   b. Establish and maintain a current list of minority and female recruitment sources provide written notification to minority and female recruitment sources and to community organizations when the Contractor or its unions have employment opportunities available, and maintain a record of the organization's responses.

   c. Maintain a current file of the names, addresses and telephone numbers of each minority and female off-the-street applicant and minority or female referral from a union, a recruitment sources or community organization and of what action was taken with respect to each such individual. If such individual was sent to the union hiring hall for referral and was not referred back to the Contractor by the union or, if referred, not employed by the Contractor, this shall be documented in the file with the reason therefore, along with whatever additional actions the Contractor may have taken.

   d. Provide immediate written notification to the Director when the union or unions with which the Contractor has a collective bargaining agreement has not referred to the Contractor a minority person or woman sent by the Contractor, or when the Contractor has other information that the union referral process has impeded the Contractor's efforts to meet its obligations.

   e. Develop on-the-job training opportunities and/or participate in training programs for the area which expressly include minorities and women, including upgrading programs and apprenticeship and trainee programs relevant to the Contractor's employment needs, especially those programs funded or approved by the Department of Labor. The Contractor shall provide notice of these programs to the sources complied under 7b above.

   f. Disseminate the Contractor's EEO policy by providing notice of the policy to unions and training programs and requesting their cooperation in assisting the Contractor in meeting its EEO obligations; by including in any policy manual and collective bargaining agreement; by publicizing it in the company newspaper, annual report, etc.; by specific review of the policy with all management personnel and with all minority and female

employees at least once a year; and by posting the company EEO policy on bulletin boards accessible to all employees at each location where construction work is performed.

g. Review, at least annually, the company's EEO policy and affirmative action obligations under these specifications with all employees having any responsibility for hiring, assignment, layoff, termination or other employment decisions including specific review of these items with on-site supervisory personnel such as Superintendents, General Foremen, etc., prior to the initiation of construction work at any job site. A written record shall be made and maintained identifying the time and place of these meetings, persons attending, subject matter discussed, and disposition of the subject matter.

h. Disseminate the Contractor's EEO policy externally by including it in any advertising in the news media, specifically including minority and female news media, and providing written notification to and discussing the Contractor's EEO policy with other Contractors and Subcontractors with whom the Contractor does or anticipates doing business.

i. Direct its recruitment, efforts, both oral and written, to minority, female and community organizations, to schools with minority and female students and to minority and female recruitment and training organizations serving the Contractor's recruitment area and employment needs. Not later than one month other training by any recruitment source, the Contractor shall send written notification to organizations such as the above, describing prior to the date for the acceptance of applications for apprenticeship or the openings, screening procedures, and tests to be used in the selection process.

j. Encourage present minority and female employees to recruit other minority persons and women and, where reasonable, provide after school, summer and vacation employment to minority and female youth both on site and in other areas of a Contractor's work force.

k. Validate all tests and other selection requirements where there is an obligation to do so under 41 CFR Part 60-3.

l. Conduct, at least annually, an inventory and evaluation at least of all minority and female personnel for promotional opportunities and encourage these employees to seek or to prepare for, through appropriate training, etc., such opportunities.

m. Ensure that seniority practices, job classifications, work assignments and other personnel practices, do not have a discriminatory effect by continually monitoring all personnel and employment related activities to ensure that the EEO policy and the Contractor's obligations under these specifications are being carried out.

n. Ensure that all facilities and company activities are non segregated except that separate or single-user toilet and necessary changing facilities shall be provided to assure privacy between the sexes.

o. Document and maintain a record of all solicitations of offers for subcontracts from minority and female construction contractors and suppliers, including circulation of

solicitation to minority and female contractor associations and other business associations.

p. Conduct a review, at least annually, of all supervisor's adherence to and performance under the Contractor's EEO policies and affirmative action obligations.

8. Contractors are encouraged to participate in voluntary associations which assist in fulfilling one or more of their affirmative action obligations (7 a through p.). The efforts of a contractor association, joint contractor-union, contractor-community, or other similar group of which the contractor is a member and participant, may be asserted as fulfilling any one or more of its obligations under 7 a through p. of these specifications provided that the contractor actively participates in the group, makes every effort to assure that the group has a positive impact on the employment of minorities and women in the industry, ensures that the concrete benefits of the program and reflected in the Contractor's minority and female work force participation, makes a good faith effort to meet its individual goals and timetables, and can provide access to documentation which demonstrates the effectiveness of actions take on behalf of the Contractor. The obligation to comply, however, is the Contractor's and failure of such a group to fulfill an obligation shall not be a defense for the Contractor's noncompliance.

9. A single goal for minorities and a separate single goal for women have been established. The Contractor, however, is required to provide equal employment opportunity and to take affirmative action for all minority groups, both make and female, and all women, both minority and non-minority. Consequently, the Contractor may be in violation of the Executive Order if a particular group is employed in a substantially disparate manner (for example, specific minority group of women is underutilized.)

10. The Contractor shall not use the goals and timetables or affirmative action even through the Contractor has achieved its goals for women generally, the Contractor may be in violation of the Executive Order if standards to discriminate against any person because of race, color, religion, sex, or national origin.

11. The Contractor shall not enter into any Subcontract with any person or firm debarred from Government contracts pursuant to Executive Order 11246.

12. The Contractor shall carry out such sanctions and penalties for violation of these specifications and of the Equal Opportunity Clause, including suspension, termination and cancellation of existing subcontracts as may be imposed or ordered pursuant to Executive Order 11246, as amended, and its implementation regulations by the Office of Federal Contract Compliance Programs. Any Contractor who fails to carry out such sanctions and penalties shall be in violation of these specifications and Executive Order 11246, as amended.

13. The Contractor, in fulfilling its obligations under these specifications, shall implement specific affirmative action steps, at least as extensive as those standards prescribed in paragraph 7 of these specifications, so as to achieve maximum results from its efforts to ensure equal employment opportunity. If the Contractor fails to comply with the

requirements of the Executive Order, the implementing regulations, or these specifications, the Director shall proceed in accordance with 41 CFR 60-4.6.

14. The Contractor shall designate a responsible official to monitor all employment related activity to ensure that the company EEO policy is being carried out, to submit reports relating to the provisions hereof as may be required by the Government and to keep records. Records shall at least include for each employee the name, address, telephone numbers, construction trade, union affiliation if any, employee identification number when assigned, social security number, race, sex, status (e.g. mechanic, apprentice, trainee, helper, or laborer), dates of changes in status, hours worked per week in the indicated trade, rate of pay, and location sat which the work was performed. Records be maintained in an easily understandable and retrievable form; however, to the degree that existing records satisfy this requirement, contractors shall not be required to maintain separate records.

15. Nothing herein provided shall be construed as a limitation upon the application of other laws which establish different standards of compliance or upon the application of requirements for the hiring of local or other area residents (e.g., those under the Public Works Employment Act of 1977 and the Community Development Block Grant Program).

End of GOALS FOR EMPLOYMENT OF FEMALES AND MINORITIES
Federally Required Contract Document

****

D. Section '**D Disadvantaged Business Enterprise (DBE) Requirements**' is removed in its entirety. The DBE material is in:

Section 105.10 EQUAL OPPORTUNITY AND CIVIL RIGHTS.

SECTION 3 - OTHER FEDERAL REQUIREMENTS

Unless expressly otherwise provided in the Bid Documents, the provisions contained in this Section 3 of this "Federal Contract Provisions Supplement" are hereby incorporated into the Bid Documents and Contract.

A. Buy America

If the cost of products purchased for permanent use in this project which are manufactured of steel, iron or the application of any coating to products of these materials exceeds 0.1 percent of the contract amount, or $2,500.00, whichever is greater, the products shall have been manufactured and the coating applied in the United States. The coating materials are not subject to this clause, only the application of the coating. In computing that amount, only the cost of the product and coating application cost will be included.

Ore, for the manufacture of steel or iron, may be from outside the United States; however, all other manufacturing processes of steel or iron must be in the United States to qualify as having been manufactured in the United States.

United States includes the 50 United States and any place subject to the jurisdiction thereof.

Products of steel include, but are not limited to, such products as structural steel, piles, guardrail, steel culverts, reinforcing steel, structural plate and steel supports for signs, luminaries and signals.

Products of iron include, but are not limited to, such products as cast iron grates.

Application of coatings include, but are not limited to, such applications as epoxy, galvanized and paint.

To assure compliance with this section, the Contractor shall submit a certification letter on its letterhead to the Department stating the following:

> "This is to certify that products made of steel, iron or the application of any coating to products of these materials whose costs are in excess of $2,500.00 or 0.1 percent of the original contract amount, whichever is greater, were manufactured and the coating, if one was required, was applied in the United States."

B. Materials

a. Convict Produced Materials References: 23 U.S.C. 114(b)(2), 23 CFR 635.417

Applicability: FHWA's prohibition against the use of convict material only applies to Federal-aid highways. Materials produced after July 1, 1991, by convict labor may only be incorporated in a Federal-aid highway construction project if: 1) such materials have been produced by convicts who are on parole, supervised release, or probation from a prison; or 2) such material has been produced in a qualified prison facility, e.g., prison industry, with the amount produced during any 12-month period, for use in Federal-aid projects, not exceeding the amount produced, for such use, during the 12-month period ending July 1, 1987.

Materials obtained from prison facilities (e.g., prison industries) are subject to the same requirements for Federal-aid participation that are imposed upon materials acquired from other sources. Materials manufactured or produced by convict labor will be given no preferential treatment.

The preferred method of obtaining materials for a project is through normal contracting procedures which require the contractor to furnish all materials to be incorporated in the work. The contractor selects the source, public or private, from which the materials are to be obtained (23 CFR 635.407). Prison industries are prohibited from bidding on projects directly (23 CFR 635.112e), but may act as material supplier to construction contractors.

Prison materials may also be approved as State-furnished material. However, since public agencies may not bid in competition with private firms, direct acquisition of materials from a prison industry for use as State-furnished material is subject to a public interest finding with the Division Administrator's concurrence (23 CFR 635.407d). Selection of materials produced by convict labor as State-furnished materials for mandatory use should be cleared prior to the submittal of the Plans Specifications & Estimates (PS&E).

b. Patented/Proprietary Products References: 23 U.S.C. 112, 23 CFR 635.411

FHWA will not participate, directly or indirectly, in payment for any premium or royalty on any patented or proprietary material, specification, or process specifically set forth in the plans and specifications for a project, unless:

- the item is purchased or obtained through competitive bidding with equally suitable unpatented items,
- the STA certifies either that the proprietary or patented item is essential for synchronization with the existing highway facilities or that no equally suitable alternative exists, or
- the item is used for research or for a special type of construction on relatively short sections of road for experimental purposes. States should follow FHWA's procedures for "Construction Projects Incorporating Experimental Features" (expermnt.htm) for the submittal of work plans and evaluations.

The primary purpose of the policy is to have competition in selection of materials and allow for development of new materials and products. The policy further permits materials and products that are judged equal may be bid under generic specifications. If only patented or proprietary products are acceptable, they shall be bid as alternatives with all, or at least a reasonable number of, acceptable materials or products listed; and the Division Administrator may approve a single source if it can be found that its utilization is in the public interest.

Trade names are generally the key to identifying patented or proprietary materials. Trade name examples include 3M, Corten, etc. Generally, products identified by their brand or trade name are not to be specified without an "or equal" phrase, and, if trade names are used, all, or at least a reasonable number of acceptable "equal" materials or products should be listed. The licensing of several suppliers to produce a product does not change the fact that it is a single product and should not be specified to the exclusion of other equally suitable products.

c. State Preference References: 23 U.S.C. 112, 23 CFR 635.409

Materials produced within Maine shall not be favored to the exclusion of comparable materials produced outside of Maine. State preference clauses give particular advantage to the designated source and thus restrict competition. Therefore, State preference provisions shall not be used on any Federal-aid construction projects.

This policy also applies to State preference actions against materials of foreign origin, except as otherwise permitted by Federal law. Thus, States cannot give preference to in-State material sources over foreign material sources. Under the Buy America provisions, the States are permitted to expand the Buy America restrictions provided that the STA is legally authorized under State law to impose more stringent requirements.

d. State Owned/Furnished/Designated Materials References: 23 U.S.C. 112, 23 CFR 635.407

Current FHWA policy requires that the contractor must furnish all materials to be incorporated in the work, and the contractor shall be permitted to select the sources from which the materials are to be obtained. Exceptions to this requirement may be made when there is a definite finding, by MaineDOT and concurred in by Federal Highway Administration's (FHWA)

Division Administrator, that it is in the public interest to require the contractor to use materials furnished by the MaineDOT or from sources designated by MaineDOT. The exception policy can best be understood by separating State-furnished materials into the categories of manufactured materials and local natural materials.

Manufactured Materials When the use of State-furnished manufactured materials is approved based on a public interest finding, such use must be made mandatory. The optional use of State-furnished manufactured materials is in violation of our policy prohibiting public agencies from competing with private firms. Manufactured materials to be furnished by MaineDOT must be acquired through competitive bidding, unless there is a public interest finding for another method, and concurred in by FHWA's Division Administrator.

Local Natural Materials When MaineDOT owns or controls a local natural materials source such as a borrow pit or a stockpile of salvaged pavement material, etc., the materials may be designated for either optional or mandatory use; however, mandatory use will require a public interest finding (PIF) and FHWA's Division Administrator's concurrence.

In order to permit prospective bidders to properly prepare their bids, the location, cost, and any conditions to be met for obtaining materials that are made available to the contractor shall be stated in the bidding documents.

Mandatory Disposal Sites Normally, the disposal site for surplus excavated materials is to be of the contractor's choosing; although, an optional site(s) may be shown in the contract provisions. A mandatory site shall be specified when there is a finding by MaineDOT, with the concurrence of the Division Administrator, that such placement is the most economical or that the environment would be substantially enhanced without excessive cost. Discussion of the mandatory use of a disposal site in the environmental document may serve as the basis for the public interest finding.

Summarizing FHWA policy for the mandatory use of borrow or disposal sites:

- mandatory use of either requires a public interest finding and FHWA's Division Administrator's concurrence,
- mandatory use of either may be based on environmental consideration where the environment will be substantially enhanced without excessive additional cost, and
- where the use is based on environmental considerations, the discussion in the environmental document may be used as the basis for the public interest finding.

Factors to justify a public interest finding should include such items as cost effectiveness, system integrity, and local shortages of material.

C. Standard FHWA Contract Provisions - FHWA 1273

Unless expressly otherwise provided in the Bid Documents, the following "Required Contract Provisions, Federal Aid Construction Contracts", FHWA-1273, are hereby incorporated into the Bid Documents and Contract.
****

REQUIRED CONTRACT PROVISIONS
FEDERAL-AID CONSTRUCTION CONTRACTS

I. General
II. Nondiscrimination
III. Nonsegregated Facilities
IV. Davis-Bacon and Related Act Provisions
V. Contract Work Hours and Safety Standards Act Provisions
VI. Subletting or Assigning the Contract
VII. Safety: Accident Prevention
VIII. False Statements Concerning Highway Projects
IX. Implementation of Clean Air Act and Federal Water Pollution Control Act
X. Compliance with Governmentwide Suspension and Debarment Requirements
XI. Certification Regarding Use of Contract Funds for Lobbying

ATTACHMENTS

A. Employment and Materials Preference for Appalachian Development Highway System or Appalachian Local Access Road Contracts (included in Appalachian contracts only)

I. GENERAL

1. Form FHWA-1273 must be physically incorporated in each construction contract funded under Title 23 (excluding emergency contracts solely intended for debris removal). The contractor (or subcontractor) must insert this form in each subcontract and further require its inclusion in all lower tier subcontracts (excluding purchase orders, rental agreements and other agreements for supplies or services).

The applicable requirements of Form FHWA-1273 are incorporated by reference for work done under any purchase order, rental agreement or agreement for other services. The prime contractor shall be responsible for compliance by any subcontractor, lower-tier subcontractor or service provider.

Form FHWA-1273 must be included in all Federal-aid design-build contracts, in all subcontracts and in lower tier subcontracts (excluding subcontracts for design services, purchase orders, rental agreements and other agreements for supplies or services). The design-builder shall be responsible for compliance by any subcontractor, lower-tier subcontractor or service provider.

Contracting agencies may reference Form FHWA-1273 in bid proposal or request for proposal documents, however, the Form FHWA-1273 must be physically incorporated (not referenced) in

all contracts, subcontracts and lower-tier subcontracts (excluding purchase orders, rental agreements and other agreements for supplies or services related to a construction contract).

2. Subject to the applicability criteria noted in the following sections, these contract provisions shall apply to all work performed on the contract by the contractor's own organization and with the assistance of workers under the contractor's immediate superintendence and to all work performed on the contract by piecework, station work, or by subcontract.

3. A breach of any of the stipulations contained in these Required Contract Provisions may be sufficient grounds for withholding of progress payments, withholding of final payment, termination of the contract, suspension / debarment or any other action determined to be appropriate by the contracting agency and FHWA.

4. Selection of Labor: During the performance of this contract, the contractor shall not use convict labor for any purpose within the limits of a construction project on a Federal-aid highway unless it is labor performed by convicts who are on parole, supervised release, or probation. The term Federal-aid highway does not include roadways functionally classified as local roads or rural minor collectors.

II. NONDISCRIMINATION

The provisions of this section related to 23 CFR Part 230 are applicable to all Federal-aid construction contracts and to all related construction subcontracts of $10,000 or more. The provisions of 23 CFR Part 230 are not applicable to material supply, engineering, or architectural service contracts.

In addition, the contractor and all subcontractors must comply with the following policies: Executive Order 11246, 41 CFR 60, 29 CFR 1625-1627, Title 23 USC Section 140, the Rehabilitation Act of 1973, as amended (29 USC 794), Title VI of the Civil Rights Act of 1964, as amended, and related regulations including 49 CFR Parts 21, 26 and 27; and 23 CFR Parts 200, 230, and 633.

The contractor and all subcontractors must comply with: the requirements of the Equal Opportunity Clause in 41 CFR 60-1.4(b) and, for all construction contracts exceeding $10,000, the Standard Federal Equal Employment Opportunity Construction Contract Specifications in 41 CFR 60-4.3.

Note: The U.S. Department of Labor has exclusive authority to determine compliance with Executive Order 11246 and the policies of the Secretary of Labor including 41 CFR 60, and 29 CFR 1625-1627. The contracting agency and the FHWA have the authority and the responsibility to ensure compliance with Title 23 USC Section 140, the Rehabilitation Act of 1973, as amended (29 USC 794), and Title VI of the Civil Rights Act of 1964, as amended, and related regulations including 49 CFR Parts 21, 26 and 27; and 23 CFR Parts 200, 230, and 633.

The following provision is adopted from 23 CFR 230, Appendix A, with appropriate revisions to conform to the U.S. Department of Labor (US DOL) and FHWA requirements.

1. Equal Employment Opportunity: Equal employment opportunity (EEO) requirements not to discriminate and to take affirmative action to assure equal opportunity as set forth under laws, executive orders, rules, regulations (28 CFR 35, 29 CFR 1630, 29 CFR 1625-1627, 41 CFR 60 and 49 CFR 27) and orders of the Secretary of Labor as modified by the provisions prescribed herein, and imposed pursuant to 23 U.S.C. 140 shall constitute the EEO and specific affirmative action standards for the contractor's project activities under this contract. The provisions of the Americans with Disabilities Act of 1990 (42 U.S.C. 12101 et seq.) set forth under 28 CFR 35 and 29 CFR 1630 are incorporated by reference in this contract. In the execution of this contract, the contractor agrees to comply with the following minimum specific requirement activities of EEO:

a. The contractor will work with the contracting agency and the Federal Government to ensure that it has made every good faith effort to provide equal opportunity with respect to all of its terms and conditions of employment and in their review of activities under the contract.

b. The contractor will accept as its operating policy the following statement:

"It is the policy of this Company to assure that applicants are employed, and that employees are treated during employment, without regard to their race, religion, sex, color, national origin, age or disability. Such action shall include: employment, upgrading, demotion, or transfer; recruitment or recruitment advertising; layoff or termination; rates of pay or other forms of compensation; and selection for training, including apprenticeship, pre-apprenticeship, and/or on-the-job training."

2. EEO Officer: The contractor will designate and make known to the contracting officers an EEO Officer who will have the responsibility for and must be capable of effectively administering and promoting an active EEO program and who must be assigned adequate authority and responsibility to do so.

3. Dissemination of Policy: All members of the contractor's staff who are authorized to hire, supervise, promote, and discharge employees, or who recommend such action, or who are substantially involved in such action, will be made fully cognizant of, and will implement, the contractor's EEO policy and contractual responsibilities to provide EEO in each grade and classification of employment. To ensure that the above agreement will be met, the following actions will be taken as a minimum:

a. Periodic meetings of supervisory and personnel office employees will be conducted before the start of work and then not less often than once every six months, at which time the contractor's EEO policy and its implementation will be reviewed and explained. The meetings will be conducted by the EEO Officer.

b. All new supervisory or personnel office employees will be given a thorough indoctrination by the EEO Officer, covering all major aspects of the contractor's EEO obligations within thirty days following their reporting for duty with the contractor.

c. All personnel who are engaged in direct recruitment for the project will be instructed by the EEO Officer in the contractor's procedures for locating and hiring minorities and women.

d. Notices and posters setting forth the contractor's EEO policy will be placed in areas readily accessible to employees, applicants for employment and potential employees.

e. The contractor's EEO policy and the procedures to implement such policy will be brought to the attention of employees by means of meetings, employee handbooks, or other appropriate means.

4. Recruitment: When advertising for employees, the contractor will include in all advertisements for employees the notation: "An Equal Opportunity Employer." All such advertisements will be placed in publications having a large circulation among minorities and women in the area from which the project work force would normally be derived.

a. The contractor will, unless precluded by a valid bargaining agreement, conduct systematic and direct recruitment through public and private employee referral sources likely to yield qualified minorities and women. To meet this requirement, the contractor will identify sources of potential minority group employees, and establish with such identified sources procedures whereby minority and women applicants may be referred to the contractor for employment consideration.

b. In the event the contractor has a valid bargaining agreement providing for exclusive hiring hall referrals, the contractor is expected to observe the provisions of that agreement to the extent that the system meets the contractor's compliance with EEO contract provisions. Where implementation of such an agreement has the effect of discriminating against minorities or women, or obligates the contractor to do the same, such implementation violates Federal nondiscrimination provisions.

c. The contractor will encourage its present employees to refer minorities and women as applicants for employment. Information and procedures with regard to referring such applicants will be discussed with employees.

5. Personnel Actions: Wages, working conditions, and employee benefits shall be established and administered, and personnel actions of every type, including hiring, upgrading, promotion, transfer, demotion, layoff, and termination, shall be taken without regard to race, color, religion, sex, national origin, age or disability.

The following procedures shall be followed:

a. The contractor will conduct periodic inspections of project sites to insure that working conditions and employee facilities do not indicate discriminatory treatment of project site personnel.

b. The contractor will periodically evaluate the spread of wages paid within each classification to determine any evidence of discriminatory wage practices.

c. The contractor will periodically review selected personnel actions in depth to determine whether there is evidence of discrimination. Where evidence is found, the contractor will

promptly take corrective action. If the review indicates that the discrimination may extend beyond the actions reviewed, such corrective action shall include all affected persons.

d. The contractor will promptly investigate all complaints of alleged discrimination made to the contractor in connection with its obligations under this contract, will attempt to resolve such complaints, and will take appropriate corrective action within a reasonable time. If the investigation indicates that the discrimination may affect persons other than the complainant, such corrective action shall include such other persons. Upon completion of each investigation, the contractor will inform every complainant of all of their avenues of appeal.

6. Training and Promotion:

a. The contractor will assist in locating, qualifying, and increasing the skills of minorities and women who are applicants for employment or current employees. Such efforts should be aimed at developing full journey level status employees in the type of trade or job classification involved.

b. Consistent with the contractor's work force requirements and as permissible under Federal and State regulations, the contractor shall make full use of training programs, i.e., apprenticeship, and on-the-job training programs for the geographical area of contract performance. In the event a special provision for training is provided under this contract, this subparagraph will be superseded as indicated in the special provision. The contracting agency may reserve training positions for persons who receive welfare assistance in accordance with 23 U.S.C. 140(a).

c. The contractor will advise employees and applicants for employment of available training programs and entrance requirements for each.

d. The contractor will periodically review the training and promotion potential of employees who are minorities and women and will encourage eligible employees to apply for such training and promotion.

7. Unions: If the contractor relies in whole or in part upon unions as a source of employees, the contractor will use good faith efforts to obtain the cooperation of such unions to increase opportunities for minorities and women.

Actions by the contractor, either directly or through a contractor's association acting as agent, will include the procedures set forth below:

a. The contractor will use good faith efforts to develop, in cooperation with the unions, joint training programs aimed toward qualifying more minorities and women for membership in the unions and increasing the skills of minorities and women so that they may qualify for higher paying employment.

b. The contractor will use good faith efforts to incorporate an EEO clause into each union agreement to the end that such union will be contractually bound to refer applicants without regard to their race, color, religion, sex, national origin, age or disability.

c. The contractor is to obtain information as to the referral practices and policies of the labor union except that to the extent such information is within the exclusive possession of the labor union and such labor union refuses to furnish such information to the contractor, the contractor shall so certify to the contracting agency and shall set forth what efforts have been made to obtain such information.

d. In the event the union is unable to provide the contractor with a reasonable flow of referrals within the time limit set forth in the collective bargaining agreement, the contractor will, through independent recruitment efforts, fill the employment vacancies without regard to race, color, religion, sex, national origin, age or disability; making full efforts to obtain qualified and/or qualifiable minorities and women. The failure of a union to provide sufficient referrals (even though it is obligated to provide exclusive referrals under the terms of a collective bargaining agreement) does not relieve the contractor from the requirements of this paragraph. In the event the union referral practice prevents the contractor from meeting the obligations pursuant to Executive Order 11246, as amended, and these special provisions, such contractor shall immediately notify the contracting agency.

8. Reasonable Accommodation for Applicants / Employees with Disabilities: The contractor must be familiar with the requirements for and comply with the Americans with Disabilities Act and all rules and regulations established there under. Employers must provide reasonable accommodation in all employment activities unless to do so would cause an undue hardship.

9. Selection of Subcontractors, Procurement of Materials and Leasing of Equipment: The contractor shall not discriminate on the grounds of race, color, religion, sex, national origin, age or disability in the selection and retention of subcontractors, including procurement of materials and leases of equipment. The contractor shall take all necessary and reasonable steps to ensure nondiscrimination in the administration of this contract.

a. The contractor shall notify all potential subcontractors and suppliers and lessors of their EEO obligations under this contract.

b. The contractor will use good faith efforts to ensure subcontractor compliance with their EEO obligations.

10. Assurance Required by 49 CFR 26.13(b):

a. The requirements of 49 CFR Part 26 and the State DOT's U.S. DOT-approved DBE program are incorporated by reference.

b. The contractor or subcontractor shall not discriminate on the basis of race, color, national origin, or sex in the performance of this contract. The contractor shall carry out applicable requirements of 49 CFR Part 26 in the award and administration of DOT-assisted contracts. Failure by the contractor to carry out these requirements is a material breach of this contract, which may result in the termination of this contract or such other remedy as the contracting agency deems appropriate.

11. Records and Reports: The contractor shall keep such records as necessary to document compliance with the EEO requirements. Such records shall be retained for a period of three years following the date of the final payment to the contractor for all contract work and shall be available at reasonable times and places for inspection by authorized representatives of the contracting agency and the FHWA.

a. The records kept by the contractor shall document the following:

(1) The number and work hours of minority and non-minority group members and women employed in each work classification on the project;

(2) The progress and efforts being made in cooperation with unions, when applicable, to increase employment opportunities for minorities and women; and

(3) The progress and efforts being made in locating, hiring, training, qualifying, and upgrading minorities and women;

b. The contractors and subcontractors will submit an annual report to the contracting agency each July for the duration of the project, indicating the number of minority, women, and non-minority group employees currently engaged in each work classification required by the contract work. This information is to be reported on Form FHWA-1391. The staffing data should represent the project work force on board in all or any part of the last payroll period preceding the end of July. If on-the-job training is being required by special provision, the contractor will be required to collect and report training data. The employment data should reflect the work force on board during all or any part of the last payroll period preceding the end of July.

III. NONSEGREGATED FACILITIES

This provision is applicable to all Federal-aid construction contracts and to all related construction subcontracts of $10,000 or more.

The contractor must ensure that facilities provided for employees are provided in such a manner that segregation on the basis of race, color, religion, sex, or national origin cannot result. The contractor may neither require such segregated use by written or oral policies nor tolerate such use by employee custom. The contractor's obligation extends further to ensure that its employees are not assigned to perform their services at any location, under the contractor's control, where the facilities are segregated. The term "facilities" includes waiting rooms, work areas, restaurants and other eating areas, time clocks, restrooms, washrooms, locker rooms, and other storage or dressing areas, parking lots, drinking fountains, recreation or entertainment areas, transportation, and housing provided for employees. The contractor shall provide separate or single-user restrooms and necessary dressing or sleeping areas to assure privacy between sexes.

IV. DAVIS-BACON AND RELATED ACT PROVISIONS

This section is applicable to all Federal-aid construction projects exceeding $2,000 and to all related subcontracts and lower-tier subcontracts (regardless of subcontract size). The requirements apply to all projects located within the right-of-way of a roadway that is functionally classified as Federal-aid highway. This excludes roadways functionally classified

as local roads or rural minor collectors, which are exempt. Contracting agencies may elect to apply these requirements to other projects.

The following provisions are from the U.S. Department of Labor regulations in 29 CFR 5.5 "Contract provisions and related matters" with minor revisions to conform to the FHWA-1273 format and FHWA program requirements.

1. Minimum wages

a. All laborers and mechanics employed or working upon the site of the work, will be paid unconditionally and not less often than once a week, and without subsequent deduction or rebate on any account (except such payroll deductions as are permitted by regulations issued by the Secretary of Labor under the Copeland Act (29 CFR part 3)), the full amount of wages and bona fide fringe benefits (or cash equivalents thereof) due at time of payment computed at rates not less than those contained in the wage determination of the Secretary of Labor which is attached hereto and made a part hereof, regardless of any contractual relationship which may be alleged to exist between the contractor and such laborers and mechanics.

Contributions made or costs reasonably anticipated for bona fide fringe benefits under section 1(b)(2) of the Davis-Bacon Act on behalf of laborers or mechanics are considered wages paid to such laborers or mechanics, subject to the provisions of paragraph 1.d. of this section; also, regular contributions made or costs incurred for more than a weekly period (but not less often than quarterly) under plans, funds, or programs which cover the particular weekly period, are deemed to be constructively made or incurred during such weekly period. Such laborers and mechanics shall be paid the appropriate wage rate and fringe benefits on the wage determination for the classification of work actually performed, without regard to skill, except as provided in 29 CFR 5.5(a)(4). Laborers or mechanics performing work in more than one classification may be compensated at the rate specified for each classification for the time actually worked therein: Provided, That the employer's payroll records accurately set forth the time spent in each classification in which work is performed. The wage determination (including any additional classification and wage rates conformed under paragraph 1.b. of this section) and the Davis-Bacon poster (WH–1321) shall be posted at all times by the contractor and its subcontractors at the site of the work in a prominent and accessible place where it can be easily seen by the workers.

b. (1) The contracting officer shall require that any class of laborers or mechanics, including helpers, which is not listed in the wage determination and which is to be employed under the contract shall be classified in conformance with the wage determination. The contracting officer shall approve an additional classification and wage rate and fringe benefits therefore only when the following criteria have been met:

(i) The work to be performed by the classification requested is not performed by a classification in the wage determination; and

(ii) The classification is utilized in the area by the construction industry; and

(iii) The proposed wage rate, including any bona fide fringe benefits, bears a reasonable relationship to the wage rates contained in the wage determination.

(2) If the contractor and the laborers and mechanics to be employed in the classification (if known), or their representatives, and the contracting officer agree on the classification and wage rate (including the amount designated for fringe benefits where appropriate), a report of the action taken shall be sent by the contracting officer to the Administrator of the Wage and Hour Division, Employment Standards Administration, U.S. Department of Labor, Washington, DC 20210. The Administrator, or an authorized representative, will approve, modify, or disapprove every additional classification action within 30 days of receipt and so advise the contracting officer or will notify the contracting officer within the 30-day period that additional time is necessary.

(3) In the event the contractor, the laborers or mechanics to be employed in the classification or their representatives, and the contracting officer do not agree on the proposed classification and wage rate (including the amount designated for fringe benefits, where appropriate), the contracting officer shall refer the questions, including the views of all interested parties and the recommendation of the contracting officer, to the Wage and Hour Administrator for determination. The Wage and Hour Administrator, or an authorized representative, will issue a determination within 30 days of receipt and so advise the contracting officer or will notify the contracting officer within the 30-day period that additional time is necessary.

(4) The wage rate (including fringe benefits where appropriate) determined pursuant to paragraphs 1.b.(2) or 1.b.(3) of this section, shall be paid to all workers performing work in the classification under this contract from the first day on which work is performed in the classification.

c. Whenever the minimum wage rate prescribed in the contract for a class of laborers or mechanics includes a fringe benefit which is not expressed as an hourly rate, the contractor shall either pay the benefit as stated in the wage determination or shall pay another bona fide fringe benefit or an hourly cash equivalent thereof.

d. If the contractor does not make payments to a trustee or other third person, the contractor may consider as part of the wages of any laborer or mechanic the amount of any costs reasonably anticipated in providing bona fide fringe benefits under a plan or program, Provided, That the Secretary of Labor has found, upon the written request of the contractor, that the applicable standards of the Davis-Bacon Act have been met. The Secretary of Labor may require the contractor to set aside in a separate account assets for the meeting of obligations under the plan or program.

2. Withholding

The contracting agency shall upon its own action or upon written request of an authorized representative of the Department of Labor, withhold or cause to be withheld from the contractor under this contract, or any other Federal contract with the same prime contractor, or any other federally-assisted contract subject to Davis-Bacon prevailing wage requirements, which is held by the same prime contractor, so much of the accrued payments or advances as may be considered necessary to pay laborers and mechanics, including apprentices, trainees, and helpers, employed by the contractor or any subcontractor the full amount of wages required by the contract. In the event of failure to pay any laborer or mechanic, including any apprentice, trainee, or helper, employed or working on the site of the work, all or part of the wages required by the contract, the contracting agency may, after written notice to the contractor, take such

action as may be necessary to cause the suspension of any further payment, advance, or guarantee of funds until such violations have ceased.

3. Payrolls and basic records

a. Payrolls and basic records relating thereto shall be maintained by the contractor during the course of the work and preserved for a period of three years thereafter for all laborers and mechanics working at the site of the work. Such records shall contain the name, address, and social security number of each such worker, his or her correct classification, hourly rates of wages paid (including rates of contributions or costs anticipated for bona fide fringe benefits or cash equivalents thereof of the types described in section 1(b)(2)(B) of the Davis-Bacon Act), daily and weekly number of hours worked, deductions made and actual wages paid. Whenever the Secretary of Labor has found under 29 CFR 5.5(a)(1)(iv) that the wages of any laborer or mechanic include the amount of any costs reasonably anticipated in providing benefits under a plan or program described in section 1(b)(2)(B) of the Davis-Bacon Act, the contractor shall maintain records which show that the commitment to provide such benefits is enforceable, that the plan or program is financially responsible, and that the plan or program has been communicated in writing to the laborers or mechanics affected, and records which show the costs anticipated or the actual cost incurred in providing such benefits. Contractors employing apprentices or trainees under approved programs shall maintain written evidence of the registration of apprenticeship programs and certification of trainee programs, the registration of the apprentices and trainees, and the ratios and wage rates prescribed in the applicable programs.

b. (1) The contractor shall submit weekly for each week in which any contract work is performed a copy of all payrolls to the contracting agency. The payrolls submitted shall set out accurately and completely all of the information required to be maintained under 29 CFR 5.5(a)(3)(i), except that full social security numbers and home addresses shall not be included on weekly transmittals. Instead the payrolls shall only need to include an individually identifying number for each employee (e.g. , the last four digits of the employee's social security number). The required weekly payroll information may be submitted in any form desired. Optional Form WH–347 is available for this purpose from the Wage and Hour Division Web site at http://www.dol.gov/esa/whd/forms/wh347instr.htm or its successor site. The prime contractor is responsible for the submission of copies of payrolls by all subcontractors. Contractors and subcontractors shall maintain the full social security number and current address of each covered worker, and shall provide them upon request to the contracting agency for transmission to the State DOT, the FHWA or the Wage and Hour Division of the Department of Labor for purposes of an investigation or audit of compliance with prevailing wage requirements. It is not a violation of this section for a prime contractor to require a subcontractor to provide addresses and social security numbers to the prime contractor for its own records, without weekly submission to the contracting agency..

(2) Each payroll submitted shall be accompanied by a “Statement of Compliance,” signed by the contractor or subcontractor or his or her agent who pays or supervises the payment of the persons employed under the contract and shall certify the following:

(i) That the payroll for the payroll period contains the information required to be provided under §5.5 (a)(3)(ii) of Regulations, 29 CFR part 5, the appropriate information is being maintained under §5.5 (a)(3)(i) of Regulations, 29 CFR part 5, and that such information is correct and complete;

(ii) That each laborer or mechanic (including each helper, apprentice, and trainee) employed on the contract during the payroll period has been paid the full weekly wages earned, without rebate, either directly or indirectly, and that no deductions have been made either directly or indirectly from the full wages earned, other than permissible deductions as set forth in Regulations, 29 CFR part 3;

(iii) That each laborer or mechanic has been paid not less than the applicable wage rates and fringe benefits or cash equivalents for the classification of work performed, as specified in the applicable wage determination incorporated into the contract.

(3) The weekly submission of a properly executed certification set forth on the reverse side of Optional Form WH–347 shall satisfy the requirement for submission of the "Statement of Compliance" required by paragraph 3.b.(2) of this section.

(4) The falsification of any of the above certifications may subject the contractor or subcontractor to civil or criminal prosecution under section 1001 of title 18 and section 231 of title 31 of the United States Code.

c. The contractor or subcontractor shall make the records required under paragraph 3.a. of this section available for inspection, copying, or transcription by authorized representatives of the contracting agency, the State DOT, the FHWA, or the Department of Labor, and shall permit such representatives to interview employees during working hours on the job. If the contractor or subcontractor fails to submit the required records or to make them available, the FHWA may, after written notice to the contractor, the contracting agency or the State DOT, take such action as may be necessary to cause the suspension of any further payment, advance, or guarantee of funds. Furthermore, failure to submit the required records upon request or to make such records available may be grounds for debarment action pursuant to 29 CFR 5.12.

4. Apprentices and trainees

a. Apprentices (programs of the USDOL).

Apprentices will be permitted to work at less than the predetermined rate for the work they performed when they are employed pursuant to and individually registered in a bona fide apprenticeship program registered with the U.S. Department of Labor, Employment and Training Administration, Office of Apprenticeship Training, Employer and Labor Services, or with a State Apprenticeship Agency recognized by the Office, or if a person is employed in his or her first 90 days of probationary employment as an apprentice in such an apprenticeship program, who is not individually registered in the program, but who has been certified by the Office of Apprenticeship Training, Employer and Labor Services or a State Apprenticeship Agency (where appropriate) to be eligible for probationary employment as an apprentice.

The allowable ratio of apprentices to journeymen on the job site in any craft classification shall not be greater than the ratio permitted to the contractor as to the entire work force under the registered program. Any worker listed on a payroll at an apprentice wage rate, who is not registered or otherwise employed as stated above, shall be paid not less than the applicable wage rate on the wage determination for the classification of work actually performed. In addition, any apprentice performing work on the job site in excess of the ratio permitted under the registered program shall be paid not less than the applicable wage rate on the wage determination for the work actually performed. Where a contractor is performing construction on a project in a locality

other than that in which its program is registered, the ratios and wage rates (expressed in percentages of the journeyman's hourly rate) specified in the contractor's or subcontractor's registered program shall be observed.

Every apprentice must be paid at not less than the rate specified in the registered program for the apprentice's level of progress, expressed as a percentage of the journeymen hourly rate specified in the applicable wage determination. Apprentices shall be paid fringe benefits in accordance with the provisions of the apprenticeship program. If the apprenticeship program does not specify fringe benefits, apprentices must be paid the full amount of fringe benefits listed on the wage determination for the applicable classification. If the Administrator determines that a different practice prevails for the applicable apprentice classification, fringes shall be paid in accordance with that determination.

In the event the Office of Apprenticeship Training, Employer and Labor Services, or a State Apprenticeship Agency recognized by the Office, withdraws approval of an apprenticeship program, the contractor will no longer be permitted to utilize apprentices at less than the applicable predetermined rate for the work performed until an acceptable program is approved.

b. Trainees (programs of the USDOL).

Except as provided in 29 CFR 5.16, trainees will not be permitted to work at less than the predetermined rate for the work performed unless they are employed pursuant to and individually registered in a program which has received prior approval, evidenced by formal certification by the U.S. Department of Labor, Employment and Training Administration.

The ratio of trainees to journeymen on the job site shall not be greater than permitted under the plan approved by the Employment and Training Administration.

Every trainee must be paid at not less than the rate specified in the approved program for the trainee's level of progress, expressed as a percentage of the journeyman hourly rate specified in the applicable wage determination. Trainees shall be paid fringe benefits in accordance with the provisions of the trainee program. If the trainee program does not mention fringe benefits, trainees shall be paid the full amount of fringe benefits listed on the wage determination unless the Administrator of the Wage and Hour Division determines that there is an apprenticeship program associated with the corresponding journeyman wage rate on the wage determination which provides for less than full fringe benefits for apprentices. Any employee listed on the payroll at a trainee rate who is not registered and participating in a training plan approved by the Employment and Training Administration shall be paid not less than the applicable wage rate on the wage determination for the classification of work actually performed. In addition, any trainee performing work on the job site in excess of the ratio permitted under the registered program shall be paid not less than the applicable wage rate on the wage determination for the work actually performed.

In the event the Employment and Training Administration withdraws approval of a training program, the contractor will no longer be permitted to utilize trainees at less than the applicable predetermined rate for the work performed until an acceptable program is approved.

c. Equal employment opportunity. The utilization of apprentices, trainees and journeymen under this part shall be in conformity with the equal employment opportunity requirements of Executive Order 11246, as amended, and 29 CFR part 30.

d. Apprentices and Trainees (programs of the U.S. DOT).

Apprentices and trainees working under apprenticeship and skill training programs which have been certified by the Secretary of Transportation as promoting EEO in connection with Federal-aid highway construction programs are not subject to the requirements of paragraph 4 of this Section IV. The straight time hourly wage rates for apprentices and trainees under such programs will be established by the particular programs. The ratio of apprentices and trainees to journeymen shall not be greater than permitted by the terms of the particular program.

5. Compliance with Copeland Act requirements. The contractor shall comply with the requirements of 29 CFR part 3, which are incorporated by reference in this contract.

6. Subcontracts. The contractor or subcontractor shall insert Form FHWA-1273 in any subcontracts and also require the subcontractors to include Form FHWA-1273 in any lower tier subcontracts. The prime contractor shall be responsible for the compliance by any subcontractor or lower tier subcontractor with all the contract clauses in 29 CFR 5.5.

7. Contract termination: debarment. A breach of the contract clauses in 29 CFR 5.5 may be grounds for termination of the contract, and for debarment as a contractor and a subcontractor as provided in 29 CFR 5.12.

8. Compliance with Davis-Bacon and Related Act requirements. All rulings and interpretations of the Davis-Bacon and Related Acts contained in 29 CFR parts 1, 3, and 5 are herein incorporated by reference in this contract.

9. Disputes concerning labor standards. Disputes arising out of the labor standards provisions of this contract shall not be subject to the general disputes clause of this contract. Such disputes shall be resolved in accordance with the procedures of the Department of Labor set forth in 29 CFR parts 5, 6, and 7. Disputes within the meaning of this clause include disputes between the contractor (or any of its subcontractors) and the contracting agency, the U.S. Department of Labor, or the employees or their representatives.

10. Certification of eligibility.

a. By entering into this contract, the contractor certifies that neither it (nor he or she) nor any person or firm who has an interest in the contractor's firm is a person or firm ineligible to be awarded Government contracts by virtue of section 3(a) of the Davis-Bacon Act or 29 CFR 5.12(a)(1).

b. No part of this contract shall be subcontracted to any person or firm ineligible for award of a Government contract by virtue of section 3(a) of the Davis-Bacon Act or 29 CFR 5.12(a)(1).

c. The penalty for making false statements is prescribed in the U.S. Criminal Code, 18 U.S.C. 1001.

V. CONTRACT WORK HOURS AND SAFETY STANDARDS ACT

The following clauses apply to any Federal-aid construction contract in an amount in excess of $100,000 and subject to the overtime provisions of the Contract Work Hours and Safety Standards Act. These clauses shall be inserted in addition to the clauses required by 29 CFR

5.5(a) or 29 CFR 4.6. As used in this paragraph, the terms laborers and mechanics include watchmen and guards.

1. Overtime requirements. No contractor or subcontractor contracting for any part of the contract work which may require or involve the employment of laborers or mechanics shall require or permit any such laborer or mechanic in any workweek in which he or she is employed on such work to work in excess of forty hours in such workweek unless such laborer or mechanic receives compensation at a rate not less than one and one-half times the basic rate of pay for all hours worked in excess of forty hours in such workweek.

2. Violation; liability for unpaid wages; liquidated damages. In the event of any violation of the clause set forth in paragraph (1.) of this section, the contractor and any subcontractor responsible therefor shall be liable for the unpaid wages. In addition, such contractor and subcontractor shall be liable to the United States (in the case of work done under contract for the District of Columbia or a territory, to such District or to such territory), for liquidated damages. Such liquidated damages shall be computed with respect to each individual laborer or mechanic, including watchmen and guards, employed in violation of the clause set forth in paragraph (1.) of this section, in the sum of $10 for each calendar day on which such individual was required or permitted to work in excess of the standard workweek of forty hours without payment of the overtime wages required by the clause set forth in paragraph (1.) of this section.

3. Withholding for unpaid wages and liquidated damages. The FHWA or the contacting agency shall upon its own action or upon written request of an authorized representative of the Department of Labor withhold or cause to be withheld, from any moneys payable on account of work performed by the contractor or subcontractor under any such contract or any other Federal contract with the same prime contractor, or any other federally-assisted contract subject to the Contract Work Hours and Safety Standards Act, which is held by the same prime contractor, such sums as may be determined to be necessary to satisfy any liabilities of such contractor or subcontractor for unpaid wages and liquidated damages as provided in the clause set forth in paragraph (2.) of this section.

4. Subcontracts. The contractor or subcontractor shall insert in any subcontracts the clauses set forth in paragraph (1.) through (4.) of this section and also a clause requiring the subcontractors to include these clauses in any lower tier subcontracts. The prime contractor shall be responsible for compliance by any subcontractor or lower tier subcontractor with the clauses set forth in paragraphs (1.) through (4.) of this section.

VI. SUBLETTING OR ASSIGNING THE CONTRACT

This provision is applicable to all Federal-aid construction contracts on the National Highway System.

1. The contractor shall perform with its own organization contract work amounting to not less than 30 percent (or a greater percentage if specified elsewhere in the contract) of the total original contract price, excluding any specialty items designated by the contracting agency. Specialty items may be performed by subcontract and the amount of any such specialty items performed may be deducted from the total original contract price before computing the amount of work required to be performed by the contractor's own organization (23 CFR 635.116).

a. The term “perform work with its own organization” refers to workers employed or leased by the prime contractor, and equipment owned or rented by the prime contractor, with or without operators. Such term does not include employees or equipment of a subcontractor or lower tier subcontractor, agents of the prime contractor, or any other assignees. The term may include payments for the costs of hiring leased employees from an employee leasing firm meeting all relevant Federal and State regulatory requirements. Leased employees may only be included in this term if the prime contractor meets all of the following conditions:

(1) the prime contractor maintains control over the supervision of the day-to-day activities of the leased employees;
(2) the prime contractor remains responsible for the quality of the work of the leased employees;
(3) the prime contractor retains all power to accept or exclude individual employees from work on the project; and
(4) the prime contractor remains ultimately responsible for the payment of predetermined minimum wages, the submission of payrolls, statements of compliance and all other Federal regulatory requirements.

b. "Specialty Items" shall be construed to be limited to work that requires highly specialized knowledge, abilities, or equipment not ordinarily available in the type of contracting organizations qualified and expected to bid or propose on the contract as a whole and in general are to be limited to minor components of the overall contract.

2. The contract amount upon which the requirements set forth in paragraph (1) of Section VI is computed includes the cost of material and manufactured products which are to be purchased or produced by the contractor under the contract provisions.

3. The contractor shall furnish (a) a competent superintendent or supervisor who is employed by the firm, has full authority to direct performance of the work in accordance with the contract requirements, and is in charge of all construction operations (regardless of who performs the work) and (b) such other of its own organizational resources (supervision, management, and engineering services) as the contracting officer determines is necessary to assure the performance of the contract.

4. No portion of the contract shall be sublet, assigned or otherwise disposed of except with the written consent of the contracting officer, or authorized representative, and such consent when given shall not be construed to relieve the contractor of any responsibility for the fulfillment of the contract. Written consent will be given only after the contracting agency has assured that each subcontract is evidenced in writing and that it contains all pertinent provisions and requirements of the prime contract.

5. The 30% self-performance requirement of paragraph (1) is not applicable to design-build contracts; however, contracting agencies may establish their own self-performance requirements.

VII. SAFETY: ACCIDENT PREVENTION

This provision is applicable to all Federal-aid construction contracts and to all related subcontracts.

1. In the performance of this contract the contractor shall comply with all applicable Federal, State, and local laws governing safety, health, and sanitation (23 CFR 635). The contractor shall provide all safeguards, safety devices and protective equipment and take any other needed actions as it determines, or as the contracting officer may determine, to be reasonably necessary to protect the life and health of employees on the job and the safety of the public and to protect property in connection with the performance of the work covered by the contract.

2. It is a condition of this contract, and shall be made a condition of each subcontract, which the contractor enters into pursuant to this contract, that the contractor and any subcontractor shall not permit any employee, in performance of the contract, to work in surroundings or under conditions which are unsanitary, hazardous or dangerous to his/her health or safety, as determined under construction safety and health standards (29 CFR 1926) promulgated by the Secretary of Labor, in accordance with Section 107 of the Contract Work Hours and Safety Standards Act (40 U.S.C. 3704).

3. Pursuant to 29 CFR 1926.3, it is a condition of this contract that the Secretary of Labor or authorized representative thereof, shall have right of entry to any site of contract performance to inspect or investigate the matter of compliance with the construction safety and health standards and to carry out the duties of the Secretary under Section 107 of the Contract Work Hours and Safety Standards Act (40 U.S.C.3704).

VIII. FALSE STATEMENTS CONCERNING HIGHWAY PROJECTS

This provision is applicable to all Federal-aid construction contracts and to all related subcontracts.

In order to assure high quality and durable construction in conformity with approved plans and specifications and a high degree of reliability on statements and representations made by engineers, contractors, suppliers, and workers on Federal-aid highway projects, it is essential that all persons concerned with the project perform their functions as carefully, thoroughly, and honestly as possible. Willful falsification, distortion, or misrepresentation with respect to any facts related to the project is a violation of Federal law. To prevent any misunderstanding regarding the seriousness of these and similar acts, Form FHWA-1022 shall be posted on each Federal-aid highway project (23 CFR 635) in one or more places where it is readily available to all persons concerned with the project:

18 U.S.C. 1020 reads as follows:

"Whoever, being an officer, agent, or employee of the United States, or of any State or Territory, or whoever, whether a person, association, firm, or corporation, knowingly makes any

false statement, false representation, or false report as to the character, quality, quantity, or cost of the material used or to be used, or the quantity or quality of the work performed or to be performed, or the cost thereof in connection with the submission of plans, maps, specifications, contracts, or costs of construction on any highway or related project submitted for approval to the Secretary of Transportation; or

Whoever knowingly makes any false statement, false representation, false report or false claim with respect to the character, quality, quantity, or cost of any work performed or to be performed, or materials furnished or to be furnished, in connection with the construction of any highway or related project approved by the Secretary of Transportation; or

Whoever knowingly makes any false statement or false representation as to material fact in any statement, certificate, or report submitted pursuant to provisions of the Federal-aid Roads Act approved July 1, 1916, (39 Stat. 355), as amended and supplemented;

Shall be fined under this title or imprisoned not more than 5 years or both."

IX. IMPLEMENTATION OF CLEAN AIR ACT AND FEDERAL WATER POLLUTION CONTROL ACT

This provision is applicable to all Federal-aid construction contracts and to all related subcontracts.

By submission of this bid/proposal or the execution of this contract, or subcontract, as appropriate, the bidder, proposer, Federal-aid construction contractor, or subcontractor, as appropriate, will be deemed to have stipulated as follows:

1. That any person who is or will be utilized in the performance of this contract is not prohibited from receiving an award due to a violation of Section 508 of the Clean Water Act or Section 306 of the Clean Air Act.
2. That the contractor agrees to include or cause to be included the requirements of paragraph (1) of this Section X in every subcontract, and further agrees to take such action as the contracting agency may direct as a means of enforcing such requirements.

X. CERTIFICATION REGARDING DEBARMENT, SUSPENSION, INELIGIBILITY AND VOLUNTARY EXCLUSION

This provision is applicable to all Federal-aid construction contracts, design-build contracts, subcontracts, lower-tier subcontracts, purchase orders, lease agreements, consultant contracts or any other covered transaction requiring FHWA approval or that is estimated to cost $25,000 or more – as defined in 2 CFR Parts 180 and 1200.

1**. Instructions for Certification – First Tier Participants:**

a. By signing and submitting this proposal, the prospective first tier participant is providing the certification set out below.

b. The inability of a person to provide the certification set out below will not necessarily result in denial of participation in this covered transaction. The prospective first tier participant shall submit an explanation of why it cannot provide the certification set out below. The certification or explanation will be considered in connection with the department or agency's determination whether to enter into this transaction. However, failure of the prospective first tier participant to furnish a certification or an explanation shall disqualify such a person from participation in this transaction.

c. The certification in this clause is a material representation of fact upon which reliance was placed when the contracting agency determined to enter into this transaction. If it is later determined that the prospective participant knowingly rendered an erroneous certification, in addition to other remedies available to the Federal Government, the contracting agency may terminate this transaction for cause of default.

d. The prospective first tier participant shall provide immediate written notice to the contracting agency to whom this proposal is submitted if any time the prospective first tier participant learns that its certification was erroneous when submitted or has become erroneous by reason of changed circumstances.

e. The terms "covered transaction," "debarred," "suspended," "ineligible," "participant," "person," "principal," and "voluntarily excluded," as used in this clause, are defined in 2 CFR Parts 180 and 1200. “First Tier Covered Transactions” refers to any covered transaction between a grantee or subgrantee of Federal funds and a participant (such as the prime or general contract). “Lower Tier Covered Transactions” refers to any covered transaction under a First Tier Covered Transaction (such as subcontracts). “First Tier Participant” refers to the participant who has entered into a covered transaction with a grantee or subgrantee of Federal funds (such as the prime or general contractor). “Lower Tier Participant” refers any participant who has entered into a covered transaction with a First Tier Participant or other Lower Tier Participants (such as subcontractors and suppliers).

f. The prospective first tier participant agrees by submitting this proposal that, should the proposed covered transaction be entered into, it shall not knowingly enter into any lower tier covered transaction with a person who is debarred, suspended, declared ineligible, or voluntarily excluded from participation in this covered transaction, unless authorized by the department or agency entering into this transaction.

g. The prospective first tier participant further agrees by submitting this proposal that it will include the clause titled "Certification Regarding Debarment, Suspension, Ineligibility and Voluntary Exclusion-Lower Tier Covered Transactions," provided by the department or contracting agency, entering into this covered transaction, without modification, in all lower tier covered transactions and in all solicitations for lower tier covered transactions exceeding the $25,000 threshold.

h. A participant in a covered transaction may rely upon a certification of a prospective participant in a lower tier covered transaction that is not debarred, suspended, ineligible, or voluntarily excluded from the covered transaction, unless it knows that the certification is erroneous. A participant is responsible for ensuring that its principals are not suspended,

debarred, or otherwise ineligible to participate in covered transactions. To verify the eligibility of its principals, as well as the eligibility of any lower tier prospective participants, each participant may, but is not required to, check the Excluded Parties List System website (https://www.epls.gov/), which is compiled by the General Services Administration.

i. Nothing contained in the foregoing shall be construed to require the establishment of a system of records in order to render in good faith the certification required by this clause. The knowledge and information of the prospective participant is not required to exceed that which is normally possessed by a prudent person in the ordinary course of business dealings.

j. Except for transactions authorized under paragraph (f) of these instructions, if a participant in a covered transaction knowingly enters into a lower tier covered transaction with a person who is suspended, debarred, ineligible, or voluntarily excluded from participation in this transaction, in addition to other remedies available to the Federal Government, the department or agency may terminate this transaction for cause or default.

* * * * *

2. Certification Regarding Debarment, Suspension, Ineligibility and Voluntary Exclusion – First Tier Participants:

a. The prospective first tier participant certifies to the best of its knowledge and belief, that it and its principals:

(1) Are not presently debarred, suspended, proposed for debarment, declared ineligible, or voluntarily excluded from participating in covered transactions by any Federal department or agency;

(2) Have not within a three-year period preceding this proposal been convicted of or had a civil judgment rendered against them for commission of fraud or a criminal offense in connection with obtaining, attempting to obtain, or performing a public (Federal, State or local) transaction or contract under a public transaction; violation of Federal or State antitrust statutes or commission of embezzlement, theft, forgery, bribery, falsification or destruction of records, making false statements, or receiving stolen property;

(3) Are not presently indicted for or otherwise criminally or civilly charged by a governmental entity (Federal, State or local) with commission of any of the offenses enumerated in paragraph (a)(2) of this certification; and

(4) Have not within a three-year period preceding this application/proposal had one or more public transactions (Federal, State or local) terminated for cause or default.

b. Where the prospective participant is unable to certify to any of the statements in this certification, such prospective participant shall attach an explanation to this proposal.

2. **Instructions for Certification - Lower Tier Participants:**

(Applicable to all subcontracts, purchase orders and other lower tier transactions requiring prior FHWA approval or estimated to cost $25,000 or more - 2 CFR Parts 180 and 1200)

a. By signing and submitting this proposal, the prospective lower tier is providing the certification set out below.

b. The certification in this clause is a material representation of fact upon which reliance was placed when this transaction was entered into. If it is later determined that the prospective lower tier participant knowingly rendered an erroneous certification, in addition to other remedies available to the Federal Government, the department, or agency with which this transaction originated may pursue available remedies, including suspension and/or debarment.

c. The prospective lower tier participant shall provide immediate written notice to the person to which this proposal is submitted if at any time the prospective lower tier participant learns that its certification was erroneous by reason of changed circumstances.

d. The terms "covered transaction," "debarred," "suspended," "ineligible," "participant," "person," "principal," and "voluntarily excluded," as used in this clause, are defined in 2 CFR Parts 180 and 1200. You may contact the person to which this proposal is submitted for assistance in obtaining a copy of those regulations. “First Tier Covered Transactions” refers to any covered transaction between a grantee or subgrantee of Federal funds and a participant (such as the prime or general contract). “Lower Tier Covered Transactions” refers to any covered transaction under a First Tier Covered Transaction (such as subcontracts). “First Tier Participant” refers to the participant who has entered into a covered transaction with a grantee or subgrantee of Federal funds (such as the prime or general contractor). “Lower Tier Participant” refers any participant who has entered into a covered transaction with a First Tier Participant or other Lower Tier Participants (such as subcontractors and suppliers).

e. The prospective lower tier participant agrees by submitting this proposal that, should the proposed covered transaction be entered into, it shall not knowingly enter into any lower tier covered transaction with a person who is debarred, suspended, declared ineligible, or voluntarily excluded from participation in this covered transaction, unless authorized by the department or agency with which this transaction originated.

f. The prospective lower tier participant further agrees by submitting this proposal that it will include this clause titled "Certification Regarding Debarment, Suspension, Ineligibility and Voluntary Exclusion-Lower Tier Covered Transaction," without modification, in all lower tier covered transactions and in all solicitations for lower tier covered transactions exceeding the $25,000 threshold.

g. A participant in a covered transaction may rely upon a certification of a prospective participant in a lower tier covered transaction that is not debarred, suspended, ineligible, or voluntarily excluded from the covered transaction, unless it knows that the certification is erroneous. A participant is responsible for ensuring that its principals are not suspended, debarred, or otherwise ineligible to participate in covered transactions. To verify the eligibility of its principals, as well as the eligibility of any lower tier prospective participants, each participant may, but is not required to, check the Excluded Parties List System website (https://www.epls.gov/), which is compiled by the General Services Administration.

h. Nothing contained in the foregoing shall be construed to require establishment of a system of records in order to render in good faith the certification required by this clause. The knowledge and information of participant is not required to exceed that which is normally possessed by a prudent person in the ordinary course of business dealings.

i. Except for transactions authorized under paragraph e of these instructions, if a participant in a covered transaction knowingly enters into a lower tier covered transaction with a person who is suspended, debarred, ineligible, or voluntarily excluded from participation in this transaction, in addition to other remedies available to the Federal Government, the department or agency with which this transaction originated may pursue available remedies, including suspension and/or debarment.

* * * * *

Certification Regarding Debarment, Suspension, Ineligibility and Voluntary Exclusion--Lower Tier Participants:

1. The prospective lower tier participant certifies, by submission of this proposal, that neither it nor its principals is presently debarred, suspended, proposed for debarment, declared ineligible, or voluntarily excluded from participating in covered transactions by any Federal department or agency.

2. Where the prospective lower tier participant is unable to certify to any of the statements in this certification, such prospective participant shall attach an explanation to this proposal.

* * * * *

XI. CERTIFICATION REGARDING USE OF CONTRACT FUNDS FOR LOBBYING

This provision is applicable to all Federal-aid construction contracts and to all related subcontracts which exceed $100,000 (49 CFR 20).

1. The prospective participant certifies, by signing and submitting this bid or proposal, to the best of his or her knowledge and belief, that:

a. No Federal appropriated funds have been paid or will be paid, by or on behalf of the undersigned, to any person for influencing or attempting to influence an officer or employee of any Federal agency, a Member of Congress, an officer or employee of Congress, or an employee of a Member of Congress in connection with the awarding of any Federal contract, the making of any Federal grant, the making of any Federal loan, the entering into of any cooperative agreement, and the extension, continuation, renewal, amendment, or modification of any Federal contract, grant, loan, or cooperative agreement.

b. If any funds other than Federal appropriated funds have been paid or will be paid to any person for influencing or attempting to influence an officer or employee of any Federal agency, a Member of Congress, an officer or employee of Congress, or an employee of a Member of Congress in connection with this Federal contract, grant, loan, or cooperative agreement, the

undersigned shall complete and submit Standard Form-LLL, "Disclosure Form to Report Lobbying," in accordance with its instructions.

2. This certification is a material representation of fact upon which reliance was placed when this transaction was made or entered into. Submission of this certification is a prerequisite for making or entering into this transaction imposed by 31 U.S.C. 1352. Any person who fails to file the required certification shall be subject to a civil penalty of not less than $10,000 and not more than $100,000 for each such failure.

3. The prospective participant also agrees by submitting its bid or proposal that the participant shall require that the language of this certification be included in all lower tier subcontracts, which exceed $100,000 and that all such recipients shall certify and disclose accordingly.

ATTACHMENT A - EMPLOYMENT AND MATERIALS PREFERENCE FOR APPALACHIAN DEVELOPMENT HIGHWAY SYSTEM OR APPALACHIAN LOCAL ACCESS ROAD CONTRACTS

This provision is applicable to all Federal-aid projects funded under the Appalachian Regional Development Act of 1965.

1. During the performance of this contract, the contractor undertaking to do work which is, or reasonably may be, done as on-site work, shall give preference to qualified persons who regularly reside in the labor area as designated by the DOL wherein the contract work is situated, or the subregion, or the Appalachian counties of the State wherein the contract work is situated, except:

a. To the extent that qualified persons regularly residing in the area are not available.

b. For the reasonable needs of the contractor to employ supervisory or specially experienced personnel necessary to assure an efficient execution of the contract work.

c. For the obligation of the contractor to offer employment to present or former employees as the result of a lawful collective bargaining contract, provided that the number of nonresident persons employed under this subparagraph (1c) shall not exceed 20 percent of the total number of employees employed by the contractor on the contract work, except as provided in subparagraph (4) below.

2. The contractor shall place a job order with the State Employment Service indicating (a) the classifications of the laborers, mechanics and other employees required to perform the contract work, (b) the number of employees required in each classification, (c) the date on which the participant estimates such employees will be required, and (d) any other pertinent information required by the State Employment Service to complete the job order form. The job order may be placed with the State Employment Service in writing or by telephone. If during the course of the contract work, the information submitted by the contractor in the original job order is substantially modified, the participant shall promptly notify the State Employment Service.

3. The contractor shall give full consideration to all qualified job applicants referred to him by the State Employment Service. The contractor is not required to grant employment to any job applicants who, in his opinion, are not qualified to perform the classification of work required.

4. If, within one week following the placing of a job order by the contractor with the State Employment Service, the State Employment Service is unable to refer any qualified job applicants to the contractor, or less than the number requested, the State Employment Service will forward a certificate to the contractor indicating the unavailability of applicants. Such certificate shall be made a part of the contractor's permanent project records. Upon receipt of this certificate, the contractor may employ persons who do not normally reside in the labor area to fill positions covered by the certificate, notwithstanding the provisions of subparagraph (1c) above.

5. The provisions of 23 CFR 633.207(e) allow the contracting agency to provide a contractual preference for the use of mineral resource materials native to the Appalachian region.

6. The contractor shall include the provisions of Sections 1 through 4 of this Attachment A in every subcontract for work which is, or reasonably may be, done as on-site work.

End of FHWA 1273

The United States Department of Transportation (USDOT)

FHWA STANDARD TITLE VI/NONDISCRIMINATION ASSURANCES

DOT Order No. 1050.2A

The Maine Department of Transportation (herein referred to as the "Recipient"), **HEREBY AGREES THAT**, as a condition to receiving any Federal financial assistance from the U.S. Department of Transportation (DOT), through The Federal Highway Administration (FHWA), is subject to and will comply with the following:

Statutory/Regulatory Authorities

- Title VI of the Civil Rights Act of 1964 (42 U.S.C. § 2000d *et seq*., 78 stat. 252), (prohibits discrimination on the basis of race, color, national origin);
- 49 C.F.R. Part 21 (entitled *Nondiscrimination In Federally-Assisted Programs Of The Department Of Transportation—Effectuation Of Title VI Of The Civil Rights Act Of 1964*);
- 28 C.F.R. section 50.3 (U.S. Department of Justice Guidelines for Enforcement of Title VI of the Civil Rights Act of 1964);

FHWA may include additional Statutory/Regulatory Authorities here.

The preceding statutory and regulatory cites hereinafter are referred to as the "Acts" and "Regulations," respectively.

General Assurances

In accordance with the Acts, the Regulations, and other pertinent directives, circulars, policy, memoranda, and/or guidance, the Recipient hereby gives assurance that it will promptly take any measures necessary to ensure that:

No person in the United States shall, on the grounds of race, color, or national origin, be excluded from participation in, be denied the benefits of, or be otherwise subjected to discrimination under any program or activity," for which the Recipient receives Federal financial assistance from DOT, including FHWA..

The Civil Rights Restoration Act of 1987 clarified the original intent of Congress, with respect to Title VI and other Nondiscrimination requirements (The Age Discrimination Act of 1975, and Section 504 of the Rehabilitation Act of 1973), by restoring the broad, institutional-wide scope and coverage of these nondiscrimination statutes and requirements to include all programs and activities of the Recipient, so long as any portion of the program is Federally assisted.

FHWA may include additional General Assurances in this section, or reference an addendum here.

Specific Assurances

More specifically, and without limiting the above general Assurance, the Recipient agrees with and gives the following Assurances with respect to its federally assisted programs:

1. The Recipient agrees that each "activity," "facility," or "program," as defined in §§ 21.23 (b) and 21.23 (e) of 49 C.F.R. § 21 will be (with regard to an "activity") facilitated, or will be (with regard to a "facility") operated, or will be (with regard to a "program") conducted in compliance with all requirements imposed by, or pursuant to the Acts and the Regulations.
2. The Recipient will insert the following notification in all solicitations for bids, Requests For Proposals for work, or material subject to the Acts and the Regulations made in connection with all Federal Highway Programs and, in adapted form, in all proposals for negotiated agreements regardless of funding source:

   The (Agency), in accordance with the provisions of Title VI of the Civil Rights Act of 1964 (78 Stat. 252, 42 U.S.C. §§ 2000d to 2000d-4) and the Regulations, hereby notifies all bidders that it will affirmatively insure that any contract entered into pursuant to this advertisement, disadvantaged business enterprises will be afforded full opportunity to submit bids in response to this invitation and will not be discriminated against on the grounds of race, color, or national origin in consideration for an award.

3. The Recipient will insert the clauses of Appendix A and E of this Assurance in every contract or agreement subject to the Acts and the Regulations.
4. The Recipient will insert the clauses of Appendix B of this Assurance, as a covenant running with the land, in any deed from the United States effecting or recording a transfer of real property, structures, use, or improvements thereon or interest therein to a Recipient.
5. That where the Recipient receives Federal financial assistance to construct a facility, or part of a facility, the Assurance will extend to the entire facility and facilities operated in connection therewith.
6. That where the Recipient receives Federal financial assistance in the form, or for the acquisition of real property or an interest in real property, the Assurance will extend to rights to space on, over, or under such property.
7. That the Recipient will include the clauses set forth in Appendix C and Appendix D of this Assurance, as a covenant running with the land, in any future deeds, leases, licenses, permits, or similar instruments entered into by the Recipient with other parties:
   a. for the subsequent transfer of real property acquired or improved under the applicable activity, project, or program; and
   b. for the construction or use of, or access to, space on, over, or under real property acquired or improved under the applicable activity, project, or program.
8. That this Assurance obligates the Recipient for the period during which Federal financial assistance is extended to the program, except where the Federal financial assistance is to provide, or is in the form of, personal property, or real property, or interest therein, or structures or improvements thereon, in which case the Assurance obligates the Recipient, or any transferee for the longer of the following periods:

a. the period during which the property is used for a purpose for which the Federal financial assistance is extended, or for another purpose involving the provision of similar services or benefits; or
b. the period during which the Recipient retains ownership or possession of the property.

9. The Recipient will provide for such methods of administration for the program as are found by the Secretary of Transportation or the official to whom he/she delegates specific authority to give reasonable guarantee that it, other recipients, sub-recipients, sub-grantees, contractors, subcontractors, consultants, transferees, successors in interest, and other participants of Federal financial assistance under such program will comply with all requirements imposed or pursuant to the Acts, the Regulations, and this Assurance.
10. The Recipient agrees that the United States has a right to seek judicial enforcement with regard to any matter arising under the Acts, the Regulations, and this Assurance.

FHWA may include additional Specific Assurances in this section.

By signing this ASSURANCE, Maine Department of Transportation also agrees to comply (and require any subrecipients, sub-grantees, contractors, successors, transferees, and/or assignees to comply) with all applicable provisions governing the FHWA access to records, accounts, documents, information, facilities, and staff. You also recognize that you must comply with any program or compliance reviews, and/or complaint investigations conducted by *FHWA*. You must keep records, reports, and submit the material for review upon request to FHWA, or their designees in a timely, complete, and accurate way. Additionally, you must comply with all other reporting, data collection, and evaluation requirements, as prescribed by law or detailed in program guidance.

Maine Department of Transportation gives this ASSURANCE in consideration of and for obtaining any Federal grants, loans, contracts, agreements, property, and/or discounts, or other Federal-aid and Federal financial assistance extended after the date hereof to the recipients by the U.S. Department of Transportation. This ASSURANCE is binding on Maine Department of Transportation, other recipients, sub-recipients, sub-grantees, contractors, subcontractors and their subcontractors', transferees, successors in interest, and any other participants in it programs. . The person(s) signing below is authorized to sign this ASSURANCE on behalf of the Recipient.

Name of Recipient: Maine Department of Transportation

David Bernhardt, Commissioner

DATED: 9/18/14

APPENDIX A

During the performance of this contract, the contractor, for itself, its assignees, and successors in interest (hereinafter referred to as the "contractor") agrees as follows:

1. **Compliance with Regulations:** The contractor (hereinafter includes consultants) will comply with the Acts and the Regulations relative to Nondiscrimination in Federally-assisted programs of the U.S. Department of Transportation, **Federal Highway Administration**, as they may be amended from time to time, which are herein incorporated by reference and made a part of this contract.

2. **Nondiscrimination:** The contractor, with regard to the work performed by it during the contract, will not discriminate on the grounds of race, color, or national origin in the selection and retention of subcontractors, including procurements of materials and leases of equipment. The contractor will not participate directly or indirectly in the discrimination prohibited by the Acts and the Regulations as set forth in Appendix E, including employment practices when the contract covers any activity, project, or program set forth in Appendix B of 49 CFR Part 21.

3. **Solicitations for Subcontracts, Including Procurements of Materials and Equipment:** In all solicitations, either by competitive bidding, or negotiation made by the contractor for work to be performed under a subcontract, including procurements of materials, or leases of equipment, each potential subcontractor or supplier will be notified by the contractor of the contractor's obligations under this contract and the Acts and the Regulations relative to Non-discrimination on the grounds of race, color, or national origin.

4. **Information and Reports:** The contractor will provide all information and reports required by the Acts, the Regulations and directives issued pursuant thereto and will permit access to its books, records, accounts, other sources of information, and its facilities as may be determined by the Recipient or the **Federal Highway Administration**, to be pertinent to ascertain compliance with such Acts, Regulations, and instructions. Where any information required of a contractor is in the exclusive possession of another who fails or refuses to furnish the information, the contractor will so certify to the Recipient or the **Federal Highway Administration**,, as appropriate, and will set forth what efforts it has made to obtain the information.

5. **Sanctions for Noncompliance:** In the event of a contractor's noncompliance with the Non-discrimination provisions of this contract, the Recipient will impose such contract sanctions as it or the **Federal Highway Administration**, may determine to be appropriate, including, but not limited to:

    a. withholding payments to the contractor under the contract until the contractor complies; and/or
    b. cancelling, terminating, or suspending a contract, in whole or in part.

Incorporation of Provisions: The contractor will include the provisions of paragraphs one through six in every subcontract, including procurements of materials and leases of equipment, unless exempt by the Acts, the Regulations and directives issued pursuant thereto. The contractor will take action with respect to any subcontract or procurement as the Recipient or the **Federal Highway Administration**, may direct as a means of enforcing such provisions including sanctions for noncompliance. Provided, that if the contractor becomes involved in, or is threatened with litigation by a subcontractor, or supplier because of such direction, the contractor may request the Recipient to enter into any litigation to protect the interests of the Recipient. In addition, the contractor may request the United States to enter into the litigation to protect the interests of the United States.

(APPENDIX C TO MAINEDOT TITLE VI ASSURANCE)

FEDERAL HIGHWAY ADMINISTRATION ASSISTED PROGRAMS

The following clauses shall be included in all deeds, licenses, leases, permits, or similar instruments entered into

by the Maine Department of Transportation pursuant to the provisions of Assurance 7(a).

The (grantee, licensee, lessee, permitee, etc., as appropriate) for herself/himself, his/her heirs, personal representatives, successors in interest, and assigns, as a part of the consideration hereof, does hereby covenant and agree [in the case of deeds and leases add "as a covenant running with the land"] that in the event facilities are constructed, maintained, or otherwise operated on the said property described in this (deed, license, lease, permit, etc.) for a purpose for which a Department of Transportation program or activity is extended or for another purpose involving the provision of similar services or benefits, the (grantee, licensee lessee, permitee, etc.) shall maintain and operate such facilities and services in compliance with all other requirements imposed pursuant to Title 49, Code of Federal Regulations, Department of Transportation, Subtitle A, Office of the Secretary, Part 21, Nondiscrimination of Federally-Assisted Programs of the Department of Transportation - Effectuation of Title VI of the Civil Rights Act of 1964, and as said Regulations may be amended.

[Include in licenses, leases, permits, etc.]*

That in the event of breach of any of the above nondiscrimination covenants, Maine Department of Transportation shall have the right to terminate the [license, lease, permit, etc.] and to re-enter and repossess said land and the facilities thereon, and hold the same as if said [licenses, lease, permit, etc.] had never been made or issued.

[Include in deeds]*

That in the event of breach of any of the above nondiscrimination covenants, Maine Department of Transportation shall have the right to re-enter said lands and facilities thereon, and the above described lands and facilities shall thereupon revert to and vest in and become the absolute property of Maine Department of Transportation and its assigns.

The following shall be included in all deeds, licenses, leases, permits, or similar agreements entered into by Maine Department of Transportation pursuant to the provisions of Assurance 7(b).

The (grantee, licensee, lessee, permitee, etc., as appropriate) for herself/himself, his/her personal representatives, successors in interest, and assigns, as a part of the consideration hereof, does hereby covenant and agree (in case of deeds, and leases add "as a covenant running with the land") that (1) no person on the grounds of race, color, or national origin shall be excluded from participation in, be denied the benefits of, or be otherwise subjected to discrimination in the use of said facilities, (2) that in the construction of any improvements on, over or under such land and the furnishing services thereon, no person on the grounds of race, color, or national origin shall be excluded from the participation in, be denied the benefits of, or be otherwise subjected to discrimination, and (3) that the (grantee, licensee, lessee, permitee, etc.) shall use the premises in compliance with all other requirements imposed by or pursuant to Title 49, Code of Federal Regulations, Department of Transportation, Subtitle A, Office of the Secretary, Part 21, Nondiscrimination in Federally-Assisted Programs of the Department of Transportation - Effectuation of Title VI of the Civil Rights Act of 1964, and as said Regulations may be amended.

[Include in licenses, leases, permits, etc.]*

That in the event of breach of any of the above nondiscrimination covenants, Maine Department of Transportation shall have the right to terminate the [license, lease, permit, etc.] and to re-enter and repossess said land and the facilities thereon, and hold the same as if said [license, lease, permit, etc.] had never been made or issued.

[Include in deeds]*

That in the event of breach of any of the above nondiscrimination covenants, Maine Department of Transportation shall have the right to re-enter said land and facilities thereon, and the above described lands and facilities shall thereupon revert to and vest in and become the absolute property of Maine Department of Transportation and its assigns.

* Reverter clause and related language to be used only when it is determined that such a clause is necessary inorder to effectuate the purpose of Title VI of the Civil Rights Act of 1964.

APPENDIX D

CLAUSES FOR CONSTRUCTIN/USE/ACCESS TO REAL PROPERTY ACQUIRED UNDER THE ACTIVITY, FACILITY OR PROGRAM

The following clauses will be included in deeds, licenses, permits, or similar instruments/agreements entered into by The Maine Department of Transportation pursuant to the provisions of Assurance 7(b):

A. The (grantee, licensee, permittee, etc., as appropriate) for himself/herself, his/her heirs, personal representatives, successors in interest, and assigns, as a part of the consideration hereof, does hereby covenant and agree (in the case of deeds and leases add, "as a covenant running with the land") that (1) no person on the ground of race, color, or national origin, will be excluded from participation in, denied the benefits of, or be otherwise subjected to discrimination in the use of said facilities, (2) that in the construction of any improvements on, over, or under such land, and the furnishing of services thereon, no person on the ground of race, color, or national origin, will be excluded from participation in, denied the benefits of, or otherwise be subjected to discriminations, (3) that the (grantee, licensees, lessee, permittee, etc.) will use the premises in compliance with all other requirements imposed by or pursuant to the Acts and Regulations, as amended, set forth in this Assurance.

B. With respect to (licenses, leases, permits, etc.), in the event of breach of any of the above Non-discrimination covenants, (***The Maine Department of Transportation***) will have the right to terminate the (license, permit, etc., as appropriate) and to enter or re-enter and repossess said land and the facilities thereon, and hold the same as if said (license, permit, etc., as appropriate) had never been made or issued.*

C. With respect to deeds, in the event of breach of any of the above Non-discrimination covenants, (***The Maine Department of Transportation***) will there upon revert to and vest in and become the absolute property of (***The Maine Department of Transportation***) and its assigns.*

(*Reverter clause and related language to be used only when it is determined that such a clause is necessary to make clear the purpose of Title VI.)

APPENDIX E

During the performance of this contract, the contractor, for itself, its assignees, and successors in interest (hereinafter referred to as the "contractor") agrees to comply with the following non-discrimination statutes and authorities; including but not limited to:

Pertinent Non-Discrimination Authorities:

- Title VI of the Civil Rights Act of 1964 (42 U.S.C. §2000d *et seq*., 78 stat. 252), (prohibits discrimination on the basis of race, color, national origin); and 49 CFR Part 21.
- The Uniform Relocation Assistance and Real Property Acquisition Policies Act of 1970, (42 U.S.C. §4601), (prohibits unfair treatment of persons displaced or whose property has been acquired because of Federal or Federal-aid programs and projects);
- Federal-Aid Highway Act of 1973, (23 U.S.C. §324 *et seq*.), (prohibits discrimination on the basis of sex);
- Section 504 of the Rehabilitation Act of 1973, (29 U.S.C. §794 *et seq*.), as amended, (prohibits discrimination on the basis of disability); and 49 CFR Part 27;
- The Age Discrimination Act of 1975, as amended, (42 U.S.C. §6101 *et seq*.), (prohibits discrimination on the basis of age);
- Airport and Airway Improvement Act of 1982, (49 U.S.C. §471, Section 47123), as amended, (prohibits discrimination based on race, creed, color, national origin, or sex);
- The Civil Rights Restoration Act of 1987, (PL 100-209), (Broadened the scope, coverage and applicability of Title VI of the Civil Rights Act of 1964, The Age Discrimination Act of 1975 and Section 504 of the Rehabilitation Act of 1973, by expanding the definition of the terms "programs or activities" to include all of the programs or activities of the Federal-aid recipients, sub-recipients and contractors, whether such programs or activities are Federally funded or not);
- Titles II and III of the Americans with Disabilities Act, which prohibit discrimination on the basis of disability in the operation of public entities, public and private transportation systems, places of public accommodation, and certain testing entities (42 U.S.C. §§12131-12189) as implemented by Department of Transportation regulations at 49 C.F.R. Parts 37 and 38;
- The Federal Aviation Administration's Non-discrimination statute (49 U.S.C. §47123) (prohibits discrimination on the basis of race, color, national origin and sex);
- Executive Order 12898, Federal Actions to Address Environmental Justice in Minority Populations and Low-Income Populations, which ensures discrimination against minority populations by discouraging programs, policies, and activities with disproportionately high and adverse human health or environmental effects on minority and low-income populations;
- Executive Order 13166, Improving Access to Services for Persons with Limited English Proficiency, and resulting agency guidance, national origin discrimination includes discrimination because of limited English proficiency (LEP). To ensure compliance with Title VI, you must take reasonable steps to ensure that LEP persons have meaningful access to your programs (70 Fed. Reg. at 74087 to 74100);
- Title IX of the Education Amendments of 1972, as amended, which prohibits you from discriminating of sex in education programs or activities (20 U.S.C. 1681 et seq.).

Environmental Summary Sheet

WIN: 22614.00 **Date Submitted: 10/26/15**
Town: Rumford- Morse Bridge Paint
CPD Team Leader: Kristen Chamberlain
ENV Field Contact: Mike Clark

NEPA Complete: 10/26/15- Programmatic Categorical Exclusion

☒ **Section 106**

SHPO Concurrence-No Adverse Effect
Section 106 Resources: Morse Bridge is NR-Eligible. No Adverse Effect based on the bridge being painted the same color and all work being completed within the ROW.

☒ **Section 4(f) and 6(f)**

Section 4(f)
Review Complete-No use
Section 6(f)
Not Applicable

☒ **Maine Department of Inland Fisheries and Wildlife Essential Habitat**

Not Applicable **Timing Window: Not Applicable**

☒ **Section 7**

Species of Concern: Atlantic Salmon DPS -No Effect
Comments/References: No in-water work

Species of Concern: Northern Long-Eared Bat- No Effect
Comments/References: Bridge inspections did not show any signs of bat activity. Bridge structure does not offer suitable habitat, and lighting will deter NLEB. No Tree removal.

☒ **Essential Fish Habitat**

No Effect-No in-water work

☒ **Maine Department of Conservation/Public Lands, Submerged Land Lease**

Not Applicable

☒ **Maine Land Use Regulation Commission**

Not Applicable

☒ **Maine Department of Environmental Protection**

Not Applicable

☒ **Army Corps of Engineers, Section 10 of the Rivers and Harbors Act and Section 404 of the Clean Water Act.**

Not Applicable

☒ **Stormwater Review**

N/A

☒ **Special Provisions Required**

Special Provision 105-Timing of Work Restriction	N/A☒	Applicable☐
Special Provision 656-Minor Soil Disturbance	N/A☐	**Applicable**☒
Standard Specification 656-Erosion Control Plan	N/A☒	Applicable☐
Special Provision 203-Dredge Spec	N/A☒	Applicable☐
General Note for Hazardous Waste	N/A☒	Applicable☐
Special Provision 203-Hazardous Waste	N/A☒	Applicable☐
Special Provision 105.9	N/A☒	Applicable☐

**All permits and approvals based on plans/scope as of:10/26/15*