# STATE OF MAINE
# DEPARTMENT OF TRANSPORTATION

# EAST MACHIAS
# WASHINGTON COUNTY
# JACKSONVILLE BRIDGE
## OVER
# EAST MACHIAS RIVER
## ROUTE 191
## FEDERAL AID PROJECT NO. STP-2050(100)
## PROJECT LENGTH 0.114 mi.
## BRIDGE NO. 3219

### SPECIFICATIONS

Design: Load and Resistance Factor Design per AASHTO LRFD Bridge Design Specifications, Seventh Edition 2014.

### DESIGN LOADING

Live Load ..... HL - 93 Modified

### TRAFFIC DATA

| | |
|---|---|
| Current (2013) AADT | 1620 |
| Future (2033) AADT | 1940 |
| DHV - % of AADT | 13% |
| Design Hour Volume | 252 |
| Heavy Trucks (% of AADT) | 20% |
| Heavy Trucks (% of DHV) | 20% |
| Directional Distribution (% of DHV) | 55% |
| 18 kip Equivalent P 2.0 | 217 |
| 18 kip Equivalent P 2.5 | 207 |
| Design Speed (mph) | 50 |

### HYDROLOGIC DATA

| | |
|---|---|
| Drainage Area | 253.4 sq mi |
| Discharge (Q25) | 4629 cfs |
| Design Discharge (Q50) | 5170 cfs |
| Check Discharge (Q100) | 5740 cfs |
| Headwater Elevation (Q25) | 35.20 ft |
| Headwater Elevation (Q50) | 35.60 ft |
| Headwater Elevation (Q100) | 36.00 ft |
| Discharge Velocity (Q25) | 10.1 fps |
| Discharge Velocity (Q50) | 10.4 fps |
| Discharge Velocity (Q100) | 10.4 fps |
| Headwater Elevation (Q1.1) | 32.50 ft |
| Discharge Velocity (Q1.1) | 6.60 fps |

### MATERIALS

Concrete:
- Curbs & Transition Barriers ..... Class "LP"
- All Other ..... Class "A"

Reinforcing Steel:
- Curbs & Transition Barriers ..... ASTM A 775/A 775M (Epoxy-Coated), Grade 60
- All Other ..... ASTM A 615/A 615M, Grade 60

Structural Steel:
- All Material (except as noted) ..... ASTM A 709, Grade 50W (unpainted)
- High Strength Bolts ..... ASTM A 325, Type 3

### BASIC DESIGN STRESSES

| | |
|---|---|
| Concrete, Class "LP" | f 'c = 5,000 psi |
| Concrete, Class "A" | f 'c = 4,000 psi |
| Reinforcing Steel | f y = 60,000 psi |
| Structural Steel: | |
| ASTM A 709, Grade 50W | F y = 50,000 psi |
| ASTM A 709, Grade 36 | F y = 36,000 psi |
| ASTM A 325 | F μ = 120,000 psi |

### LIST OF DRAWINGS


Title Sheet ..... 1
Estimated Quantities & General Notes ..... 2
General Plan ..... 3-4
Profile ..... 5-6
Boring Location Plan & Interpretive Subsurface Profile ..... 7
Boring Logs ..... 8
Typical Sections ..... 9
Cross Sections ..... 10-25
Abutment Details ..... 26-30
Framing Plan ..... 31
Structural Steel Details ..... 32
Superstructure Plan ..... 33
Reinforcing Details And Schedule ..... 34-35
Right-Of-Way Maps ..... 36-37


### UTILITIES

Emera Maine (previously Bangor Hydro-Electric Company)
Northern New England Telephone Operations (Fairpoint Communications)
Time Warner Cable (Bangor Central Office)
Maine Fiber

### MAINTENANCE OF TRAFFIC

Maintain one 12'-0" lane of two-way signalized alternating traffic using single lane temporary bridge.

| | |
|---|---|
| PROJECT LOCATION: | On Route 191, located 2.0 miles north of Route 1. Latitude 44° 45' 54", Longitude 67° 23' 56" |
| PROGRAM AREA: | Bridge |
| OUTLINE OF WORK: | Bridge Replacement with 800 feet of approach work |

HNTB

WIN 20501.00

STP-2050(100)

STATE OF MAINE
DEPARTMENT OF TRANSPORTATION

| | | DATE |
|---|---|---|
| APPROVED | COMMISSIONER: | 12/10/15 |
| | CHIEF ENGINEER: | 12-10-15 |

STATE OF MAINE ROLAND A. LAVALLEE No. 14486 PROFESSIONAL ENGINEER

SIGNATURE
P.E. NUMBER 14486
DATE 9/23/15

PROJECT INFORMATION

| | |
|---|---|
| PROGRAM | BRIDGE |
| PROJECT MANAGER | ANDY LATHE |
| DESIGNER | TIM COTE, P.E. |
| CONSULTANT | HNTB CORP. |
| PROJECT RESIDENT | |
| CONTRACTOR | |
| PROJECT COMPLETION DATE | |

EAST MACHIAS
JACKSONVILLE BRIDGE

TITLE SHEET

SHEET NUMBER
1
OF 37

Date:9/21/2015
Username:
Division:
Filename: 001_Title.dgn

| ITEM NO. | DESCRIPTION | QUANTITY | UNIT |
|---|---|---|---|
| | | | |
| 201.23 | Removing Single Tree Top Only | 1 | EA |
| 201.24 | Removing Stump | 1 | EA |
| 202.19 | Removing Existing Bridge (Structural Steel = 69 Tons, Concrete = 258 CY) | 1 | LS |
| 202.202 | Removing Pavement Surface | 350 | SY |
| 203.20 | Common Excavation | 1,200 | CY |
| 203.25 | Granular Borrow | 330 | CY |
| 206.082 | Structural Earth Excavation - Major Structures, Plan Quantity | 350 | CY |
| 304.10 | Aggregate Subbase Course - Gravel | 1,710 | CY |
| 403.207 | Hot Mix Asphalt, 19.0 mm Nominal Maximum Size | 290 | TON |
| 403.208 | Hot Mix Asphalt, 12.5 mm Nominal Maximum Size | 245 | TON |
| 403.209 | Hot Mix Asphalt, 9.5 mm Nominal Maximum Size (Sidewalk, Drives, Islands, Incidentals) | 5 | TON |
| 403.211 | Hot Mix Asphalt, 9.5 mm Nominal Maximum Size (Shimming) | 20 | TON |
| 403.213 | Hot Mix Asphalt, 12.5 mm Nominal Maximum Size, (Base and Intermediate Base Course) | 235 | TON |
| 409.15 | Bituminous Tack Coat, Applied | 120 | GAL |
| 461.131 | Temporary Pavement | 210 | TON |
| 501.231 | Dynamic Loading Test | 2 | EA |
| 501.235 | Acoustic Monitor | 4 | CD |
| 501.54 | Steel H-beam Piles 117 lb/ft, delivered | 245 | LF |
| 501.541 | Steel H-beam Piles 117 lb/ft, in place | 245 | LF |
| 501.903 | Pile Tips - Rock Injector Point | 8 | EA |
| 501.91 | Pile Splices | 4 | EA |
| 501.92 | Pile Driving Equipment Mobilization | 1 | LS |
| 502.219 | Structural Concrete, Abutments and Retaining Walls (102 CY) | 1 | LS |
| 502.26 | Structural Concrete Roadway and Sidewalk Slab on Steel Bridges (108 CY) | 1 | LS |
| 502.31 | Structural Concrete Approach Slab (21 CY) | 1 | LS |
| 502.49 | Structural Concrete Curbs and Sidewalks (19 CY) | 1 | LS |
| 503.12 | Reinforcing Steel, Fabricated and Delivered | 20,000 | LB |
| 503.13 | Reinforcing Steel, Placing | 20,000 | LB |
| 503.14 | Epoxy-Coated Reinforcing Steel, Fabricated and Delivered | 1,000 | LB |
| 503.15 | Epoxy-Coated Reinforcing Steel, Placing | 1,000 | LB |
| 504.702 | Structural steel fabricated and delivered, welded (158,000 lbs) | 1 | LS |
| 504.71 | Structural steel erection (158,000 lbs) | 1 | LS |
| 505.08 | Shear Connectors (1568 EA) | 1 | LS |
| 507.0811 | Steel Bridge Railing, 2 Bar (283 LF) | 1 | LS |
| 508.14 | High Performance Waterproofing Membrane (520 SY) | 1 | LS |
| 510.10 | Special Detour, 12 foot Roadway Width Vehicular and Pedestrican Traffic Not Seperated | 1 | LS |
| 511.07 | Cofferdam: Abutment #1 | 1 | LS |
| 511.07 | Cofferdam: Abutment #2 | 1 | LS |
| 512.081 | French Drains (56 LF) | 1 | LS |
| 514.06 | Curing Box for Concrete Cylinders | 1 | EA |
| 515.21 | Protective Coating for Concrete Surfaces (216 SY) | 1 | LS |
| 520.232 | Expansion Device - Asphaltic Plug Joint | 56 | LF |
| 526.301 | Temporary Concrete Barrier, Type I (370 LF) | 1 | LS |
| 526.34 | Permanent Concrete Transition Barrier | 4 | EA |
| 527.34 | Work Zone Crash Cushions | 4 | UN |
| 603.16 | 15 Inch Culvert Pipe Option I | 22 | LF |
| 606.1721 | Bridge Transition - Type I | 4 | EA |
| 606.23 | Guardrail Type 3c - Single Rail | 775 | LF |
| 606.231 | Guardrail Type 3c - 15 ft Radius and Less | 12.5 | LF |
| 606.258 | CRT Anchorage Assembly | 1 | EA |
| 606.353 | Reflectorized Flexible Guardrail Marker | 8 | EA |
| 606.79 | Guardrail 350 Flared Terminal | 3 | EA |
| 609.31 | Curb Type 3 | 130 | LF |
| 610.08 | Plain Riprap | 410 | CY |
| 610.16 | Heavy Riprap | 950 | CY |
| 610.18 | Stone Ditch Protection | 16 | CY |
| 613.319 | Erosion Control Blanket | 73 | SY |
| 615.07 | Loam | 85 | CY |
| 618.13 | Seeding Method Number 1 | 3 | UN |
| 618.141 | Seeding Method Number 3 | 9 | UN |
| 619.1201 | Mulch | 12 | UN |
| 619.1401 | Erosion Control Mix | 50 | CY |
| 620.58 | Erosion Control Geotextile | 1,830 | SY |
| 627.733 | 4" White or Yellow Painted Pavement Marking Line | 2,400 | LF |
| 627.78 | Temporary Pavement Marking Line, White or Yellow | 3,600 | LF |
| 629.05 | Hand Labor, Straight Time | 50 | HR |
| 631.12 | All Purpose Excavator (including operator) | 25 | HR |
| 631.14 | Grader (including operator) | 25 | HR |
| 631.15 | Roller, Earth and Base (including operator) | 25 | HR |
| 631.172 | Truck-large (including operator) | 25 | HR |
| 639.18 | Field Office, Type A | 1 | EA |
| 643.72 | Temporary Traffic Signal: Detour | 1 | LS |
| 652.312 | Type III Barricades | 4 | EA |
| 652.33 | Drum | 60 | EA |
| 652.34 | Cone | 60 | EA |
| 652.35 | Construction Signs | 360 | SF |
| 652.361 | Maintenance of Traffic Control Devices (206 CD) | 1 | LS |
| 652.38 | Flaggers | 480 | HR |
| 656.75 | Temporary Soil Erosion and Water Pollution Control | 1 | LS |
| 659.10 | Mobilization | 1 | LS |

## GENERAL CONSTRUCTION NOTES:

1. The clearing limits as shown on the plans are approximate. The exact limits will be established in the field by the Resident. Payment for clearing will be considered incidental to Contract items.

2. For easements, construction limits and right of way lines, refer to Right of Way Maps.

3. All utility facilities shall be adjusted by the respective utilities unless otherwise noted.

4. Do no excavate for Aggregate Subbase Course where existing material is suitable as determined by the Resident.

5. In areas where the Resident directs the Contractor not to excavate to the subgrade line shown on the plans, payment for removing existing pavement, grubbing, shaping, ditching, and compacting the existing subbase and layers of new subbase 6 inches or less thick will be made under appropriate equipment rental items.

6. All embankment material, except as otherwise shown, placed below EL. 32.50 shall be Granular Borrow meeting the requirements of Subsection 703.19, Material for Underwater Backfill.

7. Loam shall be placed to a nominal depth of 4 inches in lawn areas and 2 inches in all other areas unless otherwise noted or directed.

8. Erosion Control Mix may be substituted in those areas normally receiving loam and seed as directed by the Resident. Placement shall be in accordance with Standard Specifications Section 619, Mulch. Payment will be made under Item No. 619.1401, Erosion Control Mix.

9. Place a 24-in. wide strip of Temporary Erosion Control Blanket on the sideslopes along the top of riprap and behind the wingwalls.

10. An NCHRP350 compliant guardrail end treatment shall be installed concurrently with the placement of each section of beam guardrail.

11. Place a 4-ft wide strip of Extended Use Erosion Control Blanket along the bottom of all ditches.

12. Extended Use Erosion Control Blanket, seeded gutters, riprap downspouts, and other gutters lined with Stone Ditch Protection shall be constructed after paving and shoulder work is completed, where it is apparent that runoff will cause continual erosion. Payment will be made under the appropriate Contract items.

13. Protective Coating for Concrete Surfaces shall be applied to the following areas:

All exposed surfaces of concrete curbs,
Fascias down to the drip notch,
All exposed surfaces of Concrete Transition Barriers,
Top of abutment backwalls and to one foot below the top of backwalls on the back side,
Wingwalls top face and roadway face to one foot below roadway grade.

14. Project information referred to below may be accessed at the following MaineDOT web address:
http://www.maine.gov/mdot/contractors/#projectbl.

15. The existing bridge plans may be accessed at the MaineDOT web address. The plans are reproductions of the original drawings as prepared for the construction of the bridge. It is very unlikely that the plans will show any construction field changes or any alterations which may have been made to the bridge during its life span.

16. The hydrologic report of the bridge site may be accessed at the MaineDOT web address. The hydrologic report is based on the designers interpretation of the information obtained for the subject site. No assurance is given that the information or the conclusions of the report will be representative of actual conditions at the time of construction.

17. The project geotechnical report titled: Geotechnical Design Report for the Replacement of: Jacksonville Bridge Route 191 Over East Machias River, Soils Report No. 2014-17, October 6, 2014 may be accessed at the MaineDOT web address.

18. Geotechnical information furnished or referred to in this plan set is for the use of the Bidders and the Contractor. No assurance is given that the information or interpretations will be representative of actual subsurface conditions at the construction site. MaineDOT will not be responsible for the Bidder's or Contractor's interpretations of, or conclusions drawn from, the geotechnical information. The boring logs contained in the plan set present factual and interpretive subsurface information collected at discrete locations. Data provided may not be representative of the subsurface conditions between the boring locations.

19. Quantities included for pay items measured and paid for by Lump Sum are estimated quantities and are provided by MaineDOT for informational purposes only. Lump Sum pay items will be paid for at the Contract Bid amount, with no addition or reduction in payment to the Contractor if the actual final quantities are different from the MaineDOT provided estimated quantities, except as follows:

a. If a Lump Sum pay item is eliminated, the requirements of Standard Specifications Section 109.2, Elimination of Items, will take precedence.

b. If other Contract Documents specifically allow a change in payment for a Lump Sum pay item, those requirements will be followed.

c. If a design change results in changes to estimated quantities for Lump Sum pay items, price adjustments will be made in accordance with Standard Specifications Section 109.7, Equitable Adjustments to Compensation.

20. The Contractor shall submit a Bridge Demolition Plan to the Resident at least 10 business days prior to the start of demolition work. The plan shall outline the methods and equipment to be used to remove and dispose of all materials included in the existing bridge. No work related to the removal of the bridge shall be undertaken by the Contractor until MaineDOT has reviewed the Bridge Demolition Plan for appropriateness and completeness. Payment for all work necessary for developing, submitting and finalizing the demolition Plan will be considered incidental to the bridge removal pay item.

21. The existing bridge shall be removed by and become the property of the Contractor. The steel portions of the existing bridge are coated with a lead-based paint system. The Contractor is responsible for the containment, proper management and disposal of all lead-contaminated hazardous waste generated by the process of demolishing the bridge. The Contractor is responsible for implementing appropriate OSHA mandated personal protection standards related to this process. Once the existing bridge is removed, the Contractor is solely responsible for the care, custody and control of the components of the existing bridge and any hazardous waste generated as a result of the storage, recycling or disposal of the bridge components, including lead-coated steel. The Contractor shall recycle or reuse the steel in accordance with the Maine Department of Environmental Protection's "Maine Hazardous Waste Management Regulations," Chapter 850. A copy of this regulation is available at MaineDOT's offices on Child Street in Augusta. Payment for all labor, materials, equipment and other costs required to remove and dispose of the existing bridge will be considered incidental to the bridge removal pay item.

22. The pavement sawcutting and sealing immediately behind each abutment shall not be paid for directly. Payment shall be considered incidental to the related contract items.

23. The existing bridge has anchorage locations for a salmon trap that operates April 15 through June 15 each year. The Contractor shall relocate the existing anchorages as required to provide normal operation for the fish trap during construction. New anchorages shall be permanently installed on the proposed bridge prior to construction completion. Resident shall coordinate with the Department of Marine Resources for location of permanent anchorages. All costs related to relocation and permanent installation of these anchorages will not be paid for directly but will be considered incidental to the related contract items.

24. Unpaved entrances shall be constructed with 14" Aggregate Subbase Course Gravel or 11" Aggregate Subbase Course Gravel and 3" untreated Aggregate Surface Course unless otherwise noted in the plans or directed by the Resident.

HNTB

STATE OF MAINE
DEPARTMENT OF TRANSPORTATION
STP-2050(100)
WIN 20501.00
BRIDGE NO. 3219
BRIDGE PLANS

| | | BY | DATE |
|---|---|---|---|
| PROJ. MANAGER | Andy Lathe | | |
| DESIGN-DETAILED | B. Grenier | P. Bishop | 10/15 |
| CHECKED-REVIEWED | K. Brayley | T. Cote | 10/15 |
| DESIGN2-DETAILED2 | - | - | - |
| DESIGN3-DETAILED3 | - | - | - |
| REVISIONS 1 | - | - | - |
| REVISIONS 2 | - | - | - |
| REVISIONS 3 | - | - | - |
| REVISIONS 4 | - | - | - |
| FIELD CHANGES | - | - | - |

SIGNATURE
P.E. NUMBER
DATE

JACKSONVILLE BRIDGE
EAST MACHIAS RIVER
EAST MACHIAS WASHINGTON COUNTY

ESTIMATED QUANTITIES & GENERAL NOTES

SHEET NUMBER
2
OF 37

Filename: 002_Estimate.dgn Division: Username: Date:11/25/2015

Date:11/5/2015

Username:

Division:

Filename: 003_GeneralPlan.dgn

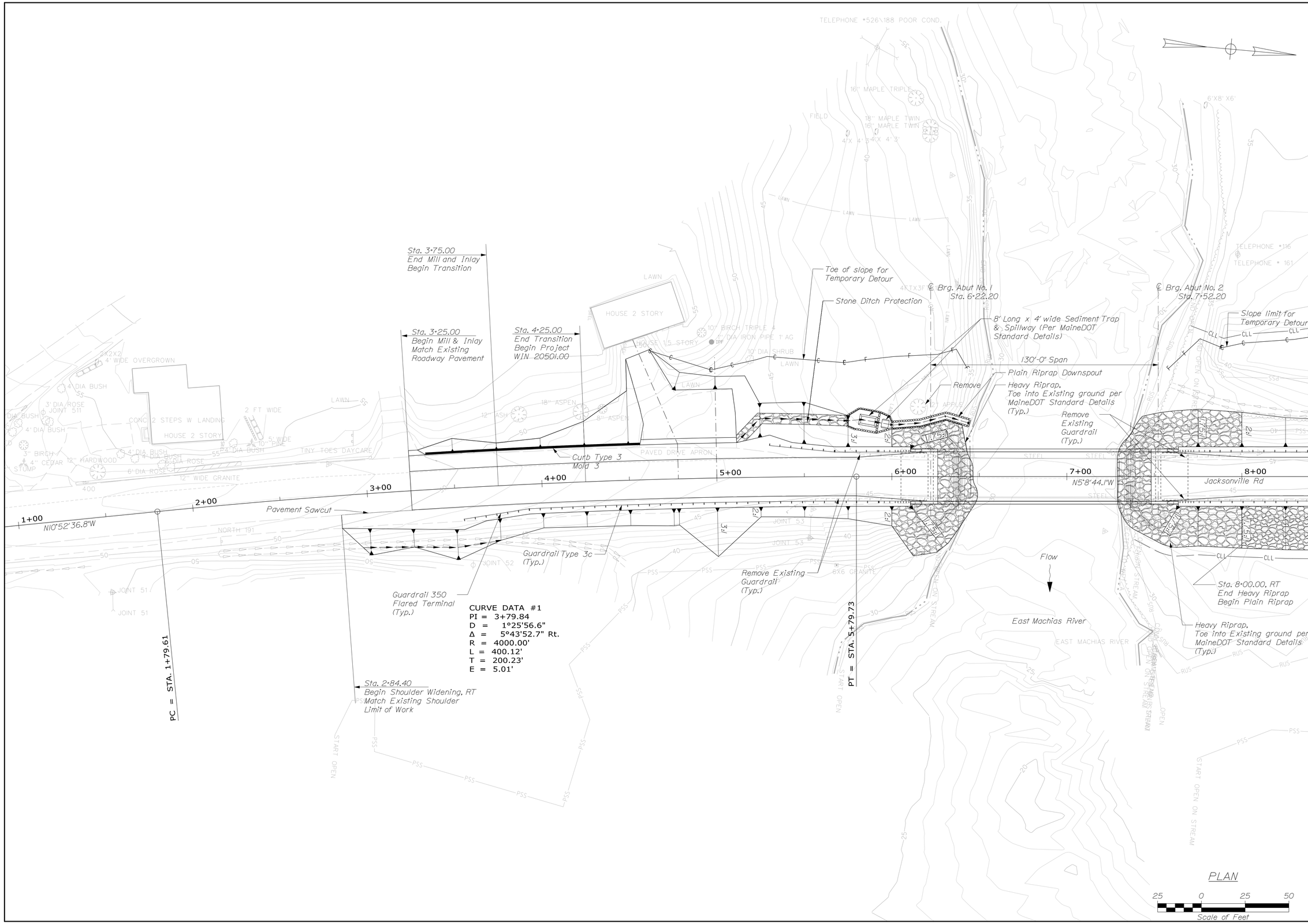


STATE OF MAINE
DEPARTMENT OF TRANSPORTATION

STP-2050(100)

WIN 20501.00

BRIDGE NO. 3219

BRIDGE PLANS

| | | BY | DATE |
|---|---|---|---|
| PROJ. MANAGER | Andy Lathe | | |
| DESIGN-DETAILED | R.Hanf | R.Hanf | 10\15 |
| CHECKED-REVIEWED | - | T.Cote | 10\15 |
| DESIGN2-DETAILED2 | - | - | - |
| DESIGN3-DETAILED3 | - | - | - |
| REVISIONS 1 | - | - | - |
| REVISIONS 2 | - | - | - |
| REVISIONS 3 | - | - | - |
| REVISIONS 4 | - | - | - |
| FIELD CHANGES | - | - | - |

SIGNATURE

P.E. NUMBER

DATE

JACKSONVILLE BRIDGE
EAST MACHIAS RIVER
EAST MACHIAS WASHINGTON COUNTY

# GENERAL PLAN

SHEET NUMBER

3

OF 37

Date:11/5/2015

Username:

Division:

Filename: 004_GeneralPlan.dgn

Toe of slope for Temporary Detour

Stone Ditch Protection

℄ Brg. Abut No. 1
Sta. 6+22.20

8' Long x 4' wide Sediment Trap & Spillway (Per MaineDOT Standard Details)

130'-0" Span

Plain Riprap Downspout

Remove

Heavy Riprap, Toe into Existing ground per MaineDOT Standard Details (Typ.)

Remove Existing Guardrail (Typ.)

℄ Brg. Abut No. 2
Sta. 7+52.20

Slope limit for Temporary Detour

Clearing limit for Temporary Detour

Remove Pipe

CRT GR System and Anchorage Assembly

22' x 15" Opt. I

Guardrail Type 3c (Typ.)

R = 8'

R = 5'

Sta. 12+26.85
End Shoulder Widening, RT
Match Existing Shoulder
Limit of Work

6+00 | 7+00 | 8+00 | 9+00 | 10+00 | 11+00 | 12+00

N5°8'44.1"W

Jacksonville Rd

Pavement Sawcut

Flow

East Machias River

PT = STA. 5+79.73

Sta. 8+00.00, RT
End Heavy Riprap
Begin Plain Riprap

Plain Riprap (Typ.)

Sta. 9+25.00
End Project WIN 20501.00
Begin Transition

CLL reduced to 5' offset to minimize resource impacts

Heavy Riprap, Toe into Existing ground per MaineDOT Standard Details (Typ.)

Sta. 9+75.00
End Transition
Begin Mill and Inlay

Sta. 10+50.00
End Mill & Inlay
Match Existing Roadway Pavement
Begin Shoulder Widening, RT

Riprap Outlet Protection

Guardrail 350 Flared Terminal (Typ.)

PC = STA. 11+95.43

CURVE DATA #2
PI = 13+46.86
D = 1°08'45.3"
Δ = 3°28'10.3" Rt.
R = 5000.00'
L = 302.77'
T = 151.43'
E = 2.29'

PLAN

25 0 25 50
Scale of Feet

STATE OF MAINE
DEPARTMENT OF TRANSPORTATION

STP-2050(100)

WIN 20501.00

BRIDGE NO. 3219

BRIDGE PLANS

| | BY | DATE |
|---|---|---|
| DESIGN-DETAILED | R.Hanf | 10\15 |
| CHECKED-REVIEWED | T.Cote | 10\15 |
| DESIGN2-DETAILED2 | - | - |
| DESIGN3-DETAILED3 | - | - |
| REVISIONS 1 | - | - |
| REVISIONS 2 | - | - |
| REVISIONS 3 | - | - |
| REVISIONS 4 | - | - |
| FIELD CHANGES | - | - |

PROJ. MANAGER: Andy Lathe

SIGNATURE

P.E. NUMBER

DATE

JACKSONVILLE BRIDGE
EAST MACHIAS RIVER
EAST MACHIAS WASHINGTON COUNTY

GENERAL PLAN

SHEET NUMBER

4

OF 37

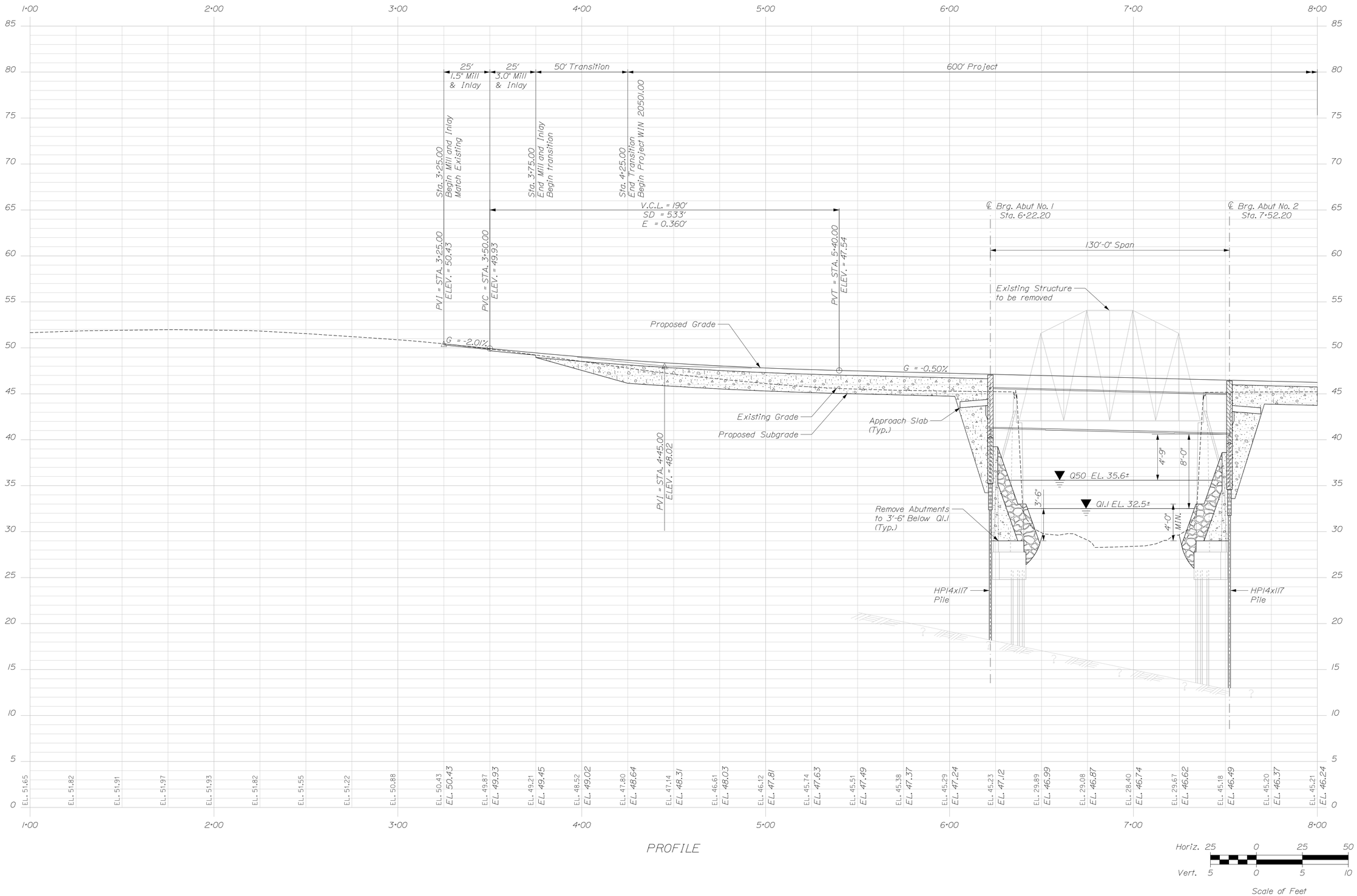


STATE OF MAINE
DEPARTMENT OF TRANSPORTATION

**STP-2050(100)**

**WIN 20501.00**

BRIDGE NO. 3219

BRIDGE PLANS

| | | BY | DATE |
|---|---|---|---|
| PROJ. MANAGER | Andy Lathe | | |
| DESIGN-DETAILED | R.Hanf | R.Hanf | 10\15 |
| CHECKED-REVIEWED | - | T.Cote | 10\15 |
| DESIGN2-DETAILED2 | - | - | - |
| DESIGN3-DETAILED3 | - | - | - |
| REVISIONS 1 | - | - | - |
| REVISIONS 2 | - | - | - |
| REVISIONS 3 | - | - | - |
| REVISIONS 4 | - | - | - |
| FIELD CHANGES | - | - | - |

SIGNATURE

P.E. NUMBER

DATE

JACKSONVILLE BRIDGE
EAST MACHIAS RIVER
EAST MACHIAS WASHINGTON COUNTY

# PROFILE

SHEET NUMBER

5

OF 37

Filename: 005_Profile.dgn Division: Username: Date:11/5/2015

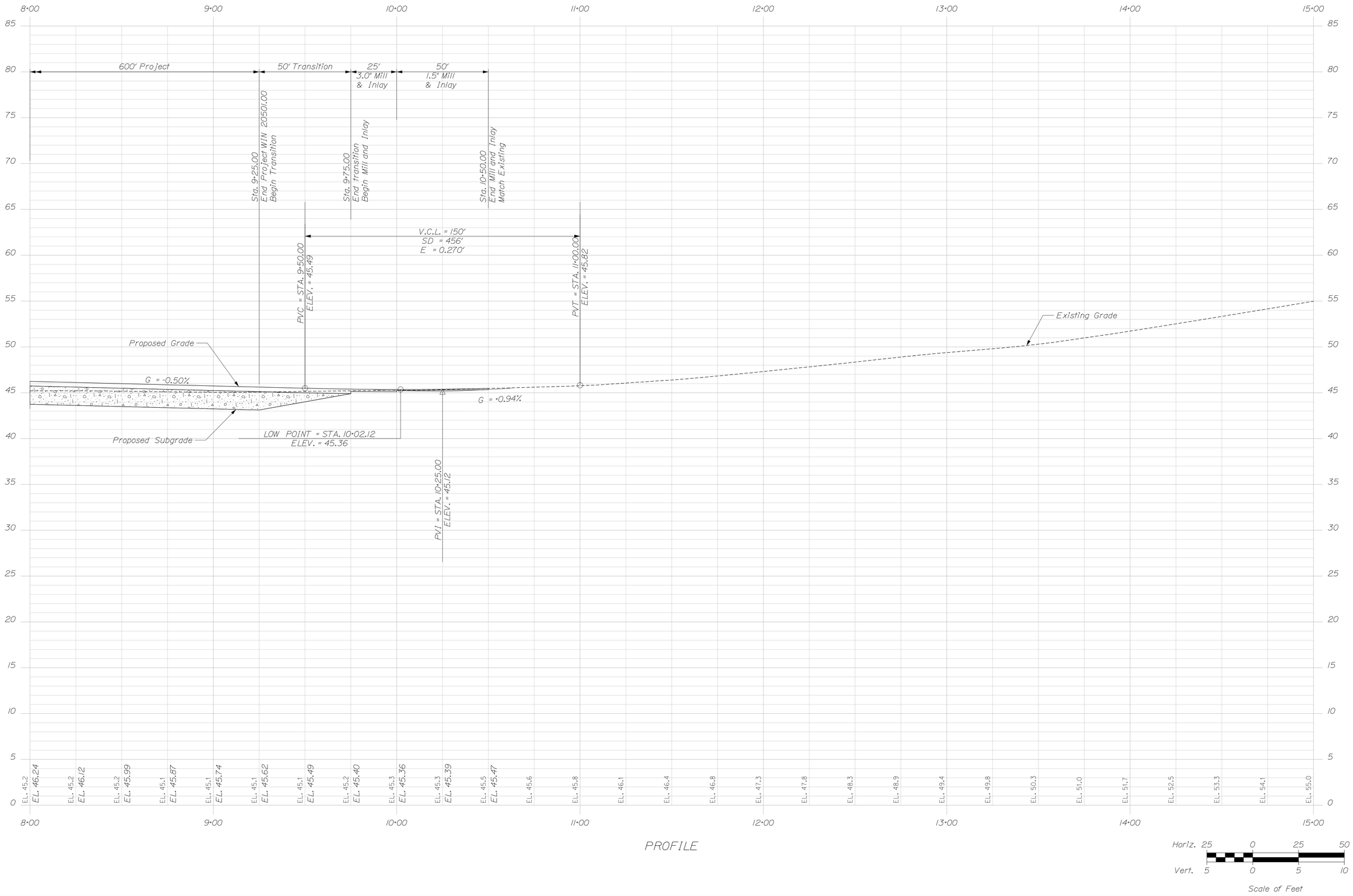


PROFILE

STATE OF MAINE
DEPARTMENT OF TRANSPORTATION

STP-2050(100)

WIN 20501.00

BRIDGE NO. 3219

BRIDGE PLANS

| | | BY | DATE |
|---|---|---|---|
| PROJ. MANAGER | Andy Lathe | | |
| DESIGN-DETAILED | R.Hanf | R.Hanf | 10\15 |
| CHECKED-REVIEWED | - | T.Cote | 10\15 |
| DESIGN2-DETAILED2 | - | - | - |
| DESIGN3-DETAILED3 | - | - | - |
| REVISIONS 1 | - | | - |
| REVISIONS 2 | - | | - |
| REVISIONS 3 | - | | - |
| REVISIONS 4 | - | | - |
| FIELD CHANGES | - | | - |

SIGNATURE

P.E. NUMBER

DATE

JACKSONVILLE BRIDGE
EAST MACHIAS RIVER
EAST MACHIAS WASHINGTON COUNTY

PROFILE

SHEET NUMBER

6

OF 37

Date:11/5/2015

Username:

Division:

Filename: 006_Profile.dgn

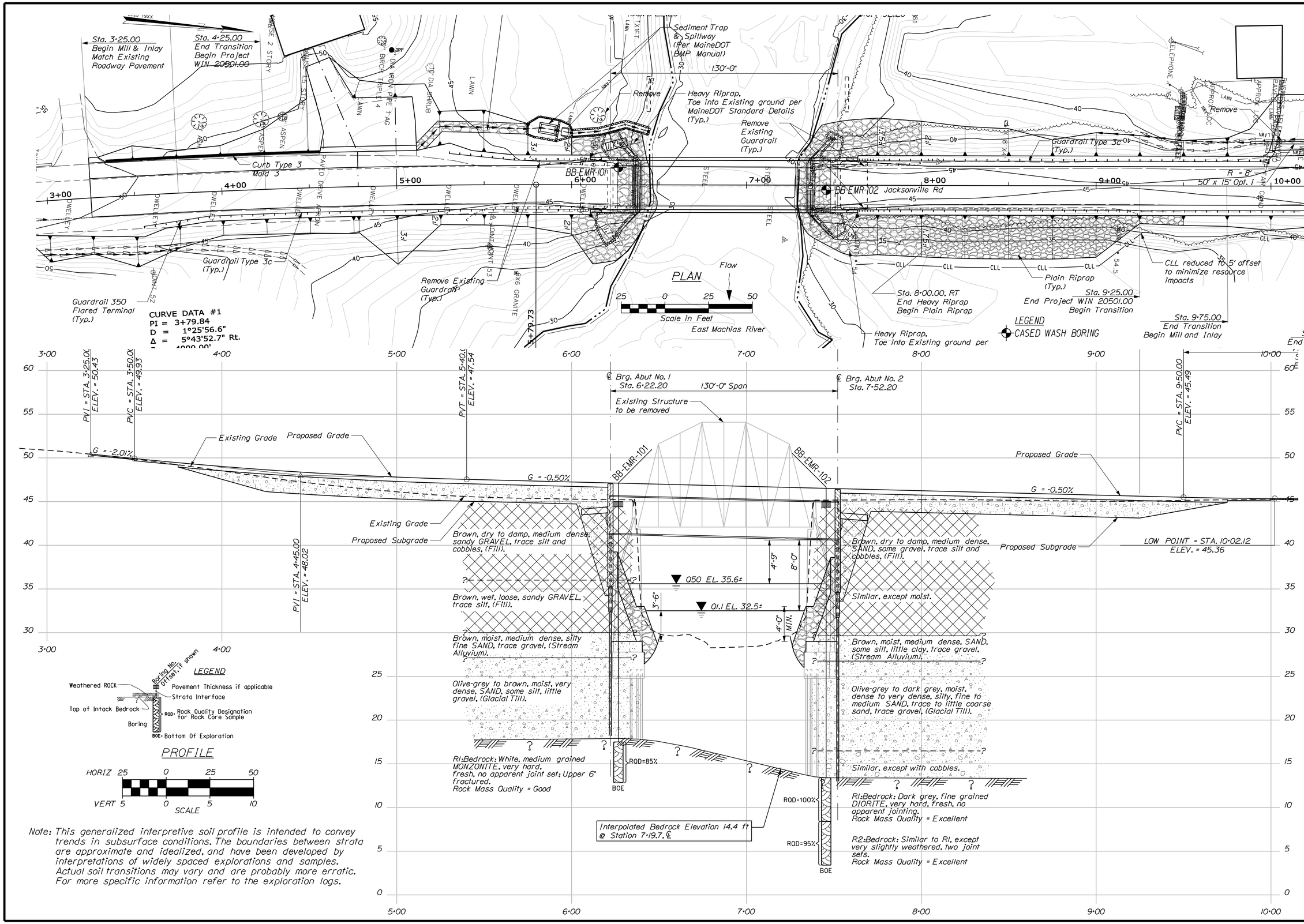


Note: This generalized interpretive soil profile is intended to convey trends in subsurface conditions. The boundaries between strata are approximate and idealized, and have been developed by interpretations of widely spaced explorations and samples. Actual soil transitions may vary and are probably more erratic. For more specific information refer to the exploration logs.

STATE OF MAINE
DEPARTMENT OF TRANSPORTATION

STP-2050(100)

PIN 20501.00

BRIDGE NO. 3219

BRIDGE PLANS

| | BY | DATE |
|---|---|---|
| PROJ. MANAGER | D. ANDERSON | APR 2014 |
| DESIGN-DETAILED | L. KRUSINSKI | T. WHITE |
| CHECKED-REVIEWED | | |
| DESIGN2-DETAILED2 | | |
| DESIGN3-DETAILED3 | | |
| REVISIONS 1 | | |
| REVISIONS 2 | | |
| REVISIONS 3 | | |
| REVISIONS 4 | | |
| FIELD CHANGES | | |

SIGNATURE

P.E. NUMBER

DATE

JACKSONVILLE BRIDGE
EAST MACHIAS RIVER
EAST MACHIAS WASHINGTON COUNTY

BORING LOCATION PLAN &
INTERPRETIVE SUBSURFACE PROFILE

SHEET NUMBER
7
OF 37

Filename: ...\GEOTECH\MSTA\007_BLP&SP1.dgn Division: GEOTECH Username: Laura.Krusinski Date:10/1/2015

Filename: ...\MSTA\008_BORING LOGS1.dgn Division: GEOTECH Username: Laura.Krusinski Date:10/1/2015

# Maine Department of Transportation

Soil/Rock Exploration Log
US CUSTOMARY UNITS

Project: Jacksonville Bridge over East Machias River on Route 191
Location: East Machias, Maine

Boring No.: BB-EMR-101
WIN: 20501.00

| | | | | | |
|---|---|---|---|---|---|
| Driller: | MaineDOT | Elevation (ft.) | 45.0 | Auger ID/OD: | 5" SSA |
| Operator: | C. Mann | Datum: | NAVD 88 | Sampler: | Standard Split Spoon |
| Logged By: | C. Lidstone | Rig Type: | CME 45C | Hammer Wt./Fall: | 140#/30" |
| Date Start/Finish: | 10/7/04-10/7/04 | Drilling Method: | Cased Wash Boring | Core Barrel: | NQ 1.88 in ID |
| Boring Location: | 6+26.8, 9.9 ft Lt. | Casing ID/OD: | HW | Water Level*: | 9.0' bgs. |

Definitions:
D = Split Spoon Sample S = Sample off Auger Flight
MD = Unsuccessful Split Spoon Sample attempt
U = Thin Wall Tube Sample
R = Rock Core Sample
V = Insitu Vane Shear Test
SSA = Solid Stem Auger

Definitions:
$S_u$ = Insitu Field Vane Shear Strength (psf)
$T_v$ = Pocket Torvane Shear Strength (psf)
$q_p$ = Unconfined Compressive Strength (ksf)
$S_{u(lab)}$ = Lab Vane Shear Strength (psf)
WOH = weight of 140lb. hammer
WOR = weight of rods WOC = weight of casing

Definitions:
WC = water content, percent ≥ = Similar or Equal too
LL = Liquid Limit
PL = Plastic Limit
PI = Plasticity Index
G = Grain Size Analysis
C = Consolidation Test

Sample Information

| Depth (ft.) | Sample No. | Pen./Rec. (in.) | Sample Depth (ft.) | Blows (/6 in.) Shear Strength (psf) or Qp (ksf) | N-value | Casing Blows | Elevation (ft.) | Visual Description and Remarks | Laboratory Testing Results/ AASHTO and Unified Class |
|---|---|---|---|---|---|---|---|---|---|
| 0 | | | | | | SSA | 44.40 | 7.2" PAVEMENT. | |
| | | | | | | | | 0.60 Brown, dry, sandy GRAVEL, trace silt and cobbles. (Fill). | |
| 5 | 1D | 24/9 | 5.00 - 7.00 | 9/12/12/13 | 24 | 38 | | Brown, dry to damp, medium dense, sandy GRAVEL, trace silt. (Fill). | |
| | | | | | | 35 | | | |
| | | | | | | 30 | | | |
| | | | | | | 31 | | | |
| | | | | | | 22 | 36.00 | 9.00 Brown, wet, loose, sandy GRAVEL, trace silt. (Fill). | |
| 10 | 2D | 24/1 | 10.00 - 12.00 | 4/3/5/4 | 8 | 15 | | | |
| | | | | | | 13 | | | |
| | | | | | | 12 | | | |
| | | | | | | 13 | | | |
| | | | | | | 11 | 30.00 | 15.00 Brown, moist, medium dense, silty fine SAND, trace gravel, some iron staining. (Stream Alluvium). | |
| 15 | 3D | 24/6 | 15.00 - 17.00 | 7/5/6/4 | 11 | 15 | | | |
| | | | | | | 18 | | | |
| | | | | | | 85 | 27.50 | 17.50 Olive-grey, moist, very dense, fine to coarse SAND, some silt, little gravel, trace clay. (Glacial Till). | GM182502 A-2-4, SC-SM WC=9.5% |
| | | | | | | 117 | | | |
| | | | | | | 120 | | | |
| 20 | 4D | 24/11 | 20.00 - 22.00 | 32/27/29/28 | 56 | 68 | | | |
| | | | | | | 135 | | | |
| | | | | | | 172 | | | |
| | | | | | | 288 | | | |
| | | | | | | OPEN HOLE | | Washed ahead from 24.0-25.0 ft bgs. | |
| 25 | 5D | 18/11 | 25.00 - 26.50 | 31/62/55 | 117 | | | Similar to 4D, except olive-brown. | GM182504 A-4, SC-SM WC=9.7% |
| | | | | | | | | Washed ahead from 25.0-27.5 ft bgs. | |
| | R1 | 56/54 | 27.50 - 32.17 | RQD = 85% | | WOC ND | 17.90 / 17.50 | 27.10 Top of Bedrock at Elev. 17.9 ft. (Roller coned into bedrock from 27.1 to 27.5' bgs. 27.50 R1: Bedrock: White, medium grained, MONZONITE, very hard, fresh, no joint set evident. Upper 6-inches fractured and surfaces oxidized. Rock Mass Quality = Good. Core Times (min:sec) 27.5-28.5 ft (5:09) 28.5-29.5 ft (5:48) 29.5-30.5 ft (4:29) 30.5-31.5 ft (5:02) 31.5-32.17 ft (3:54) 96% Recovery | |
| 30 | | | | | | | 12.83 | 32.17 Bottom of Exploration at 32.17 feet below ground surface. | |
| 35 | | | | | | | | | |
| 40 | | | | | | | | | |
| 45 | | | | | | | | | |
| 50 | | | | | | | | | |

Remarks:
Borings BB-EMR-101 and BB-EMR-102 marked on pavement with white paint for possible location by Survey.

Stratification lines represent approximate boundaries between soil typest transitions may be gradual.
* Water level readings have been made at times and under conditions stated. Groundwater fluctuations may occur due to conditions other than those present at the time measurements were made.

Page 1 of 1
Boring No.: BB-EMR-101

# Maine Department of Transportation

Soil/Rock Exploration Log
US CUSTOMARY UNITS

Project: Jacksonville Bridge over East Machias River on Route 191
Location: East Machias, Maine

Boring No.: BB-EMR-102
WIN: 20501.00

| | | | | | |
|---|---|---|---|---|---|
| Driller: | MaineDOT | Elevation (ft.) | 45.0 | Auger ID/OD: | 5" SSA |
| Operator: | C. Mann | Datum: | NAVD 88 | Sampler: | Standard Split Spoon |
| Logged By: | C. Lidstone | Rig Type: | CME 45C | Hammer Wt./Fall: | 140#/30" |
| Date Start/Finish: | 10/6/04-10/6/04 | Drilling Method: | Cased Wash Boring | Core Barrel: | NQ-1.88" I.D. |
| Boring Location: | 7+45.6, 2.8 ft Rt. | Casing ID/OD: | HW | Water Level*: | 10.0' bgs. |

Definitions:
D = Split Spoon Sample S = Sample off Auger Flight
MD = Unsuccessful Split Spoon Sample attempt
U = Thin Wall Tube Sample
R = Rock Core Sample
V = Insitu Vane Shear Test
SSA = Solid Stem Auger

Definitions:
$S_u$ = Insitu Field Vane Shear Strength (psf)
$T_v$ = Pocket Torvane Shear Strength (psf)
$q_p$ = Unconfined Compressive Strength (ksf)
$S_{u(lab)}$ = Lab Vane Shear Strength (psf)
WOH = weight of 140lb. hammer
WOR = weight of rods WOC = weight of casing

Definitions:
WC = water content, percent ≥ = Similar or Equal too
LL = Liquid Limit
PL = Plastic Limit
PI = Plasticity Index
G = Grain Size Analysis
C = Consolidation Test

Sample Information

| Depth (ft.) | Sample No. | Pen./Rec. (in.) | Sample Depth (ft.) | Blows (/6 in.) Shear Strength (psf) or Qp (ksf) | N-value | Casing Blows | Elevation (ft.) | Visual Description and Remarks | Laboratory Testing Results/ AASHTO and Unified Class |
|---|---|---|---|---|---|---|---|---|---|
| 0 | | | | | | SSA | 44.35 | 7.8" PAVEMENT. | |
| | | | | | | | | 0.65 Brown, dry, fine to coarse SAND, some gravel, trace silt, trace cobbles (Fill). | |
| 5 | 1D | 24/9 | 5.00 - 7.00 | 9/14/13/12 | 27 | 42 | | Brown, dry to damp, medium dense, fine to coarse SAND, some gravel, trace silt. (Fill). | GM182501 A-1-a, SW-SM WC=5.0% |
| | | | | | | 19 | | | |
| | | | | | | 21 | | | |
| | | | | | | 18 | | | |
| | | | | | | 16 | | | |
| 10 | 2D | 24/2 | 10.00 - 12.00 | 7/6/5/5 | 11 | 13 | | Similar to above, but moist. (Fill). | |
| | | | | | | 23 | | | |
| | | | | | | 25 | | | |
| | | | | | | 28 | | | |
| | | | | | | 33 | | | |
| 15 | 3D | 24/11 | 15.00 - 17.00 | 12/10/11/13 | 21 | 21 | 29.80 | 15.20 Brown, moist, medium dense, SAND, some silt, little clay, trace gravel, some iron staining. (Stream Alluvium). | GM182503 A-4, SC-SM WC=13.5% |
| | | | | | | 75 | | | |
| | | | | | | 86 | 27.00 | 18.00 | |
| | | | | | | 143 | | | |
| | | | | | | 148 | | | |
| 20 | 4D | 24/13 | 20.00 - 22.00 | 21/33/33/32 | 66 | 25 | | Olive-grey, moist, very dense, silty fine to medium SAND, trace coarse sand, trace gravel. (Glacial Till). Washed ahead from 20.0-25.0 ft bgs. | |
| | | | | | | 20 | | | |
| | | | | | | 19 | | | |
| | | | | | | 16 | | | |
| | | | | | | 50 | 20.00 | 25.00 | |
| 25 | 5D | 24/4 | 25.00 - 27.00 | 24/23/17/14 | 40 | 76 | | Dark grey, moist, dense, silty fine to medium SAND, little coarse sand, trace gravel, fractured rock fragments. (Glacial Till). | |
| | | | | | | 78 | | | |
| | | | | | | 62 | | | |
| | | | | | | 117 | 16.50 | 28.50 Similar to above, with cobbles. (Glacial Till). Washed ahead from 30.0-31.6 ft bgs. | |
| | | | | | | 310 | | | |
| 30 | MD | 1/0 | 30.00 - 30.08 | 53(1") | --- | 178 | | 9100 blows for 0.6 ft. | |
| | R1 | 60/60 | 31.60 - 36.60 | RQD = 100% | | 9100 ND | 13.40 | 31.60 Top of Bedrock at Elev. 13.4 ft. R1:Bedrock: Dark grey, fine grained DIORITE, very hard, fresh, no apparent joint set. Rock Mass Quality = Excellent. R1:Core Times (min:sec) 31.6-32.6 ft (6:48) 32.6-33.6 ft (4:45) 33.6-34.6 ft (5:09) 34.6-35.6 ft (4:32) 35.6-36.6 ft (4:47) 100% Recovery | |
| 35 | | | | | | | | | |
| | R2 | 60/58 | 36.60 - 41.60 | RQD = 95% | | | | R2: Similar to R1, except very slighty weathered, two joint sets, chlorite on joint surfaces. Rock Mass Quality = Excellent. Core Times (min:sec) 36.6-37.6 ft (3:33) 37.6-38.6 ft (3:20) 38.6-39.6 ft (3:29) 39.6-40.6 ft (3:16) 40.6-41.6 ft (3:14) 98% Recovery | |
| 40 | | | | | | | 3.40 | 41.60 Bottom of Exploration at 41.60 feet below ground surface. | |
| 45 | | | | | | | | | |
| 50 | | | | | | | | | |

Remarks:
Borings BB-EMR-101 and BB-EMR-102 marked on pavement with white paint for possible location by Survey.

Stratification lines represent approximate boundaries between soil typest transitions may be gradual.
* Water level readings have been made at times and under conditions stated. Groundwater fluctuations may occur due to conditions other than those present at the time measurements were made.

Page 1 of 1
Boring No.: BB-EMR-102

STATE OF MAINE
DEPARTMENT OF TRANSPORTATION

STP-2050(100)

PIN 20501.00

BRIDGE NO. 3219

BRIDGE PLANS

| | | BY | DATE |
|---|---|---|---|
| PROJ. MANAGER | D. ANDERSON | | |
| DESIGN-DETAILED | L. KRUSINSKI | T. WHITE | OCT 2014 |
| CHECKED-REVIEWED | | | |
| DESIGN2-DETAILED2 | | | |
| DESIGN3-DETAILED3 | | | |
| REVISIONS 1 | | | |
| REVISIONS 2 | | | |
| REVISIONS 3 | | | |
| REVISIONS 4 | | | |
| FIELD CHANGES | | | |

SIGNATURE

P.E. NUMBER

DATE

JACKSONVILLE BRIDGE
EAST MACHIAS RIVER
EAST MACHIAS WASHINGTON COUNTY

BORING LOGS

SHEET NUMBER
8
OF 37

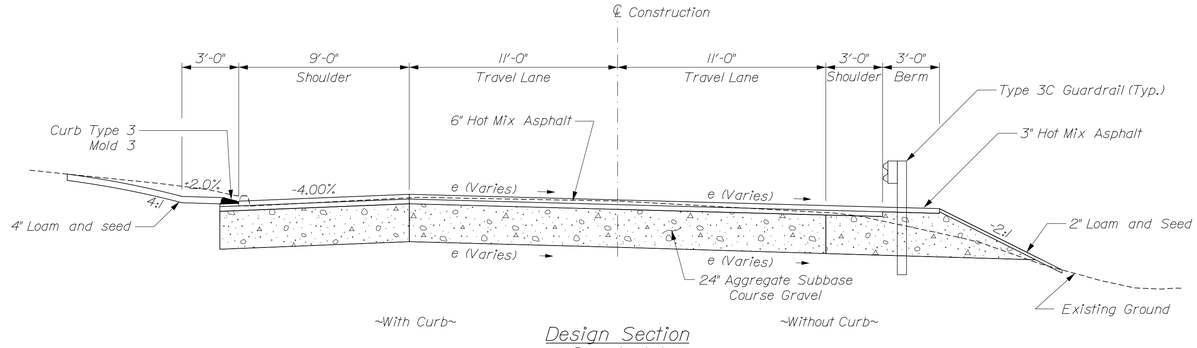


Design Section
Superelevated

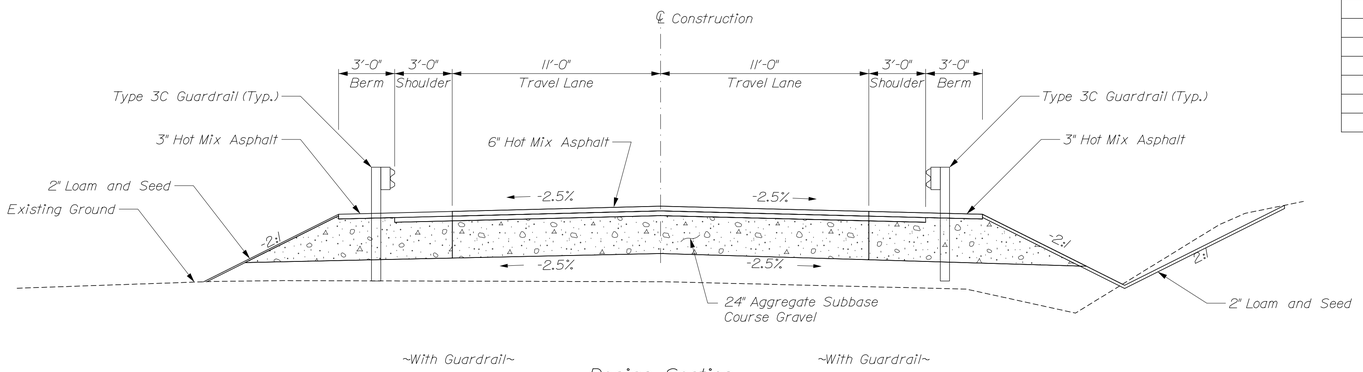


Design Section
Normal Crown

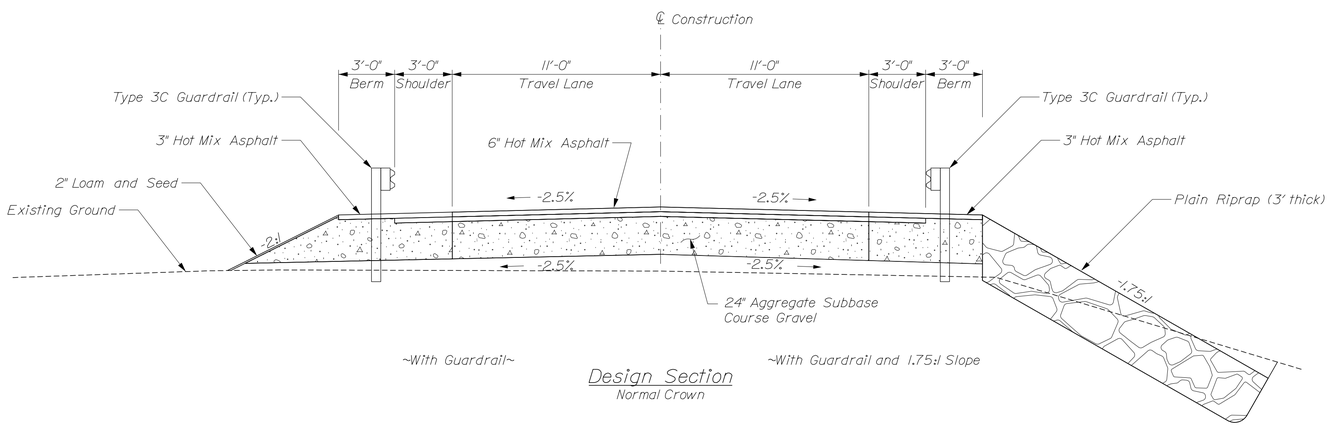


Design Section
Normal Crown

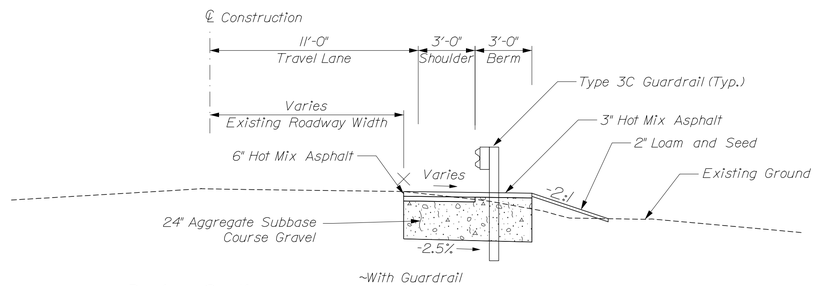


Design Section
Shoulder Widening Right

| Route 191 Super (e) | | | | |
|---|---|---|---|---|
| Left % Shoulder | Left % Travelway | Station | Right % Travelway | Right % Shoulder |
| - | - | 3+00 | - | -4.73 |
| -5.15 | +1.93 | 3+25 | -5.36 | -5.36 |
| -4.00 | +2.70 | 3+50 | -4.48 | -4.48 |
| -4.00 | +2.70 | 3+75 | -3.59 | -3.59 |
| -4.00 | +2.70 | 4+00 | -2.70 | -2.70 |
| | Full Super | To | Full Super | |
| -4.00 | +2.70 | 5+50 | -2.70 | -2.70 |
| -1.30 | +2.05 | 5+75 | -2.50 | -2.50 |
| +1.40 | +1.40 | 6+00 | -2.50 | -2.50 |
| +0.75 | +0.75 | 6+25 | -2.50 | -2.50 |
| +0.10 | +0.10 | 6+50 | -2.50 | -2.50 |
| -0.55 | -0.55 | 6+75 | -2.50 | -2.50 |
| -1.20 | -1.20 | 7+00 | -2.50 | -2.50 |
| -1.85 | -1.85 | 7+25 | -2.50 | -2.50 |
| -2.50 | -2.50 | 7+50 | -2.50 | -2.50 |
| | Normal Crown | To | Normal Crown | |
| -2.50 | -2.50 | 10+25 | -2.50 | -2.50 |
| -2.53 | - | 10+50 | - | -3.15 |
| - | - | 10+75 | - | -3.12 |
| - | - | 11+00 | - | -2.30 |
| - | - | 11+25 | - | -2.11 |
| - | - | 11+50 | - | -1.36 |
| - | - | 11+75 | - | -0.82 |
| - | - | 12+00 | - | -0.28 |

Notes:
1. The pavement, base and subbase depths as shown on the plans are intended to be nominal.

2. When superelevation exceeds the slope of the low side shoulder, the low side shoulders pavement shall have the same cross slope as the travel way.

3. Crowns for both normal and superelevation sections for all courses of subbase and pavement shall be straight.

4. The algebraic difference between shoulder and travel lane cross slopes "rollover" shall not exceed 8%.

STATE OF MAINE
DEPARTMENT OF TRANSPORTATION

STP-2050(100)

WIN 20501.00

BRIDGE NO. 3219

BRIDGE PLANS

| PROJ. MANAGER | Andy Lathe | | BY | DATE |
|---|---|---|---|---|
| DESIGN-DETAILED | R.Hanf | | R.Hanf | 10\15 |
| CHECKED-REVIEWED | R.Hanf | | T.Cote | 10\15 |
| DESIGN2-DETAILED2 | - | | - | - |
| DESIGN3-DETAILED3 | - | | - | - |
| REVISIONS 1 | - | | - | - |
| REVISIONS 2 | - | | - | - |
| REVISIONS 3 | - | | - | - |
| REVISIONS 4 | - | | - | - |
| FIELD CHANGES | - | | - | - |

SIGNATURE

P.E. NUMBER

DATE

JACKSONVILLE BRIDGE
EAST MACHIAS RIVER
EAST MACHIAS WASHINGTON COUNTY

TYPICAL SECTIONS

SHEET NUMBER
9
OF 37

Filename: 009_Typ.dgn Division: Username: Date:11/5/2015

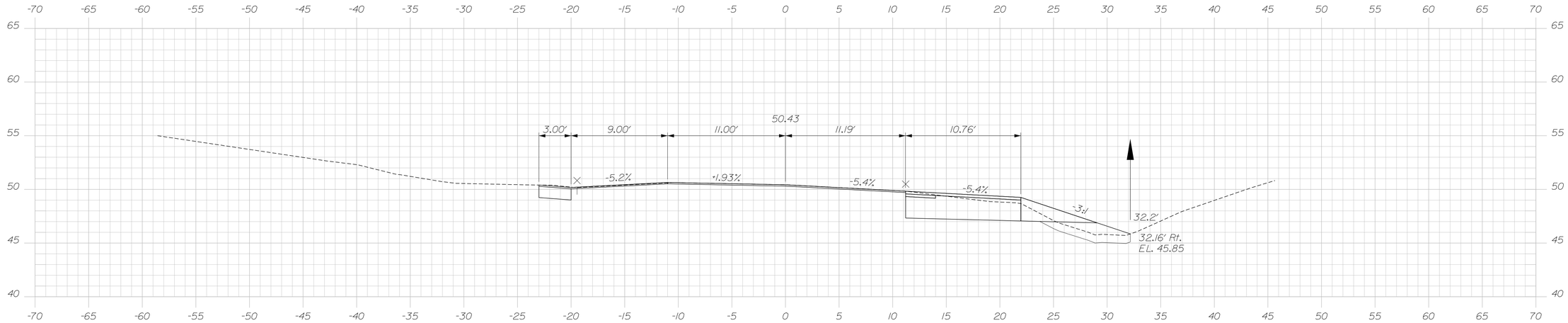


3+25.00

Sta. 3+25.00
Begin Mill and Inlay
Match Existing Roadway Pavement

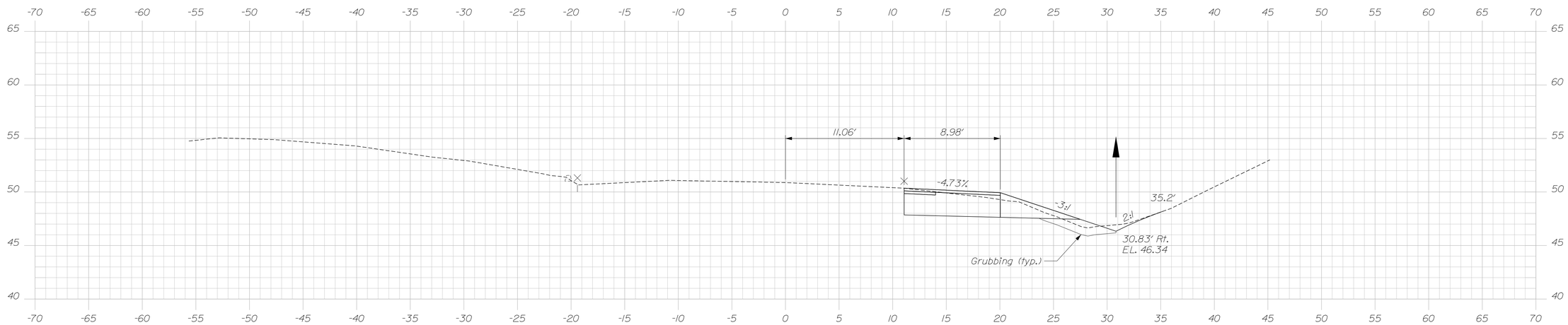


3+00.00

Sta. 2+84.40
Begin Shoulder Widening, Rt.
Match Existing Shoulder
Limit of Work

Sta. 2+84.4 to Sta. 3+75.0
Install Erosion Control Blanket
(4' wide for Ditchline)

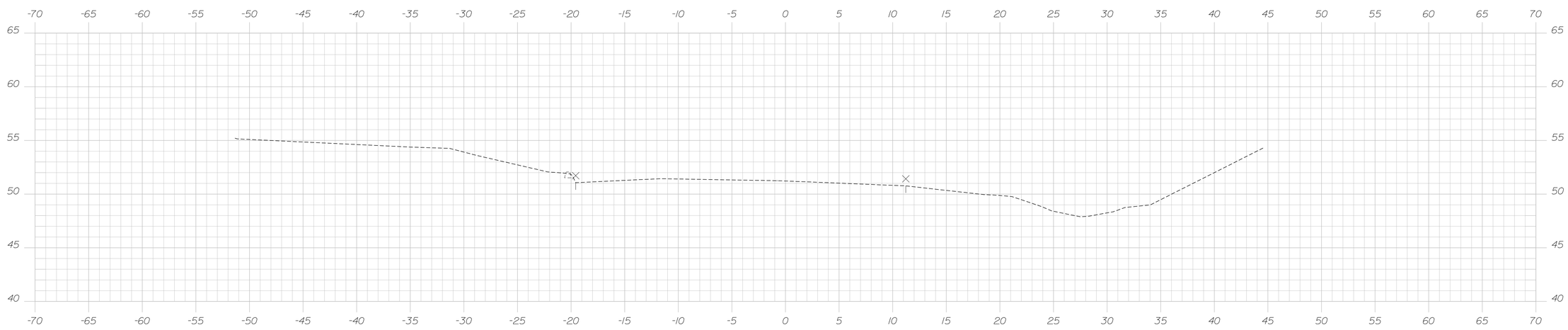

2+75.00

STATE OF MAINE
DEPARTMENT OF TRANSPORTATION

STP-2050(100)

WIN 20501.00

BRIDGE NO. 3219

BRIDGE PLANS

| | | BY | DATE |
|---|---|---|---|
| PROJ. MANAGER | Andy Lathe | | |
| DESIGN-DETAILED | R.Hanf | R.Hanf | 10\15 |
| CHECKED-REVIEWED | - | T.Cote | 10\15 |
| DESIGN2-DETAILED2 | - | - | - |
| DESIGN3-DETAILED3 | - | - | - |
| REVISIONS 1 | - | | - |
| REVISIONS 2 | - | | - |
| REVISIONS 3 | - | | - |
| REVISIONS 4 | - | | - |
| FIELD CHANGES | - | | - |

SIGNATURE

P.E. NUMBER

DATE

JACKSONVILLE BRIDGE
EAST MACHIAS RIVER
EAST MACHIAS WASHINGTON COUNTY

CROSS SECTIONS

SHEET NUMBER

10

OF 37

Date:11/5/2015

Username:

Division:

Filename: Xsect.dgn

Sta. 2+75.00 to Sta. 3+25.00

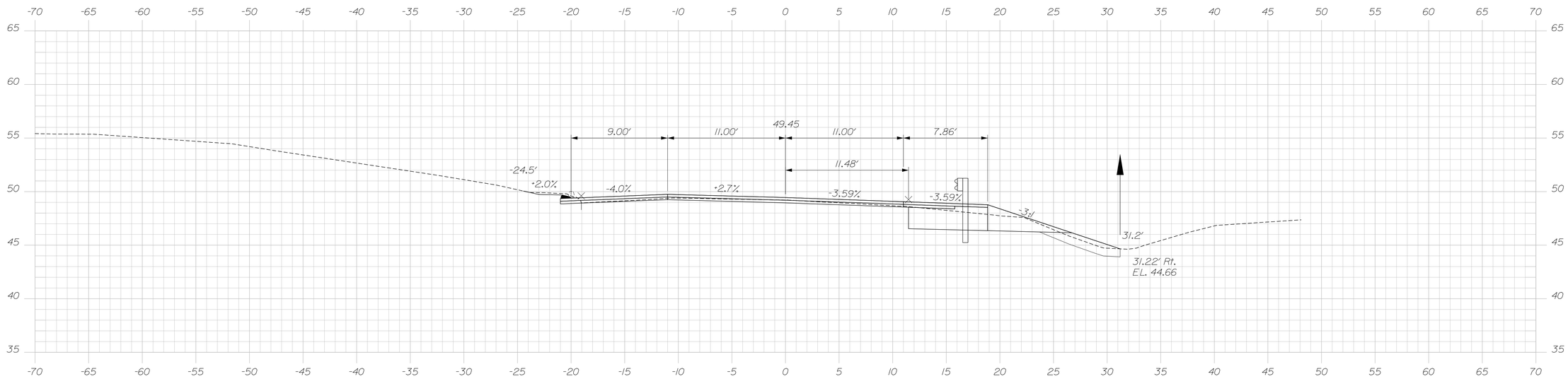


3+75.00

Sta. 3+75.00
End Mill and Inlay
Begin Transition

Sta. 3+54.40 to Sta. 3+91.90
Install Guardrail 350 Flared Terminal

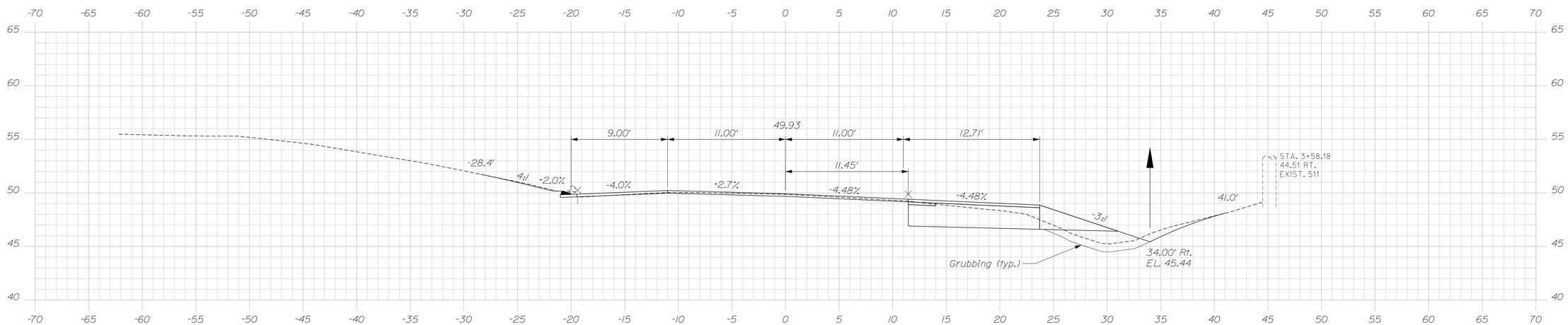


Sta. 3+34.59 to Sta. 4+56.61, Lt.
Install 122.62 LF Curb Type 3 Mold 3

3+50.00

Sta. 3+50.00 to Sta. 3+75.00

STATE OF MAINE
DEPARTMENT OF TRANSPORTATION

STP-2050(100)

WIN 20501.00

BRIDGE NO. 3219

BRIDGE PLANS

| | | BY | DATE |
|---|---|---|---|
| PROJ. MANAGER | Andy Lathe | | |
| DESIGN-DETAILED | R.Hanf | R.Hanf | 10\15 |
| CHECKED-REVIEWED | - | T.Cote | 10\15 |
| DESIGN2-DETAILED2 | - | - | - |
| DESIGN3-DETAILED3 | - | - | - |
| REVISIONS 1 | - | | - |
| REVISIONS 2 | - | | - |
| REVISIONS 3 | - | | - |
| REVISIONS 4 | - | | - |
| FIELD CHANGES | - | | - |

SIGNATURE

P.E. NUMBER

DATE

JACKSONVILLE BRIDGE
EAST MACHIAS RIVER
EAST MACHIAS WASHINGTON COUNTY

CROSS SECTIONS

SHEET NUMBER

11

OF 37

Date:11/5/2015

Username:

Division:

Filename: Xsect.dgn

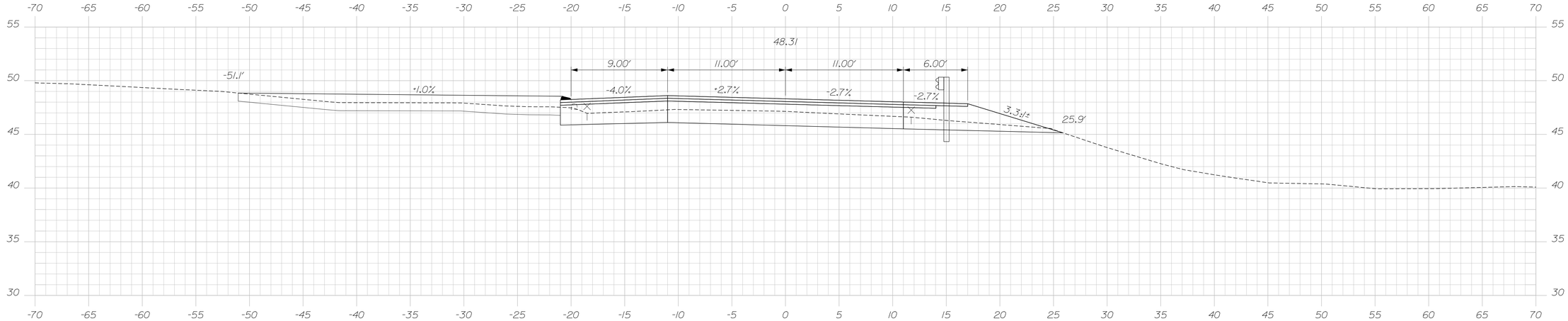


4+50.00

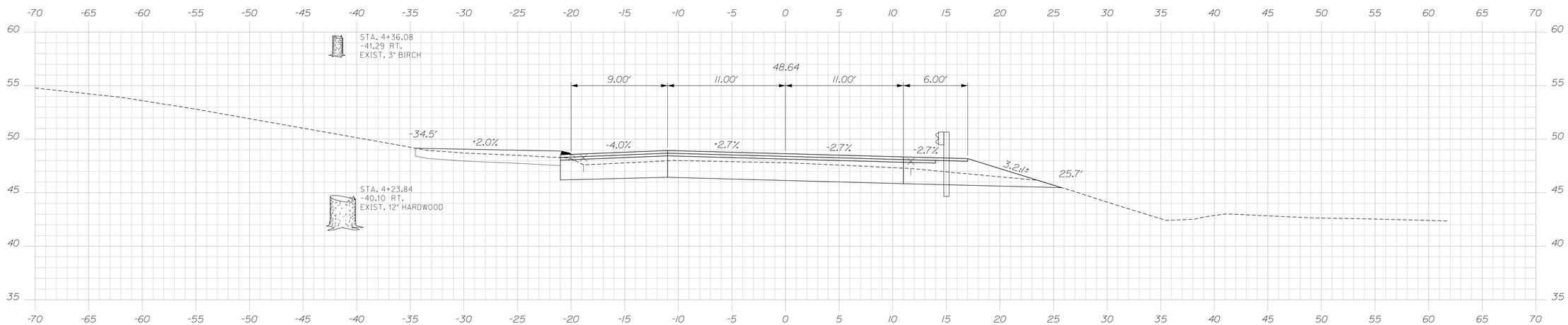


4+25.00

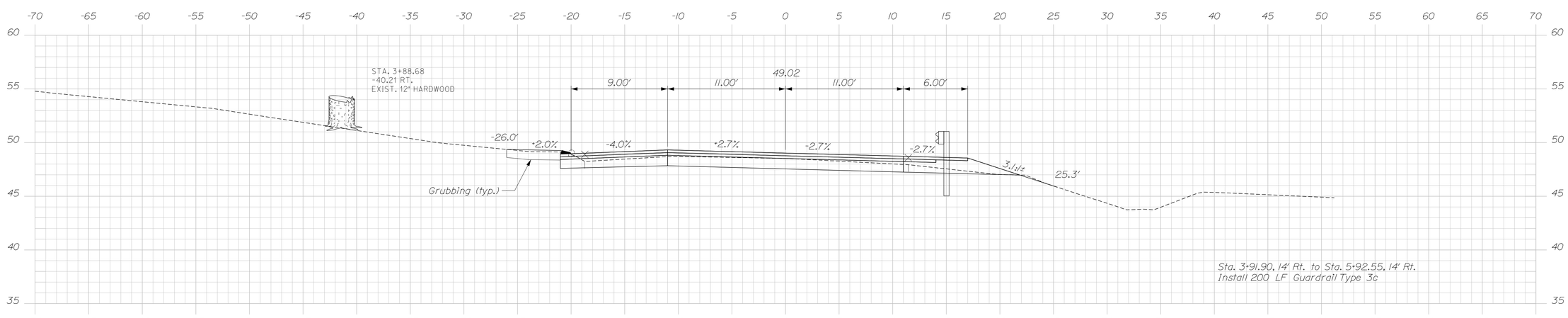


4+00.00

STATE OF MAINE
DEPARTMENT OF TRANSPORTATION

STP-2050(100)

WIN 20501.00

BRIDGE NO. 3219

BRIDGE PLANS

| | | | |
|---|---|---|---|
| PROJ. MANAGER | Andy Lathe | BY | DATE |
| DESIGN-DETAILED | R.Hanf | R.Hanf | 10\15 |
| CHECKED-REVIEWED | - | T.Cote | 10\15 |
| DESIGN2-DETAILED2 | - | - | - |
| DESIGN3-DETAILED3 | - | - | - |
| REVISIONS 1 | - | | - |
| REVISIONS 2 | - | | - |
| REVISIONS 3 | - | | - |
| REVISIONS 4 | - | | - |
| FIELD CHANGES | - | | - |

SIGNATURE

P.E. NUMBER

DATE

JACKSONVILLE BRIDGE
EAST MACHIAS RIVER
EAST MACHIAS WASHINGTON COUNTY

CROSS SECTIONS

SHEET NUMBER

12

OF 37

Date:11/5/2015

Username:

Division:

Filename: Xsect.dgn

Sta. 4+00.00 to Sta. 4+50.00

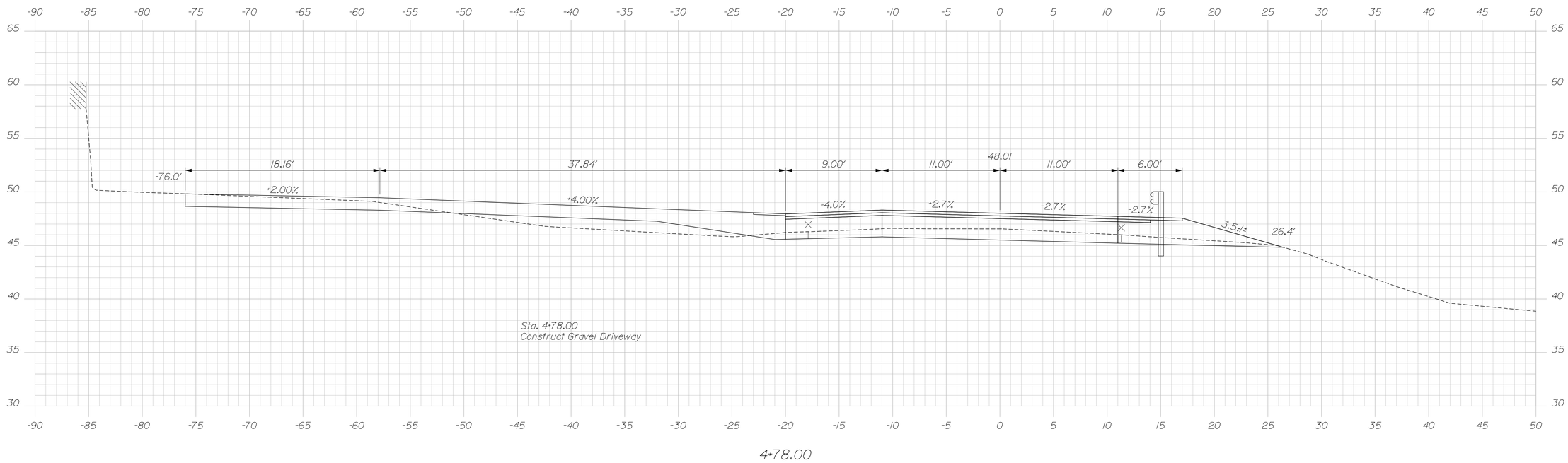


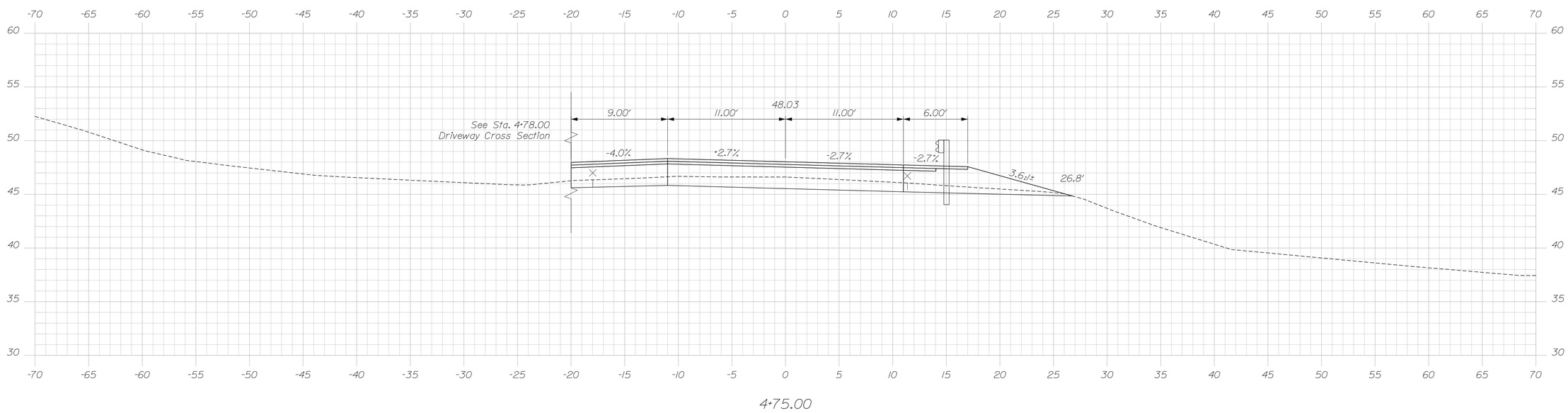


STATE OF MAINE
DEPARTMENT OF TRANSPORTATION

STP-2050(100)

WIN 20501.00

BRIDGE NO. 3219

BRIDGE PLANS

| | | BY | DATE |
|---|---|---|---|
| PROJ. MANAGER | Andy Lathe | | |
| DESIGN-DETAILED | R.Hanf | R.Hanf | 10\15 |
| CHECKED-REVIEWED | - | T.Cote | 10\15 |
| DESIGN2-DETAILED2 | - | - | - |
| DESIGN3-DETAILED3 | - | - | - |
| REVISIONS 1 | - | | - |
| REVISIONS 2 | - | | - |
| REVISIONS 3 | - | | - |
| REVISIONS 4 | - | | - |
| FIELD CHANGES | - | | - |

SIGNATURE

P.E. NUMBER

DATE

JACKSONVILLE BRIDGE
EAST MACHIAS RIVER
EAST MACHIAS WASHINGTON COUNTY

CROSS SECTIONS

SHEET NUMBER

13

OF 37

Sta. 4+75.00 to Sta. 4+78.00

Date:11/5/2015

Username:

Division:

Filename: Xsect.dgn

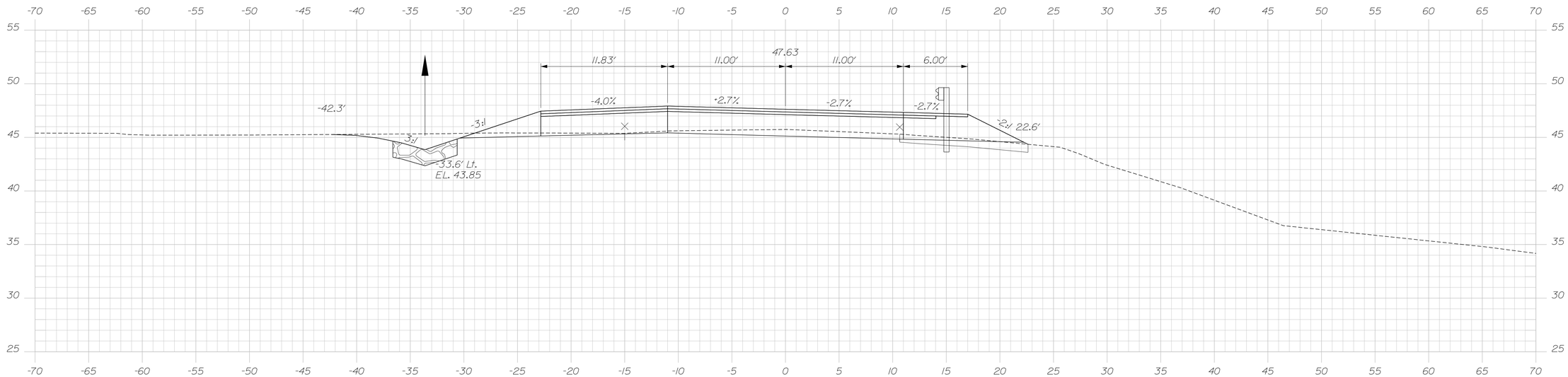


Sta. 5+11.64 to Sta. 5+75, Lt.
Install Stone Ditch Protection

5+25.00

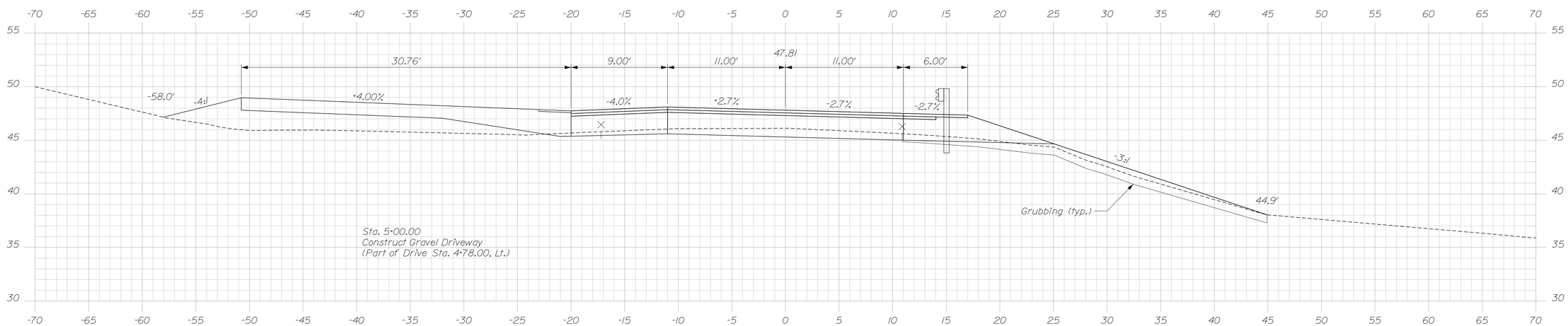


Sta. 5+00.00
Construct Gravel Driveway
(Part of Drive Sta. 4+78.00, Lt.)

5+00.00

STATE OF MAINE
DEPARTMENT OF TRANSPORTATION

STP-2050(100)

WIN 20501.00

BRIDGE NO. 3219 BRIDGE PLANS

| | | BY | DATE |
|---|---|---|---|
| PROJ. MANAGER | Andy Lathe | | |
| DESIGN-DETAILED | R.Hanf | R.Hanf | 10\15 |
| CHECKED-REVIEWED | - | T.Cote | 10\15 |
| DESIGN2-DETAILED2 | - | - | - |
| DESIGN3-DETAILED3 | - | - | - |
| REVISIONS 1 | - | | - |
| REVISIONS 2 | - | | - |
| REVISIONS 3 | - | | - |
| REVISIONS 4 | - | | - |
| FIELD CHANGES | - | | - |

SIGNATURE

P.E. NUMBER

DATE

JACKSONVILLE BRIDGE
EAST MACHIAS RIVER
EAST MACHIAS WASHINGTON COUNTY

CROSS SECTIONS

SHEET NUMBER

14

OF 37

Date:11/5/2015

Username:

Division:

Filename: Xsect.dgn

Sta. 5+00.00 to Sta. 5+25.00

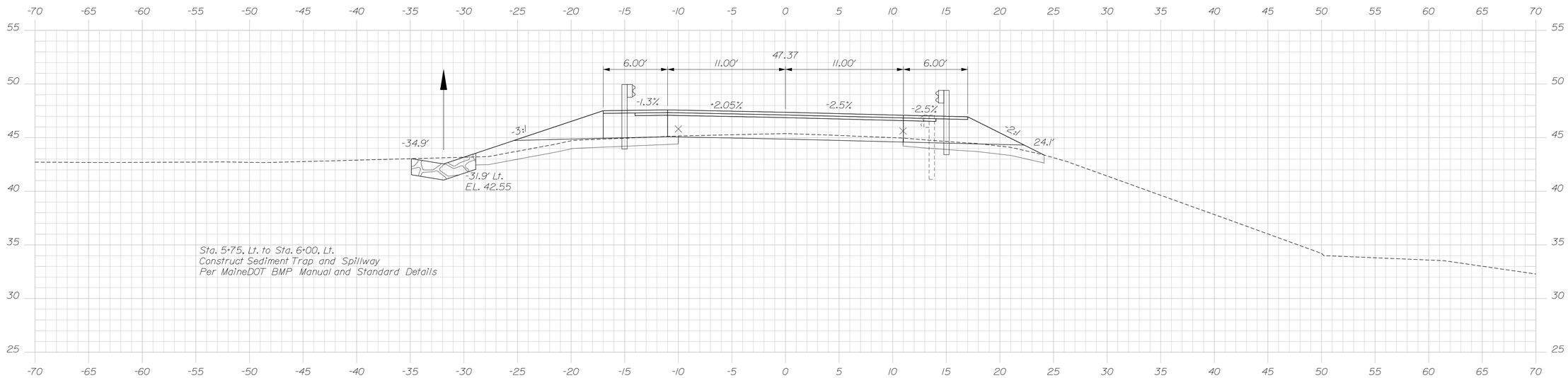


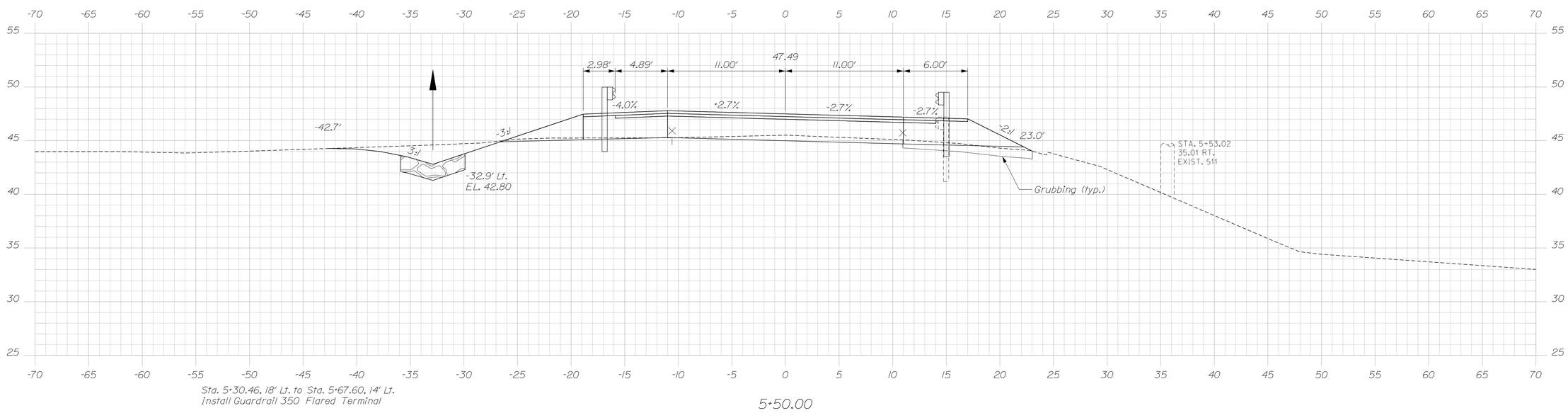


STATE OF MAINE
DEPARTMENT OF TRANSPORTATION

**STP-2050(100)**

**WIN 20501.00**

BRIDGE NO. 3219 BRIDGE PLANS

| | | BY | DATE |
|---|---|---|---|
| PROJ. MANAGER | Andy Lathe | | |
| DESIGN-DETAILED | R.Hanf | R.Hanf | 10\15 |
| CHECKED-REVIEWED | - | T.Cote | 10\15 |
| DESIGN2-DETAILED2 | - | - | - |
| DESIGN3-DETAILED3 | - | - | - |
| REVISIONS 1 | - | | - |
| REVISIONS 2 | - | | - |
| REVISIONS 3 | - | | - |
| REVISIONS 4 | - | | - |
| FIELD CHANGES | - | | - |

SIGNATURE

P.E. NUMBER

DATE

JACKSONVILLE BRIDGE
EAST MACHIAS RIVER
EAST MACHIAS WASHINGTON COUNTY

# CROSS SECTIONS

SHEET NUMBER

15

OF 37

Sta. 5+50.00 to Sta. 5+75.00

Date:11/5/2015

Username:

Division:

Filename: Xsect.dgn

Username: Date:11/5/2015

Division:

Filename: Xsect.dgn

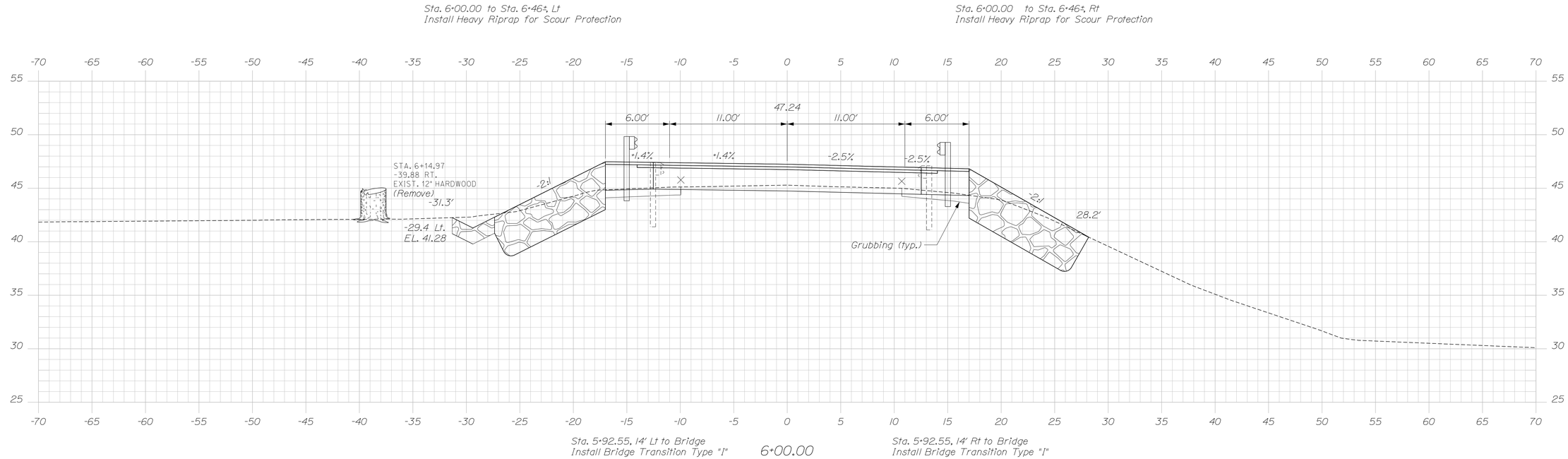


| PROJ. MANAGER | Andy Lathe | BY | DATE |
|---|---|---|---|
| DESIGN-DETAILED | R.Hanf | R.Hanf | 10\15 |
| CHECKED-REVIEWED | - | T.Cote | 10\15 |
| DESIGN2-DETAILED2 | - | - | - |
| DESIGN3-DETAILED3 | - | - | - |
| REVISIONS 1 | - | | - |
| REVISIONS 2 | - | | - |
| REVISIONS 3 | - | | - |
| REVISIONS 4 | - | | - |
| FIELD CHANGES | - | | - |

SIGNATURE

P.E. NUMBER

DATE

STATE OF MAINE
DEPARTMENT OF TRANSPORTATION

**STP-2050(100)**

**WIN 20501.00**

BRIDGE NO. 3219 BRIDGE PLANS

JACKSONVILLE BRIDGE
EAST MACHIAS RIVER
EAST MACHIAS WASHINGTON COUNTY

# CROSS SECTIONS

SHEET NUMBER

16

OF 37

Sta. 6+00.00 to Sta. 6+25.00

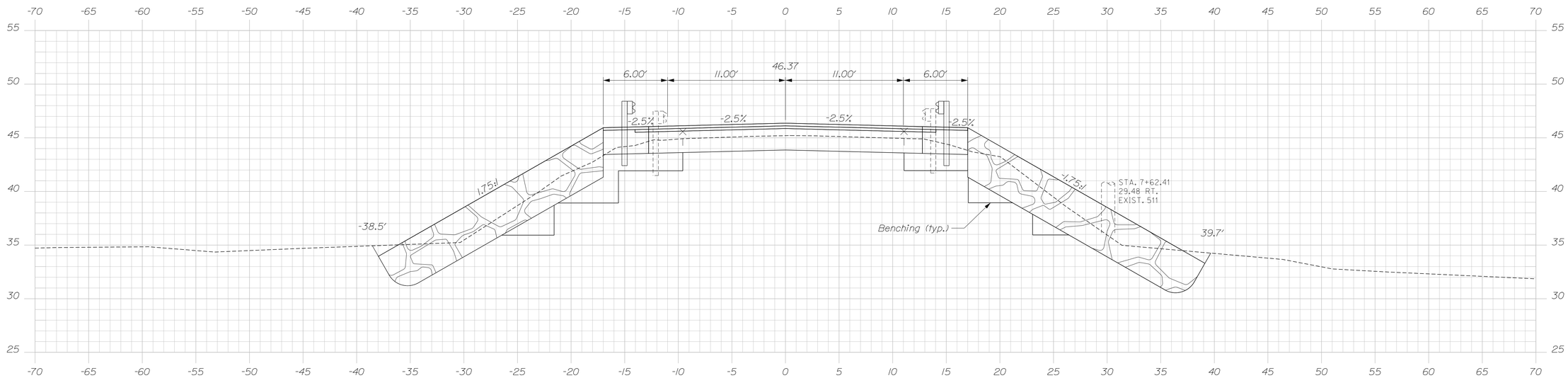


Bridge to Sta. 7+81.85, 14' Lt.
Install Bridge Transition Type "I"

Sta. 7+29± to Sta. 8+00.00, Lt
Install Heavy Riprap for Scour Protection

7+75.00

Bridge to Sta. 7+81.85, 14' Rt.
Install Bridge Transition Type "I"

Sta. 7+29± to Sta. 8+00.00, Rt
Install Heavy Riprap for Scour Protection

STATE OF MAINE
DEPARTMENT OF TRANSPORTATION

STP-2050(100)

WIN 20501.00

BRIDGE NO. 3219

BRIDGE PLANS

| | | BY | DATE |
|---|---|---|---|
| PROJ. MANAGER | Andy Lathe | | |
| DESIGN-DETAILED | R.Hanf | R.Hanf | 10\15 |
| CHECKED-REVIEWED | - | T.Cote | 10\15 |
| DESIGN2-DETAILED2 | - | - | - |
| DESIGN3-DETAILED3 | - | - | - |
| REVISIONS 1 | - | | - |
| REVISIONS 2 | - | | - |
| REVISIONS 3 | - | | - |
| REVISIONS 4 | - | | - |
| FIELD CHANGES | - | | - |

SIGNATURE

P.E. NUMBER

DATE

JACKSONVILLE BRIDGE
EAST MACHIAS RIVER
EAST MACHIAS WASHINGTON COUNTY

CROSS SECTIONS

SHEET NUMBER

17

OF 37

Date:11/5/2015

Username:

Division:

Filename: Xsect.dgn

Sta. 7+50.00 to Sta. 7+75.00

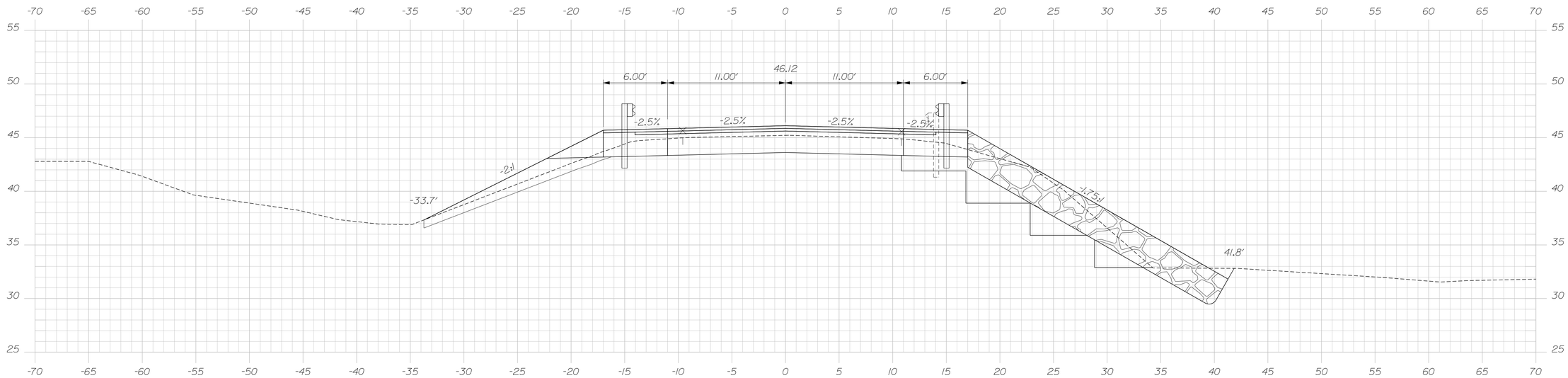


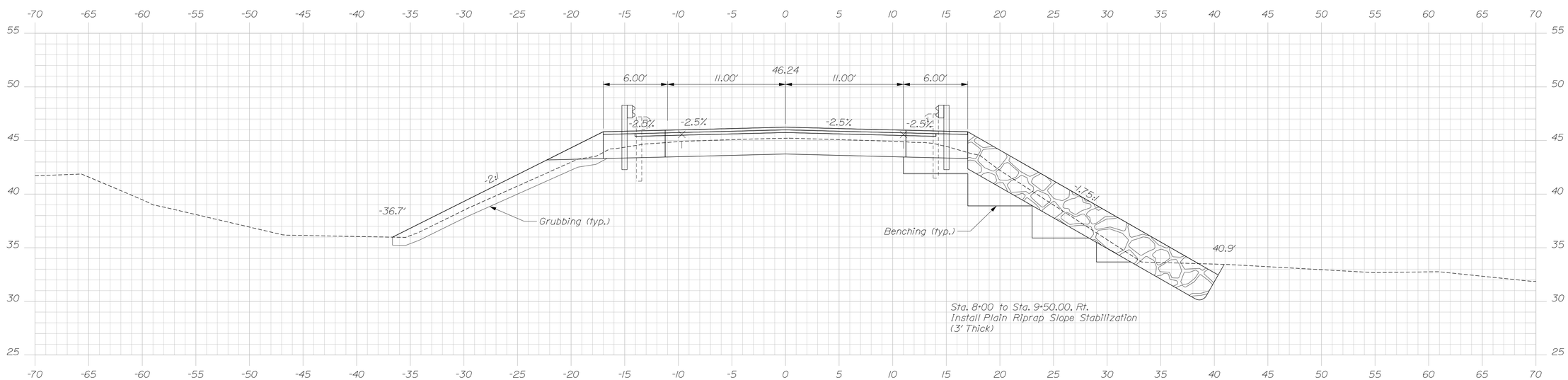


STATE OF MAINE
DEPARTMENT OF TRANSPORTATION

**STP-2050(100)**

**WIN 20501.00**

BRIDGE NO. 3219 BRIDGE PLANS

| | | BY | DATE |
|---|---|---|---|
| PROJ. MANAGER | Andy Lathe | | |
| DESIGN-DETAILED | R.Hanf | R.Hanf | 10\15 |
| CHECKED-REVIEWED | - | T.Cote | 10\15 |
| DESIGN2-DETAILED2 | - | - | - |
| DESIGN3-DETAILED3 | - | - | - |
| REVISIONS 1 | - | | - |
| REVISIONS 2 | - | | - |
| REVISIONS 3 | - | | - |
| REVISIONS 4 | - | | - |
| FIELD CHANGES | - | | - |

SIGNATURE

P.E. NUMBER

DATE

JACKSONVILLE BRIDGE
EAST MACHIAS RIVER
EAST MACHIAS WASHINGTON COUNTY

# CROSS SECTIONS

SHEET NUMBER

18

OF 37

Sta. 8+00.00 to Sta. 8+25.00

Date:11/5/2015

Username:

Division:

Filename: Xsect.dgn

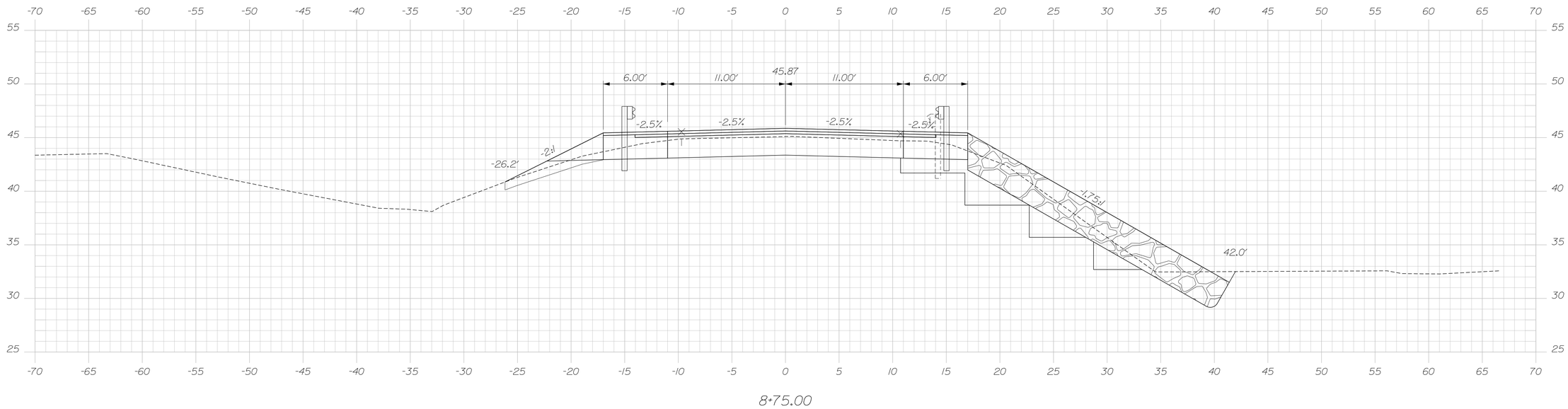


8+75.00

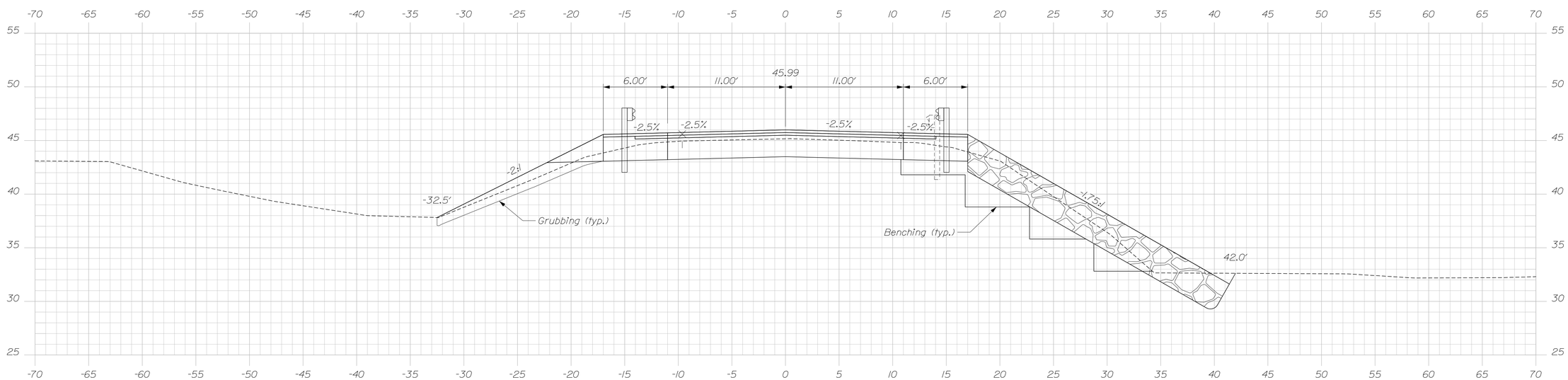


8+50.00

Sta. 8+50.00 to Sta. 8+75.00

STATE OF MAINE
DEPARTMENT OF TRANSPORTATION

STP-2050(100)

WIN 20501.00

BRIDGE NO. 3219

BRIDGE PLANS

| PROJ. MANAGER | Andy Lathe | BY | DATE |
|---|---|---|---|
| DESIGN-DETAILED | R.Hanf | R.Hanf | 10\15 |
| CHECKED-REVIEWED | - | T.Cote | 10\15 |
| DESIGN2-DETAILED2 | - | - | - |
| DESIGN3-DETAILED3 | - | - | - |
| REVISIONS 1 | - | | - |
| REVISIONS 2 | - | | - |
| REVISIONS 3 | - | | - |
| REVISIONS 4 | - | | - |
| FIELD CHANGES | - | | - |

SIGNATURE

P.E. NUMBER

DATE

JACKSONVILLE BRIDGE
EAST MACHIAS RIVER
EAST MACHIAS WASHINGTON COUNTY

CROSS SECTIONS

SHEET NUMBER

19

OF 37

Filename: Xsect.dgn Division: Username: Date:11/5/2015

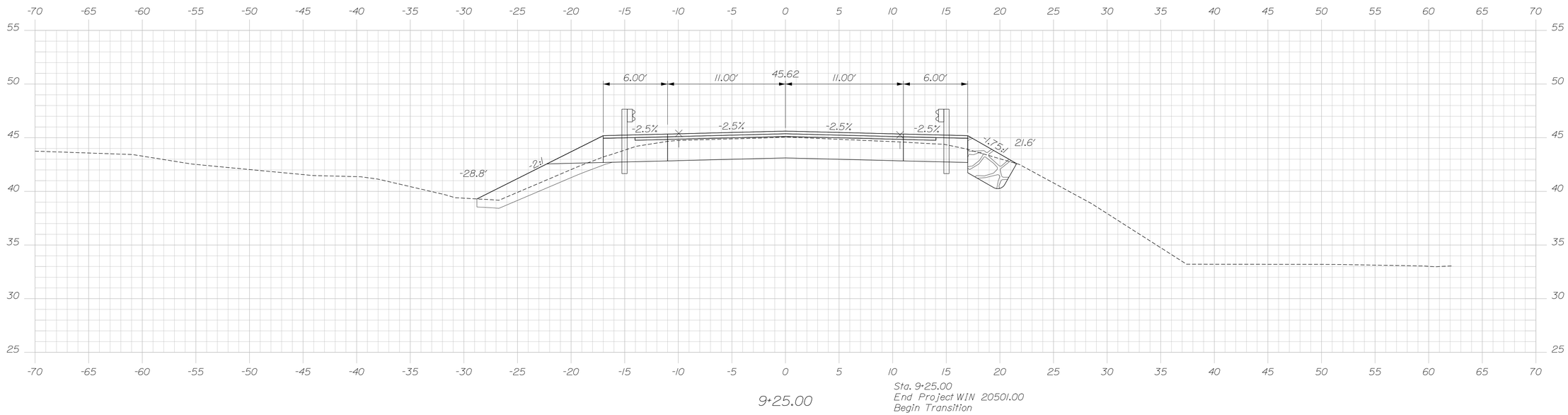


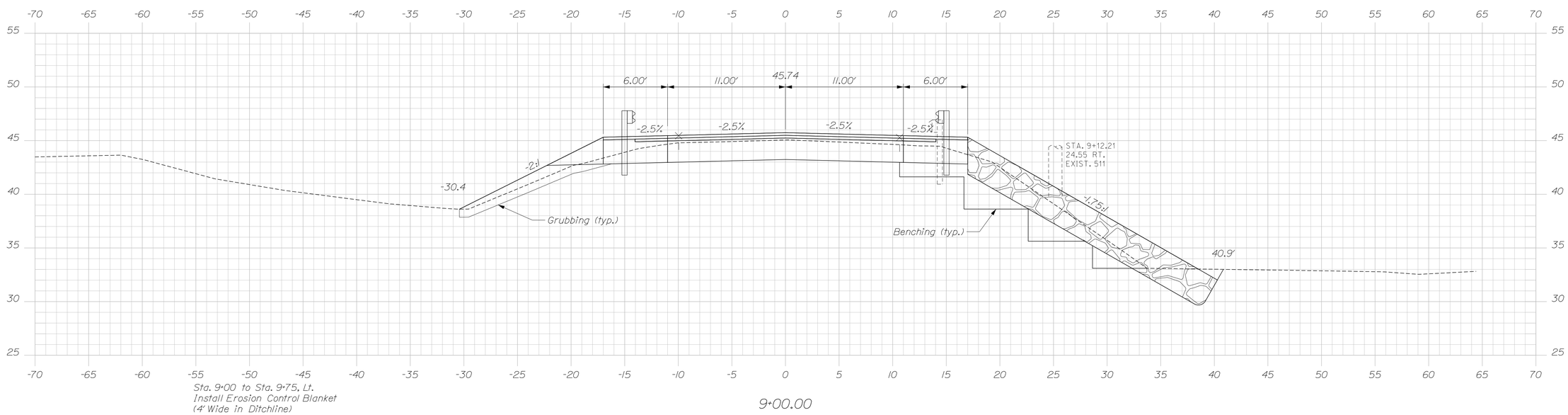


STATE OF MAINE
DEPARTMENT OF TRANSPORTATION

**STP-2050(100)**

**WIN 20501.00**

BRIDGE NO. 3219 BRIDGE PLANS

| PROJ. MANAGER | Andy Lathe | BY | DATE |
|---|---|---|---|
| DESIGN-DETAILED | R.Hanf | R.Hanf | 10\15 |
| CHECKED-REVIEWED | - | T.Cote | 10\15 |
| DESIGN2-DETAILED2 | - | - | - |
| DESIGN3-DETAILED3 | - | - | - |
| REVISIONS 1 | - | | - |
| REVISIONS 2 | - | | - |
| REVISIONS 3 | - | | - |
| REVISIONS 4 | - | | - |
| FIELD CHANGES | - | | - |

SIGNATURE

P.E. NUMBER

DATE

JACKSONVILLE BRIDGE
EAST MACHIAS RIVER
EAST MACHIAS WASHINGTON COUNTY

# CROSS SECTIONS

SHEET NUMBER

20

OF 37

Sta. 9+00.00 to Sta. 9+25.00

Date:11/5/2015 Username: Division: Filename: Xsect.dgn

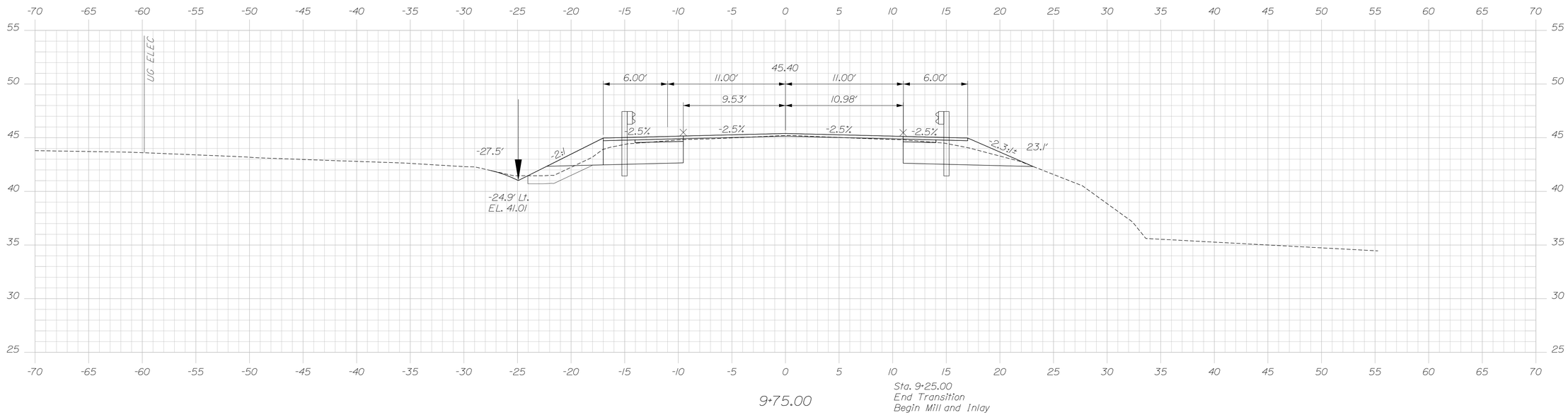


9+75.00

Sta. 9+25.00
End Transition
Begin Mill and Inlay

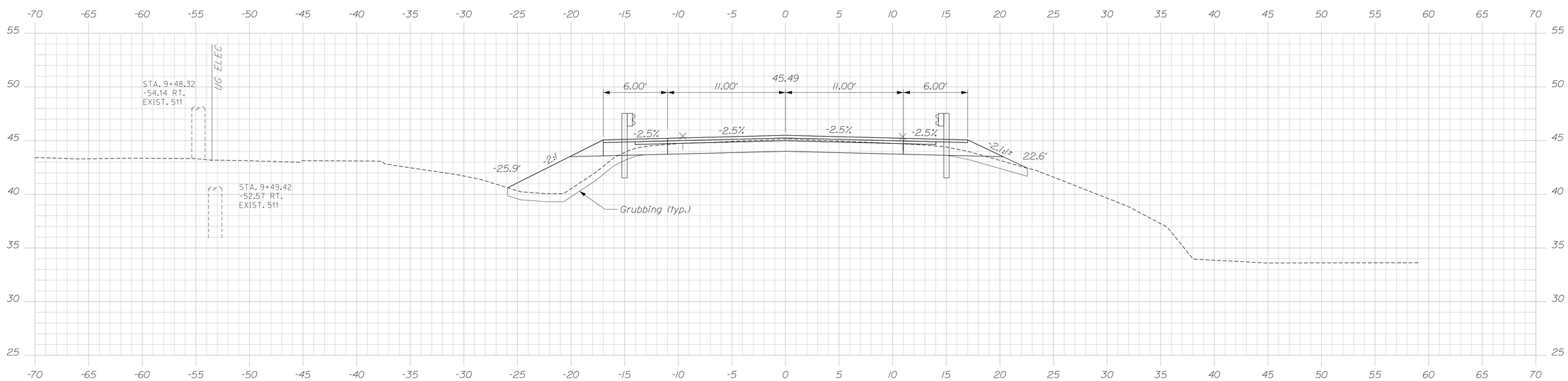


9+50.00

STATE OF MAINE
DEPARTMENT OF TRANSPORTATION

STP-2050(100)

WIN 20501.00

BRIDGE NO. 3219

BRIDGE PLANS

| | | | |
|---|---|---|---|
| PROJ. MANAGER | Andy Lathe | BY | DATE |
| DESIGN-DETAILED | R.Hanf | R.Hanf | 10\15 |
| CHECKED-REVIEWED | - | T.Cote | 10\15 |
| DESIGN2-DETAILED2 | - | - | - |
| DESIGN3-DETAILED3 | - | - | - |
| REVISIONS 1 | - | | - |
| REVISIONS 2 | - | | - |
| REVISIONS 3 | - | | - |
| REVISIONS 4 | - | | - |
| FIELD CHANGES | - | | - |

SIGNATURE

P.E. NUMBER

DATE

JACKSONVILLE BRIDGE
EAST MACHIAS RIVER
EAST MACHIAS WASHINGTON COUNTY

CROSS SECTIONS

SHEET NUMBER

21

OF 37

Sta. 9+50.00 to Sta. 9+75.00

Date:11/5/2015

Username:

Division:

Filename: Xsect.dgn

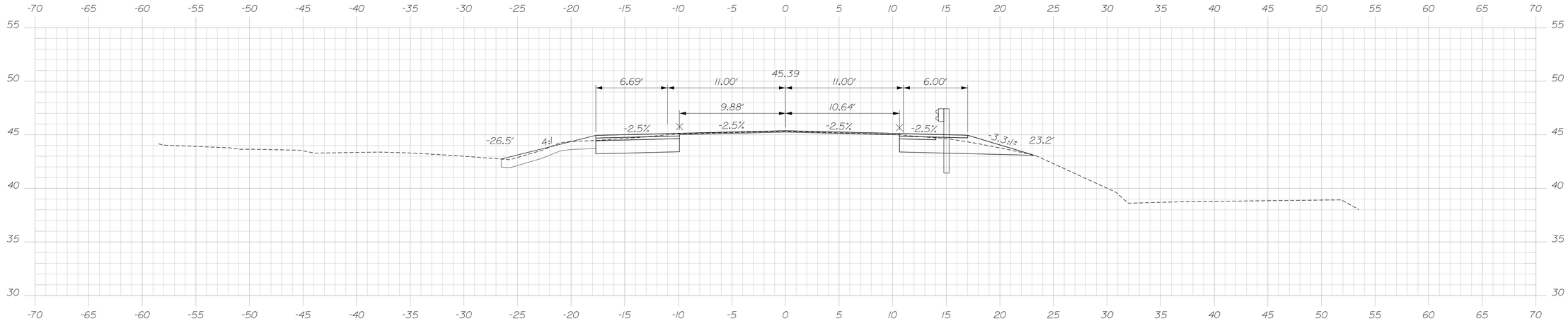


10+25.00

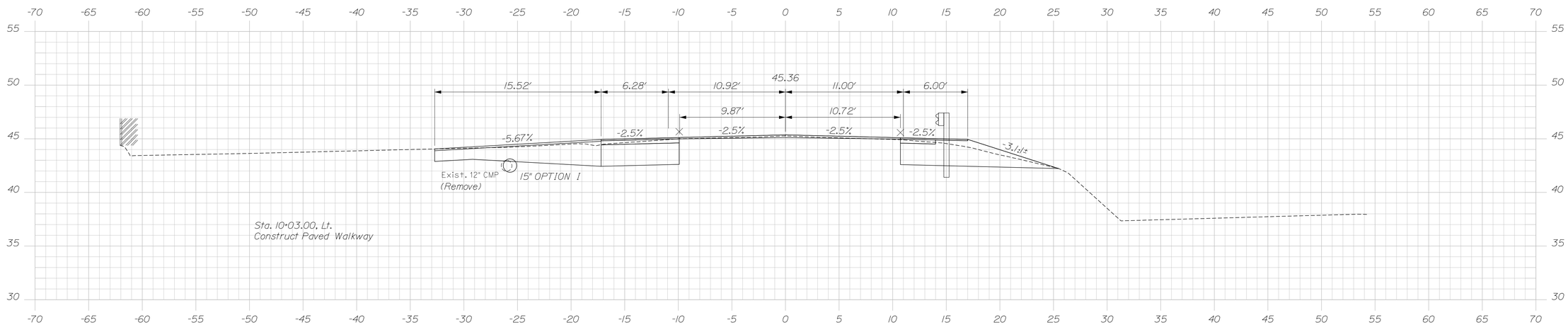


10+03.00

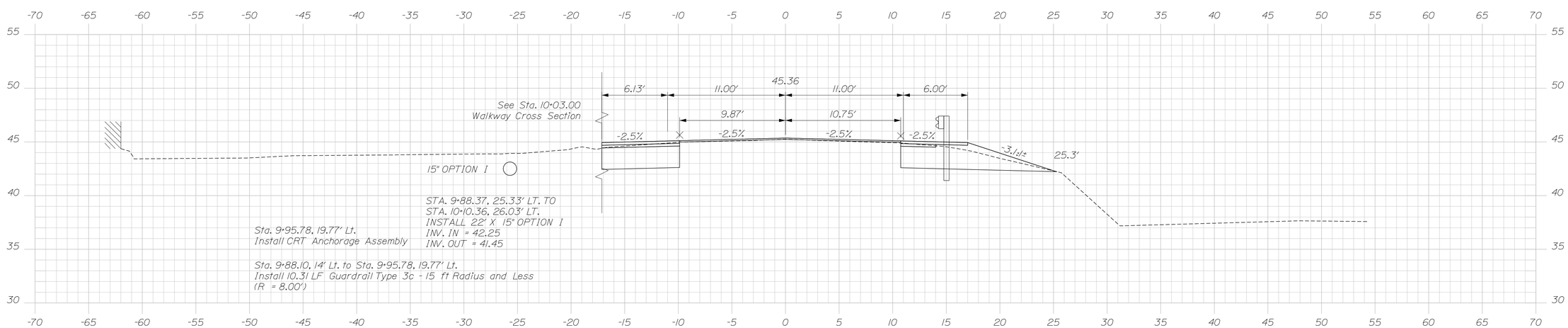


10+00.00

STATE OF MAINE
DEPARTMENT OF TRANSPORTATION

STP-2050(100)

WIN 20501.00

BRIDGE NO. 3219

BRIDGE PLANS

| | | | DATE |
|---|---|---|---|
| PROJ. MANAGER | Andy Lathe | BY | |
| DESIGN-DETAILED | R.Hanf | R.Hanf | 10\15 |
| CHECKED-REVIEWED | - | T.Cote | 10\15 |
| DESIGN2-DETAILED2 | - | - | - |
| DESIGN3-DETAILED3 | - | - | - |
| REVISIONS 1 | - | | - |
| REVISIONS 2 | - | | - |
| REVISIONS 3 | - | | - |
| REVISIONS 4 | - | | - |
| FIELD CHANGES | - | | - |

SIGNATURE

P.E. NUMBER

DATE

JACKSONVILLE BRIDGE
EAST MACHIAS RIVER
EAST MACHIAS WASHINGTON COUNTY

CROSS SECTIONS

SHEET NUMBER

22

OF 37

Sta. 10+00.00 to Sta. 10+50.00

Filename: Xsect.dgn Division: Username: Date:11/5/2015

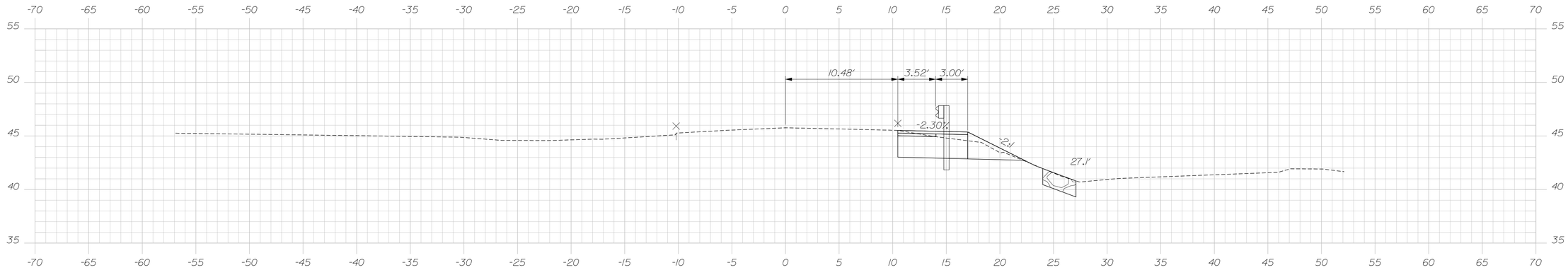


11+00.00

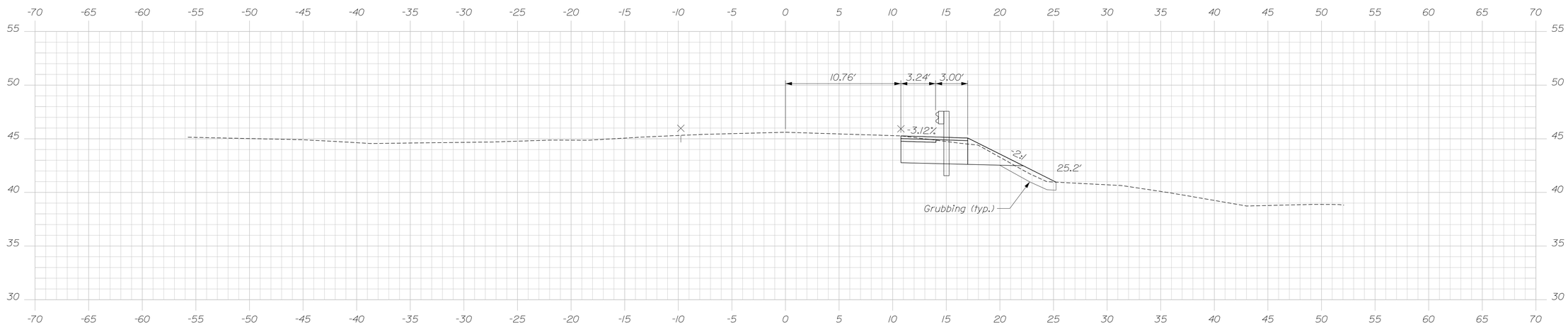


10+75.00

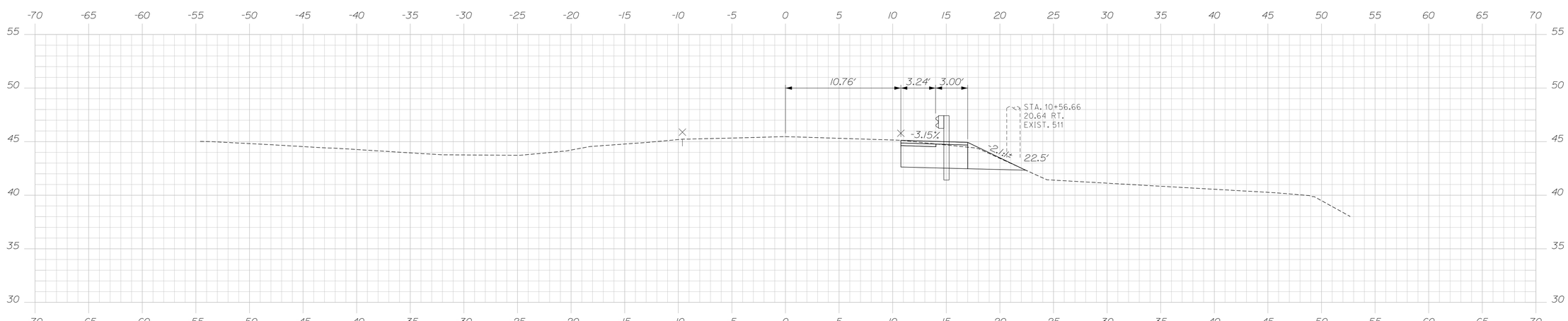


10+50.00

Sta. 10+50.00
End Mill and Inlay
Match Existing Roadway Pavement
Begin Shoulder Widening, Rt.

Date:11/5/2015

Username:

Division:

Filename: Xsect.dgn

STATE OF MAINE
DEPARTMENT OF TRANSPORTATION

STP-2050(100)

WIN 20501.00

BRIDGE NO. 3219

BRIDGE PLANS

| | | BY | DATE |
|---|---|---|---|
| PROJ. MANAGER | Andy Lathe | | |
| DESIGN-DETAILED | R.Hanf | R.Hanf | 10\15 |
| CHECKED-REVIEWED | - | T.Cote | 10\15 |
| DESIGN2-DETAILED2 | - | - | - |
| DESIGN3-DETAILED3 | - | - | - |
| REVISIONS 1 | - | | - |
| REVISIONS 2 | - | | - |
| REVISIONS 3 | - | | - |
| REVISIONS 4 | - | | - |
| FIELD CHANGES | - | | - |

SIGNATURE

P.E. NUMBER

DATE

JACKSONVILLE BRIDGE
EAST MACHIAS RIVER
EAST MACHIAS WASHINGTON COUNTY

CROSS SECTIONS

SHEET NUMBER

23

OF 37

Sta. 10+75.00 to Sta. 11+11.82

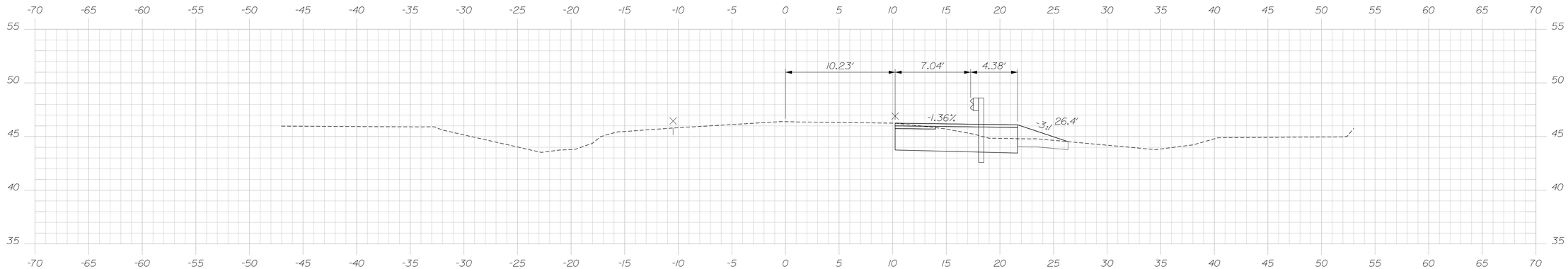


11+50.00

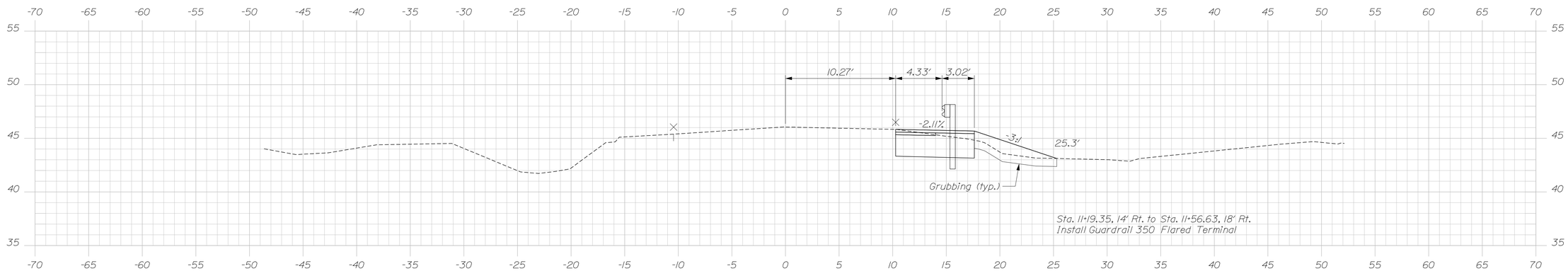


11+25.00

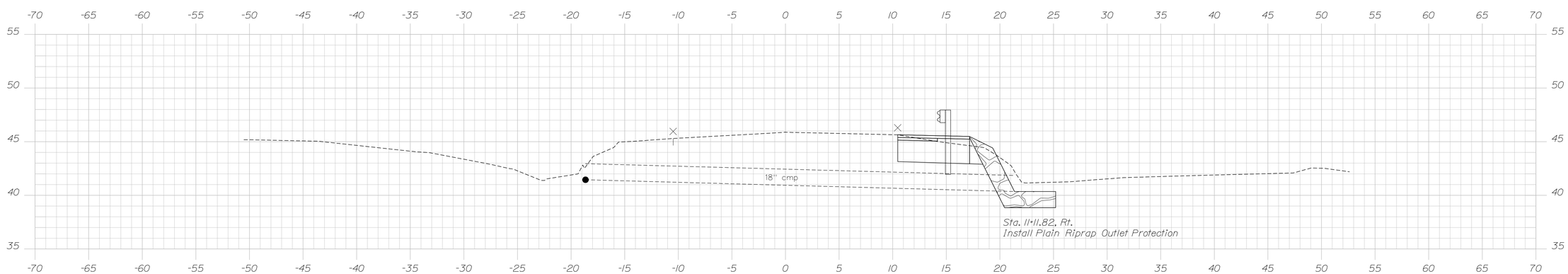


11+11.82

STATE OF MAINE
DEPARTMENT OF TRANSPORTATION

STP-2050(100)

WIN 20501.00

BRIDGE NO. 3219

BRIDGE PLANS

| | | BY | DATE |
|---|---|---|---|
| PROJ. MANAGER | Andy Lathe | | |
| DESIGN-DETAILED | R.Hanf | R.Hanf | 10\15 |
| CHECKED-REVIEWED | - | T.Cote | 10\15 |
| DESIGN2-DETAILED2 | - | - | - |
| DESIGN3-DETAILED3 | - | - | - |
| REVISIONS 1 | - | - | - |
| REVISIONS 2 | - | - | - |
| REVISIONS 3 | - | - | - |
| REVISIONS 4 | - | - | - |
| FIELD CHANGES | - | - | - |

SIGNATURE

P.E. NUMBER

DATE

JACKSONVILLE BRIDGE
EAST MACHIAS RIVER
EAST MACHIAS WASHINGTON COUNTY

CROSS SECTIONS

SHEET NUMBER

24

OF 37

Date:11/5/2015

Username:

Division:

Filename: Xsect.dgn

Sta. 11+25.00 to Sta. 11+75.00

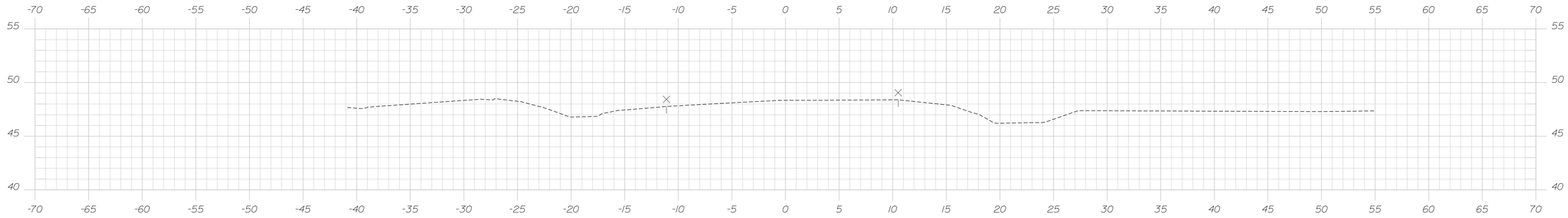

12+50.00

Sta. 12+26.85
End Shoulder Widening, Rt.
Match Existing Shoulder
Limit of Work

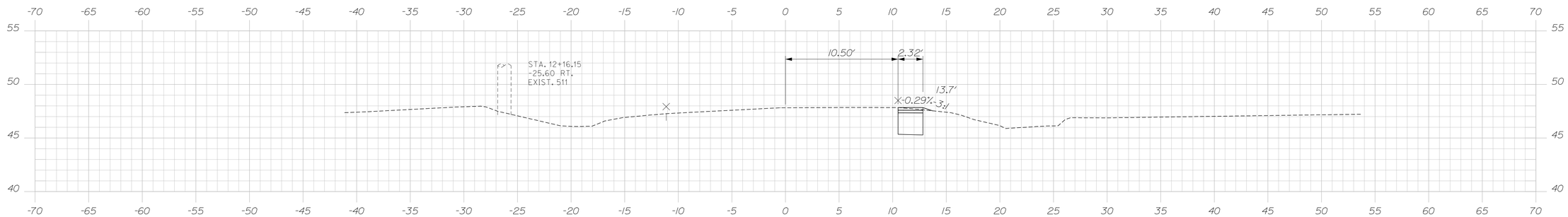


12+25.00

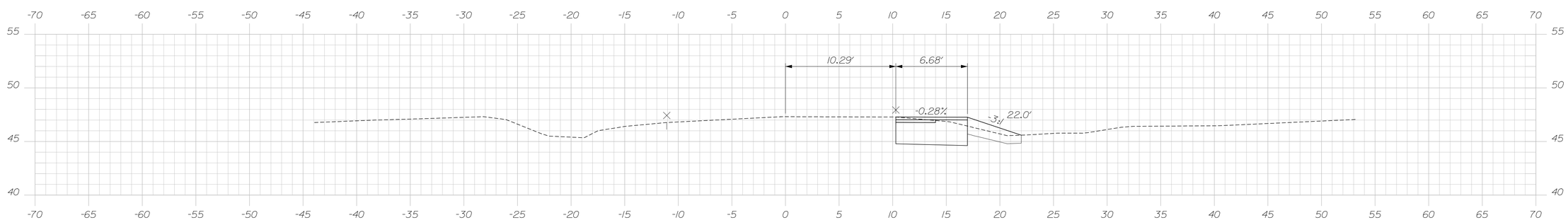


12+00.00

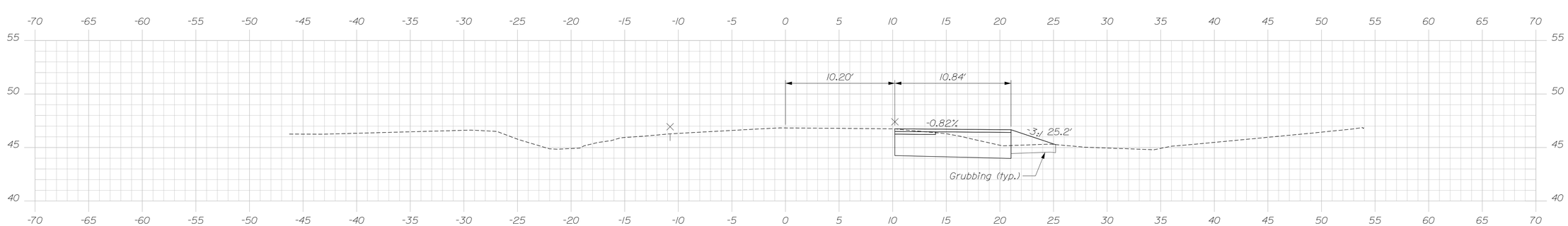


11+75.00

Sta. 12+00.00 to Sta. 12+50.00

STATE OF MAINE
DEPARTMENT OF TRANSPORTATION

STP-2050(100)

WIN 20501.00

BRIDGE NO. 3219

BRIDGE PLANS

| | | | |
|---|---|---|---|
| PROJ. MANAGER | Andy Lathe | BY | DATE |
| DESIGN-DETAILED | R.Hanf | R.Hanf | 10\15 |
| CHECKED-REVIEWED | - | T.Cote | 10\15 |
| DESIGN2-DETAILED2 | - | - | - |
| DESIGN3-DETAILED3 | - | - | - |
| REVISIONS 1 | - | | - |
| REVISIONS 2 | - | | - |
| REVISIONS 3 | - | | - |
| REVISIONS 4 | - | | - |
| FIELD CHANGES | - | | - |

SIGNATURE

P.E. NUMBER

DATE

JACKSONVILLE BRIDGE
EAST MACHIAS RIVER
EAST MACHIAS WASHINGTON COUNTY

CROSS SECTIONS

SHEET NUMBER
25
OF 37

Date:11/5/2015
Username:
Division:
Filename: Xsect.dgn

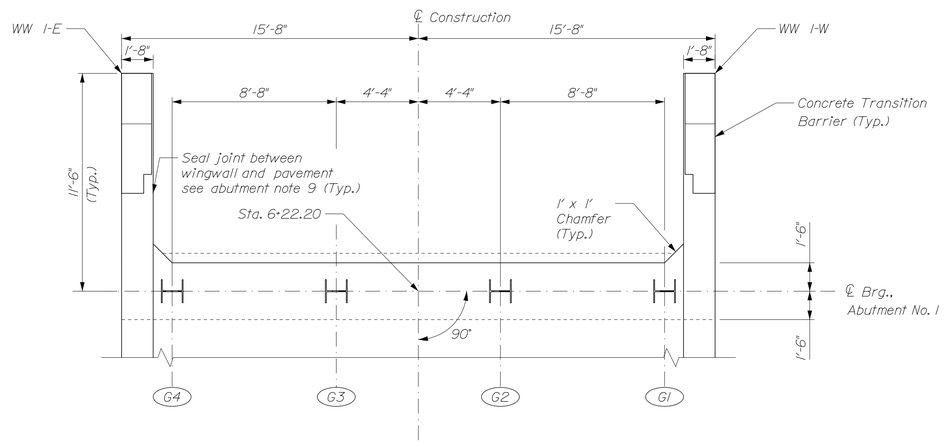


ABUTMENT NO. 1 PLAN

## ABUTMENT NOTES:

1. Reinforcing steel shall have a minimum concrete cover of 2 inches unless otherwise noted.

2. All elevations are provided at centerline of bearing unless otherwise noted.

3. Cover joints where waterstops are not required in accordance with Standard Detail 502(01).

4. Place 4 inch diameter drains in breastwall and wingwalls at 8 feet maximum spacing. The exact location will be determined by the Resident.

5. Construct French Drains behind the abutments and wingwalls in accordance with Standard Specification Section 512, French Drains.

6. Abutments, wingwalls, and their footings shall be backfilled with Granular Borrow for Underwater Backfill. Pay limits will be the structural excavation limits in cut areas and a vertical plane located 10 feet behind the walls in fill areas.

7. The Contractor shall install Transition Barrier vertical closed stirrups as shown in Standard Details Section 526, prior to the placement of the curb concrete.

8. Payment for concrete jacket around the tops of the H-piles will not be paid for directly. Payment shall be incidental to Pay Item 502.219 Structural Concrete Abutment and Retaining Walls. Fill concrete shall be used for the concrete jackets.

9. Seal interface between wingwall and pavement along wingwall with 1" x 1" pourable silicone joint on top of 1" x 5" preformed joint filler per Standard Specification 705.01, Preformed Expansion Joint Filler. Seal material and installation shall not be paid for directly. Payment shall be incidental to Pay Item 502.219, Structural Concrete, Abutment and Retaining Walls.

## PILE NOTES:

1. The maximum factored pile load is 463 kips.

2. H-pile material shall be ASTM A 572, Grade 50.

3. Estimate of piles required (includes extra 5 feet per pile as contingency):

   Abutment No. 1: 4 ~ HP 14x117 @ 28.7 feet
   Abutment No. 2: 4 ~ HP 14x117 @ 32.3 feet

4. All piles shall be equipped with a pile tip in accordance with Special Provision Section 501, Foundation Piles - Rock Injector Pile Tip.

5. Piles shall be driven to bedrock.

6. Piles shall not be out of position shown by more than 2 inches in any direction.

7. The Contractor shall perform and submit a wave equation analysis for review and acceptance by the Resident. The maximum allowable driving stress is 0.90 times Fy. The submittal analyses shall include the proposed stopping criteria based on the wave equation analysis and the proposed driving system. The stopping criteria shall include the blows per inch and the number of 1-in. intervals at which pile installation may be terminated. The cost of performing the wave equation analysis will be considered incidental to Item No. 501.92, Pile Driving Equipment Mobilization.

8. The Contractor shall perform 2 dynamic load test(s), one at each abutment, to confirm the ultimate capacity of the piles. The required nominal resistance for the pile is the factored axial pile load divided by a resistance factor of 0.65 per LRFD Specifications. The dynamic test shall be performed on the first production pile driven at each abutment.

9. The sole plates and installation of the sole plate at the top of the H-piles shall not be paid for directly. Payment shall be incidental to Pay Item No. 501.541, Steel H-beam Pile 117 lbs/ft., In Place.

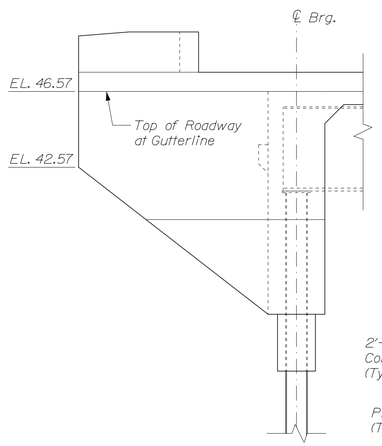


WW 1-E ELEVATION

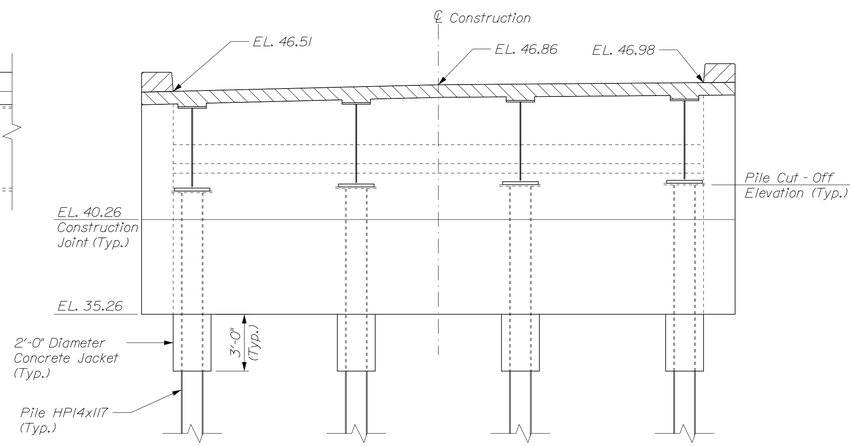


ABUTMENT NO. 1 ELEVATION

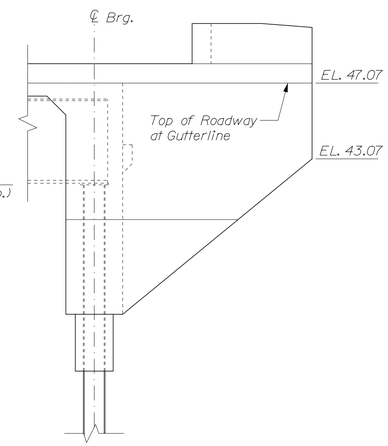


WW 1-W ELEVATION

| ABUTMENT NO. 1 PILE CUT-OFF ELEVATIONS | |
|---|---|
| Pile | Elevation |
| G1 | 41.64 |
| G2 | 41.57 |
| G3 | 41.42 |
| G4 | 41.21 |

STATE OF MAINE
DEPARTMENT OF TRANSPORTATION

STP-2050(100)

WIN 20501.00

BRIDGE NO. 3219

BRIDGE PLANS

| | | BY | DATE |
|---|---|---|---|
| PROJ. MANAGER | Andy Lathe | | |
| DESIGN-DETAILED | B. Grenier | P. Bishop | 10\15 |
| CHECKED-REVIEWED | K. Brayley | T. Cote | 10\15 |
| DESIGN2-DETAILED2 | - | - | - |
| DESIGN3-DETAILED3 | - | - | - |
| REVISIONS 1 | - | | - |
| REVISIONS 2 | - | | - |
| REVISIONS 3 | - | | - |
| REVISIONS 4 | - | | - |
| FIELD CHANGES | - | | - |

SIGNATURE

P.E. NUMBER

DATE

JACKSONVILLE BRIDGE
EAST MACHIAS RIVER
EAST MACHIAS WASHINGTON COUNTY

ABUTMENT NO. 1

SHEET NUMBER

26

OF 37

Filename: 026_Abutment_No. 1.dgn Division: Username: Date:11/5/2015

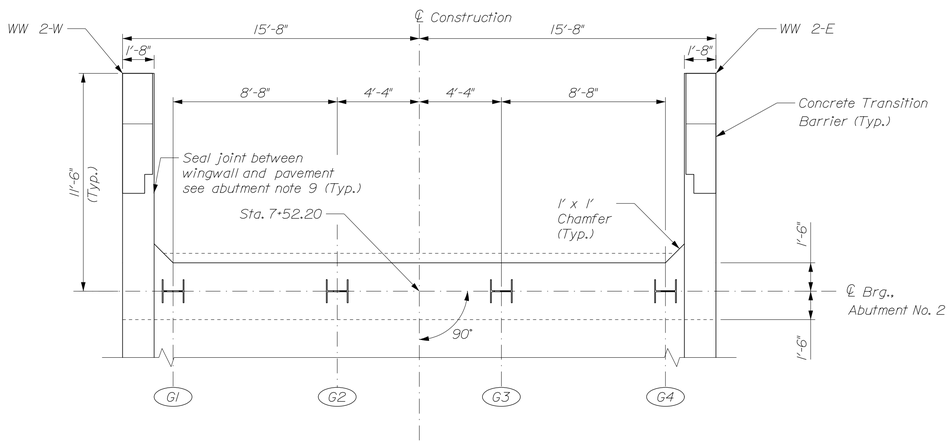


ABUTMENT NO. 2 PLAN

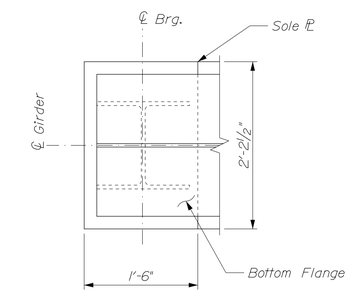


SECTION A-A

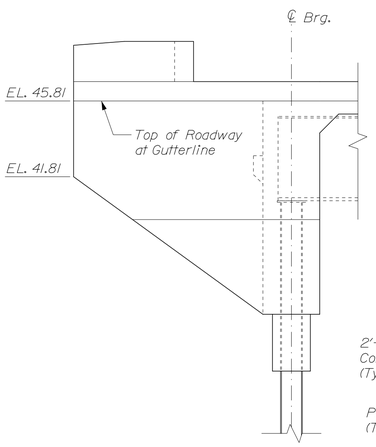


WW 2-W ELEVATION

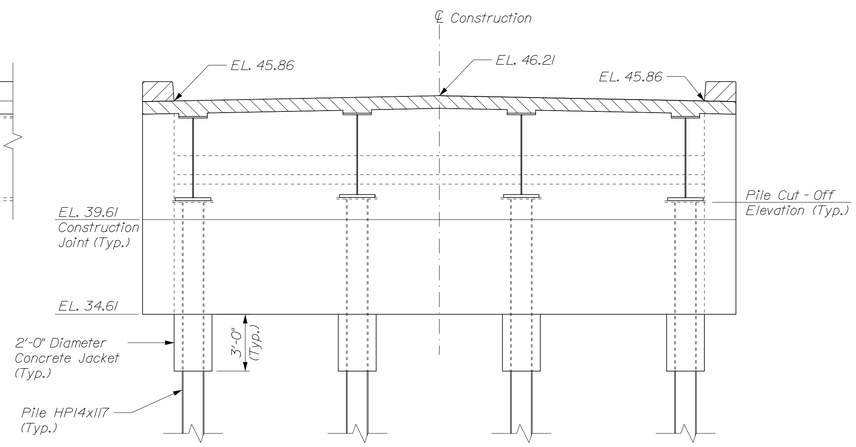


ABUTMENT NO. 2 ELEVATION

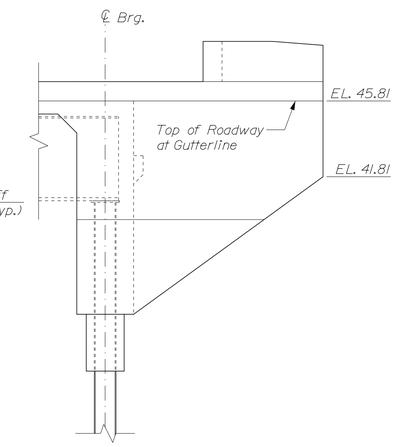


WW 2-E ELEVATION

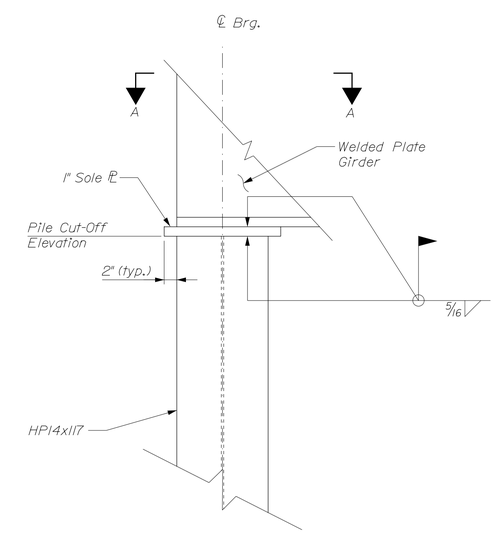


PILE CUT-OFF DETAIL

Pile cut-off elevation shall be located at center of the pile. Cut the pile at a slope to match the profile grade.

ABUTMENT NO. 2 PILE CUT-OFF ELEVATIONS

| Pile | Elevation |
|---|---|
| G1 | 40.56 |
| G2 | 40.77 |
| G3 | 40.77 |
| G4 | 40.56 |

STATE OF MAINE
DEPARTMENT OF TRANSPORTATION

STP-2050(100)

WIN 20501.00

BRIDGE NO. 3219

BRIDGE PLANS

| | | BY | DATE |
|---|---|---|---|
| PROJ. MANAGER | Andy Lathe | | |
| DESIGN-DETAILED | B. Grenier | P. Bishop | 10\15 |
| CHECKED-REVIEWED | K. Brayley | T. Cote | 10\15 |
| DESIGN2-DETAILED2 | - | - | - |
| DESIGN3-DETAILED3 | - | - | - |
| REVISIONS 1 | - | - | - |
| REVISIONS 2 | - | - | - |
| REVISIONS 3 | - | - | - |
| REVISIONS 4 | - | - | - |
| FIELD CHANGES | - | - | - |

SIGNATURE

P.E. NUMBER

DATE

JACKSONVILLE BRIDGE
EAST MACHIAS RIVER
EAST MACHIAS WASHINGTON COUNTY

ABUTMENT NO. 2

SHEET NUMBER

27

OF 37

Filename: 027_Abutment_No. 2.dgn Division: Username: Date:11/5/2015

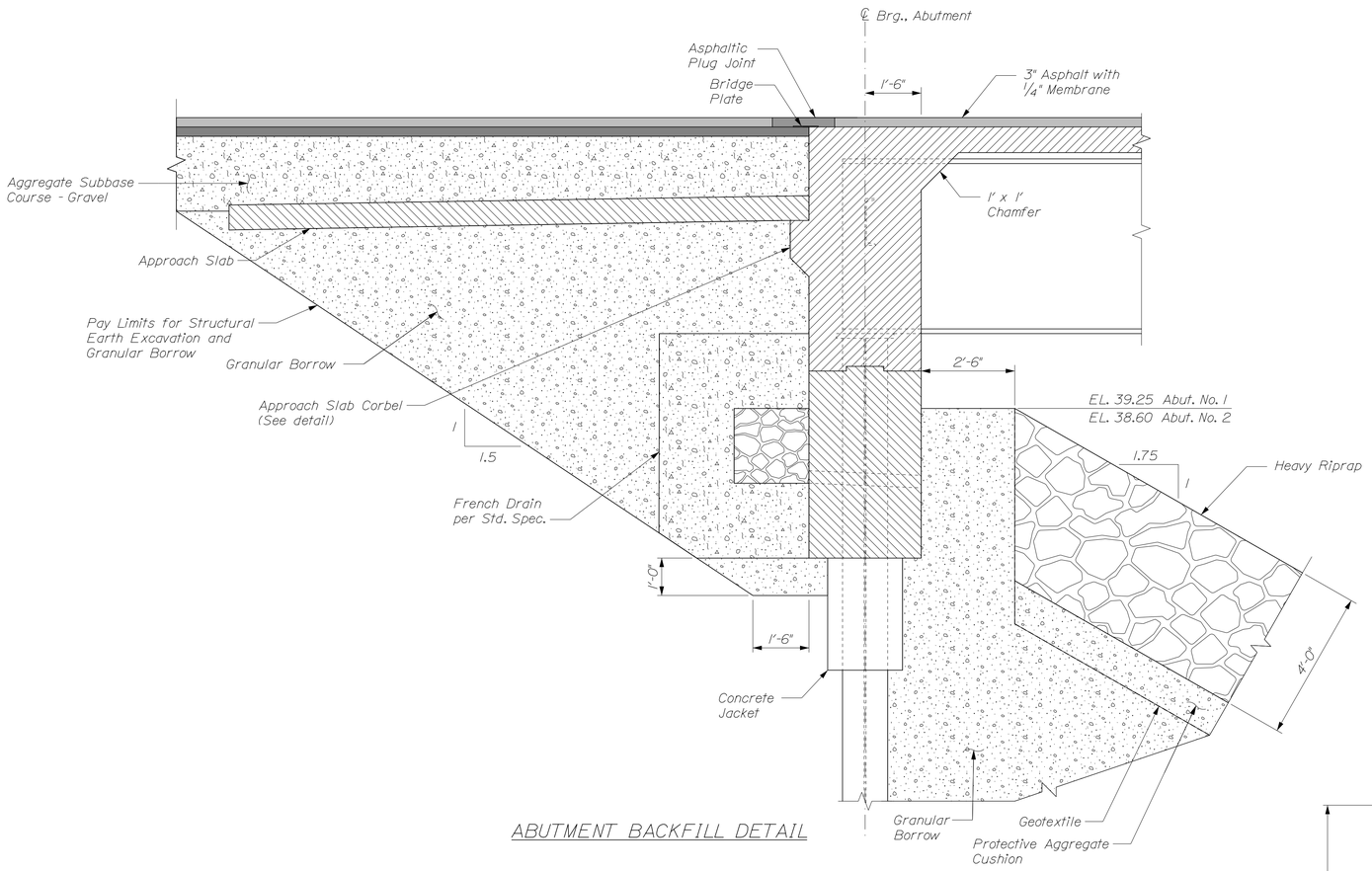


ABUTMENT BACKFILL DETAIL

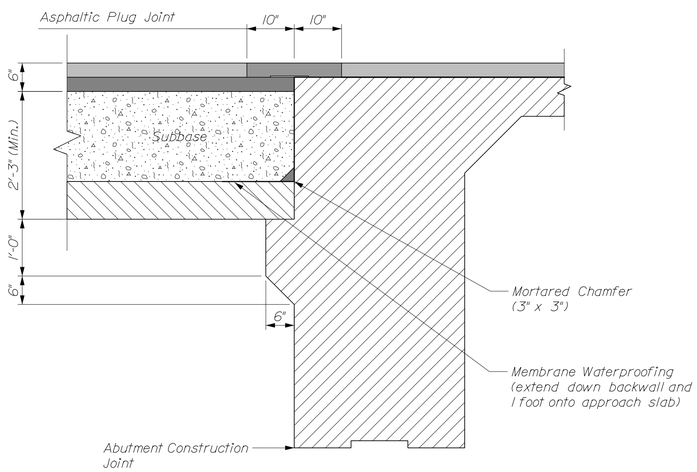


ABUTMENT CORBEL AND JOINT DETAIL

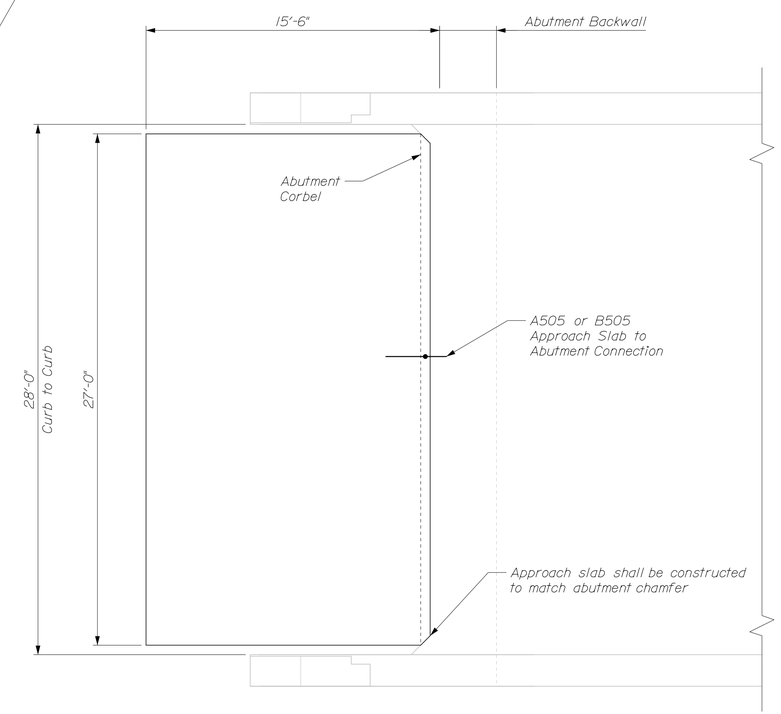


APPROACH SLAB PLAN

## NOTES:

1. Asphaltic plug joint materials shall meet the requirements of the project specifications and shall be installed in accordance with the manufacturer's recommendations.

2. Asphaltic plug joints shall be installed after the second lift of pavement is installed. Care shall be taken by the Contractor to avoid damaging the membrane during joint installation as outlined in Special Provision Section 520.

3. The joint area shall be cleaned in accordance with the manufacturer's recommendations.

4. Saw cut in pavement shall be sealed with emulsified asphalt sealing compound conforming to Specification 702.12.

5. The Contractor shall construct approach slabs as shown below and in Standard Details 502.

6. All costs related to the mortared chamfer on the approach slab will not be paid for directly but will be considered incidental to the related contract items.

STATE OF MAINE
DEPARTMENT OF TRANSPORTATION

STP-2050(100)

WIN 20501.00

BRIDGE NO. 3219

BRIDGE PLANS

| | | BY | DATE |
|---|---|---|---|
| PROJ. MANAGER | Andy Lathe | | |
| DESIGN-DETAILED | B. Greiner | P. Bishop | 10/15 |
| CHECKED-REVIEWED | K. Brayley | T. Cote | 10/15 |
| DESIGN2-DETAILED2 | - | - | - |
| DESIGN3-DETAILED3 | - | - | - |
| REVISIONS 1 | - | - | - |
| REVISIONS 2 | - | - | - |
| REVISIONS 3 | - | - | - |
| REVISIONS 4 | - | - | - |
| FIELD CHANGES | - | - | - |

SIGNATURE

P.E. NUMBER

DATE

JACKSONVILLE BRIDGE
EAST MACHIAS RIVER
EAST MACHIAS WASHINGTON COUNTY

ABUTMENT DETAILS

SHEET NUMBER

28

OF 37

Filename: 028_Abutment_Details.dgn Division: Username: Date:11/5/2015

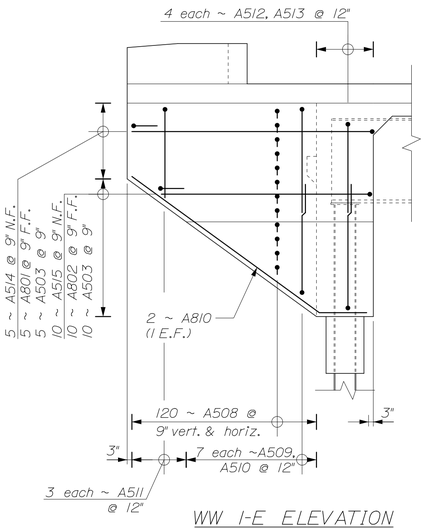


WW 1-E ELEVATION

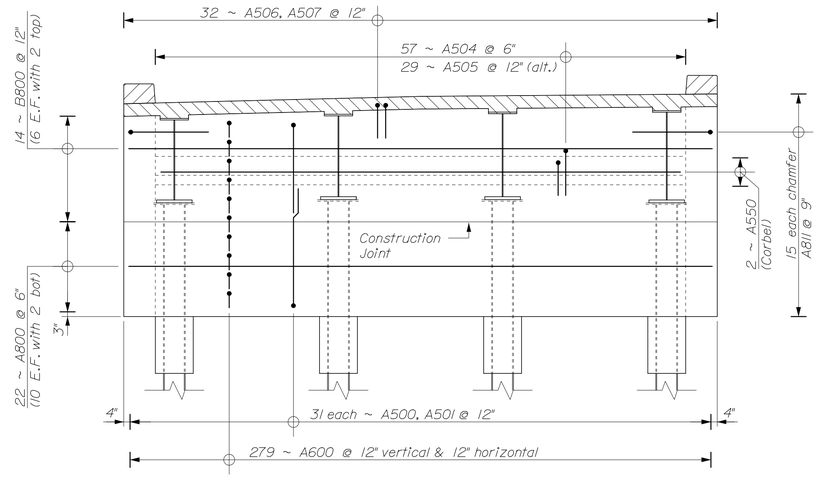


ABUTMENT NO. 1 REINFORCING

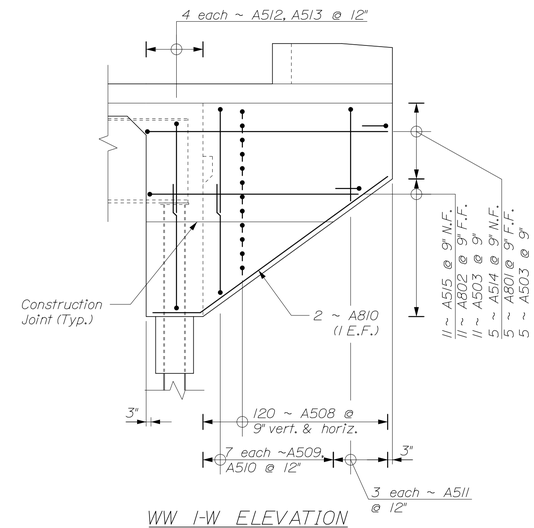


WW 1-W ELEVATION

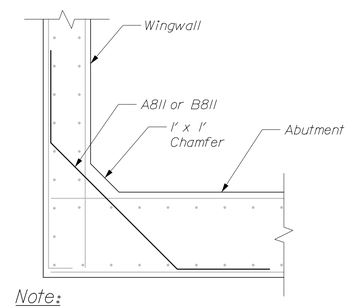


Note:

1. Wingwall and abutment reinforcing shown screened for clarity.

WINGWALL CHAMFER DETAIL

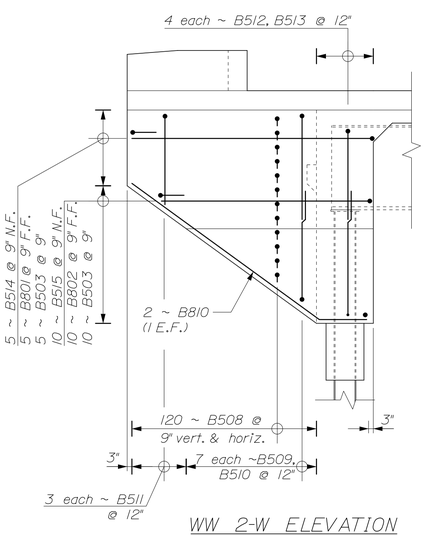


WW 2-W ELEVATION

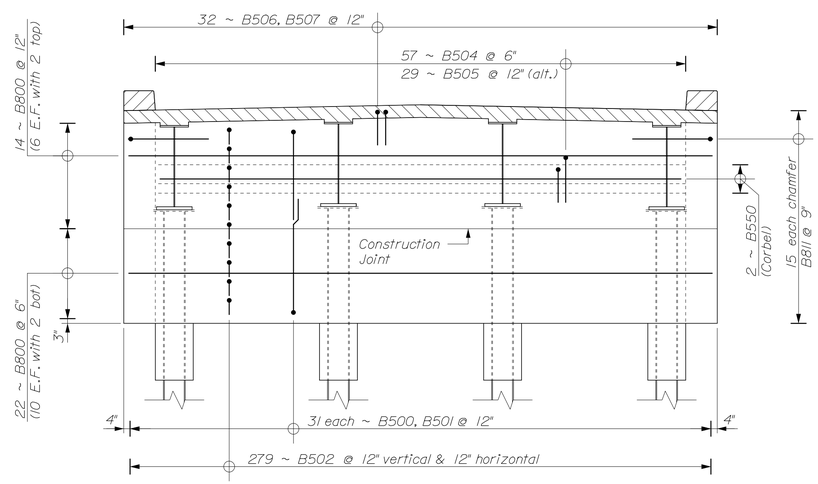


ABUTMENT NO. 2 REINFORCING

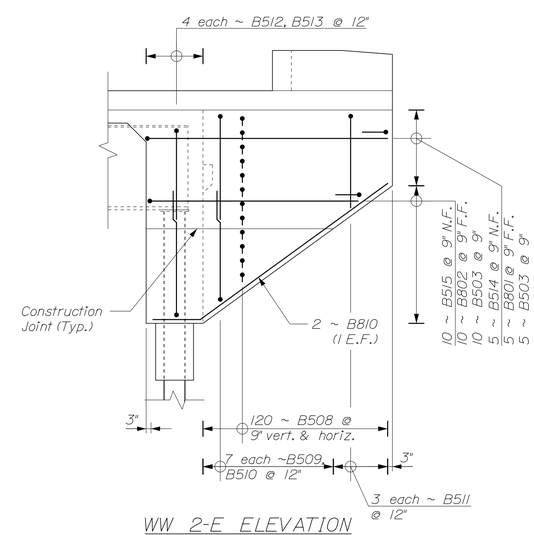


WW 2-E ELEVATION

STATE OF MAINE
DEPARTMENT OF TRANSPORTATION

STP-2050(100)

WIN 20501.00

BRIDGE NO. 3219

BRIDGE PLANS

| | | BY | DATE |
|---|---|---|---|
| PROJ. MANAGER | Andy Lathe | | |
| DESIGN-DETAILED | B. Greiner | P. Bishop | 10/15 |
| CHECKED-REVIEWED | K. Brayley | T. Cote | 10/15 |
| DESIGN2-DETAILED2 | - | - | - |
| DESIGN3-DETAILED3 | - | - | - |
| REVISIONS 1 | - | - | - |
| REVISIONS 2 | - | - | - |
| REVISIONS 3 | - | - | - |
| REVISIONS 4 | - | - | - |
| FIELD CHANGES | - | - | - |

SIGNATURE

P.E. NUMBER

DATE

JACKSONVILLE BRIDGE
EAST MACHIAS RIVER
EAST MACHIAS WASHINGTON COUNTY

ABUTMENT REINFORCING

SHEET NUMBER

29

OF 37

Filename: 029_Abutment Reinforcing.dgn Division: Username: Date:11/5/2015

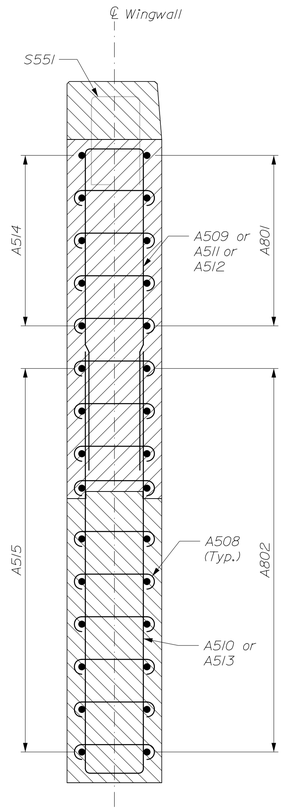


ABUTMENT NO. 1 WINGWALL SECTION

(WW 1-W similar but taller)

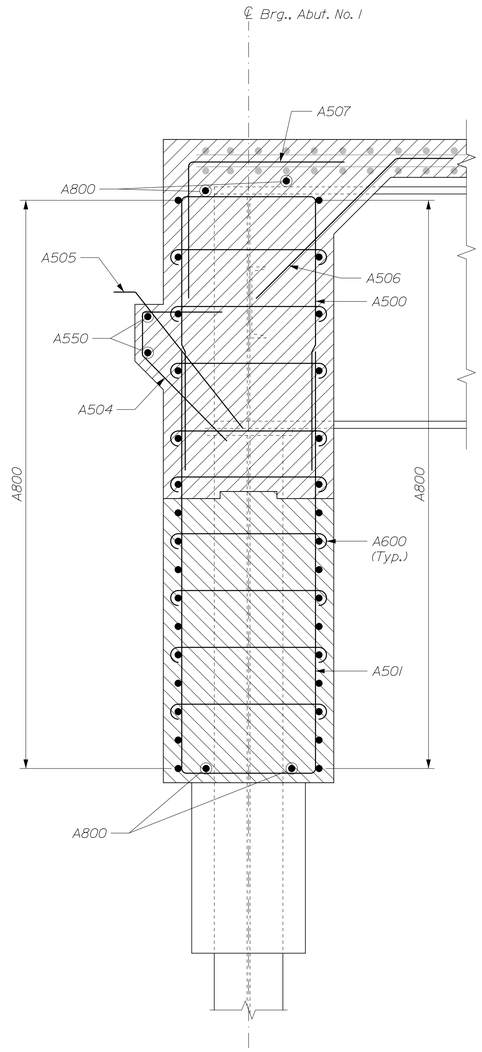


ABUTMENT NO. 1 SECTION

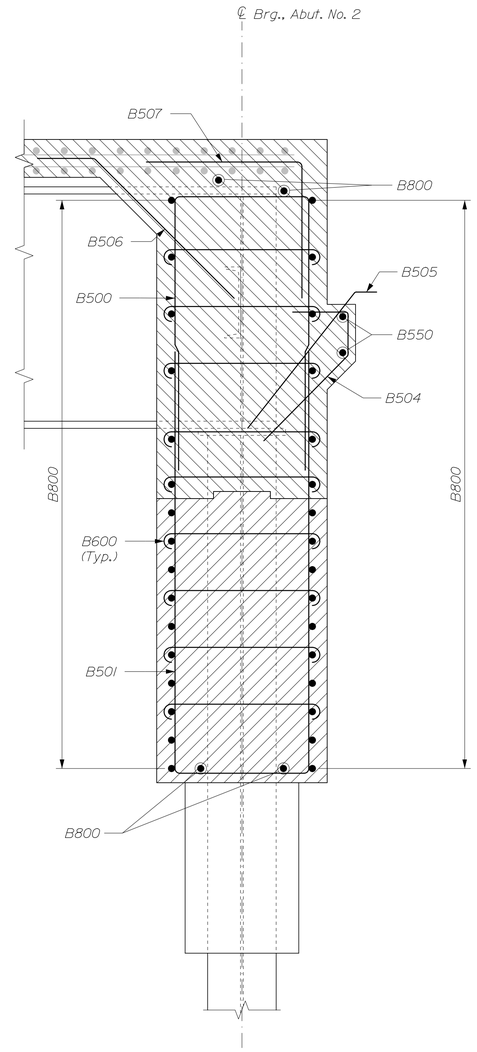


ABUTMENT NO. 2 SECTION

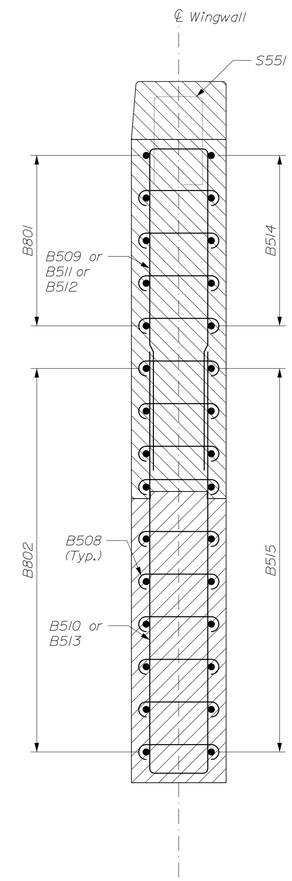


ABUTMENT NO. 2 WINGWALL SECTION

NOTES:

1. Deck and curb reinforcing shown screened for clarity.

STATE OF MAINE
DEPARTMENT OF TRANSPORTATION

STP-2050(100)

BRIDGE NO. 3219

WIN 20501.00

BRIDGE PLANS

| | | | |
|---|---|---|---|
| PROJ. MANAGER | Andy Lathe | BY | DATE |
| DESIGN-DETAILED | B. Grenier | P. Bishop | 10/15 |
| CHECKED-REVIEWED | K. Brayley | T. Cote | 10/15 |
| DESIGN2-DETAILED2 | - | - | - |
| DESIGN3-DETAILED3 | - | - | - |
| REVISIONS 1 | - | - | - |
| REVISIONS 2 | - | - | - |
| REVISIONS 3 | - | - | - |
| REVISIONS 4 | - | - | - |
| FIELD CHANGES | - | - | - |

SIGNATURE

P.E. NUMBER

DATE

JACKSONVILLE BRIDGE
EAST MACHIAS RIVER
EAST MACHIAS WASHINGTON COUNTY

ABUTMENT SECTIONS

SHEET NUMBER

30

OF 37

Filename: 030_Abutment_Sections.dgn Division: Username: Date:11/5/2015

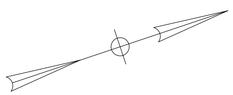

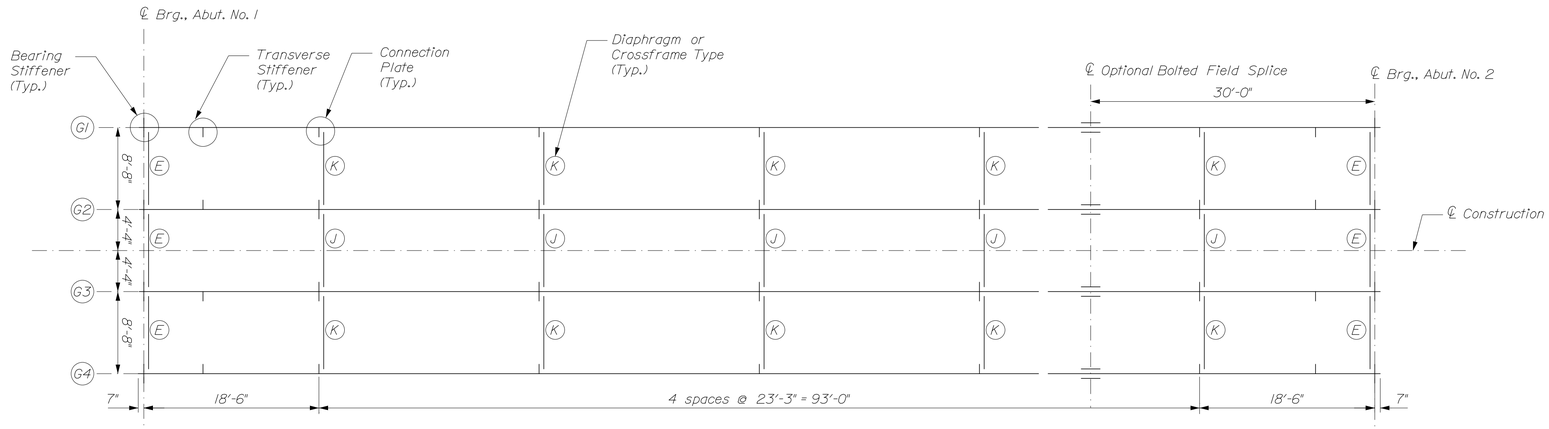


FRAMING PLAN

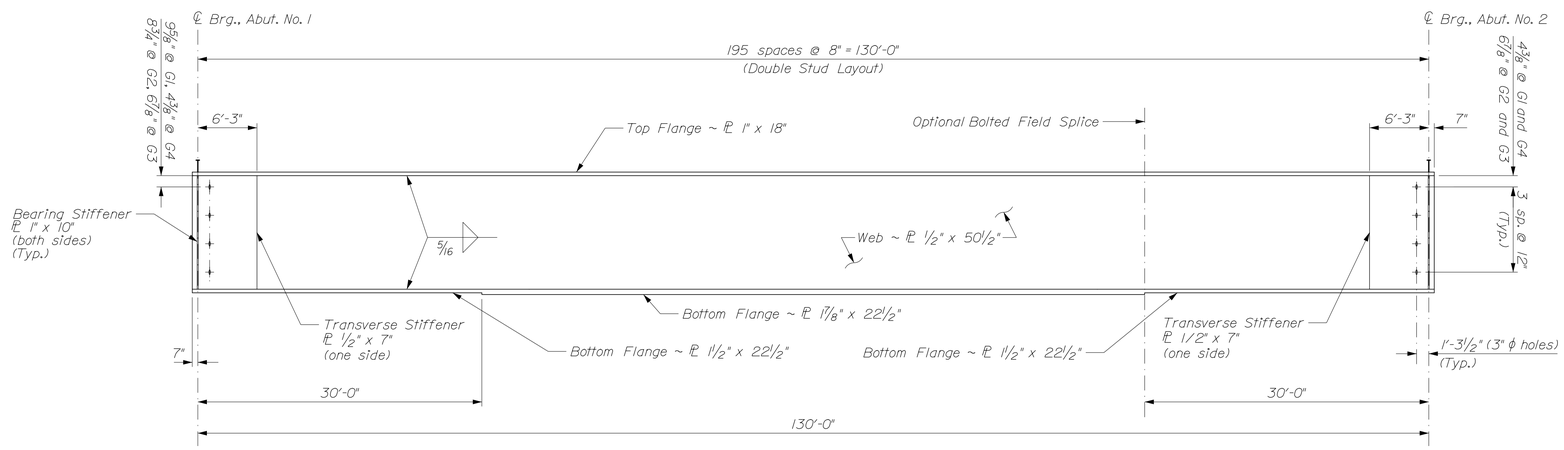


GIRDER ELEVATION

392 studs per girder (1568 studs total)

| GIRDER | BOTTOM OF SLAB ELEVATIONS | | | | | | | | | | |
|---|---|---|---|---|---|---|---|---|---|---|---|
| | ℄ Brg., Abut. No. 1 | 0.1 x L | 0.2 x L | 0.3 x L | 0.4 x L | 0.5 x L | 0.6 x L | 0.7 x L | 0.8 x L | 0.9 x L | ℄ Brg., Abut. No. 2 |
| G1 | 46.30 | 46.34 | 46.37 | 46.36 | 46.32 | 46.23 | 46.10 | 45.93 | 45.72 | 45.47 | 45.22 |
| G2 | 46.23 | 46.32 | 46.40 | 46.43 | 46.43 | 46.38 | 46.27 | 46.12 | 45.92 | 45.69 | 45.44 |
| G3 | 46.09 | 46.20 | 46.28 | 46.33 | 46.34 | 46.30 | 46.21 | 46.08 | 45.89 | 45.68 | 45.44 |
| G4 | 45.87 | 45.96 | 46.02 | 46.06 | 46.06 | 46.02 | 45.93 | 45.80 | 45.63 | 45.44 | 45.22 |

STATE OF MAINE
DEPARTMENT OF TRANSPORTATION

STP-2050(100)

WIN 20501.00

BRIDGE NO. 3219

BRIDGE PLANS

| | | BY | DATE |
|---|---|---|---|
| PROJ. MANAGER | Andy Lathe | | |
| DESIGN-DETAILED | B. Grenier | P. Bishop | 10/15 |
| CHECKED-REVIEWED | K. Brayley | T. Cote | 10/15 |
| DESIGN2-DETAILED2 | - | - | - |
| DESIGN3-DETAILED3 | - | - | - |
| REVISIONS 1 | - | - | - |
| REVISIONS 2 | - | - | - |
| REVISIONS 3 | - | - | - |
| REVISIONS 4 | - | - | - |
| FIELD CHANGES | - | - | - |

SIGNATURE

P.E. NUMBER

DATE

JACKSONVILLE BRIDGE
EAST MACHIAS RIVER
EAST MACHIAS WASHINGTON COUNTY

FRAMING PLAN

SHEET NUMBER

31

OF 37

Filename: 031_Framing_Plan.dgn Division: Username: Date:11/5/2015

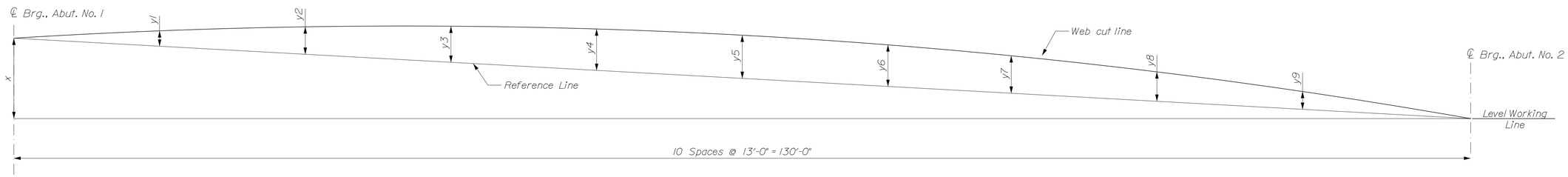


## CAMBER DIAGRAM

| GIRDER | CAMBER ORDINATES (INCHES) | | | | | | | | | | | |
|---|---|---|---|---|---|---|---|---|---|---|---|---|
| | x | ℄ Brg., Abut. No. 1 | y1 | y2 | y3 | y4 | y5 | y6 | y7 | y8 | y9 | ℄ Brg., Abut. No. 2 |
| G1 | 13 | 0 | 2 9/16 | 4 3/8 | 6 | 7 | 7 5/16 | 7 | 6 | 4 3/8 | 2 1/4 | 0 |
| G2 | 9 1/2 | 0 | 2 5/8 | 4 15/16 | 6 3/4 | 7 7/8 | 8 1/4 | 7 7/8 | 6 3/4 | 4 15/16 | 2 5/8 | 0 |
| G3 | 7 13/16 | 0 | 2 5/8 | 4 15/16 | 6 3/4 | 7 7/8 | 8 1/4 | 7 7/8 | 6 3/4 | 4 15/16 | 2 5/8 | 0 |
| G4 | 7 13/16 | 0 | 2 5/16 | 4 7/16 | 6 | 7 1/16 | 7 3/8 | 7 1/16 | 6 1/16 | 4 7/16 | 2 1/4 | 0 |

## STRUCTURAL STEEL NOTES:

1. Camber ordinates, as shown, are computed to compensate for all dead load deflections and for the finished grade profile.

2. No transverse butt-weld splices will be allowed in the flange plates or web plates within 10 feet or 10% of the span length (whichever is greater) from the points of maximum negative moment or maximum positive moment. Butt-weld splices in flanges shall be not less than 3 feet from transverse butt-welds in the web plates and no transverse web or flange butt-welds shall be located within 3 feet of other transverse welds (e.g. connection plates to web welds) on either flange or web. No transverse butt-weld splices will be allowed in areas of stress reversal.

3. Sections of flange plates or web plates between transverse shop splices or between a transverse shop splice and a field splice shall be not less than 20 feet in length unless otherwise shown on the plans.

4. Bearing stiffeners shall be plumb after erection and dead loading of the structure. Intermediate web stiffeners may be either plumb or normal to the top flange.

5. Crossframe or diaphragm connection plates may be either plumb or normal to the top flange and shall be 1/2" thick.

6. All connection plates and stiffeners shall be welded to the top and bottom flanges using 5/16" fillet welds.

7. Optional bolted field splice connections shall be made using 7/8"ϕ ASTM A325 bolts. Hole size shall be 15/16"ϕ. Bolts shall be installed with heads down at all bottom flange connections and heads up at all top flange connections. Bolt threads shall be excluded from the shear plane of the field splice connection.

8. If Precast Concrete Deck Panels are used to construct the superstructure slab, the heads of the shear connectors shall extend a minimum of 1 inch above the top of the panels.

9. The ends of the girders and the end diaphragms shall be coated with a zinc-rich coating system in accordance with Standard Specifications Section 506, Shop Applied Protective Coating - Steel (Zinc Rich Coating System), to a distance of 10 feet from the face of the abutments. All costs related to coating will not be paid for directly but will be considered incidental to related structural steel contract items. Paint color shall meet Federal Color Standard 595B color 20059 dark brown.

10. Shear connectors shall be installed per Standard Detail 505(01).

| GIRDER | DEAD LOAD COMPONENT | DEAD LOAD DEFLECTIONS (INCHES) | | | | | | | | | | |
|---|---|---|---|---|---|---|---|---|---|---|---|---|
| | | ℄ Brg., Abut. No. 1 | y1 | y2 | y3 | y4 | y5 | y6 | y7 | y8 | y9 | ℄ Brg., Abut. No. 2 |
| G1 | Steel Dead Load | 0.00 | -0.54 | -1.02 | -1.39 | -1.63 | -1.70 | -1.63 | -1.39 | -1.03 | -0.54 | 0.00 |
| | Deck Concrete Load | 0.00 | -1.37 | -2.58 | -3.52 | -4.12 | -4.31 | -4.12 | -3.53 | -2.58 | -1.37 | 0.00 |
| | Superimposed Dead Load | 0.00 | -0.43 | -0.82 | -1.09 | -1.28 | -1.36 | -1.30 | -1.12 | -0.82 | -0.43 | 0.00 |
| G2 | Steel Dead Load | 0.00 | -0.56 | -1.06 | -1.44 | -1.69 | -1.76 | -1.69 | -1.44 | -1.07 | -0.56 | 0.00 |
| | Deck Concrete Load | 0.00 | -1.66 | -3.12 | -4.27 | -4.99 | -5.23 | -4.99 | -4.28 | -3.14 | -1.67 | 0.00 |
| | Superimposed Dead Load | 0.00 | -0.41 | -0.76 | -1.02 | -1.20 | -1.26 | -1.20 | -1.03 | -0.76 | -0.41 | 0.00 |
| G3 | Steel Dead Load | 0.00 | -0.56 | -1.06 | -1.44 | -1.69 | -1.76 | -1.69 | -1.44 | -1.07 | -0.56 | 0.00 |
| | Deck Concrete Load | 0.00 | -1.66 | -3.12 | -4.27 | -4.99 | -5.23 | -4.99 | -4.28 | -3.14 | -1.67 | 0.00 |
| | Superimposed Dead Load | 0.00 | -0.41 | -0.76 | -1.02 | -1.20 | -1.26 | -1.20 | -1.03 | -0.76 | -0.41 | 0.00 |
| G4 | Steel Dead Load | 0.00 | -0.54 | -1.02 | -1.39 | -1.63 | -1.70 | -1.63 | -1.39 | -1.03 | -0.54 | 0.00 |
| | Deck Concrete Load | 0.00 | -1.37 | -2.58 | -3.52 | -4.12 | -4.31 | -4.12 | -3.53 | -2.58 | -1.37 | 0.00 |
| | Superimposed Dead Load | 0.00 | -0.43 | -0.82 | -1.09 | -1.28 | -1.36 | -1.30 | -1.12 | -0.82 | -0.43 | 0.00 |

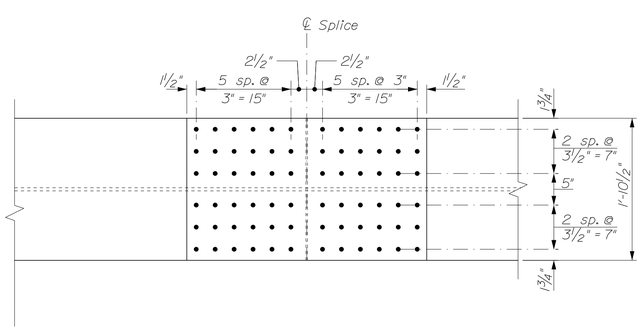


PLAN - BOTTOM FLANGE

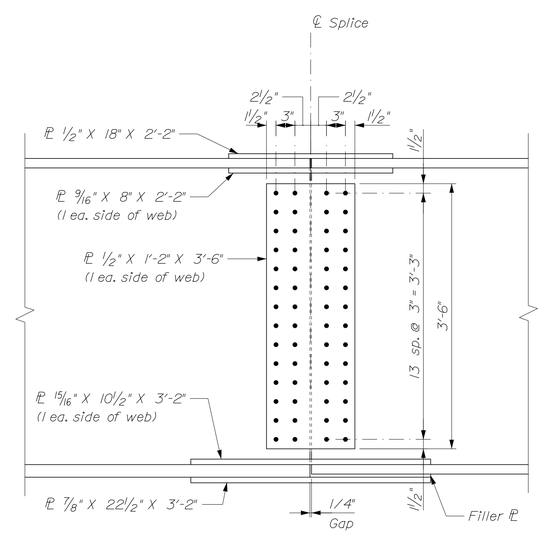


ELEVATION

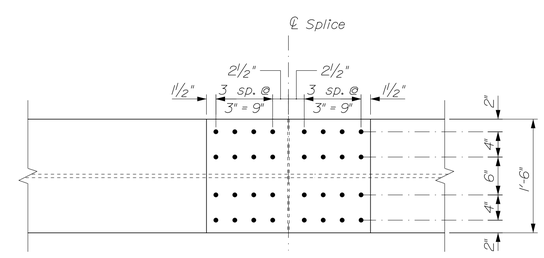


PLAN - TOP FLANGE

## OPTIONAL BOLTED FIELD SPLICE

STATE OF MAINE
DEPARTMENT OF TRANSPORTATION

STP-2050(100)

WIN 20501.00

BRIDGE NO. 3219

BRIDGE PLANS

| | | BY | DATE |
|---|---|---|---|
| PROJ. MANAGER | Andy Lathe | | |
| DESIGN-DETAILED | B. Grenier | P. Bishop | 10/15 |
| CHECKED-REVIEWED | K. Brayley | T. Cote | 10/15 |
| DESIGN2-DETAILED2 | - | - | - |
| DESIGN3-DETAILED3 | - | - | - |
| REVISIONS 1 | - | - | - |
| REVISIONS 2 | - | - | - |
| REVISIONS 3 | - | - | - |
| REVISIONS 4 | - | - | - |
| FIELD CHANGES | - | - | - |

SIGNATURE

P.E. NUMBER

DATE

JACKSONVILLE BRIDGE
EAST MACHIAS RIVER
EAST MACHIAS WASHINGTON COUNTY

STRUCTURAL STEEL DETAILS

SHEET NUMBER
32
OF 37

Filename: 032_Structural Steel Details.dgn Division: Username: Date:11/5/2015

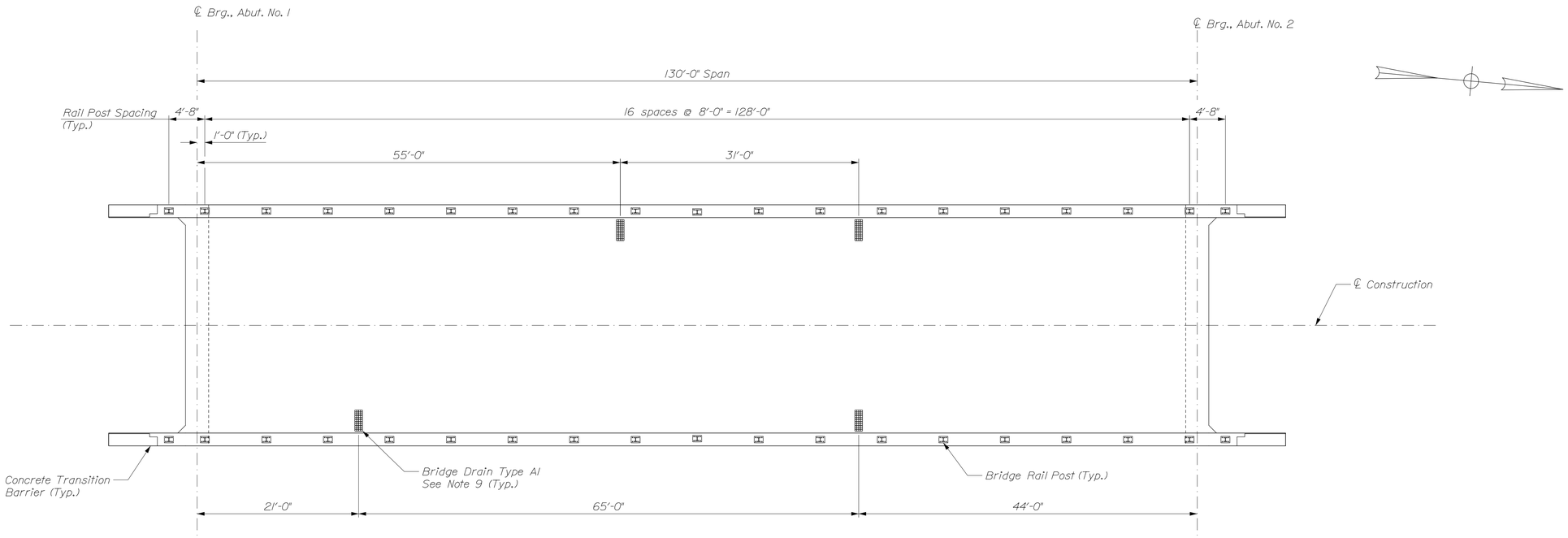


SUPERSTRUCTURE PLAN

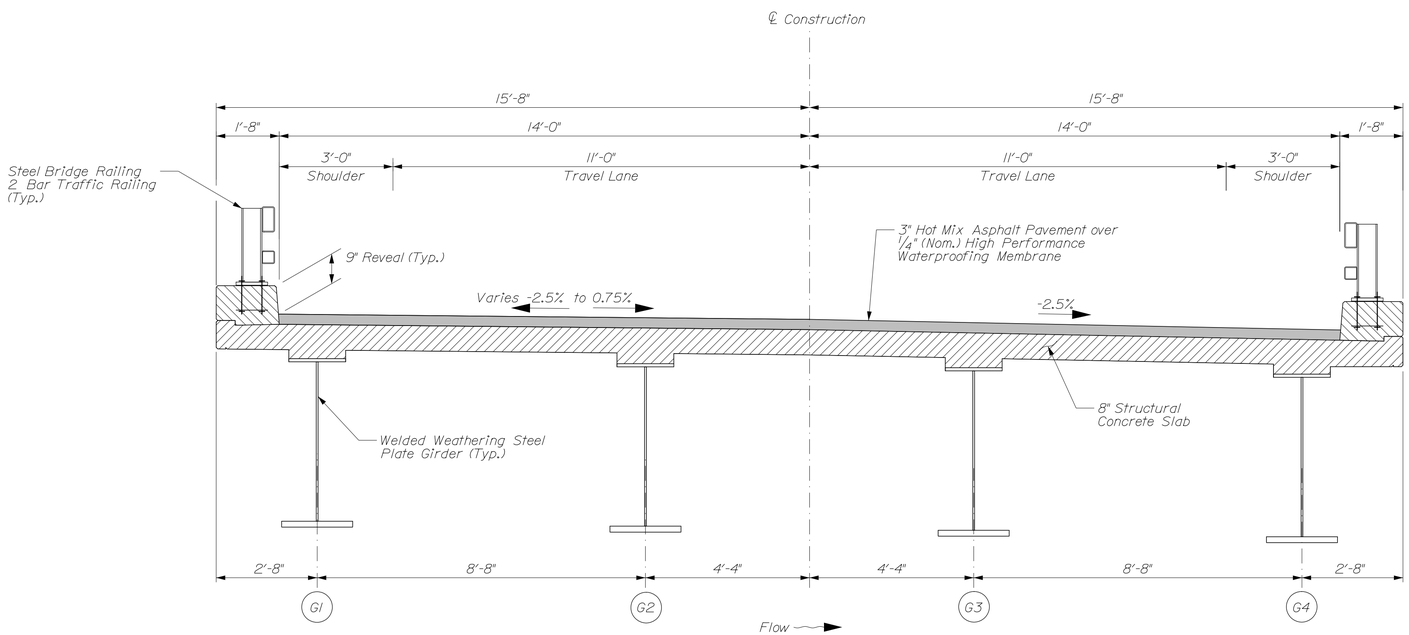


PROPOSED TYPICAL SECTION

## SUPERSTRUCTURE NOTES:

1. The theoretical blocking used for design of the structure is 3" (2" clear) at the centerline of bearing of the abutments. Refer to Standard Detail 502(02) for blocking details.

2. Reinforcing steel shall have a minimum concrete cover of 2" unless otherwise noted.

3. Form a one inch V-groove on the fascias at the horizontal joint between the curb and slab.

4. The superstructure slab shall be placed in one continuous operation and shall be kept plastic until the entire placement has been made.

5. At the Contractor's option, Precast Deck Panels may be used in place of the full depth cast-in-place deck slab, in accordance with Special Provisions Section 502, Structural Concrete - Precast Deck Panels, and in accordance with the Standard Details.

6. Payment for the reinforcing steel fabricated, delivered, and placed in the cast-in-place portion of the structural concrete slab and approach slab will be considered incidental to the appropriate Section 502 pay items. Payment for the longitudinal epoxy-coated reinforcing steel fabricated, delivered, and placed in curbs shall be paid for under item Item No. 503.14 and 503.15. All other epoxy-coated reinforcing steel fabricated, delivered, and placed in curbs will be considered incidental to the appropriate Section 502 pay items as noted in reinforcing schedule.

7. Provide 3 additional stirrups in the curbs at each Bridge Rail Post location, as shown in Standard Details Section 507.

8. The Contractor shall install Concrete Transition Barrier vertical closed stirrups, as shown in Standard Details Section 526, prior to the placement of the curb or sidewalk concrete.

9. Bridge drains shall be installed per Standard Detail 502(16).

STATE OF MAINE
DEPARTMENT OF TRANSPORTATION

STP-2050(100)

WIN 20501.00

BRIDGE NO. 3219

BRIDGE PLANS

| | | | |
|---|---|---|---|
| PROJ. MANAGER | Andy Lathe | BY | DATE |
| DESIGN-DETAILED | B. Greiner | P. Bishop | 10/15 |
| CHECKED-REVIEWED | K. Brayley | T. Cote | 10/15 |
| DESIGN2-DETAILED2 | - | - | - |
| DESIGN3-DETAILED3 | - | - | - |
| REVISIONS 1 | - | - | - |
| REVISIONS 2 | - | - | - |
| REVISIONS 3 | - | - | - |
| REVISIONS 4 | - | - | - |
| FIELD CHANGES | - | - | - |

SIGNATURE

P.E. NUMBER

DATE

JACKSONVILLE BRIDGE
EAST MACHIAS RIVER
EAST MACHIAS WASHINGTON COUNTY

SUPERSTRUCTURE PLAN

SHEET NUMBER

33

OF 37

Filename: 033_Superstructure Plan.dgn Division: Username: Date:11/5/2015

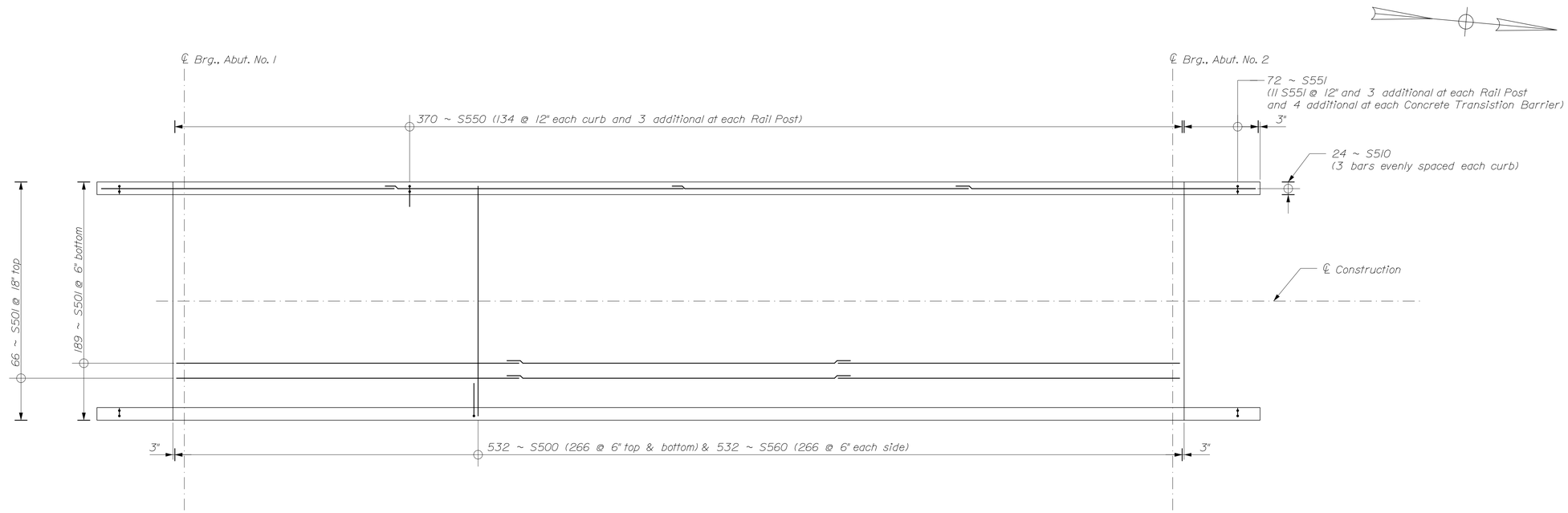


SUPERSTRUCTURE REINFORCING PLAN

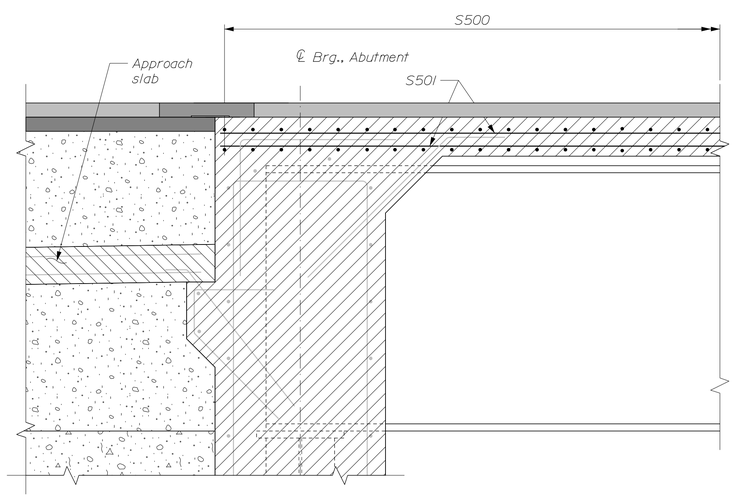


PARTIAL LONGITUDINAL SECTION

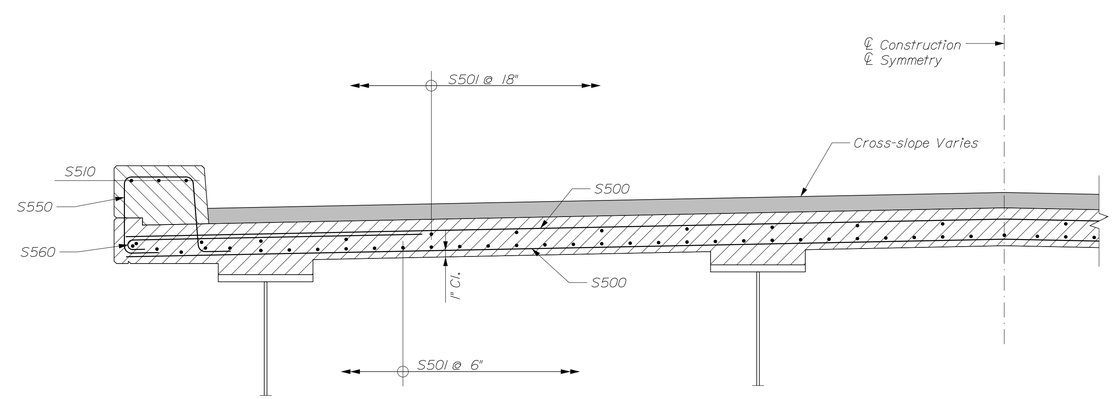


PARTIAL TRANSVERSE SECTION

NOTE:
1. Abutment and approach slab reinforcing shown screened and ties excluded for clarity.

STATE OF MAINE
DEPARTMENT OF TRANSPORTATION

STP-2050(100)

WIN 20501.00

BRIDGE NO. 3219

BRIDGE PLANS

| | | | |
|---|---|---|---|
| PROJ. MANAGER | Andy Lathel | BY | DATE |
| DESIGN-DETAILED | B. Greiner | P. Bishop | 10/15 |
| CHECKED-REVIEWED | K. Brayley | T. Cote | 10/15 |
| DESIGN2-DETAILED2 | - | - | - |
| DESIGN3-DETAILED3 | - | - | - |
| REVISIONS 1 | - | - | - |
| REVISIONS 2 | - | - | - |
| REVISIONS 3 | - | - | - |
| REVISIONS 4 | - | - | - |
| FIELD CHANGES | - | - | - |

SIGNATURE

P.E. NUMBER

DATE

JACKSONVILLE BRIDGE
EAST MACHIAS RIVER
EAST MACHIAS WASHINGTON COUNTY

SUPERSTRUCTURE
REINFORCING

SHEET NUMBER
34
OF 37

Filename: 034_Superstructure Reinforcing.dgn Division: Username: Date:11/5/2015

## STRAIGHT BARS

| MARK | QTY. | LENGTH | INCREMENT | LOCATION |
|---|---|---|---|---|
| ABUTMENT NO. 1 | | | | |
| A550 | 2 | 27'-8" | -- | Corbel Bar |
| A800 | 36 | 31'-0" | -- | Backwall Bar |
| A801 | 10 | 12'-8" | -- | Wingwall Top Bar |
| A802 | 21 | 2'-8" to 12'-8" | 12 1/4" | Wingwall Bot Bar (Array) |
| ABUTMENT NO. 2 | | | | |
| B550 | 2 | 27'-8" | -- | Corbel Bar |
| B800 | 36 | 31'-0" | -- | Backwall Bar |
| B801 | 10 | 12'-8" | -- | Wingwall Top Bar |
| B802 | 20 | 2'-8" to 12'-8" | 12 1/4" | Wingwall Bot Bar (Array) |
| SUPERSTRUCTURE | | | | |
| S500* | 532 | 31'-0" | -- | Top & Bot. Transverse |
| S501* | 255 | 45'-4" | -- | Top & Bot Longitudinal |
| S510• | 24 | 39'-5" | -- | Curb Longitudinal |

## BENT BARS

| MARK | QTY. | LENGTH | TYPE | A | B | C | D | E | F | G | H | O | R | INCREMENT | LOCATION |
|---|---|---|---|---|---|---|---|---|---|---|---|---|---|---|---|
| ABUTMENT NO. 1 | | | | | | | | | | | | | | | |
| A500 | 31 | 13'-2 1/2" | S | 0" | 5'-5" | 2'-4 1/2" | 5'-5" | -- | -- | 0" | -- | -- | -- | -- | Backwall Stirrups Top |
| A501 | 31 | 16'-2 1/2" | S | 0" | 6'-11" | 2'-4 1/2" | 6'-11" | -- | -- | 0" | -- | -- | -- | -- | Backwall Stirrups Bot |
| A503 | 31 | 4'-8" | S | 0" | 1'-8" | 1'-4" | 1'-8" | -- | -- | 0" | -- | -- | -- | -- | Wingwall Ext Face Tie |
| A504 | 57 | 4'-4" | SC | 0" | 1'-6" | 9" | 2'-1" | -- | -- | 0" | -- | 2'-2" | -- | -- | Corbel Stirrups |
| A505 | 29 | 4'-2" | V | -- | -- | -- | 2'-6" | 1'-8" | -- | -- | 1'-2 1/4" | -- | -- | -- | Approach Slab Pin |
| A506 | 32 | 5'-8" | V | -- | -- | -- | 4'-0" | 1'-8" | -- | -- | 1'-2 1/4" | -- | -- | -- | Backwall to Deck Pin |
| A507 | 32 | 5'-4" | L | 3'-0" | 2'-4" | -- | -- | -- | -- | -- | -- | -- | -- | -- | Backwall to Deck Pin |
| A508 | 240 | 2'-6" | C | 7" | 1'-4" | 7" | -- | -- | -- | -- | -- | -- | -- | -- | Wingwall Shear Tie |
| A509 | 14 | 12'-7" | S | 0" | 5'-9" | 1'-1" | 5'-9" | -- | -- | 0" | -- | -- | -- | -- | Wingwall Stirrups Top |
| A510 | 14 | 4'-4 1/2" to 14'-7" | S | 0" | 1'-7 3/4"to6'-9" | 1'-1" | 1'-7 3/4"to6'-9" | -- | -- | 0" | -- | -- | -- | B=D=8 3/4" | Wingwall Stirrups Bot |
| A511 | 6 | 9'-6" to 13'-10" | S | 0" | 4'-2 1/2" to 6'-4 1/2" | 1'-1" | 4'-2 1/2" to 6'-4 1/2" | -- | -- | 0" | -- | -- | -- | B=D=8 3/4" | Wingwall Stirrups Top |
| A512 | 8 | 11'-3" | S | 0" | 5'-1" | 1'-1" | 5'-1" | -- | -- | 0" | -- | -- | -- | -- | Wingwall Stirrups Top |
| A513 | 8 | 14'-11" | S | 0" | 6'-11" | 1'-1" | 6'-11" | -- | -- | 0" | -- | -- | -- | -- | Wingwall Stirrups Bot |
| A514 | 10 | 13'-6" | L | 12'-8" | 10" | -- | -- | -- | -- | -- | -- | -- | -- | -- | Wingwall Longitudinal |
| A515 | 21 | 3'-2 1/8" to 13'-4 5/8" | L | 2'-4 1/8" to 12'-6 5/8" | 10" | -- | -- | -- | -- | -- | -- | -- | -- | A=12 1/4" | Wingwall Longitudinal |
| A600 | 279 | 3'-10" | C | 7" | 2'-8" | 7" | -- | -- | -- | -- | -- | -- | -- | -- | Backwall Shear Tie |
| A810 | 4 | 14'-10" | V | -- | -- | -- | 2'-8" | 12'-2" | -- | -- | 7'-3 3/4" | -- | -- | -- | Wingwall Bot Face |
| A811 | 30 | 12'-9 1/2" | PT | 3'-3" | 6'-3 1/2" | 3'-3" | -- | -- | -- | -- | -- | 10'-10 1/2" | -- | -- | Wingwall Chamfer |
| ABUTMENT NO. 2 | | | | | | | | | | | | | | | |
| B500 | 31 | 13'-2 1/2" | S | 0" | 5'-5" | 2'-4 1/2" | 5'-5" | -- | -- | 0" | -- | -- | -- | -- | Backwall Stirrups Top |
| B501 | 31 | 16'-2 1/2" | S | 0" | 6'-11" | 2'-4 1/2" | 6'-11" | -- | -- | 0" | -- | -- | -- | -- | Backwall Stirrups Bot |
| B503 | 30 | 4'-8" | S | 0" | 1'-8" | 1'-4" | 1'-8" | -- | -- | 0" | -- | -- | -- | -- | Wingwall Ext Face Tie |
| B504 | 57 | 4'-4" | SC | 0" | 1'-6" | 9" | 2'-1" | -- | -- | 0" | -- | 2'-2" | -- | -- | Corbel Stirrups |
| B505 | 29 | 4'-2" | V | -- | -- | -- | 2'-6" | 1'-8" | -- | -- | 1'-2 1/4" | -- | -- | -- | Approach Slab Pin |
| B506 | 32 | 5'-8" | V | -- | -- | -- | 4'-0" | 1'-8" | -- | -- | 1'-2 1/4" | -- | -- | -- | Backwall to Deck Pin |
| B507 | 32 | 5'-4" | L | 3'-0" | 2'-4" | -- | -- | -- | -- | -- | -- | -- | -- | -- | Backwall to Deck Pin |
| B508 | 240 | 2'-6" | C | 7" | 1'-4" | 7" | -- | -- | -- | -- | -- | -- | -- | -- | Wingwall Shear Tie |
| B509 | 14 | 12'-7" | S | 0" | 5'-9" | 1'-1" | 5'-9" | -- | -- | 0" | -- | -- | -- | -- | Wingwall Stirrups Top |
| B510 | 14 | 4'-4 1/2" to 14'-7" | S | 0" | 1'-7 3/4"to6'-9" | 1'-1" | 1'-7 3/4"to6'-9" | -- | -- | 0" | -- | -- | -- | B=D=8 3/4" | Wingwall Stirrups Bot |
| B511 | 6 | 9'-6" to 13'-10" | S | 0" | 4'-2 1/2" to 6'-4 1/2" | 1'-1" | 4'-2 1/2" to 6'-4 1/2" | -- | -- | 0" | -- | -- | -- | B=D=8 3/4" | Wingwall Stirrups Top |
| B512 | 8 | 11'-3" | S | 0" | 5'-1" | 1'-1" | 5'-1" | -- | -- | 0" | -- | -- | -- | -- | Wingwall Stirrups Top |
| B513 | 8 | 14'-11" | S | 0" | 6'-11" | 1'-1" | 6'-11" | -- | -- | 0" | -- | -- | -- | -- | Wingwall Stirrups Bot |
| B514 | 10 | 13'-6" | L | 12'-8" | 10" | -- | -- | -- | -- | -- | -- | -- | -- | -- | Wingwall Longitudinal |
| B515 | 20 | | L | 2'-4 1/8" to 12'-6 5/8" | 10" | -- | -- | -- | -- | -- | -- | -- | -- | A=12 1/4" | Wingwall Longitudinal |
| B600 | 279 | 3'-10" | C | 7" | 2'-8" | 7" | -- | -- | -- | -- | -- | -- | -- | -- | Backwall Shear Tie |
| B810 | 4 | 14'-10" | V | -- | -- | -- | 2'-8" | 12'-2" | -- | -- | 7'-3 3/4" | -- | -- | -- | Wingwall Bot Face |
| B811 | 30 | 12'-9 1/2" | PT | 3'-3" | 6'-3 1/2" | 3'-3" | -- | -- | -- | -- | -- | 10'-10 1/2" | -- | -- | Wingwall Chamfer |
| SUPERSTRUCTURE | | | | | | | | | | | | | | | |
| S550** | 370 | 5'-7" | SC | 10" | 1'-4" | 1'-3" | 1'-4" | -- | -- | 10" | -- | -- | -- | -- | Curb Reinforcement - Deck |
| S551** | 72 | 5'-7" | SC | 10" | 1'-4" | 1'-3" | 2'-2" | -- | -- | 0" | -- | -- | -- | -- | Curb Reinforcement - WW |
| S560* | 532 | 5'-10" | C | 7" | 5'-3" | 0" | -- | -- | -- | -- | -- | -- | -- | -- | Deck Overhang |

## TYPE - BENDING DIAGRAMS

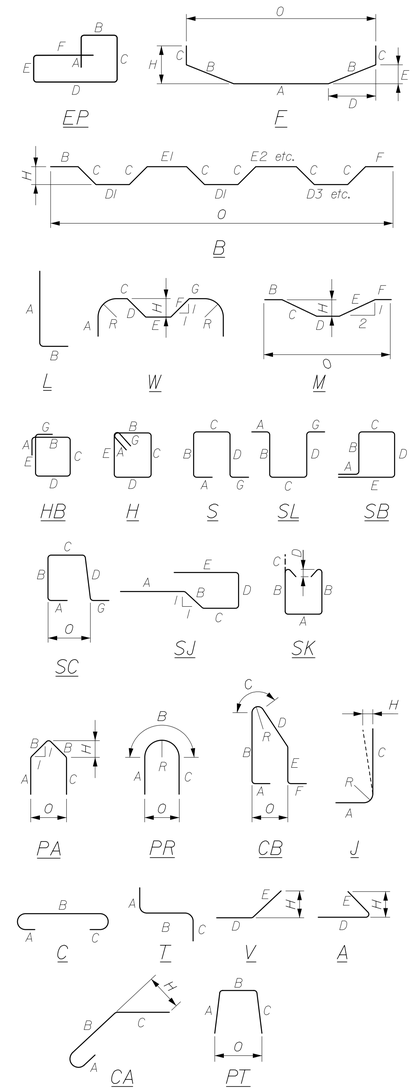


* Bar is incidental to related concrete pay item.
• Bar is epoxy coated.

All dimensions are out-to-out of bar.

Bending details and hooks shall conform to the recommendations of the current revision of ACI Standard 315 and ACI Standard 318.

Reinforcing Bar: ASTM A615/A615M, Grade 60

## GENERAL NOTES

1. The first two digits following the letter(s) of the mark indicate the size ofthe bar:

   Mark "A502" = bar size #5
   Mark "P805" = bar size #8
   Mark "S650" = bar size #6

2. Each crank bar, Type B, may be replaced by two (2) straight bars (one top and one bottom) of the same bar size as the crank bar. Payment in either case shall be based on crank bars as schedule on the plans.

HNTB

STATE OF MAINE
DEPARTMENT OF TRANSPORTATION

STP-2050(100)

WIN 20501.00

BRIDGE NO. 3219

BRIDGE PLANS

| | BY | DATE |
|---|---|---|
| Andy Lathe | | |
| PROJ. MANAGER | B. Grenier | 10/15 |
| DESIGN-DETAILED | P. Bishop | 10/15 |
| CHECKED-REVIEWED | K. Brayley | |
| DESIGN2-DETAILED2 | T. Cote | |
| DESIGN3-DETAILED3 | | |
| REVISIONS 1 | | |
| REVISIONS 2 | | |
| REVISIONS 3 | | |
| REVISIONS 4 | | |
| FIELD CHANGES | | |

SIGNATURE

P.E. NUMBER

DATE

JACKSONVILLE BRIDGE
EAST MACHIAS RIVER
EAST MACHIAS WASHINGTON COUNTY

# REINFORCING STEEL SCHEDULE

SHEET NUMBER

35

OF 37

Filename: 035_Steel Schedule.dgn Division: Username: Date:11/5/2015

THIS PLAN WAS PREPARED IN CONNECTION WITH THE DEPARTMENT'S ACQUISITION OF REAL PROPERTY FOR TRANSPORTATION PURPOSES. IT CANNOT BE USED TO ESTABLISH LEGAL BOUNDARIES BETWEEN ABUTTING PROPERTY OWNERS.

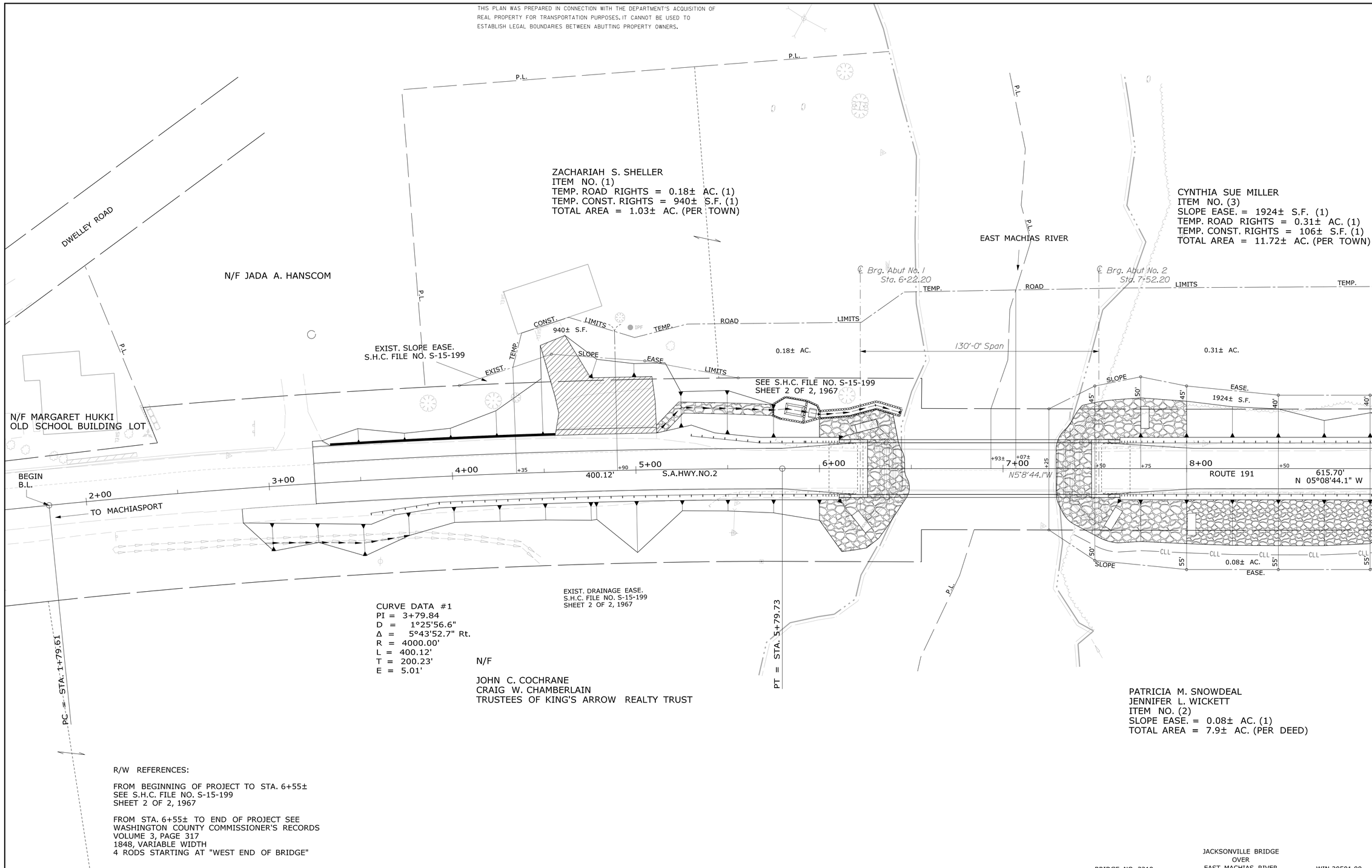


CURVE DATA #1
PI = 3+79.84
D = 1°25'56.6"
Δ = 5°43'52.7" Rt.
R = 4000.00'
L = 400.12'
T = 200.23'
E = 5.01'

N/F

JOHN C. COCHRANE
CRAIG W. CHAMBERLAIN
TRUSTEES OF KING'S ARROW REALTY TRUST

PATRICIA M. SNOWDEAL
JENNIFER L. WICKETT
ITEM NO. (2)
SLOPE EASE. = 0.08± AC. (1)
TOTAL AREA = 7.9± AC. (PER DEED)

R/W REFERENCES:

FROM BEGINNING OF PROJECT TO STA. 6+55±
SEE S.H.C. FILE NO. S-15-199
SHEET 2 OF 2, 1967

FROM STA. 6+55± TO END OF PROJECT SEE
WASHINGTON COUNTY COMMISSIONER'S RECORDS
VOLUME 3, PAGE 317
1848, VARIABLE WIDTH
4 RODS STARTING AT "WEST END OF BRIDGE"

JACKSONVILLE BRIDGE
OVER
EAST MACHIAS RIVER

BRIDGE NO. 3219 WIN 20501.00

SYMBOLS

- IP or ● IPF (IRON PIPE or PIN FOUND)
- S.T. (SEPTIC TANK)
- (ROW MONUMENT)
- BM (TRAVERSE POINT)
- WELL (WELL)
- GRADING LIMIT LINE
- CONSTRUCTION LIMIT LINE
- PROPERTY LINE PL
- LIMITS OF WROUGHT PORTION (L.O.W.P.)
- EXISTING RIGHT OF WAY
- NEW RIGHT OF WAY
- NEW ROW WITHIN EXIST. ROW
- CONTROL OF ACCESS
- WATER LINE
- GAS LINE
- ELECTRIC LINE
- TELEPHONE LINE
- SEWER LINE

| ITEM | TECH | CHECKED |
|---|---|---|
| BASE MAP | | |
| EXIST. R/W | BDM | |
| PROP. LINES | BDM | |
| AREAS | BDM | |

STATE OF MAINE
DEPARTMENT OF TRANSPORTATION
16 STATE HOUSE STATION - AUGUSTA, ME 04333-0016
EAST MACHIAS
RIGHT OF WAY MAP

| REVISIONS | | | |
|---|---|---|---|
| NO. | DATE | DESCRIPTION | BY |

PLAN FILED IN PLAN BOOK PAGE COUNTY RECORD

| NO. | GRANTOR | INSTRUMENT | DATE | BOOK | PAGE |
|---|---|---|---|---|---|

DAVID BERNHARDT
COMMISSIONER
JOYCE NOEL TAYLOR
CHIEF ENGINEER
DATE

STATE AID HIGHWAY NO. 2
ROUTE 191 JACKSONVILLE ROAD
EAST MACHIAS WASHINGTON COUNTY
FEDERAL AID PROJECT NO. STP-2050(100)

MAY 2015 | RIGHT-OF-WAY MAP | D.O.T. FILE NO. 15-321
SCALE 1" = 25' | SHEET 1 OF 2

SHEET NUMBER
36
OF 37

Date:11/5/2015
Username:
Division:
Filename: 036_RWPLAN1.dgn

THIS PLAN WAS PREPARED IN CONNECTION WITH THE DEPARTMENT'S ACQUISITION OF REAL PROPERTY FOR TRANSPORTATION PURPOSES. IT CANNOT BE USED TO ESTABLISH LEGAL BOUNDARIES BETWEEN ABUTTING PROPERTY OWNERS.

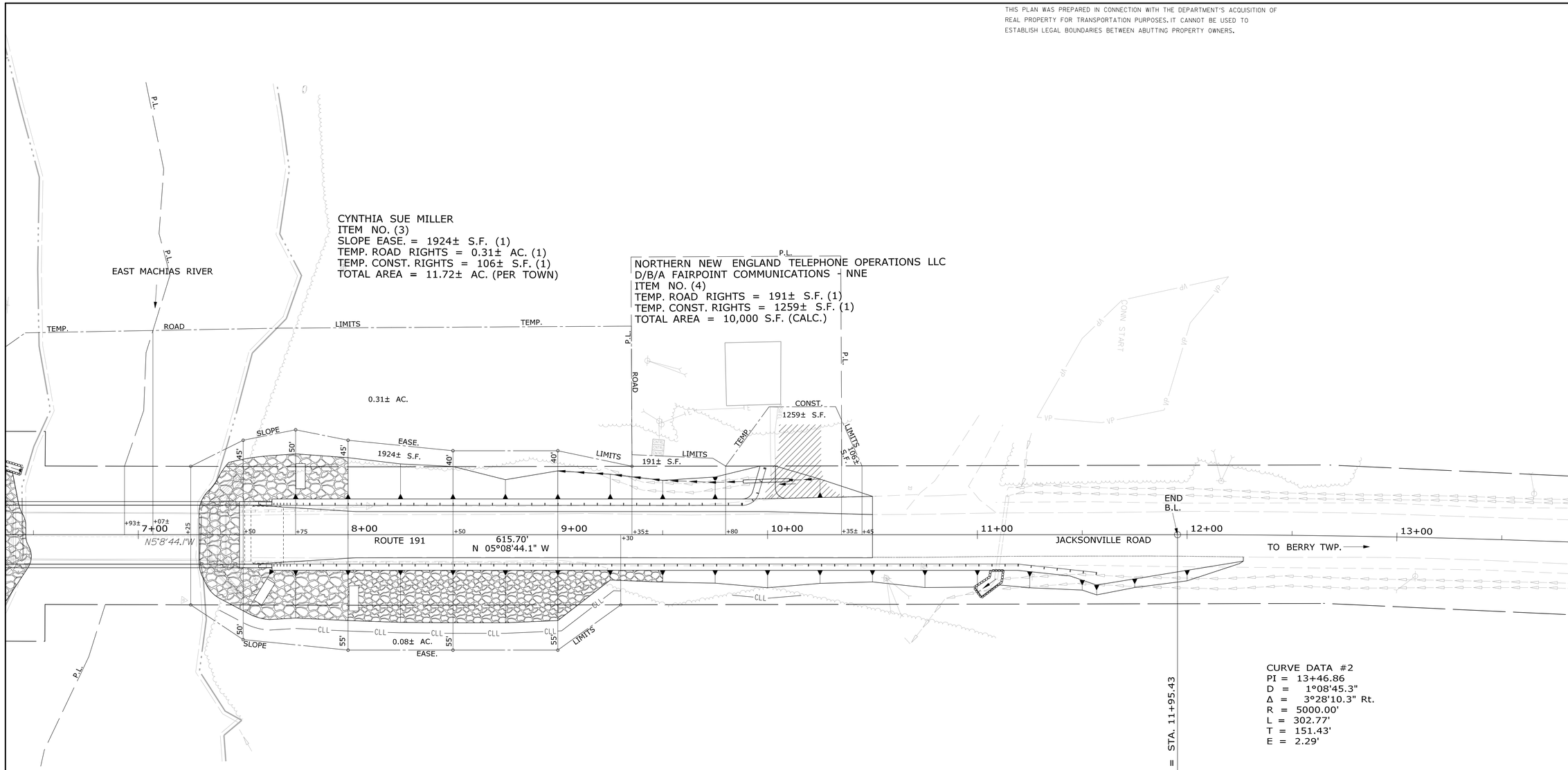


R/W REFERENCES:

FROM BEGINNING OF PROJECT TO STA. 6+55±
SEE S.H.C. FILE NO. S-15-199
SHEET 2 OF 2, 1967

FROM STA. 6+55± TO END OF PROJECT SEE
WASHINGTON COUNTY COMMISSIONER'S RECORDS
VOLUME 3, PAGE 317
1848, VARIABLE WIDTH
4 RODS STARTING AT "WEST END OF BRIDGE"

BRIDGE NO. 3219 — JACKSONVILLE BRIDGE OVER EAST MACHIAS RIVER — WIN 20501.00

SYMBOLS

- IP or ● IPF (IRON PIPE or PIN FOUND)
- S.T. (SEPTIC TANK)
- (ROW MONUMENT)
- ΔBM (TRAVERSE POINT)
- WELL (WELL)
- GRADING LIMIT LINE
- CONSTRUCTION LIMIT LINE
- PROPERTY LINE PL
- LIMITS OF WROUGHT PORTION (L.O.W.P.)
- EXISTING RIGHT OF WAY
- NEW RIGHT OF WAY
- NEW ROW WITHIN EXIST. ROW
- CONTROL OF ACCESS
- WATER LINE
- GAS LINE
- ELECTRIC LINE
- TELEPHONE LINE
- SEWER LINE

| ITEM | TECH | CHECKED |
|---|---|---|
| BASE MAP | | |
| EXIST. R/W | BDM | |
| PROP. LINES | BDM | |
| AREAS | BDM | |

STATE OF MAINE
DEPARTMENT OF TRANSPORTATION
16 STATE HOUSE STATION - AUGUSTA, ME 04333-0016
EAST MACHIAS
RIGHT OF WAY MAP

| REVISIONS | | | |
|---|---|---|---|
| NO. | DATE | DESCRIPTION | BY |

PLAN FILED IN PLAN BOOK PAGE COUNTY RECORD

| NO. | GRANTOR | INSTRUMENT | DATE | BOOK | PAGE |
|---|---|---|---|---|---|

DAVID BERNHARDT
COMMISSIONER
JOYCE NOEL TAYLOR
CHIEF ENGINEER
DATE

STATE AID HIGHWAY NO. 2
ROUTE 191 JACKSONVILLE ROAD
EAST MACHIAS WASHINGTON COUNTY
FEDERAL AID PROJECT NO. STP-2050(100)

MAY 2015 — RIGHT-OF-WAY MAP — D.O.T. FILE NO. 15-321
SCALE 1" = 25' — SHEET 2 OF 2

SHEET NUMBER
37
OF 37

Date:11/5/2015
Username:
Division:
Filename: 037_RWPLAN2.dgn