STATE OF MAINE
DEPARTMENT OF TRANSPORTATION

SPECIFICATIONS

Design: Load and Resistance Factor Design per AASHTO LRFD Bridge Design Specifications, Sixth Edition 2012.

DESIGN LOADING

Live Load ..... HL - 93

TRAFFIC DATA

Current (2013) AADT	5,920
Future (2023) AADT	6,510
Future (2033) AADT	7,100
DHV - % of AADT	10%
Design Hour Volume	710
Heavy Trucks (% of AADT)	12%
Heavy Trucks (% of DHV)	7%
Directional Distribution (% of DHV)	53%
18 kip Equivalent P 2.0	789
18 kip Equivalent P 2.5	751
Design Speed (mph)	25

HYDROLOGIC DATA

Drainage Area	264 sq mi
Design Discharge (Q50)	21,682 cfs
Check Discharge (Q100)	24,908 cfs

MATERIALS

Concrete:
- Sidewalks, Transition Barriers & Blockout in Deck at Exp. Jt. ..... Class "LP"
- All Other ..... Class "A"

Reinforcing Steel
- Plain ..... ASTM A615/A615M, Grade 60
- Epoxy Coated ..... ASTM A775/A775M, Grade 60

Structural Steel:
- High Strength Bolts ..... ASTM A325, Type 3

BASIC DESIGN STRESSES

Concrete	f 'c = 4,350 psi
Reinforcing Steel	f y = 60,000 psi
Structural Steel:	
ASTM A325	F μ = 120,000 psi

GUILFORD
PISCATAQUIS COUNTY
MEMORIAL BRIDGE
OVER
OVER PISCATAQUIS RIVER
MAIN STREET (ROUTES 6,15,16&150)
FEDERAL AID PROJECT NO. STP-2049(500)
PROJECT LENGTH 0.075 mi.
BRIDGE NO. 2337

LIST OF DRAWINGS

Title Sheet 1
Estimated Quantities 2
General Construction Notes 3
General Plan 4
Profile 5
Signing and Striping Plan 6
Geometric Layout and Curbing Plan 7
Guardrail Layout Plan 8
Typical Sections 9
Special Details 10
Cross Sections 11-14
Maintenance of Traffic Plans 15-17
Temporary Signal Plan 18
Detour Plan 19
Staged Construction 20
Abutment No. 1 21
Abutment No. 1 - Reinforcing 22
Abutment No. 1 - Northeast Wall 23
Abutment No. 1 - Sections 24
Abutment No. 2 25
Abutment No. 2 - Reinforcing 26
Abutment No. 2 - Southeast Wall 27
Abutment No. 2 - Southwest Wall 28
Framing Plan 29
Bottom of Slab Elevation 30
Transverse Section 31
Superstructure Plan 32
Superstructure Reinforcing 33
Superstructure Details 34
Approach Slab 35
Reinforcing Steel Schedule 36
Lighting Plan 37
Right of Way 38

UTILITIES

Central Maine Power Company
Fairpoint Communications
Moosehead Enterprises, Inc.
Guilford-Sangerville Water District
Guilford-Sangerville Sanitary District

MAINTENANCE OF TRAFFIC

Maintain one 12'-0" wide lane of alternating two - way traffic using traffic signals.

PROJECT LOCATION:	Memorial Bridge (#2337) which carries Routes 6, 15, 16 & 150 (Main Street) over the Piscataquis River. Located 0.04 miles north of Elm Street.
PROGRAM AREA:	Bridge
OUTLINE OF WORK:	Deck Replacement

B H

STATE OF MAINE
Brandon M. Havu
13728
LICENSED
PROFESSIONAL ENGINEER
3/4/2015

Gorrill Palmer Responsible
For Roadway/Approach Plans

GORRILL PALMER
Relationships. Responsiveness. Results.
www.gorrillpalmer.com
207.657.6910

BECKER STRUCTURAL ENGINEERS
75 York Street, Portland, Maine 04101
207.879.1838 ■ beckerstructural.com

STATE OF MAINE
DEPARTMENT OF TRANSPORTATION

APPROVED

		DATE
COMMISSIONER:		3/23/15
CHIEF ENGINEER:		3-23-15

STATE OF MAINE
JOHN A. BURGESS #5745
LICENSED PROFESSIONAL ENGINEER

SIGNATURE #5745	
P.E. NUMBER	
3/4/2015	
DATE	

PROJECT INFORMATION

PROGRAM	BRIDGE
PROJECT MANAGER	ANDREW LATHE
DESIGNER	JACK BURGESS
CONSULTANT	BECKER STRUCTURAL ENGINEERS
PROJECT RESIDENT	
CONTRACTOR	
PROJECT COMPLETION DATE	

WIN 20495.00

STP-2049(500)

GUILFORD MEMORIAL BRIDGE

TITLE SHEET

SHEET NUMBER

1

OF 38

Filename: \00\Bridge\001_Title.dgn Division: HIGHWAY Username: bhavu Date:3/4/2015

ESTIMATED QUANTITIES - SECTION 1

ITEM NO.	DESCRIPTION	QUANTITY	UNIT
202.10	REM EXIST SUPERSTRS PROP CONTR (190 CY)	1	LS
202.12	REMOVE EXISTING STRUCTURAL CONCRETE	34	CY
202.15	REMOVING EXISTING MANHOLE OR CATCH BASIN	1	EA
202.202	REMOVING PAVEMENT SURFACE	160	SY
202.203	PAVEMENT BUTT JOINTS	250	SY
203.20	COMMON EXCAVATION	460	CY
203.25	GRANULAR BORROW	155	CY
206.061	STR EARTH EXCAVATION - DRAINAGE MINOR STR BELOW GRADE	25	CY
206.082	STR EA EXC - MAJOR STRUCTURES	250	CY
304.15	AGGREGATE BASE COURSE - TYPE B	400	CY
403.2081	HOT MIX ASPHALT 12.5 MM HMA SURFACE (POLYMER MODIFIED)	115	T
403.209	HOT MIX ASPHALT - 9.5 MM (SIDEWALK, DRIVES, & INCIDENTALS)	80	T
403.211	HOT MIX ASPHALT - SHIM	45	T
403.213	HOT MIX ASPHALT - 12.5 MM (BASE AND INTERMEDIATE COURSE)	125	T
409.15	BITUMINOUS TACK COAT, APPLIED	103	GAL
461.131	TEMPORARY PAVEMENT	57	T
502.21	STR CONC ABUT & RET WALL	30	CY
502.26	STR CONC RD SW SLAB ON ST BR (135 CY)	1	LS
502.31	STRUCT CONC APPROACH SLABS (20 CY)	1	LS
502.49	STRUCTURAL CONCRETE CURBS AND SIDEWALKS (86 CY)	1	LS
503.12	REINFORCING STEEL, FABRICATED/DELIVERED	6800	LB
503.13	REINFORCING STEEL, PLACING	6800	LB
503.14	EPOXY-COATED REINF STEEL, FAB'D/DELIV'D	16700	LB
503.15	EPOXY-COATED REINF STEEL, PLACING	16700	LB
503.17	MECHANICAL / WELDED SPLICE - NON-COATED	12	EA
505.08	SHEAR CONNECTORS (3584 LBS)	1	LS
507.0831	STEEL BRIDGE RAILING, 4-BAR (412 LF)	1	LS
508.13	SHEET WATERPROOFING MEMBRANE (3 SY)	1	LS
508.14	HIGH PERFORMANCE WATERPROOFING MEMBRANE (575 SY)	1	LS
514.06	CURING BOX FOR CONC CYL	1	EA
515.21	PROTECTIVE COAT FOR CONC SUR (400 SY)	1	LS
520.22	EXPANSION DEVICE - COMPRESSION SEAL	1	EA
524.301	TEMPORARY STRUCTURAL SUPPORT - BEAM SUPPORT	1	LS
524.301	TEMPORARY STRUCTURAL SUPPORT - ROADWAY SUPPORT	1	LS
526.34	PERMANENT CONC TRANSITION BARRIER	3	EA
526.3401	PERM CONC TRANSITION BARRIER - MODIFIED	1	EA
526.301	TEMPORARY CONCRETE BARRIER (660 LF)	1	LS
527.34	WORK ZONE CRASH CUSHIONS	3	UN
603.159	12 INCH CULVERT PIPE OPTION III	8	LF
603.195	24 INCH REINFORCED CONCRETE PIPE CLASS III	32	LF
604.072	CATCH BASIN TYPE A1-C	2	EA
604.15	MANHOLE	1.125	EA
604.161	ALTERING CATCH BASIN	3	EA
604.18	ADJUSTING MANHOLE OR CB TO GRADE	1	EA
604.252	CATCH BASIN TYPE A5-C	2.125	EA
605.09	6 INCH UNDERDRAIN TYPE B	93	LF
605.11	12 INCH UNDERDRAIN TYPE C	55	LF
605.12	15 INCH UNDERDRAIN TYPE C	100	LF
605.13	18 INCH UNDERDRAIN TYPE C	88	LF
606.1721	BRIDGE TRANSITION - TYPE 1	2	EA
606.23	GUARDRAIL TYPE 3C - SINGLE RAIL	12.5	LF
606.353	REFLECTORIZED FLEXIBLE GUARDRAIL MARKER	4	EA
606.65	GUARDRAIL THRIE BEAM - SINGLE RAIL	12.5	LF
606.66	TERMINAL END THRIE BEAM	1	EA
606.72	GUARDRAIL THRIE BEAM - OVER 15 FT RADIUS	12.5	LF
606.81	TANGENT GUARDRAIL TERMINAL - ENERGY ABSORBING	1	EA
607.162	ALUMINUM FENCE - 4 FOOT	70	LF
608.26	CURB RAMP DETECTABLE WARNING FIELD	36	SF
609.11	VERTICAL CURB TYPE 1	225	LF
609.12	VERTICAL CURB TYPE 1 - CIRCULAR	27	LF
609.238	TERMINAL CURB TYPE 1-8 FOOT	15	EA
609.31	CURB TYPE 3	52	LF
610.08	PLAIN RIPRAP	3	CY
615.07	LOAM	20	CY
618.13	SEEDING METHOD NUMBER 1	2	UN
618.141	SEEDING METHOD NUMBER 3	1	UN
619.1201	MULCH	2	UN
619.1401	EROSION CONTROL MIX	20	CY
620.58	EROSION CONTROL GEOTEXTILE	10	SY
620.601	SPECIAL SEPARATION GEOTEXTILE	250	SY
626.31	18 INCH DIAMETER FOUNDATION	2	EA
627.733	4" WHITE OR YELLOW PAINTED PAVEMENT MARKING LINE	2400	LF
627.75	WHITE OR YELLOW PAVEMENT AND CURB MARKING	585	SF
627.76	TEMPORARY PAVEMENT MARKING LINE, WHITE OR YELLOW	1	LS
627.77	REMOVING PAVEMENT MARKINGS	800	SF
627.811	TEMPORARY BI DIRECTIONAL YELLOW DELINEATORS	50	EA
627.812	TEMPORARY BI DIRECTIONAL WHITE DELINEATORS	50	EA
629.05	HAND LABOR, STRAIGHT TIME	40	HR
631.10	AIR COMPRESSOR (INCLUDING OPERATOR)	20	HR
631.11	AIR TOOL (INCLUDING OPERATOR)	20	HR
631.12	ALL-PURPOSE EXCAVATOR (INCLUDING OPERATOR)	20	HR
631.172	TRUCK-LARGE (INCLUDING OPERATOR)	40	HR
631.22	FRONT END LOADER (INCLUDING OPERATOR)	20	HR
631.32	CULVERT CLEANER (INCLUDING OPERATORS)	10	HR
639.18	FIELD OFFICE, TYPE A	1	EA

ESTIMATED QUANTITIES - SECTION 1

ITEM NO.	DESCRIPTION	QUANTITY	UNIT
643.62	RECTANGULAR RAPID FLASHING BEACON	3	EA
643.72	TEMPORARY TRAFFIC SIGNAL	1	LS
643.92	PEDESTAL POLE	3	EA
645.271	REG WARNING CONF ROUTE SIGNS TYPE 1	28	SF
652.312	TYPE III BARRICADE	10	EA
652.33	DRUM	50	EA
652.34	CONE	50	EA
652.35	CONSTRUCTION SIGNS	1250	SF
652.361	MAINTENANCE OF TRAFFIC CONTROL DEVICES	1	LS
652.38	FLAGGER	1200	HR
652.41	PORTABLE - CHANGEABLE MESSAGE SIGN	2	EA
653.22	2 INCH POLYSTYRENE PLASTIC INSULATION	8	SY
656.75	TEMPORARY SOIL EROSION AND WATER POLLUTION CONTROL	1	LS
659.10	MOBILIZATION	1	LS

ESTIMATED QUANTITIES - SECTION 2

ITEM NO.	DESCRIPTION	QUANTITY	UNIT
634.160	HIGHWAY LIGHTING	1	LS
634.210	CONVENTIONAL LIGHT STANDARD	4	EA

GORRILL PALMER
Relationships. Responsiveness. Results.
www.gorrillpalmer.com
207.657.6910

BECKER STRUCTURAL ENGINEERS
75 York Street, Portland, Maine 04101
207.879.1838 ■ beckerstructural.com

STATE OF MAINE
DEPARTMENT OF TRANSPORTATION

STP-2049(500)

WIN 20495.00

BRIDGE NO. 2337

BRIDGE PLANS

PROJ. MANAGER	ANDREW LATHE	BY	DATE
DESIGN-DETAILED	E.BROWNELL	D.BURGESS	2-18-15
CHECKED-REVIEWED	E.BROWNELL	J.BURGESS	2-18-15
DESIGN2-DETAILED2	------	------	------
DESIGN3-DETAILED3	------	------	------
REVISIONS 1	------	------	------
REVISIONS 2	------	------	------
REVISIONS 3	------	------	------
REVISIONS 4	------	------	------
FIELD CHANGES	------	------	------

SIGNATURE

P.E. NUMBER

DATE

MEMORIAL BRIDGE
OVER PISCATAQUIS RIVER
GUILFORD PISCATAQUIS COUNTY

ESTIMATED QUANTITIES

SHEET NUMBER
2
OF 38

Filename: ...\BRIDGE\MSTA\002_Estimate.dgn Division: BRIDGE Username: common Date:5/5/2015

GENERAL CONSTRUCTION NOTES

1. For easements, construction limits and right of way lines, refer to Right of Way Map.

2. Except as otherwise shown, backfill for retaining walls, approach slabs and abutment backwall shall be Granular Borrow meeting the requirements of Subsection 703.19, Material for Underwater Backfill.

3. Extended-use Erosion Control Blanket, seeded gutters, riprap downspouts, and other gutters lined with Stone Ditch Protection shall be constructed after paving and shoulder work is completed, where it is apparent that runoff will cause continual erosion. Payment will be made under the appropriate Contract items.

4. Protective Coating for Concrete Surfaces shall be applied to the following areas:

All exposed surfaces of concrete curbs and sidewalks.
Fascias down to the drip notch.
All exposed surfaces of Concrete Transition Barriers.
Top of retaining wall and one foot down back of retaining walls

5. Erosion Control Mix may be substituted in those areas normally receiving loam and seed as directed by the Resident. Placement shall be in accordance with Standard Specifications Section 619, Mulch. Payment will be made under Item No. 619.1401, Erosion Control Mix.

6. Preformed expansion joint filler located between abutment backwall and retaining walls shall not be paid for directly, but shall be considered incidental to Item 502.21.

7. Existing concrete and masonry removal associated with modifications to tops of retaining walls as shown on plans shall be paid for under Item 202.12

8. Prior to demolishing existing structure, the existing Guilford Memorial Bridge plaque mounted to the northwest end post shall be removed and salvaged for re-use.

9. The existing bridge shall be removed to the limits shown and become the property of the Contractor. The steel portions of the existing bridge may be coated with a lead-based paint system. The Contractor is responsible for the containment, proper management and disposal of all lead-contaminated hazardous waste generated by the process of demolishing the bridge and installing new shear studs on top flanges of existing beams. The Contractor is responsible for implementing appropriate OSHA mandated personal protection standards related to this process.

10. Prior to installation of shear studs, the existing top surfaces of the top flanges shall be ground smooth. Payment for surface preparation of the top surfaces of the top flanges will be considered incidental to Item No. 202.10.

11. The Contractor shall submit a Bridge Demolition Plan to the Resident at least 10 business days prior to the start of demolition work. The plan shall outline the methods and equipment to be used to remove and dispose of all materials included in the existing bridge. No work related to the removal of the bridge shall be undertaken by the Contractor until MaineDOT has reviewed the Bridge Demolition Plan for appropriateness and completeness. Payment for all work necessary for developing, submitting and finalizing the Demolition Plan will be considered incidental to the bridge removal pay item.

12. Prior to removing the existing bridge deck, the Contractor shall temporarily support the existing west fascia beam for torsional forces due to the existing sanitary line. Payment for the temporary support of the west facsia beam shall be made under Item 524.301 Temporary Structural Support.

13. Quantities included for pay items measured and paid for by Lump Sum are estimated quantities and are provided by MaineDOT for informational purposes only. Lump Sum pay items will be paid for at the Contract Bid amount, with no addition or reduction in payment to the Contractor if the actual final quantities are different from the MaineDOT provided estimated quantities, except as follows:

a. If a Lump Sum pay item is eliminated, the requirements of Standard Specifications Section 109.2, Elimination of Items, will take precedence.

b. If other Contract Documents specifically allow a change in payment for a Lump Sum pay item, those requirements will be followed.

c. If a design change results in changes to estimated quantities for Lump Sum pay items, price adjustments will be made in accordance with Standard Specifications Section 109.7, Equitable Adjustments to Compensation.

14. No separate payment for Superintendent or Foreman shall be made for the supervision of equipment being paid for under the equipment rental items.

15. Project information referred to below may be accessed at the following MaineDOT web address: http://www.maine.gov/mdot/contractors/.

16. The existing bridge plans may be accessed at the MaineDOT web address. The plans are reproductions of the original drawings as prepared for the construction of the bridge. It is very unlikely that the plans will show any construction field changes and alterations which may have been made to the bridge during its life span.

17. Geotechnical information furnished or referred to in this plan set is for the use of the Bidders and the Contractor. No assurance is given that the information or interpretations will be representative of actual subsurface conditions at the construction site. MaineDOT will not be responsible for the Bidders' or Contractor's interpretations of, or conclusions drawn from, the geotechnical information.

18. All waste material not used on the project shall be disposed of off the project in waste areas approved by the Resident.

19. Any necessary cleaning of existing pavement prior to paving shall be incidental to the related paving items.

20. No existing drainage shall be abandoned, removed or plugged without prior approval of the Resident. Abandoned structures to remain shall be plugged with brick and mortar, incidental to 'Drainage Items'.

21. All existing guardrail shall be removed and become the property of the Contractor. Removal and disposal shall be considered incidental to the guardrail items.

22. The cost associated with removing and resetting granite block steps as necessary to complete the work shown on the plans will not be paid for directly, but will be considered incidental to Item 203.25 Granular Borrow.

23. The clearing and selective clearing and thinning lines shown on the plans are for estimating purposes only. The actual lines for clearing and thinning shall be established in the field by the contractor and approved by the Resident.

24. All utility facilities shall be adjusted by the respective utilities unless otherwise noted.

25. The location of the existing utilities and drainage shown on the plans and cross sections were compiled from field survey and various other sources. Locations are approximate and not guaranteed to be accurate nor is it guaranteed that all utilities are shown. No separate or additional compensation will be allowed to the Contractor due to any variance between the data shown on the plans and the actual field conditions encountered.

26. See Special Provision 104 for utility installation work.

27. Do not excavate for Aggregate Subbase Course where existing material is suitable as determined by the Resident.

28. In areas where the Resident directs the Contractor not to excavate to the subgrade line shown on the plans, payment for removing existing pavement, grubbing, shaping, ditching, and compacting the existing subbase and layers of new subbase 6 inches or less thick will be made under appropriate equipment rental items.

29. Entrances shall be constructed with:

Residential Paved:	2" Hot Mix Asphalt - Grading 9.5mm 12" Aggregate Subbase Course - Gravel
Commercial Paved:	3" Hot Mix Asphalt - Grading 9.5mm 11" Aggregate Subbase Course - Gravel
Unpaved:	14" Aggregate Subbase Course - Gravel

30. Existing culverts to remain shall be cleaned as directed by the Resident. Payment shall be made under item 631.32 Culvert Cleaner (Including operators).

31. Any necessary cutting of existing pipes to fit in areas of proposed catch basins and modifying existing catch basins to fit new pipes shall not be paid for separately and shall be considered incidental to 603, 604 or 605 pay items.

32. Catch basin and rim elevations noted on the cross sections are the top of grate elevations at the center of grate. Catch basin offset locations are measured to the center of the grate.

33. Removal of existing drainage pipes, as noted on the plans, shall be considered incidental to item 203.20, Common Excavation.

34. Any damage to the existing roads, slopes, pipes, utilities or drainage structures caused by the Contractor's equipment, personnel or operation shall be repaired to the satisfaction of the Resident. All work, equipment and materials required to make repairs shall be at the Contractor's expense.

35. Pavement Markings shall be in accordance with the 'Manual on Uniform Traffic Control Devices for Streets and Highways" U.S.D.O.T.F.H.W.A. latest edition. Pavement Marking pay items are listed on the Quantitiy Sheet.

36. Place loam 4 inches deep on all new or reconstructed sideslopes or as directed by the Resident, unless otherwise noted.

37. An NCHRP350 compliant guardrail end treatment shall be installed concurrently with the placement of each section of beam guardrail.

38. Where pavement under this contract joins an existing pavement, the existing pavement shall be saw cut along a smooth line to a neat, even vertical joint, as directed by the Resident. Broken or raveled edges will not be permitted. All work necessary for the preparation of this joint will be considered incidental to the related contract items.

39. Mulch shall be applied in areas seeded by seeding method no. 1, seeding method no. 2 and seeding method no. 3.

40. Removal of existing curbing shall be considered incidental to item 203.20 - common excavation.

41. The culvert sizes shown on the plans and cross sections are for smoothline pipes.

42. AI-C and BI-C catch basins shall be Shape 1 with haunched cone, as per Standard Detail 604(02), unless otherwise noted on the plans.

43. Plastic end caps shall be used on all dead-end 6 inch Type B underdrain.

44. All catch basins Type A place on circular curb Type 1 shall have the curb inlet cut the same radius as adjacent circular curb. Payment shall be incidental to Item 604.

45. Stations referenced are approximate.

46. All joints between existing and proposed hot mix asphalt shall be butted. Payment shall be considered incidental to 403 items.

47. Milling widths/depths may be adjusted by the Resident.

48. Existing catch basins will be cleaned as directed by the Resident. Payment for catch basin cleaning shall be incidental to 604 items.

49. All pedestrian ramps shall be 6 feet wide.

50. Pedestrian ramp Detectable Warning devices shall be used at all crosswalk locations.

51. At locations indicated, guardrail posts shall be modified from the indicated length of 6 feet, as shown in the Standard Details, to a length of 7 feet with an embedment of 4.5 feet. Payment will be considered incidental to the guardrail pay items.

52. Inlets and outlets of all culverts shall be riprapped unless otherwise noted on the plans or directed by the Resident.

53. Two Reflectorized Flexible G.R. Markers (Item 606.353) will be installed at each guardrail end.

54. Unless otherwise noted Seeding Method No. 1 shall be utilized on all lawns and developed areas. Seeding Method No. 3 shall be utilized on all guardrail fill slopes. On long guardrail backslopes, Seeding Method No. 3 may be used instead of Method No. 2 if noted or directed by the Resident.

55. "Undetermined Locations" shall be determined by the Resident.

56. All work shall be done in accordance with the Maine Department of Transportation's Best Management Practices for Erosion & Sedimentation Control, latest edition.

57. Driveway fill side slopes shall be the same as the non-guardrail fill slopes unless otherwise noted on the plans.

GORRILL PALMER
Relationships. Responsiveness. Results.
www.gorrillpalmer.com
207.657.6910

BECKER STRUCTURAL ENGINEERS
75 York Street, Portland, Maine 04101
207.879.1838 ■ beckerstructural.com

STATE OF MAINE
DEPARTMENT OF TRANSPORTATION

STP-2049(500)

WIN 20495.00

BRIDGE NO. 2337

BRIDGE PLANS

PROJ. MANAGER	ANDREW LATHE	BY	DATE
DESIGN-DETAILED	E.BROWNELL	D.BURGESS	2-18-15
CHECKED-REVIEWED	E.BROWNELL	J.BURGESS	2-18-15
DESIGN2-DETAILED2	------	------	------
DESIGN3-DETAILED3	------	------	------
REVISIONS 1	------	------	------
REVISIONS 2	------	------	------
REVISIONS 3	------	------	------
REVISIONS 4	------	------	------
FIELD CHANGES	------	------	------

SIGNATURE

P.E. NUMBER

DATE

MEMORIAL BRIDGE
OVER PISCATAQUIS RIVER
GUILFORD PISCATAQUIS COUNTY

GENERAL CONSTRUCTION NOTES

SHEET NUMBER
3
OF 38

Filename: ...\MSTA\003_GeneralNotes.dgn Division: BRIDGE Username: common Date:3/13/2015

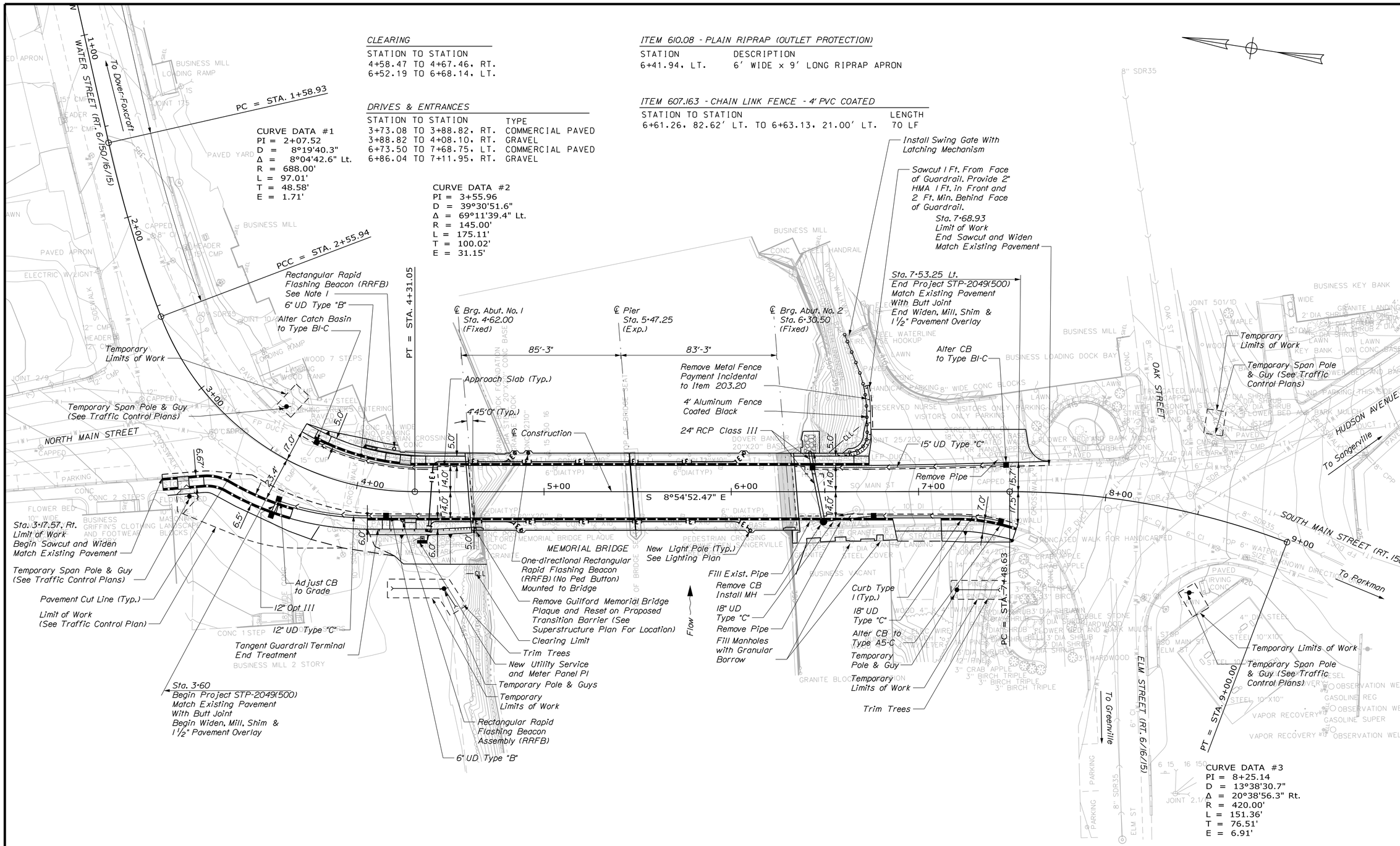

CLEARING

STATION TO STATION
4+58.47 TO 4+67.46, RT.
6+52.19 TO 6+68.14, LT.

DRIVES & ENTRANCES

STATION TO STATION	TYPE
3+73.08 TO 3+88.82, RT.	COMMERCIAL PAVED
3+88.82 TO 4+08.10, RT.	GRAVEL
6+73.50 TO 7+68.75, LT.	COMMERCIAL PAVED
6+86.04 TO 7+11.95, RT.	GRAVEL

ITEM 610.08 - PLAIN RIPRAP (OUTLET PROTECTION)

STATION	DESCRIPTION
6+41.94, LT.	6' WIDE x 9' LONG RIPRAP APRON

ITEM 607.163 - CHAIN LINK FENCE - 4' PVC COATED

STATION TO STATION	LENGTH
6+61.26, 82.62' LT. TO 6+63.13, 21.00' LT.	70 LF

NOTES:

1. Place RRFB behind bridge rail. Contractor shall field verify location of RRFB to ensure push button location/height is in compliance with MUTCD. Coordinate work with Resident.

PLAN

25 0 25 50

Scale of Feet

GORRILL PALMER

Relationships. Responsiveness. Results.
www.gorrillpalmer.com
207.657.6910

BECKER STRUCTURAL ENGINEERS

75 York Street, Portland, Maine 04101
207.879.1838 ■ beckerstructural.com

STATE OF MAINE
DEPARTMENT OF TRANSPORTATION

STP-2049(500)

WIN 20495.00

BRIDGE NO: 2337

BRIDGE PLANS

	BY	DATE
PROJ. MANAGER ANDREW LATHE		
DESIGN-DETAILED	EMW/BMH	2-13-15
CHECKED-REVIEWED	L. NEWHOUSE	2-13-15
DESIGN2-DETAILED2	D.ETTINGER	--
DESIGN3-DETAILED3	--	--
REVISIONS 1	--	--
REVISIONS 2	--	--
REVISIONS 3	--	--
REVISIONS 4	--	--
FIELD CHANGES	--	--

SIGNATURE

P.E. NUMBER

DATE

MEMORIAL BRIDGE
OVER PISCATAQUIS RIVER
GUILFORD PISCATAQUIS COUNTY

GENERAL PLAN

SHEET NUMBER

4

OF 38

Filename: ...\00\Bridge\004_BDPlan_01.dgn Division: HIGHWAY Username: bhavu Date:2/18/2015

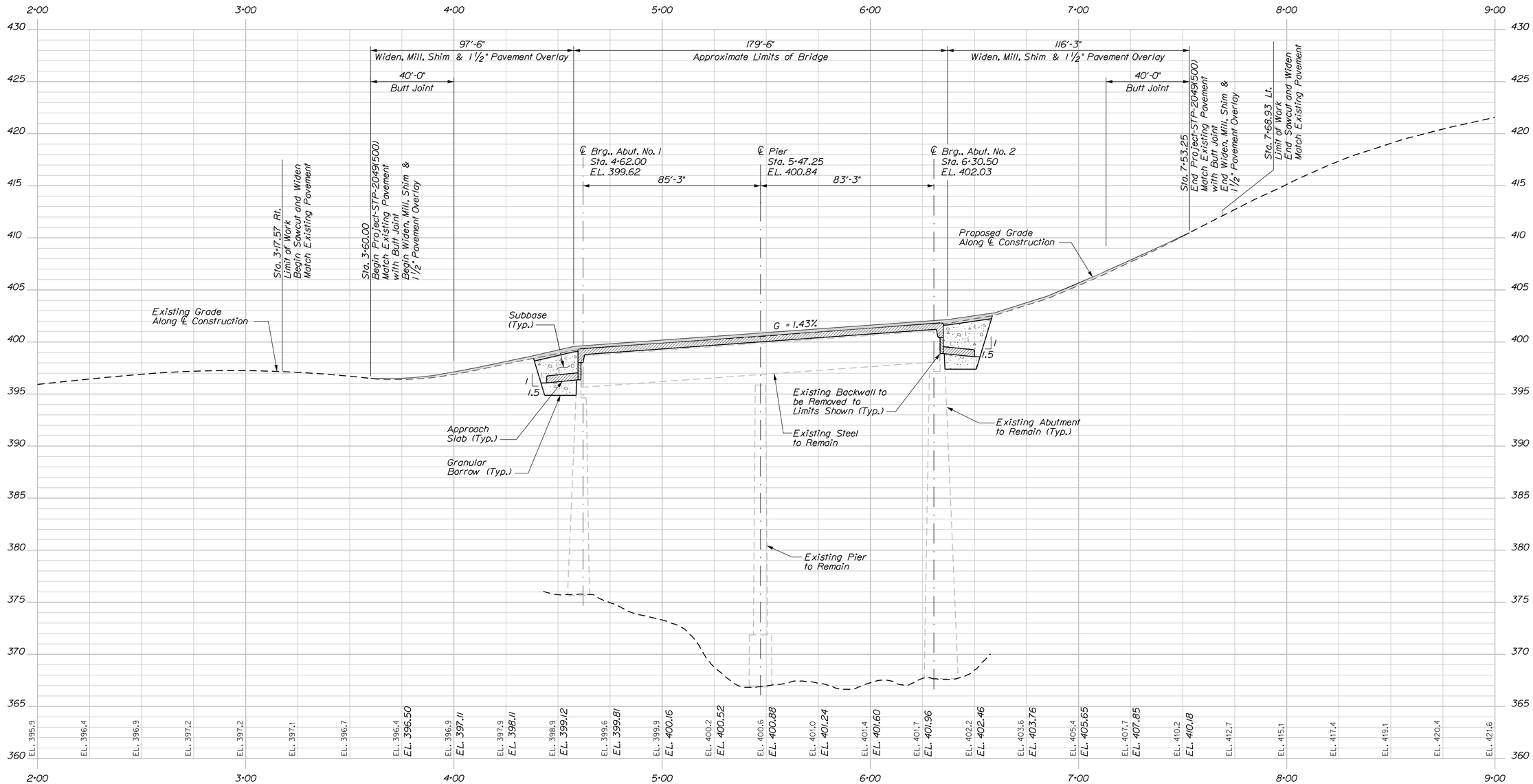

PROFILE

Horiz. 25 0 25 50

Vert. 5 0 5 10

Scale of Feet

GORRILL PALMER

Relationships. Responsiveness. Results.
www.gorrillpalmer.com
207.657.6910

BECKER
STRUCTURAL ENGINEERS
75 York Street, Portland, Maine 04101
207.879.1838 ■ beckerstructural.com

STATE OF MAINE
DEPARTMENT OF TRANSPORTATION

STP-2049(500)

WIN 20495.00

BRIDGE NO. 2337

BRIDGE PLANS

		BY	DATE
PROJ. MANAGER	ANDREW LATHE		
DESIGN-DETAILED	E.BROWNELL	D.BURGESS	1-16-15
CHECKED-REVIEWED	E.BROWNELL	J.BURGESS	
DESIGN2-DETAILED2			
DESIGN3-DETAILED3			
REVISIONS 1			
REVISIONS 2			
REVISIONS 3			
REVISIONS 4			
FIELD CHANGES			

SIGNATURE

P.E. NUMBER

DATE

MEMORIAL BRIDGE
OVER PISCATAQUIS RIVER
GUILFORD PISCATAQUIS COUNTY

PROFILE

SHEET NUMBER

5

OF 38

Filename: ...\00\Bridge\005_Profile.dgn Division: HIGHWAY Username: bhavu Date:2/17/2015

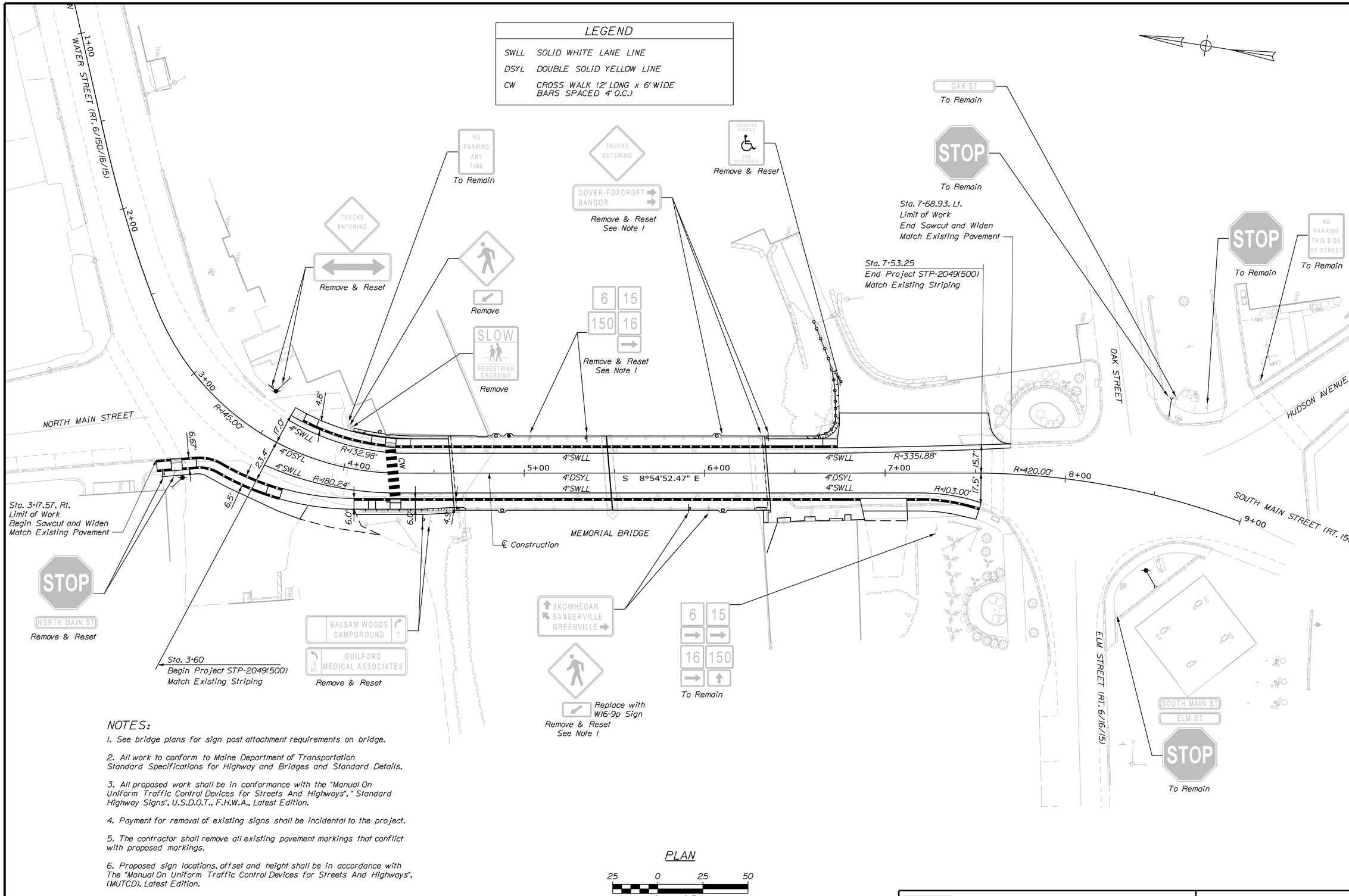

NOTES:

1. See bridge plans for sign post attachment requirements on bridge.
2. All work to conform to Maine Department of Transportation Standard Specifications for Highway and Bridges and Standard Details.
3. All proposed work shall be in conformance with the "Manual On Uniform Traffic Control Devices for Streets And Highways", "Standard Highway Signs", U.S.D.O.T., F.H.W.A., Latest Edition.
4. Payment for removal of existing signs shall be incidental to the project.
5. The contractor shall remove all existing pavement markings that conflict with proposed markings.
6. Proposed sign locations, offset and height shall be in accordance with The "Manual On Uniform Traffic Control Devices for Streets And Highways", (MUTCD), Latest Edition.
7. Payment for sign relocations to be incidental to the project. Work shall include reset or new posts. No separate payment will be made.

GORRILL PALMER
Relationships. Responsiveness. Results.
www.gorrillpalmer.com
207.657.6910

BECKER STRUCTURAL ENGINEERS
75 York Street, Portland, Maine 04101
207.879.1838 ■ beckerstructural.com

STATE OF MAINE
DEPARTMENT OF TRANSPORTATION

STP-2049(500)

WIN 20495.00

		BY	DATE
PROJ. MANAGER	ANDREW LATHE		
DESIGN-DETAILED	LEM/GMH	L. NEWHOUSE	2-13-15
CHECKED-REVIEWED	D.ETTINGER		2-13-15
DESIGN2-DETAILED2			
DESIGN3-DETAILED3			
REVISIONS 1			
REVISIONS 2			
REVISIONS 3			
REVISIONS 4			
FIELD CHANGES			

SIGNATURE

P.E. NUMBER

DATE

MEMORIAL BRIDGE
OVER PISCATAQUIS RIVER
GUILFORD PISCATAQUIS COUNTY

SIGNING & STRIPING PLAN

SHEET NUMBER
6
OF 38

Filename: ...\00\Bridge\006_SSPlan_01.dgn Division: HIGHWAY Username: bhavu Date:2/17/2015

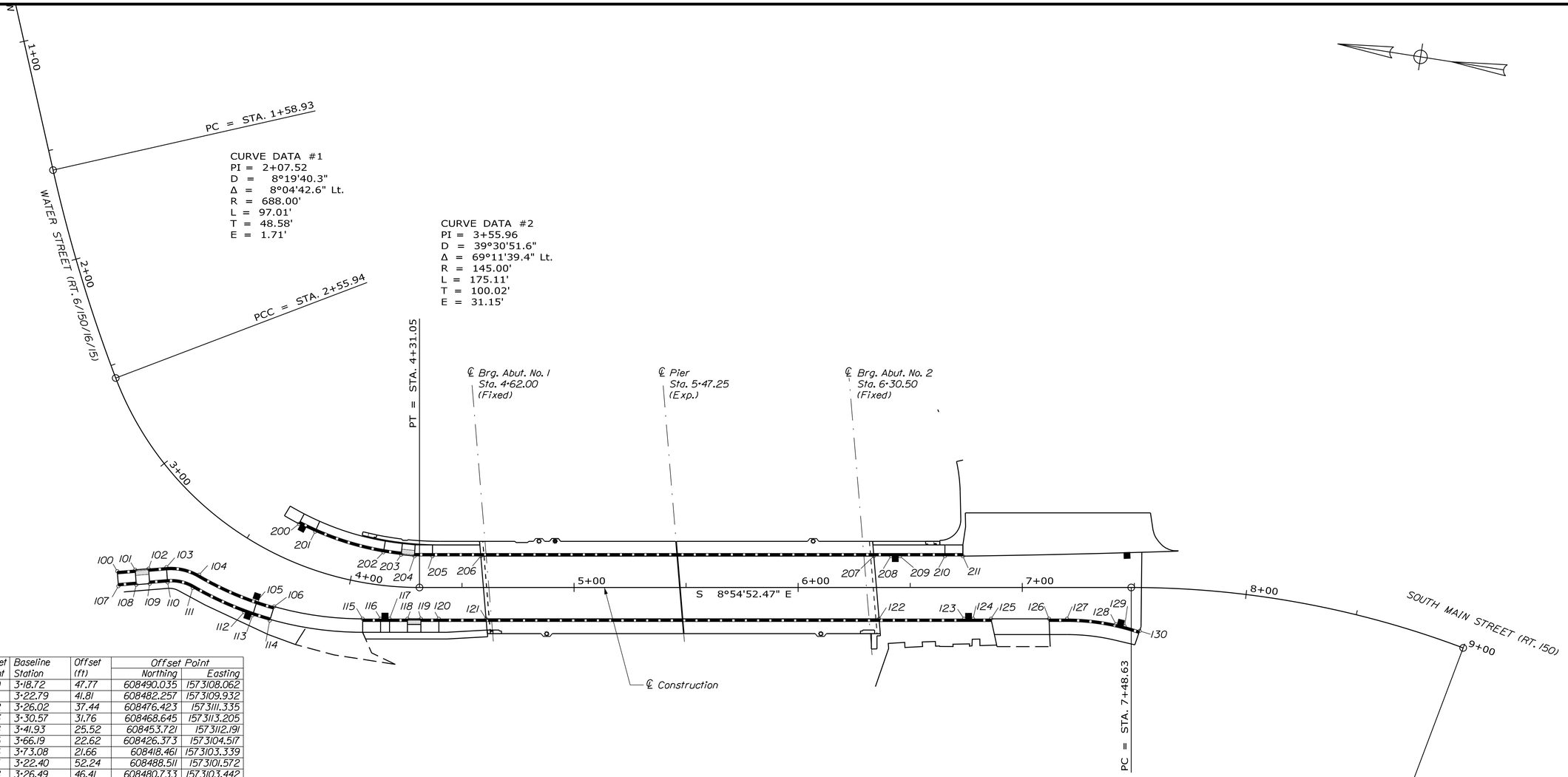

Offset Point	Baseline Station	Offset (ft)	Offset Point Northing	Offset Point Easting
100	3+18.72	47.77	608490.035	1573108.062
101	3+22.79	41.81	608482.257	1573109.932
102	3+26.02	37.44	608476.423	1573111.335
103	3+30.57	31.76	608468.645	1573113.205
104	3+41.93	25.52	608453.721	1573112.191
105	3+66.19	22.62	608426.373	1573104.517
106	3+73.08	21.66	608418.461	1573103.339
107	3+22.40	52.24	608488.511	1573101.572
108	3+26.49	46.41	608480.733	1573103.442
109	3+29.73	42.15	608474.899	1573104.845
110	3+34.27	36.62	608467.121	1573106.715
111	3+42.81	31.95	608455.610	1573105.952
112	3+63.65	29.50	608431.273	1573098.834
113	3+66.96	29.06	608427.344	1573098.088
114	3+73.59	28.13	608419.432	1573096.909
115	4+08.10	16.01	608378.594	1573104.043
116	4+15.27	14.95	608370.691	1573105.283
117	4+18.88	14.56	608366.739	1573105.903
118	4+26.15	14.09	608358.835	1573107.142
119	4+31.68	14.00	608352.908	1573108.072
120	4+39.68	14.00	608345.005	1573109.312
121	4+60.74	14.00	608324.198	1573112.575
122	6+36.10	14.00	608150.959	1573139.749
123	6+74.04	14.00	608113.477	1573145.628
124	6+78.04	14.00	608109.526	1573146.248
125	6+86.04	14.00	608101.622	1573147.488
126	7+11.95	14.00	608076.017	1573151.504
127	7+19.95	14.00	608068.113	1573152.744
128	7+41.80	16.41	608046.159	1573153.743
129	7+45.68	17.37	608042.174	1573153.405
130	7+52.53	19.38	608035.271	1573152.436
200	3+68.41	-16.63	608413.201	1573141.554
201	3+77.42	-16.26	608405.539	1573139.255
202	4+13.08	-14.76	608374.044	1573134.878
203	4+21.96	-14.38	608366.046	1573135.000
204	4+28.60	-14.00	608360.054	1573135.312
205	4+36.84	-14.00	608352.148	1573136.530
206	4+58.41	-14.00	608330.835	1573139.877
207	6+33.77	-14.00	608157.597	1573167.050
208	6+41.41	-14.00	608150.046	1573168.235
209	6+45.41	-14.00	608146.095	1573168.854
210	6+65.50	-14.00	608126.253	1573171.967
211	6+73.50	-14.00	608118.350	1573173.206

ITEM 609.11 - VERTICAL CURB TYPE 1

POINT	LENGTH (FT)	RADIUS (FT)
104 to 105	28.45	145.00
111 to 112	25.39	151.50
120 to 121	21.09	-
122 to 123	37.94	-
127 to 128	22.02	100.00
129 to 130	6.97	100.00
201 to 202	31.88	130.00
205 to 206	21.57	-
207 to 208	7.64	-
209 to 210	20.08	-

ITEM 609.12 - VERTICAL CURB TYPE 1 - CIRCULAR

POINT	LENGTH (FT)	RADIUS (FT)
103 to 104	15.19	25.00
110 to 111	11.71	19.38

ITEM 609.238 - TERMINAL CURB TYPE 1 - 8 FOOT

POINT	LENGTH (FT)	RADIUS (FT)
100 to 101	8.00	-
102 to 103	8.00	-
105 to 106	8.00	145.00
107 to 108	8.00	-
109 to 110	8.00	-
113 to 114	8.00	151.50
115 to 116	8.00	-
117 to 118	8.00	-
119 to 120	8.00	-
124 to 125	8.00	-
126 to 127	8.00	-
200 to 201	8.00	130.00
202 to 203	8.00	130.00
204 to 205	8.00	-
210 to 211	8.00	-

CURVE DATA #3
PI = 8+25.14
D = 13°38'30.7"
Δ = 20°38'56.3" Rt.
R = 420.00'
L = 151.36'
T = 76.51'
E = 6.91'

PLAN

25 0 25 50
Scale of Feet

GORRILL PALMER
Relationships. Responsiveness. Results.
www.gorrillpalmer.com
207.657.6910

BECKER STRUCTURAL ENGINEERS
75 York Street, Portland, Maine 04101
207.879.1838 ■ beckerstructural.com

STATE OF MAINE
DEPARTMENT OF TRANSPORTATION

STP-2049(500)

WIN 20495.00

BRIDGE NO: 2337

BRIDGE PLANS

		BY	DATE
PROJ. MANAGER	ANDREW LATHE		
DESIGN-DETAILED	LEM/BMH	L. NEWHOUSE	2-13-15
CHECKED-REVIEWED	D.ETTINGER		2-13-15
DESIGN2-DETAILED2			
DESIGN3-DETAILED3			
REVISIONS 1			
REVISIONS 2			
REVISIONS 3			
REVISIONS 4			
FIELD CHANGES			

SIGNATURE

P.E. NUMBER

DATE

MEMORIAL BRIDGE
OVER PISCATAQUIS RIVER
GUILFORD PISCATAQUIS COUNTY

GEOMETRIC LAYOUT AND CURBING PLAN

SHEET NUMBER
7
OF 38

Filename: ...\00\Bridge\007_CurbPlan_01.dgn Division: HIGHWAY Username: bhavu Date:2/17/2015

ITEM 606.81 - TANGENT GUARDRAIL TERMINAL - ENERGY ABSORBING

STATION TO STATION	LENGTH
4+08.92, 21.94' RT. TO 4+30.71, 20.00' RT.	25.0 LF

ITEM 606.66 - TERMINAL END THRIE BEAM

STATION
6+72.86, 55.55' LT.

ITEM 606.1721 - BRIDGE TRANSITION - TYPE 1

STATION TO STATION	RADIUS
4+43.17, 20.00' RT. TO 4+63.62, 19.00' RT.	-
6+60.89, 19.00' LT. TO 6+74.59, 30.65' LT.	11.37 FT

ITEM 606.72 - GUARDRAIL THRIE BEAM - OVER 15 FT RADIUS

STATION TO STATION	LENGTH	RADIUS
6+72.86, 55.55' LT. TO 6+74.28, 43.15' LT.	12.5 LF	70.00 FT (7 FT POSTS)

ITEM 606.23 - GUARDRAIL TYPE 3C - SINGLE RAIL

STATION TO STATION	LENGTH
4+30.71, 20.00' RT. TO 4+43.17, 20.00' RT.	12.50 LF

ITEM 606.65 - GUARDRAIL THRIE BEAM - SINGLE RAIL

STATION TO STATION	LENGTH
6+74.28, 43.15' LT. TO 6+74.59, 30.65' LT.	12.50 LF (7 FT POSTS)

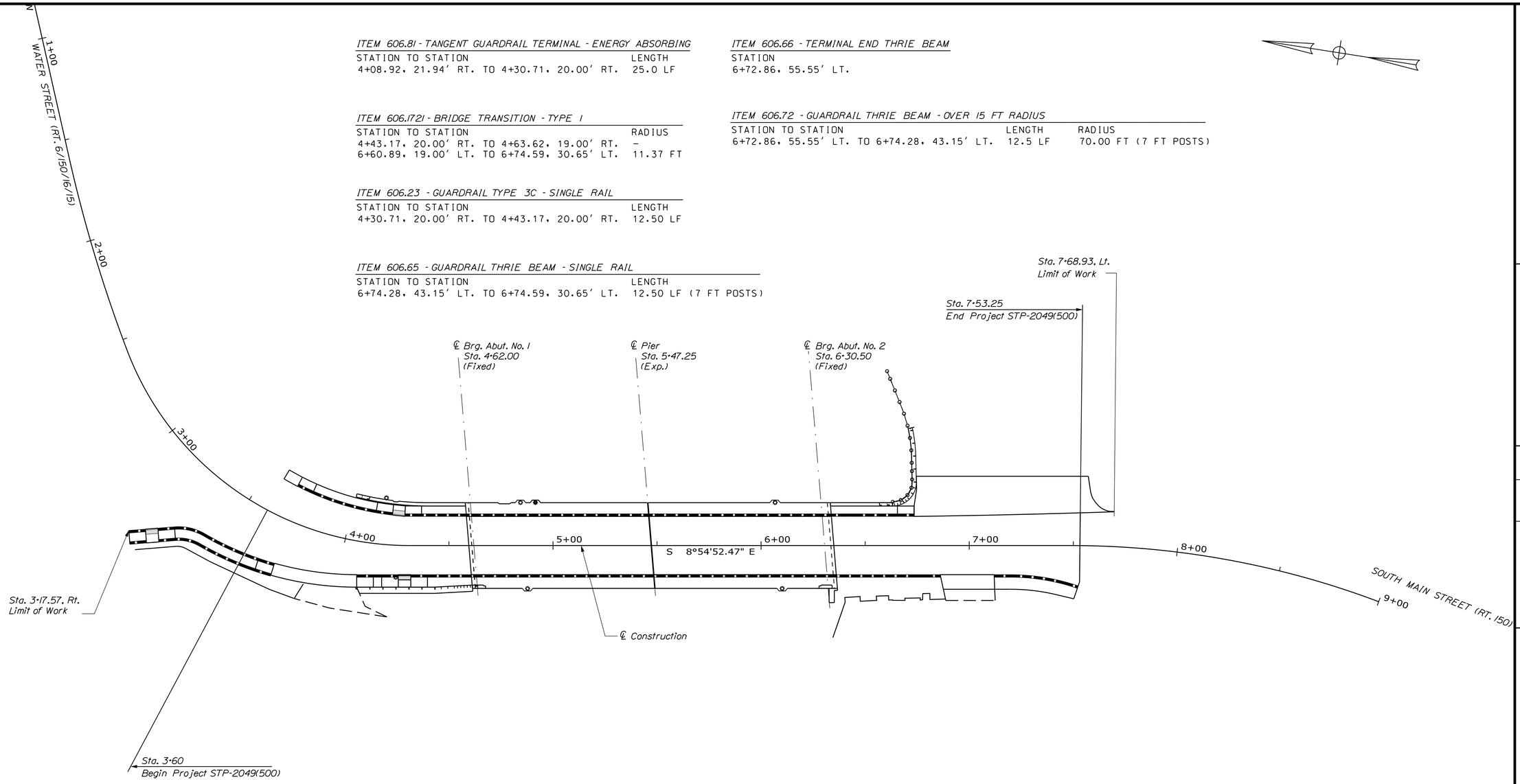

PLAN

25 0 25 50

Scale of Feet

GORRILL PALMER

Relationships. Responsiveness. Results.
www.gorrillpalmer.com
207.657.6910

BECKER STRUCTURAL ENGINEERS

75 York Street, Portland, Maine 04101
207.879.1838 ▪ beckerstructural.com

STATE OF MAINE
DEPARTMENT OF TRANSPORTATION

STP-2049(500)

WIN 20495.00

BRIDGE NO: 2337

BRIDGE PLANS

		BY	DATE
PROJ. MANAGER	ANDREW LATHE		
DESIGN-DETAILED	LEM/GMH	L. NEWHOUSE	2-13-15
CHECKED-REVIEWED	D.ETTINGER	---	2-13-15
DESIGN2-DETAILED2	------	------	------
DESIGN3-DETAILED3	------	------	------
REVISIONS 1	------	------	------
REVISIONS 2	------	------	------
REVISIONS 3	------	------	------
REVISIONS 4	------	------	------
FIELD CHANGES	------	------	------

SIGNATURE

P.E. NUMBER

DATE

MEMORIAL BRIDGE
OVER PISCATAQUIS RIVER
GUILFORD PISCATAQUIS COUNTY

GUARDRAIL LAYOUT

SHEET NUMBER

8

OF 38

Filename: ...\00\Bridge\008_GRPlan_01.dgn Division: HIGHWAY Username: bhavu Date:2/17/2015

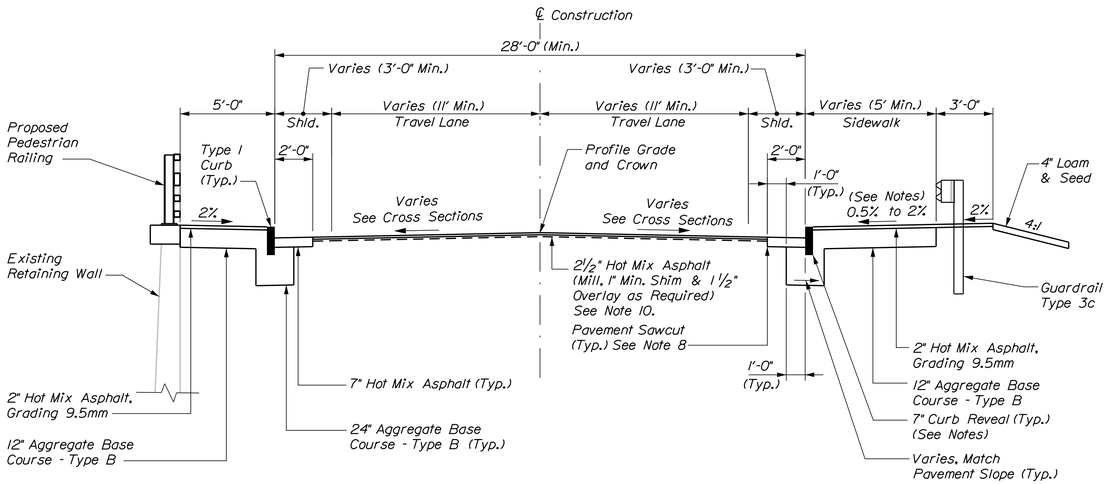

TYPICAL APPROACH SECTION
MILL, SHIM & OVERLAY

Sta. 3+60 to Sta. 4+38±
Sta. 6+58± to Sta. 7+53±

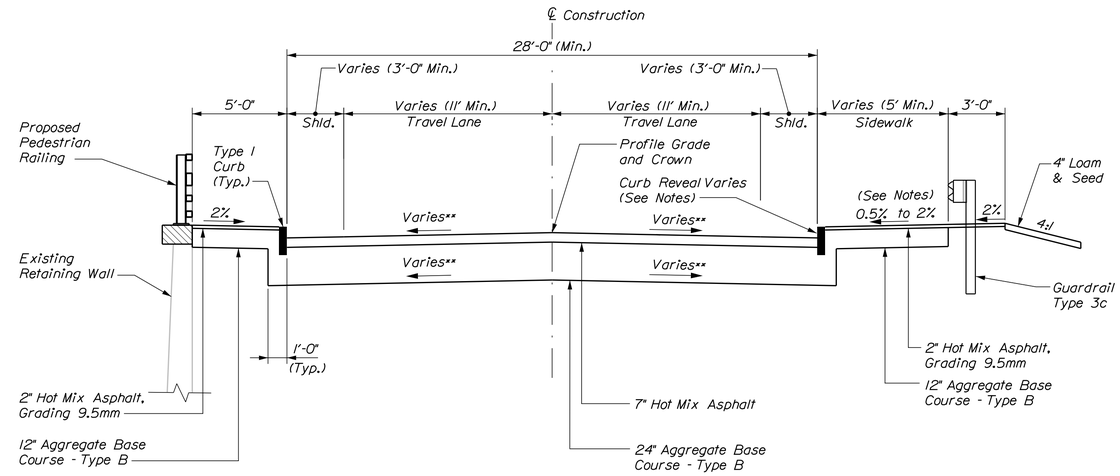

**See Superelevation Table and Cross Sections

TYPICAL APPROACH SECTION
FULL DEPTH RECONSTRUCTION

Sta. 4+38± to Bridge
Bridge to Sta. 6+58±

NOTES

1. The pavement, base and subbase depths as shown on the plans are intended to be nominal.
2. When superelevation exceeds the slope of the low side shoulder, the low side shoulder shall have the same slope as the travelway.
3. Crowns for both normal and superelevation sections for all courses of subbase and pavement shall be straight.
4. The algebraic difference between the shoulder and travelway cross slopes "rollover" shall not exceed 8%.
5. Transition curb reveal from 9" at the southwest bridge joint to 5" at Station 6+45.00, Rt. Curb reveal shall be 5" from Station 6+45.00, Rt. to Station 6+86.04, Rt.
6. Sidewalk cross slope shall transition from 1.0% to 0.50% from southwest bridge joint to Station 6+45.00, Rt. Sidewalk cross slope shall remain at 0.50% from Station 6+45.00, Rt. to driveway beginning at Station 6+86.04, Rt.
7. Sidewalk cross slopes shall transition from 2.0% to 1.0% at the bridge abutments. Transition to occur over 10 feet, unless otherwise noted.
8. The pavement saw cut line location shall be defined as the most restrictive criteria noted below, which will result in the pavement saw cut line to be nearest to the construction baseline:
   A. 24" inside of the existing edge of pavement line
   B. 24" inside of the proposed edge of pavement line
   The baseline offset to the pavement saw cut line is noted on the cross sections.
9. The stationing shown under each Typical Section is approximate.
10. The bridge deck replacement will result in a bridge profile elevation raise of 2.5". The highway approach work will require a 2.5" pavement overlay, consisting of a 1.0" minimum pavement shim and a 1.5" hot mix asphalt pavement overlay. In areas where pavement milling is required to achieve the required roadway cross slopes, the reduction or elimination of the pavement shim will be allowed.
11. Transition approach curb reveal and batter to match bridge curb reveal over an 8' segment, beginning 8' in advance of bridge joints, unless otherwise noted.

SUPERELEVATION TABLE

LEFT TRAVELWAY %	STATION	RIGHT TRAVELWAY %
Match Existing Roadway		
-3.50	3+60	0.50
-2.97	3+75	-0.13
-2.08	4+00	-1.19
-1.19	4+25	-1.19
-1.19	4+50	-1.19
Bridge *	4+62	Bridge *
Bridge *	6+30.50	Bridge *
-2.00	6+50	-2.00
-2.00	6+75	-2.00
-2.00	7+00	-2.00
-1.20	7+25	-1.45
-0.40	7+50	-0.90
Match Existing Roadway		

*Bridge cross slope = -1.19%

NOT TO SCALE

GORRILL PALMER
Relationships. Responsiveness. Results.
www.gorrillpalmer.com
207.657.6910

BECKER STRUCTURAL ENGINEERS
75 York Street, Portland, Maine 04101
207.879.1838 ■ beckerstructural.com

STATE OF MAINE
DEPARTMENT OF TRANSPORTATION

STP-2049(500)

WIN 20495.00

PROJ. MANAGER	ANDREW LATHE	BY	DATE
DESIGN-DETAILED	LEM/BMH	L. NEWHOUSE	2-13-15
CHECKED-REVIEWED	D.ETTINGER	---	2-13-15
DESIGN2-DETAILED2	------	------	------
DESIGN3-DETAILED3	------	------	------
REVISIONS 1	------	------	------
REVISIONS 2	------	------	------
REVISIONS 3	------	------	------
REVISIONS 4	------	------	------
FIELD CHANGES	------	------	------

SIGNATURE

P.E. NUMBER

DATE

MEMORIAL BRIDGE
OVER PISCATAQUIS RIVER
GUILFORD PISCATAQUIS COUNTY

TYPICAL SECTIONS

SHEET NUMBER
9
OF 38

Filename: ...\00\Bridge\009_Btypical.dgn Division: HIGHWAY Username: bhavu Date:2/17/2015

CONSTRUCTION NOTES:
1. 30"x30" SIGN W11-2
2. 12" YELLOW RECTANGULAR RAPID FLASHING BEACONS (BLACK HOUSING) SET TO HIGH VISIBILITY STROBE PATTERN - MOUNTED IN BOTH DIRECTIONS. UNLESS NOTED OTHERWISE
3. MAINEDOT PEDESTAL POLE
4. PEDESTRIAN PUSH BUTTON (NON AUDIBLE)
5. POLE MOUNTED NETWORK CONTROLLER
6. 18" CONCRETE FOUNDATION PER MAINEDOT STANDARDS

GENERAL NOTES:
1. ALL LIGHTS AND PEDESTRIAN PUSH BUTTONS . SHALL BE JSF TECHNOLOGIES OR EQUAL
2. POLE SHALL BE PAINTED COLOR BRONZE FINISH.
3. LIGHTS SHALL FLASH FOR 30 SECONDS (AS NOTED).
4. SIGNS W11-2 AND W16-7P SHALL BE FLUORESCENT. YELLOW-GREEN BACKGROUND COLOR.
5. SEE SPECIAL PROVISION 643.
6. INSTALL SIGN W16-9P INSTEAD OF W16-7P ON RRFB MOUNTED ON BRIDGE.
7. SIGN R10-25 AND PUSH BUTTON NOT REQUIRED ON RRFB MOUNTED ON BRIDGE.

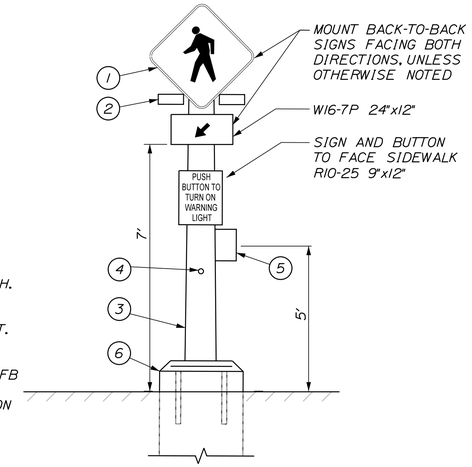

RECTANGULAR RAPID FLASHING BEACON ASSEMBLY DETAIL

(SOLAR POWERED, RADIO ACTIVATED)
Not to Scale

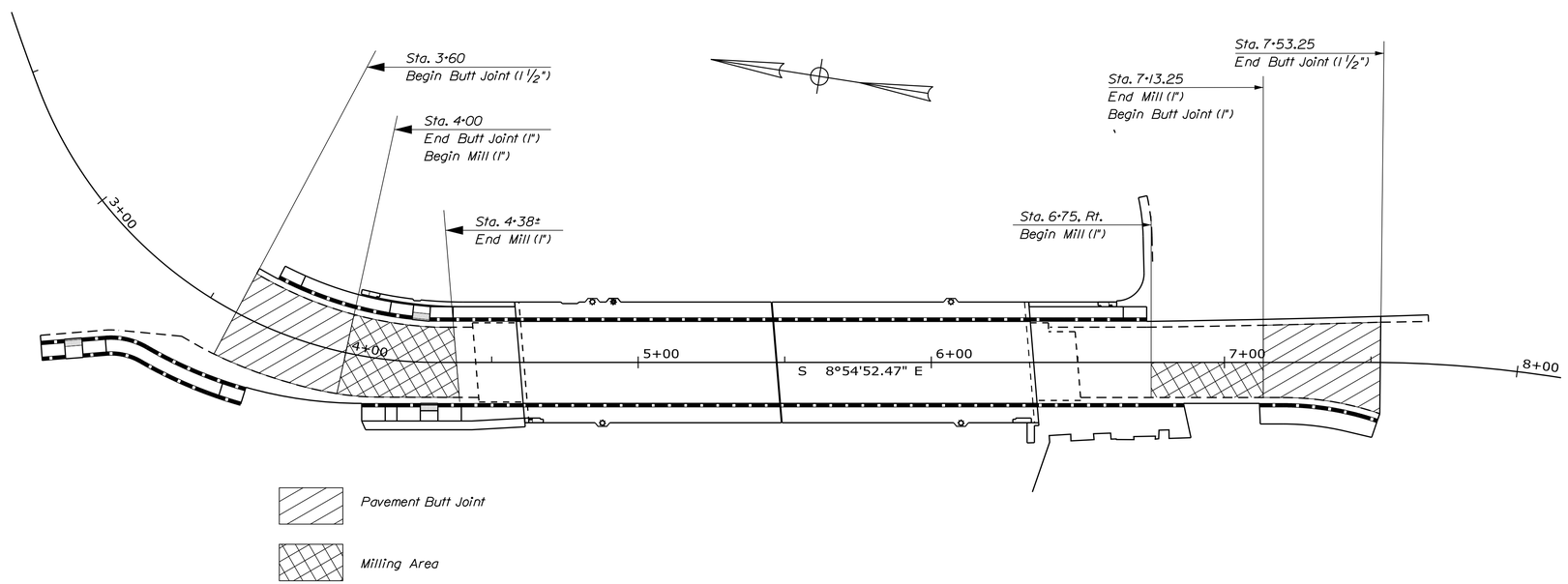

MILLING DETAIL

Scale:1" = 25'

Notes:
1. Pavement mill depths are approximate. Milling shall be to a depth deep enough to ensure placement of proposed 1 1/2" Hot Mix Asphalt and Shim, as required and noted on the typical sections.
2. Shim shall be placed to achieve required cross slopes where necessary. See typical sections for cross slope requirements.

GORRILL PALMER
Relationships. Responsiveness. Results.
www.gorrillpalmer.com
207.657.6910

BECKER STRUCTURAL ENGINEERS
75 York Street, Portland, Maine 04101
207.879.1838 ■ beckerstructural.com

STATE OF MAINE
DEPARTMENT OF TRANSPORTATION
STP-2049(500)
WIN 20495.00

		BY	DATE
PROJ. MANAGER	ANDREW LATHE		
DESIGN-DETAILED	LEM/GMH	L. NEWHOUSE	2-13-15
CHECKED-REVIEWED	D.ETTINGER	--	2-13-15
DESIGN2-DETAILED2	-------	-------	-------
DESIGN3-DETAILED3	-------	-------	-------
REVISIONS 1	-------	-------	-------
REVISIONS 2	-------	-------	-------
REVISIONS 3	-------	-------	-------
REVISIONS 4	-------	-------	-------
FIELD CHANGES	-------	-------	-------

SIGNATURE
P.E. NUMBER
DATE

MEMORIAL BRIDGE
OVER PISCATAQUIS RIVER
GUILFORD PISCATAQUIS COUNTY

SPECIAL DETAILS

SHEET NUMBER
10
OF 38

Filename: ...\00\Bridge\010_Details_001.dgn Division: HIGHWAY Username: bhavu Date:2/17/2015

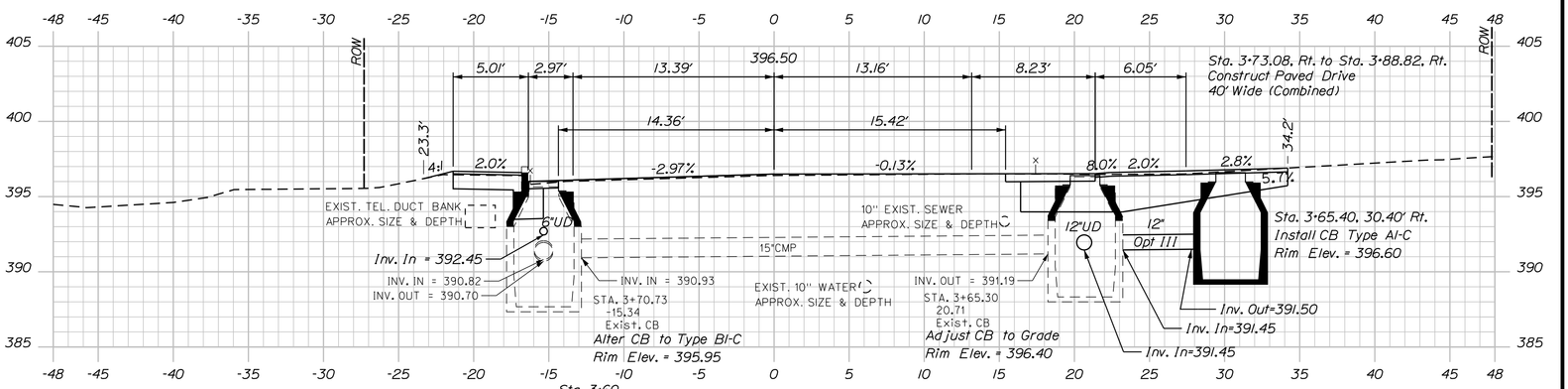

Sta. 3+70.34, Lt. to Sta. 4+43.50, Lt.
Install 65.0' x 6" UD Type "B"

Sta. 3+60
Begin Project STP-2049(500)
Match Existing Pavement
with Butt Joint
Begin Widen, Mill, Shim & 1 1/2" Pavement Overlay

3+75.00

Sta. 3+65.30, Rt. to Sta. 4+16.98, Rt.
Install 54.4' x 12" UD Type "C"

Sta. 3+65.30, Rt. to Sta. 3+65.40, Rt.
Install 5.7' x 12" Option III

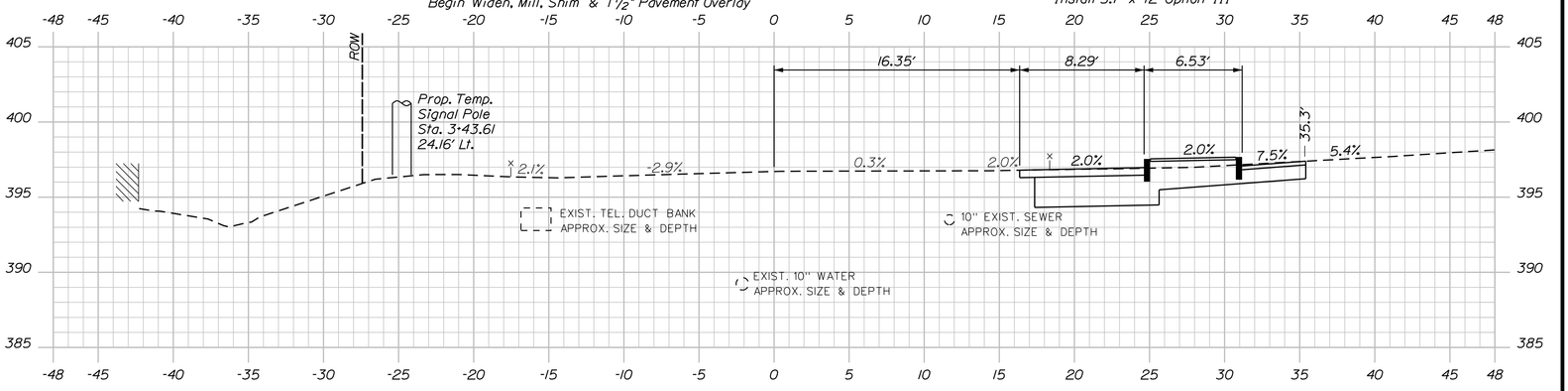

3+50.00

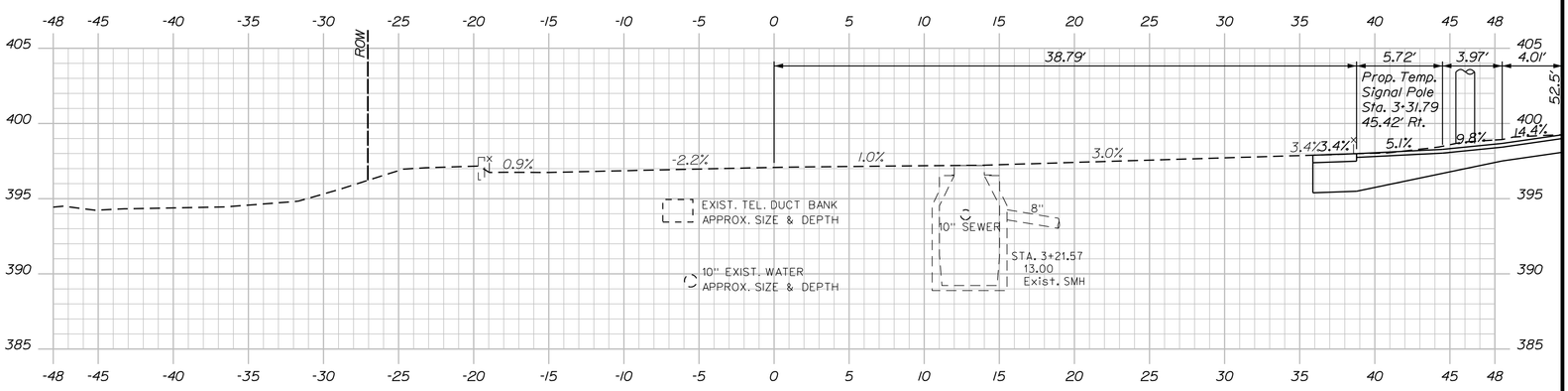

3+25.00

STA. 3+17.57 Rt.
Limit of Work
Begin Sawcut and Widen
Match Existing Pavement

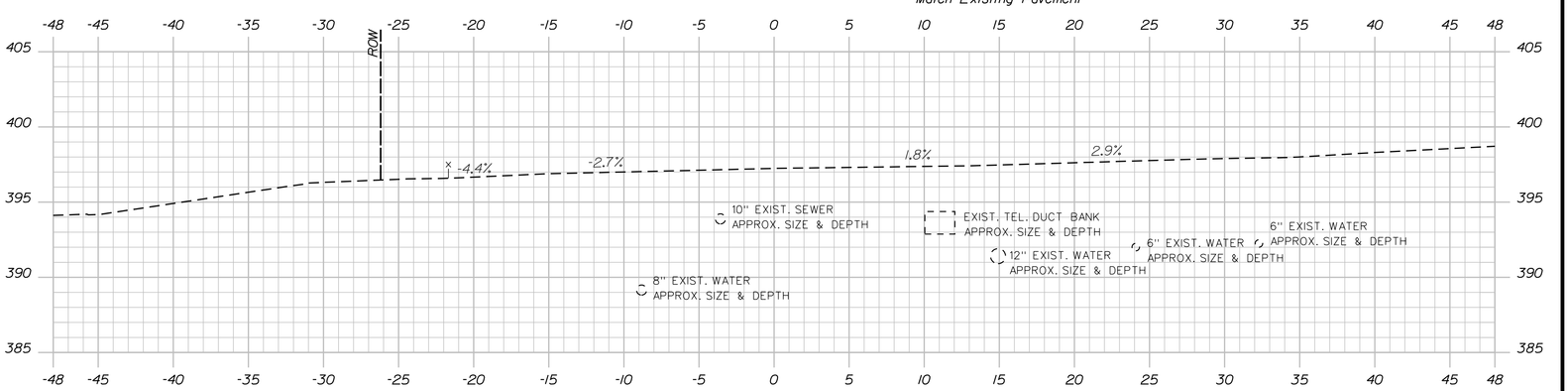

3+00.00

Sta. 3+00.00 to Sta. 3+75.00

SHEET NUMBER 11 OF 38

MEMORIAL BRIDGE
OVER PISCATAQUIS RIVER
GUILFORD PISCATAQUIS COUNTY

CROSS SECTIONS

PROJ. MANAGER	ANDREW LATHE	BY	DATE
DESIGN-DETAILED	LEM\BMH	L. NEWHOUSE	2-13-15
CHECKED-REVIEWED	D.ETTINGER	__	2-13-15
DESIGN2-DETAILED2	_____	_____	_____
DESIGN3-DETAILED3	_____	_____	_____
REVISIONS 1	_____		_____
REVISIONS 2	_____		_____
REVISIONS 3	_____		_____
REVISIONS 4	_____		_____
FIELD CHANGES	_____		_____

SIGNATURE
P.E. NUMBER
DATE

STATE OF MAINE
DEPARTMENT OF TRANSPORTATION

STP-2049(500)

BRIDGE NO. 2337 WIN 20495.00 BRIDGE PLANS

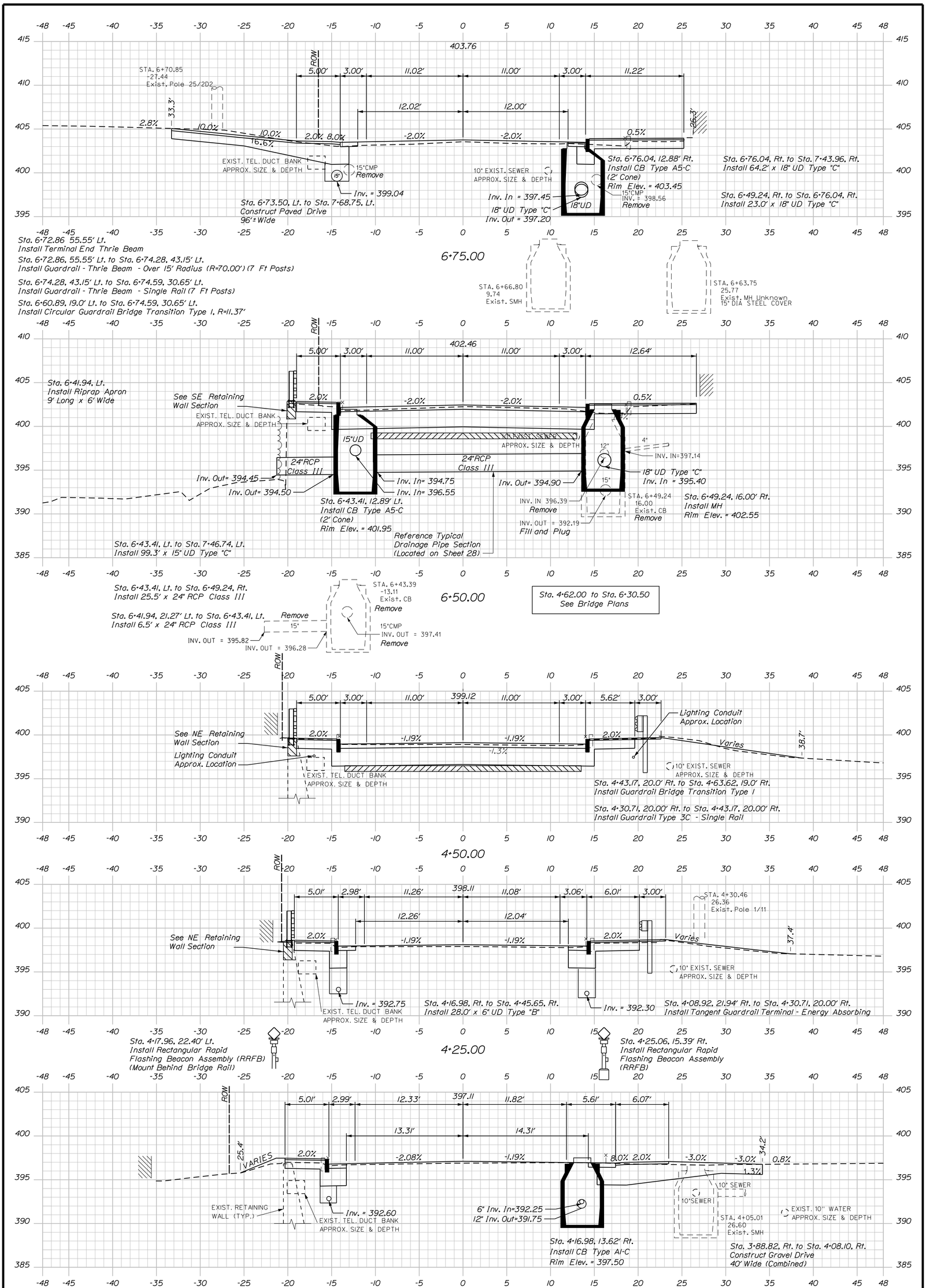

Sta. 4+00.00 to Sta. 6+75.00

SHEET NUMBER 12 OF 38	MEMORIAL BRIDGE OVER PISCATAQUIS RIVER GUILFORD PISCATAQUIS COUNTY CROSS SECTIONS	PROJ. MANAGER ANDREW LATHE	BY	DATE
		DESIGN-DETAILED	LEM\BMH	L. NEWHOUSE 2-13-15
		CHECKED-REVIEWED	D.ETTINGER	2-13-15
		DESIGN2-DETAILED2		
		DESIGN3-DETAILED3		
		REVISIONS 1		
		REVISIONS 2		
		REVISIONS 3		
		REVISIONS 4		
		FIELD CHANGES		

SIGNATURE
P.E. NUMBER
DATE

STATE OF MAINE
DEPARTMENT OF TRANSPORTATION
STP-2049(500)
BRIDGE NO. 2337 WIN 20495.00 BRIDGE PLANS

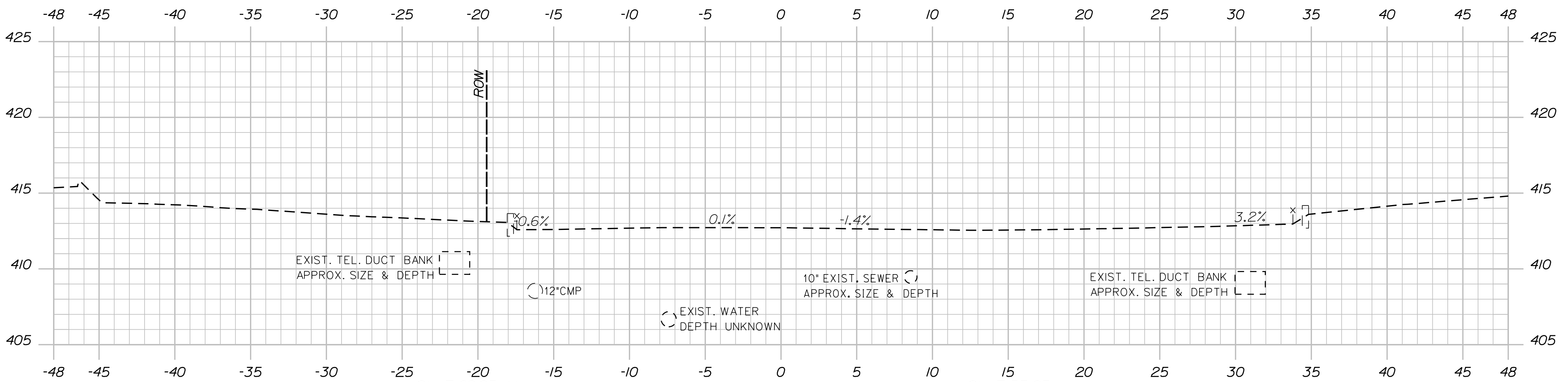

Sta. 7+68.93 Lt.
Limit Of Work
End Sawcut and Widen
Match Existing Pavement

7+75.00

Sta. 7+53.25
End Project STP-2049(500)
Match Existing Pavement
with Butt Joint
End Widen, Mill, Shim & 1 1/2" Pavement Overlay

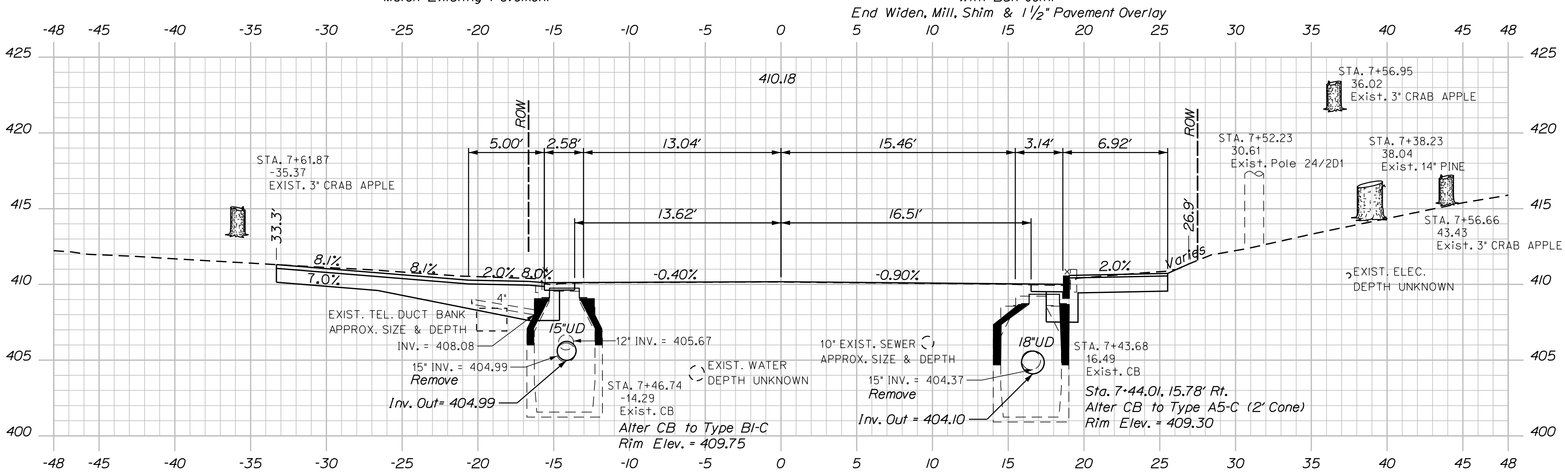

7+50.00

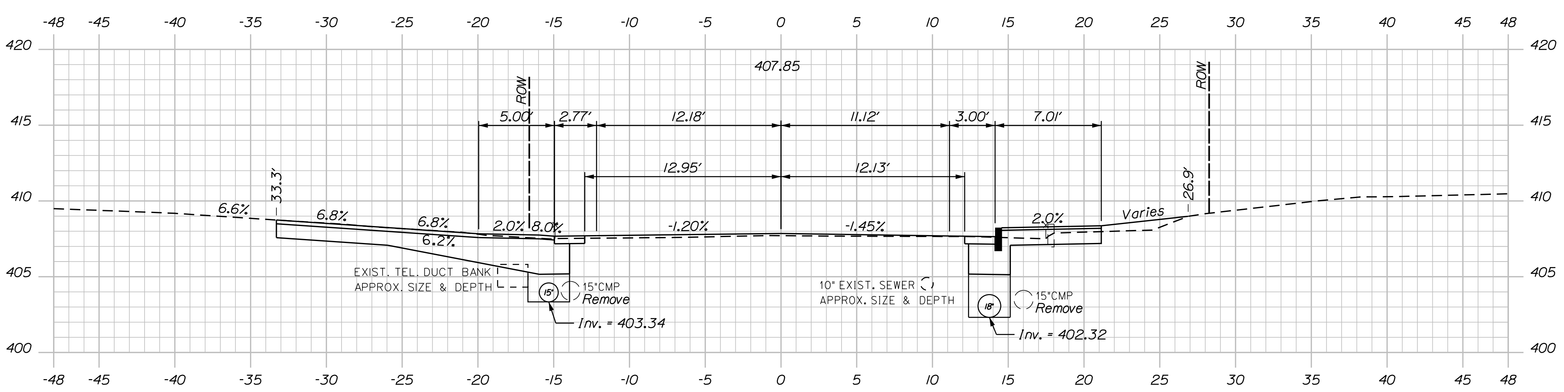

7+25.00

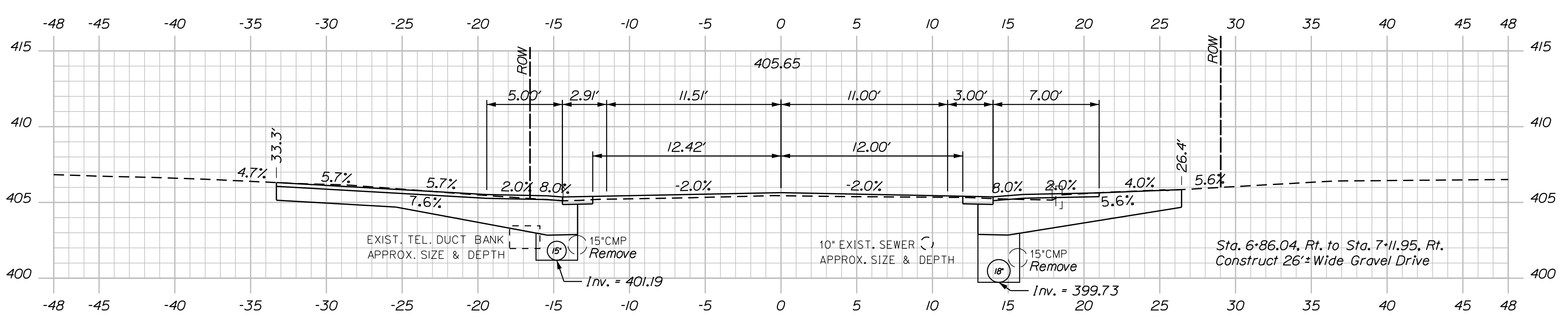

7+00.00

Sta. 7+00.00 to Sta. 7+75.00

SHEET NUMBER 13 OF 38

MEMORIAL BRIDGE
OVER PISCATAQUIS RIVER
GUILFORD PISCATAQUIS COUNTY

CROSS SECTIONS

PROJ. MANAGER ANDREW LATHE		BY	DATE
DESIGN-DETAILED	LEM\BMH	L. NEWHOUSE	2-13-15
CHECKED-REVIEWED	D.ETTINGER	__	2-13-15
DESIGN2-DETAILED2	_____	_____	_____
DESIGN3-DETAILED3	_____	_____	_____
REVISIONS 1	_____		_____
REVISIONS 2	_____		_____
REVISIONS 3	_____		_____
REVISIONS 4	_____		_____
FIELD CHANGES	_____		_____

SIGNATURE

P.E. NUMBER

DATE

STATE OF MAINE
DEPARTMENT OF TRANSPORTATION

STP-2049(500)

BRIDGE NO. 2337 WIN 20495.00 BRIDGE PLANS

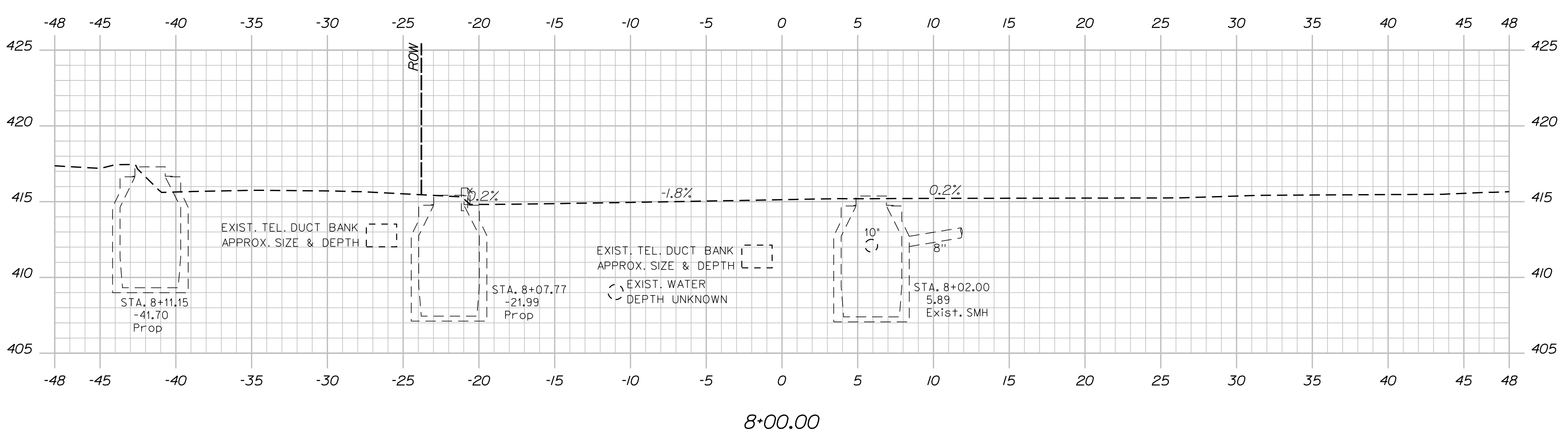

8+00.00

Sta. 8+00.00 to Sta. 8+00.00

SHEET NUMBER 14 OF 38

MEMORIAL BRIDGE
OVER PISCATAQUIS RIVER
GUILFORD PISCATAQUIS COUNTY

CROSS SECTIONS

PROJ. MANAGER	ANDREW LATHE	BY	DATE
DESIGN-DETAILED	LEM\BMH	L. NEWHOUSE	2-13-15
CHECKED-REVIEWED	D.ETTINGER	__	2-13-15
DESIGN2-DETAILED2	_____	_____	_____
DESIGN3-DETAILED3	_____	_____	_____
REVISIONS 1	_____		_____
REVISIONS 2	_____		_____
REVISIONS 3	_____		_____
REVISIONS 4	_____		_____
FIELD CHANGES	_____		_____

SIGNATURE

P.E. NUMBER

DATE

STATE OF MAINE
DEPARTMENT OF TRANSPORTATION

STP-2049(500)

BRIDGE NO. 2337 WIN 20495.00 BRIDGE PLANS

PHASE I
Not to Scale

LEGEND

TSWLL	TEMPORARY 4" SOLID WHITE LANE LINE
TSL	TEMPORARY 24" STOP LINE
TCW	TEMPORARY CROSS WALK (12" PARALLEL LINES, 6' TOTAL WIDTH)

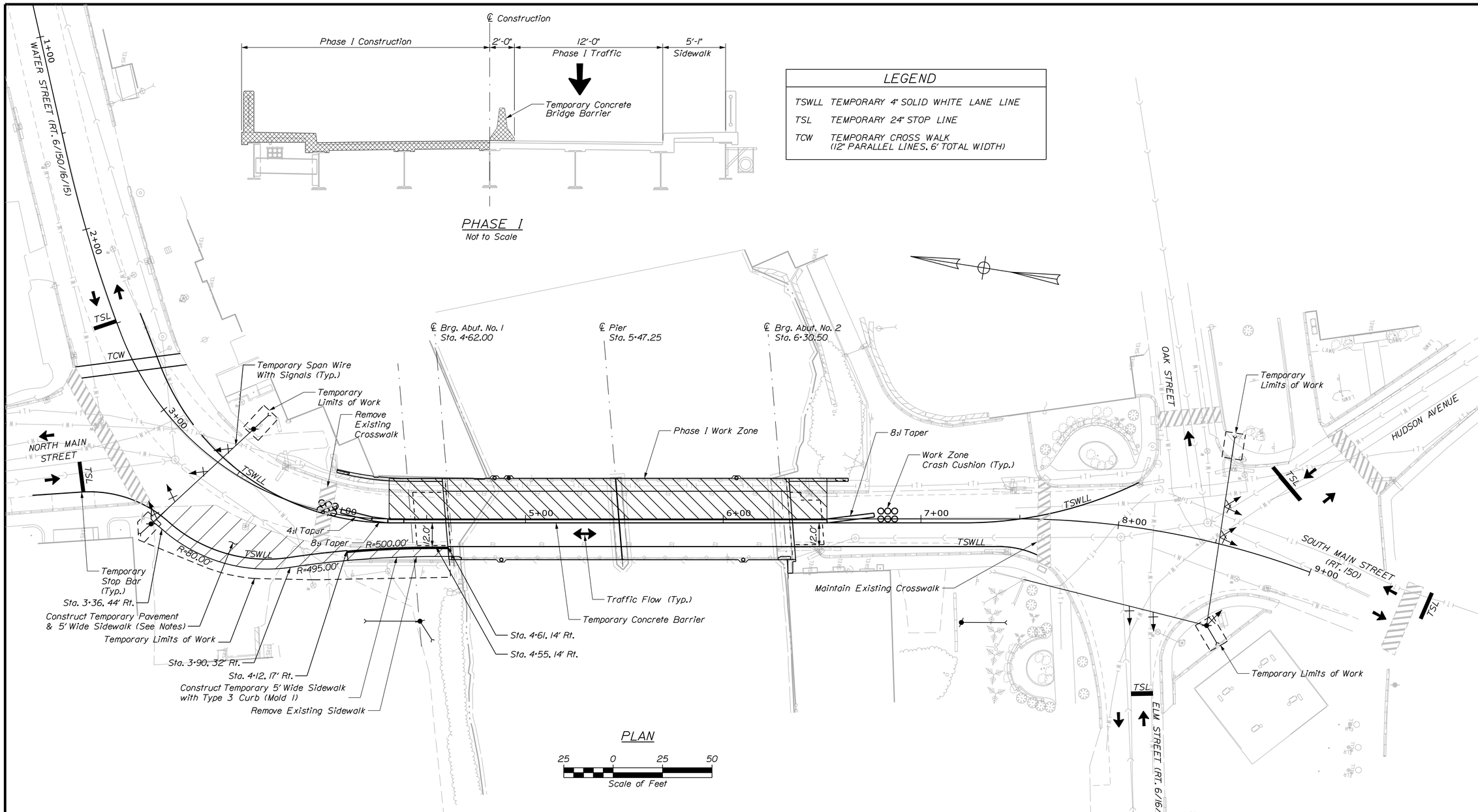

PLAN

25 0 25 50
Scale of Feet

Notes:

1. Temporary pavement and sidewalk shall be constructed with 3" Hot Mix Asphalt on 12" Aggregate Base Course - Type B. Temporary sidewalk shall be ADA compliant. Payment will be made under appropriate pay items.
2. Plans are for the layout of temporary signal, stop bars, crosswalks and temporary concrete barrier. Other striping, signs, and other traffic control devices for the temporary condition are the responsibility of the Contractor.
3. Oak Street shall be one-way when temporary signals are in place. Contractor shall be responsible for the signing and striping of this temporary traffic pattern.
4. Unless noted to be removed, existing crosswalks that are considered too worn by the resident shall be restriped.
5. Traffic flow arrows indicate direction of travel and not proposed striping.
6. The work zone crash cushion shall not exceed a height of 36".
7. Temporary stop line locations based on truck turning movements.
8. All traffic control shall be in accordance with the "Manual for Uniform Traffic Control Devices for Streets and Highways", U.S.D.O.T., Latest Edition.
9. Wide load restrictions shall be in place for the construction duration. Advanced signing is required. See Standard Specifications.
10. The Contractor shall remove all existing pavement markings that conflict with proposed markings.
11. The Contractor shall cover all existing signing that conflicts with work zone signing and signals.

GORRILL PALMER
Relationships. Responsiveness. Results.
www.gorrillpalmer.com
207.657.6910

BECKER STRUCTURAL ENGINEERS
75 York Street, Portland, Maine 04101
207.879.1838 ■ beckerstructural.com

STATE OF MAINE
DEPARTMENT OF TRANSPORTATION

STP-2049(500)

WIN 20495.00

BRIDGE NO: 2337

BRIDGE PLANS

		BY	DATE
PROJ. MANAGER	ANDREW LATHE		
DESIGN-DETAILED	LEM/BMH	L. NEWHOUSE	2-13-15
CHECKED-REVIEWED	D.ETTINGER	---	2-13-15
DESIGN2-DETAILED2	---	---	---
DESIGN3-DETAILED3	---	---	---
REVISIONS 1	---	---	---
REVISIONS 2	---	---	---
REVISIONS 3	---	---	---
REVISIONS 4	---	---	---
FIELD CHANGES	---	---	---

SIGNATURE

P.E. NUMBER

DATE

MEMORIAL BRIDGE
OVER PISCATAQUIS RIVER
GUILFORD PISCATAQUIS COUNTY

MAINTENANCE OF TRAFFIC #1

SHEET NUMBER
15
OF 38

Filename: ...\00\Bridge\015_PhaseIPlan.dgn Division: HIGHWAY Username: bhavu Date:5/5/2015

PHASE II
Not to Scale

LEGEND	
TSWLL	TEMPORARY 4" SOLID WHITE LANE LINE
TSL	TEMPORARY 24" STOP LINE
TCW	TEMPORARY CROSS WALK (12" PARALLEL LINES, 6' TOTAL WIDTH)

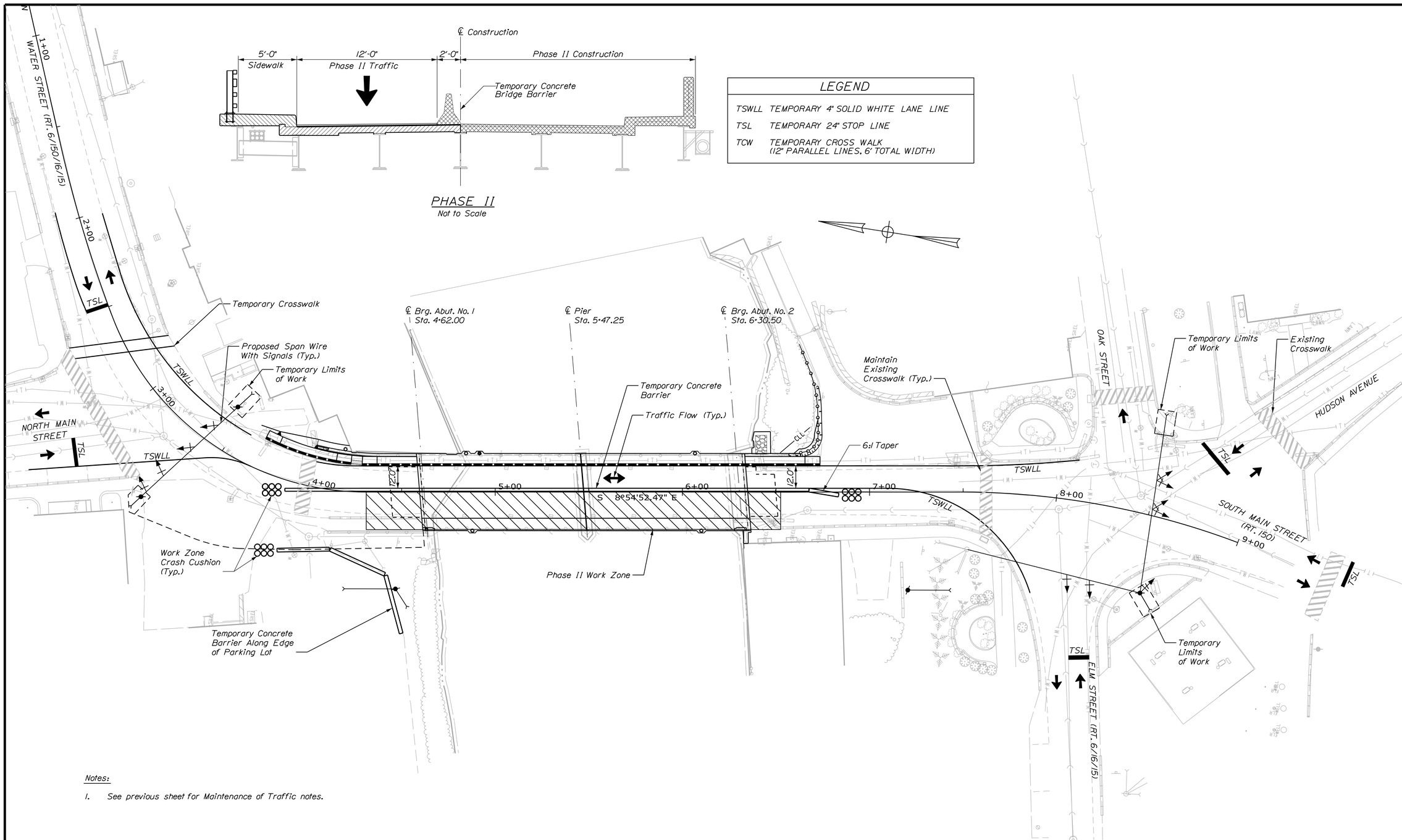

Notes:

1. See previous sheet for Maintenance of Traffic notes.

PLAN

25 0 25 50
Scale of Feet

GORRILL PALMER
Relationships. Responsiveness. Results.
www.gorrillpalmer.com
207.657.6910

BECKER STRUCTURAL ENGINEERS
75 York Street, Portland, Maine 04101
207.879.1838 ■ beckerstructural.com

STATE OF MAINE
DEPARTMENT OF TRANSPORTATION

STP-2049(500)

WIN 20495.00

BRIDGE NO: 2337

BRIDGE PLANS

		BY	DATE
PROJ. MANAGER	ANDREW LATHE		
DESIGN-DETAILED	LEM/BMH	L. NEWHOUSE	2-13-15
CHECKED-REVIEWED	D.ETTINGER	--	2-13-15
DESIGN2-DETAILED2	------	------	------
DESIGN3-DETAILED3	------	------	------
REVISIONS 1	------	------	------
REVISIONS 2	------	------	------
REVISIONS 3	------	------	------
REVISIONS 4	------	------	------
FIELD CHANGES	------	------	------

SIGNATURE

P.E. NUMBER

DATE

MEMORIAL BRIDGE
OVER PISCATAQUIS RIVER
GUILFORD PISCATAQUIS COUNTY

MAINTENANCE OF TRAFFIC #2

SHEET NUMBER
16
OF 38

Filename: ...\00\Bridge\016_Phase2Plan.dgn Division: HIGHWAY Username: bhavu Date:5/5/2015

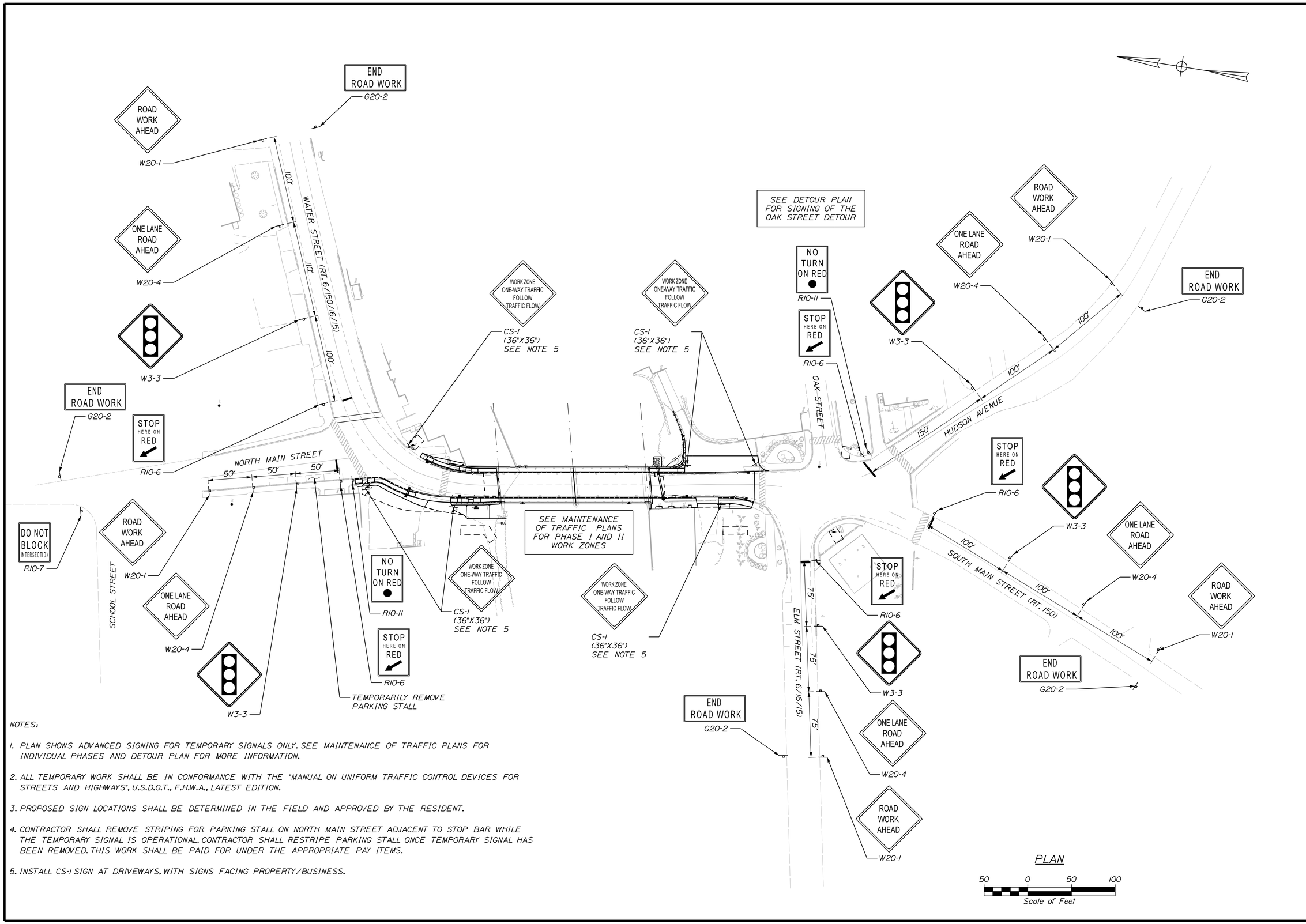

NOTES:

1. PLAN SHOWS ADVANCED SIGNING FOR TEMPORARY SIGNALS ONLY. SEE MAINTENANCE OF TRAFFIC PLANS FOR INDIVIDUAL PHASES AND DETOUR PLAN FOR MORE INFORMATION.
2. ALL TEMPORARY WORK SHALL BE IN CONFORMANCE WITH THE "MANUAL ON UNIFORM TRAFFIC CONTROL DEVICES FOR STREETS AND HIGHWAYS", U.S.D.O.T., F.H.W.A., LATEST EDITION.
3. PROPOSED SIGN LOCATIONS SHALL BE DETERMINED IN THE FIELD AND APPROVED BY THE RESIDENT.
4. CONTRACTOR SHALL REMOVE STRIPING FOR PARKING STALL ON NORTH MAIN STREET ADJACENT TO STOP BAR WHILE THE TEMPORARY SIGNAL IS OPERATIONAL. CONTRACTOR SHALL RESTRIPE PARKING STALL ONCE TEMPORARY SIGNAL HAS BEEN REMOVED. THIS WORK SHALL BE PAID FOR UNDER THE APPROPRIATE PAY ITEMS.
5. INSTALL CS-1 SIGN AT DRIVEWAYS, WITH SIGNS FACING PROPERTY/BUSINESS.

STATE OF MAINE
DEPARTMENT OF TRANSPORTATION

STP-2049(500)

WIN 20495.00

BRIDGE NO: 2337

BRIDGE PLANS

PROJ. MANAGER	ANDREW LATHE	BY	DATE
DESIGN-DETAILED	LEM/BMH	L. NEWHOUSE	2-13-15
CHECKED-REVIEWED	D.ETTINGER	--	2-13-15
DESIGN2-DETAILED2	------	------	------
DESIGN3-DETAILED3	------	------	------
REVISIONS 1	------	------	------
REVISIONS 2	------	------	------
REVISIONS 3	------	------	------
REVISIONS 4	------	------	------
FIELD CHANGES	------	------	------

SIGNATURE

P.E. NUMBER

DATE

MEMORIAL BRIDGE
OVER PISCATAQUIS RIVER
GUILFORD PISCATAQUIS COUNTY

MAINTENANCE OF TRAFFIC #3

SHEET NUMBER

17

OF 38

Filename: ...\017_AdvanceSigningPlan_01.dgn Division: HIGHWAY Username: bhavu Date:5/5/2015

PROPOSED SIGNAL HEADS

ALL LENSES 12" LED WITH 5" LOUVERED BACK PLATE

R
Y
G

ALL PHASES (10 PROPOSED)

* SIGNAL HEADS SHALL BE TETHERED AT THE BOTTOM

LEGEND

EXISTING		PROPOSED
	SIGNAL NOTE	X
	SIGNAL HEAD	
	VIDEO DETECTOR	
	SIGNAL CONDUIT (3" PVC, SCH 80, UNLESS OTHERWISE NOTED)	
	CONTROLLER CABINET	
	PEDESTRIAN SIGNAL HEAD	
	SIGNAL POLE	
	TEMPORARY SPAN WIRE	
	MOUNTED SIGN	
	JUNCTION BOX	

SIGNAL TIMING SCHEDULE (SECONDS) - FREE PLAN

	1	2	3	4	5	6	7	8
MINIMUM INITIAL	5	5	5	-	5	6	-	-
VEHICLE EXTENSION	2	2	2	-	2	2	-	-
MAXIMUM GREEN	21	16	18	-	32	17	-	-
YELLOW	3	3	3	-	3	3	-	-
ALL RED	3	3	29	-	2	29	-	-
WALK / DON'T WALK *	-	-	-	-	-	-	-	-
PEDESTRIAN CLEARANCE *	-	-	-	-	-	-	-	-
FLASH	-	-	-	-	-	-	-	-
PHASE RECALL	-	-	MIN.	-	-	MIN.	-	-
MEMORY	-	-	-	-	-	-	-	-
DETECTOR	-	-	-	-	-	-	-	-

Y=YELLOW R=RED

* TIMING TO BE FIELD ADJUSTED PER MAINEDOT OR RESIDENTS DIRECTION. THIS SHALL BE DONE FOR THE WEEKDAY AM AND PM PEAK HOURS AT A MINIMUM.

* THESE INTERSECTIONS SHALL NOT BE PUT IN FLASH MODE AT ANY TIME

* PEDESTRIANS WILL HAVE THE OPPORTUNITY TO CROSS DURING BRIDGE CLEAROUT PHASES. SOUTH PEDESTRIAN CROSSINGS DURING NORTHBOUND BRIDGE CLEAROUT AND NORTH PEDESTRIAN CROSSINGS DURING SOUTHBOUND CLEAROUT PHASE.

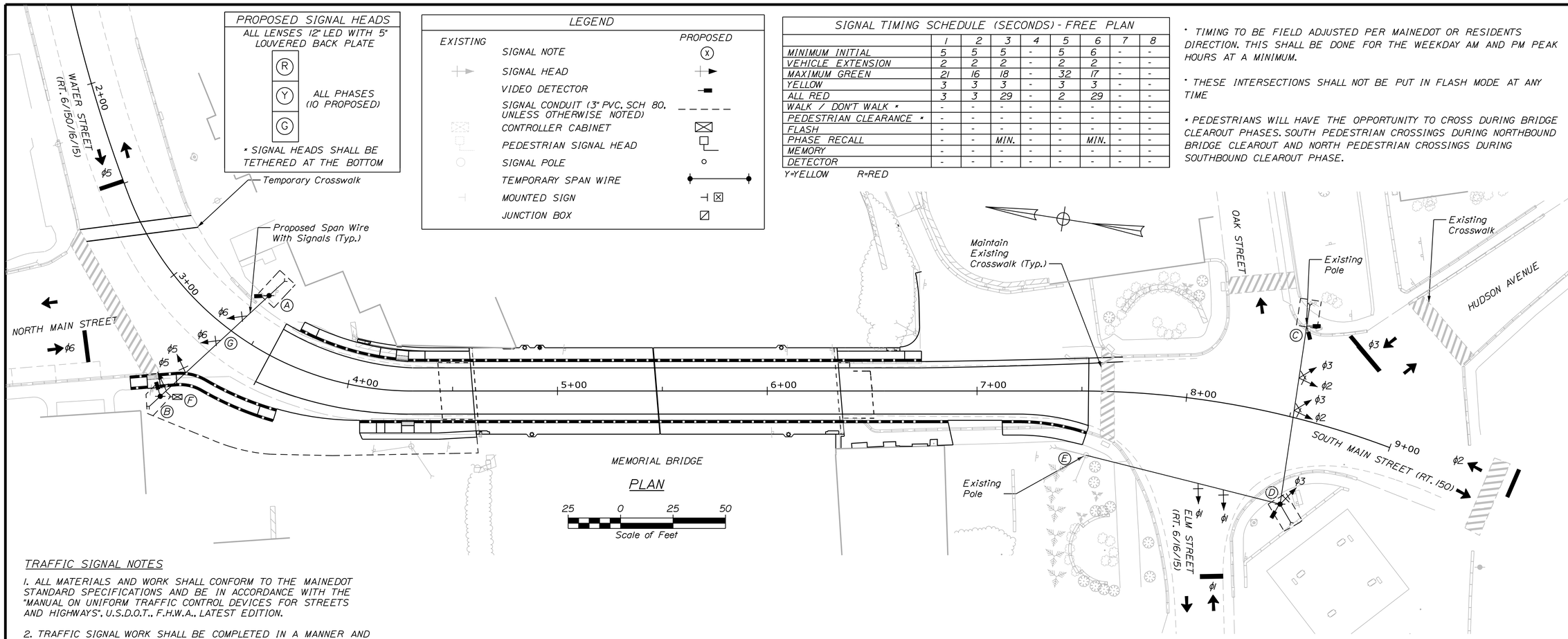

TRAFFIC SIGNAL NOTES

1. ALL MATERIALS AND WORK SHALL CONFORM TO THE MAINEDOT STANDARD SPECIFICATIONS AND BE IN ACCORDANCE WITH THE "MANUAL ON UNIFORM TRAFFIC CONTROL DEVICES FOR STREETS AND HIGHWAYS", U.S.D.O.T., F.H.W.A., LATEST EDITION.

2. TRAFFIC SIGNAL WORK SHALL BE COMPLETED IN A MANNER AND ORDER THAT WILL CAUSE THE MINIMUM DISRUPTION TO TRAFFIC.

3. THE RESIDENT AND MAINEDOT SHALL HAVE THE RIGHT AND AUTHORITY TO DETERMINE THE ACCEPTABILITY OF WORK AND MATERIALS IN PROGRESS OR COMPLETED AND SHALL HAVE THE RIGHT TO REJECT ANY WORK OR MATERIALS WHICH DO NOT CONFORM, IN ITS SOLE OPINION, TO THE PLANS OR SPECIFICATIONS.

4. THE CONTRACTOR IS RESPONSIBLE FOR FIELD ADJUSTING TIMING UNDER THE DIRECTION OF THE RESIDENT OR MAINEDOT.

5. ALL NEW SIGNAL SECTIONS SHALL HAVE LED LENSES 12 INCHES IN DIAMETER WITH 5" LOUVERED BACK PLATE.

6. THE BOTTOM OF HOUSING OF NEW SIGNAL FACES OR TETHER WIRE SHALL BE AT LEAST 16 FEET BUT NOT MORE THAN 19 FEET ABOVE THE PAVEMENT GRADE AT THE CENTER OF THE ROADWAY.

7. THE CONTRACTOR SHALL BE RESPONSIBLE FOR OBTAINING ANY NECESSARY STREET/SIDEWALK OCCUPANCY OR OPENING PERMITS.

8. ALL CONFLICTING SIGNS AND PAVEMENT MARKINGS SHALL BE COVERED OR REMOVED UNTIL PROJECT COMPLETION.

9. THE TEMPORARY SIGNAL CONTROLLER CABINET SHALL BE POLE MOUNTED.

COORDINATION PLAN

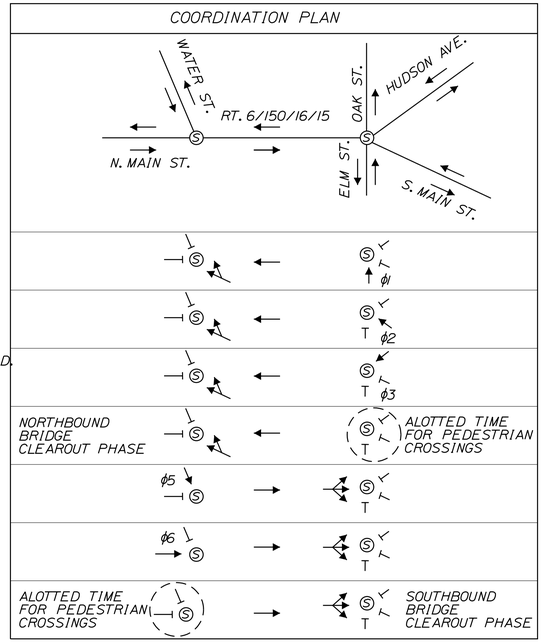

EQUIPMENT SCHEDULE

DESIGNATION	ITEM	DESCRIPTION	LOCATION*
A	TEMPORARY PROPOSED SPAN WIRE POLE WITH GUY WIRE	INCLUDES MOUNTED VEHICLE DETECTION FOR NORTH MAIN STREET.	STA. 3+43.61, 24.16' LT.
B	TEMPORARY PROPOSED SPAN WIRE POLE WITH GUY WIRE	SERVES AS POWER SOURCE FOR SIGNAL CONTROLLER. INCLUDES MOUNTED VEHICLE DETECTION FOR WATER STREET APPROACH.	STA. 3+31.79, 45.42' RT.
C	EXISTING UTILITY POLE AND PROPOSED GUY WIRE AS NEEDED	GUY WIRE INSTALLED TO ALLOW PEDESTRIANS TO PASS UNDER. MINIMUM 7' HEIGHT. INCLUDES MOUNTED VEHICLE DETECTION.	STA. 8+47.85, 43.81' LT.
D	TEMPORARY PROPOSED SPAN WIRE POLE WITH GUY WIRE	INCLUDES MOUNTED VEHICLE DETECTION INCLUDES MOUNTED SIGNAL HEAD	STA. 8+56.19, 41.59' RT.
E	EXISTING UTILITY POLE AND PROPOSED GUY WIRE AS NEEDED	-	STA. 7+52.23, 30.61' RT.
F	TEMPORARY SIGNAL CABINET WITH CONTROLLER, MOUNTED ON POLE B	BOTH INTERSECTIONS SHALL OPERATE OFF A SINGLE CONTROLLER	STA. 3+36.84, 40.60' RT.

*LOCATION MAY BE FIELD ADJUSTED AS NEEDED WITH PERMISSION OF MAINEDOT OR RESIDENT

GORRILL PALMER
Relationships. Responsiveness. Results.
www.gorrillpalmer.com
207.657.6910

BECKER STRUCTURAL ENGINEERS
75 York Street, Portland, Maine 04101
207.879.1838 ■ beckerstructural.com

STATE OF MAINE
DEPARTMENT OF TRANSPORTATION

STP-2049(500)

WIN 20495.00

BRIDGE NO: 2337

BRIDGE PLANS

		BY	DATE
PROJ. MANAGER	ANDREW LATHE		
DESIGN-DETAILED	R.DUNTON	L.NEWHOUSE	2-13-15
CHECKED-REVIEWED	D.ETTINGER	--	2-13-15
DESIGN2-DETAILED2	------	------	------
DESIGN3-DETAILED3	------	------	------
REVISIONS 1	------	------	------
REVISIONS 2	------	------	------
REVISIONS 3	------	------	------
REVISIONS 4	------	------	------
FIELD CHANGES	------	------	------

P.E. NUMBER

SIGNATURE

DATE

MEMORIAL BRIDGE
OVER PISCATAQUIS RIVER
GUILFORD PISCATAQUIS COUNTY

TEMPORARY SIGNAL PLAN

SHEET NUMBER

18

OF 38

Filename: ...\00\Bridge\018_SignalPlan.dgn Division: HIGHWAY Username: bhavu Date:5/5/2015

NOTES:

1. PLAN SHOWS SIGNING FOR DETOUR ONLY. SEE MAINTENANCE OF TRAFFIC PLANS FOR INDIVIDUAL PHASES AND ADVANCE SIGNING PLAN FOR MORE INFORMATION.
2. DETOUR SHALL BE INSTALLED PRIOR TO OPERATION OF THE TEMPORARY SIGNALS AND REMAIN FOR THE DURATION OF THE TEMPORARY SIGNALS.
3. ALL TEMPORARY WORK SHALL BE IN CONFORMANCE WITH THE "MANUAL ON UNIFORM TRAFFIC CONTROL DEVICES FOR STREETS AND HIGHWAYS". LATEST EDITION.
4. PROPOSED SIGN LOCATIONS SHALL BE DETERMINED IN THE FIELD AND APPROVED BY THE RESIDENT.
5. PROPOSED TYPE III BARRICADE CLOSEST TO MAIN STREET SHALL NOT IMPEDE ACCESS TO GARAGE BAY ON TRUE TEXTILES PARCEL.

PLAN

60 0 60 120

Scale of Feet

STATE OF MAINE
DEPARTMENT OF TRANSPORTATION

STP-2049(500)

WIN 20495.00

BRIDGE NO: 2337

BRIDGE PLANS

		BY	DATE
PROJ. MANAGER	ANDREW LATHE		
DESIGN-DETAILED	LEM/GMH	L. NEWHOUSE	2-13-15
CHECKED-REVIEWED	D.ETTINGER	---	2-13-15
DESIGN2-DETAILED2	------	------	------
DESIGN3-DETAILED3	------	------	------
REVISIONS 1	------	------	------
REVISIONS 2	------	------	------
REVISIONS 3	------	------	------
REVISIONS 4	------	------	------
FIELD CHANGES	------	------	------

SIGNATURE

P.E. NUMBER

DATE

MEMORIAL BRIDGE
OVER PISCATAQUIS RIVER
GUILFORD PISCATAQUIS COUNTY

DETOUR PLAN

SHEET NUMBER

19

OF 38

Filename: ...\Bridge\019_DetourPlan_01.dgn Division: HIGHWAY Username: bhavu Date:2/17/2015

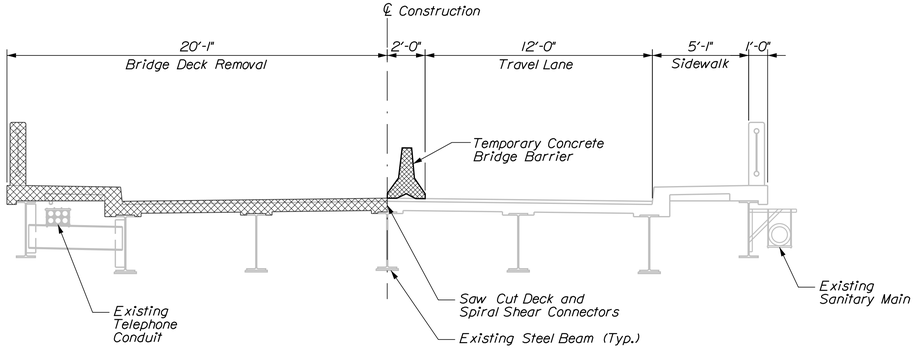

PHASE IA CONSTRUCTION

1. Install temporary concrete barrier.
2. Shift traffic to westerly side of bridge.
3. Remove easterly side of existing bridge deck.

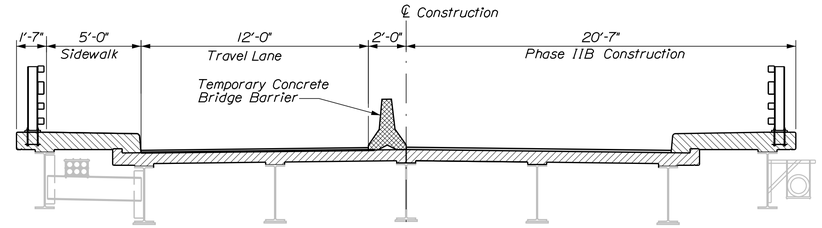

PHASE IIB CONSTRUCTION

1. Construct westerly side of bridge deck.
2. Install 1½" base lift of wearing surface.

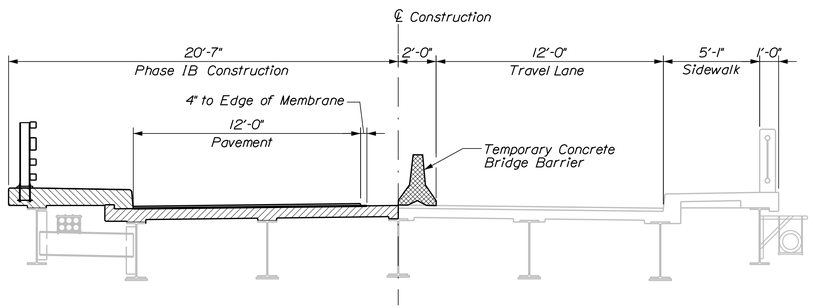

PHASE IB CONSTRUCTION

1. Construct easterly side of bridge deck.
2. Install 1½" base lift of wearing surface.
3. Install temporary paving according to "Temporary Paving Detail".

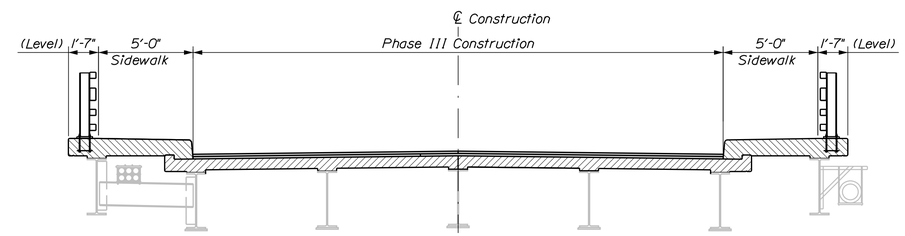

PHASE III CONSTRUCTION

1. Remove temporary pavement and install 1½" top lift of wearing surface.

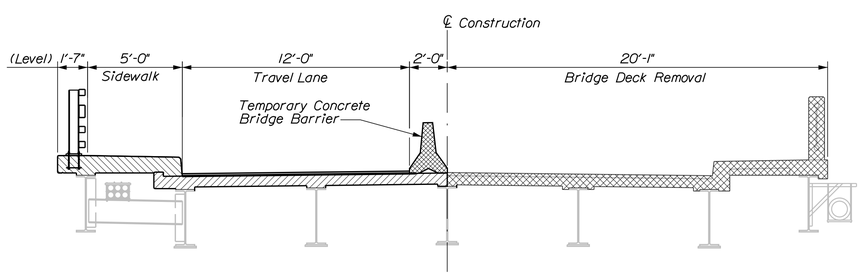

PHASE IIA CONSTRUCTION

1. Reposition temporary concrete barrier.
2. Shift traffic to easterly side of bridge.
3. Install temporary bracing for westerly fascia beam, see Staged Construction Note 2.
4. Remove westerly side of existing bridge deck.

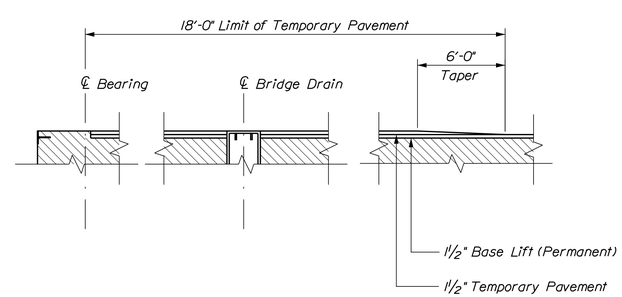

TEMPORARY PAVING DETAIL

TEMPORARY PAVING NOTES

1. Payment for temporary pavement shall be made under Item 461.131 - "Temporary Pavement".

2. Temporary pavement shall be placed prior to opening Phase IB construction to traffic.

3. Temporary paving shall be placed at Abutment No. 1 and both sides of the Pier to the limits shown left and shall extend to the full roadway width.

4. Temporary pavement shall be removed entirely prior to placement of the final 1½" lift of pavement.

STAGED CONSTRUCTION NOTES

1. During periods when the bridge deck is removed to within 4 feet of a temporary concrete barrier, the temporary concrete barrier shall be positively attached to the bridge deck. The attachment shall meet the requirements of AASHTO TL-2 loading condition. The method of attachment shall be designed and stamped by a Professional Engineer licensed in the State of Maine and approved by the Resident. When no longer needed, the attachment shall be removed and repaired as directed by the Resident. Payment for the attachment shall be considered incidental to related contract items.

BECKER
STRUCTURAL ENGINEERS
75 York Street, Portland, Maine 04101
207.879.1838 ▪ beckerstructural.com

STATE OF MAINE
DEPARTMENT OF TRANSPORTATION

STP-2049(500)

WIN 20495.00

BRIDGE NO. 2337

BRIDGE PLANS

PROJ. MANAGER	ANDREW LATHE	BY	DATE
DESIGN-DETAILED	E.BROWNELL	D.BURGESS	2-18-15
CHECKED-REVIEWED	E.BROWNELL	J.BURGESS	2-18-15
DESIGN2-DETAILED2	------	------	------
DESIGN3-DETAILED3	------	------	------
REVISIONS 1	------	------	------
REVISIONS 2	------	------	------
REVISIONS 3	------	------	------
REVISIONS 4	------	------	------
FIELD CHANGES	------	------	------

SIGNATURE

P.E. NUMBER

DATE

MEMORIAL BRIDGE
OVER PISCATAQUIS RIVER
GUILFORD PISCATAQUIS COUNTY

STAGED CONSTRUCTION

SHEET NUMBER
20
OF 38

Filename: ...\MSTA\020_Staged Constr.dgn Division: BRIDGE Username: common Date:3/9/2015

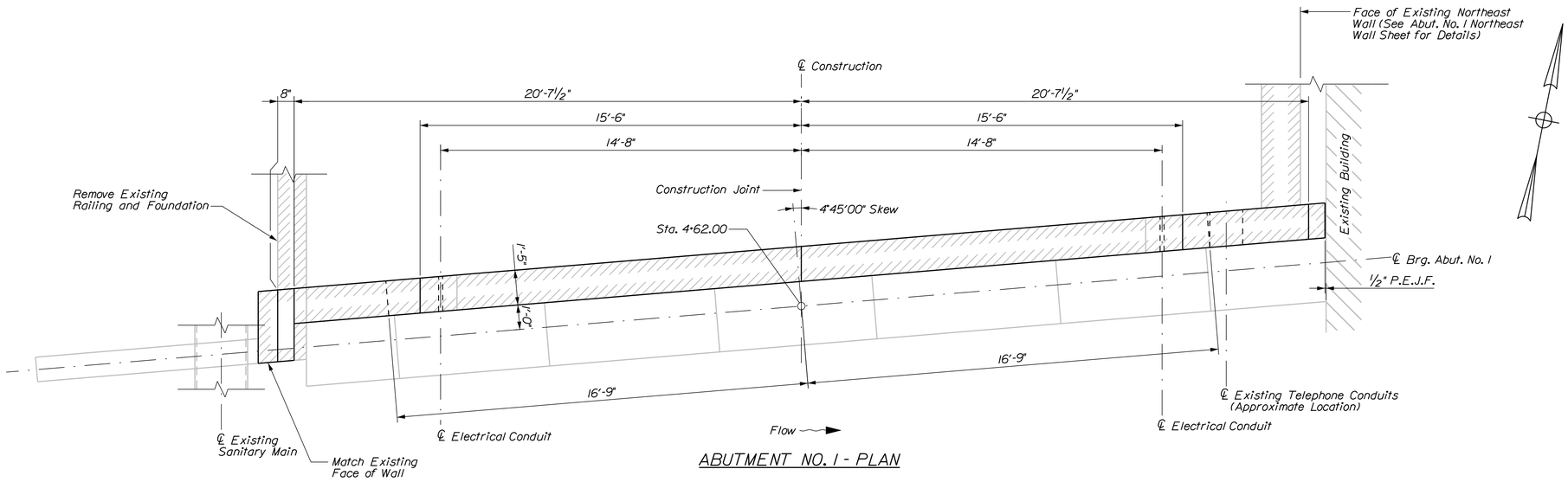

ABUTMENT NO. 1 - PLAN

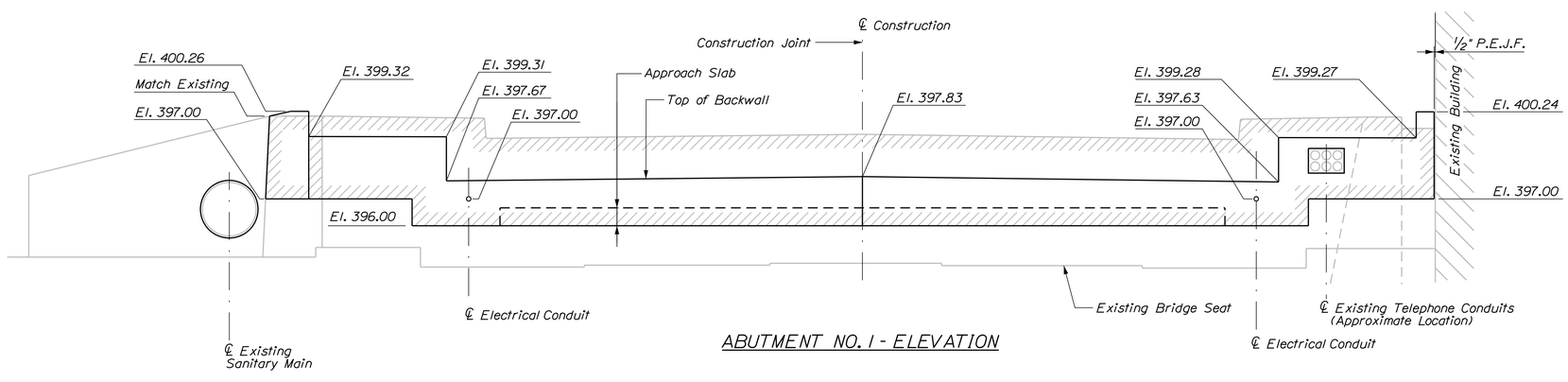

ABUTMENT NO. 1 - ELEVATION

Limits of Removal

ABUTMENT AND RETAINING WALL NOTES

1. See Transverse Section sheet for abutment sections.

2. Reinforcing steel shall have a minimum concrete cover of 2 inches in the back walls.

3. Cover joints where waterstops are not required in accordance with Standard Details Section 502(01).

4. Abutments and wingwalls shall be backfilled with Granular Borrow. Pay limits will be the structural excavation limits in cut areas and a vertical plane located 10 feet behind the walls in fill areas.

5. The Contractor shall install Transition Barrier vertical closed stirrups, as shown in Standard Details Section 526, prior to the placement of the wall concrete.

6. Removal of existing back wall and wall concrete shall be paid for under Item 202.12.

BECKER STRUCTURAL ENGINEERS
75 York Street, Portland, Maine 04101
207.879.1838 ■ beckerstructural.com

STATE OF MAINE
DEPARTMENT OF TRANSPORTATION

STP-2049(500)

WIN 20495.00

BRIDGE NO. 2337

BRIDGE PLANS

		BY	DATE
PROJ. MANAGER	ANDREW LATHE		
DESIGN-DETAILED	E.BROWNELL	D.BURGESS	2-18-15
CHECKED-REVIEWED	E.BROWNELL	J.BURGESS	2-18-15
DESIGN2-DETAILED2	-------	-------	-------
DESIGN3-DETAILED3	-------	-------	-------
REVISIONS 1	-------	-------	-------
REVISIONS 2	-------	-------	-------
REVISIONS 3	-------	-------	-------
REVISIONS 4	-------	-------	-------
FIELD CHANGES	-------	-------	-------

SIGNATURE

P.E. NUMBER

DATE

MEMORIAL BRIDGE
OVER PISCATAQUIS RIVER
GUILFORD PISCATAQUIS COUNTY

ABUTMENT NO. 1

SHEET NUMBER
21
OF 38

Filename: ...\BRIDGE\MSTA\021_Abut_001.dgn Division: BRIDGE Username: common Date:2/18/2015

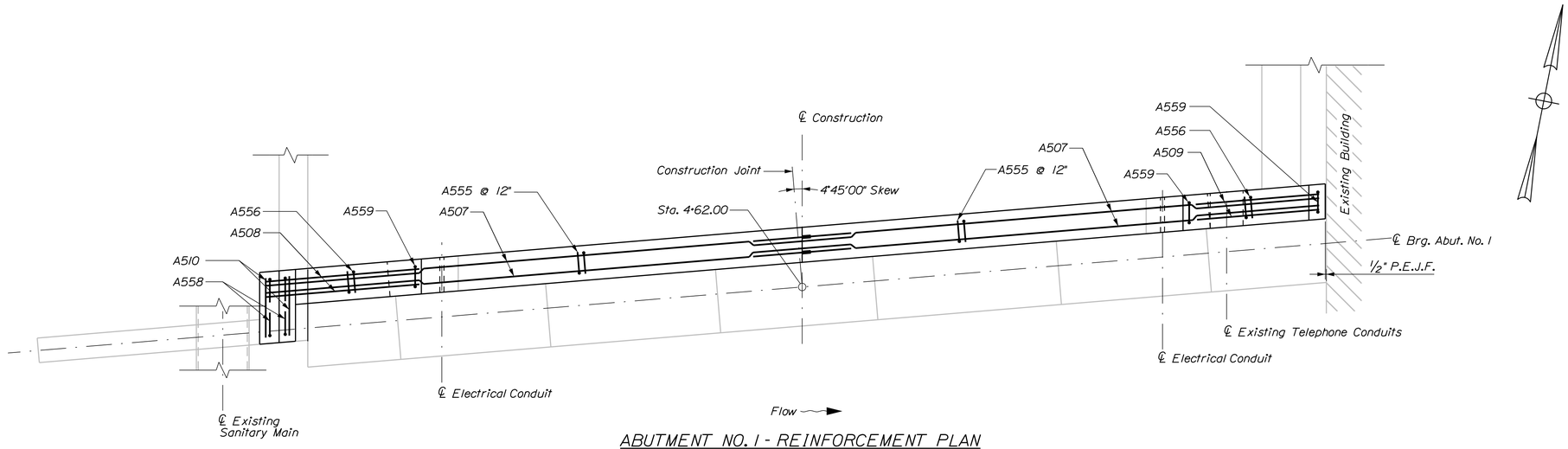

ABUTMENT NO. 1 - REINFORCEMENT PLAN

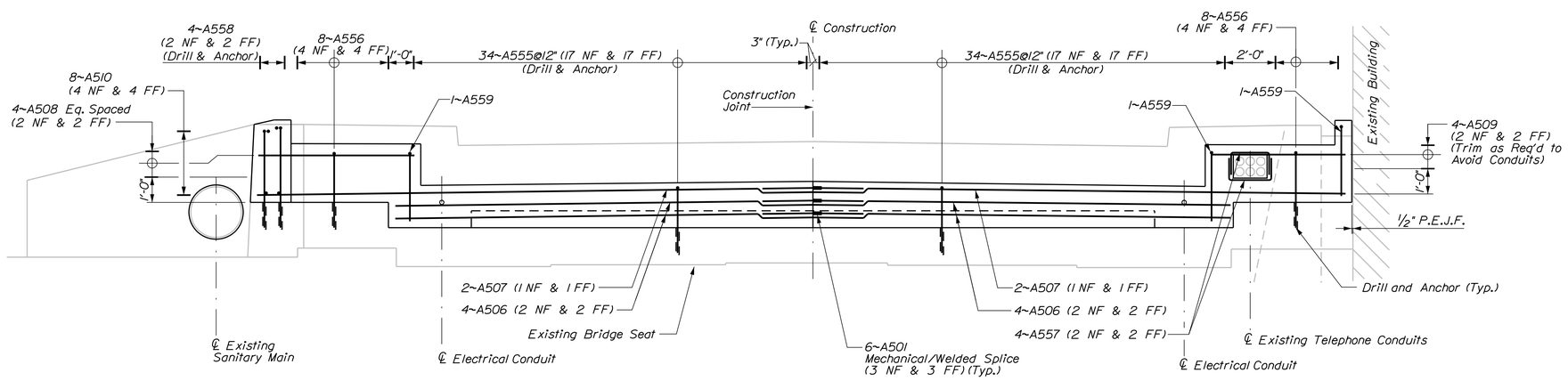

ABUTMENT NO. 1 - REINFORCEMENT ELEVATION

STATE OF MAINE
DEPARTMENT OF TRANSPORTATION

STP-2049(500)

WIN 20495.00

BRIDGE NO. 2337

BRIDGE PLANS

PROJ. MANAGER	ANDREW LATHE	BY	DATE
DESIGN-DETAILED	E.BROWNELL	D.BURGESS	2-18-15
CHECKED-REVIEWED	E.BROWNELL	J.BURGESS	2-18-15
DESIGN2-DETAILED2	------	------	------
DESIGN3-DETAILED3	------	------	------
REVISIONS 1	------	------	------
REVISIONS 2	------	------	------
REVISIONS 3	------	------	------
REVISIONS 4	------	------	------
FIELD CHANGES	------	------	------

SIGNATURE

P.E. NUMBER

DATE

MEMORIAL BRIDGE
OVER PISCATAQUIS RIVER
GUILFORD PISCATAQUIS COUNTY

ABUTMENT NO. 1 REINFORCING

SHEET NUMBER

22

OF 38

BECKER
STRUCTURAL ENGINEERS
75 York Street, Portland, Maine 04101
207.879.1838 ■ beckerstructural.com

Filename: ...\MSTA\022_Abut_001_Reinf.dgn Division: BRIDGE Username: common Date:2/18/2015

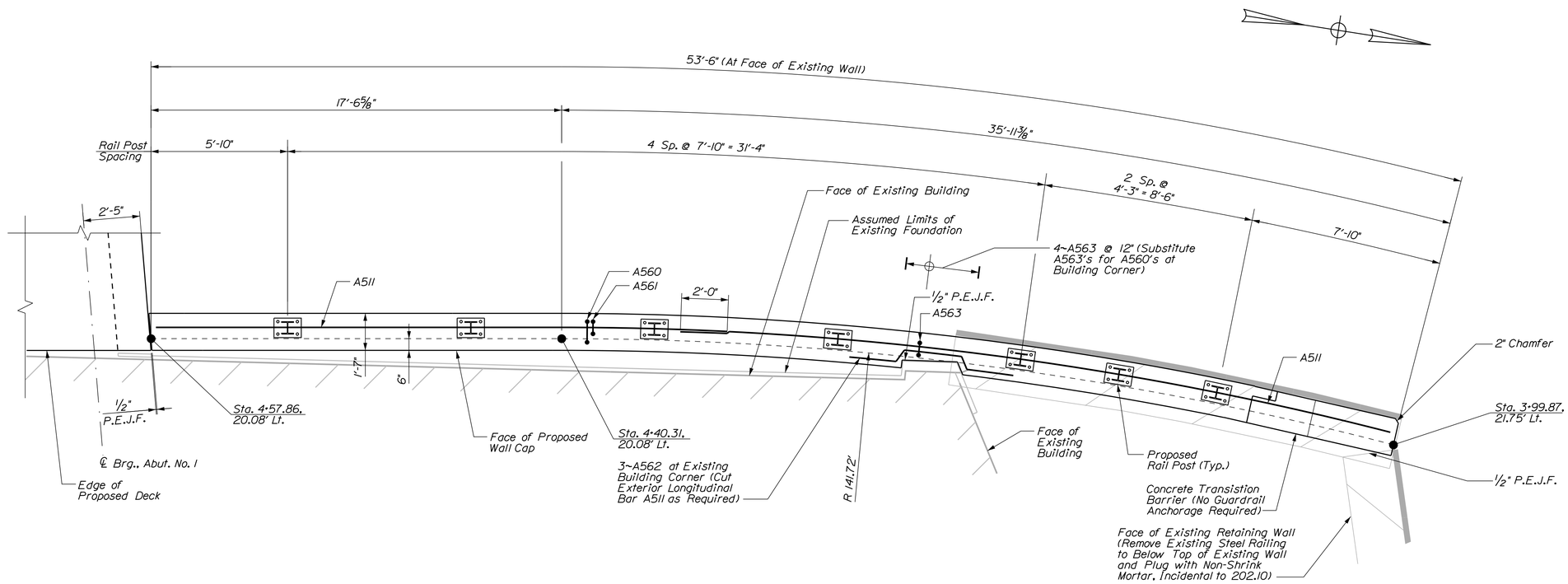

ABUTMENT NO. 1 NORTHEAST WALL - PLAN

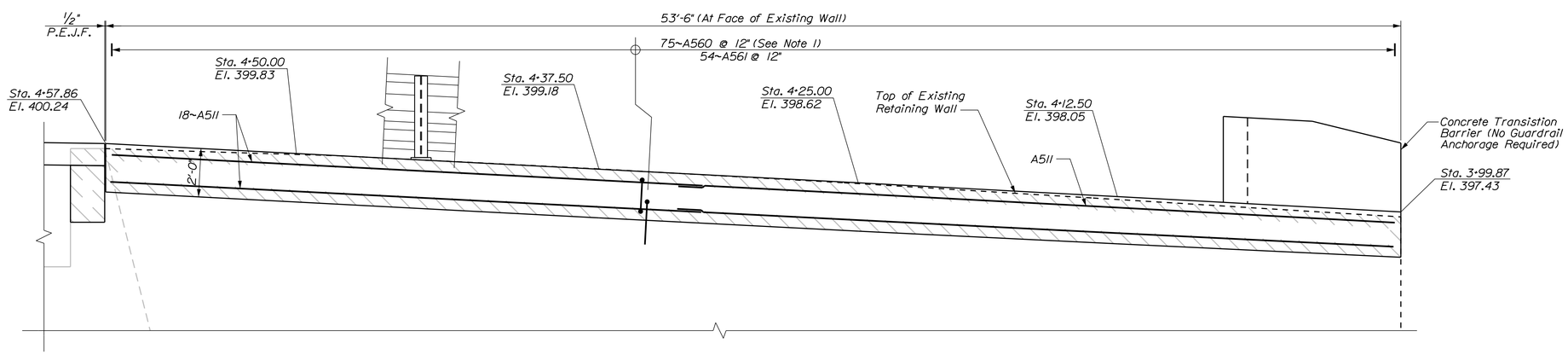

ABUTMENT NO. 1 NORTHEAST WALL - ELEVATION

Limits of Removal

NOTES

1. Provide additional #5 stirrups at railing posts and concrete transition barrier. See Standard Details 507(13) and 526(34).

BECKER
STRUCTURAL ENGINEERS
75 York Street, Portland, Maine 04101
207.879.1838 ▪ beckerstructural.com

STATE OF MAINE
DEPARTMENT OF TRANSPORTATION

STP-2049(500)

WIN 20495.00

BRIDGE NO. 2337

BRIDGE PLANS

PROJ. MANAGER	ANDREW LATHE	BY	DATE	
DESIGN-DETAILED	J.CONFER	D.BURGESS	2-18-15	
CHECKED-REVIEWED	L.BARTLETT	J.BURGESS	2-18-15	SIGNATURE
DESIGN2-DETAILED2	----------	----------	------	P.E. NUMBER
DESIGN3-DETAILED3	----------	----------	------	
REVISIONS 1	----------	----------	------	
REVISIONS 2	----------	----------	------	DATE
REVISIONS 3	----------	----------	------	
REVISIONS 4	----------	----------	------	
FIELD CHANGES	----------	----------	------	

MEMORIAL BRIDGE
OVER PISCATAQUIS RIVER
GUILFORD PISCATAQUIS COUNTY

ABUT. NO.1 NORTHEAST WALL

SHEET NUMBER
23
OF 38

Filename: ...\MSTA\023_Ret_Wall_NE.dgn Division: BRIDGE Username: common Date:3/9/2015

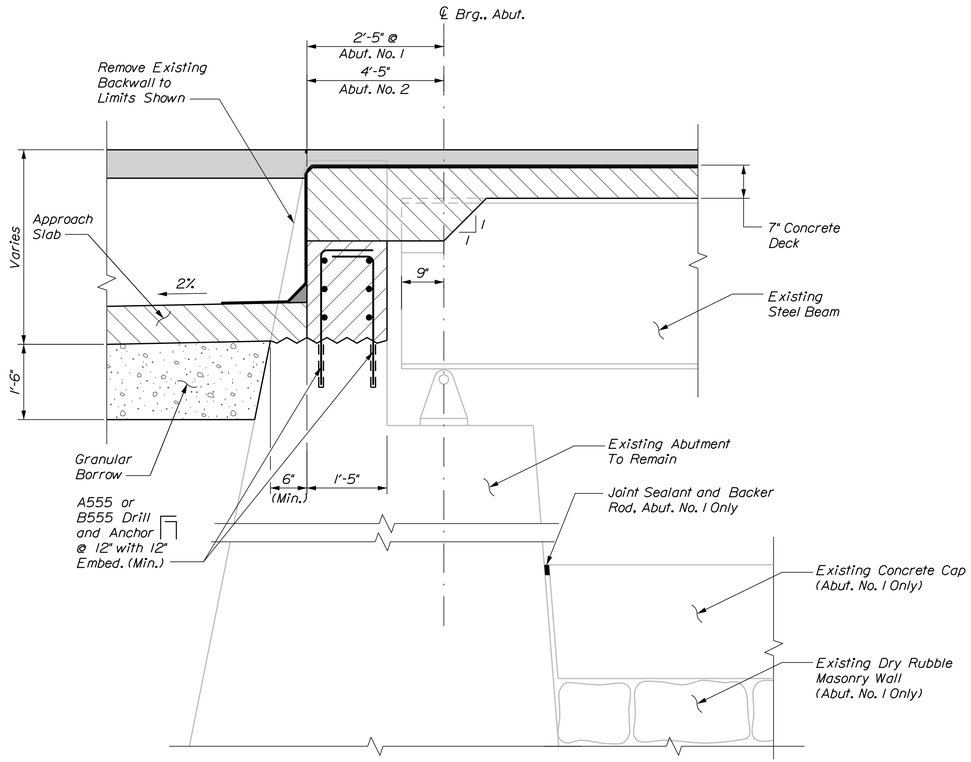

ABUTMENT SECTION AT DECK

(Abut. No. 1 Shown
Abut. No. 2 Similar)

NOTE:
Joint sealant shall conform to MaineDOT Standard Specification Section 714.04. Apply along verticale and horizontal interface between existing abutment and concrete cap. Payment for joint sealant shall be incidental to Item 502.21.

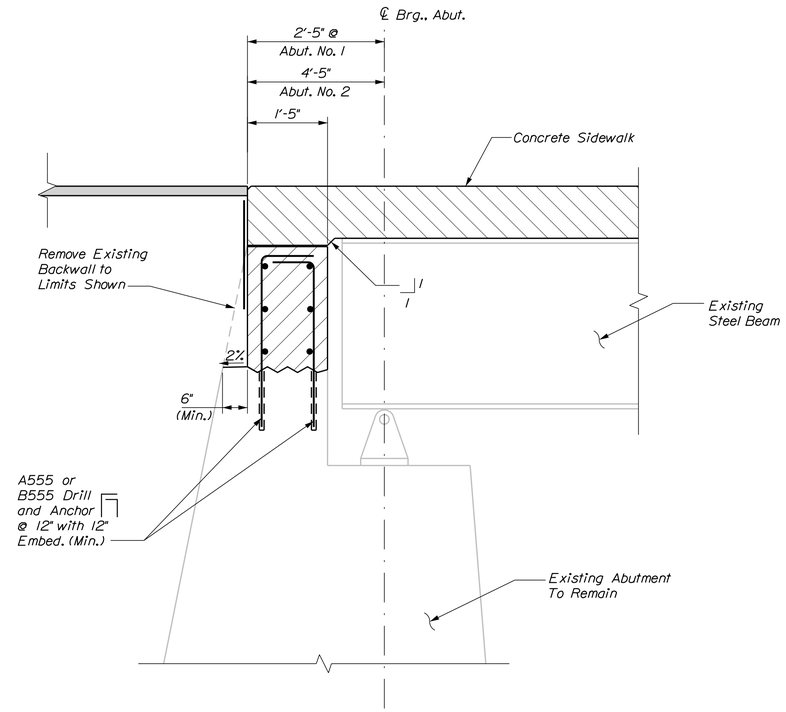

ABUTMENT SECTION AT SIDEWALK

(Abut. No. 1 Shown
Abut. No. 2 Similar)

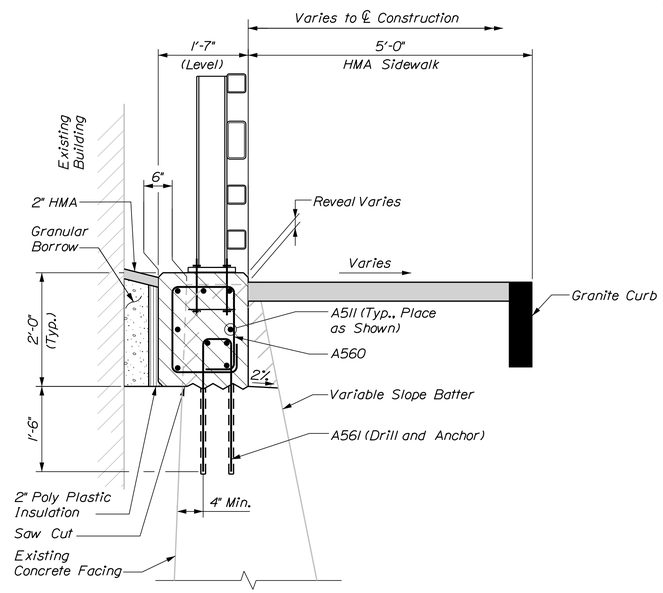

ABUTMENT NO. 1 NORTHEAST WALL - SECTION

BECKER STRUCTURAL ENGINEERS
75 York Street, Portland, Maine 04101
207.879.1838 ■ beckerstructural.com

STATE OF MAINE
DEPARTMENT OF TRANSPORTATION

STP-2049(500)

WIN 20495.00

BRIDGE NO. 2337

BRIDGE PLANS

		BY	DATE
PROJ. MANAGER	ANDREW LATHE		
DESIGN-DETAILED	E.BROWNELL	D.BURGESS	2-18-15
CHECKED-REVIEWED	E.BROWNELL	J.BURGESS	2-18-15
DESIGN2-DETAILED2	------	------	------
DESIGN3-DETAILED3	------	------	------
REVISIONS 1	------	------	------
REVISIONS 2	------	------	------
REVISIONS 3	------	------	------
REVISIONS 4	------	------	------
FIELD CHANGES	------	------	------

SIGNATURE

P.E. NUMBER

DATE

MEMORIAL BRIDGE
OVER PISCATAQUIS RIVER
GUILFORD PISCATAQUIS COUNTY

ABUTMENT NO. 1 SECTIONS

SHEET NUMBER
24
OF 38

Filename: ...\MSTA\024_Abut_001_Sect.dgn Division: BRIDGE Username: common Date:2/18/2015

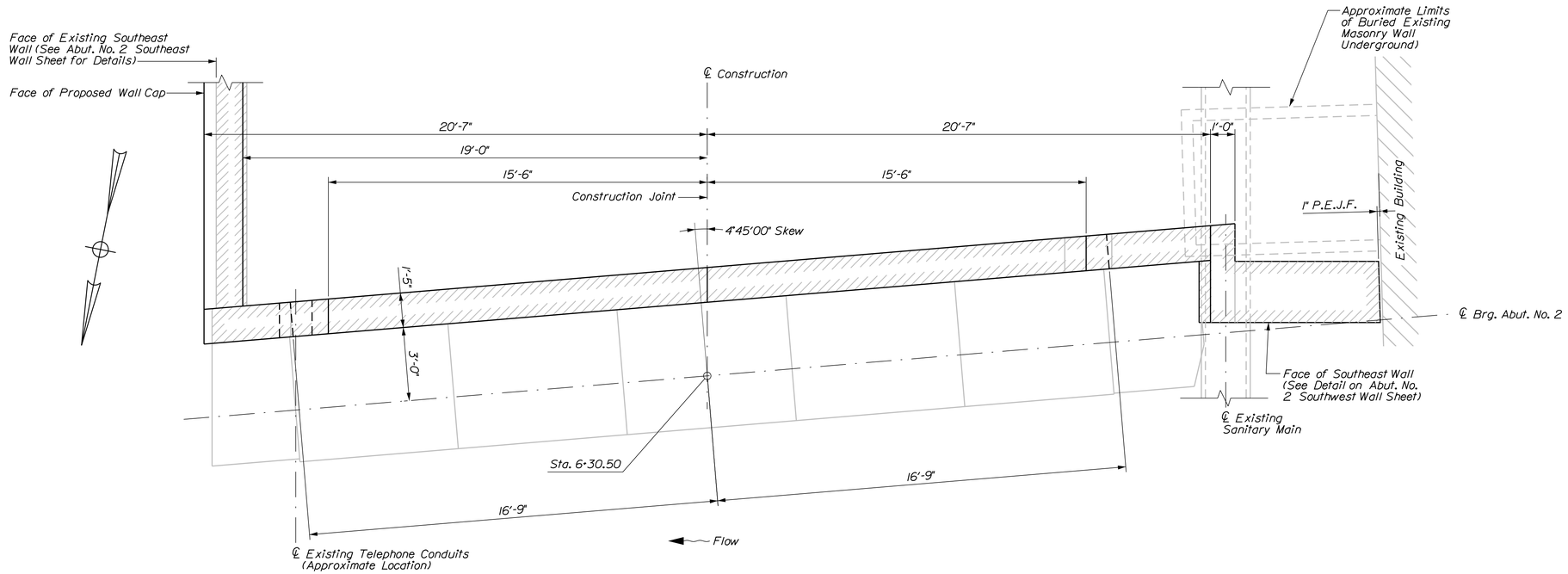

ABUTMENT NO. 2 - PLAN

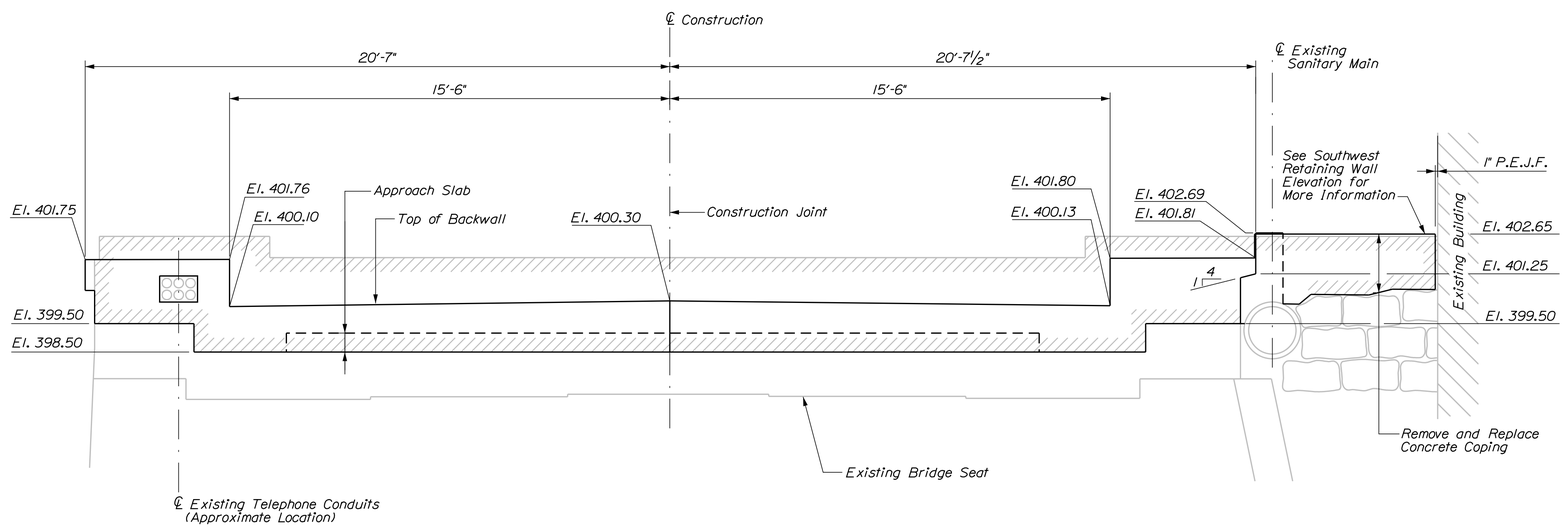

ABUTMENT NO. 2 - ELEVATION

Limits of Removal

BECKER STRUCTURAL ENGINEERS
75 York Street, Portland, Maine 04101
207.879.1838 ■ beckerstructural.com

STATE OF MAINE
DEPARTMENT OF TRANSPORTATION

STP-2049(500)

WIN 20495.00

BRIDGE NO. 2337

BRIDGE PLANS

		BY	DATE
PROJ. MANAGER	ANDREW LATHE		
DESIGN-DETAILED	E.BROWNELL	D.BURGESS	2-18-15
CHECKED-REVIEWED	E.BROWNELL	J.BURGESS	2-18-15
DESIGN2-DETAILED2	------	------	------
DESIGN3-DETAILED3	------	------	------
REVISIONS 1	------	------	------
REVISIONS 2	------	------	------
REVISIONS 3	------	------	------
REVISIONS 4	------	------	------
FIELD CHANGES	------	------	------

SIGNATURE

P.E. NUMBER

DATE

MEMORIAL BRIDGE
OVER PISCATAQUIS RIVER
GUILFORD PISCATAQUIS COUNTY

ABUTMENT NO. 2

SHEET NUMBER
25
OF 38

Filename: ...\BRIDGE\MSTA\025_Abut_002.dgn Division: BRIDGE Username: common Date:2/18/2015

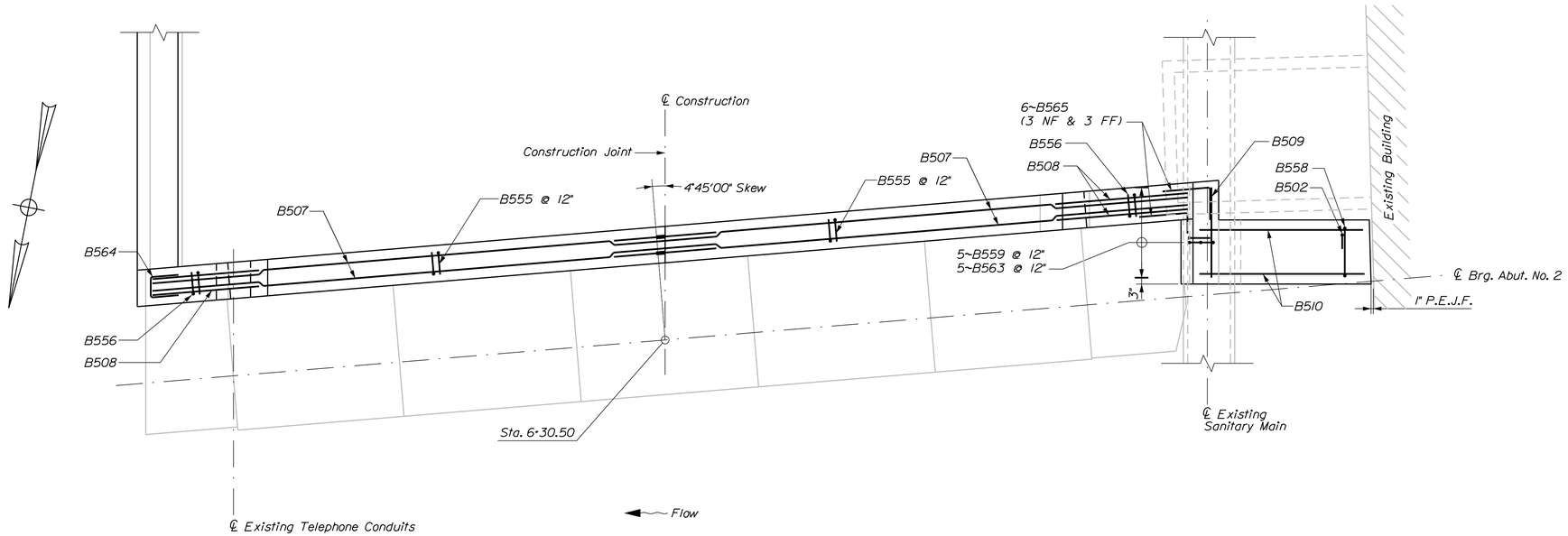

ABUTMENT NO. 2 - REINFORCEMENT PLAN

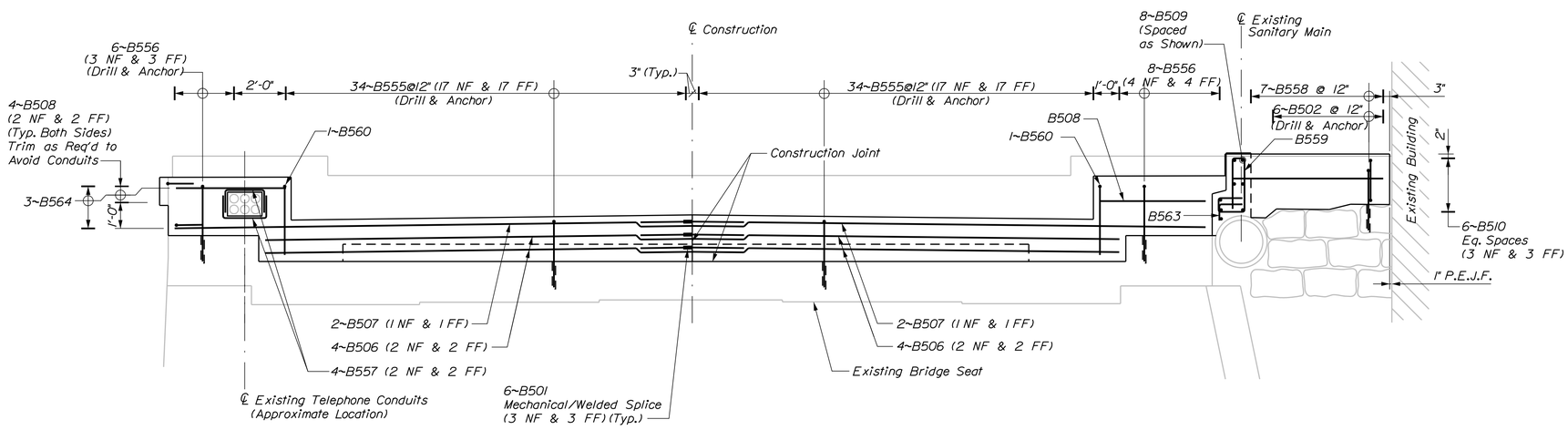

ABUTMENT NO. 2 - REINFORCEMENT ELEVATION

BECKER
STRUCTURAL ENGINEERS
75 York Street, Portland, Maine 04101
207.879.1838 ■ beckerstructural.com

STATE OF MAINE
DEPARTMENT OF TRANSPORTATION

STP-2049(500)

WIN 20495.00

BRIDGE NO. 2337

BRIDGE PLANS

PROJ. MANAGER	ANDREW LATHE	BY	DATE
DESIGN-DETAILED	E.BROWNELL	D.BURGESS	2-18-15
CHECKED-REVIEWED	E.BROWNELL	J.BURGESS	2-18-15
DESIGN2-DETAILED2	------	------	------
DESIGN3-DETAILED3	------	------	------
REVISIONS 1	------		------
REVISIONS 2	------		------
REVISIONS 3	------		------
REVISIONS 4	------		------
FIELD CHANGES	------		------

SIGNATURE

P.E. NUMBER

DATE

MEMORIAL BRIDGE
OVER PISCATAQUIS RIVER
GUILFORD PISCATAQUIS COUNTY

ABUT. NO. 2 REINFORCING

SHEET NUMBER
26
OF 38

Filename: ...\MSTA\026_Abut_002_Reinf.dgn Division: BRIDGE Username: common Date:2/18/2015

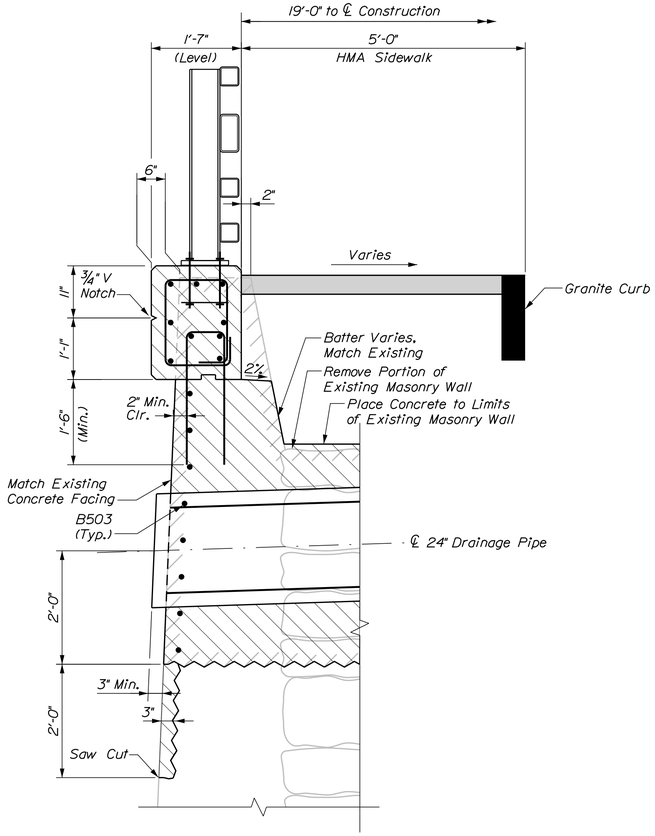

SECTION AT DRAINAGE OUTLET

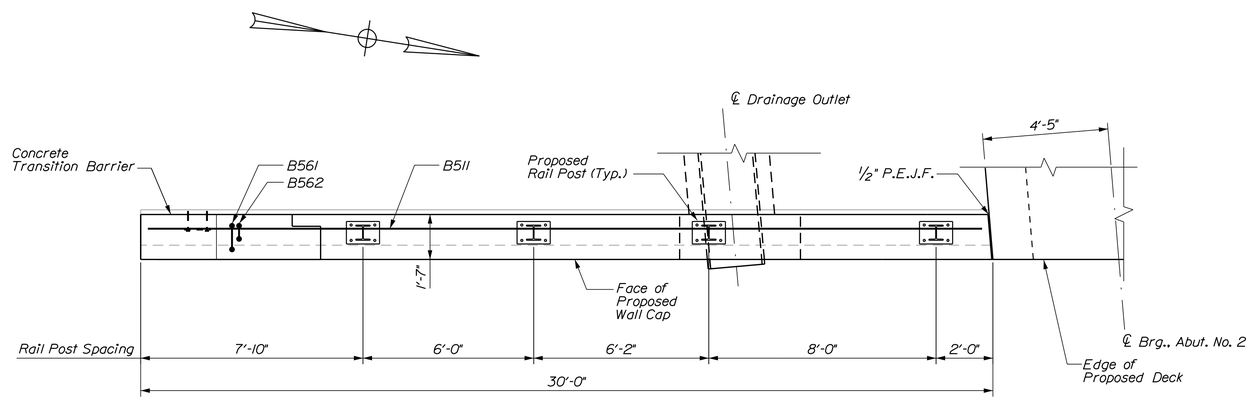

ABUTMENT NO. 2 SOUTHEAST WALL - PLAN

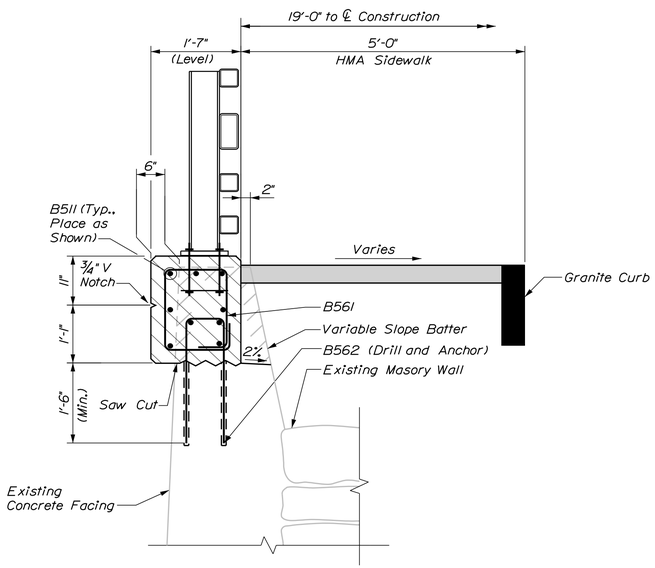

SOUTHEAST RETAINING WALL - SECTION

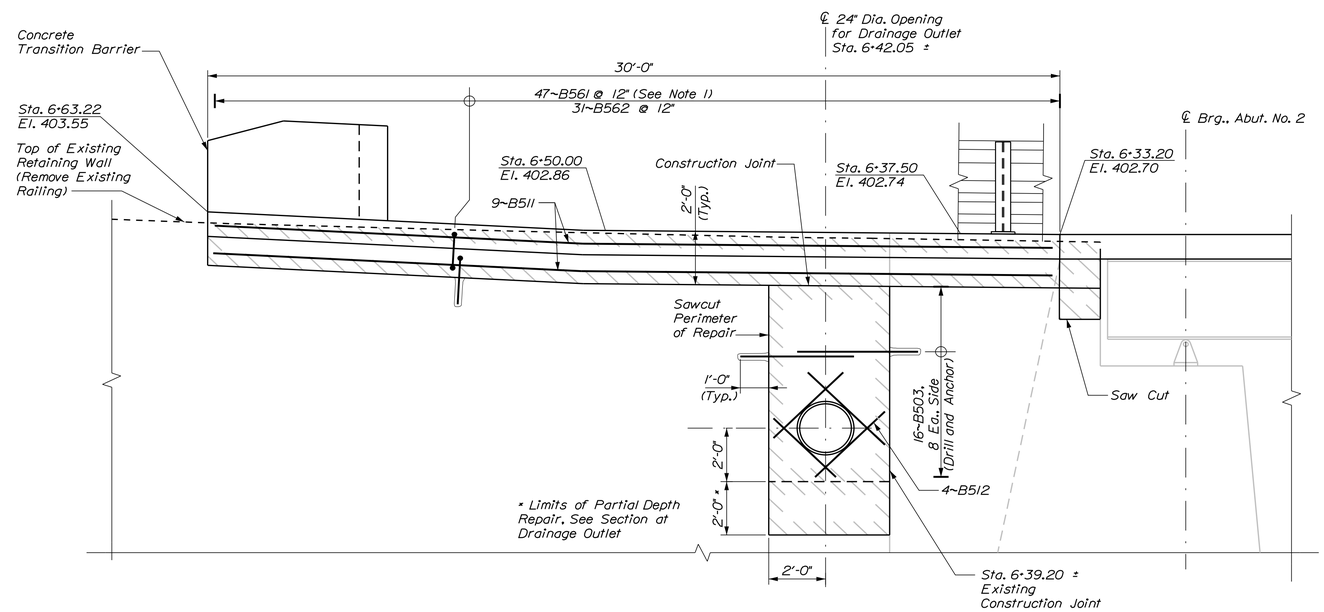

ABUTMENT NO. 2 SOUTHEAST WALL - ELEVATION

Limits of Removal

NOTES

1. Provide additional #5 stirrups at railing posts and concrete transition barrier. See Standard Details 507(13) and 526(34).

2. As an alternative to dismantling existing masonry wall and concrete facing to the limits shown in order to install the 24" drainage pipe, the Contractor has the option to core through the existing walls. This work will be incidental to Item 502.21. No additional payment will be paid for coring through the existing walls should Contractor chose to do so.

BECKER
STRUCTURAL ENGINEERS
75 York Street, Portland, Maine 04101
207.879.1838 ■ beckerstructural.com

STATE OF MAINE
DEPARTMENT OF TRANSPORTATION

STP-2049(500)

WIN 20495.00

BRIDGE NO. 2337

BRIDGE PLANS

PROJ. MANAGER	ANDREW LATHE	BY	DATE
DESIGN-DETAILED	J.CONFER	D.BURGESS	2-18-15
CHECKED-REVIEWED	L.BARTLETT	J.BURGESS	2-18-15
DESIGN2-DETAILED2	------	------	------
DESIGN3-DETAILED3	------	------	------
REVISIONS 1	------	------	------
REVISIONS 2	------	------	------
REVISIONS 3	------	------	------
REVISIONS 4	------	------	------
FIELD CHANGES	------	------	------

SIGNATURE

P.E. NUMBER

DATE

MEMORIAL BRIDGE
OVER PISCATAQUIS RIVER
GUILFORD PISCATAQUIS COUNTY

ABUT. NO.2 SOUTHEAST WALL

SHEET NUMBER
27
OF 38

Filename: ...\MSTA\027_Ret_Wall_SE.dgn Division: BRIDGE Username: common Date:3/9/2015

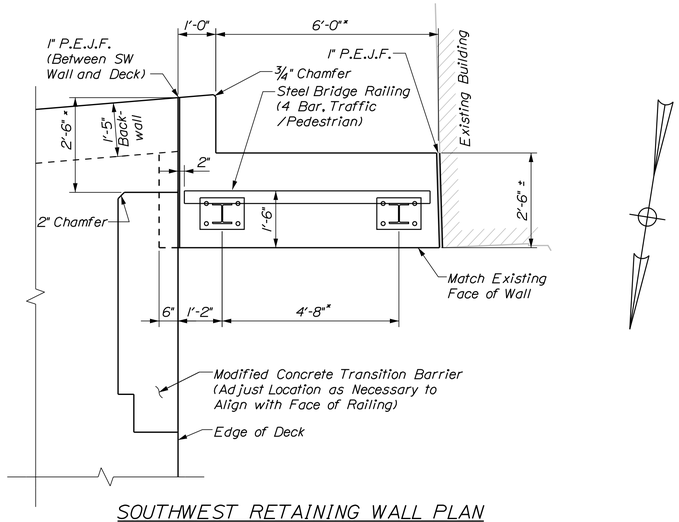

SOUTHWEST RETAINING WALL PLAN

* Verify Dimension in Field

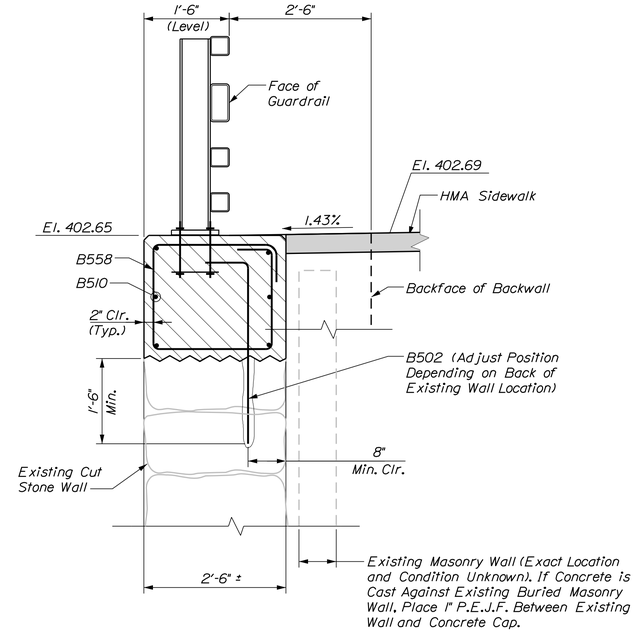

SOUTHWEST RETAINING WALL - SECTION

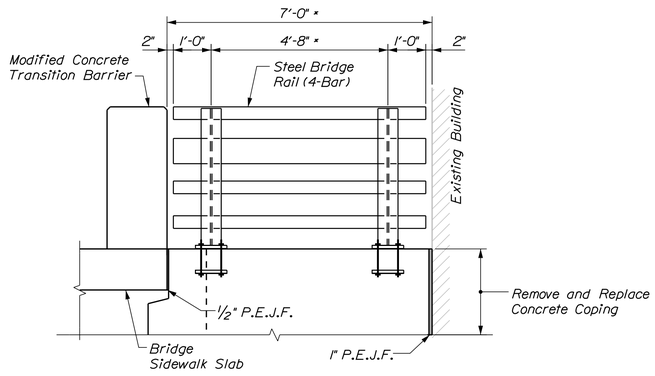

SOUTHWEST RETAINING WALL ELEVATION

* Verify Dimension in Field

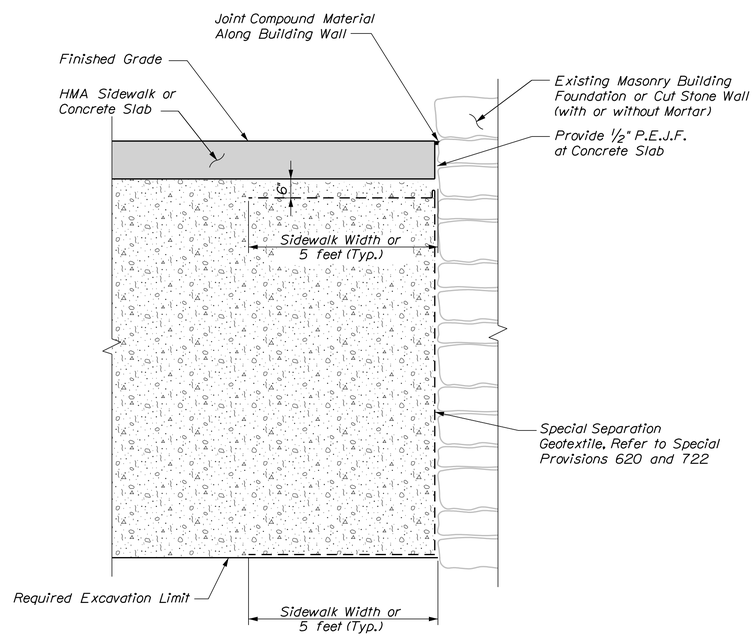

TYPICAL FILL AGAINST MASONRY OR CUT STONE

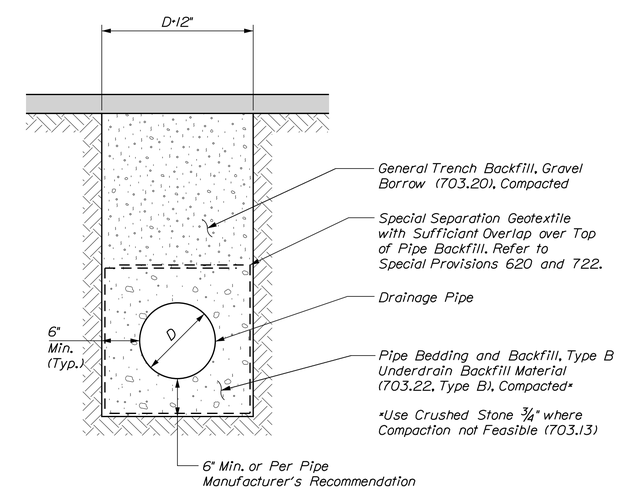

TYPICAL DRAINAGE PIPE SECTION

BECKER STRUCTURAL ENGINEERS
75 York Street, Portland, Maine 04101
207.879.1838 ■ beckerstructural.com

STATE OF MAINE
DEPARTMENT OF TRANSPORTATION

STP-2049(500)

WIN 20495.00

BRIDGE NO. 2337

BRIDGE PLANS

PROJ. MANAGER	ANDREW LATHE	BY	DATE
DESIGN-DETAILED	E.BROWNELL	D.BURGESS	2-18-15
CHECKED-REVIEWED	E.BROWNELL	J.BURGESS	2-18-15
DESIGN2-DETAILED2	------	------	------
DESIGN3-DETAILED3	------	------	------
REVISIONS 1	------	------	------
REVISIONS 2	------	------	------
REVISIONS 3	------	------	------
REVISIONS 4	------	------	------
FIELD CHANGES	------	------	------

SIGNATURE

P.E. NUMBER

DATE

MEMORIAL BRIDGE
OVER PISCATAQUIS RIVER
GUILFORD PISCATAQUIS COUNTY

ABUTMENT NO. 2
SOUTHWEST WALL

SHEET NUMBER

28

OF 38

Filename: ...\MSTA\028_Ret_Wall_SW.dgn Division: BRIDGE Username: common Date:2/18/2015

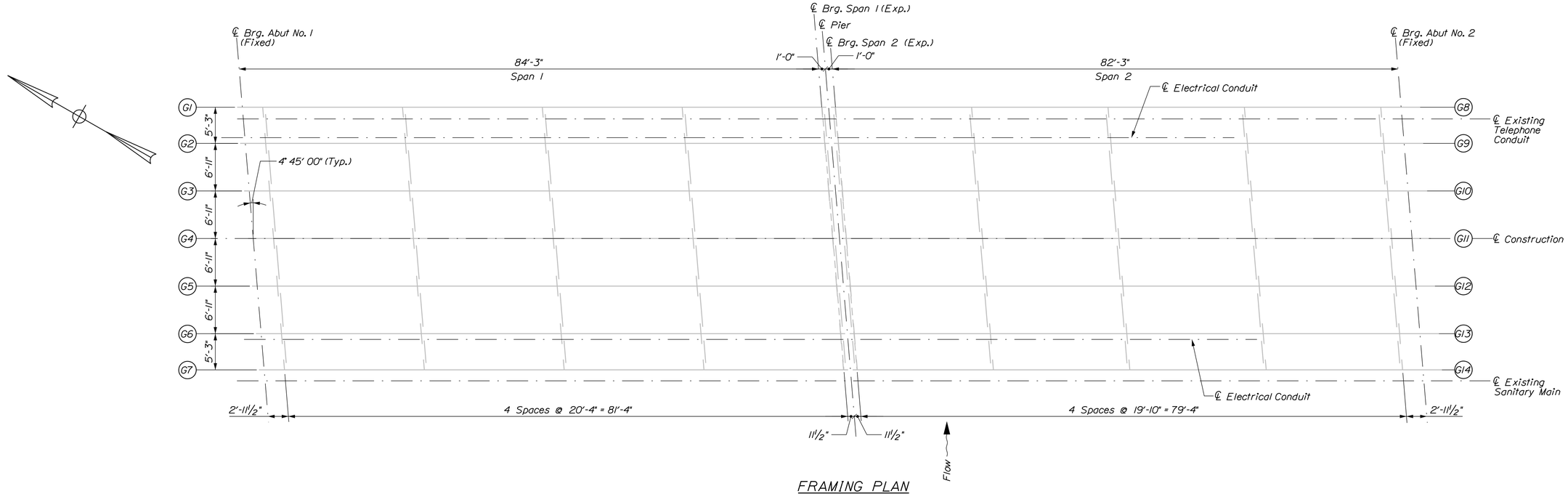

FRAMING PLAN

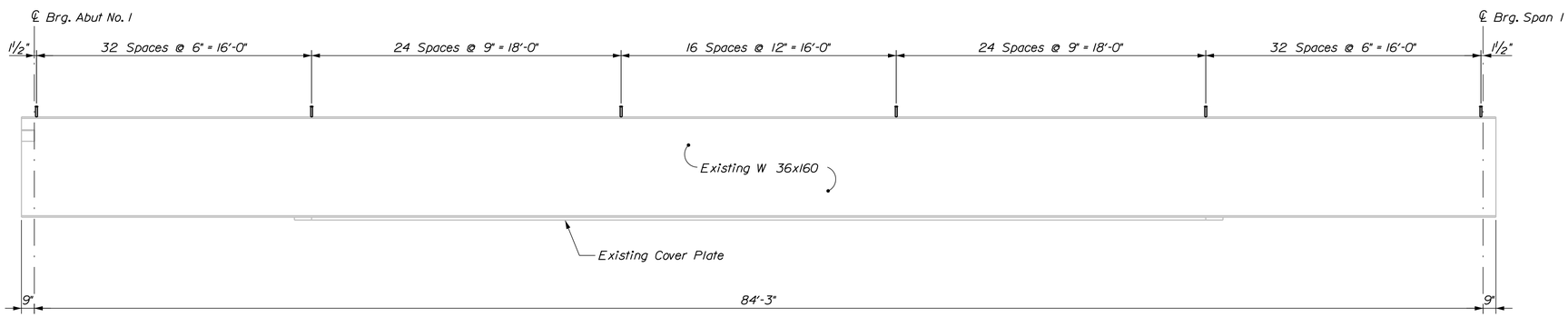

BEAM ELEVATION & STUD LAYOUT - SPAN 1

Beams G2-G6 Shown, Beams G1 & G7 Similar, See Note 1
Vertical Scale Exaggerated for Clarity
258 Studs per Beam (1,806 Studs Total, Span 1)

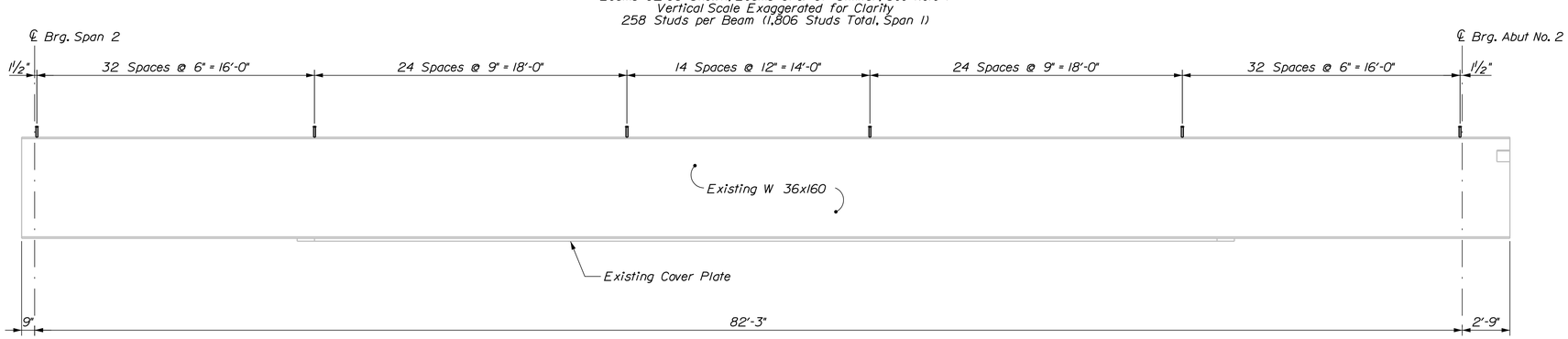

BEAM ELEVATION & STUD LAYOUT - SPAN 2

Beams G9-G13 Shown, Beams G8 & G14 Similar, See Note 1
Vertical Scale Exaggerated for Clarity
254 Studs per Beam (1,778 Studs Total, Span 2)

NOTES

1. G1, G7, G8 and G14 are W 36x150 without coverplates. Diaphragms are C 15x33.9.

2. Shear studs may interfere with the bottom mat of superstructure reinforcing steel. Studs shall be oriented parallel to the transverse reinforcing steel, which will be parallel to the skew. Superstructure reinforcing steel shall be adjusted to clear studs.

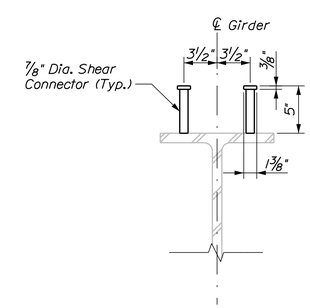

SHEAR CONNECTOR DETAIL

BECKER STRUCTURAL ENGINEERS
75 York Street, Portland, Maine 04101
207.879.1838 ■ beckerstructural.com

STATE OF MAINE
DEPARTMENT OF TRANSPORTATION

STP-2049(500)

WIN 20495.00

BRIDGE NO. 2337

BRIDGE PLANS

PROJ. MANAGER	ANDREW LATHE	BY	DATE
DESIGN-DETAILED	E.BROWNELL	D.BURGESS	2-18-15
CHECKED-REVIEWED	E.BROWNELL	J.BURGESS	2-18-15
DESIGN2-DETAILED2	------	------	------
DESIGN3-DETAILED3	------	------	------
REVISIONS 1	------	------	------
REVISIONS 2	------	------	------
REVISIONS 3	------	------	------
REVISIONS 4	------	------	------
FIELD CHANGES	------	------	------

SIGNATURE

P.E. NUMBER

DATE

MEMORIAL BRIDGE
OVER PISCATAQUIS RIVER
GUILFORD PISCATAQUIS COUNTY

FRAMING PLAN

SHEET NUMBER
29
OF 38

Filename: ...\00\BRIDGE\MSTA\029_Framing.dgn Division: BRIDGE Username: common Date:2/18/2015

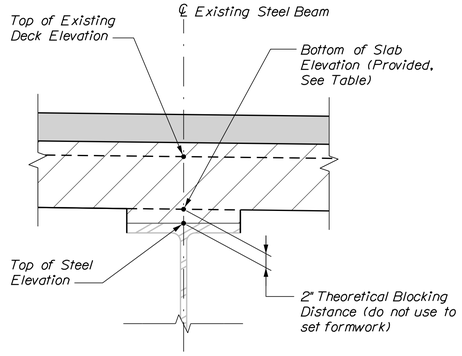

BLOCKING DETAIL

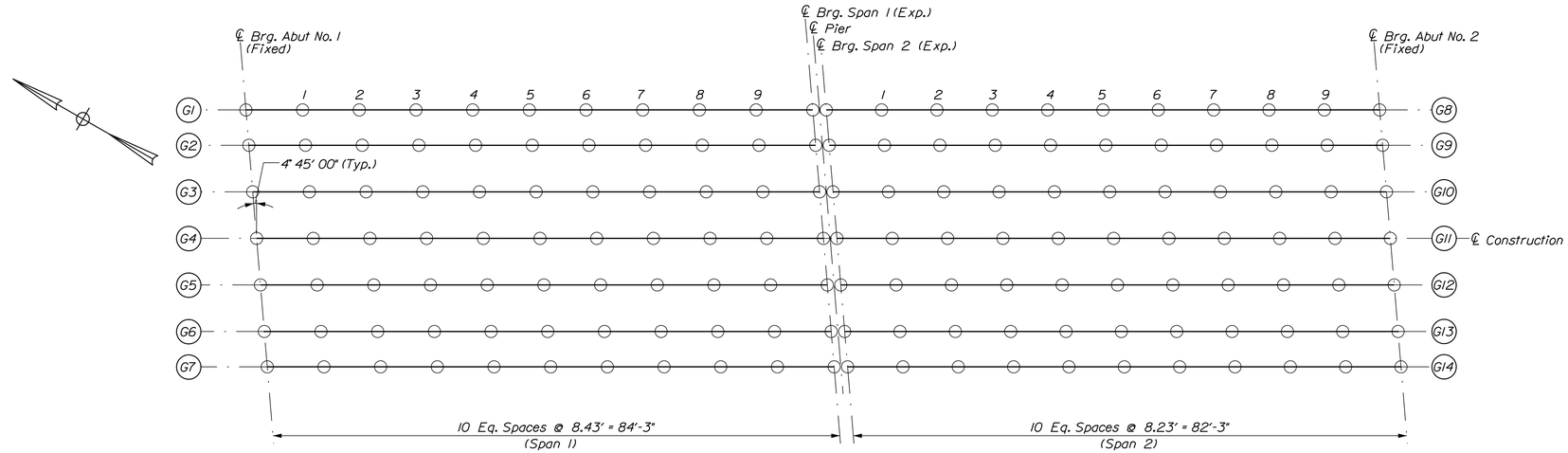

BOTTOM OF SLAB ELEVATION LAYOUT PLAN

DEAD LOAD DEFLECTIONS (INCHES) - INTERIOR BEAMS G3, G4, G5, G10, G11, G12

		℄ Brg. Abut 1	1	2	3	4	5	6	7	8	9	℄ Brg. Pier-Span 1
Span 1	Steel	0.00	0.18	0.34	0.46	0.54	0.57	0.54	0.46	0.34	0.18	0.00
	Fluid	0.00	0.63	1.18	1.59	1.85	1.94	1.85	1.59	1.18	0.63	0.00
	Superimposed	0.00	0.13	0.24	0.32	0.37	0.39	0.37	0.32	0.23	0.13	0.00
		℄ Brg. Pier-Span 2	1	2	3	4	5	6	7	8	9	℄ Brg. Abut 2
Span 2	Steel	0.00	0.17	0.31	0.42	0.49	0.51	0.49	0.42	0.31	0.17	0.00
	Fluid	0.00	0.57	1.07	1.44	1.68	1.76	1.67	1.43	1.06	0.57	0.00
	Superimposed	0.00	0.12	0.21	0.29	0.33	0.35	0.33	0.29	0.21	0.11	0.00

DEAD LOAD DEFLECTIONS (INCHES) - INTERIOR BEAMS G2, G6, G9, G13

		℄ Brg. Abut 1	1	2	3	4	5	6	7	8	9	℄ Brg. Pier-Span 1
Span 1	Steel	0.00	0.18	0.34	0.46	0.54	0.57	0.54	0.46	0.34	0.18	0.00
	Fluid	0.00	0.48	0.89	1.20	1.40	1.47	1.40	1.20	0.89	0.48	0.00
	Superimposed	0.00	0.34	0.63	0.85	0.99	1.03	0.99	0.85	0.63	0.34	0.00
		℄ Brg. Pier-Span 2	1	2	3	4	5	6	7	8	9	℄ Brg. Abut 2
Span 2	Steel	0.00	0.17	0.31	0.42	0.49	0.51	0.49	0.42	0.31	0.17	0.00
	Fluid	0.00	0.43	0.81	1.09	1.27	1.33	1.27	1.09	0.80	0.43	0.00
	Superimposed	0.00	0.31	0.57	0.77	0.89	0.94	0.89	0.76	0.56	0.30	0.00

DEAD LOAD DEFLECTIONS (INCHES) - EXTERIOR BEAMS G1, G8

		℄ Brg. Abut 1	1	2	3	4	5	6	7	8	9	℄ Brg. Pier-Span 1
Span 1	Steel	0.00	0.20	0.39	0.53	0.62	0.65	0.62	0.53	0.39	0.20	0.00
	Fluid	0.00	0.83	1.57	2.15	2.52	2.65	2.52	2.15	1.57	0.83	0.00
	Superimposed	0.00	0.04	0.07	0.10	0.12	0.12	0.12	0.10	0.07	0.04	0.00
		℄ Brg. Pier-Span 2	1	2	3	4	5	6	7	8	9	℄ Brg. Abut 2
Span 2	Steel	0.00	0.19	0.35	0.48	0.56	0.59	0.56	0.48	0.35	0.19	0.00
	Fluid	0.00	0.75	1.42	1.95	2.29	2.40	2.29	1.96	1.43	0.76	0.00
	Superimposed	0.00	0.04	0.06	0.09	0.10	0.11	0.10	0.09	0.06	0.04	0.00

DEAD LOAD DEFLECTIONS (INCHES) - EXTERIOR BEAMS G7, G14

		℄ Brg. Abut 1	1	2	3	4	5	6	7	8	9	℄ Brg. Pier-Span 1
Span 1	Steel	0.00	0.20	0.39	0.53	0.62	0.65	0.62	0.53	0.39	0.20	0.00
	Fluid	0.00	0.82	1.56	2.13	2.50	2.62	2.50	2.14	1.56	0.82	0.00
	Superimposed	0.00	0.04	0.07	0.10	0.12	0.12	0.12	0.10	0.07	0.04	0.00
		℄ Brg. Pier-Span 2	1	2	3	4	5	6	7	8	9	℄ Brg. Abut 2
Span 2	Steel	0.00	0.19	0.35	0.48	0.56	0.59	0.56	0.48	0.35	0.19	0.00
	Fluid	0.00	0.75	1.41	1.94	2.27	2.38	2.27	1.94	1.42	0.75	0.00
	Superimposed	0.00	0.04	0.06	0.09	0.10	0.11	0.10	0.09	0.06	0.04	0.00

BOTTOM OF SLAB ELEVATION TABLE

		℄ Brg. Abut 1	1	2	3	4	5	6	7	8	9	℄ Brg. Pier-Span 1
Span 1	G1	399.31	399.51	399.69	399.86	400.02	400.15	400.26	400.34	400.41	400.47	400.52
	G2	398.58	398.77	398.95	399.12	399.27	399.40	399.51	399.60	399.68	399.74	399.79
	G3	398.68	398.86	399.03	399.20	399.34	399.47	399.58	399.68	399.76	399.82	399.88
	G4	398.77	398.95	399.12	399.29	399.43	399.56	399.67	399.77	399.85	399.91	399.97
	G5	398.69	398.88	399.05	399.21	399.36	399.49	399.60	399.69	399.77	399.84	399.90
	G6	398.62	398.81	398.99	399.15	399.30	399.43	399.54	399.63	399.71	399.77	399.82
	G7	399.36	399.55	399.74	399.91	400.06	400.19	400.30	400.39	400.46	400.52	400.56
		℄ Brg. Pier-Span 2	1	2	3	4	5	6	7	8	9	℄ Brg. Abut 2
Span 2	G8	400.55	400.73	400.91	401.07	401.22	401.34	401.45	401.54	401.61	401.67	401.72
	G9	399.82	400.00	400.17	400.33	400.47	400.60	400.70	400.80	400.87	400.94	400.99
	G10	399.91	400.08	400.25	400.41	400.55	400.67	400.78	400.88	400.96	401.02	401.08
	G11	400.00	400.17	400.34	400.50	400.64	400.76	400.87	400.97	401.05	401.11	401.18
	G12	399.93	400.10	400.27	400.42	400.56	400.69	400.80	400.89	400.97	401.04	401.10
	G13	399.85	400.03	400.20	400.36	400.50	400.63	400.74	400.83	400.91	400.97	401.03
	G14	400.59	400.78	400.95	401.11	401.26	401.39	401.50	401.59	401.66	401.72	401.77

NOTES:

1. Prior to removal of the existing deck, the Contractor shall survey top of existing deck elevations at the locations specified above.

2. After removal of the existing deck, the Contractor shall survey top of steel elevations at locations specified above.

3. Prior to setting the formwork, the Contractor shall submit top of steel and top of existing deck elevations to the Engineer for review.

BECKER STRUCTURAL ENGINEERS
75 York Street, Portland, Maine 04101
207.879.1838 ■ beckerstructural.com

STATE OF MAINE
DEPARTMENT OF TRANSPORTATION

STP-2049(500)

WIN 20495.00

BRIDGE NO. 2337

BRIDGE PLANS

	BY	DATE
PROJ. MANAGER ANDREW LATHE		
DESIGN-DETAILED	D.BURGESS	2-18-15
CHECKED-REVIEWED	E.BROWNELL	2-18-15
DESIGN2-DETAILED2	E.BROWNELL	------
DESIGN3-DETAILED3	J.BURGESS	------
REVISIONS 1	------	------
REVISIONS 2	------	------
REVISIONS 3	------	------
REVISIONS 4	------	------
FIELD CHANGES	------	------

SIGNATURE

P.E. NUMBER

DATE

MEMORIAL BRIDGE
OVER PISCATAQUIS RIVER
GUILFORD PISCATAQUIS COUNTY

BOTTOM OF SLAB ELEVATION

SHEET NUMBER
30
OF 38

Filename: ...\MSTA\030_Btm Slab Elev.dgn Division: BRIDGE Username: common Date:2/18/2015

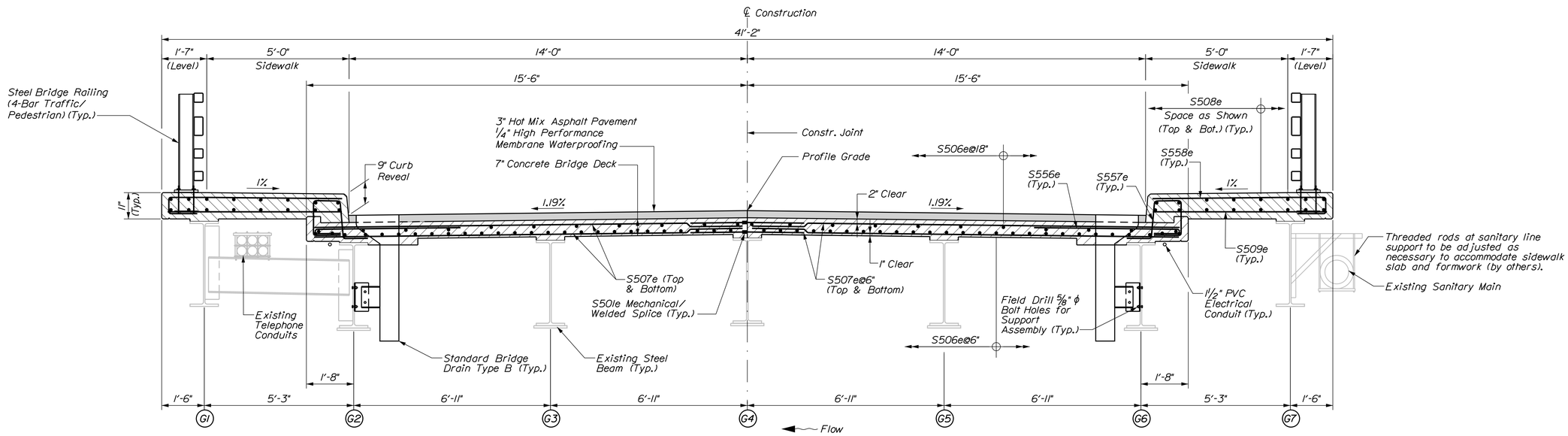

TRANSVERSE SECTION

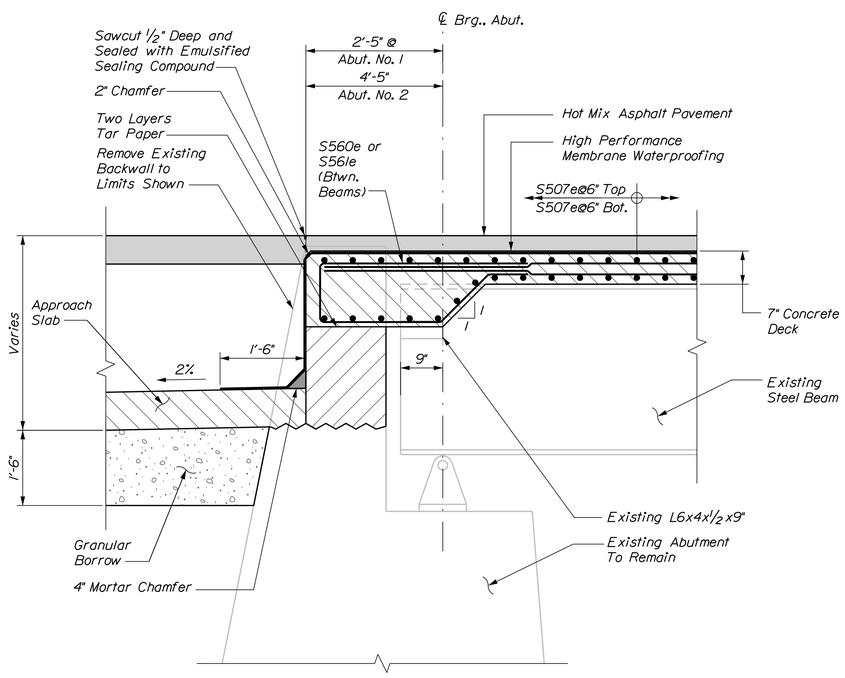

END OF SLAB SECTION AT DECK

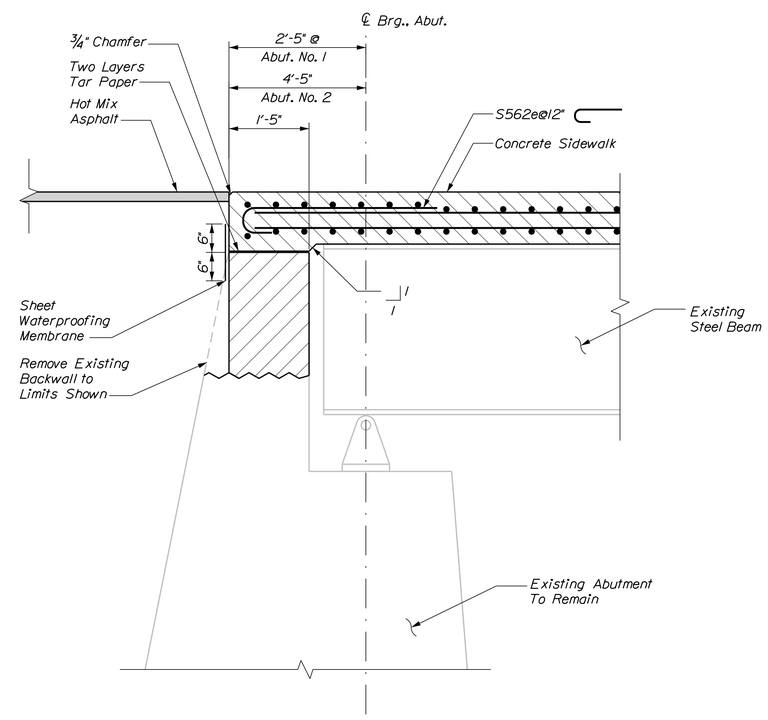

END OF SLAB SECTION AT SIDEWALK

BECKER STRUCTURAL ENGINEERS
75 York Street, Portland, Maine 04101
207.879.1838 ■ beckerstructural.com

STATE OF MAINE
DEPARTMENT OF TRANSPORTATION

STP-2049(500)

WIN 20495.00

BRIDGE NO. 2337

BRIDGE PLANS

		BY	DATE
PROJ. MANAGER	ANDREW LATHE		
DESIGN-DETAILED	E.BROWNELL	D.BURGESS	2-18-15
CHECKED-REVIEWED	E.BROWNELL	J.BURGESS	2-18-15
DESIGN2-DETAILED2	------	------	------
DESIGN3-DETAILED3	------	------	------
REVISIONS 1	------	------	------
REVISIONS 2	------	------	------
REVISIONS 3	------	------	------
REVISIONS 4	------	------	------
FIELD CHANGES	------	------	------

SIGNATURE

P.E. NUMBER

DATE

MEMORIAL BRIDGE
OVER PISCATAQUIS RIVER
GUILFORD PISCATAQUIS COUNTY

TRANSVERSE SECTION

SHEET NUMBER
31
OF 38

Filename: ...\031_Transverse Section.dgn Division: BRIDGE Username: common Date:2/18/2015

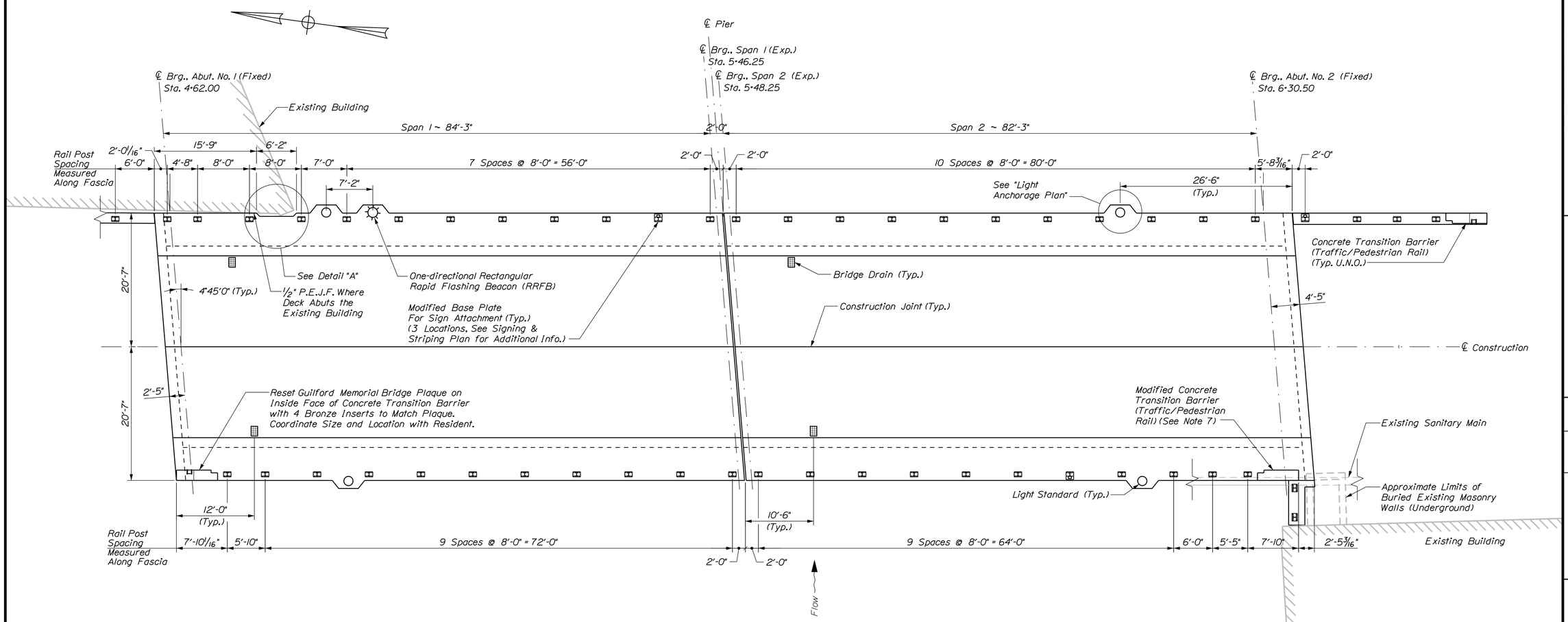

SUPERSTRUCTURE PLAN

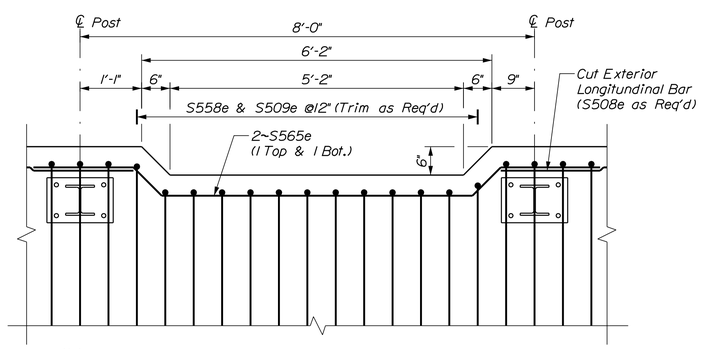

Note:
Contractor to field verify exact location and dimensions of block out to avoid deck interference with existing building.

DETAIL 'A'

SUPERSTRUCTURE NOTES

1. Reinforcing steel shall have a minimum concrete cover of 2 inches unless otherwise noted.

2. Reinforcing steel in the deck, sidewalk and bridge transitions shall be epoxy coated.

3. Adjust reinforcing steel to fit around the bridge drains and shear studs in a manner approved by the Resident. Refer to Standard Detail 502(23).

4. The Contractor shall install Transition Barrier vertical closed stirrups, as shown in Standard Details Section 526, prior to the placement of the sidewalk concrete, northwest and southwest corners only.

5. Payment for reinforcing steel fabricated, delivered, and placed in the cast-in-place portion of the structural concrete slab will be considered incidental to the appropriate Standard Specifications Section 502 pay item.

6. The theoretical blocking used for design of the structure is 2 inch at the centerline of bearing of the abutments and piers. Refer to Standard Detail 502(03) for blocking details.

7. Adjust location of Modified Concrete Tansition Barrier at southwest corner of bridge to ensure end of barrier aligns with face of bridge rail on southwest retaining wall. See Southwest Retaining Wall Plan for more information.

8. The compression seal to be furnished shall have a minimum Movement Rating (MR) of 2.25 in.

9. Cost associated with removing and resetting Guilford Memorial Bridge plaque shall not be paid for directly, but shall be considered incidental to related contract items.

BECKER STRUCTURAL ENGINEERS
75 York Street, Portland, Maine 04101
207.879.1838 ■ beckerstructural.com

STATE OF MAINE
DEPARTMENT OF TRANSPORTATION

STP-2049(500)

WIN 20495.00

BRIDGE NO. 2337

BRIDGE PLANS

PROJ. MANAGER	ANDREW LATHE	BY	DATE
DESIGN-DETAILED	E.BROWNELL	D.BURGESS	2-18-15
CHECKED-REVIEWED	E.BROWNELL	J.BURGESS	2-18-15
DESIGN2-DETAILED2			
DESIGN3-DETAILED3			
REVISIONS: 1			
REVISIONS: 2			
REVISIONS: 3			
REVISIONS: 4			
FIELD CHANGES			

SIGNATURE

P.E. NUMBER

DATE

MEMORIAL BRIDGE
OVER PISCATAQUIS RIVER
GUILFORD PISCATAQUIS COUNTY

SUPERSTRUCTURE PLAN

SHEET NUMBER
32
OF 38

Filename: ...\MSTA\032_SuperstrPlan.dgn Division: BRIDGE Username: common Date:2/18/2015

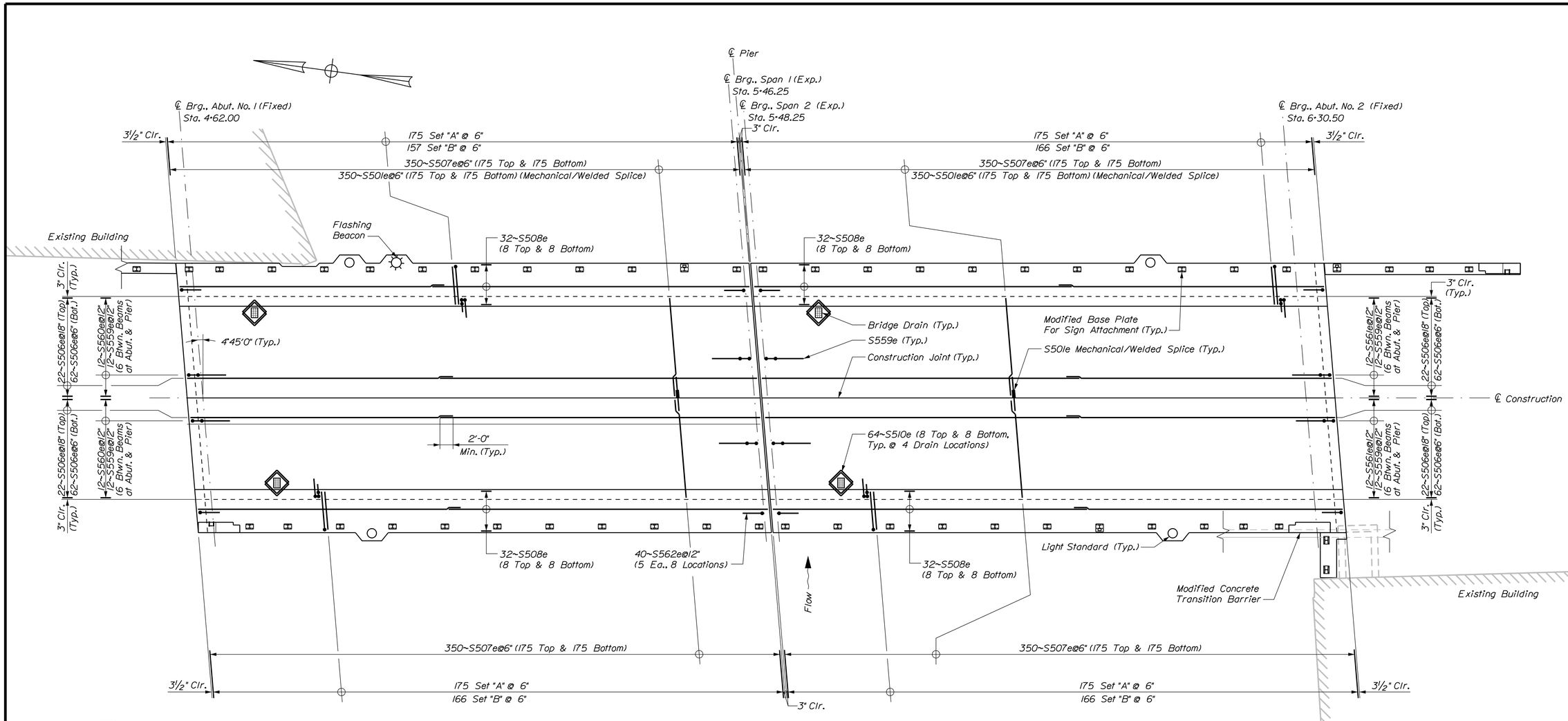

SUPERSTRUCTURE REINFORCING PLAN

Set "A":
1~S556e (#5 Hook)
1~S557e (#5 Bent Bar)

Set "B":
1~S509e (#5 Straight Bar)
1~S558e (#5 Bent Bar)

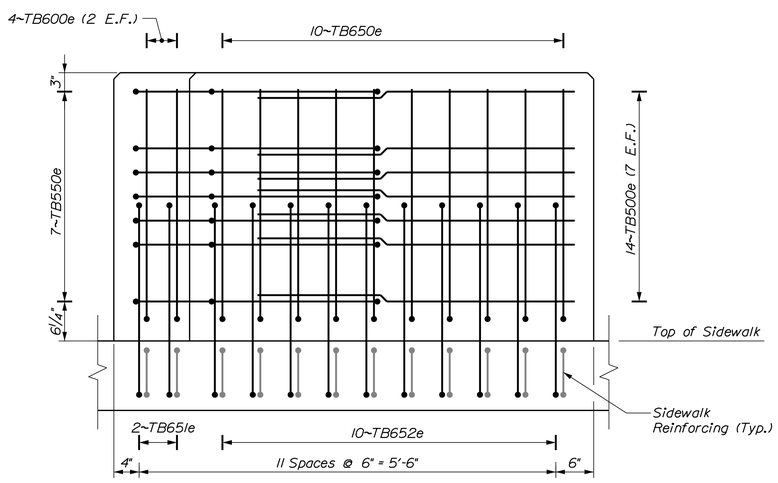

MODIFIED CONCRETE TRANSITION BARRIER ELEVATION

Note: Transition Barrier Reinforcement shall be Epoxy Coated. See Standard Detail 526(22,23,34-37) for information not shown here.

STATE OF MAINE
DEPARTMENT OF TRANSPORTATION

STP-2049(500)

WIN 20495.00

BRIDGE NO. 2337

BRIDGE PLANS

		BY	DATE
PROJ. MANAGER	ANDREW LATHE		
DESIGN-DETAILED	E.BROWNELL	D.BURGESS	2-18-15
CHECKED-REVIEWED	E.BROWNELL	J.BURGESS	2-18-15
DESIGN2-DETAILED2			
DESIGN3-DETAILED3			
REVISIONS 1			
REVISIONS 2			
REVISIONS 3			
REVISIONS 4			
FIELD CHANGES			

SIGNATURE

P.E. NUMBER

DATE

MEMORIAL BRIDGE
OVER PISCATAQUIS RIVER
GUILFORD PISCATAQUIS COUNTY

SUPERSTRUCTURE REINFORCING

BECKER STRUCTURAL ENGINEERS
75 York Street, Portland, Maine 04101
207.879.1838 ■ beckerstructural.com

SHEET NUMBER
33
OF 38

Filename: ...\033_SuperstrPlan_Reinf.dgn Division: BRIDGE Username: common Date:2/18/2015

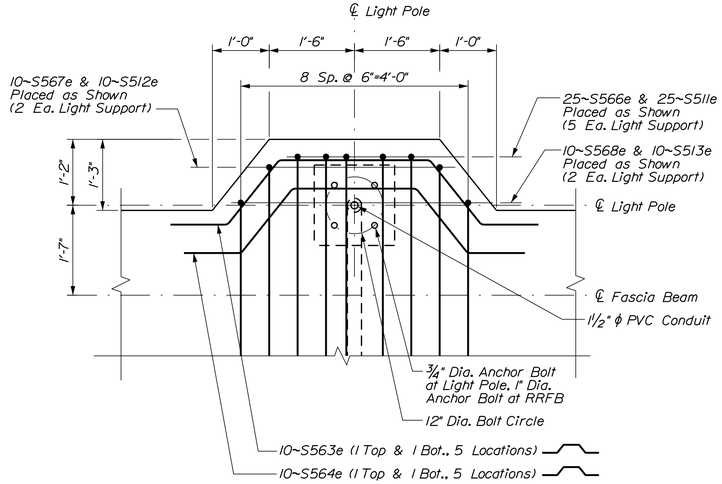

Note:
Typical deck reinforcing omitted for clarity.

LIGHT ANCHORAGE PLAN

(Light Base Support shown, RRFB Support Similar)

NOTES

1. Coordinate bolt hole pattern in anchor plates with anchor bolt pattern on light pole and RRFB.

2. Payment for anchor plates for light poles and RRFB will be considered incidental to related contract items.

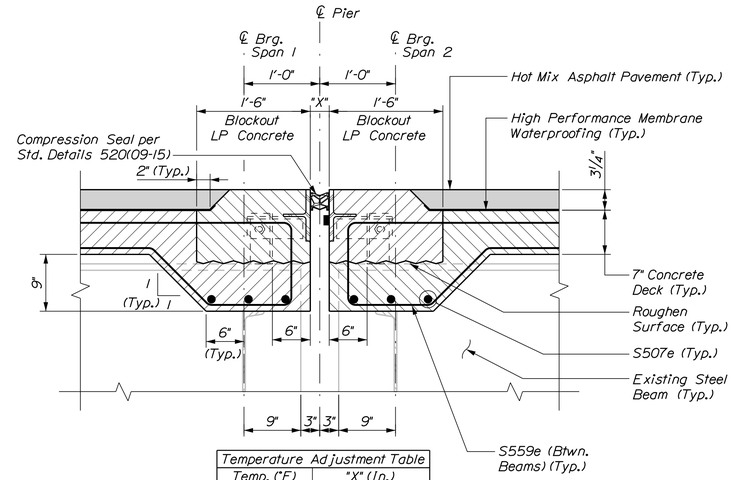

Temperature Adjustment Table	
Temp. (°F)	"X" (in.)
0	3.786
15	3.589
30	3.392
45	3.195
60	2.998
75	2.801
90	2.604

Note:
Typical deck reinforcing omitted for clarity.

SLAB HAUNCH AT PIER

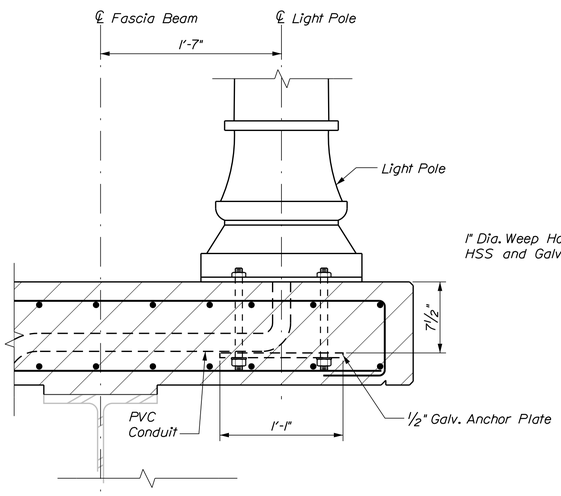

LIGHT ANCHORAGE - SECTION

(Light Base Shown, RRFB Connection Similar without Electrical Service)

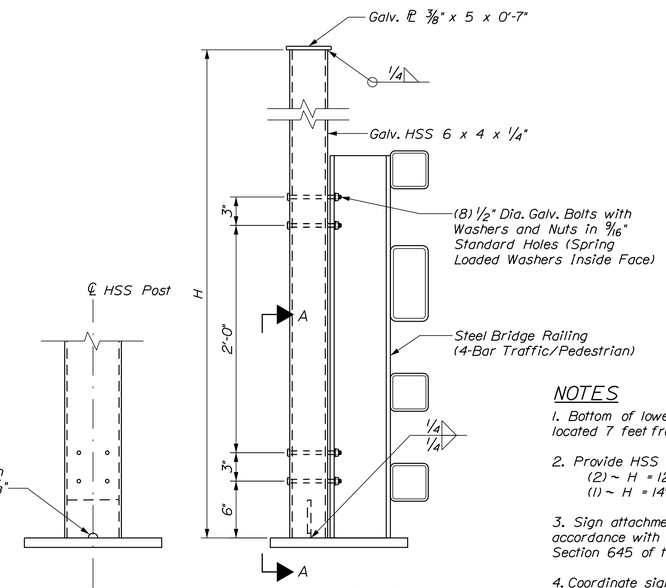

SECTION A-A

SIGN POST CONNECTION DETAIL

NOTES

1. Bottom of lowest sign on post shall be located 7 feet from top of sidewalk.

2. Provide HSS posts in 3 locations:
   (2) ~ H = 12'-6"
   (1) ~ H = 14'-6"

3. Sign attachment to post shall be in accordance with minimum requirements or Section 645 of the Standard Details.

4. Coordinate sign attachment to post with Resident.

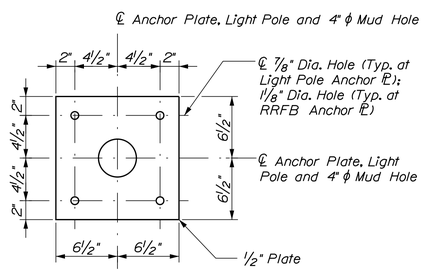

ANCHOR PLATE - PLAN

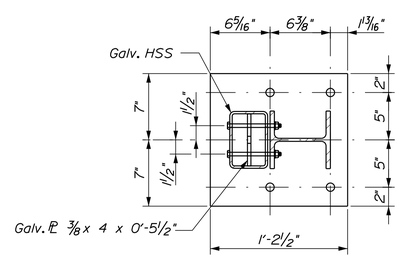

MODIFIED BASE PLATE AT SIGN POST

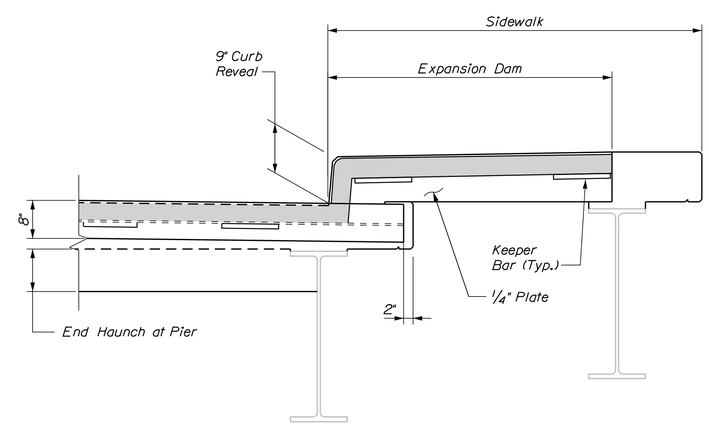

Note:
See Standard Details 520(09) - 520(15)
for more information.

EXPANSION JOINT AT SIDEWALK

BECKER
STRUCTURAL ENGINEERS
75 York Street, Portland, Maine 04101
207.879.1838 ■ beckerstructural.com

STATE OF MAINE
DEPARTMENT OF TRANSPORTATION

STP-2049(500)

WIN 20495.00

BRIDGE NO. 2337

BRIDGE PLANS

		BY	DATE
PROJ. MANAGER	ANDREW LATHE		
DESIGN-DETAILED	E.BROWNELL	D.BURGESS	2-18-15
CHECKED-REVIEWED	E.BROWNELL	J.BURGESS	2-18-15
DESIGN2-DETAILED2			
DESIGN3-DETAILED3			
REVISIONS 1			
REVISIONS 2			
REVISIONS 3			
REVISIONS 4			
FIELD CHANGES			

SIGNATURE

P.E. NUMBER

DATE

MEMORIAL BRIDGE
OVER PISCATAQUIS RIVER
GUILFORD PISCATAQUIS COUNTY

SUPERSTRUCTURE DETAILS

SHEET NUMBER

34

OF 38

Filename: ...\MSTA\034_SuperstrDet.dgn Division: BRIDGE Username: common Date:3/10/2015

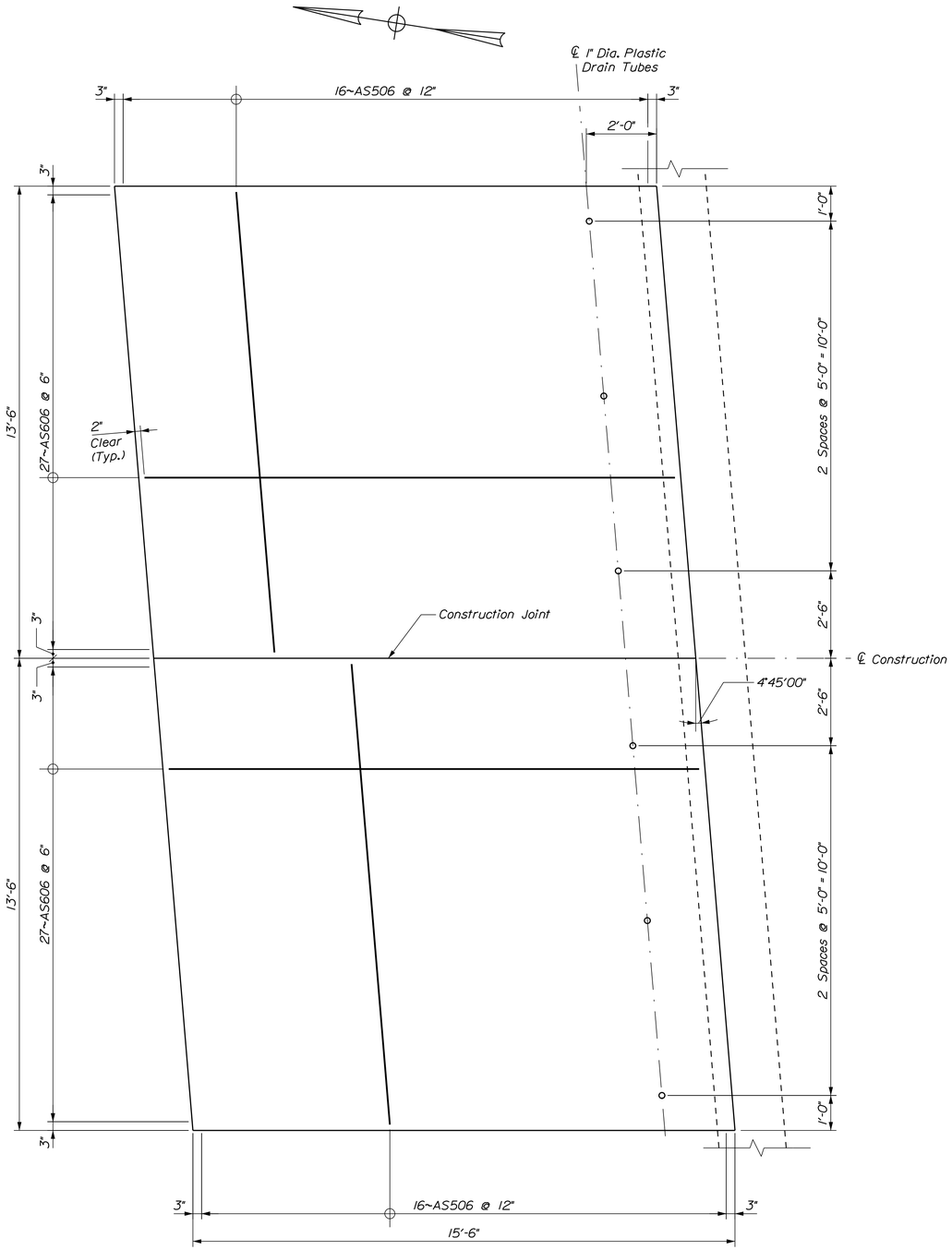

NORTH APPROACH SLAB

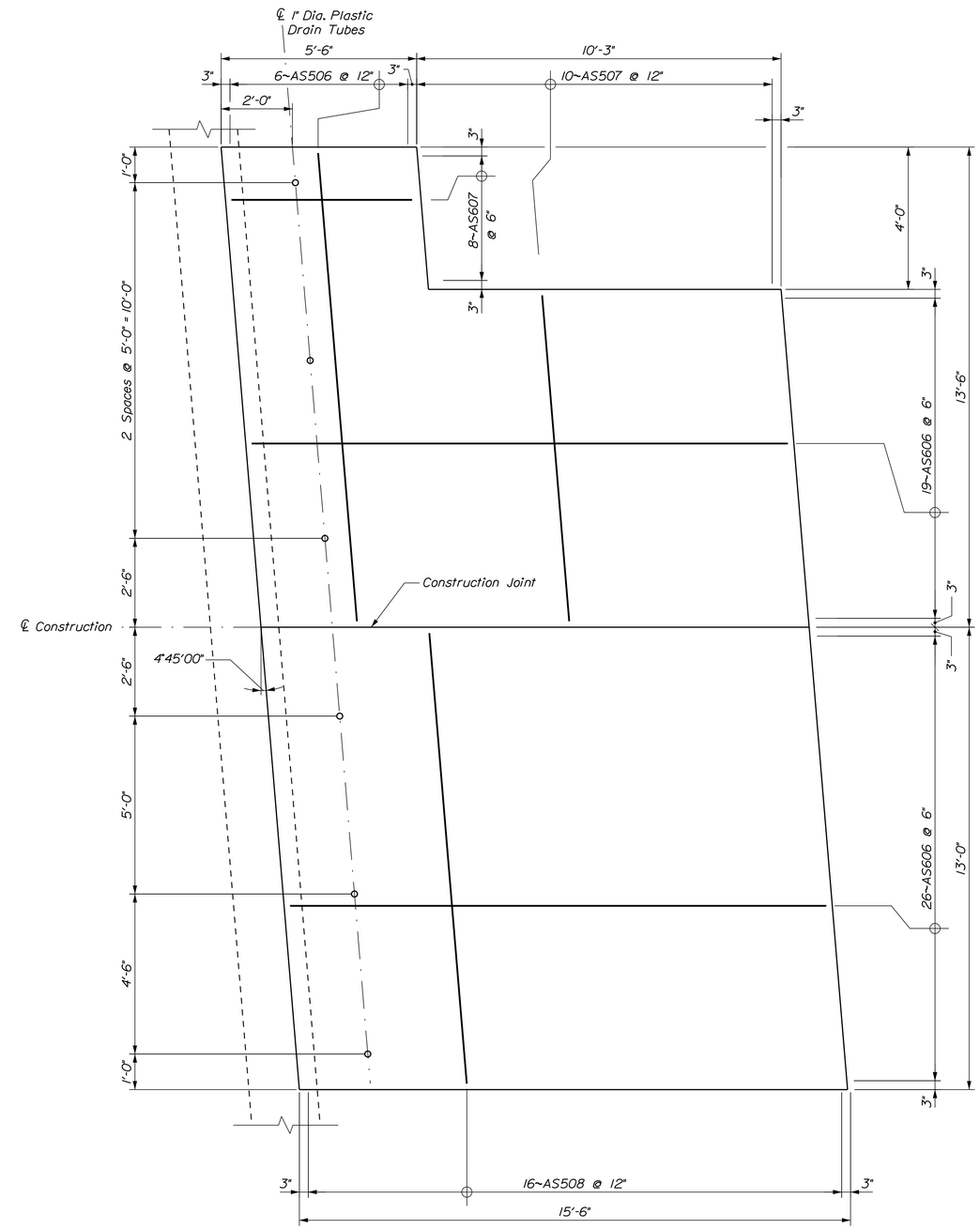

SOUTH APPROACH SLAB

BECKER
STRUCTURAL ENGINEERS
75 York Street, Portland, Maine 04101
207.879.1838 ■ beckerstructural.com

STATE OF MAINE
DEPARTMENT OF TRANSPORTATION

STP-2049(500)

WIN 20495.00

BRIDGE NO. 2337

BRIDGE PLANS

PROJ. MANAGER	ANDREW LATHE	BY	DATE
DESIGN-DETAILED	E.BROWNELL	D.BURGESS	2-18-15
CHECKED-REVIEWED	E.BROWNELL	J.BURGESS	2-18-15
DESIGN2-DETAILED2	------	------	------
DESIGN3-DETAILED3	------	------	------
REVISIONS 1	------	------	------
REVISIONS 2	------	------	------
REVISIONS 3	------	------	------
REVISIONS 4	------	------	------
FIELD CHANGES	------	------	------

SIGNATURE

P.E. NUMBER

DATE

MEMORIAL BRIDGE
OVER PISCATAQUIS RIVER
GUILFORD PISCATAQUIS COUNTY

APPROACH SLAB

SHEET NUMBER

35

OF 38

Filename: ...\MSTA\035_ApproachSlab.dgn Division: BRIDGE Username: common Date:2/18/2015

STRAIGHT BARS

MARK	QTY.	LENGTH	LOCATION	MARK	QTY.	LENGTH	LOCATION
Superstructure (Epoxy Coated)							
S506e	336	44'-6"	Deck Longitudinal				
S507e	1400	15'-0"	Deck Transverse				
S508e	128	44'-6"	Sidewalk Longitudinal				
S509e	655	6'-0"	Sidewalk - Set 'B'				
S510e	64	3'-0"	Drain				
S511e	25	7'-3"	Light Support				
S512e	10	7'-0"	Light Support				
S513e	10	6'-6"	Light Support				
Modified Concrete Transition Barrier							
TB500e	14	4'-6"					
TB600e	4	3'-4"					
Approach Slab							
AS506	38	13'-2"					
AS507	10	9'-2"					
AS508	16	12'-8"					
AS606	99	15'-2"					
AS607	8	5'-2"					
Abutment No. 1							
A506	8	16'-3"					
A507	4	21'-6"					
A508	4	6'-0"					
A509	4	3'-6"					
A510	8	6'-6"					
A511	18	27'-3"	Northeast Wall				
Abutment No. 2							
B506	8	16'-3"					
B507	4	20'-0"					
B508	8	4'-6"					
B509	8	3'-6"					
B510	6	6'-6"					
B511	9	29'-6"	Southeast Wall				
B512	4	3'-0"	Southeast Wall				
MARK	QTY.	LENGTH	LOCATION	MARK	QTY.	LENGTH	LOCATION

BENT BARS

MARK	QTY.	LENGTH	TYPE	A	B	C	D	E	F	G	H	O	R	LOCATION
Superstructure (Epoxy Coated)														
S501e	700	4'-6"	MC	2'-3"	2'-3"									Mechanical/Welded Splice
S556e	700	6'-0"	PR	5'-0"	7 3/8"	4 5/8"						4"	2"	Deck - Set 'A'
S557e	700	4'-10"	SC	8"	1'-3"	1'-0"	1'-3"			8"		1'-2"		Curb - Set 'A'
S558e	655	7'-6"	S	11 1/2"	6 1/2"	6'-0"								Sidewalk - Set 'B'
S559e	48	6'-8 1/2"	SJ	1'-0"	1'- 1/2"	1'-0"	11"	2'-9"						End of Deck - Pier
S560e	24	9'-3"	SJ	1'-0"	1'-3"	2'-1"	1'-1"	3'-10"						End of Deck - Abut. 1
S561e	24	13'-3"	SJ	1'-0"	1'-3"	4'-1"	1'-1"	5'-10"						End of Deck - Abut. 2
S562e	40	4'-0"	PR	2'-6"	9 1/2"	8 1/2"						6"	3"	End of Deck - Sidewalk
S563e	10	8'-11 1/2"	SK		1'-6"	1'-7 1/4"	2'-9"	1'-7 1/4"	1'-6"		1'-3"	1'-0"		Light Support
S564e	10	8'-5 1/2"	SK		1'-6"	1'-7 1/4"	2'-3"	1'-7 1/4"	1'-6"		1'-3"	1'-0"		Light Support
S565e	2	10'-9"	SK		2'-0"	8 1/2"	5'-4"	8 1/2"	2'-0"		6"	6"		Building Blockout
S566e	25	8'-9"	S	11 1/2"	6 1/2"	7'-3"								Light Support
S567e	10	8'-6"	S	11 1/2"	6 1/2"	7'-0"								Light Support
S568e	10	8'-0"	S	11 1/2"	6 1/2"	6'-6"								Light Support
Modified Concrete Transition Barrier														
TB550e	7	10'-2"	EP	11"	2'-4"	1'-3"	3'-4"	10"	1'-6"					
TB650e	10	7'-3 1/2"	S		3'-1"	1'-11 1/2"	3'-1"							
TB651e	2	7'-11"	H	6"	8 1/2"	2'-9"	8 1/2"	2'-9"		6"				
TB652e	10	8'-9"	H	6"	1'-11 1/2"	2'-9"	1'-11 1/2"	2'-9"		6"				
Abutment No. 1														
A501	6	4'-6"	MC	2'-3"	2'-3"									Mechanical/Welded Splice
A555	68	3'-8"	L	2'-8"	1'-0"									
A556	16	4'-2"	L	3'-2"	1'-0"									
A557	4	3'-10"	S		1'-0"	1'-10"	1'-0"							
A558	4	4'-6"	L	3'-6"	1'-0"									
A559	3	5'-8"	S		2'-4"	1'-0"	2'-4"							
A560	75	6'-4"	HB	6"	1'-2"	1'-6"	1'-2"	1'-6"		6"				Northeast Wall
A561	54	4'-6"	S		2'-0"	6"	2'-0"							Northeast Wall
A562	3	8'-5"	SK		2'-0"	8 1/2"	3'-0"	8 1/2"	2'-0"					Northeast Wall
A563	4	5'-8"	HB	6"	10"	1'-6"	10"	1'-6"		6"				Northeast Wall
Abutment No. 2														
B501	6	4'-6"	MC	2'-3"	2'-3"									Mechanical/Welded Splice
B502	6	3'-9"	L	3'-0"	9"									Southwest Wall
B555	68	3'-6"	L	2'-6"	1'-0"									
B556	14	4'-0"	L	3'-0"	1'-0"									
B557	4	3'-10"	S		1'-0"	1'-10"	1'-0"							
B558	7	8'-4"	HB	6"	1'-8"	2'-0"	1'-8"	2'-0"		6"				Southwest Wall
B559	5	6'-10"	EP	10"	6"	1'-2"	2'-0"	8"	1'-8"					Southwest Wall
B560	2	5'-8"	S		2'-4"	1'-0"	2'-4"							Southwest Wall
B561	47	6'-4"	HB	6"	1'-2"	1'-6"	1'-2"	1'-6"		6"				Southeast Wall
B562	31	5'-0"	S		2'-3"	6"	2'-3"							Southeast Wall
B563	5	1'-10"	L	1'-0"	10"									Southwest Wall
B564	3	5'-0"	S		2'-0"	1'-0"	2'-0"							
B565	6	3'-6"	L	2'-6"	1'-0"									
MARK	QTY.	LENGTH	TYPE	A	B	C	D	E	F	G	H	O	R	LOCATION

Notes:

1. Refer to MaineDOT Standard Details Section 526 for Transition Barrier reinforcing steel.
2. Transition Barrier reinforcing steel shall be epoxy coated.
3. Reinforcing steel for modified concrete transition barrier is incidental to Item 526.3401.

TYPE - BENDING DIAGRAMS

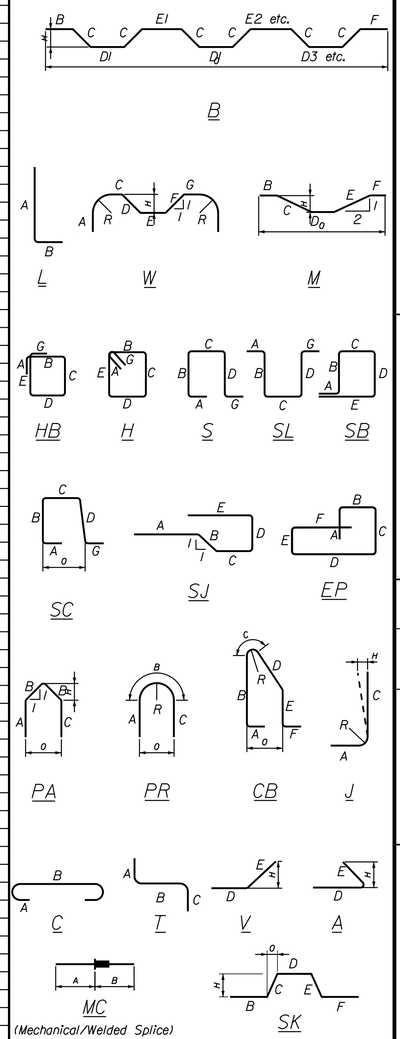

All dimensions are out-to-out of bar.

Bending details and hooks shall conform to the recommendations of the current revision of ACI Standard 315 and ACI Standard 318.

Reinforcing Bar: ASTM A615/A615M, Grade 60

GENERAL NOTES

1. The first two digits following the letter(s) of the mark indicate the size ofthe bar:

   Mark "A502" = bar size #5
   Mark "P805" = bar size #8
   Mark "S650" = bar size #6

2. Each crank bar, Type B, may be replaced by two (2) straight bars (one top and one bottom) of the same bar size as the crank bar. Payment in either case shall be based on crank bars as schedule on the plans.

STATE OF MAINE
DEPARTMENT OF TRANSPORTATION

STP-2049(500)

PIN 20495.00

BRIDGE PLANS

BRIDGE NO. 2337

			BY	DATE
PROJ. MANAGER	ANDREW LATHE			
DESIGN-DETAILED	E.BROWNELL	D.BURGESS		2-18-15
CHECKED-REVIEWED	E.BROWNELL	J.BURGESS		
DESIGN2-DETAILED2				
DESIGN3-DETAILED3				
REVISIONS 1				
REVISIONS 2				
REVISIONS 3				
REVISIONS 4				
FIELD CHANGES				

SIGNATURE

P.E. NUMBER

DATE

MEMORIAL BRIDGE
OVER PISCATAQUIS RIVER
GUILFORD PISCATAQUIS COUNTY

REINFORCING
STEEL SCHEDULE

SHEET NUMBER

36

OF 38

Filename: ...\00\BRIDGE\MSTA\036_Rebar.dgn Division: BRIDGE Username: common Date:3/9/2015

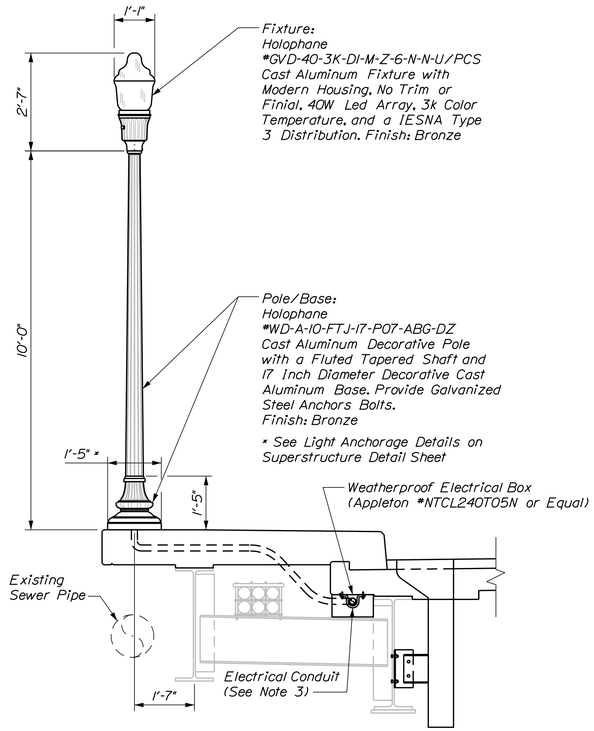

LIGHTING POLE DETAIL

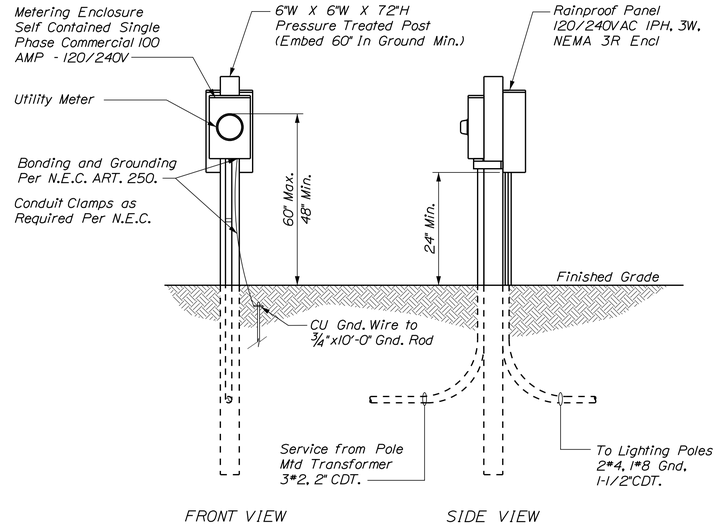

SERVICE METER DETAIL

LIGHTING NOTES

1. Where indicated, arrange with the Central Maine Power Company to provide a new 120/240v, 1-phase electrical service from the existing utility pole. Provide a 2" rigid galvanized steel riser conduit at the pole, along with a 2" schedule 40 PVC underground conduit between the utility pole and the service meter. Provide service conductors consisting of 3#2 AWG to service meter and extended to panel P1.

2. Provide lighting circuit wiring consisting of 2#4, 1#8 ground, in a 1-1/2" PVC Schedule 40 conduit from service Panel P1 along each side of the bridge deck. At each lighting pole provide wiring junction boxes per Note 6, below. Within ach wiring box, extend 2#12, 1#12 ground, wiring conductors (spliced to the #4 AWG main circuit conductors) to the adjacent light pole within 1" PVC Schedule 40 Conduit.

3. Electrical conduits shall be secured to the underside of the bridge deck with stainless steel conduit straps spaced at 3'-0" max. from electrical boxes and 5'-0" max. elsewhere.

4. Panel P1:
   120/240v, 1-phase, 100A BUS, MLO,
   NEMA 3R enclosure
   branch circuits:
   (1) 20A/1P bridge lights
   (3) 20A/1P spares

5. See Bridge Structural Drawings for Light Anchorage details.

6. Provide weatherproof electrical boxes as manufactured by Appleton #NTCL240T05N, or equal. Secure boxes to underside of deck with stainless steel hardware immediately adjacent to each light pole.

7. The minimum bending radius of the 1" PVC Schedule 40 conduit as it enters a light pole above shall be 5-3/4".

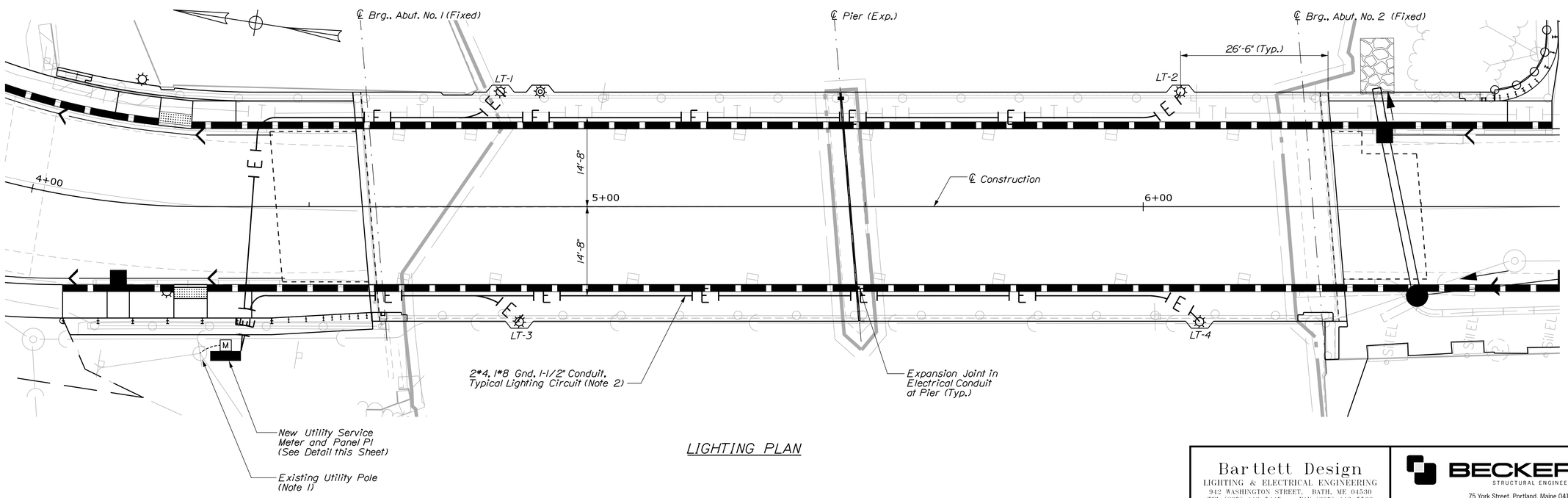

LIGHTING PLAN

Bartlett Design
LIGHTING & ELECTRICAL ENGINEERING
942 WASHINGTON STREET, BATH, ME 04530
TEL (207) 443-5447 FAX (207) 443-5560

BECKER
STRUCTURAL ENGINEERS
75 York Street, Portland, Maine 04101
207.879.1838 ■ beckerstructural.com

STATE OF MAINE
DEPARTMENT OF TRANSPORTATION

STP-2049(500)

WIN 20495.00

BRIDGE NO. 2337

BRIDGE PLANS

STATE OF MAINE LAWRENCE E. BARTLETT No. 7928 PROFESSIONAL ENGINEER
Lawrence E. Bartlett 3/4/15

PROJ. MANAGER	ANDREW LATHE	BY	DATE
DESIGN-DETAILED	J.CONFER	D.BURGESS	2-18-15
CHECKED-REVIEWED	L.BARTLETT	J.BURGESS	2-18-15
DESIGN2-DETAILED2	------	------	------
DESIGN3-DETAILED3	------	------	------
REVISIONS 1	------	------	------
REVISIONS 2	------	------	------
REVISIONS 3	------	------	------
REVISIONS 4	------	------	------
FIELD CHANGES	------	------	------

Lawrence E. Bartlett
SIGNATURE

7928
P.E. NUMBER

3/4/2015
DATE

MEMORIAL BRIDGE
OVER PISCATAQUIS RIVER
GUILFORD PISCATAQUIS COUNTY

LIGHTING PLAN

SHEET NUMBER
37
OF 38

Filename: ...\MSTA\037_Lighting Plan.dgn Division: HIGHWAY Username: common Date:3/4/2015

THIS PLAN WAS PREPARED IN CONNECTION WITH THE DEPARTMENT'S ACQUISITION OF REAL PROPERTY FOR TRANSPORTATION PURPOSES. IT CANNOT BE USED TO ESTABLISH LEGAL BOUNDARIES BETWEEN ABUTTING PROPERTY OWNERS.

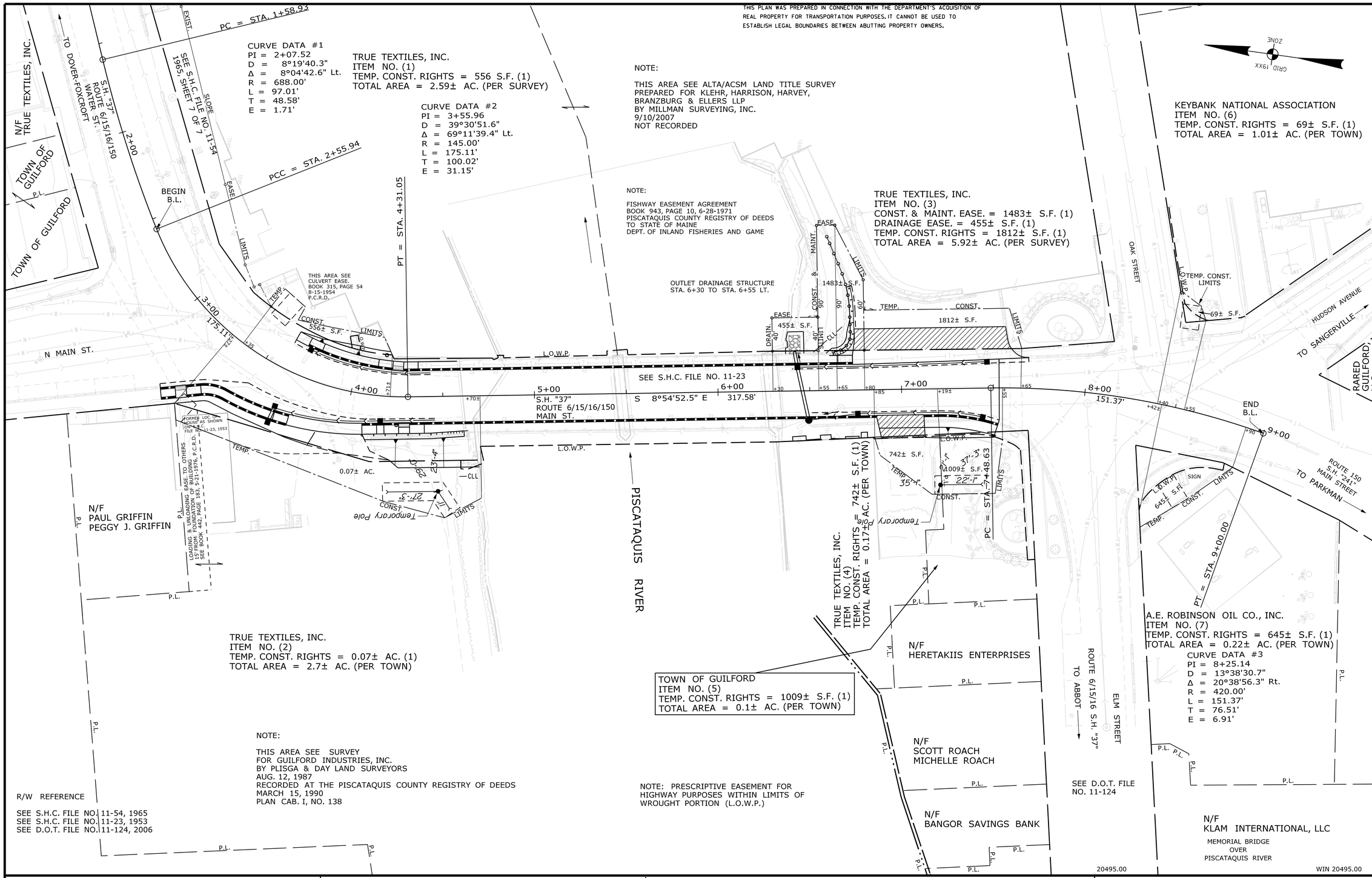

R/W REFERENCE

SEE S.H.C. FILE NO. 11-54, 1965
SEE S.H.C. FILE NO. 11-23, 1953
SEE D.O.T. FILE NO. 11-124, 2006

SYMBOLS

- IP or IPF (IRON PIPE or PIN FOUND)
- S.T. (SEPTIC TANK)
- (ROW MONUMENT)
- (TRAVERSE POINT)
- (WELL)
- GRADING LIMIT LINE
- CONSTRUCTION LIMIT LINE
- PROPERTY LINE
- LIMITS OF WROUGHT PORTION (L.O.W.P.)
- EXISTING RIGHT OF WAY
- NEW RIGHT OF WAY
- NEW ROW WITHIN EXIST. ROW
- CONTROL OF ACCESS
- WATER LINE
- GAS LINE
- ELECTRIC LINE
- TELEPHONE LINE
- SEWER LINE

ITEM	TECH	CHECKED
BASE MAP		
EXIST. R/W		
PROP. LINES		
AREAS		

STATE OF MAINE
DEPARTMENT OF TRANSPORTATION
16 STATE HOUSE STATION - AUGUSTA, ME 04333-0016

GUILFORD
RIGHT OF WAY MAP

REVISIONS

NO.	DATE	DESCRIPTION	BY

PLAN FILED IN PLAN BOOK	PAGE	COUNTY RECORD			
NO.	GRANTOR	INSTRUMENT	DATE	BOOK	PAGE
		COND.	3/2/15	2353	12

DAVID BERNHARDT
COMMISSIONER
JOYCE NOEL TAYLOR
CHIEF ENGINEER
DATE

STATE OF MAINE
BENJAMIN M. DARRAH 2399
PROFESSIONAL LAND SURVEYOR

STATE HIGHWAY "37"
ROUTE 6 \ 15 \ 16 \ 150 MAIN STREET
GUILFORD PISCATAQUIS COUNTY
FEDERAL AID PROJECT NO. STP-2049(500)

JANUARY 2015 | RIGHT-OF-WAY MAP | D.O.T. FILE NO. 11-139
SCALE 1" = 25' | SHEET 1 OF 1

SHEET NUMBER
38
OF 38

Filename: ...\00\BRIDGE\MSTA\038_RWPLAN1.dgn Division: BRIDGE Username: David.Sullivan Date:5/5/2015