STATE OF MAINE
DEPARTMENT OF TRANSPORTATION

SPECIFICATIONS

Design: AASHTO LRFD Bridge Design Specifications, Seventh Edition 2014.

DESIGN LOADING

Live Load ..... HL - 93 Modified For Strength I

TRAFFIC DATA

Current (2012) AADT	8750
Future (2032) AADT	10500
DHV - % of AADT	10
Design Hour Volume	1050
% Heavy Trucks (AADT)	11
% Heavy Trucks (DHV)	11
Directional Distribution (DHV)	51
18 kip Equivalent P 2.0	1297
18 kip Equivalent P 2.5	1253
Design Speed (mph)	40

MATERIALS

Concrete:
- Curbs & Transition Barriers ..... Class "LP"
- All Other ..... Class "A"

Reinforcing Steel ..... ASTM A 615/A 615M, Grade 60

BASIC DESIGN STRESSES

Concrete ..... f 'c = 4,000 psi

Reinforcing Steel ..... f y = 60,000 psi

BETHEL
OXFORD COUNTY
ANDROSCOGGIN RIVER BRIDGE
OVER
ANDROSCOGGIN RIVER
U.S. ROUTE 2
PROJECT No. NHP-2049(300)
PROJECT LENGTH 0.12 mi.
BRIDGE NO. 6149

LIST OF DRAWINGS

Title Sheet	1
Estimate of Quantities and General Notes	2
General Plan	3
Profile	4
Typical Sections	5
Staged Construction Sections	6
Traffic Control Plan	7
Temporary Concrete Barrier (Braced) (1 of 2)	8
Temporary Concrete Barrier (Braced) (2 of 2)	9
Scour Countermeasures Details	10
Abutment 1 Demolition Plans	11
Abutment 1 Plan	12
Abutment 1 Details	13
Abutment 2 Demolition Plans	14
Abutment 2 Plan	15
Abutment 2 Details	16
Shear Connector Details	17
Superstructure Plan	18
Superstructure Details	19
Lighting Details	20
Railing and Drain Layout Plan	21
Reinforcing Steel Schedule	22
Right-of-Way Map	23-24

UTILITIES

Bethel Water District
Central Maine Power Company
Maine Fiber
Oxford Networks
Time Warner Cable
Town of Bethel Sewer District

MAINTENANCE OF TRAFFIC

Staged Construction: Maintain one 11 foot wide travel way of alternating one-way traffic utilizing temporary traffic signals while the new deck slab is constructed via two longitudinal stages.

PROJECT LOCATION:	Mayville Road (US Route 2) over Androscoggin River Latitude 44°-25'-00" N Longitude 70°-47'-48" W
PROGRAM AREA:	Bridge Program
OUTLINE OF WORK:	Bridge deck replacement, install scour countermeasures at Piers

ERDMAN ANTHONY

WIN 020493.00

STATE OF MAINE
DEPARTMENT OF TRANSPORTATION
APPROVED
COMMISSIONER: DATE 10/21/15
CHIEF ENGINEER: DATE 10-27-15

STATE OF MAINE CHRISTOPHER GEORGE SICHAK No. 13848 LICENSED PROFESSIONAL ENGINEER

SIGNATURE 13848
P.E. NUMBER
10/15/2015
DATE

PROJECT INFORMATION
PROGRAM: BRIDGE PROGRAM
PROJECT MANAGER: JOEL KITTREDGE
DESIGNER: CHRIS SICHAK
CONSULTANT: ERDMAN ANTHONY
PROJECT RESIDENT
CONTRACTOR
PROJECT COMPLETION DATE

BETHEL
ANDROSCOGGIN RIVER BRIDGE
TITLE SHEET

SHEET NUMBER
1
OF 24

Filename: ...\00\Bridge\MSTA\001_Title.dgn Division: BRIDGE Username: Date:10/19/2015

ESTIMATED QUANTITIES			
ITEM NO.	DESCRIPTION	QUANTITY	UNIT
202.10	REMOVING EXISTING SUPERSTRUCTURE (PROPERTY OF CONTRACTOR) (479 CY)	1	LS
202.12	REMOVING EXISTING STRUCTURAL CONCRETE	7	CY
202.13	REMOVING EXISTING RAILINGS - RETAINED BY DEPARTMENT	811	LF
202.202	REMOVE PAVEMENT SURFACE	750	SY
203.20	COMMON EXCAVATION	300	CY
203.24	COMMON BORROW	50	CY
203.61	TEMPORARY ACCESS ROAD	1	LS
203.62	REMOVAL OF TEMPORARY ACCESS ROAD	1	LS
304.15	AGGREGATE BASE COURSE - TYPE B	150	CY
403.2081	HOT MIX ASPHALT 12.5 MM NOMINAL MAXIMUM SIZE (POLYMER MODIFIED)	20	TON
403.211	HOT MIX ASPHALT 9.5 MM NOMINAL MAXIMUM SIZE (SHIMMING)	2	TON
402.213	HOT MIX ASPHALT 12.5 MM NOMINAL MAXIMUM SIZE (BASE & INTERMEDIATE BASE COURSE)	5	TON
403.2131	HOT MIX ASPHALT 12.5 MM NOMINAL MAXIMUM SIZE, BASE & INTERMEDIATE BASE COURSE, POLYMER MODIFIED	20	TON
409.15	BITUMINOUS TACK COAT, APPLIED	105	GAL
502.219	STRUCTURAL CONCRETE ABUTMENTS & RETAINING WALLS (8 CY)	1	LS
502.26	STRUCTURAL CONCRETE ROADWAY & SIDEWALK SLAB ON STEEL BRIDGE (355 CY)	1	LS
502.49	STRUCTURAL CONCRETE CURBS AND SIDEWALKS (53 CY)	1	LS
502.83	PRECAST BLOCK MAT	2100	SF
503.12	REINFORCING STEEL, FABRICATED & DELIVERED	4400	LB
503.13	REINFORCING STEEL, PLACING	4400	LB
503.17	MECHANICAL WELDED SPLICE	8	EA
505.08	SHEAR CONNECTORS (4224 EA)	1	LS
507.0821	STEEL BRIDGE RAILING, 3 BAR (825 LF)	1	LS
508.14	HIGH PERFORMANCE WATERPROOFING MEMBRANE (1448 SY)	1	LS
514.06	CURING BOX FOR CONCRETE CYLINDERS	1	EA
515.21	PROTECTIVE COATING FOR CONCRETE SURFACES (408 SY)	1	LS
520.21	EXPANSION DEVICE - GLAND SEAL	2	EA
524.40	PROTECTIVE SHIELD	1	LS
526.305	TEMPORARY CONCRETE BARRIER, BRACED, TYPE 1 (650 LF)	1	LS
526.34	PERMANENT CONCRETE TRANSITION BARRIER	4	EA
527.34	WORK ZONE CRASH CUSHIONS	2	UN
606.1721	BRIDGE TRANSITION - TYPE 1	4	EA
606.23	GUARDRAIL TYPE 3C - SINGLE RAIL	450	LF
606.353	REFLECTORIZED FLEXIBLE GUARDRAIL MARKER	2	EA
606.79	GUARDRAIL 350 FLARED TERMINAL	1	EA
609.31	CURB TYPE 3	25	LF
615.07	LOAM	5	CY
618.141	SEEDING METHOD NUMBER 3	1	UN
619.1201	MULCH	1	UN
619.1401	EROSION CONTROL MIX	3	CY
627.733	4" WHITE OR YELLOW PAINTED PAVEMENT MARKING LINE	3200	LF
627.77	REMOVING EXISTING PAVEMENT MARKING	270	SF
627.78	TEMPORARY PAVEMENT MARKING LINE, WHITE OR YELLOW	2466	LF
629.05	HAND LABOR, STRAIGHT TIME	40	HR
631.12	ALL-PURPOSE EXCAVATOR (INCLUDING OPERATOR)	24	HR
631.13	BULLDOZER (INCLUDING OPERATOR)	24	HR
631.172	TRUCK-LARGE (INCLUDING OPERATOR)	24	HR
634.160	HIGHWAY LIGHTING	1	LS
638.01	EMBEDDED WORK IN STRUCTURE	1	LS
639.18	FIELD OFFICE, TYPE A	1	EA
643.72	TEMPORARY TRAFFIC SIGNAL	1	LS
645.116	REINSTALL REGULATORY, WARNING, CONFIRMATION, & ROUTE MARKER ASSEMBLY SIGN	5	EA
652.30	FLASHING ARROW	2	EA
652.312	TYPE III BARRICADES	12	EA
652.33	DRUM	40	EA
652.34	CONE	25	EA

ESTIMATED QUANTITIES			
ITEM NO.	DESCRIPTION	QUANTITY	UNIT
652.35	CONSTRUCTION SIGNS	254	SF
652.361	MAINTENANCE OF TRAFFIC CONTROL DEVICES (170 CD)	1	LS
652.38	FLAGGERS	40	HR
652.41	PORTABLE CHANGEABLE MESSAGE SIGN	2	EA
656.75	TEMPORARY SOIL EROSION AND POLLUTION CONTROL	1	LS
659.10	MOBILIZATION	1	LS

GENERAL CONSTRUCTION NOTES

1. All utility facilities shall be adjusted by the respective utilities unless otherwise noted or as detailed in the plans.

2. For easements, construction limits and right of way lines, refer to Right of Way Map.

3. Existing guardrail shall be removed as shown in the Plans and will become the property of the Contractor. Payment for guardrail removal will be considered incidental to Contract items.

4. Place loam 2 inches deep on all new or reconstructed sideslopes or as directed by the Resident.

5. Potential clearing exists for access to the river. The exact limits will be established in the field by the Resident. Payment for clearing will be considered incidental to Contract items.

6. All costs for cofferdams, including pumping, maintenance, related temporary soil erosion and water pollution controls and removal, will not be paid for directly, but will be considered incidental to related Contract items.

7. The Contractor shall allow safe passage of boat traffic through the bridge opening throughout the duration of the project with a minimum 15 foot wide lane.

8. The Contractor's operations shall maintain public access to the trail along the north bank during construction.

9. The Contractor shall provide the Resident access to all portions of the work, including that which is only accessible by boat. The method, timing, and location of access shall be approved by the Resident. Payment for access will not be made separately, but will be considered incidental to the Contract.

10. Erosion Control Mix may be substituted in those areas normally receiving loam and seed as directed by the Resident. Placement shall be in accordance with Standard Specifications Section 619, Mulch. Payment will be made under Item No. 619.1401, Erosion Control Mix.

11. Protective Coating for Concrete Surfaces shall be applied to the following areas:

All exposed surfaces of concrete curbs.
Fascias down to drip notch.
All exposed surfaces of Concrete Transition Barriers.
Top of abutment backwalls and to 12 inches below the top of backwalls on the back side.

12. Bidders and Contractors shall note that existing bridge plans may be accessed at the web address below. The plans are reproductions of the original drawings as prepared for the construction of the bridge. It is very unlikely that the plans will show any construction field changes or any alterations, which may have been made to the bridge.
http://www.maine.gov/mdot/contractors/#projecttbl

GENERAL CONSTRUCTION NOTES CONT.

13. Guardrail posts as shown in the Standard Details shall be modified from the indicated length of 6 feet to a length of 7 feet with an embedment of 4.5 feet. Payment will be considered incidental to the guardrail pay items.

14. Bidders and Contractors shall note that there was no formal hydrologic report of the bridge site prepared for this project. Water surface elevations indicated on the profile on Sheet 4 denote the following observed elevations at specific times:

October 2014 (during survey for this project): 627.5 (+/-)
January 1965 (normal water surface at the time of design of the existing bridge): 629.64
March 1936 extreme flood event: 650.79

A scour critical bridge plan of action report was performed in 2010. According to the report, the following Headwater Elevations were calculated:

500 year	650.28
100 year	647.76
50 year	646.59
10 year	643.64

The Bridge Scour Plan of Action (POA) Report may be accessed at the MaineDOT web address previously listed.

A scour assessment performed in 1996 indicates an April 1987 flood elevation approximately 5.5' below the low chord of the existing bridge at an approximate elevation of 645.5'.

The indicated data is based on MaineDOT's interpretation of the information obtained for the subject site. No assurance is given that the information will be representative of the actual conditions at the time of construction.

15. Quantities included for pay items measured and paid for by Lump Sum are estimated quantities and are provided by MaineDOT for informational purposes only. Lump Sum pay items will be paid for at the Contract Bid amount, with no addition or reduction in payment to the Contractor if the actual final quantities are different from the MaineDOT provided estimated quantities, except as follows:

a. If a Lump Sum pay item is eliminated, the requirements of Standard Specifications Section 109.2, Elimination of Items, will take precedence.

b. If other Contract Documents specifically allow a change in payment for a Lump Sum pay item, those requirements will be followed.

c. If a design change results in changes to estimated quantities for Lump Sum pay items, price adjustments will be made in accordance with Standard Specification Section 109.7, Equitable Adjustments to Compensation.

16. The Contractor shall submit a Bridge Deck Demolition Plan to the Resident at least 10 business days prior to the start of demolition work. The plan shall outline the methods and equipment to be used to remove and dispose of all materials indicated by the plans. No work related to the removal of the bridge shall be undertaken by the Contractor until MaineDOT has reviewed the Bridge Demolition Plan for appropriateness and completeness. Payment for all work necessary for developing, submitting and finalizing the Demolition Plan will be considered incidental to the superstructure removal pay item.

17. The existing bridge deck shall be removed by, and become the property of the Contractor. The steel portions of the existing bridge are coated with a lead-based paint system. The Contractor is responsible for the containment, proper management and disposal of all lead-contaminated hazardous waste generated by the process of demolishing the bridge deck. The Contractor is responsible for implementing appropriate OSHA mandated personal protection standards related to this process. Once the existing bridge deck is removed, the Contractor is solely responsible for the care, custody and control of the components of the existing bridge and any hazardous waste generated as a result of the storage, recycling or disposal of the bridge components, including lead-coated steel. The Contractor shall recycle or reuse the steel in accordance with the Maine Department of Environmental Protection's "Maine Hazardous Waste Management Regulations," Chapter 850. A copy of this regulation is available at MaineDOT's offices on Child Street in Augusta. Payment for all labor, materials, equipment and other costs required to remove and dispose of the existing bridge deck will be considered incidental to the superstructure removal pay item.

18. When removing the existing bridge drains, the Contractor shall remove the support bars flush with the existing girder.

ERDMAN ANTHONY

STATE OF MAINE
DEPARTMENT OF TRANSPORTATION

NHP-2049(300)

WIN 020493.00

BRIDGE NO. 6149

BRIDGE PLANS

SIGNATURE

P.E. NUMBER

DATE

		BY	DATE
PROJ. MANAGER	JOEL KITTREDGE		
DESIGN-DETAILED	C. SICHAK	T. LINDO	10/2015
CHECKED-REVIEWED	R. FARRELL		10/2015
DESIGN2-DETAILED2			
DESIGN3-DETAILED3			
REVISIONS 1			
REVISIONS 2			
REVISIONS 3			
REVISIONS 4			
FIELD CHANGES			

ANDROSCOGGIN RIVER BRIDGE
ANDROSCOGGIN RIVER
BETHEL OXFORD COUNTY

ESTIMATED QUANTITIES
& GENERAL CONSTRUCTION NOTES

SHEET NUMBER
2
OF 24

Filename: ...\MSTA\002_Quantities-Notes.dgn Division: BRIDGE Username: Date:10/15/2015

PLAN

25 0 25 50
Scale of Feet

NOTES:

1. For SECTIONS A-A and B-B, see Sheet No. 10.

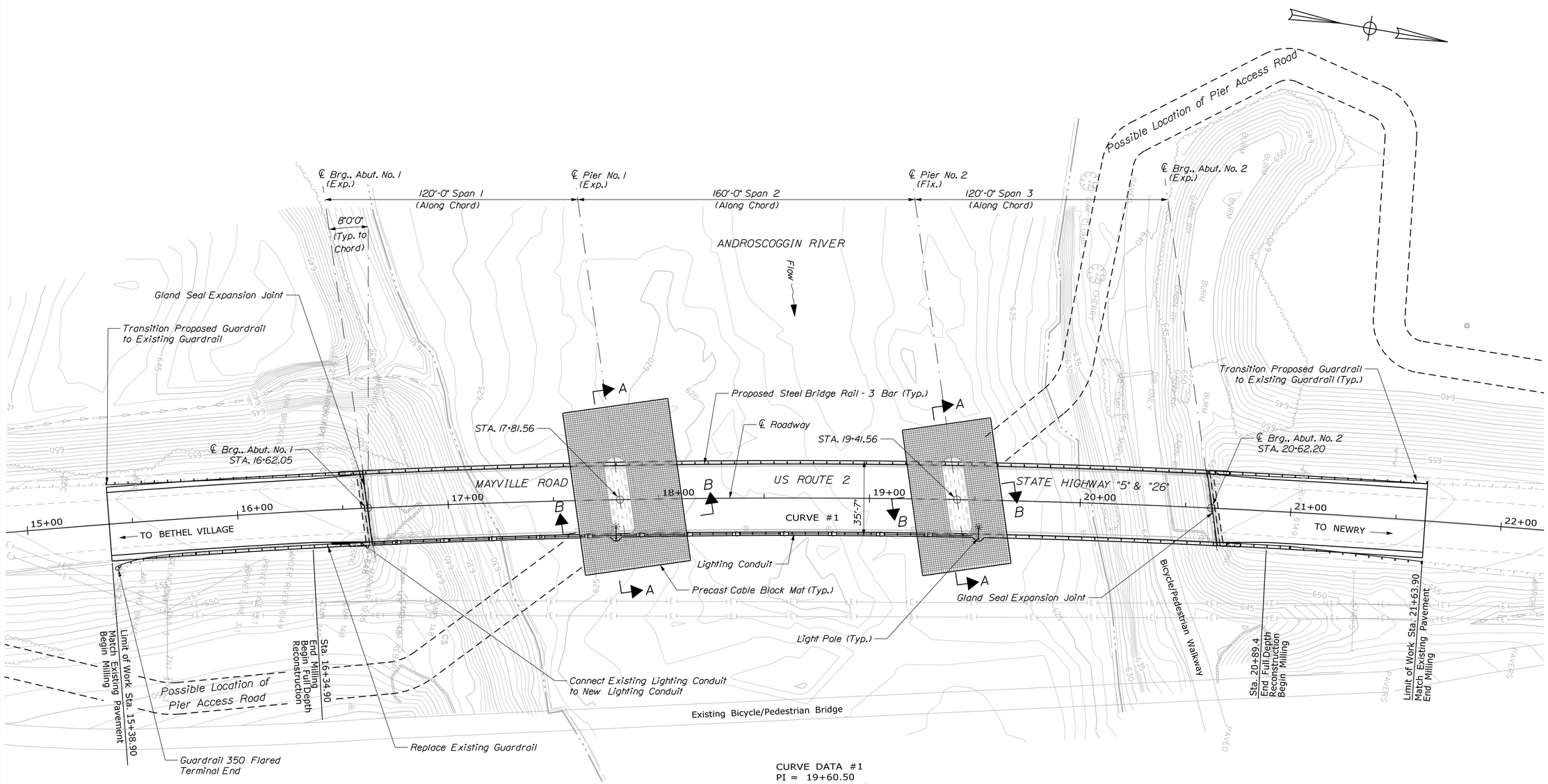

CURVE DATA #1
PI = 19+60.50
D = 1°21'33.6"
Δ = 19°16'00.8" Rt.
R = 4215.00'
L = 1417.38'
T = 715.45'
E = 60.29'

ERDMAN ANTHONY

STATE OF MAINE
DEPARTMENT OF TRANSPORTATION

NHP-2049(300)

WIN 020493.00

BRIDGE NO. 6149

BRIDGE PLANS

PROJ. MANAGER	JOEL KITTREDGE		
DESIGN-DETAILED	C. SCHAK	T. LINDO	10/2015
CHECKED-REVIEWED	R. FARRELL		10/2015
DESIGN2-DETAILED2			
DESIGN3-DETAILED3			
REVISIONS 1			
REVISIONS 2			
REVISIONS 3			
REVISIONS 4			
FIELD CHANGES			

SIGNATURE

P.E. NUMBER

DATE

ANDROSCOGGIN RIVER BRIDGE
ANDROSCOGGIN RIVER
BETHEL OXFORD COUNTY

GENERAL PLAN

SHEET NUMBER
3
OF 24

Filename: ...\00\Bridge\MSTA\003_BOPlan.dgn Division: BRIDGE Username: Date:10/15/2015

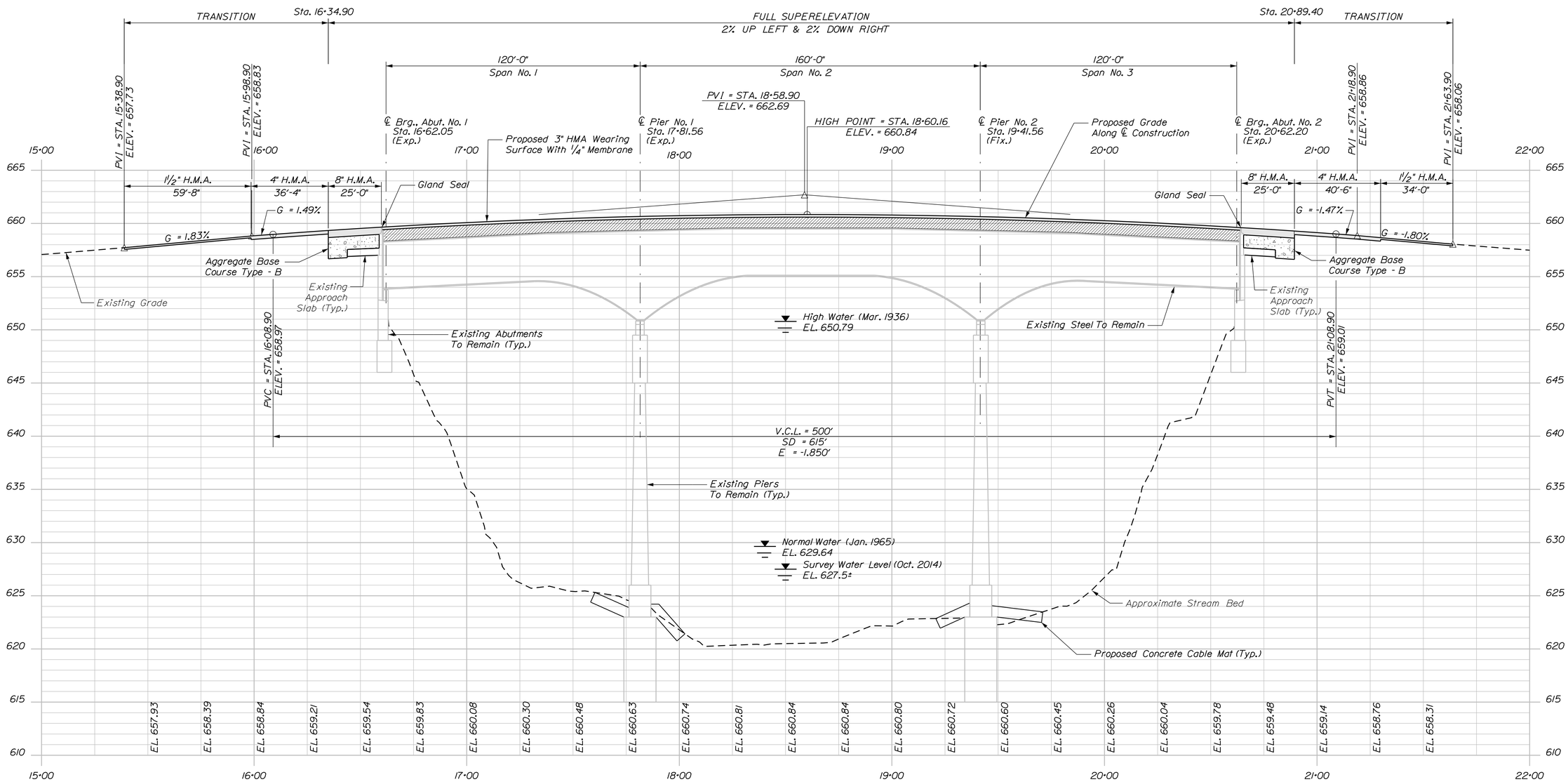

PROFILE

HOR. 25 0 25 50

VER. 5 0 5 10

Scale

ERDMAN ANTHONY

STATE OF MAINE
DEPARTMENT OF TRANSPORTATION

NHP-2049(300)

WIN 020493.00

BRIDGE NO. 6149

BRIDGE PLANS

		BY	DATE
PROJ. MANAGER	JOEL KITTREDGE		
DESIGN-DETAILED	C. SICHAK	T. LINDO	10/2015
CHECKED-REVIEWED	R. FARRELL		10/2015
DESIGN2-DETAILED2			
DESIGN3-DETAILED3			
REVISIONS 1			
REVISIONS 2			
REVISIONS 3			
REVISIONS 4			
FIELD CHANGES			

SIGNATURE

P.E. NUMBER

DATE

ANDROSCOGGIN RIVER BRIDGE
ANDROSCOGGIN RIVER
BETHEL OXFORD COUNTY

PROFILE

SHEET NUMBER

4

OF 24

Filename: ...\00\Bridge\MSTA\004_Profile.dgn Division: BRIDGE Username: Date:10/15/2015

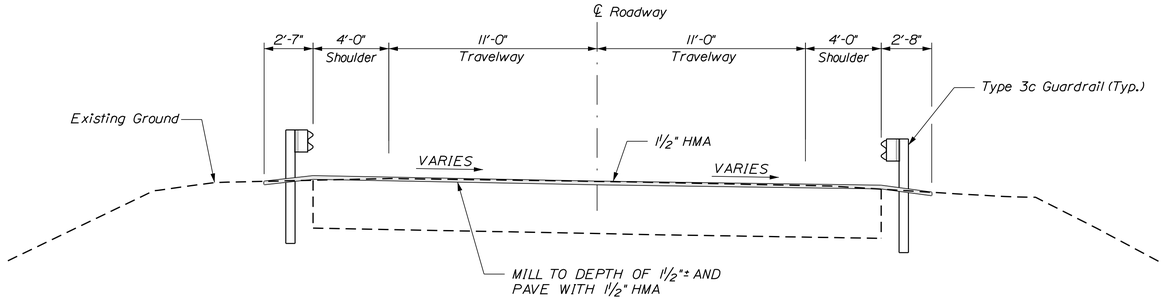

APPROACH TYPICAL SECTION - MILLING
Sta. 15+38.90 to 15+98.57
Sta. 21+29.90 to 21+63.90

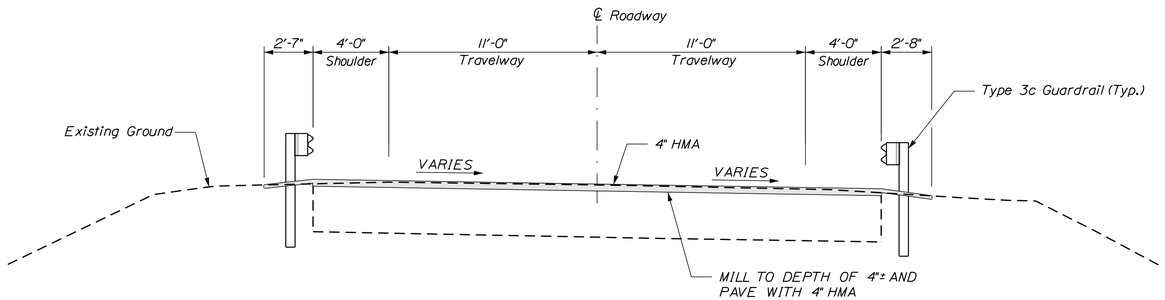

APPROACH TYPICAL SECTION - MILLING
Sta. 15+98.57 to 16+34.90
Sta. 20+89.40 to 21+29.90

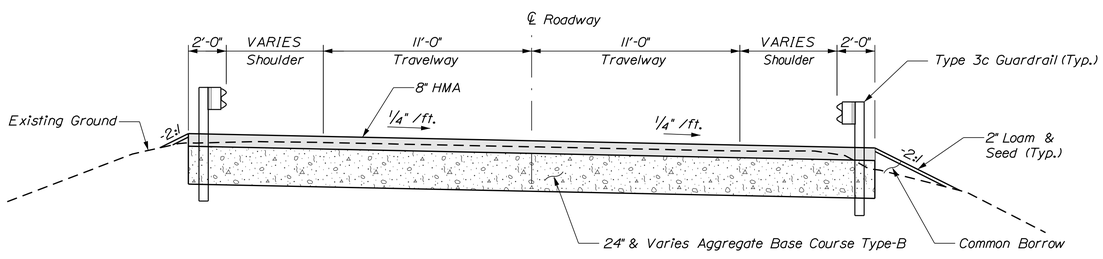

NORTH APPROACH TYPICAL SECTION - FULL DEPTH RECONSTRUCTION
Sta. 16+34.90 to 16+59.90
Sta. 20+64.40 to 20+89.40

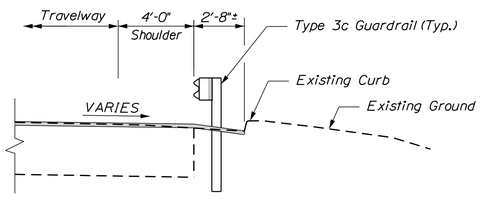

APPROACH TYPICAL SECTION - MILLING W/EXIST. CURB
Sta. 15+38.90 to 16+34.90

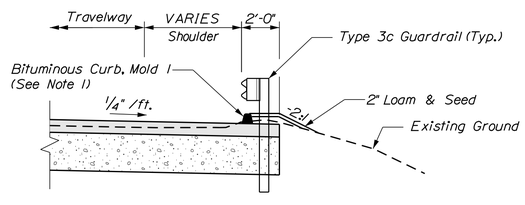

APPROACH CURB DETAIL - FULL DEPTH RECONSTRUCTION
Sta. 16+34.90 to 16+59.90

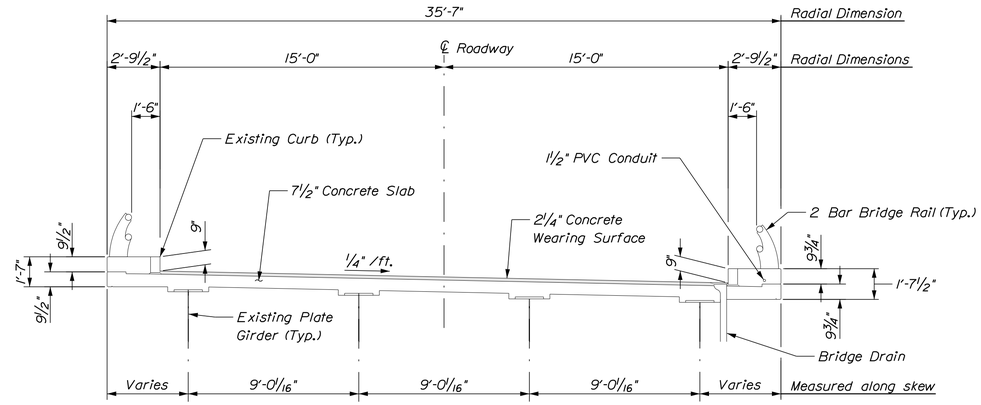

EXISTING BRIDGE SECTION

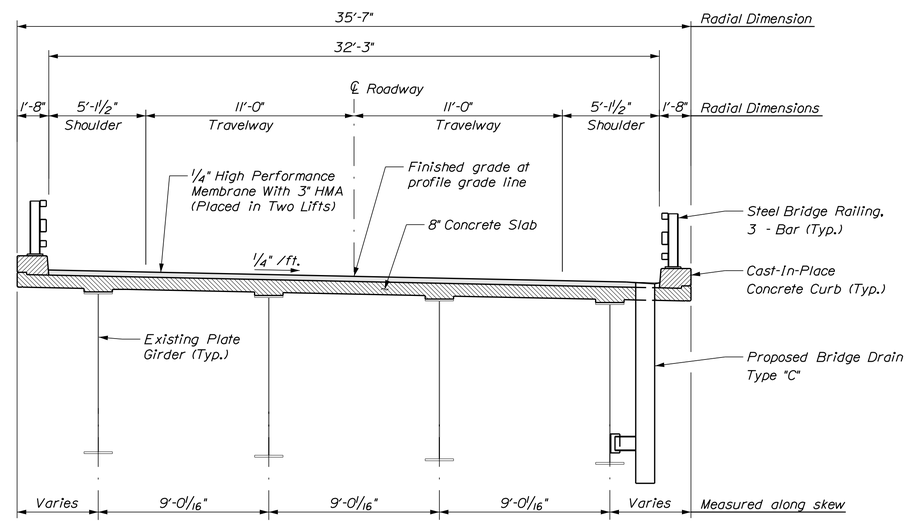

PROPOSED BRIDGE SECTION

NOTES:

1. Curb shall match existing curb at Sta. 16+34.90.

ERDMAN ANTHONY

STATE OF MAINE
DEPARTMENT OF TRANSPORTATION

NHP-2049(300)

WIN 020493.00

BRIDGE NO. 6149

BRIDGE PLANS

SIGNATURE

P.E. NUMBER

DATE

		BY	DATE
PROJ. MANAGER	JOEL KITTREDGE		
DESIGN-DETAILED	C. SICHAK	T. LINDO	10/2015
CHECKED-REVIEWED	R. FARRELL		10/2015
DESIGN2-DETAILED2			
DESIGN3-DETAILED3			
REVISIONS 1			
REVISIONS 2			
REVISIONS 3			
REVISIONS 4			
FIELD CHANGES			

ANDROSCOGGIN RIVER BRIDGE
ANDROSCOGGIN RIVER
BETHEL OXFORD COUNTY

TYPICAL SECTIONS

SHEET NUMBER
5
OF 24

Filename: ...\Bridge\MSTA\005_Btypical.dgn Division: BRIDGE Username: Date:10/15/2015

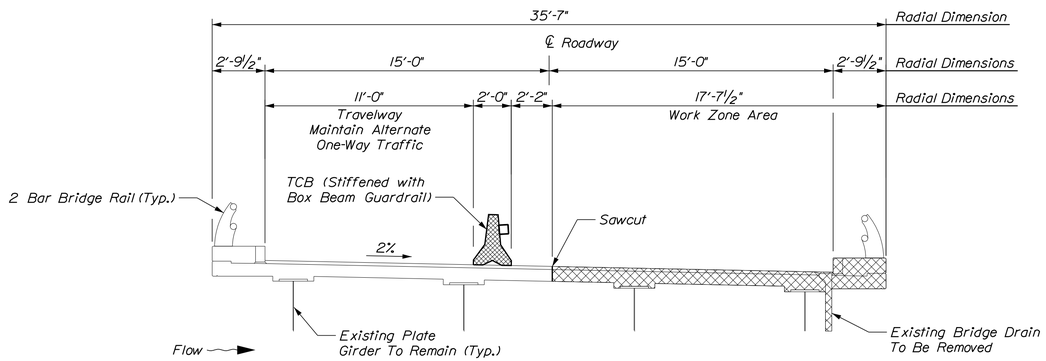

STAGE 1 - DEMOLITION

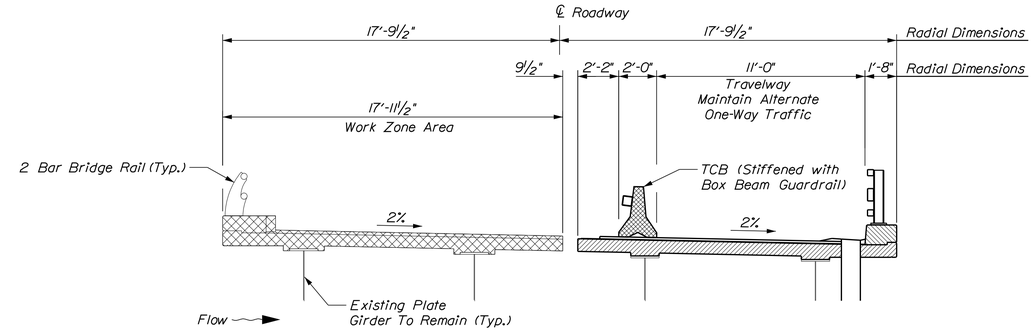

STAGE 2 - DEMOLITION

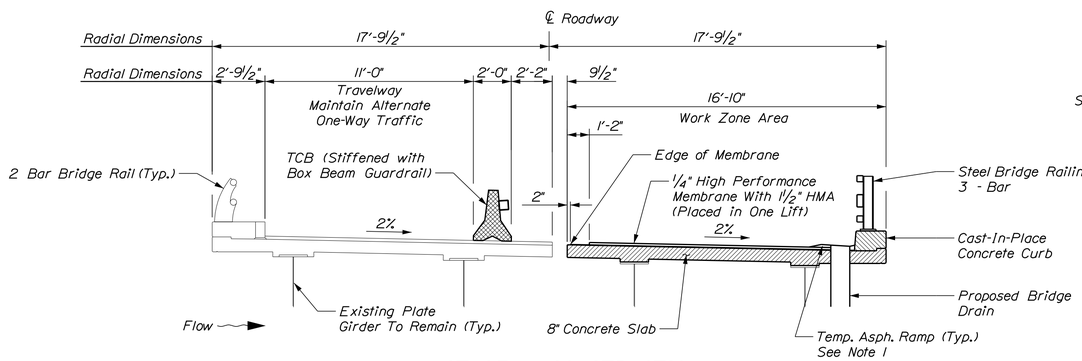

STAGE 1 - CONSTRUCTION

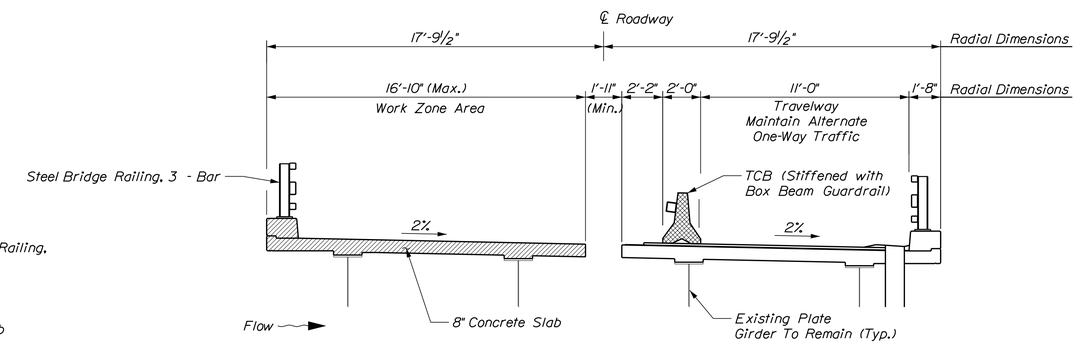

STAGE 2 - PHASE 1 CONSTRUCTION

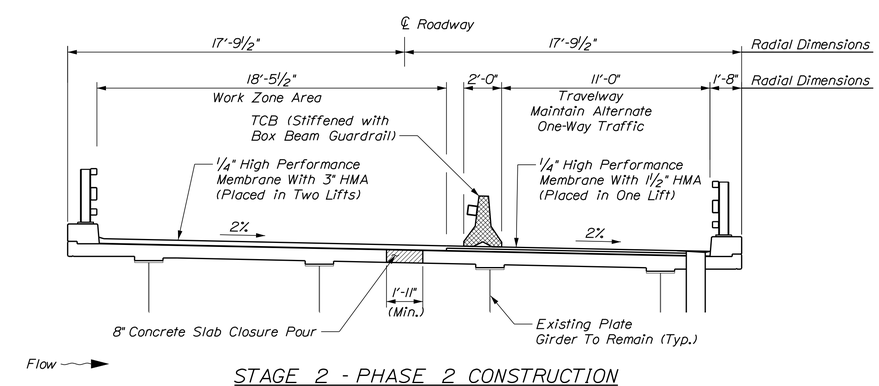

STAGE 2 - PHASE 2 CONSTRUCTION

NOTES:

1. Construct temporary asphalt ramps around Bridge Drains and Gland Seals for smooth vehicle transition during construction. Payment will be considered incidental to pay Item 403.213.

2. Resetting of the temporary concrete barrier from STAGE 1 to STAGE 2 is incidental to Item 526.305.

ERDMAN ANTHONY

STATE OF MAINE
DEPARTMENT OF TRANSPORTATION

NHP-2049(300)

WIN 020493.00

BRIDGE NO. 6149

BRIDGE PLANS

	BY	DATE
PROJ. MANAGER JOEL KITTREDGE		
DESIGN-DETAILED	C. SICHAK	10/2015
CHECKED-REVIEWED	T. LINDO	10/2015
DESIGN2-DETAILED2	R. FARRELL	
DESIGN3-DETAILED3		
REVISIONS 1		
REVISIONS 2		
REVISIONS 3		
REVISIONS 4		
FIELD CHANGES		

SIGNATURE

P.E. NUMBER

DATE

ANDROSCOGGIN RIVER BRIDGE
ANDROSCOGGIN RIVER
BETHEL OXFORD COUNTY

STAGED CONSTRUCTION

SHEET NUMBER

6

OF 24

Filename: ...\MSTA\006_Staged_Const.dgn Division: BRIDGE Username: Date:10/16/2015

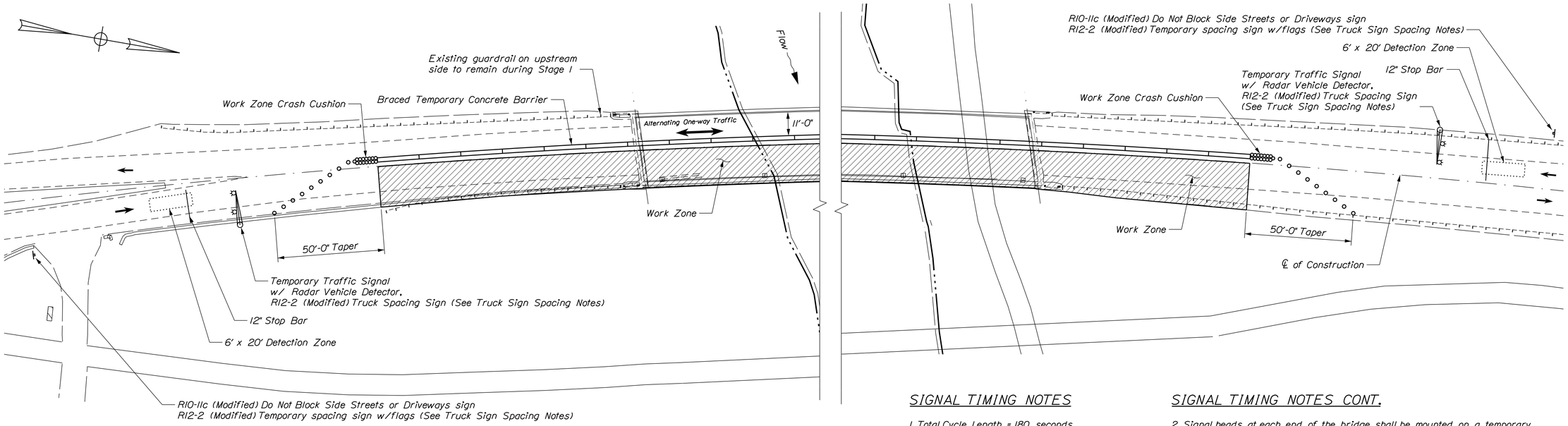

STAGE 1

TRUCK SIGN SPACING NOTES:

1. The Contractor shall install two R12-2 (modified) signs along each approach for the purposes of controlling truck traffic. The suggested locations are at the Temporary Traffic Signal and in advance of the Temporary Traffic Signal. Final locations to be determined by the Resident Engineer.

2. The language on each sign shall read: TRUCK SPACING MAINTAIN 200 FEET.

SIGNAL TIMING NOTES

1. Total Cycle Length = 180 seconds
   Phase 1 - Route 2 northbound
   Phase 2 - Route 2 southbound

SIGNAL TIMING

	Phase 1	Phase 2
Min Green	10	10
Extension	2	2
Max Green	67	67
Yellow Clear	3	3
All Red	20	20
Recall	none	none

SIGNAL TIMING NOTES CONT.

2. Signal heads at each end of the bridge shall be mounted on a temporary structure supplied by the Contractor and approved by the Resident Engineer. Two heads shall face traffic on each approach. All signal heads shall have 12" R-Y-G circular LED indications with 5" backplates.

3. Stop bar detection shall be provided on the Route 2 northbound and southbound approaches. The Contractor shall install microwave or video detection to achieve the specified operations.

4. The signal shall rest in red at times when there are no detector calls. The signal phases shall follow each other sequentially when there are calls on multiple approaches. None of these phases shall operate concurrently with each other.

5. Clearance time calculations were based on a vehicle speed of 30 mph for 725 feet through the work zone.

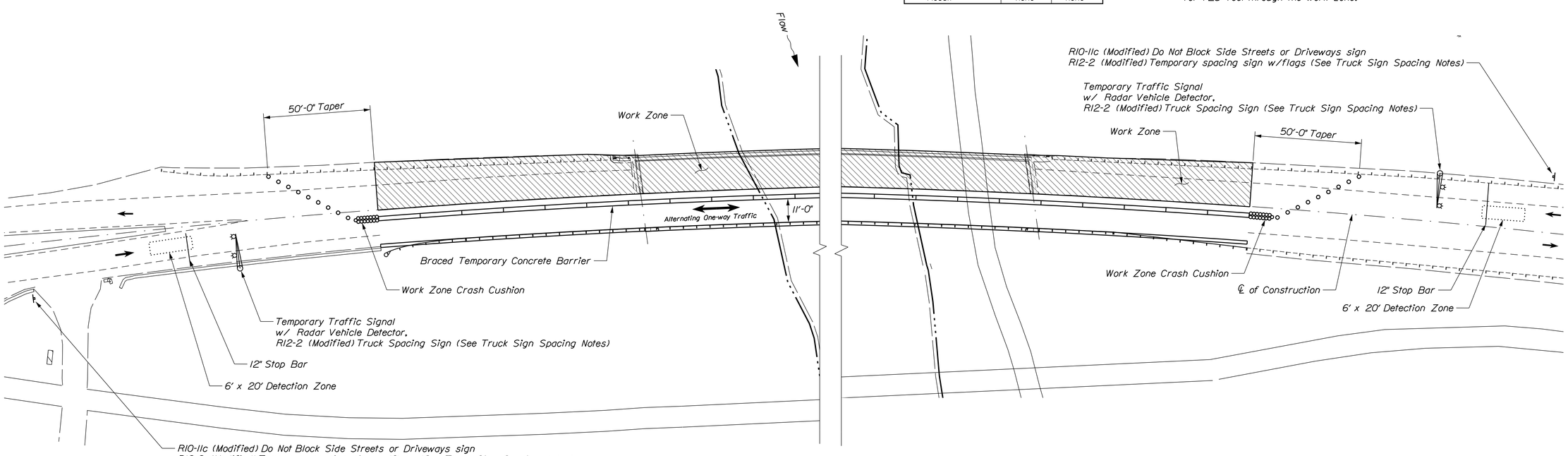

STAGE 2

ERDMAN ANTHONY

STATE OF MAINE
DEPARTMENT OF TRANSPORTATION

NHP-2049(300)

WIN 020493.00

BRIDGE NO. 6149

BRIDGE PLANS

		BY	DATE
PROJ. MANAGER	JOEL KITTREDGE		
DESIGN-DETAILED	C. SICHAK	T. LINDO	10/2015
CHECKED-REVIEWED	R. FARRELL		10/2015
DESIGN2-DETAILED2			
DESIGN3-DETAILED3			
REVISIONS 1			
REVISIONS 2			
REVISIONS 3			
REVISIONS 4			
FIELD CHANGES			

SIGNATURE

P.E. NUMBER

DATE

ANDROSCOGGIN RIVER BRIDGE
ANDROSCOGGIN RIVER
BETHEL OXFORD COUNTY

TRAFFIC CONTROL PLAN

SHEET NUMBER

7

OF 24

Filename: ...\MSTA\007_Traffic Control.dgn Division: BRIDGE Username: Date:10/15/2015

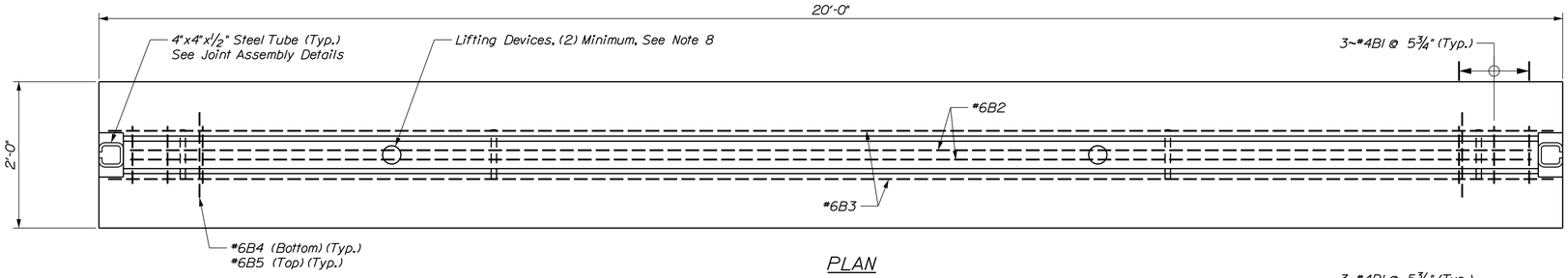

PLAN

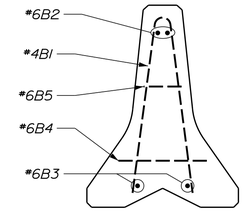

SECTION A-A

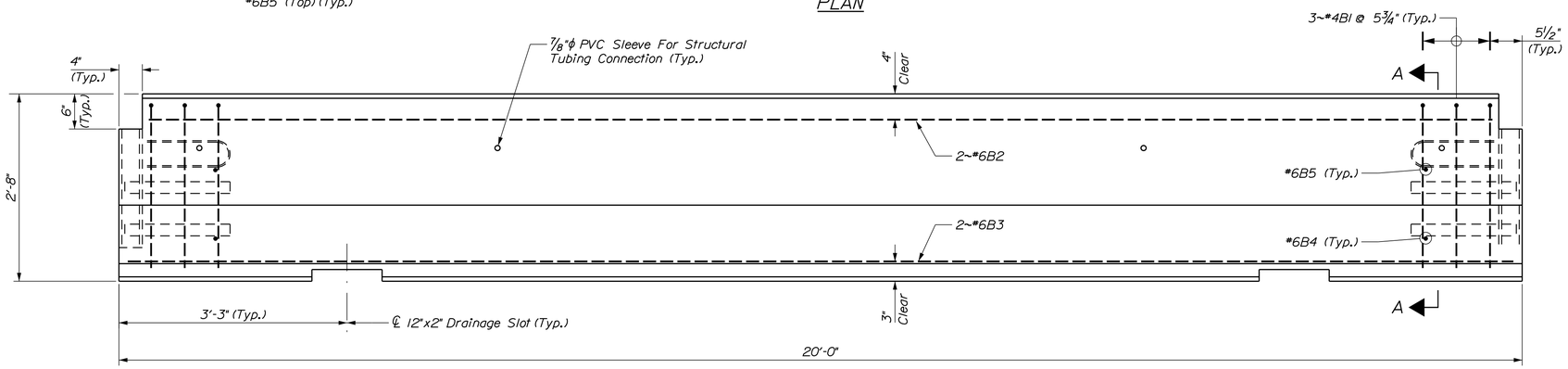

ELEVATION

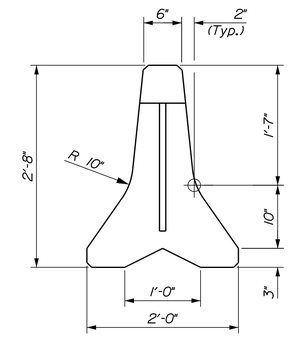

END VIEW

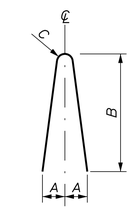

TYPE "I" BAR

REINFORCING SCHEDULE (PER 20' BARRIER UNIT)								
MARK	SIZE	LENGTH	QTY.	TYPE	A	B	C	LOCATION
BI	#4	4'-II"	6	I	5"	2'-4"	I"	STIRRUPS
B2	#6	I9'-I"	2	—				LONGITUDINAL (TOP)
B3	#6	I9'-9"	2	—				LONGITUDINAL (BOTTOM)
B4	#6	I'-2"	2	—				TRANSVERSE (BOTTOM)
B5	#6	6"	2	—				TRANSVERSE (TOP)

NOTES:

1. Temporary Concrete Barrier shall be furnished by the Contractor and paid for as Item 526.305, Temporary Concrete Barrier, Braced. Concrete Barrier and all attachments shall be fabricated in accordance with Special Provisions. All barrier units for braced systems shall be 20' long.
2. The Contractor shall furnish and install approved retroreflective delineators at 25 foot intervals along top and/or one foot down the side of Temporary Concrete Barrier, subsidiary to Item 526.305.
3. Delineators shall be attached to barrier using an approved adhesive material or as shown on this sheet.
4. Barriers shall have minimum compressive strength of 4000 psi. and shall have a smooth surface free of defects and irregularities. Casting date shall be shown on barrier. All exposed edges of concrete shall be chamfered 3/4", unless otherwise noted.
5. All reinforcing steel shall be AASHTO M31 (ASTM A615) Grade 60. All reinforcement shall have 1 1/2" minimum clear cover, unless otherwise noted.
6. Structural steel, except the steel tubes, shall be ASTM A36 or A572. All steel shall be fabricated in accordance with Section 504.
7. Steel tube 4"x4"x1/2" shall be ASTM A 500 Grade B or C.
8. A minimum of 2 recessed lifting devices, each with the capacity to lift a mass of 6 tons (minimum), shall be installed to each barrier unit. Twenty foot long barrier units are approximately 400 lbs./ft.

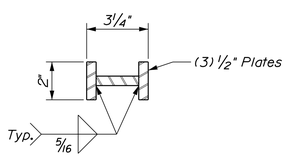

TYPICAL SECTION
(CONNECTION KEY)

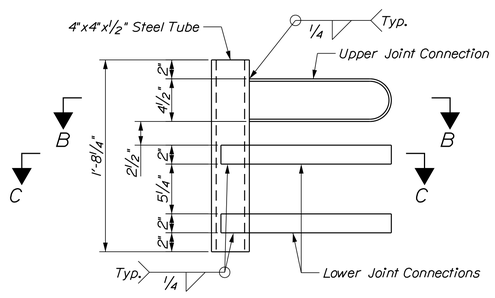

JOINT ASSEMBLY

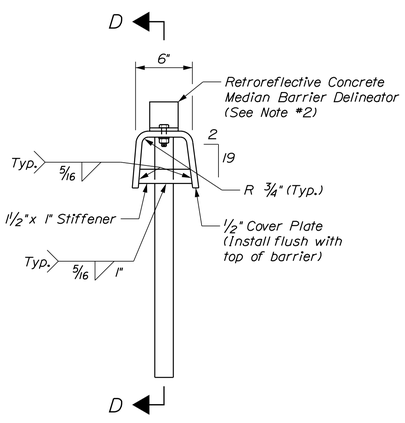

END VIEW

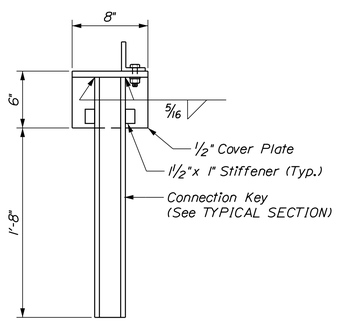

SECTION D-D

CONNECTION KEY ASSEMBLY DETAILS

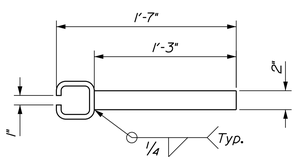

SECTION B-B
(UPPER CONNECTION)

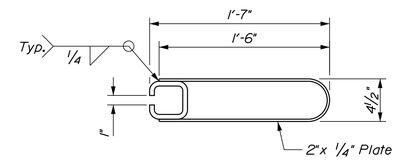

SECTION C-C
(LOWER CONNECTION)

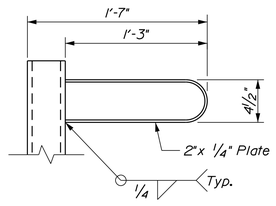

ELEVATION
(UPPER CONNECTION)

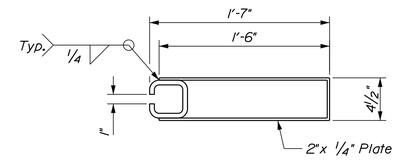

SECTION C-C
(LOWER CONNECTION - ALTERNATE)

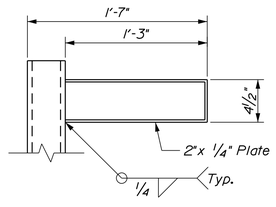

ELEVATION
(UPPER CONNECTION - ALTERNATE)

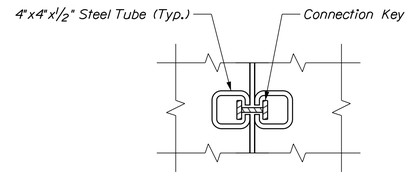

CONNECTION JOINT DETAIL

JOINT CONNECTION DETAILS

ERDMAN ANTHONY

STATE OF MAINE
DEPARTMENT OF TRANSPORTATION

NHP-2049(300)

WIN 020493.00

BRIDGE NO. 6149

BRIDGE PLANS

PROJ. MANAGER	JOEL KITTREDGE	BY	DATE
DESIGN-DETAILED	C. SICHAK	T. LINDO	10/2015
CHECKED-REVIEWED	R. FARRELL		10/2015
DESIGN2-DETAILED2			
DESIGN3-DETAILED3			
REVISIONS 1			
REVISIONS 2			
REVISIONS 3			
REVISIONS 4			
FIELD CHANGES			

SIGNATURE

P.E. NUMBER

DATE

ANDROSCOGGIN RIVER BRIDGE
ANDROSCOGGIN RIVER
BETHEL OXFORD COUNTY

TEMPORARY CONCRETE BARRIER (BRACED) (1 OF 2)

SHEET NUMBER

8

OF 24

Date:10/15/2015

Filename: ...\MSTA\008_Temp Conc Barrier.dgn Division: BRIDGE Username:

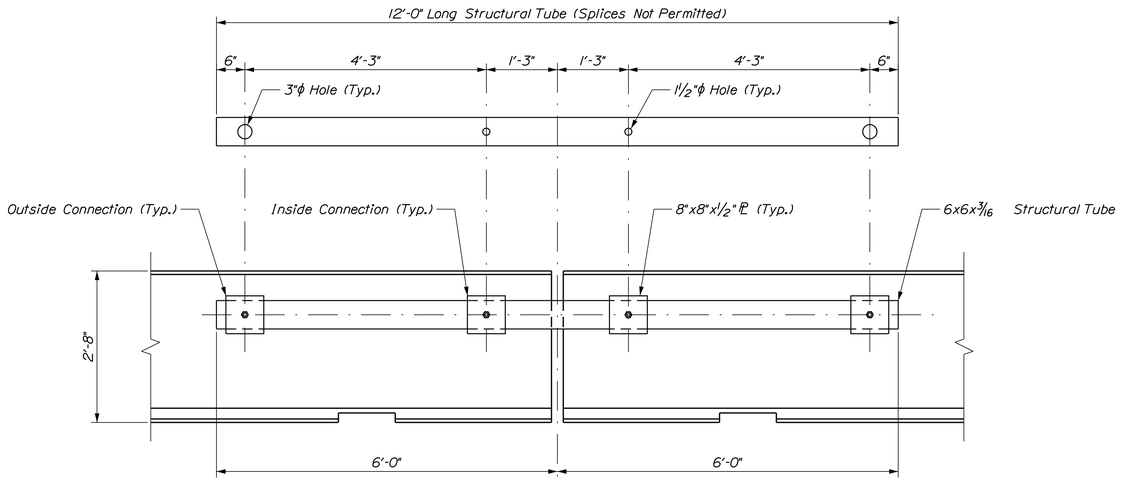

STRUCTURAL TUBING DETAILS

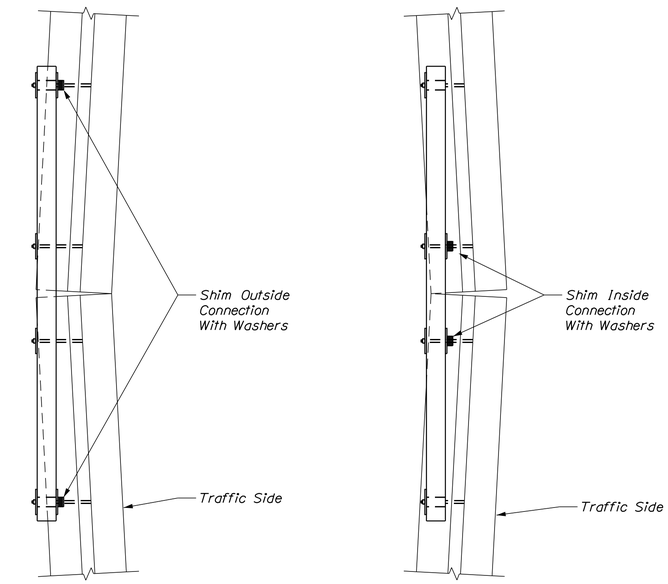

BARRIER CURVING TOWARD TRAFFIC

BARRIER CURVING AWAY FROM TRAFFIC

PLAN VIEW

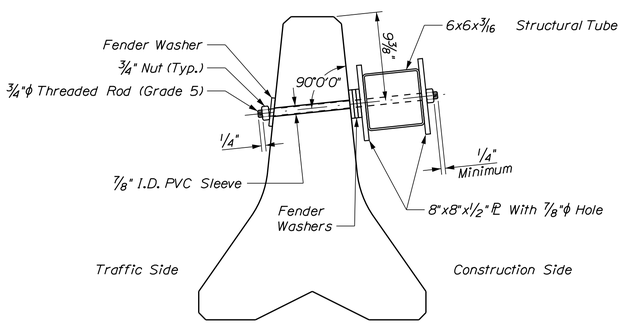

SECTION WITH SHIMMING

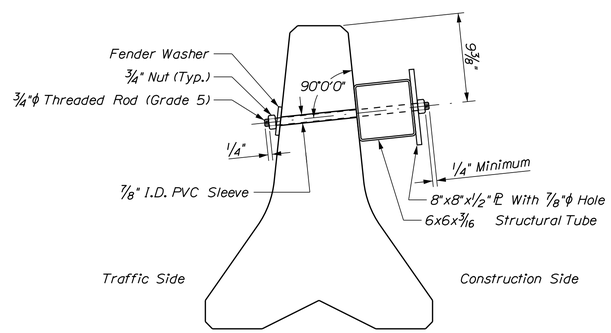

SECTION WITHOUT SHIMMING

BARRIER & STRUCTURAL TUBING SECTIONS

NOTES:

1. Structural steel, except the steel tubes, shall be ASTM A36 or A572. All steel shall be fabricated in accordance with Section 504.
2. Steel tube 6x6x3/16 shall be ASTM A 500 Grade B or C. The 6x6x3/16 tubes shall be 12' long and galvanized in accordance with Section 504.
3. PVC Sleeve openings shall be modified/drilled as required to properly align structural tube bracing units for curved alignments.
4. Where Temporary Concrete Barriers are placed on a radius, the resulting gaps between the box beam and concrete barrier shall be shimmed.
5. The shimming shall consist of 8"x8"x1/2" square plate, and Fender Washers as needed to snug the box beam stiffener to the Temporary Concrete Barrier.
6. Fender Washers shall be 3" nominal O.D.
7. Hardware other than the box beam need not be galvanized.
8. The presence of normal holes which have been modified/drilled will not affect the reuse of concrete barrier.

ERDMAN ANTHONY

STATE OF MAINE
DEPARTMENT OF TRANSPORTATION

NHP-2049(300)

WIN 020493.00

BRIDGE NO. 6149

BRIDGE PLANS

PROJ. MANAGER	JOEL KITTREDGE		
DESIGN-DETAILED	C. SICHAK	T. LINDO	10/2015
CHECKED-REVIEWED	R. FARRELL		10/2015
DESIGN2-DETAILED2			
DESIGN3-DETAILED3			
REVISIONS 1			
REVISIONS 2			
REVISIONS 3			
REVISIONS 4			
FIELD CHANGES			

SIGNATURE

P.E. NUMBER

DATE

ANDROSCOGGIN RIVER BRIDGE
ANDROSCOGGIN RIVER
BETHEL OXFORD COUNTY

TEMPORARY CONCRETE BARRIER (BRACED) (2 OF 2)

SHEET NUMBER

9

OF 24

Filename: ...\MSTA\009_Temp Conc Barrier.dgn Division: BRIDGE Username: Date:10/15/2015

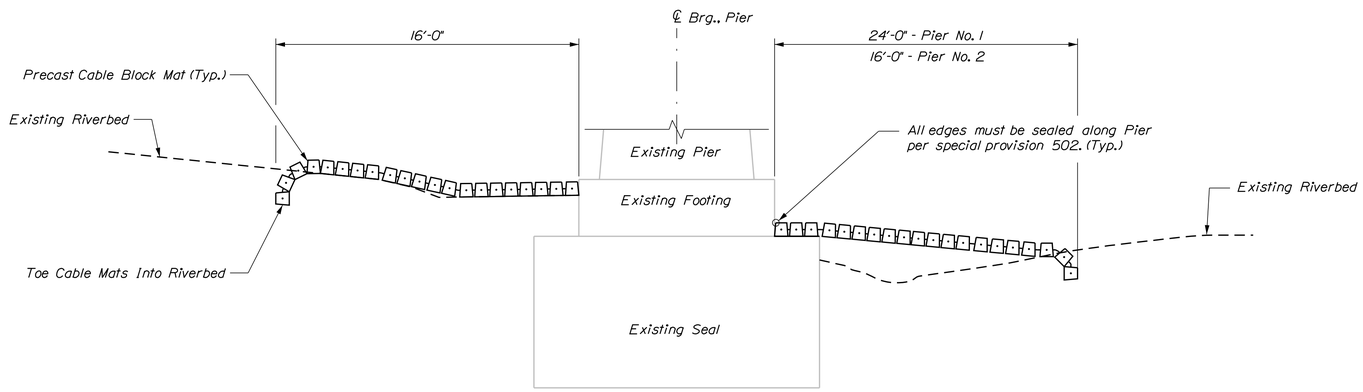

REPRESENTATIVE TYPICAL SECTION B-B

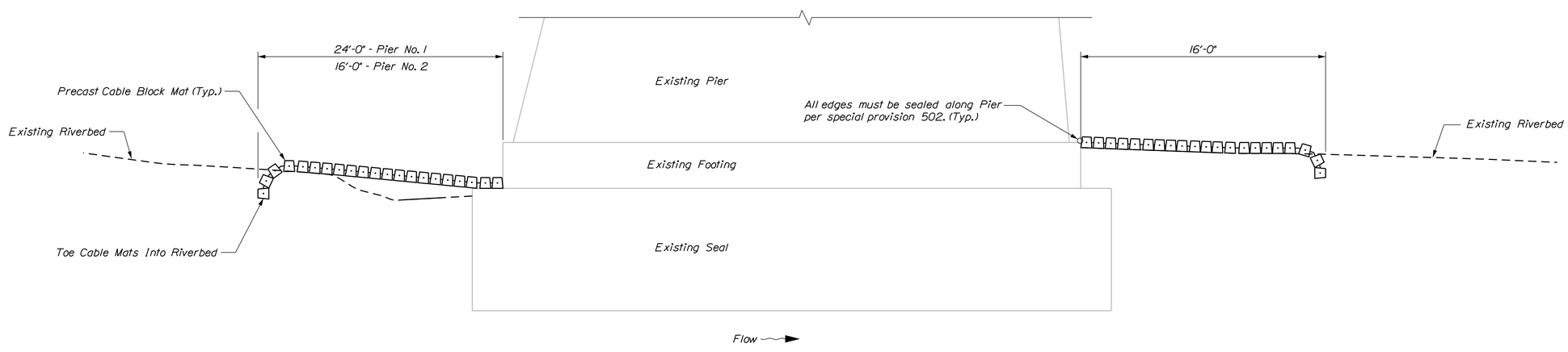

REPRESENTATIVE TYPICAL SECTION A-A

NOTES:

1. The thickness of the cable mats shall be 8½ inches.

2. Concrete cable mats shall bear directly on geotextile fabric. Geotextile fabric shall be considered incidental to Item No. 502.83.

3. Any riverbed preparation or excavation by the Contractor for the installation of block mats shall not undermine or otherwise threaten the stability of the bridge foundation or retaining wall foundation.

4. See Sheet No. 3 for section locations.

5. Existing Cobbles, Boulders and Debris within Scour Countermeasure Limits to be removed.

6. Sections shown on the design plans depict "typical" conditions and the intent of the installation which may have to be altered to fit actual site conditions as directed by the Resident.

7. Areas shown of the countermeasure installation are approximate and represent the minimum dimensions desired. The Resident may direct modifications to fit site conditions.

8. Payment for the removal, storage and replacement of the riverbed material will be paid for under Item No. 203.20 Common Excavation. Blending and wasting of excess riverbed material along the channel base will be considered incidental to Item No. 502.83 Concrete Cable Mat. No separate payment shall be made.

9. Contractor shall adhere to restrictions or additional requirements of applicable environmental permits for this Project.

10. Installation and placement of Concrete Cable Mat systems shall start from the downstream end of mat system area and progress upstream.

11. Contractor shall field verify riverbed elevations along the upstream bridge fascia, downstream bridge fascia and along the centerline of the bridge. Riverbed elevations shall be taken every 5 feet along all three lines and provided to the Resident. Resident will determine final precast block mat elevations based on this information. This work shall not be paid for directly and will be considered incidental to related contract items.

STATE OF MAINE
DEPARTMENT OF TRANSPORTATION

NHP-2049(300)

WIN 020493.00

BRIDGE NO. 6149

BRIDGE PLANS

	BY	DATE
PROJ. MANAGER JOEL KITTREDGE		
DESIGN-DETAILED	T. LINDO	10/2015
CHECKED-REVIEWED	C. SICHAK	10/2015
DESIGN2-DETAILED2	R. FARRELL	
DESIGN3-DETAILED3		
REVISIONS 1		
REVISIONS 2		
REVISIONS 3		
REVISIONS 4		
FIELD CHANGES		

SIGNATURE

P.E. NUMBER

DATE

ANDROSCOGGIN RIVER BRIDGE
ANDROSCOGGIN RIVER
BETHEL OXFORD COUNTY

SCOUR COUNTERMEASURE DETAILS

ERDMAN ANTHONY

SHEET NUMBER
10
OF 24

Filename: ...\010_Scour Countermeasures.dgn Division: BRIDGE Username: Date:10/15/2015

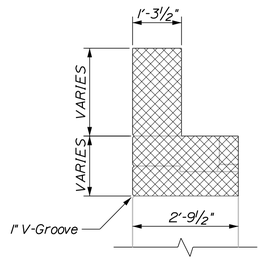

SECTION E-E

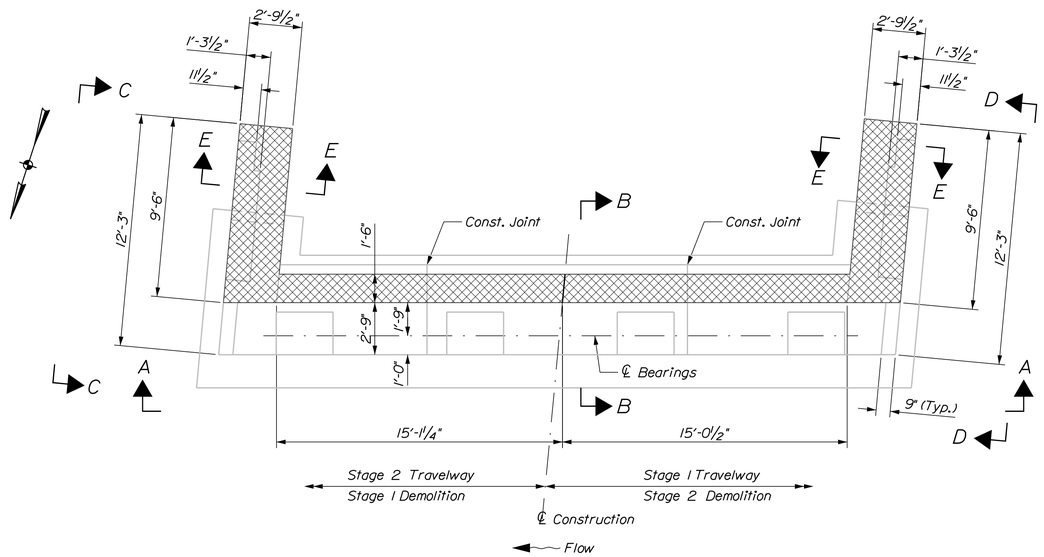

PLAN
Scale: ¼" = 1'-0"

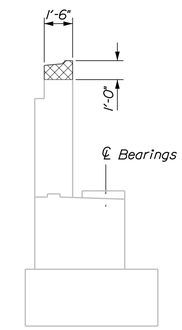

SECTION B-B
Scale: ¼" = 1'-0"

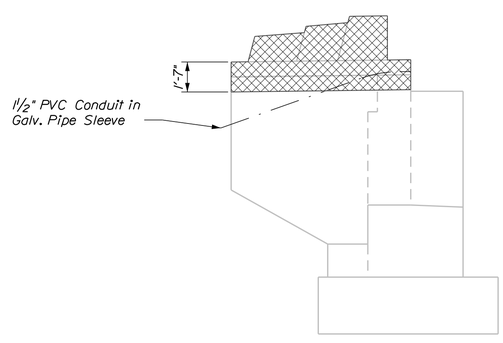

VIEW C-C
Scale: ¼" = 1'-0"

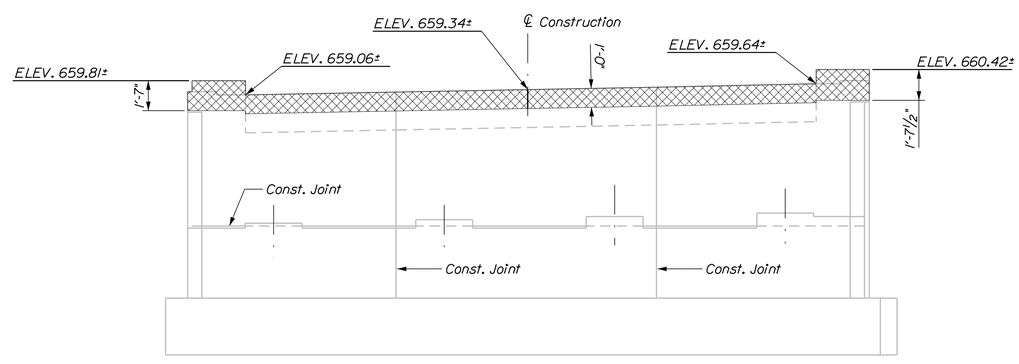

VIEW A-A
Scale: ¼" = 1'-0"

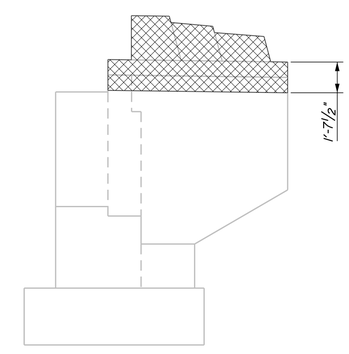

VIEW D-D
Scale: ¼" = 1'-0"

NOTES:

1. Existing vertical reinforcing in backwall to remain.

2. Existing elevations are approximate and based on recent survey.

LEGEND:

Demolition Limit
(See note 1)

ERDMAN ANTHONY

STATE OF MAINE
DEPARTMENT OF TRANSPORTATION

NHP-2049(300)

WIN 020493.00

BRIDGE NO. 6149

BRIDGE PLANS

		BY	DATE
PROJ. MANAGER	JOEL KITTREDGE		
DESIGN-DETAILED	C. SICHAK	T. LINDO	10/2015
CHECKED-REVIEWED	R. FARRELL		10/2015
DESIGN2-DETAILED2			
DESIGN3-DETAILED3			
REVISIONS 1			
REVISIONS 2			
REVISIONS 3			
REVISIONS 4			
FIELD CHANGES			

SIGNATURE

P.E. NUMBER

DATE

ANDROSCOGGIN RIVER BRIDGE
ANDROSCOGGIN RIVER
BETHEL OXFORD COUNTY

ABUTMENT 1
DEMOLITION DETAILS

SHEET NUMBER
11
OF 24

Filename: ...\MSTA\011_Abutment 1 Demo.dgn Division: BRIDGE Username: Date:10/15/2015

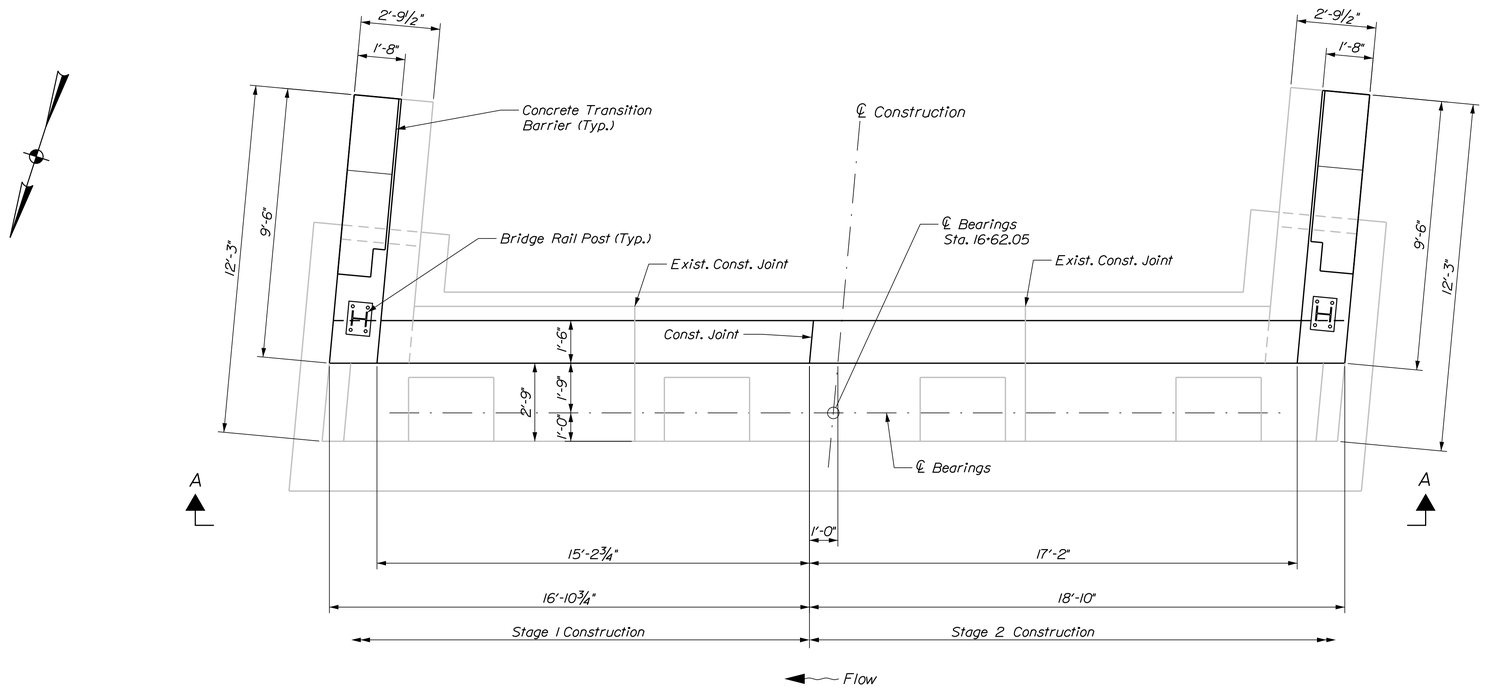

PLAN

Scale: 3/8" = 1'-0"

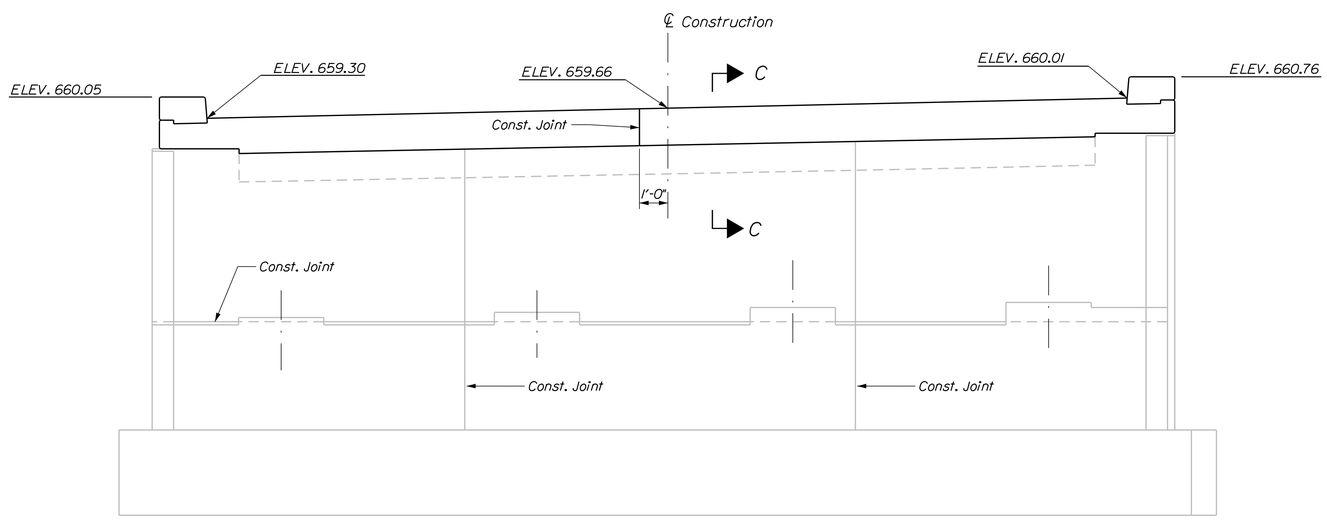

VIEW A-A

Scale: 3/8" = 1'-0"

ABUTMENT NOTES

1. Reinforcing steel shall have a minimum concrete cover of 2 inches unless otherwise noted.

2. Provide 3 additional stirrups in the curbs at each Rail Post location.

3. Provide 4 additional stirrups in the curbs at each Transition Barrier location.

4. The Contractor shall install Transition Barrier vertical closed stirrups, as shown in Standard Details Section 526, prior to the placement of the curb concrete.

5. Cover joints where waterstops are not required in accordance with Standard Details Section 502.

6. See Sheet No. 13 for SECTION C-C.

ERDMAN ANTHONY

STATE OF MAINE
DEPARTMENT OF TRANSPORTATION

NHP-2049(300)

WIN 020493.00

BRIDGE NO. 6149

BRIDGE PLANS

PROJ. MANAGER	JOEL KITTREDGE	BY	DATE
DESIGN-DETAILED	C. SICHAK	T. LINDO	10/2015
CHECKED-REVIEWED	R. FARRELL		10/2015
DESIGN2-DETAILED2			
DESIGN3-DETAILED3			
REVISIONS 1			
REVISIONS 2			
REVISIONS 3			
REVISIONS 4			
FIELD CHANGES			

SIGNATURE

P.E. NUMBER

DATE

ANDROSCOGGIN RIVER BRIDGE
ANDROSCOGGIN RIVER
BETHEL OXFORD COUNTY

ABUTMENT 1 PLAN

SHEET NUMBER

12

OF 24

Filename: ...\MSTA\012_Abutment 1 Plan.dgn Division: BRIDGE Username: Date:10/15/2015

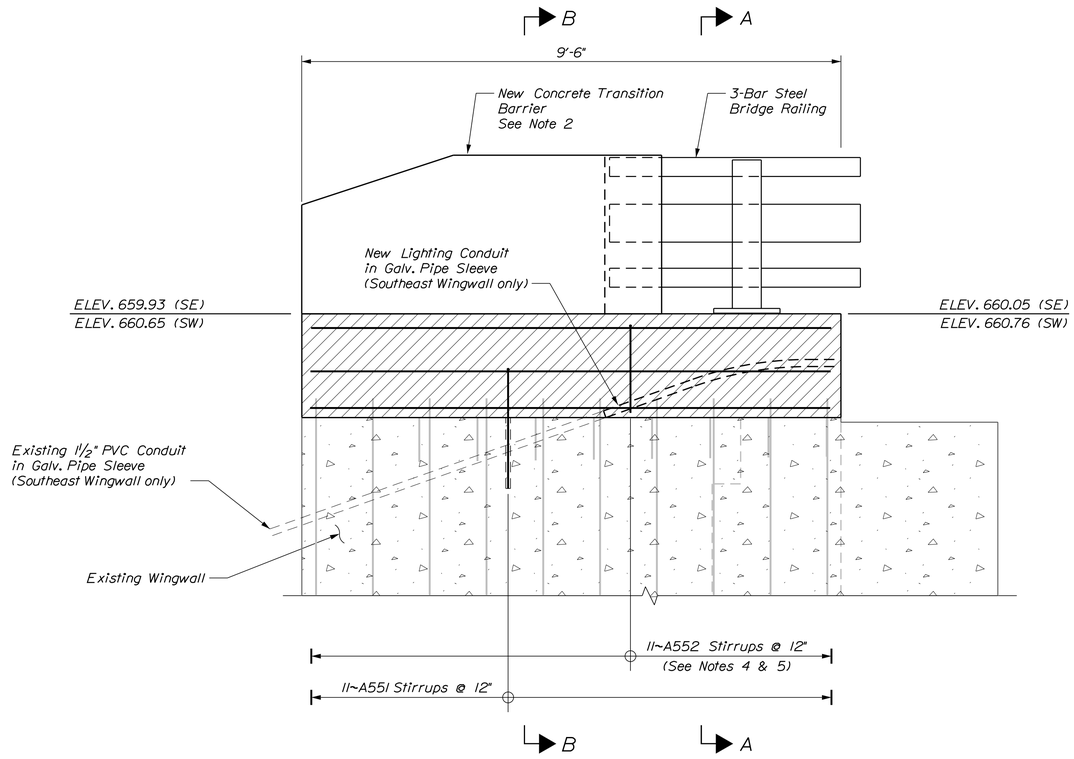

TYPICAL WINGWALL ELEVATION

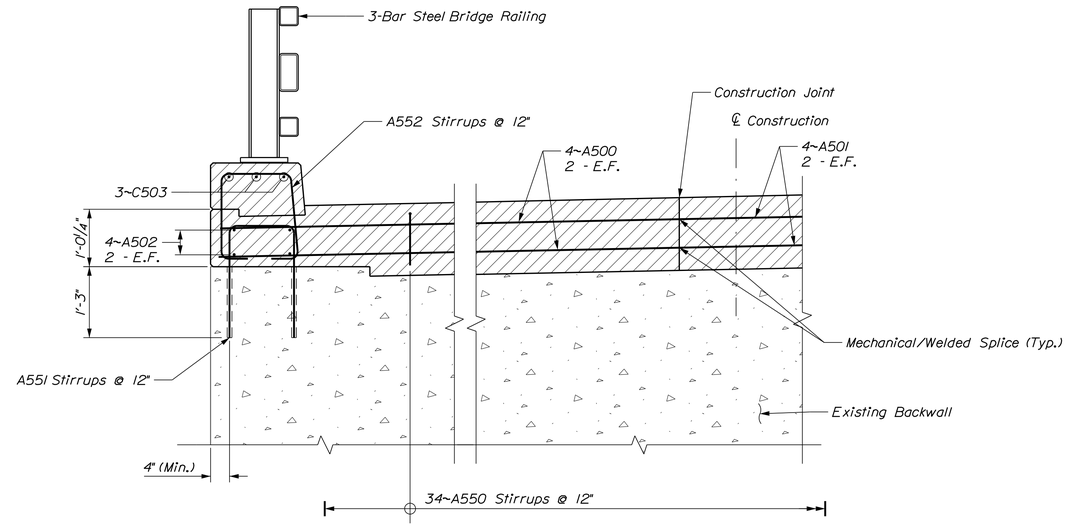

SECTION A-A
(Through Backwall)

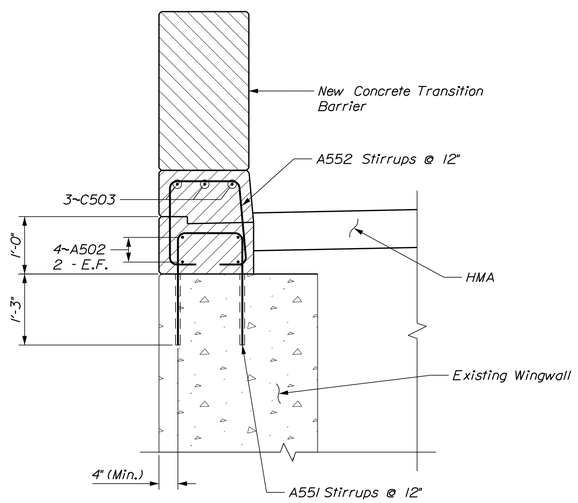

SECTION B-B
(Through Wingwall)

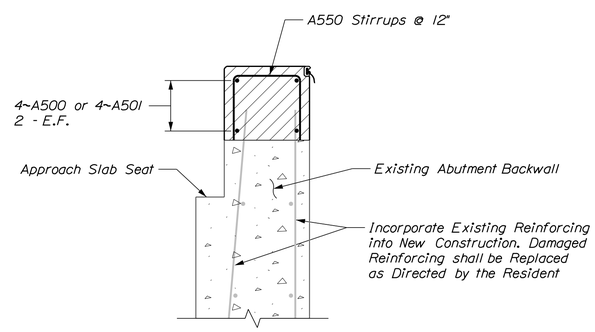

SECTION C-C

NOTES

1. For location of SECTION C-C, see Sheet No. 12.

2. For Concrete Transition Barrier Dimensions and Reinforcing, See MaineDOT Standard Details 526(22-38).

3. Reinforcing steel shall have a minimum concrete cover of 2 inches unless otherwise noted.

4. Provide 3 additional stirrups in the curbs at each Rail Post location.

5. Provide 4 additional stirrups in the curbs at each Transition Barrier location.

6. The Contractor shall install Transition Barrier vertical closed stirrups, as shown in Standard Details Section 526, prior to the placement of the curb concrete.

7. Cover joints where waterstops are not required in accordance with Standard Details Section 502.

ERDMAN ANTHONY

STATE OF MAINE
DEPARTMENT OF TRANSPORTATION

NHP-2049(300)

WIN 020493.00

BRIDGE NO. 6149

BRIDGE PLANS

SIGNATURE

P.E. NUMBER

DATE

		BY	DATE
PROJ. MANAGER	JOEL KITTREDGE		
DESIGN-DETAILED	C. SICHAK	T. LINDO	10/2015
CHECKED-REVIEWED	R. FARRELL		10/2015
DESIGN2-DETAILED2			
DESIGN3-DETAILED3			
REVISIONS 1			
REVISIONS 2			
REVISIONS 3			
REVISIONS 4			
FIELD CHANGES			

ANDROSCOGGIN RIVER BRIDGE
ANDROSCOGGIN RIVER
BETHEL OXFORD COUNTY

ABUTMENT 1 DETAILS

SHEET NUMBER
13
OF 24

Filename: ...\013_Abutment 1 Details.dgn Division: BRIDGE Username: Date:10/15/2015

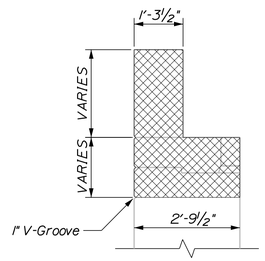

SECTION E-E

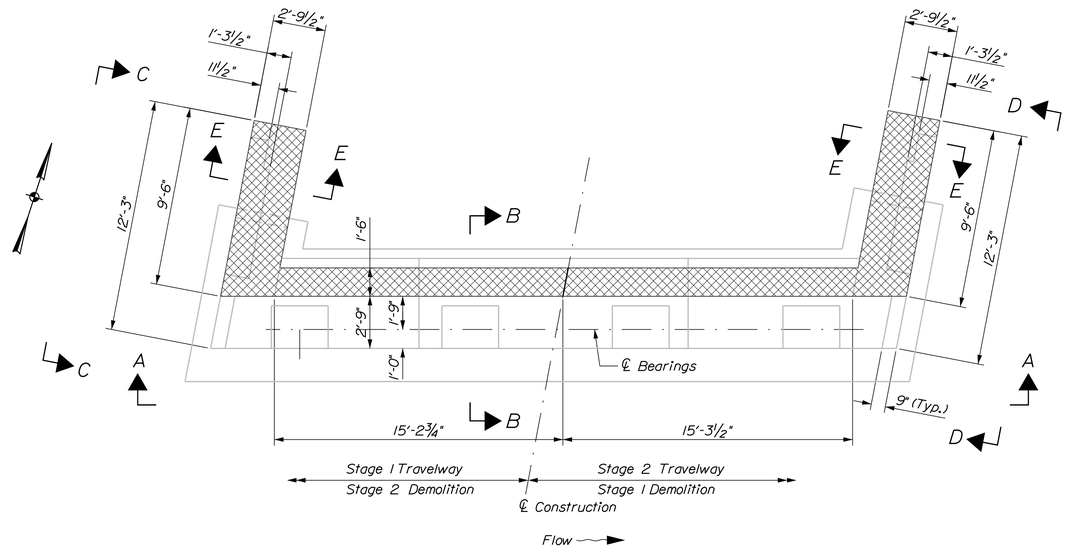

PLAN
Scale: ¼" = 1'-0"

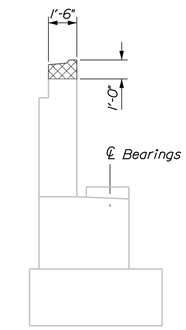

SECTION B-B
Scale: ¼" = 1'-0"

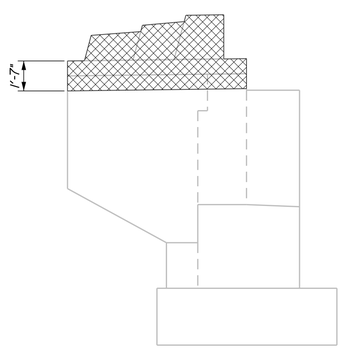

VIEW C-C
Scale: ¼" = 1'-0"

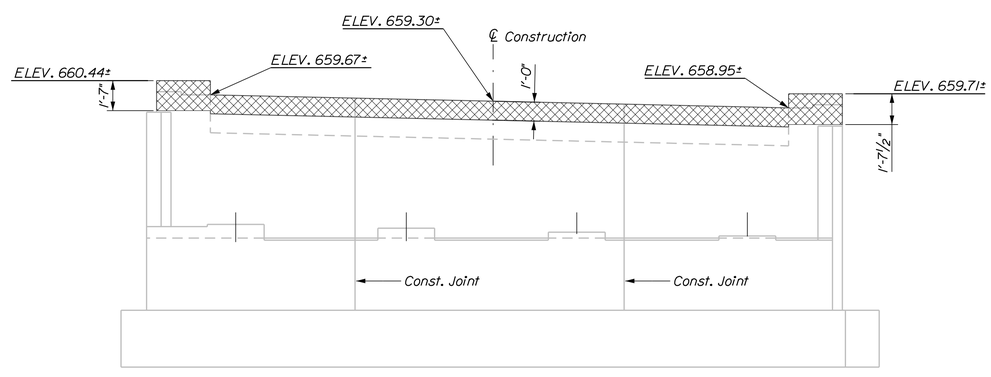

VIEW A-A
Scale: ¼" = 1'-0"

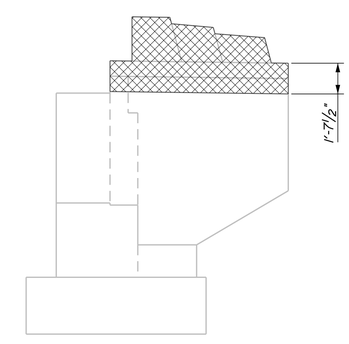

VIEW D-D
Scale: ¼" = 1'-0"

NOTES:

1. Existing vertical reinforcing in backwall to remain.

2. Existing elevations are approximate and based on recent survey.

LEGEND:

Demolition Limit (See note 1)

ERDMAN ANTHONY

STATE OF MAINE
DEPARTMENT OF TRANSPORTATION

NHP-2049(300)

WIN 020493.00

BRIDGE NO. 6149

BRIDGE PLANS

SIGNATURE

P.E. NUMBER

DATE

	BY	DATE
PROJ. MANAGER JOEL KITTREDGE		
DESIGN-DETAILED C. SICHAK	T. LINDO	10/2015
CHECKED-REVIEWED R. FARRELL		10/2015
DESIGN2-DETAILED2		
DESIGN3-DETAILED3		
REVISIONS 1		
REVISIONS 2		
REVISIONS 3		
REVISIONS 4		
FIELD CHANGES		

ANDROSCOGGIN RIVER BRIDGE
ANDROSCOGGIN RIVER
OXFORD COUNTY
BETHEL

ABUTMENT 2
DEMOLITION DETAILS

SHEET NUMBER
14
OF 24

Filename: ...\MSTA\014_Abutment 2 Demo.dgn Division: BRIDGE Username: Date:10/15/2015

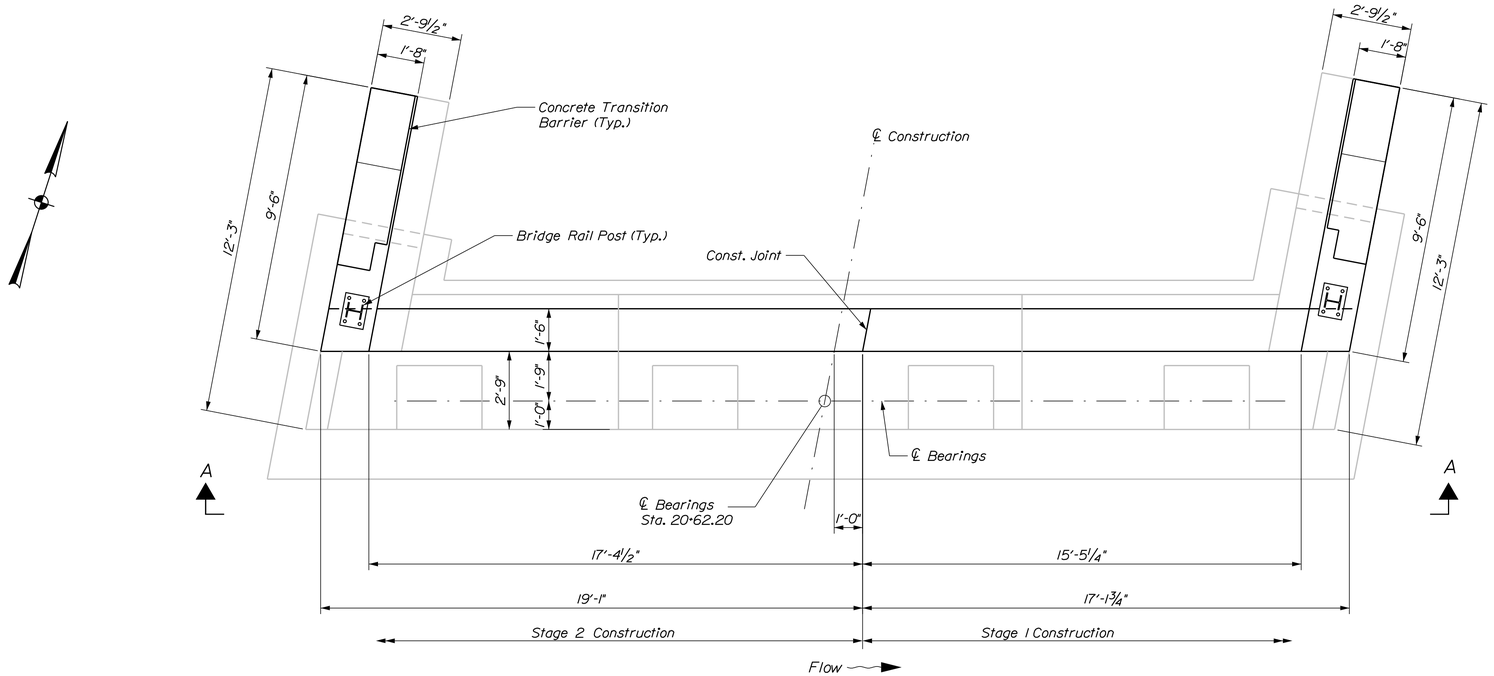

PLAN

Scale: ⅜" = 1'-0"

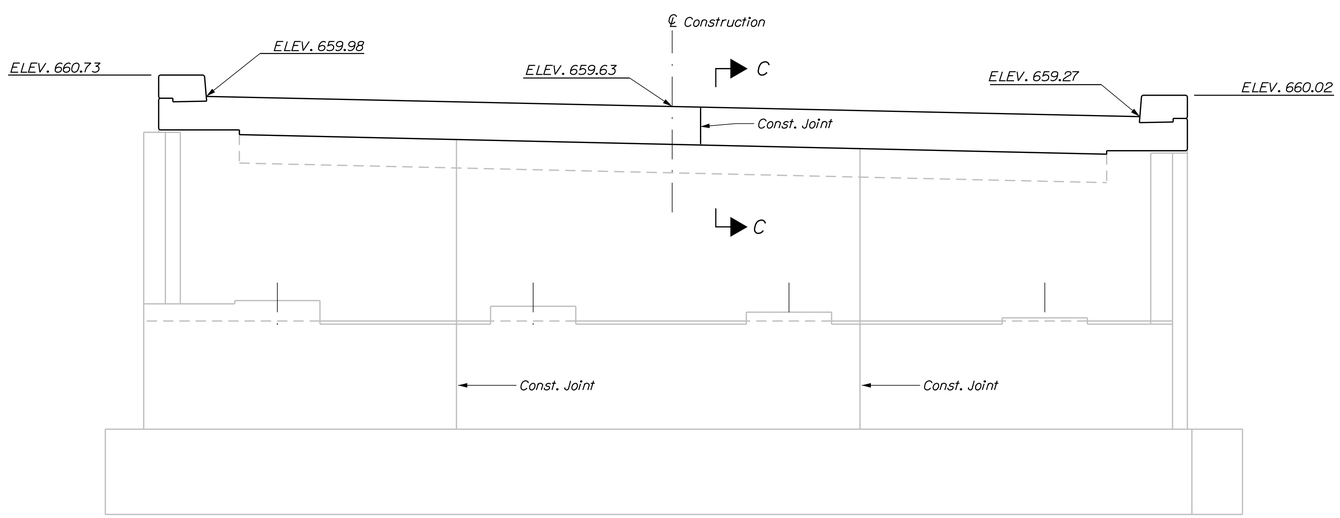

VIEW A-A

Scale: ⅜" = 1'-0"

NOTES

1. Refer to Sheet No. 12 for Abutment Notes.
2. See Sheet No. 16 for SECTION C-C.

ERDMAN ANTHONY

STATE OF MAINE
DEPARTMENT OF TRANSPORTATION

NHP-2049(300)

WIN 020493.00

BRIDGE NO. 6149

BRIDGE PLANS

		BY	DATE
PROJ. MANAGER	JOEL KITTREDGE		
DESIGN-DETAILED	C. SICHAK	T. LINDO	10/2015
CHECKED-REVIEWED	R. FARRELL		10/2015
DESIGN2-DETAILED2			
DESIGN3-DETAILED3			
REVISIONS 1			
REVISIONS 2			
REVISIONS 3			
REVISIONS 4			
FIELD CHANGES			

SIGNATURE

P.E. NUMBER

DATE

ANDROSCOGGIN RIVER BRIDGE
ANDROSCOGGIN RIVER
BETHEL OXFORD COUNTY

ABUTMENT 2 PLAN

SHEET NUMBER

15

OF 24

Filename: ...\MSTA\015_Abutment 2 Plan.dgn Division: BRIDGE Username: Date:10/15/2015

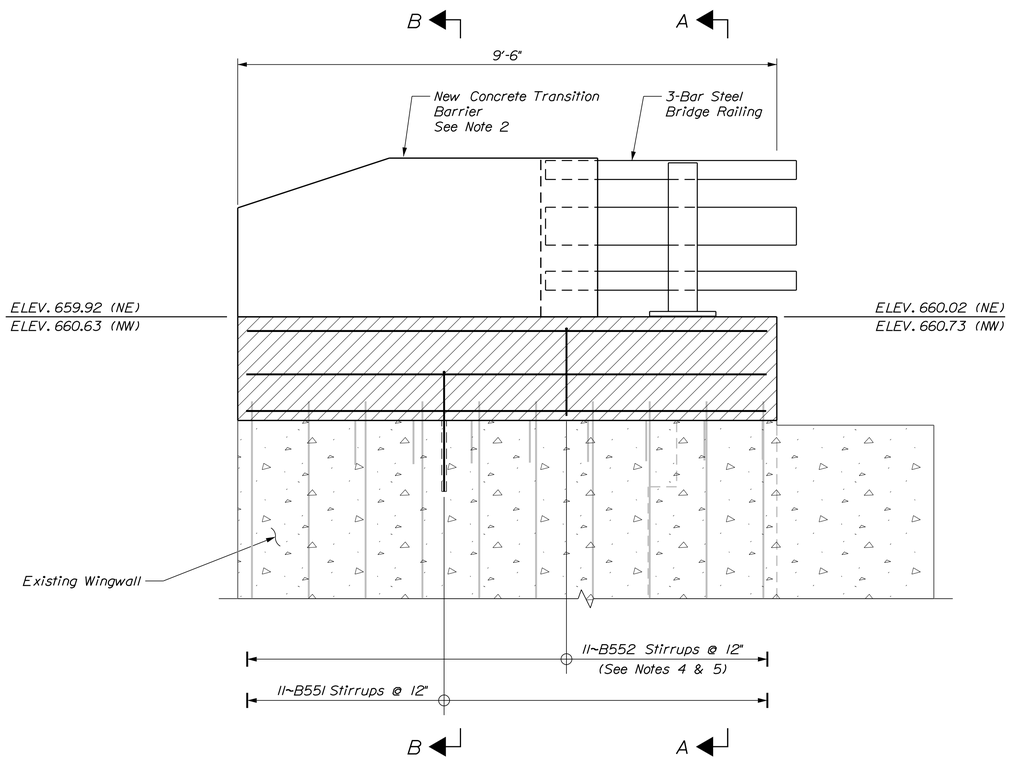

TYPICAL WINGWALL ELEVATION

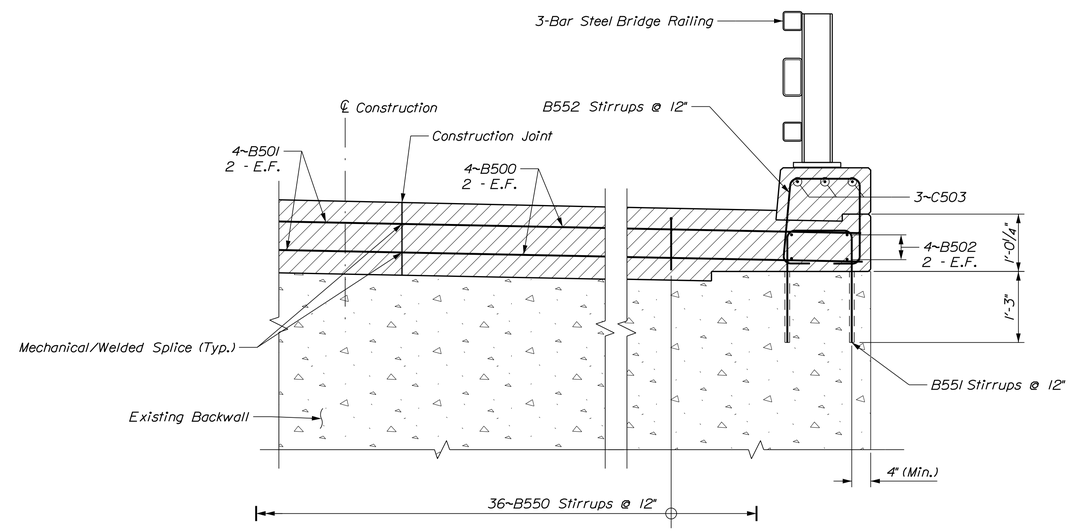

SECTION A-A
(Through Backwall)

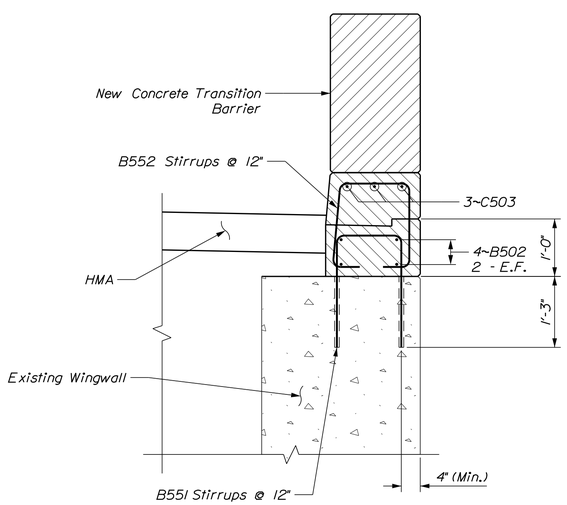

SECTION B-B
(Through Wingwall)

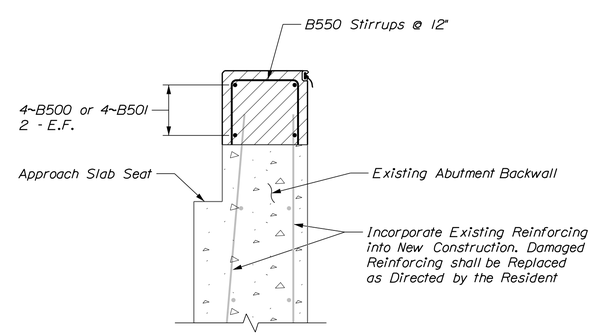

SECTION C-C

NOTES

1. For location of SECTION C-C, see Sheet No. 15.

2. For Concrete Transition Barrier Dimensions and Reinforcing, See MaineDOT Standard Details 526(22-38).

3. Reinforcing steel shall have a minimum concrete cover of 2 inches unless otherwise noted.

4. Provide 3 additional stirrups in the curbs at each Rail Post location.

5. Provide 4 additional stirrups in the curbs at each Transition Barrier location.

6. The Contractor shall install Transition Barrier vertical closed stirrups, as shown in Standard Details Section 526, prior to the placement of the curb concrete.

7. Cover joints where waterstops are not required in accordance with Standard Details Section 502.

ERDMAN ANTHONY

STATE OF MAINE
DEPARTMENT OF TRANSPORTATION

NHP-2049(300)

WIN 020493.00

BRIDGE NO. 6149

BRIDGE PLANS

SIGNATURE

P.E. NUMBER

DATE

		BY	DATE
PROJ. MANAGER	JOEL KITTREDGE		
DESIGN-DETAILED	C. SICHAK	T. LINDO	10/2015
CHECKED-REVIEWED	R. FARRELL		10/2015
DESIGN2-DETAILED2			
DESIGN3-DETAILED3			
REVISIONS 1			
REVISIONS 2			
REVISIONS 3			
REVISIONS 4			
FIELD CHANGES			

ANDROSCOGGIN RIVER BRIDGE
ANDROSCOGGIN RIVER
BETHEL OXFORD COUNTY

ABUTMENT 2 DETAILS

SHEET NUMBER
16
OF 24

Filename: ...\016_Abutment 2 Details.dgn Division: BRIDGE Username: Date:10/15/2015

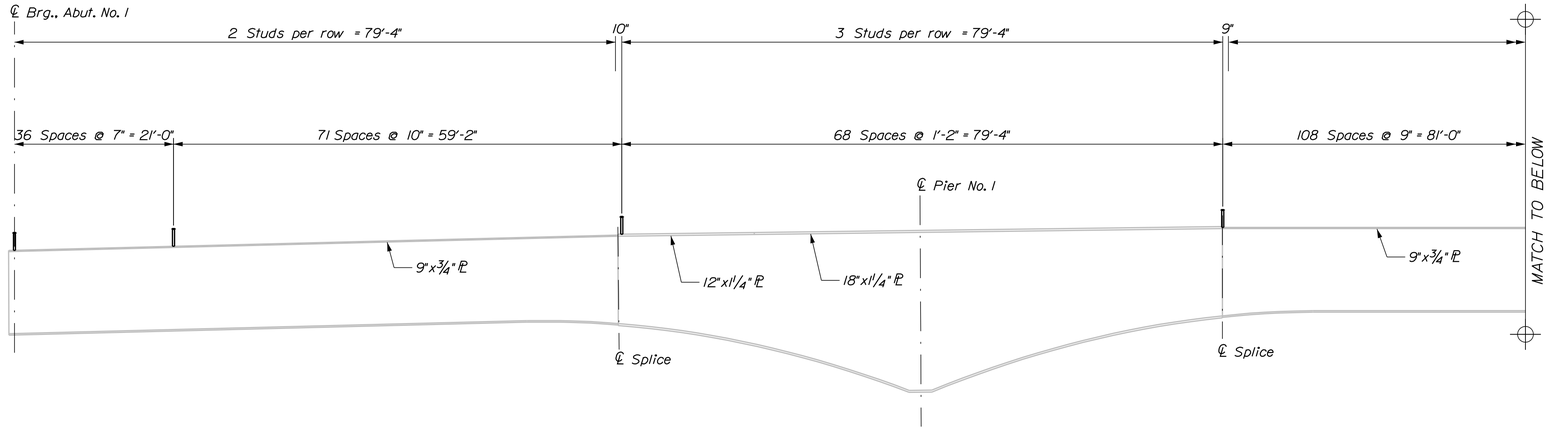

SHEAR CONNECTOR LAYOUT
(Splice Plates not Shown)

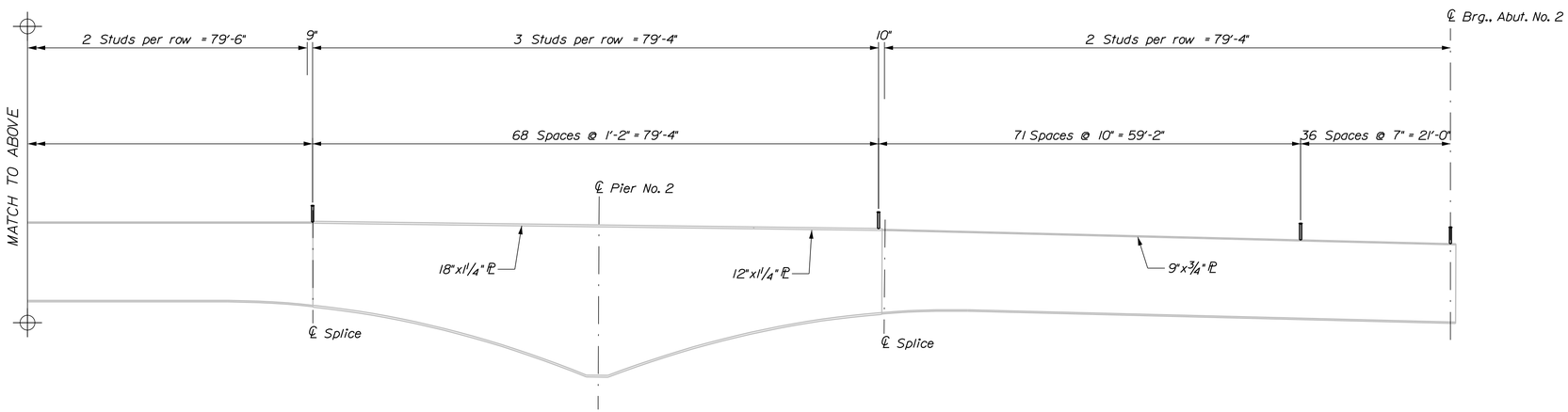

SHEAR CONNECTOR LAYOUT
(Splice Plates not Shown)

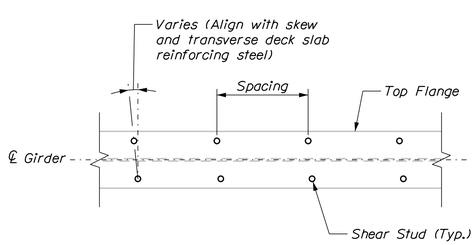

SHEAR CONNECTOR LAYOUT - 2 STUDS
(Adjust Shear Connector Spacing as Required Around Splice Plates and Bolts)
Not to Scale

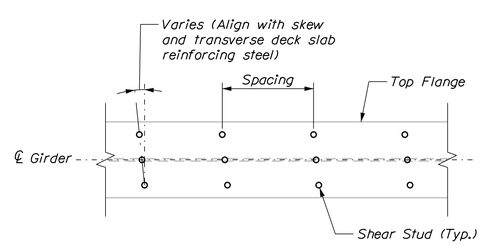

SHEAR CONNECTOR LAYOUT - 3 STUDS
(Adjust Shear Connector Spacing as Required Around Splice Plates and Bolts)
Not to Scale

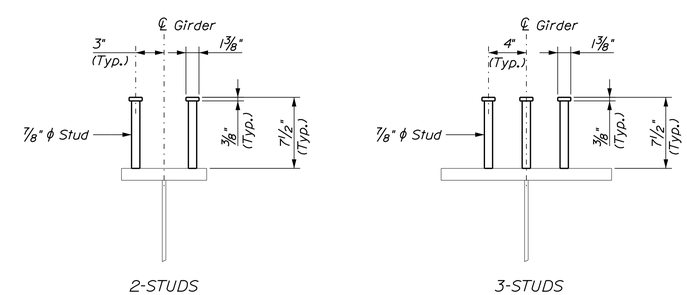

SHEAR CONNECTOR DETAILS

ERDMAN ANTHONY

STATE OF MAINE
DEPARTMENT OF TRANSPORTATION

NHP-2049(300)

WIN 020493.00

BRIDGE NO. 6149

BRIDGE PLANS

PROJ. MANAGER	JOEL KITTREDGE		
DESIGN-DETAILED	C. SICHAK	T. LINDO	10/2015
CHECKED-REVIEWED	R. FARRELL		10/2015
DESIGN2-DETAILED2			
DESIGN3-DETAILED3			
REVISIONS 1			
REVISIONS 2			
REVISIONS 3			
REVISIONS 4			
FIELD CHANGES			

SIGNATURE

P.E. NUMBER

DATE

ANDROSCOGGIN RIVER BRIDGE
ANDROSCOGGIN RIVER
BETHEL OXFORD COUNTY

SHEAR CONNECTOR DETAILS

SHEET NUMBER
17
OF 24

Filename: ...\MSTA\017_Shear_Connectors.dgn Division: BRIDGE Username: Date:10/15/2015

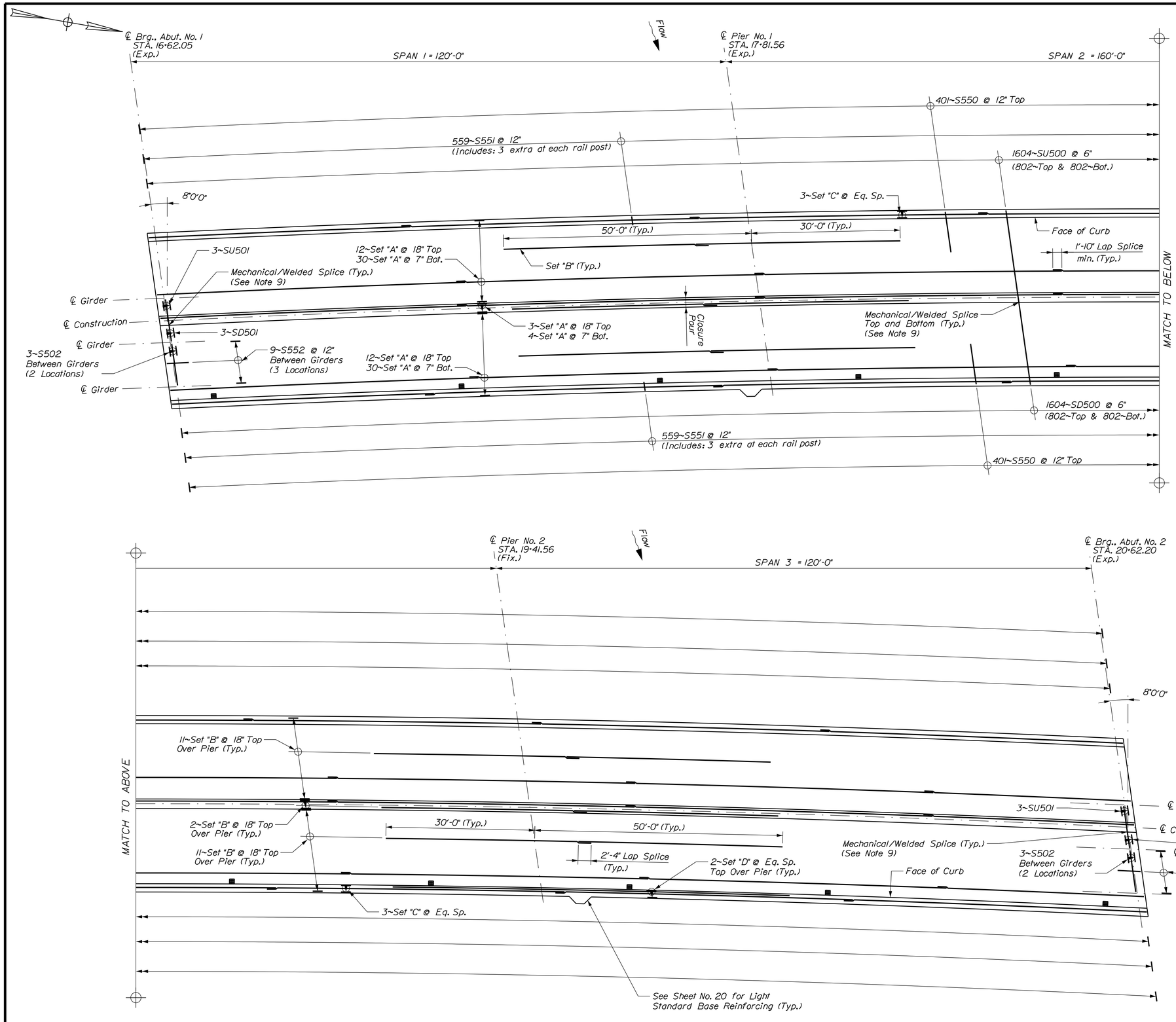

SUPERSTRUCTURE NOTES

1. Reinforcing steel shall have a minimum concrete cover of 2 inches unless otherwise noted.

2. Adjust reinforcing steel to fit around the bridge drains in a manner approved by the Resident. Do not cut transverse reinforcing bars.

3. Form a one inch V-groove on the fascias at the horizontal joint between the curb and slab.

4. The superstructure slab concrete shall be placed in one continuous operation and the concrete shall be kept plastic one complete span behind the span being placed.

5. The formwork and its supports, over the full width of the structural slab, shall remain in place until a minimum of 48 hours has elapsed after placement of the final section of the slab. After this period, removal of formwork for sections meeting the requirements for form removal of Standard Specifications Section 502, Structural Concrete, may proceed.

6. Payment for reinforcing steel fabricated, delivered, and placed in the cast-in-place portion of the structural concrete slab will be considered incidental to the appropriate Standard Specifications Section 502 pay item. Payment for longitudinal curb rebar will be covered under Items 503.12 and 503.13

7. The seal(s) to be furnished shall have minimum Movement Rating(s) as follows:

Abutment No. 1 = 3½ inch
Abutment No. 2 = 1½ inch

8. The Contractor shall stagger splice locations of longitudinal bars.

9. Mechanical/Welded splices in the structural concrete slab are incidental to Item 502.26.

10. Precast Deck Panels will not be permitted as a substitute to the cast-in-place concrete deck.

STATE OF MAINE
DEPARTMENT OF TRANSPORTATION

NHP-2049(300)

WIN 020493.00

BRIDGE NO. 6149

BRIDGE PLANS

SIGNATURE

P.E. NUMBER

DATE

		BY	DATE
PROJ. MANAGER	JOEL KITTREDGE		
DESIGN-DETAILED	C. SICHAK	T. LINDO	10/2015
CHECKED-REVIEWED	R. FARRELL		10/2015
DESIGN2-DETAILED2			
DESIGN3-DETAILED3			
REVISIONS 1			
REVISIONS 2			
REVISIONS 3			
REVISIONS 4			
FIELD CHANGES			

ANDROSCOGGIN RIVER BRIDGE
ANDROSCOGGIN RIVER
OXFORD COUNTY
BETHEL

SUPERSTRUCTURE PLAN

ERDMAN ANTHONY

SHEET NUMBER
18
OF 24

Date:10/16/2015 Division: BRIDGE Username: Filename: ...\MSTA\018_Superstructure.dgn

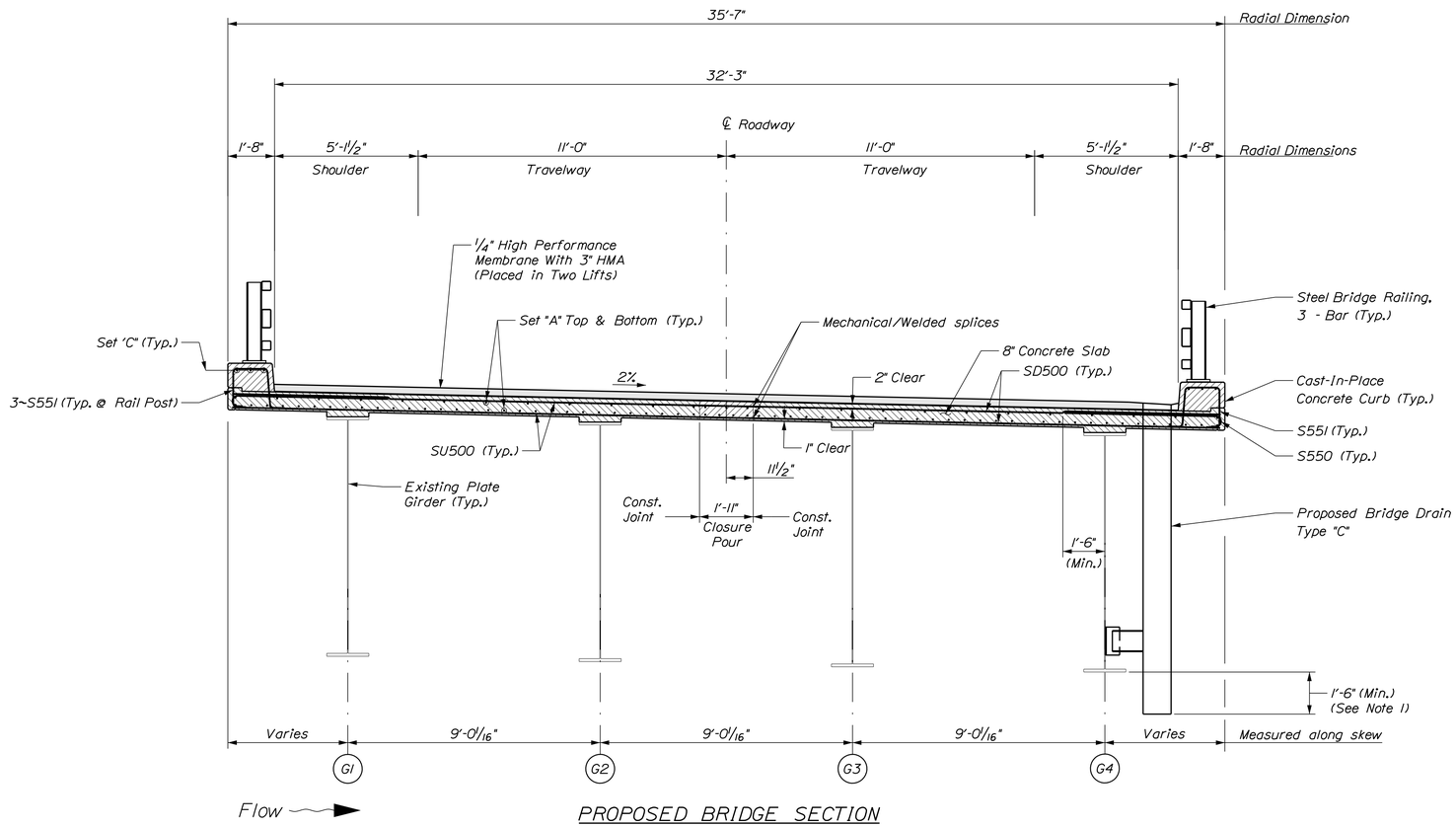

PROPOSED BRIDGE SECTION

NOTES

1. Bridge drain shall extend a minimum of 1'-6" below the bottom flange of girder. Cost to be considered incidental to related contract items.

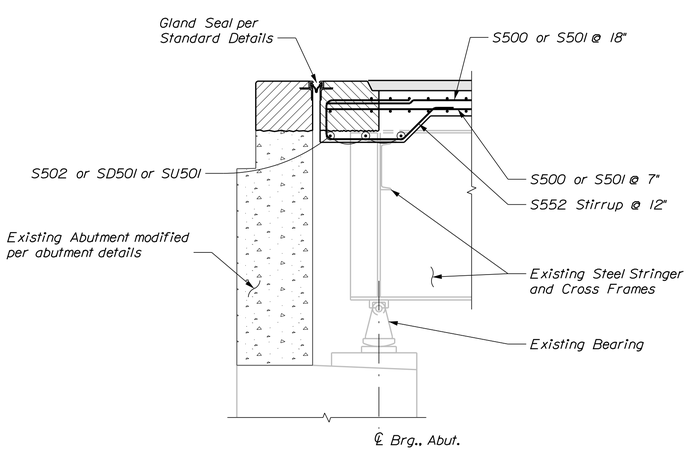

TYPICAL LONGITUDINAL SECTION AT ABUTMENT

BOTTOM OF SLAB ELEVATIONS

	Span No. 1										
	℄ BRG.	.1 Span	.2 Span	.3 Span	.4 Span	.5 Span	.6 Span	.7 Span	.8 Span	.9 Span	℄ BRG.
Girder Line 1	659.02	659.16	659.28	659.40	659.51	659.62	659.71	659.80	659.87	659.94	660.00
Girder Line 2	658.83	658.97	659.10	659.22	659.33	659.43	659.52	659.61	659.68	659.75	659.81
Girder Line 3	658.65	658.78	658.91	659.03	659.14	659.24	659.34	659.42	659.50	659.57	659.63
Girder Line 4	658.46	658.59	658.72	658.84	658.95	659.05	659.15	659.23	659.31	659.38	659.44

	Span No. 2										
	℄ BRG.	.1 Span	.2 Span	.3 Span	.4 Span	.5 Span	.6 Span	.7 Span	.8 Span	.9 Span	℄ BRG.
Girder Line 1	660.00	660.07	660.12	660.16	660.18	660.18	660.18	660.15	660.11	660.06	659.99
Girder Line 2	659.81	659.88	659.93	659.97	659.99	660.00	659.99	659.96	659.92	659.87	659.80
Girder Line 3	659.63	659.69	659.74	659.78	659.80	659.81	659.80	659.78	659.74	659.68	659.61
Girder Line 4	659.44	659.50	659.56	659.59	659.61	659.62	659.61	659.59	659.55	659.49	659.43

	Span No. 3										
	℄ BRG.	.1 Span	.2 Span	.3 Span	.4 Span	.5 Span	.6 Span	.7 Span	.8 Span	.9 Span	℄ BRG.
Girder Line 1	659.99	659.93	659.85	659.78	659.69	659.59	659.48	659.37	659.25	659.12	658.98
Girder Line 2	659.80	659.74	659.67	659.59	659.50	659.40	659.30	659.18	659.06	658.93	658.79
Girder Line 3	659.61	659.55	659.48	659.40	659.31	659.21	659.11	659.00	658.87	658.74	658.60
Girder Line 4	659.43	659.36	659.29	659.21	659.12	659.03	658.92	658.81	658.69	658.55	658.41

ERDMAN ANTHONY

STATE OF MAINE
DEPARTMENT OF TRANSPORTATION

NHP-2049(300)

WIN 020493.00

BRIDGE NO. 6149

BRIDGE PLANS

		BY	DATE
PROJ. MANAGER	JOEL KITTREDGE		
DESIGN-DETAILED	C. SCHAK	T. LINDO	10/2015
CHECKED-REVIEWED	R. FARRELL		10/2015
DESIGN2-DETAILED2			
DESIGN3-DETAILED3			
REVISIONS 1			
REVISIONS 2			
REVISIONS 3			
REVISIONS 4			
FIELD CHANGES			

SIGNATURE

P.E. NUMBER

DATE

ANDROSCOGGIN RIVER BRIDGE
ANDROSCOGGIN RIVER
BETHEL OXFORD COUNTY

SUPERSTRUCTURE DETAILS

SHEET NUMBER
19
OF 24

Filename: ...\MSTA\019_Superstructure.dgn Division: BRIDGE Username: Date:10/15/2015

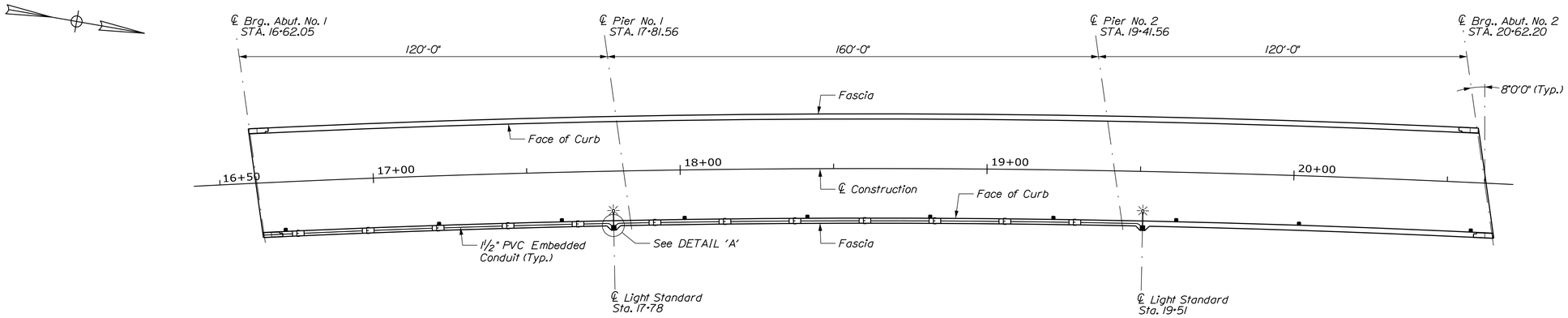

LIGHTING PLAN

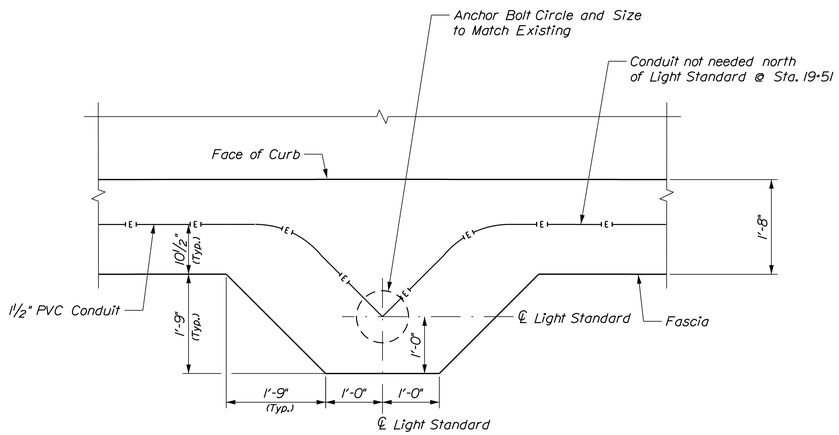

DETAIL 'A'

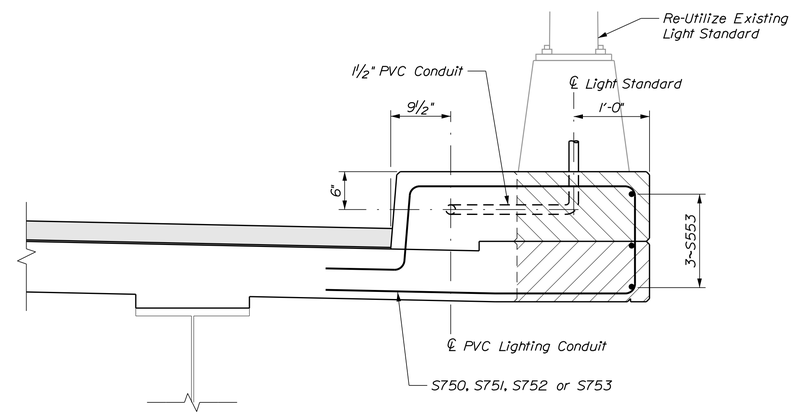

LIGHT ANCHORAGE SECTION

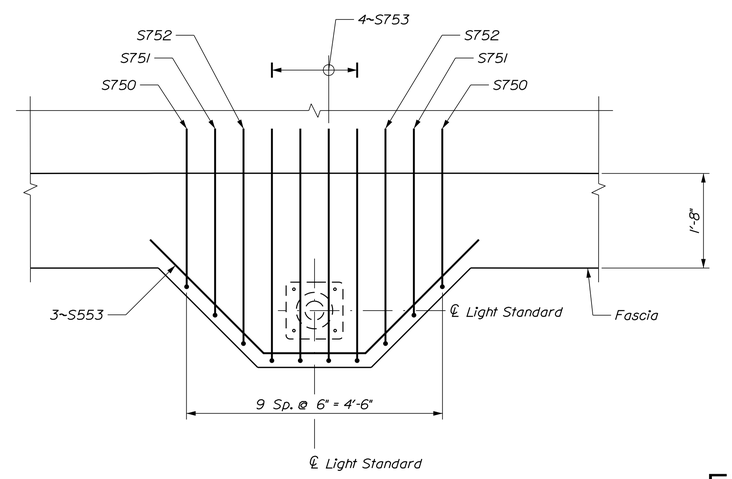

TYPICAL LIGHT STANDARD BASE REINFORCEMENT PLAN

NOTES:

1. Remove, store and reset the existing two light standards on the bridge as directed by the Resident. Reuse existing luminaire's unless otherwise directed by the Resident.

ERDMAN ANTHONY

STATE OF MAINE
DEPARTMENT OF TRANSPORTATION

NHP-2049(300)

WIN 020493.00

BRIDGE NO. 6149

BRIDGE PLANS

SIGNATURE

P.E. NUMBER

DATE

	BY	DATE
PROJ. MANAGER JOEL KITTREDGE		
DESIGN-DETAILED	T. LINDO	10/2015
CHECKED-REVIEWED	C. SICHAK	10/2015
DESIGN2-DETAILED2	R. FARRELL	
DESIGN3-DETAILED3		
REVISIONS 1		
REVISIONS 2		
REVISIONS 3		
REVISIONS 4		
FIELD CHANGES		

ANDROSCOGGIN RIVER BRIDGE
ANDROSCOGGIN RIVER
OXFORD COUNTY
BETHEL

LIGHTING DETAILS

SHEET NUMBER
20
OF 24

Filename: ...\MSTA\020_Lighting Details.dgn Division: BRIDGE Username: Date:10/15/2015

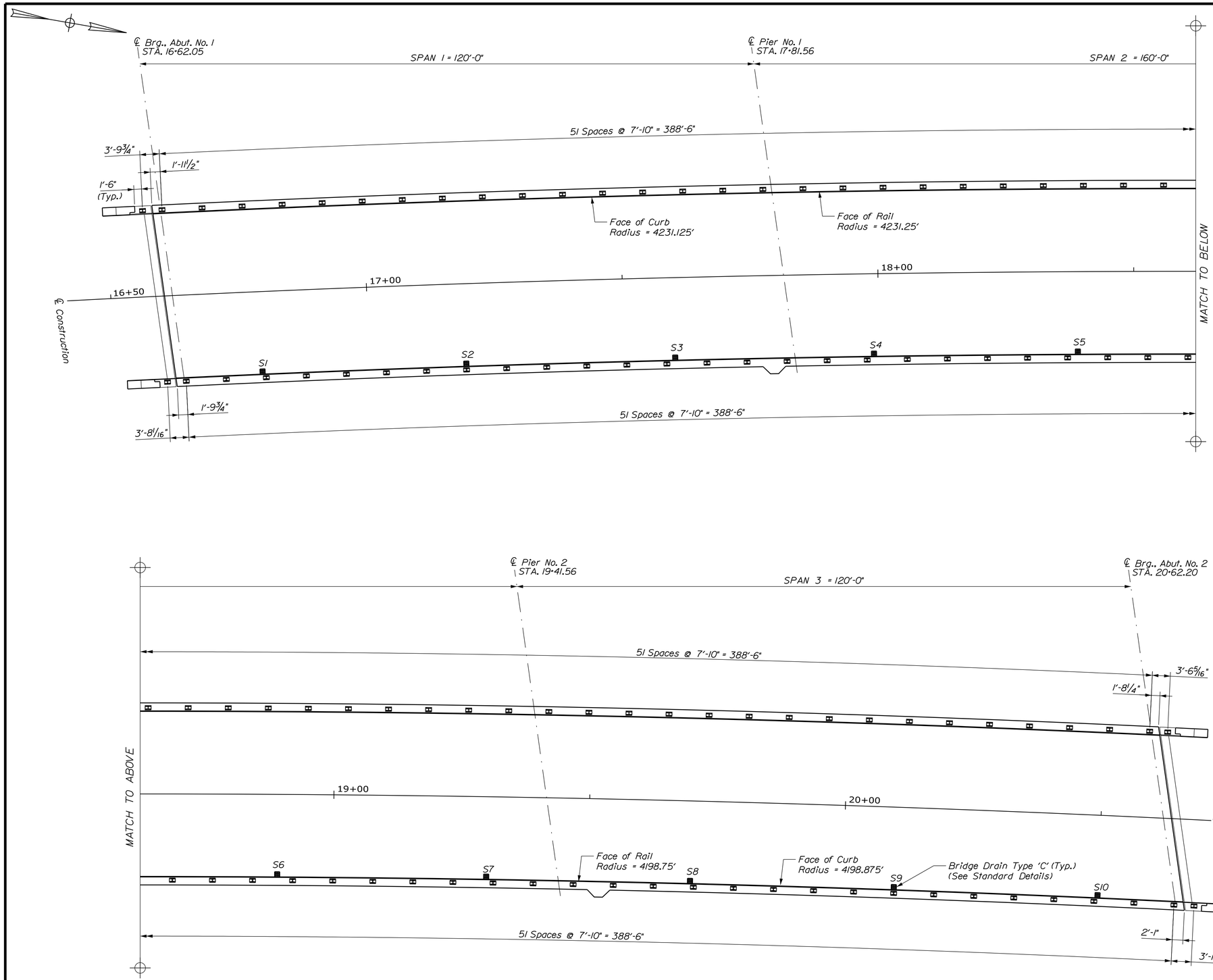

BRIDGE SCUPPER LOCATION		
SCUPPER	STATION	OFFSET
S1	16+77.13	Right
S2	17+17.13	Right
S3	17+57.13	Right
S4	17+97.13	Right
S5	18+37.13	Right
S6	18+87.13	Right
S7	19+27.13	Right
S8	19+67.13	Right
S9	20+07.13	Right
S10	20+47.13	Right

ERDMAN ANTHONY

STATE OF MAINE
DEPARTMENT OF TRANSPORTATION

NHP-2049(300)

WIN 020493.00

BRIDGE NO. 6149

BRIDGE PLANS

SIGNATURE

P.E. NUMBER

DATE

		BY	DATE
PROJ. MANAGER	JOEL KITTREDGE		
DESIGN-DETAILED	C. SICHAK	T. LINDO	10/2015
CHECKED-REVIEWED	R. FARRELL		10/2015
DESIGN2-DETAILED2			
DESIGN3-DETAILED3			
REVISIONS 1			
REVISIONS 2			
REVISIONS 3			
REVISIONS 4			
FIELD CHANGES			

ANDROSCOGGIN RIVER BRIDGE
ANDROSCOGGIN RIVER
OXFORD COUNTY
BETHEL

BRIDGE RAIL & DRAIN LAYOUT PLAN

SHEET NUMBER
21
OF 24

Date:10/15/2015 Username: Division: BRIDGE Filename: ...\MSTA\021_RailPost_Layout.dgn

STRAIGHT BARS

MARK	QTY.	LENGTH	LOCATION
ABUTMENT 1			
A500	4	16'-8"	Abutment Backwall
A501	4	18'-8"	Abutment Backwall
A502	8	9'-2"	Wingwall Longitudinal
ABUTMENT 2			
B500	4	16'-11"	Abutment Backwall
B501	4	18'-11"	Abutment Backwall
B502	8	9'-2"	Wingwall Longitudinal
SUPERSTRUCTURE			
S500	546	60'-0"	Longitudinal Top & Bottom
S501	91	53'-11"	Longitudinal Top & Bottom
S502	12	8'-8"	Transverse Between Girders
S600	96	41'-2"	Longitudinal at Pier
SD500	1614	16'-8"	Transverse Downstream
SD501	6	3'-4 1/2"	Transverse Downstream Between Girders
SU500	1614	18'-7"	Transverse Upstream
SU501	6	5'-3 1/2"	Transverse Upstream Between Girders
CURB			
C500	36	60'-0"	Longitudinal Curb
C501	6	53'-11"	Longitudinal Curb
C502	8	41'-2"	Longitudinal Curb at Pier
C503	12	9'-2"	Longitudinal Wingwall

MARK	QTY.	LENGTH	LOCATION	MARK	QTY.	LENGTH	LOCATION

BENT BARS

MARK	QTY.	LENGTH	TYPE	A	B	C	D	E	F	G	H	O	R	LOCATION
ABUTMENT 1														
A550	34	2'-10"	S		10"	1'-2"	10"							Abutment Backwall
A551	22	5'-4"	S		2'-1"	1'-2"	2'-1"							Wingwall
A552	36	5'-5"	SD	10"	1'-3"	1'-3"	1'-3"			10"		1'-4"		Transverse Curb
ABUTMENT 2														
B550	36	2'-10"	S		10"	1'-2"	10"							Abutment Backwall
B551	22	5'-4"	S		2'-1"	1'-2"	2'-1"							Wingwall
B552	36	5'-5"	SD	10"	1'-3"	1'-3"	1'-3"			10"		1'-4"		Transverse Curb
SUPERSTRUCTURE														
S550	806	6'-10"	C	7"	6'-3"									Transverse Hook
S551	1120	5'-5"	SC	10"	1'-3"	1'-3"	1'-3"			10"		1'-4"		Transverse Curb & Posts
S552	54	6'-11"	SJ	9"	1'-1"	1'-11"	1'-0"	2'-2"						Longitudinal End of Deck
S553	6	7'-5"	B			2'-10"	1'-9"							Light Standard Base
S750	4	8'-0 1/2"	SC	2'-10"	1'-5 1/4"	1'-9"	1'-0 1/4"			1'-0"		1'-10"		Light Standard Base
S751	4	9'-0 1/2"	SC	3'-4"	1'-5 1/4"	2'-3"	1'-0 1/4"			1'-0"		2'-4"		Light Standard Base
S752	4	10'-0 1/2"	SC	3'-10"	1'-5 1/4"	2'-9"	1'-0 1/4"			1'-0"		2'-10"		Light Standard Base
S753	4	10'-6 1/2"	SC	4'-1"	1'-5 1/4"	3'-0"	1'-0 1/4"			1'-0"		3'-1"		Light Standard Base

MARK	QTY.	LENGTH	TYPE	A	B	C	D	E	F	G	H	O	R	LOCATION

TYPE - BENDING DIAGRAMS

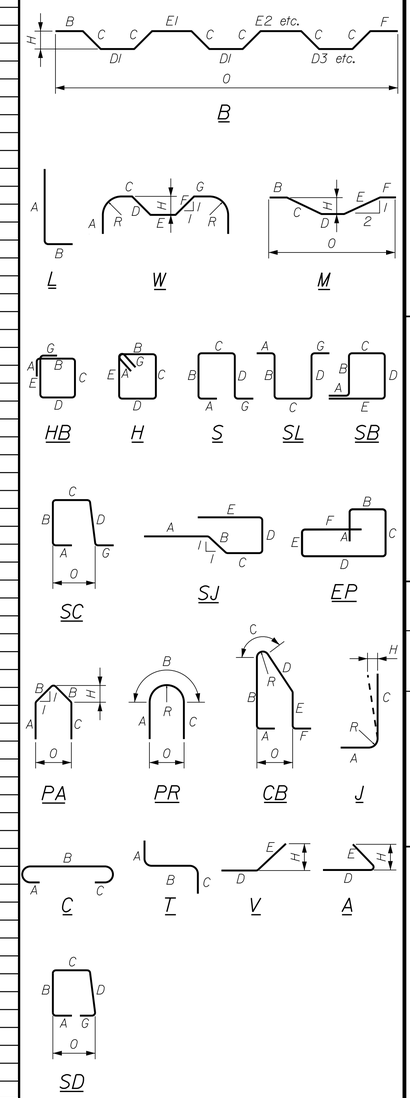

All dimensions are out-to-out of bar.

Bending details and hooks shall conform to the recommendations of the current revision of ACI Standard 315 and ACI Standard 318.

Reinforcing Bar: ASTM A615/A615M, Grade 60

GENERAL NOTES

1. The first two digits following the letter(s) of the mark indicate the size ofthe bar:

   Mark "A502" = bar size #5
   Mark "P805" = bar size #8
   Mark "S650" = bar size #6

2. Each crank bar, Type B, may be replaced by two (2) straight bars (one top and one bottom) of the same bar size as the crank bar. Payment in either case shall be based on crank bars as schedule on the plans.

ERDMAN ANTHONY

STATE OF MAINE
DEPARTMENT OF TRANSPORTATION

NHP-2049(300)

WIN 020493.00

BRIDGE PLANS

BRIDGE NO. 6149

	BY	DATE
PROJ. MANAGER JOEL KITTREDGE		
DESIGN-DETAILED	C. SICHAK	10/2015
CHECKED-REVIEWED	R. FARRELL	10/2015
DESIGN2-DETAILED2		
DESIGN3-DETAILED3		
REVISIONS 1		
REVISIONS 2		
REVISIONS 3		
REVISIONS 4		
FIELD CHANGES		

SIGNATURE

P.E. NUMBER

DATE

ANDROSCOGGIN RIVER BRIDGE
ANDROSCOGGIN RIVER
OXFORD COUNTY
BETHEL

REINFORCING STEEL SCHEDULE

SHEET NUMBER

22

OF 24

Filename: ...\MSTA\022_Rebar Schedule.dgn Division: BRIDGE Username: Date:10/15/2015

THIS PLAN WAS PREPARED IN CONNECTION WITH THE DEPARTMENT'S ACQUISITION OF REAL PROPERTY FOR TRANSPORTATION PURPOSES. IT CANNOT BE USED TO ESTABLISH LEGAL BOUNDARIES BETWEEN ABUTTING PROPERTY OWNERS.

GRID 19XX
ZONE
N

JUDITH BARKER

LOT LINE

JUDITH BARKER

P.L.

MELISSA MOREL
THOMAS ANDREW BONFATTI

120'-0" Span 1

8'0'0"

46+00 47+00 48+00 49+00 50+00 51+00

TO BETHEL VILLAGE MAYVILLE ROAD STATE HIGHWAY "25" U.S. ROUTE 2

BASELINE & CURVE DATA
FROM S.H.C. FILE NO. 9-153

CURVE DATA
P.I. STA. = 54+45.79
D = 1°-20'
Δ = 22°-59'-53" RT.
T = 874.20'
L = 1724.86'
E = 88.03'
R = 4297.18'

PC = STA. 45+71.59

CENTERLINE OF LAYOUT FOR
FORMER LOCATION OF U.S. ROUTE 2
PRIOR TO DISCONTINUANCE OF 1971

RIPLEY AND FLETCHER

TOWN OF BETHEL

JAMES MURPHY
MARJORIE MURPHY

DISCONTINUANCE
OXFORD COUNTY COMMISSIONERS RECORDS
VOLUME 3A, PAGE 69, SEPTEMBER, 1971

EXISTING RIGHT-OF-WAY REFERENCES:

SEE S.H.C. FILE NO. 9-153, SHEETS 1-3, JAN. 1966 & MARCH 2004

ALSO DISCONTINUANCE
OXFORD COUNTY
VOL. 3A, PAGE 69, SEPT. 1971

BRIDGE NO. 6149 — ANDROSCOGGIN RIVER BRIDGE OVER THE ANDROSCOGGIN RIVER — WIN 20493.00

SYMBOLS

- ● IP or ● IPF (IRON PIPE or PIN FOUND)
- ☐ S.T. (SEPTIC TANK)
- ⊠ (ROW MONUMENT)
- ⊗BM (TRAVERSE POINT)
- WELL
- GROUNDING UNIT LINE
- CONSTRUCTION LIMIT LINE
- PROPERTY LINE
- LIMITS OF ACQUISITION PORTION (LOVAP)
- EXISTING RIGHT OF WAY
- NEW RIGHT OF WAY
- NEW ROW WITHIN EXIST. ROW
- CONTROL OF ACCESS
- WATER LINE
- GAS LINE
- ELECTRIC LINE
- TELEPHONE LINE
- SEWER LINE

ITEM	TECH	CHECKED
BASE MAP		
EXIST. R/W	PNS	
PROP. LINES	PNS	
AREAS		

STATE OF MAINE
DEPARTMENT OF TRANSPORTATION
16 STATE HOUSE STATION - AUGUSTA, ME 04333-0016

BETHEL
RIGHT OF WAY MAP

REVISIONS			
NO.	DATE	DESCRIPTION	BY

PLAN FILED IN PLAN BOOK PAGE COUNTY RECORD					
NO.	GRANTOR	INSTRUMENT	DATE	BOOK	PAGE

DAVID BERNHARDT
COMMISSIONER
JOYCE NOEL TAYLOR
CHIEF ENGINEER

DATE

STATE HIGHWAY "25"
U.S. ROUTE 2 MAYVILLE ROAD
BETHEL OXFORD COUNTY
FEDERAL AID PROJECT NO. NHP-2049(300)

MAY 2015 | RIGHT-OF-WAY MAP
SCALE 1" = 25' | SHEET 1 OF 2

SHEET NUMBER
23
OF 24

Filename: ...\00\ROW\MSTA\001_RWPLAN1.dgn Division: BRIDGE Username: richard.e.myers Date:9/25/2015

THIS PLAN WAS PREPARED IN CONNECTION WITH THE DEPARTMENT'S ACQUISITION OF REAL PROPERTY FOR TRANSPORTATION PURPOSES. IT CANNOT BE USED TO ESTABLISH LEGAL BOUNDARIES BETWEEN ABUTTING PROPERTY OWNERS.

GRID 19XX
ZONE
N

TEMP. CONST. LIMITS
EXISTING CONST. LIMIT LINE
0.56± AC.
TEMP. CONST. LIMITS
EXISTING CONST. LIMIT LINE
TEMP. CONST. LIMITS

160'-0" Span 2
120'-0" Span 3

EXISTING SPUR DIKE EASEMENT
ACQUIRED AS PART OF
S.H.C. FILE NO. 9-153, JANUARY 1966

WWD ADVENTURES, LLC
ITEM NO. (1)
TEMP. CONST. RIGHTS = 0.56± AC. (1)
TOTAL AREA = 6± AC. (PER TAX MAP)

0.56± AC.
TEMP. CONST. LIMITS
EXISTING METAL SLUICE AND CULVERT EASE.
ACQUIRED AS PART OF S.H.C. FILE NO. 9-153, SHEET 2, 1966
TEMP. CONST. LIMITS

NORTH ROAD

BASELINE & CURVE DATA
FROM S.H.C. FILE NO. 9-153

TO BETHEL VILLAGE
BEGIN B.L.
52+00
53+00
+40
54+00
55+00
600.00'
56+00
MAYVILLE ROAD
STATE HIGHWAY "25"
U.S. ROUTE 2
57+00
+17
58+00
END B.L.
TO NEWRY
35'-7"

CURVE DATA
P.I. STA. = 54+45.79
D = 1°-20'
Δ = 22°-59'-53" RT.
T = 874.20'
L = 1724.86'
E = 88.03'
R = 4297.18'

CENTERLINE OF LAYOUT FOR
FORMER LOCATION OF U.S. ROUTE 2
PRIOR TO DISCONTINUANCE OF 1971

EXISTING
CONST. & MAINT. EASE. LIM.
EXISTING CONST. & MAINT. EASE. LIMITS

EXISTING CONST. AND MAINT. EASEMENT
ACQUIRED AS PART OF PIN 010516.11, JANUARY 2005

EXISTING CONST. AND MAINT. EASEMENT
ACQUIRED AS PART OF PIN 010516.11, MARCH 2004

EXISTING CONST. & MAINT. EASE. LIMITS
EXISTING METAL SLUICE EASE.
ACQUIRED AS PART OF S.H.C. FILE NO.
9-153, SHEET 2, 1966

JEFFREY PARSONS
PATRICIA PARSONS

EXISTING RIGHT-OF-WAY REFERENCES:

SEE S.H.C. FILE NO. 9-153, SHEETS 1-3, JAN. 1966 & MARCH 2004

ALSO DISCONTINUANCE
OXFORD COUNTY
VOL. 3A, PAGE 69, SEPT. 1971

BRIDGE NO. 6149
ANDROSCOGGIN RIVER BRIDGE
OVER THE
ANDROSCOGGIN RIVER
WIN 20493.00

SYMBOLS
- IP or ● IPF (IRON PIPE or PIN FOUND)
- S.T. (SEPTIC TANK)
- (ROW MONUMENT)
- BM (TRAVERSE POINT)
- WELL
- BEGINNING LIMIT LINE
- CONSTRUCTION LIMIT LINE
- PROPERTY LINE
- LIMITS OF PARCEL (PER TAX MAP)
- WATER LINE
- GAS LINE
- ELECTRIC LINE
- TELEPHONE LINE
- SEWER LINE
- NEW RIGHT OF WAY
- EXISTING RIGHT OF WAY
- NEW ROW WITHIN EXIST. ROW
- CONTROL OF ACCESS

ITEM	TECH	CHECKED
BASE MAP		
EXIST. R/W	PNS	
PROP. LINES	PNS	
AREAS		

STATE OF MAINE
DEPARTMENT OF TRANSPORTATION
16 STATE HOUSE STATION - AUGUSTA, ME 04333-0016

BETHEL
RIGHT OF WAY MAP

REVISIONS			
NO.	DATE	DESCRIPTION	BY

PLAN FILED IN PLAN BOOK		PAGE		COUNTY RECORD			
NO.	GRANTOR	INSTRUMENT	DATE	BOOK	PAGE		

DAVID BERNHARDT
COMMISSIONER
JOYCE NOEL TAYLOR
CHIEF ENGINEER
DATE

STATE HIGHWAY "25"
U.S. ROUTE 2 MAYVILLE ROAD
BETHEL OXFORD COUNTY
FEDERAL AID PROJECT NO. NHP-2049(300)

MAY 2015 | RIGHT-OF-WAY MAP
SCALE 1" = 25' | SHEET 2 OF 2

SHEET NUMBER
24
OF 24

Filename: ...\00\ROW\MSTA\002_RWPLAN2.dgn Division: BRIDGE Username: richard.e.myers Date:9/25/2015