STATE OF MAINE
DEPARTMENT OF TRANSPORTATION
16 STATE HOUSE STATION
AUGUSTA, MAINE 04333-0016

Paul R. LePage
GOVERNOR

David Bernhardt
COMMISSIONER

November 16, 2015
Subject: Bridge Deck Replacement
State WIN: 020493.00
Location: **Bethel**
Amendment No. 1

Dear Sir/Ms:

Make the following changes to the Bid Documents:

REMOVE pages 16 thru 21, "Proposal Schedule of Items" dated 10/19/2015 and **REPLACE** with the attached revised "Proposal Schedule of Items", 6 pages, dated 11/13/2015.

The following sheets are to be REMOVED from the existing plan set and then REPLACED with the corresponding attached revised sheets:

REMOVE sheet	and **REPLACE** with sheet dated 11/13/2015
1	1
2	2
18	18
19	19
22	22

The following questions have been received:

Question: Is it correct that items 502.49 Curbs (including stirrups) and item 526.34 transition barriers are epoxy coated?

Response: The reinforcement in the curbs, transition barriers, and in the top of the abutments has been changed to epoxy coated. Please refer to the updated sheets.

Question: Sheet 19 shows a cross section of the deck with a closure pour and mentions mech./welded splices. We would like to see a large sketch detail of the closure pour including the mech./welded splices. These are expensive and there could be as many as 3256 sets.

Response: To clarify, the Department has estimated approximately 1610 mechanical/welded splices for reinforcement in the cast-in-place portion of the structural slab. An extra, larger detail has been provided on one of the updated sheets.

Question: Do the existing shear connectors and spirals need to removed? If so, to what limit?

Response: Existing shear connectors/spirals shall be removed completely. Where existing shear connectors/spirals interfere with the installation of new shear connectors, the top flange in the area of the existing connection shall be ground flush.

Consider this change and information prior to submitting your bid on **November 18, 2015**.

Sincerely,

George Macdougall

George M. A. Macdougall P.E.
Contracts & Specifications Engineer

Maine Department of Transportation

Proposal Schedule of Items

Proposal ID: 020493.00 **Project(s):** 020493.00

SECTION: 1 INITIAL GROUP

Alt Set ID: **Alt Mbr ID:**

Contractor: _____

Proposal Line Number	Item ID Description	Approximate Quantity and Units	Unit Price Dollars	Unit Price Cents	Bid Amount Dollars	Bid Amount Cents
0010	202.10 REMOVING EXISTING SUPERSTRUCTURE (PROPERTY OF CONTRACTOR)	LUMP SUM	LUMP SUM		_____	_____
0020	202.12 REMOVING EXISTING STRUCTURAL CONCRETE	7.000 CY	_____	_____	_____	_____
0030	202.13 REMOVING EXISTING RAILINGS (RETAINED BY DEPARTMENT)	811.000 LF	_____	_____	_____	_____
0040	202.202 REMOVING PAVEMENT SURFACE	750.000 SY	_____	_____	_____	_____
0050	203.20 COMMON EXCAVATION	300.000 CY	_____	_____	_____	_____
0060	203.24 COMMON BORROW	50.000 CY	_____	_____	_____	_____
0070	203.61 CONSTRUCT TEMPORARY ACCESS ROAD	LUMP SUM	LUMP SUM		_____	_____
0080	203.62 REMOVAL OF TEMPORARY ACCESS ROAD	LUMP SUM	LUMP SUM		_____	_____
0090	304.15 AGGREGATE BASE COURSE - TYPE B	150.000 CY	_____	_____	_____	_____
0100	403.2081 12.5 MM POLYMER MODIFIED HOT MIX ASPHALT	20.000 T	_____	_____	_____	_____
0110	403.211 HOT MIX ASPHALT (SHIMMING)	2.000 T	_____	_____	_____	_____

Maine Department of Transportation

Proposal Schedule of Items

Proposal ID: 020493.00 **Project(s):** 020493.00

SECTION: 1 INITIAL GROUP

Alt Set ID: **Alt Mbr ID:**

Contractor: _____

Proposal Line Number	Item ID Description	Approximate Quantity and Units	Unit Price Dollars . Cents	Bid Amount Dollars . Cents
0120	403.213 HOT MIX ASPHALT 12.5 MM BASE	5.000 T	_____.____	_____.____
0130	403.2131 12.5 MM POLYMER MODIFIED HMA BASE	20.000 T	_____.____	_____.____
0140	409.15 BITUMINOUS TACK COAT - APPLIED	105.000 G	_____.____	_____.____
0150	502.219 STRUCTURAL CONCRETE, ABUTMENTS AND RETAINING WALLS	LUMP SUM	LUMP SUM	_____.____
0160	502.26 STRUCTURAL CONCRETE ROADWAY AND SIDEWALK SLABS ON STEEL BRIDGES	LUMP SUM	LUMP SUM	_____.____
0170	502.49 STRUCTURAL CONCRETE CURBS AND SIDEWALKS	LUMP SUM	LUMP SUM	_____.____
0180	502.83 PRECAST BLOCK MAT	2,100.000 SF	_____.____	_____.____
0190	503.14 EPOXY-COATED REINFORCING STEEL, FABRICATED AND DELIVERED	4,400.000 LB	_____.____	_____.____
0200	503.15 EPOXY-COATED REINFORCING STEEL, PLACING	4,400.000 LB	_____.____	_____.____
0210	503.17 MECHANICAL WELDED SPLICE	8.000 EA	_____.____	_____.____
0220	505.08 SHEAR CONNECTORS	LUMP SUM	LUMP SUM	_____.____

Maine Department of Transportation

Proposal Schedule of Items

Proposal ID: 020493.00 **Project(s):** 020493.00

SECTION: 1 INITIAL GROUP

Alt Set ID: **Alt Mbr ID:**

Contractor: _____

Proposal Line Number	Item ID Description	Approximate Quantity and Units	Unit Price Dollars	Unit Price Cents	Bid Amount Dollars	Bid Amount Cents
0230	507.0821 STEEL BRIDGE RAILING, 3 BAR	LUMP SUM	LUMP SUM		_____	_____
0240	508.14 HIGH PERFORMANCE WATERPROOFING MEMBRANE	LUMP SUM	LUMP SUM		_____	_____
0250	514.06 CURING BOX FOR CONCRETE CYLINDERS	1.000 EA	_____	_____	_____	_____
0260	515.21 PROTECTIVE COATING FOR CONCRETE SURFACES	LUMP SUM	LUMP SUM		_____	_____
0270	520.21 EXPANSION DEVICE - GLAND SEAL	2.000 EA	_____	_____	_____	_____
0280	524.40 PROTECTIVE SHIELD	LUMP SUM	LUMP SUM		_____	_____
0290	526.305 TEMPORARY CONCRETE BARRIER, BRACED TYPE 1	LUMP SUM	LUMP SUM		_____	_____
0300	526.34 PERMANENT CONCRETE TRANSITION BARRIER	4.000 EA	_____	_____	_____	_____
0310	527.34 WORK ZONE CRASH CUSHIONS	2.000 UN	_____	_____	_____	_____
0320	606.1721 BRIDGE TRANSITION - TYPE 1	4.000 EA	_____	_____	_____	_____
0330	606.23 GUARDRAIL TYPE 3C - SINGLE RAIL	450.000 LF	_____	_____	_____	_____
0340	606.353 REFLECTORIZED FLEXIBLE GUARDRAIL MARKER	2.000 EA	_____	_____	_____	_____

Maine Department of Transportation

Proposal Schedule of Items

Proposal ID: 020493.00 **Project(s):** 020493.00

SECTION: 1 INITIAL GROUP

Alt Set ID: **Alt Mbr ID:**

Contractor: _____

Proposal Line Number	Item ID Description	Approximate Quantity and Units	Unit Price Dollars	Unit Price Cents	Bid Amount Dollars	Bid Amount Cents
0350	606.79 GUARDRAIL 350 FLARED TERMINAL	1.000 EA				
0360	609.31 CURB TYPE 3	25.000 LF				
0370	615.07 LOAM	5.000 CY				
0380	618.141 SEEDING METHOD NUMBER 3	1.000 UN				
0390	619.1201 MULCH - PLAN QUANTITY	1.000 UN				
0400	619.1401 EROSION CONTROL MIX - PLAN QUANTITY	3.000 CY				
0410	627.733 4" WHITE OR YELLOW PAINTED PAVEMENT MARKING LINE	3,200.000 LF				
0420	627.77 REMOVING PAVEMENT MARKINGS	270.000 SF				
0430	627.78 TEMPORARY 4 INCH PAINTED PAVEMENT MARKING LINE, WHITE OR YELLOW	2,466.000 LF				
0440	629.05 HAND LABOR, STRAIGHT TIME	40.000 HR				
0450	631.12 ALL PURPOSE EXCAVATOR (INCLUDING OPERATOR)	24.000 HR				
0460	631.13 BULLDOZER (INCLUDING OPERATOR)	24.000 HR				

Maine Department of Transportation

Proposal Schedule of Items

Proposal ID: 020493.00 **Project(s):** 020493.00

SECTION: 1 INITIAL GROUP

Alt Set ID: **Alt Mbr ID:**

Contractor: _____

Proposal Line Number	Item ID Description	Approximate Quantity and Units	Unit Price Dollars	Unit Price Cents	Bid Amount Dollars	Bid Amount Cents
0470	631.172 TRUCK - LARGE (INCLUDING OPERATOR)	24.000 HR				
0480	634.160 HIGHWAY LIGHTING	LUMP SUM	LUMP SUM			
0490	638.01 EMBEDDED WORK IN STRUCTURE	LUMP SUM	LUMP SUM			
0500	639.18 FIELD OFFICE TYPE A	1.000 EA				
0510	643.72 TEMPORARY TRAFFIC SIGNAL	LUMP SUM	LUMP SUM			
0520	645.116 REINSTALL REGULATORY, WARNING, CONFIRMATION AND ROUTE MARKER ASSEMBLY SIGN	5.000 EA				
0530	652.30 FLASHING ARROW BOARD	2.000 EA				
0540	652.312 TYPE III BARRICADE	12.000 EA				
0550	652.33 DRUM	40.000 EA				
0560	652.34 CONE	25.000 EA				
0570	652.35 CONSTRUCTION SIGNS	254.000 SF				
0580	652.361 MAINTENANCE OF TRAFFIC CONTROL DEVICES	LUMP SUM	LUMP SUM			

Maine Department of Transportation

Proposal Schedule of Items

Proposal ID: 020493.00 **Project(s):** 020493.00

SECTION: 1 INITIAL GROUP

Alt Set ID: **Alt Mbr ID:**

Contractor: _____

Proposal Line Number	Item ID Description	Approximate Quantity and Units	Unit Price Dollars	Unit Price Cents	Bid Amount Dollars	Bid Amount Cents
0590	652.38 FLAGGER	40.000 HR	_____	_____	_____	_____
0600	652.41 PORTABLE CHANGEABLE MESSAGE SIGN	2.000 EA	_____	_____	_____	_____
0610	656.75 TEMPORARY SOIL EROSION AND WATER POLLUTION CONTROL	LUMP SUM	LUMP SUM		_____	_____
0620	659.10 MOBILIZATION	LUMP SUM	LUMP SUM		_____	_____

Section: 1 **Total:** _____.____

Total Bid: _____.____

STATE OF MAINE
DEPARTMENT OF TRANSPORTATION

SPECIFICATIONS

Design: AASHTO LRFD Bridge Design Specifications, Seventh Edition 2014.

DESIGN LOADING

Live Load ..... HL - 93 Modified For Strength I

TRAFFIC DATA

Current (2012) AADT	8750
Future (2032) AADT	10500
DHV - % of AADT	10
Design Hour Volume	1050
% Heavy Trucks (AADT)	11
% Heavy Trucks (DHV)	11
Directional Distribution (DHV)	51
18 kip Equivalent P 2.0	1297
18 kip Equivalent P 2.5	1253
Design Speed (mph)	40

MATERIALS

Concrete:	
Curbs & Transition Barriers	Class "LP"
All Other	Class "A"
Reinforcing Steel (Deck Slab)	ASTM A 615/A 615M, Grade 60
Reinforcing Steel (Abut., Curb, Transition Barrier)	ASTM A 775/A 775M, Grade 60

BASIC DESIGN STRESSES

Concrete	f 'c = 4,000 psi
Reinforcing Steel	f y = 60,000 psi

BETHEL
OXFORD COUNTY
ANDROSCOGGIN RIVER BRIDGE
OVER
ANDROSCOGGIN RIVER
U.S. ROUTE 2
PROJECT No. NHP-2049(300)
PROJECT LENGTH 0.12 mi.
BRIDGE NO. 6149

LIST OF DRAWINGS

Title Sheet 1
Estimate of Quantities and General Notes 2
General Plan 3
Profile 4
Typical Sections 5
Staged Construction Sections 6
Traffic Control Plan 7
Temporary Concrete Barrier (Braced) (1 of 2) 8
Temporary Concrete Barrier (Braced) (2 of 2) 9
Scour Countermeasures Details 10
Abutment 1 Demolition Plans 11
Abutment 1 Plan 12
Abutment 1 Details 13
Abutment 2 Demolition Plans 14
Abutment 2 Plan 15
Abutment 2 Details 16
Shear Connector Details 17
Superstructure Plan 18
Superstructure Details 19
Lighting Details 20
Railing and Drain Layout Plan 21
Reinforcing Steel Schedule 22
Right-of-Way Map 23-24

UTILITIES

Bethel Water District
Central Maine Power Company
Maine Fiber
Oxford Networks
Time Warner Cable
Town of Bethel Sewer District

MAINTENANCE OF TRAFFIC

Staged Construction: Maintain one 11 foot wide travel way of alternating one-way traffic utilizing temporary traffic signals while the new deck slab is constructed via two longitudinal stages.

PROJECT LOCATION:	Mayville Road (US Route 2) over Androscoggin River Latitude 44°-25'-00" N Longitude 70°-47'-48" W
PROGRAM AREA:	Bridge Program
OUTLINE OF WORK:	Bridge deck replacement, install scour countermeasures at Piers

ERDMAN ANTHONY

WIN 020493.00

STATE OF MAINE
DEPARTMENT OF TRANSPORTATION

APPROVED	DATE
COMMISSIONER:	
CHIEF ENGINEER:	

STATE OF MAINE CHRISTOPHER GEORGE SICHAK No. 13848 LICENSED PROFESSIONAL ENGINEER

SIGNATURE	
P.E. NUMBER	13848
DATE	10/15/2015

PROJECT INFORMATION

PROGRAM	BRIDGE PROGRAM
PROJECT MANAGER	JOEL KITTREDGE
DESIGNER	CHRIS SICHAK
CONSULTANT	ERDMAN ANTHONY
PROJECT RESIDENT	
CONTRACTOR	
PROJECT COMPLETION DATE	

BETHEL
ANDROSCOGGIN RIVER BRIDGE

TITLE SHEET

SHEET NUMBER
1
OF 24

Filename: ...\00\Bridge\MSTA\001_Title.dgn Division: BRIDGE Username: Date:11/13/2015

ESTIMATED QUANTITIES			
ITEM NO.	DESCRIPTION	QUANTITY	UNIT
202.10	REMOVING EXISTING SUPERSTRUCTURE (PROPERTY OF CONTRACTOR) (479 CY)	1	LS
202.12	REMOVING EXISTING STRUCTURAL CONCRETE	7	CY
202.13	REMOVING EXISTING RAILINGS - RETAINED BY DEPARTMENT	811	LF
202.202	REMOVE PAVEMENT SURFACE	750	SY
203.20	COMMON EXCAVATION	300	CY
203.24	COMMON BORROW	50	CY
203.61	TEMPORARY ACCESS ROAD	1	LS
203.62	REMOVAL OF TEMPORARY ACCESS ROAD	1	LS
304.15	AGGREGATE BASE COURSE - TYPE B	150	CY
403.2081	HOT MIX ASPHALT 12.5 MM NOMINAL MAXIMUM SIZE (POLYMER MODIFIED)	20	TON
403.211	HOT MIX ASPHALT 9.5 MM NOMINAL MAXIMUM SIZE (SHIMMING)	2	TON
402.213	HOT MIX ASPHALT 12.5 MM NOMINAL MAXIMUM SIZE (BASE & INTERMEDIATE BASE COURSE)	5	TON
403.2131	HOT MIX ASPHALT 12.5 MM NOMINAL MAXIMUM SIZE, BASE & INTERMEDIATE BASE COURSE, POLYMER MODIFIED	20	TON
409.15	BITUMINOUS TACK COAT, APPLIED	105	GAL
502.219	STRUCTURAL CONCRETE ABUTMENTS & RETAINING WALLS (8 CY)	1	LS
502.26	STRUCTURAL CONCRETE ROADWAY & SIDEWALK SLAB ON STEEL BRIDGE (355 CY)	1	LS
502.49	STRUCTURAL CONCRETE CURBS AND SIDEWALKS (53 CY)	1	LS
502.83	PRECAST BLOCK MAT	2100	SF
503.14	EPOXY COATED REINFORCING STEEL, FABRICATED & DELIVERED ⚠1	4400	LB
503.15	EPOXY COATED REINFORCING STEEL, PLACING ⚠1	4400	LB
503.17	MECHANICAL WELDED SPLICE	8	EA
505.08	SHEAR CONNECTORS (4224 EA)	1	LS
507.0821	STEEL BRIDGE RAILING, 3 BAR (825 LF)	1	LS
508.14	HIGH PERFORMANCE WATERPROOFING MEMBRANE (1448 SY)	1	LS
514.06	CURING BOX FOR CONCRETE CYLINDERS	1	EA
515.21	PROTECTIVE COATING FOR CONCRETE SURFACES (408 SY)	1	LS
520.21	EXPANSION DEVICE - GLAND SEAL	2	EA
524.40	PROTECTIVE SHIELD	1	LS
526.305	TEMPORARY CONCRETE BARRIER, BRACED, TYPE I (650 LF)	1	LS
526.34	PERMANENT CONCRETE TRANSITION BARRIER	4	EA
527.34	WORK ZONE CRASH CUSHIONS	2	UN
606.1721	BRIDGE TRANSITION - TYPE I	4	EA
606.23	GUARDRAIL TYPE 3C - SINGLE RAIL	450	LF
606.353	REFLECTORIZED FLEXIBLE GUARDRAIL MARKER	2	EA
606.79	GUARDRAIL 350 FLARED TERMINAL	1	EA
609.31	CURB TYPE 3	25	LF
615.07	LOAM	5	CY
618.141	SEEDING METHOD NUMBER 3	1	UN
619.1201	MULCH	1	UN
619.1401	EROSION CONTROL MIX	3	CY
627.733	4" WHITE OR YELLOW PAINTED PAVEMENT MARKING LINE	3200	LF
627.77	REMOVING EXISTING PAVEMENT MARKING	270	SF
627.78	TEMPORARY PAVEMENT MARKING LINE, WHITE OR YELLOW	2466	LF
629.05	HAND LABOR, STRAIGHT TIME	40	HR
631.12	ALL-PURPOSE EXCAVATOR (INCLUDING OPERATOR)	24	HR
631.13	BULLDOZER (INCLUDING OPERATOR)	24	HR
631.172	TRUCK-LARGE (INCLUDING OPERATOR)	24	HR
634.160	HIGHWAY LIGHTING	1	LS
638.01	EMBEDDED WORK IN STRUCTURE	1	LS
639.18	FIELD OFFICE, TYPE A	1	EA
643.72	TEMPORARY TRAFFIC SIGNAL	1	LS
645.116	REINSTALL REGULATORY, WARNING, CONFIRMATION, & ROUTE MARKER ASSEMBLY SIGN	5	EA
652.30	FLASHING ARROW	2	EA
652.312	TYPE III BARRICADES	12	EA
652.33	DRUM	40	EA
652.34	CONE	25	EA

ESTIMATED QUANTITIES			
ITEM NO.	DESCRIPTION	QUANTITY	UNIT
652.35	CONSTRUCTION SIGNS	254	SF
652.361	MAINTENANCE OF TRAFFIC CONTROL DEVICES (170 CD)	1	LS
652.38	FLAGGERS	40	HR
652.41	PORTABLE CHANGEABLE MESSAGE SIGN	2	EA
656.75	TEMPORARY SOIL EROSION AND POLLUTION CONTROL	1	LS
659.10	MOBILIZATION	1	LS

GENERAL CONSTRUCTION NOTES

1. All utility facilities shall be adjusted by the respective utilities unless otherwise noted or as detailed in the plans.

2. For easements, construction limits and right of way lines, refer to Right of Way Map.

3. Existing guardrail shall be removed as shown in the Plans and will become the property of the Contractor. Payment for guardrail removal will be considered incidental to Contract items.

4. Place loam 2 inches deep on all new or reconstructed sideslopes or as directed by the Resident.

5. Potential clearing exists for access to the river. The exact limits will be established in the field by the Resident. Payment for clearing will be considered incidental to Contract items.

6. All costs for cofferdams, including pumping, maintenance, related temporary soil erosion and water pollution controls and removal, will not be paid for directly, but will be considered incidental to related Contract items.

7. The Contractor shall allow safe passage of boat traffic through the bridge opening throughout the duration of the project with a minimum 15 foot wide lane.

8. The Contractor's operations shall maintain public access to the trail along the north bank during construction.

9. The Contractor shall provide the Resident access to all portions of the work, including that which is only accessible by boat. The method, timing, and location of access shall be approved by the Resident. Payment for access will not be made separately, but will be considered incidental to the Contract.

10. Erosion Control Mix may be substituted in those areas normally receiving loam and seed as directed by the Resident. Placement shall be in accordance with Standard Specifications Section 619, Mulch. Payment will be made under Item No. 619.1401, Erosion Control Mix.

11. Protective Coating for Concrete Surfaces shall be applied to the following areas:

All exposed surfaces of concrete curbs.
Fascias down to drip notch.
All exposed surfaces of Concrete Transition Barriers.
Top of abutment backwalls and to 12 inches below the top of backwalls on the back side.

12. Bidders and Contractors shall note that existing bridge plans may be accessed at the web address below. The plans are reproductions of the original drawings as prepared for the construction of the bridge. It is very unlikely that the plans will show any construction field changes or any alterations, which may have been made to the bridge.
http://www.maine.gov/mdot/contractors/#projecttbl

GENERAL CONSTRUCTION NOTES CONT.

13. Guardrail posts as shown in the Standard Details shall be modified from the indicated length of 6 feet to a length of 7 feet with an embedment of 4.5 feet. Payment will be considered incidental to the guardrail pay items.

14. Bidders and Contractors shall note that there was no formal hydrologic report of the bridge site prepared for this project. Water surface elevations indicated on the profile on Sheet 4 denote the following observed elevations at specific times:
October 2014 (during survey for this project): 627.5 (+/-)
January 1965 (normal water surface at the time of design of the existing bridge): 629.64
March 1936 extreme flood event: 650.79

A scour critical bridge plan of action report was performed in 2010. According to the report, the following Headwater Elevations were calculated:

500 year	650.28
100 year	647.76
50 year	646.59
10 year	643.64

The Bridge Scour Plan of Action (POA) Report may be accessed at the MaineDOT web address previously listed.

A scour assessment performed in 1996 indicates an April 1987 flood elevation approximately 5.5' below the low chord of the existing bridge at an approximate elevation of 645.5'.

The indicated data is based on MaineDOT's interpretation of the information obtained for the subject site. No assurance is given that the information will be representative of the actual conditions at the time of construction.

15. Quantities included for pay items measured and paid for by Lump Sum are estimated quantities and are provided by MaineDOT for informational purposes only. Lump Sum pay items will be paid for at the Contract Bid amount, with no addition or reduction in payment to the Contractor if the actual final quantities are different from the MaineDOT provided estimated quantities, except as follows:

a. If a Lump Sum pay item is eliminated, the requirements of Standard Specifications Section 109.2, Elimination of Items, will take precedence.

b. If other Contract Documents specifically allow a change in payment for a Lump Sum pay item, those requirements will be followed.

c. If a design change results in changes to estimated quantities for Lump Sum pay items, price adjustments will be made in accordance with Standard Specification Section 109.7, Equitable Adjustments to Compensation.

16. The Contractor shall submit a Bridge Deck Demolition Plan to the Resident at least 10 business days prior to the start of demolition work. The plan shall outline the methods and equipment to be used to remove and dispose of all materials indicated by the plans. No work related to the removal of the bridge shall be undertaken by the Contractor until MaineDOT has reviewed the Bridge Demolition Plan for appropriateness and completeness. Payment for all work necessary for developing, submitting and finalizing the Demolition Plan will be considered incidental to the superstructure removal pay item.

17. The existing bridge deck shall be removed by, and become the property of the Contractor. The steel portions of the existing bridge are coated with a lead-based paint system. The Contractor is responsible for the containment, proper management and disposal of all lead-contaminated hazardous waste generated by the process of demolishing the bridge deck. The Contractor is responsible for implementing appropriate OSHA mandated personal protection standards related to this process. Once the existing bridge deck is removed, the Contractor is solely responsible for the care, custody and control of the components of the existing bridge and any hazardous waste generated as a result of the storage, recycling or disposal of the bridge components, including lead-coated steel. The Contractor shall recycle or reuse the steel in accordance with the Maine Department of Environmental Protection's "Maine Hazardous Waste Management Regulations," Chapter 850. A copy of this regulation is available at MaineDOT's offices on Child Street in Augusta. Payment for all labor, materials, equipment and other costs required to remove and dispose of the existing bridge deck will be considered incidental to the superstructure removal pay item.

18. When removing the existing bridge drains, the Contractor shall remove the support bars flush with the existing girder.

ERDMAN ANTHONY

STATE OF MAINE
DEPARTMENT OF TRANSPORTATION

NHP-2049(300)

WIN 020493.00

BRIDGE NO. 6149

BRIDGE PLANS

SIGNATURE

P.E. NUMBER

DATE

		BY	DATE
PROJ. MANAGER	JOEL WITHEDGE		
DESIGN-DETAILED	C. SICHAK	T. LINDO	10/2015
CHECKED-REVIEWED	R. FARRELL		10/2015
DESIGN2-DETAILED2			
DESIGN3-DETAILED3			
REVISIONS 1	REBAR CHANGES		11/15
REVISIONS 2			
REVISIONS 3			
REVISIONS 4			
FIELD CHANGES			

ANDROSCOGGIN RIVER BRIDGE
ANDROSCOGGIN RIVER
BETHEL OXFORD COUNTY

ESTIMATED QUANTITIES
& GENERAL CONSTRUCTION NOTES

SHEET NUMBER
2
OF 24

Filename: ...\MSTA\002_Quantities-Notes.dgn Division: BRIDGE Username: Date:11/13/2015

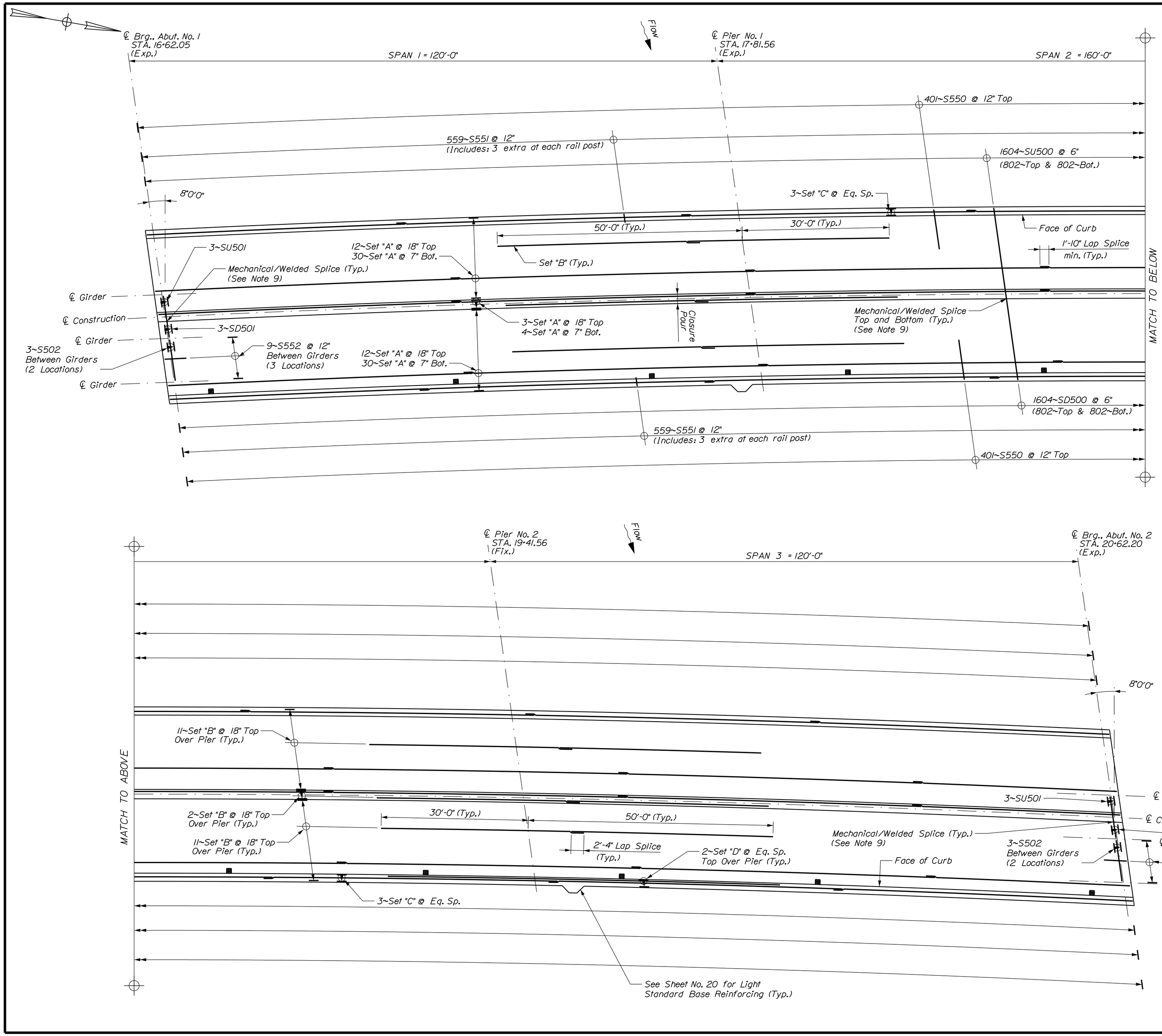

SUPERSTRUCTURE NOTES

1. Reinforcing steel shall have a minimum concrete cover of 2 inches unless otherwise noted.

2. Adjust reinforcing steel to fit around the bridge drains in a manner approved by the Resident. Do not cut transverse reinforcing bars.

3. Form a one inch V-groove on the fascias at the horizontal joint between the curb and slab.

4. The superstructure slab concrete shall be placed in one continuous operation and the concrete shall be kept plastic one complete span behind the span being placed.

5. The formwork and its supports, over the full width of the structural slab, shall remain in place until a minimum of 48 hours has elapsed after placement of the final section of the slab. After this period, removal of formwork for sections meeting the requirements for form removal of Standard Specifications Section 502, Structural Concrete, may proceed.

6. Payment for reinforcing steel fabricated, delivered, and placed in the cast-in-place portion of the structural concrete slab will be considered incidental to the appropriate Standard Specifications Section 502 pay item. Payment for longitudinal curb rebar will be covered under Items 503.12 and 503.13

7. The seal(s) to be furnished shall have minimum Movement Rating(s) as follows:

   Abutment No. 1 = 3½ inch
   Abutment No. 2 = 1½ inch

8. The Contractor shall stagger splice locations of longitudinal bars.

9. Mechanical/Welded splices in the structural concrete slab are incidental to Item 502.26.

10. Precast Deck Panels will not be permitted as a substitute to the cast-in-place concrete deck.

△1 11. All reinforcement encased within Deck Slab with exception of S551 shall be ASTM A 615/A 615M, Grade 60.

STATE OF MAINE
DEPARTMENT OF TRANSPORTATION

NHP-2049(300)

WIN 020493.00

BRIDGE NO. 6149

BRIDGE PLANS

SIGNATURE

P.E. NUMBER

DATE

PROJ. MANAGER	JOEL KITTREDGE		
DESIGN-DETAILED	C. SICHAK	T. LINDO	10/2015
CHECKED-REVIEWED	R. FARRELL		10/2015
DESIGN2-DETAILED2			
DESIGN3-DETAILED3		REBAR CHANGES	11/15
REVISIONS 1			
REVISIONS 2			
REVISIONS 3			
REVISIONS 4			
FIELD CHANGES			

ANDROSCOGGIN RIVER BRIDGE
ANDROSCOGGIN RIVER
BETHEL OXFORD COUNTY

SUPERSTRUCTURE PLAN

ERDMAN ANTHONY

SHEET NUMBER
18
OF 24

Date:11/13/2015
Division: BRIDGE
Username:
Filename: ...\MSTA\018_Superstructure.dgn

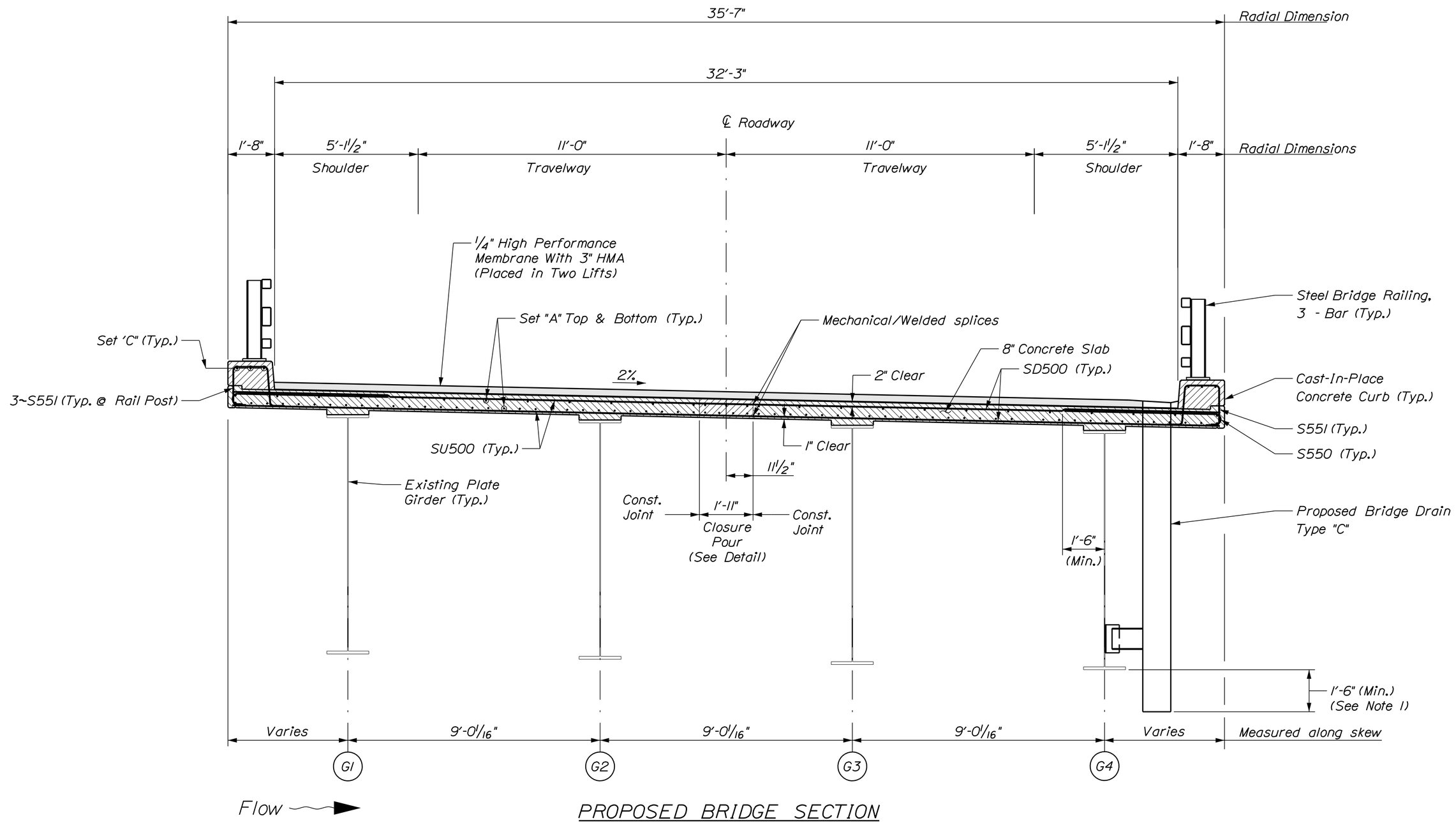

PROPOSED BRIDGE SECTION

NOTES

1. Bridge drain shall extend a minimum of 1'-6" below the bottom flange of girder. Cost to be considered incidental to related contract items.

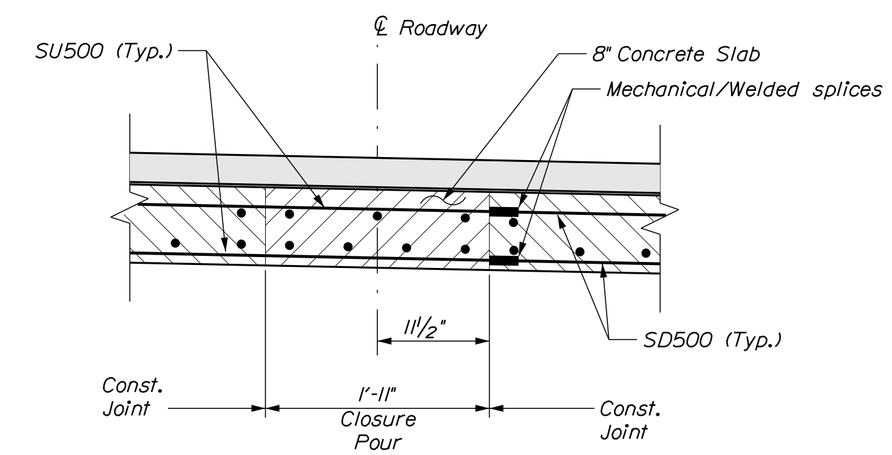

⚠ CLOSURE POUR DETAIL

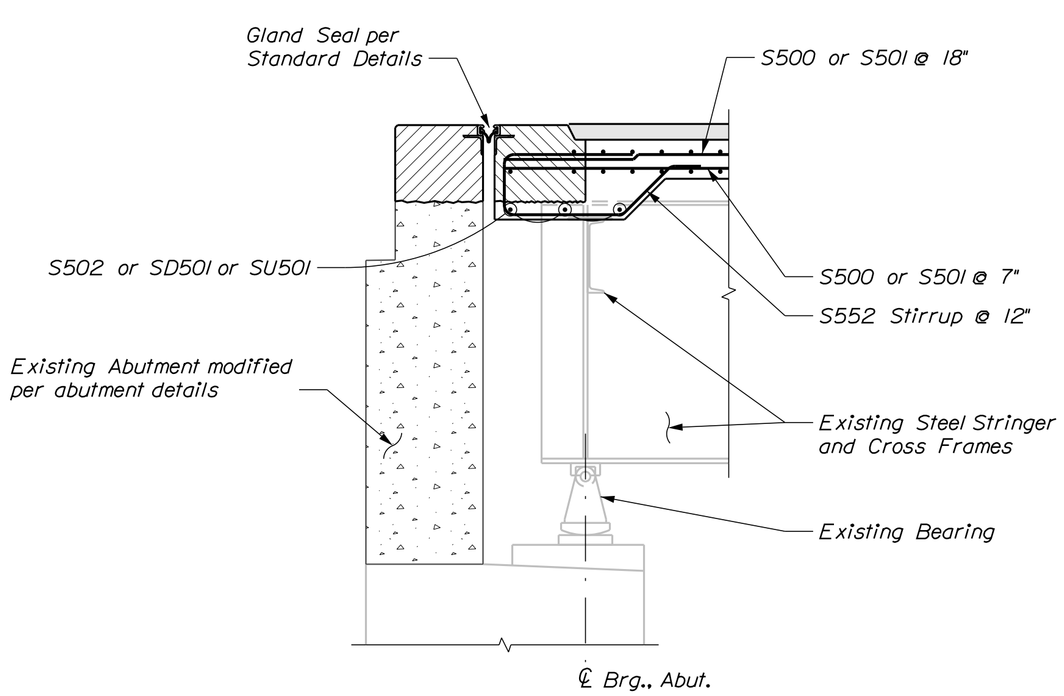

TYPICAL LONGITUDINAL SECTION AT ABUTMENT

BOTTOM OF SLAB ELEVATIONS

	Span No. 1										
	℄ BRG.	.1 Span	.2 Span	.3 Span	.4 Span	.5 Span	.6 Span	.7 Span	.8 Span	.9 Span	℄ BRG.
Girder Line 1	659.02	659.16	659.28	659.40	659.51	659.62	659.71	659.80	659.87	659.94	660.00
Girder Line 2	658.83	658.97	659.10	659.22	659.33	659.43	659.52	659.61	659.68	659.75	659.81
Girder Line 3	658.65	658.78	658.91	659.03	659.14	659.24	659.34	659.42	659.50	659.57	659.63
Girder Line 4	658.46	658.59	658.72	658.84	658.95	659.05	659.15	659.23	659.31	659.38	659.44

	Span No. 2										
	℄ BRG.	.1 Span	.2 Span	.3 Span	.4 Span	.5 Span	.6 Span	.7 Span	.8 Span	.9 Span	℄ BRG.
Girder Line 1	660.00	660.07	660.12	660.16	660.18	660.18	660.18	660.15	660.11	660.06	659.99
Girder Line 2	659.81	659.88	659.93	659.97	659.99	660.00	659.99	659.96	659.92	659.87	659.80
Girder Line 3	659.63	659.69	659.74	659.78	659.80	659.81	659.80	659.78	659.74	659.68	659.61
Girder Line 4	659.44	659.50	659.56	659.59	659.61	659.62	659.61	659.59	659.55	659.49	659.43

	Span No. 3										
	℄ BRG.	.1 Span	.2 Span	.3 Span	.4 Span	.5 Span	.6 Span	.7 Span	.8 Span	.9 Span	℄ BRG.
Girder Line 1	659.99	659.93	659.85	659.78	659.69	659.59	659.48	659.37	659.25	659.12	658.98
Girder Line 2	659.80	659.74	659.67	659.59	659.50	659.40	659.30	659.18	659.06	658.93	658.79
Girder Line 3	659.61	659.55	659.48	659.40	659.31	659.21	659.11	659.00	658.87	658.74	658.60
Girder Line 4	659.43	659.36	659.29	659.21	659.12	659.03	658.92	658.81	658.69	658.55	658.41

ERDMAN ANTHONY

STATE OF MAINE
DEPARTMENT OF TRANSPORTATION

NHP-2049(300)

WIN 020493.00

BRIDGE NO. 6149

BRIDGE PLANS

		BY	DATE
PROJ. MANAGER	JOEL KITTREDGE		
DESIGN-DETAILED	C. SICHAK	T. LINDO	10/2015
CHECKED-REVIEWED	R. FARRELL		10/2015
DESIGN2-DETAILED2			
DESIGN3-DETAILED3			
REVISIONS 1	REBAR CHANGES		11/15
REVISIONS 2			
REVISIONS 3			
REVISIONS 4			
FIELD CHANGES			

SIGNATURE

P.E. NUMBER

DATE

ANDROSCOGGIN RIVER BRIDGE
ANDROSCOGGIN RIVER
BETHEL OXFORD COUNTY

SUPERSTRUCTURE DETAILS

SHEET NUMBER

19

OF 24

Filename: ...\MSTA\019_Superstructure.dgn Division: BRIDGE Username: Date:11/13/2015

STRAIGHT BARS

MARK	QTY.	LENGTH	LOCATION
ABUTMENT 1			
A500	4	16'-8"	Abutment Backwall (Epoxy Coated) △1
A501	4	18'-8"	Abutment Backwall (Epoxy Coated)
A502	8	9'-2"	Wingwall Longitudinal (Epoxy Coated)
ABUTMENT 2			
B500	4	16'-11"	Abutment Backwall (Epoxy Coated) △1
B501	4	18'-11"	Abutment Backwall (Epoxy Coated)
B502	8	9'-2"	Wingwall Longitudinal (Epoxy Coated)
SUPERSTRUCTURE			
S500	546	60'-0"	Longitudinal Top & Bottom
S501	91	53'-11"	Longitudinal Top & Bottom
S502	12	8'-8"	Transverse Between Girders
S600	96	41'-2"	Longitudinal at Pier
SD500	1614	16'-8"	Transverse Downstream
SD501	6	3'-4 1/2"	Transverse Downstream Between Girders
SU500	1614	18'-7"	Transverse Upstream
SU501	6	5'-3 1/2"	Transverse Upstream Between Girders
CURB			
C500	36	60'-0"	Longitudinal Curb (Epoxy Coated) △1
C501	6	53'-11"	Longitudinal Curb (Epoxy Coated)
C502	8	41'-2"	Longitudinal Curb at Pier (Epoxy Coated)
C503	12	9'-2"	Longitudinal Wingwall (Epoxy Coated)

MARK	QTY.	LENGTH	LOCATION

BENT BARS

MARK	QTY.	LENGTH	TYPE	A	B	C	D	E	F	G	H	O	R	LOCATION
ABUTMENT 1														
A550	34	2'-10"	S		10"	1'-2"	10"							Abutment Backwall (Epoxy Coated)
A551	22	5'-4"	S		2'-1"	1'-2"	2'-1"							Wingwall (Epoxy Coated)
A552	36	5'-5"	SD	10"	1'-3"	1'-3"	1'-3"			10"		1'-4"		Transverse Curb (Epoxy Coated)
ABUTMENT 2														
B550	36	2'-10"	S		10"	1'-2"	10"							Abutment Backwall (Epoxy Coated)
B551	22	5'-4"	S		2'-1"	1'-2"	2'-1"							Wingwall (Epoxy Coated)
B552	36	5'-5"	SD	10"	1'-3"	1'-3"	1'-3"			10"		1'-4"		Transverse Curb (Epoxy Coated)
SUPERSTRUCTURE														
S550	806	6'-10"	C	7"	6'-3"									Transverse Hook
S551	1120	5'-5"	SC	10"	1'-3"	1'-3"	1'-3"			10"		1'-4"		Transverse Curb & Posts (Epoxy Coated) △1
S552	54	6'-11"	SJ	9"	1'-1"	1'-11"	1'-0"	2'-2"						Longitudinal End of Deck
S553	6	7'-5"	B			2'-10"	1'-9"							Light Standard Base
S750	4	8'-0 1/2"	SC	2'-10"	1'-5 1/4"	1'-9"	1'-0 1/4"			1'-0"		1'-10"		Light Standard Base
S751	4	9'-0 1/2"	SC	3'-4"	1'-5 1/4"	2'-3"	1'-0 1/4"			1'-0"		2'-4"		Light Standard Base
S752	4	10'-0 1/2"	SC	3'-10"	1'-5 1/4"	2'-9"	1'-0 1/4"			1'-0"		2'-10"		Light Standard Base
S753	4	10'-6 1/2"	SC	4'-1"	1'-5 1/4"	3'-0"	1'-0 1/4"			1'-0"		3'-1"		Light Standard Base

MARK	QTY.	LENGTH	TYPE	A	B	C	D	E	F	G	H	O	R	LOCATION

TYPE - BENDING DIAGRAMS

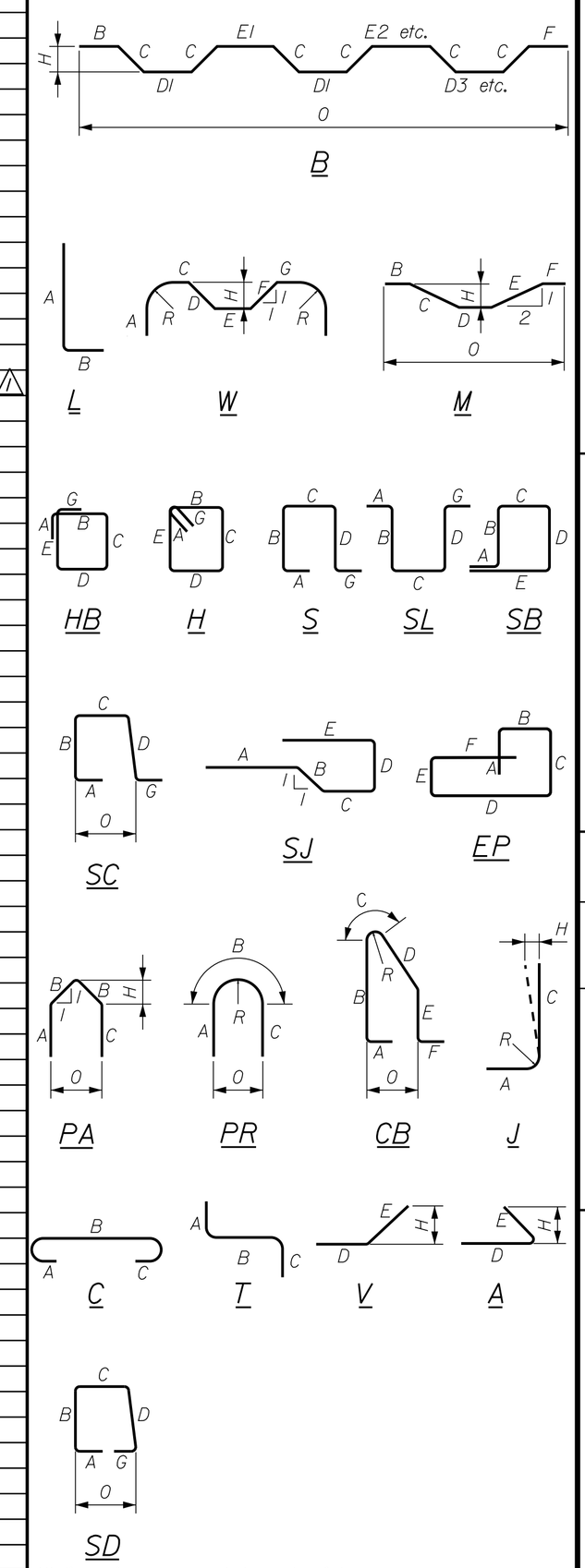

All dimensions are out-to-out of bar.

Bending details and hooks shall conform to the recommendations of the current revision of ACI Standard 315 and ACI Standard 318.

Reinforcing Bar: ASTM A615/A615M, Grade 60
A775/A775M, Grade 60 △1

GENERAL NOTES

1. The first two digits following the letter(s) of the mark indicate the size ofthe bar:

   Mark "A502" = bar size #5
   Mark "P805" = bar size #8
   Mark "S650" = bar size #6

2. Each crank bar, Type B, may be replaced by two (2) straight bars (one top and one bottom) of the same bar size as the crank bar. Payment in either case shall be based on crank bars as schedule on the plans.

ERDMAN ANTHONY

STATE OF MAINE
DEPARTMENT OF TRANSPORTATION

NHP-2049(300)

WIN 020493.00

BRIDGE PLANS

BRIDGE NO. 6149

	BY	DATE
PROJ. MANAGER JOEL KITTREDGE		
DESIGN-DETAILED	C. SICHAK	10/2015
CHECKED-REVIEWED	T. LINDO	10/2015
DESIGN2-DETAILED2	R. FARRELL	
DESIGN3-DETAILED3		
REVISIONS 1	REBAR CHANGES	11/15
REVISIONS 2		
REVISIONS 3		
REVISIONS 4		
FIELD CHANGES		

SIGNATURE

P.E. NUMBER

DATE

BETHEL

ANDROSCOGGIN RIVER BRIDGE
ANDROSCOGGIN RIVER
OXFORD COUNTY

REINFORCING STEEL SCHEDULE

SHEET NUMBER

22

OF 24

Date:11/13/2015

Username:

Division: BRIDGE

Filename: ...\MSTA\022_Rebar Schedule.dgn