STATE OF MAINE
DEPARTMENT OF TRANSPORTATION

SPECIFICATIONS

Design: Load and Resistance Factor Design per AASHTO LRFD Bridge Design Specifications, Seventh Edition 2014.

DESIGN LOADING

Live Load ..... HL - 93 - Modified for Strength I

TRAFFIC DATA

Current (2015) AADT	3,560
Future (2035) AADT	4,270
DHV - % of AADT	10
Design Hour Volume	427
Heavy Trucks (% of AADT)	5
Heavy Trucks (% of DHV)	4
Directional Distribution (% of DHV)	62
18 kip Equivalent P 2.0	121
18 kip Equivalent P 2.5	115
Posted Speed (mph)	35

HYDROLOGIC DATA

Drainage Area	71.80 sq mi
Ordinary High Water Discharge (Q1.1)	1042.8 cfs
Design Discharge (Q50)	5560.3 cfs
Check Discharge (Q100)	6373.6 cfs
Q25 Discharge	4790.8 cfs

MATERIALS

Concrete:
- Barriers, Curbs, Sidewalks & Transition Barriers ..... Class "LP"
- Precast ..... Class "P"
- All Other (including deck) ..... Class "A"

Reinforcing Steel ..... ASTM A 615/A 615M, Grade 60

BASIC DESIGN STRESSES

Concrete	f 'c = 4,350 psi
Precast Concrete	f.'c = 5,000 psi
	f 'ci = 4,000 psi
Reinforcing Steel	f y = 60,000 psi

UNITY
WALDO COUNTY
UNITY BRIDGE
OVER
SANDY STREAM
ROUTE 202
PROJECT NO. STP-2048(200)
PROJECT LENGTH 0.035 mi.
BRIDGE NO. 5228

LIST OF DRAWINGS

Title Sheet 1
Quantities & Notes 2
General Plan 3
Staged Construction 4
Framing Plan 5
Superstructure Plan 6
Deck Replacement Details 7
Reinforcing Steel Schedule 8

UTILITIES

Central Maine Power Company
Fairpoint Communications
Unitel, Inc.
Time Warner Cable
Unity Utilities District

MAINTENANCE OF TRAFFIC

Maintain one lane of alternating traffic using staged construction.

PROJECT LOCATION:	Latitude: 44° 36'30.55" N, Longitude: 69° 20'13.15" W On Route 202, immediately adjacent to intersection with Quaker Hill Rd.
PROGRAM AREA:	Highway Bridge- Traditional
OUTLINE OF WORK:	Bridge deck replacement with approach transitions at each end.

STATE OF MAINE
DEPARTMENT OF TRANSPORTATION
APPROVED — DATE
COMMISSIONER: 2/19/15
CHIEF ENGINEER: 2-17-15

STATE OF MAINE — Roger M. Nelus 9918 — LICENSED PROFESSIONAL ENGINEER

SIGNATURE
P.E. NUMBER
FEB 11 2015
DATE

PROJECT INFORMATION

PROGRAM	BRIDGE
PROJECT MANAGER	MARK PARLIN
DESIGNER	BRIAN NICHOLS
CONSULTANT	
PROJECT RESIDENT	
CONTRACTOR	
PROJECT COMPLETION DATE	

UNITY
UNITY BRIDGE
TITLE SHEET

WIN 20482.00
STP-2048(200)

SHEET NUMBER
1
OF 8

Filename:\00\BRIDGE\MSTA\001_Title.dgn Division: BRIDGE Username: dana.damren Date:2/11/2015

ESTIMATED QUANTITIES			
ITEM NO.	DESCRIPTION	QUANTITY	UNIT
202.17	REMOVING EXISTING STRUCTURAL CONCRETE (138 CY)	1	LS
202.202	REMOVING PAVEMENT SURFACE	440	SY
202.203	PAVEMENT BUTT JOINTS	100	SY
203.20	COMMON EXCAVATION	200	CY
304.10	AGGREGATE SUBBASE COURSE - GRAVEL	200	CY
403.208	HOT MIX ASPHALT 12.5 MM HMA SURFACE	87	T
403.211	HOT MIX ASPHALT (SHIMMING)	15	T
403.213	HOT MIX ASPHALT 12.5 MM BASE	132	T
409.15	BITUMINOUS TACK COAT - APPLIED	60	G
502.26	STRUCT. CONC. RDWY & S/W SLAB ON STEEL BRIDGE (84 CY)	1	LS
502.49	STRUCTURAL CONCRETE CURBS AND SIDEWALKS (11 CY)	1	LS
503.12	REINFORCING STEEL, FABRICATED AND DELIVERED	520	LB
503.13	REINFORCING STEEL, PLACING	520	LB
505.08	SHEAR CONNECTORS (840 EA)	1	LS
507.0821	STEEL BRIDGE RAILING, 3 BAR (150 LF)	1	LS
508.14	HIGH PERFORMANCE WATERPROOFING MEMBRANE (320 SY)	1	LS
514.06	CURING BOX FOR CONCRETE CYLINDERS	1	EA
515.21	PROTECTIVE COATING FOR CONCRETE SURFACES (110 SY)	1	LS
526.301	TEMPORARY CONCRETE BARRIER TYPE 1 (150 LF)	1	LS
526.34	PERMANENT CONCRETE TRANSITION BARRIER	4	EA
527.34	WORK ZONE CRASH CUSHIONS	2	UN
606.1721	BRIDGE TRANSITION - TYPE 1	4	EA
606.23	GUARDRAIL TYPE 3C - SINGLE RAIL	162.5	LF
606.232	GUARDRAIL TYPE 3C - OVER 15 FOOT RADIUS	45	LF
606.265	TERMINAL END - SINGLE RAIL - GALVANIZED STEEL	1	EA
606.353	REFLECTORIZED FLEXIBLE GUARDRAIL MARKER	4	EA
606.365	GUARDRAIL, REMOVE, MODIFY AND RESET, TYPE 3b to 3c	50	LF
606.79	GUARDRAIL 350 FLARED TERMINAL	2	EA
613.319	EROSION CONTROL BLANKET	52	SY
615.07	LOAM	10	CY
618.1401	SEEDING METHOD NUMBER 3 - PLAN QUANTITY	2	UN
619.12	MULCH	2	UN
619.1401	EROSION CONTROL MIX	20	CY
627.733	4" WHITE OR YELLOW PAINTED PAVEMENT MARKING LINE	760	LF
627.78	TEMPORARY PAVEMENT MARKING LINE, WHITE OR YELLOW	760	LF
629.05	HAND LABOR, STRAIGHT TIME	20	HR
631.12	ALL PURPOSE EXCAVATOR (INCLUDING OPERATOR)	20	HR
631.172	TRUCK - LARGE (INCLUDING OPERATOR)	20	HR
639.19	FIELD OFFICE TYPE B	1	EA
643.72	TEMPORARY TRAFFIC SIGNAL	1	LS
652.311	TYPE II BARRICADE	6	EA
652.33	DRUM	10	EA
652.34	CONE	20	EA
652.35	CONSTRUCTION SIGNS	300	SF
652.361	MAINTENANCE OF TRAFFIC CONTROL DEVICES (120 CD)	1	LS
652.38	FLAGGER	100	HR
659.10	MOBILIZATION	1	LS

GENERAL CONSTRUCTION NOTES

1. For easements, construction limits and right of way lines, refer to Right of Way Map.

2. Place loam 2 inches deep on all new or reconstructed sideslopes or as directed by the Resident.

3. Erosion Control Mix may be substituted in those areas normally receiving loam and seed as directed by the Resident. Placement shall be in accordance with Standard Specifications Section 619, Mulch. Payment will be made under Item No. 619.1401, Erosion Control Mix.

4. Place a 24-in. wide strip of Temporary Erosion Control Blanket on the top of sideslopes

5. Protective Coating for Concrete Surfaces shall be applied to the following areas:

All exposed surfaces of concrete curbs.
Fascias down to the drip notch.
All exposed surfaces of Concrete Transition Barriers

6. Project information referred to below may be accessed at the following MaineDOT web address: http://www.maine.gov/mdot/contractors/.

7. The existing bridge plans may be accessed at the MaineDOT web address. The plans are reproductions of the original drawings as prepared for the construction of the bridge. It is very unlikely that the plans will show any construction field changes or any alterations which may have been made to the bridge during its life span.

8. Quantities included for pay items measured and paid for by Lump Sum are estimated quantities and are provided by MaineDOT for informational purposes only. Lump Sum pay items will be paid for at the Contract Bid amount, with no addition or reduction in payment to the Contractor if the actual final quantities are different from the MaineDOT provided estimated quantities, except as follows:

a. If a Lump Sum pay item is eliminated, the requirements of Standard Specifications Section 109.2, Elimination of Items, will take precedence.

b. If other Contract Documents specifically allow a change in payment for a Lump Sum pay item, those requirements will be followed.

c. If a design change results in changes to estimated quantities for Lump Sum pay items, price adjustments will be made in accordance with Standard Specifications Section 109.7, Equitable Adjustments to Compensation.

9. The Contractor shall submit a Bridge Deck Demolition Plan to the Resident at least 10 business days prior to the start of demolition work. The plan shall outline the methods, equipment, and phasing to be used to remove and dispose of the appropriate bridge items in the Contract. No work related to the removal of the bridge deck shall be undertaken by the Contractor until MaineDOT has reviewed the Bridge Deck Demolition Plan for appropriateness and completeness. Payment for all work necessary for developing, submitting and finalizing the Demolition Plan will be considered incidental to the bridge removal pay item(s).

10. For the purposes of setting the Bottom of Slab Elevations, the top of the downstream parapet of Abutment No. 1 shall be called EL. 197.53.

11. A temporary traffic signal timing chart has been supplied by the Department. If further adjustments are required, as determined by the Resident, the Contractor shall be responsible for providing the new timing, which has been stamped by a Professional Engineer, and making the necessary adjustments. Payment will be considered incidental to item No. 643.72, Temporary Traffic Signal.

STATE OF MAINE
DEPARTMENT OF TRANSPORTATION

STP-2048(200)

WIN 20482.00

BRIDGE NO. 5228

BRIDGE PLANS

PROJ. MANAGER	MAP	BY	DATE
DESIGN-DETAILED	BJN	BJN	11/29/2015
CHECKED-REVIEWED	R. NAOUS	DMD	
DESIGN2-DETAILED2			
DESIGN3-DETAILED3			
REVISIONS 1			
REVISIONS 2			
REVISIONS 3			
REVISIONS 4			
FIELD CHANGES			

SIGNATURE

P.E. NUMBER

DATE

UNITY BRIDGE
SANDY STREAM
WALDO COUNTY
UNITY

ESTIMATED QUANTITIES

SHEET NUMBER
2
OF 8

Filename: ...\BRIDGE\MSTA\002_Estimate.dgn Division: BRIDGE Username: Brian.J.Nichols Date:2/20/2015

CURVE DATA #1
PI = 273+41.44
D = 3°49'32.3"
Δ = 17°55'11.0" Lt.
R = 1497.68'
L = 468.41'
T = 236.13'
E = 18.50'

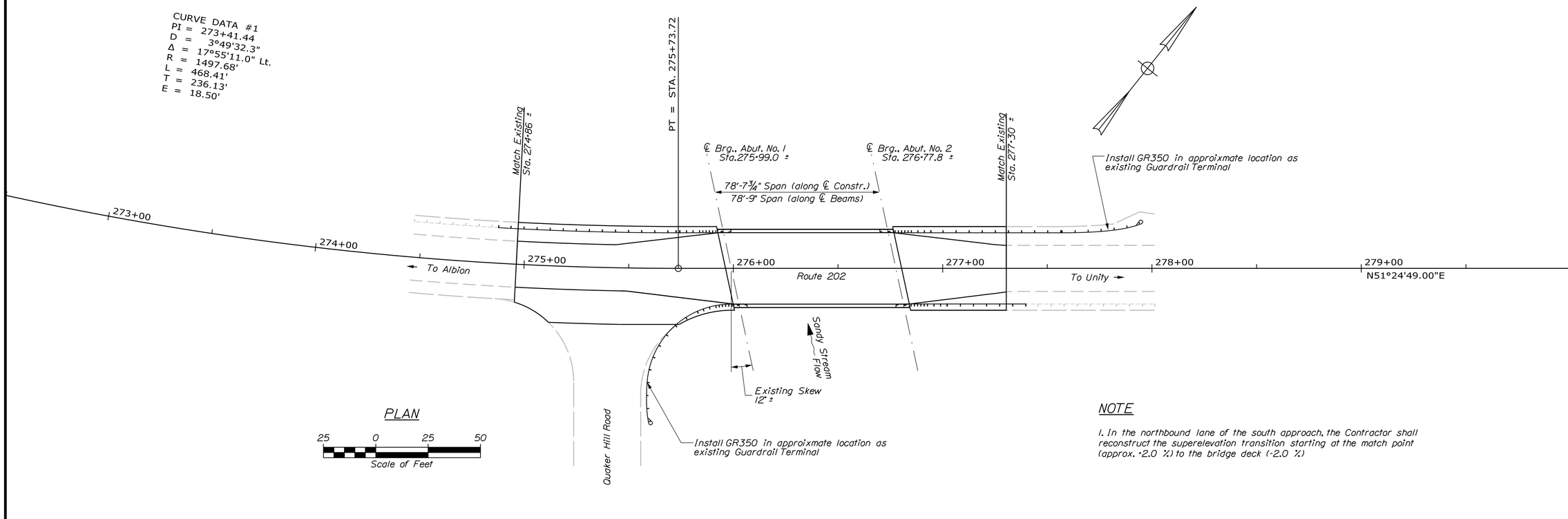

PLAN

25 0 25 50
Scale of Feet

NOTE

1. In the northbound lane of the south approach, the Contractor shall reconstruct the superelevation transition starting at the match point (approx. +2.0 %) to the bridge deck (-2.0 %)

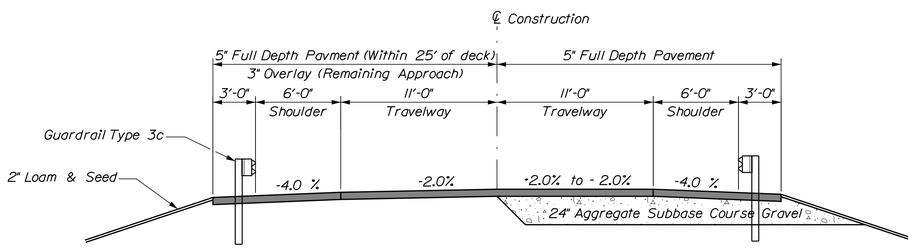

TYPICAL APPROACH SECTION - SOUTH APPROACH

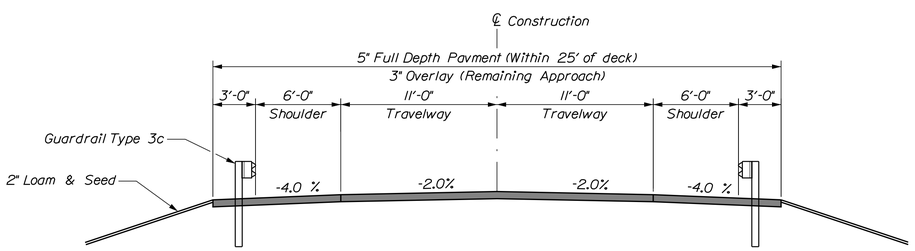

TYPICAL APPROACH SECTION - NORTH APPROACH

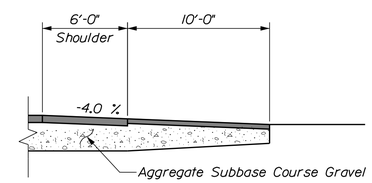

SOUTH APPROACH AT INTERSECTION

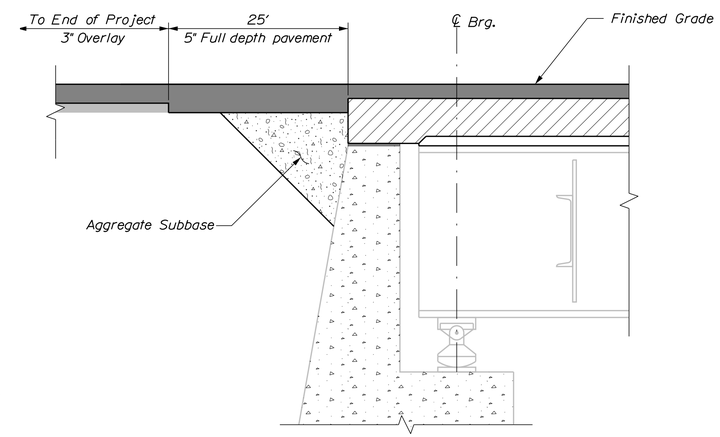

LONGITUDINAL SECTION AT ABUTMENT

STATE OF MAINE
DEPARTMENT OF TRANSPORTATION

STP-2048(200)

WIN 20482.00

BRIDGE NO. 5228

BRIDGE PLANS

PROJ. MANAGER	MAP	BY	DATE
DESIGN-DETAILED	B.N	B.N	1\29\2015
CHECKED-REVIEWED	R. NAOUS	DMD	
DESIGN2-DETAILED2			
DESIGN3-DETAILED3			
REVISIONS 1			
REVISIONS 2			
REVISIONS 3			
REVISIONS 4			
FIELD CHANGES			

SIGNATURE

P.E. NUMBER

DATE

UNITY BRIDGE
SANDY STREAM
WALDO COUNTY
UNITY

GENERAL PLAN AND TYPICAL SECTIONS

SHEET NUMBER
3
OF 8

Filename: ...\MSTA\003_GeneralPlan.dgn Division: BRIDGE Username: Brian.J.Nichols Date:2/20/2015

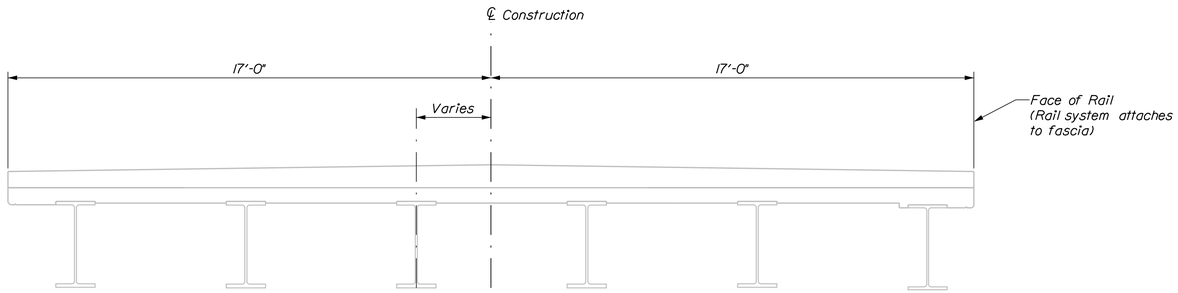

EXISTING BRIDGE SECTION

Flow

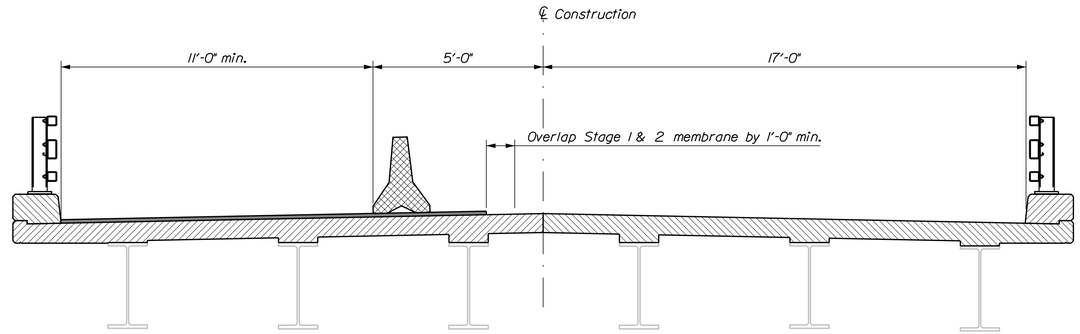

STAGE II

Flow

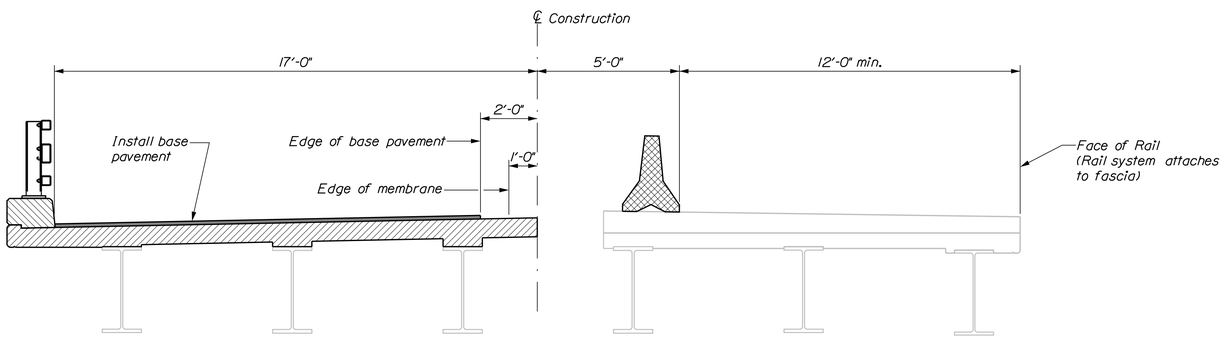

STAGE I

Flow

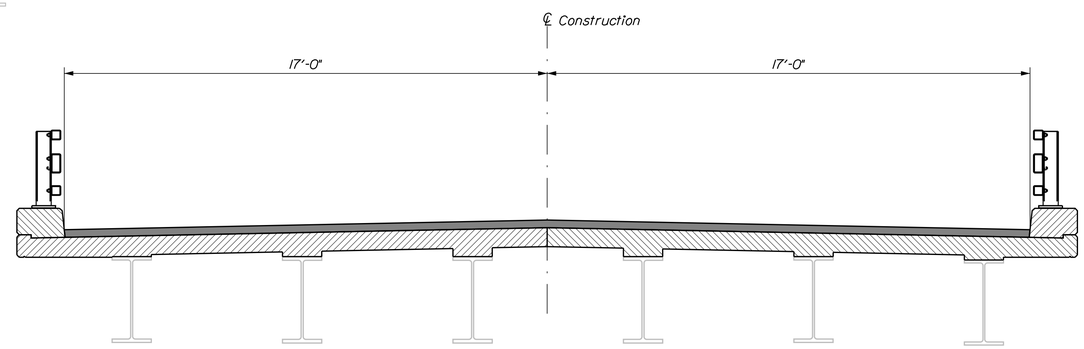

COMPLETED BRIDGE

Flow

STATE OF MAINE
DEPARTMENT OF TRANSPORTATION

STP-2048(200)

WIN 20482.00

BRIDGE NO. 5228

BRIDGE PLANS

PROJ. MANAGER		BY	DATE
DESIGN-DETAILED	B.N	B.N	1\29\2015
CHECKED-REVIEWED	R. NAOUS	DMD	
DESIGN2-DETAILED2			
DESIGN3-DETAILED3			
REVISIONS 1			
REVISIONS 2			
REVISIONS 3			
REVISIONS 4			
FIELD CHANGES			

SIGNATURE

P.E. NUMBER

DATE

UNITY BRIDGE
SANDY STREAM
WALDO COUNTY
UNITY

STAGE CONSTRUCTION PLAN

SHEET NUMBER

4

OF 8

Filename: ...\MSTA\004_Stage Const.dgn Division: BRIDGE Username: Brian.J.Nichols Date:2/20/2015

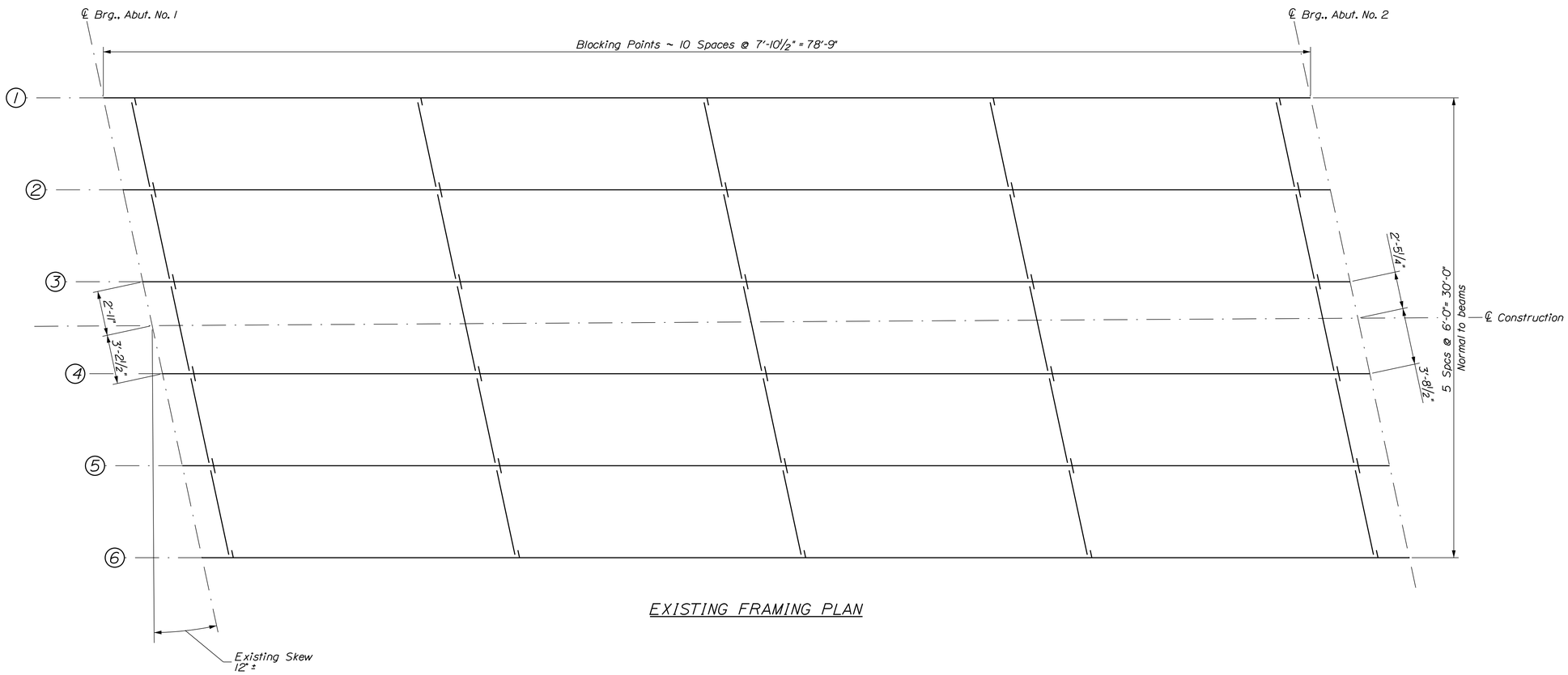

EXISTING FRAMING PLAN

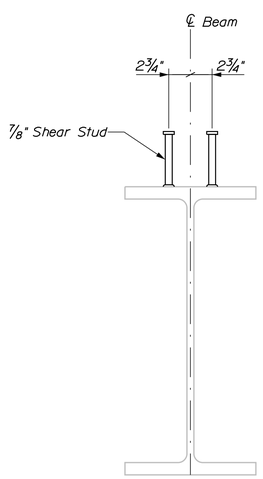

SHEAR STUD ROW SPACING

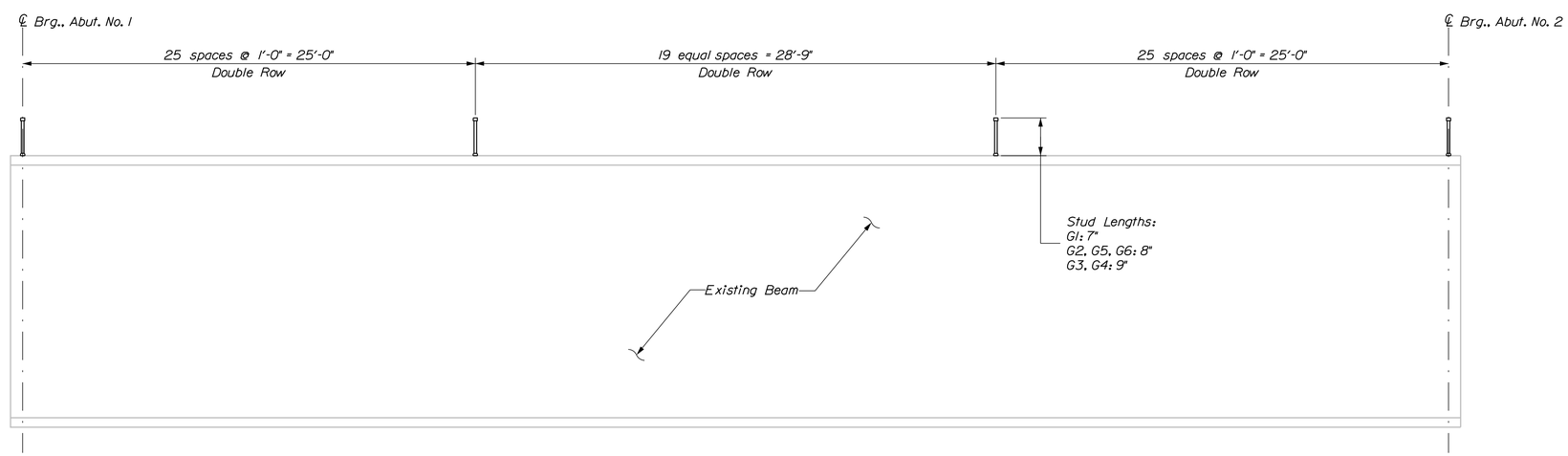

SHEAR STUD LAYOUT
140 Studs/ Beam

STATE OF MAINE
DEPARTMENT OF TRANSPORTATION

STP-2048(200)

WIN
20482.00

BRIDGE NO. 5228

BRIDGE PLANS

PROJ. MANAGER	MAP	BY	DATE
DESIGN-DETAILED	BJN	BJN	1\29\2015
CHECKED-REVIEWED	R. NAOUS	DMD	
DESIGN2-DETAILED2			
DESIGN3-DETAILED3			
REVISIONS 1			
REVISIONS 2			
REVISIONS 3			
REVISIONS 4			
FIELD CHANGES			

SIGNATURE

P.E. NUMBER

DATE

UNITY BRIDGE
SANDY STREAM
WALDO COUNTY
UNITY

FRAMING PLAN

SHEET NUMBER
5
OF 8

Filename: ...\BRIDGE\MSTA\005_Framing_1.dgn Division: BRIDGE Username: Brian.J.Nichols Date:2/20/2015

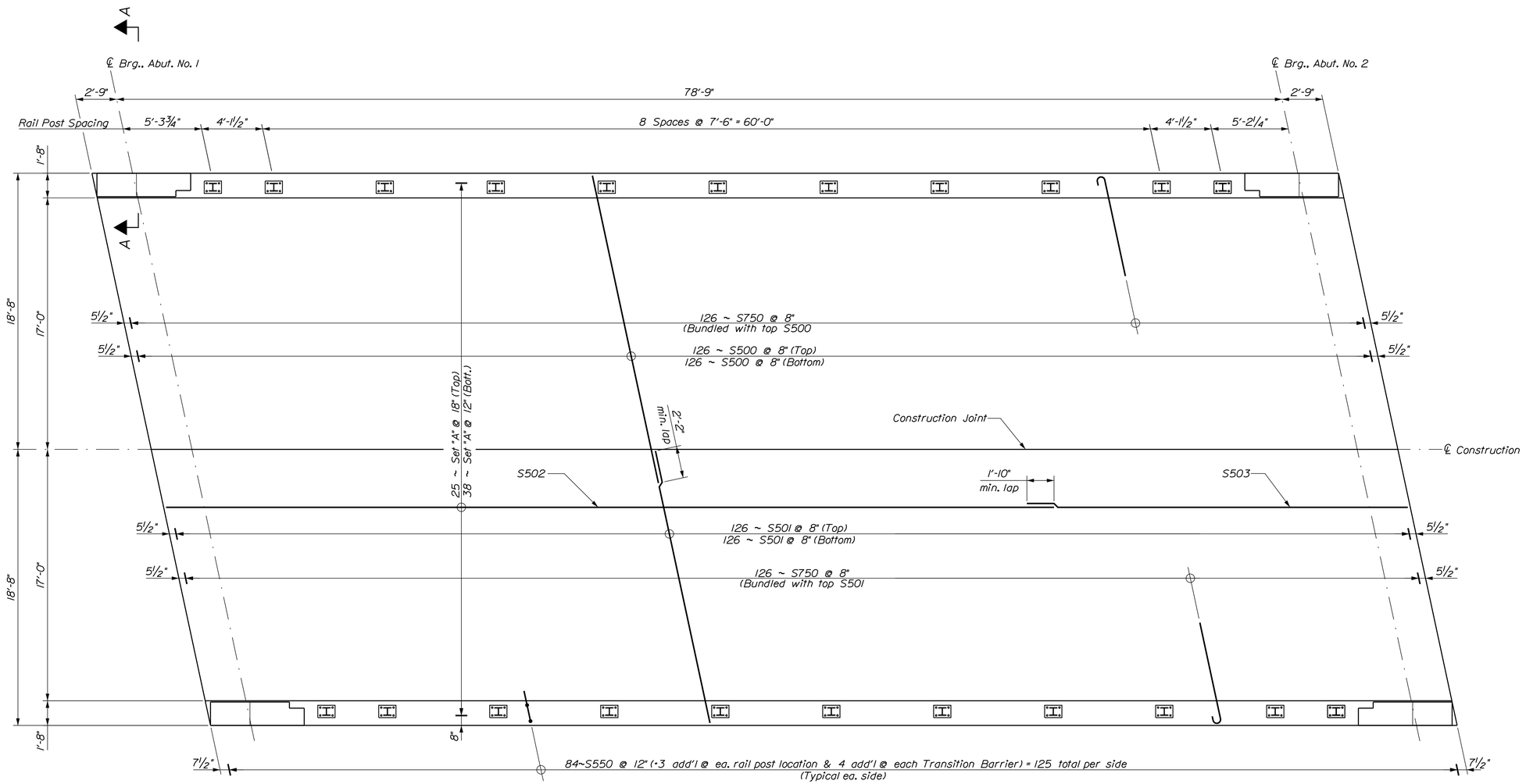

SUPERSTRUCTURE PLAN

Set "A" = 1~S502, 1~S503 (Alternate splice location)

BOTTOM OF SLAB ELEVATIONS

	℄ Brg., Abut. 1	0.1 Span	0.2 Span	0.3 Span	0.4 Span	0.5 Span	0.6 Span	0.7 Span	0.8 Span	0.9 Span	℄ Brg., Abut. 2
Stringer Line 1	196.24	196.43	196.63	196.82	197.00	197.15	197.31	197.45	197.58	197.69	197.81
Stringer Line 2	196.39	196.57	196.76	196.95	197.12	197.28	197.43	197.58	197.71	197.83	197.96
Stringer Line 3	196.54	196.72	196.91	197.10	197.27	197.43	197.58	197.73	197.86	197.98	198.11
Stringer Line 4	196.56	196.74	196.93	197.11	197.28	197.44	197.59	197.73	197.86	197.99	198.11
Stringer Line 5	196.46	196.65	196.84	197.02	197.19	197.35	197.50	197.65	197.77	197.90	198.01
Stringer Line 6	196.36	196.55	196.75	196.93	197.11	197.27	197.42	197.56	197.68	197.80	197.91

STATE OF MAINE
DEPARTMENT OF TRANSPORTATION

STP-2048(200)

WIN 20482.00

BRIDGE NO. 5228

BRIDGE PLANS

PROJ. MANAGER	MAP	BY	DATE
DESIGN-DETAILED	BJN	BJN	
CHECKED-REVIEWED	R. NAOUS	DMD	11/29/2015
DESIGN2-DETAILED2			
DESIGN3-DETAILED3			
REVISIONS 1			
REVISIONS 2			
REVISIONS 3			
REVISIONS 4			
FIELD CHANGES			

SIGNATURE

P.E. NUMBER

DATE

UNITY BRIDGE
SANDY STREAM
WALDO COUNTY
UNITY

SUPERSTRUCTURE PLAN

SHEET NUMBER

6

OF 8

Filename: ...\MSTA\006_Superstructure_1.dgn Division: BRIDGE Username: Brian.J.Nichols Date:2/20/2015

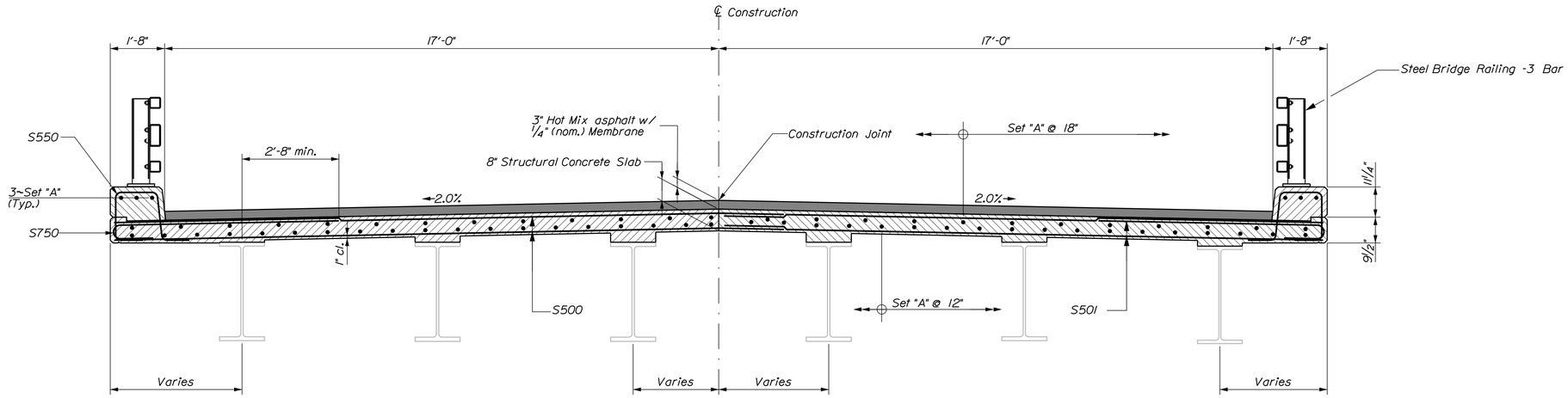

SUPERSTRUCTURE SECTION

Set "A" = 1~S502, 1~S503

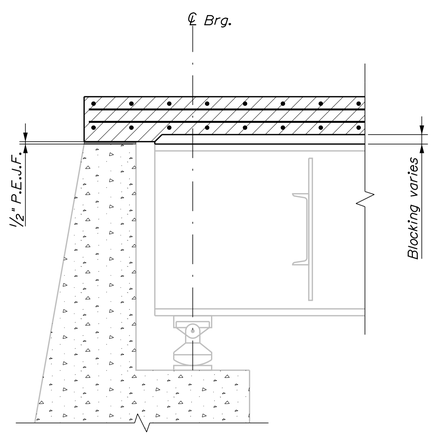

END OF SLAB SECTION

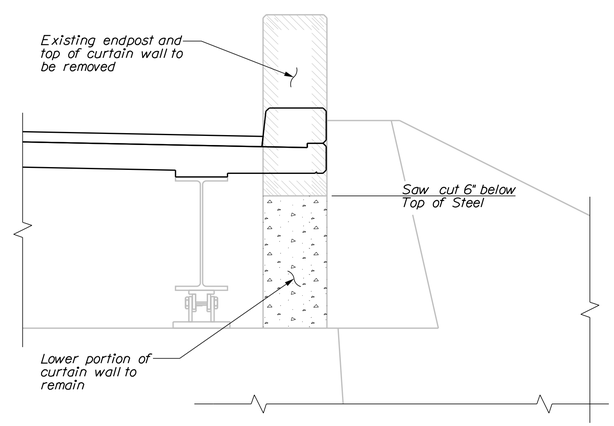

SECTION "A-A"

Northwest corner shown - remaining corners similar

SUPERSTRUCTURE NOTES

1. Reinforcing steel shall have a minimum concrete cover of 2 inches unless otherwise noted.

2. Form a one inch V-groove on the fascias at the horizontal joint between the curb and slab.

3. The superstructure slab concrete shall be placed continuously and shall be kept plastic until the entire placement has been made.

4. The formwork and its supports, over the full width of the structural slab, shall remain in place until a minimum of 48 hours has elapsed after placement of the final section of the slab. After this period, removal of formwork for sections meeting the requirements for form removal of Standard Specifications Section 502, Structural Concrete, may proceed.

5. At the Contractor's option, Precast Deck Panels may be used in place of the full depth cast-in-place deck slab, in accordance with Special Provisions Section 502, Structural Concrete - Precast Deck Panels, and in accordance with the Standard Details.

6. Payment for reinforcing steel fabricated, delivered, and placed in the cast-in-place portion of the structural concrete slab will be considered incidental to the appropriate Standard Specifications Section 502 pay item.

7. The Contractor shall install Transition Barrier vertical closed stirrups, as shown in Standard Details Section 526, prior to the placement of the curb or sidewalk concrete.

8. Stud lengths were determined based on anticipated blocking. If field conditions dictate smaller blocking, the Contractor shall provide shear connectors that meet the following criteria: maintain a clear cover of concrete over the top of the studs of at least 2 inches; ensure that the studs project a minimum of 2 inches above the bottom of the slab, or in the case of precast deck panels, 2 inches above the bottom strand of the deck panels.

9. Overlap waterproofing membrane as shown in Staged Construction Details.

STATE OF MAINE
DEPARTMENT OF TRANSPORTATION

STP-2048(200)

WIN 20482.00

BRIDGE NO. 5228

BRIDGE PLANS

PROJ. MANAGER		MAP	BY	DATE
DESIGN-DETAILED	B.N		B.N	1\29\2015
CHECKED-REVIEWED	R. NAOUS		DMD	
DESIGN2-DETAILED2				
DESIGN3-DETAILED3				
REVISIONS 1				
REVISIONS 2				
REVISIONS 3				
REVISIONS 4				
FIELD CHANGES				

SIGNATURE

P.E. NUMBER

DATE

UNITY BRIDGE
SANDY STREAM
UNITY WALDO COUNTY

DECK REPLACEMENT DETAILS

SHEET NUMBER

7

OF 8

Filename: ...\MSTA\007_Superstructure_2.dgn Division: BRIDGE Username: Brian.J.Nichols Date:2/20/2015

STRAIGHT BARS

MARK	QTY.	LENGTH	LOCATION	MARK	QTY.	LENGTH	LOCATION
S500	252	21'-3"	Deck - Transverse				
S501	252	19'-0"	Deck - Transverse				
S502	69	60'-0"	Deck - Longitudinal				
S503	69	25'-9"	Deck - Longitudinal				

BENT BARS

MARK	QTY.	LENGTH	TYPE	A	B	C	D	E	F	G	H	O	R	LOCATION
S550	250	5'-9"	SC	0'-10"	1'-6"	1'-1"	1'-6"	-	-	0'-10"	-	1'-5"	-	Curb Stirrup
S750	252	7'-11"	C	1'-0"	6'-11"	0"	-	-	-	-	-	-	-	Overhang Bar

TYPE - BENDING DIAGRAMS

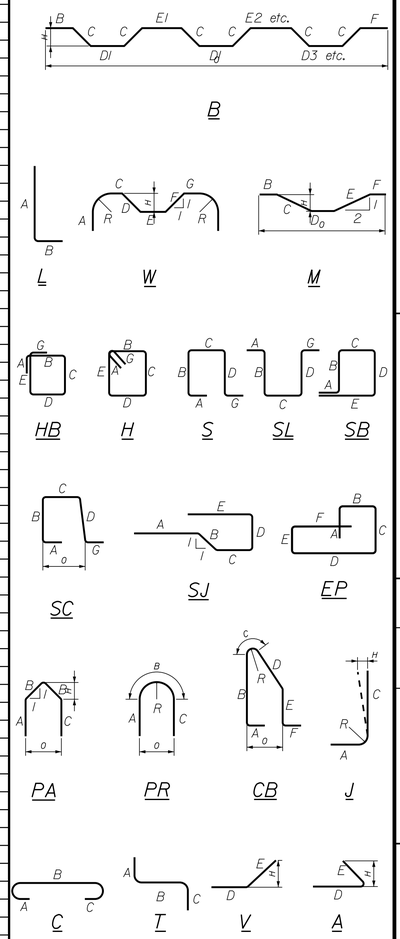

All dimensions are out-to-out of bar.

Bending details and hooks shall conform to the recommendations of the current revision of ACI Standard 315 and ACI Standard 318.

Reinforcing Bar: ASTM A615/A615M, Grade 60

GENERAL NOTES

1. The first two digits following the letter(s) of the mark indicate the size ofthe bar:

   Mark "A502" = bar size #5
   Mark "P805" = bar size #8
   Mark "S650" = bar size #6

2. Each crank bar, Type B, may be replaced by two (2) straight bars (one top and one bottom) of the same bar size as the crank bar. Payment in either case shall be based on crank bars as schedule on the plans.

STATE OF MAINE
DEPARTMENT OF TRANSPORTATION

STP-2048(200)

WIN 20482.00

BRIDGE PLANS

BRIDGE NO. 5228

PROJ. MANAGER			SIGNATURE	
DESIGN-DETAILED	BJN	BJN	1\29\2015	DATE
CHECKED-REVIEWED	R. NAOUS	DMD		
DESIGN2-DETAILED2				
DESIGN3-DETAILED3			P.E. NUMBER	
REVISIONS 1				
REVISIONS 2				
REVISIONS 3			DATE	
REVISIONS 4				
FIELD CHANGES				

UNITY BRIDGE
SANDY STREAM
WALDO COUNTY

UNITY

REINFORCING
STEEL SCHEDULE

SHEET NUMBER

8

OF 8

Filename: ...\00\BRIDGE\MSTA\008_Rebar.dgn Division: BRIDGE Username: Brian.J.Nichols Date:2/20/2015