STATE OF MAINE
DEPARTMENT OF TRANSPORTATION

SPECIFICATIONS

Design: Load and Resistance Factor Design per AASHTO LRFD Bridge Design Specifications, Seventh Edition 2014, with 2015 Interims.

DESIGN LOADING

Live Load ..... HL - 93 Modified for Strength I

TRAFFIC DATA

Current (2013) AADT	6710
Future (2033) AADT	8050
DHV - % of AADT	11%
Design Hour Volume	886
Heavy Trucks (% of AADT)	7%
Heavy Trucks (% of DHV)	5%
Directional Distribution (% of DHV)	51%
18 kip Equivalent P 2.0	177
18 kip Equivalent P 2.5	169
Design Speed (mph)	50

HYDROLOGIC DATA

Drainage Area	10.64 sq mi
Design Discharge (Q50)	828.6 cfs
Check Discharge (Q100)	958.7 cfs
Headwater Elevation (Q50)	13.84 ft
Headwater Elevation (Q100)	14.21 ft
Discharge Velocity (Q50)	2.28 fps
Discharge Velocity (Q100)	2.55 fps
Headwater Elevation (Q1.1)	10.22 ft
Discharge Velocity (Q1.1)	0.61 fps
Headwater Elevation (Q25)	13.50 ft

MATERIALS

Concrete:	
Structural Slab & Leveling Surface	Class "A"
Curbs and Transition Barriers	Class "LP"
Precast	Class "P"
Abutments and wingwalls	Class "A"
Reinforcing Steel	ASTM A 615/A 615M, Grade 60
Prestressing Strands	AASHTO 203 (ASTM A 416), Grade 270, Low Relaxation

BASIC DESIGN STRESSES

Concrete	f 'c = 4,000 psi
Precast Concrete	f 'c = 7,000 psi f 'ci = 5,500 psi
Reinforcing Steel	f y = 60,000 psi
Prestressing Strand	F μ = 270,000 psi

KENNEBUNK\WELLS
YORK COUNTY
PUMPING STATION BRIDGE
OVER
BRANCH BROOK
US ROUTE 1
FEDERAL AID PROJECT NO. STP-2047(400)
PROJECT LENGTH 0.06 mi.
BRIDGE NO. 2693

LIST OF DRAWINGS

Title Sheet	1
Estimated Quantities & Notes	2
General Plan	3
Profile	4
Boring Location Plan	5
Interpretive Subsurface Profile	6
Boring Logs	7
Stage Construction Plans	8
Approach Cross Sections	9-13
Abutment Notes and Details	14
Abutment No. 1 Plans	15
Abutment No. 1 Reinforcement	16
Abutment No. 2 Plans	17
Abutment No. 2 Reinforcement	18
Superstructure Plans & Sections	19-21
Voided Slab Plans & Details	22-25
Reinforcing Steel Schedule	26
Right of Way Map	27

UTILITIES

Central Maine Power Company
Fairpoint Communications
Kennebunk, Kennbunkport and Wells Water District
Time Warner Cable
Kennebunk Light and Power District

MAINTENANCE OF TRAFFIC

Maintain two-way traffic on one-lane of the bridge using staged construction and temporary traffic signals.

PROJECT LOCATION:	Kennebunk/Wells Pumping Station Bridge #2693 at the Kennebunk/Wells town line carrying route 1 over Branch Brook. Lat. 44° 31' 42.00" N Long. 68° 13' 12.00" W
PROGRAM AREA:	Urban & Federal Bridge Program
OUTLINE OF WORK:	Bridge Replacement

WIN 20474.00

STP-2047(400)

STATE OF MAINE
DEPARTMENT OF TRANSPORTATION
APPROVED — DATE
COMMISSIONER: — DATE 7/14/15
CHIEF ENGINEER: — DATE 7-15-15

STATE OF MAINE — Roger M. Naous 9918 — PROFESSIONAL ENGINEER — Licensed

PROJECT INFORMATION	
PROGRAM	BRIDGE
PROJECT MANAGER	J. KITTERIDGE
DESIGNER	R. NAOUS
CHECKER	K.LENFELDER
PROJECT RESIDENT	J. AUCER / B. HODGKINS
CONTRACTOR	
PROJECT COMPLETION DATE	

P.E. NUMBER 9918
SIGNATURE
DATE JUL 14 2015

KENNEBUNK\WELLS
PUMPING STATION BRIDGE

TITLE SHEET

SHEET NUMBER
1
OF 27

Filename:\00\BRIDGE\MSTA\001_Title.dgn Division: BRIDGE Username: gerald.libby Date:7/14/2015

ESTIMATED QUANTITIES			
ITEM NO.	DESCRIPTION	QUANTITY	UNIT
202.19	REMOVING EXISTING BRIDGE (400 CY)	1	LS
203.20	COMMON EXCAVATION	520	CY
203.24	COMMON BORROW	40	CY
203.25	GRANULAR BORROW	340	CY
206.082	STRUCTURAL EARTH EXCAVATION - MAJOR STRUCTURES	920	CY
304.10	AGGREGATE SUBBASE COURSE - GRAVEL	420	CY
403.208	HOT MIX ASPHALT 12.5 MM HMA SURFACE	125	T
403.213	HOT MIX ASPHALT 12.5 MM BASE	123	T
409.15	BITUMINOUS TACK COAT - APPLIED	76	G
501.231	DYNAMIC LOADING TEST	2	EA
501.54	STEEL H-BEAM PILES 117 LBS/FT, DELIVERED	1,225	LF
501.541	STEEL H-BEAM PILES 117 LBS/FT, IN PLACE	1,225	LF
501.90	PILE TIPS	10	EA
501.91	PILE SPLICES	25	EA
501.92	PILE DRIVING EQUIPMENT MOBILIZATION	1	LS
502.219	STRUCTURAL CONC., ABUTMENTS AND RETAINING WALLS (60 CY)	1	LS
502.261	STRUCTURAL CONCRETE ROADWAY (60 CY)	1	LS
502.31	STRUCTURAL CONCRETE APPROACH SLABS (30 CY)	1	LS
502.49	STRUCTURAL CONCRETE CURBS AND SIDEWALKS (6 CY)	1	LS
503.12	REINFORCING STEEL, FABRICATED AND DELIVERED	20,100	LB
503.13	REINFORCING STEEL, PLACING	20,100	LB
507.0811	STEEL BRIDGE RAILING - 2 BAR (65 LF)	1	LS
508.14	HIGH PERFORMANCE WATERPROOFING MEMBRANE (224 SY)	1	LS
511.07	COFFERDAM: UPSTREAM	1	LS
511.07	COFFERDAM: DOWNSTREAM	1	LS
514.06	CURING BOX FOR CONCRETE CYLINDERS	1	EA
515.21	PROTECTIVE COATING FOR CONCRETE SURFACES (80 SY)	1	LS
526.301	TEMPORARY CONCRETE BARRIER TYPE I (300 LF)	1	LS
526.34	PERMANENT CONCRETE TRANSITION BARRIER	4	EA
535.60	PRESTRESSED STRUCTURAL CONCRETE SLAB (70 CY)	1	LS
603.15	TWELVE INCH CULVERT PIPE - OPTION I	35	LF
604.18	ADJUST MAN HOLE OR CATCH BASIN TO GRADE	1	EA
605.11	TWELVE INCH UNDERDRAIN - TYPE C	91	LF
606.1721	BRIDGE TRANSITION - TYPE I	4	EA
606.23	GUARDRAIL TYPE 3 - SINGLE RAIL BRIDGE MOUNTED	75	LF
606.231	GUARDRAIL TYPE 3C - 15 FOOT RADIUS	25	LF
606.265	TERMINAL END - SINGLE RAIL - GALVANIZED STEEL	1	EA
606.353	REFLECTORIZED FLEXIBLE GUARDRAIL MARKER	8	EA
606.79	GUARDRAIL 350 FLARED TERMINAL	1	EA
606.81	TANGENT GUARDRAIL TERMINAL - ENERGY ABSORBING	2	EA
609.31	CURB TYPE 3	100	LF
610.08	PLAIN RIPRAP	290	CY
613.319	EROSION CONTROL BLANKET	25	SY
615.07	LOAM	15	CY
618.143	SPECIAL SEEDING - NATIVE MIX	3	UN
619.1201	MULCH - PLAN QUANTITY	3	UN
619.1401	EROSION CONTROL MIX	30	CY
620.58	EROSION CONTROL GEOTEXTILE	600	SY
620.661	DRAINAGE GEOCOMPOSITE	60	SY
627.733	4" WHITE OR YELLOW PAINTED PAVEMENT MARKING LINE	900	LF
629.05	HAND LABOR, STRAIGHT TIME	20	HR
631.12	ALL PURPOSE EXCAVATOR (INCLUDING OPERATOR)	20	HR
631.15	ROLLER, EARTH AND BASE COURSE (INCLUDING OPERATOR)	20	HR
631.171	TRUCK - SMALL (INCLUDING OPERATOR)	20	HR
639.19	FIELD OFFICE TYPE B	1	EA
643.72	TEMPORARY TRAFFIC SIGNAL AT U.S. ROUTE 1 & PUMPING STATION BRIDGE	1	LS
652.31	TYPE 1 BARRICADE	10	EA
652.312	TYPE III BARRICADE	6	EA
652.33	DRUM	20	EA
652.34	CONE	40	EA
652.35	CONSTRUCTION SIGNS	300	SF
652.361	MAINTENANCE OF TRAFFIC CONTROL DEVICES (280 CD)	1	LS
652.38	FLAGGER	100	HR
652.41	PORTABLE - CHANGEABLE MESSAGE SIGN	2	EA
656.75	TEMPORARY SOIL EROSION AND WATER POLLUTION CONTROL	1	LS
659.10	MOBILIZATION	1	LS

GENERAL CONSTRUCTION NOTES

1. For easements, construction limits and right of way lines, refer to Right of Way Map.

2. The clearing limits as shown on the plans are approximate. The exact limits will be established in the field by the Resident. Payment for clearing will be considered incidental to Contract items.

3. All utility facilities shall be adjusted by the respective utilities unless otherwise noted.

4. Do not excavate for Aggregate Subbase Course where existing material is suitable as determined by the Resident.

5. In areas where the Resident directs the Contractor not to excavate to the subgrade line shown on the plans, payment for removing existing pavement, grubbing, shaping, ditching, and compacting the existing subbase and layers of new subbase 6 inches or less thick will be made under appropriate equipment rental items.

6. All embankment material, except as otherwise shown, placed below EL. 13.84' shall be Granular Borrow meeting the requirements of Subsection 703.19, Material for Underwater Backfill.

7. Place riprap on sideslopes up to EL. 13.84'.

8. Construct the riprap shelf at each abutment at EL. 15.00'.

9. Place loam 2 inches deep on all new or reconstructed sideslopes or as directed by the Resident.

10. Erosion Control Mix may be substituted in those areas normally receiving loam and seed as directed by the Resident. Placement shall be in accordance with Standard Specifications Section 619, Mulch. Payment will be made under Item No. 619.1401, Erosion Control Mix.

11. Place a 24-in. wide strip of Temporary Erosion Control Blanket on the sideslopes along the top of the riprap and behind the wingwalls.

12. Guardrail posts as shown in the Standard Details shall be modified from the indicated length of 6 feet to a length of 7 feet with an embedment of 4.5 feet. Payment will be considered incidental to the guardrail pay items.

13. An NCHRP350 compliant guardrail end treatment shall be installed concurrently with the placement of each section of beam guardrail.

14. Extended-use Erosion Control Blanket, seeded gutters, riprap downspouts, and other gutters lined with Stone Ditch Protection shall be constructed after paving and shoulder work is completed, where it is apparent that runoff will cause continual erosion. Payment will be made under the appropriate Contract items.

15. Protective Coating for Concrete Surfaces shall be applied to the following areas in accordance with Pay Item 515.21 - Protective Coating for Concrete Surfaces:

All exposed surfaces of concrete curbs.
Fascias down to the drip notch.
Top of wingwalls and to one foot below the top of wingwalls on the back side.

16. Project information referred to below may be accessed at the following MaineDOT web address: http://www.maine.gov/mdot/contractors/.

17. The existing bridge plans may be accessed at the MaineDOT web address. The plans are reproductions of the original drawings as prepared for the construction of the bridge. It is very unlikely that the plans will show any construction field changes or any alterations which may have been made to the bridge during its life span.

18. The hydrologic report of the bridge site may be accessed at the MaineDOT web address. The hydrologic report is based on MaineDOT's interpretation of the information obtained for the subject site. No assurance is given that the information or the conclusions of the report will be representative of actual conditions at the time of construction.

19. The project geotechnical report titled: Geotechnical Design Report for the Replacement of Kennebunk/Wells - Pumping Station Bridge over Branch Brook, Kennebunk, Maine, Soils Report No. 2015-03, February 18, 2015 may be accessed at the Maine DOT web address.

20. Geotechnical information furnished or referred to in this plan set is for the use of the Bidders and the Contractor. No assurance is given that the information or interpretations will be representative of actual subsurface conditions at the construction site. MaineDOT will not be responsible for the Bidders' or Contractor's interpretations of, or conclusions drawn from, the geotechnical information. The boring logs contained in the plan set present factual and interpretive subsurface information collected at discrete locations. Data provided may not be representative of the subsurface conditions between the boring locations.

21. Quantities included for pay items measured and paid for by Lump Sum are estimated quantities and are provided by MaineDOT for informational purposes only. Lump Sum pay items will be paid for at the Contract Bid amount, with no addition or reduction in payment to the Contractor if the actual final quantities are different from the MaineDOT provided estimated quantities, except as follows:

a. If a Lump Sum pay item is eliminated, the requirements of Standard Specifications Section 109.2, Elimination of Items, will take precedence.

b. If other Contract Documents specifically allow a change in payment for a Lump Sum pay item, those requirements will be followed.

c. If a design change results in changes to estimated quantities for Lump Sum pay items, price adjustments will be made in accordance with Standard Specifications Section 109.7, Equitable Adjustments to Compensation.

22. The Contractor shall submit a Bridge Demolition Plan to the Resident at least 10 business days prior to the start of demolition work. The plan shall outline the methods and equipment to be used to remove and dispose of all materials included in the existing bridge. No work related to the removal of the bridge shall be undertaken by the Contractor until MaineDOT has reviewed the Bridge Demolition Plan for appropriateness and completeness. Payment for all work necessary for developing, submitting and finalizing the Demolition Plan will be considered incidental to the bridge removal pay item.

23. The existing bridge shall be removed to the limits shown and become the property of the Contractor.

STATE OF MAINE
DEPARTMENT OF TRANSPORTATION

STP-2047(400)

WIN 20474.00

BRIDGE NO. 2693

BRIDGE PLANS

		BY	DATE
PROJ. MANAGER	J. KITTREDGE		
DESIGN-DETAILED	R. NAOUS	G. LIBBY	
CHECKED-REVIEWED	K.LENFELDER	B. NICHOLS	
DESIGN2-DETAILED2	K.MAGUIRE	T. WHITE	JUNE 2014
DESIGN3-DETAILED3	K.LENFELDER		
REVISIONS 1			
REVISIONS 2			
REVISIONS 3			
REVISIONS 4			
FIELD CHANGES			

SIGNATURE

P.E. NUMBER

DATE

PUMPING STATION BRIDGE
BRANCH BROOK
KENNEBUNK\WELLS YORK COUNTY

ESTIMATED QUANTITIES & NOTES

SHEET NUMBER
2
OF 27

Filename: ...\BRIDGE\MSTA\002_Estimate.dgn Division: BRIDGE Username: gerald.libby Date:7/14/2015

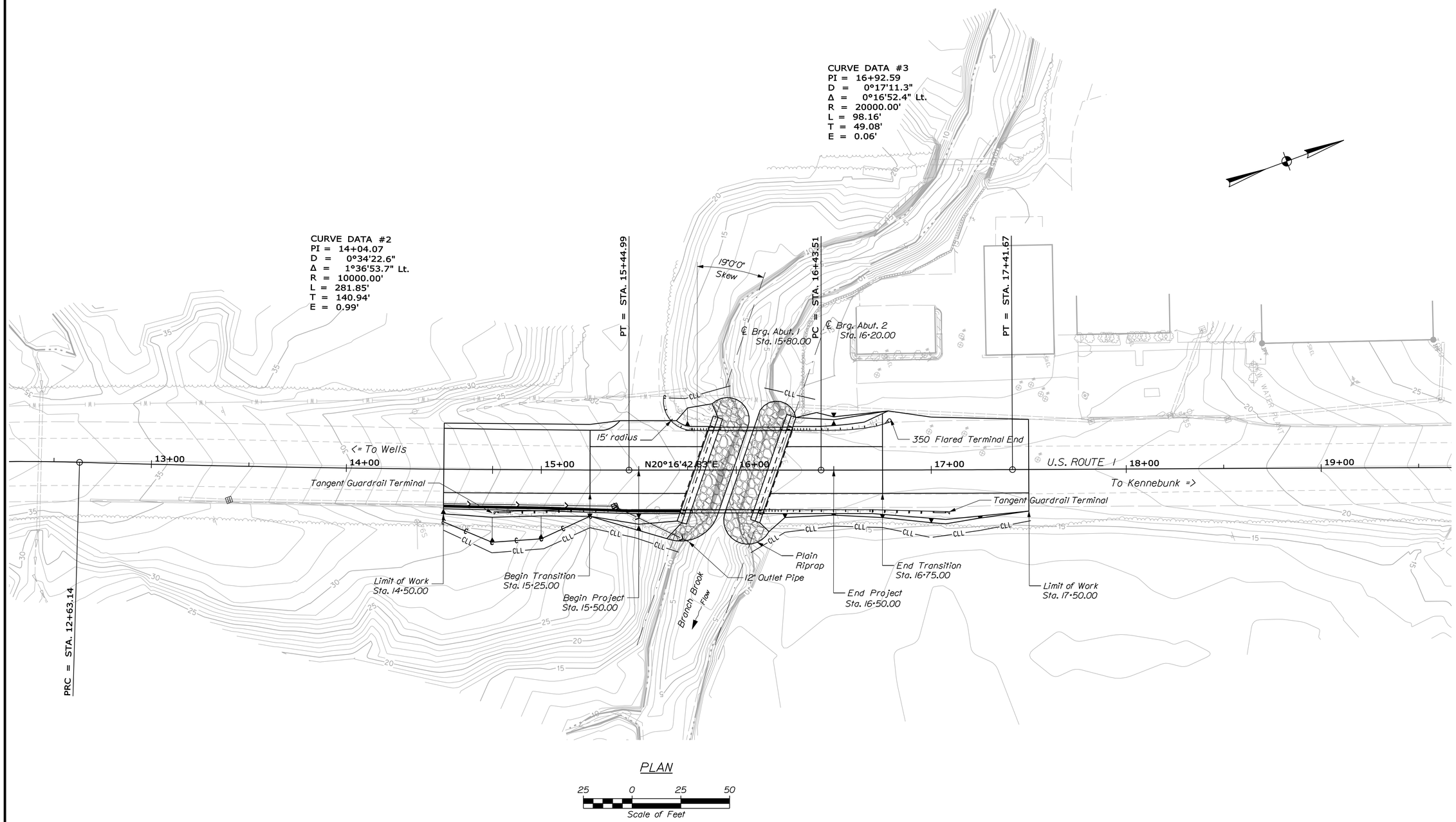

STATE OF MAINE
DEPARTMENT OF TRANSPORTATION

STP-2047(400)

PIN 20474.00

BRIDGE NO. 2693

BRIDGE PLANS

		BY	DATE
PROJ. MANAGER	J. KITTREDGE		
DESIGN-DETAILED	R. NAOUS	G. LIBBY	
CHECKED-REVIEWED	KLEINFELDER	B. NICHOLS	
DESIGN2-DETAILED2	K.MAGUIRE	T. WHITE	JUNE 2014
DESIGN3-DETAILED3	KLEINFELDER	-------	-------
REVISIONS 1	-------	-------	-------
REVISIONS 2	-------	-------	-------
REVISIONS 3	-------	-------	-------
REVISIONS 4	-------	-------	-------
FIELD CHANGES	-------	-------	-------

SIGNATURE

P.E. NUMBER

DATE

PUMPING STATION BRIDGE
BRANCH BROOK
KENNEBUNK\WELLS YORK COUNTY

GENERAL PLAN

SHEET NUMBER

3

OF 27

Filename: ...\00\BRIDGE\MSTA\003_BDPlan1.dgn Division: BRIDGE Username: richard.e.myers Date:7/14/2015

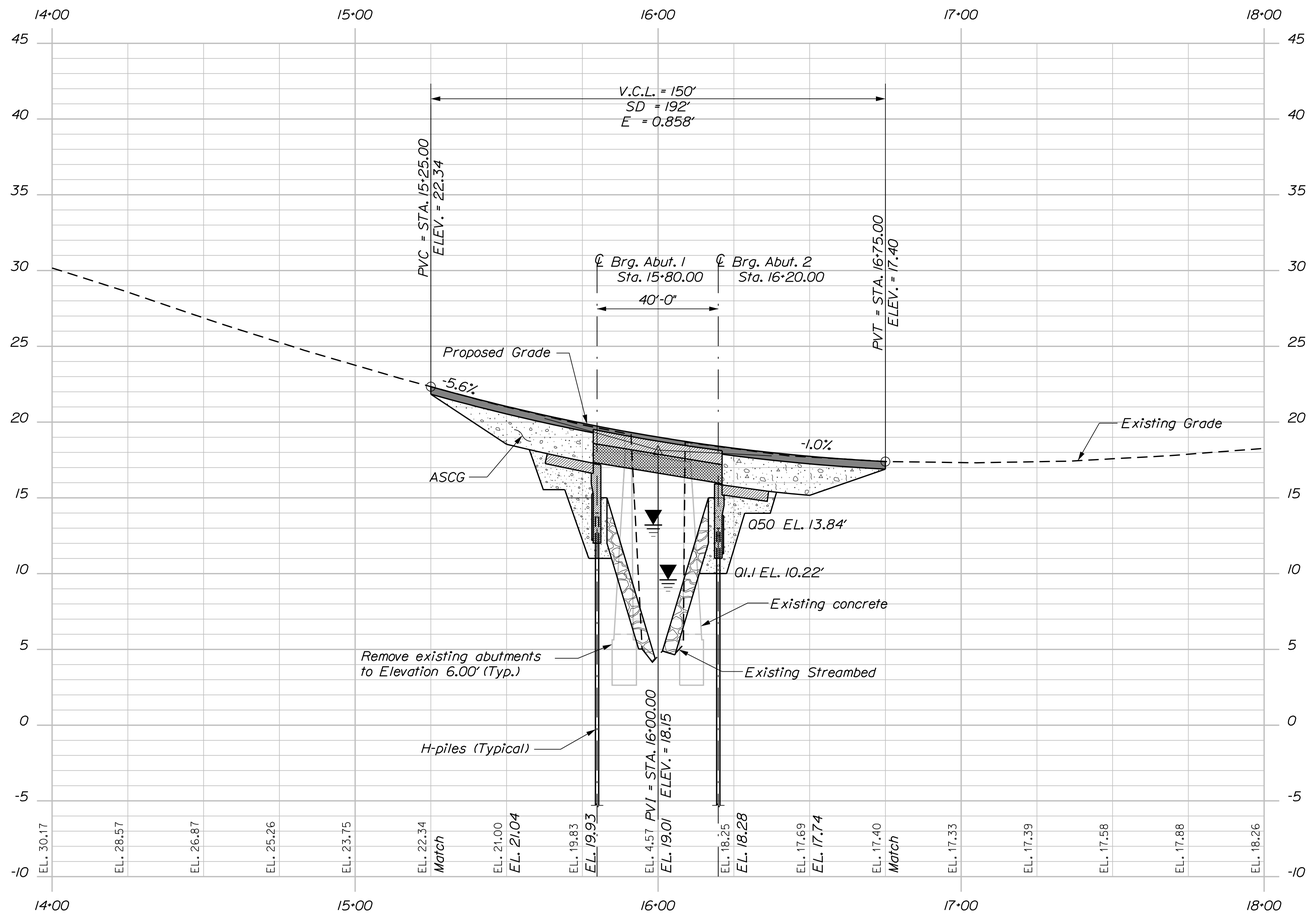

PROFILE

Horiz. 25 0 25 50

Vert. 5 0 5 10

Scale of Feet

STATE OF MAINE
DEPARTMENT OF TRANSPORTATION

STP-2047(400)

WIN 20474.00

BRIDGE NO. 2693

BRIDGE PLANS

PROJ. MANAGER	J. KITTREDGE	BY	DATE
DESIGN-DETAILED	R. NAOUS	G. LIBBY	
CHECKED-REVIEWED	KLENFELDER	B. NICHOLS	------ SIGNATURE
DESIGN2-DETAILED2	K.MAGUIRE	T. WHITE	JUNE 2014
DESIGN3-DETAILED3	KLENFELDER	------	------ P.E. NUMBER
REVISIONS 1	------	------	------
REVISIONS 2	------	------	------ DATE
REVISIONS 3	------	------	------
REVISIONS 4	------	------	------
FIELD CHANGES	------	------	------

PUMPING STATION BRIDGE
BRANCH BROOK
KENNEBUNK\WELLS YORK COUNTY

PROFILE

SHEET NUMBER

4

OF 27

Filename: ...\00\BRIDGE\MSTA\004_Profile.dgn Division: BRIDGE Username: gerald.libby Date:7/14/2015

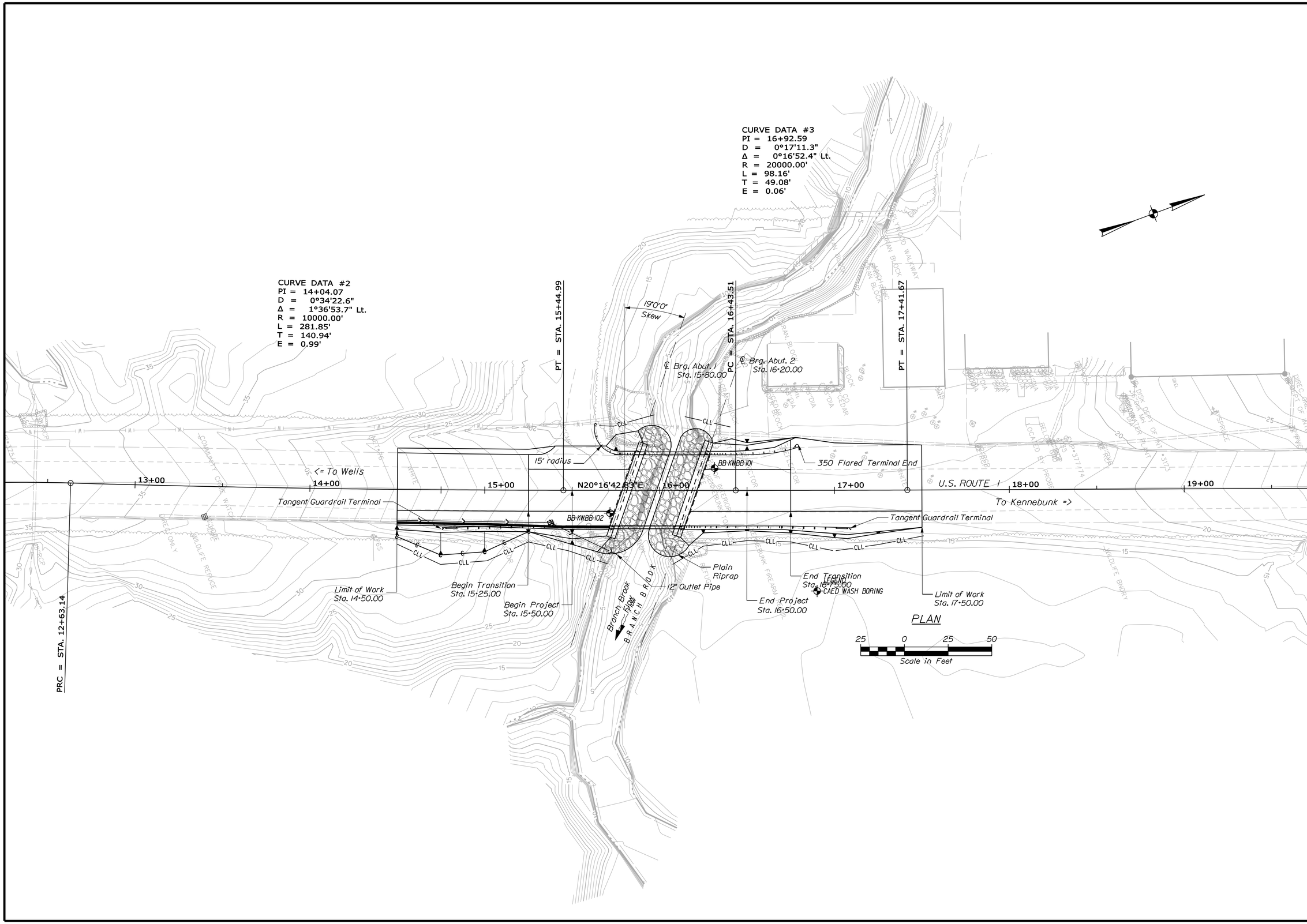

STATE OF MAINE
DEPARTMENT OF TRANSPORTATION

STP-2047(400)

WIN 20474.00

BRIDGE NO. 2693

BRIDGE PLANS

	BY	DATE
PROJ. MANAGER	J. KITTREDGE	
DESIGN-DETAILED	R. NADUS	G. LIBBY
CHECKED-REVIEWED	R. WEO	B. NICHOLS
DESIGN2-DETAILED2	K. KLEINFELDER	T. WHITE
DESIGN3-DETAILED3	K. MAGUIRE	JUNE 2014
REVISIONS 1	K. KLEINFELDER	
REVISIONS 2		
REVISIONS 3		
REVISIONS 4		
FIELD CHANGES		

SIGNATURE

P.E. NUMBER

DATE

PUMPING STATION BRIDGE
BRANCH BROOK
KENNEBUNK\WELLS YORK COUNTY

BORING LOCATION PLAN

SHEET NUMBER

5

OF 27

Filename: ...\00\BRIDGE\MSTA\005_BLP1.dgn Division: BRIDGE Username: richard.e.myers Date:7/14/2015

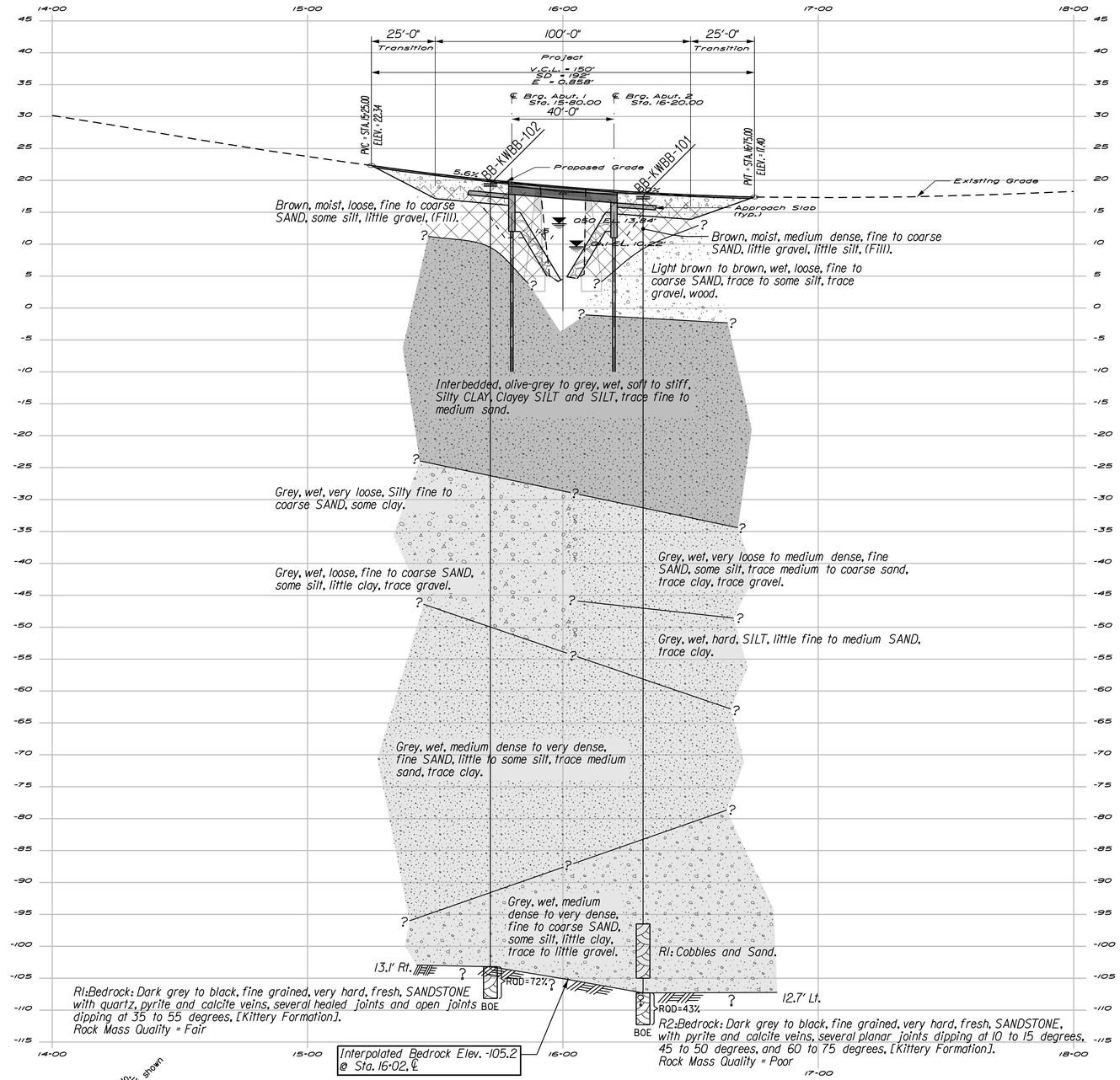

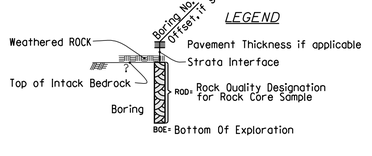

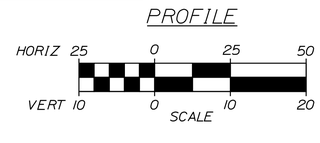

Note: This generalized interpretive soil profile is intended to convey trends in subsurface conditions. The boundaries between strata are approximate and idealized, and have been developed by interpretations of widely spaced explorations and samples. Actual soil transitions may vary and are probably more erratic. For more specific information refer to the exploration logs.

STATE OF MAINE
DEPARTMENT OF TRANSPORTATION

STP-2047(400)

WIN 20474.00

BRIDGE NO. 2693

BRIDGE PLANS

		BY	DATE
PROJ. MANAGER	J. KITTREDGE		
DESIGN-DETAILED	R. NAOUS	G. LIBBY	
CHECKED-REVIEWED	KLEINFELDER	B. NICHOLS	
DESIGN2-DETAILED2	K.MAGUIRE	T.WHITE	JUNE 2014
DESIGN3-DETAILED3	KLEINFELDER	------	------
REVISIONS 1	------	------	------
REVISIONS 2	------	------	------
REVISIONS 3	------	------	------
REVISIONS 4	------	------	------
FIELD CHANGES	------	------	------

SIGNATURE

P.E. NUMBER

DATE

PUMPING STATION BRIDGE
BRANCH BROOK
KENNEBUNK\WELLS YORK COUNTY

INTERPRETIVE SUBSURFACE PROFILE

SHEET NUMBER

6

OF 27

Filename: ...\00\BRIDGE\MSTA\006_ISP1.dgn Division: BRIDGE Username: gerald.libby Date:7/14/2015

Filename: ...\MSTA\007_BORING LOGS1.dgn Division: BRIDGE Username: gerald.libby Date:7/14/2015

Maine Department of Transportation
Soil/Rock Exploration Log
US CUSTOMARY UNITS

Project: Pumping Station Bridge #2693 carries Route 1 over Branch Brook
Location: Kennebunk and Wells, Maine
Boring No.: BB-KWBB-101
WIN: 20474.00

Driller:	Maine DOT	Elevation (ft.)	17.5	Auger ID/OD:	5" Solid Stem
Operator:	Giles/Doggett	Datum:	NAVD88	Sampler:	Standard Split Spoon
Logged By:	B. Wilder	Rig Type:	CME 45C	Hammer Wt./Fall:	140#/30"
Date Start/Finish:	2/4,25/2014-4/25,27/2014	Drilling Method:	Cased Wash Boring	Core Barrel:	NQ-2"
Boring Location:	16+31.4, 12.7 ft Lt.	Casing ID/OD:	NW	Water Level*:	13.0 ft bgs.
Hammer Efficiency Factor: 0.867		Hammer Type:	Automatic ☒ Hydraulic ☐ Rope & Cathead ☐		

Definitions:
D = Split Spoon Sample
MD = Unsuccessful Split Spoon Sample attempt
U = Thin Wall Tube Sample
MU = Unsuccessful Thin Wall Tube Sample attempt
V = Insitu Vane Shear Test, PP = Pocket Penetrometer
MV = Unsuccessful Insitu Vane Shear Test attempt
R = Rock Core Sample
SSA = Solid Stem Auger
HSA = Hollow Stem Auger
RC = Roller Cone
WOH = weight of 140lb. hammer
WOR/C = weight of rods or casing
WO1P = Weight of one person
S_u = Insitu Field Vane Shear Strength (psf)
T_v = Pocket Torvane Shear Strength (psf)
q_p = Unconfined Compressive Strength (ksf)
N-uncorrected = Raw Field SPT N-value
Hammer Efficiency Factor = Annual Calibration Value
N_{60} = SPT N-uncorrected corrected for hammer efficiency
S_u = Lab Vane Shear Strength (psf)
WC = water content, percent
LL = Liquid Limit
PL = Plastic Limit
PI = Plasticity Index
G = Grain Size Analysis
C = Consolidation Test

Depth (ft.)	Sample No.	Pen./Rec. (in.)	Sample Depth (ft.)	Blows (/6 in.) Shear Strength (psf) or RQD (%)	N-uncorrected	N_{60}	Casing Blows	Elevation (ft.)	Graphic Log	Visual Description and Remarks	Laboratory Testing Results/ AASHTO and Unified Class
0							SSA	17.00		5" Pavement (0.42)	
										Brown, damp, fine to coarse SAND, little gravel, little silt. (Fill).	
5	10	24/12	5.00 - 7.00	7/8/10/10	18	26				Brown, moist, medium dense, fine to coarse SAND, little gravel, little silt. (Fill).	GM243226 A-2-4, SM WC=6.8% Non-Plastic
10	20	24/15	10.00 - 12.00	2/3/3/4	6	9	12	9.00		(8.50) Light brown, wet, loose, fine to medium SAND, trace coarse sand.	GM243227 A-3, SP-SM WC=27.0%
							14				
							22				
							22				
							27				
15	30	24/11	15.00 - 17.00	2/2/2/2	4	6	12			Brown, wet, loose, fine to coarse SAND, some silt, trace gravel, wood.	GM243228 A-2-4, SM WC=55.2%
							29				
							22				
							25				
							16	-1.50		(19.00) Grey, wet, very soft, Silty CLAY, trace fine to medium sand.	
20	40 MV	24/20	20.00 - 22.00 (20+60) 20.83	WOH/WOH/WOH/WOH Would not Push	---		17			Failed 55x110 mm vane attempt.	GM243329 A-6, CL WC=43.4% LL=28 PL=19 PI=9
							17				
							19				
							23				
							22				
25	50 MV	24/22	25.00 - 27.00 (29+60) 25.73	WOH/WOH/WOH/WOH Would not Push	---		OPEN HOLE			Grey, wet, very soft, Silty CLAY, trace fine to medium sand. Hydraulic push casing from 25.0-35.0 ft bgs. Failed 55x110 mm vane attempt. Washed ahead to 27.0 ft bgs. Failed 55x110 mm vane attempt.	GM243230 A-6, ML WC=40.6% LL=31 PL=25 PI=12
	MV		27.00 - 27.20	Would not Push							
30										Grey, wet, soft, Silty CLAY, trace fine to medium sand. 55x110 mm vane raw torque readings: V31: 10.0/1.0 ft-lbs V32: 10.0/1.5 ft-lbs	GM243231 A-6, CL WC=33.2% LL=35 PL=23 PI=12
	60 V1	24/24	30.00 - 32.00	WOR/WOR/WOR/WOR Su=446/55 psf	---						
	V2		31.00 - 31.63 - 32.00	Su=446/67 psf							
35	70 V3	24/20	35.00 - 37.00 (40+60) 36.00	WOR/WOR/3/4 Su=716/112 psf	3	4	23			Similar to above, medium stiff. 55x110 mm vane raw torque readings: V31: 16.0/2.5 ft-lbs Failed 55x110 mm vane attempt.	Combined with 60 for lab testing
	MV		36.00 - 36.30	Only Pushed 0.3'			20				
							23				
							19				
							23				
40	80	24/24	40.00 - 42.00	WOH/1/3/3	4	6	25			Grey, wet, medium stiff, Clayey SILT, trace fine to medium sand.	GM243232 A-4, CL WC=24.6%
							27				
							51				
							43				
							36				
45	90	24/24	45.00 - 47.00	1/3/3/4	6	9	31			Similar to above, stiff.	
							27				
							23				
							28				
							29				
50	100	24/24	50.00 - 52.00	15/15/8/10	23	33	48			Grey, wet, hard, SILT, some sand, some clay, trace gravel.	GM243233 A-4, ML WC=21.1% Non-Plastic
							43				
							37				
							33	-36.50		(54.00)	
							31			Grey, wet, very loose, fine SAND, some silt, trace medium to coarse sand, trace clay, trace gravel.	GM243234 A-4, SC-SM WC=22.9% Non-Plastic
55	110	24/14	55.00 - 57.00	2/1/2/2	3	4	25				
							31				
							27				
							26				
							23				
60	120	24/16	60.00 - 62.00	1/4/5/7	9	13	24			Grey, wet, medium dense, fine SAND, some silt, trace medium to coarse sand, trace clay, trace gravel.	GM243235 A-2-4, SC-SM WC=22.0%
							19				
							26				
							45				
							29				
65	130	24/12	65.00 - 67.00	1/4/5/5	9	13	22			Similar to above.	
							24				
							22				
							36				
							42	-51.50		(69.00)	
70	140	24/18	70.00 - 72.00	5/11/20/29	31	45	31			Grey, wet, hard, SILT, little fine to medium sand, trace clay.	GM243236 A-4, ML WC=20.7%
							28				
							27				
							51				
							240				
75											

Remarks:
300# down pressure on Core Barrel.

Stratification lines represent approximate boundaries between soil types; transitions may be gradual.
* Water level readings have been made at times and under conditions stated. Groundwater fluctuations may occur due to conditions other than those present at the time measurements were made.

Page 1 of 2
Boring No.: BB-KWBB-101

Maine Department of Transportation
Soil/Rock Exploration Log
US CUSTOMARY UNITS

Project: Pumping Station Bridge #2693 carries Route 1 over Branch Brook
Location: Kennebunk and Wells, Maine
Boring No.: BB-KWBB-101
WIN: 20474.00

Driller:	Maine DOT	Elevation (ft.)	17.5	Auger ID/OD:	5" Solid Stem
Operator:	Giles/Doggett	Datum:	NAVD88	Sampler:	Standard Split Spoon
Logged By:	B. Wilder	Rig Type:	CME 45C	Hammer Wt./Fall:	140#/30"
Date Start/Finish:	2/4,25/2014-4/25,27/2014	Drilling Method:	Cased Wash Boring	Core Barrel:	NQ-2"
Boring Location:	16+31.4, 12.7 ft Lt.	Casing ID/OD:	NW	Water Level*:	13.0 ft bgs.
Hammer Efficiency Factor: 0.867		Hammer Type:	Automatic ☒ Hydraulic ☐ Rope & Cathead ☐		

Definitions:
D = Split Spoon Sample
MD = Unsuccessful Split Spoon Sample attempt
U = Thin Wall Tube Sample
MU = Unsuccessful Thin Wall Tube Sample attempt
V = Insitu Vane Shear Test, PP = Pocket Penetrometer
MV = Unsuccessful Insitu Vane Shear Test attempt
R = Rock Core Sample
SSA = Solid Stem Auger
HSA = Hollow Stem Auger
RC = Roller Cone
WOH = weight of 140lb. hammer
WOR/C = weight of rods or casing
WO1P = Weight of one person
S_u = Insitu Field Vane Shear Strength (psf)
T_v = Pocket Torvane Shear Strength (psf)
q_p = Unconfined Compressive Strength (ksf)
N-uncorrected = Raw Field SPT N-value
Hammer Efficiency Factor = Annual Calibration Value
N_{60} = SPT N-uncorrected corrected for hammer efficiency
S_u = Lab Vane Shear Strength (psf)
WC = water content, percent
LL = Liquid Limit
PL = Plastic Limit
PI = Plasticity Index
G = Grain Size Analysis
C = Consolidation Test

Depth (ft.)	Sample No.	Pen./Rec. (in.)	Sample Depth (ft.)	Blows (/6 in.) Shear Strength (psf) or RQD (%)	N-uncorrected	N_{60}	Casing Blows	Elevation (ft.)	Graphic Log	Visual Description and Remarks	Laboratory Testing Results/ AASHTO and Unified Class
75	150	24/15	75.00 - 77.00	9/12/15/16	27	39	31			Similar to above. 8.0 ft running, rewashed out, kept a head of water in bore hole.	
							34				
							36				
							51				
							34	-62.50		(80.00) Grey, wet, very dense, fine SAND, little silt, trace clay, trace medium sand. Kept a head of water in bore hole, no running sand. Roller coned ahead to 85.0 ft bgs.	
80	160	24/17	80.50 - 82.50	14/19/32/47	51	74	60				GM243237 A-2-4, SC-SM WC=19.4%
							73				
							82				
							139				
							169				
85	170	24/14	85.00 - 87.00	12/18/28/22	46	66	66			Grey, wet, very dense, fine SAND, little silt, trace clay, trace medium sand. 5.0 ft running sand, rewashed out, kept a head of water in bore hole.	GM243238 A-2-4, SC-SM WC=18.6%
							73				
							81				
							145				
							148			Similar to above. Roller coned ahead to 100.0 ft bgs.	
90	180	24/20	90.00 - 92.00	14/30/39/42	69	100	117				
							128				
							129				
							170				
							285				
95							120				
							97				
							115				
							118				
							118	-82.50		(100.00) Grey, wet, medium dense, fine to coarse SAND, some silt, little clay, little gravel. Roller coned ahead to 110.0 ft bgs.	
100	190	24/20	100.50 - 102.50	4/5/8/11	13	19	121				GM243239 A-4, SC-SM WC=10.7%
							122				
							122			Artisan water pressure at 103.0 ft bgs.	
							121				
							113				
							112				
							119				
							118				
							136			Failed sample attempt. Similar to above, dense.	
105							126				
							123				
							120				
							122				
110	MD	24/0	110.00 - 112.00	14/13/11/17	24	35	126				
							123				
							120				
							122				
	R1	102/18	114.00 - 122.50				122 RQD=2			R1: Cobbles and Sandy Till.	
115							296				
							236				
							245				
							250				
							258				
120							287				
							296/				
	200	21.6/14	122.50 - 124.30	12/24/24/40(3.6)	48	69	0280			*280 blows for 0.5 ft. Grey, wet, very dense, fine to coarse SAND, some silt, little clay, little gravel.	GM262321 A-4, SC-SM WC=7.7%
	R2	60/60	124.80 - 129.80	RQD = 43%			NQ-2	-107.30		Roller coned ahead 124.3 to 124.8 ft bgs.	
125										(124.80) Top of Bedrock at Elev. -107.3 R2:Bedrock: Dark grey to black, fine grained, very hard, fresh, SANDSTONE with pyrite and calcite veins, several planar joints dipping at 10 to 15 degrees, 40 to 50 degrees and 60 to 75 degrees (Kittery Formation). Rock Mass Quality = Poor. R2:Core Times (min:sec) 124.8-125.8 ft (5:53) 125.8-126.8 ft (7:39) 126.8-127.8 ft (2:57) 127.8-128.8 ft (3:27) 128.8-129.8 ft (3:48) 100% Recovery	
								-112.30			
130										(129.80) Bottom of Exploration at 129.80 feet below ground surface.	
135											
140											
145											
150											

Remarks:
300# down pressure on Core Barrel.

Stratification lines represent approximate boundaries between soil types; transitions may be gradual.
* Water level readings have been made at times and under conditions stated. Groundwater fluctuations may occur due to conditions other than those present at the time measurements were made.

Page 2 of 2
Boring No.: BB-KWBB-101

Maine Department of Transportation
Soil/Rock Exploration Log
US CUSTOMARY UNITS

Project: Pumping Station Bridge #2693 carries Route 1 over Branch Brook
Location: Kennebunk and Wells, Maine
Boring No.: BB-KWBB-102
WIN: 20474.00

Driller:	Maine DOT	Elevation (ft.)	19.5	Auger ID/OD:	5" Solid Stem
Operator:	Giles/Doggett	Datum:	NAVD88	Sampler:	Standard Split Spoon
Logged By:	B. Wilder/K. Maguire	Rig Type:	CME 45C	Hammer Wt./Fall:	140#/30"
Date Start/Finish:	2/22,23-24,28/2014	Drilling Method:	Cased Wash Boring	Core Barrel:	NQ-2"
Boring Location:	15+71.6, 13.1 ft Rt.	Casing ID/OD:	NW & HW	Water Level*:	None Observed
Hammer Efficiency Factor: 0.867		Hammer Type:	Automatic ☒ Hydraulic ☐ Rope & Cathead ☐		

Definitions:
D = Split Spoon Sample
MD = Unsuccessful Split Spoon Sample attempt
U = Thin Wall Tube Sample
MU = Unsuccessful Thin Wall Tube Sample attempt
V = Insitu Vane Shear Test, PP = Pocket Penetrometer
MV = Unsuccessful Insitu Vane Shear Test attempt
R = Rock Core Sample
SSA = Solid Stem Auger
HSA = Hollow Stem Auger
RC = Roller Cone
WOH = weight of 140lb. hammer
WOR/C = weight of rods or casing
WO1P = Weight of one person
S_u = Insitu Field Vane Shear Strength (psf)
T_v = Pocket Torvane Shear Strength (psf)
q_p = Unconfined Compressive Strength (ksf)
N-uncorrected = Raw Field SPT N-value
Hammer Efficiency Factor = Annual Calibration Value
N_{60} = SPT N-uncorrected corrected for hammer efficiency
S_u = Lab Vane Shear Strength (psf)
WC = water content, percent
LL = Liquid Limit
PL = Plastic Limit
PI = Plasticity Index
G = Grain Size Analysis
C = Consolidation Test

Depth (ft.)	Sample No.	Pen./Rec. (in.)	Sample Depth (ft.)	Blows (/6 in.) Shear Strength (psf) or RQD (%)	N-uncorrected	N_{60}	Casing Blows	Elevation (ft.)	Graphic Log	Visual Description and Remarks	Laboratory Testing Results/ AASHTO and Unified Class
0							SSA	19.00		5" Pavement (0.42)	
										Brown, damp, fine to coarse SAND, some silt, little gravel. (Fill).	
5	10	24/18	4.50 - 6.50	2/2/2/2	4	6				Brown, moist, loose, fine to coarse SAND, some silt, little gravel. (Fill).	GM243240 A-2-4, SM WC=13.0%
10	20	24/20	9.50 - 11.50	2/2/2/2	4	6				(10.50) Olive-grey, wet, medium stiff, Clayey SILT, trace fine sand.	GM243241 A-6, CL WC=32.2% LL=31 PL=20 PI=11
							26	9.00			
							30				
							22				
							20				
							19				
15	MDMV	24/0	15.50 - 17.50	1/WOH/WOH/1	---		12			Failed sample attempt. Failed 55x110 mm vane attempt, would not push.	
							20				
							18				
							16				
20	30/MU	24/6	20.00 - 22.00	WOR/WOR/WOR/WOR	---		17			Grey, wet, very soft to soft, Clayey SILT, trace fine sand. Failed Tube attempt, set for 20 minutes. Tube pushed with WOR.	
							13				
	V1		22.63 - 23.00	Su=223/67 psf			11			55x110 mm vane raw torque readings: V1: 5.0/1.5 ft-lbs	
	V2		23.63 - 24.00	Su=312/45 psf			9				
25	40/MU	24/10	25.00 - 27.00	WOR/WOR/WOR/WOR	---		11			Grey, wet, soft, Silty CLAY, trace sand, trace gravel. Failed tube attempt, set for 45 minutes. Pushed with WOR.	GM243242 A-6, CL WC=41.0%
							9				
	V3		27.63 - 28.00	Su=402/89 psf			6			55x110 mm vane raw torque readings: V3: 9.0/2.0 ft-lbs V4: 8.0/4.0 ft-lbs	
	V4		28.63 - 29.00	Su=357/179 psf			5				
30	50 V5	24/16	30.00 - 32.00 (40+60) 31.63	WOR/WOR/WOR/WOR Su=280/83 psf	---		5			Grey, wet, soft, Silty CLAY, trace gravel, trace sand. 55x110 mm vane raw torque readings: V5: 6.5/2.0 ft-lbs V6: 8.0/1.0 ft-lbs	GM243243 A-6, ML WC=34.4% LL=36 PL=25 PI=11
	V6		31.63 - 32.00	Su=357/45 psf			24				
							26				
							20				
							21				
35	60 V7	24/20	35.00 - 37.00 (40+60) 36.00	WOR/WOR/WOR/WOR Su=402/134 psf	---		10			Similar to above. 55x110 mm vane raw torque readings: V7: 9.0/3.0 ft-lbs V8: 9.5/1.5 ft-lbs	
	V8		36.63 - 37.00	Su=424/67 psf			11				
							12				
							5				
							5				
40	70 V9	24/17	40.00 - 42.00 (40+60) 41.00	WOR/WOR/WOR/WOR Su=424/89 psf	---		WOH			Grey, wet, soft, Clayey SILT, little fine sand. 55x110 mm vane raw torque readings: V9: 9.5/2.0 ft-lbs V10: 9.5/1.0 ft-lbs	
	V10		41.63 - 42.00	Su=424/45 psf			WOC				
							WOC				
							WOH				
							WOH				
45	80 MV	24/20	45.00 - 47.00 (40+60) 45.63	WOR/WOR/2/6 Would not Push	2	3	19	-26.00		(45.50) Grey, wet, very loose, Silty fine to coarse SAND, some clay. Failed 55x110 mm vane attempt.	GM243245 A-4, ML WC=19.5% Non-Plastic
							24				
							23				
							24				
							20				
50	90	24/20	50.00 - 52.00	WOR/WOR/WOR/WOR	---		WOC			Grey, wet, very loose, Silty fine to coarse SAND, some clay.	Combined with 80 for lab testing
							WOC				
							18				
							26			Set in NW casing at 53.0 ft bgs.	
							22				
							15				
55							8				
							7				
							7				
							6				
60	100	24/14	60.00 - 62.00	2/1/2/2	3	4	GmP			Grey, wet, loose, fine to coarse SAND, some silt, little clay, trace gravel. *Hydraulic Push	GM243246 A-4, SC-SM WC=19.7%
							HP				
							HP				
							HP				
							8				
65							35				
							14				
							24				
							22			Running sand, kept a head of water in casing.	
							30	-49.50		(69.00)	
70	110	24/18	70.00 - 72.00	8/10/11/12	21	30	1			Grey, wet, medium dense, fine SAND, some silt, trace medium sand, trace clay.	GM243247 A-2-4, SC-SM WC=20.8%
							WOC				
							7				
							26				
							105				
75											

Remarks:

Stratification lines represent approximate boundaries between soil types; transitions may be gradual.
* Water level readings have been made at times and under conditions stated. Groundwater fluctuations may occur due to conditions other than those present at the time measurements were made.

Page 1 of 2
Boring No.: BB-KWBB-102

Maine Department of Transportation
Soil/Rock Exploration Log
US CUSTOMARY UNITS

Project: Pumping Station Bridge #2693 carries Route 1 over Branch Brook
Location: Kennebunk and Wells, Maine
Boring No.: BB-KWBB-102
WIN: 20474.00

Driller:	Maine DOT	Elevation (ft.)	19.5	Auger ID/OD:	5" Solid Stem
Operator:	Giles/Doggett	Datum:	NAVD88	Sampler:	Standard Split Spoon
Logged By:	B. Wilder/K. Maguire	Rig Type:	CME 45C	Hammer Wt./Fall:	140#/30"
Date Start/Finish:	2/22,23-24,28/2014	Drilling Method:	Cased Wash Boring	Core Barrel:	NQ-2"
Boring Location:	15+71.6, 13.1 ft Rt.	Casing ID/OD:	NW & HW	Water Level*:	None Observed
Hammer Efficiency Factor: 0.867		Hammer Type:	Automatic ☒ Hydraulic ☐ Rope & Cathead ☐		

Definitions:
D = Split Spoon Sample
MD = Unsuccessful Split Spoon Sample attempt
U = Thin Wall Tube Sample
MU = Unsuccessful Thin Wall Tube Sample attempt
V = Insitu Vane Shear Test, PP = Pocket Penetrometer
MV = Unsuccessful Insitu Vane Shear Test attempt
R = Rock Core Sample
SSA = Solid Stem Auger
HSA = Hollow Stem Auger
RC = Roller Cone
WOH = weight of 140lb. hammer
WOR/C = weight of rods or casing
WO1P = Weight of one person
S_u = Insitu Field Vane Shear Strength (psf)
T_v = Pocket Torvane Shear Strength (psf)
q_p = Unconfined Compressive Strength (ksf)
N-uncorrected = Raw Field SPT N-value
Hammer Efficiency Factor = Annual Calibration Value
N_{60} = SPT N-uncorrected corrected for hammer efficiency
S_u = Lab Vane Shear Strength (psf)
WC = water content, percent
LL = Liquid Limit
PL = Plastic Limit
PI = Plasticity Index
G = Grain Size Analysis
C = Consolidation Test

Depth (ft.)	Sample No.	Pen./Rec. (in.)	Sample Depth (ft.)	Blows (/6 in.) Shear Strength (psf) or RQD (%)	N-uncorrected	N_{60}	Casing Blows	Elevation (ft.)	Graphic Log	Visual Description and Remarks	Laboratory Testing Results/ AASHTO and Unified Class
75							236				
							210				
							186				
							188				
							234			Kept a head of water in casing.	
80	120	24/18	80.00 - 82.00	6/6/8/8	14	20	91			Grey, wet, medium dense, fine SAND, little silt, trace medium sand, trace clay.	GM243248 A-2-4, SC-SM WC=21.4%
							68				
							83				
							91			Roller coned ahead to 90.0 ft bgs.	
							252				
85							209				
							175				
							182				
							263			Kept a head of water in casing.	
							258				
90	130	24/19	90.00 - 92.00	4/4/12/23	16	23	211			Grey, wet, medium dense, fine SAND, little medium sand, little silt, trace clay.	GM243249 A-2-4, SC-SM WC=20.0%
							137				
							143				
							189			Washed ahead to 100.0 ft bgs.	
							101				
							121				
							136				
							216				
95							128			Grey, wet, medium dense, fine SAND, little silt, trace clay. Washed ahead of casing to 120.0 ft bgs.	
							160				
							206				
							308				
100							301				
							230				
							220				
							204				
							254				
							191	-90.50		(110.00) Grey, wet, medium dense, fine to coarse SAND, some silt, little clay, trace gravel.	GM243250 A-4, SC-SM WC=10.7%
105							190				
							240				
							290				
							252				
							259				
110							333				
							333				
							345				
							525				
							412				
115	160	7.2/7.2	120.50 - 121.10	40/50(1.2")	---		156+			Grey, wet, very dense, fine to coarse SAND, some silt, little gravel, little clay.	GM262320 A-4, SC-SM WC=7.1%
	R1	60/60	122.70 - 127.70	RQD = 72%			NQ-2	-103.20		Roller coned ahead to 122.7 ft bgs.	
120										(122.70) Top of Bedrock at Elev. -103.2 ft. R1:Bedrock: Dark grey to black, fine grained, very hard, fresh, SANDSTONE with quartz, pyrite and calcite veins, several healed and open joints dipping at 35 to 55 degrees (Kittery Formation). Rock Mass Quality = Fair. R1:Core Times (min:sec) 122.7-123.7 ft (3:25) 123.7-124.7 ft (3:40) 124.7-125.7 ft (2:35) 125.7-126.7 ft (4:25) 126.7-127.7 ft (6:57) 100% Recovery	
								-108.20			
125										(127.70) Bottom of Exploration at 127.70 feet below ground surface.	
130											
135											
140											
145											
150											

Remarks:

Stratification lines represent approximate boundaries between soil types; transitions may be gradual.
* Water level readings have been made at times and under conditions stated. Groundwater fluctuations may occur due to conditions other than those present at the time measurements were made.

Page 2 of 2
Boring No.: BB-KWBB-102

STATE OF MAINE
DEPARTMENT OF TRANSPORTATION
STP-2047(400)
WIN 20474.00
BRIDGE NO. 2693
BRIDGE PLANS

PROJ. MANAGER	J. KITTREDGE	BY	DATE
DESIGN-DETAILED	R. NAOUS	G. LIBBY	
CHECKED-REVIEWED	K.LENFELDER	B. NICHOLS	SIGNATURE
DESIGN2-DETAILED2	K.MAGUIRE	T. WHITE	JUNE 2014
DESIGN3-DETAILED3	K.LENFELDER		P.E. NUMBER
REVISIONS 1			
REVISIONS 2			DATE
REVISIONS 3			
REVISIONS 4			
FIELD CHANGES			

PUMPING STATION BRIDGE
BRANCH BROOK
KENNEBUNK\WELLS YORK COUNTY

BORING LOGS

SHEET NUMBER
7
OF 27

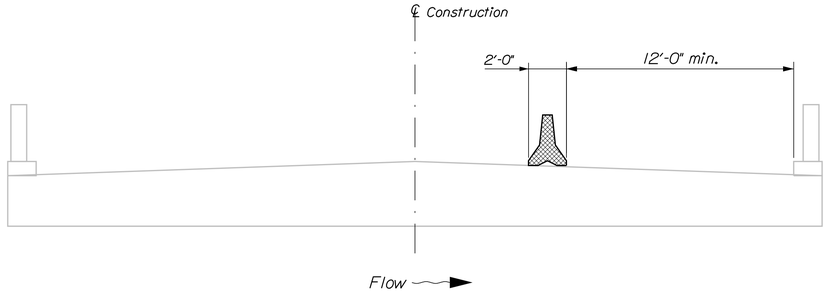

STAGE I

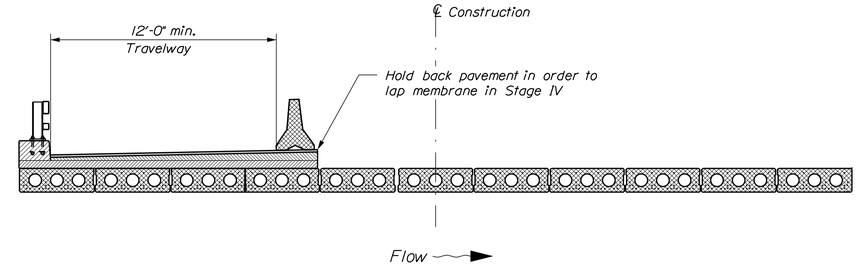

STAGE III

STAGE I

1. Position temporary concrete barriers on downstream side.
2. Open downstream travel lane to one lane of alternating traffic.

STAGE II

1. Cut and remove upstream side of the existing bridge.
2. Place & post tension the first four (4) precast concrete beams.
3. Place first part of the concrete leveling slab w/ curb & bridge rail.
4. Place membrane and at a minimum, base pavement.

STAGE III

1. Move temporary concrete barrier to shift traffic to the upstream lane.
2. Place & post tension the remaining seven (7) precast concrete beams.

STAGE IV

1. Place the remaining concrete leveling slab and curb w/ bridge rail.
2. Place remaining membrane and pavement.
3. Open to traffic.

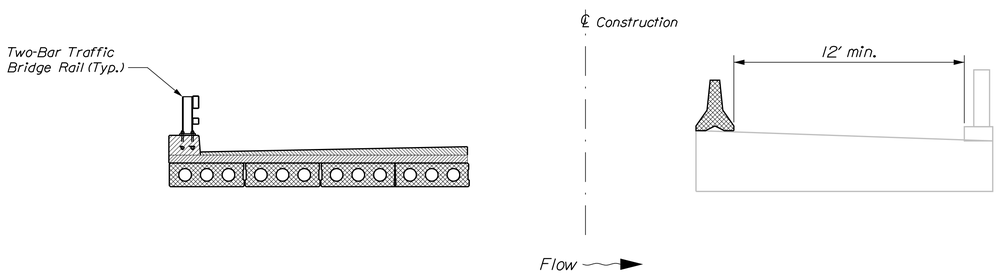

STAGE II

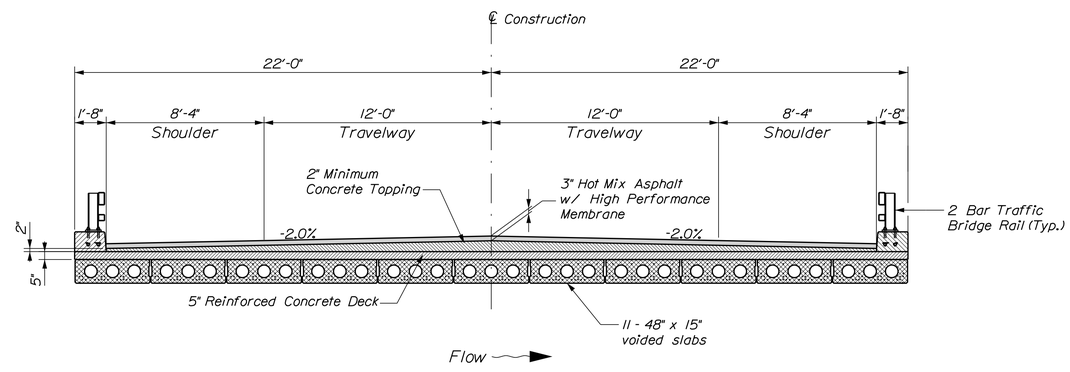

STAGE IV

BRIDGE SECTION

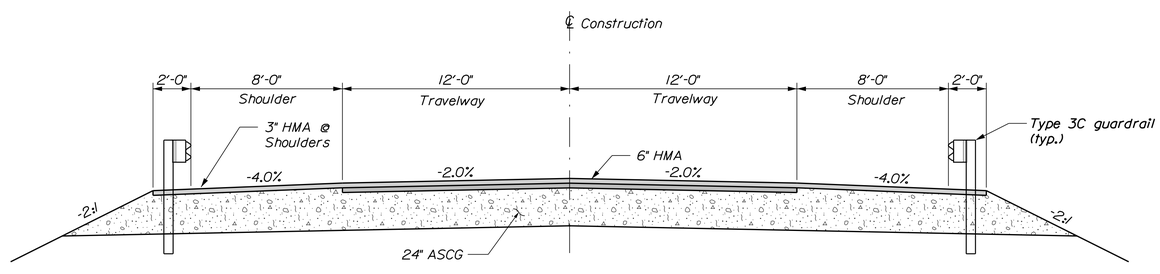

APPROACH SECTION

STATE OF MAINE
DEPARTMENT OF TRANSPORTATION

STP-2047(400)

WIN 20474.00

BRIDGE NO. 2693

HISTORICAL PLANS

PROJ. MANAGER	J. KITTREDGE	BY	DATE
DESIGN-DETAILED	R. NAOUS	G. LIBBY	
CHECKED-REVIEWED	K.KLEINFELDER	B. NICHOLS	
DESIGN2-DETAILED2	K.MAGUIRE	T. WHITE	JUNE 2014
DESIGN3-DETAILED3	K.KLEINFELDER		
REVISIONS 1			
REVISIONS 2			
REVISIONS 3			
REVISIONS 4			
FIELD CHANGES			

SIGNATURE

P.E. NUMBER

DATE

PUMPING STATION BRIDGE
BRANCH BROOK
KENNEBUNK\WELLS YORK COUNTY

STAGE CONSTRUCTION PLANS

SHEET NUMBER

8

OF 27

Filename: ...\MSTA\008_StageConstr.dgn Division: BRIDGE Username: gerald.libby Date:7/14/2015

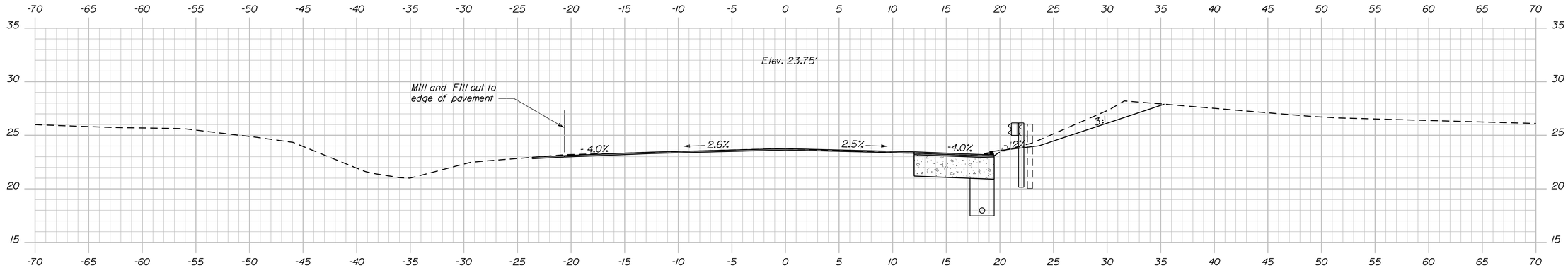

15+00.00

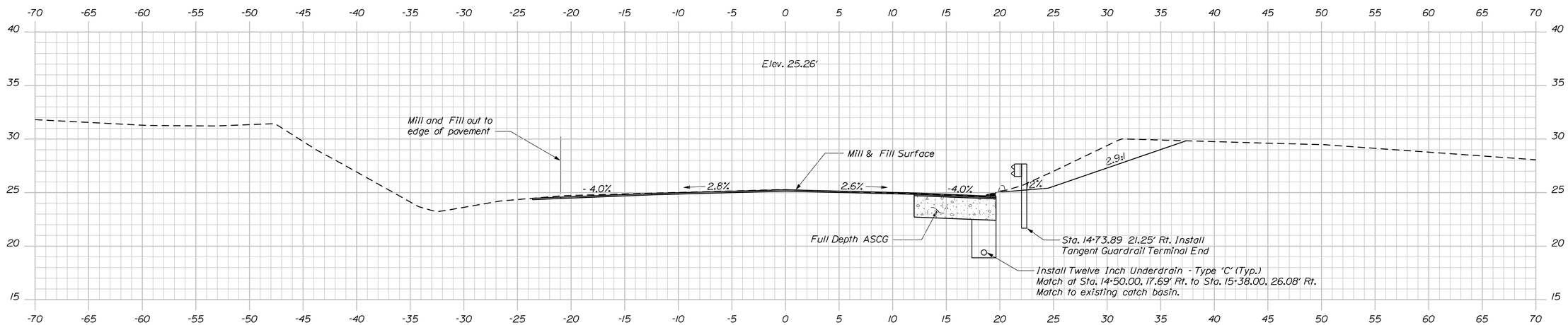

14+75.00

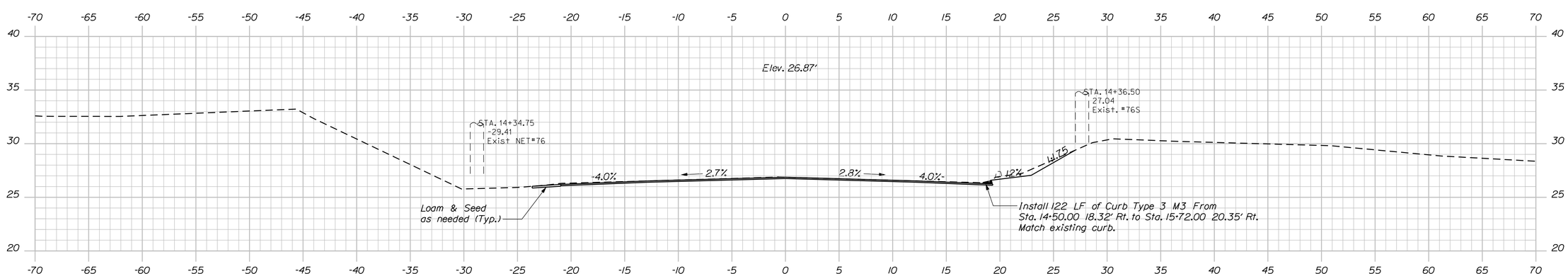

Limit of Work
Mill and Fill
Match Existing

14+50.00

STATE OF MAINE
DEPARTMENT OF TRANSPORTATION

STP-2047(400)

WIN 20474.00

BRIDGE NO. 2693

BRIDGE PLANS

		BY	DATE
PROJ. MANAGER	J. KITTREDGE		
DESIGN-DETAILED	R. MAOUS	G. LIBBY	------
CHECKED-REVIEWED	KLEINFELDER	B. NICHOLS	------
DESIGN2-DETAILED2	K. MAGUIRE	T. WHITE	JUNE 2014
DESIGN3-DETAILED3	KLEINFELDER	------	------
REVISIONS 1	------	------	------
REVISIONS 2	------	------	------
REVISIONS 3	------	------	------
REVISIONS 4	------	------	------
FIELD CHANGES	------	------	------

SIGNATURE

P.E. NUMBER

DATE

PUMPING STATION BRIDGE
BRANCH BROOK
KENNEBUNK\WELLS YORK COUNTY

APPROACH CROSS SECTIONS

SHEET NUMBER

9

OF 27

Filename: ...\MSTA\009_XSECT_14+50_001.dgn Division: BRIDGE Username: gerald.libby Date:7/14/2015

Sta. 14+50.00 to Sta. 15+00.00

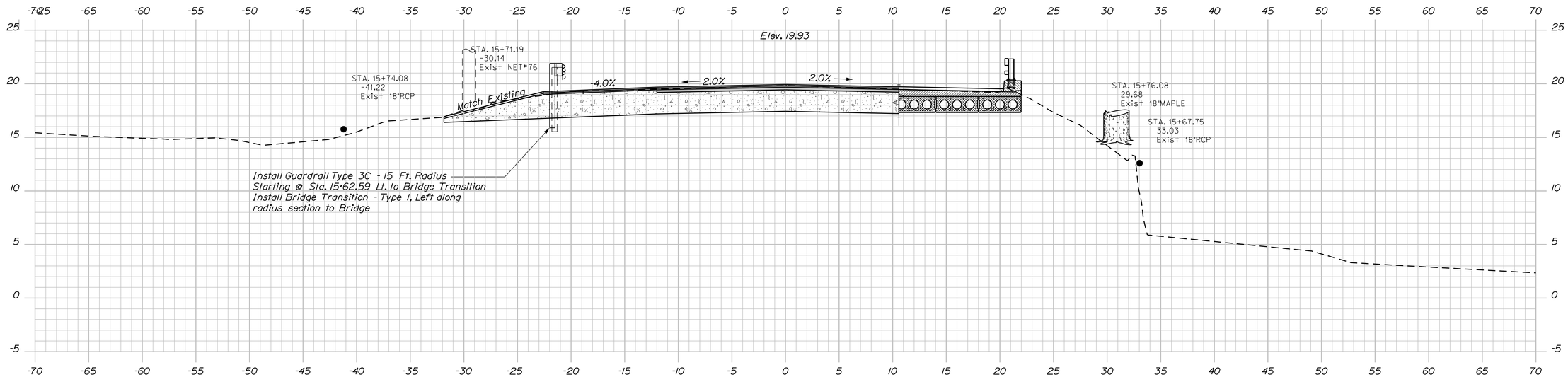

15+75.00

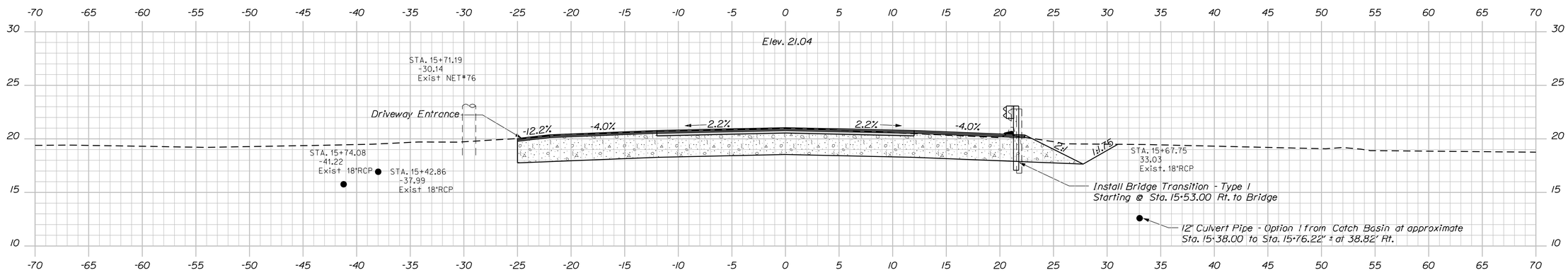

15+50.00
End Transition
Begin Project

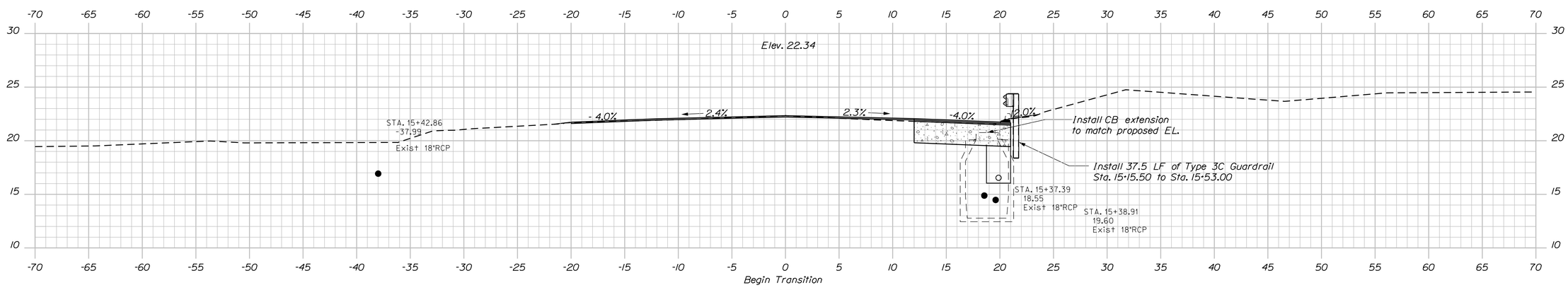

Begin Transition
15+25.00

STATE OF MAINE
DEPARTMENT OF TRANSPORTATION

STP-2047(400)

WIN 20474.00

BRIDGE NO. 2693

BRIDGE PLANS

		BY	DATE
PROJ. MANAGER	J. WITTREDGE		
DESIGN-DETAILED	R. NAOUS	G. LIBBY	
CHECKED-REVIEWED	K.LENFELDER	B. NICHOLS	
DESIGN2-DETAILED2	K.MAGUIRE	T. WHITE	JUNE 2014
DESIGN3-DETAILED3	K.LENFELDER		
REVISIONS 1			
REVISIONS 2			
REVISIONS 3			
REVISIONS 4			
FIELD CHANGES			

SIGNATURE

P.E. NUMBER

DATE

PUMPING STATION BRIDGE
BRANCH BROOK
KENNEBUNK\WELLS YORK COUNTY

APPROACH CROSS SECTIONS

SHEET NUMBER

10

OF 27

Filename: ...\MSTA\010_XSECT_15+25_002.dgn Division: BRIDGE Username: gerald.libby Date:7/14/2015

Sta. 15+25.00 to Sta. 15+75.00

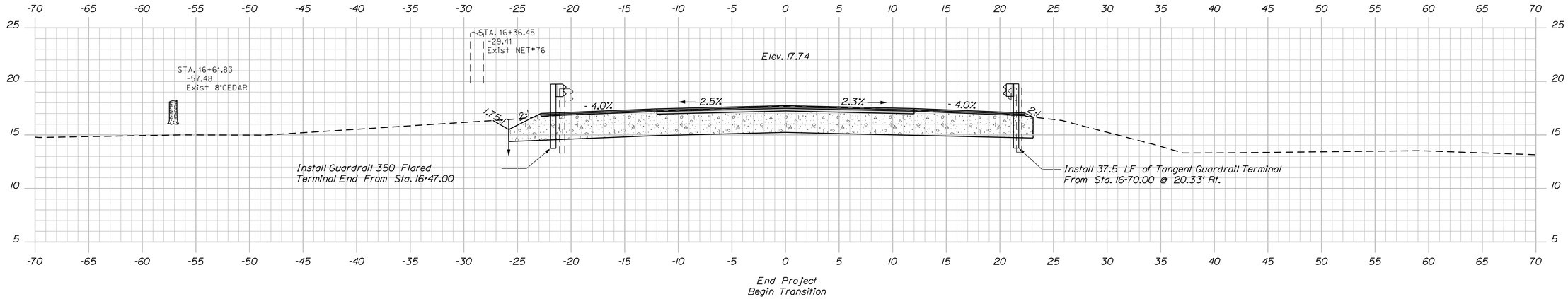

16+50.00

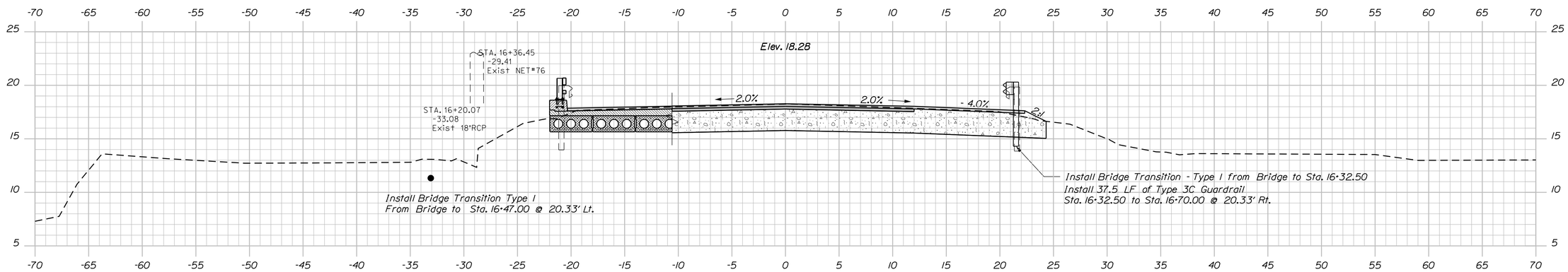

16+25.00

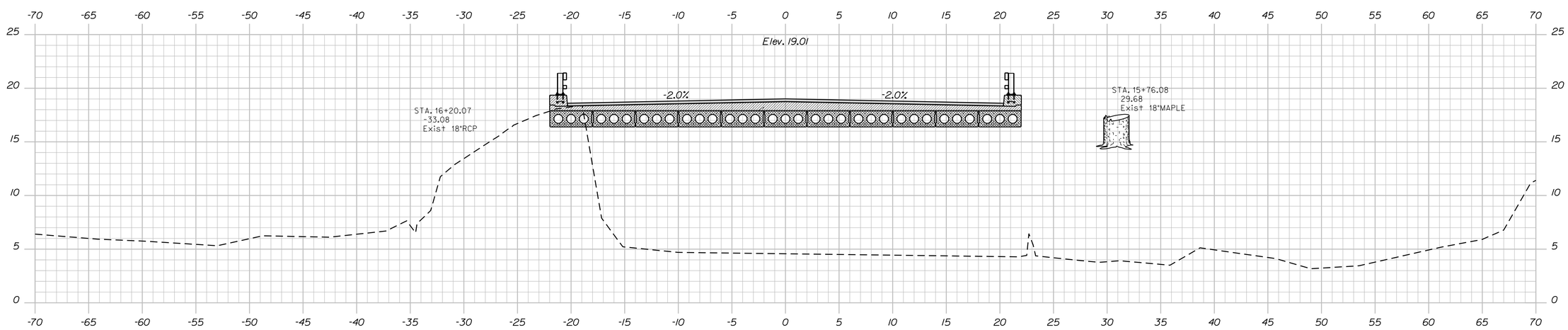

16+00.00

STATE OF MAINE
DEPARTMENT OF TRANSPORTATION

STP-2047(400)

WIN 20474.00

BRIDGE NO. 2693

BRIDGE PLANS

		BY	DATE
PROJ. MANAGER	J. KITTREDGE		
DESIGN-DETAILED	R. NAOUS	G. LIBBY	
CHECKED-REVIEWED	KLEINFELDER	B. NICHOLS	
DESIGN2-DETAILED2	K.MAGUIRE	T.WHITE	JUNE 2014
DESIGN3-DETAILED3	KLEINFELDER		
REVISIONS 1			
REVISIONS 2			
REVISIONS 3			
REVISIONS 4			
FIELD CHANGES			

SIGNATURE

P.E. NUMBER

DATE

PUMPING STATION BRIDGE
BRANCH BROOK
KENNEBUNK\WELLS YORK COUNTY

APPROACH CROSS SECTIONS

SHEET NUMBER

11

OF 27

Sta. 16+00.00 to Sta. 16+50.00

Filename: ...\MSTA\011_XSECT_16+00_003.dgn Division: BRIDGE Username: gerald.libby Date:7/14/2015

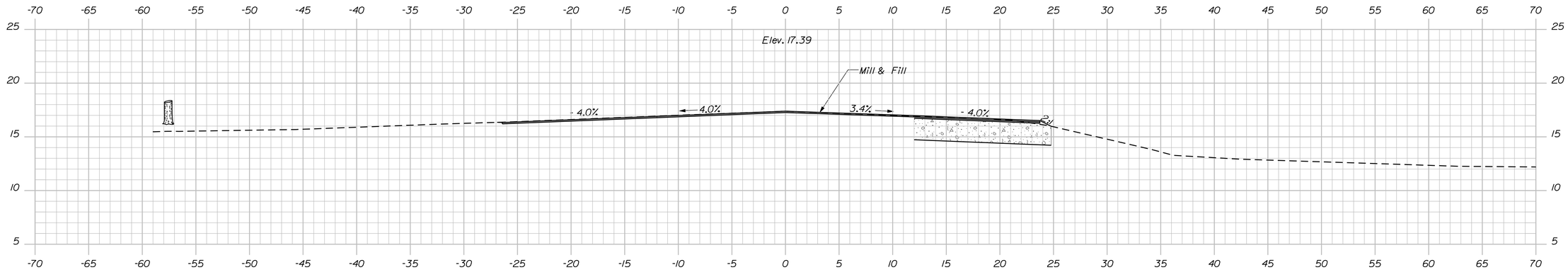

17+25.00

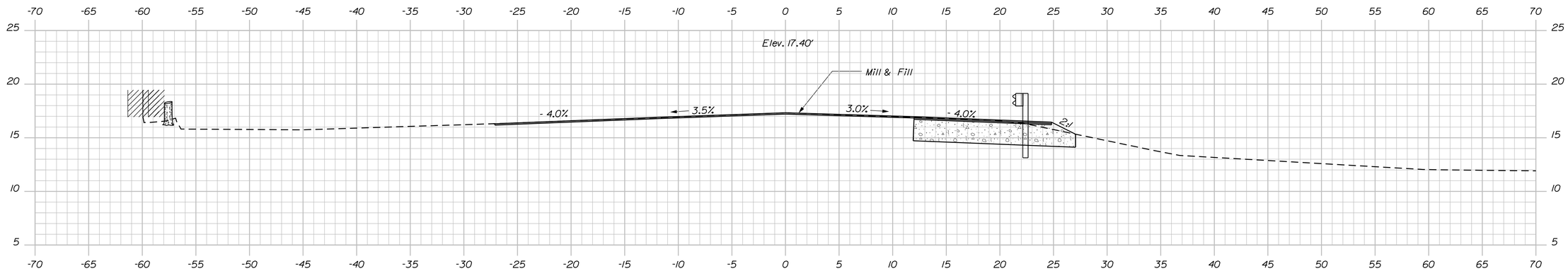

17+00.00

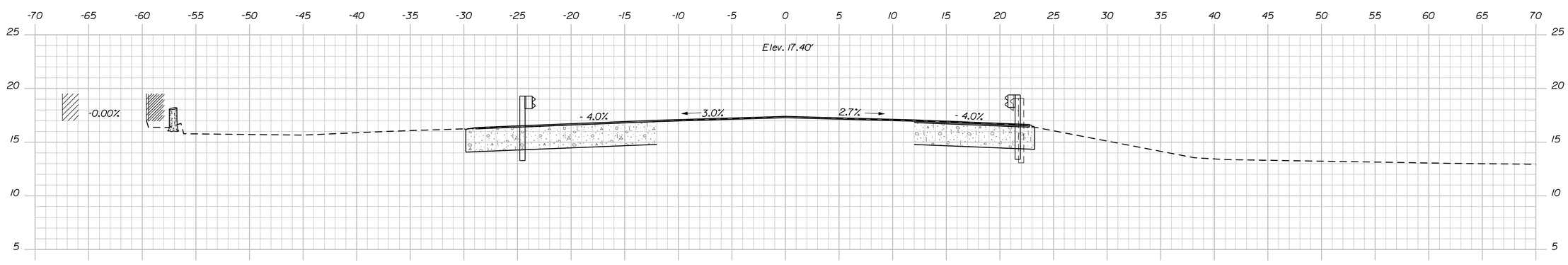

16+75.00

End Transition
Match Existing

Sta. 16+75.00 to Sta. 17+25.00

STATE OF MAINE
DEPARTMENT OF TRANSPORTATION

STP-2047(400)

WIN
20474.00

BRIDGE NO. 2693

BRIDGE PLANS

		BY	DATE
PROJ. MANAGER	J. KITTREDGE		
DESIGN-DETAILED	R. NAOUS	G. LIBBY	
CHECKED-REVIEWED	K.LENFELDER	B. NICHOLS	
DESIGN2-DETAILED2	K.MAGUIRE	T. WHITE	JUNE 2014
DESIGN3-DETAILED3	K.LENFELDER		
REVISIONS 1			
REVISIONS 2			
REVISIONS 3			
REVISIONS 4			
FIELD CHANGES			

SIGNATURE

P.E. NUMBER

DATE

PUMPING STATION BRIDGE
BRANCH BROOK
KENNEBUNK\WELLS YORK COUNTY

APPROACH CROSS SECTIONS

SHEET NUMBER

12

OF 27

Filename: ...\MSTA\012_XSECT_16+75_004.dgn Division: BRIDGE Username: gerald.libby Date:7/14/2015

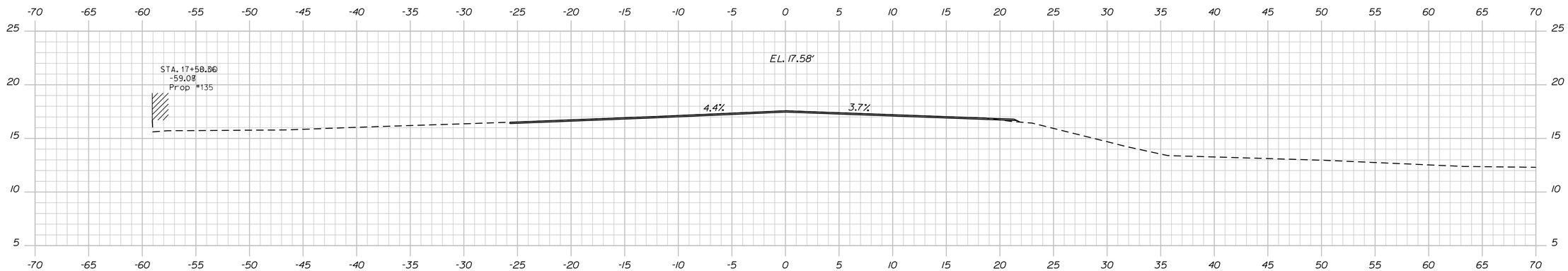

17+50.00

Limit of Work
Mill and Fill
Match Existing Pavement

Sta. 17+50.00 to Sta. 18+00.00

STATE OF MAINE
DEPARTMENT OF TRANSPORTATION

STP-2047(400)

WIN
20474.00

BRIDGE NO. 2693

BRIDGE PLANS

PROJ. MANAGER	J. KITTREDGE	BY	DATE
DESIGN-DETAILED	R. NAOUS	G. LIBBY	
CHECKED-REVIEWED	KLEINFELDER	B. NICHOLS	
DESIGN2-DETAILED2	K.MAGUIRE	T. WHITE	JUNE 2014
DESIGN3-DETAILED3	KLEINFELDER		
REVISIONS 1			
REVISIONS 2			
REVISIONS 3			
REVISIONS 4			
FIELD CHANGES			

SIGNATURE

P.E. NUMBER

DATE

PUMPING STATION BRIDGE
BRANCH BROOK
KENNEBUNK\WELLS YORK COUNTY

APPROACH CROSS SECTIONS

SHEET NUMBER

13

OF 27

Filename: ...\MSTA\013_XSECT_17+50_005.dgn Division: BRIDGE Username: gerald.libby Date:7/14/2015

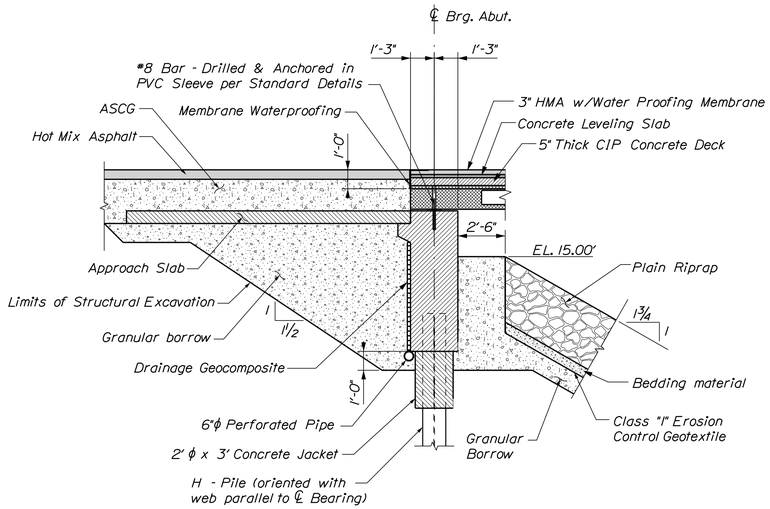

TYPICAL ABUTMENT SECTION

ABUTMENT NOTES

1. Structural Earth Excavation, Abutments and Retaining Walls, required more than 12 inches below the bottom of the structure, will be paid for in accordance with Standard Specifications Section 206, Structural Excavation.

2. Reinforcing steel shall have a minimum concrete cover of 3 inches in the abutments and wingwalls unless otherwise noted.

3. Cover joints where waterstops are not required in accordance with Standard Details Section 502.

4. Install drainage geocomposite behind the abutment and wingwalls up to the approach slab elevation and in accordance with Special Provision 620 - Drainage Geocomposite.

5. Payment for the concrete jacket around the tops of the H-piles will not be paid for directly, but shall be considered incidental to Pay Item No. 502.219, Structural Concrete - Abutments & Retaining Wall. Fill Concrete may be used for the concrete jacket.

6. To ensure an accurate match with the superstructure, the parapet portions of the wingwalls shall be placed after erection of the precast units.

PILE NOTES

1. The maximum factored pile load is 378 kips.

2. H-pile material shall be ASTM A 572, Grade 50.

3. Estimate of piles required:

   Abutment No. 1: 5 ~ HP 14x117 @ 120 feet
   Abutment No. 2: 5 ~ HP 14x117 @ 125 feet

4. All piles shall be equipped with a standard specifications pile tip in accordance with Section 501.10 - Prefabricated Pile Tips.

5. Piles shall not be out of position shown by more than 2 inches in any direction. Cost for removing and redriving piles that are out of position will be incidental to related Contract items.

6. The Contractor shall perform and submit a wave equation analysis for review and acceptance by the Resident. The maximum allowable driving stress is 0.90 times Fy. The submittal analyses shall include the proposed stopping criteria based on the wave equation analysis and the proposed driving system. The stopping criteria shall include the blows per inch and the number of 1-in. intervals at which pile installation may be terminated. The cost of performing the wave equation analysis will be considered incidental to Item No. 501.92, Pile Driving Equipment Mobilization.

7. The Contractor shall perform 2 dynamic load test(s), 1 per each abutment, to confirm the ultimate capacity of the piles. The required nominal resistance for the pile is the factored axial pile load divided by a resistance factor of 0.65 per LRFD Specifications. The dynamic test shall be performed on the first production pile at each abutment.

8. Piles shall be driven to bedrock in accordance with Section 501 of the Standard Specifications.

9. It is anticipated that the Contractor will encounter obstructions including but not limited to existing timber piling during pile driving operations. Clearing of obstructions shall be as specified in Section 501 of the Standard Specifications. The method of clearing obstructions shall be approved by the Resident. The cost of clearing obstructions shall be considered incidental to related contract items.

10. Where existing timber piling may interfere with proposed H-pile driving, the existing timber piles shall be removed to limits determined by the Resident.

STATE OF MAINE
DEPARTMENT OF TRANSPORTATION

STP-2047(400)

WIN 20474.00

BRIDGE NO. 2693

BRIDGE PLANS

PROJ. MANAGER	J. KITTREDGE	BY	DATE
DESIGN-DETAILED	R. NAOUS	G. LIBBY	
CHECKED-REVIEWED	KLEINFELDER	B. NICHOLS	------
DESIGN2-DETAILED2	K.MAGUIRE	T. WHITE	JUNE 2014
DESIGN3-DETAILED3	KLEINFELDER	------	------
REVISIONS 1	------	------	------
REVISIONS 2	------	------	------
REVISIONS 3	------	------	------
REVISIONS 4	------	------	------
FIELD CHANGES	------	------	------

SIGNATURE

P.E. NUMBER

DATE

PUMPING STATION BRIDGE
BRANCH BROOK
KENNEBUNK\WELLS YORK COUNTY

ABUTMENT NOTES & DETAILS

SHEET NUMBER

14

OF 27

Filename: ...\MSTA\014_Abutment_notes.dgn Division: BRIDGE Username: gerald.libby Date:7/14/2015

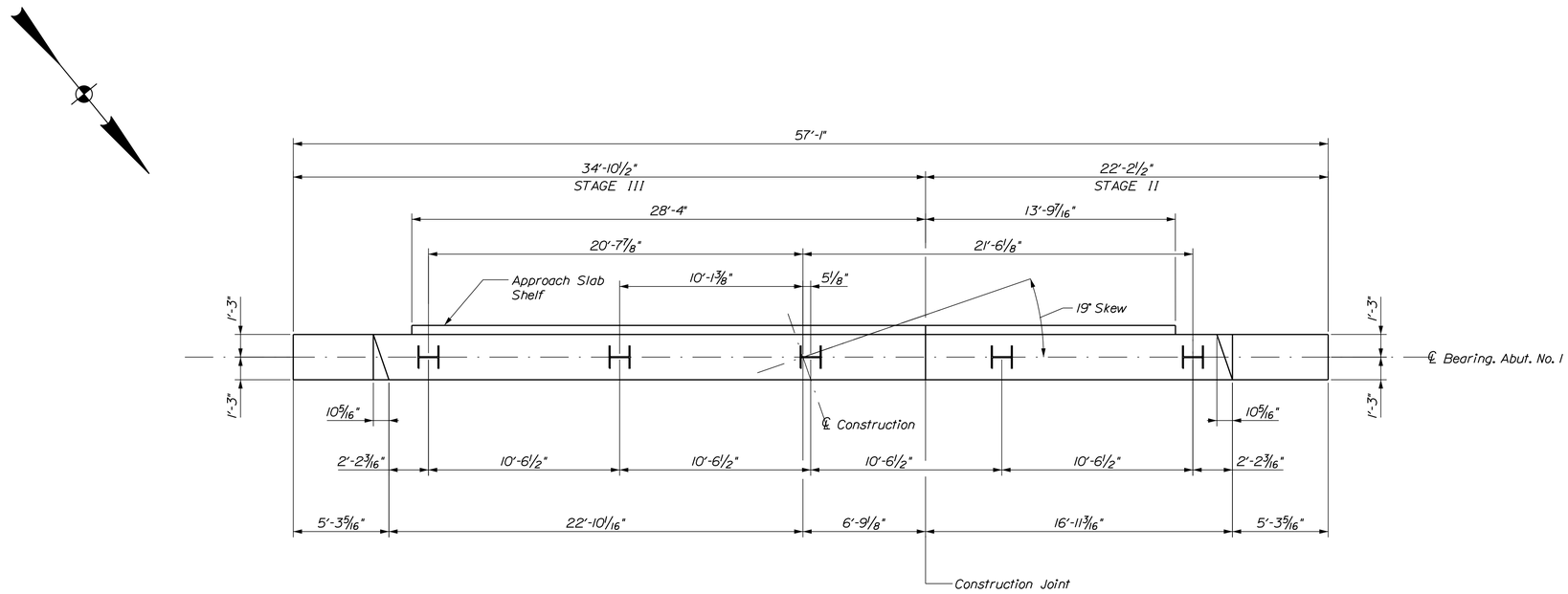

ABUTMENT NO. 1 PLAN

Flow

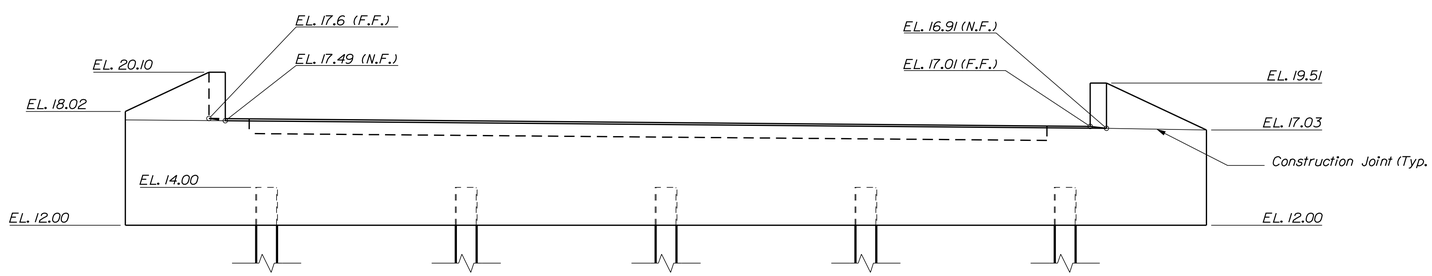

ABUTMENT NO. 1 FRONT ELEVATION

Flow

STATE OF MAINE
DEPARTMENT OF TRANSPORTATION

STP-2047(400)

WIN 20474.00

BRIDGE NO. 2693

BRIDGE PLANS

PROJ. MANAGER	J. KITTREDGE	BY	DATE
DESIGN-DETAILED	R. NAOUS	G. LIBBY	
CHECKED-REVIEWED	K.LENFELDER	B. NICHOLS	------
DESIGN2-DETAILED2	K.MAGUIRE	T. WHITE	JUNE 2014
DESIGN3-DETAILED3	K.LENFELDER	------	------
REVISIONS 1	------	------	------
REVISIONS 2	------	------	------
REVISIONS 3	------	------	------
REVISIONS 4	------	------	------
FIELD CHANGES	------	------	------

SIGNATURE

P.E. NUMBER

DATE

PUMPING STATION BRIDGE
BRANCH BROOK
KENNEBUNK\WELLS YORK COUNTY

ABUTMENT NO. 1 PLANS

SHEET NUMBER

15

OF 27

Filename: ...\MSTA\015_Abutment_ 1_Plan.dgn Division: BRIDGE Username: gerald.libby Date:7/14/2015

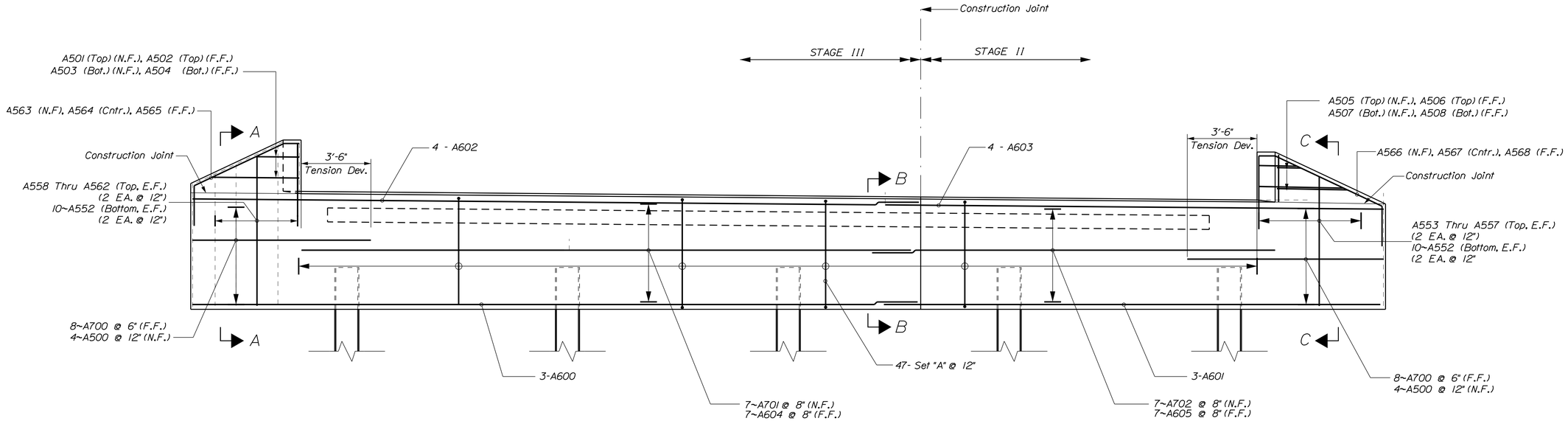

ABUTMENT NO. 1 REINFORCEMENT

Flow

REINFORCING STEEL SETS	
SET	DESCRIPTION
A	2 - A551 (Top), 2 - A550 (Bot.)

NOTES:

- ALL PILES SHALL BE HP14x117
- TDL - DENOTES TENSION DEVELOPMENT LENGTH
- N.F. - DENOTES 'NEAR FACE' TO ELEVATION
- F.F. - DENOTES 'FAR FACE' TO ELEVATION
- E.F. - DENOTES 'EACH FACE' TO ELEVATION

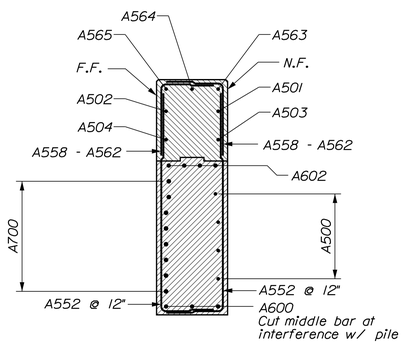

SECTION A - A

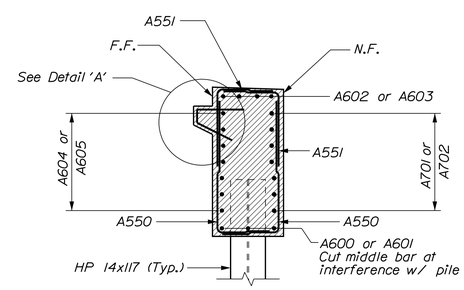

SECTION B - B

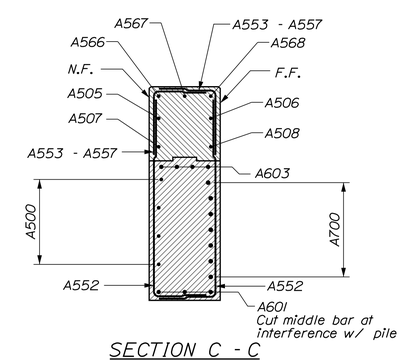

SECTION C - C

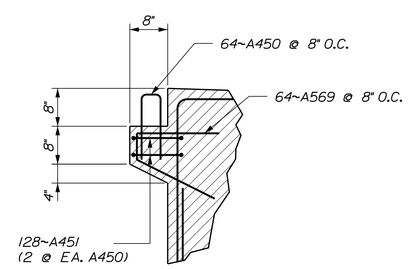

DETAIL 'A'

STATE OF MAINE
DEPARTMENT OF TRANSPORTATION

STP-2047(400)

WIN 20474.00

BRIDGE NO. 2693

BRIDGE PLANS

	BY	DATE
PROJ. MANAGER	J. KITTREDGE	
DESIGN-DETAILED	R. NAOUS	G. LIBBY
CHECKED-REVIEWED	KLEINFELDER	B. NICHOLS
DESIGN2-DETAILED2	K.MAGUIRE	T.WHITE
DESIGN3-DETAILED3	KLEINFELDER	JUNE 2014
REVISIONS 1		
REVISIONS 2		
REVISIONS 3		
REVISIONS 4		
FIELD CHANGES		

SIGNATURE

P.E. NUMBER

DATE

PUMPING STATION BRIDGE
BRANCH BROOK
KENNEBUNK\WELLS YORK COUNTY

ABUTMENT NO. 1
REINFORCING

SHEET NUMBER

16

OF 27

Filename: ...\MSTA\016_Abutment_ 1_REINF.dgn Division: BRIDGE Username: gerald.libby Date:7/14/2015

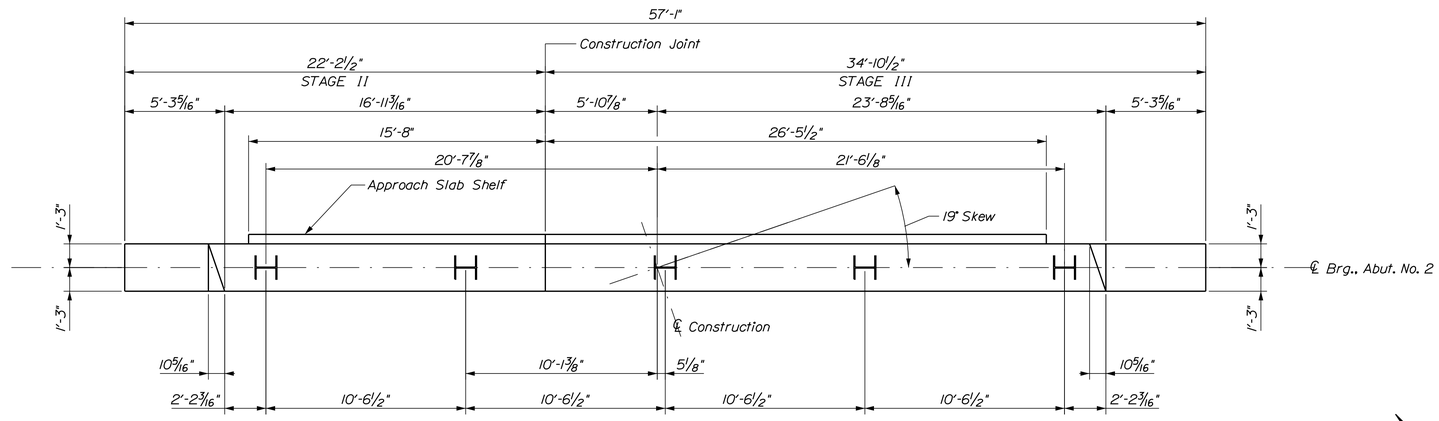

ABUTMENT NO. 2 PLAN

Flow

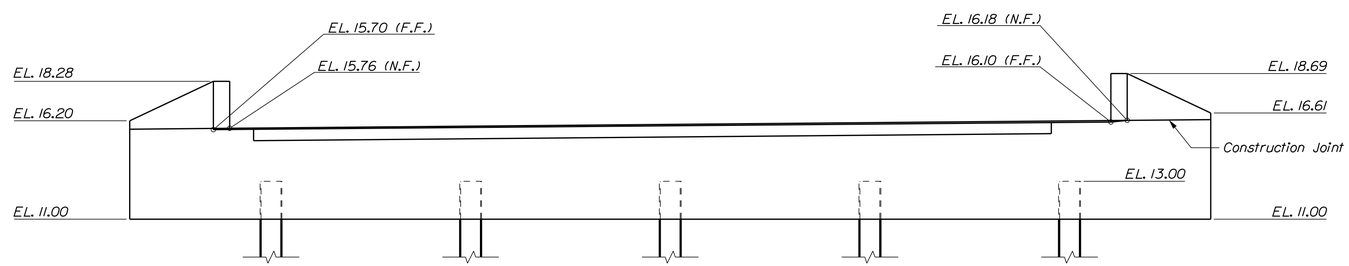

ABUTMENT NO. 2 FRONT ELEVATION

Flow

PROJ. MANAGER	J. KITTREDGE	BY	DATE
DESIGN-DETAILED	R. NAOUS	G. LIBBY	
CHECKED-REVIEWED	K.LENFELDER	B. NICHOLS	
DESIGN2-DETAILED2	K.MAGUIRE	T. WHITE	JUNE 2014
DESIGN3-DETAILED3	K.LENFELDER		
REVISIONS 1			
REVISIONS 2			
REVISIONS 3			
REVISIONS 4			
FIELD CHANGES			

SIGNATURE

P.E. NUMBER

DATE

STATE OF MAINE
DEPARTMENT OF TRANSPORTATION

STP-2047(400)

WIN 20474.00

BRIDGE NO. 2693

BRIDGE PLANS

PUMPING STATION BRIDGE
BRANCH BROOK
KENNEBUNK\WELLS YORK COUNTY

ABUTMENT NO. 2 PLANS

SHEET NUMBER

17

OF 27

Filename: ...\MSTA\017_Abutment_2_Plan.dgn Division: BRIDGE Username: gerald.libby Date:7/14/2015

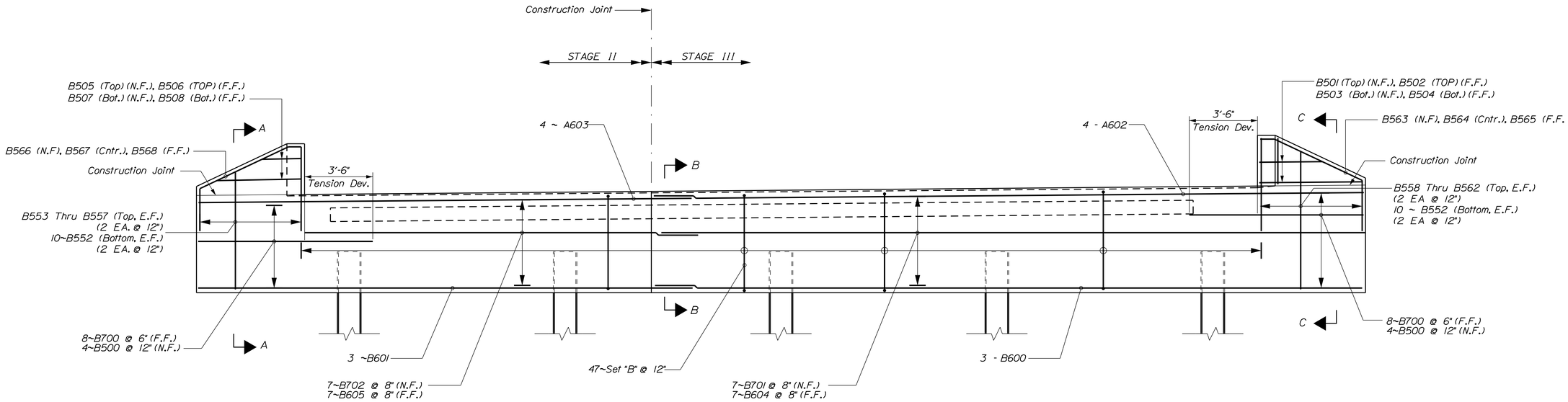

ABUTMENT NO. 2 REINFORCEMENT

Flow

REINFORCING STEEL SETS	
SET	DESCRIPTION
B	2 - B551 (Top), 2 - B550 (Bot.)

NOTES:
- ALL PILES SHALL BE HP14x117
- TDL - DENOTES TENSION DEVELOPMENT LENGTH
- N.F. - DENOTES 'NEAR FACE' TO ELEVATION
- F.F. - DENOTES 'FAR FACE' TO ELEVATION
- E.F. - DENOTES 'EACH FACE' TO ELEVATION

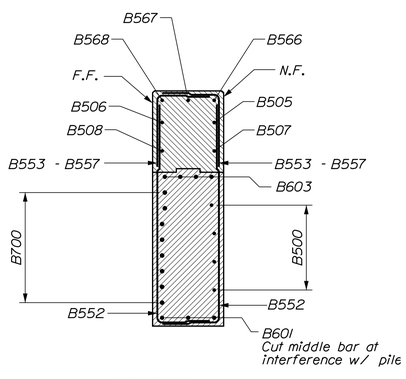

SECTION A - A

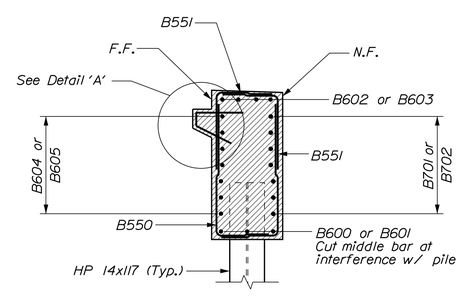

SECTION B - B

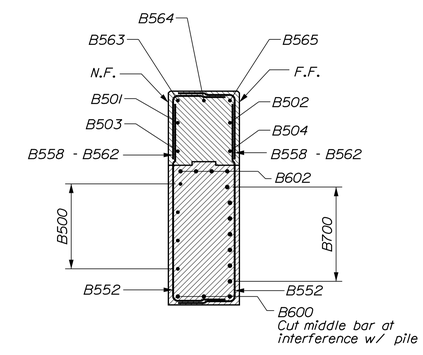

SECTION C - C

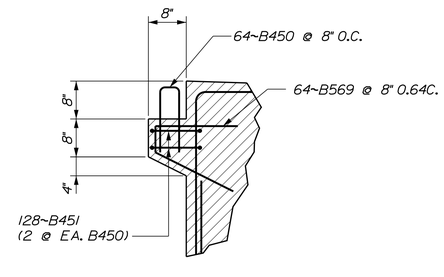

DETAIL 'A'

STATE OF MAINE
DEPARTMENT OF TRANSPORTATION

STP-2047(400)

WIN 20474.00

BRIDGE NO. 2693

BRIDGE PLANS

		BY	DATE
PROJ. MANAGER	J. KITTREDGE		
DESIGN-DETAILED	R. NAOUS	G. LIBBY	
CHECKED-REVIEWED	KLEINFELDER	B. NICHOLS	
DESIGN2-DETAILED2	K.MAGUIRE	T.WHITE	JUNE 2014
DESIGN3-DETAILED3	KLEINFELDER	------	------
REVISIONS 1	------	------	------
REVISIONS 2	------	------	------
REVISIONS 3	------	------	------
REVISIONS 4	------	------	------
FIELD CHANGES	------	------	------

SIGNATURE

P.E. NUMBER

DATE

PUMPING STATION BRIDGE
BRANCH BROOK
KENNEBUNK\WELLS YORK COUNTY

ABUTMENT NO. 2
REINFORCING

SHEET NUMBER

18

OF 27

Filename: ...\MSTA\018_Abutment_2_REINF.dgn Division: BRIDGE Username: gerald.libby Date:7/14/2015

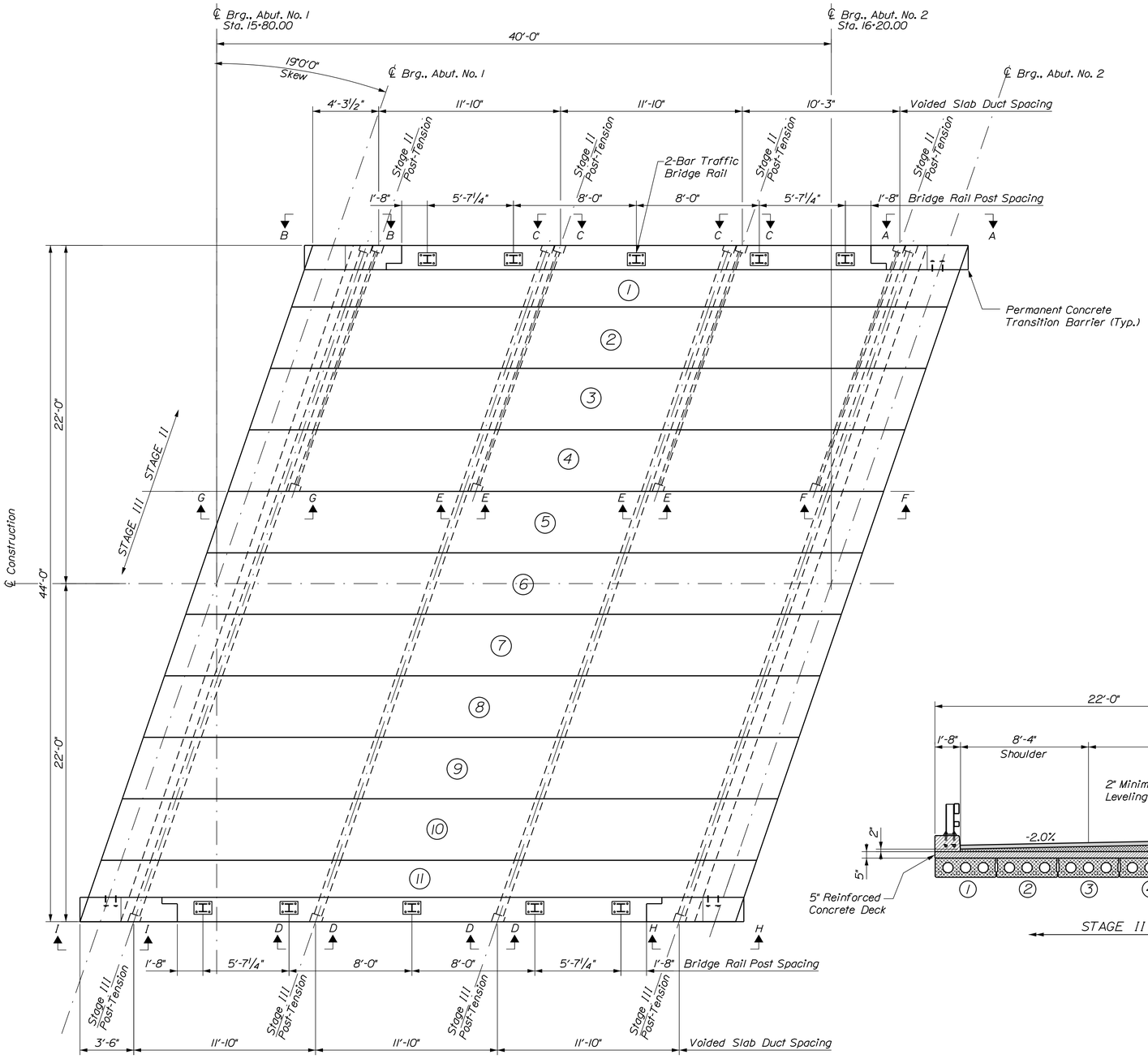

BRIDGE SLAB LAYOUT and POST-TENSIONING PLAN

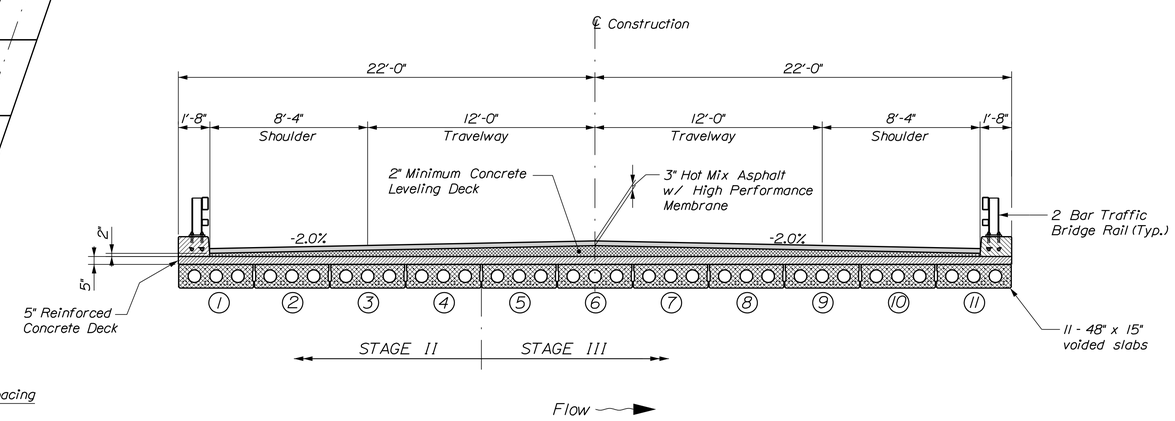

BRIDGE SECTION

PRECAST CONCRETE SUPERSTRUCTURE NOTES

1. Prestressing strands for Stage III shall be 0.6-in. diameter. The tensioning force is 44 kips per prestressing strand.

2. Reinforcing steel shall have a minimum concrete cover of 2 inches unless otherwise noted.

3. Install a 1-in. diameter nonmetallic void drain in the bottom of each void at both ends.

4. The top surface of the upper flange of the prestressed beams shall be raked to a surface roughness of ±¼ inch.

5. The drilling of holes in the prestressed beams and the use of power actuated tools on the beams will not be permitted.

6. Neoprene pads shall be either polychloroprene or natural polyisoprene of 50±5 Shore A durometer hardness, and shall conform to the requirements of Division 2, Section 18.2 of AASHTO Standard Specifications for Highway Bridges. Neoprene pads will not be paid for directly but will be considered incidental to related contract items.

7. Post tensioning strands for Stage III shall be covered by a seamless polypropylene sheath, with corrosion inhibiting grease between the strands and sheath, for the full length of the strand except at the anchorage location.

8. The Contractor shall calibrate the jacking equipment as necessary to provide an anchorage of 38 to 41 kips after setting losses in each 0.6-in. diameter post tensioning strand.

9. Apply 50% of the post-tensioning force for Stage III before placement of the concrete for the deck. Apply the rest of the force after the concrete deck is placed and cured. The concrete strength in the deck must have achieved a minimum of 80% of its compressive strength before the rest of the post-tensioning force can be applied. Apply 100% of the post-tensioning force for Stage II prior to deck placement.

STATE OF MAINE
DEPARTMENT OF TRANSPORTATION

STP-2047(400)

WIN 20474.00

BRIDGE NO. 2693

BRIDGE PLANS

PROJ. MANAGER	J. KITTREDGE	BY	DATE
DESIGN-DETAILED	R. NAQUS	G. LIBBY	------
CHECKED-REVIEWED	K.LENFELDER	B. NICHOLS	------
DESIGN2-DETAILED2	K.MAGUIRE	T. WHITE	JUNE 2014
DESIGN3-DETAILED3	K.LENFELDER	------	------
REVISIONS 1	------	------	------
REVISIONS 2	------	------	------
REVISIONS 3	------	------	------
REVISIONS 4	------	------	------
FIELD CHANGES	------	------	------

SIGNATURE

P.E. NUMBER

DATE

PUMPING STATION BRIDGE
BRANCH BROOK
KENNEBUNK\WELLS YORK COUNTY

SUPERSTRUCTURE PLANS

SHEET NUMBER

19

OF 27

Filename: ...\MSTA\019_Superstructure.dgn Division: BRIDGE Username: gerald.libby Date:7/14/2015

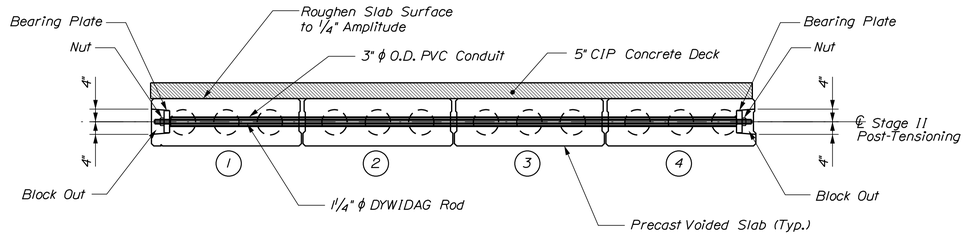

STAGE II POST-TENSIONING - PRECAST SLABS (TYP.)

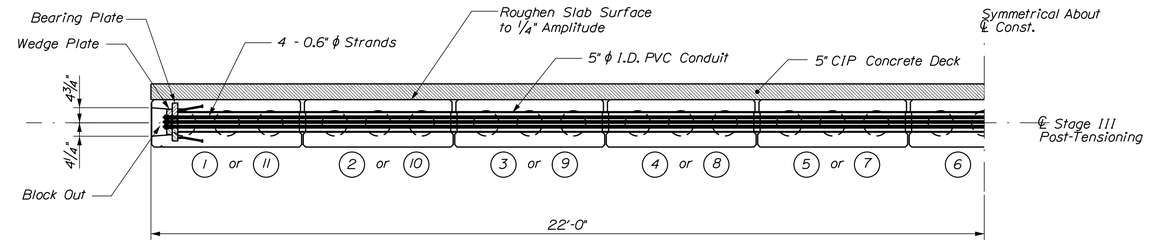

STAGE III POST-TENSIONING - PRECAST SLABS (TYP.)

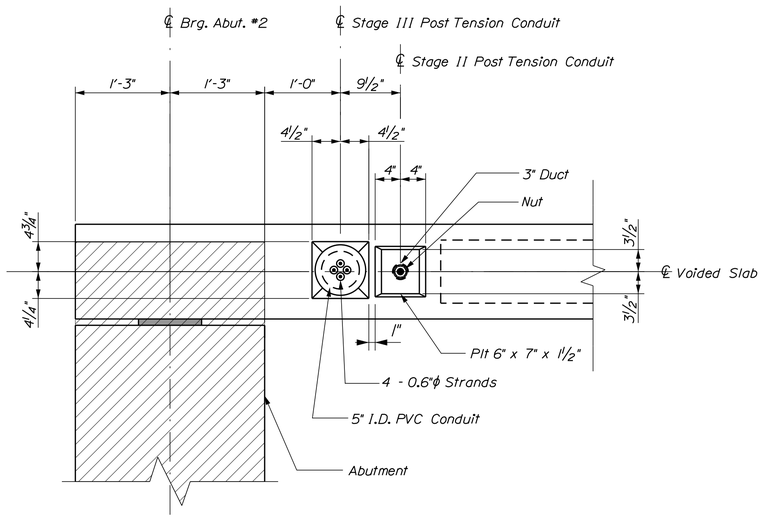

SECTION A - A (As Drawn)
SECTION B - B (Opposite Hand)
(POST-TENSIONING DETAIL - END VOIDED SLAB #1)

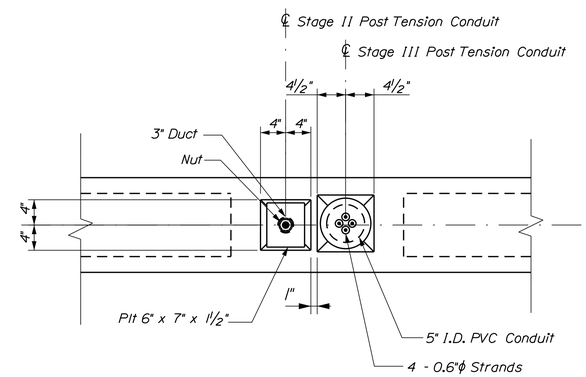

SECTION C - C
(POST-TENSIONING DETAIL AT VOIDED SLAB #1)

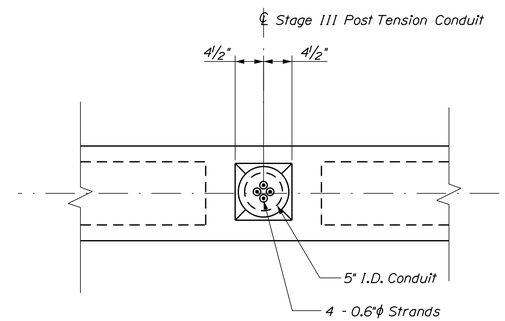

SECTION D - D
(POST-TENSIONING DETAIL AT VOIDED SLAB #11)

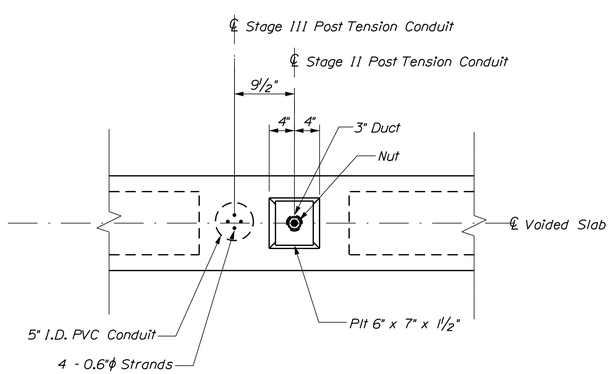

SECTION E - E
(POST-TENSIONING DETAIL AT VOIDED SLAB #4)

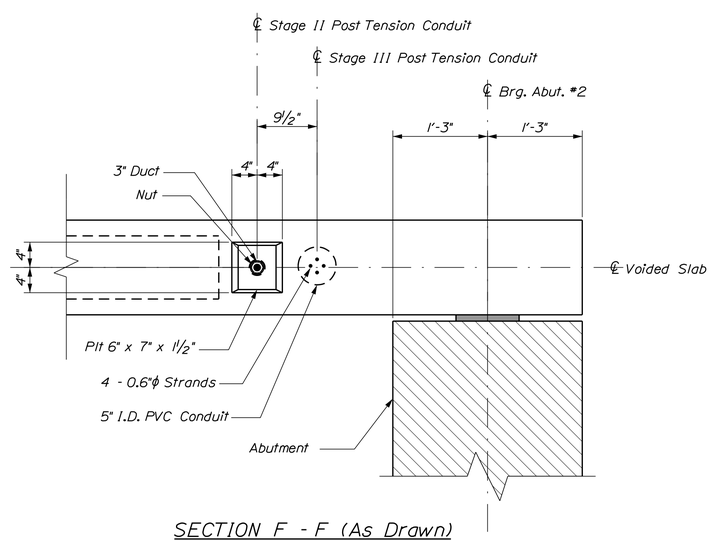

SECTION F - F (As Drawn)
SECTION G - G (Opposite Hand)
(POST-TENSIONING DETAIL - END OF VOIDED SLAB #4)

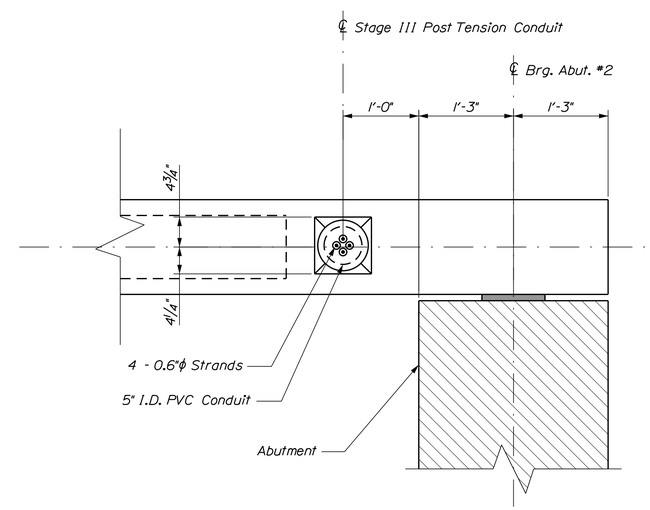

SECTION H - H (As Drawn)
SECTION I - I (Opposite Hand)
(POST-TENSIONING DETAIL - END OF VOIDED SLAB #11)

STATE OF MAINE
DEPARTMENT OF TRANSPORTATION

STP-2047(400)

WIN 20474.00

BRIDGE NO. 2693

BRIDGE PLANS

PROJ. MANAGER	J. KITTREDGE	BY	DATE
DESIGN-DETAILED	R. NAOUS	G. LIBBY	
CHECKED-REVIEWED	KLENFELDER	B. NICHOLS	
DESIGN2-DETAILED2	K.MAGUIRE	T. WHITE	JUNE 2014
DESIGN3-DETAILED3	KLENFELDER	------	------
REVISIONS 1	------	------	------
REVISIONS 2	------	------	------
REVISIONS 3	------	------	------
REVISIONS 4	------	------	------
FIELD CHANGES	------	------	------

SIGNATURE

P.E. NUMBER

DATE

PUMPING STATION BRIDGE
BRANCH BROOK
KENNEBUNK\WELLS YORK COUNTY

SUPERSTRUCTURE SECTIONS

SHEET NUMBER
20
OF 27

Filename: ...\020_Superstructure_Sections.dgn Division: BRIDGE Username: gerald.libby Date:7/14/2015

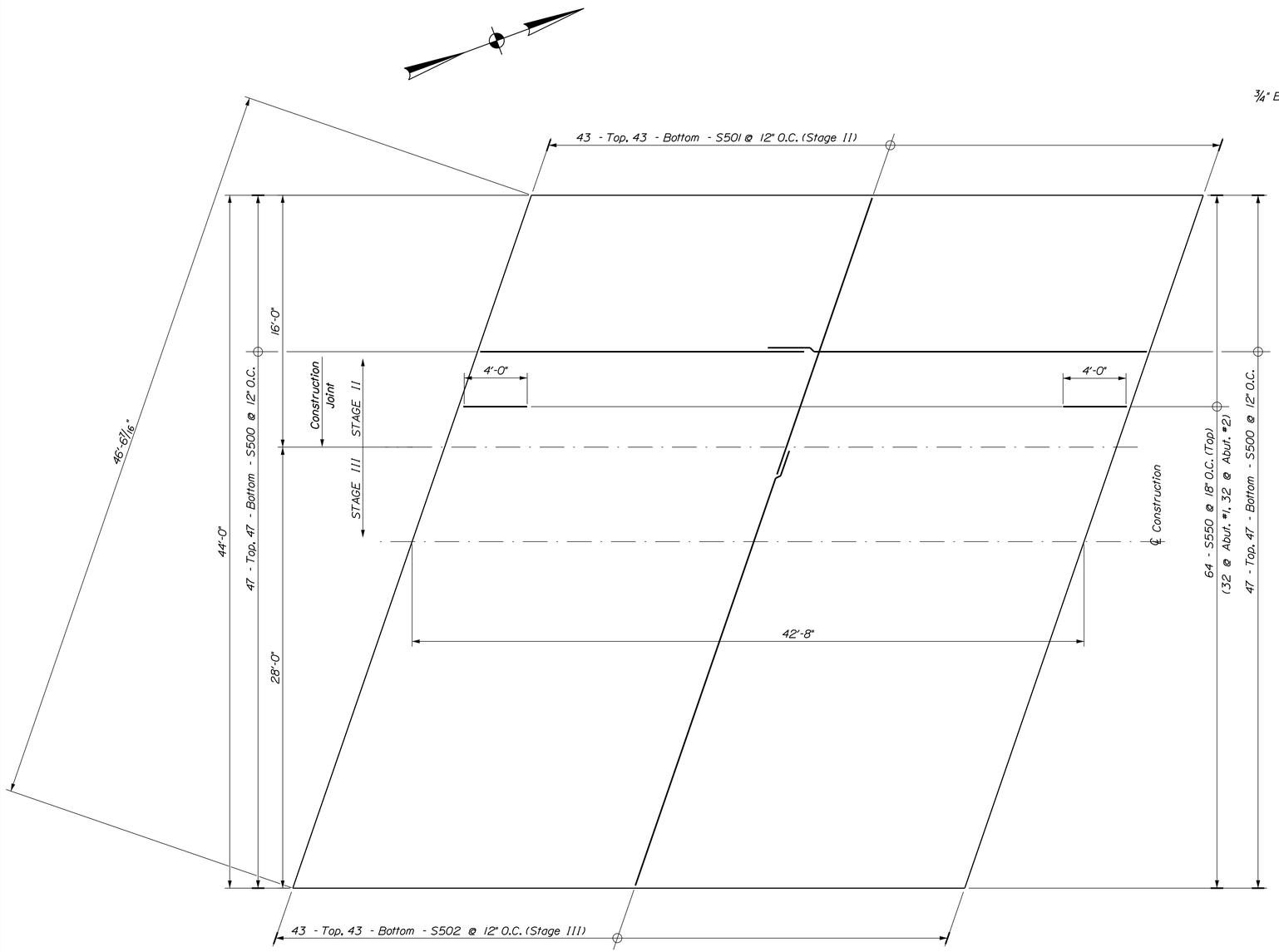

BRIDGE DECK REINFORCEMENT LAYOUT PLAN

Notes:

- Maintain 1" of cover over Top & Bottom reinforcement in slab
- Stagger Bottom Upper Layer & Top Lower Layer Bars

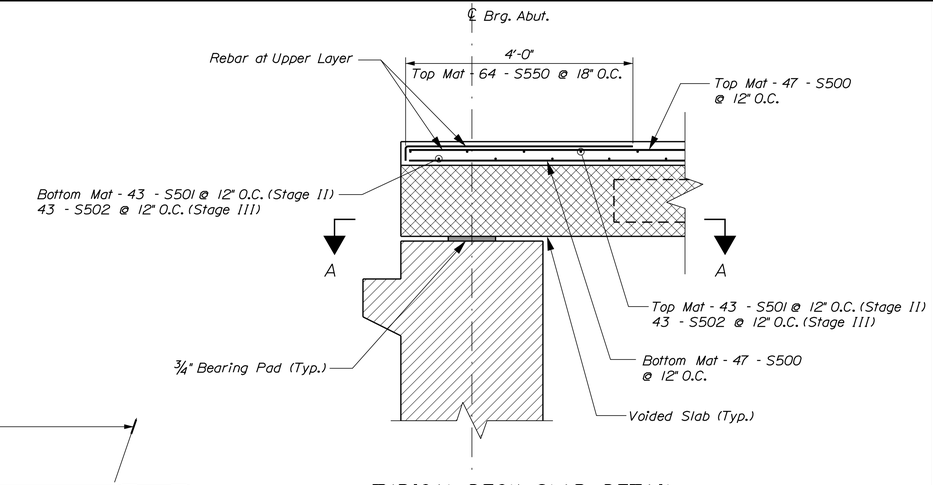

TYPICAL DECK SLAB DETAIL
@ END OF VOIDED SLABS
(Abut. #1 Shown, Abut. #2 - Similar)

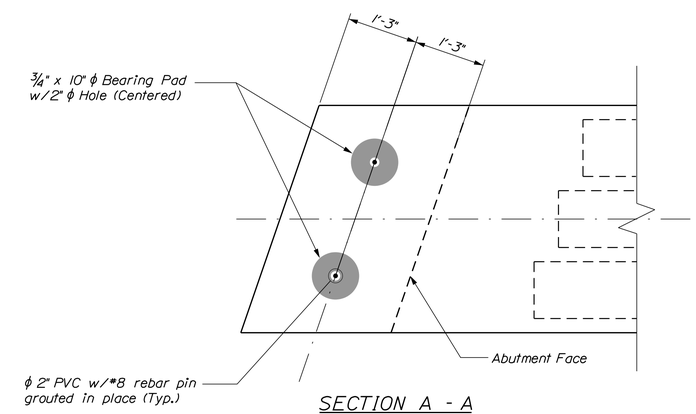

SECTION A - A

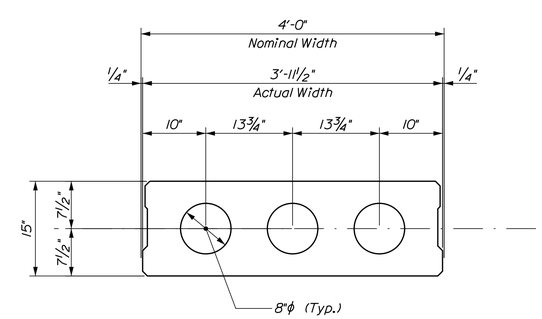

VOIDED SLAB TRANSVERSE SECTION (Typ.)

STATE OF MAINE
DEPARTMENT OF TRANSPORTATION

STP-2047(400)

WIN 20474.00

BRIDGE NO. 2693

BRIDGE PLANS

			DATE
PROJ. MANAGER	J. KITTREDGE	BY	
DESIGN-DETAILED	R. NAOUS	G. LIBBY	
CHECKED-REVIEWED	K.LENFELDER	B. NICHOLS	
DESIGN2-DETAILED2	K.MAGUIRE	T. WHITE	JUNE 2014
DESIGN3-DETAILED3	K.LENFELDER		
REVISIONS 1			
REVISIONS 2			
REVISIONS 3			
REVISIONS 4			
FIELD CHANGES			

SIGNATURE

P.E. NUMBER

DATE

PUMPING STATION BRIDGE
BRANCH BROOK
KENNEBUNK\WELLS YORK COUNTY

SUPERSTRUCTURE REINFORCEMENT

SHEET NUMBER

21

OF 27

Filename: ...\021_Superstructure_reinforcement.dgnDivision: BRIDGE Username: gerald.libby Date:7/14/2015

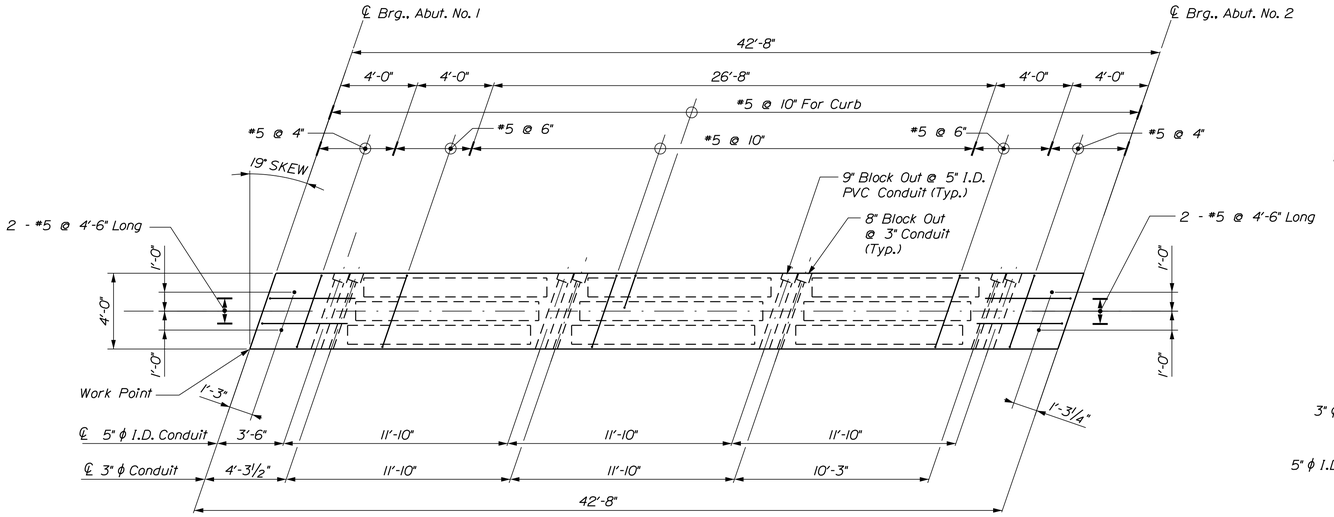

DETAIL of SLAB #1

Note: All Conduits to be placed at a 19° Skew (Typ.)

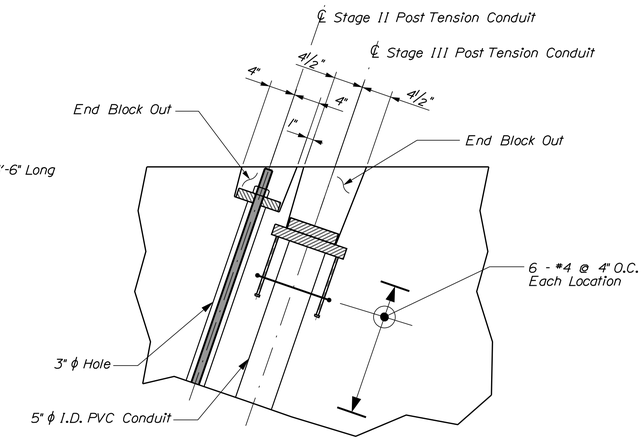

TYPICAL BLOCK OUT DETAIL @ GIRDER #1

NOTES:

1). - When indicating the post tensioning conduit: "3" ϕ Conduit (Outside Diameter) (O.D.).

2). - When indicating the size of the hole in the concrete: "3" ϕ hole".

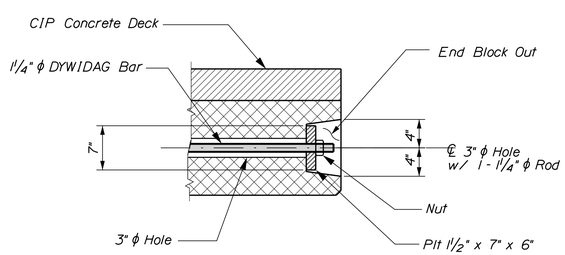

STAGE II POST-TENSION DETAIL

(End Girder Block Out Detail)
Typ. at Girders 1 & 4

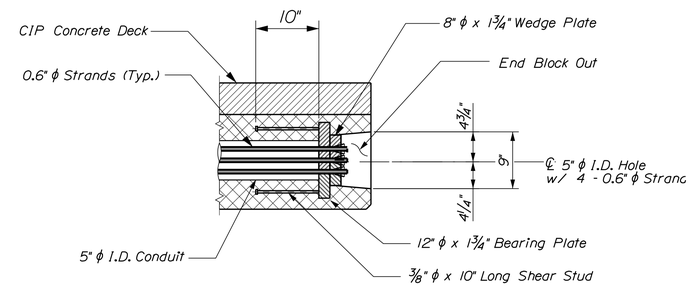

STAGE III POST-TENSION DETAIL

(End Girder Block Out Detail)
Typ. at Girders 1 & 11
NOTE - Bearing Plate is cast steel

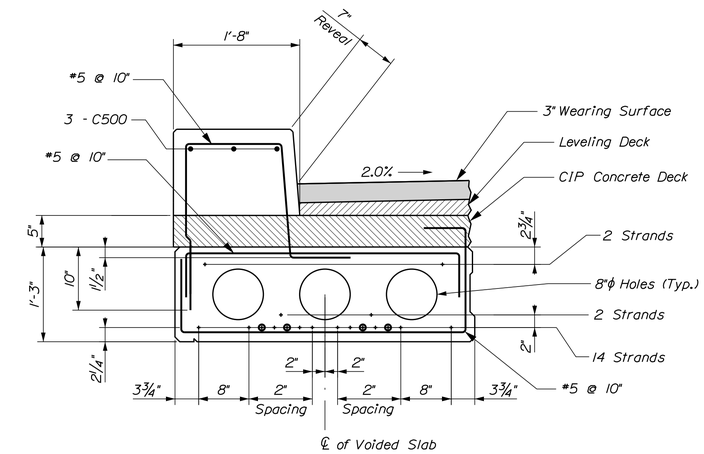

EXTERIOR SLABS - #1 (As Drawn) & #11 (Opp. Hand) - TYPICAL SECTION

NOTE: Spacing of strands shown is for Slabs #1 & #11 Only
+ - Denotes 0.6"ϕ Strand
⊕ - Denotes 0.6"ϕ Strand Debonded 4'-0" at Ends

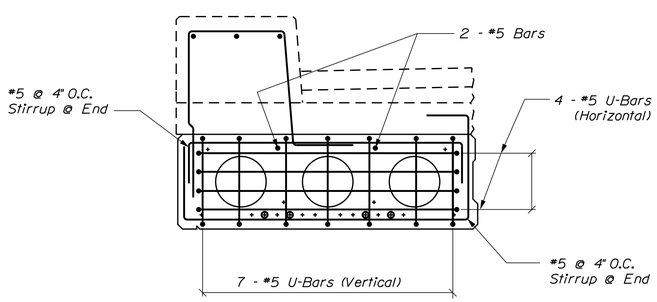

EXTERIOR SLABS #1 & #11 - SLAB END DETAIL

+ - Denotes 0.6"ϕ Strand
⊕ - Denotes 0.6"ϕ Strand Debonded 4'-0" at Ends

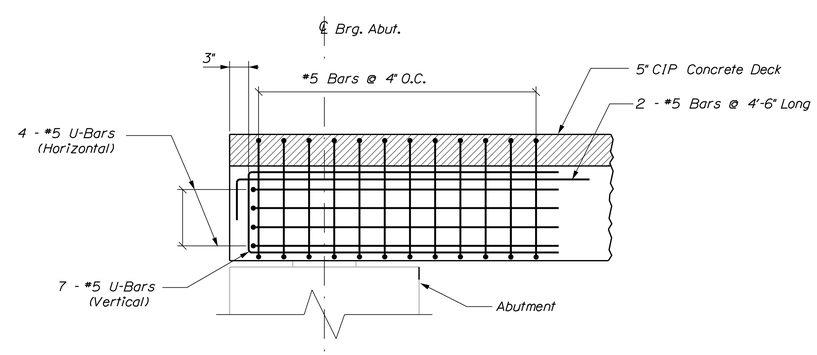

END OF SLAB ELEVATION DETAIL

(Typ., At All Voided Slabs)

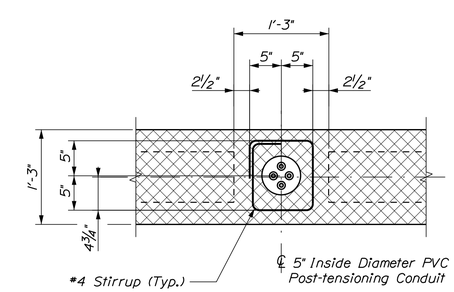

LONGITUDINAL SECTION @ CONDUIT

Typical for Exterior Voided Slabs #1 and #11

STATE OF MAINE
DEPARTMENT OF TRANSPORTATION

STP-2047(400)

WIN 20474.00

BRIDGE NO. 2693

BRIDGE PLANS

		BY	DATE
PROJ. MANAGER	J. KITTREDGE		
DESIGN-DETAILED	R. NAOUS	G. LIBBY	
CHECKED-REVIEWED	KLEINFELDER	B. NICHOLS	
DESIGN2-DETAILED2	K.MAGUIRE	T. WHITE	JUNE 2014
DESIGN3-DETAILED3	KLEINFELDER	------	------
REVISIONS 1	------	------	------
REVISIONS 2	------	------	------
REVISIONS 3	------	------	------
REVISIONS 4	------	------	------
FIELD CHANGES	------	------	------

SIGNATURE

P.E. NUMBER

DATE

PUMPING STATION BRIDGE
BRANCH BROOK
KENNEBUNK\WELLS YORK COUNTY

VOIDED SLAB #1
PLANS & DETAILS

SHEET NUMBER
22
OF 27

Filename: ...\MSTA\022_Voided_slab-1.dgn Division: BRIDGE Username: gerald.libby Date:7/14/2015

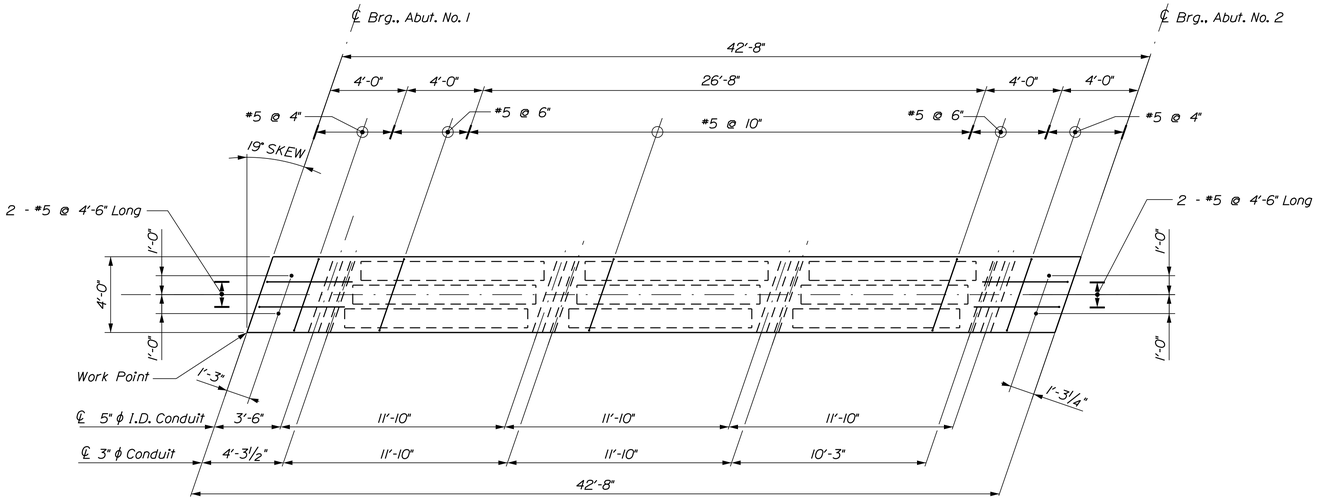

DETAIL of SLAB #2 & #3

Note: All Conduits to be placed at a 19° Skew (Typ.)

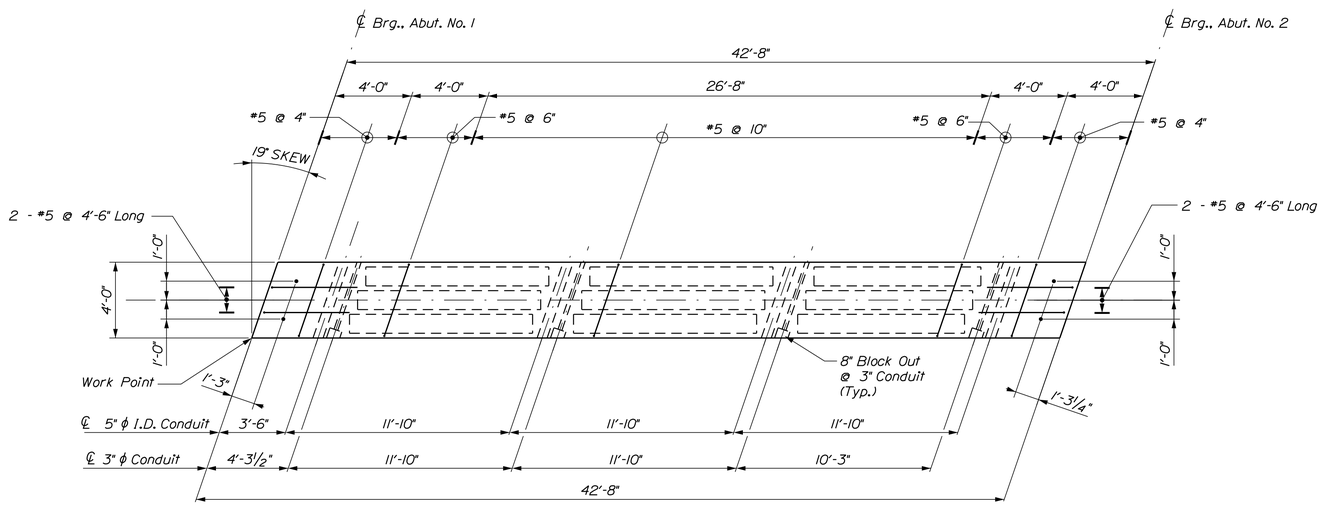

DETAIL of SLAB #4

Note: All Conduits to be placed at a 19° Skew (Typ.)

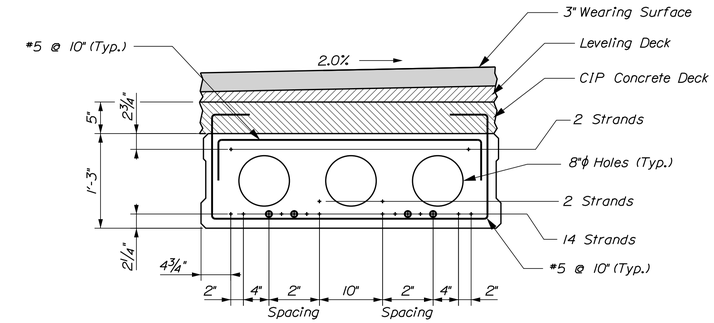

INTERIOR SLABS (#2 Thru #10) - TYPICAL SECTION

+ - Denotes 0.6"ϕ Strand

⊕ - Denotes 0.6"ϕ Strand Debonded 4'-0" at Ends

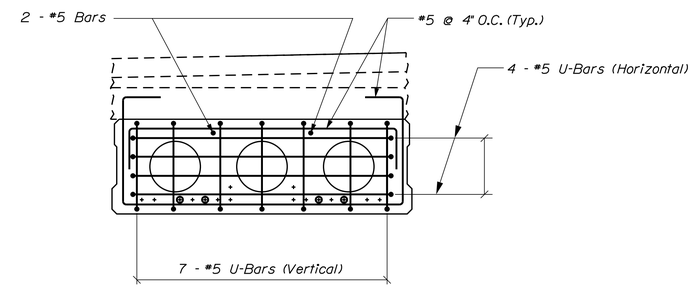

INTERIOR SLABS (#2 Thru #10) - SLAB END DETAIL

+ - Denotes 0.6"ϕ Strand

⊕ - Denotes 0.6"ϕ Strand Debonded 4'-0" at Ends

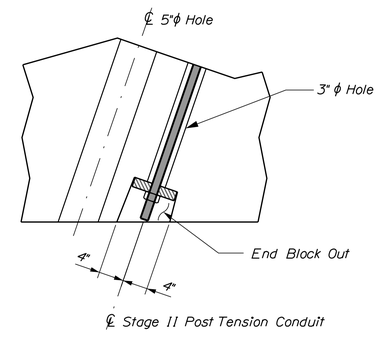

TYPICAL BLOCK OUT DETAIL @ GIRDER #4

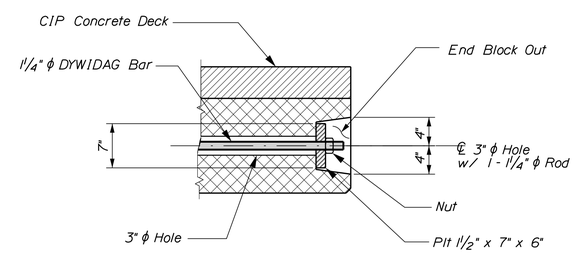

STAGE II POST-TENSION DETAIL

(End Girder Block Out Detail)

Typ. at Girders 1 & 4

STATE OF MAINE
DEPARTMENT OF TRANSPORTATION

STP-2047(400)

WIN 20474.00

BRIDGE NO. 2693

BRIDGE PLANS

		BY	DATE
PROJ. MANAGER	J. KITTREDGE		
DESIGN-DETAILED	R. NADUS	G. LIBBY	
CHECKED-REVIEWED	K.LEINFELDER	B. NICHOLS	
DESIGN2-DETAILED2	K.MAGUIRE	T.WHITE	JUNE 2014
DESIGN3-DETAILED3	K.LEINFELDER		
REVISIONS 1			
REVISIONS 2			
REVISIONS 3			
REVISIONS 4			
FIELD CHANGES			

SIGNATURE

P.E. NUMBER

DATE

PUMPING STATION BRIDGE
BRANCH BROOK
KENNEBUNK\WELLS YORK COUNTY

VOIDED SLAB #2, #3 & #4
PLANS & DETAILS

SHEET NUMBER

23

OF 27

Filename: ...\MSTA\023_Voided_slab-2_4.dgn Division: BRIDGE Username: gerald.libby Date:7/14/2015

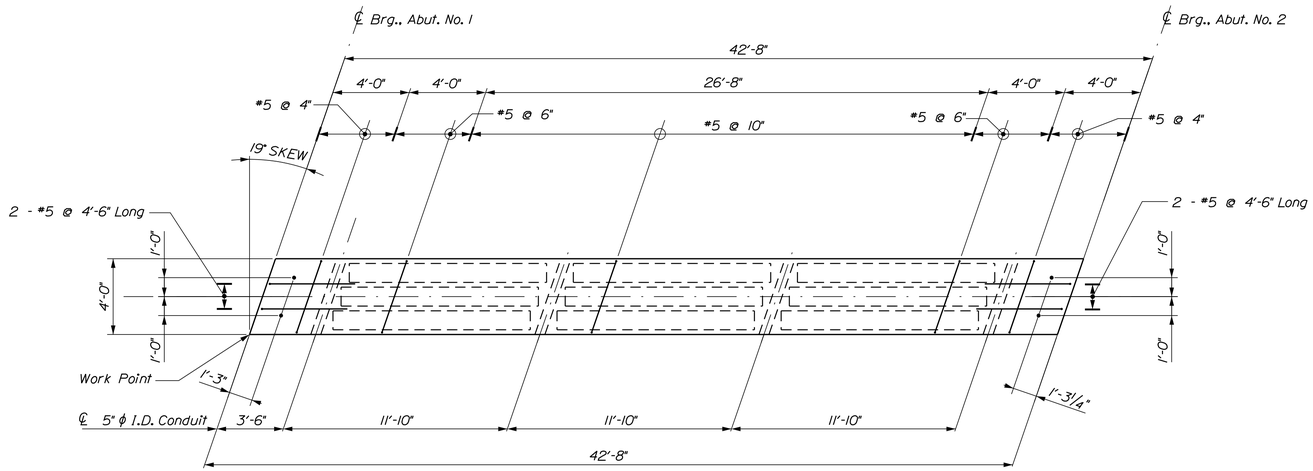

DETAIL of SLAB #5 Through #10

Note: All Conduits to be placed at a 19° Skew (Typ.)

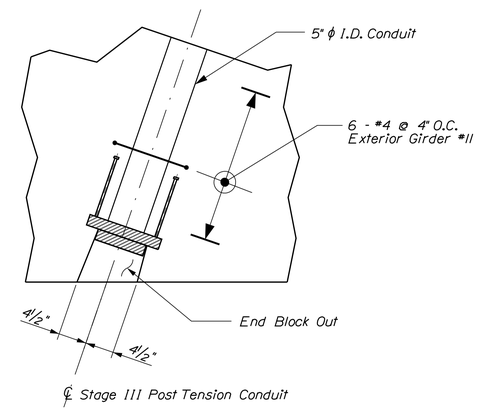

TYPICAL BLOCK OUT DETAIL @ GIRDER #11

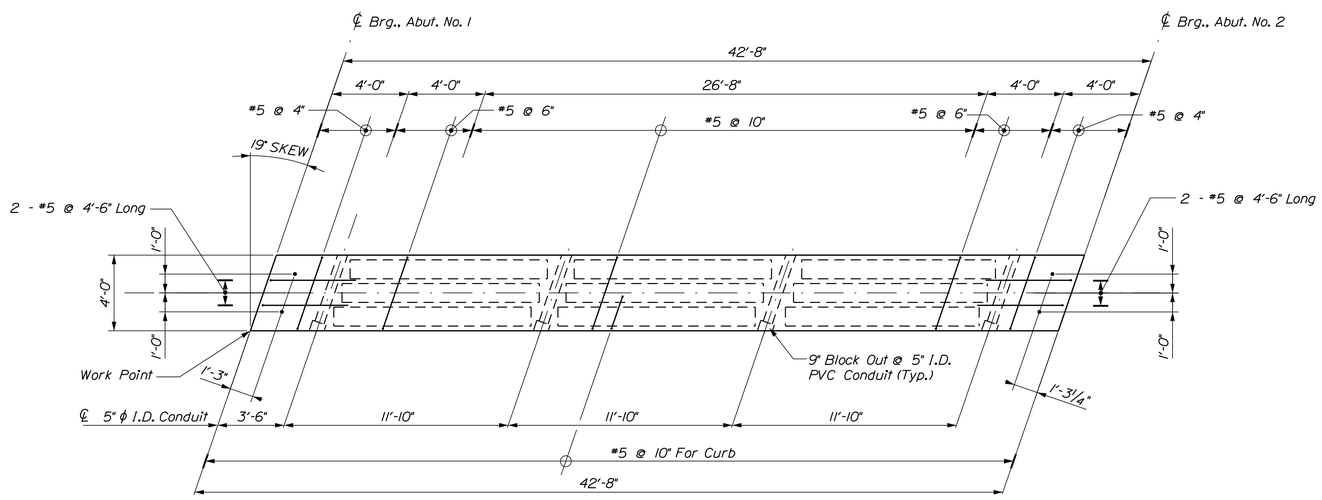

DETAIL of SLAB #11

Notes:
- All Conduits to be placed at a 19° Skew (Typ.)
- See Sheet #22 for additional information

STATE OF MAINE
DEPARTMENT OF TRANSPORTATION

STP-2047(400)

WIN 20474.00

BRIDGE NO. 2693

BRIDGE PLANS

		BY	DATE
PROJ. MANAGER	J. KITTREDGE		
DESIGN-DETAILED	R. NAOUS	G. LIBBY	
CHECKED-REVIEWED	KLEINFELDER	B. NICHOLS	
DESIGN2-DETAILED2	K.MAGUIRE	T.WHITE	JUNE 2014
DESIGN3-DETAILED3	KLEINFELDER	------	------
REVISIONS 1	------	------	------
REVISIONS 2	------	------	------
REVISIONS 3	------	------	------
REVISIONS 4	------	------	------
FIELD CHANGES	------	------	------

SIGNATURE

P.E. NUMBER

DATE

PUMPING STATION BRIDGE
BRANCH BROOK
KENNEBUNK\WELLS YORK COUNTY

VOIDED SLABS #5 Through #11
PLANS & DETAILS

SHEET NUMBER

24

OF 27

Filename: ...\MSTA\024_Voided_slab-5_11.dgn Division: BRIDGE Username: gerald.libby Date:7/14/2015

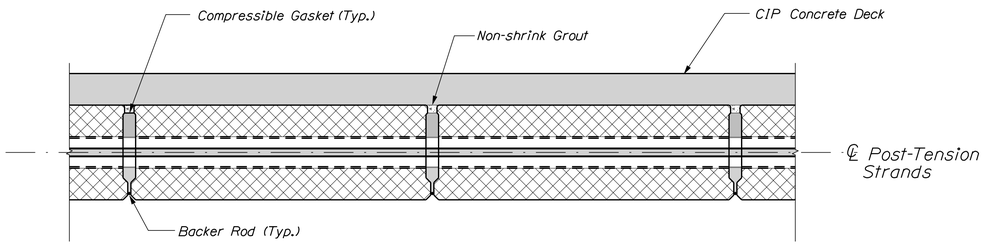

STRAND/CONDUIT DETAIL

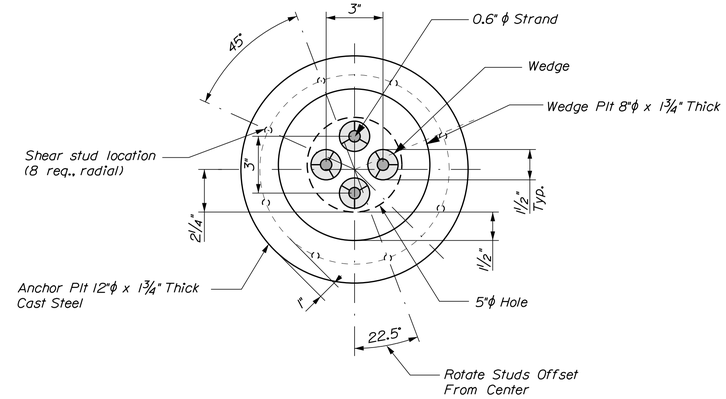

PLATE DETAIL

At Post-Tension Blockout Location (Stage III)

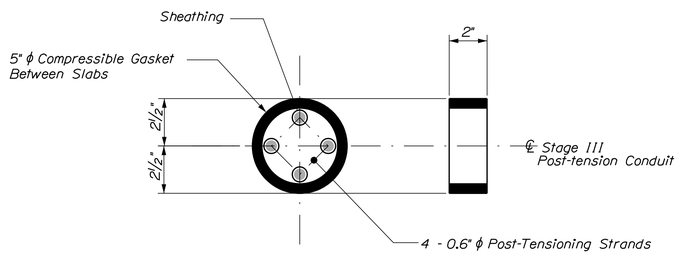

5"ϕ COMPRESSION GASKET DETAIL

At Post-Tension Blockout Location (Stage III)

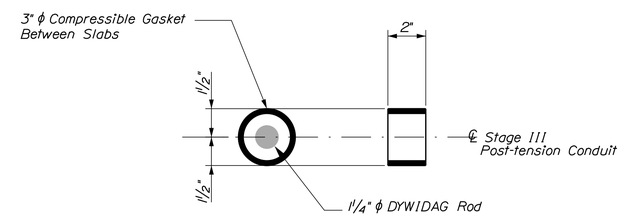

3"ϕ COMPRESSION GASKET DETAIL

At Post-Tension Blockout Location (Stage II)

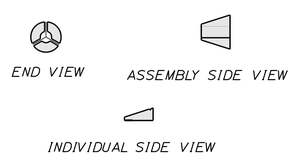

WEDGE DETAIL

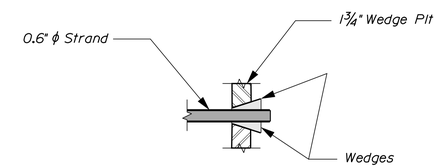

STRAND END DETAIL

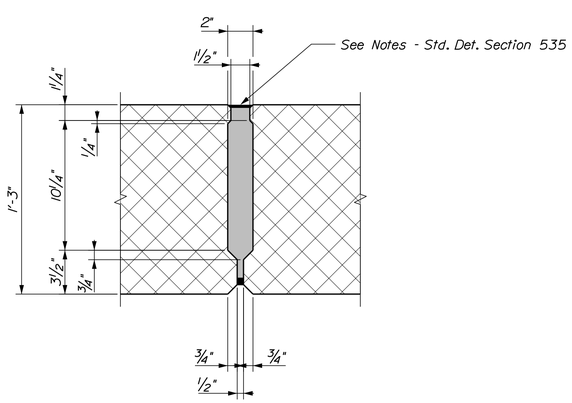

SHEAR KEY DETAIL

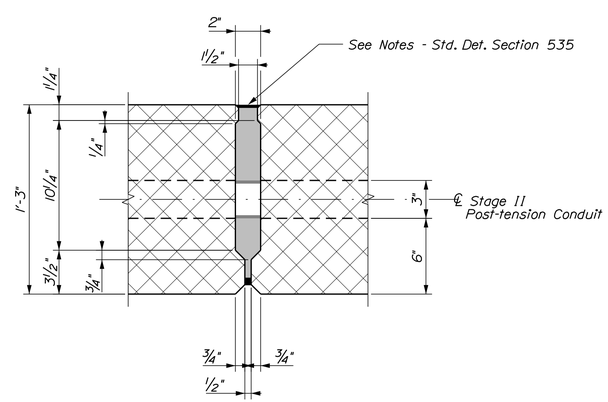

SHEAR KEY DETAIL @ 3" CONDUIT

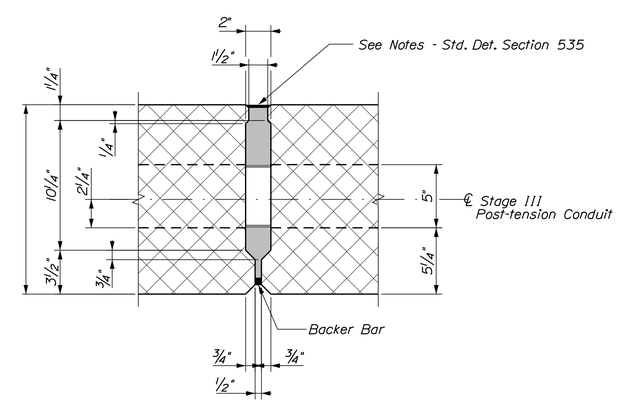

SHEAR KEY DETAIL @ 5" I.D. CONDUIT

STATE OF MAINE
DEPARTMENT OF TRANSPORTATION

STP-2047(400)

WIN 20474.00

BRIDGE NO. 2693

BRIDGE PLANS

PROJ. MANAGER	J. KITTREDGE	BY	DATE
DESIGN-DETAILED	R. NAQUS	G. LIBBY	
CHECKED-REVIEWED	KLEINFELDER	B. NICHOLS	
DESIGN2-DETAILED2	K.MAGUIRE	T.WHITE	JUNE 2014
DESIGN3-DETAILED3	KLEINFELDER	------	------
REVISIONS 1	------	------	------
REVISIONS 2	------	------	------
REVISIONS 3	------	------	------
REVISIONS 4	------	------	------
FIELD CHANGES	------	------	------

SIGNATURE

P.E. NUMBER

DATE

PUMPING STATION BRIDGE
BRANCH BROOK
KENNEBUNK\WELLS YORK COUNTY

PLATE AND SHEAR KEY
PLANS & DETAILS

SHEET NUMBER

25

OF 27

Filename: ...\025_Plate_and Shear-key_Detls.dgn Division: BRIDGE Username: gerald.libby Date:7/14/2015

STRAIGHT BARS

MARK	QTY.	LENGTH	LOCATION	MARK	QTY.	LENGTH	LOCATION
A500	8	8'-9"	Wing Horiz.	B500	8	8'-9"	Wing Horiz.
A501	1	1'-2"	Wing Horiz.	B501	1	1'-2"	Wing Horiz.
A502	1	2'-1"	Wing Horiz.	B502	1	2'-1"	Wing Horiz.
A503	1	3'-4"	Wing Horiz.	B503	1	3'-4"	Wing Horiz.
A504	1	4'-2"	Wing Horiz.	B504	1	4'-2"	Wing Horiz.
A505	1	1'-2"	Wing Horiz.	B505	1	1'-2"	Wing Horiz.
A506	1	1'-10"	Wing Horiz.	B506	1	1'-10"	Wing Horiz.
A507	1	3'-4"	Wing Horiz.	B507	1	3'-4"	Wing Horiz.
A508	1	4'-0"	Wing Horiz.	B508	1	4'-0"	Wing Horiz.
A600	3	34'-7"	Abut. Bott.	B600	3	34'-7"	Abut. Bott.
A601	3	23'-9"	Abut. Bott.	B601	3	23'-9"	Abut. Bott.
A602	4	34'-7"	Abut. Top	B602	4	34'-7"	Abut. Top
A603	4	23'-10"	Abut. Top	B603	4	23'-10"	Abut. Top
A700	16	8'-9"	Wing Horiz.	B700	16	8'-9"	Wing Horiz.
A800	44	2'-0"	Precast Anchorage	S500	188	21'-10"	Leveling Slab Longitudinal
				S501	86	18'-7"	Leveling Slab Transverse
AS500	32	15'-8"	Approach Slab Transverse	S502	86	29'-3"	Leveling Slab Transverse
AS501	32	25'-11"	Approach Slab Transverse				
AS600	162	15'-2"	Approach Slab Longitudinal	C500	6	42'-4"	Curb Longitudinal
MARK	QTY.	LENGTH	LOCATION	MARK	QTY.	LENGTH	LOCATION

BENT BARS

MARK	QTY.	LENGTH	TYPE	A	B	C	D	E	F	G	H	O	R	LOCATION
A450	64	2'-8"	S	0"	1'-2	0'-4	1'-2	-	-	0"	-	-	-	Approach Slab Seat
A451	128	3'-4"	HB	0'-6	0'-6	0'-8	0'-6	0'-8	-	0'-6	-	-	-	Approach Slab Seat
A550	94	6'-6"	L	1'-10	4'-8	-	-	-	-	-	-	-	-	Abut. Vert.
A551	94	4'-7"	L	1'-10	2'-9	-	-	-	-	-	-	-	-	Abut. Vert.
A552	20	7'-6"	L	1'-10	5'-8	-	-	-	-	-	-	-	-	Wing Vert.
A553	2	5'-10"	L	1'-10	4'-0	-	-	-	-	-	-	-	-	Wing Vert.
A554	2	6'-4"	L	1'-10	4'-6	-	-	-	-	-	-	-	-	Wing Vert.
A555	2	6'-8"	L	1'-10	4'-10	-	-	-	-	-	-	-	-	Wing Vert.
A556	2	7'-2"	L	1'-10	5'-4	-	-	-	-	-	-	-	-	Wing Vert.
A557	2	7'-2"	L	1'-10	5'-4	-	-	-	-	-	-	-	-	Wing Vert.
A558	2	7'-2"	L	1'-10	5'-4	-	-	-	-	-	-	-	-	Wing Vert.
A559	2	7'-2"	L	1'-10	5'-4	-	-	-	-	-	-	-	-	Wing Vert.
A560	2	6'-8"	L	1'-10	4'-10	-	-	-	-	-	-	-	-	Wing Vert.
A561	2	6'-4"	L	1'-10	4'-6	-	-	-	-	-	-	-	-	Wing Vert.
A562	2	5'-10"	L	1'-10	4'-0	-	-	-	-	-	-	-	-	Wing Vert.
A563	1	12'-7"	W	1'-11	4'-8	-	4'-0	-	-	-	2'-0	-	-	Top of Wing
A564	1	12'-10"	W	1'-11	4'-8	0'-3	4'-0	-	-	-	2'-0	-	-	Top of Wing
A565	1	13'-2"	W	1'-11	4'-8	0'-7	4'-0	-	-	-	2'-0	-	-	Top of Wing
A566	1	13'-2"	W	1'-11	4'-8	0'-7	4'-0	-	-	-	2'-0	-	-	Top of Wing
A567	1	12'-10"	W	1'-11	4'-8	0'-3	4'-0	-	-	-	2'-0	-	-	Top of Wing
A568	1	12'-7"	W	1'-11	4'-8	-	4'-0	-	-	-	2'-0	-	-	Top of Wing
A569	64	3'-6"	SC	0"	1'-6	0'-4	1'-8	-	-	0"	-	1'-2	-	Approach Slab Seat
B450	64	2'-8"	S	0"	1'-2	0'-4	1'-2	-	-	0"	-	-	-	Approach Slab Seat
B451	128	3'-4"	HB	0'-6	0'-6	0'-8	0'-6	0'-8	-	0'-6	-	-	-	Approach Slab Seat
B550	94	6'-6"	L	1'-10	4'-8	-	-	-	-	-	-	-	-	Abut. Vert.
B551	94	4'-7"	L	1'-10	2'-9	-	-	-	-	-	-	-	-	Abut. Vert.
B552	20	7'-6"	L	1'-10	5'-8	-	-	-	-	-	-	-	-	Wing Vert.
B553	2	5'-10"	L	1'-10	4'-0	-	-	-	-	-	-	-	-	Wing Vert.
B554	2	6'-4"	L	1'-10	4'-6	-	-	-	-	-	-	-	-	Wing Vert.
B555	2	6'-8"	L	1'-10	4'-10	-	-	-	-	-	-	-	-	Wing Vert.
B556	2	7'-2"	L	1'-10	5'-4	-	-	-	-	-	-	-	-	Wing Vert.
B557	2	7'-2"	L	1'-10	5'-4	-	-	-	-	-	-	-	-	Wing Vert.
B558	2	7'-2"	L	1'-10	5'-4	-	-	-	-	-	-	-	-	Wing Vert.
B559	2	7'-2"	L	1'-10	5'-4	-	-	-	-	-	-	-	-	Wing Vert.
B560	2	6'-8"	L	1'-10	4'-10	-	-	-	-	-	-	-	-	Wing Vert.
B561	2	6'-4"	L	1'-10	4'-6	-	-	-	-	-	-	-	-	Wing Vert.
B562	2	5'-10"	L	1'-10	4'-0	-	-	-	-	-	-	-	-	Wing Vert.
B563	1	12'-7"	W	1'-11	4'-8	0"	4'-0	-	-	-	2'-0	-	-	Top of Wing
B564	1	12'-10"	W	1'-11	4'-8	0'-3	4'-0	-	-	-	2'-0	-	-	Top of Wing
B565	1	13'-2"	W	1'-11	4'-8	0'-7	4'-0	-	-	-	2'-0	-	-	Top of Wing
B566	1	13'-2"	W	1'-11	4'-8	0'-7	4'-0	-	-	-	2'-0	-	-	Top of Wing
B567	1	12'-10"	W	1'-11	4'-8	0'-3	4'-0	-	-	-	2'-0	-	-	Top of Wing
B568	1	12'-7"	W	1'-11	4'-8	0"	4'-0	-	-	-	2'-0	-	-	Top of Wing
B569	64	3'-6"	SC	0"	1'-6	0'-4	1'-8	-	-	0"	-	1'-2	-	Approach Slab Seat
S550	64	4'-3"	L	0'-3	4'-0	*	-	-	-	-	-	-	-	Leveling Slab
						*								
						*								
MARK	QTY.	LENGTH	TYPE	A	B	C	D	E	F	G	H	O	R	LOCATION

TYPE - BENDING DIAGRAMS

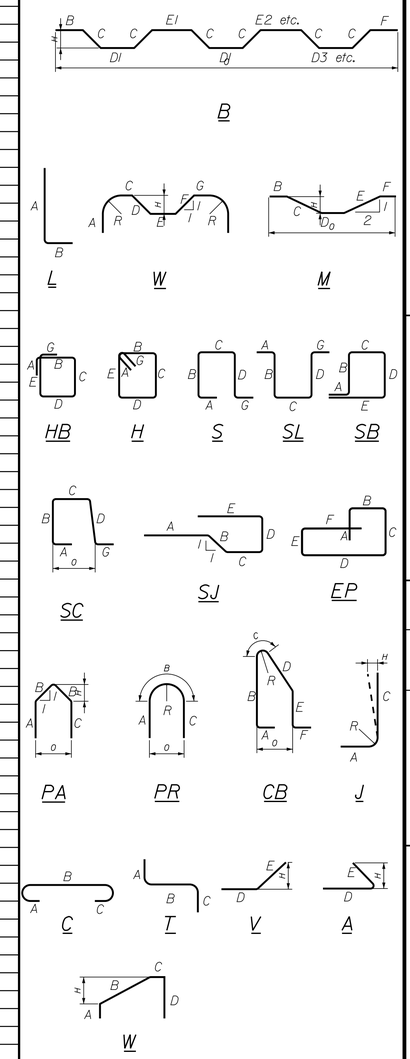

All dimensions are out-to-out of bar.

Bending details and hooks shall conform to the recommendations of the current revision of ACI Standard 315 and ACI Standard 318.

Reinforcing Bar: ASTM A615/A615M, Grade 60

GENERAL NOTES

1. The first two digits following the letter(s) of the mark indicate the size ofthe bar:

   Mark "A502" = bar size #5
   Mark "P805" = bar size #8
   Mark "S650" = bar size #6

2. Each crank bar, Type B, may be replaced by two (2) straight bars (one top and one bottom) of the same bar size as the crank bar. Payment in either case shall be based on crank bars as schedule on the plans.

STATE OF MAINE
DEPARTMENT OF TRANSPORTATION

STP-2047(400)

WIN 20474.00

BRIDGE NO. 2693

BRIDGE PLANS

	BY	DATE
PROJ. MANAGER	J. KITTREDGE	
DESIGN-DETAILED	R. NAOUS	G. LIBBY
CHECKED-REVIEWED	K.LENFELDER	B. NICHOLS
DESIGN2-DETAILED2	K.MAGUIRE	T. WHITE
DESIGN3-DETAILED3	K.LENFELDER	JUNE 2014
REVISIONS 1		
REVISIONS 2		
REVISIONS 3		
REVISIONS 4		
FIELD CHANGES		

SIGNATURE

P.E. NUMBER

DATE

PUMPING STATION BRIDGE
BRANCH BROOK
KENNEBUNK\WELLS YORK COUNTY

REINFORCING STEEL SCHEDULE

SHEET NUMBER

26

OF 27

Filename: ...\00\BRIDGE\MSTA\026_Rebar.dgn Division: BRIDGE Username: gerald.libby Date:7/14/2015

PLAN LEGEND

Town, County, State	New R/W Along Existing R/W	Existing / Proposed	Existing / Proposed	Cut Line / Fill Line
Approx. Property Lines — P.L.	Building	Sanitary Sewer	Traveled Way	Stonewall / Retaining Wall
Existing Right of Way	Trees: Conifer / Deciduous	Telephone Line	Ditch	Baseline 10+00 11+00 12+00
Limits of Wrought Portion — L.O.W.P.	Clearing Limit Line — CLL	Electric Line	Catch Basin	Monument / Traverse Point
Control Of Access — C.O.A.	Tree Line / Bush Line	Water Line	Manhole	Iron Rod Found ● IRF / Pipe Found ● IPF
New Right of Way	Water Edge	Underdrain Line	Sewer Manhole	Replacement Pin Set
New Easement	Ledge / Rock/Boulder / Flag Pole	Gas Line	Utility Pole	
New Temporary Rights	Fence: CHAIN LINK / BARB WIRE / STOCKADE	Guardrail	Fire Hydrant	
New R/W Within Existing R/W	Sign / Well / Mailbox	Culvert	Curbing	

STATE OF MAINE
REGISTRY OF DEEDS
COUNTY _____
RECEIVED _____, _____
at _____h _____m _____M and recorded in
Plan Book _____, Page _____
Attest: _____
REGISTER

THIS PLAN WAS PREPARED IN CONNECTION WITH THE DEPARTMENT'S ACQUISITION OF REAL PROPERTY FOR TRANSPORTATION PURPOSES. IT CANNOT BE USED TO ESTABLISH LEGAL BOUNDARIES BETWEEN ABUTTING PROPERTY OWNERS.

25 0 25 50 75 100
Scale of Feet

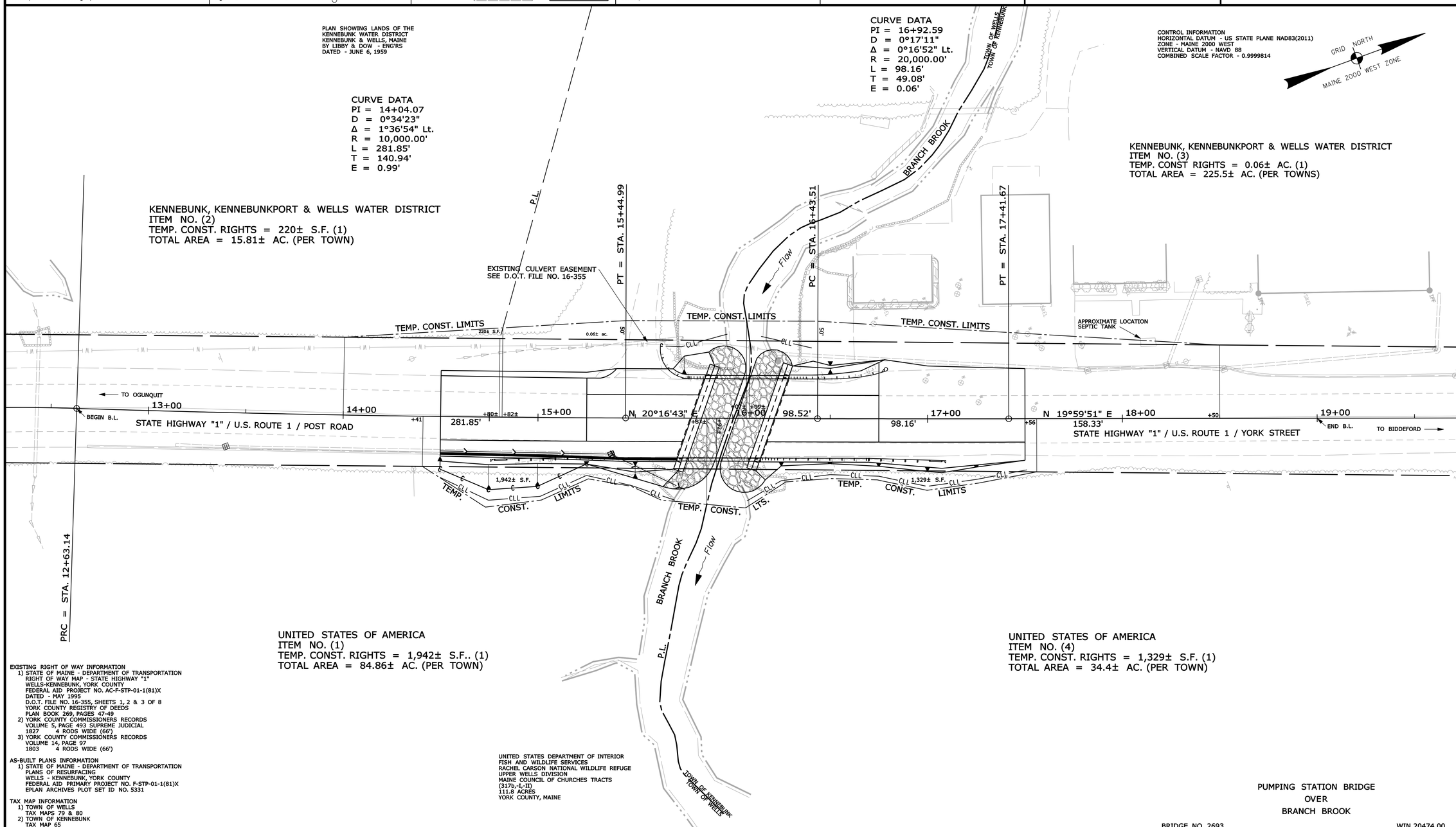

EXISTING RIGHT OF WAY INFORMATION
1) STATE OF MAINE - DEPARTMENT OF TRANSPORTATION
RIGHT OF WAY MAP - STATE HIGHWAY "1"
WELLS-KENNEBUNK, YORK COUNTY
FEDERAL AID PROJECT NO. AC-F-STP-01-1(81)X
DATED - MAY 1995
D.O.T. FILE NO. 16-355, SHEETS 1, 2 & 3 OF 8
YORK COUNTY REGISTRY OF DEEDS
PLAN BOOK 269, PAGES 47-49
2) YORK COUNTY COMMISSIONERS RECORDS
VOLUME 5, PAGE 493 SUPREME JUDICIAL
1827 4 RODS WIDE (66')
3) YORK COUNTY COMMISSIONERS RECORDS
VOLUME 14, PAGE 97
1803 4 RODS WIDE (66')

AS-BUILT PLANS INFORMATION
1) STATE OF MAINE - DEPARTMENT OF TRANSPORTATION
PLANS OF RESURFACING
WELLS - KENNEBUNK, YORK COUNTY
FEDERAL AID PRIMARY PROJECT NO. F-STP-01-1(81)X
EPLAN ARCHIVES PLOT SET ID NO. 5331

TAX MAP INFORMATION
1) TOWN OF WELLS
TAX MAPS 79 & 80
2) TOWN OF KENNEBUNK
TAX MAP 65

REVISIONS

NO.	DATE	DESCRIPTION	BY

PLAN FILED IN PLAN BOOK PAGE COUNTY RECORD

NO.	GRANTOR	INSTRUMENT	DATE	BOOK	PAGE

DAVID BERNHARDT
COMMISSIONER
JOYCE NOEL TAYLOR
CHIEF ENGINEER
DATE

To the best of my knowledge and belief the Highway Right of Way lines depicted hereon are based upon a survey conforming to the Standards of Practice promulgated by the Maine Board of Licensure for Professional Land Surveyors 02-360 CMR, Chapter 90; Exceptions: (1) No separate survey report, (2) Monumentation only as shown on plan. See sheet X of this plan set for coordinates. (3) Other boundary lines, including lines between abutters are approximate and for general reference purposes only.

STATE HIGHWAY "1"
U.S. ROUTE 1 / POST ROAD & YORK STREET
WELLS / KENNEBUNK YORK COUNTY
FEDERAL AID PROJECT NO. STP-2047(400)

MAY 2015 | RIGHT-OF-WAY MAP | D.O.T. FILE NO. 16-501
SCALE 1" = 25' | SHEET 1 OF 1

ITEM	TECH	CHECKED
EXISTING CONDITION PLAN	G.L.L.	
FINAL RIGHT OF WAY	G.L.L.	
AREAS	G.L.L.	

STATE OF MAINE
DEPARTMENT OF TRANSPORTATION
16 STATE HOUSE STATION - AUGUSTA, ME 04333-0016 - 207-624-3460
WELLS \ KENNEBUNK
RIGHT OF WAY MAP

SHEET NUMBER
27
OF 27

Filename: ...\00\ROW\MSTA\027_RWPLAN1.dgn Division: BRIDGE Username: richard.e.myers Date:7/14/2015