Built By F.A.

| F.H.W.A. REG. NO. | STATE | PROJECT NUMBER | SHEET NO. | TOTAL SHEETS |
|---|---|---|---|---|
| 1 | MAINE | 0249 | 1 | 7 |

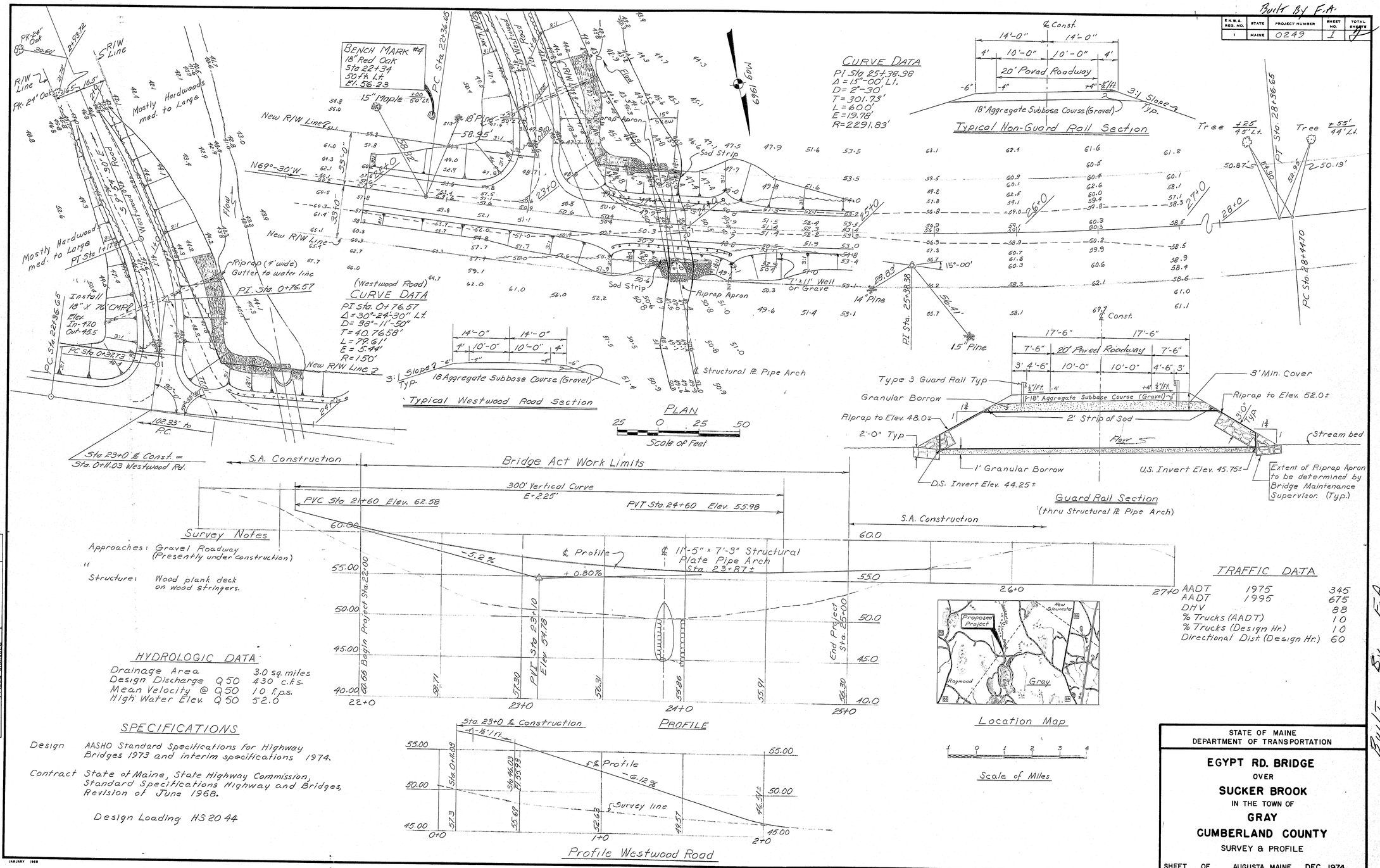


## Survey Notes

Approaches: Gravel Roadway (Presently under construction)

Structure: Wood plank deck on wood stringers.

## HYDROLOGIC DATA

| | | |
|---|---|---|
| Drainage Area | | 3.0 sq. miles |
| Design Discharge | Q 50 | 430 c.f.s. |
| Mean Velocity @ | Q 50 | 10 f.p.s. |
| High Water Elev. | Q 50 | 52.0 |

## SPECIFICATIONS

Design AASHO Standard Specifications for Highway Bridges 1973 and interim specifications 1974.

Contract State of Maine, State Highway Commission, Standard Specifications Highway and Bridges, Revision of June 1968.

Design Loading HS 20 44

## TRAFFIC DATA

| | | |
|---|---|---|
| AADT | 1975 | 345 |
| AADT | 1995 | 675 |
| DHV | | 88 |
| % Trucks (AADT) | | 10 |
| % Trucks (Design Hr.) | | 10 |
| Directional Dist. (Design Hr.) | | 60 |

Survey Checked
Survey Plotted

| PROJECT DESIGN ENGINEER | BY | DATE |
|---|---|---|
| PLANS DESIGN-DETAILED | | |
| CHECKED | | |
| REVISIONS | | |
| FIELD CHANGES | | |

D.D. 12-23-74
J.J. 12-19-74

STATE OF MAINE
DEPARTMENT OF TRANSPORTATION

**EGYPT RD. BRIDGE**
OVER
**SUCKER BROOK**
IN THE TOWN OF
**GRAY**
**CUMBERLAND COUNTY**
SURVEY & PROFILE

SHEET OF AUGUSTA, MAINE DEC. 1974

178-79

Built By F.A.

Built By F.A.

| F.H.W.A. REG. NO. | STATE | PROJECT NUMBER | SHEET NO. | TOTAL SHEETS |
|---|---|---|---|---|
| 1 | MAINE | 0249 | 2 | 2 |

Mag. 1969

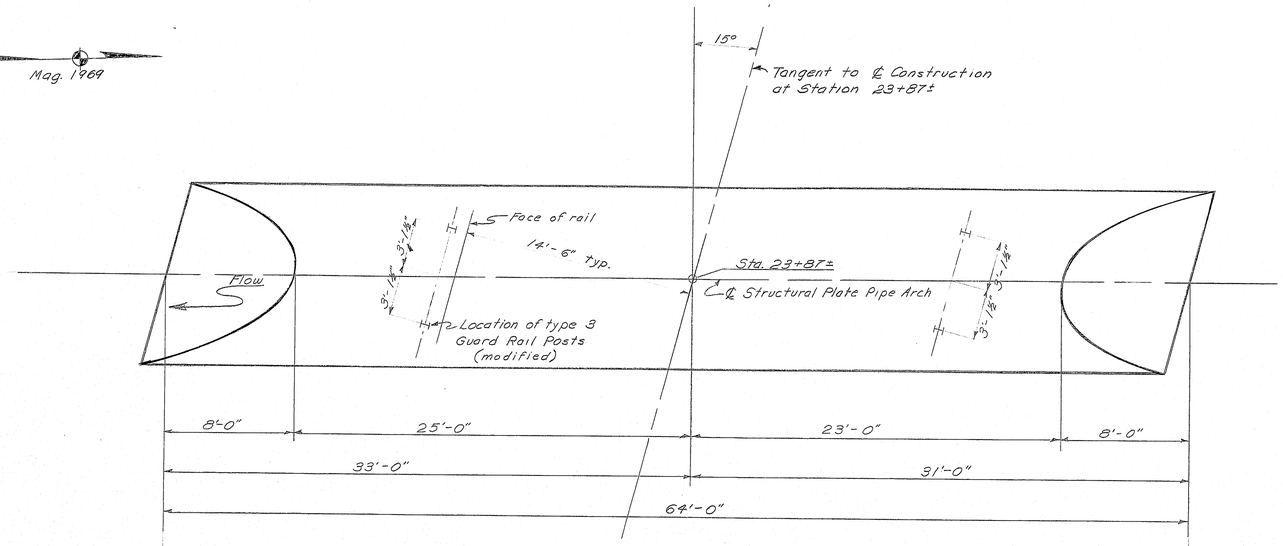


PLAN

## NOTES

1. One 11'-5" span by 7'-3' rise Structural Plate Pipe Arch required. Top Plates shall be 8 gauge, bottom and corner Plates shall be 7 gauge. Assemble with ¾ ϕ hot dipped galvanized Bolts (ASTM A325).
2. Ends shall be cut to slope and skew as shown on details.
3. Granular Borrow shall meet the requirments of Subsection 703.19, Material for Underwater Backfill.
4. Granular Borrow may be omitted under the Pipe Arch if the existing material is suitable.
5. Place a 2ft wide strip of Sod along the top of the Riprap and over the Pipe Arch. Typical at both ends of Pipe Arch.
6. Set bottom of Pipe Arch 6" below stream bed.
7. Riprap shall be carefully placed around the ends of the Pipe Arch so that no damage to the Pipe Arch will result, and in such a manner that the finish slopes will match the ends of the Pipe Arch.
8. 2 inches of loam shall be placed on the slopes to 10 ft beyond the Riprap limits, and under the sodded areas. Excluding the Riprap areas.

NOTE: For Guard Rail Posts detail not shown see Standard Details Aug. 1969 (B)

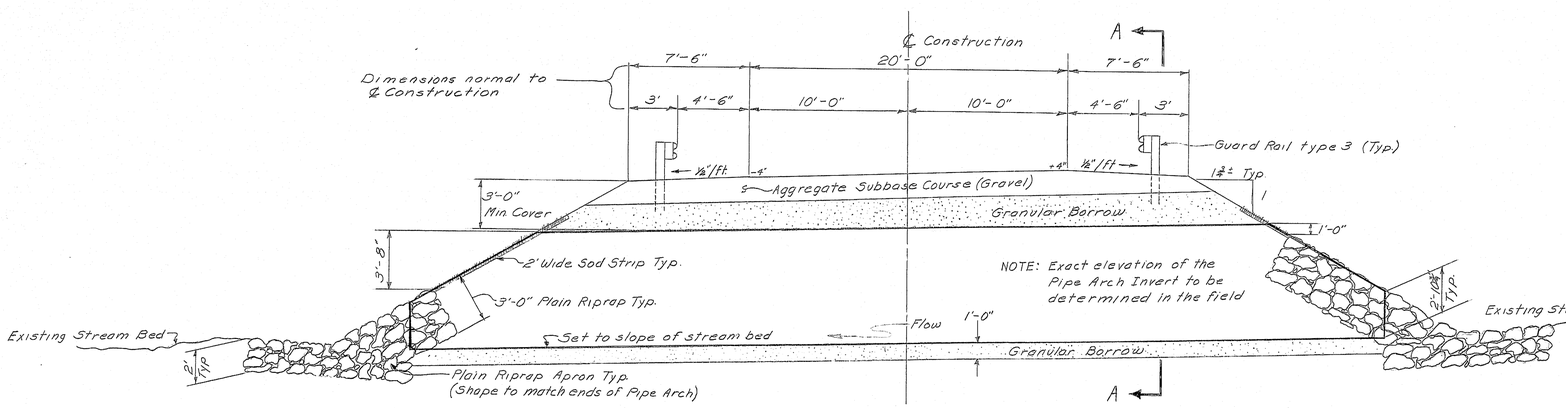


NOTE: Warp slopes to fit ends of Pipe Arch.

ELEVATION

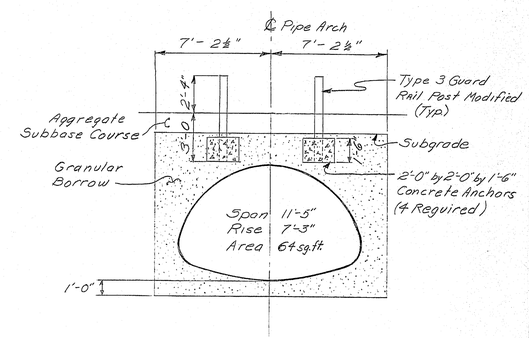


SECTION AA

| PROJECT DESIGN ENGINEER | BY | DATE |
|---|---|---|
| DESIGN - DETAILED | K.E.A. | 3-6-73 |
| CHECKED | J.A.W. | |
| REVISIONS | | |
| FIELD CHANGES | | |

PLANS

STATE OF MAINE
DEPARTMENT OF TRANSPORTATION

**EGYPT RD. BRIDGE**
OVER
**SUCKER BROOK**
IN THE TOWN OF
**GRAY**
**CUMBERLAND COUNTY**

STRUCTURAL PLATE PIPE ARCH

SHEET OF AUGUSTA, MAINE

JANUARY 1968

Built By F.A.

178-80