STATE OF MAINE
DEPARTMENT OF TRANSPORTATION

SPECIFICATIONS

Design: Load and Resistance Factor Design per AASHTO LRFD Bridge Design Specifications, Seventh Edition 2014 and Interim Specifications 2015.

DESIGN LOADING

Live Load ..... HL - 93 Modified

TRAFFIC DATA

	I-395 EB	I-395 WB
Current (2012) AADT	17,600	18,090
Future (2032) AADT	22,880	23,520
DHV - % of AADT	10%	10%
Design Hour Volume	2,288	2,352
Heavy Trucks (% of AADT)	7%	7%
Heavy Trucks (% of DHV)	5%	5%
Directional Distribution (% of DHV)	100%	100%
18 kip Equivalent P 2.0	1,055	1,149
18 kip Equivalent P 2.5	1,005	1,094
Design Speed (mph)	60	60

MATERIALS

Concrete:
All ..... Class "A"
Reinforcing Steel:
Plain ..... ASTM A 615/A 615M, Grade 60

BASIC DESIGN STRESSES

Concrete ..... f 'c = 4,000 psi
Reinforcing Steel ..... f y = 60,000 psi

UTILITIES

Emera Maine
City of Bangor (Sewer)
City of Bangor (Fire Alarm)

MAINTENANCE OF TRAFFIC

Full closure of I-395 Eastbound and Westbound traffic with multiple detours.

BANGOR
PENOBSCOT COUNTY
WEBSTER AVENUE BRIDGE (I-395)
OVER
WEBSTER AVENUE

FEDERAL AID PROJECT NO. AC-IM-1931(100)E
PROJECT LENGTH 0.033 mi.
BRIDGE NO. 5796

LIST OF DRAWINGS

Title Sheet 1
Estimated Quantities 2
General Construction Notes 3
General Plan 4
Webster Ave Profile 5
I-395 Eastbound Profile 6
I-395 Westbound Profile 7
Boring Location Plan 8
Interpretive Subsurface Profile 9
Boring Logs 10
Signing And Striping Plan 11
Typical Sections 12
Webster Ave Cross Sections 13-17
I-395 Cross Sections 18-23
Conceptual Staged Construction Details 24
Mat Foundation 25
Mat Foundation Reinforement And Details 26
Bridge Plan And Details 27
South Headwall And Wingwalls 28
North Headwall And Wingwalls 29
Reinforcing Steel Schedule 30
Lighting Plan 31
I-395 Eastbound Detour Overall Plan 32
I-395 Westbound Detour Overall Plan 33
Route 2 Eastbound Detour Plan 34
Route 202 Eastbound Detour Plan 35
I-395 West Detour Plan 1 Of 2 36
I-395 West Detour Plan 2 Of 2 37
Exist Sign Plan 1 Of 2 38
Exist Sign Plan 2 Of 2 39
I-95 Exit 180 Temporary Striping Plan 40
* Right Of Way Map 41
Sanitary Sewer U1-U5

* There is no ROW map (sheet 41) in this plan set.

PROJECT LOCATION:	Webster Avenue Bridge #5796 over Webster Avenue, located 0.44 miles east of Odlin Road, 44°47'12"N, 68°48'12"W
PROGRAM AREA:	Bridge
OUTLINE OF WORK:	Bridge Replacement

GORRILL PALMER
Relationships. Responsiveness. Results.
www.gorrillpalmer.com
207.657.6910

BECKER STRUCTURAL ENGINEERS
75 York Street, Portland, Maine 04101
207.879.1838 ■ beckerstructural.com

WIN 19311.00

AC-IM-1931(100)E

STATE OF MAINE
DEPARTMENT OF TRANSPORTATION
APPROVED
COMMISSIONER: DATE 8/12/15
CHIEF ENGINEER: DATE 8-11-15

ROADWAY DETOUR AND APPROACH DESIGN
STATE OF MAINE Brandon M. Havu 13726 LICENSED PROFESSIONAL ENGINEER
SIGNATURE
P.E. NUMBER 13726
DATE July 27, 2015
GORRILL-PALMER CONSULTING ENGINEERS, INC.

STATE OF MAINE BRYSON T. WELCH No. 11799 LICENSED PROFESSIONAL ENGINEER
SIGNATURE
P.E. NUMBER 11799
DATE July 29, 2015
BECKER STRUCTURAL ENGINEERS, INC.

PROJECT INFORMATION	
PROGRAM	BRIDGE
PROJECT MANAGER	M. WIGHT
DESIGNER	J. BURGESS
CONSULTANT	B.S.E.
PROJECT RESIDENT	
CONTRACTOR	
PROJ. COMP. DATE	

BANGOR
I-395 OVER WEBSTER AVE.
TITLE SHEET

SHEET NUMBER
1
OF 41

Filename:\00\BRIDGE\MSTA\001_Title.dgn Division: BRIDGE Username: common Date:7/27/2015

ESTIMATED QUANTITIES - SECTION 1			
ITEM NO.	DESCRIPTION	QUANTITY	UNIT
202.13	REMOVING EXISTING RAILINGS (RETAINED BY DEPARTMENT)	212	LF
202.19	REMOVING EXISTING BRIDGE (730 CY /273,000 LB)	1	LS
202.202	REMOVING PAVEMENT SURFACE	180	SY
203.20	COMMON EXCAVATION	1,900	CY
203.24	COMMON BORROW	3,700	CY
203.26	GRAVEL BORROW	350	CY
304.10	AGGREGATE SUBBASE COURSE - GRAVEL	1,600	CY
304.14	AGGREGATE BASE COURSE - TYPE A	160	CY
304.15	AGGREGATE BASE COURSE - TYPE B	720	CY
403.207	HMA - 19.0 MM NOMINAL MAXIMUM SIZE	550	T
403.2081	HMA - 12.5 MM NOMINAL MAX. SIZE (POLYMER MODIFIED)	210	T
403.210	HMA - 9.5 MM NOMINAL MAXIMUM SIZE	80	T
403.2131	HMA - 12.5 MM NOM. MAX. SIZE (BASE AND INTERM. BASE COURSE)	210	T
409.15	BITUMINOUS TACK COAT - APPLIED	190	G
502.21	STRUCTURAL CONCRETE, ABUTMENTS AND RETAINING WALLS	330	CY
502.565	CONCRETE FILL	45	CY
503.12	REINFORCING STEEL, FABRICATED/DELIVERED	51,207	LB
503.13	REINFORCING STEEL, PLACING	51,207	LB
512.081	FRENCH DRAINS (384 LF)	1	LS
514.06	CURING BOX FOR CONC CYL	1	EA
531.51	BRIDGE STRUCTURE - DETAIL BUILD	1	LS
603.175	18" RCP CLASS III	60	LF
603.179	18" CULVERT PIPE OPTION III	40	LF
603.199	24" CULVERT PIPE OPTION III	49	LF
603.411	24" RCP CLASS V	256	LF
603.55	CONCRETE PIPE TIES	24	GP
604.092	CATCH BASIN TYPE BI-C	2.125	EA
604.15	MANHOLE	1.125	EA
604.247	CATCH BASIN TYPE F5-C	1	EA
605.09	6" UNDERDRAIN TYPE B	400	LF
605.10	6" UNDERDRAIN OUTLET	30	LF
606.24	GUARDRAIL TYPE 3D - SINGLE RAIL	740	LF
606.2401	GUARDRAIL TYPE 3D - DOUBLE RAIL	240	LF
607.173	CHAIN LINK FENCE - 6 FOOT - PVC COATED	150	LF
607.35	BRACING ASSEMBLY CHAIN LINK FENCE - PVC COATED	8	EA
608.243	PRECAST CONCRETE PAVERS (1,720 SF)	1	LS
610.08	PLAIN RIPRAP	27	CY
610.18	STONE DITCH PROTECTION	22	CY
613.319	EROSION CONTROL BLANKET	150	SY
615.07	LOAM	150	CY
618.14	SEEDING METHOD NUMBER 2	9	UN
618.141	SEEDING METHOD NUMBER 3	16	UN
619.1201	MULCH	25	UN
619.1401	EROSION CONTROL MIX	150	CY
620.58	EROSION CONTROL GEOTEXTILE	120	SY
620.60	SEPARATION GEOTEXTILE	3,200	SY
626.31	18 INCH DIAMETER FOUNDATION	2	EA
626.33	30 INCH DIAMETER, 8 FEET OR LESS FOUNDATION	1	EA
627.51	6 INCH TEMPORARY PAVEMENT TAPE, YELLOW OR WHITE	3,450	LF
627.57	12 INCH REMOVABLE BLACK LINE MASKING TAPE	2,450	LF
627.733	4" WHITE OR YELLOW PAINTED PAVEMENT MARKING LINE	300	LF
627.744	6" WHITE OR YELLOW PAINTED PAVEMENT MARKING LINE	1,650	LF
627.75	WHITE OR YELLOW PAVEMENT & CURB MARKING	300	SF
627.77	REMOVEING EXISTING PAVEMENT MARKING	400	SF
629.05	HAND LABOR, STRAIGHT TIME	40	HR
631.10	AIR COMPRESSOR (INCLUDING OPERATOR)	20	HR
631.11	AIR TOOL (INCLUDING OPERATOR)	20	HR
631.12	ALL PURPOSE EXCAVATOR (INCLUDING OPERATOR)	20	HR
631.172	TRUCK - LARGE (INCLUDING OPERATOR)	20	HR
631.18	CHAIN SAW RENTAL (INCLUDING OPERATOR)	10	HR
631.20	STUMP CHIPPER RENTAL (INCLUDING OPERATOR)	10	HR
631.22	FRONT END LOADER (INCLUDING OPERATOR)	20	HR
631.32	CULVERT CLEANER (INCLUDING OPERATORS)	10	HR
634.160	HIGHWAY LIGHTING	1	LS
634.208	REMOVE & RESET LIGHT STANDARDS	1	EA
634.210	CONVENTIONAL LIGHT STANDARD	2	EA
634.2042	LED LUMINAIRES TYPE S1	2	EA
634.2042	LED LUMINAIRES TYPE S2 TUNNEL	38	EA
639.18	FIELD OFFICE TYPE A	1	EA
643.71	TRAFFIC SIGNAL MODIFICATION: ROUTE 202 & COLD BROOK RD	1	LS
643.72	TEMPORARY TRAFFIC SIGNAL: I-95 & COLD BROOK ROAD	1	LS
646.35	SEAL ABANDONED WELL	1	LS
652.30	FLASHING ARROW	4	EA
652.312	TYPE III BARRICADE	18	EA
652.33	DRUM	300	EA
652.35	CONSTRUCTION SIGNS	3,750	SF
652.361	MAINTENANCE OF TRAFFIC CONTROL DEVICES (40 CD)	1	LS
652.38	FLAGGER	200	HR
652.381	TRAFFIC OFFICER	80	HR
652.382	TRAFFIC MONITOR	4	CD
652.41	PORTABLE-CHANGEABLE MESSAGE SIGN	8	EA
656.75	TEMPORARY SOIL EROSION AND WATER POLLUTION CONTROL	1	LS
658.20	ACRYLIC LATEX COLOR FINISH, GREEN	14	SY
659.10	MOBILIZATION	1	LS
841.48	BOLLARDS	4	EA
841.481	REMOVABLE BOLLARD	2	EA

ESTIMATED QUANTITIES - SECTION 2			
ITEM NO.	DESCRIPTION	QUANTITY	UNIT
659.10	MOBILIZATION	1	LS
801.17	8 INCH PVC SANITARY SEWER	280	LF
803.173	SEWER MANHOLE - 4 FOOT DIAMETER	3	EA

GORRILL PALMER
Relationships. Responsiveness. Results.
www.gorrillpalmer.com
207.657.6910

BECKER STRUCTURAL ENGINEERS
75 York Street, Portland, Maine 04101
207.879.1838 ■ beckerstructural.com

STATE OF MAINE
DEPARTMENT OF TRANSPORTATION

AC-IM- 1931(100)E

WIN 19311.00

BRIDGE NO. 5796

BRIDGE PLANS

PROJ. MANAGER	MIKE WIGHT	BY	DATE
DESIGN-DETAILED	B.WELCH	D.BURGESS	7\15
CHECKED-REVIEWED	J.BURGESS	B.WELCH	7\15
DESIGN2-DETAILED2	------	------	------
DESIGN3-DETAILED3	------	------	------
REVISIONS 1	------	------	------
REVISIONS 2	------	------	------
REVISIONS 3	------	------	------
REVISIONS 4	------	------	------
FIELD CHANGES	------	------	------

SIGNATURE

P.E. NUMBER

DATE

WEBSTER AVENUE BRIDGE
OVER WEBSTER AVENUE
BANGOR PENOBSCOT COUNTY

ESTIMATED QUANTITIES

SHEET NUMBER
2
OF 41

Filename: ...\00\Bridge\002_Estimate.dgn Division: HIGHWAY Username: bhavu Date:8/13/2015

GENERAL CONSTRUCTION NOTES

1. During construction, the road will be closed to traffic for a time period specified in the Special Provisions.

2. For easements, construction limits and right of way lines, refer to Right of Way Map.

3. The clearing limits as shown on the plans are approximate. The exact limits will be established in the field by the Resident. Payment for clearing will be considered incidental to Contract items.

4. All utility facilities shall be adjusted by the respective utilities unless otherwise noted.

5. All aluminum bridge rail, rail posts, and associated hardware which are to be removed shall be carefully salvaged by the Contractor and will remain the property of the Department.

6. Do not excavate for Aggregate Subbase Course where existing material is suitable as determined by the Resident.

7. In areas where the Resident directs the Contractor not to excavate to the subgrade line shown on the plans, payment for removing existing pavement, grubbing, shaping, ditching, and compacting the existing subbase and layers of new subbase 6 inches or less thick will be made under appropriate equipment rental items.

8. Place loam 2 inches deep on all new or reconstructed sideslopes or as directed by the Resident.

9. Erosion Control Mix may be substituted in those areas normally receiving loam and seed as directed by the Resident. Placement shall be in accordance with Standard Specifications Section 619, Mulch. Payment will be made under Item No. 619.1401, Erosion Control Mix.

10. Place a 24-in. wide strip of Temporary Erosion Control Blanket on the sideslopes behind the wingwalls.

11. Guardrail posts as shown in the Standard Details shall be modified from the indicated length of 6 feet to a length of 7 feet with an embedment of 4.5 feet. Payment will be considered incidental to the guardrail pay items.

12. Extended-use Erosion Control Blanket, seeded gutters, riprap downspouts, and other gutters lined with Stone Ditch Protection shall be constructed after paving and shoulder work is completed, where it is apparent that runoff will cause continual erosion. Payment will be made under the appropriate Contract items.

13. Project information referred to below may be accessed at the following MaineDOT web address: http://www.maine.gov/mdot/contractors/

14. The existing bridge plans may be accessed at the MaineDOT web address. The plans are reproductions of the original drawings as prepared for the construction of the bridge. It is very unlikely that the plans will show any construction field changes or any alterations which may have been made to the bridge during its life span.

15. The following project geotechnical reports may be accessed at the MaineDOT web address:

A. Preliminary Geotechnical Design Report for Interstate 395 over Webster Avenue, Bangor, Maine, December 20, 2012, Soils Report 2012-34C.

B. Supplemental Geotechnical Design Memorandum Interstate 395 over Webster Avenue, Bangor, Maine, Soils Report, 2015-14C, 3 November, 2014.

C. Final Geotechnical Design Memorandum Interstate 395 over Webster Avenue, Bangor, Maine, Soils Report 2015-18C, 30 July 2015.

16. Geotechnical information furnished or referred to in this plan set is for the use of the Bidders and the Contractor. No assurance is given that the information or interpretations will be representative of actual subsurface conditions at the construction site. MaineDOT will not be responsible for the Bidders' or Contractor's interpretations of, or conclusions drawn from, the geotechnical information. The boring logs contained in the plan set present factual and interpretive subsurface information collected at discrete locations. Data provided may not be representative of the subsurface conditions between the boring locations.

17. Quantities included for pay items measured and paid for by Lump Sum are estimated quantities and are provided by MaineDOT for informational purposes only. Lump Sum pay items will be paid for at the Contract Bid amount, with no addition or reduction in payment to the Contractor if the actual final quantities are different from the MaineDOT provided estimated quantities, except as follows:

A. If a Lump Sum pay item is eliminated, the requirements of Standard Specifications Section 109.2, Elimination of Items, will take precedence.

B. If other Contract Documents specifically allow a change in payment for a Lump Sum pay item, those requirements will be followed.

C. If a design change results in changes to estimated quantities for Lump Sum pay items, price adjustments will be made in accordance with Standard Specifications Section 109.7, Equitable Adjustments to Compensation.

18. All costs for cofferdams, including pumping, maintenance, related temporary soil erosion and water pollution controls and removal, will not be paid for directly, but will be considered incidental to related Contract items.

19. The Contractor shall submit a Bridge Demolition Plan and CPM to the Resident at least 45 business days prior to the start of demolition work. The plan shall outline the methods and equipment to be used to remove and dispose of all materials included in the existing bridge. No work related to the removal of the bridge shall be undertaken by the Contractor until MaineDOT has reviewed the Bridge Demolition Plan for appropriateness and completeness. Payment for all work necessary for developing, submitting and finalizing the Demolition Plan will be considered incidental to the bridge removal pay item.

20. The existing bridge shall be removed by and become the property of the Contractor. The steel portions of the existing bridge are coated with a lead-based paint system. The Contractor is responsible for the containment, proper management and disposal of all lead-contaminated hazardous waste generated by the process of demolishing the bridge. The Contractor is responsible for implementing appropriate OSHA mandated personal protection standards related to this process. Once the existing bridge is removed, the Contractor is solely responsible for the care, custody and control of the components of the existing bridge and any hazardous waste generated as a result of the storage, recycling or disposal of the bridge components, including lead-coated steel. The Contractor shall recycle or reuse the steel in accordance with the Maine Department of Environmental Protection's "Maine Hazardous Waste Management Regulations," Chapter 850. A copy of this regulation is available at MaineDOT's offices on Child Street in Augusta. Payment for all labor, materials, equipment and other costs required to remove and dispose of the existing bridge will be considered incidental to the bridge removal pay item.

21. Place 12" aggregate subbase course gravel and 2" hot mix asphalt around catch basins in grassed areas (3' outside of frame) and paint with acrylic latex color finish - green. Payment shall be under the applicable contract items.

22. When super elevation exceeds the slope of the low side shoulder, the shoulder pavement will have same slope as traveled way.

23. Existing culverts and catch basins will be cleaned as directed by the Resident under the appropriate pay items.

24. No existing drainage shall be abandoned, removed or plugged without prior approval of the Resident.

25. Inlets and outlets of all culverts shall be riprapped unless otherwise noted on the plans or directed by the Resident.

26. The culvert sizes shown on the plans and cross sections are for smoothlined pipes.

27. Plastic end caps shall be used on all dead-end 6-inch type B underdrain.

28. All underdrain not shown on the cross sections will have a flow line of 5.5 feet below finish grade directly above the underdrain and underdrain sand backfill placed to an elevation equal to the bottom of the new gravel layer. All underdrain shown on the cross sections will have the flow line scaled from the cross sections. All flow line elevations are subject to approval by the Resident.

29. Guardrail end treatments shall be installed concurrently with the placement of each section of beam guardrail.

30. All existing guardrail shall be removed and become the property of the Contractor. Removal and disposal shall be considered incidental to the guardrail items.

31. Connections for proposed guardrail to existing guardrail will be considered incidental to Item 606.

32. Any damage to the slopes caused by the Contractor's equipment, personnel, or operation shall be repaired to the satisfaction of the Resident. All work, equipment, and materials required to make repairs shall be at the Contractor's expense.

33. "Undetermined locations" shall be determined by the Resident.

34. Stations referenced are approximate.

35. All work shall be done in accordance with the Maine Department of Transportation's Best Management Practices for Erosion Control & Sediment Control, February, 2008.

36. Concrete pipe ties shall be installed between all segments of reinforced concrete pipe located beneath the concrete slab and all segments of pipes located within a minimum of 3 sections beyond the concrete slab. Pipe ties shall be provided a 3 locations along the outside of pipe as detailed in the typical sections. Pipe ties shall be installed with pipes at 0" of separation and shall allow for 1" of separation between pipe segments. Coordinate work with Resident.

37. Existing curbing shall be removed within limits of work on I-395. I-395 westerly limits of work shall extend to the extent required to remove full limits of curbing. Contractor shall reset curbing at the I-395 easterly limits of work to function as terminal curbing. Curbing removal and placement of reset terminal curbing shall be considered incidental to Item 203.20 Common Excavation.

38. Where pavement under this contract joins an existing pavement, the existing pavement shall be sawcut along a smooth line to a neat, even vertical joint, as directed by the Resident. Broken or raveled edges will not be permitted. All work necessary for the preparation of this joint will be considered incidental to the related contract items.

39. Existing bollards, boulders and other miscellaneous elements located on Webster Ave. shall be removed and disposed at the direction of the Resident. Payment for this work shall be considered incidental to Item 203.20 - Common Excavation.

40. Removal of existing drainage pipes, as noted on the plans, shall be considered incidental to item 203.20 - Common Excavation.

41. Where existing drainage is noted to be filled with concrete. Payment shall be made under Item 502.565, Concrete Fill.

42. A 4'-0"x4'-0"x4" piece of rigid insulation shall be placed at approximately Sta. 11+32, 3.25' Rt., where the proposed 24" Option III pipe crosses the existing sewer line. Payment shall be considered incidental to Item 603.199.

43. Backfill for the 24" reinforced concrete pipe located under the mat foundation shall be backfilled with material meeting the requirements of Standard Specifications, Section 703.22, Underdrain Backfill Material. Underdrain backfill material shall extend beyond the southerly limits of the mat slab to the catch basin located at Sta. 11+32, Lt. Backfill material for the 24" Opt III pipe outlet from this catch basin shall meet the same requirements specified above. The contractor shall ensure appropriate backfill material is provided as necessary to outlet the trench drainage at this outlet pipe location. Payment for backfill shall be considered incidental to 603 Item(s).

44. Temporary striping shall be completed using removable tape materials. Temporary stripe lines shall be 6" wide, colored white or yellow as designated on I-395 Exit 180 Temporary Striping Plan. Payment for temporary striping lines shall be paid under Item 627.51, 6 Inch Temporary Pavement Tape, Yellow or White. Existing striping that conflicts with temporary striping shall be covered with removable black masking tape. Payment for covering existing striping shall be paid under Item 627.57, 12 Inch Removable Black Line Masking Tape.

45. Backfill for the 6" coarse aggregate (class A) layer under the mat foundation shall meet the requirements of Standard Specification, Section 703.02, Coarse Aggregate for Concrete (Class A). Payment for backfill shall be considered incidental to 502 Item.

46. Where existing observation well is noted to be abandoned, the steel guardpipe and lock cap assembly shall be carefully salvaged by the Contractor and will remain the property of the Department. The PVC well shall be cut at or below the existing ground surface and filled with concrete. Payment shall be made under Item 646.35, Seal Abandoned Well.

47. Gravel borrow beneath the mat foundation shall be placed in lifts not exceeding 12 inches in loose measure and compacted to a minimum of 95 percent of the materials maximum dry density as determined in accordance with AASHTO T180 - "Moisture-Density Relation of Soils".

GORRILL PALMER

Relationships. Responsiveness. Results.
www.gorrillpalmer.com
207.657.6910

BECKER STRUCTURAL ENGINEERS
75 York Street, Portland, Maine 04101
207.879.1838 ■ beckerstructural.com

STATE OF MAINE
DEPARTMENT OF TRANSPORTATION

AC-IM- 1931(100)E

WIN 19311.00

BRIDGE NO. 5796

BRIDGE PLANS

PROJ. MANAGER	MIKE WIGHT	BY	DATE
DESIGN-DETAILED	B.WELCH	D.BURGESS	7\15
CHECKED-REVIEWED	J.BURGESS	B.WELCH	7\15
DESIGN2-DETAILED2	------	------	------
DESIGN3-DETAILED3	------	------	------
REVISIONS 1		------	------
REVISIONS 2		------	------
REVISIONS 3		------	------
REVISIONS 4		------	------
FIELD CHANGES		------	------

SIGNATURE

P.E. NUMBER

DATE

WEBSTER AVENUE BRIDGE
OVER WEBSTER AVENUE
BANGOR PENOBSCOT COUNTY

CONSTRUCTION NOTES

SHEET NUMBER
3
OF 41

Filename: ...\00\Bridge\003_GeneralNotes.dgn Division: HIGHWAY Username: bhavu Date:8/13/2015

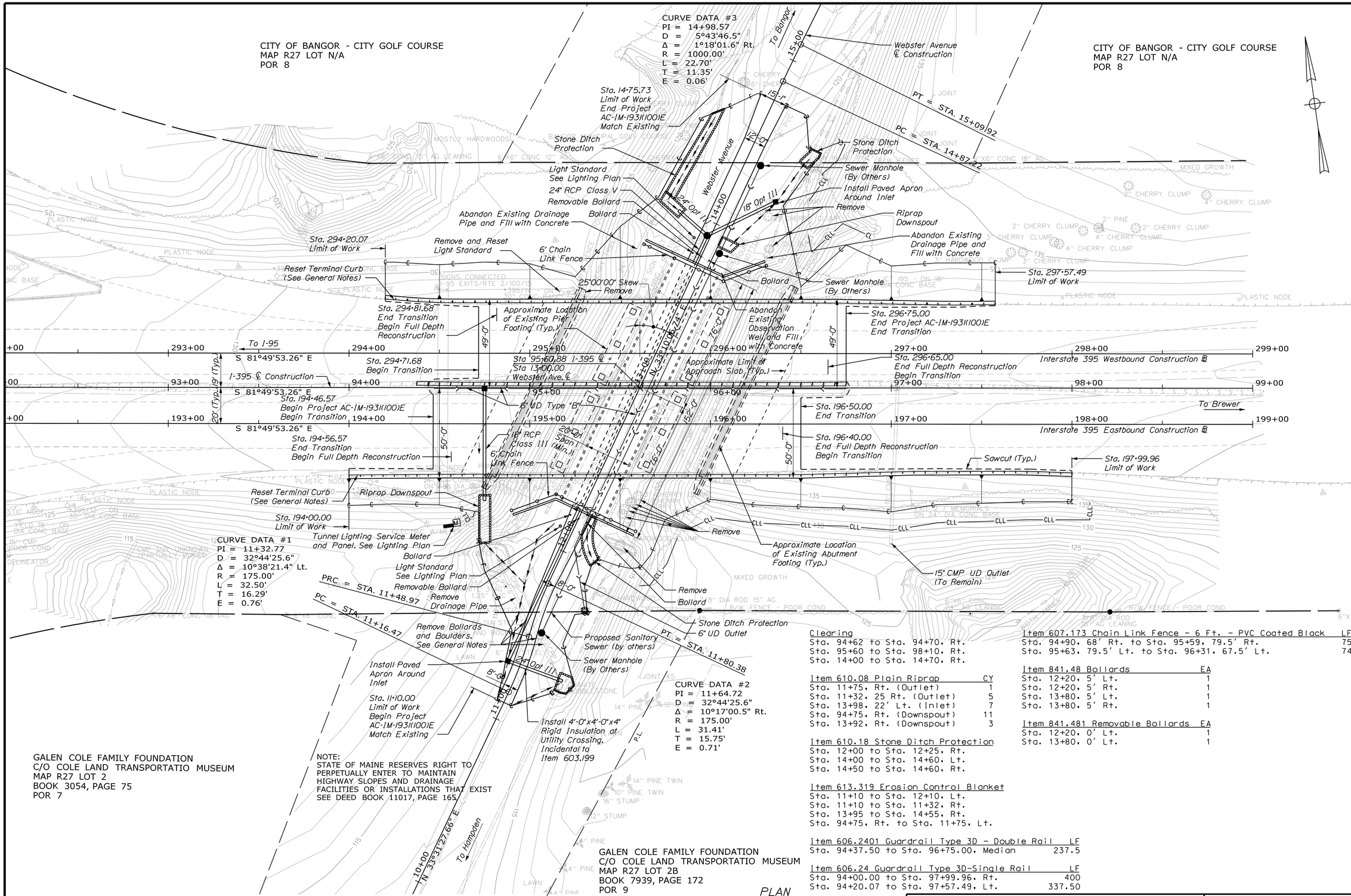

PLAN

Clearing
Sta. 94+62 to Sta. 94+70, Rt.
Sta. 95+60 to Sta. 98+10, Rt.
Sta. 14+00 to Sta. 14+70, Rt.

Item 610.08 Plain Riprap	CY
Sta. 11+75, Rt. (Outlet)	1
Sta. 11+32, 25 Rt. (Outlet)	5
Sta. 13+98, 22' Lt. (Inlet)	7
Sta. 94+75, Rt. (Downspout)	11
Sta. 13+92, Rt. (Downspout)	3

Item 610.18 Stone Ditch Protection
Sta. 12+00 to Sta. 12+25, Rt.
Sta. 14+00 to Sta. 14+60, Lt.
Sta. 14+50 to Sta. 14+60, Rt.

Item 613.319 Erosion Control Blanket
Sta. 11+10 to Sta. 12+10, Lt.
Sta. 11+10 to Sta. 11+32, Rt.
Sta. 13+95 to Sta. 14+55, Rt.
Sta. 94+75, Rt. to Sta. 11+75, Lt.

Item 606.2401 Guardrail Type 3D - Double Rail	LF
Sta. 94+37.50 to Sta. 96+75.00, Median	237.5

Item 606.24 Guardrail Type 3D-Single Rail	LF
Sta. 94+00.00 to Sta. 97+99.96, Rt.	400
Sta. 94+20.07 to Sta. 97+57.49, Lt.	337.50

Item 607.173 Chain Link Fence - 6 Ft. - PVC Coated Black	LF
Sta. 94+90, 68' Rt. to Sta. 95+59, 79.5' Rt.	75
Sta. 95+63, 79.5' Lt. to Sta. 96+31, 67.5' Lt.	74

Item 841.48 Bollards	EA
Sta. 12+20, 5' Lt.	1
Sta. 12+20, 5' Rt.	1
Sta. 13+80, 5' Lt.	1
Sta. 13+80, 5' Rt.	1

Item 841.481 Removable Bollards	EA
Sta. 12+20, 0' Lt.	1
Sta. 13+80, 0' Lt.	1

GORRILL PALMER
Relationships. Responsiveness. Results.
www.gorrillpalmer.com
207.657.6910

BECKER STRUCTURAL ENGINEERS
75 York Street, Portland, Maine 04101
207.879.1838 ■ beckerstructural.com

STATE OF MAINE
DEPARTMENT OF TRANSPORTATION

AC-IM-1931(100)E

WIN 19311.00

BRIDGE NO.:5796

BRIDGE PLANS

		SIGNATURE	DATE
PROJ. MANAGER	MIKE WIGHT		
DESIGN-DETAILED	B. HAVU	M. CUNDIFF	07/15
CHECKED-REVIEWED	D. ETTINGER		07/15
DESIGN2-DETAILED2			
DESIGN3-DETAILED3			
REVISIONS 1			
REVISIONS 2			
REVISIONS 3			
REVISIONS 4			
FIELD CHANGES			

P.E. NUMBER

DATE

INTERSTATE 395
OVER WEBSTER AVENUE
BANGOR PENOBSCOT

GENERAL PLAN

SHEET NUMBER
4
OF 41

Date:7/28/2015
Username: mcundiff
Division: HIGHWAY
Filename: ...\00\Bridge\004_Plan_001.dgn

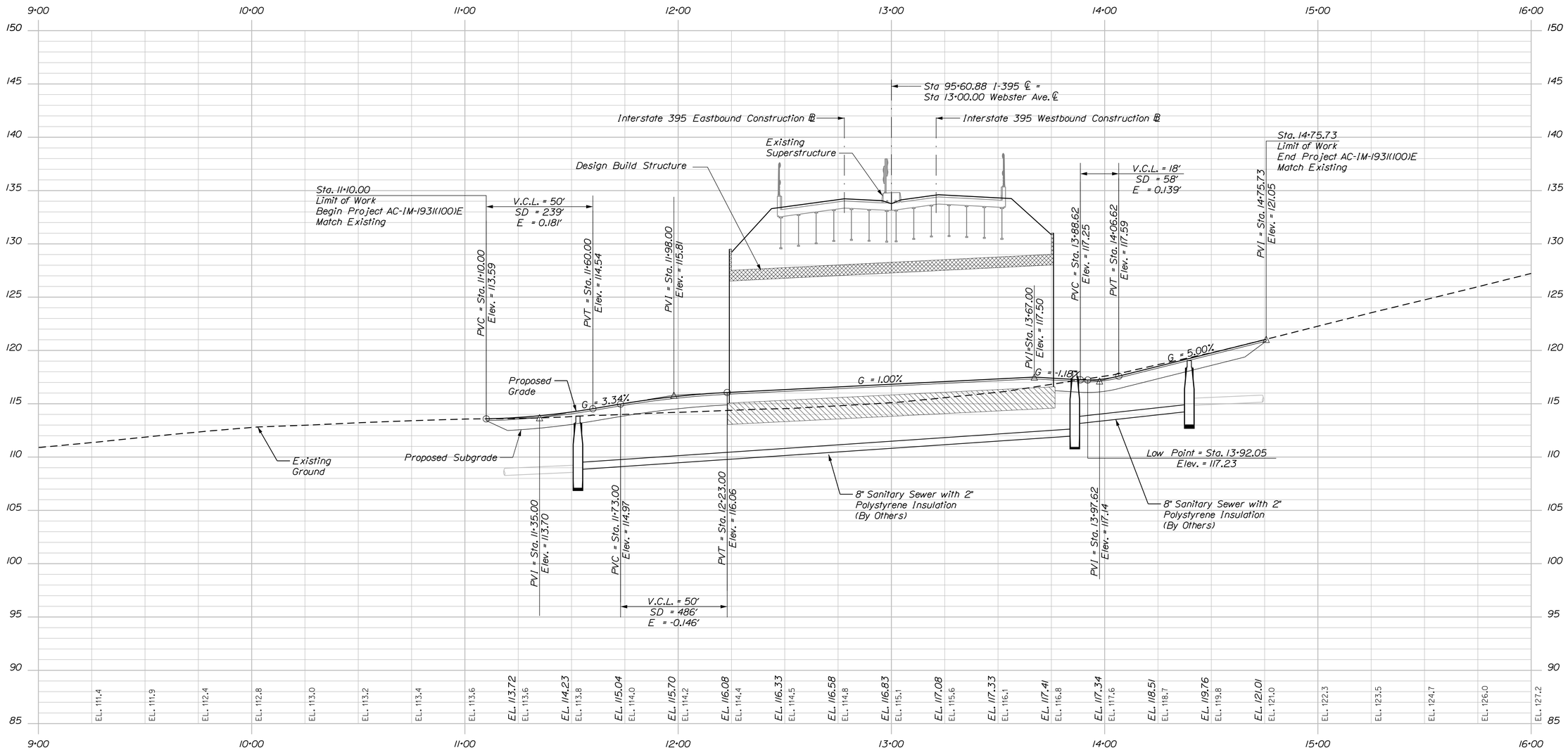

WEBSTER AVENUE PROFILE

Horiz. 25 0 25 50

Vert. 5 0 5 10

Scale of Feet

GORRILL PALMER

Relationships. Responsiveness. Results.
www.gorrillpalmer.com
207.657.6910

BECKER STRUCTURAL ENGINEERS

75 York Street, Portland, Maine 04101
207.879.1838 ■ beckerstructural.com

STATE OF MAINE
DEPARTMENT OF TRANSPORTATION

AC-IM-1931(100)E

WIN 19311.00

BRIDGE NO.:5796

BRIDGE PLANS

PROJ. MANAGER	MIKE WIGHT	BY	DATE
DESIGN-DETAILED	B. HAVU	M. CUNDIFF	06\15
CHECKED-REVIEWED	D. ETTINGER		06\15
DESIGN2-DETAILED2			
DESIGN3-DETAILED3			
REVISIONS 1			
REVISIONS 2			
REVISIONS 3			
REVISIONS 4			
FIELD CHANGES			

SIGNATURE

P.E. NUMBER

DATE

INTERSTATE 395
OVER WEBSTER AVENUE
BANGOR PENOBSCOT

WEBSTER AVENUE PROFILE

SHEET NUMBER

5

OF 41

Filename: ...\00\Bridge\005_Profile_001.dgn Division: HIGHWAY Username: mcundiff Date:7/28/2015

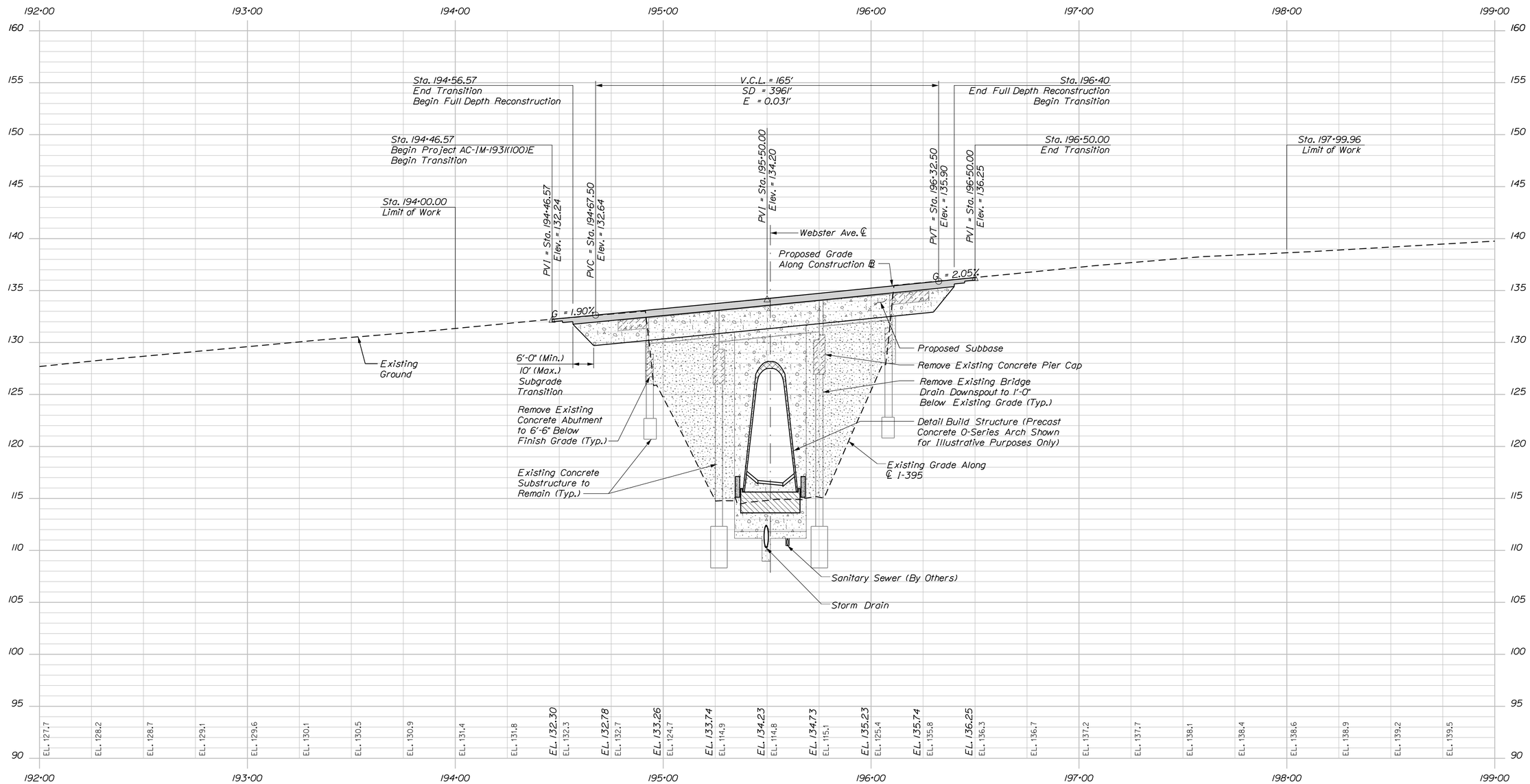

INTERSTATE I-395 EASTBOUND PROFILE

Horiz. 25 0 25 50
Vert. 5 0 5 10
Scale of Feet

GORRILL PALMER
Relationships. Responsiveness. Results.
www.gorrillpalmer.com
207.657.6910

BECKER STRUCTURAL ENGINEERS
75 York Street, Portland, Maine 04101
207.879.1838 ■ beckerstructural.com

STATE OF MAINE
DEPARTMENT OF TRANSPORTATION

AC-IM-1931(100)E

WIN 19311.00

BRIDGE NO.:5796

BRIDGE PLANS

PROJ. MANAGER	MKE WIGHT	BY	DATE
DESIGN-DETAILED	B.HAVU	M.CUNDIFF	6/15
CHECKED-REVIEWED	D.ETTINGER		6/15
DESIGN2-DETAILED2			
DESIGN3-DETAILED3			
REVISIONS 1			
REVISIONS 2			
REVISIONS 3			
REVISIONS 4			
FIELD CHANGES			

SIGNATURE

P.E. NUMBER

DATE

INTERSTATE 395
OVER WEBSTER AVENUE
BANGOR PENOBSCOT

I-395 EASTBOUND PROFILE

SHEET NUMBER
6
OF 41

Filename: ...\00\Bridge\006_Profile_002.dgn Division: HIGHWAY Username: mcundiff Date:7/28/2015

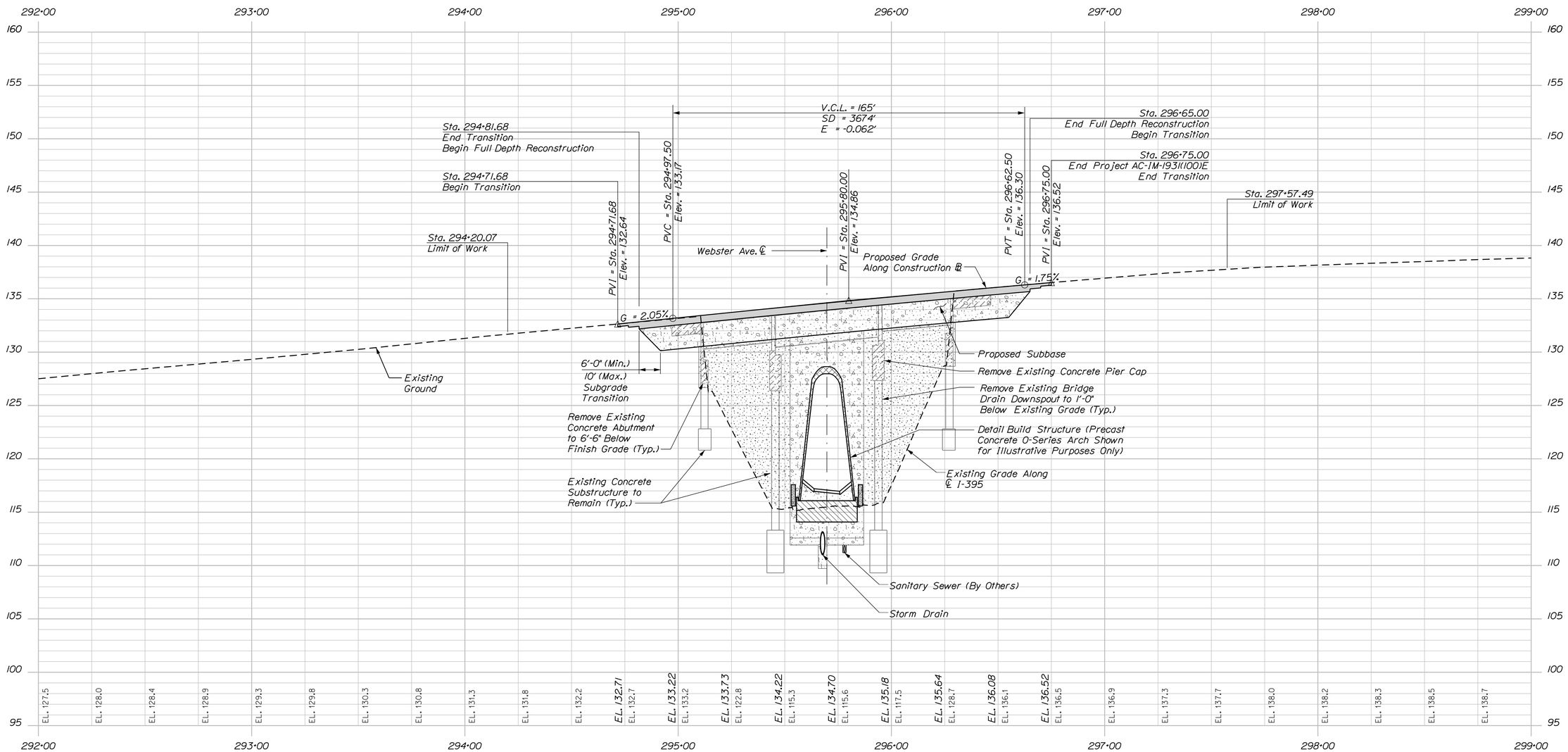

INTERSTATE I-395 WESTBOUND PROFILE

Horiz. 25 0 25 50

Vert. 5 0 5 10

Scale of Feet

GORRILL PALMER

Relationships. Responsiveness. Results.
www.gorrillpalmer.com
207.657.6910

BECKER STRUCTURAL ENGINEERS

75 York Street, Portland, Maine 04101
207.879.1838 ■ beckerstructural.com

STATE OF MAINE
DEPARTMENT OF TRANSPORTATION

AC-IM-1931(100)E

WIN 19311.00

BRIDGE NO.:5796

BRIDGE PLANS

	NAME	BY	DATE
PROJ. MANAGER	MIKE WIGHT		
DESIGN-DETAILED	B.HAVU	M.CUNDIFF	6/15
CHECKED-REVIEWED	D.ETTINGER		6/15
DESIGN2-DETAILED2			
DESIGN3-DETAILED3			
REVISIONS 1			
REVISIONS 2			
REVISIONS 3			
REVISIONS 4			
FIELD CHANGES			

SIGNATURE

P.E. NUMBER

DATE

INTERSTATE 395
OVER WEBSTER AVENUE
BANGOR PENOBSCOT

I-395 WESTBOUND PROFILE

SHEET NUMBER

7

OF 41

Filename: ...\00\Bridge\007_Profile_003.dgn Division: HIGHWAY Username: mcundiff Date:7/28/2015

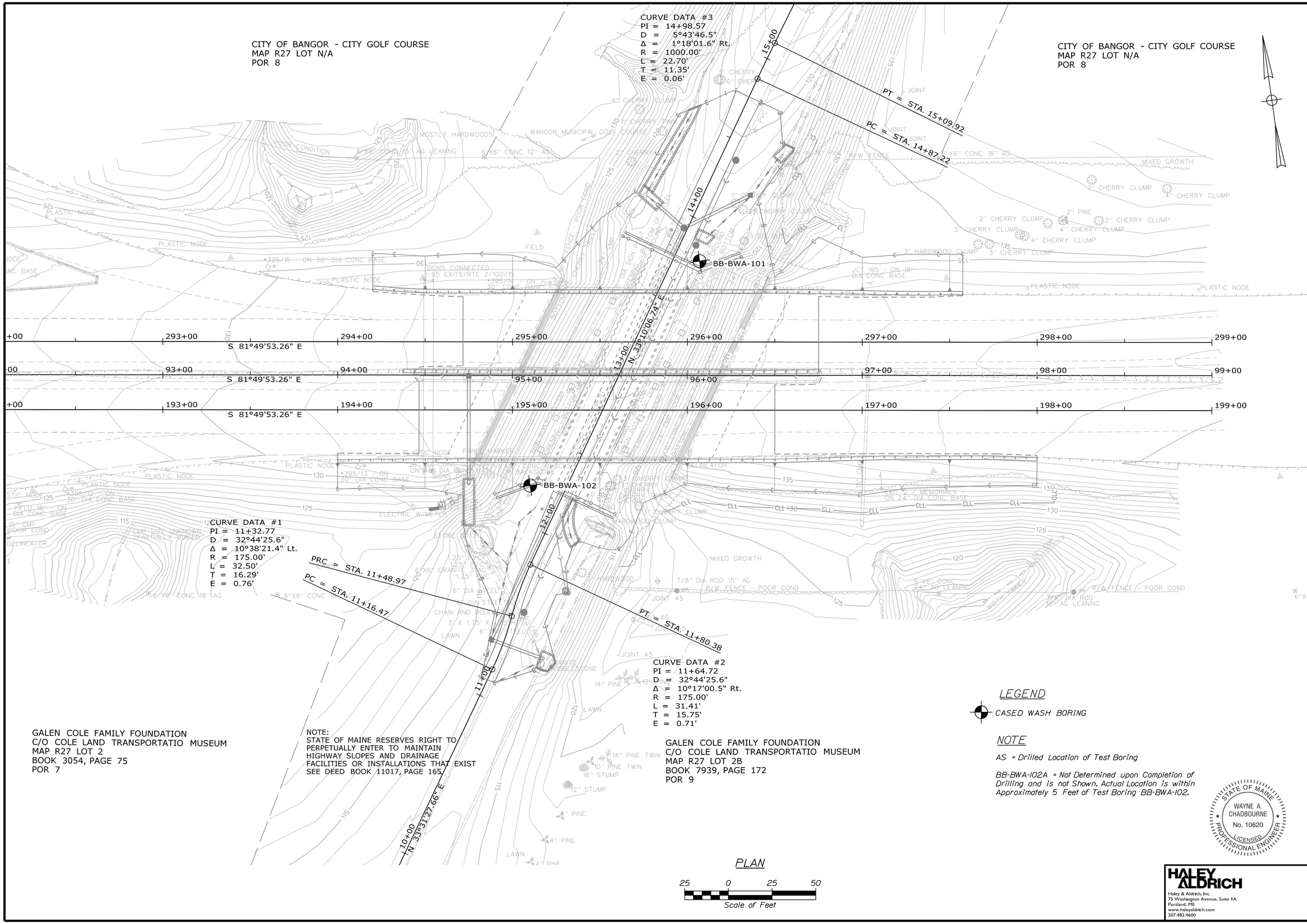

STATE OF MAINE
DEPARTMENT OF TRANSPORTATION

AC-IM-1931(100)E

WIN 19311.00

BRIDGE NO. 5796

BRIDGE PLANS

PROJ. MANAGER	MIKE WIGHT	BY	DATE
DESIGN-DETAILED	P. LIBBY	P.LIBBY	7/15
CHECKED-REVIEWED	B.STENERT	-	7/15
DESIGN2-DETAILED2			
DESIGN3-DETAILED3			
REVISIONS 1			
REVISIONS 2			
REVISIONS 3			
REVISIONS 4			
FIELD CHANGES			

SIGNATURE

P.E. NUMBER

DATE

WEBSTER AVENUE BRIDGE
OVER WEBSTER AVENUE
BANGOR PENOBSCOT COUNTY

BORING LOCATION PLAN

STATE OF MAINE
WAYNE A. CHADBOURNE
No. 10620
LICENSED
PROFESSIONAL ENGINEER

HALEY ALDRICH
Haley & Aldrich, Inc.
75 Washington Avenue, Suite 1A
Portland, ME
www.haleyaldrich.com
207.482.4600

SHEET NUMBER

8

OF 41

Filename: ...\BRIDGE\MSTA\008_BoringPlan.dgn Division: BRIDGE Username: common Date:7/27/2015

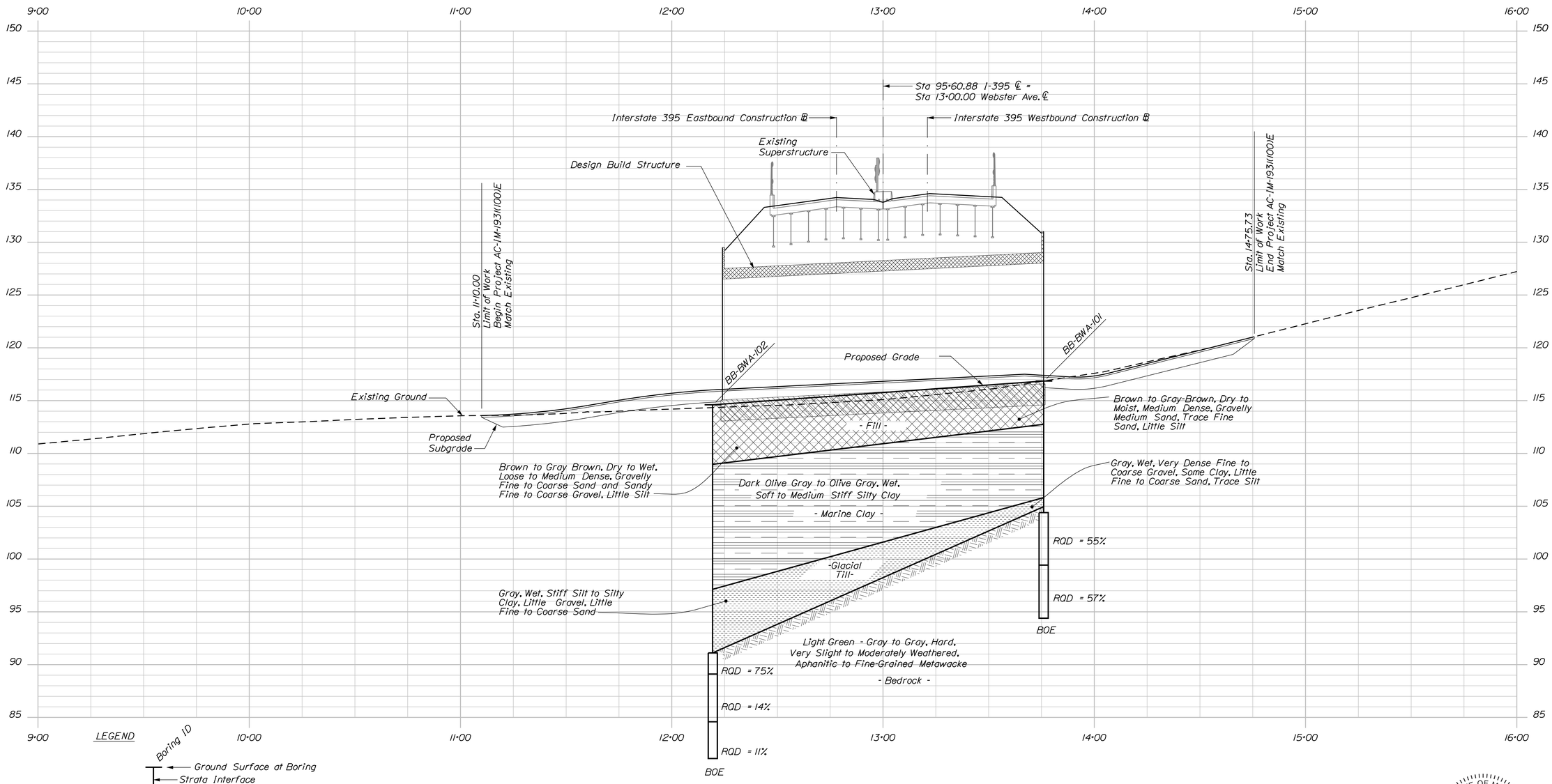

WEBSTER AVENUE PROFILE

LEGEND

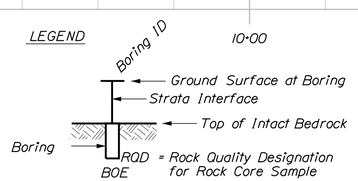

NOTE

This generalized interpretive soil profile is intended to convey trends in subsurface conditions. The boundaries between strata are approximate and idealized, and have been developed by interpretations of widely space explorations and samples. Actual soil transitions may vary and are probably more erratic. For more specific information, refer to the exploration logs.

Horiz. 25 0 25 50

Vert. 5 0 5 10

Scale of Feet

STATE OF MAINE
WAYNE A. CHADBOURNE
No. 10620
LICENSED
PROFESSIONAL ENGINEER

HALEY ALDRICH

Haley & Aldrich, Inc.
75 Washington Avenue, Suite 1A
Portland, ME
www.haleyaldrich.com
207.482.4600

STATE OF MAINE
DEPARTMENT OF TRANSPORTATION

AC-IM-1931(100)E

WIN 19311.00

BRIDGE NO. 5796

BRIDGE PLANS

PROJ. MANAGER	MIKE WIGHT		
DESIGN-DETAILED	P.LIBBY	BY	DATE
CHECKED-REVIEWED	B.STENERT	P.LIBBY	7\15
DESIGN2-DETAILED2		B.STENERT	7\15
DESIGN3-DETAILED3			
REVISIONS: 1			
REVISIONS: 2			
REVISIONS: 3			
REVISIONS: 4			
FIELD CHANGES			

SIGNATURE

P.E. NUMBER

DATE

WEBSTER AVENUE BRIDGE
OVER WEBSTER AVENUE
BANGOR PENOBSCOT COUNTY

INTERPRETIVE SUBSURFACE PROFILE

SHEET NUMBER

9

OF 41

Filename: ...\MSTA\009_BoringProfile.dgn Division: BRIDGE Username: common Date:7/27/2015

Filename: ...\BRIDGE\MSTA\010_BoringLogs.dgn   Division: BRIDGE   Username: common   Date:7/27/2015

Maine Department of Transportation
Soil/Rock Exploration Log
US CUSTOMARY UNITS

Project: Interstate 395 over Webster Avenue
Location: Bangor, Maine
Boring No.: BB-BWA-101
PIN: 19311.00

Driller:	MaineDOT	Elevation (ft.)	116.7	Auger ID/OD:	--
Operator:	E. Giguere	Datum:	NAVD 88	Sampler:	Split Spoon-1.375 in. ID
Logged By:	B. Babcock	Rig Type:	CME 45 Skid on Truck	Hammer Wt./Fall:	HW-NW-S 140#/30 in.
Date Start/Finish:	07-16-2012/07-16-2012	Drilling Method:	HW/NW	Core Barrel:	NQ-2.0 in.
Boring Location:	See Plan	Casing ID/OD:	HW-4.0 in. ID/NW-3.0 in. ID	Water Level`*:	5.2
Hammer Efficiency Factor:	0.84	Hammer Type:	Automatic☒ Hydraulic☐ Rope & Cathead☐		

Definitions:
D = Split Spoon Sample
MD = Unsuccessful Split Spoon Sample attempt
U = Thin Wall Tube Sample
MU = Unsuccessful Thin Wall Tube Sample attempt
V = Insitu Vane Shear Test
MV = Unsuccessful Insitu Vane Shear Test attempt
R = Rock Core Sample
SSA = Solid Stem Auger
HSA = Hollow Stem Auger
RC = Roller Cone
WOH = weight of 140lb. hammer
WOR = weight of rods
WO1P = Weight of one person
S~u = Insitu Field Vane Shear Strength (psf)
T~v = Pocket Torvane Shear Strength (psf)
q~p = Unconfined Compressive Strength (ksf)
N-uncorrected = Raw field SPT N-value
Hammer Efficiency Factor = Annual Calibration Value
N~6~0 = SPT N-uncorrected corrected for hammer efficiency
N~6~0 = (Hammer Efficiency Factor/60%)*N-uncorrected
S~u~(~l~a~b~) = Lab Vane Shear Strength (psf)
WC = water content, percent
LL = Liquid Limit
PL = Plastic Limit
PI = Plasticity Index
G = Grain Size Analysis
C = Consolidation Test

Sample Information

Depth (ft.)	Sample No.	Pen./Rec. (in.)	Sample Depth (ft.)	Blows (/6 in.) Shear Strength (psf) or RQD (%)	N-uncorrected	N~6~0	Casing Blows	Elevation (ft.)
0	1D	24/12	0.0 - 2.0	5/10/11/8	21	25	PUSH	
	2D	24/18	2.0 - 4.0	3/10/9/5	19	23		
								112.70
	3D	24/14	4.0 - 6.0	3/1/1/1	2	2		
5	MU	24/0	6.0 - 8.0					
	1U	24/23	8.0 - 10.0				4	
							6	
10	V1A		10.6 - 11.0	Su=935/285 psf			6	
								105.70
	4D	11/5	11.0 - 11.9	8/100(5.0")			24	104.80
	R1	60/60	12.4 - 17.4	RQD = 55%				
15								
	R2	60/60	17.4 - 22.4	RQD = 57%				
20								94.30
25								
30								
35								
40								
45								
50								

Visual Description and Remarks	Laboratory Testing Results/ AASHTO and Unified Class.
Brown, dry, medium dense, gravelly medium to coarse SAND, trace fine sand, little silt -FILL-(GC/GM)	G#244201 A-1-b, GC/ GM WC=2.3%
Brown with gray-brown, dry to moist, medium dense, gravelly medium to coarse SAND, trace fine sand, little silt -FILL-(SC-SM)	G#244202 A-1-b, SC-SM WC=4.8%
4.0	
Olive-gray, wet, very soft, silty CLAY, pocket penetrometer <0.1 tsf -MARINE DEPOSIT-(CL)	G#244203 A-4, CL WC=27.4%, LL=27 PL=18, PI=9
Pushed thinwall tube 24 in. with no recovery. Pushed spoon through sample zone, recovered 2 in. clay similar to above	
Pushed thinwall tube 24 in., 23 in. recovery	G#244204 A-4, CL WC=28.0%, LL=28 PL=20, PI=8 C#244204
65x110 mm vane raw torque readings: V1A: 33.0/10.0 ft-lbs Note: Vane refusal at 11.0 ft.	
11.0	
Gray, wet, very dense, fine to coarse GRAVEL, some clay, little fine to coarse sand, trace silt -GLACIAL TILL-(GC)	
11.9	
Top of Bedrock at El. 104.8 ft Light green-gray, aphanitic to fine grained METAWACKE. Hard, very slight to moderately weathered between 16.9 and 17.4 ft. Primary joints dipping at steep angles, close, smooth, undulating, discolored, open. Secondary joints dipping at vertical angles, very close, rough, stepped, discolored to moderately weathered with silt infilling, open. Quartzose veins throughout. Total water loss between 16.4 and 17.4 ft. Rock Mass Quality=Fair -BANGOR FORMATION- R1 Core Times (min:sec): 12.4-13.4' (3:59); 13.4-14.4' (2:46); 14.4-15.4' (3:09); 15.4-16.4' (2:10); 16.4-17.4' (2:15)	
Light green-gray, aphanitic to fine grained METAWACKE. Hard, moderately to very slightly weathered. Primary joints dipping at steep angles, close, smooth, planar, discolored to slightly weathered, open. Secondary joints dipping at vertical angles, close to moderately close, rough, stepped, discolored to moderately weathered with occasional brown clay infilling, open to healed. Quartzose veins throughout. Total water loss during core run from 17.4 to 22.4 ft. Rock Mass Quality=Fair -BANGOR FORMATION- R2 Core Times (min:sec): 17.4-18.4' (2:35); 18.4-19.4' (3:05); 19.4-20.4' (2:35); 20.4-21.4' (1:31); 21.4-22.4' (1:48)	
22.4	
Bottom of Exploration at 22.4 feet below ground surface.	

Remarks:

1. Ground surface elevations at test boring locations were determined by MaineDOT upon the completion of drilling.

Stratification lines represent approximate boundaries between soil types; transitions may be gradual.

* Water level readings have been made at times and under conditions stated. Groundwater fluctuations may occur due to conditions other than those present at the time measurements were made.

Page 1 of 1

Boring No.: BB-BWA-101

Maine Department of Transportation
Soil/Rock Exploration Log
US CUSTOMARY UNITS

Project: Interstate 395 over Webster Avenue
Location: Bangor, Maine
Boring No.: BB-BWA-102
PIN: 19311.00

Driller:	MaineDOT	Elevation (ft.)	114.7	Auger ID/OD:	--
Operator:	E. Giguere	Datum:	NAVD 88	Sampler:	Split Spoon-1.375 in. ID
Logged By:	B. Babcock	Rig Type:	CME 45 Skid on Truck	Hammer Wt./Fall:	HW-NW-S 140#/30 in.
Date Start/Finish:	07-16-2012/07-17-2012	Drilling Method:	HW/NW	Core Barrel:	NQ-2.0 in.
Boring Location:	See Plan	Casing ID/OD:	HW-4.0 in. ID/NW-3.0 in. ID	Water Level`*:	Not Measured
Hammer Efficiency Factor:	0.84	Hammer Type:	Automatic☒ Hydraulic☐ Rope & Cathead☐		

Definitions:
D = Split Spoon Sample
MD = Unsuccessful Split Spoon Sample attempt
U = Thin Wall Tube Sample
MU = Unsuccessful Thin Wall Tube Sample attempt
V = Insitu Vane Shear Test
MV = Unsuccessful Insitu Vane Shear Test attempt
R = Rock Core Sample
SSA = Solid Stem Auger
HSA = Hollow Stem Auger
RC = Roller Cone
WOH = weight of 140lb. hammer
WOR = weight of rods
WO1P = Weight of one person
S~u = Insitu Field Vane Shear Strength (psf)
T~v = Pocket Torvane Shear Strength (psf)
q~p = Unconfined Compressive Strength (ksf)
N-uncorrected = Raw field SPT N-value
Hammer Efficiency Factor = Annual Calibration Value
N~6~0 = SPT N-uncorrected corrected for hammer efficiency
N~6~0 = (Hammer Efficiency Factor/60%)*N-uncorrected
S~u~(~l~a~b~) = Lab Vane Shear Strength (psf)
WC = water content, percent
LL = Liquid Limit
PL = Plastic Limit
PI = Plasticity Index
G = Grain Size Analysis
C = Consolidation Test

Sample Information

Depth (ft.)	Sample No.	Pen./Rec. (in.)	Sample Depth (ft.)	Blows (/6 in.) Shear Strength (psf) or RQD (%)	N-uncorrected	N~6~0	Casing Blows	Elevation (ft.)
0							Push	114.20
	1D	24/4	1.0 - 3.0	2/11/17/15	28	33		
	2D	24/18	3.0 - 5.0	5/19/11/13	30	36		
5	3D	24/15	5.0 - 7.0	5/7/2/2	9	11	10	
							12	108.70
							20	
							Open	
10	MU ~~4D~~	24/24	9.0 - 11.0					
	MV ~~5D~~	24/16	11.0 - 13.0					
	6D ~~V1A~~	24/24	13.0 - 15.0 ~~13.6 - 14.0~~	- ~~Su=880/170 psf~~				
15	V1B		14.6 - 15.0	Su=935/225 psf				
	1U	24/18	15.0 - 17.0					
	7D ~~V2A~~	24/10	17.0 - 19.0 ~~17.4 - 17.8~~	WOH(12.0")/3/8 ~~Su=1,120/95 psf~~				96.90
								95.70
20	8D	24/10	19.0 - 21.0	9/11/4/17	15	18	8	
							23	
							21	
							22	
	R1	24/22	23.7 - 25.7	RQD = 75%			42(7.0")	91.00
25	R2	54/54	25.7 - 30.2	RQD = 14%				
30	R3	42/36	30.2 - 33.7	RQD = 11%				
								81.00
35								
40								
45								
50								

Visual Description and Remarks	Laboratory Testing Results/ AASHTO and Unified Class.
-PORTLAND CEMENT CONCRETE-	
0.5	
Brown, dry, medium dense, gravelly medium to coarse SAND, trace fine sand, little silt -FILL-(GW-GC)	G#244205 A-1-a, GW-GC W=8.2%
Brown with gray-brown, dry to moist, medium dense, sandy fine to coarse GRAVEL, little silt -FILL-(GC-GM)	G#244206 A-1-a, GC-GM WC=5.2%
Brown, wet, loose, gravelly fine to coarse SAND, little silt -FILL-(GC-GM)	G#244207 A-1-b, GC-GM WC=12.5%
6.0	
Dark olive-gray, wet, soft, silty CLAY, pocket penetrometer<0.1 tsf -MARINE DEPOSIT-(CL) Note: Gravel caught between casing and roller bit while washing ahead to 7.0 ft. Forced to wash ahead to 9.0 ft.	
Push thinwall tube 24 in. from 9 to 11 ft, no recovery. Dark olive-gray, wet, medium stiff, silty CLAY, pocket penetrometer <0.1 tsf -MARINE DEPOSIT-(CL)	WC=31.7%, LL=27 PL-19, PI=8
Push thinwall tube 24 in. from 11.0 to 13.0 ft, no recovery Dark olive-gray, wet, medium stiff, silty CLAY, pocket penetrometer <0.1 tsf -MARINE DEPOSIT-(CL)	WC=31.0%, LL=31 PL=19, PI=12
Dark olive-gray, wet, soft, silty CLAY, pocket penetrometer <0.1 tsf -MARINE DEPOSIT-(CL) 65x110 mm vane raw torque readings: V1A: 31.0/6.0 ft-lbs V2A: 33.0/7.5 ft-lbs Pushed thinwall tube 24 in. from 15.0 to 17.0 ft, recovered 18 in.	WC=29.5%, LL=25 PL=17, PI=8 G#244208 A-4, CL WC=27.6%, LL=23 PL=18, PI=5
55x130 mm vane raw torque readings: V2A: 24.0/2.0 ft-lbs Note: Vane refusal at 17.8 ft.	
17.8	
Gray, wet, stiff, silty CLAY, little gravel, little silt, little fine sand, trace medium to coarse sand -GLACIAL TILL-(CL)	
19.0	
Gray, wet, stiff, SILT, some clay, little gravel, little fine to coarse sand -GLACIAL TILL-(ML)	
Note: Casing and drill action indicate probable bedrock at 23.7 ft.	
23.7	
Top of Bedrock at El. 91.0 ft Gray, aphanitic to fine grained METAWACKE. Hard, very slight to moderately weathered. Primary joints dipping at steep angles, close to very close, smooth, planar, discolored, moderately weathered, open. Single horizontal joint at 24.3 ft, smooth, undulating, slightly weathered with minimal brown silt infilling, open. Note: Barrel jammed at 25.7 ft. Rock Mass Quality=Fair -BANGOR FORMATION- R1 Core Times (min:sec): 23.7-24.7' (2:05); 24.7-25.7' (2:15)	
Gray, aphanitic to fine grained METAWACKE. Hard, very slight to moderately weathered. Primary joints dipping at steep angles, close, smooth to rough, stepped, discolored to slightly weathered with minimal silt infilling, open. Secondary joints dipping at vertical angles, close, smooth to rough, planar to stepped, discolored to slightly weathered, open. Horizontal joints close to moderately close, smooth, undulating, slightly weathered with minimal silt infilling, open. Rock Mass Quality=Very Poor -BANGOR FORMATION- R2 Core Times (min:sec): 25.7-26.7' (3:34); 26.7-27.7' (2:49); 27.7-28.7' (2:20); 28.7-29.7' (2:06); 29.7-30.2' (2:14)	
Gray, aphanitic to fine grained METAWACKE. Hard, very slight to moderately weathered. Primary joints dipping at steep angles, close; smooth to rough, stepped to planar, discolored to slightly weathered, open, moderately weathered zone from 31.9 to 32.2 ft. Rock Mass Quality=Very Poor -BANGOR FORMATION- R3 Core Times (min:sec): 30.2-31.2' (1:48); 31.2-32.2' (3:04); 32.2-33.3' (3:12); 33.3-33.7' (1:50)	
33.7	
Bottom of Exploration at 33.7 feet below ground surface.	

Remarks:

1. Ground surface elevations at test boring locations were determined by MaineDOT upon the completion of drilling.

Stratification lines represent approximate boundaries between soil types; transitions may be gradual.

* Water level readings have been made at times and under conditions stated. Groundwater fluctuations may occur due to conditions other than those present at the time measurements were made.

Page 1 of 1

Boring No.: BB-BWA-102

Maine Department of Transportation
Soil/Rock Exploration Log
US CUSTOMARY UNITS

Project: Interstate 395 over Webster Avenue
Location: Bangor, Maine
Boring No.: BB-BWA-102A
PIN: 19311.00

Driller:	MaineDOT	Elevation (ft.)	113.7	Auger ID/OD:	--
Operator:	E. Giguere	Datum:	NAVD 88	Sampler:	Split Spoon-1.375 in. ID
Logged By:	B. Babcock	Rig Type:	CME 45 Skid on Truck	Hammer Wt./Fall:	HW-S 140#/30 in.
Date Start/Finish:	07-17-2012/07-17-2012	Drilling Method:	HW/NW	Core Barrel:	NQ-2.0 in.
Boring Location:	See Plan	Casing ID/OD:	HW-4.0 in. ID	Water Level`*:	Not Measured
Hammer Efficiency Factor:	0.6	Hammer Type:	Automatic☒ Hydraulic☐ Rope & Cathead☐		

Definitions:
D = Split Spoon Sample
MD = Unsuccessful Split Spoon Sample attempt
U = Thin Wall Tube Sample
MU = Unsuccessful Thin Wall Tube Sample attempt
V = Insitu Vane Shear Test
MV = Unsuccessful Insitu Vane Shear Test attempt
R = Rock Core Sample
SSA = Solid Stem Auger
HSA = Hollow Stem Auger
RC = Roller Cone
WOH = weight of 140lb. hammer
WOR = weight of rods
WO1P = Weight of one person
S~u = Insitu Field Vane Shear Strength (psf)
T~v = Pocket Torvane Shear Strength (psf)
q~p = Unconfined Compressive Strength (ksf)
N-uncorrected = Raw field SPT N-value
Hammer Efficiency Factor = Annual Calibration Value
N~6~0 = SPT N-uncorrected corrected for hammer efficiency
N~6~0 = (Hammer Efficiency Factor/60%)*N-uncorrected
S~u~(~l~a~b~) = Lab Vane Shear Strength (psf)
WC = water content, percent
LL = Liquid Limit
PL = Plastic Limit
PI = Plasticity Index
G = Grain Size Analysis
C = Consolidation Test

Sample Information

Depth (ft.)	Sample No.	Pen./Rec. (in.)	Sample Depth (ft.)	Blows (/6 in.) Shear Strength (psf) or RQD (%)	N-uncorrected	N~6~0	Casing Blows	Elevation (ft.)
0							HSA	
5							10	107.70
							12	
	1U	24/22	7.0 - 9.0				Open	
	V1A		9.6 - 10.0	Su=840/235 psf				
10	V1B		10.6 - 11.0	Su=745/185 psf				
	V2A		11.6 - 12.0	Su=605/140 psf				
	V2B		12.6 - 13.0	Su=745/185 psf				
	V3A		13.6 - 14.0	Su=605/140 psf				
	V3B		14.6 - 14.9	Su=745/185 psf				
15	1D ~~V4A~~	24/24	15.0 - 17.0 ~~15.6 - 16.0~~	Push(12.0")/12/19 ~~Su=885/185 psf~~				96.90 96.70
20								
25								

Visual Description and Remarks	Laboratory Testing Results/ AASHTO and Unified Class.
Note: Advanced borehole to 7.0 ft, unsampled. See BB-BWA-102 log for overburden details. -FILL-	
6.0	
Push thinwall tube 24 in., recovered 22 in.	G#244212 A-6, CL WC=33.2%, LL=31 PL=20, PI=11 C#244212
55x130 mm vane raw torque readings: V1A: 18.0/5.0 ft-lbs V1B: 16.0/4.0 ft-lbs	
55x130 mm vane raw torque readings: V2A: 13.0/3.0 ft-lbs V2B: 14.5/4.0 ft-lbs	
55x130 mm vane raw torque readings: V3A: 13.0/3.0 ft-lbs V3B: 16.0/4.0 ft-lbs	
Dark olive-gray, wet, medium stiff to stiff, silty CLAY, little silt, pocket penetrometer <1 tsf, few pieces gravel in tip of spoon -MARINE DEPOSIT-(CL) 55x130 mm vane raw torque readings: V4A: 19.0/4.0 ft-lbs Note: Vane refual at 16.7 ft.	WC=28.2%, LL=25 PL=17, PI=8
16.8	
-PROBABLE GLACIAL TILL-	
17.0	
Bottom of Exploration at 17.0 feet below ground surface.	

Remarks:

1. Ground surface elevations at test boring locations were determined by MaineDOT upon the completion of drilling.

Stratification lines represent approximate boundaries between soil types; transitions may be gradual.

* Water level readings have been made at times and under conditions stated. Groundwater fluctuations may occur due to conditions other than those present at the time measurements were made.

Page 1 of 1

Boring No.: BB-BWA-102A

STATE OF MAINE
DEPARTMENT OF TRANSPORTATION

AC-IM-1931(100)E

BRIDGE NO.: 5796   WIN 19311.00   BRIDGE PLANS

		BY	DATE
PROJ. MANAGER	MIKE WIGHT		
DESIGN-DETAILED	P.LIBBY	P.LIBBY	7\15
CHECKED-REVIEWED	B.STEINERT	-	7\15
DESIGN2-DETAILED2			
DESIGN3-DETAILED3			
REVISIONS 1			
REVISIONS 2			
REVISIONS 3			
REVISIONS 4			
FIELD CHANGES			

SIGNATURE
P.E. NUMBER
DATE

WEBSTER AVENUE BRIDGE
OVER WEBSTER AVENUE
BANGOR   PENOBSCOT COUNTY

BORING LOGS

STATE OF MAINE
WAYNE A. CHADBOURNE
No. 10620
LICENSED
PROFESSIONAL ENGINEER

HALEY ALDRICH
Haley & Aldrich, Inc.
75 Washington Avenue, Suite 1A
Portland, ME
www.haleyaldrich.com
207.482.4600

SHEET NUMBER
10
OF 41

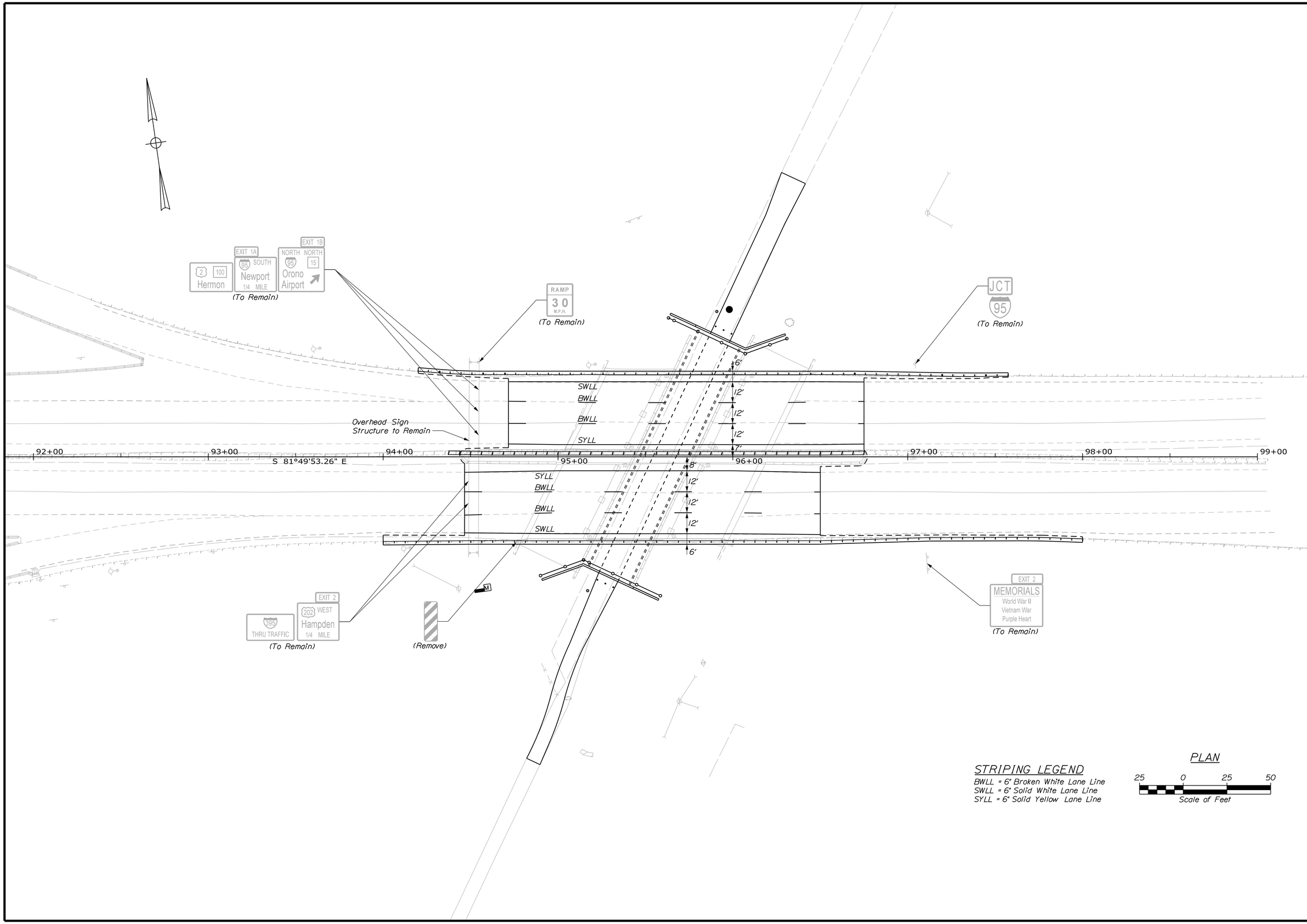

STATE OF MAINE
DEPARTMENT OF TRANSPORTATION

AC-IM-1931(100)E

WIN 19311.00

BRIDGE NO.:5796

BRIDGE PLANS

SIGNATURE

P.E. NUMBER

DATE

		BY	DATE
PROJ. MANAGER	MIKE WIGHT		
DESIGN-DETAILED	B. HAVU	M. CUNDIFF	07\15
CHECKED-REVIEWED	D. ETTINGER		07\15
DESIGN2-DETAILED2			
DESIGN3-DETAILED3			
REVISIONS 1			
REVISIONS 2			
REVISIONS 3			
REVISIONS 4			
FIELD CHANGES			

INTERSTATE 395
OVER WEBSTER AVENUE
BANGOR PENOBSCOT

SIGNING AND STRIPING PLAN

SHEET NUMBER

11

OF 41

Filename: ...\Bridge\011_SigningStriping.dgn Division: HIGHWAY Username: mcundiff Date:7/23/2015

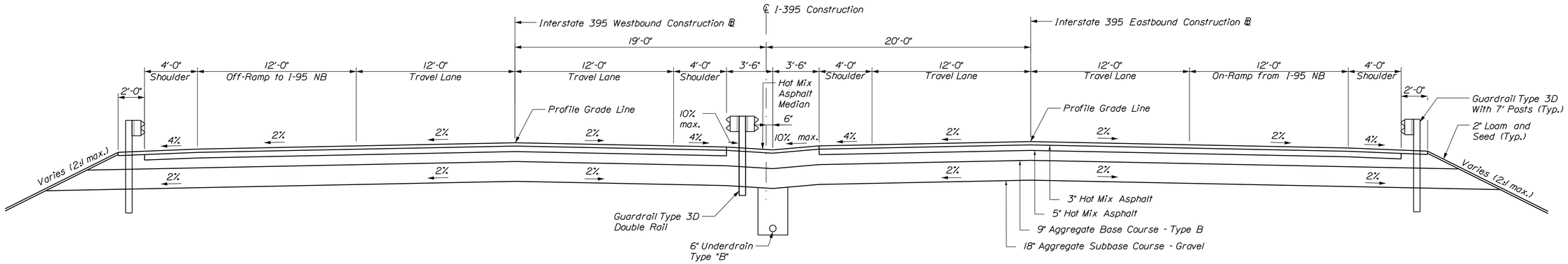

I-395 TYPICAL SECTION

Sta. 194+56.57 to Sta. 196+40.00 Eastbound
Sta. 294+81.68 to Sta. 296+65.00 Westbound

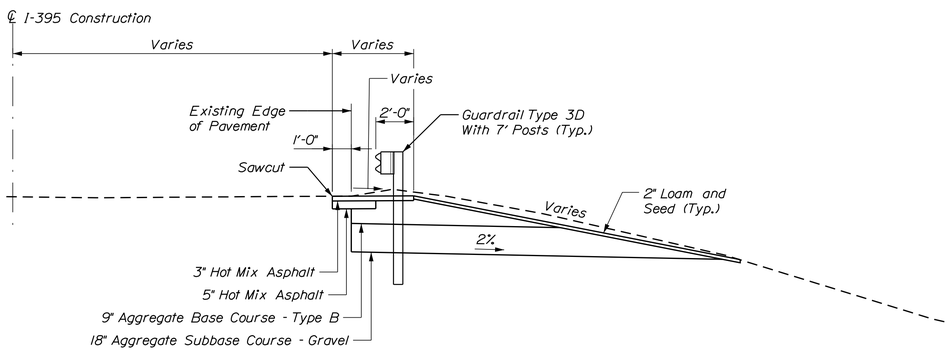

I-395 TYPICAL SECTION

Sta. 194+00.00 to Sta. 194+46.57 Eastbound
Sta. 196+50.00 to Sta. 197+99.96 Eastbound
Sta. 294+20.07 to Sta. 294+71.68 Westbound
Sta. 296+75.00 to Sta. 297+57.49 Westbound

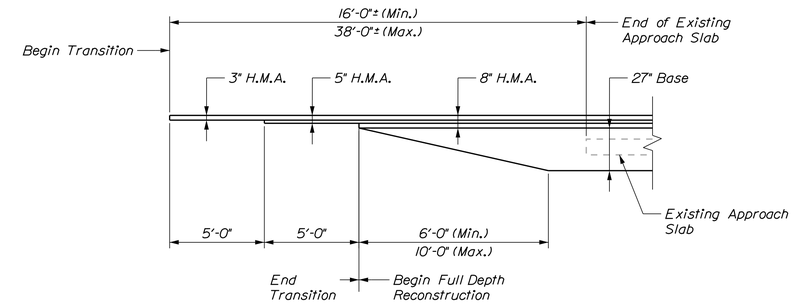

PAVEMENT TRANSITION DETAIL

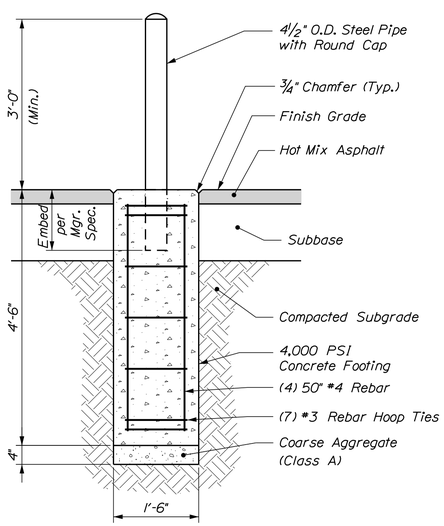

FIXED STEEL BOLLARD

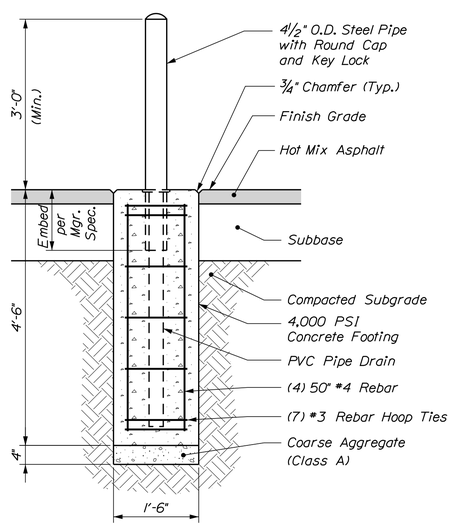

REMOVABLE STEEL BOLLARD

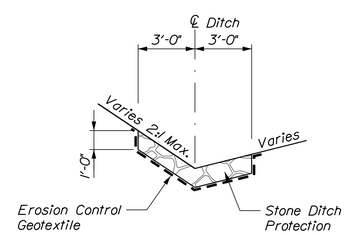

STONE DITCH PROTECTION DETAIL

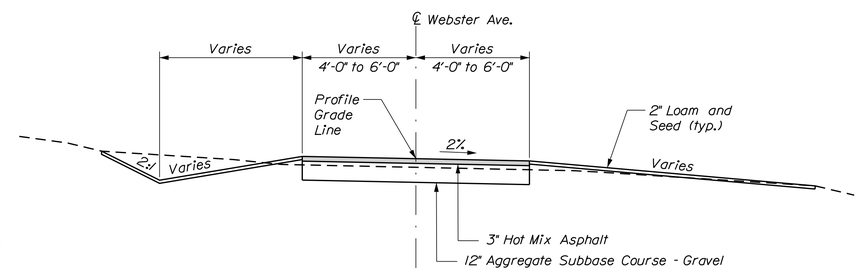

WEBSTER AVENUE TYPICAL SECTION

Sta. 11+10.00 to Sta. 14+50.00

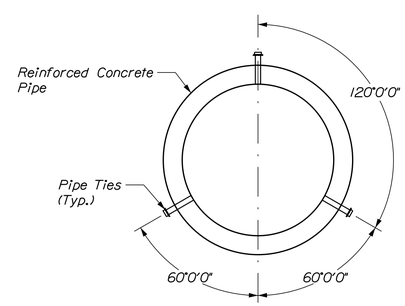

REINFORCED CONCRETE PIPE TIE DETAIL

See General Notes

NOTES:

1. The pavement, base and subbase depths as shown on the plans are intended to be nominal.

2. When superelevation exceeds the slope of the low side shoulder, the low side shoulder shall have the same slope as the travelway.

3. Crowns for both normal and superelevation sections for all courses of subbase and pavement shall be straight.

4. The gravel quantity calculation is based on a 2" loam or dirty borrow depth. The actual depth may vary. See the general notes.

5. The algebraic difference between the shoulder and travelway cross slopes "rollover" shall not exceed 8%.

6. The stationing shown under each typical is approximate.

NOT TO SCALE

GORRILL PALMER
Relationships. Responsiveness. Results.
www.gorrillpalmer.com
207.657.6910

BECKER STRUCTURAL ENGINEERS
75 York Street, Portland, Maine 04101
207.879.1838 ■ beckerstructural.com

STATE OF MAINE
DEPARTMENT OF TRANSPORTATION

AC-IM-1931(100)E

WIN 19311.00

BRIDGE NO.:5796

BRIDGE PLANS

SIGNATURE
P.E. NUMBER
DATE

	BY	DATE
PROJ. MANAGER	MIKE WIGHT	
DESIGN-DETAILED	B. HAVU	M. CUNDIFF	07\15
CHECKED-REVIEWED	D. ETTINGER		07\15
DESIGN2-DETAILED2			
DESIGN3-DETAILED3			
REVISIONS 1			
REVISIONS 2			
REVISIONS 3			
REVISIONS 4			
FIELD CHANGES			

INTERSTATE 395
OVER WEBSTER AVENUE
BANGOR PENOBSCOT

TYPICAL SECTIONS

SHEET NUMBER
12
OF 41

Filename: ...\00\Bridge\012_Typical01.dgn Division: HIGHWAY Username: mcundiff Date:7/23/2015

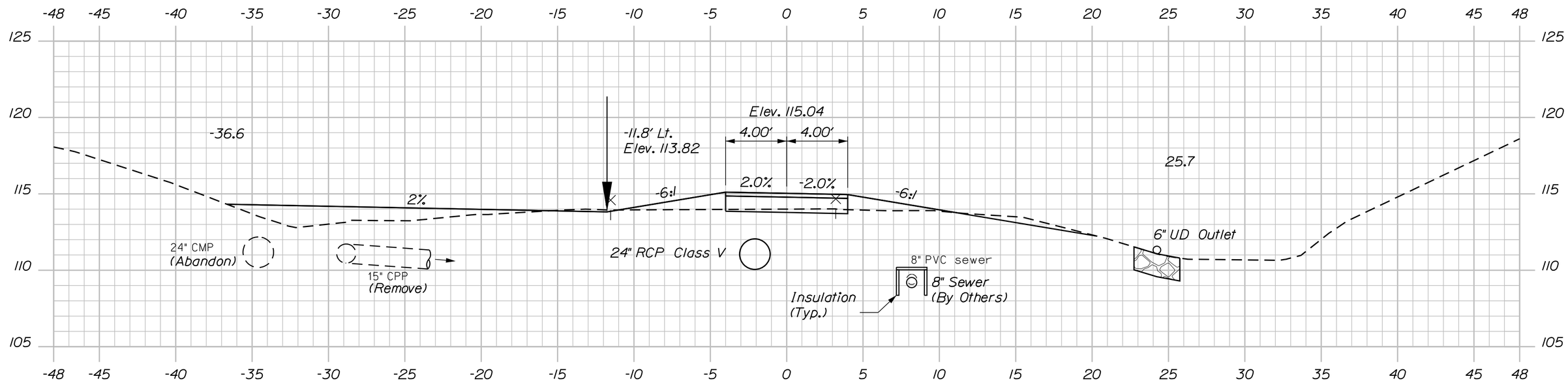

Sta. 94+75, Rt. to Sta. 11+75, Lt.
Install Temporary Erosion Control Blanket

11+75.00

Sta. 11+75, Rt. to Sta. 12+00, Rt.
Install 30' x 6" UD Outlet
Inv. Out = 111.08
Riprap Outlet

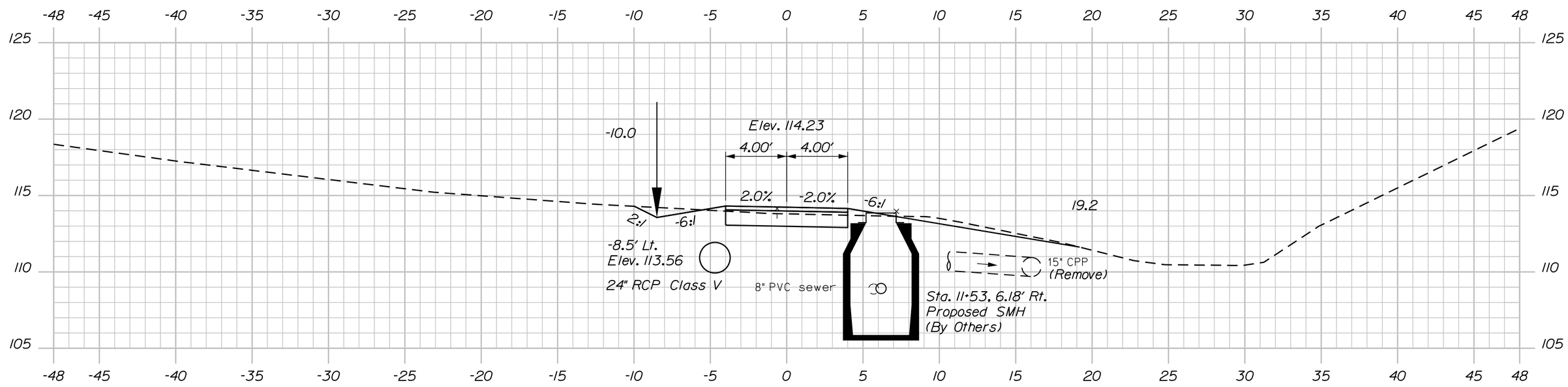

Sta. 11+32.32, Lt. to Sta. 13+92.05, Lt.
Install 256' x 24" RCP Class V
Install Concrete Pipe Ties (See General Notes)

11+50.00

A 4'-0"x4'-0"x4" piece of rigid insulation shall be placed at approximately Sta. 11+32, 3.25' Rt. where the proposed 18" Option III pipe crosses the proposed sewer line. Payment shall be considered incidental to Item 603.199.

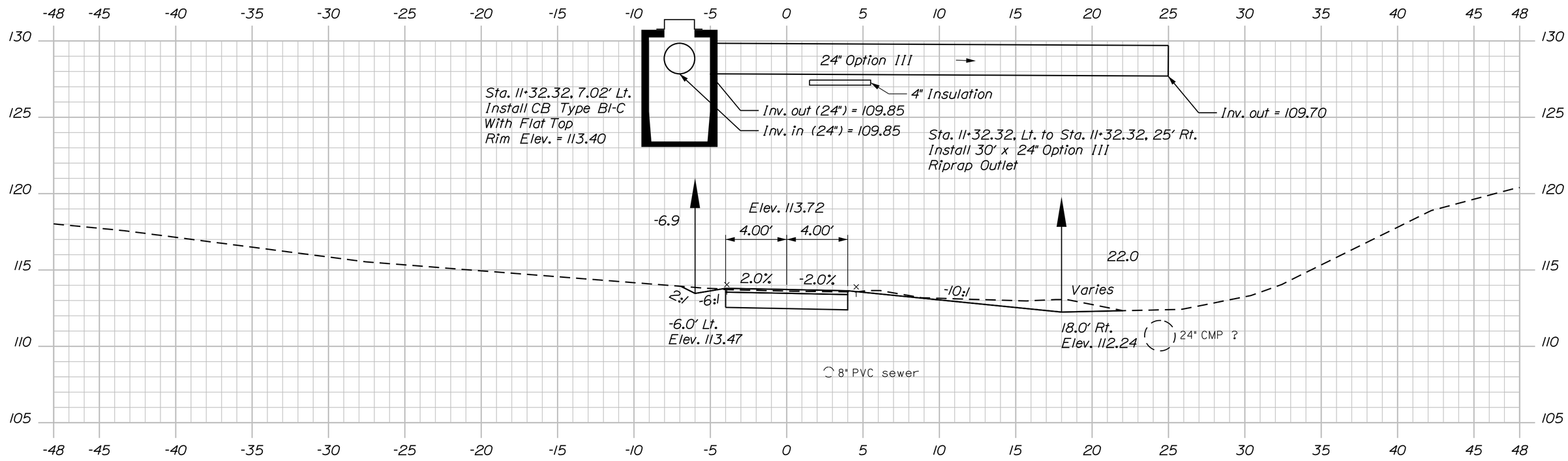

Sta. 11+10 to Sta. 12+10, Lt.
Install Temporary Erosion Control Blanket

11+25.00

Sta. 11+10 to Sta. 11+32, Rt.
Install Temporary Erosion Control Blanket

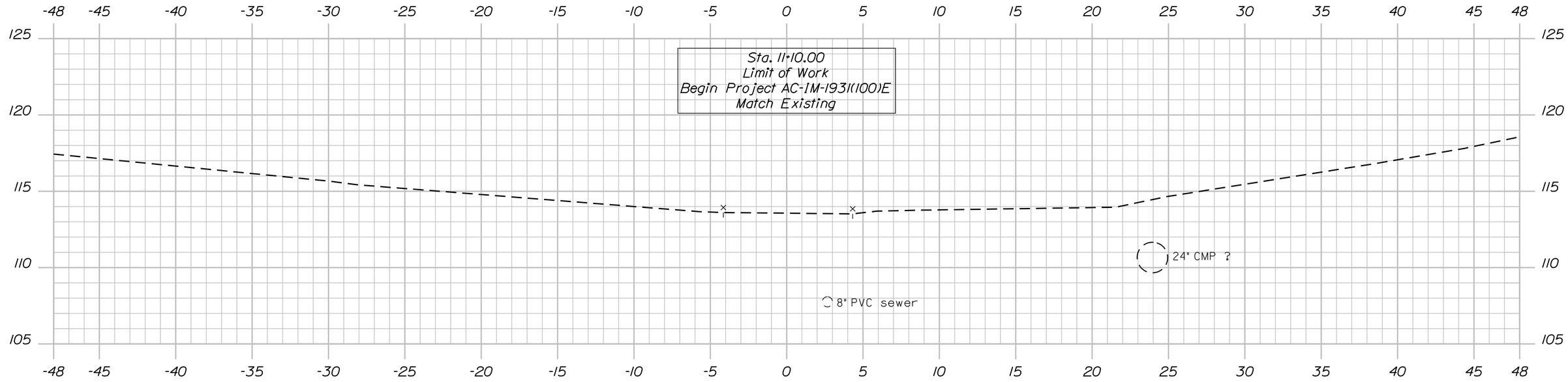

11+00.00

Sta. 11+00.00 to Sta. 11+75.00

PROJ. MANAGER	MIKE WIGHT	BY	DATE
DESIGN-DETAILED	B. HAVU	M. CUNDIFF	07\15
CHECKED-REVIEWED	D. ETTINGER		07\15
DESIGN2-DETAILED2			
DESIGN3-DETAILED3			
REVISIONS 1			
REVISIONS 2			
REVISIONS 3			
REVISIONS 4			
FIELD CHANGES			

SIGNATURE

P.E. NUMBER

DATE

SHEET NUMBER 13 OF 41

INTERSTATE 395
OVER WEBSTER AVENUE
BANGOR PENOBSCOT

WEBSTER AVENUE CROSS SECTIONS

STATE OF MAINE
DEPARTMENT OF TRANSPORTATION

AC-IM-1931(100)E

BRIDGE NO.:5796 WIN 19311.00 BRIDGE PLANS

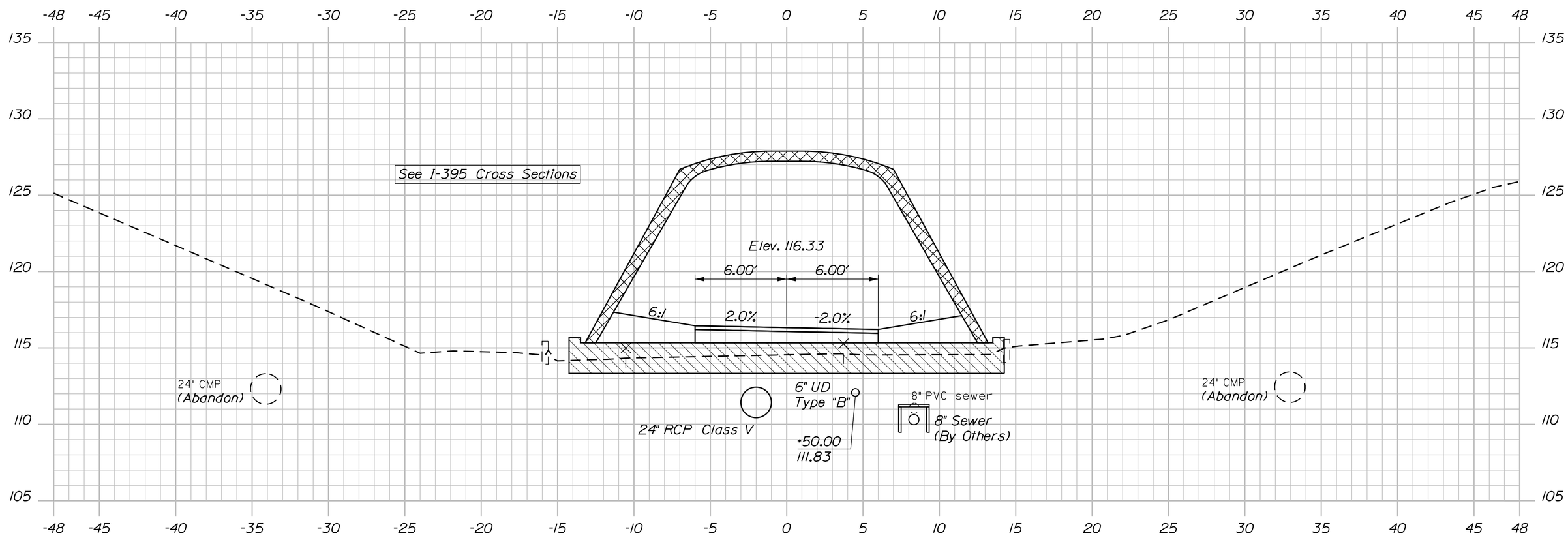

12+50.00

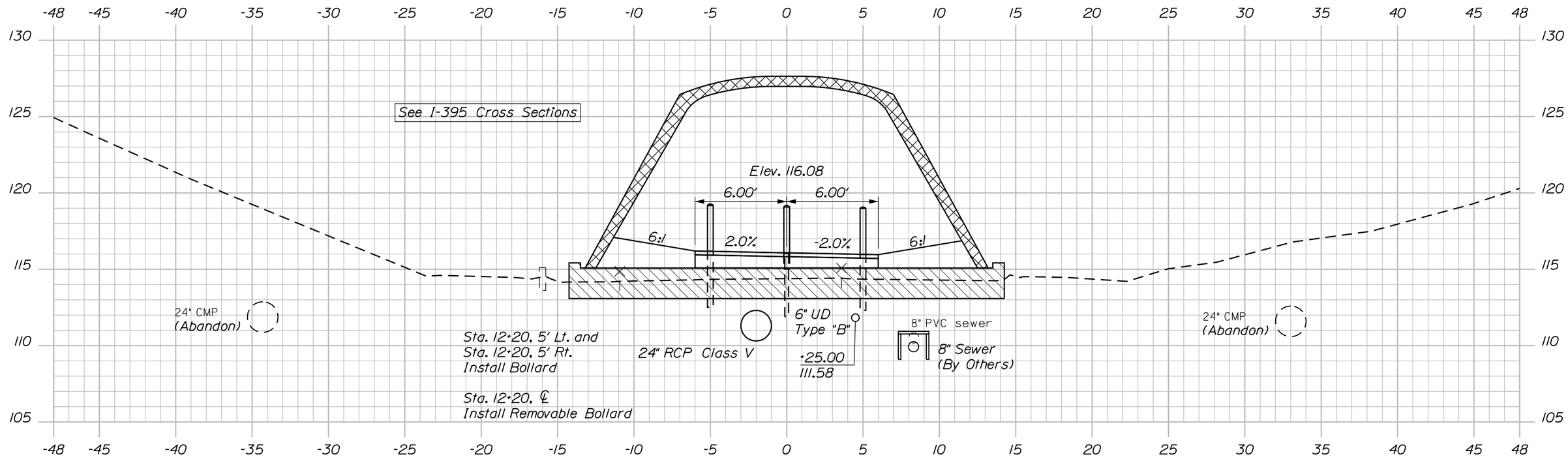

12+25.00

Sta. 12+00 to Sta. 12+24, Rt.
Install Stone Ditch Protection

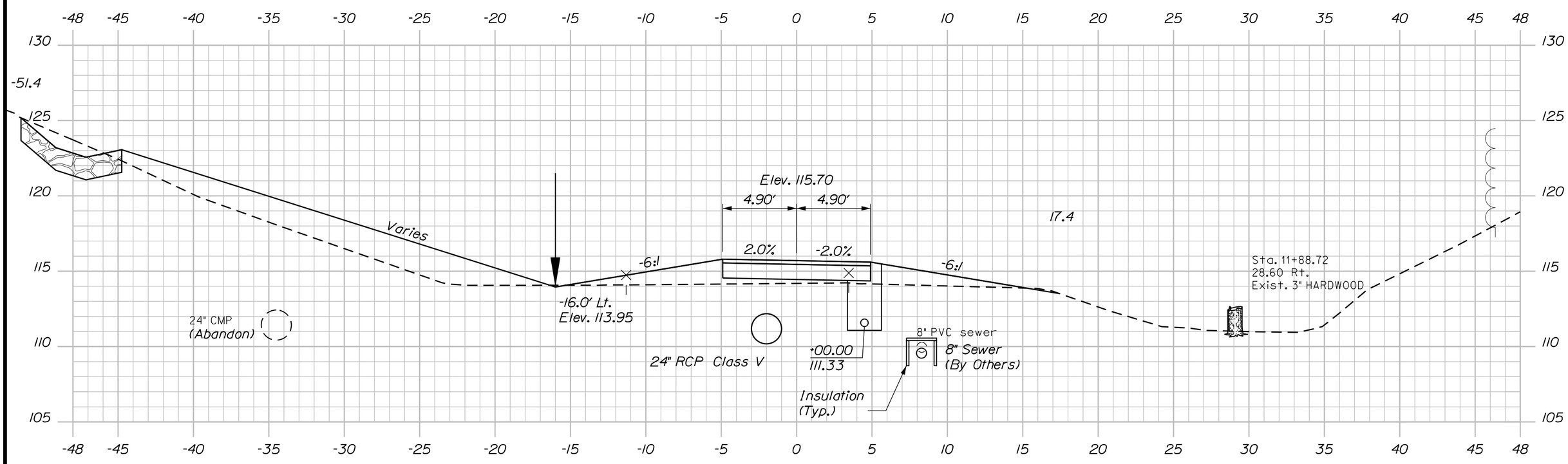

12+00.00

Sta. 12+00, Rt. to Sta. 13+75, Rt.
Install 175' x 6" UD Type "B"

Sta. 12+00.00 to Sta. 12+50.00

SHEET NUMBER 14 OF 41

INTERSTATE 395
OVER WEBSTER AVENUE
BANGOR PENOBSCOT

WEBSTER AVENUE CROSS SECTIONS

PROJ. MANAGER	MIKE WIGHT	BY	DATE
DESIGN-DETAILED	B. HAVU	M. CUNDIFF	07\15
CHECKED-REVIEWED	D. ETTINGER		07\15
DESIGN2-DETAILED2			
DESIGN3-DETAILED3			
REVISIONS 1			
REVISIONS 2			
REVISIONS 3			
REVISIONS 4			
FIELD CHANGES			

SIGNATURE
P.E. NUMBER
DATE

STATE OF MAINE
DEPARTMENT OF TRANSPORTATION

AC-IM-1931(100)E

BRIDGE NO.:5796 WIN 19311.00 BRIDGE PLANS

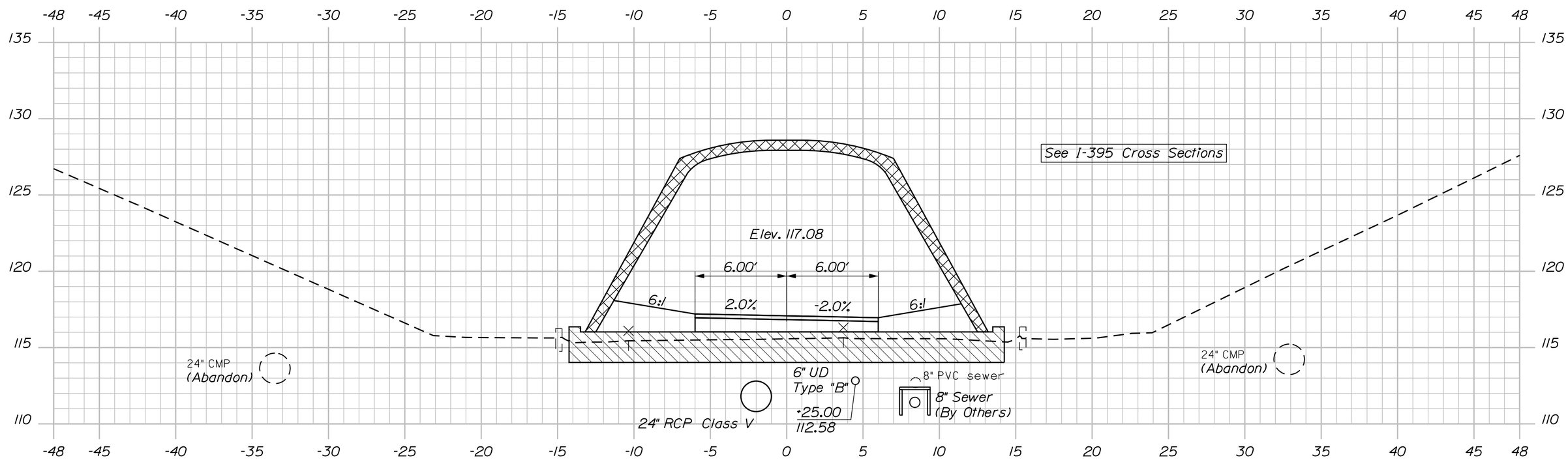

13+25.00

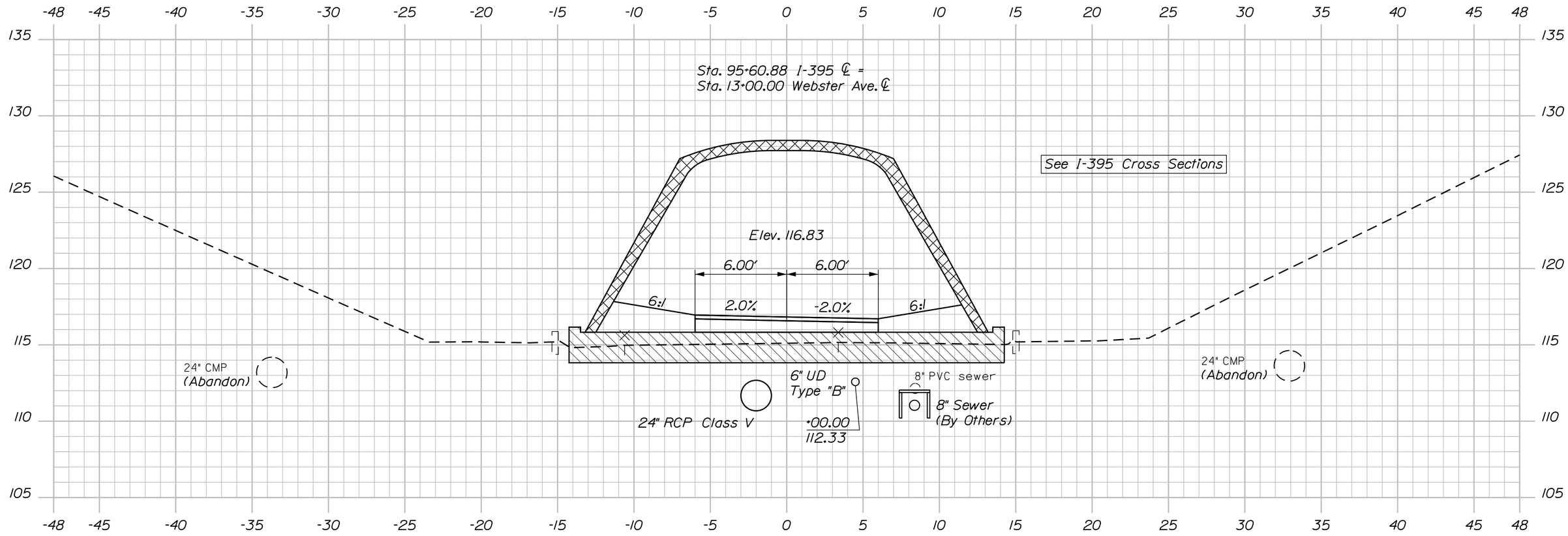

13+00.00

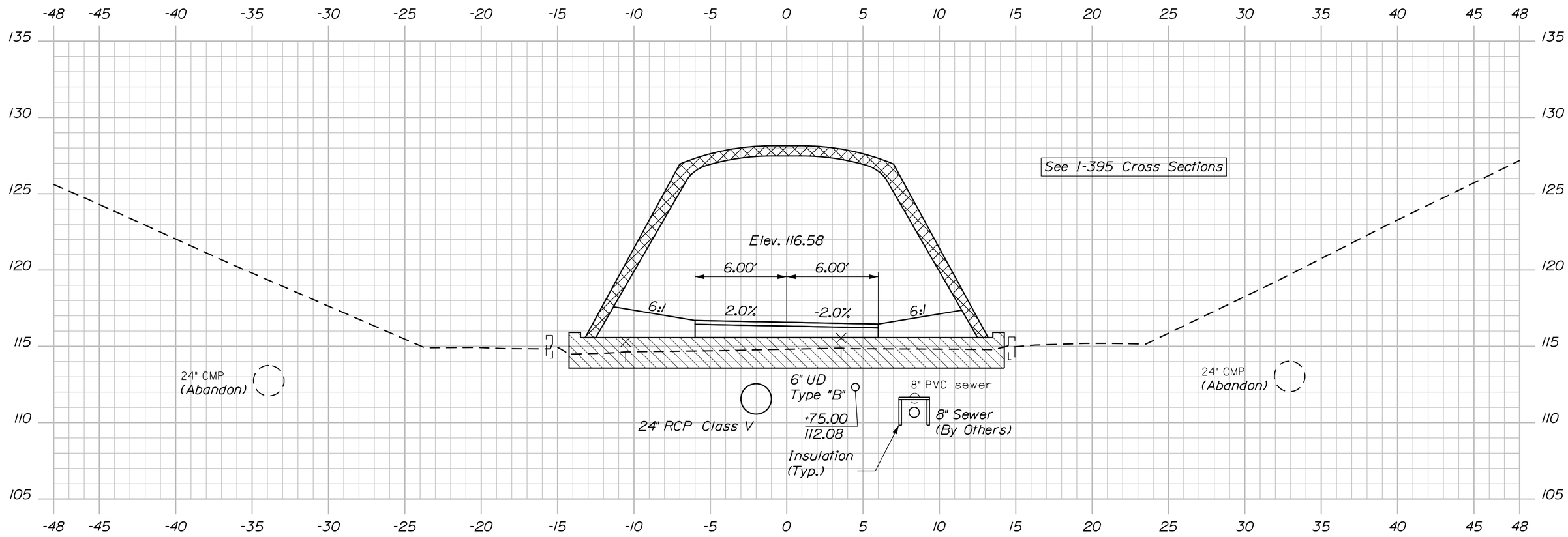

12+75.00

Sta. 12+75.00 to Sta. 13+25.00

SHEET NUMBER 15 OF 41

INTERSTATE 395
OVER WEBSTER AVENUE
BANGOR PENOBSCOT

WEBSTER AVENUE CROSS SECTIONS

PROJ. MANAGER	MIKE WIGHT	BY	DATE
DESIGN-DETAILED	B. HAVU	M. CUNDIFF	07\15
CHECKED-REVIEWED	D. ETTINGER		07\15
DESIGN2-DETAILED2			
DESIGN3-DETAILED3			
REVISIONS 1			
REVISIONS 2			
REVISIONS 3			
REVISIONS 4			
FIELD CHANGES			

SIGNATURE
P.E. NUMBER
DATE

STATE OF MAINE
DEPARTMENT OF TRANSPORTATION

AC-IM-1931(100)E

BRIDGE NO.:5796 WIN 19311.00 BRIDGE PLANS

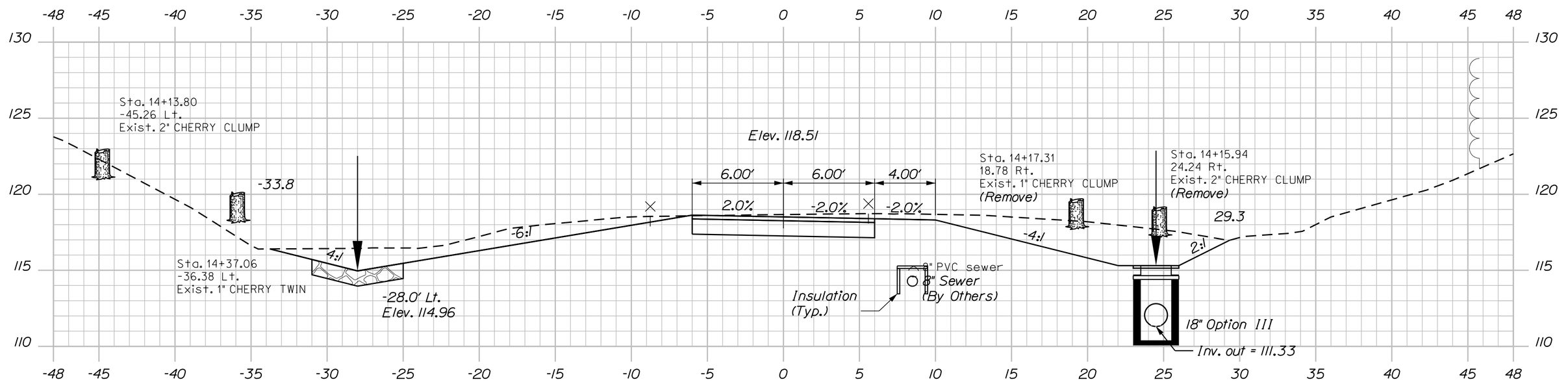

Sta. 14+00 to Sta. 14+60, Lt.
Install Stone Ditch Protection

14+25.00

Sta. 14+25.00, 24.50' Rt.
Install CB Type F5-C
Rim El. = 115.33

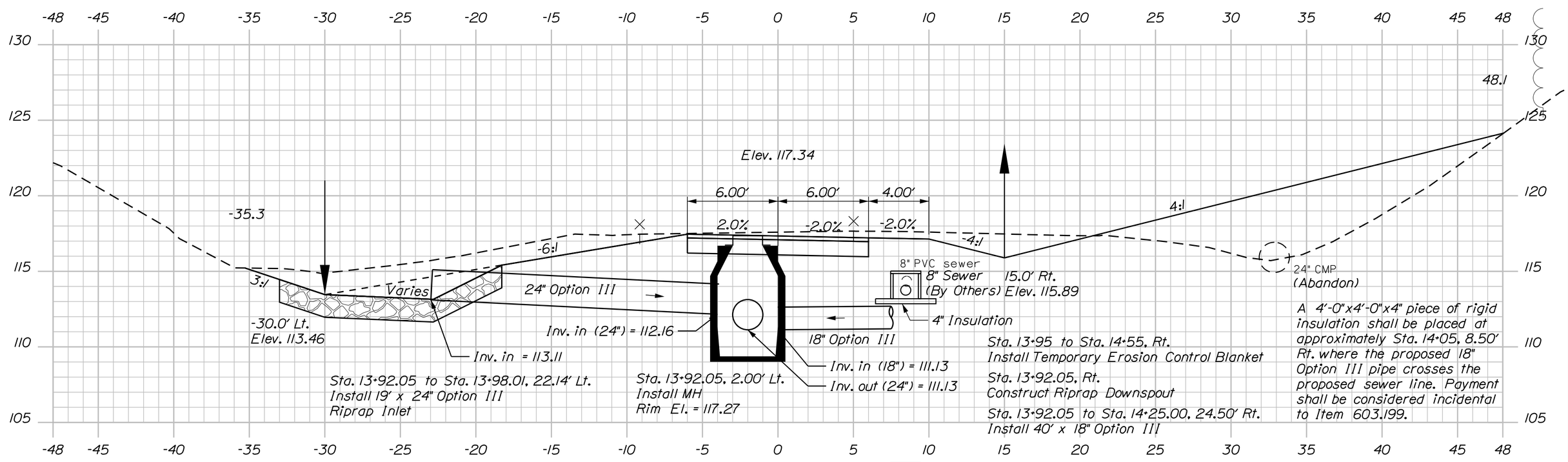

14+00.00

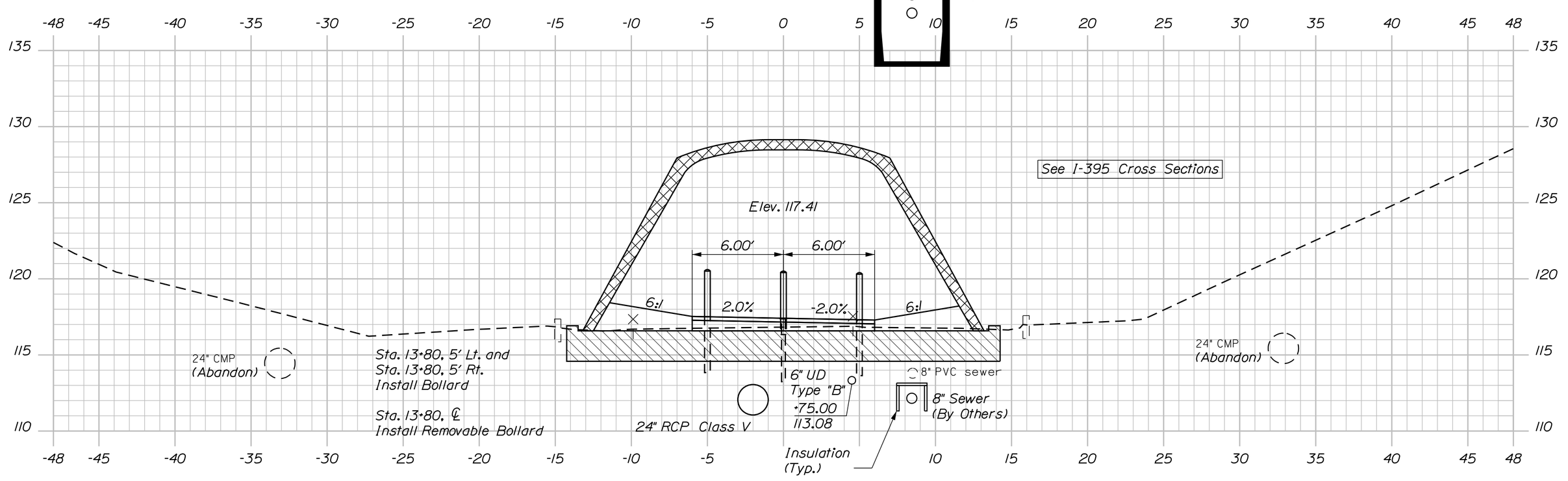

13+75.00

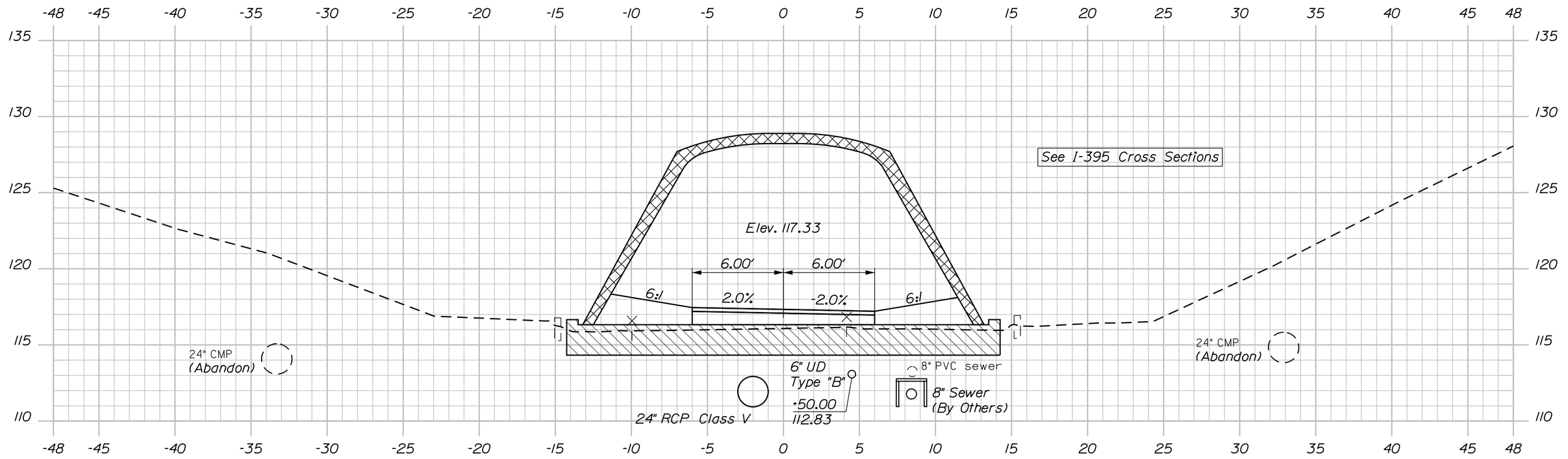

13+50.00

Sta. 13+50.00 to Sta. 14+25.00

SHEET NUMBER 16 OF 41

INTERSTATE 395
OVER WEBSTER AVENUE
BANGOR PENOBSCOT

WEBSTER AVENUE CROSS SECTIONS

PROJ. MANAGER	MIKE WIGHT	BY	DATE
DESIGN-DETAILED	B. HAVU	M. CUNDIFF	07\15
CHECKED-REVIEWED	D. ETTINGER		07\15
DESIGN2-DETAILED2			
DESIGN3-DETAILED3			
REVISIONS 1			
REVISIONS 2			
REVISIONS 3			
REVISIONS 4			
FIELD CHANGES			

SIGNATURE
P.E. NUMBER
DATE

STATE OF MAINE
DEPARTMENT OF TRANSPORTATION

AC-IM-1931(100)E

BRIDGE NO.:5796 WIN 19311.00 BRIDGE PLANS

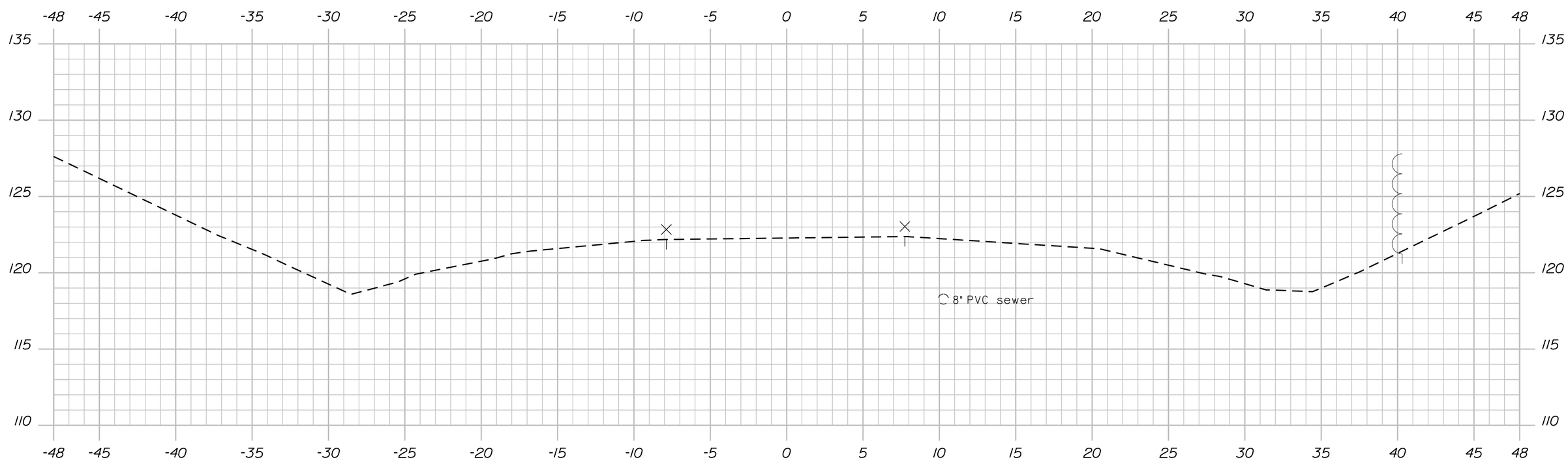

15+00.00

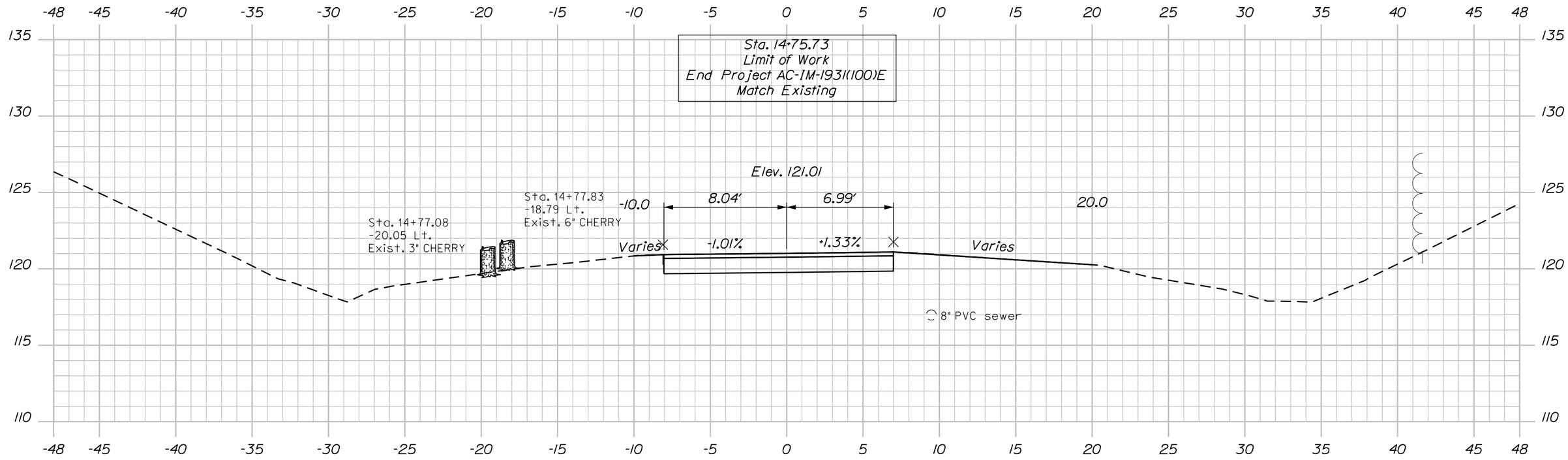

14+75.00

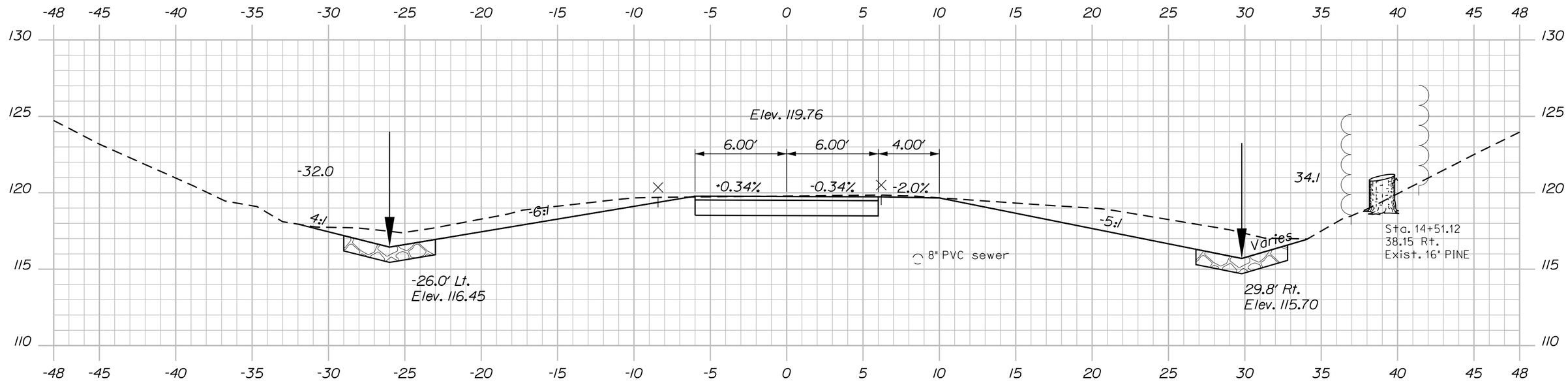

14+50.00

Sta. 14+50.00 to Sta. 15+00.00

Sta. 14+50 to Sta. 14+60, Rt.
Install Stone Ditch Protection

SHEET NUMBER 17 OF 41

INTERSTATE 395
OVER WEBSTER AVENUE
BANGOR PENOBSCOT

WEBSTER AVENUE CROSS SECTIONS

PROJ. MANAGER	MIKE WIGHT	BY	DATE
DESIGN-DETAILED	B. HAVU	M. CUNDIFF	07\15
CHECKED-REVIEWED	D. ETTINGER		07\15
DESIGN2-DETAILED2			
DESIGN3-DETAILED3			
REVISIONS 1			
REVISIONS 2			
REVISIONS 3			
REVISIONS 4			
FIELD CHANGES			

SIGNATURE
P.E. NUMBER
DATE

STATE OF MAINE
DEPARTMENT OF TRANSPORTATION

AC-IM-1931(100)E

BRIDGE NO.:5796 WIN 19311.00 BRIDGE PLANS

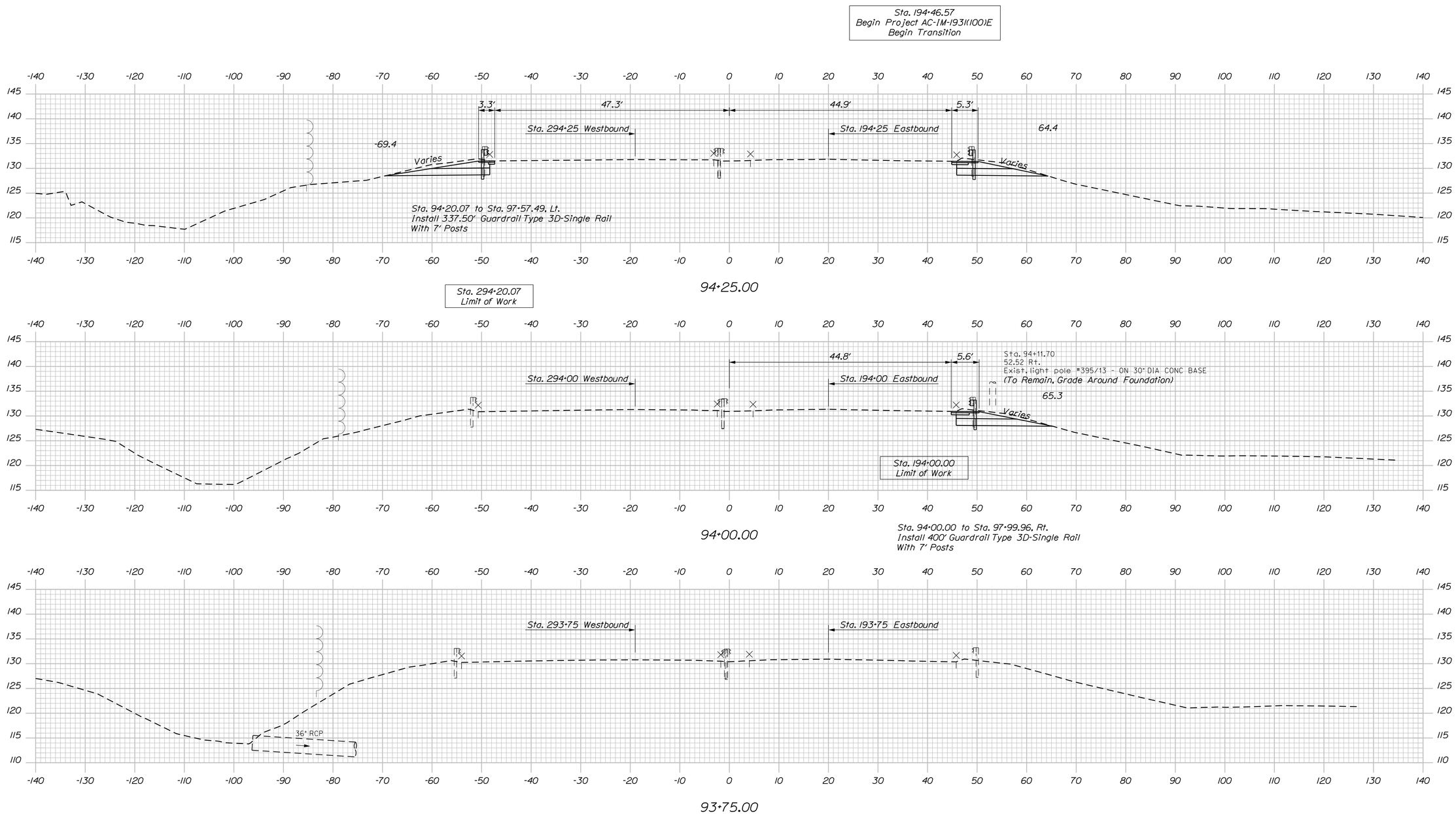

STATE OF MAINE
DEPARTMENT OF TRANSPORTATION

AC-IM-1931(100)E

WIN 19311.00

BRIDGE NO.:5796

BRIDGE PLANS

SIGNATURE

P.E. NUMBER

DATE

		BY	DATE
PROJ. MANAGER	MIKE WIGHT		
DESIGN-DETAILED	B. HAVU	M. CUNDIFF	07\15
CHECKED-REVIEWED	D. ETTINGER		07\15
DESIGN2-DETAILED2			
DESIGN3-DETAILED3			
REVISIONS 1			
REVISIONS 2			
REVISIONS 3			
REVISIONS 4			
FIELD CHANGES			

INTERSTATE 395
OVER WEBSTER AVENUE
BANGOR PENOBSCOT

I-395 CROSS SECTIONS

SHEET NUMBER
18
OF 41

Sta. 93+75.00 to Sta. 94+25.00

Filename: ...\00\Bridge\Xsect-10scale.dgn Division: HIGHWAY Username: mcundiff Date:7/23/2015

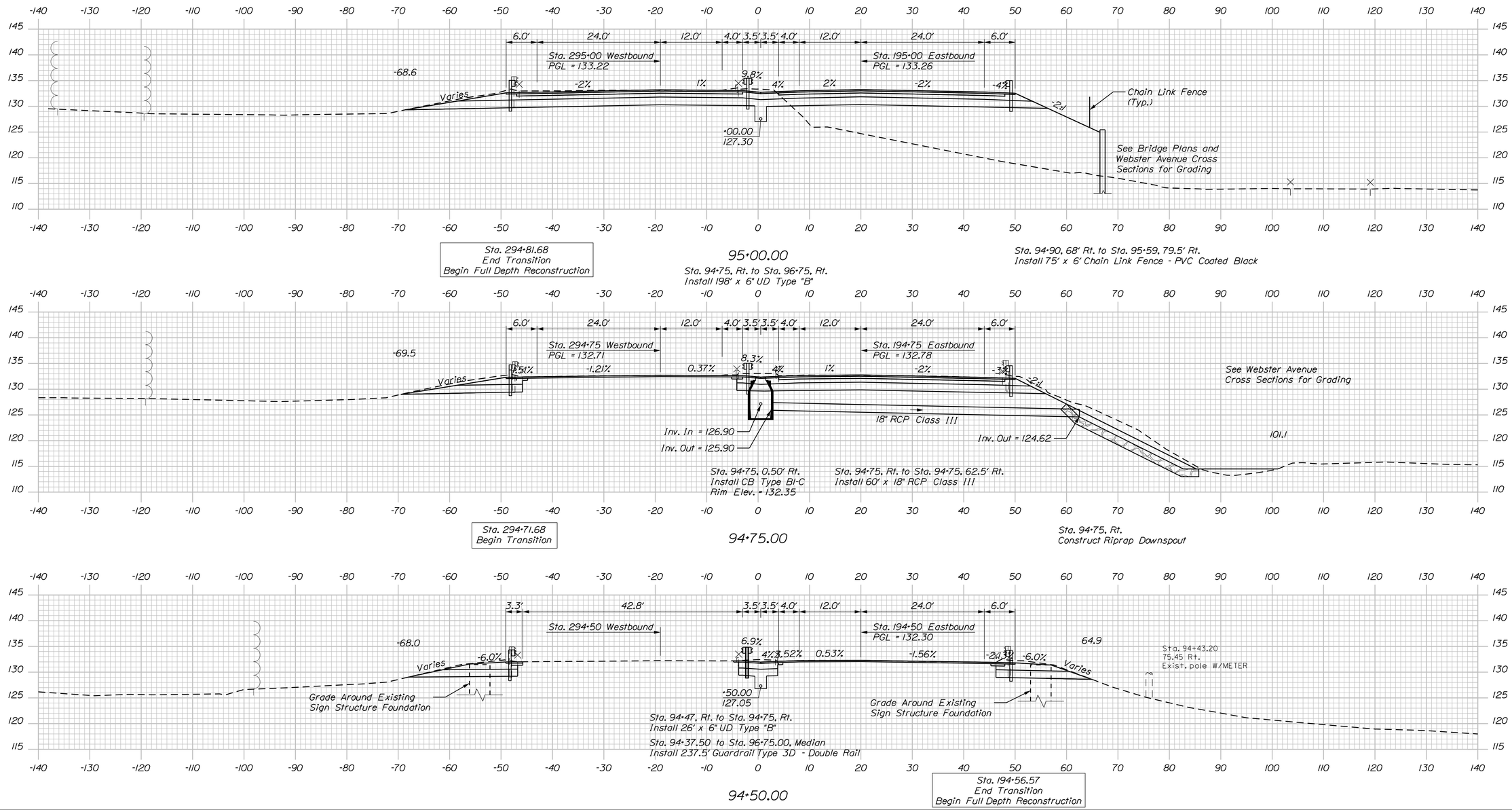

STATE OF MAINE
DEPARTMENT OF TRANSPORTATION

AC-IM-1931(100)E

WIN 19311.00

BRIDGE NO.:5796

BRIDGE PLANS

SIGNATURE

P.E. NUMBER

DATE

		BY	DATE
PROJ. MANAGER	MIKE WIGHT		
DESIGN-DETAILED	B. HAYU	M. CUNDIFF	07/15
CHECKED-REVIEWED	D. ETTINGER		07/15
DESIGN2-DETAILED2			
DESIGN3-DETAILED3			
REVISIONS 1			
REVISIONS 2			
REVISIONS 3			
REVISIONS 4			
FIELD CHANGES			

INTERSTATE 395
OVER WEBSTER AVENUE
BANGOR PENOBSCOT

I-395 CROSS SECTIONS

SHEET NUMBER

19

OF 41

Sta. 94+50.00 to Sta. 95+00.00

Filename: ...\00\Bridge\Xsect-10scale.dgn Division: HIGHWAY Username: mcundiff Date:7/23/2015

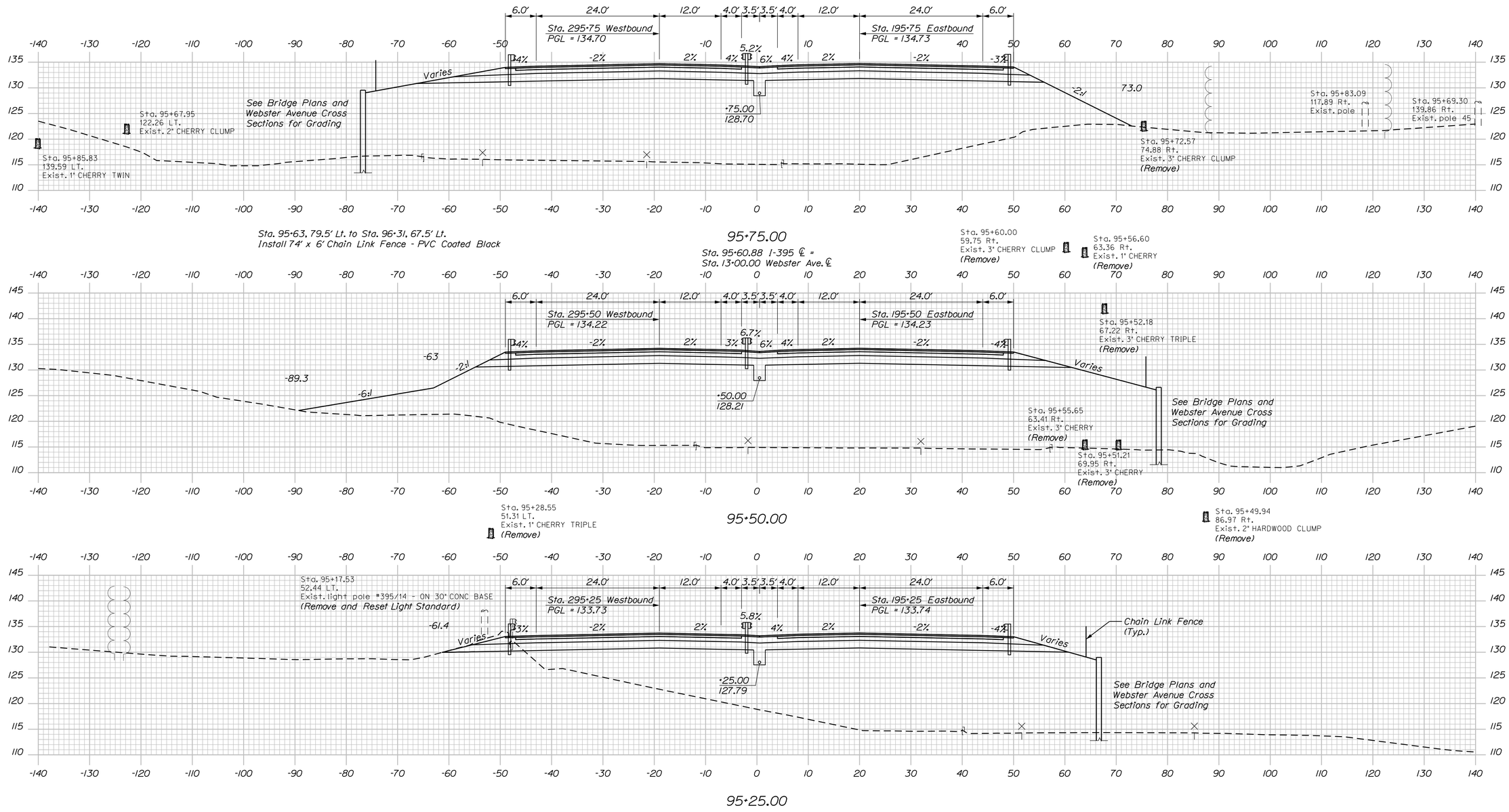

STATE OF MAINE
DEPARTMENT OF TRANSPORTATION

AC-IM-1931(100)E

WIN 19311.00

BRIDGE NO.:5796

BRIDGE PLANS

PROJ. MANAGER	MIKE WIGHT			
DESIGN-DETAILED	B. HAVU	M. CUNDIFF	07\15	
CHECKED-REVIEWED	D. ETTINGER			
DESIGN2-DETAILED2				
DESIGN3-DETAILED3				
REVISIONS 1				
REVISIONS 2				
REVISIONS 3				
REVISIONS 4				
FIELD CHANGES				

SIGNATURE

P.E. NUMBER

DATE

INTERSTATE 395
OVER WEBSTER AVENUE
BANGOR PENOBSCOT

I-395 CROSS SECTIONS

SHEET NUMBER
20
OF 41

Sta. 95+25.00 to Sta. 95+75.00

Filename: ...\00\Bridge\Xsect-10scale.dgn Division: HIGHWAY Username: mcundiff Date:7/23/2015

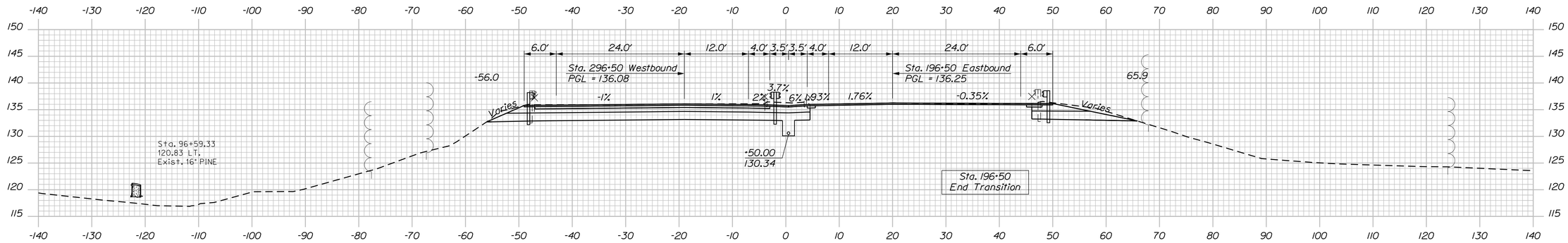

96+50.00

Sta. 196+40.00
End Full Depth Reconstruction
Begin Transition

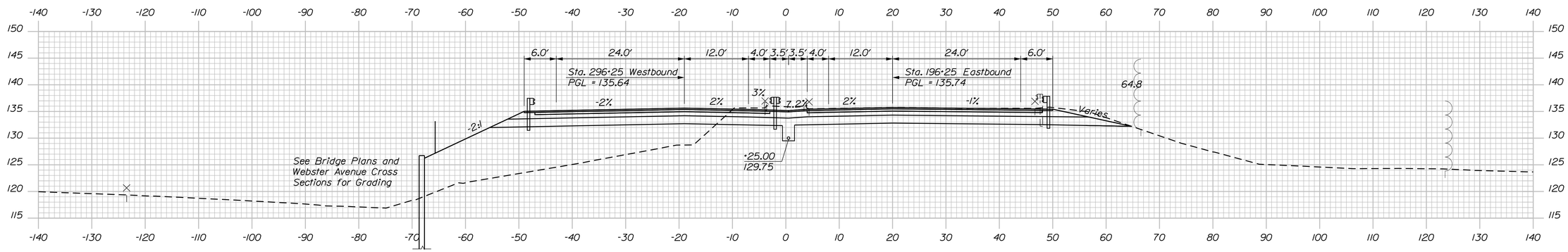

96+25.00

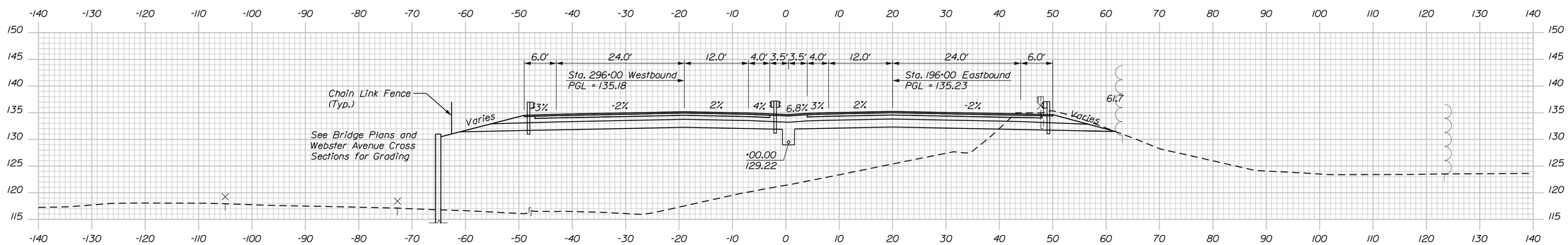

96+00.00

STATE OF MAINE
DEPARTMENT OF TRANSPORTATION

AC-IM-1931(100)E

WIN 19311.00

BRIDGE NO.:5796

BRIDGE PLANS

PROJ. MANAGER	MIKE WIGHT	BY	DATE
DESIGN-DETAILED	B. HAVU	M. CUNDIFF	07/15
CHECKED-REVIEWED	D. ETTINGER		07/15
DESIGN2-DETAILED2			
DESIGN3-DETAILED3			
REVISIONS 1			
REVISIONS 2			
REVISIONS 3			
REVISIONS 4			
FIELD CHANGES			

SIGNATURE

P.E. NUMBER

DATE

INTERSTATE 395
OVER WEBSTER AVENUE
BANGOR PENOBSCOT

I-395 CROSS SECTIONS

SHEET NUMBER

21

OF 41

Filename: ...\00\Bridge\Xsect-10scale.dgn Division: HIGHWAY Username: mcundiff Date:7/23/2015

Sta. 96+00.00 to Sta. 96+50.00

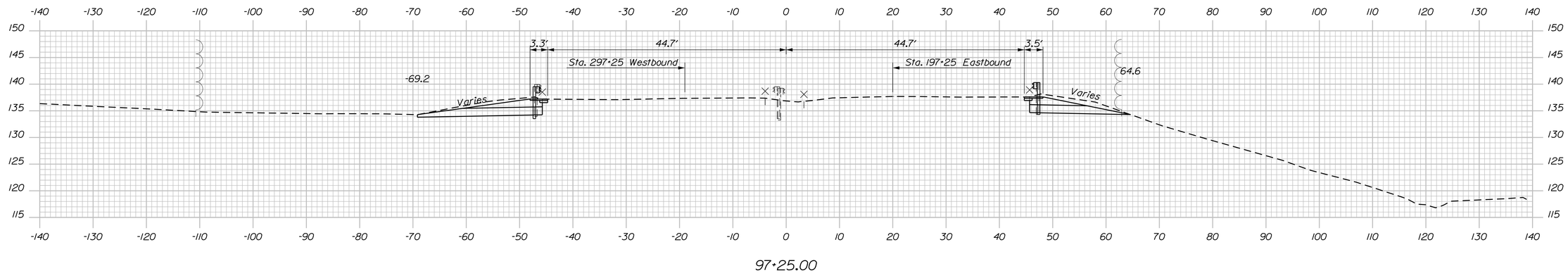

97+25.00

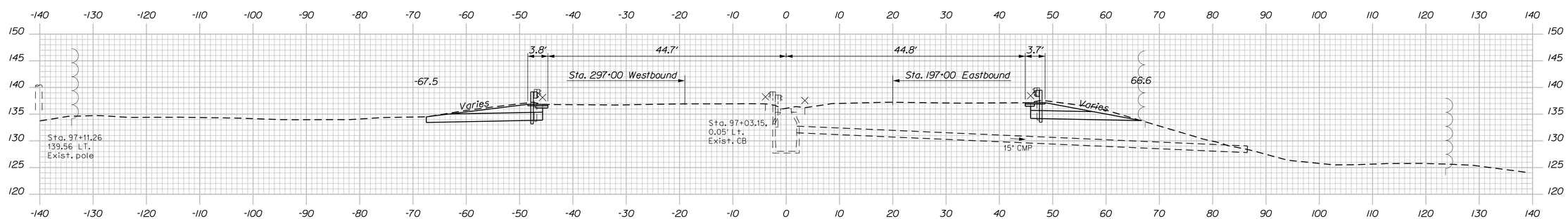

97+00.00

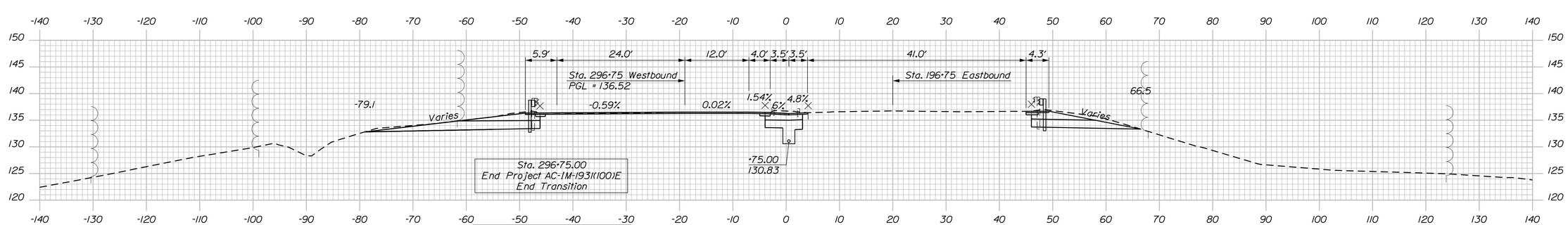

96+75.00

STATE OF MAINE
DEPARTMENT OF TRANSPORTATION

AC-IM-1931(100)E

WIN 19311.00

BRIDGE NO.-5796

BRIDGE PLANS

SIGNATURE

P.E. NUMBER

DATE

PROJ. MANAGER	MIKE WIGHT	BY	DATE
DESIGN-DETAILED	B. HAVU	M. CUNDIFF	07\15
CHECKED-REVIEWED	D. ETTINGER		07\15
DESIGN2-DETAILED2			
DESIGN3-DETAILED3			
REVISIONS 1			
REVISIONS 2			
REVISIONS 3			
REVISIONS 4			
FIELD CHANGES			

INTERSTATE 395
OVER WEBSTER AVENUE
BANGOR PENOBSCOT

I-395 CROSS SECTIONS

SHEET NUMBER
22
OF 41

Sta. 96+75.00 to Sta. 97+25.00

Filename: ...\00\Bridge\Xsect-10scale.dgn Division: HIGHWAY Username: mcundiff Date:7/23/2015

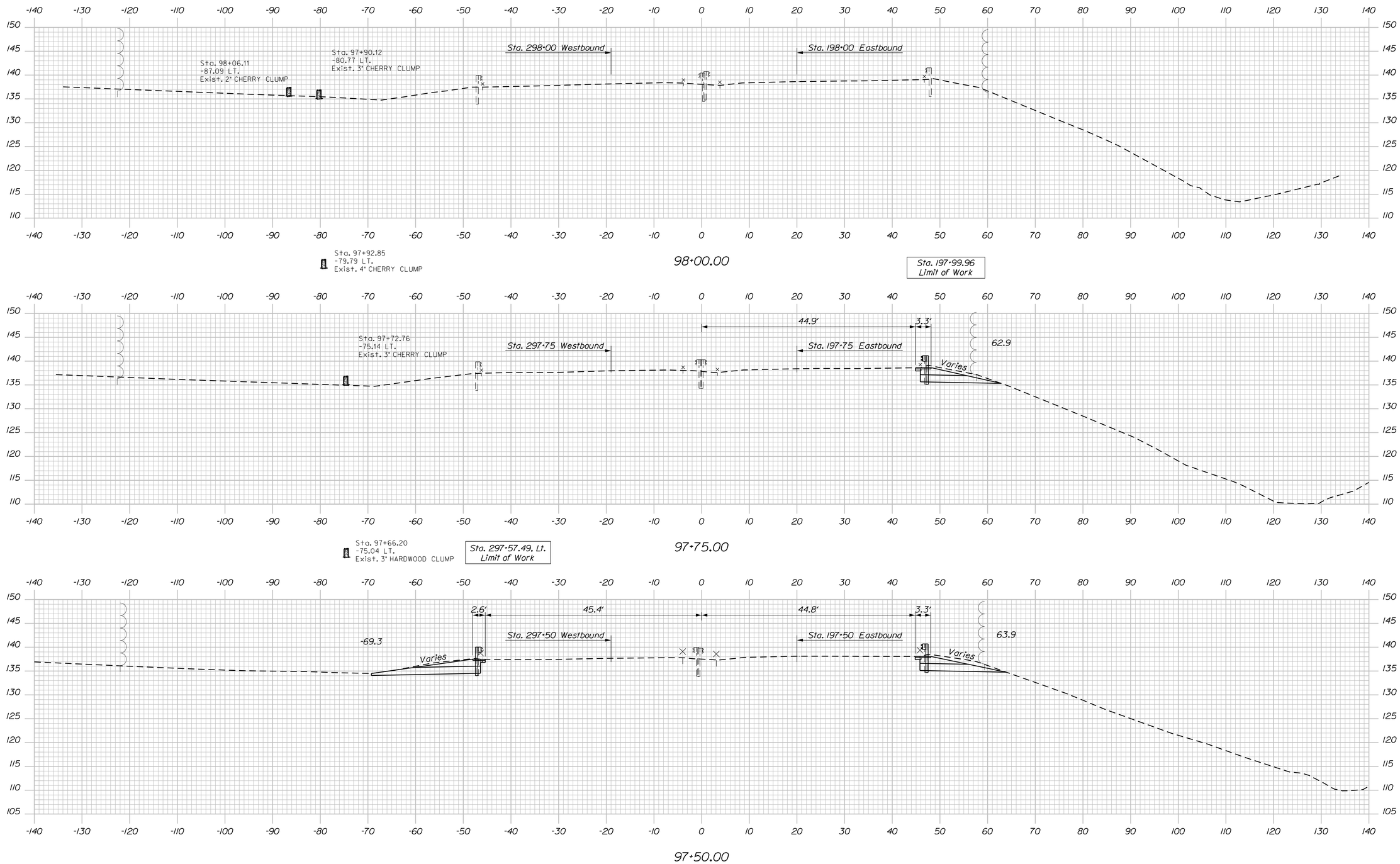

STATE OF MAINE
DEPARTMENT OF TRANSPORTATION

AC-IM-1931(100)E

WIN 19311.00

BRIDGE NO.:5796

BRIDGE PLANS

PROJ. MANAGER	MIKE WIGHT	BY	DATE
DESIGN-DETAILED	B. HAVU	M. CUNDIFF	07/15
CHECKED-REVIEWED	D. ETTINGER		07/15
DESIGN2-DETAILED2			
DESIGN3-DETAILED3			
REVISIONS 1			
REVISIONS 2			
REVISIONS 3			
REVISIONS 4			
FIELD CHANGES			

SIGNATURE

P.E. NUMBER

DATE

INTERSTATE 395
OVER WEBSTER AVENUE
BANGOR PENOBSCOT

I-395 CROSS SECTIONS

SHEET NUMBER
23
OF 41

Filename: ...\00\Bridge\Xsect-10scale.dgn Division: HIGHWAY Username: mcundiff Date:7/23/2015

Sta. 97+50.00 to Sta. 97+50.00

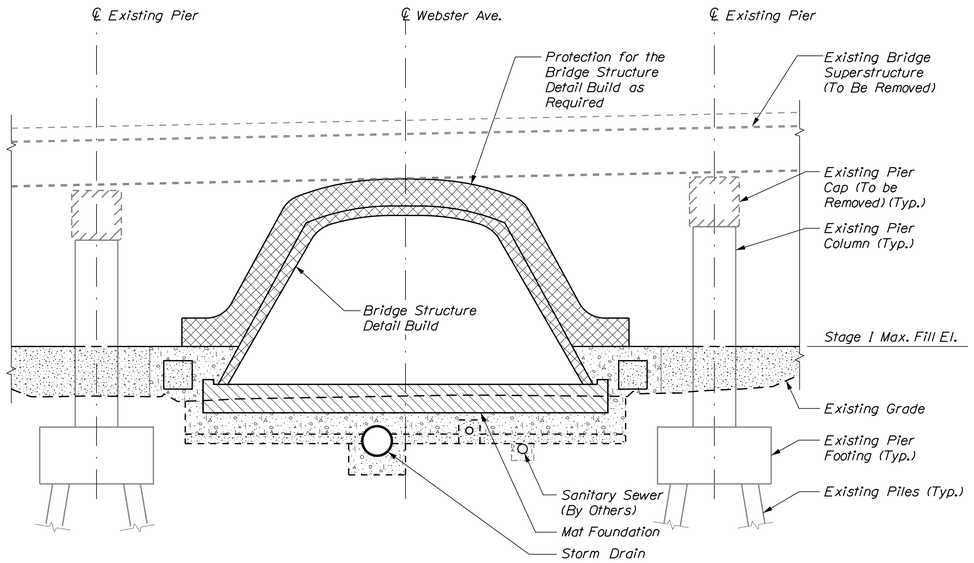

STAGE I CONSTRUCTION

(Prior to I-395 Closure)

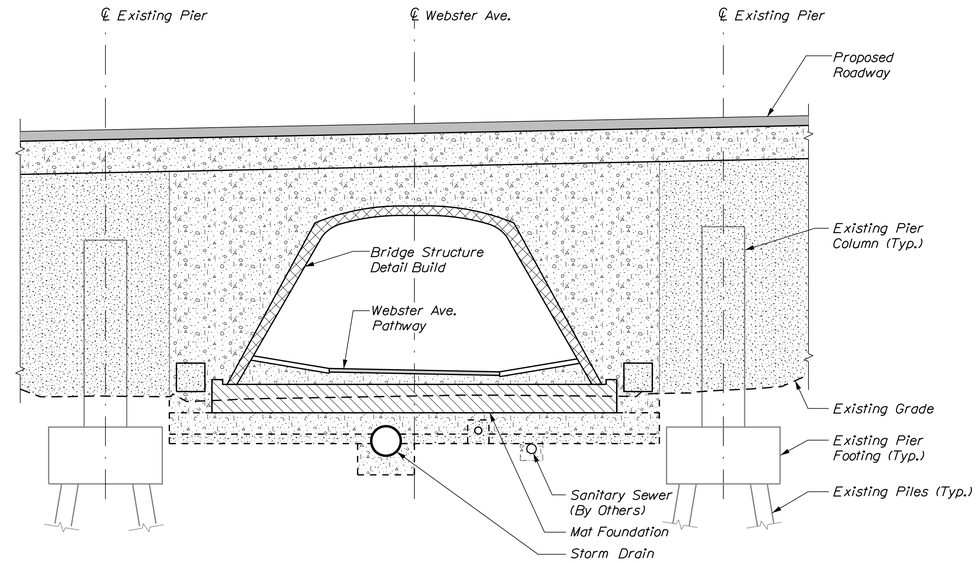

STAGE III CONSTRUCTION

(After I-395 Closure)

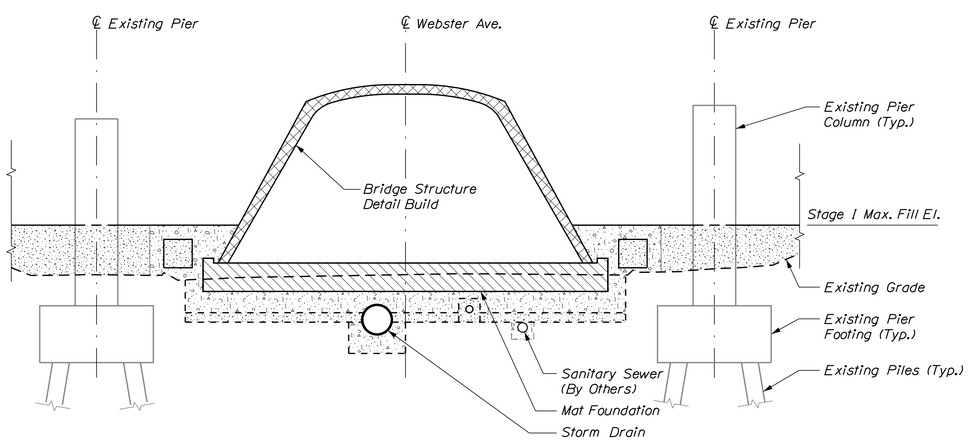

STAGE II CONSTRUCTION

(During I-395 Closure)

CONCEPTUAL STAGE I CONSTRUCTION (PRIOR TO I-395 CLOSURE)

1. Close Webster Ave to pedestrian and bicycle traffic
2. Construct Webster Ave storm drain
3. Construct Webster Ave sanitary sewer (by others)
4. Construct mat foundation
5. Start bridge structure detail build and wingwalls
6. Backfill bridge structure and wingwalls with borrow material. Stage I max backfill elevation:
   - El. 117.50 between Sta. 12+25 and 13+00 (Webster Ave. baseline)
   - El. 120.50 between Sta. 13+00 and 13+75 (Webster Ave. baseline)
7. Provide protection as required to prevent damage to the bridge structure detail build during the removal of the existing bridge superstructure in Stage II Construction

CONCEPTUAL STAGE II CONSTRUCTION (DURING I-395 CLOSURE)

1. Install I-395 traffic detours
2. Remove existing bridge superstructure and approach slabs
3. Remove existing concrete abutments to 6'-6" below finish grade
4. Remove existing concrete pier caps
5. Complete bridge structure and wingwalls backfill
6. Mill existing I-395 pavement transition
7. Construct I-395 subbase, base and pavement
8. Install guardrail and stripe lanes
9. Clean I-395 of construction debris
10. Remove I-395 traffic detours

CONCEPTUAL STAGE III CONSTRUCTION (AFTER I-395 CLOSURE)

1. Complete Webster Ave pathway construction
2. Open Webster Ave to pedestrians and bicycle traffic

BECKER
STRUCTURAL ENGINEERS
75 York Street, Portland, Maine 04101
207.879.1838 ▪ beckerstructural.com

STATE OF MAINE
DEPARTMENT OF TRANSPORTATION

AC-IM-1931(100)E

WIN 19311.00

BRIDGE NO.: 5796

BRIDGE PLANS

PROJ. MANAGER	MIKE WIGHT	BY	DATE
DESIGN-DETAILED	B.WELCH	D.BURGESS	7\15
CHECKED-REVIEWED	J.BURGESS	B.WELCH	7\15
DESIGN2-DETAILED2			
DESIGN3-DETAILED3			
REVISIONS 1			
REVISIONS 2			
REVISIONS 3			
REVISIONS 4			
FIELD CHANGES			

SIGNATURE

P.E. NUMBER

DATE

WEBSTER AVENUE BRIDGE
OVER WEBSTER AVENUE
BANGOR PENOBSCOT COUNTY

CONCEPTUAL STAGED CONSTRUCTION DETAILS

SHEET NUMBER

24

OF 41

Filename: ...\00\Bridge\024_StageConstr.dgn Division: HIGHWAY Username: bhavu Date:8/13/2015

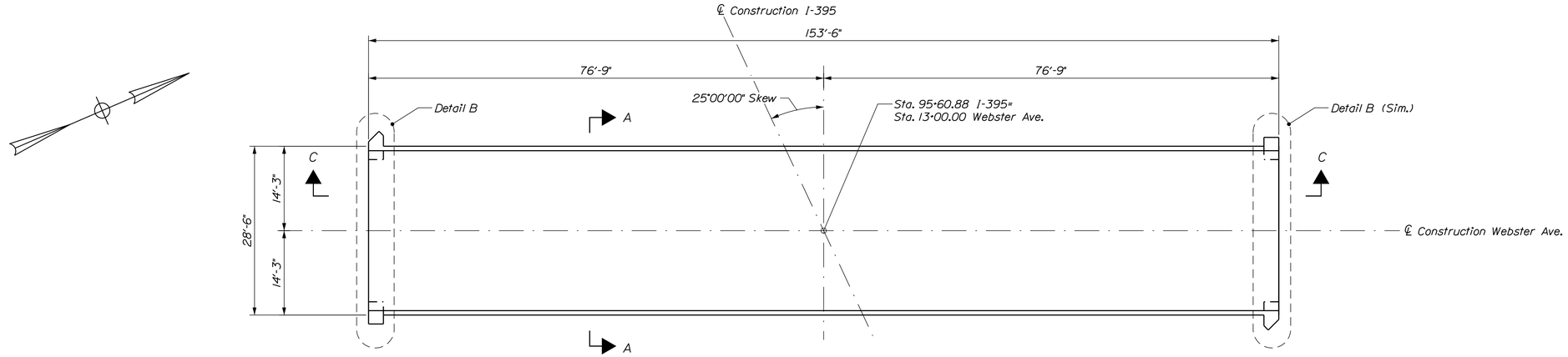

MAT FOUNDATION - PLAN

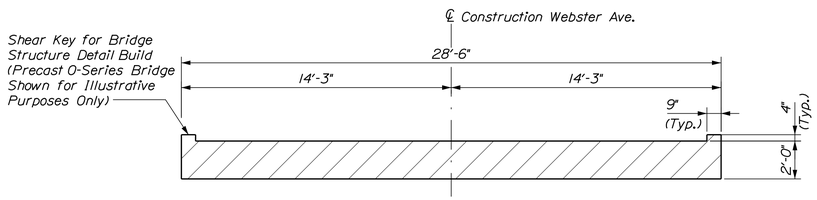

SECTION A-A

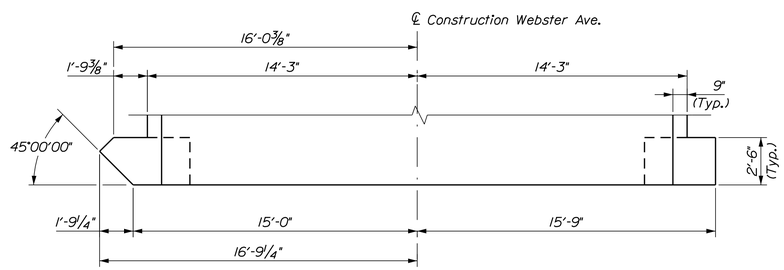

PLAN

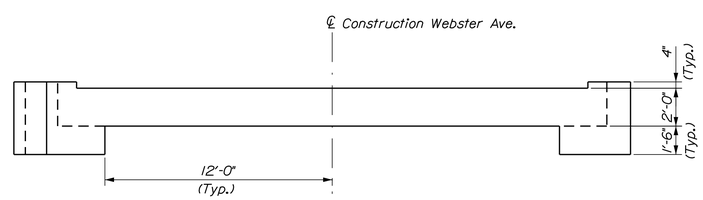

ELEVATION

DETAIL B

MAT FOUNDATION NOTES

1. The maximum factored applied footing pressure is 4.5 ksf.

2. Reinforcing steel shall have a minimum concrete cover of 3 inches unless otherwise noted.

3. Maximum allowable construction live load shall be HL-93 Modified.

4. The required width of the mat slab is a function of the Bridge Structure Detail Build option selected by the Contractor. The 28'-6" mat slab width shown is based on CON/SPAN O-Series 225 Option which has an out to out dimension at point of contact with the mat slab of 26'-6". The required minimum width of the mat slab for the alternate detail build options per Special Provision 531 shall be the out to out dimension of the sturcture at point of contact with the mat slab plus 2'-0". The required length and number of mat slab reinforcing steel bars shall be adjusted accordingly.

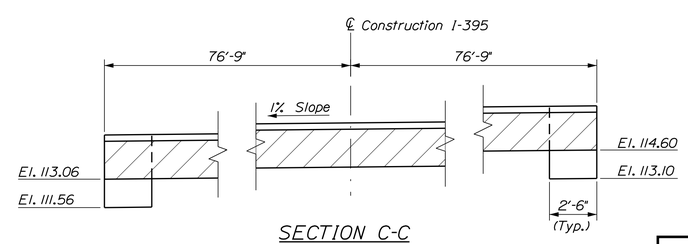

SECTION C-C

BECKER STRUCTURAL ENGINEERS
75 York Street, Portland, Maine 04101
207.879.1838 ■ beckerstructural.com

STATE OF MAINE
DEPARTMENT OF TRANSPORTATION

AC-IM- 1931(100)E

WIN 19311.00

BRIDGE NO. 5796

BRIDGE PLANS

PROJ. MANAGER	MIKE WIGHT	BY	DATE
DESIGN-DETAILED	B.WELCH	D.BURGESS	7\15
CHECKED-REVIEWED	J.BURGESS	B.WELCH	7\15
DESIGN2-DETAILED2			
DESIGN3-DETAILED3			
REVISIONS 1			
REVISIONS 2			
REVISIONS 3			
REVISIONS 4			
FIELD CHANGES			

SIGNATURE

P.E. NUMBER

DATE

WEBSTER AVENUE BRIDGE
OVER WEBSTER AVENUE
BANGOR PENOBSCOT COUNTY

MAT FOUNDATION

SHEET NUMBER

25

OF 41

Filename: ...\00\BRIDGE\MSTA\025_Mat.dgn Division: BRIDGE Username: common Date:7/28/2015

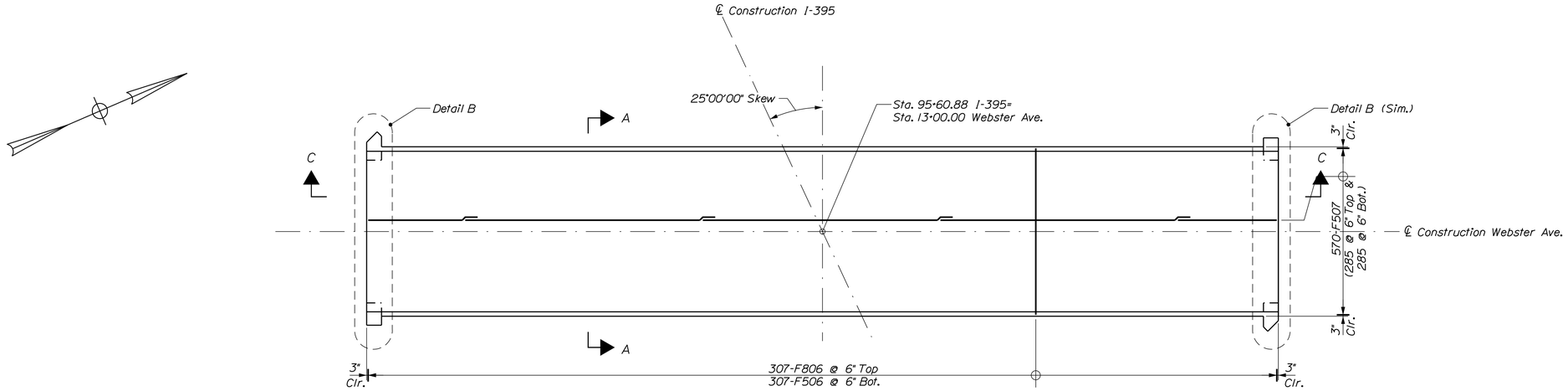

MAT FOUNDATION - PLAN

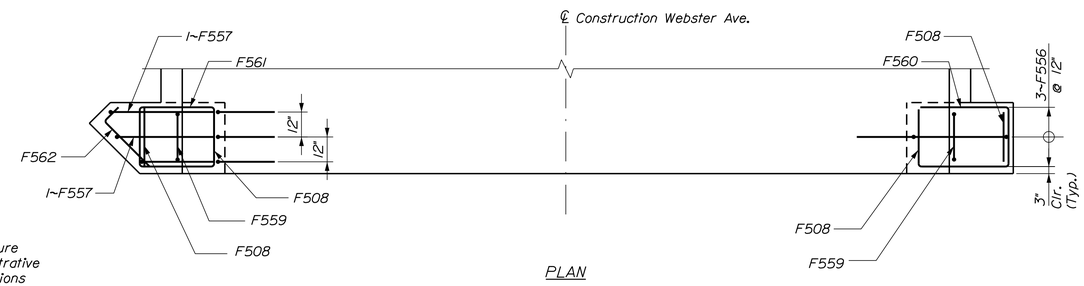

PLAN

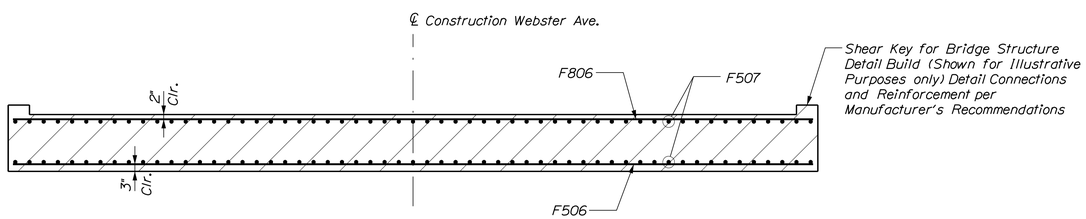

SECTION A-A

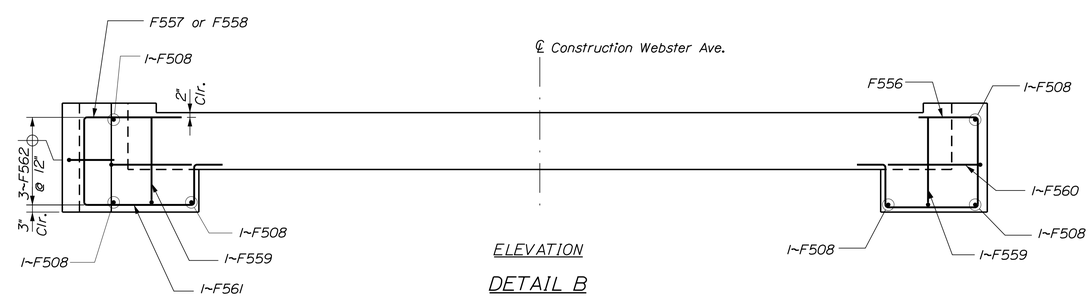

ELEVATION

DETAIL B

Note: Not All Reinforcing Shown for Clarity

BECKER STRUCTURAL ENGINEERS
75 York Street, Portland, Maine 04101
207.879.1838 ■ beckerstructural.com

STATE OF MAINE
DEPARTMENT OF TRANSPORTATION

AC-IM- 1931(100)E

WIN 19311.00

BRIDGE NO. 5796

BRIDGE PLANS

PROJ. MANAGER	MIKE WIGHT	BY	DATE
DESIGN-DETAILED	B.WELCH	D.BURGESS	7\15
CHECKED-REVIEWED	J.BURGESS	B.WELCH	7\15
DESIGN2-DETAILED2			
DESIGN3-DETAILED3			
REVISIONS 1			
REVISIONS 2			
REVISIONS 3			
REVISIONS 4			
FIELD CHANGES			

SIGNATURE

P.E. NUMBER

DATE

WEBSTER AVENUE BRIDGE
OVER WEBSTER AVENUE
BANGOR PENOBSCOT COUNTY

MAT FOUNDATION
REINFORCEMENT AND DETAILS

SHEET NUMBER

26

OF 41

Filename: ...\BRIDGE\MSTA\026_MatDet_01.dgn Division: BRIDGE Username: common Date:7/28/2015

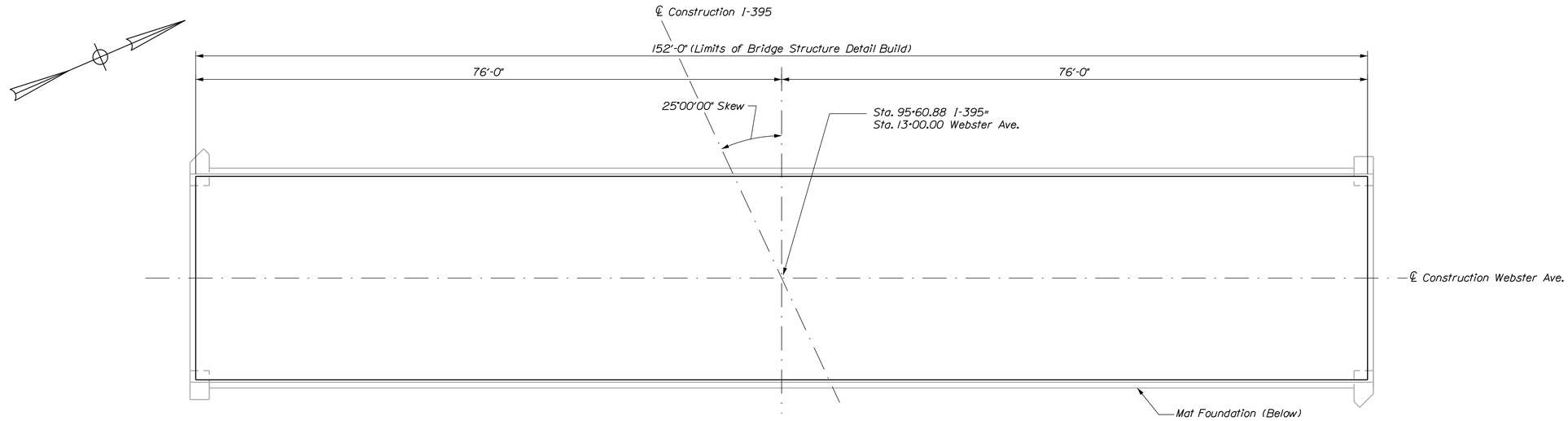

BRIDGE STRUCTURE DETAIL BUILD PLAN

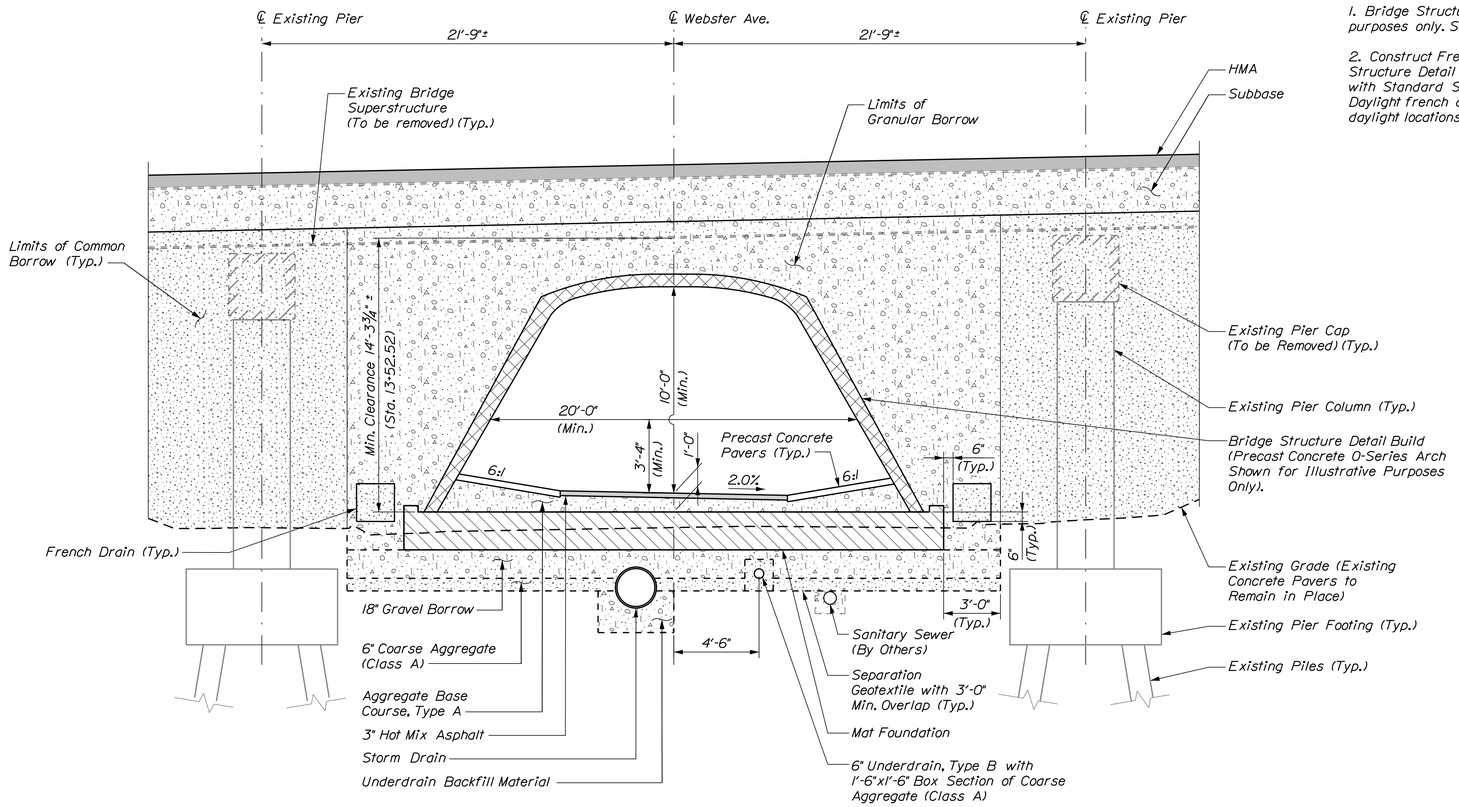

PROPOSED BRIDGE SECTION

(Along ℄ Construction)

BRIDGE STRUCTURE DETAIL BUILD NOTES

1. Bridge Structure Detail Build shown is for illustrative purposes only. See Special Provision 531.

2. Construct French Drains behind each base of the Bridge Structure Detail Build and retaining walls in accordance with Standard Specification Section 512, French Drains. Daylight french drains through wingwalls. Coordinate daylight locations with Resident in field.

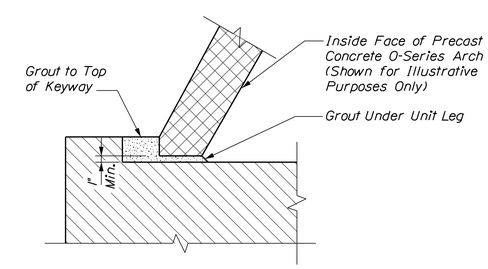

Note:
Fill entire keyway including nominal 1" void beween the bottom of the keyway and bottom of precast arch unit leg with grout.

TYPICAL KEYWAY DETAIL

BECKER STRUCTURAL ENGINEERS
75 York Street, Portland, Maine 04101
207.879.1838 ■ beckerstructural.com

STATE OF MAINE
DEPARTMENT OF TRANSPORTATION

AC-IM-1931(100)E

WIN 19311.00

BRIDGE NO.: 5796

BRIDGE PLANS

		BY	DATE
PROJ. MANAGER	MIKE WIGHT		
DESIGN-DETAILED	B.WELCH	D.BURGESS	7\15
CHECKED-REVIEWED	J.BURGESS	B.WELCH	7\15
DESIGN2-DETAILED2			
DESIGN3-DETAILED3			
REVISIONS 1			
REVISIONS 2			
REVISIONS 3			
REVISIONS 4			
FIELD CHANGES			

SIGNATURE

P.E. NUMBER

DATE

WEBSTER AVENUE BRIDGE
OVER WEBSTER AVENUE
BANGOR PENOBSCOT COUNTY

BRIDGE PLAN AND DETAILS

SHEET NUMBER

27

OF 41

Filename: ...\BRIDGE\MSTA\027_Arch Plan.dgn Division: BRIDGE Username: common Date:7/28/2015

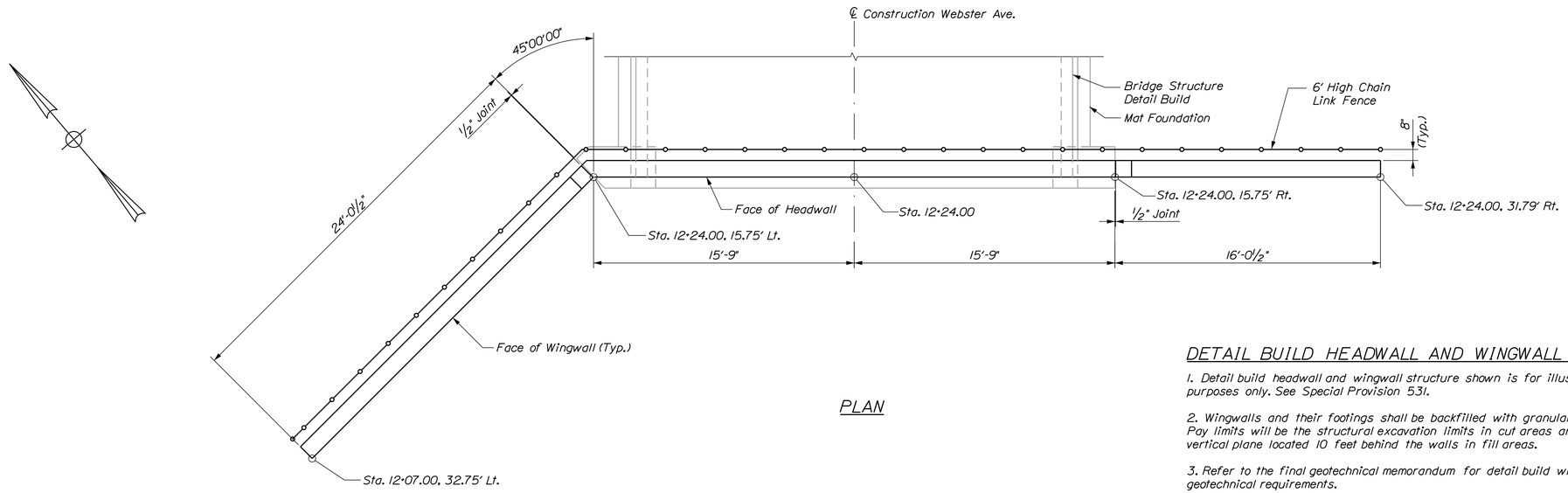

PLAN

DETAIL BUILD HEADWALL AND WINGWALL NOTES

1. Detail build headwall and wingwall structure shown is for illustrative purposes only. See Special Provision 531.

2. Wingwalls and their footings shall be backfilled with granular borrow. Pay limits will be the structural excavation limits in cut areas and a vertical plane located 10 feet behind the walls in fill areas.

3. Refer to the final geotechnical memorandum for detail build wingwall geotechnical requirements.

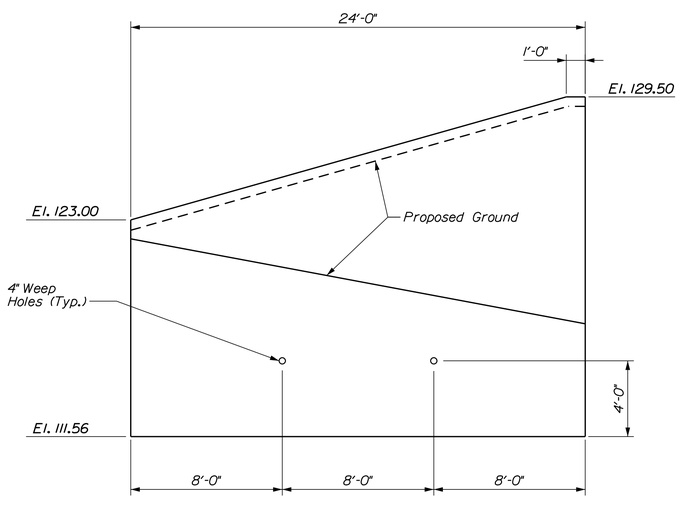

SOUTHWEST WINGWALL

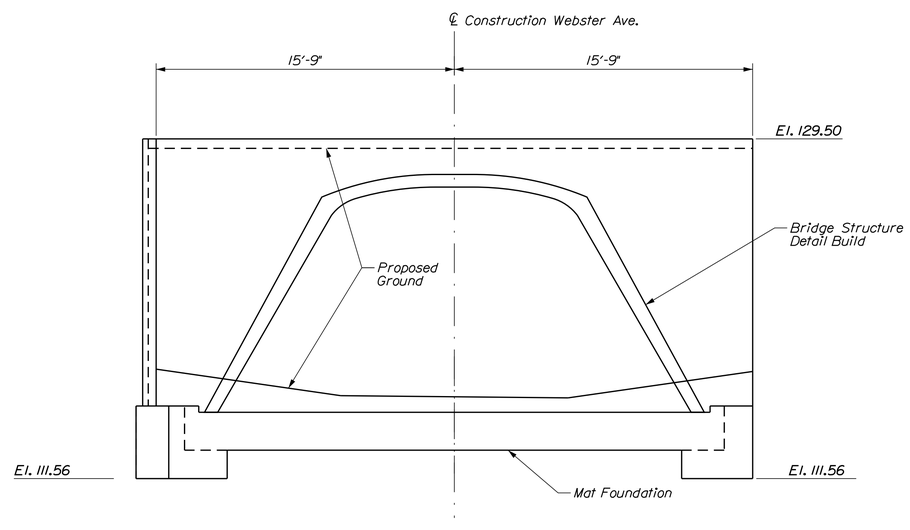

SOUTH HEADWALL

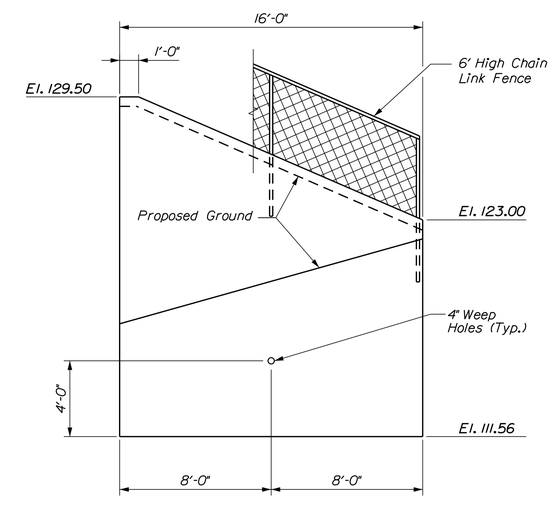

SOUTHEAST WINGWALL

ELEVATION

BECKER STRUCTURAL ENGINEERS
75 York Street, Portland, Maine 04101
207.879.1838 ▪ beckerstructural.com

STATE OF MAINE
DEPARTMENT OF TRANSPORTATION

AC-IM- 1931(100)E

WIN 19311.00

BRIDGE NO. 5796

BRIDGE PLANS

PROJ. MANAGER	MIKE	BY	DATE
DESIGN-DETAILED	B.WELCH	D.BURGESS	7\15
CHECKED-REVIEWED	J.BURGESS	B.WELCH	7\15
DESIGN2-DETAILED2	------	------	------
DESIGN3-DETAILED3	------	------	------
REVISIONS 1	------	------	------
REVISIONS 2	------	------	------
REVISIONS 3	------	------	------
REVISIONS 4	------	------	------
FIELD CHANGES	------	------	------

SIGNATURE

P.E. NUMBER

DATE

WEBSTER AVENUE BRIDGE
OVER WEBSTER AVENUE
BANGOR PENOBSCOT COUNTY

SOUTH HEADWALL AND WINGWALLS

SHEET NUMBER
28
OF 41

Filename: ...\BRIDGE\MSTA\028_Wingwall_S.dgn Division: BRIDGE Username: common Date:7/28/2015

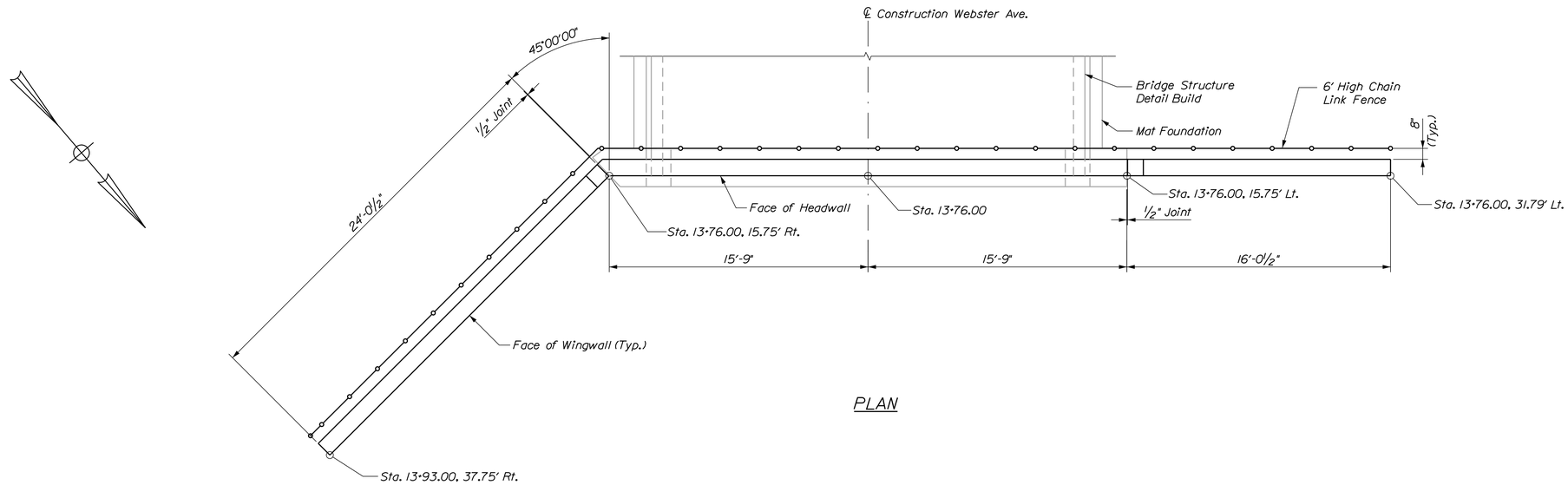

PLAN

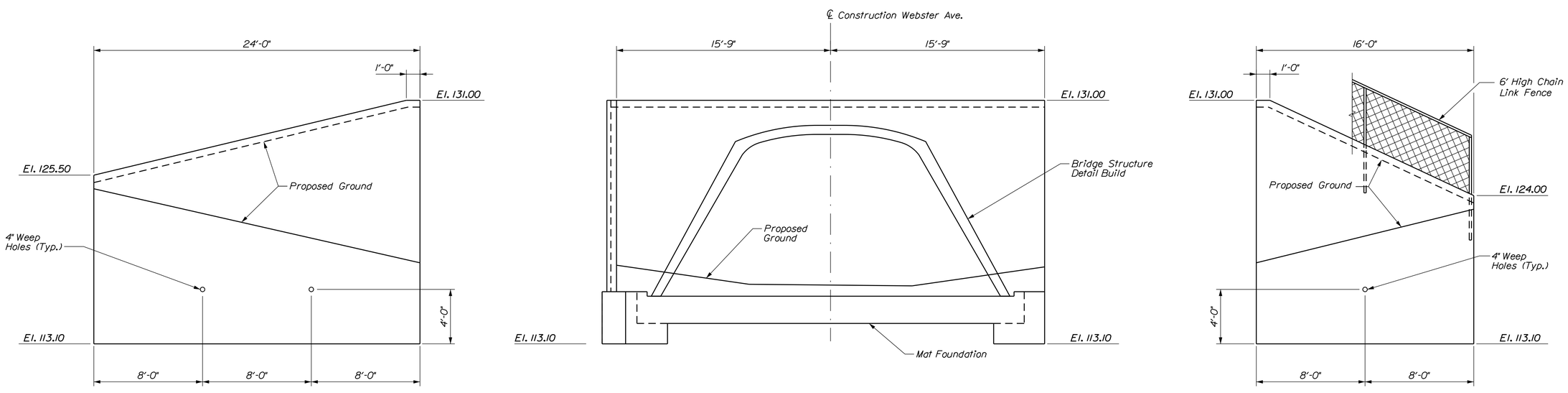

NORTHEAST WINGWALL

NORTH HEADWALL

NORTHWEST WINGWALL

ELEVATION

STATE OF MAINE
DEPARTMENT OF TRANSPORTATION

AC-IM- 1931(100)E

WIN 19311.00

BRIDGE NO. 5796

BRIDGE PLANS

PROJ. MANAGER	MIKE WIGHT	BY	DATE
DESIGN-DETAILED	B.WELCH	D.BURGESS	7\15
CHECKED-REVIEWED	J.BURGESS	B.WELCH	7\15
DESIGN2-DETAILED2	------	------	------
DESIGN3-DETAILED3	------	------	------
REVISIONS 1	------	------	------
REVISIONS 2	------	------	------
REVISIONS 3	------	------	------
REVISIONS 4	------	------	------
FIELD CHANGES	------	------	------

SIGNATURE

P.E. NUMBER

DATE

WEBSTER AVENUE BRIDGE
OVER WEBSTER AVENUE
BANGOR PENOBSCOT COUNTY

NORTH HEADWALL
AND WINGWALLS

BECKER
STRUCTURAL ENGINEERS
75 York Street, Portland, Maine 04101
207.879.1838 ■ beckerstructural.com

SHEET NUMBER
29
OF 41

Filename: ...\BRIDGE\MSTA\029_Wingwall_N.dgn Division: BRIDGE Username: common Date:7/28/2015

STRAIGHT BARS

MARK	QTY.	LENGTH	LOCATION	MARK	QTY.	LENGTH	LOCATION
Mat Foundation							
F506	307	28'-0"					
F507	570	32'-0"					
F508	12	2'-0"					
F806	307	28'-0"					

BENT BARS

MARK	QTY.	LENGTH	TYPE	A	B	C	D	E	F	G	H	O	R	LOCATION
Mat Foundation														
F556	6	12.58	S	3'-2"	3'-1"	3'-2"	1'-6"			1'-8"				
F557	4	13.50	S	3'-7"	3'-1"	3'-8"	1'-6"			1'-8"				
F558	2	11.50	S	2'-7"	3'-1"	2'-8"	1'-6"			1'-8"				
F559	4	7.83	S		3'-0"	1'-10"	3'-0"							
F560	2	8.33	S		3'-2"	2'-0"	3'-2"							
F561	2	7.33	S		2'-8"	2'-0"	2'-8"							
F562	6	2.67	L	2'-0"	8"									

TYPE - BENDING DIAGRAMS

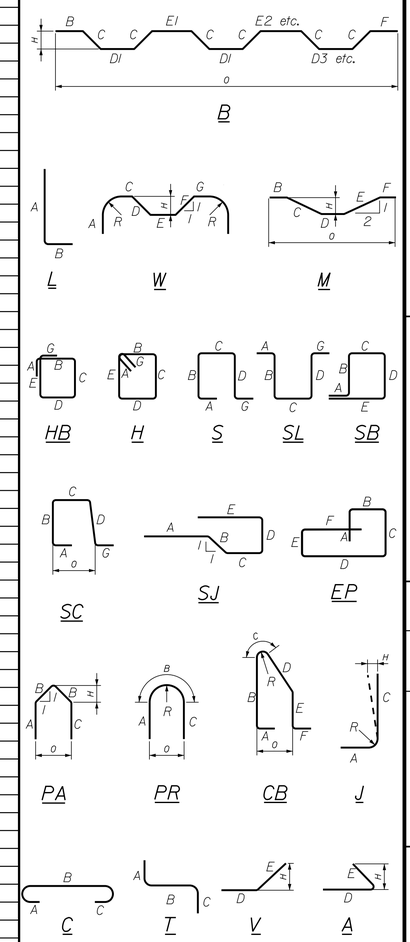

All dimensions are out-to-out of bar.

Bending details and hooks shall conform to the recommendations of the current revision of ACI Standard 315 and ACI Standard 318.

Reinforcing Bar: ASTM A615/A615M, Grade 60

GENERAL NOTES

1. The first two digits following the letter(s) of the mark indicate the size ofthe bar:

   Mark "A502" = bar size #5
   Mark "P805" = bar size #8
   Mark "S650" = bar size #6

2. Each crank bar, Type B, may be replaced by two (2) straight bars (one top and one bottom) of the same bar size as the crank bar. Payment in either case shall be based on crank bars as schedule on the plans.

BECKER STRUCTURAL ENGINEERS
75 York Street, Portland, Maine 04101
207.879.1838 ■ beckerstructural.com

STATE OF MAINE
DEPARTMENT OF TRANSPORTATION

AC-IM- 1931(100)E

WIN 19311.00

BRIDGE PLANS

BRIDGE NO. 5796

PROJ. MANAGER	MIKE WIGHT	BY	DATE
DESIGN-DETAILED	B.WELCH	D.BURGESS	7\15
CHECKED-REVIEWED	J.BURGESS	B.WELCH	7\15
DESIGN2-DETAILED2			
DESIGN3-DETAILED3			
REVISIONS 1			
REVISIONS 2			
REVISIONS 3			
REVISIONS 4			
FIELD CHANGES			

SIGNATURE

P.E. NUMBER

DATE

WEBSTER AVENUE BRIDGE
OVER WEBSTER AVENUE
BANGOR PENOBSCOT COUNTY

REINFORCING STEEL SCHEDULE

SHEET NUMBER

30

OF 41

Filename: ...\00\BRIDGE\MSTA\030_Rebar.dgn Division: BRIDGE Username: common Date:7/28/2015

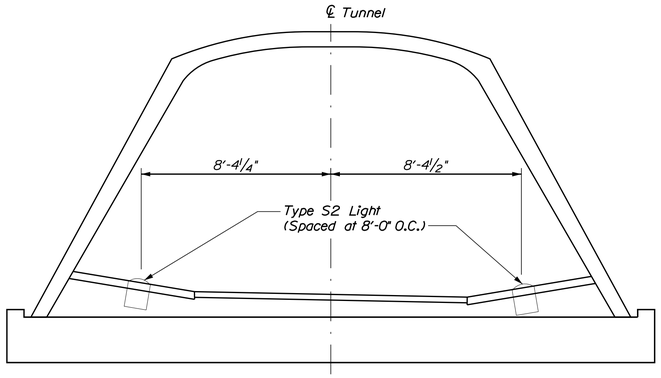

TUNNEL SECTION

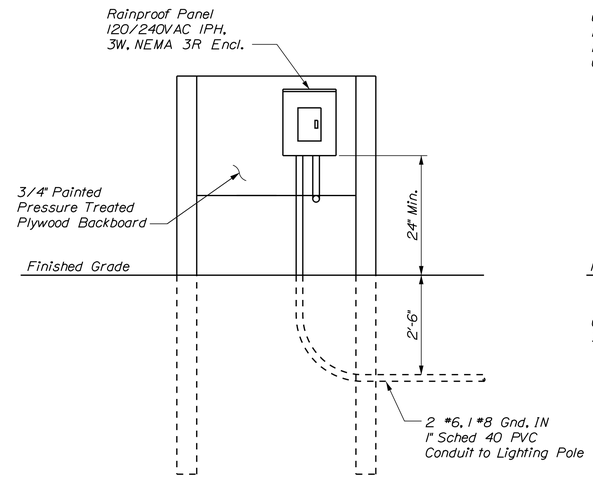

REAR VIEW

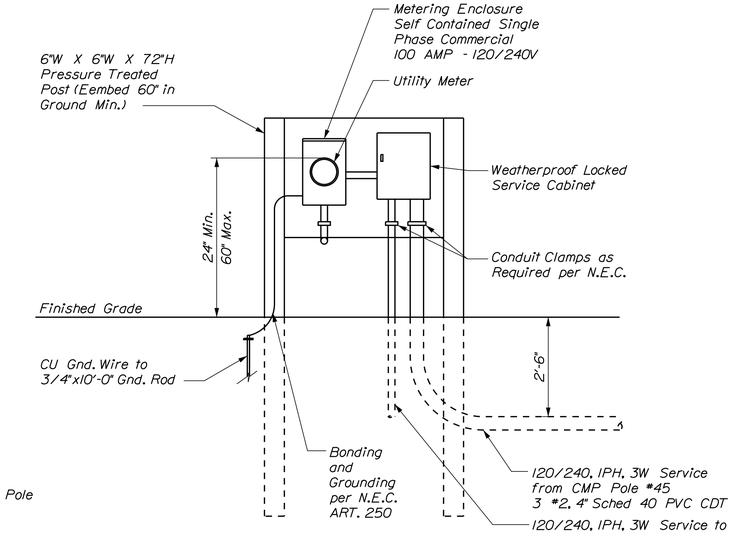

FRONT VIEW

SERVICE PANEL AND METER DETAIL

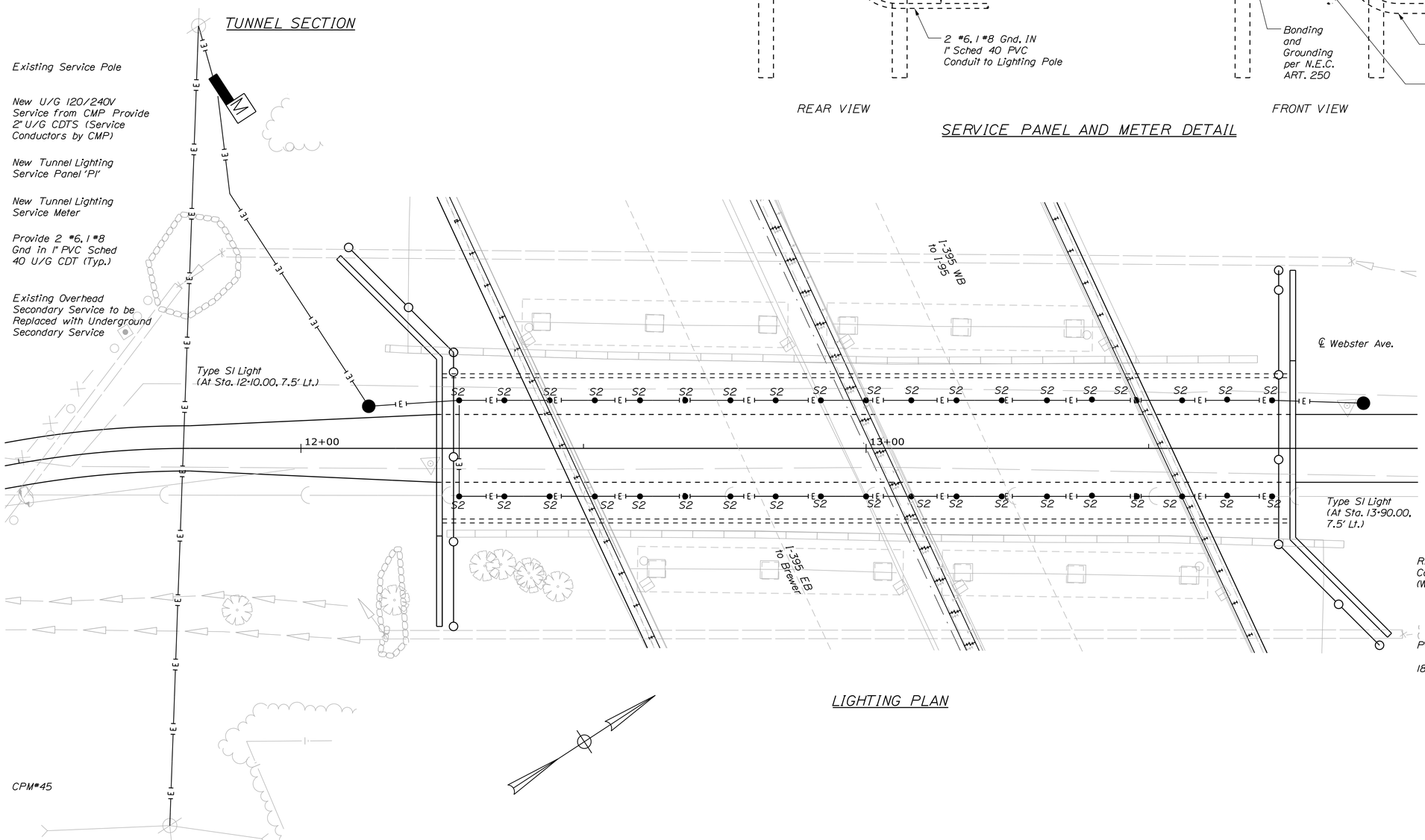

LIGHTING PLAN

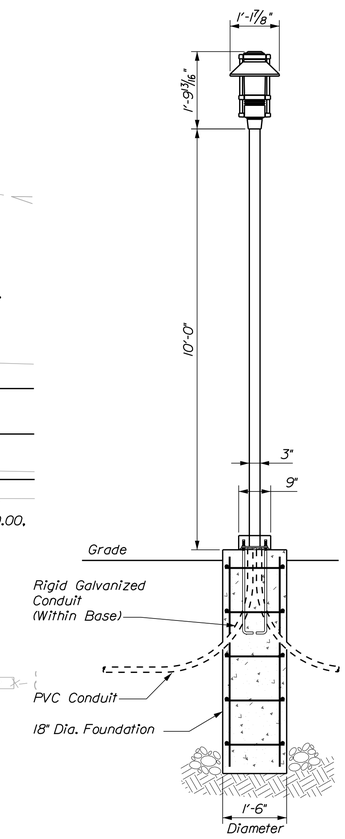

LIGHTING POLE DETAIL

Bartlett Design
LIGHTING & ELECTRICAL ENGINEERING
942 WASHINGTON STREET, BATH, ME 04530
TEL (207) 443-5447 FAX (207) 443-5560

STATE OF MAINE
DEPARTMENT OF TRANSPORTATION

AC-IM-1931(100)E

WIN 19311.00

BRIDGE NO: 5796

BRIDGE PLANS

STATE OF MAINE LAWRENCE E. BARTLETT No. 7928 PROFESSIONAL ENGINEER LICENSED

Lawrence E. Bartlett 07/23/15

Lawrence E. Bartlett			
SIGNATURE			
7928			
P.E. NUMBER			
07/23/15			
DATE			

PROJ. MANAGER	MIKE WIGHT	BY	DATE
DESIGN-DETAILED	J. CONFER	D.BURGESS	7\15
CHECKED-REVIEWED	L. BARTLETT	L. BARTLETT	7\15
DESIGN2-DETAILED2			
DESIGN3-DETAILED3			
REVISIONS 1			
REVISIONS 2			
REVISIONS 3			
REVISIONS 4			
FIELD CHANGES			

WEBSTER AVENUE BRIDGE
OVER WEBSTER AVENUE
BANGOR PENOBSCOT COUNTY

LIGHTING PLAN

SHEET NUMBER

31

OF 41

Filename: ...\BRIDGE\MSTA\031_Lighting.dgn Division: BRIDGE Username: common Date:7/27/2015

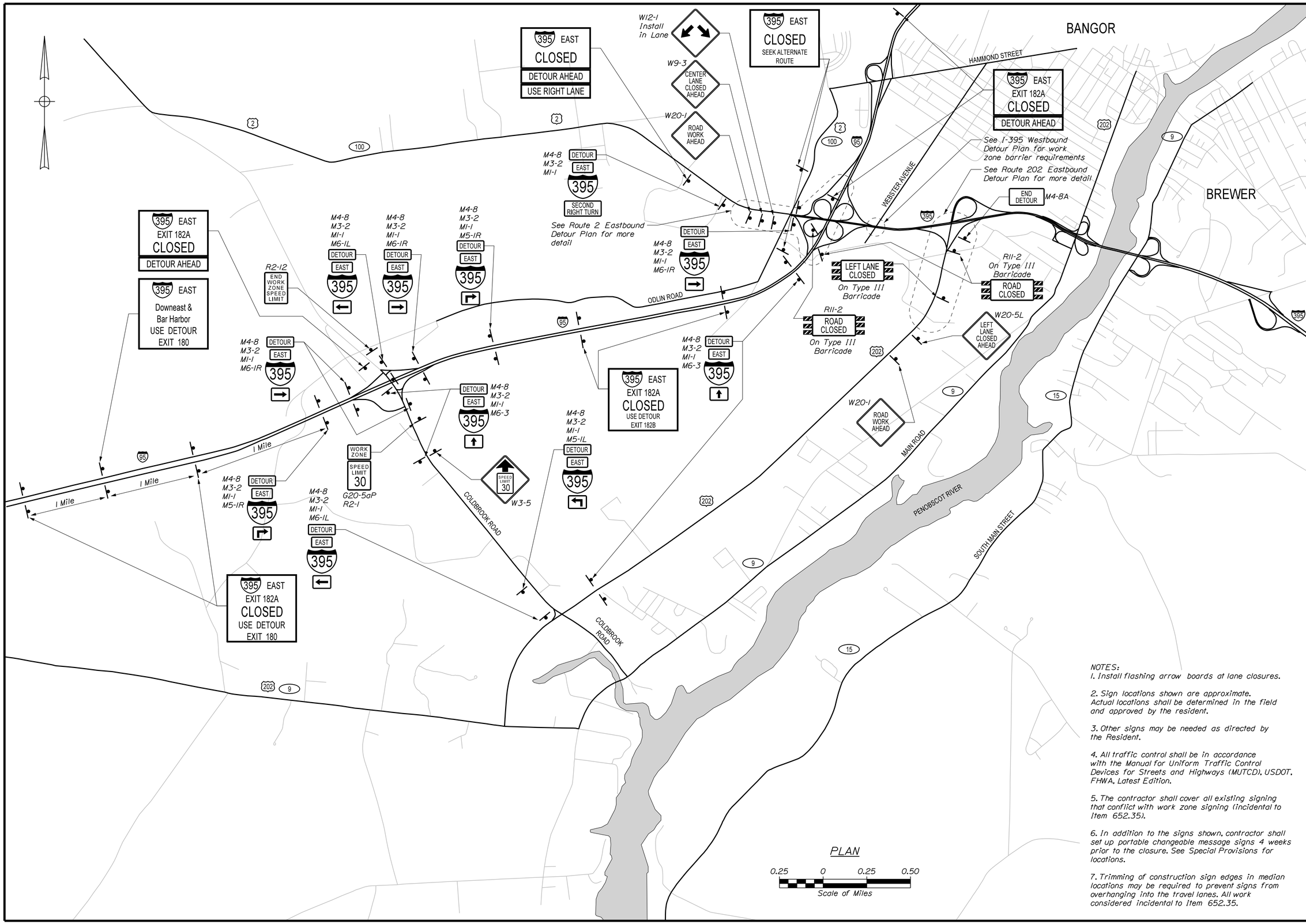

PLAN

0.25 0 0.25 0.50

Scale of Miles

NOTES:

1. Install flashing arrow boards at lane closures.

2. Sign locations shown are approximate. Actual locations shall be determined in the field and approved by the resident.

3. Other signs may be needed as directed by the Resident.

4. All traffic control shall be in accordance with the Manual for Uniform Traffic Control Devices for Streets and Highways (MUTCD), USDOT, FHWA, Latest Edition.

5. The contractor shall cover all existing signing that conflict with work zone signing (incidental to Item 652.35).

6. In addition to the signs shown, contractor shall set up portable changeable message signs 4 weeks prior to the closure. See Special Provisions for locations.

7. Trimming of construction sign edges in median locations may be required to prevent signs from overhanging into the travel lanes. All work considered incidental to Item 652.35.

STATE OF MAINE
DEPARTMENT OF TRANSPORTATION

AC-IM-1931(100)E

WIN 19311.00

BRIDGE NO.:5796

BRIDGE PLANS

PROJ. MANAGER	MIKE WIGHT	BY	DATE
DESIGN-DETAILED	B. HAVU	M. CUNDIFF	07/15
CHECKED-REVIEWED	D. ETTINGER		07/15
DESIGN2-DETAILED2			
DESIGN3-DETAILED3			
REVISIONS 1			
REVISIONS 2			
REVISIONS 3			
REVISIONS 4			
FIELD CHANGES			

SIGNATURE

P.E. NUMBER

DATE

INTERSTATE 395
OVER WEBSTER AVENUE
BANGOR PENOBSCOT

I-395 EASTBOUND DETOUR OVERALL PLAN

SHEET NUMBER

32

OF 41

Filename: ...\032_OverallDetourEast.dgn Division: HIGHWAY Username: mcundiff Date:7/23/2015

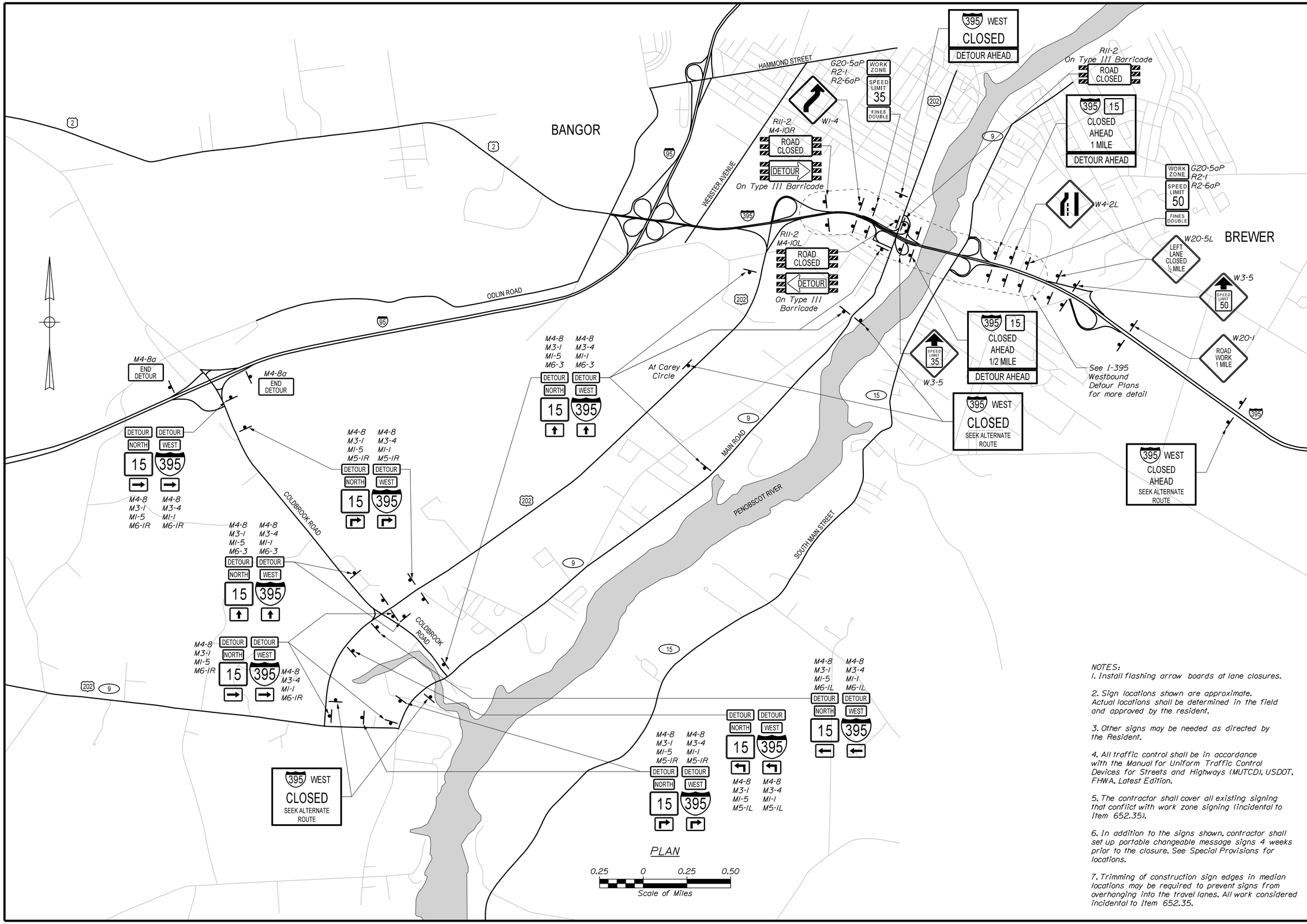

NOTES:

1. Install flashing arrow boards at lane closures.

2. Sign locations shown are approximate. Actual locations shall be determined in the field and approved by the resident.

3. Other signs may be needed as directed by the Resident.

4. All traffic control shall be in accordance with the Manual for Uniform Traffic Control Devices for Streets and Highways (MUTCD), USDOT, FHWA, Latest Edition.

5. The contractor shall cover all existing signing that conflict with work zone signing (incidental to Item 652.35).

6. In addition to the signs shown, contractor shall set up portable changeable message signs 4 weeks prior to the closure. See Special Provisions for locations.

7. Trimming of construction sign edges in median locations may be required to prevent signs from overhanging into the travel lanes. All work considered incidental to Item 652.35.

STATE OF MAINE
DEPARTMENT OF TRANSPORTATION

AC-IM-1931(100)E

WIN 19311.00

BRIDGE NO.:5796

BRIDGE PLANS

	MIKE WIGHT	BY	DATE
DESIGN-DETAILED	B. HAVU	M. CUNDIFF	07/15
CHECKED-REVIEWED	D. ETTINGER		07/15
DESIGN2-DETAILED2			
DESIGN3-DETAILED3			
REVISIONS 1			
REVISIONS 2			
REVISIONS 3			
REVISIONS 4			
FIELD CHANGES			

PROJ. MANAGER

SIGNATURE

P.E. NUMBER

DATE

INTERSTATE 395
OVER WEBSTER AVENUE
BANGOR PENOBSCOT

I-395 WESTBOUND
DETOUR OVERALL PLAN

SHEET NUMBER

33

OF 41

Filename: ...\033_OverallDetourWest.dgn Division: HIGHWAY Username: mcundiff Date:7/23/2015

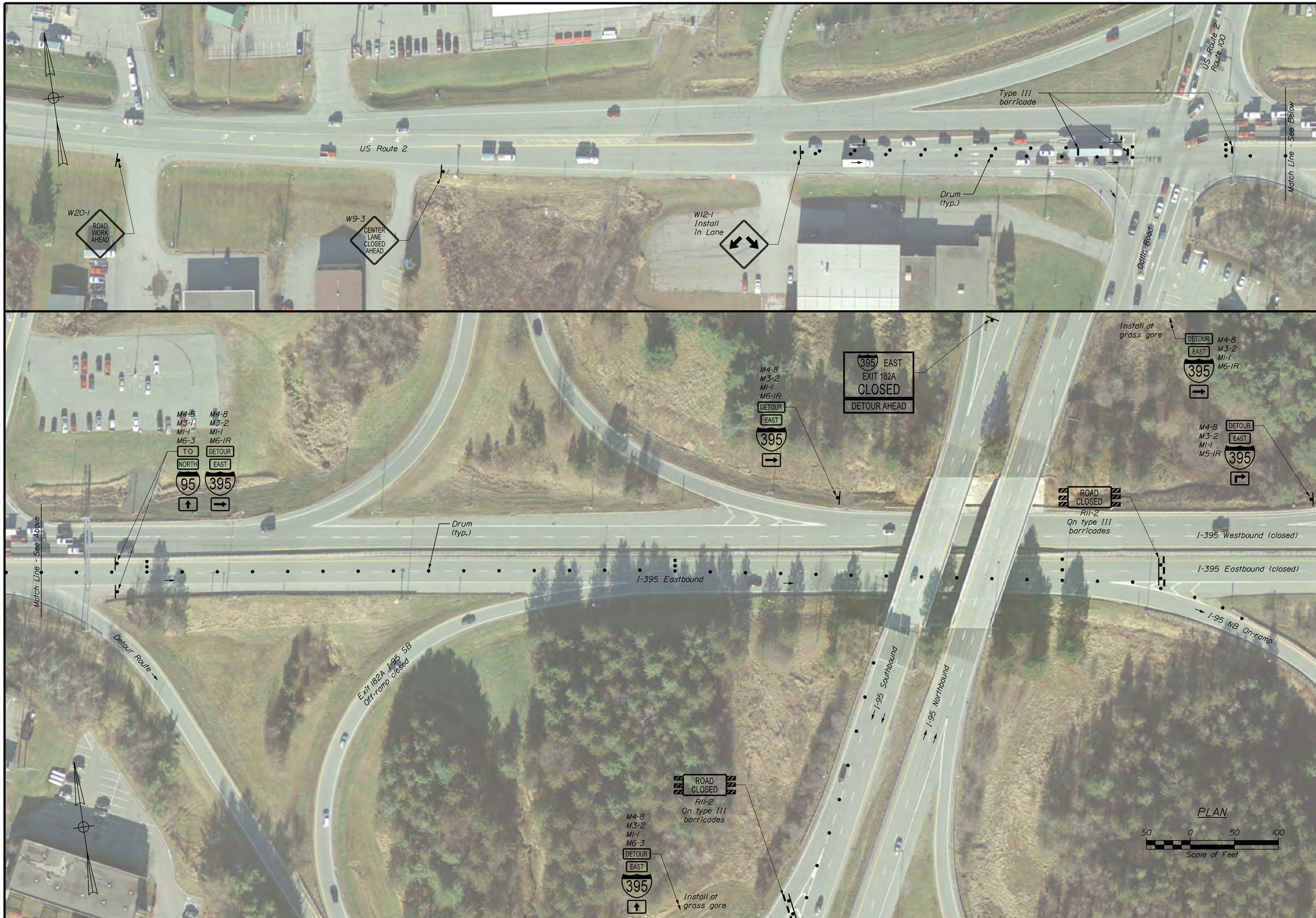

STATE OF MAINE
DEPARTMENT OF TRANSPORTATION

AC-IM-1931(100)E

WIN 19311.00

BRIDGE NO.5796

BRIDGE PLANS

SIGNATURE

P.E. NUMBER

DATE

PROJ. MANAGER	MIKE	BY	DATE
DESIGN-DETAILED	B. HAVU	M. CUNDIFF	07\15
CHECKED-REVIEWED	D. ETTINGER		07\15
DESIGN2-DETAILED2			
DESIGN3-DETAILED3			
REVISIONS 1			
REVISIONS 2			
REVISIONS 3			
REVISIONS 4			
FIELD CHANGES			

INTERSTATE 395
OVER WEBSTER AVENUE
BANGOR PENOBSCOT

ROUTE 2 EASTBOUND DETOUR PLAN

SHEET NUMBER

34

OF 41

Filename: ...\034_Route2EastDetour.dgn Division: HIGHWAY Username: mcundiff Date:7/23/2015

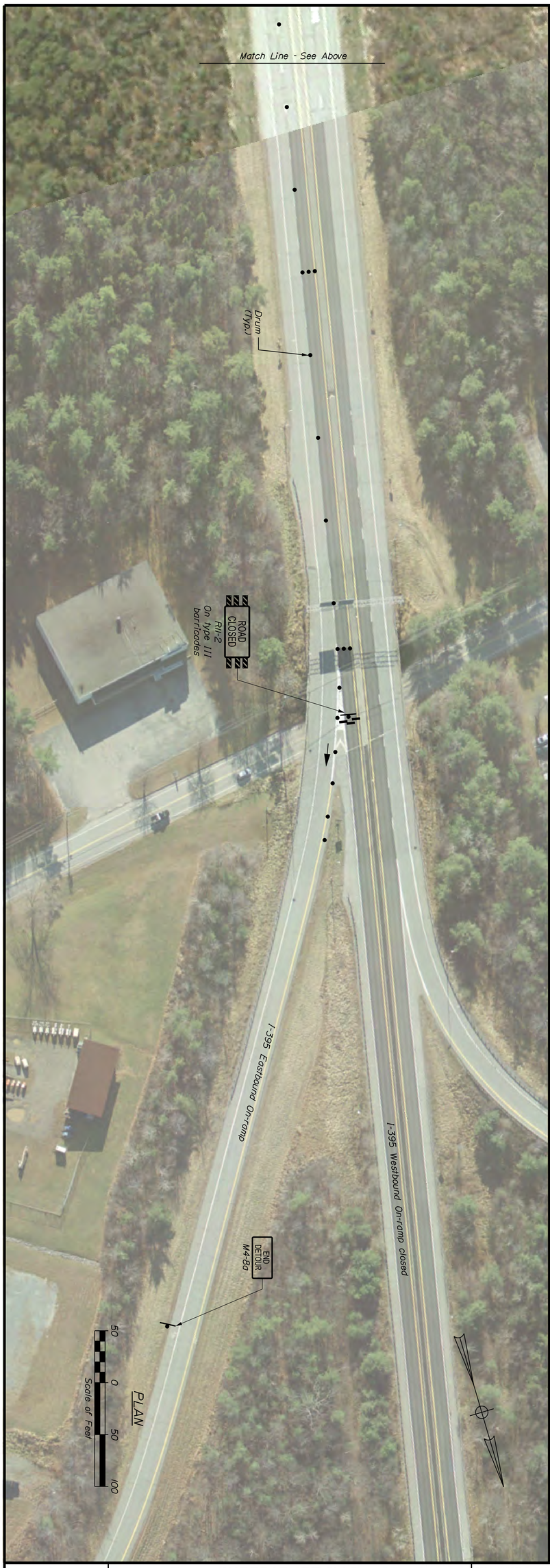

SHEET NUMBER 35 OF 41

INTERSTATE 395
OVER WEBSTER AVENUE
BANGOR PENOBSCOT

ROUTE 202 EASTBOUND DETOUR PLAN

PROJ. MANAGER	MIKE WIGHT	BY	DATE
DESIGN-DETAILED	B. HAVU	M. CUNDIFF	07\15
CHECKED-REVIEWED	D. ETTINGER		07\15
DESIGN2-DETAILED2			
DESIGN3-DETAILED3			
REVISIONS 1			
REVISIONS 2			
REVISIONS 3			
REVISIONS 4			
FIELD CHANGES			

SIGNATURE
P.E. NUMBER
DATE

STATE OF MAINE
DEPARTMENT OF TRANSPORTATION

AC-IM-1931(100)E

BRIDGE NO.:5796 WIN 19311.00 BRIDGE PLANS

INTERSTATE 395
OVER WEBSTER AVENUE
BANGOR PENOBSCOT

I-395 WESTBOUND DETOUR PLAN 1 OF 2

PROJ. MANAGER	MIKE WIGHT	BY	DATE
DESIGN-DETAILED	B. HAVU	M. CUNDIFF	07\15
CHECKED-REVIEWED	D. ETTINGER		07\15
DESIGN2-DETAILED2			
DESIGN3-DETAILED3			
REVISIONS 1			
REVISIONS 2			
REVISIONS 3			
REVISIONS 4			
FIELD CHANGES			

SIGNATURE
P.E. NUMBER
DATE

STATE OF MAINE
DEPARTMENT OF TRANSPORTATION

AC-IM-1931(100)E

BRIDGE NO.:5796 WIN 19311.00 BRIDGE PLANS

SHEET NUMBER 36 OF 41

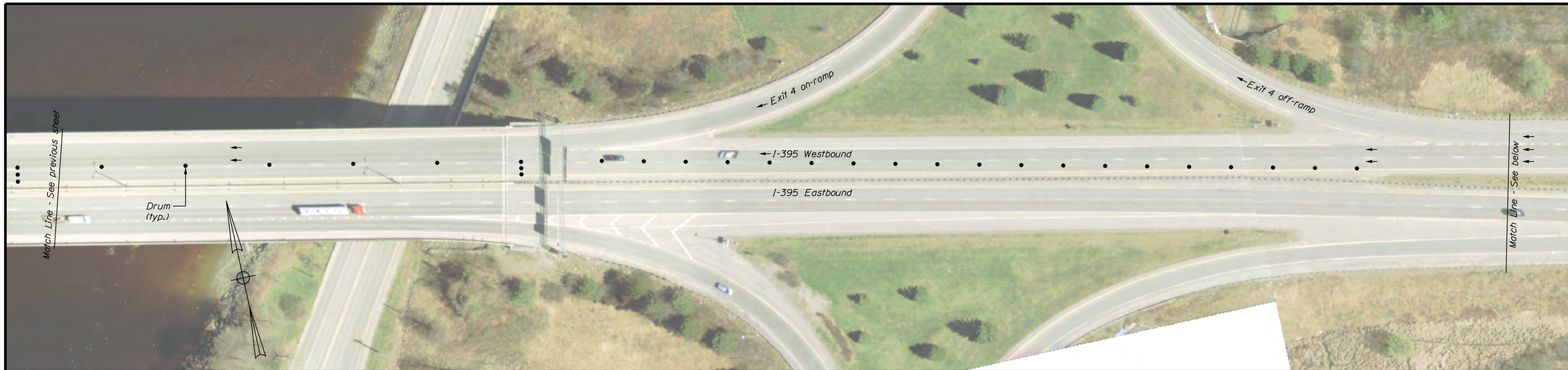

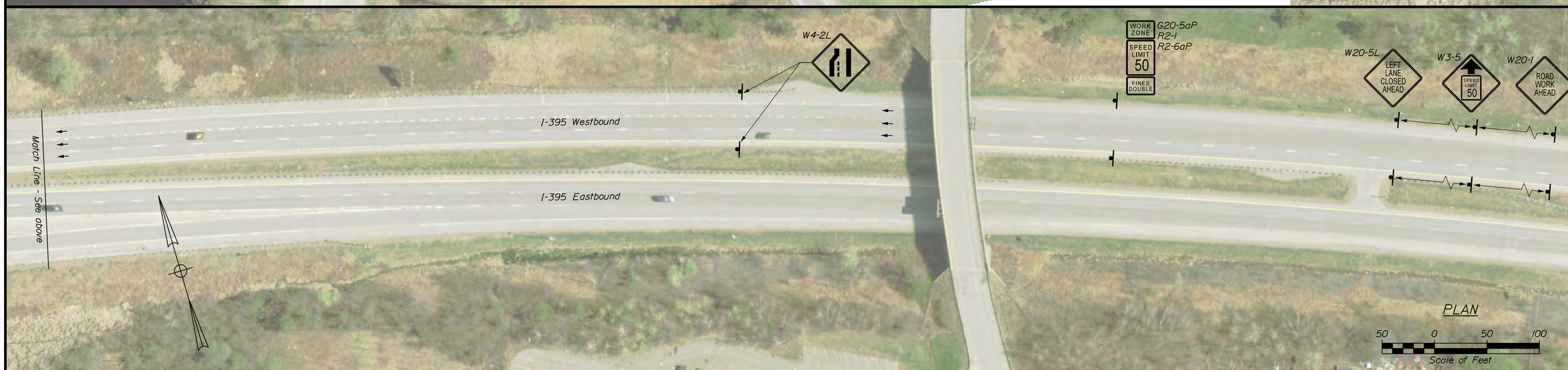

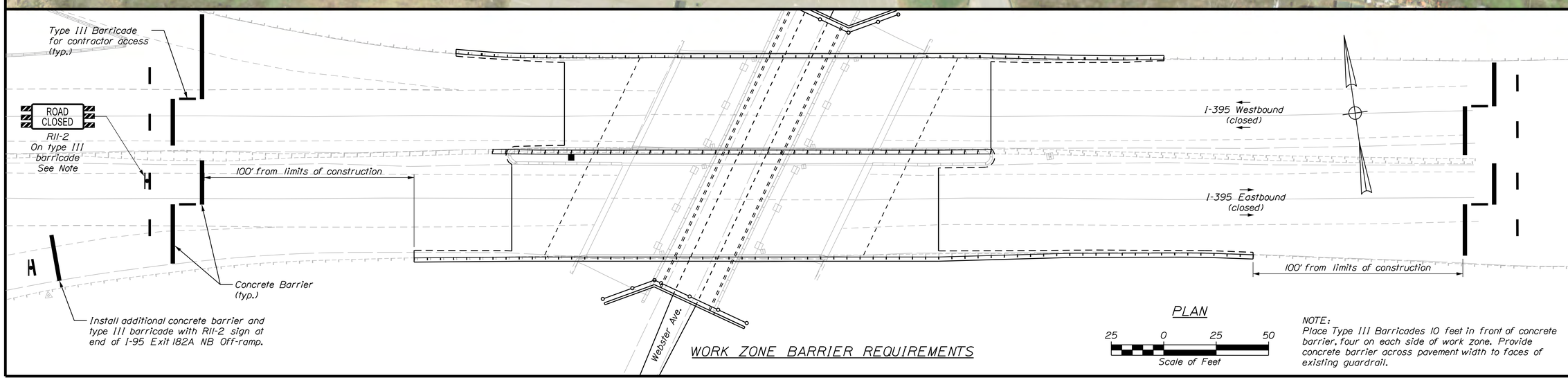

WORK ZONE BARRIER REQUIREMENTS

NOTE:
Place Type III Barricades 10 feet in front of concrete barrier, four on each side of work zone. Provide concrete barrier across pavement width to faces of existing guardrail.

STATE OF MAINE
DEPARTMENT OF TRANSPORTATION

AC-IM-1931(100)E

WIN 19311.00

BRIDGE NO.:5796

BRIDGE PLANS

SIGNATURE

P.E. NUMBER

DATE

PROJ. MANAGER	MIKE WIGHT	BY	DATE
DESIGN-DETAILED	B. HAVU	M. CUNDIFF	07\15
CHECKED-REVIEWED	D. ETTINGER		07\15
DESIGN2-DETAILED2			
DESIGN3-DETAILED3			
REVISIONS 1			
REVISIONS 2			
REVISIONS 3			
REVISIONS 4			
FIELD CHANGES			

INTERSTATE 395
OVER WEBSTER AVENUE
BANGOR PENOBSCOT

I-395 WESTBOUND
DETOUR PLAN 2 OF 2

SHEET NUMBER
37
OF 41

Filename: ...\Bridge\037_I395WestDetour.dgn Division: HIGHWAY Username: mcundiff Date:7/23/2015

NOTE:
1. When an exit ramp is closed, an "Exit Closed" sign (E5-2a) can be placed diagonally across the guide sign instead of covering the sign.

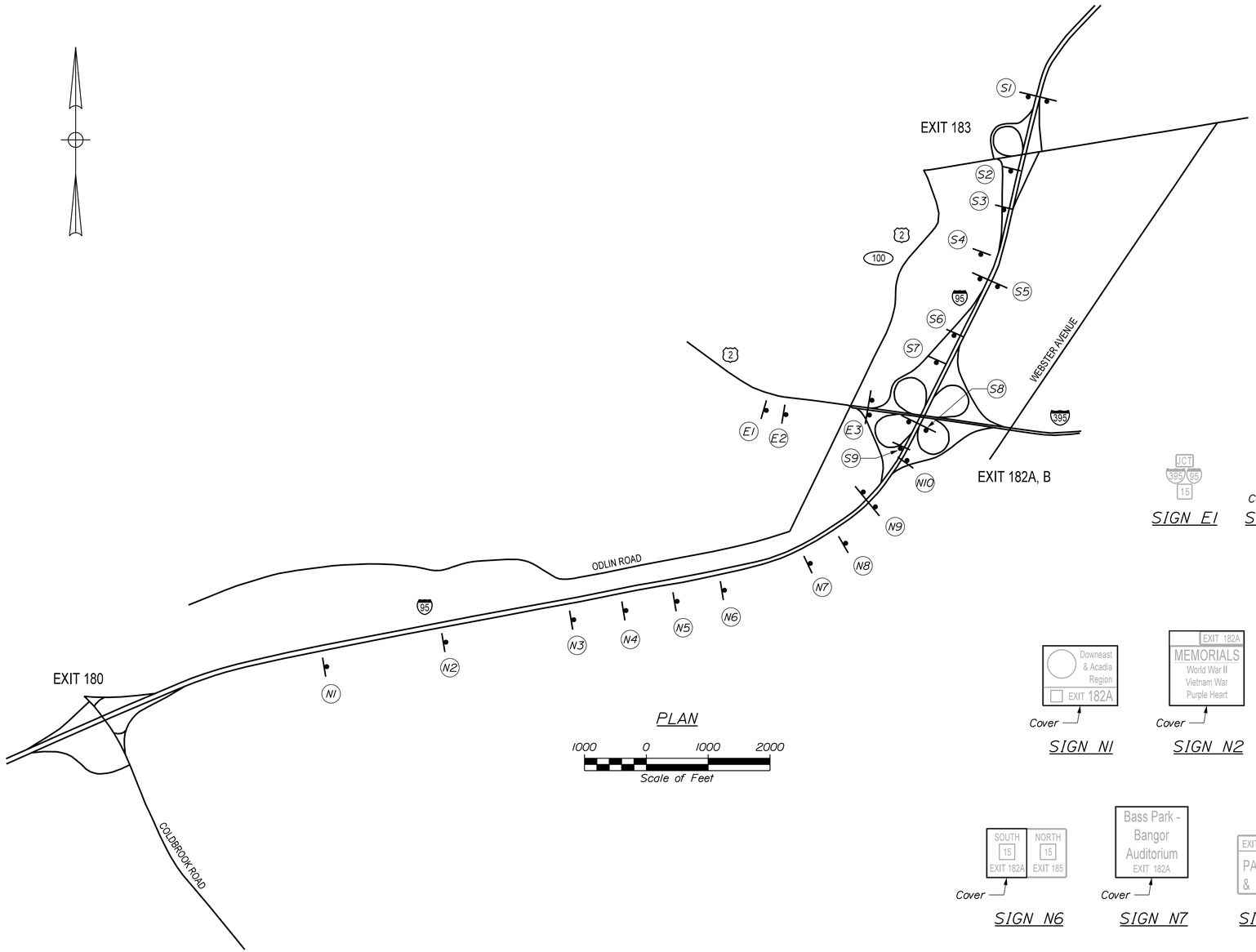

PLAN

1000 0 1000 2000
Scale of Feet

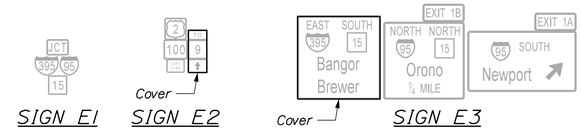

SIGN E1 SIGN E2 SIGN E3

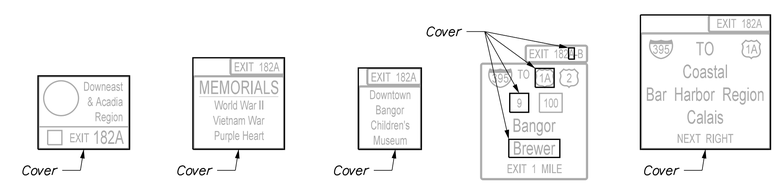

SIGN N1 SIGN N2 SIGN N3 SIGN N4 SIGN N5

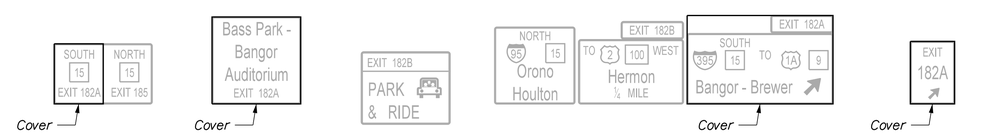

SIGN N6 SIGN N7 SIGN N8 SIGN N9 SIGN N10

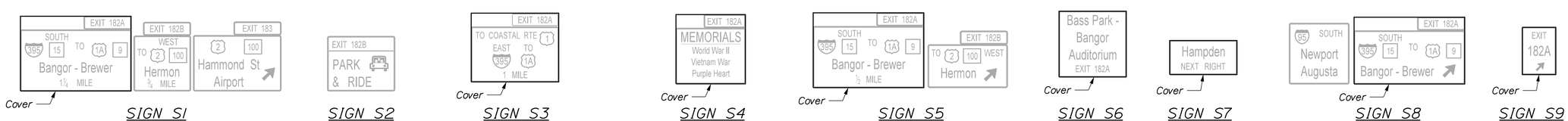

SIGN S1 SIGN S2 SIGN S3 SIGN S4 SIGN S5 SIGN S6 SIGN S7 SIGN S8 SIGN S9

STATE OF MAINE
DEPARTMENT OF TRANSPORTATION

AC-IM-1931(100)E

WIN 19311.00

BRIDGE NO.:5796

BRIDGE PLANS

PROJ. MANAGER	MIKE WIGHT	BY	DATE
DESIGN-DETAILED	B. HAVU	M. CUNDIFF	07\15
CHECKED-REVIEWED	D. ETTINGER		07\15
DESIGN2-DETAILED2			
DESIGN3-DETAILED3			
REVISIONS: 1			
REVISIONS: 2			
REVISIONS: 3			
REVISIONS: 4			
FIELD CHANGES			

SIGNATURE

P.E. NUMBER

DATE

INTERSTATE 395
OVER WEBSTER AVENUE
BANGOR PENOBSCOT

EXIST SIGN PLAN
1 OF 2

SHEET NUMBER
38
OF 41

Filename: ...\00\Bridge\038_ExistSigns1.dgn Division: HIGHWAY Username: mcundiff Date:7/23/2015

SIGN E1

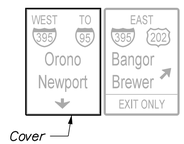

SIGN E2

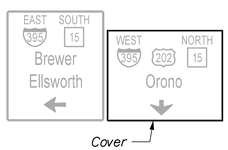

SIGN N1

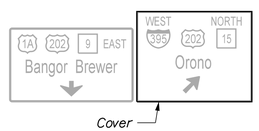

SIGN N2

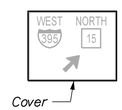

SIGN N3

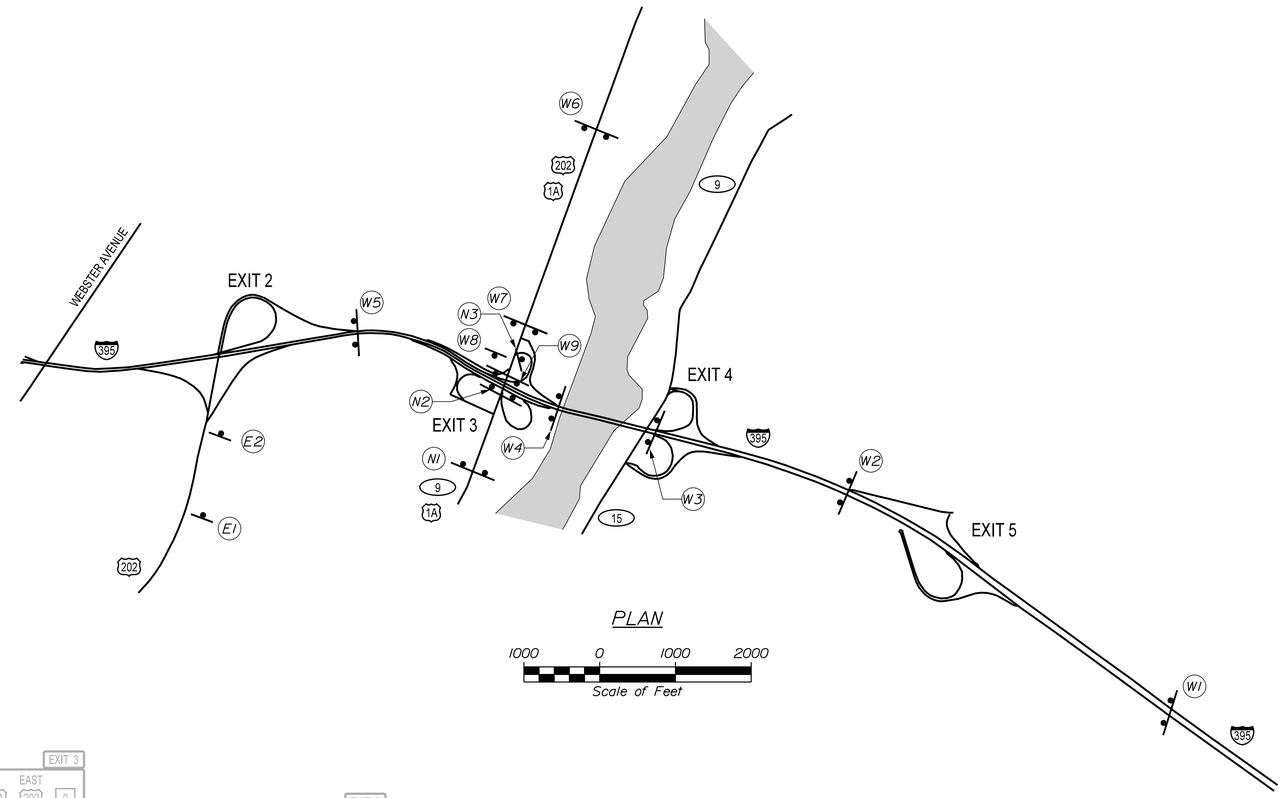

PLAN

SIGN W1

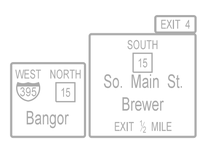

SIGN W2

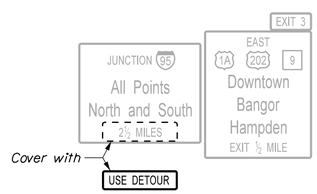

SIGN W3

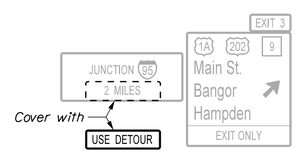

SIGN W4

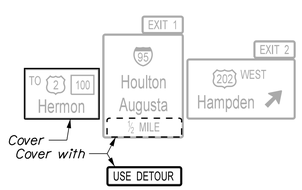

SIGN W5

SIGN W6

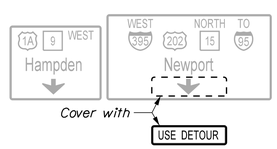

SIGN W7

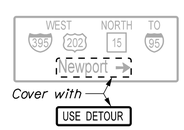

SIGN W8

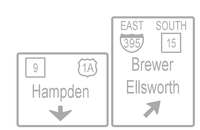

SIGN W9

NOTE:
1. When an exit ramp is closed, an "Exit Closed" sign (E5-2a) can be placed diagonally across the guide sign instead of covering the sign.

STATE OF MAINE
DEPARTMENT OF TRANSPORTATION

AC-IM-1931(100)E

WIN 19311.00

BRIDGE NO.-5796

BRIDGE PLANS

PROJ. MANAGER	MIKE WIGHT	BY	DATE
DESIGN-DETAILED	B. HAVU	M. CUNDIFF	07\15
CHECKED-REVIEWED	D. ETTINGER		07\15
DESIGN2-DETAILED2			
DESIGN3-DETAILED3			
REVISIONS 1			
REVISIONS 2			
REVISIONS 3			
REVISIONS 4			
FIELD CHANGES			

SIGNATURE

P.E. NUMBER

DATE

INTERSTATE 395
OVER WEBSTER AVENUE
BANGOR PENOBSCOT

EXIST SIGN PLAN
2 OF 2

SHEET NUMBER
39
OF 41

Filename: ...\00\Bridge\039_ExistSigns2.dgn Division: HIGHWAY Username: mcundiff Date:7/23/2015

Filename: ...\040_I95Exit180Striping.dgn Division: HIGHWAY Username: mcundiff Date:7/23/2015

LEGEND:
TSWLL = 6" Temporary Solid White Lane Line
TSYLL = 6" Temporary Solid Yellow Lane Line
TDYLL = 6" Temporary Double Yellow Lane Line

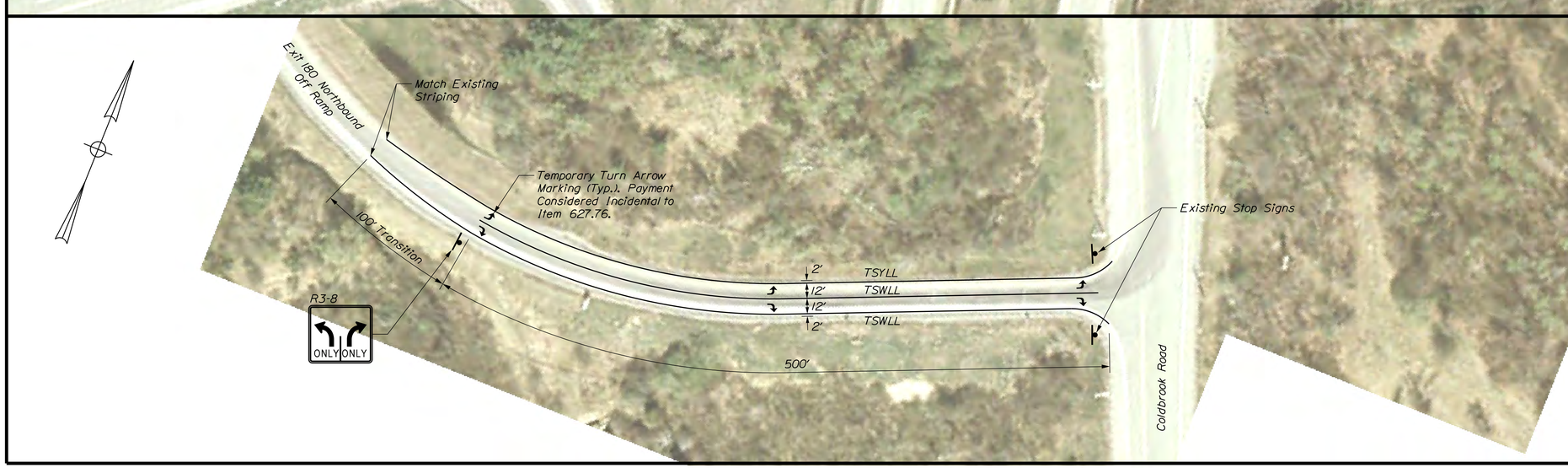

NOTES:

1. Temporary striping shall be tape materials and will be paid for under Item 627.51, 6" Temporary Pavement Tape, Yellow or White.

2. Existing pavement markings that conflict with proposed pavement markings shall be covered with black masking tape. Payment will be made under Item 627.57, 12" Removable Black Line Masking Tape.

3. Work is required for I-395 closure. Upon completion of I-395 closure, temporary pavement markings shall be removed and existing markings restored.

4. Temporary traffic signal required at the Exit 180 Southbound Off Ramp intersection with Coldbrook Road. Temporary signal work not shown on this plan.

PLAN

50 0 50 100
Scale of Feet

STATE OF MAINE
DEPARTMENT OF TRANSPORTATION

AC-IM-1931(100)E

WIN 19311.00

BRIDGE NO.:5796

BRIDGE PLANS

		BY	DATE
PROJ. MANAGER	MIKE WIGHT		
DESIGN-DETAILED	B. HAVU	M. CUNDIFF	07/15
CHECKED-REVIEWED	D. ETTINGER		07/15
DESIGN2-DETAILED2			
DESIGN3-DETAILED3			
REVISIONS 1			
REVISIONS 2			
REVISIONS 3			
REVISIONS 4			
FIELD CHANGES			

SIGNATURE

P.E. NUMBER

DATE

INTERSTATE 395
OVER WEBSTER AVENUE
BANGOR PENOBSCOT

I-95 EXIT 180 TEMPORARY STRIPING PLAN

SHEET NUMBER
40
OF 41

SHEET NO.	TOTAL SHEETS
1	5

WEBSTER AVENUE SANITARY SEWER BANGOR, MAINE

PENOBSCOT COUNTY

PROJECT LENGTH: 0.05 MILES

JUNE 2015

CONVENTIONAL SYMBOLS

EXISTING		PROPOSED	EXISTING		PROPOSED
	Iron pin found		12"rcp	Storm drain	
	Monument found			Underdrain	
	Utility pole		199	Existing contour	
	Construction Baseline	10+00		Fence	
	Edge of pavement			Catch basin	
	Curb			Water Shutoff	
	Right of way line			Sewer manhole	
OH	Overhead electric			Drain manhole	
UW	Water line			Fire hydrant	
S	Sanitary Line			Tree	
UG	Gas Line			Guy wire	
G	Gas Line				
	Sign				
	Building				

INDEX OF SHEETS

SHEET NO.	DESCRIPTION
1	TITLE SHEET
2	GENERAL NOTES
3	DETAILS
4	SANITARY SEWER PLAN
5	SANITARY SEWER PROFILE

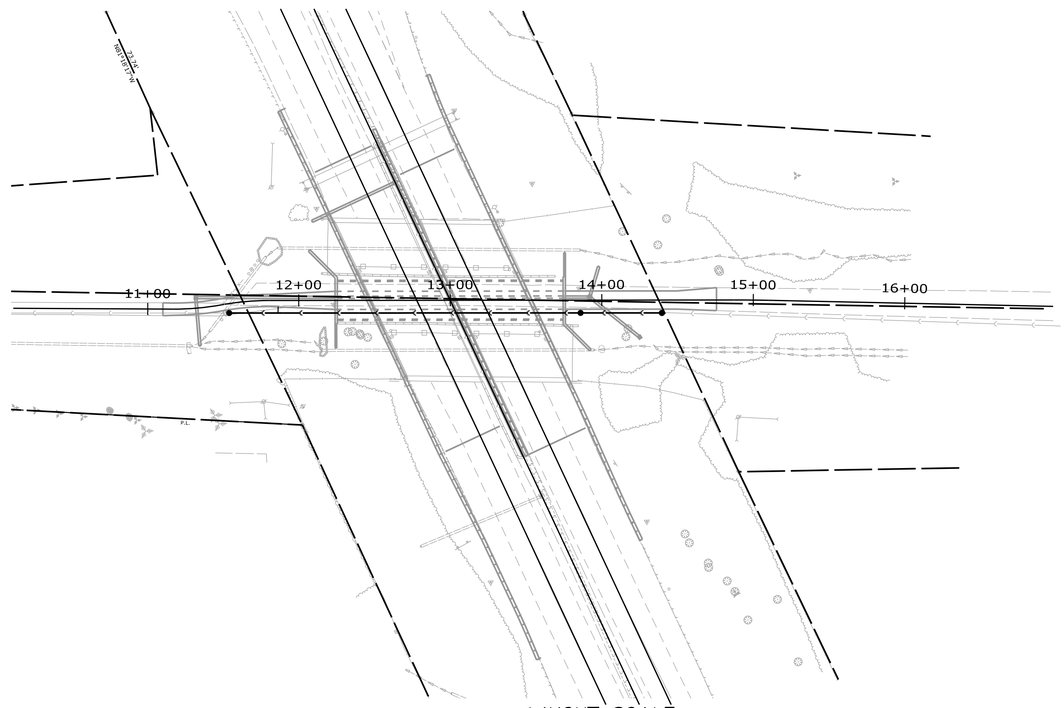

LAYOUT SCALE

50 0 50 100

Scale of Feet

LOCATION MAP
A PORTION OF PENOBSCOT COUNTY

STATE OF MAINE
WILLIAM C. HASKELL
No. 8518
LICENSED
PROFESSIONAL ENGINEER
9/22/15

CLIENT:
CITY OF BANGOR
73 HARLOW ST
BANGOR, ME 04401

NOTE:
* MAINTENANCE OF TRAFFIC PER THE MANUAL ON UNIFORM TRAFFIC CONTROL DEVICES (MUTCD LATEST EDITION).
* CONTRACTOR SHALL USE THE B.M.P. (BEST MANAGEMENT PRACTICES FOR EROSION AND SEDIMENT CONTROL) AS A MINIMUM STANDARD.

Rev.	Date	Revision
-	-	-

Issued For	Date	By
-	-	-

Prepared By:

GORRILL PALMER

Relationships. Responsiveness. Results.
www.gorrillpalmer.com
207.657.6910

GENERAL NOTES:

1. EXISTING CONDITIONS BASED ON SURVEY COMPLETED BY MAINEDOT.

2. PROTECT EXISTING FEATURES/STRUCTURES NOT CALLED OUT FOR REPLACEMENT/ALTERATION.

3. THE CITY OF BANGOR SHALL HAVE THE RIGHT AND AUTHORITY TO DETERMINE THE ACCEPTABILITY OF WORK AND MATERIALS IN PROGRESS OR COMPLETED. THE CITY OF BANGOR SHALL HAVE THE RIGHT TO REJECT ANY WORK OR MATERIALS WHICH DO NOT CONFORM, IN ITS SOLE OPINION, TO THE PLANS OR SPECIFICATIONS.

4. ALL MATERIAL SCHEDULES SHOWN ON THE PLANS ARE FOR GENERAL INFORMATION ONLY. THE CONTRACTOR SHALL PREPARE HIS OWN MATERIAL SCHEDULES BASED UPON HIS PLAN REVIEW. ALL SCHEDULES SHALL BE VERIFIED IN THE FIELD BY THE CONTRACTOR PRIOR TO ORDERING MATERIALS OR PERFORMING WORK.

5. DISPOSITION OF SURPLUS MATERIAL SHALL BE THE RESPONSIBILITY OF THE CONTRACTOR. SURPLUS MATERIAL SHALL NOT BE DISPOSED OF ON THE PROJECT SITE. DISPOSITION SHALL BE MADE ONLY AT WASTE AREAS WHICH ARE LICENSED TO ACCEPT SUCH MATERIALS, UNLESS THE MATERIALS CAN BE INCORPORATED IN FILLS IN OTHER PROJECTS OF THE CONTRACTOR.

6. PROPERTY LINE AND R.O.W. MONUMENTS SHALL NOT BE DISTURBED BY CONSTRUCTION. IF DISTURBED, THEY SHALL BE RESET TO THEIR ORIGINAL LOCATIONS AT THE CONTRACTOR'S EXPENSE, BY A MAINE LICENSED LAND SURVEYOR.

7. THE CONTRACTOR SHALL CALL THE APPROPRIATE UTILITY COMPANY AND DIG SAFE (888-344-7233) AT LEAST 72 HOURS PRIOR TO ANY EXCAVATION TO REQUEST EXACT FIELD LOCATION OF UTILITIES. THE CONTRACTOR IS SPECIFICALLY CAUTIONED THAT THE LOCATION AND/OR THE ELEVATION OF THE EXISTING UTILITIES AS SHOWN ON THESE PLANS IS BASED ON RECORDS OF THE VARIOUS UTILITY COMPANIES AND WHERE POSSIBLE MEASUREMENTS TAKEN IN THE FIELD. UNDERGROUND FACILITIES INDICATED ON THE CROSS SECTIONS HAVE BEEN CARRIED OVER FROM THE PLAN VIEW DATA AND MAY ALSO INCLUDE FURTHER APPROXIMATIONS OF THE ELEVATIONS (DEPTHS) BASED UPON STRAIGHT LINE INTERPOLATION FROM THE NEAREST MANHOLES, GATE VALVES, OR TEST PITS. THIS INFORMATION IS NOT TO BE RELIED ON AS BEING EXACT OR COMPLETE. THE ENGINEER HAS COORDINATED THE PROPOSED WORK WITH THE AFFECTED UTILITY COMPANIES TO ARRANGE FOR REQUIRED RELOCATION OF THEIR KNOWN FACILITIES. IT SHALL BE THE RESPONSIBILITY OF THE CONTRACTOR TO COORDINATE HIS WORK AND SCHEDULE WITH THE UTILITY RELOCATION WORK AND THE PROPER UTILITY COMPANY. THE FOLLOWING UTILITIES HAVE FACILITIES WITHIN THE PROJECT LIMITS:

   -CITY OF BANGOR (SEWER)
   -CITY OF BANGOR (FIRE ALARM)
   -EMERA MAINE

   ANY ADDITIONAL UTILITY WORK NOT SPECIFIED ON THE PLANS SHALL BE COMPLETED BY THE RESPECTIVE UTILITY COMPANY.

8. CONTRACTOR SHALL COORDINATE DISRUPTION OF PRIVATE UTILITY SERVICES WITH LAND OWNER AT LEAST 2 DAYS (48 HOURS) PRIOR TO SCHEDULED DISRUPTION.

9. EXCAVATIONS ACCOMPLISHED AS PART OF THIS PROJECT SHALL BE CONSTRUCTED IN ACCORDANCE WITH OSHA REGULATIONS SUBPART P OF 29 CRF PART 1926.650-.652 (CONSTRUCTION STANDARD FOR EXCAVATIONS).

10. LOCATIONS OF RIGHT-OF-WAY SHOWN ON PLANS ARE APPROXIMATE ONLY.

11. THE CONTRACTOR SHALL COMPLETE THE WORK WITHIN THE RIGHT-OF-WAY, AND SHALL BE RESPONSIBLE IF TRESPASSING ON PRIVATE PROPERTY OCCURS.

12. CONTRACTOR SHALL NOT PARK, IMPEDE ACCESS OR STORE EQUIPMENT/MATERIAL ON ADJACENT CITY OR PRIVATELY OWNED LAND WITHOUT WRITTEN CONSENT FROM THE CITY OR LAND OWNER.

13. THE CONTRACTOR SHALL RESTORE ALL AREAS DISTURBED OR DAMAGED BY CONSTRUCTION ACTIVITIES, TO ORIGINAL FINISH SURFACE (LAWN, PAVEMENT, GRAVEL, ETC.) UNLESS NOTED OTHERWISE ON PLANS. RESTORATION OF PAVED SURFACES, GRAVEL SURFACES, DRIVEWAYS, WALKWAYS, LAWNS AND OTHER AREAS SHALL BE AT THE CONTRACTORS EXPENSE. ALL CURB DAMAGED BY CONSTRUCTION ACTIVITIES SHALL BE REPLACED IN KIND, AT THE CONTRACTORS EXPENSE, AND SHALL CONFORM TO CITY OF BANGOR STANDARDS.

14. ALL SIGNING, SIGNAL AND STRIPING MATERIALS AND PLACEMENT SHALL CONFORM TO THE MAINE DOT STANDARD SPECIFICATIONS, SUPPLEMENTAL SPECIFICATIONS AND STANDARD DETAILS AND WITH THE FEDERAL HIGHWAY ADMINISTRATION "MANUAL ON UNIFORM TRAFFIC CONTROL DEVICES".

15. THE CONTRACTOR SHALL BE RESPONSIBLE FOR REPAIRING ANY TRENCH PAVEMENT THAT HAS EXPERIENCED EXCESSIVE SETTLEMENT, CRACKING, OR OPENING OF JOINTS. REPAIRS MAY INCLUDE OVERLAY, REMOVAL OF UNACCEPTABLE MATERIALS, COMPLETE REPLACEMENT, JOINT SEALING, OR RECONSTRUCTING PAVEMENT JOINTS AS REQUIRED. THIS WORK MAY BE NECESSARY AFTER THE FINAL ACCEPTANCE OF WORK OR PRIOR TO THE ONE YEAR GUARANTEE. THIS WORK SHALL BE DONE AT THE CONTRACTOR'S EXPENSE.

16. THE CONTRACTOR SHALL ANTICIPATE THAT GROUNDWATER WILL BE ENCOUNTERED DURING CONSTRUCTION AND SHALL INCLUDE SUFFICIENT COSTS WITHIN THEIR BID TO PROVIDE DEWATERING AS NECESSARY. NO SEPARATE PAYMENT SHALL BE MADE TO THE CONTRACTOR FOR DEWATERING.

17. EXISTING FACILITIES/STRUCTURES (I.E. TREES, POLES, LIGHT POLES) SHALL BE REMOVED AND PROTECTED DURING CONSTRUCTION. CITY RETAINS THE RIGHT TO KEEP ANY AND ALL REMOVED FACILITIES/STRUCTURES. CONTRACTOR SHALL DISPOSE OF UNWANTED/UNUSED FACILITIES/STRUCTURES OFF SITE IN CONFORMANCE WITH APPLICABLE FEDERAL, STATE, AND LOCATION REGULATIONS.

18. ALL MATERIALS AND CONSTRUCTION METHODS SHALL CONFORM WITH APPLICABLE FEDERAL, STATE, AND CITY OF BANGOR CODES AND SPECIFICATIONS.

19. COMPACTION REQUIREMENTS:

LOCATION	MINIMUM COMPACTION*
BELOW PAVED AREAS	95%
BELOW SEEDED AREAS	90%

*ALL PERCENTAGES OF COMPACTION SHALL BE OF MAXIMUM DRY DENSITY AT THE OPTIMUM MOISTURE CONTENT AS DETERMINED AND CONTROLLED IN ACCORDANCE WITH ASTM D-1557.

20. STATIONING, PIPE LENGTHS, PIPE SLOPES AND PIPE INVERT CALCULATIONS ARE MEASURED ALONG THE PIPE CENTERLINE TO THE INSIDE WALL OF MANHOLE AND CATCH BASIN STRUCTURES.

21. THE CONTRACTOR SHALL PROVIDE, ERECT AND MAINTAIN ALL NECESSARY BARRIERS, FENCES, LIGHTS, WARNING SIGNS AND OTHER DEVICES NECESSARY TO SAFEGUARD TRAFFIC AND THE PUBLIC DURING WORKING AND NON-WORKING HOURS FOR THE DURATION OF THE PROJECT. SITE SHALL BE LEFT WITH APPROPRIATE SAFETY MEASURES IN PLACE DURING NON-WORKING HOURS. NO TRENCH SHALL BE LEFT OPEN DURING NON-WORKING HOURS. SITE SAFETY IS THE RESPONSIBILITY OF THE CONTRACTOR, DURING BOTH WORKING AND NON-WORKING HOURS.

22. IT IS THE CONTRACTORS RESPONSIBILITY TO FAMILIARIZE THEMSELVES WITH THE EXISTING CONDITIONS PRIOR TO BIDDING.

23. THE FOLLOWING SHALL BE INCIDENTAL TO THE 801 & 803 PAY ITEMS:

   - CUTTING OF PIPE AND/OR CONNECTIONS NECESSARY TO CONSTRUCT NEW STORM DRAIN & SEWER PIPE AND APPURTENANCES
   - WORK & MATERIALS NECESSARY TO CONNECT NEW OR EXISTING PIPES TO CATCH BASINS OR MANHOLES
   -CHANGES TO FLOW LINES/PROFILE GRADES/PIPE INVERTS OF ONE(1) FOOT OR LESS.

TEMPORARY EROSION CONTROL MEASURES

1. MAINTENANCE OF EROSION CONTROL MEASURES IS OF PARAMOUNT IMPORTANCE TO THE CITY. THE CONTRACTOR IS RESPONSIBLE FOR COMPLYING WITH ALL EROSION CONTROL MEASURES SHOWN ON THE PLANS. ADDITIONAL EROSION CONTROL MEASURES SHALL BE INSTALLED IF DEEMED NECESSARY BY ON-SITE INSPECTIONS OF THE CITY OR THEIR REPRESENTATIVES AT NO ADDITIONAL COST TO THE CITY.
2. LAND DISTURBING ACTIVITIES SHALL BE ACCOMPLISHED IN A MANNER AND SEQUENCE THAT CAUSES THE LEAST PRACTICAL DISTURBANCE OF THE SITE.
3. PRIOR TO BEGINNING ANY CONSTRUCTION ACTIVITIES, THE CONTRACTOR SHALL INSTALL EROSION CONTROL BMPs AS SHOWN OR NOTED ON THE PLANS.
4. SILTATION FENCE SHALL BE INSTALLED DOWN GRADIENT OF ANY DISTURBED AREAS TO TRAP RUNOFF-BORNE SEDIMENTS UNTIL GRASS AREAS ARE REVEGETATED. THE SILT FENCE SHALL BE INSTALLED PER THE DETAILS PROVIDED ON THIS PLAN AND INSPECTED BEFORE AND IMMEDIATELY AFTER EACH RAINFALL AND AT LEAST DAILY DURING PROLONGED RAINFALL. REPAIRS SHALL BE MADE IF THERE ARE ANY SIGNS OF EROSION OR SEDIMENTATION BELOW THE FENCE LINE. IF THERE ARE SIGNS OF UNDERCUTTING AT THE CENTER OR THE EDGES, OR IMPOUNDING OF LARGE VOLUMES OF WATER BEHIND THE FENCE, THE BARRIER SHALL BE REPLACED WITH A STONE CHECK DAM.
5. FOR WORK WHICH IS CONDUCTED BETWEEN SEPTEMBER 15TH AND APRIL 15TH OF ANY CALENDAR YEAR, ALL DISTURBED AREAS, SHALL BE COVERED WITH HAY MULCH OR EROSION CONTROL MIX, APPLIED AT TWICE THE NORMAL APPLICATION RATE AND ANCHORED WITH A FABRIC NETTING. THE TIME PERIOD FOR APPLYING MULCH SHALL BE LIMITED TO 7 DAYS FOR ALL AREAS.
6. PUBLIC WAYS SHALL BE SWEPT, AS NECESSARY, TO CONTROL MUD AND DUST.
7. SILT FENCING WITH A MAXIMUM STAKE SPACING OF 6 FEET SHOULD BE USED, UNLESS THE FENCE IS SUPPORTED BY WIRE FENCE REINFORCEMENT OF MINIMUM 14 GAUGE AND WITH A MAXIMUM MESH SPACING OF 6 INCHES, IN WHICH CASE STAKES MAY BE SPACED A MAXIMUM OF 10 FEET APART. THE BOTTOM OF THE FENCE SHALL BE EMBEDDED IN A SOIL TRENCH.
8. WATER AND/OR CALCIUM CHLORIDE SHALL BE FURNISHED AND APPLIED IN ACCORDANCE WITH MAINE DOT SPECIFICATIONS - SECTION 637 - DUST CONTROL.
9. LOAM AND SEED IS INTENDED TO SERVE AS THE PRIMARY PERMANENT REVEGETATIVE MEASURE FOR ALL DISTURBED AREAS NOT PROVIDED WITH OTHER EROSION CONTROL MEASURES, SUCH AS RIPRAP.

Rev.	Date	Revision
-	-	-

Issued For	Date	By
-	-	-

Design: OC	Draft: LAN	Date: JUNE 2015
Checked: WCH	Scale:	Job No.: 3028
File Name:		

This plan shall not be modified without written permission from Gorrill Palmer (GP). Any alterations, authorized or otherwise, shall be at the user's sole risk and without liability to GP.

GORRILL PALMER
Relationships. Responsiveness. Results.
www.gorrillpalmer.com
207.657.6910

Drawing Name: GENERAL NOTES

Project: Webster Avenue Sanitary Sewer
Bangor, Maine

Client: City of Bangor
73 Harlow St, Bangor, ME 04401

Drawing No. U2

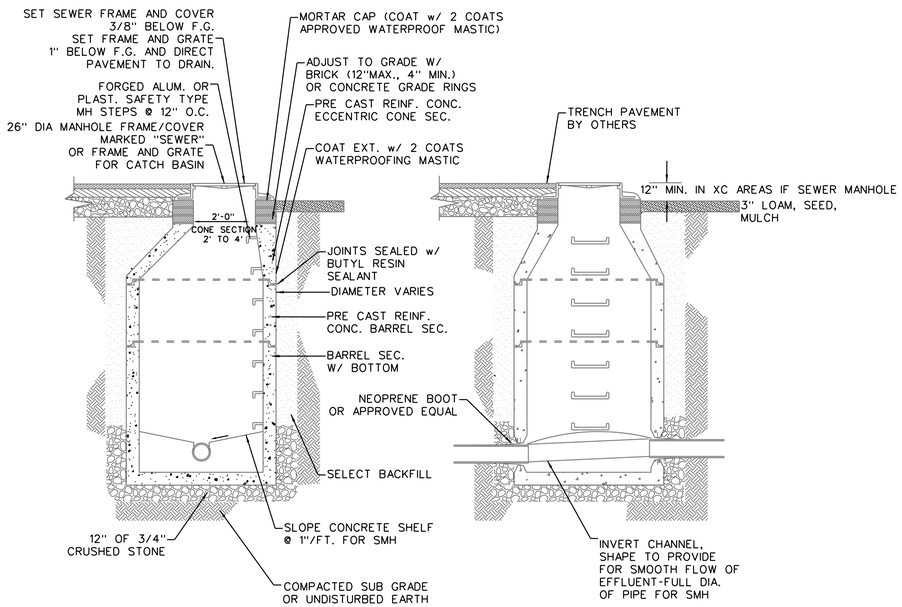

PRECAST STANDARD SANITARY SEWER MANHOLE

NOT TO SCALE

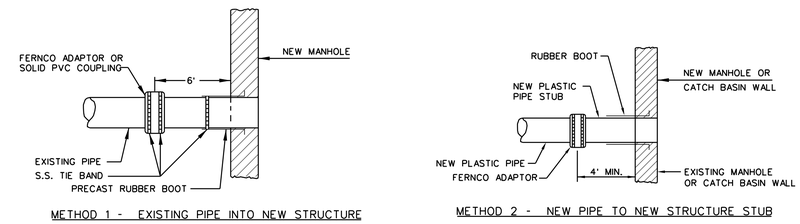

METHOD 1 - EXISTING PIPE INTO NEW STRUCTURE

METHOD 2 - NEW PIPE TO NEW STRUCTURE STUB

PLASTIC PIPE CONNECTIONS

NOT TO SCALE

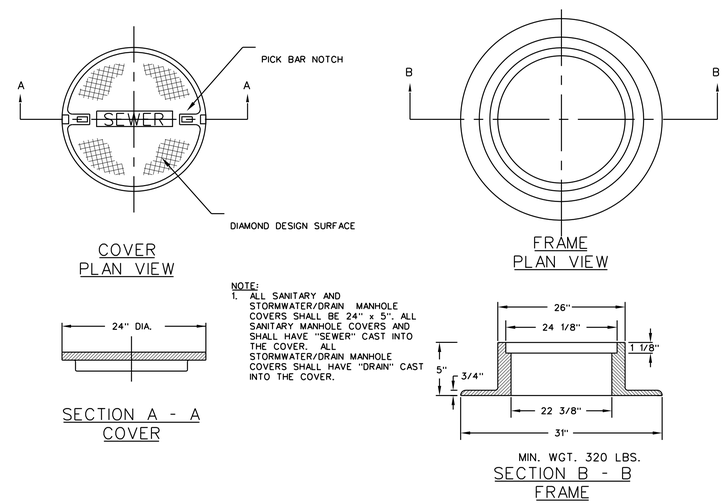

CAST IRON MANHOLE COVER AND FRAME

NOT TO SCALE

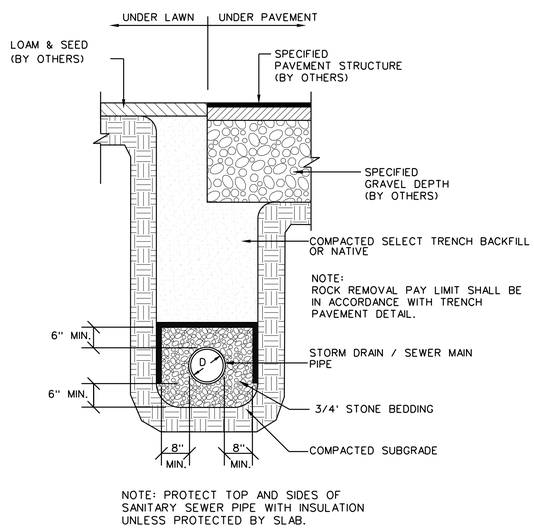

NOTE: PROTECT TOP AND SIDES OF SANITARY SEWER PIPE WITH INSULATION UNLESS PROTECTED BY SLAB.

TYPICAL PIPE TRENCH

NOT TO SCALE

GENERAL NOTES FOR MANHOLES AND CATCH BASINS

1. ALL CONCRETE SHALL HAVE A MINIMUM ULTIMATE COMPRESSIVE STRENGTH OF 4000 lbs. PER SQ. INCH AT THE END OF 28 DAYS, UNLESS OTHERWISE NOTED.
2. MANHOLES MAY BE CONSTRUCTED OF MASONRY, PRECAST REINFORCED CONCRETE, OR CAST IN PLACE.
3. PRECAST REINFORCED CONE BARREL MANUFACTURED PER ASTM SPEC. C-478.
4. ALL STORM AND SEWER MANHOLE COVERS SHALL BE SOLID AND SHALL HAVE ONE 7/8" DIAMETER DRILLED PICK HOLE LOCATED 8" FROM THE CENTER OF THE COVER.
5. ALL SANITARY MANHOLE COVERS SHALL HAVE "SEWER" CAST INTO THE COVER. ALL STORMWATER/DRAIN MANHOLE COVERS SHALL HAVE "DRAIN" CAST INTO THE COVER.
6. ALL MANHOLE RISERS SHALL BE 24" CLEAR OPENING OR APPROVED EQUAL.
7. SEWER BRICK SHALL CONFORM TO ASTM SPEC. DESIGNATE ON C-32-63, GRADE MA AND SA.
8. ALL SANITARY MANHOLES SHALL HAVE A WATERPROOFING COATING APPLIED TO THE EXTERIOR SURFACE.
9. CATCH BASIN FRAMES FOR TYPE A4 CATCH BASIN CURB INLETS SHALL BE DR5A OR APPROVED EQUAL.
10. CASTINGS SHALL CONFORM TO ASTM DESIGNATION A48-CLASS 35.
11. EXISTING MANHOLES, CATCH BASINS, FRAMES, AND COVERS SHALL BE SALVAGED BY THE CONTRACTOR, AND SHALL REMAIN THE PROPERTY OF THE CITY OF PORTLAND.
12. ALL CATCH BASIN OUTLETS SHALL BE INSTALLED WITH A CASCO TRAP.

Rev.	Date	Revision
-	-	-

Issued For	Date	By
-	-	-

Design: OC | Draft: LAN | Date: JUNE 2015
Checked: WCH | Scale: | Job No.: 3028
File Name:

This plan shall not be modified without written permission from Gorrill Palmer (GP). Any alterations, authorized or otherwise, shall be at the user's sole risk and without liability to GP.

GORRILL PALMER
Relationships. Responsiveness. Results.
www.gorrillpalmer.com
207.657.6910

Drawing Name: DETAILS
Project: Webster Avenue Sanitary Sewer, Bangor, Maine
Client: City of Bangor, 73 Harlow St, Bangor, ME 04401

Drawing No. U3

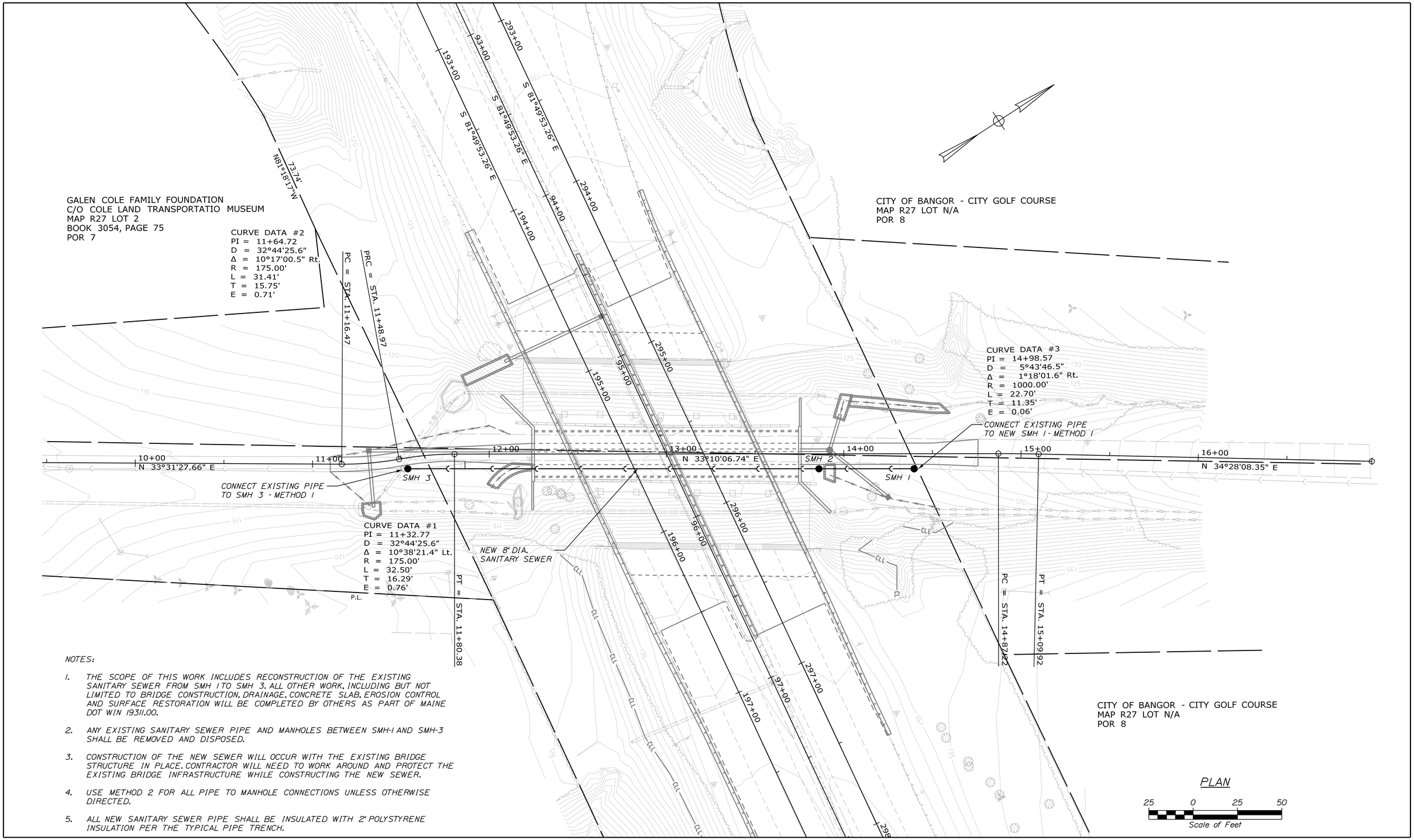

NOTES:

1. THE SCOPE OF THIS WORK INCLUDES RECONSTRUCTION OF THE EXISTING SANITARY SEWER FROM SMH 1 TO SMH 3. ALL OTHER WORK, INCLUDING BUT NOT LIMITED TO BRIDGE CONSTRUCTION, DRAINAGE, CONCRETE SLAB, EROSION CONTROL AND SURFACE RESTORATION WILL BE COMPLETED BY OTHERS AS PART OF MAINE DOT WIN 19311.00.

2. ANY EXISTING SANITARY SEWER PIPE AND MANHOLES BETWEEN SMH-1 AND SMH-3 SHALL BE REMOVED AND DISPOSED.

3. CONSTRUCTION OF THE NEW SEWER WILL OCCUR WITH THE EXISTING BRIDGE STRUCTURE IN PLACE. CONTRACTOR WILL NEED TO WORK AROUND AND PROTECT THE EXISTING BRIDGE INFRASTRUCTURE WHILE CONSTRUCTING THE NEW SEWER.

4. USE METHOD 2 FOR ALL PIPE TO MANHOLE CONNECTIONS UNLESS OTHERWISE DIRECTED.

5. ALL NEW SANITARY SEWER PIPE SHALL BE INSULATED WITH 2" POLYSTYRENE INSULATION PER THE TYPICAL PIPE TRENCH.

Rev.	Date	Revision
-	-	-

Issued For	Date	By
-	-	-

Design: OC	Draft: LAN	Date: JUNE 2015
Checked: WCH	Scale:	Job No.: 3028
File Name:		

This plan shall not be modified without written permission from Gorrill Palmer (GP). Any alterations, authorized or otherwise, shall be at the user's sole risk and without liability to GP.

GORRILL PALMER
Relationships. Responsiveness. Results.
www.gorrillpalmer.com
207.657.6910

Drawing Name: **SANITARY SEWER PLAN**

Project: **Webster Avenue Sanitary Sewer**
Bangor, Maine

Client: **City of Bangor**
73 Harlow St, Bangor, ME 04401

Drawing No. U4

BANGOR, WEBSTER AVENUE

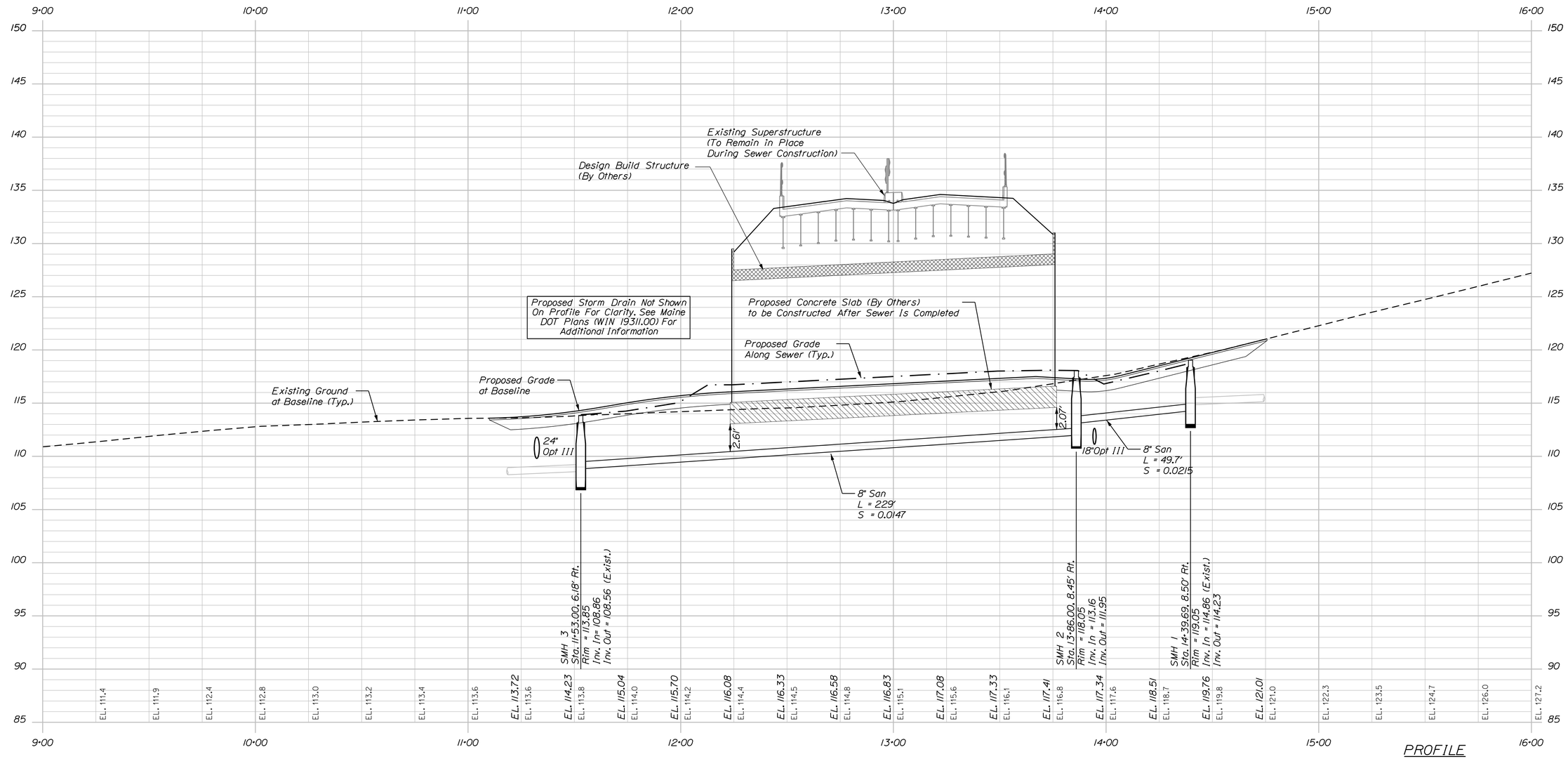

WEBSTER AVENUE SEWER PROFILE

PROFILE

Horiz. 25 0 25 50

Vert. 5 0 5 10

Scale of Feet

Rev.	Date	Revision
-	-	-

Issued For	Date	By
-	-	-

Design: OC	Draft: LAN	Date: JUNE 2015
Checked: WCH	Scale:	Job No.: 3028
File Name:		

This plan shall not be modified without written permission from Gorrill Palmer (GP). Any alterations, authorized or otherwise, shall be at the user's sole risk and without liability to GP.

GORRILL PALMER

Relationships. Responsiveness. Results.
www.gorrillpalmer.com
207.657.6910

Drawing Name: **SANITARY SEWER PROFILE**

Project: **Webster Avenue Sanitary Sewer**
Bangor, Maine

Client: **City of Bangor**
73 Harlow St, Bangor, ME 04401

Drawing No. U5

BANGOR, WEBSTER AVENUE