B.P.R. DIV. NO.	STATE	PROJECT NO.	SHEET NO.	TOTAL SHEETS
1	MAINE	I-083-1(1)	84	230

BANGOR INDUSTRIAL SPUR

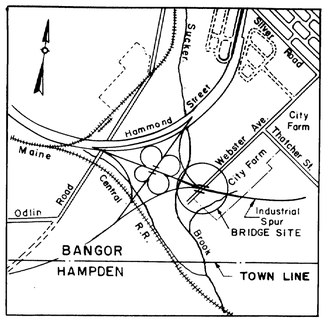

LOCATION MAP
NO SCALE

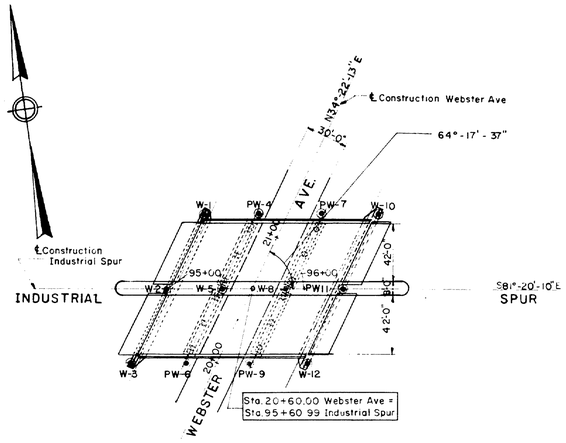

KEY PLAN
SCALE: 1"=50'-0"

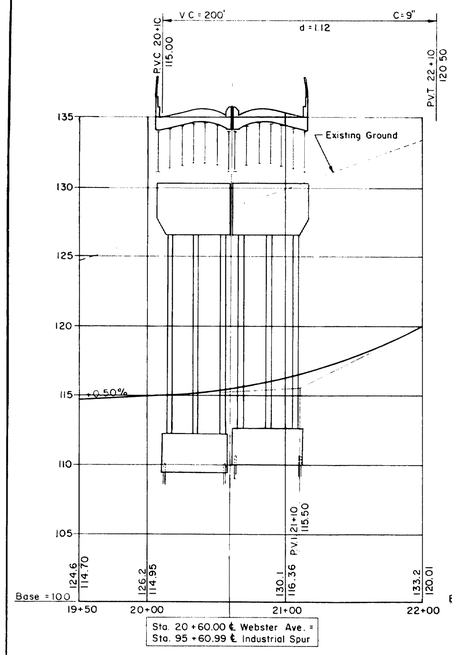

PROFILE ALONG WEBSTER AVE.
SCALES Horiz. 1"=50'-0" Vert. 1"=5'-0"

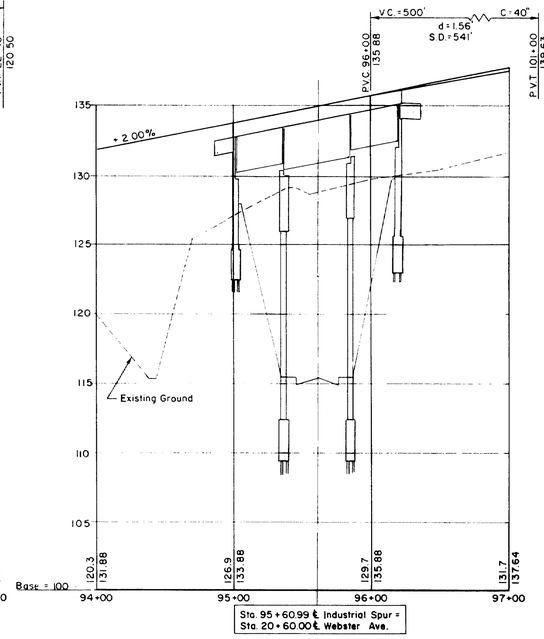

PROFILE ALONG INDUSTRIAL SPUR
SCALES Horiz 1"=50'-0" Vert. 1"=5'-0"

GENERAL NOTES

FOUNDATIONS:
Foundations may be altered, if necessary, to suit conditions encountered in construction.

DESIGN:
In accordance with the Specifications of the American Association of State Highway Officials for H20-S16-44 loading (1953 edition), modified for military requirements.

Design Stresses Structural Steel 18,000 psi
Reinforcing Steel 18,000 psi
Concrete (n=10) 1,200 psi

CONSTRUCTION:
State of Maine Standard Specification to be followed except as noted in Special Provisions.

REINFORCEMENT:
All bars shall have deformations conforming to A.S.T.M. Designation A 305

Unless otherwise shown on plans, reinforcing bars shall be lapped 20 diameters to make a splice, except that main reinforcing bars near the top of slabs and beams having more than 12 inches of concrete under the bars shall be lapped 35 diameters to make a splice

BENCH MARK:
TBM #8 R.R. Spike in root of Northside of forked 24" Pine Sta 96+10±, 390'± Rt. Elev. 117.69

ESTIMATED QUANTITIES
(NOT GUARANTEED)

STRUCTURAL EARTH EXCAVATION (ABUTMENTS AND RETAINING WALLS)	640	CU. YDS
STRUCTURAL EARTH EXCAVATION, (PIERS)	400	CU. YDS
BITUMINOUS CONCRETE SURFACE COURSE (TYPE "A")	170	TONS
MEMBRANE WATERPROOFING (3 PLY)	1,140	SQ. YDS
PORTLAND CEMENT CONCRETE (ABUTMENTS AND RETAINING WALLS)	365	CU. YDS
PORTLAND CEMENT CONCRETE, (PIERS)	360	CU. YDS
PORTLAND CEMENT CONCRETE (ROADWAY AND SIDEWALK SLABS ON STEEL BRIDGES)	420	CU. YDS
PORTLAND CEMENT	1,710	BBLS.
BRIDGE DRAINAGE	1	LUMP SUM
STRUCTURAL STEEL, FABRICATED AND DELIVERED	328,000	LBS.
STRUCTURAL STEEL ERECTION	328,000	LBS
REINFORCING STEEL DELIVERED	153,200	LBS.
REINFORCING STEEL PLACED	153,200	LBS
CAST IN PLACE CONCRETE PILES	2,500	LIN. FT.
FRENCH DRAINS	150	CU. YDS
ALUMINUM RAILING	240	LIN. FT
SLOPED GRANITE CURB (6"x7")	240	LIN. FT
SLOPE PAVING FOR BRIDGE	80	SQ. YDS.
GRAVEL BASE COURSE-IN PLACE MEASUREMENT	400	CU. YDS
PILE LOADING TEST	1	LUMP SUM
2" GALVANIZED CONDUIT	120	LIN. FT

FINAL AS BUILT PLANS

APPROVED BY John Clarkeson DATE 9/9/57
THE CLARKESON ENGINEERING CO., INC.
CONSULTING ENGINEERS
BOSTON MASSACHUSETTS

DESIGN	CHECK H.P.	BRIDGE NO.
DRAWN D.A.T.	APPROVED: WAH BCJM	SURVEY PLOT

STATE HIGHWAY COMMISSION
INDUSTRIAL SPUR
OVER
WEBSTER AVE.
IN THE CITY OF
BANGOR
PENOBSCOT COUNTY
KEY PLAN & PROFILES

SHEET 1 OF 7 AUGUSTA, MAINE

M-1155

0 1 2 3 4 5 INCHES

B.P.R. DIV. NO.	STATE	PROJECT NO.	SHEET NO.	TOTAL SHEETS
1	MAINE	I - 083 - 1 (1)	86	230

BANGOR INDUSTRIAL SPUR

W-1

Elevations	Description of Materials	Casing Blows per Foot	Spoon Blows per Foot	Percent Recovery	Vane Shear Strength (Tons per Sq. Ft.)
128.1	Brown fine sandy silt or silty sand	34 25 25 20			
125.1	Mottled fine sandy silt	18 16 11 14 13	3 3		
121.0	Brown silty fine sand	13 14 12 11 10	0 3		1.59 1.36
114.6	Blue gray silty clay	9 9 8 4 7			.383
	Sand layer at 108.6	7 8 7 9 11	0		.443
103.3	Gray silty sand	12 24 25 72 94 124 50 90	13 13		
95.6	Compact gray gravel	134 195 230 59 58 250 260 270	90		
88.1	Phyllite with weathered calcite and quartz seams Bedded 50°				
63.1					

122.50 Water; Base = 100

Bottom of Proposed Westerly Abutment Foundation

W-2

Elevations	Description of Materials	Casing Blows per Foot	Spoon Blows per Foot	Percent Recovery	Vane Shear Strength (Tons per Sq. Ft.)
126.8	Brown sandy silt or silty sand	50 24 16 15 14			
119.8	Gradually turning to gray	22 21 13 15 15 15 22 21 17 12 18 16	1 3		1.64 1.36 1.12
113.8	Gray black silty clay (black spots)	11 11 8 10 12			1.04 .483
107.8	Gray silty clay	12 10 10 13 15 17 18			.483
100.6	Gray sand or gravelly sand	45 65 75 80	2		.423
96.3	Brown sand or gravelly sand	1	19		
95.8		25* 21 22 65 78 85 30			
89.5		Refusal			

122.50 Water

*Blows per foot are on "A" rod taken from 95.8 to refusal.

W-3

Elevations	Description of Materials	Casing Blows per Foot	Spoon Blows per Foot	Percent Recovery	Vane Shear Strength (Tons per Sq. Ft.)
125.8	Brown fine sandy silt or silty sand	74 30 31			
122.8	Mottled silty sand or sandy silt	22 21 13 15 15 22 21 17 12 18 16	6 10		1.68 1.36 1.50
118.6	Dark gray sandy silt or silty sand	15 13 9 8 10			.383 .403
111.3	Gray silty clay	12 10 10 10 12 10 11 9 12 13 13			.423 .403 .423
106.8	Gray gravel or sandy gravel	30 85 35 70	135		
96.8	Brown compact stony sand	145 155 175	40		
92.8	Phyllite with weathered calcite and quartz seams Bedded 50°			72 100 90	
89.8					
84.8					

122.50 Water

W-5

Elevations	Description of Materials	Casing Blows per Foot	Spoon Blows per Foot	Percent Recovery	Vane Shear Strength (Tons per Sq. Ft.)
128.6	Gravel mixed (Fill) with brown silty sand	8 12 25			
125.1	Brown fine sandy silt or silty sand	30 14 12 15 16 20 22 15 20 13 14	3 6		1.68 1.50
115.1	Gray silty clay or clayey silt	14 8 8 9 11 12 11 10 10 12 16		0	.383 .423
102.7	Gray gravelly sand	27 36 73 63 29 50 75	15 24	0	.403 .423
95.8	Phyllite - bedded 50° - with weathered calcite seams to 4' depth			67 87 100 50 147	
90.8					

122.5 Water; 110.0; 109.0

Bottom of Proposed Pier A Foundation

W-8

Elevations	Description of Materials	Casing Blows per Foot	Spoon Blows per Foot	Percent Recovery	Vane Shear Strength (Tons per Sq. Ft.)
129.6	Brown silty fine sand or sandy silt	10 10 10 12 20 10 9 9	0 5		1.55
121.1	Gray silty fine sand or sandy silt	11 16 9 7 7 10			1.50
115.1	Bluish gray silty fine sand or sandy silt	10 6 6 8			.544
111.6	Gray silty clay or clayey silt	11 6 7 10 11 12 6	0		.463
103.1	Gray silty sand	20 45 150	5		
100.1	Rock			90 67	
95.1					

121.5 Water; 110.0; 109.0

Bottom of Proposed Pier B Foundation

W-10

Elevations	Description of Materials	Casing Blows per Foot	Spoon Blows per Foot	Percent Recovery	Vane Shear Strength (Tons per Sq. Ft.)
132.0	Brown fine sandy silt or silty sand	31 19 18 27 20 10 10 17 15	3 3	1.96	
123.7	Mottled fine sandy silt or silty sand	20 19 5 5 14	0 3	1.22	
119.0	Gray clayey silt or silty clay	23 23 9 9 10 6 5 5 5	4 10	423	1.78 1.08
108.4	Rock* - 75% quartz seam in phyllite	75		403	
105.4				87 67	

123.00

* 3" of rotten rock on top of ledge

W-12

Elevations	Description of Materials	Casing Blows per Foot	Spoon Blows per Foot	Percent Recovery	Vane Shear Strength (Tons per Sq. Ft.)
128.1	Brown silty fine sand or sandy silt	12 14 15 24 24 13 13 14 19 11 8 9 13 18			1.78 1.08
113.1	Gray sandy silt or sandy silty clay	10 8 10			564
109.6	Gray silty clay	12 15 7 7 11 23			604
103.6	Gravelly silty sand	170	55		
102.4	Rock - Phyllite bedded 70° with thin calcite and quartz seams			93 93	
97.4					

123.00

Bottom of Proposed Easterly Abutment Foundation

PW-4

Elev.	Depth in Feet	No. of Blows
130.4	0-1	10
	1-2	5
	2-3	10
	3-4	11
	4-5	13
	5-6	13
	6-7	12
	7-8	12
	8-9	14
120.0	9-10	15
	10-11	15
	11-12	15
	12-13	15
	13-14	16
	14-15	16
	15-16	17
	16-17	18
	17-18	17
	18-19	16
	19-20	16
110.0	20-21	16
	21-22	18
	22-23	16
	23-24	17
	24-25	18
	25-26	17
	26-27	25
	27-28	27
	28-29	26
100.0	29-30	41
	30-31	41
	31-32	38
	32-33	44
	33-34	105
		Not Refusal

Bottom of Proposed Pier A Foundation

PW-6

Elev.	Depth in Feet	No. of Blows
126.0	0-1	10
	1-2	3
	2-3	3
	3-4	6
	4-5	11
	5-6	16
	6-7	12
	7-8	14
120.0	8-9	15
	9-10	15
	10-11	15
	11-12	17
	12-13	17
	13-14	18
	14-15	18
	15-16	18
	16-17	18
110.0	17-18	22
	18-19	21
	19-20	22
	20-21	22
	21-22	23
	22-23	23
	23-24	24
	24-25	23
	25-26	23
100.0	26-27	22
	27-28	23
	28-29	23
	29-30	24
	30-31	110
	31-32	50
	32-33	40
	33-34	48
	34-34.2'	95
		40
		Refusal

Bottom of Proposed Pier B Foundation

PW-7

Elev.	Depth in Feet	No. of Blows
131.4	0-1	12
	1-2	3
	2-3	6
	3-4	14
	4-5	12
	5-6	19
	6-7	14
	7-8	13
	8-9	15
	9-10	17
120.0	10-11	18
	11-12	19
	12-13	22
	13-14	17
	14-15	17
	15-16	15
	16-17	14
	17-18	13
	18-19	15
	19-20	15
110.0	20-21	14
	21-22	14
	22-23	13
	23-24	13
	24-25	17
	25-26	18
	26-27	21
	27-27.11'	55
		Refusal

Bottom of Proposed Pier B Foundation

PW-9

Elev.	Depth in Feet	No. of Blows
127.5	0-1	26
	1-2	6
	2-3	7
	3-4	11
	4-5	19
	5-6	19
	6-7	15
	7-8	15
	8-9	15
	9-10	15
	10-11	15
	11-12	15
	12-13	15
	13-14	16
	14-15	17
	15-16	17
	16-17	16
	17-18	17
	18-19	17
	19-20	19
120.0	20-21	21
	21-22	21
	22-23	21
	23-24	19
	24-25	20
	25-26	19
100.0	26-27	18
	27-28	19
	28-29	29
	29-30	32
	30-31	27
	31-32	25
		Refusal

Bottom of Proposed Pier B Foundation

PW-11

Elev.	Depth in Feet	No. of Blows
130.3	0-1	15
	1-2	6
	2-3	9
	3-4	10
	4-5	12
	5-6	16
	6-7	15
	7-8	14
120.0	8-9	14
	9-10	14
	10-11	15
	11-12	16
	12-13	17
	13-14	17
	14-15	16
	15-16	16
	16-17	15
	17-18	15
110.0	18-19	15
	19-20	15
	20-21	16
	21-22	18
	22-23	16
	23-24	19
	24-25	21
	25-26	25
	26-27	30
	27-28	38
	28-28.10'	70
		Refusal

Bottom of Proposed Easterly Abutment Foundation

BORING LOG

Scale 1/8" = 1'-0"

NOTES:

1. Location of borings are shown on Key Plan thus ◉ W-1, punchings are shown on Key Plan thus ◉ PW-4; borings and punchings are taken for purpose of design and show condition at boring and punching points only, but do not necessarily show nature of materials to be encountered during construction.
2. Figures in boring columns indicate blows per foot on 2½" casing or 1" spoon produced by a 308# hammer with a fall of 16" and 14" respectively.
3. Figures in punching columns indicate blows per foot on "A" rods with a probe point produced by a 308# hammer with a fall of 14".
4. Borings and punchings were taken by the Maine State Highway Commission during the month of February, 1957.
5. The contractor in to form his own opinion of the character of the material, and to make his own interpretation of the borings.
6. The Engineer does not warrant the findings as being accurate or complete.

PUNCHING LOG

No Scale

FINAL AS BUILT PLANS

THE CLARKESON ENGINEERING CO., INC.

DESIGN	CHECK G. B. W. A. H.	BRIDGE NO.
DRAWN A. L.	APPROVED C. J. M.	SURVEY PLOT

STATE HIGHWAY COMMISSION

INDUSTRIAL SPUR

OVER

WEBSTER AVE.

IN THE CITY OF

BANGOR

PENOBSCOT COUNTY

BORING DATA

SHEET 2 OF 7 AUGUSTA, MAINE

M-1156

0 1 2 3 4 5 INCHES

B.P.R. DIV. NO.	STATE	PROJECT NO.	SHEET NO.	TOTAL SHEETS
1	MAINE	I-083-1(1)	86	230

BANGOR INDUSTRIAL SPUR

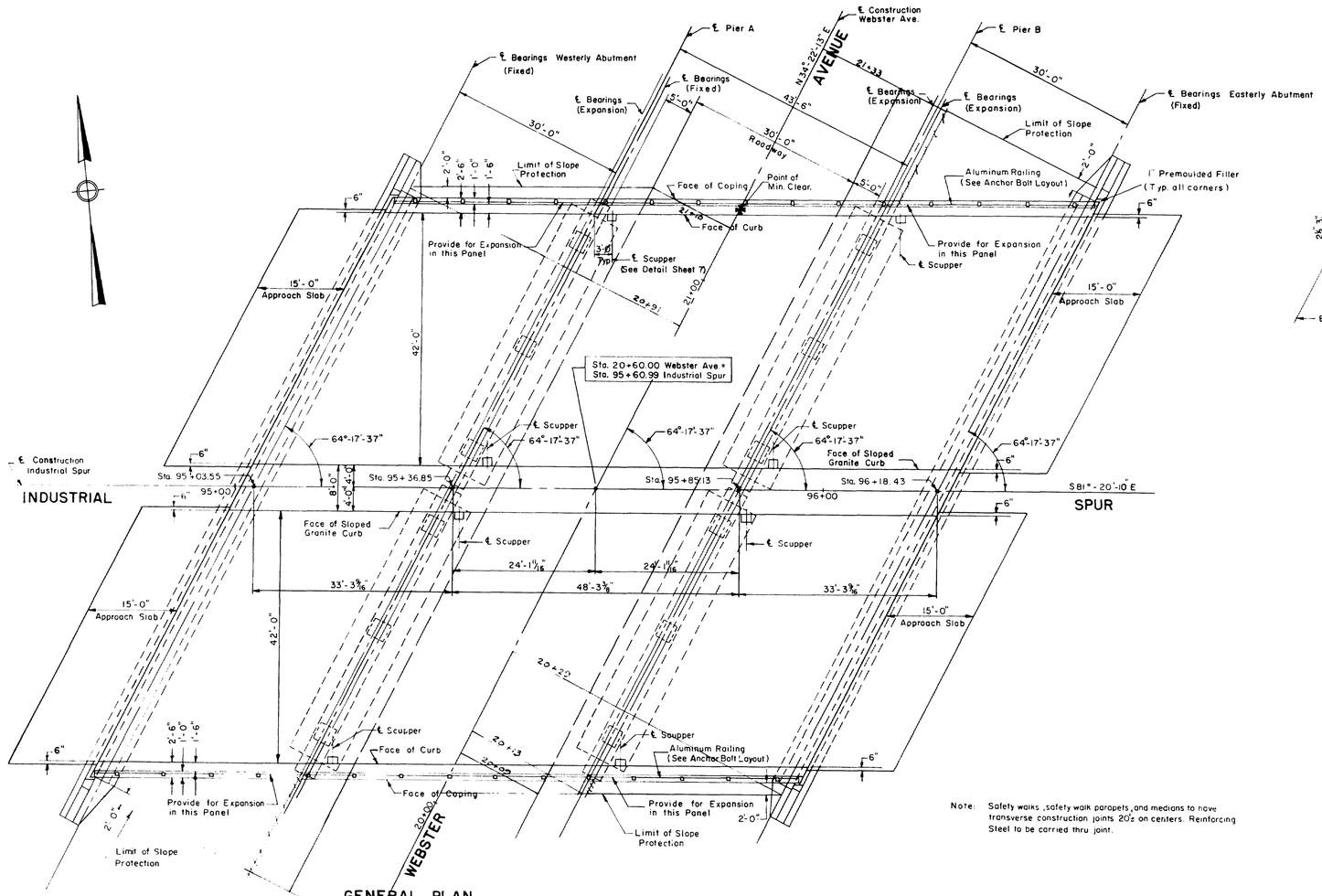

GENERAL PLAN
SCALE: 3/32" = 1'-0"

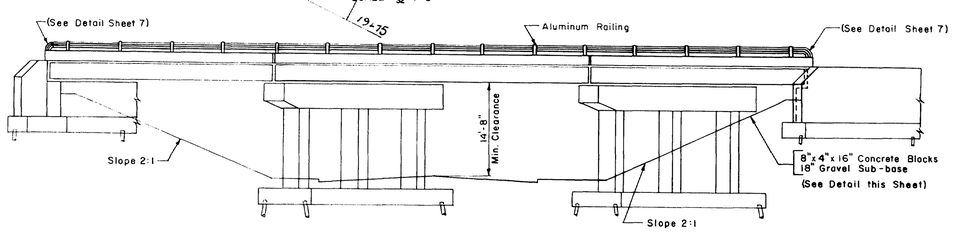

GENERAL ELEVATION
SCALE: 3/32" = 1'-0"

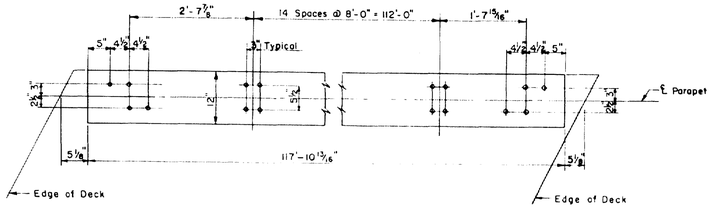

NORTHERLY RAILING ANCHOR BOLT LAYOUT
SOUTHERLY RAILING ANCHOR BOLT LAYOUT (OPP. HAND)
SCALE: 3/4" = 1'-0"

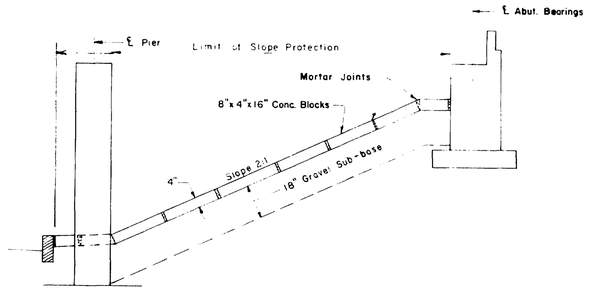

SLOPE DETAIL
NO SCALE

Note: Safety walks, safety walk parapets, and medians to have transverse construction joints 20'± on centers. Reinforcing Steel to be carried thru joint.

FINAL AS BUILT PLANS

THE CLARKESON ENGINEERING CO., INC.

DESIGN: H.P.	CHECK: Y.E. & H.P.	BRIDGE NO
DRAWN: D.A.T.	APPROVED: W.A.H., C.J.M.	SURVEY PLOT

STATE HIGHWAY COMMISSION
INDUSTRIAL SPUR
OVER
WEBSTER AVENUE
IN THE CITY OF
BANGOR
PENOBSCOT COUNTY
GENERAL PLAN AND ELEVATION

SHEET 3 OF 7 AUGUSTA, MAINE

M-1157

0 1 2 3 4 5 INCHES

B.P.R. DIV. NO.	STATE	PROJECT NO.	SHEET NO.	TOTAL SHEETS
1	MAINE	I-083-1(1)	67	230

BANGOR INDUSTRIAL SPUR

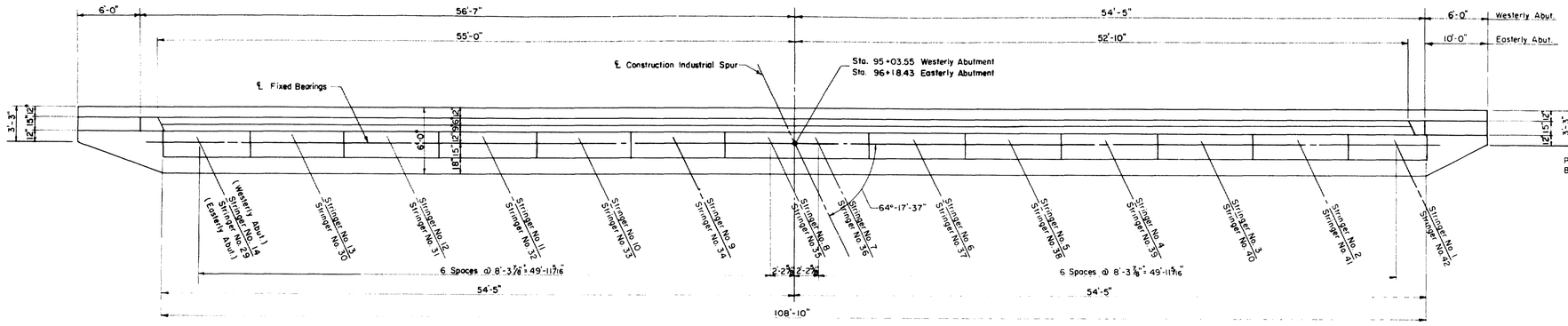

WESTERLY ABUTMENT PLAN
EASTERLY ABUTMENT PLAN (SIMILAR)
Scale: 3/16" = 1'-0"

Note:
Approach slabs shall be paid for under Item 701-40, Portland Cement Concrete Roadway and Sidewalk Slabs on Steel Bridges.

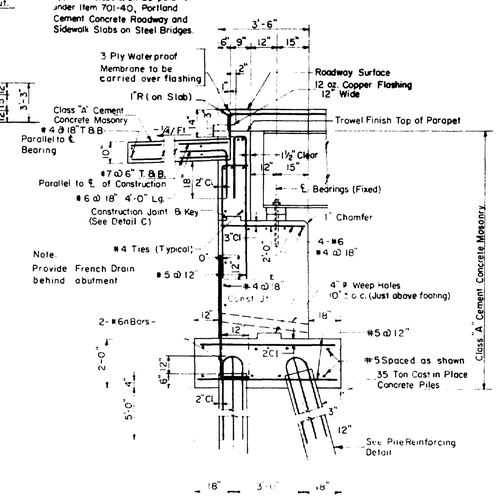

TYPICAL ABUTMENT SECTION
Scale: 3/8" = 1'-0"

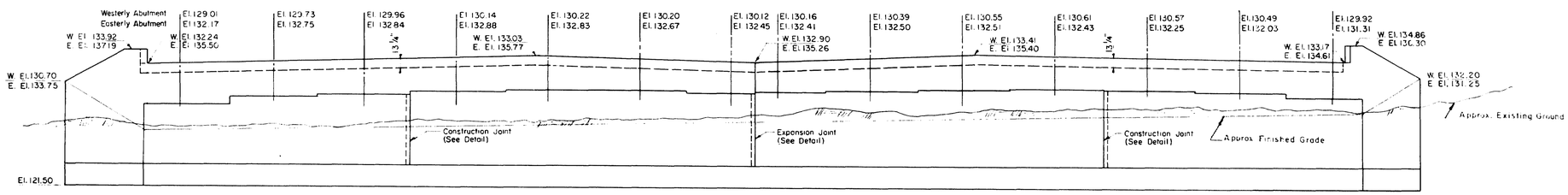

WESTERLY ABUTMENT ELEVATION
EASTERLY ABUTMENT ELEVATION (SIMILAR)
Scale: 3/16" = 1'-0"

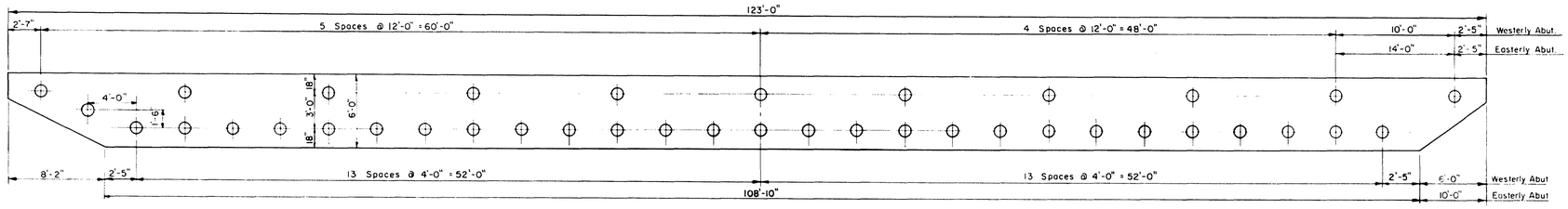

WESTERLY ABUTMENT PILE PLAN
EASTERLY ABUTMENT PILE PLAN (SAME)
Scale: 3/16" = 1'-0"

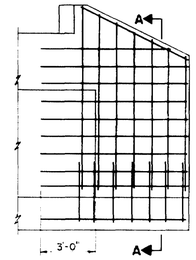

WING REINFORCING LAYOUT
Scale: 1/4" = 1'-0"

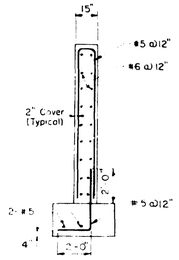

SECTION A-A
Scale: 1/4" = 1'-0"

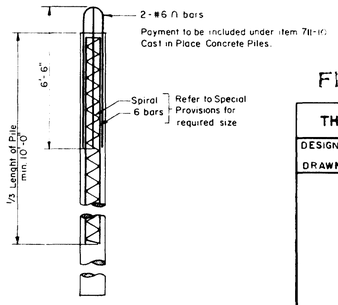

PILE REINFORCING DETAIL
Scale: 3/8" = 1'-0"

Note: Concrete in backwall not to be placed until Structural Steel has been erected. Construction Joint to be at or above Bridge Seat Elevations.

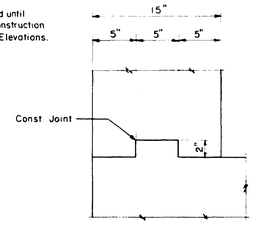

DETAIL C
Scale: 1 1/2" = 1'-0"

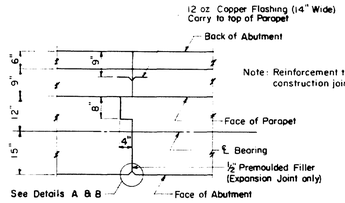

ABUTMENT CONSTRUCTION & EXPANSION JOINT
Scale: 1/2" = 1'-0"

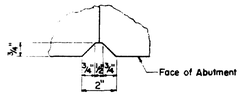

DETAIL A (CONSTRUCTION JOINT)
Scale: 3" = 1'-0"

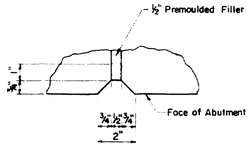

DETAIL B (EXPANSION JOINT)
Scale: 3" = 1'-0"

FINAL AS BUILT PLANS

THE CLARKESON ENGINEERING CO., INC.

DESIGN	H.P.	CHECK	Y.E. & H.P.	BRIDGE NO.
DRAWN	D.A.T. S.A.L.	APPROVED	W.A.H. C.J.M.	SURVEY PLOT

STATE HIGHWAY COMMISSION

INDUSTRIAL SPUR

OVER

WEBSTER AVE.

IN THE CITY OF

BANGOR

PENOBSCOT COUNTY

ABUTMENTS

SHEET 4 OF 7 AUGUSTA, MAINE

M-1158

0 1 2 3 4 5 INCHES

B.P.R. DIV. NO.	STATE	PRODUCT NO.	SHEET NO.	TOTAL SHEETS
1	MAINE	I-083-1(1)	88	230

BANGOR INDUSTRIAL SPUR

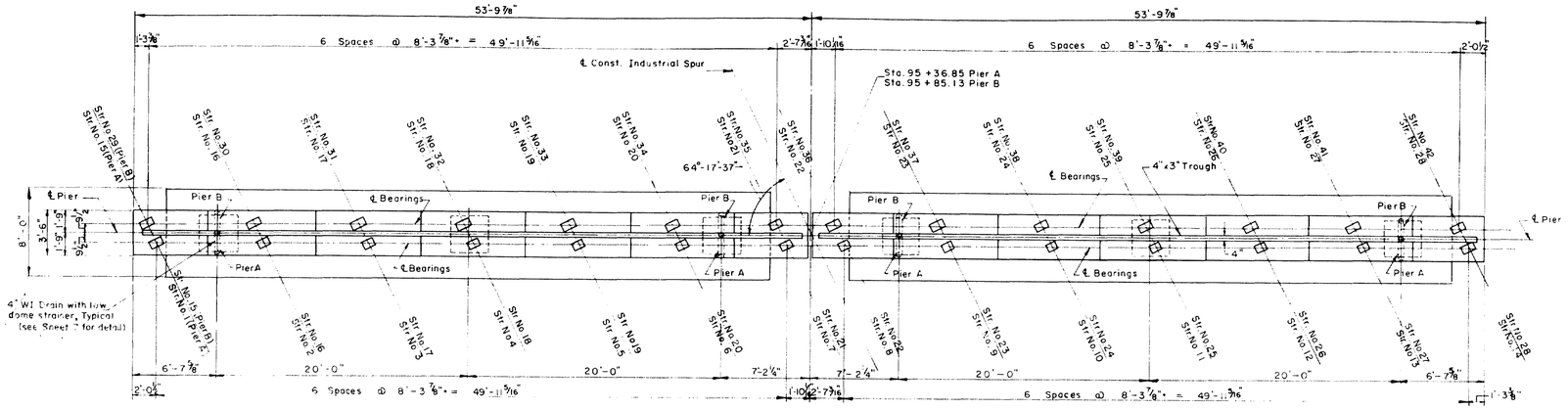

PLAN PIER A
PLAN PIER B (SIMILAR)

Scale: 3/16" = 1'-0"

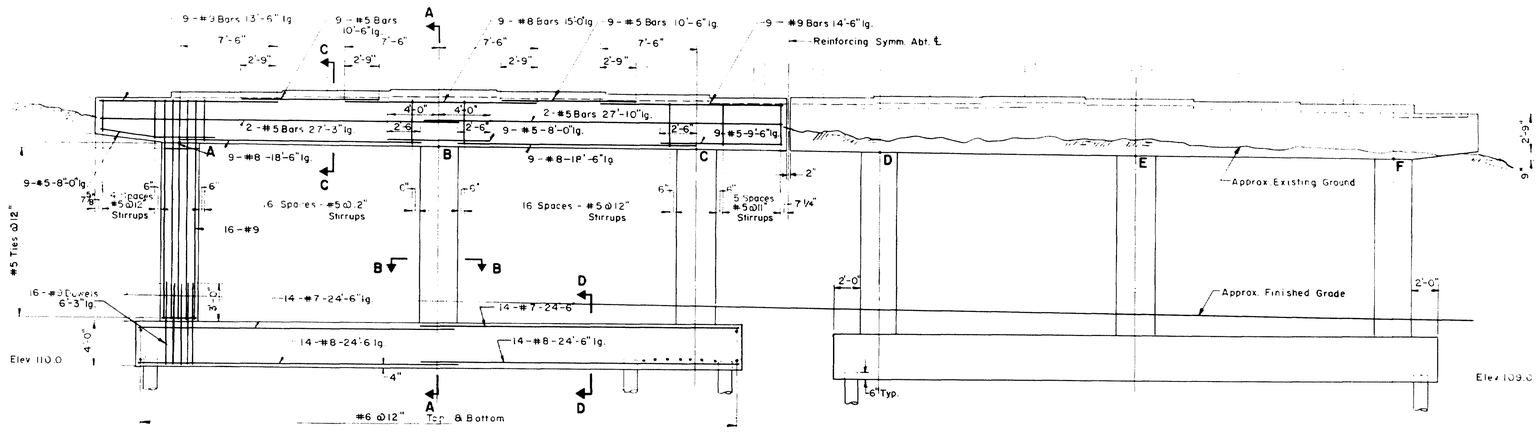

ELEVATION PIER A
ELEVATION PIER B (SIMILAR)

Scale: 3/16" = 1'-0"

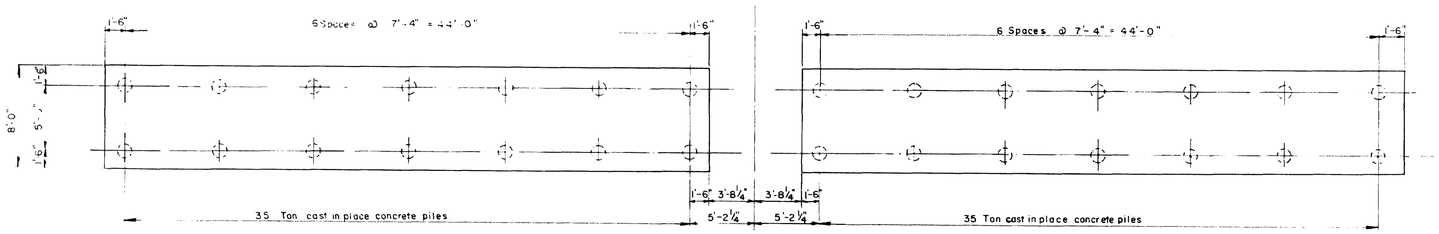

PILE PLAN PIER A
PILE PLAN PIER B (SIMILAR)

Scale: 3/16" = 1'-0"

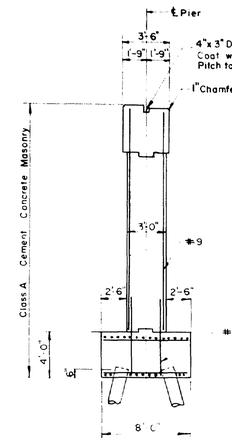

SECTION A-A

Scale: 3/16" = 1'-0"

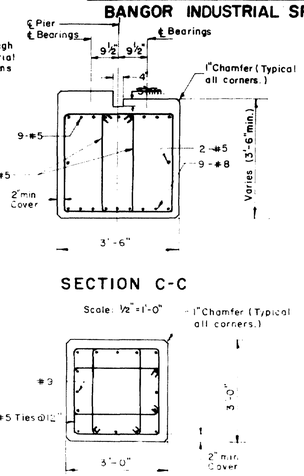

SECTION C-C

Scale: 1/2" = 1'-0"

SECTION B-B

Scale: 1/2" = 1'-0"

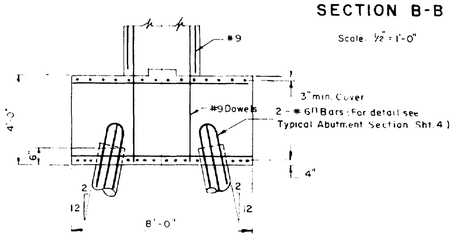

SECTION D-D

Scale: 3/16" = 1'-0"

Schedule of Beam Seat Elevations

Beam No.	Pier A		Beam No.	Pier B		Beam No.
1	130.57	130.57	15	131.50	131.57	29
2	131.14	130.64	16	131.57	132.14	30
3	131.22	130.72	17	131.65	132.22	31
4	131.26	130.75	18	131.64	132.26	32
5	131.19	130.69	19	131.62	132.20	33
6	131.03	130.51	20	131.46	132.04	34
7	130.81	130.29	21	131.22	131.81	35
8	130.77	130.25	22	131.18	131.77	36
9	130.85	130.35	23	131.28	131.85	37
10	130.87	130.37	24	131.30	131.87	38
11	130.79	130.28	25	131.21	131.79	39
12	130.61	130.10	26	131.03	131.61	40
13	130.38	129.88	27	130.81	131.38	41
14	129.66	129.67	28	130.60	130.67	42

Elevations at Tops of Pier Columns

Pier \ Col.	A	B	C	D	E	F
A	127.07	126.88	126.68	126.55	126.35	126.16
B	128.01	127.83	127.64	127.50	127.30	127.11

FINAL AS BUILT PLANS

THE CLARKESON ENGINEERING CO., INC.

DESIGN - O.C.O.	CHECK - Y.E. & H.P.	BRIDGE NO.
DRAWN - D.A.T.	APPROVED - W.A.H. & J.M.	SURVEY PLOT

STATE HIGHWAY COMMISSION

INDUSTRIAL SPUR

OVER

WEBSTER AVE.

IN THE CITY OF

BANGOR

PENOBSCOT COUNTY

PIERS

SHEET 5 OF 7 AUGUSTA, MAINE

M-1159

0 1 2 3 4 5 INCHES

B.P.R. DIV. NO.	STATE	PROJECT NO.	SHEET NO.	TOTAL SHEETS
1	MAINE	I-083-1(1)	89	230

BANGOR INDUSTRIAL SPUR

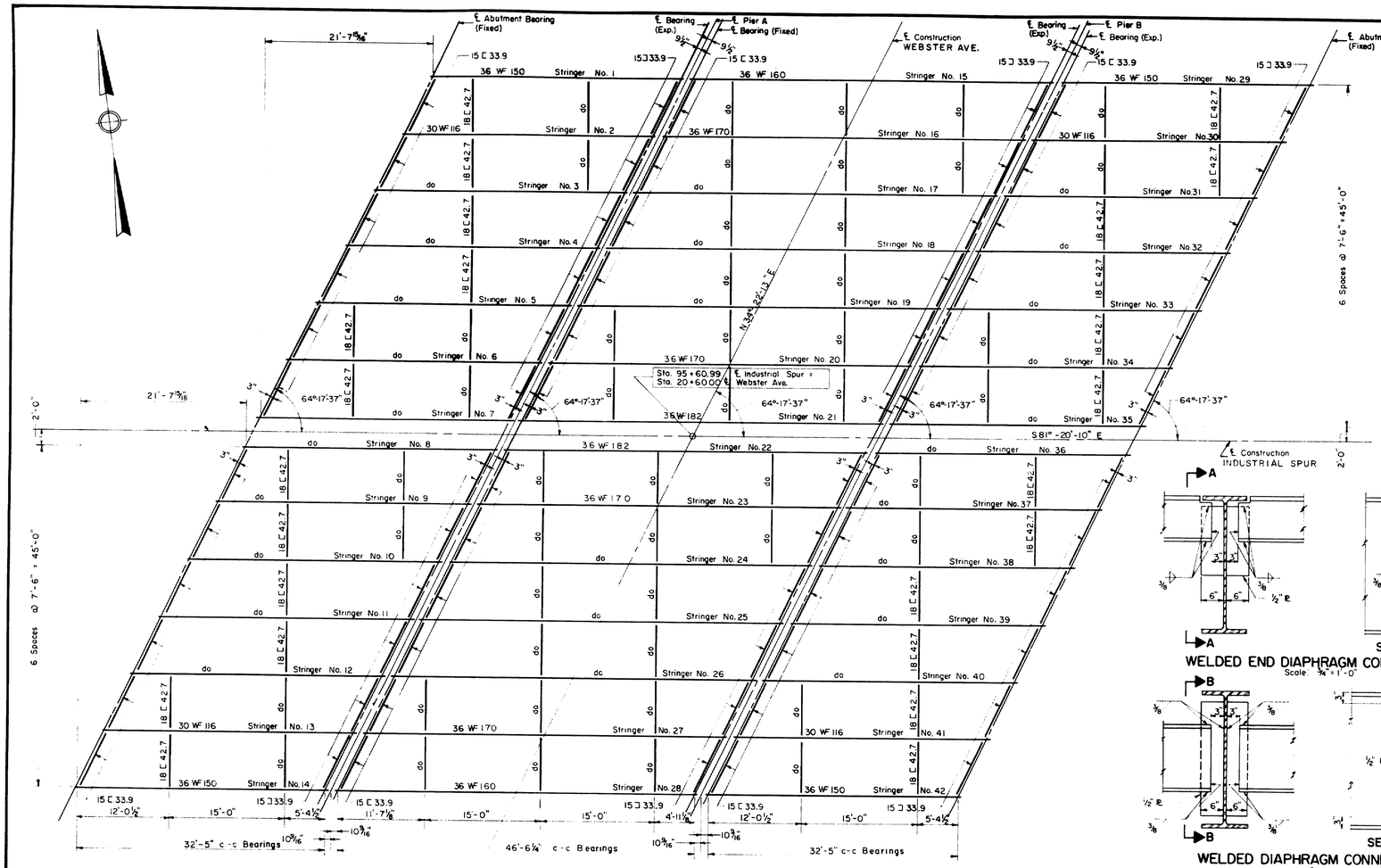

FRAMING PLAN
Scale: 1/8" = 1'-0"

Camber Note: All beams to be cambered to the extent that the bridge deck under full dead load will follow as nearly as practicable the design profile, and in no case with less camber than is likely to remain permanent. The proposed camber diagram shall be submitted to the Engineer for approval.

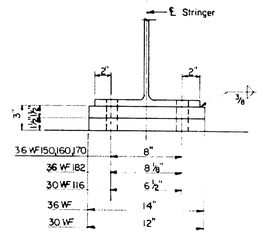

Note:
Holes in masonry plates to be 1⅜" dia.

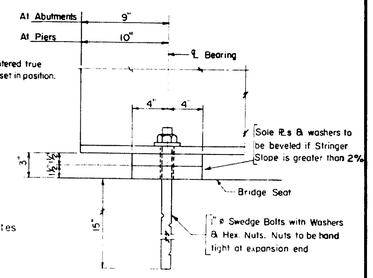

Note:
All anchor bolts to be centered true before bearing plates are set in position.

FIXED AND EXPANSION BEARING DETAILS
Scale: 1½" = 1'-0"

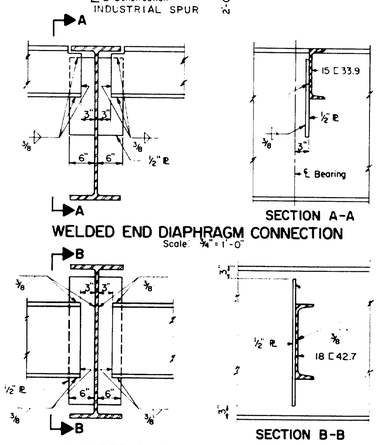

WELDED END DIAPHRAGM CONNECTION
Scale: ¾" = 1'-0"

SECTION A-A

SECTION B-B

WELDED DIAPHRAGM CONNECTION
Scale: ¾" = 1'-0"

Note: All welds may be shop or field welds

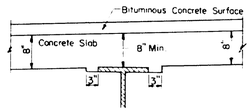

DETAIL OF HAUNCH
Scale: ¾" = 1'-0"

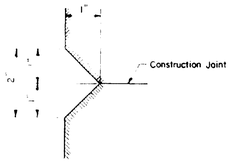

DETAIL B
Scale: ½ Size

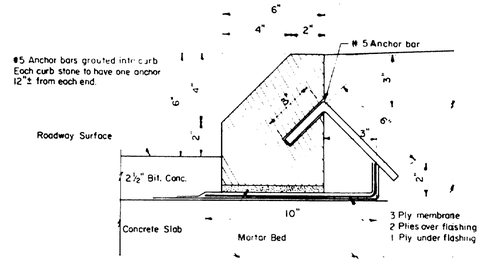

DETAIL A
Scale: 3" = 1'-0"

Note: Safety walks, safety walk parapets, and medians to have transverse construction joints 20'± on centers. Reinforcing steel to be carried thru joint.

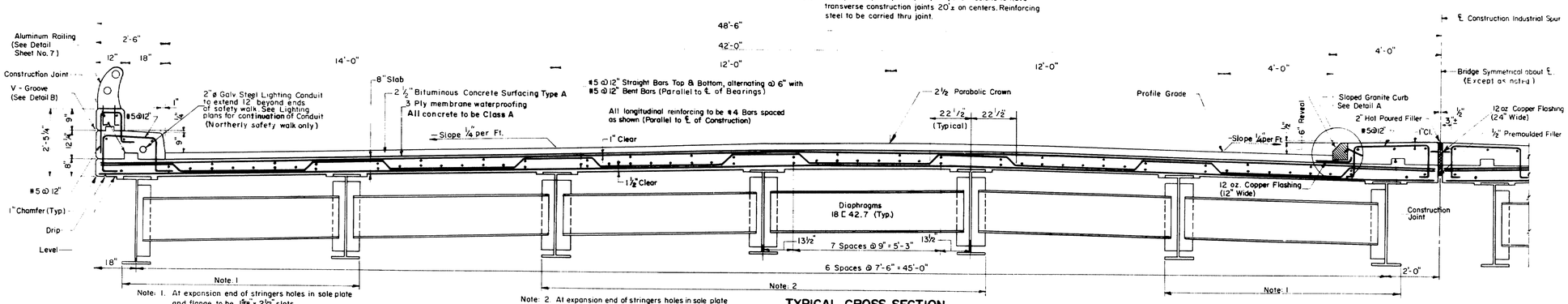

Note: 1. At expansion end of stringers holes in sole plate and flange to be 1⅜" x 2½" slots. At fixed end of these stringers holes to be 1⅜" ø

Note: 2. At expansion end of stringers holes in sole plate and flange to be 1⅜" x 2½" slots. At fixed end of these stringers holes to be 1⅜" ø

TYPICAL CROSS SECTION
Scale: ½" = 1'-0"

FINAL AS BUILT PLANS

THE CLARKESON ENGINEERING CO., INC.

DESIGN H.P.	CHECK Y.E. & H.P.	BRIDGE NO.	
DRAWN S.A.L.	APPROVED W.A.H. C.J.M.	SURVEY	
		PLOT	

STATE HIGHWAY COMMISSION

INDUSTRIAL SPUR

OVER

WEBSTER AVE.

IN THE CITY OF

BANGOR

PENOBSCOT COUNTY

FRAMING PLAN & TYPICAL CROSS SECTION

SHEET 6 OF 7 AUGUSTA, MAINE

M-1160

0 1 2 3 4 5 INCHES

B.P.R. DIV. NO.	STATE	PROJECT NO.	SHEET NO.	TOTAL SHEETS
1	MAINE	I-083-1(1)	90	220

BANGOR INDUSTRIAL SPUR

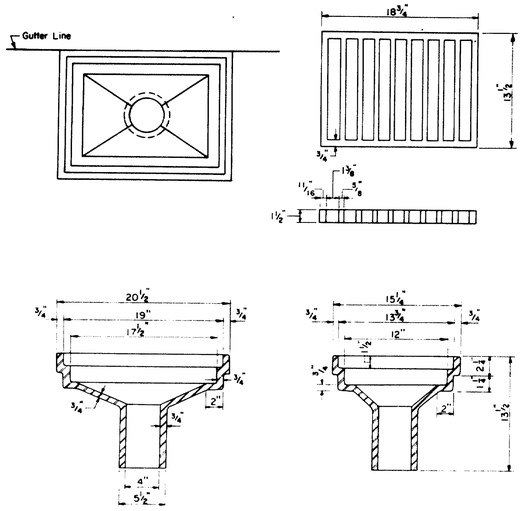

SCUPPER DETAILS

Scale: 1½" = 1'-0"

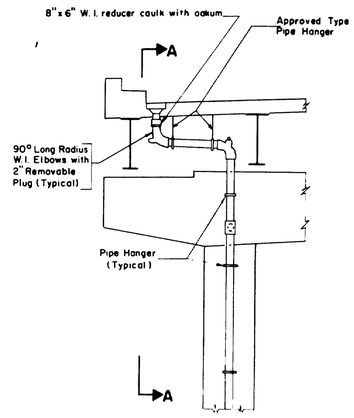

PIPE DETAILS AT SCUPPERS

Scale 1/4" = 1'-0"

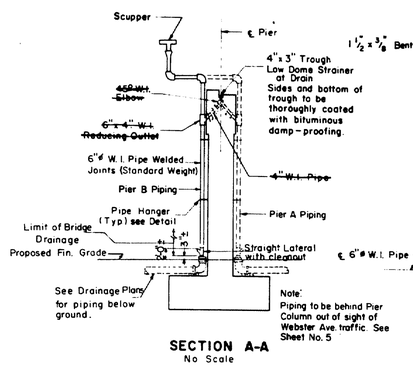

SECTION A-A
No Scale

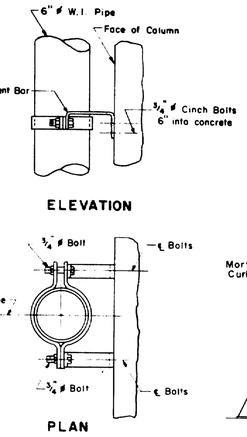

PIPE HANGER DETAIL

Scale 1½" = 1'-0"

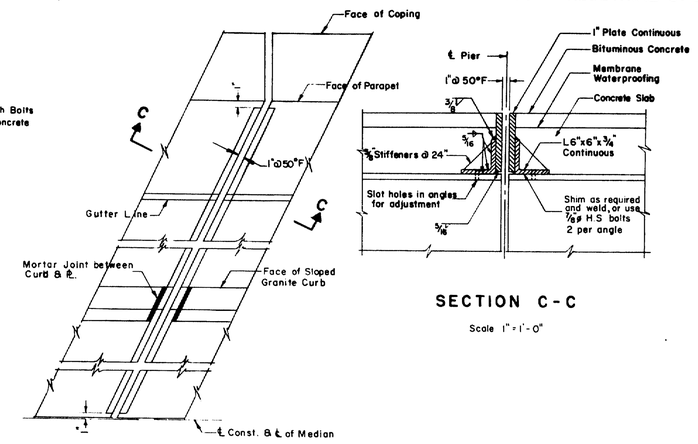

PLAN OF FIXED & EXPANSION JOINTS

Scale 1" = 1'-0"

SECTION C-C

Scale 1" = 1'-0"

Note:
1. All pipes and fittings to be W.I. standard weight with horizontal runs on 2% grade
2. All joints to be welded except as shown
3. For location of scuppers see Sheet No. 3
4. The contractor shall submit complete drawings of the piping system to the Engineer for approval.

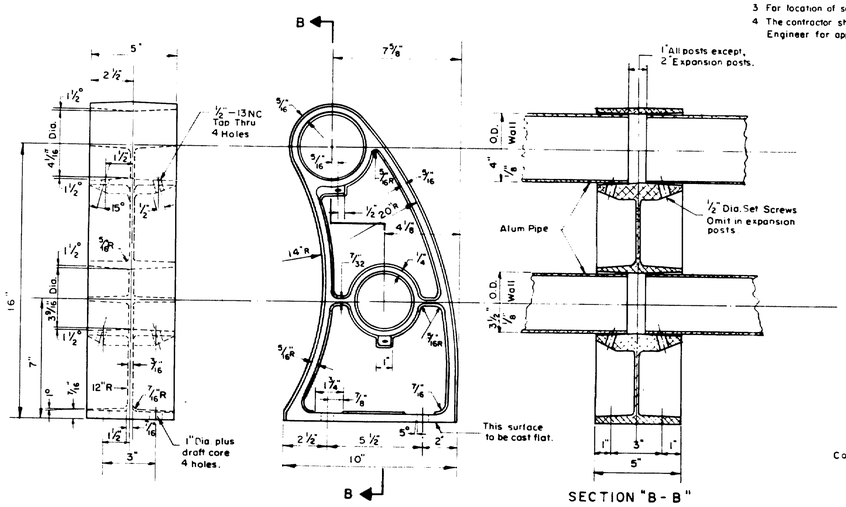

SECTION "B-B"

ALUMINUM RAIL DETAILS

Scale: 3" = 1'-0"

Notes:
1. Any variation in railing dimensions shall be submitted for approval.
2. Aluminum Alloy Anchor Bolts, Nuts & Washers
3. All anchor bolts to be ¾" ø L bolts (set 8" min. into conc.)

Note See sheet 3 for anchor bolt layout

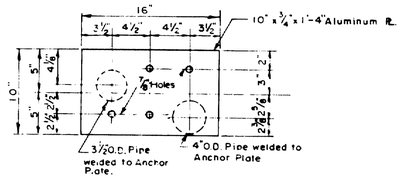

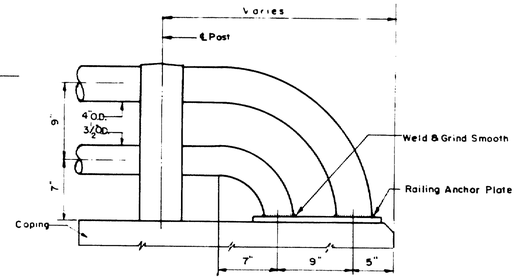

END RAILING DETAIL

Scale: 1½" = 1'-0"

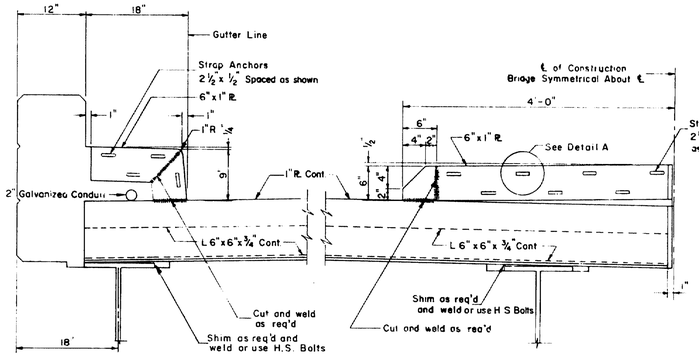

SAFETY WALK

MEDIAN

FIXED & EXPANSION JOINT DETAILS

Scale 1" = 1'-0"

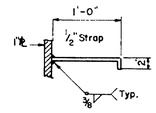

DETAIL A

FINAL AS BUILT PLANS

THE CLARKESON ENGINEERING CO., INC.		
DESIGN	CHECK H.P.	BRIDGE NO
DRAWN A.I.	APPROVED W.A.H. C.J.M.	SURVEY PLOT

STATE HIGHWAY COMMISSION

INDUSTRIAL SPUR

OVER

WEBSTER AVE.

IN THE CITY OF

BANGOR

PENOBSCOT COUNTY

DETAIL SHEET

SHEET 7 OF 7 AUGUSTA, MAINE

M-1161

0 1 2 3 4 5 INCHES