MAINE DEPARTMENT OF TRANSPORTATION
BRIDGE PROGRAM
GEOTECHNICAL SECTION
AUGUSTA, MAINE

GEOTECHNICAL DESIGN REPORT

For the Replacement of:

BAR MILLS BRIDGE
OVER SACO RIVER
STATE ROUTE 4A
HOLLIS AND BUXTON, MAINE

Prepared by:
Kathleen Maguire, P.E.
Geotechnical Engineer

Reviewed by:
Laura Krusinski, P.E.
Senior Geotechnical Engineer

York County
WIN 19280.00

Soils Report No. 2014-16
Bridge No. 3333

Fed No. STP-1928(000)
August 13, 2014

Table of Contents

GEOTECHNICAL DESIGN SUMMARY **1**

1.0 INTRODUCTION **5**

2.0 GEOLOGIC SETTING **5**

3.0 SUBSURFACE INVESTIGATION **6**

4.0 SUBSURFACE CONDITIONS **7**

4.1 ABUTMENT NO. 1 7
4.2 ABUTMENT NO. 2 7
4.3 PIERS 7
4.4 ABUTMENT NO. 2 RETAINING WALL 7
4.5 BEDROCK 8
4.6 GROUNDWATER 9

5.0 FOUNDATION ALTERNATIVES **9**

6.0 GEOTECHNICAL DESIGN RECOMMENDATIONS **9**

6.1 GENERAL - SPREAD FOOTINGS ON BEDROCK 9
6.2 ABUTMENT AND WINGWALL DESIGN 10
6.3 REINFORCED CONCRETE PIER DESIGN 12
6.4 BEDROCK REMOVAL AND BEDROCK SUBGRADE PREPARATION 14
6.5 BEARING RESISTANCE 14
6.6 CAST-IN-PLACE CANTILEVER TYPE RETAINING WALL 15
6.7 SCOUR AND RIPRAP 16
6.8 SETTLEMENT 17
6.9 FROST PROTECTION 17
6.10 SEISMIC DESIGN CONSIDERATIONS 17
6.11 CONSTRUCTION CONSIDERATIONS 18

7.0 CLOSURE **19**

Tables

Table 1 - Summary of Bedrock Depths, Bedrock Elevations and RQD
Table 2 - Estimated Bottom of Footing or Seal Elevations for Abutments and Seals
Table 3 - Equivalent Height of Soil for Vehicular Load on Abutments Perpendicular to Traffic

Sheets

Sheet 1 - Location Map
Sheet 2 - Boring Location Plan
Sheet 3 - Interpretive Subsurface Profile
Sheet 4 - Boring Logs

Appendices

Appendix A - Boring Logs
Appendix B - Calculations
Appendix C - Special Provision

GEOTECHNICAL DESIGN SUMMARY

The purpose of this Geotechnical Design Report is to present subsurface information and make geotechnical recommendations for the replacement of Bar Mills Bridge which carries State Route 4A over the Saco River on the Hollis - Buxton town line. The proposed bridge will be an approximately 490-foot long, three (3) span, steel girder superstructure on a 30 degree skew. The proposed abutments will consist of full height, cast-in-place, mass concrete, cantilever-type abutments founded on spread footings on bedrock or on concrete seals on bedrock. The two (2) piers will consist of reinforced concrete piers founded on spread footings on bedrock or on concrete seals on bedrock. The following design recommendations are discussed in detail in Section 6.0 of this report:

General - Spread Footings on Bedrock - The proposed abutments, wingwalls and piers will be founded on spread footings constructed directly on bedrock or on concrete seals cast on bedrock. The bedrock surface shall be cleared of all loose bedrock and loose, decomposed bedrock. The nature, slope and degree of fracturing in the bedrock bearing surfaces will not be evident until the foundation excavations for the seals are made. The bottom of footing elevation will vary based on the presence of fractured bedrock and the variability of the bedrock surface.

Abutment and Wingwall Design - Abutments and wingwalls shall be designed for all applicable load combinations and for all relevant strength, service and extreme limit states. The design of abutments and wingwalls founded on spread footings or concrete seals at the strength limit state shall consider bearing resistance, eccentricity (overturning), failure by sliding and reinforced concrete structural failure. For the service limit state design, analyses shall consider settlement, horizontal movement, bearing resistance, sliding and eccentricity. For the extreme limit state design, analyses shall consider bearing resistance, eccentricity, failure by sliding and structural failure with respect to extreme event load conditions relating to certain hydraulic events, ice and seismic forces. Additional lateral earth pressure due to construction surcharge or live load surcharge is required. Abutment and wingwall designs shall include a drainage system to intercept any groundwater. Anchoring of the spread footing to the concrete seal is required by the Maine Department of Transportation Bridge Design Guide.

Reinforced Concrete Pier Design - The reinforced concrete piers shall be designed for all applicable load combinations for all relevant strength, service and extreme limit states. The design of piers founded on a spread footing at the strength limit state shall consider bearing resistance, eccentricity (overturning), failure by sliding and reinforced concrete structural failure. For the service limit state design analyses shall consider settlement, horizontal movement, bearing resistance, sliding and eccentricity. For the extreme limit state design, analyses shall consider bearing resistance, eccentricity, failure by sliding and structural failure with respect to extreme event load conditions relating to certain hydraulic events, ice, vessel collision and seismic forces. Anchoring of the spread footing to the concrete seal is required by the Maine Department of Transportation Bridge Design Guide.

Bedrock Removal and Bedrock Subgrade Preparation - The nature, slope and degree of fracturing in the bedrock bearing surfaces will not be evident until the foundation excavations for

the abutments, wingwalls and piers are made. The bedrock surface shall be cleared of all loose fractured bedrock, loose decomposed bedrock and soil. Construction activities should not be permitted to disturb the bedrock mass or to create any rock falls or any open fissures. The cleanliness and condition of the final bedrock surface shall be approved by the Resident prior to placement of the footing concrete or seal concrete.

If bedrock is observed to slope steeper than 4H:1V at the subgrade elevation, the bedrock should be benched to create level steps or excavated to be completely level. The bottom of footing elevation may vary based on the presence of fractured bedrock and the variability of the bedrock surface. Anchors or dowels may also be designed and employed to improve sliding resistance where the prepared bedrock surface is steeper than 4H:1V in any direction. Where foundations are constructed in-the-dry, the final bearing surface shall be washed with high pressure water and air prior to concrete being placed for the footing. For spread footings are constructed in-the-dry, any irregularities in the existing bedrock surface or irregularities created during the excavation process should be backfilled with unreinforced concrete to the bearing elevation.

The pier excavations and portions of the abutment excavations will be submerged. The contractor shall prepare and submit a written procedure for cleaning and inspection of the submerged bedrock subgrade to the Resident in accordance with Special Provision 511.

Bearing Resistance - When analyzing the service limit state load combination, a factored bearing resistance of 20 ksf may be used and for preliminary footing sizing, and to control settlements. The bearing resistance for abutment, wingwall and pier foundations founded on competent, sound bedrock shall be investigated at the strength limit state using factored loads and a factored bearing resistance of 23 ksf. For extreme limit state load combinations a factored bearing resistance of 42 ksf may be used.

Cast-in-place Cantilever Type Retaining Wall - A long cast-in-place, cantilever type retaining wall founded on bedrock will be constructed on the existing island. This long retaining wall will end adjacent to the east abutment for the Canal Bridge. Bearing resistance for the proposed cast-in-place retaining wall founded on bedrock shall be investigated at the service limit state using factored loads and a factored bearing resistance of 20 ksf. The bearing resistance for the proposed cast-in-place retaining wall founded on competent, sound bedrock shall be investigated at the strength limit state using factored loads and a factored bearing resistance of 23 ksf. For extreme limit state load combinations a factored bearing resistance of 42 ksf may be used. If the wall footings are constructed directly on bedrock cleaned of all weathered, loose and potentially erodible or scourable rock, strength and extreme limit state designs do not need to consider foundation resistance after the design (Q_{100}) or check (Q_{500}) floods for scour. The cast-in-place retaining wall shall be designed as unrestrained meaning free to rotate at the top in an active state of earth pressure.

Scour and Riprap - For scour protection of abutment, wingwall and pier footings, place the bottom of concrete seals or footings directly on bedrock surfaces cleaned of all weathered, loose and potentially erodible or scourable rock. The consequences of changes in foundation conditions resulting from streambed material loss due to the design (Q_{100}) flood for scour shall be considered for any foundation constructed on granular soils at the strength and service limit states. These

changes in foundation conditions shall be investigated at the abutments, wingwalls and the piers. For scour protection, any footings for wingwalls, which are constructed on granular deposits, should be embedded a minimum of 3 feet below the design scour depth and armored with 3 feet of riprap. Bridge approach slopes, slopes at wingwalls and slopes at the toes of any footings on granular soils shall be armored with 3 feet of riprap. Stone riprap shall be placed at a maximum slope of 1.75 horizontal to 1 vertical (1.75H:1V). The toe of the riprap section shall be constructed 1 foot below the streambed elevation unless the streambed consists of bedrock. The riprap section shall be underlain by a 1 foot thick layer of bedding material and Class "1" Erosion Control Geotextile.

Settlement - The proposed approach embankments at the bridge approaches will be constructed on granular soils. Placement of the necessary fill will result in negligible densification of the underlying soils and minimal settlement of the embankments. Any settlement will occur during and immediately after construction of the widened embankments. Post-construction settlement will be minimal. Any settlement of bridge abutments or piers will be due to elastic compression of the bedrock mass and is anticipated to be less than 1.0 inch.

Frost Protection - It is anticipated that the abutment, wingwall and pier spread footings and concrete seals will be founded directly on bedrock. For foundations on bedrock, heave due to frost is not a design issue and no requirements for minimum depth of embedment are necessary. Any foundations placed on granular soils should be founded a minimum of 6.0 feet below finished exterior grade for frost protection.

Seismic Design Considerations - Seismic analysis is not required for multi-span bridges in Seismic Zone 1. The Bar Mills Bridge is not on the National Highway System (NHS). The bridge is not classified as a major structure since the construction costs will not exceed $10 million. These criteria eliminate the MaineDOT Bridge Design Guide requirement to design the foundations for seismic earth loads. However, superstructure connections and minimum support length requirements shall be designed per AASHTO LRFD Bridge Design Specifications.

Construction Considerations - Construction activities will include construction of cofferdams and earth support systems to support the approach fills and control stream flow during construction of concrete seals and spread footings for the abutments, wingwalls and piers. Construction activities will also include common earth and rock excavation and structural earth and rock excavation for major structures.

There is a potential for the existing abutment and wingwall foundations to interfere with the excavation activities for the proposed abutments and wingwalls. Obstructions may be cleared by conventional excavation methods. The existing abutments, wingwalls and piers shall be removed in their entirety. This should be noted on the Plans and the work shall be considered incidental to bridge removal. Clearing obstructions shall be specified as incidental to related pay items. Alternative methods to clear obstructions may be used as approved by the Resident.

The nature, slope and degree of fracturing in the bedrock bearing surfaces will not be evident until the foundation excavations are made. The bedrock surface shall be cleared of all loose fractured bedrock, loose decomposed bedrock and soil.

Portions of the abutment, wingwall and pier excavations may be submerged. The contractor shall prepare and submit a written procedure for cleaning and inspection of the bedrock subgrade to the Resident. The cleanliness and condition of the bedrock surface should be confirmed by the Resident prior to placing concrete.

Where foundations are constructed in-the-dry, the final bearing surface shall be washed with high pressure water and air prior to concrete being placed for the footing. In-the-dry or underwater excavation of highly sloped and loose fractured bedrock material may be done using conventional excavation methods, but may require drilling and blasting techniques. Blasting should be conducted in accordance with Section 105.2.6 of the MaineDOT Standard Specifications. It is also recommended that the contractor conduct pre-and post-blast surveys, as well as blast vibration monitoring at nearby residences and bridge structures in accordance with industry standards at the time of the blast.

It is anticipated that there will be seepage of water from fractures and joints exposed in the bedrock surface. Water should be controlled by pumping from sumps.

1.0 INTRODUCTION

The purpose of this Geotechnical Design Report is to present subsurface information and make geotechnical recommendations for the replacement of Bar Mills Bridge which carries State Route 4A over the Saco River on the Hollis - Buxton town line. A subsurface investigation has been completed at the site. The purpose of the investigation was to explore subsurface conditions at the site in order to develop geotechnical recommendations for the bridge replacement. This report presents the soils and bedrock information obtained at the site during the subsurface investigation, foundation recommendations and geotechnical design parameters for bridge replacement.

The existing Bar Mills Bridge was built in 1936 and is an approximately 512-foot long, three-span riveted steel through truss founded on reinforced concrete abutments and piers. The abutments and piers are all founded on spread footings on bedrock. The existing bridge is located approximately 230 feet downstream from the Bar Mills Dam. Year 2014 Maine Department of Transportation (MaineDOT) Bridge Maintenance inspection reports assign the existing substructures a condition rating of 4 – poor with a Bridge Sufficiency Rating of 34.9. The Inspection Notes state that the bridge is in poor condition with heavy rusting and section loss. The abutments and piers are cracking in the bearing areas.

The Bar Mills Bridge will be replaced in conjunction with the Canal Bridge which is located immediately west of the Bar Mills Bridge on State Route 4A. The east abutment of the Canal Bridge and the west abutment of the Bar Mills Bridge will be constructed on an existing island which divides the Saco River into two channels. The proposed replacement bridge will be constructed on a new alignment north (upstream) of the existing bridge and will be a three-span, steel plate girder superstructure with a 30 degree skew founded on cast-in-place reinforced concrete abutments and two (2) reinforced concrete piers on spread footings obstructed directly on bedrock or on concrete seals on bedrock. The proposed bridge will have a span length of approximately 490 feet. A cast-in-place retaining wall will be constructed on the island at the Abutment No. 1 end of the bridge to retain fill materials. Two-way traffic will be maintained on the existing structure during construction.

2.0 GEOLOGIC SETTING

The Bar Mills Bridge on State Route 4A in Hollis and Buxton crosses the Saco River at the Hollis - Buxton town line as shown on Sheet 1 - Location Map. The Saco River flows southeast into Casco Bay at Saco, Maine.

According to the Bar Mills Quadrangle, Maine Surficial Geologic map published by the Maine Geological Survey Open File No. 99-77 (1999), the surficial soils in the vicinity of the site consist of the Presumpscot Formation. The Presumpscot Formation generally consists of laminated to massive grey to green-grey silt and clay and may contain boulders, sand and gravel. The Presumpscot Formation was deposited during the period of late-glacial marine submergence.

According to the Bedrock Geology of Bar Mills Quadrangle, Maine (Open File No. 95-75, 1995) published by the Maine Geological Survey, the site is underlain by Ordovician or Silurian, medium grained, quartz-plagioclase-biotite granofels of the Hutchins Corner Formation.

3.0 SUBSURFACE INVESTIGATION

Subsurface conditions at the site were explored by drilling seven (7) test borings at the site. Test borings BB-HBSR-101 and BB-HBSR-102 were drilled behind the location of the proposed west abutment (Abutment No. 1). Test borings BB-HBSR-103 and BB-HBSR-104 were drilled through the deck of the existing bridge near the locations of the proposed piers. Test borings BB-HBSR-105 and BB-HBSR-106 were drilled near the location of the proposed east abutment (Abutment No. 2). Test boring BB-HBSR-107 was drilled near the end of the proposed retaining wall at the south end of the proposed east abutment. The test boring locations are shown on Sheet 2 - Boring Location Plan. Test borings BB-HBSR-101, BB-HBSR-102, BB-HBR-105, BB-HBSR-106 and BB-HBSR-107 were drilled between September 9 and 17, 2013 by the Northern Test Boring (NTB) of Gorham, Maine using a track mounted drill rig. Test borings BB-HBSR-103 and BB-HBSR-104 were drilled on September 9 and 10, 2013 by the MaineDOT Materials Testing and Exploration drill crew using a trailer mounted drill rig. Details and sampling methods used, field data obtained, and soil and groundwater conditions encountered are presented in the boring logs provided in Appendix A - Boring Logs and graphically on Sheet 3 - Interpretive Subsurface Profile.

All the borings were drilled using solid stem auger, cased wash boring and rock core techniques. Soil samples were obtained, where possible, at 5-foot intervals using Standard Penetration Test (SPT) methods. During SPT sampling, the sampler is driven 24 inches and the hammer blows for each 6 inch interval of penetration are recorded. The sum of the blows for the second and third intervals is the N-value or standard penetration resistance. The both the MaineDOT drill rig and the NTB drill rig are equipped with automatic hammers to drive the split spoon. Both hammers were calibrated per ASTM D4633-05 “Standard Test Method for Energy Measurement for Dynamic Penetrometers” in July of 2013. The MaineDOT automatic hammer was found to deliver approximately 44 percent more energy during driving than the standard rope and cathead system. The NTB automatic hammer was found to deliver approximately 33 percent more energy during driving than the standard rope and cathead system. All N-values discussed in this report are corrected values computed by applying the corresponding average energy transfer factor of 0.867 (for the MaineDOT hammer) and 0.801 (for the NTB hammer) to the raw field N-values. The hammer efficiency factors (0.867 and 0.801) and both the raw field N-values and the corrected N-values are shown on the boring logs.

The borings were advanced to bedrock and were terminated with bedrock cores. The bedrock was cored using an NQ-2 inch core barrel and the Rock Quality Designation (RQD) of the core was calculated. The MaineDOT Geotechnical Team member selected the boring locations and drilling methods, designated type and depth of sampling techniques, and identified field and laboratory testing requirements. The MaineDOT Subsurface Inspector certified by the Northeast Transportation Technical Certification Program (NETTCP) and a consultant geotechnical engineer logged the subsurface conditions encountered at the borings. The borings were located in the field by a MaineDOT survey crew after completion of the drilling program.

Details and sampling methods used, field data obtained, and soil and groundwater conditions encountered are presented in the boring logs provided in Appendix A – Boring Logs and on Sheet 4 – Boring Logs.

4.0 SUBSURFACE CONDITIONS

The general soil stratigraphy encountered consisted of a thin soil layer overlying bedrock at the abutment locations and a thin layer of fluvial soils (river sediments) overlying bedrock or exposed bedrock at the pier locations. An interpretive subsurface profile depicting the detailed soil stratigraphy across the site is show on Sheet 3 - Interpretive Subsurface Profile. A brief summary description of the strata encountered is as follows:

4.1 Abutment No. 1

A layer of fill material was encountered at the location of proposed Abutment No. 1 in test borings BB-HBSR-101 and BB-HBSR-102. The thickness of the fill layer ranged from approximately 9.7 to 7.5 feet thick, respectively, at the boring locations. The fill was made up of brown, dry to damp, fine to medium sand with little silt and trace coarse sand and gravel. Rootlets and wood were also observed within the soil samples. Corrected SPT N-values in the fill ranged from 5 to 15 blows per foot (bpf) indicating that the soil is loose to medium dense in consistency. The fill was underlain by bedrock.

4.2 Abutment No. 2

Test borings BB-HBSR-105 and BB-HBSR-106 were drilled at the location of proposed Abutment No. 2. Exposed bedrock was encountered at the ground surface in test boring BB-HBSR-105. A thin layer of fluvial soils (river sediments) was present over bedrock in test boring BB-HBSR-106. The thickness of the fluvial soil layer was approximately 0.6 feet thick at the boring location. The fluvial soil was made up of light brown, dry, fine to coarse sand with little fine gravel, trace silt and trace wood fibers. The fluvial soil layer was underlain by bedrock.

4.3 Piers

The locations of the proposed piers were not accessible to the drill rigs. Test borings BB-HBSR-103 and BB-HBSR-104 were drilled through the deck of the existing bridge near the locations of the proposed piers. Exposed bedrock was encountered at the ground surface in test boring BB-HSRC-103. A layer of river sediments was encountered overlying bedrock in test boring BB-HSRC-104. The thickness of the river sediment layer was approximately 1.5 feet thick at the boring location. The river sediments were underlain by bedrock.

4.4 Abutment No. 2 Retaining Wall

Test boring BB-HBSR-107 was drilled near the end of the proposed retaining wall at the south end of the proposed east abutment. A layer of nearshore deposits was encountered overlying bedrock.

The thickness of the nearshore deposits was approximately 7.4 feet thick at the boring location. The nearshore deposits were made up of:

- Grey-brown, fine to coarse sandy gravel, trace silt, with rootlets and
- Brown, wet, fine to coarse sand with some silt and some gravel.

Corrected SPT N-values in the nearshore deposits ranged from 13 to 20 bpf indicating that the soil is medium dense in consistency. The nearshore deposits were underlain by bedrock.

4.5 Bedrock

The bedrock was cored in all of the borings conducted at the site. Table 1 summarizes approximate depths to bedrock, corresponding top of bedrock elevations and RQD at the boring locations:

Boring Number Substructure	Approximate Depth to Bedrock	Approximate Bedrock Elevation	Estimated RQD
BB-HBSR-101 Abutment No. 1	9.7 feet	135.3 feet	44 to 59%
BB-HBSR-102 Abutment No. 1	7.5 feet	136.1 feet	0 to 68%
BB-HBSR-103 Near Pier 1	0.0 feet	131.5 feet	25 to 47%
BB-HBSR-104 Near Pier 2	1.5 feet	124.9 feet	0 to 28%
BB-HBSR-105 Abutment No. 2	0.0 feet	134.1 feet	0 to 100%
BB-HBSR-106 Abutment No. 2	0.6 feet	132.8 feet	0 to 70%
BB-HBSR-107 Abutment No. 2 Retaining Wall South End	7.4 feet	141.6 feet	82%

Table 1 – Summary of Bedrock Depths, Bedrock Elevations and RQD

The bedrock in the borings is identified as grey, aphanitic to medium grained, granofels and biotite granofels, moderately hard to hard, fresh to severely weathered, with moderately dipping joints, moderately close, planar to undulating, rough, tight to open with slight oxidation on joint surfaces, thin quartz veins. The RQD of the bedrock ranged from 0 to 100% indicating a Rock Mass Quality of very poor to excellent.

4.6 Groundwater

Groundwater was not observed in any of the borings. Water was introduced into the boreholes during the drilling operations. Groundwater levels will fluctuate with changes in the water levels in the river, seasonal changes, precipitation, runoff and adjacent construction activities.

5.0 FOUNDATION ALTERNATIVES

Assessment of subsurface conditions indicates that due to the presence of shallow bedrock across the site, the most effective foundation type for this site is full height, cast-in-place, cantilever-type abutments and reinforced concrete piers on spread footings founded directly on bedrock or on concrete seals constructed on bedrock. Fill materials will be retained at both abutments with cast-in-place concrete retaining walls on spread footings founded directly on bedrock or on concrete seals constructed on bedrock.

6.0 GEOTECHNICAL DESIGN RECOMMENDATIONS

The Bar Mills Bridge will be replaced in conjunction with the Canal Bridge which is located immediately west of the Bar Mills Bridge on State Route 4A. The east abutment of the Canal Bridge and the west abutment of the Bar Mills Bridge will be constructed on an existing island which divides the Saco River into two channels. The proposed Bar Mills Bridge and Canal Bridge will be constructed on a new alignment north (upstream) of the existing bridges. The proposed Bar Mills Bridge will be a three-span, steel plate girder superstructure with a 30 degree skew founded on cast-in-place reinforced concrete abutments and two (2) reinforced concrete piers on spread footings on bedrock or concrete seals on bedrock. The proposed Bar Mills Bridge will have a span length of approximately 490 feet. Fill materials will be retained at the abutments with cast-in-place concrete retaining walls on spread footings founded directly on bedrock or on concrete seals constructed on bedrock. The following subsections discuss the foundation considerations and recommendations for the proposed structure.

The design recommendations in this Section are in accordance with AASHTO LRFD Bridge Design Specifications, 6th Edition, 2012 (herein referred to as LRFD).

6.1 General - Spread Footings on Bedrock

Shallow bedrock was encountered at all of the proposed substructure locations. Spread footings or concrete seals can be practically and economically constructed to bear on bedrock within moderately shallow excavations possibly requiring cofferdams and temporary support systems.

The test borings indicate that several feet of loose, fractured bedrock will be encountered at the bedrock surface at all of the proposed substructure locations. Prior to construction of the concrete seals or spread footings, the bedrock surface shall be cleared of all loose and fractured bedrock to expose sound bedrock. Based on the borings conducted at the site, top of bedrock elevations encountered in those borings and the bedrock RQD, the range of bottom of spread footing or bottom of concrete seal elevations are presented in Table 2 below:

Substructure	Estimated Bottom of Spread Footing or Concrete Seal Elevation[1]
Abutment No. 1	132.0 to 136.0 feet
Pier No. 1	127.0 to 131.0 feet
Pier No. 2	122.0 to 127.0 feet
Abutment No. 2	130.0 to 132.0 feet

Table 2 – Estimated Bottom of Footing or Seal Elevations for Abutments and Piers[1]

These bottom of footing elevations are estimated based on the information obtained from the borings. The nature, slope and degree of fracturing in the bedrock bearing surfaces will not be evident until the foundation excavations for the seals are made. The actual bottom of spread footing or concrete seal elevations will vary from those shown in Table 2 based on the presence of fractured bedrock and the variability of the bedrock surface. For footings constructed in-the-dry, fill concrete can be used to level the bearing area prior to placement of the spread footing.

6.2 Abutment and Wingwall Design

Abutments and wingwalls shall be proportioned for all applicable load combinations specified in LRFD Articles 3.4.1 and 11.5.5 and shall be designed for all relevant service, strength and extreme limit states.

For the service limit state, a resistance factor, φ, of 1.0 shall be used to assess spread footing design for settlement, horizontal movement, bearing resistance, sliding and eccentricity. The overall stability of foundations is typically investigated at the Service I Load Combination and a resistance factor, φ, of 0.65. Shear failure along adversely oriented joint surfaces in the rock mass below the foundations is not anticipated, therefore, a global stability evaluation may be waived.

The design of project abutments and wingwalls founded on spread footings at the strength limit state shall consider bearing resistance, eccentricity (overturning), failure by sliding and reinforced concrete structural failure. For footings or concrete seals on bedrock, the eccentricity of loading at the strength limit state, based on factored loads, shall not exceed 0.45 of the footing dimensions in either direction. The eccentricity corresponds to the resultant of reaction forces falling within the middle nine-tenths (9/10) of the base width.

Extreme limit state design checks for abutments and wingwalls shall include bearing resistance, eccentricity, failure by sliding and structural failure with respect to extreme event load conditions relating to certain hydraulic events, ice (if warranted by ice history or stream constriction by the abutments) and seismic forces. Resistance factors, φ, for the extreme limit state shall be taken as 1.0 with the exception of bearing resistance for which a resistance factor of 0.8 shall be used.

[1] Estimated bottom of spread footing or concrete seal elevations are based on top of bedrock elevations encountered in the borings near each proposed substructure, interpolated bedrock elevation from survey information along the proposed bridge centerline and the presence of low RQD bedrock (which may require removal for construction) at the top of the bedrock surface.

For scour protection of abutment and wingwall footings, construct the footings or seals directly on bedrock surfaces cleaned of all weathered, loose and potentially erodible or scourable rock. With these precautions, strength and extreme limit state designs do not need to consider rock scour due to the design (Q_{100}) or check (Q_{500}) floods for scour.

For sliding analyses, a sliding resistance factor, φ_τ, of 0.80 shall be applied to the nominal sliding resistance of abutments and wingwalls founded on spread footings or concrete seals on bedrock assuming the bedrock subgrade will be prepared in-the-wet and some amount of sediment will remain on the bedrock surface. A sliding resistance factor, φ_τ, of 0.80 shall be applied to the nominal sliding resistance of cast-in-place concrete on tremie concrete (this sliding resistance factor is taken as equal to the resistance factor for cast-in-place concrete on sand (LFRD Table 10.5.5.2.2-1)).If the bedrock subgrade is prepared in-the-dry and cleaned with high pressure water and air prior to placing seal concrete a sliding resistance factor, φ_τ, of 0.90 may be used. LRFD Table 11.5.7-1 allows a sliding resistance factor, φ_τ, of 1.0 for semi-gravity retaining walls regardless of subgrade material.

Assuming that the rock subgrade will be prepared in-the-wet, some amount of sediment is expected to remain on the rock surface and the sliding computations for resistance of abutment and wingwall spread footings to lateral loads shall assume a maximum friction coefficient of 0.60 at the bedrock-seal concrete interface. If the bedrock subgrade is prepared in-the-dry and cleaned with high pressure water and air prior to placing seal concrete, sliding computations for resistance of abutment and wingwall footings to lateral loads shall assume a maximum frictional coefficient of 0.70 at the bedrock-seal concrete interface.

Anchorage of the footing to the seal is required by the MaineDOT Bridge Design Guide (BDG) Section 5.2.2. The dowels should be drilled and grouted into the seal concrete after dewatering and prior to placing the footing concrete. Anchorage of seals to bedrock may also be required to resist sliding forces and improve stability. If bedrock is observed to slope steeper than 4 horizontal to 1 vertical (4H:1V) at the subgrade elevation, the bedrock should be benched to create level steps or excavated to be completely level.

Cantilever-type abutments and wingwalls should be designed for active earth pressure over the abutment height. In designing for active pressure, a Rankine active earth pressure coefficient, K_a, of 0.31 is recommended (assuming a level backfill). Earth loads for wingwalls shall also be calculated using an active earth pressure coefficient, K_a, of 0.31 (assuming a level backfill), calculated using Rankine Theory. The earth pressure coefficient will need to be recalculated if there is a sloping backfill surface behind the abutments or wingwalls. See Appendix B – Calculations for supporting documentation.

The designer may assume Soil Type 4 (MaineDOT BDG Section 3.6.1) for backfill material soil properties. The backfill properties are as follows: $\phi = 32$ degrees, $\gamma = 125$ pcf.

Additional lateral earth pressure due to construction surcharge or live load surcharge is required per Section 3.6.8 of the MaineDOT BDG for the abutments and wingwalls if an approach slab is not specified. When a structural approach slab is specified, reduction, not elimination of the surcharge loads is permitted per LRFD Article 3.11.6.5. The live load surcharge on wingwalls

may be estimated as a uniform horizontal earth pressure due to an equivalent height of soil (h_{eq}) of 2.0 feet, per LRFD Table 3.11.6.4-2. The live load surcharge on abutments may be estimated as a uniform horizontal earth pressure due to an equivalent height of soil (h_{eq}) taken from the Table 3 below:

Abutment Height (feet)	h_{eq} (feet)
5	4.0
10	3.0
≥20	2.0

Table 3 - Equivalent Height of Soil for Vehicular Load on Abutments Perpendicular to Traffic

Abutment and wingwall designs shall include a drainage system to intercept any groundwater. Drainage behind the structure shall be in accordance with Section 5.4.1.4 Drainage, of the MaineDOT BDG.

Backfill within 10 feet of the abutments and wingwalls and side slope fill shall conform to Granular Borrow for Underwater Backfill - MaineDOT Specification 709.19. This gradation specifies 10 percent or less of the material passing the No. 200 sieve. This material is specified in order to reduce the amount of fines and to minimize frost action behind the structure.

Slopes above the wingwalls should be constructed with riprap and not exceed 1.75 horizontal to 1 vertical (1.75H:1V).

6.3 Reinforced Concrete Pier Design

The reinforced concrete piers shall be proportioned for all applicable load combinations specified in LRFD Articles 3.4.1 and 11.5.5 and shall be designed for all relevant service, strength and extreme limit states.

For the service limit state, a resistance factor, φ, of 1.0 shall be used to assess spread footing design for settlement, horizontal movement, bearing resistance, sliding and eccentricity. The overall stability of foundations are typically investigated at the Service I Load Combination and a resistance factor, φ, of 0.65. Shear failure along adversely oriented joint surfaces in the rock mass below the foundations is not anticipated, therefore, a global stability evaluation may be waived.

The design of the piers founded on spread footings at the strength limit state shall consider bearing resistance, eccentricity (overturning), failure by sliding and reinforced concrete structural failure. A modified strength limit state analysis should be performed that includes the ice pressures specified in MaineDOT BDG Section 3.9 - Ice Loads. For pier footings or concrete seals on bedrock, the eccentricity of loading at the strength limit state, based on factored loads, shall not exceed 0.45 of the footing dimensions in either direction. The eccentricity corresponds to the

resultant of reaction forces falling within the middle nine-tenths (9/10) of the base width and length.

Extreme limit state design checks for the piers shall include bearing resistance, eccentricity, failure by sliding and structural failure with respect to extreme event load conditions relating to certain hydraulic events and ice and seismic forces. Resistance factors, φ, for the extreme limit state shall be taken as 1.0 with the exception of bearing resistance for which a resistance factor of 0.8 shall be used. The ice pressures for Extreme Event II shall be applied at the Q1.1 and Q50 elevations as defined in MaineDOT BDG Section 3.9 with the design ice thickness increased by 1 foot and a load factor of 1.0.

For scour protection of pier footings, construct the footing or seal directly on bedrock surfaces cleaned of all weathered, loose and potentially erodible or scourable rock. With these precautions, strength and extreme limit state designs do not need to consider rock scour due to the design (Q_{100}) or check (Q_{500}) floods for scour.

For sliding analyses, at the strength limit state, a sliding resistance factor, φ_τ, of 0.80 shall be applied to the nominal sliding resistance of piers founded on spread footings on concrete seal on bedrock assuming the bedrock subgrade will be prepared in-the-wet and some amount of sediment will remain on the bedrock surface. A sliding resistance factor, φ_τ, of 0.80 shall be applied to the nominal sliding resistance of cast-in-place concrete on tremie concrete (this sliding resistance factor is taken as equal to the resistance factor for cast-in-place concrete on sand (LFRD Table 10.5.5.2.2-1)). If the bedrock subgrade is prepared in-the-dry and cleaned with high pressure water and air prior to placing seal concrete a sliding resistance factor, φ_τ, of 0.9 may be used.

Assuming that the rock subgrade will be prepared in-the-wet, some amount of sediment is expected to remain on the rock surface and the sliding computations for resistance of pier footings to lateral loads shall assume a maximum friction coefficient of 0.60 at the bedrock-seal concrete interface. If the bedrock subgrade is prepared in-the-dry and cleaned with high pressure water and air prior to placing seal concrete, sliding computations for resistance of pier footings to lateral loads shall assume a maximum frictional coefficient of 0.70 at the bedrock-seal concrete interface.

Anchorage of the pier footings to the seal is required by the MaineDOT BDG Section 5.2.2. The dowels should be drilled and grouted into the seal concrete after dewatering and prior to placing the footing concrete. Anchorage of the footing concrete or of the concrete seal to the bedrock may also be required to resist sliding forces and improve stability. The dowels should be drilled and grouted into the concrete seal after dewatering and prior to placing the footing concrete. If bedrock is observed to slope steeper than 4H:1V at the subgrade elevation, the bedrock should be benched to create level steps or excavated to be completely level.

Site conditions may warrant that the pier noses be designed to effectively break up or deflect floating ice or debris. Each pier nose should be designed to effectively break up or deflect floating ice or drift. Facing the pier noses with a steel plate/angle or facing piers with granite should be considered.

6.4 Bedrock Removal and Bedrock Subgrade Preparation

The nature, slope and degree of fracturing in the bedrock bearing surfaces will not be evident until the foundation excavations for the abutments and piers are made. The bedrock surface shall be cleared of all loose fractured bedrock, loose decomposed bedrock and soil. The final bearing surface shall be solid. Construction activities should not be permitted to disturb the bedrock mass or to create any rock falls or any open fissures. The cleanliness and condition of the final bedrock surface shall be approved by the Resident prior to placement of the footing concrete or seal concrete.

If bedrock is observed to slope steeper than 4H:1V at the subgrade elevation, the bedrock should be benched to create level steps or excavated to be completely level. The bedrock surface may be stepped along the centerline of bearing to create a workable bearing surface. The bottom of footing elevation may vary based on the presence of fractured bedrock and the variability of the bedrock surface. Anchors or dowels may also be designed and employed to improve sliding resistance where the prepared bedrock surface is steeper than 4H:1V in any direction.

The contractor should maintain the abutment and wingwall excavations so that the foundations can be constructed in-the-dry. Where foundations are constructed in-the-dry, the final bearing surface shall be washed with high pressure water and air prior to concrete being placed for the footing. For spread footings are constructed in-the-dry, any irregularities in the existing bedrock surface or irregularities created during the excavation process should be backfilled with unreinforced concrete to the bearing elevation.

In-the-dry or underwater excavation of highly sloped and loose fractured bedrock material may be done using conventional excavation methods, but may require drilling and blasting techniques. Blasting should be conducted in accordance with Section 105.2.6 of the MaineDOT Standard Specifications. It is also recommended that the contractor conduct pre-and post-blast surveys, as well as blast vibration monitoring at nearby structures in accordance with industry standards at the time of the blast.

The pier excavations and portions of the abutment excavations will be submerged. The contractor shall prepare and submit a written procedure for cleaning and inspection of the submerged bedrock subgrade to the Resident in accordance with Special Provision 511 found in Appendix C.

It is anticipated that there will be seepage of water from fractures and joints exposed in the bedrock surface. Water should be controlled by pumping from sumps.

6.5 Bearing Resistance

Substructure spread footings shall be proportioned to provide stability against bearing capacity failure. Application of permanent and transient loads are specified in LRFD Article 11.5.6. The stress distribution may be assumed to be a triangular or trapezoidal distribution over the effective base as shown in LRFD Figure 11.6.3.2-2.

A factored bearing resistance of 20 ksf may be used and for preliminary footing sizing, and to control settlements when analyzing the service limit state load combination. The bearing resistance for abutment, wingwall and pier footings founded on competent, sound bedrock shall be investigated at the strength limit state using factored loads and a factored bearing resistance of 23 ksf. This assumes a bearing resistance factor, φ_b, for spread footings on bedrock of 0.45, based on bearing resistance evaluation using semi-empirical methods. For extreme limit state load combinations a factored bearing resistance of 42 ksf may be used. This assumes a bearing resistance factor of 0.8 in accordance with LRFD Article C11.5.8. See Appendix B – Calculations for supporting documentation.

In no instance shall the factored bearing stress exceed the factored compressive resistance of the footing concrete, which may be taken as 0.3*f'c*. No footing shall be less than 2 feet wide regardless of the applied bearing pressure or bearing material.

6.6 Cast-in-Place Cantilever Type Retaining Wall

A long cast-in-place, cantilever type retaining wall founded on bedrock will be constructed on the existing island (adjacent to Abutment No. 1) to retain fill soils necessary to bring the existing island grade to the proposed new elevation. This long retaining wall will end adjacent to the east abutment for the Canal Bridge (Abutment No. 2). The foundation for this long retaining wall may transition to a pile supported wall closer to the Canal Bridge abutment. The need for a pile supported wall in this area (adjacent to Canal Bridge Abutment No. 2) is currently being evaluated. The results of this evaluation and any alternative design requirements will be included in the Final Geotechnical Design Report for the Replacement of Canal Bridge.

Bearing resistance for the proposed cast-in-place retaining wall founded on bedrock shall be investigated at the service limit state using factored loads and a factored bearing resistance of 20 ksf. Resistance factors for the service limit state shall be taken as 1.0. A factored bearing resistance of 20 ksf may be used to control settlement when analyzing the service limit state and for preliminary footing sizing as allowed in LRFD C10.6.2.1.

The design of the retaining walls founded on a spread footing on bedrock at the strength limit state shall consider nominal bearing resistance, overturning (eccentricity), lateral sliding and structural failure. The bearing resistance for the proposed cast-in-place retaining wall founded on competent, sound bedrock shall be investigated at the strength limit state using factored loads and a factored bearing resistance of 23 ksf. This assumes a bearing resistance factor, φ_b, for spread footings on bedrock of 0.45.

For extreme limit state load combinations a factored bearing resistance of 42 ksf may be used for gravity and semi-gravity walls and 52 ksf may be used for cantilever type walls. This assumes a bearing resistance factor of 0.8 for gravity and semi-gravity walls and 1.0 for cantilever type walls in accordance with LRFD Article C11.5.8. See Appendix B – Calculations for supporting documentation.

For scour protection of the retaining wall footings, construct the footing directly on bedrock surfaces cleaned of all weathered, loose and potentially erodible or scourable rock. With these

precautions, strength and extreme limit state designs do not need to consider foundation resistance after the design (Q_{100}) or check (Q_{500}) floods for scour. The cast-in-place retaining wall shall be designed as unrestrained meaning free to rotate at the top in an active state of earth pressure. Earth loads shall be calculated using as active earth pressure coefficient, K_a, calculated using Rankine Theory for cantilever walls (K_a = 0.31) and Coulomb Theory for gravity shaped structures (K_a = 0.28). These earth pressure coefficients are calculated assuming a level backfill slope. The earth pressure coefficients will need to be recalculated if there is a sloping backfill surface behind the retaining wall. Appendix B - Calculations for supporting documentation.

The vertical stress shall be calculated assuming a triangular or trapezoidal distribution over an effective base area as shown in LRFD Figure 11.6.3.2-2. For footings on rock, the location of the resultant of the reaction forces shall be within the middle nine-tenths (9/10) of the base width. See In no instance shall the factored bearing stress exceed the nominal resistance of the footing concrete, which is taken as 0.3*f'c*. No footing shall be less than 2 feet wide regardless of the applied bearing pressure.

The Designer may assume Soil Type 4 (MaineDOT BDG Section 3.6.1) for backfill material soil properties. The backfill properties are as follows: ϕ = 32 degrees, γ = 125 pcf.

Assuming that the rock subgrade will be prepared in-the-wet, some amount of sediment is expected to remain on the rock surface and the sliding computations for resistance to lateral loads shall assume a maximum friction coefficient of 0.60 at the bedrock-concrete interface. If the bedrock subgrade is prepared in-the-dry and cleaned with high pressure water and air prior to placing seal concrete, sliding computations for resistance to lateral loads shall assume a maximum frictional coefficient of 0.70 at the bedrock-concrete interface. A sliding resistance factor of φ_τ=0.80 shall be applied to the nominal sliding resistance of walls founded on spread footings on bedrock.

6.7 Scour and Riprap

For scour protection of abutment, wingwall and pier footings, place the bottom of concrete seals or footings directly on bedrock surfaces cleaned of all weathered, loose and potentially erodible or scourable rock.

The consequences of changes in foundation conditions resulting from streambed material loss due to the design (Q_{100}) flood for scour shall be considered for any foundation at the service and strength limit states. These changes in foundation conditions shall be investigated at the abutments, wingwalls and piers. For scour protection any footings for wingwalls which are constructed on granular deposits should be embedded a minimum of 3 feet below the design scour depth and armored with 3 feet of riprap. Refer to MaineDOT BDG Section 2.3.11 for information regarding scour design.

Bridge approach slopes, slopes at wingwalls and slopes at the toes of any footings on granular soils shall be armored with 3 feet of riprap. Stone riprap shall conform to item number 703.26 - Plain Hand Laid Riprap and shall be placed at a maximum slope of 1.75H:1V. The toe of the

riprap section shall be constructed 1 foot below the streambed elevation unless the streambed consists of bedrock. The riprap section shall be underlain by a 1 foot thick layer of bedding material conforming to item number 703.19 of the Standard Specification and Class "1" Erosion Control Geotextile per Standard Details 610(02) through 610(04).

6.8 Settlement

The proposed approach embankments at the bridge approaches will be constructed on granular soils. Placement of the necessary fill will result in negligible densification of the underlying soils and minimal settlement of the embankments. Any settlement will occur during and immediately after construction of the widened embankments. Post-construction settlement will be minimal.

Any settlement of bridge abutments or piers will be due to elastic compression of the bedrock mass and is anticipated to be less than 1.0 inch.

6.9 Frost Protection

It is anticipated that the abutment, wingwall and pier spread footings will be founded directly on bedrock. For foundations on bedrock, heave due to frost is not a design issue and no requirements for minimum depth of embedment are necessary.

In the event that any foundation is placed on granular subgrade soils, it should be designed with an appropriate embedment for frost protection. According to the Modberg Software by the US Army Cold Regions Research and Engineering Laboratory the site has an air design-freezing index of approximately 1492 F-degree days. In a granular soil with a water content of approximately 10%, this correlates to a frost depth of approximately 5.8 feet. Therefore, any foundations placed on granular soils should be founded a minimum of 6.0 feet below finished exterior grade for frost protection. This minimum embedment depth applies only to foundations placed on granular soils and not those founded on bedrock. See Appendix B - Calculations for supporting documentation.

6.10 Seismic Design Considerations

The following parameters were determined for the site from the USGS Seismic Parameters CD provided with the LRFD Manual and LRFD Articles 3.10.3.1 and 3.10.6:

- Peak ground acceleration coefficient:
  PGA = 0.096g (Hollis); 0.094g (Buxton)
- Design spectral acceleration coefficient at 0.2-second period:
  S_{DS} = 0.188g (Hollis); 0.185 (Buxton)
- Design spectral acceleration coefficient at 1.0-second period:
  S_{D1} = 0.046g (both Hollis and Buxton)
- Site Class B (Rock with 2,500 ft/s < v_s < 5,000 ft/s)
- Seismic Zone 1, based on a S_{D1} < 0.15g

In conformance with LRFD Table 4.7.4.3 seismic analysis is not required for multi-span bridges in Seismic Zone 1. According to Figure 2-2 of the MaineDOT BDG, the Bar Mills Bridge is not on the National Highway System (NHS). The bridge is not classified as a major structure since the construction costs will not exceed $10 million. These criteria eliminate the MaineDOT BDG requirement to design the foundations for seismic earth loads. However, superstructure connections and minimum support length requirements shall be designed per LRFD Articles 3.10.9 and 4.7.4.4, respectively. See Appendix B – Calculations for supporting documentation.

6.11 Construction Considerations

Construction activities will include construction of cofferdams and earth support systems to support the approach fills and control stream flow during construction of concrete seals and spread footings for the abutments, wingwalls and piers. Construction activities will also include common earth and rock excavation and structural earth and rock excavation for major structures.

There is a potential for the existing abutment and/or wingwall foundations to interfere with the excavation activities for the proposed abutments and wingwalls. Obstructions may be cleared by conventional excavation methods. The existing abutments and wingwalls shall be removed to the bearing seal elevation and left in place to maintain the existing topography. The existing piers shall be removed in their entirety. This should be noted on the Plans and the work shall be considered incidental to bridge removal. Clearing obstructions shall be specified as incidental to related pay items. Alternative methods to clear obstructions may be used as approved by the Resident.

The nature, slope and degree of fracturing in the bedrock bearing surfaces will not be evident until the foundation excavations are made. The bedrock surface shall be cleared of all loose fractured bedrock, loose decomposed bedrock and soil. The final bearing surface shall be solid. The bedrock surface slope shall be less than 4H:1V or it shall be benched in level steps or excavated to be completely level. Anchoring, doweling or other means of improving sliding resistance may also be employed where the prepared bedrock surface is steeper than 4H:1V in any direction.

Portions of the abutment, wingwall and pier excavations may be submerged. The contractor shall prepare and submit a written procedure for cleaning and inspection of the bedrock subgrade to the Resident in accordance with Special Provision 511 found in Appendix C. Where practical, the contractor may maintain the abutment, wingwall or pier excavations so that the foundations can be constructed in-the-dry.

Where foundations are constructed in-the-dry, the final bearing surface shall be washed with high pressure water and air prior to concrete being placed for the footing. In-the-dry or underwater excavation of highly sloped and loose fractured bedrock material may be done using conventional excavation methods, but may require drilling and blasting techniques. Blasting should be conducted in accordance with Section 105.2.6 of the MaineDOT Standard Specifications. It is also recommended that the contractor conduct pre-and post-blast surveys, as well as blast vibration monitoring at nearby residences and bridge structures in accordance with industry standards at the time of the blast.

The cleanliness and condition of the final bedrock surface shall be approved by the Resident prior to placement of the footing concrete or seal concrete.

It is anticipated that there will be seepage of water from fractures and joints exposed in the bedrock surface. Water should be controlled by pumping from sumps.

Using the excavated native soils as structural backfill should not be permitted. The native soils may only be used as common borrow in accordance with MaineDOT Standard Specifications 203 and 703.

The Contractor will have to excavate the existing subbase and subgrade fill soils in the bridge approaches. These materials should not be used to re-base the new bridge approaches. Excavated subbase sand and gravel may be used as fill below subgrade level in fill areas provided all other requirements of MaineDOT Standard Specifications 203 and 703 are met.

7.0 CLOSURE

This report has been prepared for the use of the MaineDOT Bridge Program for specific application to the proposed replacement of Bar Mills Bridge in Hollis and Buxton, Maine in accordance with generally accepted geotechnical and foundation engineering practices. No other intended use or warranty is expressed or implied.

In the event that any changes in the nature, design, or location of the proposed project are planned, this report should be reviewed by a geotechnical engineer to assess the appropriateness of the conclusions and recommendations and to modify the recommendations as appropriate to reflect the changes in design. Further, the analyses and recommendations are based in part upon limited soil explorations at discrete locations completed at the site. If variations from the conditions encountered during the investigation appear evident during construction, it may also become necessary to re-evaluate the recommendations made in this report.

We also recommend that we be provided the opportunity for a general review of the final design and specifications in order that the earthwork and foundation recommendations may be properly interpreted and implemented in the design.

Sheets

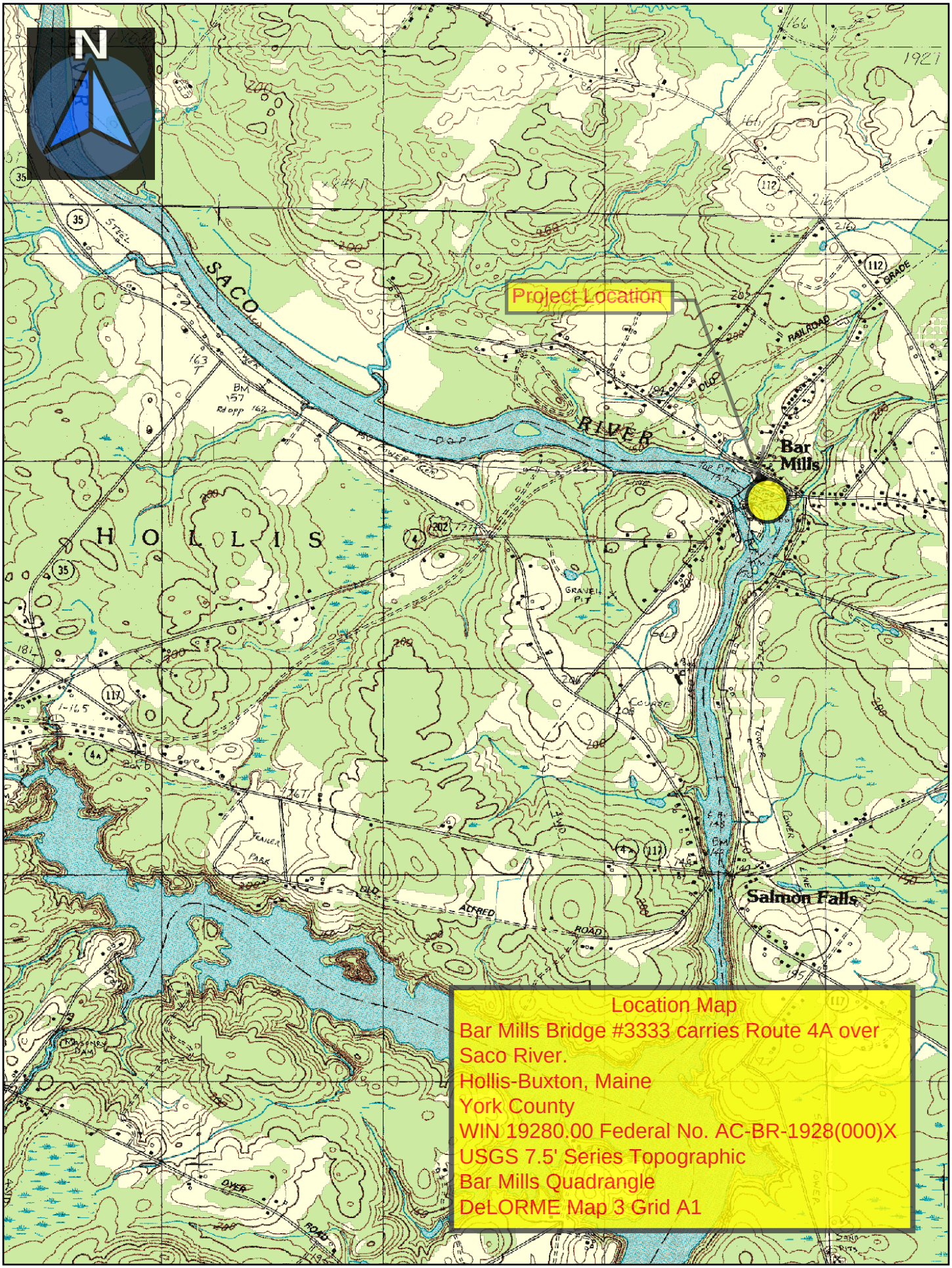

Map Scale 1:24000

The Maine Department of Transportation provides this publication for information only. Reliance upon this information is at user risk. It is subject to revision and may be incomplete depending upon changing conditions. The Department assumes no liability if injuries or damages result from this information. This map is not intended to support emergency dispatch. Road names used on this map may not match official road names.

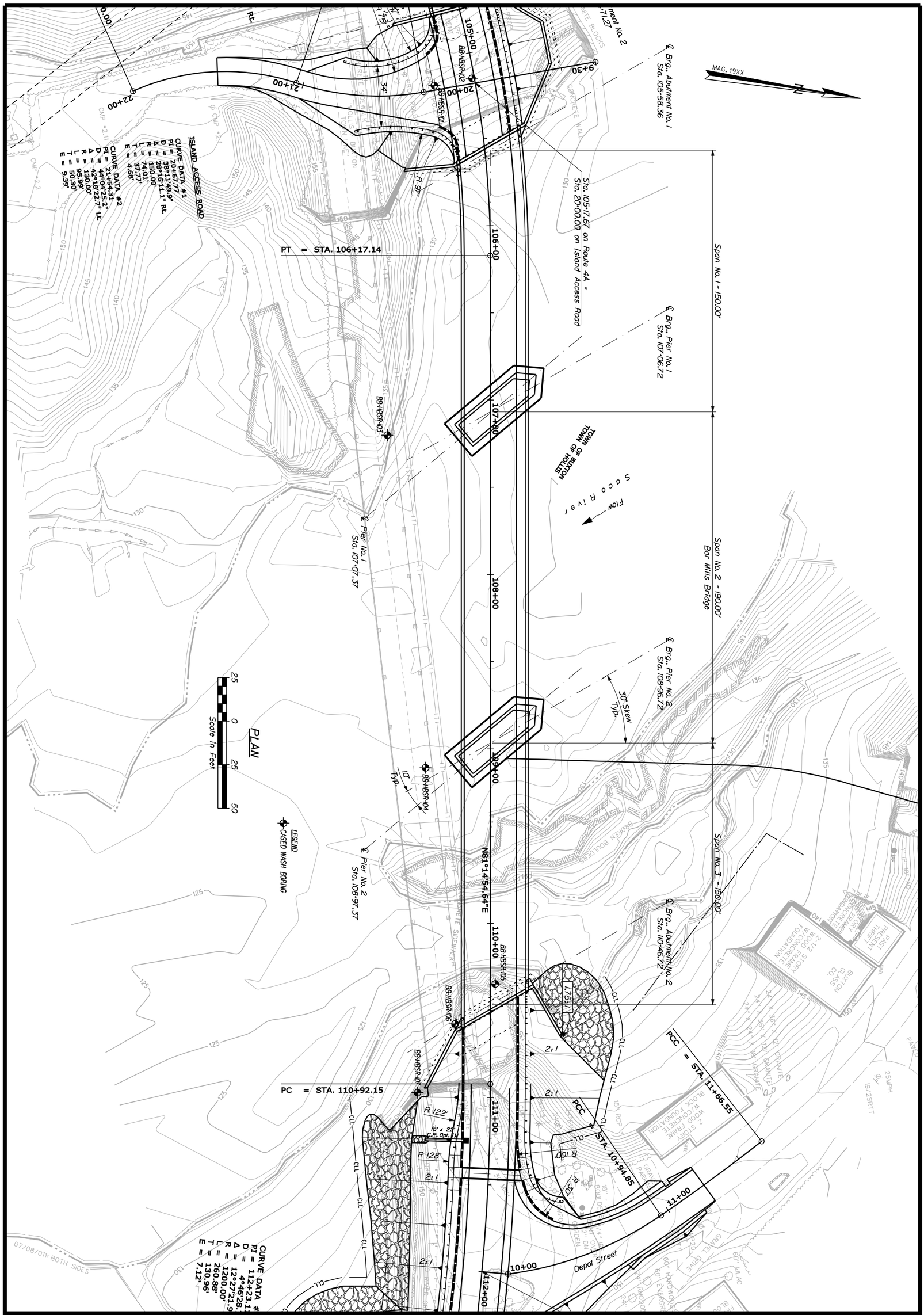

SHEET NUMBER 2 OF 4

BAR MILLS BRIDGE
SACO RIVER
HOLLIS-BUXTON YORK COUNTY

BORING LOCATION PLAN

PROJ. MANAGER	M. Parlin	BY	DATE
DESIGN-DETAILED	D. Eaton	D. Damren	
CHECKED-REVIEWED			
DESIGN2-DETAILED2	K.MAGUIRE	T.WHITE	SEPT 2013
DESIGN3-DETAILED3			
REVISIONS 1			
REVISIONS 2			
REVISIONS 3			
REVISIONS 4			
FIELD CHANGES			

SIGNATURE

P.E. NUMBER

DATE

STATE OF MAINE
DEPARTMENT OF TRANSPORTATION

–

BRIDGE NO. 3333 WIN 19280.00 BRIDGE PLANS

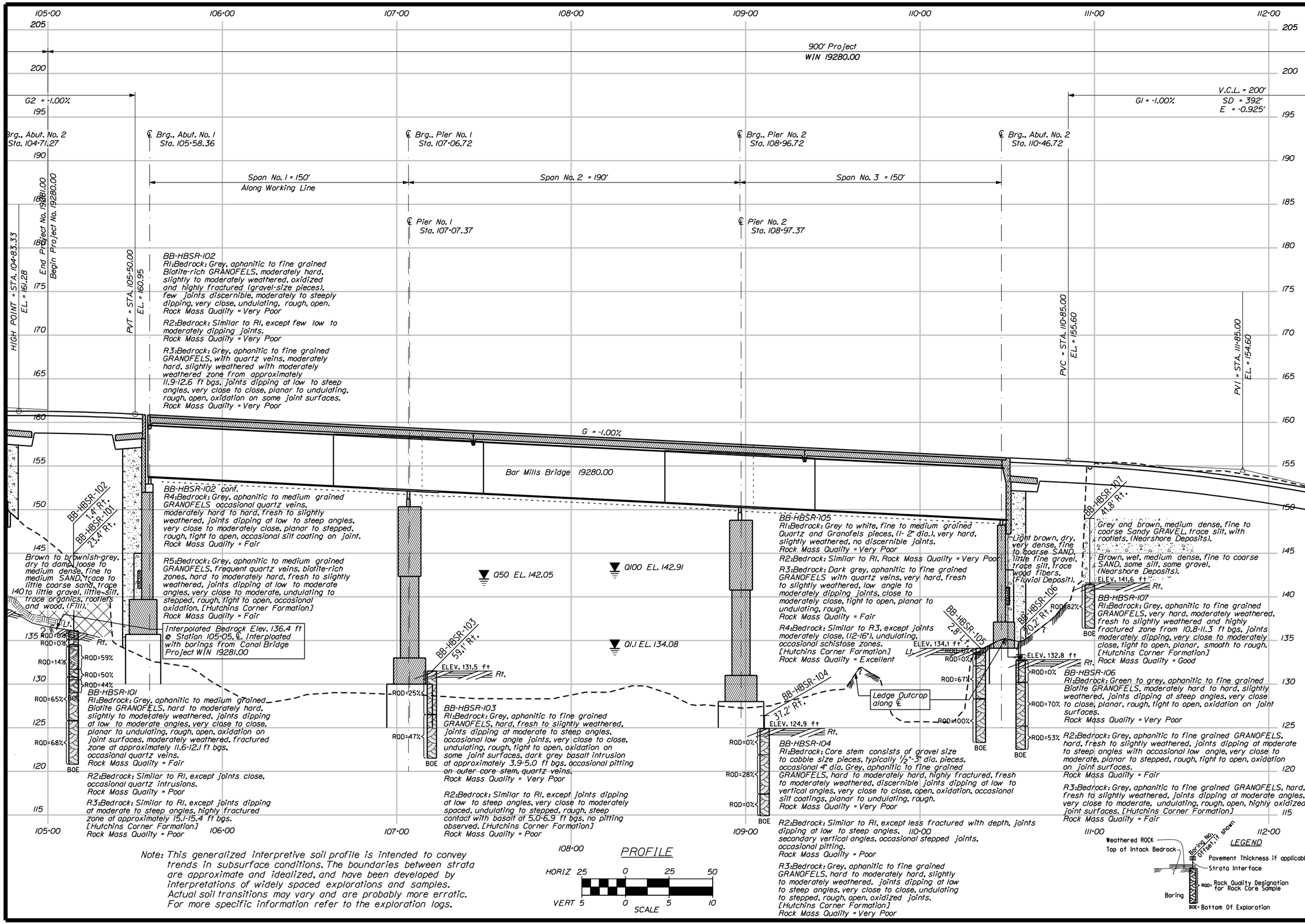

Note: This generalized interpretive soil profile is intended to convey trends in subsurface conditions. The boundaries between strata are approximate and idealized, and have been developed by interpretations of widely spaced explorations and samples. Actual soil transitions may vary and are probably more erratic. For more specific information refer to the exploration logs.

STATE OF MAINE
DEPARTMENT OF TRANSPORTATION

STP-1928(000)

WIN 19280.00

BRIDGE NO. 3333

BRIDGE PLANS

PROJ. MANAGER	M. Parlin	BY	DATE
DESIGN-DETAILED			
CHECKED-REVIEWED			
DESIGN2-DETAILED2	K.MAGUIRE	T.WHITE	JUN 2014
DESIGN3-DETAILED3			
REVISIONS 1			
REVISIONS 2			
REVISIONS 3			
REVISIONS 4			
FIELD CHANGES			

SIGNATURE

P.E. NUMBER

DATE

BAR MILLS BRIDGE
SACO RIVER
HOLLIS-BUXTON YORK COUNTY

INTERPRETIVE SUBSURFACE PROFILE

SHEET NUMBER

3

OF 4

Filename: ...\00\GEOTECH\MSTA\018_ISP1.dgn Division: GEOTECH Username: terry.white Date:12/3/2014

Filename: ...\msta\008_BORING LOGS1.dgn   Division: GEOTECH   Username: terry.white   Date:8/13/2014

Maine Department of Transportation — Soil/Rock Exploration Log — US CUSTOMARY UNITS

Project: Bar Mills Bridge #3333 carries Route 4A over Saco River
Location: Hollis-Buxton, Maine

Boring No.: BB-HBSR-101   WIN: 19280.00

Driller:	Northern Test Boring, Inc.	Elevation (ft.)	145.0	Auger ID/OD:	5" Solid Stem
Operator:	M. Nadeau	Datum:	NAVD88	Sampler:	Standard Split Spoon
Logged By:	B. Steinert H&A	Rig Type:	Dietrich D-50 Track	Hammer Wt./Fall:	140#/30"
Date Start/Finish:	9/11/2013-9/11/2013	Drilling Method:	Cased Wash Boring	Core Barrel:	NQ-2"
Boring Location:	105+14.9, 23.4 ft Rt.	Casing ID/OD:	HW	Water Level*:	None Observed
Hammer Efficiency Factor: 0.801		Hammer Type:	Automatic ☒ Hydraulic ☐ Rope & Cathead ☐		

Definitions:
D = Split Spoon Sample
MD = Unsuccessful Split Spoon Sample attempt
U = Thin Wall Tube Sample
MU = Unsuccessful Thin Wall Tube Sample attempt
V = Insitu Vane Shear Test, PP = Pocket Penetrometer
MV = Unsuccessful Insitu Vane Shear Test attempt
R = Rock Core Sample
SSA = Solid Stem Auger
HSA = Hollow Stem Auger
RC = Roller Cone
WOH = weight of 140lb. hammer
WOR/C = weight of rods or casing
WO1P = Weight of one person
S_u = Insitu Field Vane Shear Strength (psf)
T_v = Pocket Torvane Shear Strength (psf)
q_p = Unconfined Compressive Strength (ksf)
N-uncorrected = Raw field SPT N-value
Hammer Efficiency Factor = Annual Calibration Value
N_{60} = SPT N-uncorrected corrected for hammer efficiency
N_{60} = (Hammer Efficiency Factor/60%)*N-uncorrected
$S_{u(lab)}$ = Lab Vane Shear Strength (psf)
WC = water content, percent
LL = Liquid Limit
PL = Plastic Limit
PI = Plasticity Index
G = Grain Size Analysis
C = Consolidation Test

Sample No.	Pen./Rec. (in.)	Sample Depth (ft.)	Blows (/6 in.) Shear Strength (psf) or RQD (%)	N-uncorrected	N_{60}	Casing Blows	Elevation (ft.)
1D	24/8	0.00 - 2.00	6/6/5/5	11	15	SSA	
2D	24/3	5.00 - 7.00	5/2/2/3	4	5		
R1	33.6/33.6	10.50 - 13.30	RQD = 59%			NQ-2	135.30
R2	14.4/14.4	13.30 - 14.50	RQD = 50%				
R3	18/18	14.50 - 16.00	RQD = 44%				129.00

Visual Description and Remarks:

Brown, dry, medium dense, fine to medium SAND, little coarse sand, gravel and silt, rootlets, (Topsoil/Fill).

Brown, dry, loose, fine to medium SAND, little silt, trace coarse sand and gravel.

9.70

Top of Bedrock at Elev. 135.3 ft.
Auger REFUSAL at 9.7 ft bgs, Roller Coned ahead to 10.5 ft bgs.
R1:Bedrock: Grey, aphanitic to medium grained Biotite GRANOFELS, hard to moderately hard, slightly to moderately weathered, joints dipping at low to moderate angles, very close to close, planar to undulating, rough, open, oxidation on joint surfaces, moderately weathered, fractured zone at approximately 11.6-12.1 ft bgs, occasional quartz veins.
Rock Mass Quality = Fair
R1:Core Times (min:sec)
10.5-11.5 ft (2:45)
11.5-12.5 ft (3:10)
12.5-13.3 ft (3:49) 100% Recovery
R2:Bedrock: Similar to R1, except joints close, occasional quartz intrusions.
Rock Mass Quality = Poor
R2:Core Times (min:sec)
13.3-13.5 ft (0:51)
13.5-14.5 ft (3:57) 100% Recovery
R3:Bedrock: Similar to R1, except joints dipping at moderate to steep angles, highly fractured zone at approximately 15.1-15.4 ft bgs. [Hutchins Corner Formation]
Rock Mass Quality = Poor
R3:Core Times (min:sec)
14.5-16.0 ft (2:14) 100% Recovery

16.00

Bottom of Exploration at 16.00 feet below ground surface.

Remarks:

Stratification lines represent approximate boundaries between soil types; transitions may be gradual.

* Water level readings have been made at times and under conditions stated. Groundwater fluctuations may occur due to conditions other than those present at the time measurements were made.

Page 1 of 1   Boring No.: BB-HBSR-101

Maine Department of Transportation — Soil/Rock Exploration Log — US CUSTOMARY UNITS

Project: Bar Mills Bridge #3333 carries Route 4A over Saco River
Location: Hollis-Buxton, Maine

Boring No.: BB-HBSR-102   WIN: 19280.00

Driller:	Northern Test Boring, Inc.	Elevation (ft.)	143.6	Auger ID/OD:	N/A
Operator:	M. Nadeau	Datum:	NAVD88	Sampler:	Standard Split Spoon
Logged By:	D. Dearden H&A	Rig Type:	Dietrich D-50 Track	Hammer Wt./Fall:	140#/30"
Date Start/Finish:	9/10/2013-9/10/2013	Drilling Method:	Cased Wash Boring	Core Barrel:	NQ-2"
Boring Location:	105+14.7, 1.4 ft Rt.	Casing ID/OD:	HW	Water Level*:	None Observed
Hammer Efficiency Factor: 0.801		Hammer Type:	Automatic ☒ Hydraulic ☐ Rope & Cathead ☐		

Definitions:
D = Split Spoon Sample
MD = Unsuccessful Split Spoon Sample attempt
U = Thin Wall Tube Sample
MU = Unsuccessful Thin Wall Tube Sample attempt
V = Insitu Vane Shear Test, PP = Pocket Penetrometer
MV = Unsuccessful Insitu Vane Shear Test attempt
R = Rock Core Sample
SSA = Solid Stem Auger
HSA = Hollow Stem Auger
RC = Roller Cone
WOH = weight of 140lb. hammer
WOR/C = weight of rods or casing
WO1P = Weight of one person
S_u = Insitu Field Vane Shear Strength (psf)
T_v = Pocket Torvane Shear Strength (psf)
q_p = Unconfined Compressive Strength (ksf)
N-uncorrected = Raw field SPT N-value
Hammer Efficiency Factor = Annual Calibration Value
N_{60} = SPT N-uncorrected corrected for hammer efficiency
N_{60} = (Hammer Efficiency Factor/60%)*N-uncorrected
$S_{u(lab)}$ = Lab Vane Shear Strength (psf)
WC = water content, percent
LL = Liquid Limit
PL = Plastic Limit
PI = Plasticity Index
G = Grain Size Analysis
C = Consolidation Test

Sample No.	Pen./Rec. (in.)	Sample Depth (ft.)	Blows (/6 in.) Shear Strength (psf) or RQD (%)	N-uncorrected	N_{60}	Casing Blows	Elevation (ft.)
1D	24/6	0.00 - 2.00	1/2/2/3	4	5	RCA	
2D	20.4/4	5.00 - 6.70	2/2/2/50(2.4")	4	5		
R1	12/10	7.50 - 8.50	RQD = 0%			NQ-2	136.10
R2	9.6/6	8.50 - 9.30	RQD = 0%				
R3	42/41	9.30 - 12.80	RQD = 14%				
R4	60/60	12.80 - 17.80	RQD = 65%				
R5	60/54	17.80 - 22.80	RQD = 68%				120.80

Visual Description and Remarks:

Brown, dry, loose, fine to medium SAND, little silt, trace gravel, poorly graded with rootlets and trace organics. (Reworked Alluvium, Fill).

Brownish-grey, moist to damp, loose, fine to medium SAND, little silt, poorly graded with piece of decomposed wood 2" in length.

Advanced HW Casing to 7.4 ft bgs, Roller Coned ahead to 7.5 ft bgs.

7.50

Top of Bedrock at Elev. 136.1 ft.
R1:Bedrock: Grey, aphanitic to fine grained Biotite-rich GRANOFELS, moderately hard, slightly to moderately weathered, oxidized and highly fractured (gravel-size pieces), few joints discernible, moderately to steeply dipping, very close, undulating, rough, open.
Rock Mass Quality = Very Poor
R1:Core Times (min:sec)
7.5-8.5 ft (6:00) 83% Recovery
Core Barrel jammed
R2:Bedrock: Similar to R1, except few low to moderately dipping joints.
Rock Mass Quality = Very Poor
R2:Core Times (min:sec)
8.5-9.3 ft (4:00) 60% Recovery
R3:Bedrock: Grey, aphanitic to fine grained GRANOFELS, with quartz veins, moderately hard, slightly weathered with moderately weathered zone from approximately 11.9-12.6 ft bgs, joints dipping at low to steep angles, very close to close, planar to undulating, rough, open, oxidation on some joint surfaces.
Rock Mass Quality = Very Poor
R3:Core Times (min:sec)
9.3-10.3 ft (2:00)
10.3-11.3 ft (2:00)
11.3-12.3 ft (2:00)
12.3-12.8 ft (1:48) 98% Recovery
R4:Bedrock: Grey, aphanitic to medium grained GRANOFELS, occasional quartz veins, moderately hard to hard, fresh to slightly weathered, joints dipping at low to steep angles, very close to moderately close, planar to stepped, rough, tight to open, occasional silt coating on joint.
Rock Mass Quality = Fair
R4:Core Times (min:sec)
12.8-13.8 ft (1:42)
13.8-14.8 ft (2:00)
14.8-15.8 ft (2:00)
15.8-16.8 ft (2:00)
16.8-17.8 ft (3:00) 100% Recovery
R5:Bedrock: Grey, aphanitic to medium grained GRANOFELS, frequent quartz veins, biotite-rich zones, hard to moderately hard, fresh to slightly weathered, joints dipping at low to moderate angles, very close to moderate, undulating to stepped, rough, tight to open, occasional oxidation.
[Hutchins Corner Formation]
Rock Mass Quality = Fair
R5:Core Times (min:sec)
17.8-18.8 ft (2:00)
18.8-19.8 ft (2:30)
19.8-20.8 ft (2:00)
20.8-21.8 ft (4:30)
21.8-22.8 ft (?) 90% Recovery

22.80

Bottom of Exploration at 22.80 feet below ground surface.

Remarks:

Stratification lines represent approximate boundaries between soil types; transitions may be gradual.

* Water level readings have been made at times and under conditions stated. Groundwater fluctuations may occur due to conditions other than those present at the time measurements were made.

Page 1 of 1   Boring No.: BB-HBSR-102

Maine Department of Transportation — Soil/Rock Exploration Log — US CUSTOMARY UNITS

Project: Bar Mills Bridge #3333 carries Route 4A over Saco River
Location: Hollis-Buxton, Maine

Boring No.: BB-HBSR-103   WIN: 19280.00

Driller:	MaineDOT	Elevation (ft.)	131.5	Auger ID/OD:	N/A
Operator:	Giles/Daggett	Datum:	NAVD88	Sampler:	N/A
Logged By:	B. Wilder	Rig Type:	CME 45C	Hammer Wt./Fall:	N/A
Date Start/Finish:	9/10/2013; 10:00-14:00	Drilling Method:	Cased Wash Boring	Core Barrel:	NQ-2"
Boring Location:	107+20.1, 59.1 ft Rt.	Casing ID/OD:	HW	Water Level*:	None Observed
Hammer Efficiency Factor: 0.867		Hammer Type:	Automatic ☒ Hydraulic ☐ Rope & Cathead ☐		

Definitions:
D = Split Spoon Sample
MD = Unsuccessful Split Spoon Sample attempt
U = Thin Wall Tube Sample
MU = Unsuccessful Thin Wall Tube Sample attempt
V = Insitu Vane Shear Test, PP = Pocket Penetrometer
MV = Unsuccessful Insitu Vane Shear Test attempt
R = Rock Core Sample
SSA = Solid Stem Auger
HSA = Hollow Stem Auger
RC = Roller Cone
WOH = weight of 140lb. hammer
WOR/C = weight of rods or casing
WO1P = Weight of one person
S_u = Insitu Field Vane Shear Strength (psf)
T_v = Pocket Torvane Shear Strength (psf)
q_p = Unconfined Compressive Strength (ksf)
N-uncorrected = Raw field SPT N-value
Hammer Efficiency Factor = Annual Calibration Value
N_{60} = SPT N-uncorrected corrected for hammer efficiency
N_{60} = (Hammer Efficiency Factor/60%)*N-uncorrected
$S_{u(lab)}$ = Lab Vane Shear Strength (psf)
WC = water content, percent
LL = Liquid Limit
PL = Plastic Limit
PI = Plasticity Index
G = Grain Size Analysis
C = Consolidation Test

Sample No.	Pen./Rec. (in.)	Sample Depth (ft.)	Blows (/6 in.) Shear Strength (psf) or RQD (%)	N-uncorrected	N_{60}	Casing Blows	Elevation (ft.)
R1	60/60	0.00 - 5.00	RQD = 25%			NQ-2	
R2	60/60	5.00 - 10.00	RQD = 47%				121.50

Visual Description and Remarks:

Top of Bedrock at Elev. 131.5 ft.
Spun HW Casing 0.4 ft into Bedrock.
R1:Bedrock: Grey, aphanitic to fine grained GRANOFELS, hard, fresh to slightly weathered, joints dipping at moderate to steep angles, occasional low angle joints, very close to close, undulating, rough, tight to open, oxidation on some joint surfaces, dark grey basalt intrusion at approximately 3.9-5.0 ft bgs, occasional pitting on outer core stem, quartz veins.
Rock Mass Quality = Very Poor
R1:Core Times (min:sec)
0.0-1.0 ft (5:45)
1.0-2.0 ft (7:00)
2.0-3.0 ft (7:50)
3.0-4.0 ft (8:25)
4.0-5.0 ft (8:30) 100% Recovery
R2:Bedrock: Similar to R1, except joints dipping at low to steep angles, very close to moderately spaced, undulating to stepped, rough, steep contact with basalt at 5.0-6.9 ft bgs, no pitting observed.
[Hutchins Corner Formation]
Rock Mass Quality = Poor
R2:Core Times (min:sec)
5.0-6.0 ft (6:15)
6.0-7.0 ft (7:20)
7.0-8.0 ft (7:35)
8.0-9.0 ft (7:35)
9.0-10.0 ft (7:50) 100% Recovery

10.00

Bottom of Exploration at 10.00 feet below ground surface.

Remarks:

27.0 ft from Bridge Deck to Ground, Top of Bedrock.
300-400 lbs of down presure on Core Barrel.

Stratification lines represent approximate boundaries between soil types; transitions may be gradual.

* Water level readings have been made at times and under conditions stated. Groundwater fluctuations may occur due to conditions other than those present at the time measurements were made.

Page 1 of 1   Boring No.: BB-HBSR-103

Maine Department of Transportation — Soil/Rock Exploration Log — US CUSTOMARY UNITS

Project: Bar Mills Bridge #3333 carries Route 4A over Saco River
Location: Hollis-Buxton, Maine

Boring No.: BB-HBSR-104   WIN: 19280.00

Driller:	MaineDOT/H&A	Elevation (ft.)	126.4	Auger ID/OD:	N/A
Operator:	Giles/Daggett	Datum:	NAVD88	Sampler:	N/A
Logged By:	B. Wilder/M. Snow	Rig Type:	CME 45C	Hammer Wt./Fall:	140#/30"
Date Start/Finish:	9/9/2013-9/10/2013	Drilling Method:	Cased Wash Boring	Core Barrel:	NQ-2"
Boring Location:	109+10.9, 37.2 ft Rt.	Casing ID/OD:	HW & NW	Water Level*:	None Observed
Hammer Efficiency Factor: 0.867		Hammer Type:	Automatic ☒ Hydraulic ☐ Rope & Cathead ☐		

Definitions:
D = Split Spoon Sample
MD = Unsuccessful Split Spoon Sample attempt
U = Thin Wall Tube Sample
MU = Unsuccessful Thin Wall Tube Sample attempt
V = Insitu Vane Shear Test, PP = Pocket Penetrometer
MV = Unsuccessful Insitu Vane Shear Test attempt
R = Rock Core Sample
SSA = Solid Stem Auger
HSA = Hollow Stem Auger
RC = Roller Cone
WOH = weight of 140lb. hammer
WOR/C = weight of rods or casing
WO1P = Weight of one person
S_u = Insitu Field Vane Shear Strength (psf)
T_v = Pocket Torvane Shear Strength (psf)
q_p = Unconfined Compressive Strength (ksf)
N-uncorrected = Raw field SPT N-value
Hammer Efficiency Factor = Annual Calibration Value
N_{60} = SPT N-uncorrected corrected for hammer efficiency
N_{60} = (Hammer Efficiency Factor/60%)*N-uncorrected
$S_{u(lab)}$ = Lab Vane Shear Strength (psf)
WC = water content, percent
LL = Liquid Limit
PL = Plastic Limit
PI = Plasticity Index
G = Grain Size Analysis
C = Consolidation Test

Sample No.	Pen./Rec. (in.)	Sample Depth (ft.)	Blows (/6 in.) Shear Strength (psf) or RQD (%)	N-uncorrected	N_{60}	Casing Blows	Elevation (ft.)
						124	
R1	36/36	1.50 - 4.50	RQD = 0%			a353 NQ-2	124.90
R2	54/54	4.50 - 9.00	RQD = 28%				
R3	30/24	9.00 - 11.50	RQD = 0%				114.90

Visual Description and Remarks:

30.4 ft of HW Casing, then set in NW Casing.
No description given.
a353 blows for 0.5 ft.

1.50

Top of Bedrock at Elev. 124.9 ft.
R1:Bedrock: Core stem consists of gravel size to cobble size pieces, typically .5"-3" dia. pieces, occasional 4" dia.
Grey, aphanitic to fine grained GRANOFELS, hard to moderately hard, highly fractured, fresh to moderately weathered, discernible joints dipping at low to vertical angles, very close to close, open, oxidation, occasional silt coatings, planar to undulating, rough.
Rock Mass Quality = Very Poor
R1:Core Times (min:sec)
1.5-2.5 ft (7:20)
2.5-3.5 ft (9:20)
3.5-4.5 ft (6:25) 100% Recovery
No water return.
Set in NW Casing to 2.5 ft bgs.
R2:Bedrock: Similar to R1, except less fractured with depth, joints dipping at low to steep angles, secondary vertical angles, occasional stepped joints, occasional pitting.
Rock Mass Quality = Poor
R2:Core Times (min:sec)
4.5-5.5 ft (4:39)
5.5-6.5 ft (4:37)
6.5-7.5 ft (4:15)
7.5-8.5 ft (3:30)
8.5-9.0 ft (5:00) 100% Recovery
Core Blocked, no water return.
R3:Bedrock: Grey, aphanitic to fine grained GRANOFELS, hard to moderately hard, slightly to moderately weathered, joints dipping at low to steep angles, very close to close, undulating to stepped, rough, open, oxidized joints.
[Hutchins Corner Formation]
Rock Mass Quality = Very Poor
R3:Core Times (min:sec)
9.0-10.0 ft (7:10)
10.0-11.0 ft (4:45)
11.0-11.5 ft (4:00) 80% Recovery
No water return.

11.50

Bottom of Exploration at 11.50 feet below ground surface.

Remarks:

30.4 ft from Bridge Deck to Ground.
300-400 lbs of down presure on Core Barrel.

Stratification lines represent approximate boundaries between soil types; transitions may be gradual.

* Water level readings have been made at times and under conditions stated. Groundwater fluctuations may occur due to conditions other than those present at the time measurements were made.

Page 1 of 1   Boring No.: BB-HBSR-104

Maine Department of Transportation — Soil/Rock Exploration Log — US CUSTOMARY UNITS

Project: Bar Mills Bridge #3333 carries Route 4A over Saco River
Location: Hollis-Buxton, Maine

Boring No.: BB-HBSR-105   WIN: 19280.00

Driller:	Northern Test Boring, Inc.	Elevation (ft.)	134.1	Auger ID/OD:	N/A
Operator:	M. Nadeau	Datum:	NAVD88	Sampler:	N/A
Logged By:	M. Snow H&A	Rig Type:	Dietrich D-50 Track	Hammer Wt./Fall:	N/A
Date Start/Finish:	9/17/2013-9/17/2013	Drilling Method:	N/A	Core Barrel:	NQ-2"
Boring Location:	110+34.8, 2.8 ft Lt.	Casing ID/OD:	N/A	Water Level*:	None Observed
Hammer Efficiency Factor: 0.801		Hammer Type:	Automatic ☒ Hydraulic ☐ Rope & Cathead ☐		

Definitions:
D = Split Spoon Sample
MD = Unsuccessful Split Spoon Sample attempt
U = Thin Wall Tube Sample
MU = Unsuccessful Thin Wall Tube Sample attempt
V = Insitu Vane Shear Test, PP = Pocket Penetrometer
MV = Unsuccessful Insitu Vane Shear Test attempt
R = Rock Core Sample
SSA = Solid Stem Auger
HSA = Hollow Stem Auger
RC = Roller Cone
WOH = weight of 140lb. hammer
WOR/C = weight of rods or casing
WO1P = Weight of one person
S_u = Insitu Field Vane Shear Strength (psf)
T_v = Pocket Torvane Shear Strength (psf)
q_p = Unconfined Compressive Strength (ksf)
N-uncorrected = Raw field SPT N-value
Hammer Efficiency Factor = Annual Calibration Value
N_{60} = SPT N-uncorrected corrected for hammer efficiency
N_{60} = (Hammer Efficiency Factor/60%)*N-uncorrected
$S_{u(lab)}$ = Lab Vane Shear Strength (psf)
WC = water content, percent
LL = Liquid Limit
PL = Plastic Limit
PI = Plasticity Index
G = Grain Size Analysis
C = Consolidation Test

Sample No.	Pen./Rec. (in.)	Sample Depth (ft.)	Blows (/6 in.) Shear Strength (psf) or RQD (%)	N-uncorrected	N_{60}	Casing Blows	Elevation (ft.)
R1	6/6	0.00 - 0.50	RQD = 0%			NQ-2	
R2	18/7	0.50 - 2.00	RQD = 0%				
R3	45.6/42	2.00 - 5.80	RQD = 67%				
R4	60/60	5.80 - 10.80	RQD = 100%				123.30

Visual Description and Remarks:

Top of Bedrock at Elev. 134.1 ft.
R1:Bedrock: Grey to white, fine to medium grained Quartz and Granofels pieces, (1- 2" dia.), very hard, slightly weathered, no discernible joints.
Rock Mass Quality = Very Poor
R1:Core Times (min:sec)
0.0-0.5 ft (1:57) 100% Recovery
R2:Bedrock: Similar to R1.
Rock Mass Quality = Very Poor
R2:Core Times (min:sec)
0.5-1.5 ft (2:44)
1.5-2.0 ft (2:03) 39% Recovery
R3:Bedrock: Dark grey, aphanitic to fine grained GRANOFELS with quartz veins, very hard, fresh to slightly weathered, low angle to moderately dipping joints, close to moderately close, tight to open, planar to undulating, rough.
Rock Mass Quality = Fair
R3:Core Times (min:sec)
2.0-3.0 ft (8:16)
3.0-4.0 ft (8:00)
4.0-5.0 ft (9:31)
5.0-5.8 ft (7:39) 91% Recovery
R4:Bedrock: Similar to R3, except joints moderately close, (12-16"), undulating, occasional schistose zones.
[Hutchins Corner Formation]
Rock Mass Quality = Excellent
R4:Core Times (min:sec)
5.8-6.8 ft (12:30)
6.8-7.8 ft (11:10)
7.8-8.8 ft (15:21)
8.8-9.8 ft (12:30)
9.8-10.8 ft (10:46) 100% Recovery

10.80

Bottom of Exploration at 10.80 feet below ground surface.

Remarks:

Stratification lines represent approximate boundaries between soil types; transitions may be gradual.

* Water level readings have been made at times and under conditions stated. Groundwater fluctuations may occur due to conditions other than those present at the time measurements were made.

Page 1 of 1   Boring No.: BB-HBSR-105

Maine Department of Transportation — Soil/Rock Exploration Log — US CUSTOMARY UNITS

Project: Bar Mills Bridge #3333 carries Route 4A over Saco River
Location: Hollis-Buxton, Maine

Boring No.: BB-HBSR-106   WIN: 19280.00

Driller:	Northern Test Boring, Inc.	Elevation (ft.)	133.4	Auger ID/OD:	N/A
Operator:	M. Nadeau	Datum:	NAVD88	Sampler:	Standard Split Spoon
Logged By:	B. Steinert H&A	Rig Type:	Dietrich D-50 Track	Hammer Wt./Fall:	140#/30"
Date Start/Finish:	9/9/2013-9/9/2013	Drilling Method:	Cased Wash Boring	Core Barrel:	NQ-2"
Boring Location:	110+57.7, 20.2 ft Rt.	Casing ID/OD:	HW	Water Level*:	None Observed
Hammer Efficiency Factor: 0.801		Hammer Type:	Automatic ☒ Hydraulic ☐ Rope & Cathead ☐		

Definitions:
D = Split Spoon Sample
MD = Unsuccessful Split Spoon Sample attempt
U = Thin Wall Tube Sample
MU = Unsuccessful Thin Wall Tube Sample attempt
V = Insitu Vane Shear Test, PP = Pocket Penetrometer
MV = Unsuccessful Insitu Vane Shear Test attempt
R = Rock Core Sample
SSA = Solid Stem Auger
HSA = Hollow Stem Auger
RC = Roller Cone
WOH = weight of 140lb. hammer
WOR/C = weight of rods or casing
WO1P = Weight of one person
S_u = Insitu Field Vane Shear Strength (psf)
T_v = Pocket Torvane Shear Strength (psf)
q_p = Unconfined Compressive Strength (ksf)
N-uncorrected = Raw field SPT N-value
Hammer Efficiency Factor = Annual Calibration Value
N_{60} = SPT N-uncorrected corrected for hammer efficiency
N_{60} = (Hammer Efficiency Factor/60%)*N-uncorrected
$S_{u(lab)}$ = Lab Vane Shear Strength (psf)
WC = water content, percent
LL = Liquid Limit
PL = Plastic Limit
PI = Plasticity Index
G = Grain Size Analysis
C = Consolidation Test

Sample No.	Pen./Rec. (in.)	Sample Depth (ft.)	Blows (/6 in.) Shear Strength (psf) or RQD (%)	N-uncorrected	N_{60}	Casing Blows	Elevation (ft.)
1D	6/6	0.00 - 0.50	79	---		NQ-2	132.80
R1	30/10	0.70 - 3.20	RQD = 0%				
R2	60/60	3.20 - 8.20	RQD = 70%				
R3	32.4/32.4	8.20 - 10.90	RQD = 53%				122.50

Visual Description and Remarks:

Light brown, dry, very dense, fine to coarse SAND, little fine gravel, trace silt, trace wood fibers. (Fluvial Deposit).
Spoon REFUSAL at 0.5 ft bgs.

0.60

Top of Bedrock at Elev. 132.8 ft.
Advanced HW Casing to 0.6 ft bgs.
Roller Cone ahead to 0.7 ft bgs.
R1:Bedrock: Green to grey, aphanitic to fine grained Biotite GRANOFELS, moderately hard to hard, slightly weathered, joints dipping at steep angles, very close to close, planar, rough, tight to open, oxidation on joint surfaces.
Rock Mass Quality = Very Poor
R1:Core Times (min:sec)
0.7-1.7 ft (3:11)
1.7-2.7 ft (3:20)
2.7-3.2 ft (1:35) 33% Recovery
R2:Bedrock: Grey, aphanitic to fine grained GRANOFELS, hard, fresh to slightly weathered, joints dipping at moderate to steep angles with occasional low angle, very close to moderate, planar to stepped, rough, tight to open, oxidation on joint surfaces.
Rock Mass Quality = Fair
R2:Core Times (min:sec)
3.2-3.7 ft (1:22)
3.7-4.7 ft (3:05)
4.7-5.7 ft (2:58)
5.7-6.7 ft (2:45)
6.7-7.7 ft (3:09)
7.7-8.2 ft (1:23) 100% Recovery
R3:Bedrock: Grey, aphanitic to fine grained GRANOFELS, hard, fresh to slightly weathered, joints dipping at moderate angles, very close to moderate, undulating, rough, open, highly oxidized joint surfaces. [Hutchins Corner Formation]
Rock Mass Quality = Fair
R3:Core Times (min:sec)
8.2-8.7 ft (1:02)
8.7-9.7 ft (2:18)
9.7-10.7 ft (2:36)
10.7-10.9 ft (0:38) 100% Recovery

10.90

Bottom of Exploration at 10.90 feet below ground surface.

Remarks:

Boring drilled through existing Bridge Deck. Deck thickness 0.8 ft.
Distance from Deck to Ground is 22.8 ft (measured with drill rods).

Stratification lines represent approximate boundaries between soil types; transitions may be gradual.

* Water level readings have been made at times and under conditions stated. Groundwater fluctuations may occur due to conditions other than those present at the time measurements were made.

Page 1 of 1   Boring No.: BB-HBSR-106

Maine Department of Transportation — Soil/Rock Exploration Log — US CUSTOMARY UNITS

Project: Bar Mills Bridge #3333 carries Route 4A over Saco River
Location: Hollis-Buxton, Maine

Boring No.: BB-HBSR-107   WIN: 19280.00

Driller:	Northern Test Boring, Inc.	Elevation (ft.)	149.0	Auger ID/OD:	5" Solid Stem
Operator:	M. Nadeau	Datum:	NAVD88	Sampler:	Standard Split Spoon
Logged By:	M. Snow H&A	Rig Type:	Dietrich D-50 Track	Hammer Wt./Fall:	140#/30"
Date Start/Finish:	9/17/2013-9/17/2013	Drilling Method:	Cased Wash Boring	Core Barrel:	NQ-2"
Boring Location:	110+97.3, 41.8 ft Rt.	Casing ID/OD:	HW	Water Level*:	None Observed
Hammer Efficiency Factor: 0.801		Hammer Type:	Automatic ☒ Hydraulic ☐ Rope & Cathead ☐		

Definitions:
D = Split Spoon Sample
MD = Unsuccessful Split Spoon Sample attempt
U = Thin Wall Tube Sample
MU = Unsuccessful Thin Wall Tube Sample attempt
V = Insitu Vane Shear Test, PP = Pocket Penetrometer
MV = Unsuccessful Insitu Vane Shear Test attempt
R = Rock Core Sample
SSA = Solid Stem Auger
HSA = Hollow Stem Auger
RC = Roller Cone
WOH = weight of 140lb. hammer
WOR/C = weight of rods or casing
WO1P = Weight of one person
S_u = Insitu Field Vane Shear Strength (psf)
T_v = Pocket Torvane Shear Strength (psf)
q_p = Unconfined Compressive Strength (ksf)
N-uncorrected = Raw field SPT N-value
Hammer Efficiency Factor = Annual Calibration Value
N_{60} = SPT N-uncorrected corrected for hammer efficiency
N_{60} = (Hammer Efficiency Factor/60%)*N-uncorrected
$S_{u(lab)}$ = Lab Vane Shear Strength (psf)
WC = water content, percent
LL = Liquid Limit
PL = Plastic Limit
PI = Plasticity Index
G = Grain Size Analysis
C = Consolidation Test

Sample No.	Pen./Rec. (in.)	Sample Depth (ft.)	Blows (/6 in.) Shear Strength (psf) or RQD (%)	N-uncorrected	N_{60}	Casing Blows	Elevation (ft.)
1D	24/6	0.00 - 2.00	5/7/8/8	15	20	SSA	
2D	24/8	5.00 - 7.00	3/5/5/9	10	13		
R1	60/60	7.60 - 12.60	RQD = 82%				141.60
							136.40

Visual Description and Remarks:

Grey and brown, medium dense, fine to coarse Sandy GRAVEL, trace silt, with rootlets, (Nearshore Deposits).

Brown, wet, medium dense, fine to coarse SAND, some silt, some gravel, (Nearshore Deposits).

7.40

Top of Bedrock at Elev. 141.6 ft.
R1:Bedrock: Grey, aphanitic to fine grained GRANOFELS, very hard, moderately weathered, fresh to slightly weathered and highly fractured zone from 10.8-11.3 ft bgs, joints moderately dipping, very close to moderately close, tight to open, planar, smooth to rough.
[Hutchins Corner Formation]
Rock Mass Quality = Good
R1:Core Times (min:sec)
7.6-8.6 ft (3:08)
8.6-9.6 ft (3:03)
9.6-10.6 ft (2:35)
10.6-11.6 ft (2:01)
11.6-12.6 ft (2:04) 100% Recovery

12.60

Bottom of Exploration at 12.60 feet below ground surface.

Remarks:

Stratification lines represent approximate boundaries between soil types; transitions may be gradual.

* Water level readings have been made at times and under conditions stated. Groundwater fluctuations may occur due to conditions other than those present at the time measurements were made.

Page 1 of 1   Boring No.: BB-HBSR-107

STATE OF MAINE
DEPARTMENT OF TRANSPORTATION

BRIDGE PLANS
WIN 19280.00
BRIDGE NO. 3333

SIGNATURE
P.E. NUMBER
DATE

	BY	DATE
PROJ. MANAGER		
DESIGN-DETAILED		
CHECKED-REVIEWED		
DESIGN2-DETAILED2	K. MAGUIRE	
DESIGN3-DETAILED3	T. WHITE	AUG 2014
REVISIONS 1		
REVISIONS 2		
REVISIONS 3		
REVISIONS 4		
FIELD CHANGES		

BAR MILLS BRIDGE
SACO RIVER
HOLLIS-BUXTON   YORK COUNTY

BORING LOGS

SHEET NUMBER
4
OF 4

Appendix A

Boring Logs

UNIFIED SOIL CLASSIFICATION SYSTEM

MAJOR DIVISIONS			GROUP SYMBOLS	TYPICAL NAMES
COARSE-GRAINED SOILS (more than half of material is larger than No. 200 sieve size)	GRAVELS (more than half of coarse fraction is larger than No. 4 sieve size)	CLEAN GRAVELS (little or no fines)	GW	Well-graded gravels, gravel-sand mixtures, little or no fines
			GP	Poorly-graded gravels, gravel sand mixtures, little or no fines
		GRAVEL WITH FINES (Appreciable amount of fines)	GM	Silty gravels, gravel-sand-silt mixtures.
			GC	Clayey gravels, gravel-sand-clay mixtures.
	SANDS (more than half of coarse fraction is smaller than No. 4 sieve size)	CLEAN SANDS (little or no fines)	SW	Well-graded sands, gravelly sands, little or no fines
			SP	Poorly-graded sands, gravelly sand, little or no fines.
		SANDS WITH FINES (Appreciable amount of fines)	SM	Silty sands, sand-silt mixtures
			SC	Clayey sands, sand-clay mixtures.
FINE-GRAINED SOILS (more than half of material is smaller than No. 200 sieve size)	SILTS AND CLAYS (liquid limit less than 50)		ML	Inorganic silts and very fine sands, rock flour, silty or clayey fine sands, or clayey silts with slight plasticity.
			CL	Inorganic clays of low to medium plasticity, gravelly clays, sandy clays, silty clays, lean clays.
			OL	Organic silts and organic silty clays of low plasticity.
	SILTS AND CLAYS (liquid limit greater than 50)		MH	Inorganic silts, micaceous or diatomaceous fine sandy or silty soils, elastic silts.
			CH	Inorganic clays of high plasticity, fat clays.
			OH	Organic clays of medium to high plasticity, organic silts
	HIGHLY ORGANIC SOILS		Pt	Peat and other highly organic soils.

Desired Soil Observations: (in this order)

Color (Munsell color chart)
Moisture (dry, damp, moist, wet, saturated)
Density/Consistency (from above right hand side)
Name (sand, silty sand, clay, etc., including portions - trace, little, etc.)
Gradation (well-graded, poorly-graded, uniform, etc.)
Plasticity (non-plastic, slightly plastic, moderately plastic, highly plastic)
Structure (layering, fractures, cracks, etc.)
Bonding (well, moderately, loosely, etc., if applicable)
Cementation (weak, moderate, or strong, if applicable, ASTM D 2488)
Geologic Origin (till, marine clay, alluvium, etc.)
Unified Soil Classification Designation
Groundwater level

TERMS DESCRIBING DENSITY/CONSISTENCY

Coarse-grained soils (more than half of material is larger than No. 200 sieve): Includes (1) clean gravels; (2) silty or clayey gravels; and (3) silty, clayey or gravelly sands. Consistency is rated according to standard penetration resistance.

Modified Burmister System

Descriptive Term	Portion of Total
trace	0% - 10%
little	11% - 20%
some	21% - 35%
adjective (e.g. sandy, clayey)	36% - 50%

Density of Cohesionless Soils	Standard Penetration Resistance N-Value (blows per foot)
Very loose	0 - 4
Loose	5 - 10
Medium Dense	11 - 30
Dense	31 - 50
Very Dense	> 50

Fine-grained soils (more than half of material is smaller than No. 200 sieve): Includes (1) inorganic and organic silts and clays; (2) gravelly, sandy or silty clays; and (3) clayey silts. Consistency is rated according to shear strength as indicated.

Consistency of Cohesive soils	SPT N-Value blows per foot	Approximate Undrained Shear Strength (psf)	Field Guidelines
Very Soft	WOH, WOR, WOP, <2	0 - 250	Fist easily Penetrates
Soft	2 - 4	250 - 500	Thumb easily penetrates
Medium Stiff	5 - 8	500 - 1000	Thumb penetrates with moderate effort
Stiff	9 - 15	1000 - 2000	Indented by thumb with great effort
Very Stiff	16 - 30	2000 - 4000	Indented by thumbnai
Hard	>30	over 4000	Indented by thumbnail with difficulty

Rock Quality Designation (RQD):

$$RQD = \frac{\text{sum of the lengths of intact pieces of core* > 100 mm}}{\text{length of core advance}}$$

*Minimum NQ rock core (1.88 in. OD of core)

Correlation of RQD to Rock Mass Quality

Rock Mass Quality	RQD
Very Poor	<25%
Poor	26% - 50%
Fair	51% - 75%
Good	76% - 90%
Excellent	91% - 100%

Desired Rock Observations: (in this order)

Color (Munsell color chart)
Texture (aphanitic, fine-grained, etc.)
Lithology (igneous, sedimentary, metamorphic, etc.)
Hardness (very hard, hard, mod. hard, etc.)
Weathering (fresh, very slight, slight, moderate, mod. severe, severe, etc.)
Geologic discontinuities/jointing:
- -dip (horiz - 0-5, low angle - 5-35, mod. dipping - 35-55, steep - 55-85, vertical - 85-90)
- -spacing (very close - <5 cm, close - 5-30 cm, mod. close 30-100 cm, wide - 1-3 m, very wide >3 m)
- -tightness (tight, open or healed)
- -infilling (grain size, color, etc.)

Formation (Waterville, Ellsworth, Cape Elizabeth, etc.)
RQD and correlation to rock mass quality (very poor, poor, etc.)
ref: AASHTO Standard Specification for Highway Bridges 17th Ed. Table 4.4.8.1.2A
Recovery

Maine Department of Transportation
Geotechnical Section
Key to Soil and Rock Descriptions and Terms
Field Identification Information

Sample Container Labeling Requirements:

PIN	Blow Counts
Bridge Name / Town	Sample Recovery
Boring Number	Date
Sample Number	Personnel Initials
Sample Depth	

Maine Department of Transportation

Soil/Rock Exploration Log
US CUSTOMARY UNITS

Project: Bar Mills Bridge #3333 carries Route 4A over Saco River
Location: Hollis-Buxton, Maine

Boring No.: BB-HBSR-101
WIN: 19280.00

Driller:	Northern Test Boring, Inc.	**Elevation (ft.)**	145.0	**Auger ID/OD:**	5" Solid Stem
Operator:	M. Nadeau	**Datum:**	NAVD88	**Sampler:**	Standard Split Spoon
Logged By:	B. Steinert H&A	**Rig Type:**	Dietrich D-50 Track	**Hammer Wt./Fall:**	140#/30"
Date Start/Finish:	9/11/2013-9/11/2013	**Drilling Method:**	Cased Wash Boring	**Core Barrel:**	NQ-2"
Boring Location:	105+14.9, 23.4 ft Rt.	**Casing ID/OD:**	HW	**Water Level*:**	None Observed
Hammer Efficiency Factor:	0.801	**Hammer Type:**	Automatic ☒ Hydraulic ☐ Rope & Cathead ☐		

Definitions:
D = Split Spoon Sample
MD = Unsuccessful Split Spoon Sample attempt
U = Thin Wall Tube Sample
MU = Unsuccessful Thin Wall Tube Sample attempt
V = Insitu Vane Shear Test, PP = Pocket Penetrometer
MV = Unsuccessful Insitu Vane Shear Test attempt
R = Rock Core Sample
SSA = Solid Stem Auger
HSA = Hollow Stem Auger
RC = Roller Cone
WOH = weight of 140lb. hammer
WOR/C = weight of rods or casing
WO1P = Weight of one person
S_u = Insitu Field Vane Shear Strength (psf)
T_v = Pocket Torvane Shear Strength (psf)
q_p = Unconfined Compressive Strength (ksf)
N-uncorrected = Raw field SPT N-value
Hammer Efficiency Factor = Annual Calibration Value
N_{60} = SPT N-uncorrected corrected for hammer efficiency
N_{60} = (Hammer Efficiency Factor/60%)*N-uncorrected
$S_{u(lab)}$ = Lab Vane Shear Strength (psf)
WC = water content, percent
LL = Liquid Limit
PL = Plastic Limit
PI = Plasticity Index
G = Grain Size Analysis
C = Consolidation Test

Sample Information

Depth (ft.)	Sample No.	Pen./Rec. (in.)	Sample Depth (ft.)	Blows (/6 in.) Shear Strength (psf) or RQD (%)	N-uncorrected	N_{60}	Casing Blows	Elevation (ft.)	Visual Description and Remarks	Laboratory Testing Results/ AASHTO and Unified Class.
0	1D	24/8	0.00 - 2.00	6/6/5/5	11	15	SSA		Brown, dry, medium dense, fine to medium SAND, little coarse sand, gravel and silt, rootlets, (Topsoil/Fill).	
5	2D	24/3	5.00 - 7.00	5/2/2/3	4	5			Brown, dry, loose, fine to medium SAND, little silt, trace coarse sand and gravel.	
								135.30	9.70	
10	R1	33.6/33.6	10.50 - 13.30	RQD = 59%			NQ-2		Top of Bedrock at Elev. 135.3 ft. Auger REFUSAL at 9.7 ft bgs, Roller Coned ahead to 10.5 ft bgs. R1:Bedrock: Grey, aphanitic to medium grained Biotite GRANOFELS, hard to moderately hard, slightly to moderately weathered, joints dipping at low to moderate angles, very close to close, planar to undulating, rough, open, oxidation on joint surfaces, moderately weathered, fractured zone at approximately 11.6-12.1 ft bgs, occasional quartz veins. Rock Mass Quality = Fair R1:Core Times (min:sec) 10.5-11.5 ft (2:45) 11.5-12.5 ft (3:10) 12.5-13.3 ft (3:49) 100% Recovery	
	R2	14.4/14.4	13.30 - 14.50	RQD = 50%						
	R3	18/18	14.50 - 16.00	RQD = 44%						
15								129.00	R2:Bedrock: Similar to R1, except joints close, occasional quartz intrusions. Rock Mass Quality = Poor R2:Core Times (min:sec) 13.3-13.5 ft (0:51) 13.5-14.5 ft (3:57) 100% Recovery R3:Bedrock: Similar to R1, except joints dipping at moderate to steep angles, highly fractured zone at approximately 15.1-15.4 ft bgs. [Hutchins Corner Formation] Rock Mass Quality = Poor R3:Core Times (min:sec) 14.5-16.0 ft (2:14) 100% Recovery	
20										
25									16.00 **Bottom of Exploration at 16.00 feet below ground surface.**	

Remarks:

Stratification lines represent approximate boundaries between soil types; transitions may be gradual.

* Water level readings have been made at times and under conditions stated. Groundwater fluctuations may occur due to conditions other than those present at the time measurements were made.

Boring No.: BB-HBSR-101

Maine Department of Transportation

Soil/Rock Exploration Log
US CUSTOMARY UNITS

Project: Bar Mills Bridge #3333 carries Route 4A over Saco River
Location: Hollis-Buxton, Maine

Boring No.: BB-HBSR-102
WIN: 19280.00

Driller:	Northern Test Boring, Inc.	**Elevation (ft.)**	143.6	**Auger ID/OD:**	N/A
Operator:	M. Nadeau	**Datum:**	NAVD88	**Sampler:**	Standard Split Spoon
Logged By:	D. Dearden H&A	**Rig Type:**	Dietrich D-50 Track	**Hammer Wt./Fall:**	140#/30"
Date Start/Finish:	9/10/2013-9/10/2013	**Drilling Method:**	Cased Wash Boring	**Core Barrel:**	NQ-2"
Boring Location:	105+14.7, 1.4 ft Rt.	**Casing ID/OD:**	HW	**Water Level*:**	None Observed
Hammer Efficiency Factor:	0.801	**Hammer Type:**	Automatic ☒ Hydraulic ☐ Rope & Cathead ☐		

Definitions:
D = Split Spoon Sample
MD = Unsuccessful Split Spoon Sample attempt
U = Thin Wall Tube Sample
MU = Unsuccessful Thin Wall Tube Sample attempt
V = Insitu Vane Shear Test, PP = Pocket Penetrometer
MV = Unsuccessful Insitu Vane Shear Test attempt
R = Rock Core Sample
SSA = Solid Stem Auger
HSA = Hollow Stem Auger
RC = Roller Cone
WOH = weight of 140lb. hammer
WOR/C = weight of rods or casing
WO1P = Weight of one person
S_u = Insitu Field Vane Shear Strength (psf)
T_v = Pocket Torvane Shear Strength (psf)
q_p = Unconfined Compressive Strength (ksf)
N-uncorrected = Raw field SPT N-value
Hammer Efficiency Factor = Annual Calibration Value
N_{60} = SPT N-uncorrected corrected for hammer efficiency
N_{60} = (Hammer Efficiency Factor/60%)*N-uncorrected
$S_{u(lab)}$ = Lab Vane Shear Strength (psf)
WC = water content, percent
LL = Liquid Limit
PL = Plastic Limit
PI = Plasticity Index
G = Grain Size Analysis
C = Consolidation Test

Depth (ft.)	Sample No.	Pen./Rec. (in.)	Sample Depth (ft.)	Blows (/6 in.) Shear Strength (psf) or RQD (%)	N-uncorrected	N_{60}	Casing Blows	Elevation (ft.)	Visual Description and Remarks	Laboratory Testing Results/ AASHTO and Unified Class.
0	1D	24/6	0.00 - 2.00	1/2/2/3	4	5	RCA		Brown, dry, loose, fine to medium SAND, little silt, trace gravel, poorly graded with rootlets and trace organics, (Reworked Alluvium, Fill).	
5	2D	20.4/4	5.00 - 6.70	2/2/2/50(2.4")	4	5			Brownish-grey, moist to damp, loose, fine to medium SAND, little silt, poorly graded with piece of decomposed wood 2" in length.	
	R1	12/10	7.50 - 8.50	RQD = 0%			NQ-2	136.10	Advanced HW Casing to 7.4 ft bgs, Roller Coned ahead to 7.5 ft bgs. 7.50	
	R2	9.6/6	8.50 - 9.30	RQD = 0%					Top of Bedrock at Elev. 136.1 ft.	
	R3	42/41	9.30 - 12.80	RQD = 14%					R1:Bedrock: Grey, aphanitic to fine grained Biotite-rich GRANOFELS, moderately hard, slightly to moderately weathered, oxidized and highly fractured (gravel-size pieces), few joints discernible, moderately to steeply dipping, very close, undulating, rough, open.	
10									Rock Mass Quality = Very Poor	
									R1:Core Times (min:sec)	
									7.5-8.5 ft (6:00) 83% Recovery	
									Core Barrel jammed	
	R4	60/60	12.80 - 17.80	RQD = 65%					R2:Bedrock: Similar to R1, except few low to moderately dipping joints.	
									Rock Mass Quality = Very Poor	
									R2:Core Times (min:sec)	
									8.5-9.3 ft (4:00) 60% Recovery	
15									R3:Bedrock: Grey, aphanitic to fine grained GRANOFELS, with quartz veins, moderately hard, slightly weathered with moderately weathered zone from approximately 11.9-12.6 ft bgs, joints dipping at low to steep angles, very close to close, planar to undulating, rough, open, oxidation on some joint surfaces.	
	R5	60/54	17.80 - 22.80	RQD = 68%					Rock Mass Quality = Very Poor	
									R3:Core Times (min:sec)	
									9.3-10.3 ft (2:00)	
									10.3-11.3 ft (2:00)	
									11.3-12.3 ft (2:00)	
									12.3-12.8 ft (1:48) 98% Recovery	
20									R4:Bedrock: Grey, aphanitic to medium grained GRANOFELS, occasional quartz veins, moderately hard to hard, fresh to slightly weathered, joints dipping at low to steep angles, very close to moderately close, planar to stepped, rough, tight to open, occasional silt coating on joint.	
								120.80	Rock Mass Quality = Fair	
									R4:Core Times (min:sec)	
									12.8-13.8 ft (1:42)	
									13.8-14.8 ft (2:00)	
25									14.8-15.8 ft (2:00)	

Remarks:

Stratification lines represent approximate boundaries between soil types; transitions may be gradual.

* Water level readings have been made at times and under conditions stated. Groundwater fluctuations may occur due to conditions other than those present at the time measurements were made.

Boring No.: BB-HBSR-102

Maine Department of Transportation

Soil/Rock Exploration Log
US CUSTOMARY UNITS

Project: Bar Mills Bridge #3333 carries Route 4A over Saco River
Location: Hollis-Buxton, Maine

Boring No.: BB-HBSR-102
WIN: 19280.00

Driller:	Northern Test Boring, Inc.	**Elevation (ft.)**	143.6	**Auger ID/OD:**	N/A
Operator:	M. Nadeau	**Datum:**	NAVD88	**Sampler:**	Standard Split Spoon
Logged By:	D. Dearden H&A	**Rig Type:**	Dietrich D-50 Track	**Hammer Wt./Fall:**	140#/30"
Date Start/Finish:	9/10/2013-9/10/2013	**Drilling Method:**	Cased Wash Boring	**Core Barrel:**	NQ-2"
Boring Location:	105+14.7, 1.4 ft Rt.	**Casing ID/OD:**	HW	**Water Level*:**	None Observed
Hammer Efficiency Factor:	0.801	**Hammer Type:**	Automatic ☒ Hydraulic ☐ Rope & Cathead ☐		

Definitions:
D = Split Spoon Sample
MD = Unsuccessful Split Spoon Sample attempt
U = Thin Wall Tube Sample
MU = Unsuccessful Thin Wall Tube Sample attempt
V = Insitu Vane Shear Test, PP = Pocket Penetrometer
MV = Unsuccessful Insitu Vane Shear Test attempt
R = Rock Core Sample
SSA = Solid Stem Auger
HSA = Hollow Stem Auger
RC = Roller Cone
WOH = weight of 140lb. hammer
WOR/C = weight of rods or casing
WO1P = Weight of one person
S_u = Insitu Field Vane Shear Strength (psf)
T_v = Pocket Torvane Shear Strength (psf)
q_p = Unconfined Compressive Strength (ksf)
N-uncorrected = Raw field SPT N-value
Hammer Efficiency Factor = Annual Calibration Value
N_{60} = SPT N-uncorrected corrected for hammer efficiency
N_{60} = (Hammer Efficiency Factor/60%)*N-uncorrected
$S_{u(lab)}$ = Lab Vane Shear Strength (psf)
WC = water content, percent
LL = Liquid Limit
PL = Plastic Limit
PI = Plasticity Index
G = Grain Size Analysis
C = Consolidation Test

Depth (ft.)	Sample No.	Pen./Rec. (in.)	Sample Depth (ft.)	Blows (/6 in.) Shear Strength (psf) or RQD (%)	N-uncorrected	N_{60}	Casing Blows	Elevation (ft.)	Graphic Log	Visual Description and Remarks	Laboratory Testing Results/ AASHTO and Unified Class.
25										15.8-16.8 ft (2:00) 16.8-17.8 ft (3:00) 100% Recovery R5:Bedrock: Grey, aphanitic to medium grained GRANOFELS, frequent quartz veins, biotite-rich zones, hard to moderately hard, fresh to slightly weathered, joints dipping at low to moderate angles, very close to moderate, undulating to stepped, rough, tight to open, occasional oxidation. [Hutchins Corner Formation] Rock Mass Quality = Fair R5:Core Times (min:sec) 17.8-18.8 ft (2:00) 18.8-19.8 ft (2:30) 19.8-20.8 ft (2:00) 20.8-21.8 ft (4:30) 21.8-22.8 ft (?) 90% Recovery 22.80 **Bottom of Exploration at 22.80 feet below ground surface.**	
30											
35											
40											
45											
50											

Remarks:

Stratification lines represent approximate boundaries between soil types; transitions may be gradual.

* Water level readings have been made at times and under conditions stated. Groundwater fluctuations may occur due to conditions other than those present at the time measurements were made.

Maine Department of Transportation

Soil/Rock Exploration Log
US CUSTOMARY UNITS

Project: Bar Mills Bridge #3333 carries Route 4A over Saco River
Location: Hollis-Buxton, Maine

Boring No.: BB-HBSR-103
WIN: 19280.00

Driller:	MaineDOT	**Elevation (ft.)**	131.5	**Auger ID/OD:**	N/A
Operator:	Giles/Daggett	**Datum:**	NAVD88	**Sampler:**	N/A
Logged By:	B. Wilder	**Rig Type:**	CME 45C	**Hammer Wt./Fall:**	N/A
Date Start/Finish:	9/10/2013; 10:00-14:00	**Drilling Method:**	Cased Wash Boring	**Core Barrel:**	NQ-2"
Boring Location:	107+20.1, 59.1 ft Rt.	**Casing ID/OD:**	HW	**Water Level*:**	None Observed
Hammer Efficiency Factor:	0.867	**Hammer Type:**	Automatic ☒ Hydraulic ☐ Rope & Cathead ☐		

Definitions:
D = Split Spoon Sample
MD = Unsuccessful Split Spoon Sample attempt
U = Thin Wall Tube Sample
MU = Unsuccessful Thin Wall Tube Sample attempt
V = Insitu Vane Shear Test, PP = Pocket Penetrometer
MV = Unsuccessful Insitu Vane Shear Test attempt
R = Rock Core Sample
SSA = Solid Stem Auger
HSA = Hollow Stem Auger
RC = Roller Cone
WOH = weight of 140lb. hammer
WOR/C = weight of rods or casing
WO1P = Weight of one person
S_u = Insitu Field Vane Shear Strength (psf)
T_v = Pocket Torvane Shear Strength (psf)
q_p = Unconfined Compressive Strength (ksf)
N-uncorrected = Raw field SPT N-value
Hammer Efficiency Factor = Annual Calibration Value
N_{60} = SPT N-uncorrected corrected for hammer efficiency
N_{60} = (Hammer Efficiency Factor/60%)*N-uncorrected
$S_{u(lab)}$ = Lab Vane Shear Strength (psf)
WC = water content, percent
LL = Liquid Limit
PL = Plastic Limit
PI = Plasticity Index
G = Grain Size Analysis
C = Consolidation Test

Sample Information

Depth (ft.)	Sample No.	Pen./Rec. (in.)	Sample Depth (ft.)	Blows (/6 in.) Shear Strength (psf) or RQD (%)	N-uncorrected	N_{60}	Casing Blows	Elevation (ft.)	Graphic Log	Visual Description and Remarks	Laboratory Testing Results/ AASHTO and Unified Class.
0	R1	60/60	0.00 - 5.00	RQD = 25%			NQ-2			Top of Bedrock at Elev. 131.5 ft. Spun HW Casing 0.4 ft into Bedrock. R1:Bedrock: Grey, aphanitic to fine grained GRANOFELS, hard, fresh to slightly weathered, joints dipping at moderate to steep angles, occasional low angle joints, very close to close, undulating, rough, tight to open, oxidation on some joint surfaces, dark grey basalt intrusion at approximately 3.9-5.0 ft bgs, occasional pitting on outer core stem, quartz veins. Rock Mass Quality = Very Poor R1:Core Times (min:sec) 0.0-1.0 ft (5:45) 1.0-2.0 ft (7:00) 2.0-3.0 ft (7:50) 3.0-4.0 ft (8:25) 4.0-5.0 ft (8:30) 100% Recovery	
5	R2	60/60	5.00 - 10.00	RQD = 47%						R2:Bedrock: Similar to R1, except joints dipping at low to steep angles, very close to moderately spaced, undulating to stepped, rough, steep contact with basalt at 5.0-6.9 ft bgs, no pitting observed. [Hutchins Corner Formation] Rock Mass Quality = Poor R2:Core Times (min:sec) 5.0-6.0 ft (6:15) 6.0-7.0 ft (7:20) 7.0-8.0 ft (7:35) 8.0-9.0 ft (7:35) 9.0-10.0 ft (7:50) 100% Recovery	
10								121.50		10.00 **Bottom of Exploration at 10.00 feet below ground surface.**	
15											
20											
25											

Remarks:

27.0 ft from Bridge Deck to Ground, Top of Bedrock.
300-400 lbs of down presure on Core Barrel.

Stratification lines represent approximate boundaries between soil types; transitions may be gradual.

* Water level readings have been made at times and under conditions stated. Groundwater fluctuations may occur due to conditions other than those present at the time measurements were made.

Boring No.: BB-HBSR-103

Maine Department of Transportation

Soil/Rock Exploration Log
US CUSTOMARY UNITS

Project: Bar Mills Bridge #3333 carries Route 4A over Saco River
Location: Hollis-Buxton, Maine

Boring No.: BB-HBSR-104
WIN: 19280.00

Driller:	MaineDOT/H&A	**Elevation (ft.)**	126.4	**Auger ID/OD:**	N/A
Operator:	Giles/Daggett	**Datum:**	NAVD88	**Sampler:**	N/A
Logged By:	B. Wilder/M. Snow	**Rig Type:**	CME 45C	**Hammer Wt./Fall:**	140#/30"
Date Start/Finish:	9/9/2013-9/10/2013	**Drilling Method:**	Cased Wash Boring	**Core Barrel:**	NQ-2"
Boring Location:	109+10.9, 37.2 ft Rt.	**Casing ID/OD:**	HW & NW	**Water Level*:**	None Observed
Hammer Efficiency Factor:	0.867	**Hammer Type:**	Automatic ☒ Hydraulic ☐ Rope & Cathead ☐		

Definitions:
D = Split Spoon Sample
MD = Unsuccessful Split Spoon Sample attempt
U = Thin Wall Tube Sample
MU = Unsuccessful Thin Wall Tube Sample attempt
V = Insitu Vane Shear Test, PP = Pocket Penetrometer
MV = Unsuccessful Insitu Vane Shear Test attempt
R = Rock Core Sample
SSA = Solid Stem Auger
HSA = Hollow Stem Auger
RC = Roller Cone
WOH = weight of 140lb. hammer
WOR/C = weight of rods or casing
WO1P = Weight of one person
S_u = Insitu Field Vane Shear Strength (psf)
T_v = Pocket Torvane Shear Strength (psf)
q_p = Unconfined Compressive Strength (ksf)
N-uncorrected = Raw field SPT N-value
Hammer Efficiency Factor = Annual Calibration Value
N_{60} = SPT N-uncorrected corrected for hammer efficiency
N_{60} = (Hammer Efficiency Factor/60%)*N-uncorrected
$S_{u(lab)}$ = Lab Vane Shear Strength (psf)
WC = water content, percent
LL = Liquid Limit
PL = Plastic Limit
PI = Plasticity Index
G = Grain Size Analysis
C = Consolidation Test

Sample Information

Depth (ft.)	Sample No.	Pen./Rec. (in.)	Sample Depth (ft.)	Blows (/6 in.) Shear Strength (psf) or RQD (%)	N-uncorrected	N_{60}	Casing Blows	Elevation (ft.)	Graphic Log	Visual Description and Remarks	Laboratory Testing Results/ AASHTO and Unified Class.
0							124			30.4 ft of HW Casing, then set in NW Casing. No description given. a353 blows for 0.5 ft.	
	R1	36/36	1.50 - 4.50	RQD = 0%			a353 NQ-2	124.90		1.50 Top of Bedrock at Elev. 124.9 ft. R1:Bedrock: Core stem consists of gravel size to cobble size pieces, typically ½"-3" dia. pieces, occasional 4" dia. Grey, aphanitic to fine grained GRANOFELS, hard to moderately hard, highly fractured, fresh to moderately weathered, discernible joints dipping at low to vertical angles, very close to close, open, oxidation, occasional silt coatings, planar to undulating, rough. Rock Mass Quality = Very Poor R1:Core Times (min:sec) 1.5-2.5 ft (7:20) 2.5-3.5 ft (9:20) 3.5-4.5 ft (6:25) 100% Recovery No water return. Set in NW Casing to 2.5 ft bgs.	
	R2	54/54	4.50 - 9.00	RQD = 28%						R2:Bedrock: Similar to R1, except less fractured with depth, joints dipping at low to steep angles, secondary vertical angles, occasional stepped joints, occasional pitting. Rock Mass Quality = Poor R2:Core Times (min:sec) 4.5-5.5 ft (4:39) 5.5-6.5 ft (4:37) 6.5-7.5 ft (4:15) 7.5-8.5 ft (3:30) 8.5-9.0 ft (5:00) 100% Recovery Core Blocked, no water return.	
5											
	R3	30/24	9.00 - 11.50	RQD = 0%						R3:Bedrock: Grey, aphanitic to fine grained GRANOFELS, hard to moderately hard, slightly to moderately weathered, joints dipping at low to steep angles, very close to close, undulating to stepped, rough, open, oxidized joints. [Hutchins Corner Formation] Rock Mass Quality = Very Poor R3:Core Times (min:sec) 9.0-10.0 ft (7:10) 10.0-11.0 ft (4:45) 11.0-11.5 ft (4:00) 80% Recovery No water return.	
10								114.90		11.50 **Bottom of Exploration at 11.50 feet below ground surface.**	
15											
20											
25											

Remarks:

30.4 ft from Bridge Deck to Ground.
300-400 lbs of down presure on Core Barrel.

Stratification lines represent approximate boundaries between soil types; transitions may be gradual.

* Water level readings have been made at times and under conditions stated. Groundwater fluctuations may occur due to conditions other than those present at the time measurements were made.

Boring No.: BB-HBSR-104

Maine Department of Transportation

Soil/Rock Exploration Log
US CUSTOMARY UNITS

Project: Bar Mills Bridge #3333 carries Route 4A over Saco River
Location: Hollis-Buxton, Maine

Boring No.: BB-HBSR-105
WIN: 19280.00

Driller:	Northern Test Boring, Inc.	**Elevation (ft.)**	134.1	**Auger ID/OD:**	N/A
Operator:	M. Nadeau	**Datum:**	NAVD88	**Sampler:**	N/A
Logged By:	M. Snow H&A	**Rig Type:**	Dietrich D-50 Track	**Hammer Wt./Fall:**	N/A
Date Start/Finish:	9/17/2013-9/17/2013	**Drilling Method:**	N/A	**Core Barrel:**	NQ-2"
Boring Location:	110+34.8, 2.8 ft Lt.	**Casing ID/OD:**	N/A	**Water Level*:**	None Observed
Hammer Efficiency Factor:	0.801	**Hammer Type:**	Automatic ☒ Hydraulic ☐ Rope & Cathead ☐		

Definitions:
D = Split Spoon Sample
MD = Unsuccessful Split Spoon Sample attempt
U = Thin Wall Tube Sample
MU = Unsuccessful Thin Wall Tube Sample attempt
V = Insitu Vane Shear Test, PP = Pocket Penetrometer
MV = Unsuccessful Insitu Vane Shear Test attempt
R = Rock Core Sample
SSA = Solid Stem Auger
HSA = Hollow Stem Auger
RC = Roller Cone
WOH = weight of 140lb. hammer
WOR/C = weight of rods or casing
WO1P = Weight of one person
S_u = Insitu Field Vane Shear Strength (psf)
T_v = Pocket Torvane Shear Strength (psf)
q_p = Unconfined Compressive Strength (ksf)
N-uncorrected = Raw field SPT N-value
Hammer Efficiency Factor = Annual Calibration Value
N_{60} = SPT N-uncorrected corrected for hammer efficiency
N_{60} = (Hammer Efficiency Factor/60%)*N-uncorrected
$S_{u(lab)}$ = Lab Vane Shear Strength (psf)
WC = water content, percent
LL = Liquid Limit
PL = Plastic Limit
PI = Plasticity Index
G = Grain Size Analysis
C = Consolidation Test

Sample Information

Depth (ft.)	Sample No.	Pen./Rec. (in.)	Sample Depth (ft.)	Blows (/6 in.) Shear Strength (psf) or RQD (%)	N-uncorrected	N_{60}	Casing Blows	Elevation (ft.)	Graphic Log	Visual Description and Remarks	Laboratory Testing Results/ AASHTO and Unified Class.
0	R1	6/6	0.00 - 0.50	RQD = 0%			NQ-2			Top of Bedrock at Elev. 134.1 ft.	
	R2	18/7	0.50 - 2.00	RQD = 0%						R1:Bedrock: Grey to white, fine to medium grained Quartz and Granofels pieces, (1- 2" dia.), very hard, slightly weathered, no discernible joints.	
										Rock Mass Quality = Very Poor	
	R3	45.6/42	2.00 - 5.80	RQD = 67%						R1:Core Times (min:sec)	
										0.0-0.5 ft (1:57) 100% Recovery	
										R2:Bedrock: Similar to R1.	
										Rock Mass Quality = Very Poor	
										R2:Core Times (min:sec)	
5										0.5-1.5 ft (2:44)	
	R4	60/60	5.80 - 10.80	RQD = 100%						1.5-2.0 ft (2:03) 39% Recovery	
										R3:Bedrock: Dark grey, aphanitic to fine grained GRANOFELS with quartz veins, very hard, fresh to slightly weathered, low angle to moderately dipping joints, close to moderately close, tight to open, planar to undulating, rough.	
										Rock Mass Quality = Fair	
										R3:Core Times (min:sec)	
										2.0-3.0 ft (8:16)	
										3.0-4.0 ft (8:00)	
										4.0-5.0 ft (9:31)	
10										5.0-5.8 ft (7:39) 91% Recovery	
								123.30		R4:Bedrock: Similar to R3, except joints moderately close, (12-16"), undulating, occasional schistose zones.	
										[Hutchins Corner Formation]	
										Rock Mass Quality = Excellent	
										R4:Core Times (min:sec)	
										5.8-6.8 ft (12:30)	
										6.8-7.8 ft (11:10)	
										7.8-8.8 ft (15:21)	
										8.8-9.8 ft (12:30)	
15										9.8-10.8 ft (10:46) 100% Recovery	
										10.80	
										Bottom of Exploration at 10.80 feet below ground surface.	
20											
25											

Remarks:

Stratification lines represent approximate boundaries between soil types; transitions may be gradual.

* Water level readings have been made at times and under conditions stated. Groundwater fluctuations may occur due to conditions other than those present at the time measurements were made.

Boring No.: BB-HBSR-105

Maine Department of Transportation

Soil/Rock Exploration Log
US CUSTOMARY UNITS

Project: Bar Mills Bridge #3333 carries Route 4A over Saco River
Location: Hollis-Buxton, Maine

Boring No.: BB-HBSR-106
WIN: 19280.00

Driller:	Northern Test Boring, Inc.	**Elevation (ft.)**	133.4	**Auger ID/OD:**	N/A
Operator:	M. Nadeau	**Datum:**	NAVD88	**Sampler:**	Standard Split Spoon
Logged By:	B. Steinert H&A	**Rig Type:**	Dietrich D-50 Track	**Hammer Wt./Fall:**	140#/30"
Date Start/Finish:	9/9/2013-9/9/2013	**Drilling Method:**	Cased Wash Boring	**Core Barrel:**	NQ-2"
Boring Location:	110+57.7, 20.2 ft Rt.	**Casing ID/OD:**	HW	**Water Level*:**	None Observed
Hammer Efficiency Factor:	0.801	**Hammer Type:**	Automatic ☒ Hydraulic ☐ Rope & Cathead ☐		

Definitions:
D = Split Spoon Sample
MD = Unsuccessful Split Spoon Sample attempt
U = Thin Wall Tube Sample
MU = Unsuccessful Thin Wall Tube Sample attempt
V = Insitu Vane Shear Test, PP = Pocket Penetrometer
MV = Unsuccessful Insitu Vane Shear Test attempt
R = Rock Core Sample
SSA = Solid Stem Auger
HSA = Hollow Stem Auger
RC = Roller Cone
WOH = weight of 140lb. hammer
WOR/C = weight of rods or casing
WO1P = Weight of one person
S_u = Insitu Field Vane Shear Strength (psf)
T_v = Pocket Torvane Shear Strength (psf)
q_p = Unconfined Compressive Strength (ksf)
N-uncorrected = Raw field SPT N-value
Hammer Efficiency Factor = Annual Calibration Value
N_{60} = SPT N-uncorrected corrected for hammer efficiency
N_{60} = (Hammer Efficiency Factor/60%)*N-uncorrected
$S_{u(lab)}$ = Lab Vane Shear Strength (psf)
WC = water content, percent
LL = Liquid Limit
PL = Plastic Limit
PI = Plasticity Index
G = Grain Size Analysis
C = Consolidation Test

Sample Information

Depth (ft.)	Sample No.	Pen./Rec. (in.)	Sample Depth (ft.)	Blows (/6 in.) Shear Strength (psf) or RQD (%)	N-uncorrected	N_{60}	Casing Blows	Elevation (ft.)	Graphic Log	Visual Description and Remarks	Laboratory Testing Results/ AASHTO and Unified Class.
0	1D	6/6	0.00 - 0.50	79	---		NQ-2	132.80		Light brown, dry, very dense, fine to coarse SAND, little fine gravel, trace silt, trace wood fibers, (Fluvial Deposit). Spoon REFUSAL at 0.5 ft bgs.	
	R1	30/10	0.70 - 3.20	RQD = 0%						0.60	
										Top of Bedrock at Elev. 132.8 ft. Advanced HW Casing to 0.6 ft bgs. Roller Cone ahead to 0.7 ft bgs. R1:Bedrock: Green to grey, aphanitic to fine grained Biotite GRANOFELS, moderately hard to hard, slightly weathered, joints dipping at steep angles, very close to close, planar, rough, tight to open, oxidation on joint surfaces. Rock Mass Quality = Very Poor R1:Core Times (min:sec) 0.7-1.7 ft (3:11) 1.7-2.7 ft (3:20) 2.7-3.2 ft (1:35) 33% Recovery	
	R2	60/60	3.20 - 8.20	RQD = 70%						R2:Bedrock: Grey, aphanitic to fine grained GRANOFELS, hard, fresh to slightly weathered, joints dipping at moderate to steep angles with occasional low angle, very close to moderate, planar to stepped, rough, tight to open, oxidation on joint surfaces. Rock Mass Quality = Fair R2:Core Times (min:sec) 3.2-3.7 ft (1:22) 3.7-4.7 ft (3:05) 4.7-5.7 ft (2:58) 5.7-6.7 ft (2:45) 6.7-7.7 ft (3:09) 7.7-8.2 ft (1:23) 100% Recovery	
5											
	R3	32.4/32.4	8.20 - 10.90	RQD = 53%						R3:Bedrock: Grey, aphanitic to fine grained GRANOFELS, hard, fresh to slightly weathered, joints dipping at moderate angles, very close to moderate, undulating, rough, open, highly oxidized joint surfaces. [Hutchins Corner Formation] Rock Mass Quality = Fair R3:Core Times (min:sec) 8.2-8.7 ft (1:02) 8.7-9.7 ft (2:18) 9.7-10.7 ft (2:36) 10.7-10.9 ft (0:38) 100% Recovery	
10								122.50		10.90	
15											
20											
25											

Bottom of Exploration at 10.90 feet below ground surface.

Remarks:

Boring drilled through existing Bridge Deck. Deck thickness 0.8 ft.
Distance from Deck to Ground is 22.8 ft (measured with drill rods).

Stratification lines represent approximate boundaries between soil types; transitions may be gradual.

* Water level readings have been made at times and under conditions stated. Groundwater fluctuations may occur due to conditions other than those present at the time measurements were made.

Boring No.: BB-HBSR-106

Maine Department of Transportation

Soil/Rock Exploration Log
US CUSTOMARY UNITS

Project: Bar Mills Bridge #3333 carries Route 4A over Saco River
Location: Hollis-Buxton, Maine

Boring No.: BB-HBSR-107
WIN: 19280.00

Driller:	Northern Test Boring, Inc.	**Elevation (ft.)**	149.0	**Auger ID/OD:**	5" Solid Stem
Operator:	M. Nadeau	**Datum:**	NAVD88	**Sampler:**	Standard Split Spoon
Logged By:	M. Snow H&A	**Rig Type:**	Dietrich D-50 Track	**Hammer Wt./Fall:**	140#/30"
Date Start/Finish:	9/17/2013-9/17/2013	**Drilling Method:**	Cased Wash Boring	**Core Barrel:**	NQ-2"
Boring Location:	110+97.3, 41.8 ft Rt.	**Casing ID/OD:**	HW	**Water Level*:**	None Observed
Hammer Efficiency Factor:	0.801	**Hammer Type:**	Automatic ☒ Hydraulic ☐ Rope & Cathead ☐		

Definitions:
D = Split Spoon Sample
MD = Unsuccessful Split Spoon Sample attempt
U = Thin Wall Tube Sample
MU = Unsuccessful Thin Wall Tube Sample attempt
V = Insitu Vane Shear Test, PP = Pocket Penetrometer
MV = Unsuccessful Insitu Vane Shear Test attempt
R = Rock Core Sample
SSA = Solid Stem Auger
HSA = Hollow Stem Auger
RC = Roller Cone
WOH = weight of 140lb. hammer
WOR/C = weight of rods or casing
WO1P = Weight of one person
S_u = Insitu Field Vane Shear Strength (psf)
T_v = Pocket Torvane Shear Strength (psf)
q_p = Unconfined Compressive Strength (ksf)
N-uncorrected = Raw field SPT N-value
Hammer Efficiency Factor = Annual Calibration Value
N_{60} = SPT N-uncorrected corrected for hammer efficiency
N_{60} = (Hammer Efficiency Factor/60%)*N-uncorrected
$S_{u(lab)}$ = Lab Vane Shear Strength (psf)
WC = water content, percent
LL = Liquid Limit
PL = Plastic Limit
PI = Plasticity Index
G = Grain Size Analysis
C = Consolidation Test

Sample Information

Depth (ft.)	Sample No.	Pen./Rec. (in.)	Sample Depth (ft.)	Blows (/6 in.) Shear Strength (psf) or RQD (%)	N-uncorrected	N_{60}	Casing Blows	Elevation (ft.)	Visual Description and Remarks	Laboratory Testing Results/ AASHTO and Unified Class.
0	1D	24/6	0.00 - 2.00	5/7/8/8	15	20	SSA		Grey and brown, medium dense, fine to coarse Sandy GRAVEL, trace silt, with rootlets, (Nearshore Deposits).	
5	2D	24/8	5.00 - 7.00	3/5/5/9	10	13			Brown, wet, medium dense, fine to coarse SAND, some silt, some gravel, (Nearshore Deposits).	
	R1	60/60	7.60 - 12.60	RQD = 82%				141.60	7.40	
									Top of Bedrock at Elev. 141.6 ft. R1:Bedrock: Grey, aphanitic to fine grained GRANOFELS, very hard, moderately weathered, fresh to slightly weathered and highly fractured zone from 10.8-11.3 ft bgs, joints moderately dipping, very close to moderately close, tight to open, planar, smooth to rough. [Hutchins Corner Formation] Rock Mass Quality = Good R1:Core Times (min:sec) 7.6-8.6 ft (3:08) 8.6-9.6 ft (3:03) 9.6-10.6 ft (2:35) 10.6-11.6 ft (2:01) 11.6-12.6 ft (2:04) 100% Recovery	
10								136.40	12.60	
15									**Bottom of Exploration at 12.60 feet below ground surface.**	
20										
25										

Remarks:

Stratification lines represent approximate boundaries between soil types; transitions may be gradual.

* Water level readings have been made at times and under conditions stated. Groundwater fluctuations may occur due to conditions other than those present at the time measurements were made.

Boring No.: BB-HBSR-107

Appendix B

Calculations

Earth Pressure:

Active Earth Pressure - Rankine Theory
from MaineDOT Bridge Design Guide Section 3.6.5.2 pg 3-7

Soil Type 4 Properties from MaineDOT Bridge Design Guide (BDG)

unit weight: $\gamma_{type4} := 125 \cdot pcf$

Internal Friction Angle: $\phi_{type4} := 32 \cdot deg$

Cohesion: $c_{sand} := 0 \cdot psf$

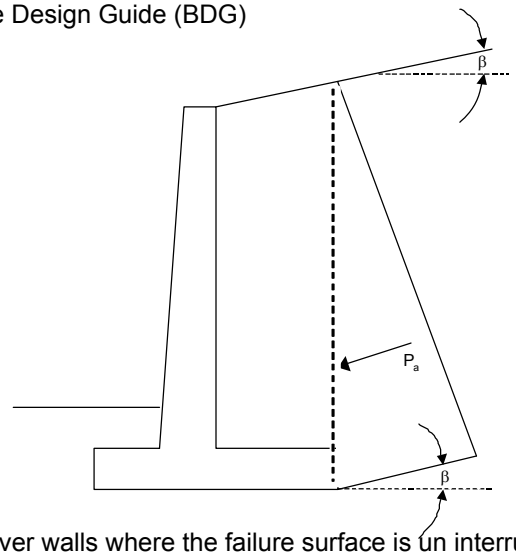

Generally use Rankine for long heeled cantilever walls where the failure surface is un interrupted by the top of the wall system. The earth pressure is applied to a plane extending vertically up from the heel of the wall base and the weight of the soil on the inside of the vertical plane is considered as part of the wall weight. The failure sliding surface is not restricted by the top of the wall or the backface of the wall.

For cantilever walls with sloped backfill surface:

β = Angle of fill slope to the horizontal

$\beta := 0 \cdot deg$ assume horizontal backfill surface

$$K_{a\_rankine\_slope} := \frac{\cos(\beta) - \sqrt{\cos(\beta)^2 - \cos(\phi_{type4})^2}}{\cos(\beta) + \sqrt{\cos(\beta)^2 - \cos(\phi_{type4})^2}}$$

$K_{a\_rankine\_slope} = 0.31$

Pa is oriented at an angle of β to the vertical plane.

Active Earth Pressure - Coulomb Theory - AASHTO Standard Specifications for Highway Bridges 17th Edition 2002 on Figure 5.5.2A page 122. Also AASHTO LRFD Section 3.11.5.3 pg 3-65.

$\phi := 32 \cdot deg$ $\delta := 0.55$ $\beta := 0 \cdot deg$ $\theta := 90 \cdot deg$

For Gravity Shaped Cast-in-Place Retaining Wall

$$K_a := \frac{\sin(\theta + \phi)^2}{\sin(\theta)^2 \cdot \sin(\theta - \delta) \cdot \left(1 + \sqrt{\frac{\sin(\phi + \delta) \cdot \sin(\phi - \beta)}{\sin(\theta - \delta) \cdot \sin(\theta + \beta)}}\right)^2}$$

$K_a = 0.28$

At-Rest Earth Pressure
from Principles of Foundation Engineering, BM Das, 4th Edition
Eq. 6.3

$K_o := 1 - \sin(\phi_{type4})$ $K_o = 0.47$

Bearing Resistance for Abutments, Wingwalls, Piers and Cast-in-Place Retaining Wall on Bedrock:

SERVICE LIMIT STATE

Presumptive Bearing Resistance for Service Limit State ONLY

Reference: AASHTO LRFD Bridge Design Specifications 6th Edition 2012
Table C10.6.2.6.1-1 Presumptive Bearing Resistances for Spread Footings at the Service Limit State Modified after US Department of Navy (1982)

For Broken Rock of any kind:

Type of Bearing Material: Weathered or broken rock of any kind

Consistency In Place: medium hard rock

Bearing Resistance: Ordinary Range (ksf) 16 to 24

Recommended Value of Use: 20 ksf

Resistance factor at the **service limit state** = 1.0 (LRFD Article 10.5.5.1)

$q_{factored\_bc} := 20 \cdot ksf$

Note: This bearing resistance is settlement limited (1 inch) and applies only at the service limit state.

STRENGTH LIMIT STATE

Determine Bearing Resistance using RMR Method

From AASHTO LRFD Bridge Design Specifications
Section 10.4.6.4 Rock Mass Strength

Bedrock is Granofels (metemorphic crystalline rock) which was "very poor to excellent" in quality.
Look at rock cores across both Canal and Bar Mills Bridges for a broader look
RQD ranged from 0 to 100%. (Average 42% - poor)

Determine RMR from Table 10.4.6.4-1 Geomechanics Classification of Rock Mass

From AASHTO - RMR is determined as the sum of the five relative ratings listed in Table 10.4.6.4-1

1. Strength of intact rock

From Standard Specifications for Highway Bridges 17th Edition - 2002
Table 4.4.8.1.2B uniaxial compressive strength for Granite = 300 to 7,000 ksf = 2,100 to 49,000 psi
(Table 4.4.8.1.2B groups coarse-grained igneous and metamorphic crystalline rock together.)

Use: $q_u := 1500 \cdot ksf$ $q_u = 10417 \cdot psi$

From Table 10.4.6.4.-1:
For Uniaxial Compressive Strength = 1080 to 2160 ksf: Relative Rating = 7

2. Drill Core Quality

Bedrock RQD = Average 42% (poor) From Table 10.4.6.4.-1: RQD 25% to 50%: Relative Rating = 8

3. Spacing of joints

Assume Spacing of 2 inches to 1 foot From Table 10.4.6.4.-1: Relative Rating = 10

4. Condition of joints

Assume slightly rough surfaces <0.05 in, soft joint wall rock From Table 10.4.6.4.-1: Relative Rating = 12

5. Groundwater conditions

General Conditions = Water under moderate pressure From Table 10.4.6.4.-1: Relative Rating = 4

Raw RMR = 41

Adjustment to RMR for joint Orientations from Table 10.4.6.4-2

Assume Strike and Dip Orientations of Joints = Fair For Foundations: Rating = -7

Adjusted RMR = 34 $RMR := 34$

Determine Rock Mass Class from Adjusted RMR Rating

For Adjusted RMR = 34 From LRFD Table 10.4.6.4.-3: Class No. = IV - Poor Rock

Determine Rock Type from LRFD Table 10.4.6.4.-4

Rock Type E - Metamorphic crystalline rock

Determine Rock Property constants *m* and *s:*

Reference: The Hoek and Brown Failure Criterion - a 1988 Update,
15th Canadian Rock Mechanics Symposium

m/m_i= exp ((RMR-100)/14) Eq 18 - for disturbed rock masses

where m_i = m for intact rock $m_i := 25$ From LRFD Table 10.4.6.4-4

$$m_{Epoor} := m_i \cdot \exp\left(\frac{RMR - 100}{14}\right) \qquad m_{Epoor} = 0.224$$

s = exp ((RMR-100)/6) Eq 19 - for disturbed rock masses

$$s_{Epoor} := \exp\left(\frac{RMR - 100}{6}\right) \qquad s_{Epoor} = 0.00002$$

<u>Determine nominal and factored bearing resistance of Bedrock:</u>

Foundation Shape correction factor:

$C_{f1} := 1.0$ From Foundations on Rock, Wyllie, Table 5.4 pg 138

Uniaxial Compressive Strength - Granite

$$q_{uc} := \begin{pmatrix} 2100 \\ 10417 \\ 15000 \\ 20000 \end{pmatrix} \cdot psi$$

Lower and middle bounds from from Standard Specifications for Highway Bridges 17th Edition - 2002 Table 4.4.8.1.2B

Determine Nominal Bearing Resistance:

From Foundations on Rock, Wyllie, Table 5.4 pg 138

$$q_{nom} := C_{f1} \cdot \sqrt{s_{Epoor}} \cdot q_{uc} \cdot \left[1 + \sqrt{m_{Epoor} \cdot \left(s_{Epoor}^{\frac{-1}{2}}\right) + 1}\right] \qquad q_{nom} = \begin{pmatrix} 10 \\ 52 \\ 75 \\ 100 \end{pmatrix} \cdot ksf$$

Determine Factored Bearing Resistance at the Strength Limit State:

From Table 10.5.5.2.2-1 Resistance factor for footing on rock $\phi_b := 0.45$

The factored resistance $q_R = \phi_b \times q_n$ equation 10.6.3.1.1-1 AASHTO LRFD

$$q_R := \phi_b \cdot q_{nom} \qquad q_R = \begin{pmatrix} 5 \\ 23 \\ 34 \\ 45 \end{pmatrix} \cdot ksf$$

Recommend 23 ksf for Strength Limit State

Determine Factored Bearing Resistance at the Extreme Limit State:

Use a bearing resistance factor of 0.8 for Extreme Limit State for gravity and semigravity walls and 1.0 for cantilever type walls per LRFD Article C11.5.8. Use for piers for consistency with the theory of preventing collapse for the Extreme Event.

Resistance factor - $\phi_{bc} := 0.8$

$$q_{rEE} := \phi_{bc} \cdot q_{nom} \qquad q_{rEE} = \begin{pmatrix} 8 \\ 42 \\ 60 \\ 80 \end{pmatrix} \cdot ksf$$

For Gravity and Semigravity Walls

Recommend 42 ksf for Extreme Limit State

Frost Protection:

Method 1 - MaineDOT Design Freezing Index (DFI) Map and Depth of Frost Penetration Table are in BDG Section 5.2.1.

From the Design Freezing Index Map:
Hollis and Buxton, Maine
DFI = 1200 degree-days

Soils are coarse grained, assume a water content = ~10%

From Table 5-1 MaineDOT BDG for Design Freezing Index of 1200 and wc =10%
Frost Penetration = 73.1 inches

$Frost\_depth := 73.1in$ $\quad$ $Frost\_depth = 6.1 \cdot ft$

Method 2 - Check Frost Depth using Modberg Software

Closest Station is West Buxton

ModBerg Results

Project Location: West Buxton 2 NNW, Maine

Air Design Freezing Index	=	1492 F-days
N-Factor	=	0.80
Surface Design Freezing Index	=	1194 F-days
Mean Annual Temperature	=	43.9 deg F
Design Length of Freezing Season	=	132 days

Layer #:Type	t	w%	d	Cf	Cu	Kf	Ku	L
1-Coarse	69.2	10.0	120.0	26	32	1.7	1.5	1,728

t = Layer thickness, in inches.
w% = Moisture content, in percentage of dry density.
d = Dry density, in lbs/cubic ft.
Cf = Heat Capacity of frozen phase, in BTU/(cubic ft degree F).
Cu = Heat Capacity of thawed phase, in BTU/(cubic ft degree F).
Kf = Thermal conductivity in frozen phase, in BTU/(ft hr degree).
Ku = Thermal conductivity in thawed phase, in BTU/(ft hr degree).
L = Latent heat of fusion, in BTU / cubic ft.

****
Total Depth of Frost Penetration = 5.77 ft = 69.2 in.
****

$Frost\_depth_{modberg} := 69.2 \cdot in$

$Frost\_depth_{modberg} = 5.767 \cdot ft$ $\quad$ Use Frost Depth = 6.0 feet for design

Seismic:

Conterminous 48 States
2007 AASHTO Bridge Design Guidelines
AASHTO Spectrum for 7% PE in 75 years
State - Maine
Zip Code - 04042
Zip Code Latitude = 43.635600
Zip Code Longitude = -070.620500
Site Class B
Data are based on a 0.05 deg grid spacing.

Hollis

Period (sec)	Sa (g)	
0.0	0.096	PGA - Site Class B
0.2	0.188	Ss - Site Class B
1.0	0.046	S1 - Site Class B

Conterminous 48 States
2007 AASHTO Bridge Design Guidelines
Spectral Response Accelerations SDs and SD1
State - Maine
Zip Code - 04042
Zip Code Latitude = 43.635600
Zip Code Longitude = -070.620500
As = FpgaPGA, SDs = FaSs, and SD1 = FvS1
Site Class B
Data are based on a 0.05 deg grid spacing.

Period (sec)	Sa (g)	
0.0	0.096	As - Site Class B
0.2	0.188	SDs - Site Class B
1.0	0.046	SD1 - Site Class B

Conterminous 48 States
2007 AASHTO Bridge Design Guidelines
AASHTO Spectrum for 7% PE in 75 years
State - Maine
Zip Code - 04093
Zip Code Latitude = 43.651400
Zip Code Longitude = -070.547700
Site Class B
Data are based on a 0.05 deg grid spacing.

Buxton

Period (sec)	Sa (g)	
0.0	0.094	PGA - Site Class B
0.2	0.185	Ss - Site Class B
1.0	0.046	S1 - Site Class B

Conterminous 48 States
2007 AASHTO Bridge Design Guidelines
Spectral Response Accelerations SDs and SD1
State - Maine
Zip Code - 04093
Zip Code Latitude = 43.651400
Zip Code Longitude = -070.547700
As = FpgaPGA, SDs = FaSs, and SD1 = FvS1
Site Class B
Data are based on a 0.05 deg grid spacing.

Period (sec)	Sa (g)	
0.0	0.094	As - Site Class B
0.2	0.185	SDs - Site Class B
1.0	0.046	SD1 - Site Class B

Seismic Design Parameters for
2007 AASHTO Seismic Design Guidelines

Purpose - The ground motion parameters obtained in this analysis are for use with the design procedures described in AASHTO Guidelines for the Seismic Design of Highway Bridges (2007). The user may calculate seismic design parameters and response spectra (both for period and displacement), for Site Class A through E.

Description - This program allows the user to obtain seismic design parameters for sites in the 50 states of the United States, Puerto Rico and the U.S. Virgin Islands. In most cases the user may perform an analysis for a site by specifying location by either latitude-longitude (recommended) or zip code. However, locations in Puerto and the Virgin Islands may only be specified by latitude-longitude.

Ground motion maps are included in PDF format. These maps may be opened using a map viewer that is part of the software package.

Data - The 2007 AASHTO maps are based on 5% in 50 year probabilistic data from the U.S. Geological Survey data sets for the following regions: 48 conterminous states (2002), Alaska (2006), Hawaii (1998), Puerto Rico and the Virgin Islands (2003). These were the most recent data available at the time of preparation of the AASHTO maps. The AASHTO maps are labelled with a probability of exceedance of 7% in 75 years which is approximately equal to the 5% in 50 year data.

Disclaimer - Correct application of the data obtained from the use of this program and/or maps is the responsibility of the user. This software is not a substitute for technical knowledge of seismic design and/or analysis.

Appendix C

Special Provision

SPECIAL PROVISION
SECTION 511
COFFERDAMS

Section 511 is deleted in its entirety and replaced with the following:

511.01 Description This work shall consist of the complete design, construction, maintenance and removal of cofferdams and other related work, including dewatering and inspection, required to allow for the excavation of foundation units, to permit and protect the construction of bridge or other structural units and to protect adjacent Roadways, embankments or other structural units, in accordance with the Contract.

511.02 Materials As specified in the cofferdam Working Drawings.

511.03 Cofferdam Construction

A. Working Drawings. The Contractor shall submit Working Drawings, showing the materials to be used and the proposed method of construction of cofferdams to the Department. Construction shall not start on cofferdams until such Working Drawings have been submitted. Any review of or comment on, or any lack of review of or comment on, these Working Drawings by the Department shall not result in any liability upon the Department and it shall not relieve the Contractor of the responsibility for the satisfactory functioning of the cofferdam.

B. Construction. Construct cofferdams in conformance with the submitted Working Drawings. Cofferdams shall, in general, be carried below the elevation of the bottom of footings to adequate depths to ensure stability and adequate heights to seal off water. Cofferdams shall be braced to withstand pressure without buckling, secured in place to prevent tipping or movement and be as watertight as necessary for the safe and proper construction of the substructure Work inside them. With the exception of construction of a concrete foundation seal placed under water, the interior dimensions of cofferdams shall provide sufficient clearance for the construction and inspection of forms and to permit pumping outside of forms. The Contractor shall be responsible for the righting and resetting of cofferdams that have tilted or moved laterally, as required for construction.

During the placing and curing of seal concrete, maintain the water level inside the cofferdam at the same level as the water outside the cofferdam, to prevent flow through the concrete.

No timber or bracing shall be used in cofferdams in such a way as to remain in the substructure Work.

Cofferdams shall be constructed to protect fresh concrete against damage from the sudden rising of the water body, to prevent damage by erosion and to prevent damage to adjacent Roadways, embankments or other structural units.

Unless otherwise noted, cofferdams, including all sheeting and bracing involved, shall be removed after the completion of the substructure Work in a manner that prevents disturbance or injury to the finished Work.

Cofferdams shall be constructed, dewatered and removed in accordance with the requirements of Section 656 - Temporary Soil Erosion and Water Pollution Control and related Special Provisions.

C. Construction Inspection of Seal Cofferdams. Seal cofferdam excavations shall initially be inspected and approved by the Contractor.

For each seal cofferdam excavation, the Contractor shall submit a written procedure to the Resident for sediment/overburden removal and excavation inspection. For cofferdams where seal concrete is to be placed on bedrock, the inspection procedure shall describe the Contractor's final cleaning and inspection process for attaining cleanliness of each cofferdam excavation. For cofferdams where seal concrete is not excavated to bedrock, the procedure shall describe the Contractor's final cleaning and inspection process for attaining the bottom of seal elevation shown on the Plans.

The Contractor shall notify the Resident at least 48 hours prior to when each seal cofferdam excavation will be ready for final inspection by the Department. The Contractor shall allow adequate time for each occurrence of cofferdam excavation inspection by the Department. The Contractor shall provide and maintain access and equipment, such as steel probes, for the Resident and/or the Department's Dive Team to independently inspect each cofferdam excavation.

No seal concrete placement shall begin until the Department has approved the cofferdam excavation.

511.04 Pumping Pumping from the interior of any cofferdam shall be done in such a manner as to prevent any current of water that would carry away or segregate the concrete.

Pumping to dewater a sealed cofferdam shall not commence until the seal concrete has set sufficiently to withstand the hydrostatic pressure and meets the following minimum curing time, after the completion of the installation of the seal concrete:

1. When the temperature of the water body outside the cofferdam is greater than 40°F, a minimum of 5 days.
2. When the temperature of the water body outside the cofferdam is less than 40°F, a minimum of 7 days.

Procedures for the removal of all water and materials from cofferdams shall be described in the Soil Erosion and Water Pollution Control Plan as required in Section 656 Temporary Soil Erosion and Water Pollution Control and related Special Provisions.

511.05 Method of Measurement Cofferdams will be measured as one lump sum unit, as indicated on the Plans or called for in the Contract.

511.06 Basis of Payment The accepted quantity of cofferdam will be paid for at the Contract lump sum price for the respective cofferdam items, which price shall be full compensation for design, construction, maintenance, inspection and removal.

When required, the elevation of the bottom of the footing of any substructure unit may be lowered, without change in the price to be paid for cofferdams. However, if the average elevation of more than 25% of the area of the excavation is more than 3 feet below the elevation shown on the Plans, and if requested by the Contractor, then the additional costs incurred that are included in the cofferdam Pay Item will be paid for in accordance with Section 109.7 - Equitable Adjustments to Compensation. The Contractor shall immediately notify the Department when these additional costs commence. Failure of the Contractor to provide this notification will result in undocumented additional work that will be non-reimbursable. The Department will evaluate this additional work to determine an appropriate time extension, if warranted.

All costs for sedimentation control practices, including, but not limited to, constructing, maintaining, and removing sedimentation control structures, and pumping or transporting water and other materials for sedimentation control will not be paid for directly, but will be considered incidental to the cofferdam Pay Item(s).

All costs for related temporary soil erosion and water pollution controls, including inspection and maintenance, will not be paid for directly, but will be considered incidental to the cofferdam Pay Item(s).

All costs associated with preparation of Working Drawings, design calculations, written procedure for sediment/overburden removal and excavation inspection, and the inspection of the seal cofferdam excavation shall be considered incidental to the cofferdam Pay Item(s). There shall be no additional payment for repeated inspection by the Department of the same cofferdam excavation.

All costs for cofferdams and related temporary soil erosion and water pollution controls, including inspection and maintenance, will be considered incidental to related Pay Items, when a specific Pay Item for cofferdams is not included in the Contract.

Seal concrete will be evaluated under Section 502.

Payment will be made under:

Pay Item	Pay Unit
511.07 Cofferdam	Lump Sum

MAINE DEPARTMENT OF TRANSPORTATION
BRIDGE PROGRAM
GEOTECHNICAL SECTION
AUGUSTA, MAINE

GEOTECHNICAL DESIGN REPORT

For the Replacement of:

CANAL BRIDGE
OVER SACO RIVER CANAL
STATE ROUTE 4A
HOLLIS, MAINE

Prepared by:
Kathleen Maguire, P.E.
Geotechnical Engineer

Reviewed by:
Laura Krusinski, P.E.
Senior Geotechnical Engineer

York County
WIN 19281.00

Soils Report No. 2014-25
Bridge No. 1525

Fed No. BR-1928(100)X
November 10, 2014

Table of Contents

GEOTECHNICAL DESIGN SUMMARY **1**

1.0 INTRODUCTION **5**

2.0 GEOLOGIC SETTING **5**

3.0 SUBSURFACE INVESTIGATIONS **6**

4.0 LABORATORY TESTING **7**

5.0 SUBSURFACE CONDITIONS **7**

5.1 ABUTMENT NO. 1 7
5.2 ABUTMENT NO. 2 8
5.3 SACO RIVER CANAL RETAINING WALL 8
5.4 BEDROCK 9
5.5 GROUNDWATER 9

6.0 FOUNDATION ALTERNATIVES **10**

7.0 GEOTECHNICAL DESIGN RECOMMENDATIONS **10**

7.1 ABUTMENT NO. 1 - SEMI-INTEGRAL ABUTMENT ON SPREAD FOOTING DESIGN 10
7.2 ABUTMENT NO. 1 - BEDROCK REMOVAL AND BEDROCK SUBGRADE PREPARATION 13
7.3 BEARING RESISTANCE 14
7.4 ABUTMENT NO. 2 - MICROPILE DESIGN 14
7.5 ABUTMENT NO. 2 - MICROPILE SUPPORTED SEMI-INTEGRAL ABUTMENT DESIGN 16
7.6 INDEPENDENT WINGWALL AND RETAINING WALL DESIGN 17
7.7 SCOUR AND RIPRAP 18
7.8 SETTLEMENT 18
7.9 FROST PROTECTION 19
7.10 SEISMIC DESIGN CONSIDERATIONS 19
7.11 BAR MILLS HYDROELECTRIC FACILITY IMPACTS ANALYSIS AND RECOMMENDATIONS 20
7.12 CONSTRUCTION CONSIDERATIONS 20

8.0 CLOSURE **21**

Tables

Table 1 - Summary of Bedrock Depths, Bedrock Elevations and RQD
Table 2 - Equivalent Height of Soil for Vehicular Loading on Abutments
Table 3 - Factored Axial Compression Geotechnical Resistance and Uplift Resistance of Micropiles at the Strength Limit State
Table 4 - Factored Axial Compression Geotechnical Resistance and Uplift Resistance of Micropiles at the Service and Extreme Limit States

Sheets

Sheet 1 - Location Map
Sheet 2 - Boring Location Plan
Sheet 3 - Interpretive Subsurface Profile
Sheets 4 and 5 - Boring Logs

Appendices

Appendix A - Boring Logs
Appendix B - Laboratory Data
Appendix C - Calculations
Appendix D - Special Provisions
Appendix E - Bar Mills Hydroelectric Facility Impacts Analysis Summary Memorandum

GEOTECHNICAL DESIGN SUMMARY

The purpose of this Geotechnical Design Report is to present subsurface information and make geotechnical recommendations for the replacement of Canal Bridge which carries State Route 4A over the Saco River Canal in Hollis and the protection of the nearby Saco River Canal retaining wall which is owned and operated by Brookfield Renewable Power (Brookfield). The proposed bridge superstructure will be an approximately 115-foot long single-span, steel plate girder superstructure on a 6 degree skew. The proposed western abutment (Abutment No. 1) will be a semi-integral abutment founded on a spread footing or concrete seal on bedrock. The proposed eastern abutment (Abutment No. 2) will be a semi-integral abutment founded on rock-socketed micropiles. The following design recommendations are discussed in detail in Section 7.0 of this report:

Semi-Integral Abutment Design - Semi-Integral abutments shall be designed for all applicable load combinations and for all relevant service, strength, and extreme limit states. The design of the abutments and wingwalls founded on a spread footing or concrete seal on bedrock at the strength limit state shall consider bearing resistance, eccentricity (overturning), failure by sliding and reinforced concrete structural failure. For the service limit state analyses shall consider settlement, horizontal movement, bearing resistance, sliding, and eccentricity. For the extreme limit state design analyses shall consider bearing resistance, eccentricity, failure by sliding and structural failure with respect to extreme event load conditions relating to certain hydraulic events, ice and seismic forces. Anchorage of the footing to the seal is required by the MaineDOT Bridge Design Guide (BDG) Section 5.2.2. Additional lateral earth pressure due to construction surcharge or live load surcharge is required. All abutment designs shall include a drainage system behind the abutment to intercept any groundwater.

Bedrock Removal and Subgrade Preparation - The nature, slope and degree of fracturing in the bedrock bearing surfaces will not be evident until the foundation excavations for the abutment and its wingwalls are made. The bedrock surface shall be cleared of all loose fractured bedrock, loose decomposed bedrock and soil. Construction activities should not be permitted to disturb the bedrock mass or to create any rock falls or any open fissures. The cleanliness and condition of the final bedrock surface shall be approved by the Resident prior to placement of the footing concrete or seal concrete.

If bedrock is observed to slope steeper than 4H:1V at the subgrade elevation, the bedrock should be benched to create level steps or excavated to be completely level. The bedrock surface may be stepped along the centerline of bearing to create a workable bearing surface. The bottom of footing elevation may vary based on the presence of fractured bedrock and the variability of the bedrock surface. Anchors or dowels may also be designed and employed to improve sliding resistance where the prepared bedrock surface is steeper than 4H:1V in any direction. Where foundations are constructed in-the-dry, the final bearing surface shall be washed with high pressure water and air prior to concrete being placed for the footing. For spread footings are constructed in-the-dry, any irregularities in the existing bedrock surface or irregularities created during the excavation process should be backfilled with unreinforced concrete to the bearing elevation.

Bearing Resistance - When analyzing the service limit state load combination, a factored bearing resistance of 20 ksf may be used and for preliminary footing sizing, and to control settlements. The bearing resistance for abutment, wingwall and pier foundations founded on competent, sound bedrock shall be investigated at the strength limit state using factored loads and a factored bearing resistance of 23 ksf. For extreme limit state load combinations a factored bearing resistance of 42 ksf may be used.

Micropile Design - Rock-socketed micropiles shall be a composite micropile consisting of a 9.625 inch outside diameter permanent steel casing installed within the upper site soils and a 10-foot long, 8.0 inch diameter bedrock socket with a 1.41 inch (minimum) diameter central reinforcing bar installed for the full length of the micropile. Micropiles shall have double corrosion protection. The micropiles shall be Type A micropiles constructed by placing a Portland cement grout in the pile under gravity head. The 28-day compressive strength of the cement grout should be at least 5,000 psi. Centralizers (spacing devices) shall be attached to the reinforcing bar in order to maintain cement grout cover within the casing and bedrock socket. The design of the micropiles at the strength limit state shall consider the structural resistance of the micropiles, the geotechnical resistance of the micropile, downdrag, and an unsupported length due to loss of the materials in front of the pile group. Since the micropiles will be subjected to lateral loading, they should be analyzed for combined axial compression and flexure resistance. The factored design load (FDL) shall be shown on the contract plans. The design of the micropiles at the service limit state shall consider settlement due to static loads and downdrag, overall stability, lateral squeeze, lateral deformation, and scour at the design (Q_{100}) flood event. Extreme limit state design shall check that the nominal pile resistance remaining after scour due to the design (Q_{100}) flood and the extreme event load groups (ice and seismic forces) can support the unfactored strength limit state loads with a resistance factor of 1.0. Micropile resistance shall be verified through the performance of micropile load tests.

Independent Wingwall and Retaining Wall Design - Cast-in-place concrete wingwalls will be constructed at both abutments to retain the approach fills. A long, cast-in-place, retaining wall will be constructed on the island on the Abutment No. 2 side of the bridge in order to bring the existing island grade to the proposed new elevation. This long retaining wall will end adjacent to the proposed west abutment for the Bar Mills Bridge (Abutment No. 1). The live load surcharge on wingwalls may be estimated as a uniform horizontal earth pressure due to an equivalent height of soil.

Scour and Riprap - For scour protection of Abutment No. 1 and the associated wingwall spread footings place tremie seal concrete or cast footings directly on bedrock surfaces cleaned of all weathered, loose and potentially erodible or scourable rock. The consequences of changes in foundation conditions resulting from the design flood for scour shall be considered for any foundation constructed on granular soils at the strength and service limit states. These changes in foundation conditions shall be investigated at the abutments and wingwalls should they be designed to bear on soil. For scour protection, any footings for wingwalls, which are constructed on granular deposits, should be embedded a minimum of 3 feet below the design scour depth and armored with a minimum of 3 feet of riprap. Bridge approach slopes, slopes at wingwalls and slopes at the toes of any footings on granular soils shall be armored with 3 feet of riprap. Stone riprap shall be placed at a maximum slope of 1.75H:1V. The toe of the riprap section shall be

constructed 1 foot below the streambed elevation. The riprap section shall be underlain by a 1 foot thick layer of bedding material and Class "1" Erosion Control Geotextile.

Settlement - Significant fill will be required behind Abutment No. 2 to bring the existing island grade up to the proposed grade of the new bridge structure. The proposed fill will be placed on granular soils. Placement of the necessary fill will result in negligible densification of the underlying soils and minimal settlement of the embankments. Any settlement will occur during and immediately after construction of the widened embankments. Post-construction settlement is anticipated to be minimal. Any settlement of Abutment No. 1 will be due to elastic compression of the bedrock mass, and is anticipated to be less than 1.0-inch. Micropile foundations founded in bedrock can be expected to undergo only elastic shortening above the bedrock bond zone. For this proposed micropile design the elastic shortening of a micropile would be on the order of less than ½ inch.

Frost Protection - It is anticipated that the abutment, wingwall and retaining wall spread footings and concrete seals will be founded directly on bedrock. For foundations on bedrock, heave due to frost is not a design issue and no requirements for minimum depth of embedment are necessary. Any foundations placed on granular soils should be founded a minimum of 6.0 feet below finished exterior grade for frost protection.

Seismic Design Considerations - Seismic analysis is not required for single-span bridges regardless of seismic zone. Additionally, single-span bridges are not required to include acceleration-augmented soil pressures for design. However, superstructure connections and minimum bridge seat dimensions shall be designed to meet the requirements of AASHTO LRFD Bridge Design Specifications.

Construction Considerations - No excavation will occur within 5 feet of the existing Saco River Canal retaining wall. Heavy construction equipment and material stockpiles shall not be permitted within 15 of the backface of the existing Saco River Canal retaining wall. Slopes for excavations beyond 5 feet from the existing Saco River Canal retaining wall shall be constructed no steeper than 1.5H:1V.

Special Provision 501 - Vibration and Movement Monitoring and Control has been developed to establish the requirements for monitoring construction vibrations and establish monitoring points along the existing Saco River Canal retaining wall which will be monitored for horizontal and vertical deformations during construction activities. Excavation methods and shall be conducted and monitored in accordance with the requirements of Special Provision 501.

Construction activities may include construction of cofferdams and earth support systems to support the approach fills and control stream flow during construction of seals and footings for abutments and wingwalls. Construction activities will also include common earth and rock excavation and structural earth and rock excavation for major structures.

There is a potential for the existing abutment and/or wingwall foundations to interfere with the excavation activities for the proposed abutments and wingwalls. Obstructions may be cleared by

conventional excavation methods. The existing abutments and wingwalls shall be removed to the bearing seat elevation and left in place to maintain the existing topography.

The cleanliness and condition of the bedrock surface shall be approved by the Resident prior to placement of the footing concrete or tremie-seal concrete. It is anticipated that there will be seepage of water from fractures and joints exposed in the bedrock surface. Water should be controlled by pumping from sumps.

1.0 INTRODUCTION

The purpose of this Geotechnical Design Report is to present subsurface information and make geotechnical recommendations for the replacement of Canal Bridge which carries State Route 4A over the Saco River Canal in Hollis and the protection of the nearby Saco River Canal retaining wall which is owned and operated by Brookfield Renewable Power (Brookfield). Subsurface investigations have been completed at the site. The purpose of these investigations was to explore subsurface conditions at the site in order to develop geotechnical recommendations for the bridge replacement and protection of the nearby Saco River Canal retaining wall. This Geotechnical Design Report presents the soils information obtained at the site during the subsurface investigations, foundation recommendations, and geotechnical design parameters for bridge replacement.

An independent evaluation of the potential construction impacts to the nearby Bar Mills Hydroelectric Facility was conducted by Haley & Aldrich, Inc. (H&A) and Kleinschmidt Associates (Kleinschmidt) at the request of Brookfield. A formal report prepared by Kleinschmidt was submitted by Brookfield to Federal Energy Regulatory Commission (FERC) for their review.

The existing Canal Bridge was built in 1937 and is an approximately 135-foot long, single-span riveted steel through truss founded on reinforced concrete abutments. Existing Abutment No. 1 (west) is founded on a spread footing on soil. Existing Abutment No. 2 (east) is founded on timber piles. The existing bridge is located approximately 230 feet downstream from the Bar Mills Dam. The year 2014 Maine Department of Transportation (MaineDOT) Bridge Maintenance inspection report assigns the existing substructures a condition rating of 4 – poor with a Bridge Sufficiency Rating of 49.6. The Inspection Notes state that the bridge is in poor condition with heavy rusting and section loss. The abutments have spalling and exposed rebar in the bearing areas.

The Canal Bridge will be replaced in conjunction with the Bar Mills Bridge which is located immediately east of the Canal Bridge on State Route 4A. The proposed east abutment of the Canal Bridge and the proposed west abutment of the Bar Mills Bridge will be constructed on an existing island which divides the Saco River into two channels. The proposed replacement bridge will be constructed on a new alignment north (upstream) of the existing bridge and will be will be an approximately 115-foot long, single-span, steel plate girder superstructure with a 6 degree skew. The proposed western abutment (Abutment No. 1) will be a semi-integral abutment founded on a spread footing or concrete seal on bedrock. The proposed eastern abutment (Abutment No. 2) will be a semi-integral abutment founded on rock-socketed micropiles. Two-way traffic will be maintained on the existing structure during construction.

2.0 GEOLOGIC SETTING

The Canal Bridge on State Route 4A in Hollis crosses the Saco River Canal 0.1 miles west of the Buxton town line as shown on Sheet 1 - Location Map. The Saco River Canal flows into the Saco River which flows southeast into Casco Bay at Saco, Maine.

According to the Bar Mills Quadrangle, Maine Surficial Geologic map published by the Maine Geological Survey, Open File No. 99-77 (1999), the surficial soils in the vicinity of the site consist of nearshore deposits to the west and Presumpscot Formation to the east. The nearshore deposits generally consist of a poorly sorted mixture of silt, sand and gravel formed by wave reworking of glacial sediments during marine regression. The Presumpscot Formation generally consists of laminated to massive grey to green-grey silt and clay and may contain boulders, sand and gravel. The Presumpscot Formation was deposited during the period of late-glacial marine submergence.

According to the Bedrock Geology of Bar Mills Quadrangle, Maine (Open File No. 95-75, 1995) published by the Maine Geological Survey, the site is underlain by Ordovician or Silurian, medium grained, quartz-plagioclase-biotite granofels of the Hutchins Corner Formation.

3.0 SUBSURFACE INVESTIGATIONS

Subsurface conditions at the site were explored by drilling five (5) test borings at the site. Test borings BB-HSRC-101 and BB-HSRC-102 were drilled behind the location of the proposed west abutment (Abutment No. 1). Test borings BB-HSRC-103 and BB-HSRC-104 were drilled behind the location of the proposed east abutment (Abutment No. 2). Test boring BB-HSRC-201 was drilled in front of the existing Saco River Canal retaining wall through the deck of the existing Canal Bridge. The boring locations are shown in Sheet 2 - Boring Location Plan. Test boring BB-HSRC-101 was drilled on September 11, 2013 by the MaineDOT Materials Testing and Exploration drill crew using a trailer mounted drill rig. Test borings BB-HSRC-102, BB-HSRC-103 and BB-HSRC-104 were drilled between September 9 and 11, 2013 by the Northern Test Boring (NTB) of Gorham, Maine using a track mounted drill rig. Test boring BB-HSRC-201 was drilled on July 15, 2014 by the MaineDOT Materials Testing and Exploration drill crew using a trailer mounted drill rig. Details and sampling methods used, field data obtained, and soil and groundwater conditions encountered are presented in the boring logs provided in Appendix A - Boring Logs and graphically on Sheet 3 - Interpretive Subsurface Profile.

All the borings were drilled using solid stem auger and cased wash boring techniques. Soil samples were obtained, where possible, at 5-foot intervals using Standard Penetration Test (SPT) methods. During SPT sampling, the sampler is driven 24 inches and the hammer blows for each 6 inch interval of penetration are recorded. The standard penetration resistance, N-value, is the sum of the blows for the second and third intervals. Both the MaineDOT drill rig and the NTB drill rig are equipped with automatic hammers to drive the split spoon. Both hammers were calibrated in July of 2013. The MaineDOT automatic hammer was found to deliver approximately 45 percent more energy during driving than the standard rope and cathead system. The NTB automatic hammer was found to deliver approximately 34 percent more energy during driving than the standard rope and cathead system. All N-values discussed in this report are corrected values computed by applying the corresponding average energy transfer factor of 0.867 (for the MaineDOT hammer) and 0.801 (for the NTB hammer) to the raw field N-values. The hammer efficiency factors (0.867 and 0.801) and both the raw field N-values and the corrected N-values are shown on the boring logs.

The borings were advanced to bedrock and were terminated with bedrock cores. The bedrock was cored using an NQ-2" core barrel and the Rock Quality Designation (RQD) of the core was calculated. The MaineDOT Geotechnical Team member selected the boring locations and drilling methods, designated type and depth of sampling techniques, and identified field and laboratory testing requirements. The MaineDOT Subsurface Inspector certified by the Northeast Transportation Technical Certification Program (NETTCP) and a consultant geotechnical engineer logged the subsurface conditions encountered at the borings. The 100-series borings were located in the field by a MaineDOT survey crew after completion of the drilling program. The 200-series boring was located in the field by use of a tape after completion of the drilling program.

Details and sampling methods used, field data obtained, and soil and groundwater conditions encountered are presented in the boring logs provided in Appendix A – Boring Logs and on Sheets 4 and 5 – Boring Logs.

4.0 LABORATORY TESTING

A laboratory testing program was conducted on selected samples recovered from test borings to assist in soil classification, evaluation of engineering properties of the soils, and geologic assessment of the project site.

Laboratory testing consisted of three (3) standard washed grain size analyses with natural moisture content. The tests were performed in the MaineDOT Materials and Testing Laboratory in Bangor, Maine. The results of this laboratory testing are provided in Appendix B - Laboratory Data. Moisture content information is also shown on the Boring Logs in Appendix A and on Sheets 4 and 5 - Boring Logs.

5.0 SUBSURFACE CONDITIONS

The general soil stratigraphy encountered at proposed Abutment No. 1 consisted of fill underlain by sand overlying bedrock. The general soil stratigraphy encountered at proposed Abutment No. 2 consisted of silt underlain by sand overlying bedrock. An interpretive subsurface profile depicting the detailed soil stratigraphy across the site is show on Sheet 3 - Interpretive Subsurface Profile. A brief summary description of the strata encountered is as follows:

5.1 Abutment No. 1

A layer of fill material was encountered in borings BB-HSRC-101 and BB-HSRC-102. The thickness of the fill layer ranged from approximately 11.5 to 13.5 feet thick at the boring locations. The fill was made up of brown, damp to wet, fine to coarse sand with little to some gravel and trace to little silt. Corrected SPT N-values in the fill ranged from 9 to 23 blows per foot (bpf) indicating that the soil is loose to medium dense in consistency. Two (2) water contents from samples obtained within the fill were approximately 4 and 5%. Two (2) grain size analyses conducted on samples of fill indicated that the soil is classified as an A-1-b under the AASHTO Soil Classification System and as an SM or SW-SM under the Unified Soil Classification System. Laboratory test results can be found in Appendix B - Laboratory Data.

The fill material was underlain by a layer of native sand. The thickness of the sand layer ranged from approximately 3.3 to 14.5 feet thick at the boring locations. The sand was made up of grey, wet, fine to coarse sand with little gravel and little silt and dark grey, gravelly sand, some clay. Trace amounts of wood were noted at the bottom of boring BB-HSRC-101. Corrected SPT N-values in the sand ranged from 7 to 29 bpf indicating that the soil is loose to medium dense in consistency. One (1) water content from a sample obtained within the sand was approximately 12%. One (1) grain size analysis conducted on a sample of sand indicated that the sand is classified as an A-1-b under the AASHTO Soil Classification System and as an SW-SM under the Unified Soil Classification System. Laboratory test results can be found in Appendix B - Laboratory Data.

5.2 Abutment No. 2

A layer of silt was encountered at the ground surface in boring BB-HSRC-103 and immediately below an approximately 0.5 foot thick layer of topsoil in BB-HSRC-104. The thickness of the silt layer ranged from approximately 5.0 to 9.5 feet thick at the boring locations. The silt was made up of:

- Grey-brown, moist, sandy silt with rootlets and wood fibers throughout,
- Grey-brown, silt with little fine sand and trace wood fibers, and
- Brownish-grey, damp, fine sandy silt, grading to clayey silt, mottled, with a blocky texture.

Corrected SPT N-values in the silt ranged from 3 to 13 bpf indicating that the silt is soft to stiff in consistency.

A layer of native sand underlies the silt in boring BB-HSRC-104. The native sand was approximately 4.5 feet thick at the boring location. The native sand consisted of brownish-grey, fine to medium sand, with little silt and trace coarse sand and gravel. One corrected SPT N-value in the native sand was 9 bpf indicating that the native sand is loose in consistency.

5.3 Saco River Canal Retaining Wall

Boring BB-HSRC-201 was drilled behind the existing Saco River Canal retaining wall in front of the existing Abutment No. 2 in order to evaluate the foundation of the Saco River Canal retaining wall at its southern end. The materials encountered in the boring were fill underlain by glacial till and bedrock.

The fill was approximately 15.0 feet thick at the boring location and consisted of brown, moist, fine to medium sand, with little coarse sand and gravel and trace silt mixed with broken rock, wood, cobbles, and boulders. Corrected SPT N-values in the fill ranged from 7 to 20 bpf indicating that the fill is loose to medium dense in consistency.

The glacial till was approximately 16.2 feet thick at the boring location and consisted of grey, wet fine to medium sand, little gravel, trace coarse sand and silt interbedded with cobbles and

boulders. One corrected SPT N-value in the glacial till was 12 bpf indicating that the glacial till is medium dense in consistency.

5.4 Bedrock

The bedrock was cored in all of the borings conducted at the site. Table 1 summarizes approximate depths to bedrock, corresponding top of bedrock elevations and RQD at the boring locations:

Boring Number Substructure	Approximate Depth to Bedrock	Approximate Bedrock Elevation	RQD
BB-HSRC-101 Abutment No. 1 south	28.0 feet	129.4 feet	82%
BB-HSRC-102 Abutment No. 1 north	14.8 feet	139.7 feet	33 to 100%
BB-HSRC-103 Abutment No. 2	11.0 feet	138.5 feet	7 to 70%
BB-HSRC-104 Abutment No. 2	10.5 feet	137.0 feet	63%
BB-HSRC-201 Saco River Canal Wall	31.2 feet	120.0 feet	73%

Table 1 – Summary of Bedrock Depths, Bedrock Elevations and RQD

The bedrock in borings BB-HSRC-101 through BB-HSRC-104 is identified as grey, aphanitic to medium grained, granofels and biotite granofels, moderately hard to hard, fresh to severely weathered, with moderately dipping joints, moderately close, planar to undulating, rough, tight to open with slight oxidation on joint surfaces, thin quartz veins. A layer of weathered bedrock approximately 1.0 to 1.5 feet thick was present at the Abutment No. 2 location. The bedrock in boring BB-HSRC-201 is identified as grey to dark grey, aphanitic to fine-grained schist, moderately hard, fresh to slightly weathered, joints dipping at low to moderate angles, extremely close to moderately close, open, planar to undulating, smooth to rough, seconsary high angle joint, frequent calcite veins, occasional moderately weathered veins (vugs present), some oxidized joint surfaces. The RQD of the bedrock ranged from 7 to 100% indicating a Rock Mass Quality of very poor to excellent.

5.5 Groundwater

The measured groundwater level in boring BB-HSRC-101 was approximately 15.0 feet below ground surface. Groundwater was not observed in the other borings. The water levels were measured upon completion of drilling and are indicated on the boring logs in Appendix A. Note that water was introduced into the boreholes during the drilling operations. It is likely that the water levels indicated on the boring logs do not represent stabilized groundwater conditions. Groundwater levels will fluctuate with changes in the water levels in the river, seasonal changes, precipitation, runoff and adjacent construction activities.

6.0 FOUNDATION ALTERNATIVES

Based on the subsurface conditions encountered at the site, the following foundation alternatives were considered feasible:

Abutment No. 1 - Bedrock was encountered at elevations of approximately 129.4 and 139.7 feet in the borings taken at the proposed Abutment No. 1 location. Due to the relatively shallow bedrock encountered, the proposed abutment will consist of a semi-integral abutment founded on a spread footing or concrete seal constructed on bedrock.

Abutment No. 2 - Bedrock was encountered at elevations of approximately 138.5 and 137.0 feet at the borings taken at the proposed Abutment No. 2 location. Due to presence of the Saco River Canal retaining wall, which is owned and operated by Brookfield, the MaineDOT design team has chosen to use a semi-integral, rock-socketed micropile foundation at this abutment. The use of this foundation type will minimize any influence by the abutment on the Saco River Canal retaining wall.

7.0 GEOTECHNICAL DESIGN RECOMMENDATIONS

The Canal Bridge will be replaced in conjunction with the Bar Mills Bridge which is located immediately east of the Canal Bridge on State Route 4A. The proposed east abutment (Abutment No. 2) of the Canal Bridge and the proposed west abutment (Abutment No. 1) of the Bar Mills Bridge will be constructed on an existing island which divides the Saco River into two channels. The proposed Canal Bridge and Bar Mills Bridge will be constructed on a new alignment north (upstream) of the existing bridges. The proposed Canal Bridge will be an approximately 115-foot long single-span, steel plate girder superstructure on a 6 degree skew. The following subsections will discuss the foundation considerations and recommendations for:

- Abutment No. 1 - Semi-integral abutment founded on a spread footing constructed directly on bedrock or on a concrete seal constructed on bedrock, and
- Abutment No. 2 - Semi-integral abutment founded on rock-socketed micropiles.

Cast-in-place concrete wingwalls will be constructed at both abutments to retain the approach fills. A long, cast-in-place, retaining wall will be constructed on the island on the Abutment No. 2 side of the bridge in order to retain fills in that area.

The design recommendations in this Section are in accordance with AASHTO LRFD Bridge Design Specifications, 6th Edition, 2012 (herein referred to as LRFD).

7.1 Abutment No. 1 - Semi-Integral Abutment on Spread Footing Design

Abutment No. 1 will be a semi-integral, concrete abutment founded on a spread footing constructed directly on bedrock or on a concrete seal constructed on bedrock. It is assumed that the Abutment No. 1 excavation will require a cofferdam and temporary soil support systems. The borings indicate that fractured bedrock may be encountered at the bearing elevation. Prior to

construction of the spread footing or concrete seal, the bedrock surface shall be cleared of all loose and fractured bedrock to expose sound bedrock. Bedrock was encountered at elevations of approximately 129.4 and 139.7 feet at the borings taken at the proposed Abutment No. 1 location. The actual bottom of spread footing or concrete seal elevations will vary based on the presence of fractured bedrock and the variability of the bedrock surface. For footings constructed in-the-dry, fill concrete can be used to level the bearing area prior to placement of the spread footing or concrete seal on bedrock. The nature, slope and degree of fracturing in the bedrock bearing surface will not be evident until the foundation excavation for the abutment is made.

The spread footing on bedrock or concrete seal on bedrock shall be designed for all applicable load combinations specified in LRFD Articles 3.4.1 and 11.5.5 and shall be designed for all relevant service, strength, and extreme limit states.

The design of the abutments and wingwalls founded on a spread footing or concrete seal on bedrock at the strength limit state shall consider bearing resistance, eccentricity (overturning), failure by sliding and reinforced concrete structural failure. For footings or concrete seals on bedrock, the eccentricity of loading at the strength limit state, based on factored loads, shall not exceed 0.45 of the footing dimensions in either direction. The eccentricity corresponds to the resultant of reaction forces falling within the middle nine-tenths (9/10) of the base width.

For the service limit state a resistance factor, φ, of 1.0 shall be used to assess spread footing design for settlement, horizontal movement, bearing resistance, sliding, and eccentricity. The overall stability of the foundation should be investigated at the Service I Load Combination and a resistance factor, φ, of 0.65. Shear failure along adversely oriented joint surfaces in the rock mass below the foundation is not anticipated, therefore, a global stability evaluation may be waived.

Extreme limit state design checks for abutments and wingwalls shall include bearing resistance, eccentricity, failure by sliding and structural failure with respect to extreme event load conditions relating to certain hydraulic events, ice (if warranted by ice history or stream constriction by the abutments) and seismic forces. Resistance factors, φ, for the extreme limit state shall be taken as 1.0 with the exception of bearing resistance for which a resistance factor of 0.8 shall be used.

For scour protection of abutment and wingwall footings, construct the footings or seals directly on bedrock surfaces cleaned of all weathered, loose and potentially erodible or scourable rock. With these precautions, strength and extreme limit state designs do not need to consider rock scour due to abrasion or plucking due to the design (Q_{100}) or check (Q_{500}) floods for scour.

For sliding analyses, a sliding resistance factor, φ_τ, of 0.80 shall be applied to the nominal sliding resistance of abutments and wingwalls founded on spread footings or concrete seals on bedrock assuming the bedrock subgrade will be prepared in-the-wet and some amount of sediment will remain on the bedrock surface. A sliding resistance factor, φ_τ, of 0.80 shall be applied to the nominal sliding resistance of cast-in-place concrete on tremie concrete (this sliding resistance factor is taken as equal to the resistance factor for cast-in-place concrete on sand (LFRD Table 10.5.5.2.2-1)). If the bedrock subgrade is prepared in-the-dry and cleaned with high pressure

water and air prior to placing seal concrete a sliding resistance factor, φ_τ, of 0.90 may be used. LRFD Table 11.5.7-1 allows a sliding resistance factor, φ_τ, of 1.0 for semi-gravity retaining walls regardless of subgrade material.

Assuming that the rock subgrade will be prepared in-the-wet, some amount of sediment is expected to remain on the rock surface and the sliding computations for resistance of footings to lateral loads shall assume a maximum friction coefficient of 0.60 at the bedrock-to-concrete interface. If the bedrock subgrade is prepared in-the-dry and cleaned with high pressure water and air prior to placing footing concrete, sliding computations for resistance of cast-in-place footings and wingwall footings to lateral loads shall assume a maximum frictional coefficient of 0.70 at the bedrock-to-concrete interface.

Anchorage of the footing to the seal is required by the MaineDOT Bridge Design Guide (BDG) Section 5.2.2. The dowels should be drilled and grouted into the seal concrete after dewatering and prior to placing the footing concrete. Anchorage of seals to bedrock may also be required to resist sliding forces and improve stability. If bedrock is observed to slope steeper than 4 horizontal to 1 vertical (4H:1V) at the subgrade elevation, the bedrock should be benched to create level steps or excavated to be completely level or reinforcing dowels designed to anchor the footing to sloping rock.

Semi-integral abutments should typically be designed for active earth pressure over the abutment height and a uniform pressure distribution due to the height of soil behind the superstructure. The superstructure backwall should typically be designed for full passive pressure only. However, the Designer may elect a more conservative approach and design the abutment stem wall (structurally) to withstand a passive earth pressure state. In designing for active pressure, a Rankine active earth pressure coefficient, K_a, of 0.31 (assuming a level backfill) is recommended. In designing for passive earth pressure, the Coulomb state is recommended. Experience in designing wingwalls for integral abutments has shown that the use of the Coulomb passive earth pressure K_p=6.89 (assuming a level backfill) may result in uneconomical wall sections. For this reason, consideration may be given to using a Rankine passive earth pressure, K_p=3.25 (assuming a level backfill) when designing semi-integral abutments (structurally). The earth pressure coefficient will need to be recalculated if there is a sloping backfill surface. The abutment walls should be designed of overturning, sliding, eccentricity and bearing resistance using the Rankine active earth pressure coefficient, K_a, of 0.31. See Appendix C – Calculations for supporting documentation.

The designer may assume Soil Type 4 (MaineDOT BDG Section 3.6.1) for backfill material soil properties. The backfill properties are as follows: ϕ = 32 degrees, γ = 125 pcf.

Additional lateral earth pressure due to construction surcharge or live load surcharge is required per Section 3.6.8 of the MaineDOT BDG for the abutment if an approach slab is not specified. Use of an approach slab is required per MaineDOT BDG Sections 5.4.4 and 5.4.2.10. When a structural approach slab is specified, reduction, not elimination of the surcharge loads is permitted per LRFD Article 3.11.6.5 and MaineDOT BDG Section 5.4.4. The live load surcharge on the abutment may be estimated as a uniform horizontal earth pressure due to an equivalent height of soil (h_{eq}) taken from the Table 2 below:

Abutment Height	h_{eq}
5 feet	4.0 feet
10 feet	3.0 feet
≥20 feet	2.0 feet

Table 2 – Equivalent Height of Soil for Vehicular Loading on Abutments

All abutment designs shall include a drainage system behind the abutment to intercept any groundwater. Drainage behind structure shall be in accordance with Section 5.4.1.4 of the MaineDOT BDG. To avoid water intrusion behind the abutment the approach slab should be connected directly to the abutment.

Backfill within 10 feet of the abutment shall conform to Granular Borrow for Underwater Backfill - MaineDOT Specification 703.19. This gradation specifies 7 percent or less of the material passing the No. 200 sieve. This material is specified in order to reduce the amount of fines and to minimize frost action behind the structure.

7.2 Abutment No. 1 - Bedrock Removal and Bedrock Subgrade Preparation

The nature, slope and degree of fracturing in the bedrock bearing surfaces will not be evident until the foundation excavations for the abutment and its wingwalls are made. The bedrock surface shall be cleared of all loose fractured bedrock, loose decomposed bedrock and soil. The final bearing surface shall be solid. Construction activities should not be permitted to disturb the bedrock mass or to create any rock falls or any open fissures. The cleanliness and condition of the final bedrock surface shall be approved by the Resident prior to placement of the footing concrete or seal concrete.

If bedrock is observed to slope steeper than 4H:1V at the subgrade elevation, the bedrock should be benched to create level steps or excavated to be completely level. The bedrock surface may be stepped along the centerline of bearing to create a workable bearing surface. The bottom of footing elevation may vary based on the presence of fractured bedrock and the variability of the bedrock surface. Any irregularities in the existing bedrock surface or irregularities created during the excavation process should be backfilled with unreinforced concrete to the bearing elevation. Anchors or dowels may also be designed and employed to improve sliding resistance where the prepared bedrock surface is steeper than 4H:1V in any direction.

The contractor should maintain the abutment and wingwall excavations so that the foundations can be constructed in-the-dry. Where foundations are constructed in-the-dry, the final bearing surface shall be washed with high pressure water and air prior to concrete being placed for the footing. For spread footings are constructed in-the-dry, any irregularities in the existing bedrock surface or irregularities created during the excavation process should be backfilled with unreinforced concrete to the bearing elevation.

In-the-dry or underwater excavation of highly sloped and loose fractured bedrock material may be done using conventional excavation methods and shall be conducted and monitored in accordance with the requirements of Special Provision 501 - Vibration and Movement Monitoring and Control (see Appendix D).

It is anticipated that there will be seepage of water from fractures and joints exposed in the bedrock surface. Water should be controlled by pumping from sumps.

7.3 Bearing Resistance

The Abutment No. 1 and wingwall spread footing shall be proportioned to provide stability against bearing capacity failure. Application of permanent and transient loads are specified in LRFD Article 11.5.6. The stress distribution may be assumed to be a triangular or trapezoidal distribution over the effective base as shown in LRFD Figure 11.6.3.2-2.

A factored bearing resistance of 20 ksf may be used for preliminary footing sizing, and to control settlements when analyzing the service limit state load combination. The bearing resistance for abutment and wingwall footings founded on competent, sound bedrock shall be investigated at the strength limit state using factored loads and a factored bearing resistance of 23 ksf. This assumes a bearing resistance factor, φ_b, for spread footings on bedrock of 0.45, based on bearing resistance evaluation using semi-empirical methods. For extreme limit state load combinations a factored bearing resistance of 42 ksf may be used. This assumes a bearing resistance factor of 0.8 in accordance with LRFD Article C11.5.8. See Appendix C – Calculations for supporting documentation.

In no instance shall the factored bearing stress exceed the factored compressive resistance of the footing concrete, which may be taken as $0.3f'c$. No footing shall be less than 2 feet wide regardless of the applied bearing pressure or bearing material.

7.4 Abutment No. 2 - Micropile Design

Rock-socketed micropiles shall be a composite micropile consisting of a 9.625 inch outside diameter permanent steel casing installed within the upper site soils and a 10-foot long, 8.0 inch diameter bedrock socket with a 1.41 inch (minimum) diameter central reinforcing bar (consisting of Grade 75 continuously threaded bar) installed for the full length of the micropile. Two rows of micropiles will be utilized to support the proposed abutment. The front row of micropiles will be battered at either 3H:12V or 2H:12V. Micropile installation and testing shall be performed in accordance with Special Provision 501 - Micropiles. Micropiles shall have double corrosion protection. The micropiles shall be Type A micropiles constructed by placing a Portland cement grout in the pile under gravity head. The 28-day compressive strength of the cement grout should be at least 5,000 psi. Centralizers (spacing devices) shall be attached to the reinforcing bar in order to maintain cement grout cover within the casing and bedrock socket. Full-time monitoring of the micropile installation by an inspector familiar with micropile construction is recommended.

7.4.1 Strength Limit State Design

The design of the micropiles at the strength limit state shall consider the structural resistance of the micropiles, the geotechnical resistance of the micropile, downdrag, and an unsupported length due to loss of the materials in front of the pile group.

The nominal axial compression geotechnical resistance (R_R) of a single micropile at the strength limit state shall be as specified in LRFD Article 10.9.3.5.1. Estimates of the nominal axial compressive geotechnical resistances of the proposed micropile were calculated using a resistance factor, ϕ_{stat}, of 0.55 for side resistance. Micropiles are typically designed based on bond into soil and rock neglecting tip resistance due to their relatively small diameter and high grout-to-ground bond resistance (LRFD Article C10.9.3.5.1). For this project the resistance of the micropile within the soil is neglected to consider an unsupported length condition. Table 3 presents the factored micropile geotechnical resistances at the strength limit state for several bedrock bond (rock-socket) lengths:

Bedrock Bond (Rock-Socket) Length (feet)	Strength Limit State Factored Geotechnical Resistance (kips) ϕ_{stat}=0.55	Strength Limit State Factored Uplift Resistance (kips) ϕ_{up}=0.55
10	332	332
12	398	398
14	464	464
16	531	531
18	597	597

Table 3 – Factored Axial Compression Geotechnical Resistance and Uplift Resistance of Micropiles at the Strength Limit State

The structural design of the micropiles shall be in accordance with the provisions of LRFD Section 5 for the design of the reinforced concrete and Section 6 for the design of the steel and LRFD Article 10.9.3.10. The resistance factors for structural design are specified in LRFD Table 10.5.5.2.5-2.

Since the micropiles will be subjected to lateral loading, they should be analyzed for combined axial compression and flexure resistance as prescribed in LRFD Articles 6.9.2.2 and 6.15. L-Pile® analyses were conducted to evaluate the soil-pile interaction for combined axial and flexure, with factored axial loads, movements and pile head displacements. L-Pile analyses are included in Appendix C.

The factored design load (FDL) shall be shown on the contract plans.

7.4.2 Service and Extreme Limit State Design

The design of the micropiles at the service limit state shall consider settlement due to static loads and downdrag, overall stability, lateral squeeze, lateral deformation, and scour at the design (Q_{100}) flood event.

Extreme limit state design shall check that the nominal pile resistance remaining after scour due to the design (Q_{100}) flood and the extreme event load groups (ice and seismic forces) can support the unfactored strength limit state loads with a resistance factor of 1.0. The design (Q_{100}) flood scour is defined in LRFD Articles 2.6.4.4.2 and 3.7.5.

Table 4 presents the factored micropile resistances at the service and extreme limit states for several bedrock bond (rock-socket) lengths:

Bedrock Bond (Rock Socket) Length (feet)	Service and Extreme Limit States Factored Geotechnical Resistance (kips) ϕ=1.0	Factored Uplift Resistance (kips) ϕ_{up}=0.80 (LRFD Article 10.5.5.3.3)
10	603	483
12	724	579
14	844	676
16	965	772
18	1086	869

Table 4 – Factored Axial Compression Geotechnical Resistance and Uplift Resistance of Micropiles at the Service and Extreme Limit States

Micropile foundations founded in bedrock can be expected to undergo only elastic shortening above the grout-to-bedrock bond length. The elastic shortening of a micropile extending less than approximately 15 feet above bedrock would be less than ½ inch.

7.4.3 Micropile Quality Control

Micropile resistance shall be verified through the performance of micropile load tests. The load test shall follow the procedures specified in ASTM D1143 for compression and ASTM D3689 for tension. The loading procedure should follow the Quick Load Test method. The micropile axial resistance shall be determined from the test data using the Davisson Method as presented in LRFD Article 10.7.3.8.2. At least one (1) non-production verification micropile load test shall be required. This verification load test shall be performed to 1.5 times the factored design load (FDL). At least five (5) proof load tests are recommended. The proof load tests shall be performed to 1.0 times the FDL.

7.5 Abutment No. 2 - Micropile Supported Semi-Integral Abutment Design

Abutment No. 2 will be a semi-integral, concrete abutment founded on rock-socketed micropiles. Due to presence of the Saco River Canal retaining wall construction vibration in the area of Abutment No. 2 must be minimized. The abutment will be designed such that it is independent of existing Saco River Canal retaining wall and will not impart additional loads onto the existing wall.

Semi-integral stub abutments shall be designed for all relevant strength, service and extreme limit states and load combinations specified in LRFD Articles 3.4.1 and 11.5.5. The design of micropile supported abutments at the strength limit state shall consider structural failure of the reinforced concrete abutment and backwall and the structural and geotechnical resistance of the micropile group. Strength limit state design shall also consider foundation resistance after scour due to the design flood.

A resistance factor of ϕ = 1.0 shall be used to assess abutment design at the service limit state including: horizontal movement, overall stability and scour at the design flood. The overall global stability of the foundation should be investigated at the Service I Load Combination and a resistance factor,ϕ, of 0.65.

Semi-integral abutments should typically be designed for eccentricity, sliding, and bearing resistance assuming an active earth pressure over the abutment height and a uniform pressure distribution due to the height of soil behind the superstructure. The superstructure backwall should typically be designed for full passive pressure only. However, the Designer may elect a more conservative approach to the structural design of the abutment and design the abutment stem wall to withstand a passive earth pressure state. In designing for active pressure, a Rankine active earth pressure coefficient, K_a, of 0.31 (assuming a level backfill) is recommended. In designing for passive earth pressure, the Coulomb state is recommended. Experience in designing wingwalls for integral abutments has shown that the use of the Coulomb passive earth pressure K_p=6.89 (assuming a level backfill) may result in uneconomical wall sections. For this reason, consideration may be given to using a Rankine passive earth pressure, K_p=3.25 (assuming a level backfill) when designing semi-integral abutments. The earth pressure coefficient will need to be recalculated if there is a sloping backfill surface. See Appendix C – Calculations for supporting documentation.

The Designer may assume Soil Type 4 (MaineDOT BDG Section 3.6.1) for abutment backfill material soil properties. The backfill properties are as follows: ϕ = 32 degrees, γ = 125 pcf.

Additional lateral earth pressure due to construction surcharge or live load surcharge is required per Section 3.6.8 of the MaineDOT BDG for the abutments. Use of an approach slab is required per the MaineDOT BDG Sections 5.4.2.12 and 5.4.4. The approach slab should be underlain by 2 layers of 4 to 6 mil polyethylene sheets to minimize friction against horizontal movement of the superstructure backwall. When a structural approach slab is specified, reduction, not elimination, of the surcharge loads on abutments is permitted per LRFD Article 3.11.6.5 and MaineDOT BDG Section 5.4.4. The live load surcharge may be estimated as a uniform horizontal earth pressure due to an equivalent height (h_{eq}) taken from Table 2 in Section 7.1.

All abutment designs shall include a drainage system behind the abutments to intercept any groundwater. Drainage behind structure shall be in accordance with Section 5.4.1.4 of the MaineDOT BDG. To avoid water intrusion behind the abutment the approach slab should be connected directly to the abutment.

Backfill within 10 feet of the abutments and wingwalls and side slope fill shall conform to Granular Borrow for Underwater Backfill - MaineDOT Specification 703.19. This gradation specifies 7 percent or less of the material passing the No. 200 sieve. This material is specified in order to reduce the amount of fines and to minimize frost action behind the structure.

7.6 Independent Wingwall and Retaining Wall Design

Cast-in-place concrete wingwalls will be constructed at both abutments to retain the approach fills. A long, cast-in-place, retaining wall will be constructed on the island on the Abutment No.

2 side of the bridge in order to bring the existing island grade to the proposed new elevation. This long retaining wall will end adjacent to the proposed west abutment for the Bar Mills Bridge (Abutment No. 1). The retaining walls constructed at Abutment No. 1 and a portion of the retaining walls constructed at Abutment No. 2 will be founded on spread footings on bedrock. The portion of the retaining wall adjacent to the Saco River Canal retaining wall will be founded on micropiles. The portions of the retaining walls to be founded on spread footings on bedrock or concrete seal on bedrock shall be designed as described in Section 7.1 and portions of the retaining walls to be founded on micropiles shall be designed as described in Section 7.5 with the following exceptions:

The live load surcharge on wingwalls may be estimated as a uniform horizontal earth pressure due to an equivalent height of soil (h_{eq}) of 2.0 feet, per LRFD Table 3.11.6.4-2.

Cantilever-type wingwalls should be designed for active earth pressure over the wall height. In designing for active pressure, a Rankine active earth pressure coefficient, K_a, of 0.31 is recommended (assuming a level backfill). The earth pressure coefficient will need to be recalculated if there is a sloping backfill surface behind the wingwalls. See Appendix C – Calculations for supporting

7.7 Scour and Riprap

For scour protection of Abutment No. 1 and the associated wingwall spread footings place tremie seal concrete or cast footings directly on bedrock surfaces cleaned of all weathered, loose and potentially erodible or scourable rock.

The consequences of changes in foundation conditions resulting from the design flood for scour shall be considered for any foundation constructed on granular soils at the strength and service limit states. These changes in foundation conditions shall be investigated at the abutments and wingwalls should they be designed to bear on soil. For scour protection, any footings for wingwalls, which are constructed on granular deposits, should be embedded a minimum of 3 feet below the design scour depth and armored with a minimum of 3 feet of riprap. Refer to MaineDOT BDG Section 2.3.11 for information regarding scour design.

Bridge approach slopes, slopes at wingwalls and slopes at the toes of any footings on granular soils shall be armored with 3 feet of riprap. Stone riprap shall conform to item number 703.26 or 703.28 the MaineDOT Standard Specifications and shall be placed at a maximum slope of 1.75H:1V. The toe of the riprap section shall be constructed 1 foot below the streambed elevation. The riprap section shall be underlain by a 1 foot thick layer of bedding material conforming to item number 703.19 of the Standard Specification and Class “1” Erosion Control Geotextile per Standard Details 610(02) through 610(04).

7.8 Settlement

Significant fill will be required behind Abutment No. 2 to bring the existing island grade up to the proposed grade of the new bridge structure. The proposed fill will be placed on granular soils. Placement of the necessary fill will result in negligible densification of the underlying

soils and minimal settlement of the embankments. Any settlement will occur during and immediately after construction of the widened embankments. Post-construction settlement is anticipated to be minimal.

Any settlement of Abutment No. 1 will be due to elastic compression of the bedrock mass, and is anticipated to be less than 1.0-inch. Micropile foundations founded in bedrock can be expected to undergo only elastic shortening above the bedrock bond zone. For this proposed micropile design the elastic shortening of a micropile would be on the order of less than ½ inch.

7.9 Frost Protection

It is anticipated that Abutment No. 1 and portions of the proposed wingwalls and retaining walls at both abutments will be constructed on spread footings founded directly on bedrock. For foundations on bedrock, heave due to frost is not a design issue and no requirements for minimum depth of embedment are necessary.

Any foundation placed on granular subgrade soils should be designed with an appropriate embedment for frost protection. According to the MaineDOT frost depth maps for the State of Maine (MaineDOT BDG Figure 5-1) the site has an air design-freezing index of approximately 1300 F-degree days. Considering the site soils and natural water contents determined in the laboratory, this correlates to a frost depth of 6.4 feet. The design frost depth was also calculated using the Modberg Software by the US Army Cold Regions Research and Engineering Laboratory. According the Modberg program the site has a design-freezing index of approximately 1492 F-degree days. In a granular soil with a water content of approximately 10%, this correlates to a frost depth of approximately 5.7 feet. Experience has shown that embedment for frost protection to a minimum depth of 6.0 feet below finished exterior grade is adequate for protection of structures in the site area. This minimum embedment depth applies only to foundations placed on granular soils and not those founded on bedrock. See Appendix C - Calculations for supporting documentation.

7.10 Seismic Design Considerations

The following parameters were determined for the site from the USGS Seismic Parameters CD provided with the LRFD Manual and LRFD Articles 3.10.3.1 and 3.10.6:

- Peak ground acceleration coefficient (PGA) = 0.096g
- Design spectral acceleration coefficient at 0.2-second period, S_{DS} = 0.301g
- Design spectral acceleration coefficient at 1.0-second period, S_{D1} = 0.111g
- Site Class D (stiff soil with 600 ft/s < average v_s < 1,200 ft/s or with either 15 < average N < 50 blows/foot, or 1.0 < average s_u < 2.0 ksf)
- Seismic Zone 1, based on a S_{D1} < 0.15g

In conformance with LRFD Article 4.7.4.2 seismic analysis is not required for single-span bridges regardless of seismic zone. LRFD Article C3.10.9.1 further indicates that single-span bridges are not required to include acceleration-augmented soil pressures for design. However,

superstructure connections and minimum bridge seat dimensions shall be designed to meet the requirements of LRFD Articles 3.10.9 and 4.7.4.4, respectively.

See Appendix C – Calculations for supporting documentation.

7.11 Bar Mills Hydroelectric Facility Impacts Analysis and Recommendations

An evaluation of the potential construction impacts to the nearby Bar Mills Hydroelectric Facility was conducted by H&A and Kleinschmidt at the request of Brookfield. A formal report prepared by Kleinschmidt was submitted by Brookfield to FERC for their review. A summary memorandum prepared by H&A presenting recommendations regarding mitigation measures necessary to minimize damage to the dam facilities is included in Appendix E.

7.12 Construction Considerations

No excavation will occur within 5 feet of the existing Saco River Canal retaining wall. Heavy construction equipment and material stockpiles shall not be permitted within 15 of the backface of the existing Saco River Canal retaining wall. Slopes for excavations beyond 5 feet from the existing Saco River Canal retaining wall shall be constructed no steeper than 1.5H:1V.

Special Provision 501 - Vibration and Movement Monitoring and Control (see Appendix D) has been developed to establish the requirements for monitoring construction vibrations and establish monitoring points along the existing Saco River Canal retaining wall which will be monitored for horizontal and vertical deformations during construction activities.

Construction activities may include construction of cofferdams and earth support systems to support the approach fills and control stream flow during construction of seals and footings for abutments and wingwalls. Construction activities will also include common earth and rock excavation and structural earth and rock excavation for major structures.

There is a potential for the existing abutment and/or wingwall foundations to interfere with the excavation activities for the proposed abutments and wingwalls. Obstructions may be cleared by conventional excavation methods. Clearing obstructions shall be specified as incidental to related pay items. Alternative methods to clear obstructions may be used as approved by the Resident. The existing abutments and wingwalls shall be removed to the bearing seat elevation and left in place to maintain the existing topography. This should be noted on the Plans and the work shall be considered incidental to bridge removal.

The nature, slope and degree of fracturing in the bedrock bearing surfaces will not be evident until the foundation excavations are made. The bedrock surface shall be cleared of all loose fractured bedrock, loose decomposed bedrock and soil. The final bearing surface shall be solid. The bedrock surface slope shall be less than 4 horizontal to 1 vertical (4H:1V) or it shall be benched in level steps or excavated to be completely level. Anchoring, doweling or other means of improving sliding resistance may also be employed where the prepared bedrock surface is steeper than 4H:1V in any direction.

Where foundations are constructed in the dry, the final bearing surface shall be washed with high pressure water and air prior to concrete being placed for the footing. In-the-dry or underwater excavation of highly sloped and loose fractured bedrock material may be done using conventional excavation methods and shall be conducted and monitored in accordance with the requirements of Special Provision 501 - Vibration and Movement Monitoring and Control (see Appendix D).

The cleanliness and condition of the bedrock surface shall be approved by the Resident prior to placement of the footing concrete or tremie-seal concrete. It is anticipated that there will be seepage of water from fractures and joints exposed in the bedrock surface. Water should be controlled by pumping from sumps. The contractor should maintain the excavation so that all foundations are constructed in the dry.

Using the excavated native soils as structural backfill should not be permitted. The native soils may only be used as common borrow in accordance with MaineDOT Standard Specifications 203 and 703.

The Contractor will have to excavate the existing subbase and subgrade fill soils in the bridge approaches. These materials should not be used to re-base the new bridge approaches. Excavated subbase sand and gravel may be used as fill below subgrade level in fill areas provided all other requirements of MaineDOT Standard Specifications 203 and 703 are met.

8.0 CLOSURE

This report has been prepared for the use of the MaineDOT Bridge Program for specific application to the proposed replacement of Canal Bridge in Hollis, Maine in accordance with generally accepted geotechnical and foundation engineering practices. No other intended use or warranty is implied. In the event that any changes in the nature, design, or location of the proposed project are planned, this report should be reviewed by a geotechnical engineer to assess the appropriateness of the conclusions and recommendations and to modify the recommendations as appropriate to reflect the changes in design. Further, the analyses and recommendations are based in part upon limited soil explorations at discrete locations completed at the site. If variations from the conditions encountered during the investigation appear evident during construction, it may also become necessary to re-evaluate the recommendations made in this report.

We also recommend that we be provided the opportunity for a general review of the final design and specifications in order that the earthwork and foundation recommendations may be properly interpreted and implemented in the design.

Sheets

Map Scale 1:24000

The Maine Department of Transportation provides this publication for information only. Reliance upon this information is at user risk. It is subject to revision and may be incomplete depending upon changing conditions. The Department assumes no liability if injuries or damages result from this information. This map is not intended to support emergency dispatch. Road names used on this map may not match official road names.

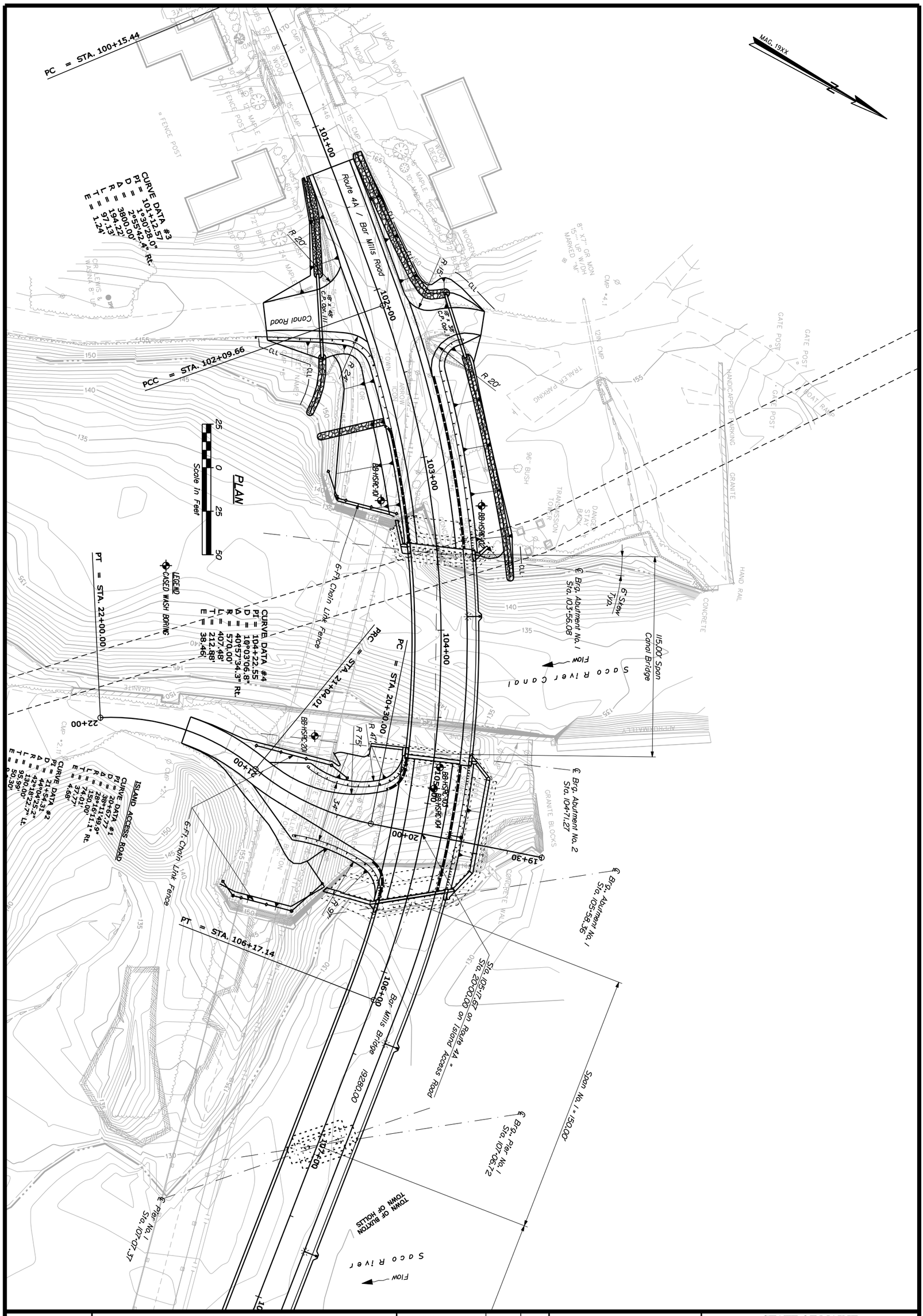

SHEET NUMBER 2 OF 5	CANAL BRIDGE SACO RIVER CANAL HOLLIS YORK COUNTY BORING LOCATION PLAN	PROJ. MANAGER M. Porlin BY DATE DESIGN-DETAILED D. Eaton D. Damren CHECKED-REVIEWED ----- ----- ----- DESIGN2-DETAILED2 K.MAGUIRE T.WHITE SEPT 2013 DESIGN3-DETAILED3 ------ ------ ------ REVISIONS 1 ------ ------ REVISIONS 2 ------ ------ REVISIONS 3 ------ ------ REVISIONS 4 ------ ------ FIELD CHANGES ------ ------	SIGNATURE P.E. NUMBER DATE	STATE OF MAINE DEPARTMENT OF TRANSPORTATION BR-1928(100)X BRIDGE NO. 1525 WIN 19281.00 BRIDGE PLANS

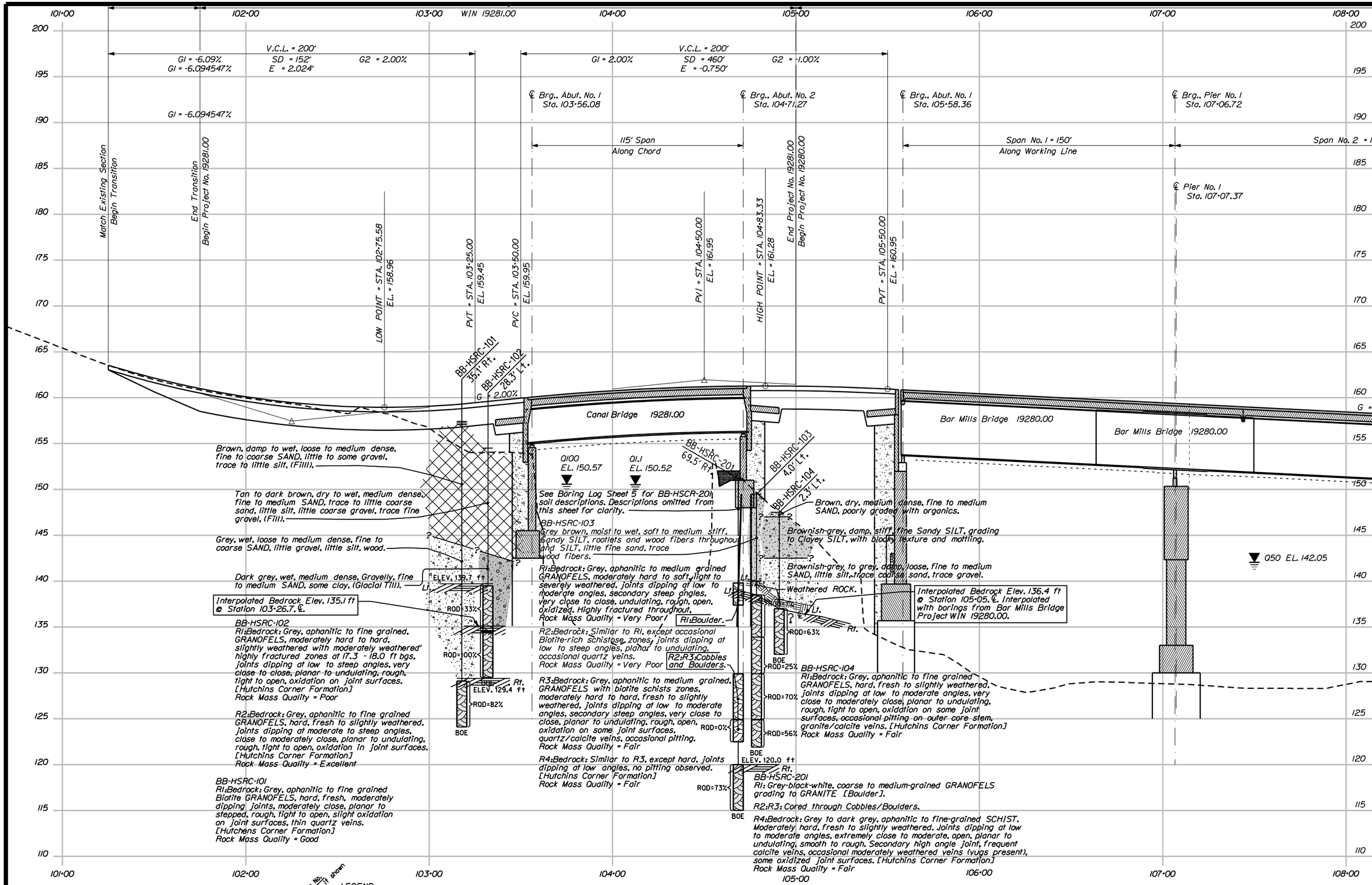

Note: This generalized interpretive soil profile is intended to convey trends in subsurface conditions. The boundaries between strata are approximate and idealized, and have been developed by interpretations of widely spaced explorations and samples. Actual soil transitions may vary and are probably more erratic. For more specific information refer to the exploration logs.

STATE OF MAINE
DEPARTMENT OF TRANSPORTATION

BR-1928(100)X

WIN 19281.00

BRIDGE NO. 1525

BRIDGE PLANS

	BY	DATE
PROJ. MANAGER	M. Parlin	
DESIGN-DETAILED	D. Eaton	
CHECKED-REVIEWED	D. Damren	
DESIGN2-DETAILED2	K.MAGUIRE	JUN. 2014
DESIGN3-DETAILED3	T. WHITE	
REVISIONS 1		
REVISIONS 2		
REVISIONS 3		
REVISIONS 4		
FIELD CHANGES		

SIGNATURE

P.E. NUMBER

DATE

CANAL BRIDGE
SACO RIVER CANAL
HOLLIS YORK COUNTY

INTERPRETIVE SUBSURFACE PROFILE

SHEET NUMBER

3

OF 5

Filename: ...\00\GEOTECH\MSTA\014_ISP1.dgn Division: GEOTECH Username: terry.white Date:12/3/2014

Filename: ...\msta\015_BORING LOGS1.dgn Division: GEOTECH Username: terry.white Date:11/10/2014

Maine Department of Transportation — Soil/Rock Exploration Log — US CUSTOMARY UNITS

Project: Canal Bridge #1525 carries Route 4A over Saco River Canal
Location: Hollis, Maine

Boring No.: BB-HSRC-101 WIN: 19281.00

Driller:	MaineDOT	Elevation (ft.)	157.4	Auger ID/OD:	5" Solid Stem
Operator:	Giles/Daggett	Datum:	NAVD88	Sampler:	Standard Split Spoon
Logged By:	B. Wilder	Rig Type:	CME 45C	Hammer Wt./Fall:	140#/30"
Date Start/Finish:	9/11/2013; 07:30-14:30	Drilling Method:	Cased Wash Boring	Core Barrel:	NQ-2"
Boring Location:	103+17.8, 35.1 ft Rt.	Casing ID/OD:	Hw & NW	Water Level*:	15.0 ft bgs.
Hammer Efficiency Factor: 0.867		Hammer Type:	Automatic ☒ Hydraulic ☐ Rope & Cathead ☐		

Definitions:
D = Split Spoon Sample
MD = Unsuccessful Split Spoon Sample attempt
U = Thin Wall Tube Sample
MU = Unsuccessful Thin Wall Tube Sample attempt
V = Insitu Vane Shear Test, PP = Pocket Penetrometer
MV = Unsuccessful Insitu Vane Shear Test attempt
R = Rock Core Sample
SSA = Solid Stem Auger
HSA = Hollow Stem Auger
RC = Roller Cone
WOH = weight of 140lb. hammer
WOR/C = weight of rods or casing
WO1P = Weight of one person
S_u = Insitu Field Vane Shear Strength (psf)
T_v = Pocket Torvane Shear Strength (psf)
q_p = Unconfined Compressive Strength (ksf)
N-uncorrected = Raw field SPT N-value
Hammer Efficiency Factor = Annual Calibration Value
N_{60} = SPT N-uncorrected corrected for hammer efficiency
N_{60} = (Hammer Efficiency Factor/60%)*N-uncorrected
$S_{u(lab)}$ = Lab Vane Shear Strength (psf)
WC = water content, percent
LL = Liquid Limit
PL = Plastic Limit
PI = Plasticity Index
G = Grain Size Analysis
C = Consolidation Test

Depth (ft.)	Sample No.	Pen./Rec. (in.)	Sample Depth (ft.)	Blows (/6 in.) Shear Strength (psf) or RQD (%)	N-uncorrected	N60	Casing Blows	Elevation (ft.)	Visual Description and Remarks	Laboratory Testing Results/ AASHTO and Unified Class
0							SSA	157.07	4" Pavement ——0.33	
	1D	24/17	1.00 - 3.00	5/7/5/6	12	17			Brown, damp, medium dense, fine to coarse SAND, some gravel, little silt, (Fill).	G#243052 A-1-b, SM WC=4.8%
5	2D	24/14	5.00 - 7.00	3/4/3/3	7	10			Brown, damp, loose, fine to coarse SAND, some gravel, trace silt, (Fill).	G#243053 A-1-b, SW-SM WC=4.2%
10	3D	24/9	10.00 - 12.00	3/4/2/3	6	9	15		Brown, wet, loose, fine to coarse SAND, little gravel, little silt, (Fill).	
							21			
							27			
							39	143.90	——13.50	
							47			
15	4D	24/15	15.00 - 17.00	7/10/10/8	20	29	41		Grey, wet, medium dense, fine to coarse SAND, little gravel, little silt.	G#243054 A-1-b, SW-SM WC=12.3%
							61			
							56			
							51			
							36			
20	MD	21/0	20.00 - 21.75	4/3/2/2	5	7	15		Failed sample attempt, similar to above in wash, loose.	
							20			
							19			
							20			
							19			
25	5D	24/8	25.00 - 27.00	3/2/3/2	5	7	25		Grey, wet, loose, fine to coarse SAND, little gravel, little silt, wood.	
							48			
							80	129.40	——28.00	
	R1	60/54	28.30 - 33.30	RQD = 82%			NQ-2		Top of Bedrock at Elev. 129.4 ft. Roller Coned ahead to 28.3 ft bgs. R1:Bedrock: Grey, aphanitic to fine grained, Biotite GRANOFELS, hard, fresh, moderately dipping joints, moderately close, planar to stepped, rough, tight to open, slight oxidation on joint surfaces, thin quartz veins. [Hutchens Corner Formation] Rock Mass Quality = Good R1:Core Times (min:sec) 28.3-29.3 ft (5:03) 29.3-30.3 ft (6:19) 30.3-31.3 ft (6:12) 31.3-32.3 ft (6:03) 32.3-33.3 ft (6:00) 90% Recovery	
								124.10	——33.30 Bottom of Exploration at 33.30 feet below ground surface.	

Remarks:

300-400 lbs down pressure on Core Barrel.
bgs= below ground surface

Stratification lines represent approximate boundaries between soil types; transitions may be gradual.

* Water level readings have been made at times and under conditions stated. Groundwater fluctuations may occur due to conditions other than those present at the time measurements were made.

Page 1 of 1

Boring No.: BB-HSRC-101

Maine Department of Transportation — Soil/Rock Exploration Log — US CUSTOMARY UNITS

Project: Canal Bridge #1525 carries Route 4A over Saco River Canal
Location: Hollis, Maine

Boring No.: BB-HSRC-102 WIN: 19281.00

Driller:	Northern Test Borings Inc.	Elevation (ft.)	154.5	Auger ID/OD:	5" Solid Stem
Operator:	M. Nadeau	Datum:	NAVD88	Sampler:	Standard Split Spoon
Logged By:	B. Steinert H&A	Rig Type:	Dietrich D-50 ATV	Hammer Wt./Fall:	140#/30"
Date Start/Finish:	9/9/2013-9/9/2013	Drilling Method:	Cased Wash Boring	Core Barrel:	NQ-2"
Boring Location:	103+32, 28.3 ft Lt.	Casing ID/OD:	HW	Water Level*:	None Observed
Hammer Efficiency Factor: 0.801		Hammer Type:	Automatic ☒ Hydraulic ☐ Rope & Cathead ☐		

Definitions:
D = Split Spoon Sample
MD = Unsuccessful Split Spoon Sample attempt
U = Thin Wall Tube Sample
MU = Unsuccessful Thin Wall Tube Sample attempt
V = Insitu Vane Shear Test, PP = Pocket Penetrometer
MV = Unsuccessful Insitu Vane Shear Test attempt
R = Rock Core Sample
SSA = Solid Stem Auger
HSA = Hollow Stem Auger
RC = Roller Cone
WOH = weight of 140lb. hammer
WOR/C = weight of rods or casing
WO1P = Weight of one person
S_u = Insitu Field Vane Shear Strength (psf)
T_v = Pocket Torvane Shear Strength (psf)
q_p = Unconfined Compressive Strength (ksf)
N-uncorrected = Raw field SPT N-value
Hammer Efficiency Factor = Annual Calibration Value
N_{60} = SPT N-uncorrected corrected for hammer efficiency
N_{60} = (Hammer Efficiency Factor/60%)*N-uncorrected
$S_{u(lab)}$ = Lab Vane Shear Strength (psf)
WC = water content, percent
LL = Liquid Limit
PL = Plastic Limit
PI = Plasticity Index
G = Grain Size Analysis
C = Consolidation Test

Depth (ft.)	Sample No.	Pen./Rec. (in.)	Sample Depth (ft.)	Blows (/6 in.) Shear Strength (psf) or RQD (%)	N-uncorrected	N60	Casing Blows	Elevation (ft.)	Visual Description and Remarks	Laboratory Testing Results/ AASHTO and Unified Class
0	1D	24/12	0.00 - 2.00	3/8/9/8	17	23	SSA		Tan to dark brown, dry to moist, medium dense, fine to medium SAND, trace coarse sand, little silt, rootlets in top 6" of sample, (Fill).	
5	2D	24/6	5.00 - 7.00	12/6/5/2	11	15			Tan to brown, dry to moist, medium dense, fine to medium SAND, little coarse gravel and silt, trace fine gravel, (Fill). Dark brown, wet, medium dense, fine to medium SAND, little coarse sand and silt, (Fill).	
10	3D	24/12	10.00 - 12.00	8/6/5/5	11	15	42		Similar to above.	
							85	143.00	——11.50 Dark grey, wet, medium dense, Gravelly fine to medium SAND, some clay, (Glacial Till).	
							297			
							66		Similar material to above observed in wash water below approximately 13.0 ft bgs.	
							a42		a42 blows for 0.8 ft.	
15	R1	60/60	15.00 - 20.00	RQD = 33%			NQ-2	139.70	——14.80 Top of Bedrock at Elev. 139.7 ft. Roller Coned ahead to 15.0 ft bgs. R1:Bedrock: Grey, aphanitic to fine grained, GRANOFELS, moderately hard to hard, slightly weathered with moderately weathered, highly fractured zones at 17.3 to 18.0 ft bgs, joints dipping at low to steep angles, very close to close, planar to undulating, rough, tight to open, oxidation on joint surfaces. [Hutchins Corner Formation] Rock Mass Quality = Poor R1:Core Times (min:sec) 15.0-16.0 ft (2:04) 16.0-17.0 ft (2:10) 17.0-18.0 ft (1:47) 18.0-19.0 ft (2:05) 19.0-20.0 ft (2:32) 100% Recovery	
20	R2	60/60	20.00 - 25.00	RQD = 100%					R2:Bedrock: Grey, aphanitic to fine grained GRANOFELS, hard, fresh to slightly weathered, joints dipping at moderate to steep angles, close to moderately close, planar to undulating, rough, tight to open, oxidation in joint surfaces. [Hutchins Corner Formation] Rock Mass Quality = Excellent R2:Core Times (min:sec) 20.0-21.0 ft (3:43) 21.0-22.0 ft (2:49) 22.0-23.0 ft (1:54) 23.0-24.0 ft (2:37) 24.0-25.0 ft (1:47) 100% Recovery Bottom of Exploration at 25.00 feet below ground surface.	
25								129.50	——25.00 Bottom of Exploration at 25.00 feet below ground surface.	

Remarks:

Drill Rig SN:283
bgs = below ground surface

Stratification lines represent approximate boundaries between soil types; transitions may be gradual.

* Water level readings have been made at times and under conditions stated. Groundwater fluctuations may occur due to conditions other than those present at the time measurements were made.

Page 1 of 1

Boring No.: BB-HSRC-102

Maine Department of Transportation — Soil/Rock Exploration Log — US CUSTOMARY UNITS

Project: Canal Bridge #1525 carries Route 4A over Saco River Canal
Location: Hollis, Maine

Boring No.: BB-HSRC-103 WIN: 19281.00

Driller:	Northern Test Borings Inc.	Elevation (ft.)	149.5	Auger ID/OD:	5" Solid Stem
Operator:	M. Nadeau	Datum:	NAVD88	Sampler:	Standard Split Spoon
Logged By:	B. Steinert H&A	Rig Type:	Dietrich D-50 ATV	Hammer Wt./Fall:	140#/30"
Date Start/Finish:	9/11/2013-9/11/2013	Drilling Method:	Cased Wash Boring	Core Barrel:	NQ-2"
Boring Location:	104+78.5, 4.0 ft Lt.	Casing ID/OD:	HW	Water Level*:	None Observed
Hammer Efficiency Factor: 0.801		Hammer Type:	Automatic ☒ Hydraulic ☐ Rope & Cathead ☐		

Definitions:
D = Split Spoon Sample
MD = Unsuccessful Split Spoon Sample attempt
U = Thin Wall Tube Sample
MU = Unsuccessful Thin Wall Tube Sample attempt
V = Insitu Vane Shear Test, PP = Pocket Penetrometer
MV = Unsuccessful Insitu Vane Shear Test attempt
R = Rock Core Sample
SSA = Solid Stem Auger
HSA = Hollow Stem Auger
RC = Roller Cone
WOH = weight of 140lb. hammer
WOR/C = weight of rods or casing
WO1P = Weight of one person
S_u = Insitu Field Vane Shear Strength (psf)
T_v = Pocket Torvane Shear Strength (psf)
q_p = Unconfined Compressive Strength (ksf)
N-uncorrected = Raw field SPT N-value
Hammer Efficiency Factor = Annual Calibration Value
N_{60} = SPT N-uncorrected corrected for hammer efficiency
N_{60} = (Hammer Efficiency Factor/60%)*N-uncorrected
$S_{u(lab)}$ = Lab Vane Shear Strength (psf)
WC = water content, percent
LL = Liquid Limit
PL = Plastic Limit
PI = Plasticity Index
G = Grain Size Analysis
C = Consolidation Test

Depth (ft.)	Sample No.	Pen./Rec. (in.)	Sample Depth (ft.)	Blows (/6 in.) Shear Strength (psf) or RQD (%)	N-uncorrected	N60	Casing Blows	Elevation (ft.)	Visual Description and Remarks	Laboratory Testing Results/ AASHTO and Unified Class
0	1D	24/10	0.00 - 2.00	1/2/3/3	5	7	SSA		Grey brown, moist, medium stiff, Sandy SILT, rootlets and wood fibers throughout.	
5	2D	24/6	5.00 - 7.00	2/2/WOH/1	2	3			Grey brown, wet, soft, SILT, little fine sand, trace wood fibers.	
10	3D	9/9	10.00 - 10.75	45/50(3")	---			140.00	——9.50 Weathered BEDROCK.	
	R1	55.2/41	11.00 - 15.60	RQD = 7%			NQ-2	138.50	Roller Coned ahead to 11.0 ft bgs. ——11.00 Top of Intact Bedrock at Elev. 138.5 ft. R1:Bedrock: Grey, aphanitic to medium grained, GRANOFELS, moderately hard to soft, light to severely weathered, joints dipping at low to moderate angles, secondary steep angles, very close to close, undulating, rough, open, oxidized. Highly fractured throughout. Rock Mass Quality = Very Poor R1:Core Times (min:sec) 11.0-12.0 ft (2:26) 12.0-13.0 ft (1:52) 13.0-14.0 ft (1:57) 14.0-15.0 ft (1:49) 15.0-15.6 ft (2:00) 75% Recovery	
15	R2	48/44	15.60 - 19.60	RQD = 25%					R2:Bedrock: Similar to R1, except occasional Biotite-rich schistose zones, joints dipping at low to steep angles, planar to undulating, occasional quartz veins. Rock Mass Quality = Very Poor R2:Core Times (min:sec) 15.6-16.0 ft (0:41) 16.0-17.0 ft (1:48) 17.0-18.0 ft (1:33) 18.0-19.0 ft (2:35) 19.0-19.6 ft (1:47) 92% Recovery	
20	R3	60/60	19.60 - 24.60	RQD = 70%					R3:Bedrock: Grey, aphanitic to medium grained, GRANOFELS with biotite schists zones, moderately hard to hard, fresh to slightly weathered, joints dipping at low to moderate angles, secondary steep angles, very close to close, planar to undulating, rough, open, oxidation on some joint surfaces, quartz/calcite veins, occasional pitting. Rock Mass Quality = Fair R3:Core Times (min:sec) 19.6-20.0 ft (1:43) 20.0-21.0 ft (2:33) 21.0-22.0 ft (2:25) 22.0-23.0 ft (3:29) 23.0-24.0 ft (5:09) 24.0-24.6 ft (1:40) 100% Recovery	
25	R4	36/36	24.60 - 27.60	RQD = 56%				121.90	R4:Bedrock: Similar to R3, except hard, joints dipping at low angles, no pitting observed. [Hutchins Corner Formation] Rock Mass Quality = Fair R4:Core Times (min:sec) 24.6-25.0 ft (1:36) 25.0-26.0 ft (3:27) 26.0-27.0 ft (?) 27.0-27.6 ft (3:07) 100% Recovery ——27.60 Bottom of Exploration at 27.60 feet below ground surface.	

Remarks:

Drill Rig SN:283
bgs = below ground surface

Stratification lines represent approximate boundaries between soil types; transitions may be gradual.

* Water level readings have been made at times and under conditions stated. Groundwater fluctuations may occur due to conditions other than those present at the time measurements were made.

Page 1 of 1

Boring No.: BB-HSRC-103

Maine Department of Transportation — Soil/Rock Exploration Log — US CUSTOMARY UNITS

Project: Canal Bridge #1525 carries Route 4A over Saco River Canal
Location: Hollis, Maine

Boring No.: BB-HSRC-104 WIN: 19281.00

Driller:	Northern Test Borings Inc.	Elevation (ft.)	147.5	Auger ID/OD:	5" Solid Stem
Operator:	M. Nadeau	Datum:	NAVD88	Sampler:	Standard Split Spoon
Logged By:	N. Dearden/B. Steinert H&A	Rig Type:	Dietrich D-50 ATV	Hammer Wt./Fall:	140#/30"
Date Start/Finish:	9/11/2013-9/11/2013	Drilling Method:	Cased Wash Boring	Core Barrel:	NQ-2"
Boring Location:	104+90.9, 2.3 ft Lt.	Casing ID/OD:	HW	Water Level*:	None Observed
Hammer Efficiency Factor: 0.801		Hammer Type:	Automatic ☒ Hydraulic ☐ Rope & Cathead ☐		

Definitions:
D = Split Spoon Sample
MD = Unsuccessful Split Spoon Sample attempt
U = Thin Wall Tube Sample
MU = Unsuccessful Thin Wall Tube Sample attempt
V = Insitu Vane Shear Test, PP = Pocket Penetrometer
MV = Unsuccessful Insitu Vane Shear Test attempt
R = Rock Core Sample
SSA = Solid Stem Auger
HSA = Hollow Stem Auger
RC = Roller Cone
WOH = weight of 140lb. hammer
WOR/C = weight of rods or casing
WO1P = Weight of one person
S_u = Insitu Field Vane Shear Strength (psf)
T_v = Pocket Torvane Shear Strength (psf)
q_p = Unconfined Compressive Strength (ksf)
N-uncorrected = Raw field SPT N-value
Hammer Efficiency Factor = Annual Calibration Value
N_{60} = SPT N-uncorrected corrected for hammer efficiency
N_{60} = (Hammer Efficiency Factor/60%)*N-uncorrected
$S_{u(lab)}$ = Lab Vane Shear Strength (psf)
WC = water content, percent
LL = Liquid Limit
PL = Plastic Limit
PI = Plasticity Index
G = Grain Size Analysis
C = Consolidation Test

Depth (ft.)	Sample No.	Pen./Rec. (in.)	Sample Depth (ft.)	Blows (/6 in.) Shear Strength (psf) or RQD (%)	N-uncorrected	N60	Casing Blows	Elevation (ft.)	Visual Description and Remarks	Laboratory Testing Results/ AASHTO and Unified Class
0	1D	24/13	0.00 - 2.00	3/4/6/7	10	13	SSA	147.00	Brown, dry, medium dense, Silty, fine to medium SAND, poorly graded with organics. ——0.50 Brownish-grey, damp, stiff, fine Sandy SILT grading to clayey SILT with blocky texture and mottling.	
5	2D	24/11	5.00 - 7.00	3/5/2/2	7	9		142.50	——5.00 Brownish-grey to gray, damp, loose, fine to medium SAND, little silt, trace coarse sand and gravel.	
10	MD R1	1/0 60/60	10.00 - 10.08 10.50 - 15.50	50(1") RQD = 63%	---		NQ-2	138.00 137.00	——9.50 Auger REFUSAL, probable Weathered BEDROCK. Failed sample attempt. Roller Coned ahead to 10.5 ft bgs. ——10.50 Top of Intact Bedrock at Elev. 137.0 ft. R1:Bedrock: Grey, aphanitic to fine grained, GRANOFELS, hard, fresh to slightly weathered, joints dipping at low to moderate angles, very close to moderately close, planar to undulating, rough, tight to open, oxidation on some joint surfaces, occasional pitting on outer core stem, granite/calcite veins. [Hutchins Corner Formation] Rock Mass Quality = Fair R1:Core Times (min:sec) 10.5-11.5 ft (3:39) 11.5-12.5 ft (3:14) 12.5-13.5 ft (4:40) 13.5-14.5 ft (2:51) 14.5-15.5 ft (2:33) 100% Recovery	
15								132.00	——15.50 Bottom of Exploration at 15.50 feet below ground surface.	

Remarks:

Drill Rig SN:283

Stratification lines represent approximate boundaries between soil types; transitions may be gradual.

* Water level readings have been made at times and under conditions stated. Groundwater fluctuations may occur due to conditions other than those present at the time measurements were made.

Page 1 of 1

Boring No.: BB-HSRC-104

STATE OF MAINE
DEPARTMENT OF TRANSPORTATION

BR-1928(100)X

BRIDGE NO. 1525 WIN 19281.00 BRIDGE PLANS

		BY	DATE
PROJ. MANAGER		M. Parlin	
DESIGN-DETAILED	D. Eaton	D. Damren	
CHECKED-REVIEWED	-----	-----	-----
DESIGN2-DETAILED2	K.MAGUIRE	T.WHITE	NOV 2014
DESIGN3-DETAILED3			
REVISIONS 1			
REVISIONS 2			
REVISIONS 3			
REVISIONS 4			
FIELD CHANGES			

SIGNATURE

P.E. NUMBER

DATE

CANAL BRIDGE
SACO RIVER CANAL
HOLLIS YORK COUNTY

BORING LOGS

SHEET NUMBER 4 OF 5

Filename: ...\msta\016_BORING LOGS2.dgn Division: GEOTECH Username: terry.white Date:11/10/2014

Maine Department of Transportation

Soil/Rock Exploration Log
US CUSTOMARY UNITS

Project: Canal Bridge Replacement
Location: Hollis/Buxton, Maine

Boring No.: BB-HSRC-201
WIN: 19281.00

Driller:	Maine Department of Transportation	Elevation (ft.)	151.2 (est.)	Auger ID/OD:	--
Operator:	C. Giles	Datum:	NAVD 88	Sampler:	SPLIT SPOON-1.375 in.
Logged By:	M. Snow	Rig Type:	CME 45	Hammer Wt./Fall:	140#/30 in.
Date Start/Finish:	7-15-2014/7-15-2014	Drilling Method:	Cased Wash Boring	Core Barrel:	NQ-2.0 in.
Boring Location:	1014582.3; 692.3 ft Rt. SR8 Bankline	Casing ID/OD:	3.0 in.	Water Level*:	None observed
Hammer Efficiency Factor: 0.867		Hammer Type:	Automatic ☒ Hydraulic ☐ Rope & Cathead ☐		

Definitions:
D = Split Spoon Sample
MD = Unsuccessful Split Spoon Sample attempt
U = Thin Wall Tube Sample
MU = Unsuccessful Thin Wall Tube Sample attempt
V = Insitu Vane Shear Test. PP = Pocket Penetrometer
MV = Unsuccessful Insitu Vane Shear Test attempt
R = Rock Core Sample
SSA = Solid Stem Auger
HSA = Hollow Stem Auger
RC = Roller Cone
WOH = weight of 140lb. hammer
WOR/C = weight of rods or casing
WO1P = Weight of one person
S_u = Insitu/Field Vane Shear Strength (psf)
S_r = Pocket Torvane Shear Strength (psf)
q_u = Unconfined Compressive Strength (ksf)
N-uncorrected = Raw field SPT N-value
Hammer Efficiency Factor = Annual Calibration Value
N_{60} = SPT N-uncorrected corrected for hammer efficiency
N_{60} = (Hammer Efficiency Factor/60%)*N-uncorrected
S_u(lab) = Lab Vane Shear Strength (psf)
WC = water content, percent
LL = Liquid Limit
PL = Plastic Limit
PI = Plasticity Index
G = Grain Size Analysis
C = Consolidation Test

Depth (ft.)	Sample No.	Pen./Rec. (in.)	Sample Depth (ft.)	Blows (/6 in.) Shear Strength (psf) or RQD (%)	N-uncorrected	N_{60}	Casing Blows	Elevation (ft.)	Graphic Log	Visual Description and Remarks	Laboratory Testing Results/ AASHTO and Unified Class
0	10	24/12	0.00 - 2.00	3/3/2/2	5	7	7			Brown, moist, loose, fine to medium SAND, little coarse sand and gravel, trace silt, (Fill).	
							10				
							15				
	20	24/9	3.70 - 5.70	16/9/5/4	14	20	21	147.50			3.70
								147.00		Broken rock FILL (slaty cleavage)	4.20
							21			Brown, wet, medium dense, Silty fine to medium SAND, little coarse sand and gravel, (Fill).	
5							24				
							20				
							9				
	30	24/4	8.70 - 10.70	7/3/3/3	6	9	12				
							13			Recovered 2 in. gravel wash. 2 in. brown, wet, loose, fine to medium SAND, some silt, little angular gravel, trace coarse sand, moderately bonded, (Fill).	
10							13				
	R1	29/26	11.40 - 13.82				18&0.0	139.80			11.40
							20&0.0			Grey-black-white, coarse to medium-grained GRANODIOR grading to GRANITE, (Boulder).	
							212.0				
							301&0.0				13.80
								137.40		Wood	14.10
							SPIN NR	137.10		Note: Spun NW casing through probable boulder from 14.1 to 15.7 feet based on drill action.	
15								136.20			15.00
										Note: Grey wash water at 15.7 feet.	
										(Probable Glacial Till)	
20											
	R2	60/17	21.30 - 26.30							Note: Cored through cobbles/boulders from 21.3 to 26.3 feet.	
							SPIN NR				
25											
	R3	29/2	26.30 - 28.72	RQD = 0%						Note: Cored through cobbles from 26.3 to 28.7 feet.	
	50	24/5	28.70 - 30.70	4/3/5/6	8	12				Grey, wet, medium dense, fine to medium SAND, little gravel, trace coarse sand and silt, (Glacial Till).	
30											
	R4	60/60	31.20 - 36.20	RQD = 73%			NQ-2	120.00			31.20
										Top of Bedrock at Elev. 120.0 ft. Grey to dark Grey, aphanitic to fine-grained SCHIST. Moderately hard, fresh to slightly weathered. Joints dipping at low to moderate angles, extremely close to moderate, open, planar to undulating, smooth to rough. Secondary high angle joints, frequent calcite veins, occasional moderately weathered veins (vugs present), some oxidized joint surfaces. (Kutshina Corner Formation). Rock Mass Quality = Fair R4 Core Times (minsec): 31.2-32.2 ft (2:08) 32.2-33.2 ft (4:28) 33.2-34.2 ft (5:15) 34.2-35.2 ft (3:07) 35.2-36.2 ft (4:35) Recovery 100%	
								115.00			36.20
35										Bottom of Exploration at 36.20 feet below ground surface.	
40											
45											
50											

Remarks:

1. As-drilled coordinates of test borings determined by MaineDOT and provided in NAD83 (96) ME2000 East Zone coordinate system. As-drilled coordinates related to baseline station and offset information by MaineDOT.
2. Boring Location from the Island Access Road = Sta. 20+85.4, 35.4 ft Rt.

Stratification lines represent approximate boundaries between soil types; transitions may be gradual.

* Water level readings have been made at times and under conditions stated. Groundwater fluctuations may occur due to conditions other than those present at the time measurements were made.

Page 1 of 1

Boring No.: BB-HSRC-201

STATE OF MAINE
DEPARTMENT OF TRANSPORTATION

BR-1928(100)X

WIN 19281.00

BRIDGE NO. 1525 BRIDGE PLANS

PROJ. MANAGER	M. Parlin	BY	DATE
DESIGN-DETAILED	D. Eaton	D. Damren	
CHECKED-REVIEWED	-----	-----	SIGNATURE
DESIGN2-DETAILED2	K.MAGUIRE	T.WHITE	NOV 2014
DESIGN3-DETAILED3	-----	-----	P.E. NUMBER
REVISIONS 1	-----	-----	-----
REVISIONS 2	-----	-----	-----
REVISIONS 3	-----	-----	DATE
REVISIONS 4	-----	-----	-----
FIELD CHANGES	-----	-----	-----

CANAL BRIDGE
SACO RIVER CANAL
HOLLIS YORK COUNTY

BORING LOGS

SHEET NUMBER
5
OF 5

Appendix A

Boring Logs

UNIFIED SOIL CLASSIFICATION SYSTEM

MAJOR DIVISIONS			GROUP SYMBOLS	TYPICAL NAMES
COARSE-GRAINED SOILS (more than half of material is larger than No. 200 sieve size)	GRAVELS (more than half of coarse fraction is larger than No. 4 sieve size)	CLEAN GRAVELS (little or no fines)	GW	Well-graded gravels, gravel-sand mixtures, little or no fines
			GP	Poorly-graded gravels, gravel sand mixtures, little or no fines
		GRAVEL WITH FINES (Appreciable amount of fines)	GM	Silty gravels, gravel-sand-silt mixtures.
			GC	Clayey gravels, gravel-sand-clay mixtures.
	SANDS (more than half of coarse fraction is smaller than No. 4 sieve size)	CLEAN SANDS (little or no fines)	SW	Well-graded sands, gravelly sands, little or no fines
			SP	Poorly-graded sands, gravelly sand, little or no fines.
		SANDS WITH FINES (Appreciable amount of fines)	SM	Silty sands, sand-silt mixtures
			SC	Clayey sands, sand-clay mixtures.
FINE-GRAINED SOILS (more than half of material is smaller than No. 200 sieve size)	SILTS AND CLAYS (liquid limit less than 50)		ML	Inorganic silts and very fine sands, rock flour, silty or clayey fine sands, or clayey silts with slight plasticity.
			CL	Inorganic clays of low to medium plasticity, gravelly clays, sandy clays, silty clays, lean clays.
			OL	Organic silts and organic silty clays of low plasticity.
	SILTS AND CLAYS (liquid limit greater than 50)		MH	Inorganic silts, micaceous or diatomaceous fine sandy or silty soils, elastic silts.
			CH	Inorganic clays of high plasticity, fat clays.
			OH	Organic clays of medium to high plasticity, organic silts
	HIGHLY ORGANIC SOILS		Pt	Peat and other highly organic soils.

Desired Soil Observations: (in this order)

Color (Munsell color chart)
Moisture (dry, damp, moist, wet, saturated)
Density/Consistency (from above right hand side)
Name (sand, silty sand, clay, etc., including portions - trace, little, etc.)
Gradation (well-graded, poorly-graded, uniform, etc.)
Plasticity (non-plastic, slightly plastic, moderately plastic, highly plastic)
Structure (layering, fractures, cracks, etc.)
Bonding (well, moderately, loosely, etc., if applicable)
Cementation (weak, moderate, or strong, if applicable, ASTM D 2488)
Geologic Origin (till, marine clay, alluvium, etc.)
Unified Soil Classification Designation
Groundwater level

Maine Department of Transportation
Geotechnical Section
Key to Soil and Rock Descriptions and Terms
Field Identification Information

TERMS DESCRIBING DENSITY/CONSISTENCY

Coarse-grained soils (more than half of material is larger than No. 200 sieve): Includes (1) clean gravels; (2) silty or clayey gravels; and (3) silty, clayey or gravelly sands. Consistency is rated according to standard penetration resistance.

Modified Burmister System

Descriptive Term	Portion of Total
trace	0% - 10%
little	11% - 20%
some	21% - 35%
adjective (e.g. sandy, clayey)	36% - 50%

Density of Cohesionless Soils	Standard Penetration Resistance N-Value (blows per foot)
Very loose	0 - 4
Loose	5 - 10
Medium Dense	11 - 30
Dense	31 - 50
Very Dense	> 50

Fine-grained soils (more than half of material is smaller than No. 200 sieve): Includes (1) inorganic and organic silts and clays; (2) gravelly, sandy or silty clays; and (3) clayey silts. Consistency is rated according to shear strength as indicated.

Consistency of Cohesive soils	SPT N-Value blows per foot	Approximate Undrained Shear Strength (psf)	Field Guidelines
Very Soft	WOH, WOR, WOP, <2	0 - 250	Fist easily Penetrates
Soft	2 - 4	250 - 500	Thumb easily penetrates
Medium Stiff	5 - 8	500 - 1000	Thumb penetrates with moderate effort
Stiff	9 - 15	1000 - 2000	Indented by thumb with great effort
Very Stiff	16 - 30	2000 - 4000	Indented by thumbnai
Hard	>30	over 4000	Indented by thumbnail with difficulty

Rock Quality Designation (RQD):

$$RQD = \frac{\text{sum of the lengths of intact pieces of core* > 100 mm}}{\text{length of core advance}}$$

*Minimum NQ rock core (1.88 in. OD of core)

Correlation of RQD to Rock Mass Quality

Rock Mass Quality	RQD
Very Poor	≤25%
Poor	26% - 50%
Fair	51% - 75%
Good	76% - 90%
Excellent	91% - 100%

Desired Rock Observations: (in this order)

Color (Munsell color chart)
Texture (aphanitic, fine-grained, etc.)
Lithology (igneous, sedimentary, metamorphic, etc.)
Hardness (very hard, hard, mod. hard, etc.)
Weathering (fresh, very slight, slight, moderate, mod. severe, severe, etc.)
Geologic discontinuities/jointing:
- -dip (horiz - 0-5, low angle - 5-35, mod. dipping - 35-55, steep - 55-85, vertical - 85-90)
- -spacing (very close - <5 cm, close - 5-30 cm, mod. close 30-100 cm, wide - 1-3 m, very wide >3 m)
- -tightness (tight, open or healed)
- -infilling (grain size, color, etc.)

Formation (Waterville, Ellsworth, Cape Elizabeth, etc.)
RQD and correlation to rock mass quality (very poor, poor, etc.)
ref: AASHTO Standard Specification for Highway Bridges 17th Ed. Table 4.4.8.1.2A
Recovery

Sample Container Labeling Requirements:

PIN	Blow Counts
Bridge Name / Town	Sample Recovery
Boring Number	Date
Sample Number	Personnel Initials
Sample Depth	

Maine Department of Transportation

Soil/Rock Exploration Log
US CUSTOMARY UNITS

Project: Canal Bridge #1525 carries Route 4A over Saco River Canal
Location: Hollis, Maine

Boring No.: BB-HSRC-101
WIN: 19281.00

Driller:	MaineDOT	**Elevation (ft.)**	157.4	**Auger ID/OD:**	5" Solid Stem
Operator:	Giles/Daggett	**Datum:**	NAVD88	**Sampler:**	Standard Split Spoon
Logged By:	B. Wilder	**Rig Type:**	CME 45C	**Hammer Wt./Fall:**	140#/30"
Date Start/Finish:	9/11/2013; 07:30-14:30	**Drilling Method:**	Cased Wash Boring	**Core Barrel:**	NQ-2"
Boring Location:	103+17.8, 35.1 ft Rt.	**Casing ID/OD:**	Hw & NW	**Water Level*:**	15.0 ft bgs.
Hammer Efficiency Factor:	0.867	**Hammer Type:**	Automatic ☒ Hydraulic ☐ Rope & Cathead ☐		

Definitions:
D = Split Spoon Sample
MD = Unsuccessful Split Spoon Sample attempt
U = Thin Wall Tube Sample
MU = Unsuccessful Thin Wall Tube Sample attempt
V = Insitu Vane Shear Test, PP = Pocket Penetrometer
MV = Unsuccessful Insitu Vane Shear Test attempt
R = Rock Core Sample
SSA = Solid Stem Auger
HSA = Hollow Stem Auger
RC = Roller Cone
WOH = weight of 140lb. hammer
WOR/C = weight of rods or casing
WO1P = Weight of one person
S_u = Insitu Field Vane Shear Strength (psf)
T_v = Pocket Torvane Shear Strength (psf)
q_p = Unconfined Compressive Strength (ksf)
N-uncorrected = Raw field SPT N-value
Hammer Efficiency Factor = Annual Calibration Value
N_{60} = SPT N-uncorrected corrected for hammer efficiency
N_{60} = (Hammer Efficiency Factor/60%)*N-uncorrected
$S_{u(lab)}$ = Lab Vane Shear Strength (psf)
WC = water content, percent
LL = Liquid Limit
PL = Plastic Limit
PI = Plasticity Index
G = Grain Size Analysis
C = Consolidation Test

Sample Information

Depth (ft.)	Sample No.	Pen./Rec. (in.)	Sample Depth (ft.)	Blows (/6 in.) Shear Strength (psf) or RQD (%)	N-uncorrected	N_{60}	Casing Blows	Elevation (ft.)	Visual Description and Remarks	Laboratory Testing Results/ AASHTO and Unified Class.
0							SSA	157.07	4" Pavement (0.33)	
	1D	24/17	1.00 - 3.00	5/7/5/6	12	17			Brown, damp, medium dense, fine to coarse SAND, some gravel, little silt, (Fill).	G#243052 A-1-b, SM WC=4.8%
5	2D	24/14	5.00 - 7.00	3/4/3/3	7	10			Brown, damp, loose, fine to coarse SAND, some gravel, trace silt, (Fill).	G#243053 A-1-b, SW-SM WC=4.2%
10	3D	24/9	10.00 - 12.00	3/4/2/3	6	9	15		Brown, wet, loose, fine to coarse SAND, little gravel, little silt, (Fill).	
							21			
							27			
							39	143.90	(13.50)	
							47			
15	4D	24/15	15.00 - 17.00	7/10/10/8	20	29	41		Grey, wet, medium dense, fine to coarse SAND, little gravel, little silt.	G#243054 A-1-b, SW-SM WC=12.3%
							61			
							56			
							51			
							36			
20	MD	21/0	20.00 - 21.75	4/3/2/2	5	7	15		Failed sample attempt, similar to above in wash, loose.	
							20			
							19			
							20			
25							19			

Remarks:

300-400 lbs down pressure on Core Barrel.
bgs= below ground surface

Stratification lines represent approximate boundaries between soil types; transitions may be gradual.

* Water level readings have been made at times and under conditions stated. Groundwater fluctuations may occur due to conditions other than those present at the time measurements were made.

Boring No.: BB-HSRC-101

Maine Department of Transportation

Soil/Rock Exploration Log
US CUSTOMARY UNITS

Project: Canal Bridge #1525 carries Route 4A over Saco River Canal
Location: Hollis, Maine

Boring No.: BB-HSRC-101
WIN: 19281.00

Driller:	MaineDOT	**Elevation (ft.)**	157.4	**Auger ID/OD:**	5" Solid Stem
Operator:	Giles/Daggett	**Datum:**	NAVD88	**Sampler:**	Standard Split Spoon
Logged By:	B. Wilder	**Rig Type:**	CME 45C	**Hammer Wt./Fall:**	140#/30"
Date Start/Finish:	9/11/2013; 07:30-14:30	**Drilling Method:**	Cased Wash Boring	**Core Barrel:**	NQ-2"
Boring Location:	103+17.8, 35.1 ft Rt.	**Casing ID/OD:**	Hw & NW	**Water Level*:**	15.0 ft bgs.
Hammer Efficiency Factor:	0.867	**Hammer Type:**	Automatic ☒ Hydraulic ☐ Rope & Cathead ☐		

Definitions:
D = Split Spoon Sample
MD = Unsuccessful Split Spoon Sample attempt
U = Thin Wall Tube Sample
MU = Unsuccessful Thin Wall Tube Sample attempt
V = Insitu Vane Shear Test, PP = Pocket Penetrometer
MV = Unsuccessful Insitu Vane Shear Test attempt
R = Rock Core Sample
SSA = Solid Stem Auger
HSA = Hollow Stem Auger
RC = Roller Cone
WOH = weight of 140lb. hammer
WOR/C = weight of rods or casing
WO1P = Weight of one person
S_u = Insitu Field Vane Shear Strength (psf)
T_v = Pocket Torvane Shear Strength (psf)
q_p = Unconfined Compressive Strength (ksf)
N-uncorrected = Raw field SPT N-value
Hammer Efficiency Factor = Annual Calibration Value
N_{60} = SPT N-uncorrected corrected for hammer efficiency
N_{60} = (Hammer Efficiency Factor/60%)*N-uncorrected
$S_{u(lab)}$ = Lab Vane Shear Strength (psf)
WC = water content, percent
LL = Liquid Limit
PL = Plastic Limit
PI = Plasticity Index
G = Grain Size Analysis
C = Consolidation Test

Sample Information

Depth (ft.)	Sample No.	Pen./Rec. (in.)	Sample Depth (ft.)	Blows (/6 in.) Shear Strength (psf) or RQD (%)	N-uncorrected	N_{60}	Casing Blows	Elevation (ft.)	Graphic Log	Visual Description and Remarks	Laboratory Testing Results/ AASHTO and Unified Class.
25	5D	24/8	25.00 - 27.00	3/2/3/2	5	7	25			Grey, wet, loose, fine to coarse SAND, little gravel, little silt, wood.	
							48				
							80				
	R1	60/54	28.30 - 33.30	RQD = 82%			NQ-2	129.40		28.00 Top of Bedrock at Elev. 129.4 ft. Roller Coned ahead to 28.3 ft bgs. R1:Bedrock: Grey, aphanitic to fine grained, Biotite GRANOFELS, hard, fresh, moderately dipping joints, moderately close, planar to stepped, rough, tight to open, slight oxidation on joint surfaces, thin quartz veins. [Hutchens Corner Formation] Rock Mass Quality = Good R1:Core Times (min:sec) 28.3-29.3 ft (5:03) 29.3-30.3 ft (6:19) 30.3-31.3 ft (6:12) 31.3-32.3 ft (6:03) 32.3-33.3 ft (6:00) 90% Recovery	
30								124.10			
35										33.30 **Bottom of Exploration at 33.30 feet below ground surface.**	
40											
45											
50											

Remarks:

300-400 lbs down pressure on Core Barrel.
bgs= below ground surface

Stratification lines represent approximate boundaries between soil types; transitions may be gradual.

* Water level readings have been made at times and under conditions stated. Groundwater fluctuations may occur due to conditions other than those present at the time measurements were made.

Maine Department of Transportation

Soil/Rock Exploration Log
US CUSTOMARY UNITS

Project: Canal Bridge #1525 carries Route 4A over Saco River Canal
Location: Hollis, Maine

Boring No.: BB-HSRC-102
WIN: 19281.00

Driller:	Northern Test Borings Inc.	**Elevation (ft.)**	154.5	**Auger ID/OD:**	5" Solid Stem
Operator:	M. Nadeau	**Datum:**	NAVD88	**Sampler:**	Standard Split Spoon
Logged By:	B. Steinert H&A	**Rig Type:**	Dietrich D-50 ATV	**Hammer Wt./Fall:**	140#/30"
Date Start/Finish:	9/9/2013-9/9/2013	**Drilling Method:**	Cased Wash Boring	**Core Barrel:**	NQ-2"
Boring Location:	103+32, 28.3 ft Lt.	**Casing ID/OD:**	HW	**Water Level*:**	None Observed
Hammer Efficiency Factor:	0.801	**Hammer Type:**	Automatic ☒ Hydraulic ☐ Rope & Cathead ☐		

Definitions:
D = Split Spoon Sample
MD = Unsuccessful Split Spoon Sample attempt
U = Thin Wall Tube Sample
MU = Unsuccessful Thin Wall Tube Sample attempt
V = Insitu Vane Shear Test, PP = Pocket Penetrometer
MV = Unsuccessful Insitu Vane Shear Test attempt
R = Rock Core Sample
SSA = Solid Stem Auger
HSA = Hollow Stem Auger
RC = Roller Cone
WOH = weight of 140lb. hammer
WOR/C = weight of rods or casing
WO1P = Weight of one person
S_u = Insitu Field Vane Shear Strength (psf)
T_v = Pocket Torvane Shear Strength (psf)
q_p = Unconfined Compressive Strength (ksf)
N-uncorrected = Raw field SPT N-value
Hammer Efficiency Factor = Annual Calibration Value
N_{60} = SPT N-uncorrected corrected for hammer efficiency
N_{60} = (Hammer Efficiency Factor/60%)*N-uncorrected
$S_{u(lab)}$ = Lab Vane Shear Strength (psf)
WC = water content, percent
LL = Liquid Limit
PL = Plastic Limit
PI = Plasticity Index
G = Grain Size Analysis
C = Consolidation Test

Sample Information

Depth (ft.)	Sample No.	Pen./Rec. (in.)	Sample Depth (ft.)	Blows (/6 in.) Shear Strength (psf) or RQD (%)	N-uncorrected	N_{60}	Casing Blows	Elevation (ft.)	Graphic Log	Visual Description and Remarks	Laboratory Testing Results/ AASHTO and Unified Class.
0	1D	24/12	0.00 - 2.00	3/8/9/8	17	23	SSA			Tan to dark brown, dry to moist, medium dense, fine to medium SAND, trace coarse sand, little silt, rootlets in top 6" of sample, (Fill).	
5	2D	24/6	5.00 - 7.00	12/6/5/2	11	15				Tan to brown, dry to moist, medium dense, fine to medium SAND, little coarse gravel and silt, trace fine gravel, (Fill).	
										Dark brown, wet, medium dense, fine to medium SAND, little coarse sand and silt, (Fill).	
10	3D	24/12	10.00 - 12.00	8/6/5/5	11	15	42			Similar to above.	
							85	143.00		11.50	
							297			Dark grey, wet, medium dense, Gravelly fine to medium SAND, some clay, (Glacial Till).	
							66			Similar material to above observed in wash water below approximately 13.0 ft bgs.	
							[a]42			[a]42 blows for 0.8 ft.	
15	R1	60/60	15.00 - 20.00	RQD = 33%			NQ-2	139.70		14.80	
										Top of Bedrock at Elev. 139.7 ft. Roller Coned ahead to 15.0 ft bgs. R1:Bedrock: Grey, aphanitic to fine grained, GRANOFELS, moderately hard to hard, slightly weathered with moderately weathered, highly fractured zones at 17.3 to 18.0 ft bgs, joints dipping at low to steep angles, very close to close, planar to undulating, rough, tight to open, oxidation on joint surfaces. [Hutchins Corner Formation] Rock Mass Quality = Poor R1:Core Times (min:sec) 15.0-16.0 ft (2:04) 16.0-17.0 ft (2:10) 17.0-18.0 ft (1:47) 18.0-19.0 ft (2:05) 19.0-20.0 ft (2:32) 100% Recovery	
20	R2	60/60	20.00 - 25.00	RQD = 100%						R2:Bedrock: Grey, aphanitic to fine grained GRANOFELS, hard, fresh to slightly weathered, joints dipping at moderate to steep angles, close to moderately close, planar to undulating, rough, tight to open, oxidation in joint surfaces. [Hutchins Corner Formation] Rock Mass Quality = Excellent R2:Core Times (min:sec)	
25											

Remarks:

Drill Rig SN:283
bgs = below ground surface

Stratification lines represent approximate boundaries between soil types; transitions may be gradual.

* Water level readings have been made at times and under conditions stated. Groundwater fluctuations may occur due to conditions other than those present at the time measurements were made.

Maine Department of Transportation

Soil/Rock Exploration Log
US CUSTOMARY UNITS

Project: Canal Bridge #1525 carries Route 4A over Saco River Canal
Location: Hollis, Maine

Boring No.: BB-HSRC-102
WIN: 19281.00

Driller:	Northern Test Borings Inc.	**Elevation (ft.)**	154.5	**Auger ID/OD:**	5" Solid Stem
Operator:	M. Nadeau	**Datum:**	NAVD88	**Sampler:**	Standard Split Spoon
Logged By:	B. Steinert H&A	**Rig Type:**	Dietrich D-50 ATV	**Hammer Wt./Fall:**	140#/30"
Date Start/Finish:	9/9/2013-9/9/2013	**Drilling Method:**	Cased Wash Boring	**Core Barrel:**	NQ-2"
Boring Location:	103+32, 28.3 ft Lt.	**Casing ID/OD:**	HW	**Water Level*:**	None Observed
Hammer Efficiency Factor:	0.801	**Hammer Type:**	Automatic ☒ Hydraulic ☐ Rope & Cathead ☐		

Definitions:
D = Split Spoon Sample
MD = Unsuccessful Split Spoon Sample attempt
U = Thin Wall Tube Sample
MU = Unsuccessful Thin Wall Tube Sample attempt
V = Insitu Vane Shear Test, PP = Pocket Penetrometer
MV = Unsuccessful Insitu Vane Shear Test attempt
R = Rock Core Sample
SSA = Solid Stem Auger
HSA = Hollow Stem Auger
RC = Roller Cone
WOH = weight of 140lb. hammer
WOR/C = weight of rods or casing
WO1P = Weight of one person
S_u = Insitu Field Vane Shear Strength (psf)
T_v = Pocket Torvane Shear Strength (psf)
q_p = Unconfined Compressive Strength (ksf)
N-uncorrected = Raw field SPT N-value
Hammer Efficiency Factor = Annual Calibration Value
N_{60} = SPT N-uncorrected corrected for hammer efficiency
N_{60} = (Hammer Efficiency Factor/60%)*N-uncorrected
$S_{u(lab)}$ = Lab Vane Shear Strength (psf)
WC = water content, percent
LL = Liquid Limit
PL = Plastic Limit
PI = Plasticity Index
G = Grain Size Analysis
C = Consolidation Test

Depth (ft.)	Sample No.	Pen./Rec. (in.)	Sample Depth (ft.)	Blows (/6 in.) Shear Strength (psf) or RQD (%)	N-uncorrected	N_{60}	Casing Blows	Elevation (ft.)	Graphic Log	Visual Description and Remarks	Laboratory Testing Results/ AASHTO and Unified Class.
25								129.50		20.0-21.0 ft (3:43) 21.0-22.0 ft (2:49) 22.0-23.0 ft (1:54) 23.0-24.0 ft (2:37) 24.0-25.0 ft (1:47) 100% Recovery **Bottom of Exploration at 25.00 feet below ground surface.**	
										25.00	
										Bottom of Exploration at 25.00 feet below ground surface.	
30											
35											
40											
45											
50											

Remarks:

Drill Rig SN:283
bgs = below ground surface

Stratification lines represent approximate boundaries between soil types; transitions may be gradual.

* Water level readings have been made at times and under conditions stated. Groundwater fluctuations may occur due to conditions other than those present at the time measurements were made.

Maine Department of Transportation

Soil/Rock Exploration Log
US CUSTOMARY UNITS

Project: Canal Bridge #1525 carries Route 4A over Saco River Canal
Location: Hollis, Maine

Boring No.: BB-HSRC-103
WIN: 19281.00

Driller:	Northern Test Borings Inc.	**Elevation (ft.)**	149.5	**Auger ID/OD:**	5" Solid Stem
Operator:	M. Nadeau	**Datum:**	NAVD88	**Sampler:**	Standard Split Spoon
Logged By:	B. Steinert H&A	**Rig Type:**	Dietrich D-50 ATV	**Hammer Wt./Fall:**	140#/30"
Date Start/Finish:	9/11/2013-9/11/2013	**Drilling Method:**	Cased Wash Boring	**Core Barrel:**	NQ-2"
Boring Location:	104+78.5, 4.0 ft Lt.	**Casing ID/OD:**	HW	**Water Level*:**	None Observed
Hammer Efficiency Factor:	0.801	**Hammer Type:**	Automatic ☒ Hydraulic ☐ Rope & Cathead ☐		

Definitions:
D = Split Spoon Sample
MD = Unsuccessful Split Spoon Sample attempt
U = Thin Wall Tube Sample
MU = Unsuccessful Thin Wall Tube Sample attempt
V = Insitu Vane Shear Test, PP = Pocket Penetrometer
MV = Unsuccessful Insitu Vane Shear Test attempt
R = Rock Core Sample
SSA = Solid Stem Auger
HSA = Hollow Stem Auger
RC = Roller Cone
WOH = weight of 140lb. hammer
WOR/C = weight of rods or casing
WO1P = Weight of one person
S_u = Insitu Field Vane Shear Strength (psf)
T_v = Pocket Torvane Shear Strength (psf)
q_p = Unconfined Compressive Strength (ksf)
N-uncorrected = Raw field SPT N-value
Hammer Efficiency Factor = Annual Calibration Value
N_{60} = SPT N-uncorrected corrected for hammer efficiency
N_{60} = (Hammer Efficiency Factor/60%)*N-uncorrected
$S_{u(lab)}$ = Lab Vane Shear Strength (psf)
WC = water content, percent
LL = Liquid Limit
PL = Plastic Limit
PI = Plasticity Index
G = Grain Size Analysis
C = Consolidation Test

Depth (ft.)	Sample No.	Pen./Rec. (in.)	Sample Depth (ft.)	Blows (/6 in.) Shear Strength (psf) or RQD (%)	N-uncorrected	N_{60}	Casing Blows	Elevation (ft.)	Visual Description and Remarks	Laboratory Testing Results/ AASHTO and Unified Class.
0	1D	24/10	0.00 - 2.00	1/2/3/3	5	7	SSA		Grey brown, moist, medium stiff, Sandy SILT, rootlets and wood fibers throughout.	
5	2D	24/6	5.00 - 7.00	2/2/WOH/1	2	3			Grey brown, wet, soft, SILT, little fine sand, trace wood fibers.	
								140.00	9.50	
10	3D	9/9	10.00 - 10.75	45/50(3")	---				Weathered BEDROCK.	
	R1	55.2/41	11.00 - 15.60	RQD = 7%			NQ-2	138.50	Roller Coned ahead to 11.0 ft bgs. 11.00 Top of Intact Bedrock at Elev. 138.5 ft. R1:Bedrock: Grey, aphanitic to medium grained, GRANOFELS, moderately hard to soft, light to severely weathered, joints dipping at low to moderate angles, secondary steep angles, very close to close, undulating, rough, open, oxidized. Highly fractured throughout. Rock Mass Quality = Very Poor R1:Core Times (min:sec) 11.0-12.0 ft (2:26) 12.0-13.0 ft (1:52) 13.0-14.0 ft (1:57) 14.0-15.0 ft (1:49) 15.0-15.6 ft (2:00) 75% Recovery	
15	R2	48/44	15.60 - 19.60	RQD = 25%					R2:Bedrock: Similar to R1, except occasional Biotite-rich schistose zones, joints dipping at low to steep angles, planar to undulating, occasional quartz veins. Rock Mass Quality = Very Poor R2:Core Times (min:sec) 15.6-16.0 ft (0:41) 16.0-17.0 ft (1:48) 17.0-18.0 ft (1:33) 18.0-19.0 ft (2:35) 19.0-19.6 ft (1:47) 92% Recovery	
20	R3	60/60	19.60 - 24.60	RQD = 70%					R3:Bedrock: Grey, aphanitic to medium grained, GRANOFELS with biotite schists zones, moderately hard to hard, fresh to slightly weathered, joints dipping at low to moderate angles, secondary steep angles, very close to close, planar to undulating, rough, open, oxidation on some joint	
25	R4	36/36	24.60 - 27.60	RQD = 56%						

Remarks:

Drill Rig SN:283
bgs = below ground surface

Stratification lines represent approximate boundaries between soil types; transitions may be gradual.

* Water level readings have been made at times and under conditions stated. Groundwater fluctuations may occur due to conditions other than those present at the time measurements were made.

Maine Department of Transportation

Soil/Rock Exploration Log
US CUSTOMARY UNITS

Project: Canal Bridge #1525 carries Route 4A over Saco River Canal
Location: Hollis, Maine

Boring No.: BB-HSRC-103
WIN: 19281.00

Driller:	Northern Test Borings Inc.	**Elevation (ft.)**	149.5	**Auger ID/OD:**	5" Solid Stem
Operator:	M. Nadeau	**Datum:**	NAVD88	**Sampler:**	Standard Split Spoon
Logged By:	B. Steinert H&A	**Rig Type:**	Dietrich D-50 ATV	**Hammer Wt./Fall:**	140#/30"
Date Start/Finish:	9/11/2013-9/11/2013	**Drilling Method:**	Cased Wash Boring	**Core Barrel:**	NQ-2"
Boring Location:	104+78.5, 4.0 ft Lt.	**Casing ID/OD:**	HW	**Water Level*:**	None Observed
Hammer Efficiency Factor:	0.801	**Hammer Type:**	Automatic ☒ Hydraulic ☐ Rope & Cathead ☐		

Definitions:
D = Split Spoon Sample
MD = Unsuccessful Split Spoon Sample attempt
U = Thin Wall Tube Sample
MU = Unsuccessful Thin Wall Tube Sample attempt
V = Insitu Vane Shear Test, PP = Pocket Penetrometer
MV = Unsuccessful Insitu Vane Shear Test attempt
R = Rock Core Sample
SSA = Solid Stem Auger
HSA = Hollow Stem Auger
RC = Roller Cone
WOH = weight of 140lb. hammer
WOR/C = weight of rods or casing
WO1P = Weight of one person
S_u = Insitu Field Vane Shear Strength (psf)
T_v = Pocket Torvane Shear Strength (psf)
q_p = Unconfined Compressive Strength (ksf)
N-uncorrected = Raw field SPT N-value
Hammer Efficiency Factor = Annual Calibration Value
N_{60} = SPT N-uncorrected corrected for hammer efficiency
N_{60} = (Hammer Efficiency Factor/60%)*N-uncorrected
$S_{u(lab)}$ = Lab Vane Shear Strength (psf)
WC = water content, percent
LL = Liquid Limit
PL = Plastic Limit
PI = Plasticity Index
G = Grain Size Analysis
C = Consolidation Test

Depth (ft.)	Sample No.	Pen./Rec. (in.)	Sample Depth (ft.)	Blows (/6 in.) Shear Strength (psf) or RQD (%)	N-uncorrected	N_{60}	Casing Blows	Elevation (ft.)	Graphic Log	Visual Description and Remarks	Laboratory Testing Results/ AASHTO and Unified Class.
25										surfaces, quartz/calcite veins, occasional pitting. Rock Mass Quality = Fair R3:Core Times (min:sec) 19.6-20.0 ft (1:43) 20.0-21.0 ft (2:33) 21.0-22.0 ft (2:25) 22.0-23.0 ft (3:29) 23.0-24.0 ft (5:09) 24.0-24.6 ft (1:40) 100% Recovery	
								121.90		R4:Bedrock: Similar to R3, except hard, joints dipping at low angles, no pitting observed. [Hutchins Corner Formation] Rock Mass Quality = Fair R4:Core Times (min:sec) 24.6-25.0 ft (1:36) 25.0-26.0 ft (3:27) 26.0-27.0 ft (?) 27.0-27.6 ft (3:07) 100% Recovery	
30											
										27.60 **Bottom of Exploration at 27.60 feet below ground surface.**	
35											
40											
45											
50											

Remarks:

Drill Rig SN:283
bgs = below ground surface

Stratification lines represent approximate boundaries between soil types; transitions may be gradual.

* Water level readings have been made at times and under conditions stated. Groundwater fluctuations may occur due to conditions other than those present at the time measurements were made.

Maine Department of Transportation

Soil/Rock Exploration Log
US CUSTOMARY UNITS

Project: Canal Bridge #1525 carries Route 4A over Saco River Canal
Location: Hollis, Maine

Boring No.: BB-HSRC-104
WIN: 19281.00

Driller:	Northern Test Borings Inc.	**Elevation (ft.)**	147.5	**Auger ID/OD:**	5" Solid Stem
Operator:	M. Nadeau	**Datum:**	NAVD88	**Sampler:**	Standard Split Spoon
Logged By:	N. Dearden/B. Steinert H&A	**Rig Type:**	Dietrich D-50 ATV	**Hammer Wt./Fall:**	140#/30"
Date Start/Finish:	9/11/2013-9/11/2013	**Drilling Method:**	Cased Wash Boring	**Core Barrel:**	NQ-2"
Boring Location:	104+90.9, 2.3 ft Lt.	**Casing ID/OD:**	HW	**Water Level*:**	None Observed
Hammer Efficiency Factor:	0.801	**Hammer Type:**	Automatic ☒ Hydraulic ☐ Rope & Cathead ☐		

Definitions:
D = Split Spoon Sample
MD = Unsuccessful Split Spoon Sample attempt
U = Thin Wall Tube Sample
MU = Unsuccessful Thin Wall Tube Sample attempt
V = Insitu Vane Shear Test, PP = Pocket Penetrometer
MV = Unsuccessful Insitu Vane Shear Test attempt
R = Rock Core Sample
SSA = Solid Stem Auger
HSA = Hollow Stem Auger
RC = Roller Cone
WOH = weight of 140lb. hammer
WOR/C = weight of rods or casing
WO1P = Weight of one person
S_u = Insitu Field Vane Shear Strength (psf)
T_v = Pocket Torvane Shear Strength (psf)
q_p = Unconfined Compressive Strength (ksf)
N-uncorrected = Raw field SPT N-value
Hammer Efficiency Factor = Annual Calibration Value
N_{60} = SPT N-uncorrected corrected for hammer efficiency
N_{60} = (Hammer Efficiency Factor/60%)*N-uncorrected
$S_{u(lab)}$ = Lab Vane Shear Strength (psf)
WC = water content, percent
LL = Liquid Limit
PL = Plastic Limit
PI = Plasticity Index
G = Grain Size Analysis
C = Consolidation Test

Sample Information

Depth (ft.)	Sample No.	Pen./Rec. (in.)	Sample Depth (ft.)	Blows (/6 in.) Shear Strength (psf) or RQD (%)	N-uncorrected	N_{60}	Casing Blows	Elevation (ft.)	Visual Description and Remarks	Laboratory Testing Results/ AASHTO and Unified Class.
0	1D	24/13	0.00 - 2.00	3/4/6/7	10	13	SSA	147.00	Brown, dry, medium dense, Silty, fine to medium SAND, poorly graded with organics.	
									0.50 — Brownish-grey, damp, stiff, fine Sandy SILT grading to clayey SILT with blocky texture and mottling.	
5	2D	24/11	5.00 - 7.00	3/5/2/2	7	9		142.50	5.00 — Brownish-grey to gray, damp, loose, fine to medium SAND, little silt, trace coarse sand and gravel.	
								138.00	9.50 — Auger REFUSAL, probable Weathered BEDROCK. Failed sample attempt. Roller Coned ahead to 10.5 ft bgs.	
10	MD R1	1/0 60/60	10.00 - 10.08 10.50 - 15.50	50(1") RQD = 63%	---		NQ-2	137.00	10.50 — Top of Intact Bedrock at Elev. 137.0 ft. R1:Bedrock: Grey, aphanitic to fine grained, GRANOFELS, hard, fresh to slightly weathered, joints dipping at low to moderate angles, very close to moderately close, planar to undulating, rough, tight to open, oxidation on some joint surfaces, occasional pitting on outer core stem, granite/calcite veins. [Hutchins Corner Formation] Rock Mass Quality = Fair R1:Core Times (min:sec) 10.5-11.5 ft (3:39) 11.5-12.5 ft (3:14) 12.5-13.5 ft (4:40) 13.5-14.5 ft (2:51) 14.5-15.5 ft (2:33) 100% Recovery	
15								132.00	15.50 — **Bottom of Exploration at 15.50 feet below ground surface.**	
20										
25										

Remarks:

Drill Rig SN:283

Stratification lines represent approximate boundaries between soil types; transitions may be gradual.

* Water level readings have been made at times and under conditions stated. Groundwater fluctuations may occur due to conditions other than those present at the time measurements were made.

Maine Department of Transportation

Soil/Rock Exploration Log
US CUSTOMARY UNITS

Project: Canal Bridge Replacement
Location: Hollis/Buxton, Maine

Boring No.: BB-HSRC-201
WIN: 19281.00

Driller:	Maine Department of Transportation	**Elevation (ft.)**	151.2 (est.)	**Auger ID/OD:**	--
Operator:	C. Giles	**Datum:**	NAVD 88	**Sampler:**	Split Spoon-1.375 in. ID
Logged By:	M. Snow	**Rig Type:**	CME 45	**Hammer Wt./Fall:**	140#/30 in.
Date Start/Finish:	7-15-2014/7-15-2014	**Drilling Method:**	Cased Wash Boring	**Core Barrel:**	NQ-2.0 in.
Boring Location:	104+68.5, 69.5 ft Rt. See Remarks	**Casing ID/OD:**	3.0 in.	**Water Level*:**	None observed
Hammer Efficiency Factor:	0.867	**Hammer Type:**	Automatic ☒ Hydraulic ☐ Rope & Cathead ☐		

Definitions:
D = Split Spoon Sample
MD = Unsuccessful Split Spoon Sample attempt
U = Thin Wall Tube Sample
MU = Unsuccessful Thin Wall Tube Sample attempt
V = Insitu Vane Shear Test, PP = Pocket Penetrometer
MV = Unsuccessful Insitu Vane Shear Test attempt
R = Rock Core Sample
SSA = Solid Stem Auger
HSA = Hollow Stem Auger
RC = Roller Cone
WOH = weight of 140lb. hammer
WOR/C = weight of rods or casing
WO1P = Weight of one person
S_u = Insitu Field Vane Shear Strength (psf)
T_v = Pocket Torvane Shear Strength (psf)
q_p = Unconfined Compressive Strength (ksf)
N-uncorrected = Raw field SPT N-value
Hammer Efficiency Factor = Annual Calibration Value
N_{60} = SPT N-uncorrected corrected for hammer efficiency
N_{60} = (Hammer Efficiency Factor/60%)*N-uncorrected
$S_{u(lab)}$ = Lab Vane Shear Strength (psf)
WC = water content, percent
LL = Liquid Limit
PL = Plastic Limit
PI = Plasticity Index
G = Grain Size Analysis
C = Consolidation Test

Depth (ft.)	Sample No.	Pen./Rec. (in.)	Sample Depth (ft.)	Blows (/6 in.) Shear Strength (psf) or RQD (%)	N-uncorrected	N_{60}	Casing Blows	Elevation (ft.)	Visual Description and Remarks	Laboratory Testing Results/ AASHTO and Unified Class.
0	1D	24/12	0.00 - 2.00	3/3/2/2	5	7	7		Brown, moist, loose, fine to medium SAND, little coarse sand and gravel, trace silt, (Fill).	
							10			
							15			
	2D	24/9	3.70 - 5.70	16/9/5/4	14	20	21	147.50	3.70	
							21	147.00	Broken rock FILL (slaty cleavage) 4.20	
5							24		Brown, wet, medium dense, Silty fine to medium SAND, little coarse sand and gravel, (Fill).	
							20			
							9			
	3D	24/4	8.70 - 10.70	7/3/3/3	6	9	12		Recovered 2 in. gravel wash, 2 in. brown, wet, loose, fine to medium SAND, some silt, little angular gravel, trace coarse sand, moderately bonded, (Fill).	
							13			
10							13			
	R1	29/26	11.40 - 13.82				18(8.0) 50(0.0)	139.80	11.40	
							52(2.0)		Grey-black-white, coarse to medium-grained GRANOFELS grading to GRANITE, (Boulder).	
							130(4.0)			
							SPIN NW	137.40	13.80	
								137.10	Wood 14.10	
15								136.20	Note: Spun NW casing through probable boulder from 14.1 to 15.7 feet based on drill action. 15.00	
									Note: Grey wash water at 15.7 feet.	
									(Probable Glacial Till)	
20										
	R2	60/17	21.30 - 26.30						Note: Cored through cobbles/boulders from 21.3 to 26.3 feet.	
25							SPIN			

Remarks:

1. As-drilled coordinates of test borings determined by MaineDOT and provided in NAD83 (96) ME2000 East Zone coordinate system. As-drilled coordinates related to baseline station and offset information by MaineDOT.
2. Boring Location from the Island Access Road = Sta. 20+85.4, 35.4 ft Rt.

Stratification lines represent approximate boundaries between soil types; transitions may be gradual.

* Water level readings have been made at times and under conditions stated. Groundwater fluctuations may occur due to conditions other than those present at the time measurements were made.

Maine Department of Transportation

Soil/Rock Exploration Log
US CUSTOMARY UNITS

Project: Canal Bridge Replacement
Location: Hollis/Buxton, Maine

Boring No.: BB-HSRC-201
WIN: 19281.00

Driller:	Maine Department of Transportation	**Elevation (ft.)**	151.2 (est.)	**Auger ID/OD:**	--
Operator:	C. Giles	**Datum:**	NAVD 88	**Sampler:**	Split Spoon-1.375 in. ID
Logged By:	M. Snow	**Rig Type:**	CME 45	**Hammer Wt./Fall:**	140#/30 in.
Date Start/Finish:	7-15-2014/7-15-2014	**Drilling Method:**	Cased Wash Boring	**Core Barrel:**	NQ-2.0 in.
Boring Location:	104+68.5, 69.5 ft Rt. See Remarks	**Casing ID/OD:**	3.0 in.	**Water Level*:**	None observed
Hammer Efficiency Factor:	0.867	**Hammer Type:**	Automatic ☒ Hydraulic ☐ Rope & Cathead ☐		

Definitions:
D = Split Spoon Sample
MD = Unsuccessful Split Spoon Sample attempt
U = Thin Wall Tube Sample
MU = Unsuccessful Thin Wall Tube Sample attempt
V = Insitu Vane Shear Test, PP = Pocket Penetrometer
MV = Unsuccessful Insitu Vane Shear Test attempt
R = Rock Core Sample
SSA = Solid Stem Auger
HSA = Hollow Stem Auger
RC = Roller Cone
WOH = weight of 140lb. hammer
WOR/C = weight of rods or casing
WO1P = Weight of one person
S_u = Insitu Field Vane Shear Strength (psf)
T_v = Pocket Torvane Shear Strength (psf)
q_p = Unconfined Compressive Strength (ksf)
N-uncorrected = Raw field SPT N-value
Hammer Efficiency Factor = Annual Calibration Value
N_{60} = SPT N-uncorrected corrected for hammer efficiency
N_{60} = (Hammer Efficiency Factor/60%)*N-uncorrected
$S_{u(lab)}$ = Lab Vane Shear Strength (psf)
WC = water content, percent
LL = Liquid Limit
PL = Plastic Limit
PI = Plasticity Index
G = Grain Size Analysis
C = Consolidation Test

Sample Information

Depth (ft.)	Sample No.	Pen./Rec. (in.)	Sample Depth (ft.)	Blows (/6 in.) Shear Strength (psf) or RQD (%)	N-uncorrected	N_{60}	Casing Blows	Elevation (ft.)	Graphic Log	Visual Description and Remarks	Laboratory Testing Results/ AASHTO and Unified Class.
25							NW				
	R3	29/2	26.30 - 28.72	RQD = 0%						Note: Cored through cobbles from 26.3 to 28.7 feet.	
	5D	24/5	28.70 - 30.70	4/3/5/6	8	12				Grey, wet, medium dense, fine to medium SAND, little gravel, trace coarse sand and silt, (Glacial Till).	
30											
	R4	60/60	31.20 - 36.20	RQD = 73%			NQ-2	120.00		31.20 Top of Bedrock at Elev. 120.0 ft. Grey to dark Grey, aphanitic to fine-grained SCHIST. Moderately hard, fresh to slightly weathered. Joints dipping at low to moderate angles, extremely close to moderate, open, planar to undulating, smooth to rough. Secondary high angle joint, frequent calcite veins, occasional moderately weathered veins (vugs present), some oxidized joint surfaces. [Hutchins Corner Formation]. Rock Mass Quality = Fair R4 Core Times (min:sec): 31.2-32.2 ft (2:08) 32.2-33.2 ft (4:28) 33.2-34.2 ft (5:15) 34.2-35.2 ft (3:07) 35.2-36.2 ft (4:35) Recovery 100%	
35								115.00		36.20 **Bottom of Exploration at 36.20 feet below ground surface.**	
40											
45											
50											

Remarks:

1. As-drilled coordinates of test borings determined by MaineDOT and provided in NAD83 (96) ME2000 East Zone coordinate system. As-drilled coordinates related to baseline station and offset information by MaineDOT.
2. Boring Location from the Island Access Road = Sta. 20+85.4, 35.4 ft Rt.

Stratification lines represent approximate boundaries between soil types; transitions may be gradual.

* Water level readings have been made at times and under conditions stated. Groundwater fluctuations may occur due to conditions other than those present at the time measurements were made.

Appendix B

Laboratory Data

State of Maine - Department of Transportation

Laboratory Testing Summary Sheet

Town(s): Hollis Work Number: 19281.00

Boring & Sample Identification Number	Station (Feet)	Offset (Feet)	Depth (Feet)	Reference Number	G.S.D.C. Sheet	W.C. %	L.L.	P.I.	Classification		
									Unified	AASHTO	Frost
BB-HSRC-101, 1D	103+17.8	35.1 Rt.	1.0-3.0	243052	1	4.8			SM	A-1-b	II
BB-HSRC-101, 2D	103+17.8	35.1 Rt.	5.0-7.0	243053	1	4.2			SW-SM	A-1-b	0
BB-HSRC-101, 4D	103+17.8	35.1 Rt.	15.0-17.0	243054	1	12.3			SW-SM	A-1-b	0

Classification of these soil samples is in accordance with AASHTO Classification System M-145-40. This classification is followed by the "Frost Susceptibility Rating" from zero (non-frost susceptible) to Class IV (highly frost susceptible). The "Frost Susceptibility Rating" is based upon the MaineDOT and Corps of Engineers Classification Systems.

GSDC = Grain Size Distribution Curve as determined by AASHTO T 88-93 (1996) and/or ASTM D 422-63 (Reapproved 1998)

WC = water content as determined by AASHTO T 265-93 and/or ASTM D 2216-98

LL = Liquid limit as determined by AASHTO T 89-96 and/or ASTM D 4318-98 NP = Non Plastic

PI = Plasticity Index as determined by AASHTO 90-96 and/or ASTM D4318-98

State of Maine Department of Transportation
GRAIN SIZE DISTRIBUTION CURVE

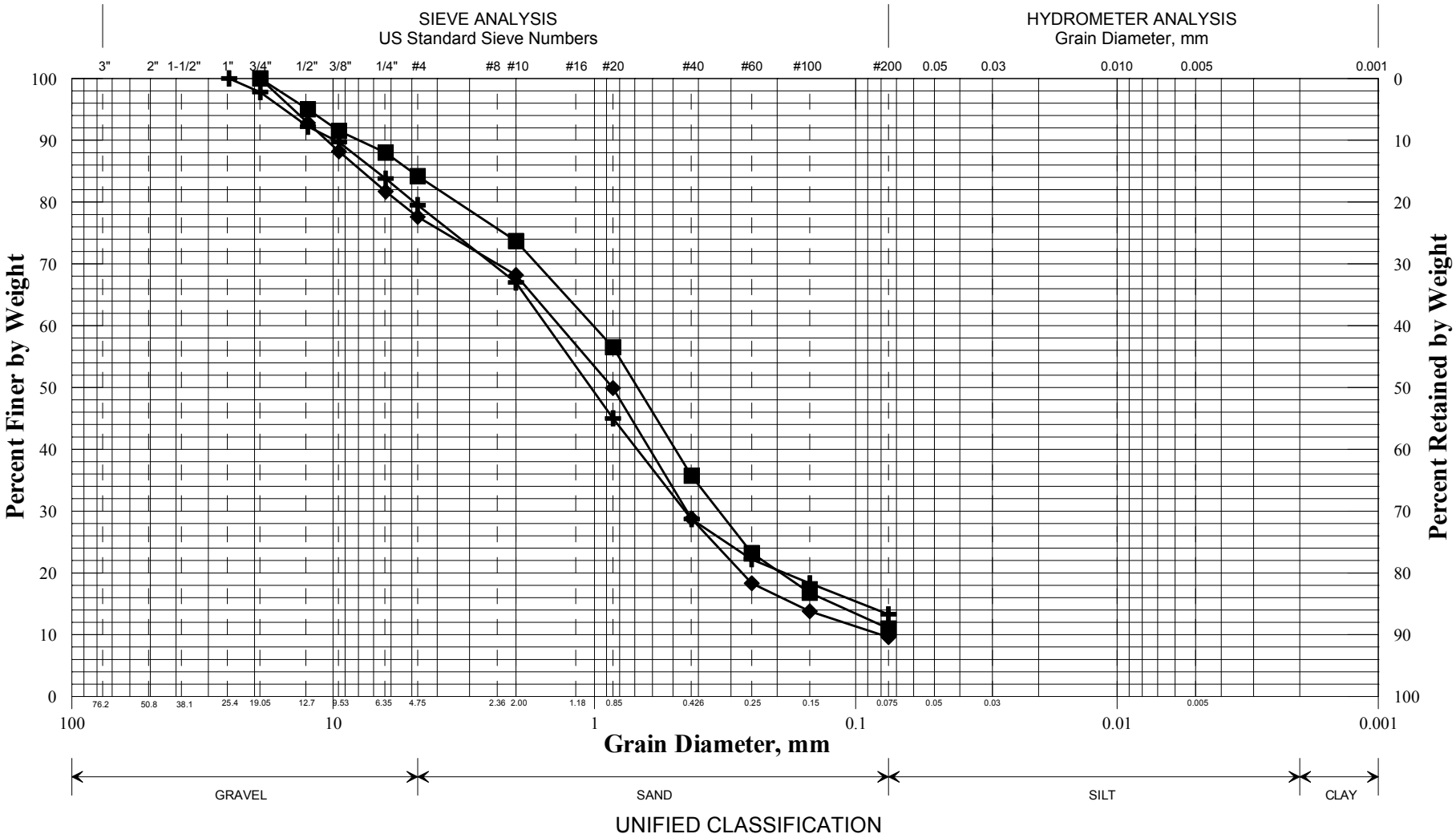

UNIFIED CLASSIFICATION

	Boring/Sample No.	Station	Offset, ft	Depth, ft	Description	W, %	LL	PL	PI
✚	BB-HSRC-101/1D	103+17.8	35.1 RT	1.0-3.0	SAND, some gravel, little silt.	4.8			
◆	BB-HSRC-101/2D	103+17.8	35.1 RT	5.0-7.0	SAND, some gravel, trace silt.	4.2			
■	BB-HSRC-101/4D	103+17.8	35.1 RT	15.0-17.0	SAND, little gravel, little silt.	12.3			
●									
▲									
✖									

WIN
019281.00
Town
Hollis
Reported by/Date
WHITE, TERRY A 10/9/2013

SHEET 1

Appendix C

Calculations

Earth Pressure:

Active Earth Pressure - Rankine Theory
from MaineDOT Bridge Design Guide Section 3.6.5.2 pg 3-7

Soil Type 4 Properties from MaineDOT Bridge Design Guide (BDG)

unit weight: $\gamma_{type4} := 125 \cdot pcf$

Internal Friction Angle: $\phi_{type4} := 32 \cdot deg$

Cohesion: $c_{sand} := 0 \cdot psf$

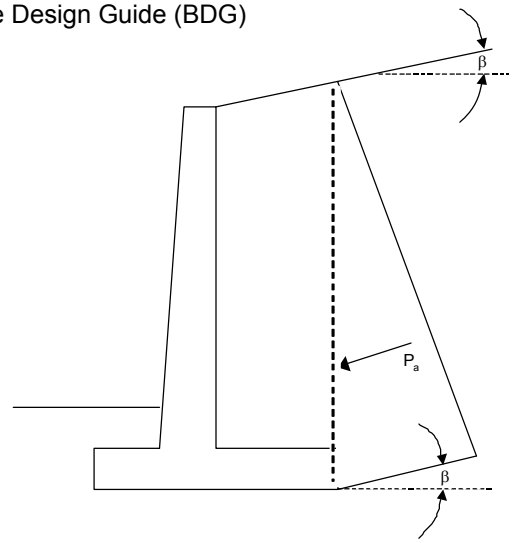

Generally use Rankine for long heeled cantilever walls where the failure surface is uninterrupted by the top of the wall system. The earth pressure is applied to a plane extending vertically up from the heel of the wall base and the weight of the soil on the inside of the vertical plane is considered as part of the wall weight. The failure sliding surface is not restricted by the top of the wall or the backface of the wall.

For cantilever walls with sloped backfill surface:

β = Angle of fill slope to the horizontal

$\beta := 0 \cdot deg$ assume horizontal backfill surface

$$K_{a\_rankine\_slope} := \frac{\cos(\beta) - \sqrt{\cos(\beta)^2 - \cos(\phi_{type4})^2}}{\cos(\beta) + \sqrt{\cos(\beta)^2 - \cos(\phi_{type4})^2}}$$

$K_{a\_rankine\_slope} = 0.31$

Pa is oriented at an angle of β to the vertical plane.

Passive Earth Pressure:

Coulomb Theory - Passive Earth Pressure from Maine DOT Bridge Design Guide
Section 3.6.6 pg 3-8

Angle of back face of wall to the horizontal: $\alpha := 90 \cdot deg$

Angle of internal soil friction: $\phi := 32 \cdot deg$

Friction angle between fill and wall:
From LRFD Table 3.11.5.3-1 range from 17 to 22 $\delta := 20 \cdot deg$

Angle of backfill to the horizontal $\beta := 0 \cdot deg$

$$K_p := \frac{\sin(\alpha - \phi)^2}{\sin(\alpha)^2 \cdot \sin(\alpha + \delta) \cdot \left(1 - \sqrt{\frac{\sin(\phi + \delta) \cdot \sin(\phi + \beta)}{\sin(\alpha + \delta) \cdot \sin(\alpha + \beta)}}\right)^2}$$

$K_p = 6.89$

Rankine Theory - Passive Earth Pressure from Bowles 5th Edition Section 11-5 pg 602

Angle of backfill to the horizontal $\beta := 0 \cdot deg$

Angle of internal soil friction: $\phi := 32 \cdot deg$

$$K_{p\_rank} := \frac{\cos(\beta) + \sqrt{\cos(\beta)^2 - \cos(\phi)^2}}{\cos(\beta) - \sqrt{\cos(\beta)^2 - \cos(\phi)^2}}$$

$K_{p\_rank} = 3.25$

Bowles does not recommend the use of the Rankine Method for K_p when β>0.

<u>Active Earth Pressure</u> - Coulomb Theory
from MaineDOT Bridge Design Guide Section 3.6.5.2 pg 3-5

For cases where the backface of the wall interferes with the development of a full sliding surface in the backfill use Coulomb Theory.

- Coulomb Theory applies for gravity, semi-gravity, and prefab modular walls with steep back faces
- Coulomb Theory applies to concrete cantilever wall with short heels where the sliding surface is restricted by the top of the wall - the wedge of soil does not move.
- Inter face friction is considered in Coulomb Theory

Angle of backface of wall to the horizontal: $\alpha := 90 \cdot deg$

Choosing Friction Angle between fill and wall:

i.) From LRFD Table 3.11.5.3-1 range from 17 to 22 - choose δ = 20 degrees
ii.) From MaineDOT BDG Table 3-3 δ = 24 degrees
iii.) From LRFD Figure C3.11.5.3-1 - δ = 1/3 to 2/3 * Internal Friction Angle = 21.33 degrees

Use Friction Angle between fill and wall = $\delta := 20 \cdot deg$

β = Angle of fill slope to the horizontal $\beta := 0 \cdot deg$

Internal Friction Angle: $\phi_{type4} := 32 \cdot deg$

$$K_{a\_coulomb} := \frac{\sin(\alpha + \phi_{type4})^2}{\sin(\alpha)^2 \cdot \sin(\alpha - \delta) \cdot \left(1 + \sqrt{\frac{\sin(\phi_{type4} + \delta) \cdot \sin(\phi_{type4} - \beta)}{\sin(\alpha - \delta) \cdot \sin(\beta + \alpha)}}\right)^2}$$

$K_{a\_coulomb} = 0.28$

Orientation of Coulomb Pa :

- In the case of gravity shaped walls and prefab walls - Pa is oriented δ degrees up from a perpendicular line to the backface.
- In the case of short heeled cantilever walls where the top of the wall interferes with the failure surface - Pa is oriented at an angle of 1/3 to 2/3 Φ to the normal of a vertical line extending up from the heel of the wall.

Bearing Resistance for Abutments, Wingwalls and Cast-in-Place Retaining Wall on Bedrock:

SERVICE LIMIT STATE

Presumptive Bearing Resistance for Service Limit State ONLY

Reference: AASHTO LRFD Bridge Design Specifications 6th Edition 2012
Table C10.6.2.6.1-1 Presumptive Bearing Resistances for Spread Footings at the Service Limit State Modified after US Department of Navy (1982)

For Broken Rock of any kind:

Type of Bearing Material: Weathered or broken rock of any kind

Consistency In Place: medium hard rock

Bearing Resistance: Ordinary Range (ksf) 16 to 24

Recommended Value of Use: 20 ksf

Resistance factor at the **service limit state** = 1.0 (LRFD Article 10.5.5.1)

$q_{factored\_bc} := 20 \cdot ksf$

Note: This bearing resistance is settlement limited (1 inch) and applies only at the service limit state.

STRENGTH LIMIT STATE

Determine Bearing Resistance using RMR Method

From AASHTO LRFD Bridge Design Specifications
Section 10.4.6.4 Rock Mass Strength

Bedrock is Granofels (metamorphic crystalline rock) which was "very poor to excellent" in quality.
Look at rock cores across both Canal and Bar Mills Bridges for a broader look
RQD ranged from 0 to 100%. (Average 42% - poor)

Determine RMR from Table 10.4.6.4-1 Geomechanics Classification of Rock Mass

From AASHTO - RMR is determined as the sum of the five relative ratings listed in Table 10.4.6.4-1

1. Strength of intact rock

From Standard Specifications for Highway Bridges 17th Edition - 2002
Table 4.4.8.1.2B uniaxial compressive strength for Granite = 300 to 7,000 ksf = 2,100 to 49,000 psi

Use: $q_u := 1500 \cdot ksf$ $q_u = 10417 \cdot psi$

From Table 10.4.6.4.-1:
For Uniaxial Compressive Strength = 1080 to 2160 ksf: Relative Rating = 7

2. Drill Core Quality

Bedrock RQD = Average 42% (poor) From Table 10.4.6.4.-1: RQD 25% to 50%: Relative Rating = 8

3. Spacing of joints

Assume Spacing of 2 inches to 1 foot From Table 10.4.6.4.-1: Relative Rating = 10

4. Condition of joints

Assume slightly rough surfaces <0.05 in, soft joint wall rock From Table 10.4.6.4.-1: Relative Rating = 12

5. Groundwater conditions

General Conditions = Water under moderate pressure From Table 10.4.6.4.-1: Relative Rating = 4

Raw RMR = 41

Adjustment to RMR for joint Orientations from Table 10.4.6.4-2

Assume Strike and Dip Orientations of Joints = Fair For Foundations: Rating = -7

Adjusted RMR = 34 $RMR := 34$

Determine Rock Mass Class from Adjusted RMR Rating

For Adjusted RMR = 34 From LRFD Table 10.4.6.4.-3: Class No. = IV - Poor Rock

Determine Rock Type from LRFD Table 10.4.6.4.-4

Rock Type E - Metamorphic Crystalline Rock

Determine Rock Property constants *m* and *s:*

Reference: The Hoek and Brown Failure Criterion - a 1988 Update,
15th Canadian Rock Mechanics Symposium

$m/m_i = \exp((RMR-100)/14)$ Eq 18 - for disturbed rock masses

where m_i = m for intact rock $m_i := 25$ From LRFD Table 10.4.6.4-4

$$m_{Epoor} := m_i \cdot \exp\left(\frac{RMR - 100}{14}\right) \qquad m_{Epoor} = 0.224$$

$s = \exp((RMR-100)/6)$ Eq 19 - for disturbed rock masses

$$s_{Epoor} := \exp\left(\frac{RMR - 100}{6}\right) \qquad s_{Epoor} = 0.00002$$

<u>Determine nominal and factored bearing resistance of Bedrock:</u>

Foundation Shape correction factor:

$C_{f1} := 1.0$ From Foundations on Rock, Wyllie, Table 5.4 pg 138

Uniaxial Compressive Strength - Granite

$$q_{uc} := \begin{pmatrix} 2100 \\ 10417 \\ 15000 \\ 20000 \end{pmatrix} \cdot psi$$

Middle and lower bounds from from Standard Specifications for Highway Bridges 17th Edition - 2002 Table 4.4.8.1.2B

Determine Nominal Bearing Resistance:

From Foundations on Rock, Wyllie, Table 5.4 pg 138

$$q_{nom} := C_{f1} \cdot \sqrt{s_{Epoor}} \cdot q_{uc} \cdot \left[1 + \sqrt{m_{Epoor} \cdot \left(s_{Epoor}^{\frac{-1}{2}}\right) + 1}\right] \qquad q_{nom} = \begin{pmatrix} 10 \\ 52 \\ 75 \\ 100 \end{pmatrix} \cdot ksf$$

Determine Factored Bearing Resistance at the Strength Limit State:

From Table 10.5.5.2.2-1 Resistance factor for footing on rock $\phi_b := 0.45$

The factored resistance $q_R = \phi_b \times q_n$ equation 10.6.3.1.1-1 AASHTO LRFD

$$q_R := \phi_b \cdot q_{nom} \qquad q_R = \begin{pmatrix} 5 \\ 23 \\ 34 \\ 45 \end{pmatrix} \cdot ksf$$

Recommend 23 ksf for Strength Limit State

Determine Factored Bearing Resistance at the Extreme Limit State:

Use a bearing resistance factor of 0.8 for Extreme Limit State for gravity and semigravity walls per LRFD Article C11.5.8. Use for piers for consistency with the theory of preventing collapse for the Extreme Event.

Resistance factor - $\phi_{bc} := 0.8$

$$q_{rEE} := \phi_{bc} \cdot q_{nom} \qquad q_{rEE} = \begin{pmatrix} 8 \\ 42 \\ 60 \\ 80 \end{pmatrix} \cdot ksf$$

For Gravity and Semigravity Walls

Recommend 42 ksf for Extreme Limit State

Abutment No. 1 Rock-Socketed Micropiles

References:
1) AASHTO LRFD Bridge Design Specifications 6th Edition 2012 (LRFD)
2) Standard Specifications for Highway Bridges 17th Edition - 2002
3) Micropile Design and Construction Reference Manual - FHWA-NHI-05-039 December 2005

Consider Micropile:

9.625 inch diameter, 0.472 in wall steel casing
8.0 inch minimum diameter drill hole
#11 (1.41 inch diameter min.) steel bar

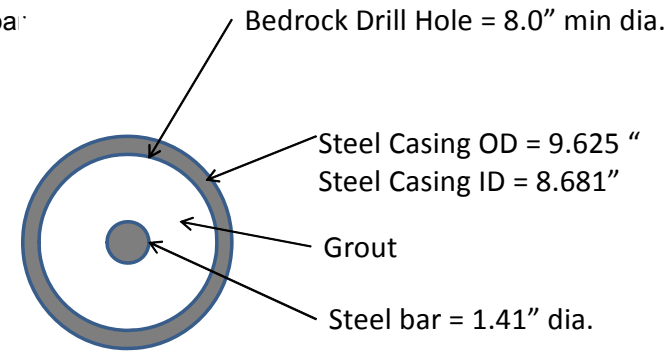

$dia_{casing} := 9.625 \cdot in$ $\quad wall_t := 0.472 \cdot in$

$dia_{hole} := 8.0 \cdot in$

$dia_{bar} := 1.41 \cdot in$

Area of 9.625 in dia steel casing:

Outside diameter of casing: $OD := 9.625 \cdot in$

Inside diameter of casing: $ID := dia_{casing} - 2 \cdot wall_t$ $\quad ID = 8.681 \cdot in$

$$A_{steel\_casing} := \pi \cdot \frac{OD^2}{4} - \pi \frac{ID^2}{4} \qquad A_{steel\_casing} = 13.57 \cdot in^2$$

Area of #11 steel bar:

$$dia_{bar} := 1.41in \qquad A_{bar} := \frac{\pi \cdot dia_{bar}^2}{4} \qquad A_{bar} = 1.56 \cdot in^2$$

Area of grout inside casing:

$$A_{grout\_upper} := \frac{\pi \cdot ID^2}{4} - A_{bar} \qquad A_{grout\_upper} = 57.63 \cdot in^2$$

Area of grout in drill hole:

$$A_{grout\_lower} := \frac{\pi \cdot dia_{hole}^2}{4} - A_{bar} \qquad A_{grout\_lower} = 48.7 \cdot in^2$$

Grout Compressive Strength: $f_c := 5 \cdot ksi$ minimum

Steel Bar Yield Strength: $f_{bar} := 60 \cdot ksi$ The plans will specify the use of 75 ksi steel. 60 ksi steel used in these calculations to be consistent with the structural design assumptions.

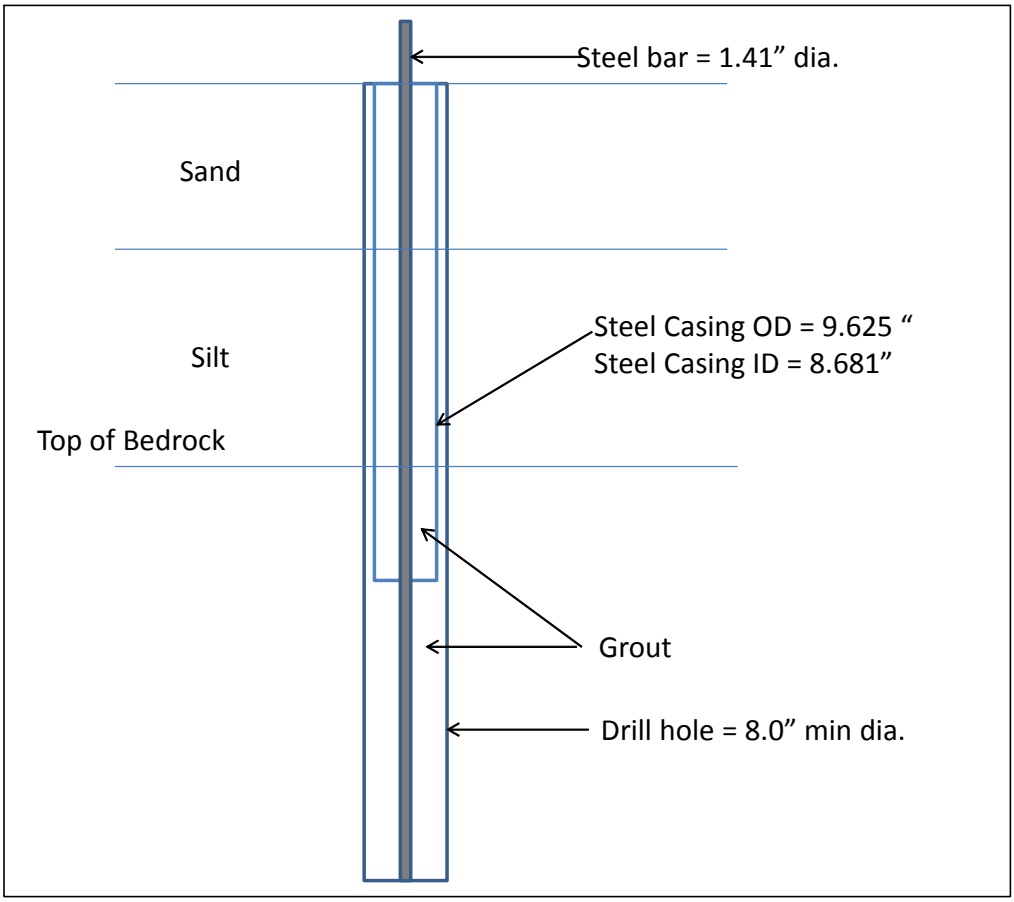

Geotechnical Axial Compressive Resistance of Micropile:

Use Micropile Type A3: Permanent casing in the upper shaft and a bar in the lower shaft

Factored resistance of a micropile:

$R_R = \phi_{qp} * R_p + \phi_{qs} * R_s$ — LRFD Eq. 10.9.3.5.1-1

$R_p = q_p * A_p$ — LRFD Eq. 10.9.3.5.1-2 — Nominal Tip Resistance

$R_s = q_s * A_s$ — LRFD Eq. 10.9.3.5.1-3 — Nominal Grout-to-Bedrock Bond Resistance

Strength Limit State:

Resistance factor for tip resistance: $\phi_{qp} := 0.5$ — LFRD Table 10.5.5.2.5-1

Resistance factor for side (Grout-to-Bedrock) resistance (presumptive values): $\phi_{qs} := 0.55$ — LFRD Table 10.5.5.2.5-1

Unit tip resistance: $q_p := 0 \cdot ksf$

$R_p := q_p \cdot A_{grout\_lower}$ $\quad R_p = 0 \cdot ksf$ — neglect tip resistance due to relatively small diameter, drill cuttings, strain incompatibility

Determine grout-to-ground bond resistance:

Rs = π * d_b * α_b * L_b LRFD Eq. 10.9.3.5.2-1

Diameter of micropile drill hole through bonded length: $d_b := 8.0 \cdot in$

Nominal micropile grout-to-bedrock bond strength: LFRD Table C10.9.3.5.2-1

Bedrock is Granofels - For a Type A Micropile
(Metamorphic, massive, non-foliated)

For Granite and Basalt: α_b = 28.8 - 87.7 ksf Use: $\alpha_b := 28.8 \cdot ksf$
For Slates and Hard Shales: α_b = 10.8 - 28.8 ksf

Micropile grout-to-bedrock bond length:

Look at several grout-to-bedrock bond lengths:

$$L_b := \begin{pmatrix} 10 \\ 12 \\ 14 \\ 16 \\ 18 \end{pmatrix} \cdot ft$$

$$R_s := \pi \cdot d_b \cdot \alpha_b \cdot L_b \qquad R_s = \begin{pmatrix} 603 \\ 724 \\ 844 \\ 965 \\ 1086 \end{pmatrix} \cdot kip$$

Nominal Grout-to-Bedrock Bond Resistance

Strength Limit State
Factored Axial Compression Geotechnical Resistance of Micropile:

$$R_R := \phi_{qp} \cdot R_p + \phi_{qs} \cdot R_s \qquad R_R = \begin{pmatrix} 332 \\ 398 \\ 464 \\ 531 \\ 597 \end{pmatrix} \cdot kip$$

for these grout-to-bedrock bond lengths: $L_b := \begin{pmatrix} 10 \\ 12 \\ 14 \\ 16 \\ 18 \end{pmatrix} \cdot ft$

Service and Extreme Limit States
Factored Axial Compression Geotechnical Resistance of Micropile:

$\phi_{se} := 1.0$

$$R_{Rse} := \phi_{se} \cdot R_p + \phi_{se} \cdot R_s \qquad R_{Rse} = \begin{pmatrix} 603 \\ 724 \\ 844 \\ 965 \\ 1086 \end{pmatrix} \cdot kip$$

for these grout-to-bedrock bond lengths: $L_b := \begin{pmatrix} 10 \\ 12 \\ 14 \\ 16 \\ 18 \end{pmatrix} \cdot ft$

Strength Limit State
Uplift Factored Geotechnical Resistance of Micropile:

$\phi_{up} := 0.55$ LRFD Table 10.5.5.2.5-2 - Presumptive Values

$R_{Rup\_str} := \phi_{up} \cdot R_p + \phi_{up} \cdot R_s$ $R_{Rup\_str} = \begin{pmatrix} 332 \\ 398 \\ 464 \\ 531 \\ 597 \end{pmatrix} \cdot kip$ for these grout-to-bedrock bond lengths: $L_b := \begin{pmatrix} 10 \\ 12 \\ 14 \\ 16 \\ 18 \end{pmatrix} \cdot ft$

Extreme Limit State
Uplift Factored Geotechnical Resistance of Micropile:

$\phi_{up\_ee} := 0.8$ LRFD Article 10.5.5.3.3

$R_{Rup\_ee} := \phi_{up\_ee} \cdot R_p + \phi_{up\_ee} \cdot R_s$ $R_{Rup\_ee} = \begin{pmatrix} 483 \\ 579 \\ 676 \\ 772 \\ 869 \end{pmatrix} \cdot kip$ for these grout-to-bedrock bond lengths: $L_b := \begin{pmatrix} 10 \\ 12 \\ 14 \\ 16 \\ 18 \end{pmatrix} \cdot ft$

Determine the axial compressive structural resistance for the micropile:

Factored axial compressive structural resistance:

$R_C = \phi_c * R_n$ LRFD Eq. 10.9.3.10.2-1

Look at both the cased and uncased portions of the micropile:

Factored structural resistance in the upper cased portion:

$R_{CC} = \phi_{cc} * R_n$ LRFD Eq. 10.9.3.10.2a-1

where $Rn = 0.85(0.85 * f_c * A_g + f_y * (A_b + A_c))$ LRFD Eq. 10.9.3.10.2a-2

$\phi_{cc} := 0.75$ LFRD Table 10.5.5.2.5-2

$f_c = 5 \cdot ksi$ compressive strength of grout

$A_{grout\_upper} = 57.63 \cdot in^2$ Area of grout in casing

$f_{c\_casing} := 80 \cdot ksi$ Yield strength of steel casing:

use minimum

$f_{c\_bar} := 60 \cdot ksi$ Yield strength of bar

$A_{bar} = 1.56 \cdot in^2$ Area of #11 steel bar

$A_{steel\_casing} = 13.572 \cdot in^2$ Area of steel casing

$$R_{CC} := \phi_{cc} \cdot \left[0.85\left[0.85 \cdot f_c \cdot A_{grout\_upper} + f_{c\_bar} \cdot \left(A_{bar} + A_{steel\_casing}\right)\right]\right]$$

$$R_{CC} = 735 \cdot kip$$

Factored structural resistance in the lower uncased portion:

$R_{CU} = \phi_{cu} * R_n$ LRFD Eq. 10.9.3.10.2b-1

where $Rn = 0.85(0.85 * f_c * A_g + f_y * A_b)$ LRFD Eq. 10.9.3.10.2b-2

$\phi_{cu} := 0.75$ LFRD Table 10.5.5.2.5-2

$f_c = 5 \cdot ksi$ compressive strength of grout

$A_{grout\_lower} = 48.7 \cdot in^2$ Area of grout in casing

$f_{c\_bar} := 60 \cdot ksi$ Yield strength of bar

$A_{bar} = 1.56 \cdot in^2$ Area of #11 steel bar

$$R_{CU} := \phi_{cu} \cdot \left[0.85\left(0.85 \cdot f_c \cdot A_{grout\_lower} + f_{c\_bar} \cdot A_{bar}\right)\right]$$

$$R_{CU} = 192 \cdot kip$$

Frost Protection:

Method 1 - MaineDOT Design Freezing Index (DFI) Map and Depth of Frost Penetration Table are in BDG Section 5.2.1.

From the Design Freezing Index Map:
Hollis, Maine
DFI = 1300 degree-days

From the lab testing: soils are coarse grained with a water content = ~10%

From Table 5-1 MaineDOT BDG for Design Freezing Index of 1300 and wc =10%
Frost Penetration = 73.1 inches

$Frost\_depth := 76.3in$ $\quad$ $Frost\_depth = 6.4 \cdot ft$

Method 2 - Check Frost Depth using Modberg Software

Closest Station is West Buxton

ModBerg Results

Project Location: West Buxton 2 NNW, Maine

Air Design Freezing Index	=	1492 F-days
N-Factor	=	0.80
Surface Design Freezing Index	=	1194 F-days
Mean Annual Temperature	=	43.9 deg F
Design Length of Freezing Season	=	132 days

Layer #:Type	t	w%	d	Cf	Cu	Kf	Ku	L
1-Coarse	69.2	10.0	120.0	26	32	1.7	1.5	1,728

t = Layer thickness, in inches.
w% = Moisture content, in percentage of dry density.
d = Dry density, in lbs/cubic ft.
Cf = Heat Capacity of frozen phase, in BTU/(cubic ft degree F).
Cu = Heat Capacity of thawed phase, in BTU/(cubic ft degree F).
Kf = Thermal conductivity in frozen phase, in BTU/(ft hr degree).
Ku = Thermal conductivity in thawed phase, in BTU/(ft hr degree).
L = Latent heat of fusion, in BTU / cubic ft.

****
Total Depth of Frost Penetration = 5.77 ft = 69.2 in.
****

$Frost\_depth_{modberg} := 69.2 \cdot in$

$Frost\_depth_{modberg} = 5.767 \cdot ft$ $\quad$ Use Frost Depth = 6.0 feet for design

Seismic:

BB-101					BB-102					BB-103					BB-EMR-104				
Depth	SPT N		di	di/N	Depth	SPT N		di	di/N	Depth	SPT N		di	di/N	Depth	SPT N		di	di/N
2	17	Fill	5	0.29	1	23	fill	5	0.22	1	7	Silt	5	0.71	1	13	Silt	5	0.38
6	10	Fill	5	0.50	6	15	fill	5	0.33	6	3	Silt	4.5	1.50	6	9	Sand	4.5	0.50
11	9	Fill	3.5	0.39	11	15	fill	1.5	0.10										
16	29	Sand	5	0.17		30	ftill	3.3	0.11										
	7	sand	5	0.71															
	7	Sand	4.5	0.64															
28	100	bedrock	72	0.72	14.8	100	bedrock	85.2	0.85	9.5	100	bedrock	90.5	0.91	9.5	100	bedrock	90.5	0.91
SUM			100	3.43				100	1.61	SUM			100	3.12				100	1.79
			di/di/N	29.13				di/di/N	62.01				di/di/N	32.06				di/di/N	55.88

Note: Weight of rod (WOR) and weight of hammer (WHO) values are taken as N=1.

SUM	Nav.	44.77

Conclusion: Site Class D - Site Class evaluated using the N values and thickness of soil above rock also including thickness of bedrock in the upper 100 feet

Conterminous 48 States
2007 AASHTO Bridge Design Guidelines
AASHTO Spectrum for 7% PE in 75 years
State - Maine
Zip Code - 04042
Zip Code Latitude = 43.635600
Zip Code Longitude = -070.620500
Site Class B
Data are based on a 0.05 deg grid spacing.

Period (sec)	Sa (g)	
0.0	0.096	PGA - Site Class B
0.2	0.188	Ss - Site Class B
1.0	0.046	S1 - Site Class B

Conterminous 48 States
2007 AASHTO Bridge Design Guidelines
Spectral Response Accelerations SDs and SD1
State - Maine
Zip Code - 04042
Zip Code Latitude = 43.635600
Zip Code Longitude = -070.620500
As = FpgaPGA, SDs = FaSs, and SD1 = FvS1
Site Class D - Fpga = 1.60, Fa = 1.60, Fv = 2.40
Data are based on a 0.05 deg grid spacing.

Period (sec)	Sa (g)	
0.0	0.154	As - Site Class D
0.2	0.301	SDs - Site Class D
1.0	0.111	SD1 - Site Class D

Seismic Design Parameters for
2007 AASHTO Seismic Design Guidelines

Purpose - The ground motion parameters obtained in this analysis are for use with the design procedures described in AASHTO Guidelines for the Seismic Design of Highway Bridges (2007). The user may calculate seismic design parameters and response spectra (both for period and displacement), for Site Class A through E.

Description - This program allows the user to obtain seismic design parameters for sites in the 50 states of the United States, Puerto Rico and the U.S. Virgin Islands. In most cases the user may perform an analysis for a site by specifying location by either latitude-longitude (recommended) or zip code. However, locations in Puerto and the Virgin Islands may only be specified by latitude-longitude.

Ground motion maps are included in PDF format. These maps may be opened using a map viewer that is part of the software package.

Data - The 2007 AASHTO maps are based on 5% in 50 year probabilistic data from the U.S. Geological Survey data sets for the following regions: 48 conterminous states (2002), Alaska (2006), Hawaii (1998), Puerto Rico and the Virgin Islands (2003). These were the most recent data available at the time of preparation of the AASHTO maps. The AASHTO maps are labelled with a probability of exceedance of 7% in 75 years which is approximately equal to the 5% in 50 year data.

Disclaimer - Correct application of the data obtained from the use of this program and/or maps is the responsibility of the user. This software is not a substitute for technical knowledge of seismic design and/or analysis.

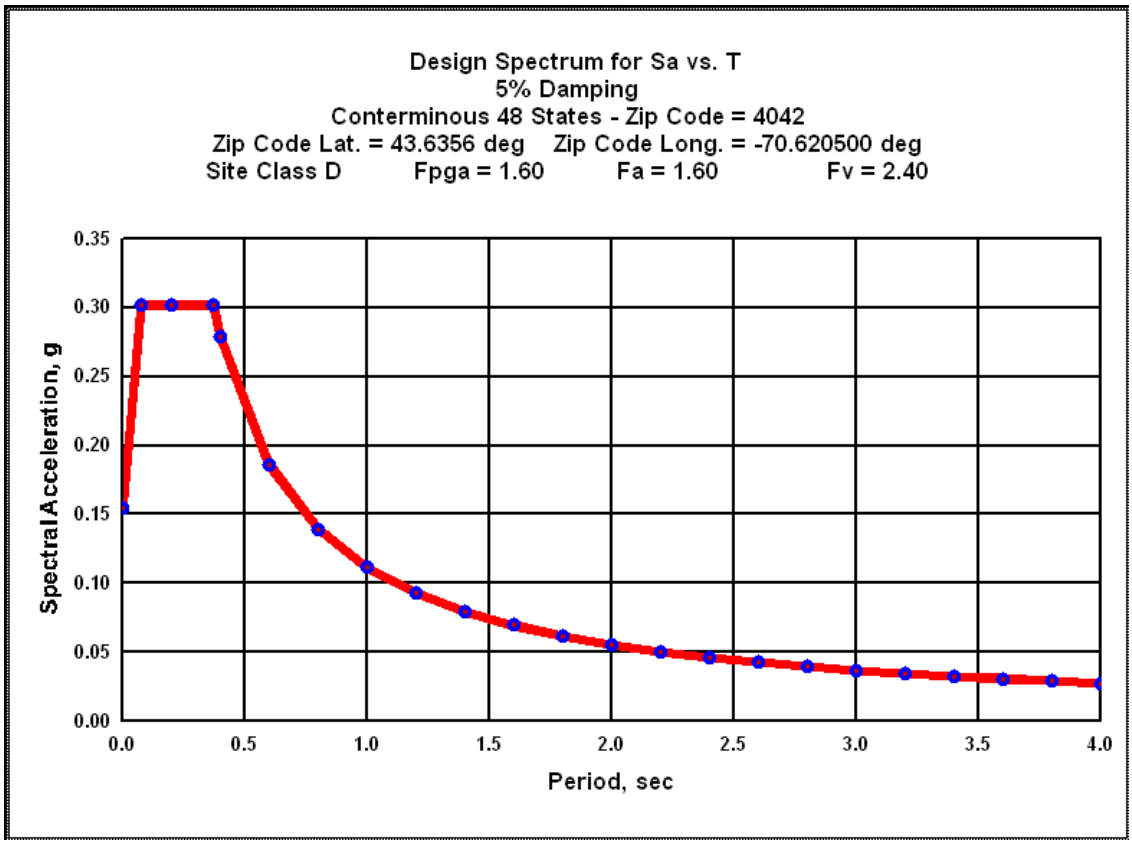

Appendix D

Special Provisions

SPECIAL PROVISION
SECTION 501- FOUNDATION PILES
MICROPILES

Amend Standard Specification Section 501 – Foundation Piles to include the following:

501.01 Description. This work shall consist of furnishing, constructing and load testing a micropile foundation as shown in the Plans and as specified herein. The micropile Contractor is responsible for furnishing all materials, products, accessories, tools, equipment, services, transportation, labor and supervision, and manufacturing techniques required for installation and load testing of micropiles and micropile top attachments for this project as shown on the Plans, approved submittals and specified herein.

The micropile Contractor is advised that existing canal and auxiliary spillway retaining walls are located in close proximity to the Work. Micropile construction is capable of producing vibrations and vertical and horizontal deformations that may cause damage to the existing canal and auxiliary spillway retaining walls. The micropile Contractor shall be responsible for any and all damage to the retaining walls that is caused by micropile construction. Vibration monitoring and movement monitoring will be completed during installation of micropiles by the Department as specified in Special Provision 501 - Vibration and Movement Monitoring and Control. Micropile installation shall not begin until the Contractor has confirmed with the Department that the retaining wall instrumentation (seismographs and deformation monitoring points (DMPs)) have been installed and initialized. In addition, threshold and limiting vibration and horizontal and vertical deformation values are included in Special Provision 501 – Vibration and Movement Monitoring and Control. The Work performed in conformance with Special Provision 501 – Vibration and Movement Monitoring and Control may restrict micropile construction practices and means and methods. The micropile Contractor shall consider these limitations in preparing their bid.

The micropile Contractor shall coordinate the work so the micropiles are safely constructed. The micropile Contractor shall perform the micropile construction and related excavation in accordance with the Plans and approved submittals.

The micropile Contractor shall select the micropile installation means and methods to prevent damage to the existing canal and auxiliary spillway retaining walls and confirm the estimated bedrock-grout bond value by load testing. The minimum micropile lengths and casing diameters are shown on the Plans. The micropile load capacities shall be verified by verification and proof load testing and must meet the load test Acceptance Criteria specified herein.

The micropile Contractor shall install micropiles using means and methods that prevent ground loss or densification that could result in settlement or vibration induced damage to the existing canal and auxiliary spillway retaining walls. The micropile Contractor is responsible for removing and/or advancing through all underground obstructions that may interfere with the installation of micropiles.

The micropile Contractor shall monitor all aspects of micropile construction and load testing. The micropile Contractor shall perform material conformance load testing as required. The Contractor shall not install or load test micropiles unless the Department is present to monitor the work.

501.011 Definitions. Definitions that apply within this Special Provision are:

Bond Breaker - A device, sleeve or special treatment placed over the steel reinforcement that will prevent load transfer to the soil over that length. A bond breaker also provides full lateral support of the micropile over the length of the bond breaker. Grout placed in contact with the soil using gravity pressure only will not be considered to constitute a bond breaker.

Bond Zone - The gravity grouted, pressure grouted, and/or post grouted length of a micropile that is bonded to the bedrock and transfers the applied loads to the surrounding bedrock.

Factored Design Load (FDL) - The factored load designed for a micropile. The factored design load is indicated in the Contract Documents.

Drill Casing - Steel pipe of flush joint type used in the drilling process to stabilize the drill hole.

Extended Length - An additional micropile length resulting from a requirement that the micropile capacity be achieved below a given elevation. Typically, extended lengths are prompted by a conflict with subsurface elements (e.g., underground structure, utilities, etc.) or unreliable soil strata. Bond breakers may be required.

Micropile - A small diameter, bonded, cast-in-place friction pile formed by removing material using non-vibratory and non-displacement methods to create a cased open, cylindrical hole in the ground, which is subsequently filled with grout and steel reinforcement.

Mill Secondary - Mill rejected American Petroleum Institute (API) casing, a.k.a. “Mill Rejects,” “Structural Grade,” “Limited Service,” or “Minimum Test Pipe”.

Non-production pile - Non-production piles are micropiles that are not incorporated into the substructure.

Permanent Casing - A steel casing installed in the upper portion of a micropile to increase the micropile's moment capacity and lateral capacity against horizontal loads.

Positive circulation or flush - A method of progressing and cleaning out a hole for a micropile wherein drilling fluid is injected into the hole and returns upward along the outside of the drill casing.

Production micropile - A micropile which will be incorporated into the structure's foundation.

Recirculation - A method of handling drilling fluid where the fluid coming back out of the hole is captured in a pan and reused.

Reverse circulation - A method of cleaning the inside of the drill casing. Drilling fluid is circulated down through the drill rods and returns upwards through the inside of the drill casing to flush the drill casing clean.

Tremie grouting - A method used to place grout in a wet hole. A grout tube is placed to the bottom

of the drill hole. While keeping the grout tube opening submerged in the grout, grout is pumped into the hole, causing the drilling fluid to be displaced upward.

501.012 Micropile Contractor's Experience Requirements and Submittal. The micropile Contractor shall be fully experienced in all aspects of micropile construction and load testing. The micropile Contractor shall have proof of successfully constructed micropiles using non-displacement methods immediately adjacent to vibration sensitive structures at a minimum of three (3) projects in the previous five (5) years of similar scope and size. At least four (4) weeks prior to the start of installation of the micropiles, the micropile Contractor shall provide proof of completing a minimum of three (3) projects on which the micropile Contractor has successfully installed micropiles immediately adjacent to vibration sensitive structures. A brief description of each project and a reference shall be included for each project listed. As a minimum, the reference shall include an individual's name and current phone number.

At least two (2) weeks prior to the start of installation of the micropiles, the micropile Contractor shall submit a list identifying the engineer, drill rig operators and on-site supervisors who will be assigned to the project. The proposed on-site Supervisor for this work shall have supervised the successful installation of micropiles immediately adjacent to vibration sensitive structures on at least two (2) projects in the past two (2) years. The list shall contain a summary of each individual's experience and it shall be complete enough for the Resident to determine whether or not each individual has satisfied the qualifications. Drill rig operators shall have a minimum of one (1) year experience in construction of micropile foundations. Load testers shall have a minimum of one (1) year experience in load testing of micropile foundations.

The micropile Contractor shall assign an engineer to supervise the work with at least three (3) years of experience in the construction and load testing of micropiles. The use of consultants or manufacturer's representatives does not satisfy the requirements of this section. Drill operators and on-site supervisors shall have a minimum of one (1) year experience installing micropiles with the micropile Contractor's organization.

The Resident shall approve or reject the micropile Contractor's qualifications and staff within ten (10) working days after receipt of the submission. Work shall not be started on any micropile installation nor any materials ordered until approval of the micropile Contractor's qualifications is given. The Resident may suspend the micropile work if the micropile Contractor substitutes unqualified personnel for approved personnel; the micropile Contractor shall be fully liable for additional costs resulting from the suspension of work and no adjustment in contract time resulting from the suspension of work will be allowed.

501.013 Submittals. The micropile Contractor will not be allowed to begin work until all related submittal requirements are satisfied and found acceptable to the Resident and until baseline vibration and vertical and horizontal deformation measurements are taken by the Department along the existing canal and auxiliary spillway retaining walls. At least four (4) weeks prior to the start of installation of the micropiles the micropile Contractor shall prepare and submit the method-of-installation information outlined below and a micropile Quality Control Plan (QCP) to the Resident for approval. The Resident will require a minimum of 21 working days to review the initial submittal and ten (10) working days to review each subsequent revision as per Section 105.7. Approval of the installation method by the Resident does not constitute a guarantee of

acceptable micropile installations. Acceptable installations are the responsibility of the micropile Contractor.

Include in the submittal:

1. List and description of proposed equipment to be used for micropile installation, including drilling equipment, cleaning method, checking cleanliness of drill holes, centralizers, installing micropiles, tremie grouting, tensioning, load testing and load transfer.
2. Details of step-by-step description of proposed procedures for micropile installation including, but not limited to, installation sequence and the approximate time required for each sequence step.
3. Procedures for advancing through boulders and other obstructions.
4. Procedures for containment of drilling fluid and spoils, and disposal of spoils.
5. Procedures for preventing loss of ground and densification of in-situ soils, which could result in damage to the existing canal and auxiliary spillway retaining walls.
6. Procedures for limiting vibrations and horizontal and vertical deformations of the existing canal and auxiliary spillway retaining walls should the threshold and limiting values specified in Special Provision 501 – Vibration and Movement Monitoring and Control be approached or exceeded.
7. Procedures for removal of high-density corrugated polyethylene tubing and factory grout in advance and in preparation of anchor plate and nut placement.
8. Shop drawings for all structural steel, including the micropile components, corrosion protection system, micropile top attachment and bond length details to the Resident for review. Provide information on the length of the casing sections to be used, as dictated by the length of the drill mast and by the available overhead clearance, and the resulting location of joints. Shop drawings shall include a plan showing micropile designations and test micropile locations.
9. Procedures and equipment for placing grout.
    a. Prepare the mix design for the grout and obtain documentation from an independent laboratory showing the following:
        i. The mix design conforms to the submitted mix and meets the required strength.
        ii. The compressive strength of the mix, tested at 3, 7, 14, and 28 days.
        iii. The specific gravity of the mix.
    b. Identify a method for monitoring quality control of the mix. At a minimum, the micropile Contractor shall use a Baroid Mud Balance per American Petroleum Institute (API) Recommended Practice (RP) 13B-1: Standard Procedure for Testing Water Based Drilling Fluids, to check the specific gravity of the mixed grout prior to placement of the grout into each micropile in addition to 3 cubes per day or per batch, whichever is greater.
    c. Provide pressure gages capable of measuring the actual grout pressures used and such that actual pressure readings are within the middle third of the gage.
10. If proposed, details of post-grouting equipment and procedures, including the method, sequence of operations and equipment required.
11. Layout drawings showing the proposed sequence of micropile installation. Coordinate this sequence with the proposed phasing and scheduling. Provide material

certifications for the micropile components. The drawings shall provide details and dimensions of all micropile components. Shop drawings detailing the monitoring system for measuring movements during verification and proof load tests; detailed procedures for load testing and load transfer to micropiles including method for verifying lock-off loads; detail procedures for installation of micropiles, including method of drilling, installation, and grouting.

Control the procedures and operations so as to prevent mining, damage or settlement to adjacent structures (specifically the existing canal and auxiliary spillway retaining walls), tunnels, utilities or adjacent ground. If any mining, damage or settlement occurs, halt operations. Provide a written plan to the Resident for review with procedures to avoid reoccurrence. Resume work only after the Resident has approved the plan in writing. Repair all damage and settlement at no additional cost to the Department. In instances where vibration and/or horizontal and vertical deformation threshold or limiting values on the existing canal and auxiliary spillway retaining wall are approached or are exceeded the actions specified in Special Provision 501 – Vibration and Movement Monitoring and Control (specifically Section 501.013) shall be followed. Delays resulting from exceedances and the plan preparation and review process shall be the sole responsibility of the Contractor, at no additional cost to the Department.

The micropile Contractor shall submit certified mill test reports, properly marked, for the reinforcing steel, and coupon test results for API N-80 pipe casing, as the materials are delivered, to the Resident for record purposes. The ultimate strength, yield strength, elongation, and material properties composition shall be included. For API steel pipe used as permanent casing, the micropile Contractor shall submit a minimum of two representative coupon tests or mill certifications (if available) on each load delivered to the project.

The micropile Contractor shall submit the grout mix designs, details of all materials to be used in the grout, trial batch reports, certified lab test data, and the procedure for mixing and placing the grout to the Resident for approval. This submittal shall include certified test results and trial batch reports verifying the acceptability of the proposed mix designs.

The micropile Contractor shall submit detailed plans for the method proposed for load testing the micropiles to the Resident for review and acceptance prior to beginning load tests. This shall include all necessary drawings and details to clearly describe the load test method and equipment proposed and shall bear the seal of a Professional Engineer registered in the State of Maine.

The micropile Contractor shall submit to the Resident calibration reports for each test jack, pressure gauge, master pressure gauge and load cell to be used. The calibration tests shall have been performed by an independent testing laboratory and tests shall have been performed within sixty (60) days of the date submitted. The Resident shall approve or reject the calibration data within five (5) working days after receipt of the data. Testing shall not commence until the Resident has approved the jack, pressure gauge and master pressure gauge calibrations.

Micropile installation records shall be submitted to the Resident within 24 hours after each micropile installation is completed. At a minimum the records shall include: micropile drilling, duration and observations; description of soil and bedrock encountered; rate of advancement; micropile inclination; approximate final tip elevation; cut-off elevation; nominal resistance;

description of unusual behavior and/or conditions; deviations from planned parameters; grout volumes pumped; micropile materials and dimensions; micropile location; inspector name; drill method; drill rig operator.

Work shall not begin until the appropriate submittals have been received, reviewed, and accepted by the Resident and until baseline vibration and horizontal and vertical deformation measurements are taken by the Department along the existing canal and auxiliary spillway retaining walls. The micropile Contractor shall allow the Resident up to two (2) weeks to review, comment upon and return the submittal package after a complete set has been received. Note that any additional time required due to incomplete or unacceptable submittals shall not be cause for delay or impact claims. All costs associated with incomplete or unacceptable submittals shall be the responsibility of the micropile Contractor.

The micropile Contractor shall submit to the Resident within thirty (30) calendar days after completion of the micropile work a report containing:

1. As-built drawings showing the locations of the micropiles and the micropiles length.
2. Steel manufacturer's mill test reports for the steel micropile components incorporated in the installation.
3. Detailed drilling records including depth to bedrock quality.
4. Grouting records indicating the cement type, and quantity injected.
5. Micropile load test results and graphs.

501.02 Materials. For all steel remaining as a permanent part of the work, all Buy America provisions shall apply.

Admixture for Grout - Admixtures shall conform to the requirements of ASTM C494 or AASHTO M194. Expansive admixtures shall only be added to the grout used for filling sealed encapsulations and anchorage covers. Admixture shall be compatible with the grout and mixed in accordance with the manufacturer’s recommendations. Their use will only be permitted after field tests on fluid and set grout properties. Admixtures containing chlorides are not permitted. Accelerators are not permitted. Admixtures that control bleed, improve flowability, reduce water content and retard set may be used in the grout, subject to the review and acceptance of the Resident.

Bar Tendon Hex Nuts and Couplers - Bar Tendon Hex Nuts and Couplers shall conform to ASTM A108 and develop the ultimate tensile strength of the bars without evidence of any failure.

Cement - All cement shall be Portland cement conforming to ASTM C150/AASHTO M85, Type II and shall be the product of one manufacturer. If the brand or type of cement is changed during the project, additional grout mix tests shall be conducted to ensure consistency of quality and performance.

Centralizers and Spacers - Centralizers and spacers shall be fabricated from schedule 40 PVC pipe or tube, steel, or material non-detrimental to the reinforcing steel. Wood shall not be used. Centralizers and spacers shall be securely attached to the reinforcement; sized to position the

reinforcement within 3/8 inch of plan location form center of micropile; sized to allow grout tremie pipe insertion to the bottom of the drill hole; and sized to allow grout to freely flow up the drill hole and casing without misalignment of the reinforcement.

Encapsulation - Double corrosion protection shall be fabricated using high-density, corrugated polyethylene tubing conforming to the requirement of ASTM D3350/AASHTO M252 with nominal wall thickness of 0.31 inch (0.8 mm). The inside annulus between the reinforcing bars and the encapsulating tube shall be a minimum of 0.197 inch (5 mm) and be fully grouted with non-shrink grout. Grouting shall be performed during fabrication by the manufacturer. Field grouting of corrosion protection will not be allowed.

Fine Aggregate - If sand-cement is used, sand shall conform to ASTM C144/AASHTO M45.

Grout - Neat cement or sand/cement mixture with a minimum 3-day compressive strength of 2,750 psi and a minimum 28-day compressive strength of 5000 psi per ASTM T106/ASTM C109. Limit water-soluble chloride-ion content in hardened concrete to 0.15 percent by weight of cement.

Grout Protection - Provide a minimum 1-inch grout cover over bars and ½ inch grout cover over couplers.

Permanent Steel Casing/Pipe Used As Reinforcement - Steel casing for micropiles shall have the minimum outside diameter shown on the approved Plans and shall conform to API 5CT N80 or ASTM A252 Grade 3 with a minimum yield strength (Fy) of 80 ksi, with the exception that spiral welded pipe shall not be allowed. Lap welded seams are not acceptable. Mill secondaries cannot be used for reinforcement. The steel shall be a Prequalified Base Metal from the AWS D1.1 Structural Welded Code - Steel.

Splices shall conform to the requirements of ASTM A148/A148M Grade 725-585, (Grade 105-85). Threaded casing joints shall develop at least the required compressive, tensile, and/or bending strength.

The casing shall be flush joint and the pipe joint shall be completely shouldered and with no stripped threads.

The manufacturer or fabricator of steel pipe piling shall furnish a certificate of compliance stating that the piling being supplied conforms to these specifications. The certificate of compliance shall include test reports for tensile and chemical tests. Samples for testing shall be taken from the base metal, steel or coil or from the manufactured or fabricated piling. The certificate of compliance shall be in English units.

Plates and Shapes - Structural steel plates and shapes for micropile tip attachment shall conform to ASTM A 572 Grade 50 (AASHTO M183)

Reinforcing Steel - Reinforcement steel shall be continuously threaded bar, Grade 75 ksi, conforming to ASTM A615, as manufactured by DSI or approved equal. When a bearing plate and nut are required to be threaded onto the top end of the reinforcing bars for micropile top to

footing anchorage, the threading may be continuous spiral deformed ribbing provided by the bar deformations or may be cut into the reinforcing bar. If threads are cut into a reinforcing bar, the next larger bar number designation from that shown on the Plans shall be provided at no additional cost.

Water - Water used in the grout mix shall conform to AASHTO T26 and shall be potable, clean and free from substances that may be injurious to cement and steel.

501.04 Construction Requirements. Progress all micropiles using steel drill casing. Install the permanent casing prior to or in conjunction with the micropile drillhole advancement. If replacement micropiles are needed because installed micropiles are unacceptable, location of the replacement micropile(s) shall be approved by the Resident. All installation techniques shall be determined and scheduled such that there will be no interconnection or damage to previously installed micropiles or damage to the existing canal and auxiliary spillway retaining walls. It is the Contractor's sole responsibility to prevent detrimental vibrations, horizontal and vertical deformations and damage to the existing canal and auxiliary spillway retaining walls. Any damage to the existing canal and auxiliary spillway retaining walls as a result of the micropile Contractor's Work shall be repaired at no additional cost to the Department.

Tolerances - Install the top of the permanent casing to the elevation indicated in the Contract Documents. Install the permanent casing so that the center of each casing does not vary from the plan location by more than 3 inches. Micropile-hole alignment of vertical micropiles shall be within 2% of design alignment. Micropile-hole alignment of micropiles inclined up to 1:6 shall be within 4% of design alignment. Micropile-hole alignment of micropiles inclined greater than 1:6 shall be within 7% of design alignment. Top elevation of the micropile shall be within plus 1 inch or minus 2 inches of the design vertical elevation. Centerline of reinforcing steel shall not be more than ¾ inch from centerline of piling.

Threshold/Limiting Values – Micropile construction shall produce vibrations and horizontal and vertical deformations on/of the existing canal and auxiliary spillway retaining walls less than the threshold and limiting values provided in Special Provision 501 – Vibration Movement and Monitoring Control Section 501.013.

Equipment Location Limitations – Equipment and material stockpiles used to construct the micropile foundation shall be located no closer than 15 ft from the back face (landside) of the existing canal and auxiliary spillway retaining walls to avoid loading the retaining walls.

Drilling, Soil Removal, and Permanent Casing Installation - The drilling equipment and methods shall be suitable for drilling through the conditions to be encountered, with minimal disturbance to these conditions or any overlying or adjacent structures (specifically the existing canal and auxiliary spillway retaining walls) or services. The drilling equipment shall be capable of installing micropiles to a depth and size shown on the Plans and to a depth of twenty (20) percent of the micropile length beyond the tip depths shown in the Contract Documents. Drill so that the micropile is not moved out of horizontal alignment or out of specified inclination. All micropile drillholes shall be constructed using drill casing from ground surface into bedrock per the requirements shown on the Plans. Casing shall be firmly seated into rock. Open/unsupported drillholes will not be permitted. The drillhole must be constructed to the

defined nominal diameter, full length, prior to placing grout and reinforcement. Do not drill or flush ahead of the drill casing by more than 6 inches at any time during micropile installation. Perform drilling and excavation in such a manner as to prevent the collapse of the hole. Use of bentonite slurry is not permitted. Use of polymer slurry to remove cuttings from the cased hole must be approved by the Resident. Install micropiles so that the permanent casing is tight against the surrounding soil.

If obstructions are encountered during drilling for a micropile, progress through them by means of coring or a tricone roller bit. Use of drop type impact hammers and blasting are not permitted. Use of a down-the-hole hammer shall be approved by the Resident.

Control the procedures and operations so as to prevent mining, damage or settlement to adjacent structures (specifically the existing canal and auxiliary spillway retaining walls), tunnels, utilities or adjacent ground. If any mining, damage or settlement occurs, halt operations. Provide a written plan to the Resident for review with procedures to avoid reoccurrence. Resume work only after the Resident has approved the plan in writing. Repair all damage and settlement at no additional cost to the Department. In instances where vibration and/or horizontal and vertical deformation threshold or limiting values on the existing canal and auxiliary spillway retaining wall are approached or are exceeded the actions specified in Special Provision 501 – Vibration and Movement Monitoring and Control (specifically Section 501.04) shall be followed. Delays resulting from exceedances, and the plan preparation and review process shall be the sole responsibility of the Contractor, at no additional cost to the Department.

Control the procedures and operations so as to prevent the soil at the bottom of the hole from flowing into the hole at all times during installation and cleaning out. Monitor the rate of fluid flow used to progress the holes.

Control drilling fluid and dispose of spoil in accordance with the approved procedure.

Do not progress a hole, pressure grout, or post-grout, within a radius of five (5) pile diameters or five (5) feet, whichever is greater, of a micropile until the grout for that micropile has set for 24 hours or longer if a retarder is used. The Resident will determine the wait time if a retarder is used based on the of the grout testing.

All installation techniques shall be determined and scheduled such that there will be no interconnection or damage to micropiles in which grout has not achieved final set.

Micropile Splices - Micropile splices shall be constructed to develop the required factored design strength of the micropile cross section. Lengths of pipe/casing to be spliced shall be secured in proper alignment and in such a manner that no eccentricity between the axis of the two lengths spliced or angle between them results.

Reinforcement, Centralizers, and Post Grout Tube Placement - Reinforcement shall be placed prior to tremie grouting. The reinforcement surface shall be free of all deleterious substances such as soil, mud, grease or oil that might contaminate the grout or coat the reinforcement and impair bond. Cutting of reinforcing bars with torches is not permitted.

Centralizers and spacers (if used) shall be sized to position the reinforcement within 3/4 inches of plan location from the center of the micropile; sized to allow grout tremie pipe insertion to the bottom of the drill hole; and sized to allow grout to freely flow up the drill hole and casing and between adjacent reinforcing bars. Centralizers, spaced not to exceed 10 feet, must be used to center the reinforcement for its entire length. The uppermost and lower most centralizers shall be located a maximum of 5 feet from the ends of the micropile. Securely attach the centralizers to withstand installation stresses.

The micropile Contractor shall check micropile top elevations and adjust all installed micropiles to the planned elevations.

Do not drop, but lower the steel reinforcement to its specified location in the hole. If a post grout tube is used, attach it to the steel reinforcement prior to lowering it. Partially inserted reinforcing bars shall not be driven or forced into the hole. The micropile Contractor shall redrill and reinsert steel when necessary to facilitate inserting at no additional cost to the Department. There will be no interconnection or damage to micropiles in which the grout has not achieved final set.

Threaded pipe casing joints shall not be used with 2 feet of the bottom of the pile cap.

Grout Placement - Fill annular space between the permanent casing and the micropile with grout meeting the requirements of the approved mix design. The micropile Contractor shall provide calibrated systems and equipment to measure the grout quality (including, at a minimum, compressive strength according to AASHTO T106/ASTM C109 and grout density), quantity, and pumping pressure during the grouting operations. Micropiles shall be grouted the same day the load transfer bond length is drilled.

After drilling, the hole shall be flushed with water and/or air to remove drill cuttings and/or other loose debris to the satisfaction of the Resident. The micropile Contractor shall provide a stable, homogenous neat cement grout or a sand cement grout with a minimum 28-day unconfined compressive strength of 5000 psi. The grout shall not contain lumps or any other evidence of poor or incomplete mixing. Admixtures, if used, shall be mixed in accordance with manufacturer's recommendations. The grouting equipment shall be sized to enable the grout to be pumped in one continuous operation. The grout should be kept in constant agitation prior to pumping. Fill annular space between the permanent casing and the micropile with the grout meeting the requirements of the approved mix design. Grout shall be placed within one (1) hour or less after mixing or within the time recommended by the manufacturer if admixtures are used, and shall be installed without significant interruption. If significant interruption occurs, the micropile Contractor shall replace the micropile or install a new replacement micropile at a location approved by the Resident at no additional cost to the Department. Grout not placed within the allowed time will be rejected.

Provide quality control of the mix by monitoring grout quality. Measure grout consistency by determining grout density per API Recommended Practice (RP) 13B-1 by the Baroid Mud Balance Test at a frequency, of at least one test per micropile, and provide the information to the Resident.

The grout shall be injected from the lowest point of the drill hole by means of a tremie pipe until clean, pure grout flows from the top of the micropile. The grout may be pumped through grout tubes, hollow stem augers or drill rods. Subsequent to tremie grouting, all grouting operations shall ensure complete continuity of the grout column. The use of compressed air to directly pressurize the fluid grout is not permissible. The entire micropile shall be grouted to the design cut-off level. Make provisions for checking the grout level in place at the end of each stage of grouting. Record the initial volume of grout required to fill the hole. Record grouting pressure and volume of grout being pumped into the micropile during pressure grouting. Upon completion, maintain the grout level at or above the micropile cut off elevation until the grout has set.

Upon completion of grouting, the grout tube may remain in the hole, but it shall be filled with grout.

Locate the grout volume measuring gages at the micropile installation site so that they are accessible and legible to the Resident.

Grout within the micropiles shall be allowed to attain the minimum 28-day unconfined compressive strength prior to load testing. Grout within the micropiles shall be allowed to attain the minimum design strength prior to being loaded.

Grout Testing - The Resident will perform quality assurance of the mix in accordance with Standard Specification Section 106. During production micropile grout shall be tested by the micropile Contractor for compressive strength in accordance with AASHTO T106/ASTM C109 at a frequency of no less than one set of three (3) 2-inch grout cubes each day of operation or per every ten (10) micropiles whichever occurs more frequently. The compressive strength shall be the average of the three (3) cubes tested.

Micropile Acceptance Criteria -

1. Micropile meets Construction Tolerance criteria.
2. Micropile was installed in accordance with the approved submittal.
3. Micropile is not damaged.
4. Micropile was installed using the same methods as the accepted test pile.

Unacceptable Micropiles - Unacceptable micropiles are micropiles which do not meet the Acceptance Criteria outlined above.

In the event that a Micropile is identified as unacceptable, the micropile Contractor shall submit to the Resident a written plan of remedial action showing how to correct the problem and prevent its reoccurrence. The micropile Contractor shall repair, augment, or replace the unacceptable micropile in accordance with the approved remedial plan at no additional cost to the Department. No repair shall be permitted until the written plan is approved by the Resident.

<u>501.041 Verification Load Testing.</u> One successful, pre-production verification axial load test shall be conducted on a sacrificial, plumb micropile installed within 50 feet of the proposed micropile locations at a location approved by the Resident. Verification load tests shall verify that the Contractor's installed micropile meets the required tension load capacity and the load

test acceptance criteria. The verification micropile(s) shall be installed and prior to production micropile installation. The drilling and grouting methods, pipe/casing and other reinforcement details, and depth of embedment for the successful verification test micropile shall identical to the subsequent production micropile installation except where approved otherwise by the Resident. The verification load test will be conducted in tension. The verification micropile shall be loaded to 150% of the factored design load. The verification load testing shall be completed in the presence of the Department.

Micropile verification load testing shall be in general conformance with ASTM D-3689 (tension load test) except as modified herein. The micropile Contractor shall provide load testing equipment with a movement-measuring device with a sensitivity of 0.001 inches of displacement. Testing equipment shall include two (2) dial gauges, dial gauge support, jack and pressure gauge, electronic load cell and reference beam. A leveling plate shall be attached to the surface of the test pile and the jack shall be set in position with the load centered on the pile. The hydraulic jack and pressure gauge shall be calibrated by an independent testing laboratory as a unit with the pressure gauge graded to allow 10 kip increments.

The micropile Contractor shall position the jack at the beginning of the load test such that the unloading and repositioning of the jack during the load test will not be required. An Alignment Load (AL) may be applied to the micropile prior to setting the movement recording devices. The AL shall be no more than 0.04 times the Factored Design Load (FDL). Dial gauges shall be zeroed at the first setting of the AL.

The micropile Contractor shall perform the sacrificial verification micropile load test by incrementally loading the micropile in accordance with the following schedule and recording the micropile head movement at each step:

Load Steps for Verification Load Testing

AL = Alignment Load FDL = Factored Design Load		
	LOAD	HOLD TIME
1	AL(0.04 FDL)	-
2	0.075 FDL	4 minutes
3	0.15 FDL	4 minutes
4	0.225 FDL	4 minutes
5	0.30 FDL	4 minutes
6	0.375 FDL	4 minutes
7	AL(0.04 FDL)	1 minute
8	0.15 FDL	1 minute
9	0.30 FDL	1 minute
10	0.375 FDL	1 minute
11	0.45 FDL	4 minutes
12	0.525 FDL	4 minutes
13	0.60 FDL	4 minutes
14	0.675 FDL	4 minutes
15	0.75 FDL	4 minutes
16	AL(0.04 FDL)	1 minute
17	0.30 FDL	1 minute
18	0.60 FDL	1 minute
19	0.675 FDL	1 minute
20	0.75 FDL	1 minute
21	0.825 FDL	4 minutes
22	0.90 FDL	4 minutes
23	0.975 FDL	60 minute (Creep Test Load Hold)
24	AL(0.04 FDL)	1 minute
25	0.30 FDL	1 minute
26	0.60 FDL	1 minute
27	0.90 FDL	1 minute
28	0.975 FDL	1 minute
29	1.05 FDL	4 minutes
30	1.125 FDL	4 minutes
31	1.2 FDL	4 minutes
32	1.275 FDL	4 minutes
33	1.35 FDL	4 minutes
34	1.425 FDL	4 minutes
35	1.5 FDL	4 minutes
36	1.2 FDL	4 minutes
37	0.90 FDL	4 minutes
38	0.60 FDL	4 minutes
39	0.30 FDL	4 minutes
40	AL (0.04 FDL)	15 minutes

Micropile top movement shall be measured at each load increment. Micropile movement during the creep test shall be measured and recorded at 1, 2, 3, 4, 5, 6, 10, 20, 30, 50, and 60 minutes.

The Acceptance Criteria for micropile verification load tests shall be:

1. The micropile shall sustain the axial compression design load (0.75 FDL) in tension with no more than 0.33-inch total vertical movement at the top of the micropile as measured relative to the top of the micropile prior to the start of load testing. If an alignment load is used, then the allowable movement will be reduced by multiplying by a factor of [(0.75 FDL-AL)/0.75FDL].
2. Test micropiles shall have a creep rate at the end of the 0.975 FDL increments which is not greater than 0.04 inches/log cycle time from 1 to 10 minutes or 0.08 inches/log cycle time from 6 to 60 minutes and has a linear or decreasing creep rate throughout the creep load hold period.
3. Failure does not occur by the 1.5 FDL test load. Failure is defined as a slope of the load versus defection curve (at end of increment) exceeding 0.025 inch/kip.

If the micropile load test fails to meet the design requirements, the cause(s) shall be established, and the micropile design and/or installation methods shall be modified. These modifications include, but are not limited to, installing replacement micropiles, modifying the installation methods, increasing the bond length, regrouting via pre-placed re-grout tubes, or changing the micropile type. Any modification which requires changes to the structure shall have prior review and acceptance of the Resident. The cause for any modifications of design or construction procedures shall be decided in order to appropriately determine any additional cost implications. Any modifications of construction procedures shall be at the micropile Contractor's expense. Subsequent verification micropiles shall be installed at locations approved by the Resident using the approved modified construction procedures and retested, as detailed previously in this Subsection. If the verification test results meet the acceptance criteria, the Resident shall review and approve the modified design and/or installation methods proposed by the Contractor prior to beginning production micropile installation.

The micropile Contractor shall minimize disturbance to the ground surface when placing and removing blocking. The micropile Contractor shall also avoid loading the existing canal and auxiliary spillway retaining walls during any and all load testing.

The micropile Contractor will provide the Resident a written report confirming micropile details and construction procedures within 7 working days after the completion of the pre-production load tests. This written confirmation will either confirm the micropile construction methods initially proposed and bond lengths as shown in the drawings for micropiles or propose modifications based upon the results of the verification load tests.

At the completion of verification load testing, test micropiles shall be removed down to the elevation specified by the Resident.

<u>501.042 Proof Load Testing.</u> The micropile Contractor shall perform proof load tests a minimum of five (5) production micropiles. The micropiles to be load tested will be selected by the Resident. Proof load tests shall be conducted in tension and shall be conducted in the presence of the Department.
Axial micropile load tests shall be made by loading the micropiles in accordance with the following schedule and recording the micropile head movement at each step:

Load Steps for Proof Load Testing

AL = Alignment Load FDL = Factored Design Load		
	LOAD	HOLD TIME
1	AL(0.04 FDL)	4 minute
2	0.10 FDL	4 minute
3	0.20 FDL	4 minute
4	0.30 FDL	4 minute
5	0.40 FDL	4 minute
6	0.50 FDL	4 minutes
7	0.60 FDL	4 minutes
8	0.70 FDL	4 minutes
9	0.80 FDL	4 minutes
10	0.90 FDL	4 minutes
11	1.00 FDL	60 minutes (Creep Test)
12	0.75 FDL	4 minutes
13	0.50 FDL	4 minutes
14	0.25 FDL	4 minutes
15	AL (0.04 FDL)	4 minutes

The Acceptance Criteria for micropile proof load tests shall be:

1. The micropile shall sustain the design loads (0.75 FDL) with no more than 0.125 inch of total vertical movement at the top of the micropile as measured relative to the micropile prior to the start of load testing. If an AL is used, then the allowable movement will be reduced by multiplying by a factor of [(0.75 FDL-AL)/0.75 FDL].
2. Test micropiles shall have a creep rate at the end of the 1.00 FDL increment that is not greater than 0.04 inch/log cycle time from 1 to 10 minutes or 0.08 inch/log cycle time from 6 to 60 minutes and has a linear or decreasing creep rate.
3. Failure does not occur by 1.00 FDL test load.

If a production micropile that is proof load tested fails to meet the Acceptance Criteria, modifications shall be made to the design, the construction procedures or both. These modifications include, but are not limited to, installing replacement micropiles, incorporating micropiles of reduced load capacities, modifying the installation methods, increasing the bond length, or changing the micropile type. Any modification which requires changes to the structure shall have prior review and acceptance of the Resident. Any modifications of construction procedures shall be at the micropile Contractor's expense. The Resident may elect to proof test an additional micropile in consideration of a failed proof test and/or the circumstances of the modification.

501.05 Method of Measurement.

All work related to mobilization and demobilization of any equipment or temporary access and/or working platforms required to satisfactorily complete all micropile installation and load testing shall be measured on a lump sum basis.

Micropiles will be measured as the number of accepted micropiles installed including up to one (1) successful verification load test micropile. This measurement shall not include micropiles damaged prior to completion of the work unless remedied to the satisfaction of the Resident. This measurement shall not include verification micropiles that did not meet the acceptance criteria as outlined herein.

501.06 Basis of Payment.

Drilling Equipment Mobilization. The unit bid price for Drilling Equipment Mobilization - Micropiles shall be considered full compensation for providing all labor, equipment, and materials needed to complete micropile installation, all labor, equipment, and materials needed to perform verification and proof load tests and submit calibration reports as specified.

Micropiles. The unit bid price shall include cost of the micropiles (installed and accepted), development and execution of an approved QCP, furnishing all labor, materials and equipment necessary to complete the work, conduct verification and proof load tests and submit reports. All costs to repair all damage and settlement to adjacent ground and structures shall be incidental to the pay item for micropiles and at no additional cost to the Department. All costs to repair, augment and/or replace all rejected micropiles shall be incidental to the pay item for micropiles and at no additional cost to the Department. Micropiles that fail to meet the Acceptance Criteria will be rejected and no payment will be made for these micropiles. Separate payment will not be made for advancing through boulders and obstructions including all incidental costs under the pay item for micropiles. The micropile Contractor is responsible for estimating the grout take. There will be no extra payment for grout overruns. All costs associated with micropile installation include full compensation for any temporary or permanent casings, augers, grouting operations, drilling equipment, or specialty tools needed to micropiles shall be incidental to the contract pay item for micropiles.

Payment will be made under:

Pay Item:	Pay Unit
501.804 Drilling Equipment Mobilization - Micropiles	Lump Sum
501.220 Micropiles	Each

SPECIAL PROVISION
SECTION 501 - FOUNDATION PILES
Vibration and Movement Monitoring and Control

Amend Standard Specification Section 501 - Foundation Piles to include the following:

501.01 Description. The activities that are required for the construction of this project are capable of producing vibrations and vertical and horizontal deformations that may cause damage to the existing canal and auxiliary spillway retaining walls. The magnitude of the vibrations and deformations are dependent on the Contractor means and methods of construction. The Contractor is advised that existing structures (specifically the canal and auxiliary spillway retaining walls) are located in close proximity to the proposed work and that construction activities shall be conducted so as to preclude damage.

The Department will provide all equipment, materials, labor and services to install, monitor, report on, protect, maintain and replace if necessary, multiple vibration and movement monitoring points along portions of the existing canal and auxiliary spillway retaining walls during bridge construction and demolition activities. The Department will compare vibration and deformation monitoring results to the limiting levels set in this Special Provision. If limiting values are exceeded, the Resident will immediately report the occurrence to the Contractor and the work will be stopped until the situation is corrected. In the event of an exceedance, the Resident will perform a visual inspection of the canal and auxiliary spillway retaining walls and the Contractor shall evaluate the situation and submit a proposed revision to the construction means and methods as outlined in this Section.

The Contractor shall be responsible for all damage to the existing canal and auxiliary spillway retaining walls that is caused by construction activities. The Work performed in conformance with these specifications may restrict construction practices and means and methods. The Contractor shall consider these limitations in preparing their bid.

501.011 Purpose. The purpose of the vibration and movement monitoring program is to provide baseline data prior to construction as well as real-time data during bridge construction and demolition for comparison with specified limiting values to prevent damage to the existing canal and auxiliary spillway retaining walls. Construction means and methods that result in vibration levels or deformations in excess of the limiting values specified herein will not be allowed and shall be revised by the Contractor such that limiting values are not exceeded.

501.012 Execution.

A. The Department will perform pre- and post-construction surveys/inspections of the existing canal and auxiliary spillway retaining walls to identify any existing damage prior to construction as well as any new damage that may have been caused as a result of bridge construction and demolition activities. The pre- and post-construction surveys/inspections will be made available to the Contractor, if requested. The Contractor may elect to conduct supplemental pre- and post-construction surveys/inspections at no additional cost to the Department.

B. The Department will provide all equipment, materials, labor and services necessary to install, monitor, report on, protect, maintain and replace if necessary, multiple seismographs (for vibration monitoring) and deformation monitoring points (DMPs) along portions of the existing canal and auxiliary spillway retaining walls prior to and during bridge construction and demolition activities.

C. The number, type, location and monitoring duration and frequency will be determined by the Department. A general plan showing the locations and designations of seismographs and DMPs will be provided to the Contractor by the Department. The general plan will be available during the pre-construction meeting.

D. Vibration and horizontal and vertical deformation monitoring of the existing canal and auxiliary spillway retaining walls will be completed by the Department on a schedule and frequency based on the location and extent of bridge construction and demolition activities. The Contractor shall cooperate in every way with the Department to accomplish vibration and horizontal and vertical deformation monitoring of the retaining walls. The data collected by the Department will be made available to the Contractor in a timely manner, if requested. The Contractor shall provide and maintain safe means of access to all instrumentation locations as required for data collection for the duration of the project.

E. The Contractor shall exercise caution during the progress of Work and shall prevent damage to all instrumentation devices (i.e., seismographs, DMPs). Any damage or loss of function caused by the Contractor's operations, or by any other cause, to new or existing instrumentation shall be repaired or the equipment replaced at no additional cost to the Department within two (2) working days of seismographs and/or DMPs becoming inoperable due to damage caused by the Contractor.

F. The duration and frequency of instrumentation readings by the Department may be extended or increased, as determined by the Resident, if limiting values are approached or exceeded during the Work, or during periods of significant activity near the monitoring locations. Monitoring duration and frequency may also be shortened or reduced by the Department, if deemed appropriate by the Resident. At a minimum, the Department plans to conduct vibration monitoring throughout the duration of the project, including during new bridge construction and existing bridge demolition. The Department also plans to conduct optical monitoring of the DMPs when construction/demolition activities are on-going within 200 ft of the existing canal and auxiliary spillway retaining walls.

501.013 Limiting Values. Limiting values for vibration and horizontal and vertical deformations for the existing canal and auxiliary spillway retaining walls are summarized below. The criteria presented below are intended to establish a minimum basis for the Contractor's construction procedures, and in no way relieve the Contractor of its sole responsibility for preventing detrimental vibrations, movements and damage to the existing canal and auxiliary spillway retaining walls.

Instrumentation Type	Limiting Value
Seismograph (vibration monitoring of canal and auxiliary spillway retaining walls)	0.2 in./sec. between 1 and 10 Hz and increasing linearly (on a logarithmic scale) from 0.2 in./sec. at 10 Hz to 0.9 in./sec. at 100 Hz.
Deformation Monitoring Points (horizontal and vertical deformation of canal and auxiliary spillway retaining walls)	¼ in. (threshold) ½ in. (limiting)

If the threshold values are exceeded and/or limiting values are being approached, the Resident will notify the Contractor and the Contractor shall take all actions necessary to prevent exceedances of the limiting values, including but not limited to the following:

A. Meet with the Resident within 2 hours of notification to discuss the status of Work activities, observations made, and need for mitigating measures to prevent exceedances of limiting values if it is judged by the Resident to be attributed to the Work of the Contractor.

B. If the Resident judges that mitigating measures are needed or if limiting values are exceeded the Contractor shall:

   i. Terminate further work activity determined to be causing the exceedances.
   ii. Develop revised construction means and methods that the Contractor believes will result in acceptable vibration and deformation of the existing canal and auxiliary spillway retaining walls. The Contractor shall submit the plan in written form to the Department for review. The Contractor shall revise the plan if requested by the Department until a mutually agreed upon plan is developed. Delays resulting from exceedances and the plan preparation and review process shall be the sole responsibility of the Contractor, at no additional cost to the Department.
   iii. Implement revised construction means and methods of performing activities that will allow Work to be completed without exceedances.

C. The Department may install additional instrumentation and increase monitoring frequency if necessary.

Mitigating measures are subject to adjustment by the Department based on observed conditions and instrumentation monitoring data collected during bridge construction and demolition activities. Temporary work stoppages and execution of construction tasks using alternate means and methods necessary due to limiting value exceedances shall be completed by the Contractor at no additional cost to the Department.

501.05 Method of Measurement. This item will not be measured.

501.06 Basis of Payment. No payment shall be made for temporary work stoppages or additional work completed as a result of vibration and horizontal and vertical monitoring point limiting value exceedances.

Appendix E

Bar Mills Hydroelectric Facility Impacts Analysis
Summary Memorandum

Haley & Aldrich, Inc.
75 Washington Avenue
Suite 203
Portland, ME 04101

Tel: 207.482.4600
Fax: 207.775.7666
HaleyAldrich.com

MEMORANDUM

31 October 2014
File No. 40900-000

TO: Maine Department of Transportation
Kate Maguire, P.E.

C: Maine Department of Transportation: Jeff Folsom, Mark Parlin
Kleinschmidt Associates: Kevin Cooley, Eric Turgeon

FROM: Haley & Aldrich, Inc.
Bryan C. Steinert, P.E., Wayne A. Chadbourne, P.E.

SUBJECT: Bar Mills Hydroelectric Facility Impacts Analysis
Replacement of Bar Mills and Canal Bridges
MaineDOT WIN 19280.00 and 19281.00
Route 4A - Buxton and Hollis, Maine

This memorandum summarizes our assessment of potential impacts to the Brookfield Renewable Power (Brookfield) Bar Mills Hydroelectric Facility (Facility) as a result of the design and construction of the Bar Mills and Canal replacement bridges by the Maine Department of Transportation (MaineDOT) and also presents recommendations regarding mitigation measures necessary to minimize damage to Facility structures. The impacts assessment and development of recommendations as summarized herein was completed by Haley & Aldrich, Inc. (Haley & Aldrich) in partnership with Kleinschmidt Associates (Kleinschmidt).

This memorandum was prepared in accordance with our proposal, dated 1 May 2014 and with the provisions of our General Consultant Agreement (GCA) with the MaineDOT, No. CT20110614000000006492.

Please note that a more detailed report was prepared by Haley & Aldrich and Kleinschmidt and submitted to Brookfield on 18 August 2014 for subsequent submission to the Federal Energy Regulatory Commission (FERC) for review. We understand that as a public agency, MaineDOT was not able to sign a confidentiality agreement with Brookfield that requires conformance with the FERC guidelines for protecting Critical Energy Infrastructure Information (CEII). As a result, and considering Haley & Aldrich executed a confidentiality agreement with Brookfield on 13 May 2014, we have prepared this brief summary memorandum which only includes general information and purposely excludes specific Facility information and some details of our evaluations.

BACKGROUND

The project consists of replacing the existing Bar Mills and Canal Bridges, which carry Route 4A over the Saco River and Saco River Canal, downstream of the Bar Mills Dam and Saco River Canal headworks structure in Buxton and Hollis, Maine. Additional details of the Facility and the existing and proposed bridges are provided in the following sections of this memorandum.

Bar Mills Hydroelectric Facility

The Facility is an existing hydroelectric power generating station currently owned and operated by Brookfield. The Facility contains several structures including a concrete dam that spans the Saco River (Bar Mills Dam), a masonry block headworks structure located at the entrance to the Saco River Canal, which is immediately adjacent and parallel with the dam and conveys flow to the powerhouse, a downstream fish passage facility, a powerhouse, and appurtenant equipment.

The west side of the Saco River Canal (left side looking downstream) is formed by the Saco River Canal retaining wall (canal retaining wall), which is composed of various masonry block and/or concrete overflow and non-overflow sections. The non-overflow portion of the canal retaining wall consists of dry-laid masonry blocks and begins at the downstream end of the auxiliary spillway and extends approximately 35 ft downstream. Based on our discussions with you, we understand that this portion of the canal retaining wall was, at one point, part of an abutment supporting a historic bridge that spanned the Saco River Canal prior to construction of the existing Canal Bridge. The canal retaining wall transitions from dry-laid masonry to an approximately 12-in. thick cast-in-place concrete (CIP) corewall in the vicinity of the upstream end of the proposed Canal Bridge Abutment 2 and extends a considerable distance downstream, beyond the existing Canal Bridge. The top of this portion of the canal retaining wall is relatively flat and was constructed at approximately El. 155 (ft, NAVD 88 vertical datum) as judged based on site topographic information provided by MaineDOT. In addition, a dry-laid masonry block wingwall is present and serves as the downstream boundary of the auxiliary spillway, running perpendicular to the canal retaining wall. The masonry block wingwall directs Saco River Canal overflow back into the Saco River.

Existing and Proposed MaineDOT Bridges

Originally constructed in 1936 and 1937 as a result of flood damage to the historic bridges, the existing Bar Mills and Canal Bridges consists of a three-span and a single-span steel truss bridges, respectively. Based on our review of the historic bridge plans provided by MaineDOT, we understand that the Bar Mills Bridge is an approximate 350-ft long structure supported on two abutments and two piers which spans the Saco River. The Canal Bridge is an approximate 140-ft long single-span structure supported on two abutments and spans the Saco River Canal. Substructures currently supporting the two bridges consist of spread footings bearing directly on bedrock with the exception of Canal Bridge Abutment 2, which is supported by timber piles. Canal Bridge Abutment 2 is located approximately 10 ft east of the CIP concrete corewall portion of the Canal Wall.

As described in MaineDOT's Preliminary Design Report (PDR) dated April 2014, the proposed replacement bridges will be constructed on a roughly parallel alignment located upstream of the existing bridges and downstream of the Bar Mills Dam and masonry block Canal headworks structure. The proposed Canal Bridge alignment is generally located along the alignment of the historic bridge that was present at the site prior to the existing bridge.

The proposed replacement bridges consist of 115-ft long single (Canal Bridge) and 490-ft long three span (Bar Mills Bridge) structures, respectively. Similar to the existing Canal Bridge Abutment 2, the planned location of the proposed Canal Bridge Abutment 2 is within approximately 15 ft of the existing CIP concrete corewall portion of the canal retaining wall. In addition, a wingwall/retaining wall will be constructed on the upstream side of the proposed bridge/roadway alignment which will connect Canal Bridge Abutment 2 to Bar Mills Bridge Abutment 1 in order to retain earth fill required to meet proposed site grades. Based on our discussions with MaineDOT and similar to the existing Bar Mills and Canal Bridges, it is our understanding that the proposed replacement bridges will be supported by spread footings bearing directly on bedrock with the exception of Canal Bridge Abutment 2, which will be supported by rock-socketed micropiles.

PURPOSE

The primary focus of our work was to complete a global review of historic, existing and proposed Facility and/or MaineDOT infrastructure as well as existing site conditions (including subsurface information), identify potential impacts to existing Facility infrastructure and develop recommendations/guidelines for MaineDOT's use during final design and construction such that when followed, will limit impacts as required by the FERC and Brookfield. More specifically, our work was focused on the small man-made island that separates the Saco River Canal and Saco River where the proposed Canal Bridge Abutment 2, Bar Mills Bridge Abutment 1 and wingwall/retaining wall will be constructed in the immediate vicinity of the existing canal retaining wall (dry-laid masonry block and CIP concrete corewall portions) and auxiliary spillway retaining wall.

DOCUMENT REVIEW AND DATA COLLECTION

The recommended existing canal and auxiliary spillway retaining walls impact mitigation measures summarized herein were developed in large part based on our review of existing documentation and field collection of data as discussed more specifically, below.

- Brookfield File Review – Obtained and reviewed copies of available historical drawings, photographs, calculations, reports and work orders relevant to the Facility and more specifically the canal and auxiliary spillway retaining walls.

- MaineDOT File Review – Obtained and reviewed copies of existing Canal and Bar Mills Bridge drawings, the Preliminary Design Report (PDR) prepared by MaineDOT for the proposed replacement bridges, logs of test borings completed for the proposed replacement bridges and proposed bridge drawings.

- Field Observations –Visited the site on multiple occasions to observe existing conditions, to confirm information found in files obtained from Brookfield and MaineDOT, and to gather additional field measurements to confirm information shown in the files. Notes and sketches were prepared along with photographic documentation. In general, field observations were limited to what was visible above the water level in the Saco River Canal at the time of the site visits.

- Supplemental Subsurface Investigation – Upon completion of the file review it became apparent that additional subsurface information was required to more accurately assess the conditions behind and below the Canal Wall. As a result, one test boring was drilled through the existing Canal Bridge, generally located between Abutment 2 and the existing CIP concrete corewall portion of the Canal Wall and downstream of the proposed Canal Bridge alignment.

HYDROELECTRIC FACILITY IMPACTS ASSESSMENT

It is our opinion that, based on the document review and data collection, that the potential for negative impacts to the Facility is negligible in all respects with the exception of the construction of the proposed Canal Bridge Abutment 2, Bar Mills Bridge Abutment 1 and wingwall/retaining wall will be constructed in the immediate vicinity of the existing canal (dry-laid masonry block and CIP concrete corewall portions) and auxiliary spillway retaining walls. Therefore the subsequent discussions of specific impacts will be focused on this area.

- Impacts During Construction - It is our opinion that the potential for adverse impacts on the canal and auxiliary spillway retaining walls is likely to be greatest during construction of the proposed Canal Bridge Abutment 2, Bar Mills Bridge Abutment 1 and wingwall/retaining wall. Excavation of material from behind the walls could create unbalanced lateral loads for which the walls were likely not designed to resist. In addition, excessive removal of material could shorten seepage paths causing flow from the Saco River Canal into the foundation excavations. The construction vehicles necessary for excavation and deep foundation installation/construction could impose potentially damaging surcharge loads on the walls. Finally, installation of drilled and/or driven deep foundation elements or compaction of backfill materials could impart vibrations and damaging frequencies on the retaining walls or to the bearing material beneath the retaining walls.

- Impacts After Construction – Given the plan location of the proposed Canal Bridge Abutment 2 relative to the canal retaining wall, it is our opinion that the lateral bridge abutment loads provided by MaineDOT could add additional load to the wall for which the wall was likely not designed to resist. In addition, changes to site grading in the immediate vicinity of or directing stormwater runoff towards the walls could lead to adverse impacts.

RECOMMENDED IMPACT MITIGATION MEASURES

The recommended canal and auxiliary spillway retaining walls impact mitigation measures summarized herein are based on our review of documents provided by Brookfield and MaineDOT, our observations and measurements taken during multiple site visits, the subsurface conditions encountered in recent test borings drilled by MaineDOT and interpreted from historic drawings provided by Brookfield, our understanding of the proposed bridge construction, our collective engineering experience on similar types of projects and comments made by FERC on our 18 August 2014 report.

The recommended canal and auxiliary spillway retaining walls impact mitigation measures summarized below are intended to prevent damage to existing Facility as a result of the design and construction of the Canal and Bar Mills replacement bridges.

- The proposed replacement bridge structure will be designed such that it is independent of existing hydro project infrastructure (existing canal and auxiliary spillway retaining walls) and does not rely on said infrastructure for load resistance nor does the proposed structure impart additional loads onto the infrastructure (existing canal and auxiliary spillway retaining walls).

- The proposed replacement bridge will be designed to accommodate future maintenance, repair and/or replacement of the existing walls by Brookfield, specifically within the limits of the proposed bridge. Based on recent discussions with you, we understand that the micropiles used to support Canal Bridge Abutment 2 have been designed for an unsupported length extending from the proposed bottom of the abutment pile cap (El. 148) down to the top of bedrock. Therefore, the micropiles do not rely on lateral resistance provided by the soil present between the Canal Bridge Abutment 2 and the existing canal retaining wall. Haley & Aldrich and Kleinschmidt will recommend to Brookfield that they notify MaineDOT prior to conducting future work on the walls.

- Micropiles used to support Canal Bridge Abutment 2 will be designed by MaineDOT and installed by the Contractor considering the recommendations stated herein. Micropiles will be constructed such that the specified limiting criteria (see below) will be met thereby reducing potential for disturbance to canal and auxiliary spillway retaining wall foundation soils and damage to the structure itself. Temporary or permanent steel casing will be used during foundation construction, which will be seated into bedrock and reduce the likelihood of ground loss in the vicinity of the walls. Micropile construction means/methods will follow the requirements of a Special Provision, which will be developed by MaineDOT and Haley & Aldrich (see below).

- The selection of Canal Bridge Abutment 1 foundation type, the design of the preferred foundation type and the means/methods used by the Contractor to construct the preferred foundation type will consider the subsurface conditions, temporary excavation support and dewatering needs based on a normal canal water level equal to approximately El. 148.5 and other appropriate canal water levels during storm events.

- Excavation will not be allowed within 5 ft of the existing canal wall. Clearing within this area will be completed by hand. Excavation/grubbing can be completed using mechanical equipment provided that the depth is limited to approximately 6 in. or less and the equipment is located no less than 15 ft from the walls (see requirement below). Any grubbing required within 1 ft of the wall will be completed by hand. Beyond the 5-foot zone excavation will be completed no steeper than 1.5H:1V or as stipulated by OSHA based on the soil and groundwater conditions encountered. These requirements are based on a preliminary bottom of abutment elevation equal to El. 148 and an assumption that the Contractor will excavate no more than 1 ft below this level (El. 147) to construct the foundations. If excavation below El. 147 is required we recommend that MaineDOT notify Brookfield, Kleinschmidt Associates and Haley & Aldrich. Excavation limitations will be re-evaluated to determine whether modifications to the excavation requirements can be made without impacting the walls. We recommend that MaineDOT make these requirements clear by including appropriate notes on the Contract Drawings and including Special Provisions.

- Excavation required to construct foundations for the proposed retaining wall nearest the auxiliary spillway wall will not be allowed within 5 ft of the wall. Any clearing required within this area can be completed by hand. We do not anticipate the need to excavate/grub in this area. Beyond the 5-ft zone excavation sideslopes will be constructed no steeper than 1.5H:1V or as stipulated by OSHA based on the soil and groundwater conditions encountered. We recommend that MaineDOT make these requirements clear by including appropriate notes on the Contract Drawings and including Special Provisions.

- Blasting will be prohibited on the project. We recommend that the Contract Documents (plans and specifications) include language making it clear to prospective bidding Contractors that blasting will not be permitted. We also recommend that Haley & Aldrich and Kleinschmidt be given the opportunity to review the language prior to finalizing the Contract Documents.

- Finished site grades in the immediate vicinity of the existing canal and auxiliary spillway retaining walls should match current site grades to avoid additional loading on the walls with the exception of a small, locally depressed area near the interface between the granite block and cast-in-place concrete portions of the canal retaining walls. It is our opinion that the ground surface elevation in this area was at some point similar to the existing grade in adjacent areas (higher). Therefore, it is our opinion that fill may be placed in this area up to approximately El. 152 (3 ft below the top of the canal wall) without causing additional loading of the wall beyond what is has been subjected to historically and will roughly match existing grades along the remaining length of the canal retaining walls.

- Surface water runoff during and after construction should directed away from the existing canal and auxiliary spillway retaining walls to avoid surficial erosion (loss of material) or ponding of water that could impart additional load onto the Walls. We recommend that MaineDOT make this requirement clear by including appropriate notes on the Contract Drawings and including Special Provisions.

- Construction equipment, material stockpiles or other items capable of inducing surcharge loads onto the existing canal and auxiliary spillway walls should not be located within 15 ft of the back face (landside) of the walls. We recommend that MaineDOT make this requirement clear by including appropriate notes on the Contract Drawings and including Special Provisions.

- Special Provisions (specifications) will be developed by MaineDOT and/or Haley & Aldrich establishing threshold and limiting criteria and requiring instrumentation be installed on the existing canal and auxiliary spillway retaining walls by the Contractor. MaineDOT will provide a draft version of related Special Provisions to Haley & Aldrich for review for conformance with the recommendations included herein prior to finalizing. The following instrumentation will be installed and monitored by MaineDOT regularly prior to and during excavation, rock removal (if necessary by means of hoe-ramming only), foundation installation activities and existing bridge demolition:

  - Seismographs – setup at multiple locations along the existing canal and auxiliary spillway retaining walls to measure vibrations and associated frequencies. Seismographs will be installed prior to construction and read periodically to obtain baseline readings from which subsequent readings will be compared. Peak Particle Velocity (PPV) shall not exceed 0.2 in./sec. between 1 and 10 Hz and increasing linearly (on a logarithmic scale) from 0.2 in./sec. at 10 Hz to 0.9 in./sec. at 100 Hz.

  - Monitoring Points – setup at multiple locations along the existing canal and auxiliary spillway retaining walls to measure horizontal and vertical deformations. Monitoring points will be installed prior to construction and read periodically to obtain baseline readings from which subsequent reading will be compared. Vertical and horizontal deformations should not exceed the threshold and limiting values of ¼-in. and ½-in., respectively.

  The Special Provision developed by MaineDOT and/or Haley & Aldrich will require the Contractor to comply with the specified threshold and limiting criteria during excavation, rock removal (if necessary) and foundation installation and bridge demolition activities in the vicinity of the auxiliary spillway and canal retaining walls. In instances when threshold and limiting criteria are exceeded, MaineDOT, as outlined in the Special Provision, will require the Contractor to stop work to visually inspect the walls for signs of distress and make adjustments to their means/methods as necessary to comply with the specified threshold and limiting criteria until the criteria have been met. MaineDOT will inform Brookfield if any of the threshold or limiting values have been exceeded, the results of the visual inspection, suggested modifications to the Contractor's means/methods (if any) and verification that construction work in the vicinity of the Walls has proceeded such that the limiting criteria are being met. The Special Provision for the project will include submittal requirements which will require the Contractor to submit a revised work plan in the instance an exceedance occurs.

As requested by Brookfield, MaineDOT has agreed to allow Haley & Aldrich an opportunity to review the Special Provision prior to finalization of the Contract Documents for the project. As communicated to Brookfield in our 22 October 2014 memorandum summarizing responses to FERC comments on our 18 August 2014 report we have respectfully requested an expedited review of the Contract Documents concurrent with the bidding and any comments generated as a result of the review be communicated during the three-week bid period so that any recommendations that affect the scope of work can be incorporated into addenda and issued to prospective Contractors during the three-week bid period.

Kleinschmidt and Haley & Aldrich conducted conference calls on 14 August and 14 October 2014 with representatives of MaineDOT to review in detail the specific recommendations included herein. After the conference calls, Haley & Aldrich emailed a summary of the recommendations to MaineDOT. MaineDOT reviewed the recommendations and responded that they will proceed with the project based on the recommendations outlined in the emails.

CLOSURE

We trust this information meets your present needs. Please do not hesitate to contact us if you have any questions, comments or concerns regarding the information presented herein.

G:\PROJECTS\40900 - bar mills-canal bridge\2014_1103_HAI_19280+19281 Impacts Summary Mem_F.docx