STATE OF MAINE
DEPARTMENT OF TRANSPORTATION

SPECIFICATIONS

Design: Load and Resistance Factor Design per AASHTO LRFD Bridge Design Specifications, Sixth Edition 2012 and Interim Specifications 2013.

DESIGN LOADING

Live Load ..... HL - 93 Modified

TRAFFIC DATA

Current (2012) AADT	3790
Future (2032) AADT	4550
DHV - % of AADT	11
Design Hour Volume	501
Heavy Trucks (% of AADT)	7
Heavy Trucks (% of DHV)	4
Directional Distribution (% of DHV)	77
18 kip Equivalent P 2.0	184
18 kip Equivalent P 2.5	176
Design Speed (mph)	30

HYDROLOGIC DATA

Drainage Area	1594 sq mi
Design Discharge (Q50)	32,344 cfs
Check Discharge (Q100)	36,369 cfs

	Canal Bridge	Bar Mills Bridge
Headwater Elevation (Q1.1)	150.52 ft	134.08 ft
Headwater Elevation (Q10)	150.52 ft	139.87 ft
Headwater Elevation (Q25)	150.52 ft	141.14 ft
Headwater Elevation (Q50)	150.52 ft	142.05 ft
Headwater Elevation (Q100)	150.57 ft	142.91 ft
Discharge Velocity (Q1.1)	N/A	3.63 fps
Discharge Velocity (Q10)	N/A	4.57 fps
Discharge Velocity (Q25)	N/A	4.79 fps
Discharge Velocity (Q50)	N/A	4.94 fps
Discharge Velocity (Q100)	N/A	5.09 fps

MATERIALS

Concrete:
- Curbs, Sidewalks & Transition Barriers ..... Class "LP"
- Seals ..... Class "A" or "S"
- Fill ..... "Fill"
- All Other ..... Class "A"

Reinforcing Steel ..... ASTM A 615/A 615M, Grade 60

Structural Steel (Canal Bridge):
- All Material (except as noted) .... ASTM A 709, Grade 50 or 50W (Coated)
- High Strength Bolts ..... ASTM A 325, Type 1

Structural Steel (Bar Mills Bridge):
- All Material (except as noted) ..... ASTM A 709, Grade 50W (Unpainted)
- High Strength Bolts ..... ASTM A 325, Type 3

BASIC DESIGN STRESSES

Concrete	f 'c = 4,350 psi
Reinforcing Steel	f y = 60,000 psi
Structural Steel:	
ASTM A 709, Grade 50 or 50W	F y = 50,000 psi
ASTM A 709, Grade 36	F y = 36,000 psi
ASTM A 325	F µ = 120,000 psi

HOLLIS, YORK COUNTY
CANAL BRIDGE
OVER
SACO RIVER CANAL
PROJECT NO. BR-1928(100)X
PROJECT LENGTH 0.062 mi.
BRIDGE NO. 1525

HOLLIS & BUXTON, YORK CTY.
BAR MILLS BRIDGE
OVER
SACO RIVER
PROJECT NO. STP-1928(000)
PROJECT LENGTH 0.170 mi.
BRIDGE NO. 3333

STATE OF MAINE
GARRETT A. GUSTAFSON
13553
LICENSED
PROFESSIONAL ENGINEER
11/20/14

NOTE: MaineDOT is responsible for Sheets 1 through 45, Sheets 140 through 148 and for bridge geometry.

LIST OF DRAWINGS

Title Sheet 1
Estimated Quantities 2
General Construction Notes 3
General Plan ..... 4 - 6
Profile - Route 4A ..... 7 - 9
Profile - Side Roads 10
Typical Sections 11
Special Details 12
Geotechnical Plans: Canal Bridge ..... 13 - 16
Geotechnical Plans: Bar Mills Bridge ..... 17 - 19
Highway Approach Cross Sections: Route 4A ..... 20 - 39
Highway Approach Cross Sections: Island Acess Road ..... 40 - 42
Highway Approach Cross Sections: Depot Street ..... 43 - 45

Canal Bridge WIN 19281.00
- Abutment Notes 46
- Abutment No. 1 ..... 47 - 54
- Abutment No. 2 ..... 55 - 60
- Bearings 61
- Structural Steel ..... 62 - 63
- Superstructure ..... 64 - 73
- Reinforcing Steel Schedule ..... 74 - 75

Bar Mills Bridge WIN 19280.00:
- Abutment Notes 76
- Abutment No. 1 ..... 77 - 87
- Island Retaining Wall ..... 88 - 89
- Abutment No. 2 ..... 90 - 101
- Pier Notes 102
- Pier No. 1 ..... 103 - 104
- Pier No. 2 ..... 105 - 106
- Bearings 107
- Structural Steel ..... 108 - 116
- Superstructure ..... 117 - 135
- Reinforcing Steel Schedule ..... 136 - 139

Memorial Plan ..... 140 - 141
Detour Signing Plan 142
Lighting Plan ..... 143 - 144
Right of Way Map ..... 145 - 148

UTILITIES

Brookfield Renewable Energy Partners LP
Central Maine Power Company
Pine Tree Networks
Time Warner Cable

MAINTENANCE OF TRAFFIC

Two - way traffic will be maintained on the existing bridges during construction, except for a short - term closure for the completion of the Bar Mills Bridge east end span.

PROJECT LOCATION	On State Route 4A, Canal Bridge (No. 1525) over the Saco River Canal in Hollis and Bar Mills Bridge (No. 3333) over the Saco River on the Hollis & Buxton town line. Lat. / Long. 43°36'44.69" N 70°33'9.89" W
PROGRAM AREA	Highway Bridges - Traditional
OUTLINE OF WORK	Bridge Replacements

STATE OF MAINE
DEPARTMENT OF TRANSPORTATION
APPROVED
COMMISSIONER: DATE 11/25/14
CHIEF ENGINEER: DATE 11-25-14

STATE OF MAINE ROLAND A. MAILLET No. 6452 LICENSED PROFESSIONAL ENGINEER

SIGNATURE
P.E. NUMBER 6452
DATE 11/14/14

PROJECT INFORMATION

PROGRAM	BRIDGE PROGRAM
PROJECT MANAGER	MARK PARLIN
DESIGNER	D. EATON & G. GUSTAFSON
CONSULTANT	HNTB CORPORATION
PROJECT RESIDENT	
CONTRACTOR	
PROJECT COMPLETION DATE	

WIN 19281.00 & 19280.00

BR-1928(100)X & STP-1928(000)

HOLLIS & BUXTON
CANAL & BAR MILLS BRIDGES

TITLE SHEET

SHEET NUMBER
1
OF 148

Filename:\00\BRIDGE\MSTA\001_Title.dgn Division: BRIDGE Username: Garrett.A.Gustafson Date:11/13/2014

ESTIMATED QUANTITIES

ITEM NO.	DESCRIPTION	QUANTITY WIN 19281.00	QUANTITY WIN 19280.00	QUANTITY Total	UNIT
202.15	REMOVE EXISTING MAN HOLE OR CATCH BASIN	0	1	1	EA
202.19	REMOVING EXISTING BRIDGE	(119 T, 123 CY)	(488 T, 1419 CY)	1	LS
202.20	REMOVING BITUMINOUS CONCRETE PAVEMENT	63	170	233	SY
203.20	COMMON EXCAVATION	743	1778	2521	CY
203.21	ROCK EXCAVATION	68	73	141	CY
203.24	COMMON BORROW	874	488	1362	CY
203.25	GRANULAR BORROW	451	6690	7141	CY
203.35	CRUSHED STONE	20	0	20	CY
206.061	STRUCTURAL EARTH EXCAVATION - DRAINAGE MINOR STRUCTURES BELOW GRADE	5	5	10	CY
206.082	STRUCTURAL EARTH EXCAVATION - MAJOR STRUCTURES	1060	718	1778	CY
206.092	STRUCTURAL ROCK EXCAVATION - MAJOR STRUCTURES	160	540	700	CY
206.10	STRUCTURAL EARTH EXCAVATION - PIERS	0	45	45	CY
206.11	STRUCTURAL ROCK EXCAVATION - PIERS	0	180	180	CY
304.10	AGGREGATE SUBBASE COURSE - GRAVEL	845	2080	2925	CY
403.207	HOT MIX ASPHALT 19.0 MM HMA	105	185	290	T
403.208	HOT MIX ASPHALT 12.5 MM HMA SURFACE	114	346	460	T
403.209	HOT MIX ASPHALT 9.5 MM HMA (SIDEWALKS, DRIVES, INCIDENTALS)	40	80	120	T
403.213	HOT MIX ASPHALT 12.5 MM BASE	118	402	520	T
409.15	BITUMINOUS TACK COAT - APPLIED	38	142	180	G
501.220	MICROPILES	24	0	24	EA
501.804	DRILLING EQUIPMENT MOBILIZATION - MICROPILES	1	0	1	LS
502.219	STRUCTURAL CONCRETE, ABUTMENTS AND RETAINING WALLS	(274 CY)	(805 CY)	1	LS
502.22	STRUCTURAL CONCRETE, ABUTMENTS AND RETAINING WALLS (PLACED UNDER WATER)	321	849	1170	CY
502.239	STRUCTURAL CONCRETE PIERS	0	(346 CY)	1	LS
502.24	STRUCTURAL CONCRETE PIERS (PLACED UNDER WATER)	0	311	311	CY
502.26	STRUCTURAL CONCRETE ROADWAY AND SIDEWALK SLABS ON STEEL BRIDGES	(178 CY)	(540 CY)	1	LS
502.31	STRUCTURAL CONCRETE APPROACH SLABS	(22 CY)	(22 CY)	1	LS
502.49	STRUCTURAL CONCRETE CURBS AND SIDEWALK	(40 CY)	(150 CY)	1	LS
503.12	REINFORCING STEEL, FABRICATED AND DELIVERED	28,000	132,000	160,000	LB
503.13	REINFORCING STEEL, PLACING	28,000	132,000	160,000	LB
504.702	STRUCTURAL STEEL FABRICATED AND DELIVERED, WELDED	(179,000 LB)	(728,000 LB)	1	LS
504.71	STRUCTURAL STEEL ERECTION	(179,000 LB)	(728,000 LB)	1	LS
505.08	SHEAR CONNECTORS	(1365 EA)	(6880 EA)	1	LS
506.9104	THERMAL SPRAY COATING (SHOP APPLIED)	(179,000 LB)	0	1	LS
507.0821	STEEL BRIDGE RAILING, 3 BAR	(111 LF)	(487 LF)	1	LS
507.0831	STEEL BRIDGE RAILING, 4 BAR	(113 LF)	(486 LF)	1	LS
508.14	HIGH PERFORMANCE WATERPROOFING MEMBRANE	(420 SY)	(1660 SY)	1	LS
511.07	COFFERDAM: CANAL ABUT. NO. 1	1	0	1	LS
511.07	COFFERDAM: BAR MILLS ABUT. NO. 1	0	1	1	LS
511.07	COFFERDAM: PIER NO. 1	0	1	1	LS
511.07	COFFERDAM: PIER NO. 2	0	1	1	LS
511.07	COFFERDAM: BAR MILLS ABUT. NO. 2	0	1	1	LS
512.081	FRENCH DRAINS	0	(191 LF)	1	LS
514.06	CURING BOX FOR CONCRETE CYLINDERS	1	1	2	EA
515.21	PROTECTIVE COATING FOR CONCRETE SURFACES	(232 SY)	(830 SY)	1	LS
518.52	REPAIR OF UPWARD FACING SURFACES >= 8 IN.	20	27	47	CY
518.60	REPAIR OF VERTICAL SURFACES < 8 IN.	100	200	300	SF
521.23	EXPANSION DEVICE FINGER JOINT: BAR MILLS ABUT. NO. 1	0	1	1	EA
523.52	BEARING INSTALLATION	10	20	30	EA
523.5551	POT OR DISC BEARINGS, FIXED	5	5	10	EA
523.5552	POT OR DISC BEARINGS, EXPANSION	5	15	20	EA
526.301	TEMPORARY CONCRETE BARRIER TYPE 1	(200 LF)	(200 LF)	1	LS
526.34	PERMANENT CONCRETE TRANSITION BARRIER	4	3	7	EA
526.3401	PERMANENT CONCRETE TRANSITION BARRIER - MODIFIED	0	1	1	EA
603.169	15 INCH CULVERT PIPE OPTION III	0	98	98	LF
603.17	18 INCH CULVERT PIPE OPTION I	38	0	38	LF
603.179	18 INCH CULVERT PIPE OPTION III	48	0	48	LF
603.43	36 INCH REINFORCED CONCRETE PIPE CLASS IV	0	88	88	LF
604.072	CATCH BASIN TYPE A1-C	0	2	2	EA
606.1721	BRIDGE TRANSITION - TYPE 1	4	4	8	EA
606.23	GUARDRAIL TYPE 3C - SINGLE RAIL	233	305	538	LF
606.231	GUARDRAIL TYPE 3C - 15 FOOT RADIUS AND LESS	25	25	50	LF
606.232	GUARDRAIL TYPE 3C - OVER 15 FOOT RADIUS	75	144	219	LF
606.265	TERMINAL END - SINGLE RAIL - GALVANIZED STEEL	3	3	6	EA
606.353	REFLECTORIZED FLEXIBLE GUARDRAIL MARKER	6	6	12	EA
607.17	CHAIN LINK FENCE - 6 FOOT	110	70	180	LF
609.11	VERTICAL CURB TYPE 1	190	400	590	LF
609.12	VERTICAL CURB TYPE 1 - CIRCULAR	13	37	50	LF
609.234	TERMINAL CURB TYPE 1 - 4ft.	1	1	2	EA
609.237	TERMINAL CURB TYPE 1 - 7ft.	1	3	4	EA
609.2371	TERMINAL CURB TYPE 1 - 7ft. - CIRCULAR	1	3	4	EA
610.08	PLAIN RIPRAP	20	0	20	CY
610.16	HEAVY RIPRAP	0	1140	1140	CY
610.18	STONE DITCH PROTECTION	55	0	55	CY
613.319	EROSION CONTROL BLANKET	255	120	375	SY
615.07	LOAM	46	130	176	CY
618.13	SEEDING METHOD NUMBER 1 - PLAN QUANTITY	2	2	4	UN
618.14	SEEDING METHOD NUMBER 2 - PLAN QUANTITY	6	17	23	UN

ESTIMATED QUANTITIES

ITEM NO.	DESCRIPTION	QUANTITY WIN 19281.00	QUANTITY WIN 19280.00	QUANTITY Total	UNIT
619.1201	MULCH - PLAN QUANTITY	7	21	28	UN
619.1401	EROSION CONTROL MIX	90	260	350	CY
620.58	EROSION CONTROL GEOTEXTILE	260	1220	1480	SY
620.661	DRAINAGE GEOCOMPOSITE	160	0	160	SY
621.031	EVERGREEN TREES 4'-5' GROUP A	0	6	6	EA
621.039	EVERGREEN TREES 5'-6' GROUP C	0	3	3	EA
621.195	DECIDUOUS TREES 1¾" - 2" GROUP A CONT.	0	6	6	EA
621.415	DWARF EVERGREENS 3' - 3½' GROUP C	0	5	5	EA
621.54	DECIDUOUS SHRUBS 15" - 18" GROUP A CONT.	0	6	6	EA
621.71	HERBACEOUS PERENNIALS GROUP A	0	12	12	EA
626.11	PRECAST CONCRETE JUNCTION BOX	1	1	2	EA
626.21	METALLIC CONDUIT	0	40	40	LF
626.22	NON-METALIC CONDUIT	25	315	340	LF
626.32	24" FOUNDATION	0	2	2	EA
626.35	CONTROLLER CABINET FOUNDATION	0	1	1	EA
627.733	4 INCH WHITE OR YELLOW PAINTED PAVE MRK LINE	1110	3340	4450	LF
629.05	HAND LABOR, STRAIGHT TIME	50	50	100	HR
631.12	ALL PURPOSE EXCAVATOR (INCLUDING OPERATOR)	10	10	20	HR
631.172	TRUCK - LARGE (INCLUDING OPERATOR)	10	10	20	HR
631.22	FRONT END LOADER (INCLUDING OPERATOR)	10	10	20	HR
631.32	CULVERT CLEANER (INCLUDING OPERATOR)	0	10	10	HR
634.16	HIGHWAY LIGHTING			1	LS
634.2041	LUMINAIRES - LED	1	6	7	EA
634.210	CONVENTIONAL LIGHT STANDARD	1	6	7	EA
637.071	DUST CONTROL			1	LS
638.01	EMBEDDED WORK IN STRUCTURE			1	LS
639.18	FIELD OFFICE TYPE A			1	EA
641.35	ALUMINUM FLAGPOLE	0	1	1	EA
643.62	RECTANGULAR RAPID FLASHING BEACON	0	1	1	EA
643.72	TEMPORARY TRAFFIC SIGNAL			1	LS
645.51	SPECIAL SIGNAGE			1	LS
652.312	TYPE III BARRICADE	3	3	6	EA
652.33	DRUM	25	25	50	EA
652.34	CONE	25	25	50	EA
652.35	CONSTRUCTION SIGNS	255	255	510	SF
652.361	MAINTENANCE OF TRAFFIC CONTROL DEVICES	(350 CD)	(350 CD)	1	LS
652.38	FLAGGER	1500	1500	3000	HR
652.41	PORTABLE CHANGEABLE MESSAGE SIGN	1	2	3	EA
656.75	TEMPORARY SOIL EROSION AND WATER POLLUTION CONTROL			1	LS
659.10	MOBILIZATION			1	LS
660.21	ON-THE-JOB TRAINING (BID)	1000	2000	3000	HR
910.301	SPECIAL WORK - RELOCATE MEMORIAL	0	1	1	LS

STATE OF MAINE
DEPARTMENT OF TRANSPORTATION

BR-1928(100)X & STP-1928(000)

WIN 19281.00 & 19280.00

BRIDGE NO. 1525 & 3333

BRIDGE PLANS

PROJ. MANAGER	M. Parlin	BY	DATE
DESIGN-DETAILED	D. Eaton	Team North	Nov. 2014
CHECKED-REVIEWED	G. Gustafson		
DESIGN2-DETAILED2			
DESIGN3-DETAILED3			
REVISIONS 1			
REVISIONS 2			
REVISIONS 3			
REVISIONS 4			
FIELD CHANGES			

SIGNATURE

P.E. NUMBER

DATE

CANAL & BAR MILLS BRIDGES
SACO RIVER CANAL & SACO RIVER
HOLLIS & BUXTON YORK COUNTY

ESTIMATED QUANTITIES

SHEET NUMBER

2

OF 148

Filename: ...\BRIDGE\MSTA\002_Estimate.dgn Division: BRIDGE Username: dana.damren Date:12/1/2014

GENERAL CONSTRUCTION NOTES

1. Blasting for any reason shall be prohibited.

2. During construction, the road will be closed to traffic for a time period specified in the Special Provisions.

3. For easements, construction limits and right of way lines, refer to Right of Way Map.

4. The clearing limits as shown on the plans are approximate. The exact limits will be established in the field by the Resident. Payment for clearing will be considered incidental to Contract items.

5. All utility facilities shall be adjusted by the respective utilities unless otherwise noted.

6. Do not excavate for Aggregate Subbase Course where existing material is suitable as determined by the Resident.

7. In areas where the Resident directs the Contractor not to excavate to the subgrade line shown on the plans, payment for removing existing pavement, grubbing, shaping, ditching, and compacting the existing subbase and layers of new subbase 6 inches or less thick will be made under appropriate equipment rental items.

8. All embankment material, except as otherwise shown, placed below EL. 151.00 from Sta. 101+25 - Sta. 110+00 and EL. 144.00 from Sta. 110+00 - Sta. 114+50, shall be Granular Borrow meeting the requirements of Subsection 703.19, Material for Underwater Backfill.

9. Place riprap on sideslopes up to EL. 144.0.

10. Place loam 2 inches deep on all new or reconstructed sideslopes or as directed by the Resident.

11. Erosion Control Mix may be substituted in those areas normally receiving loam and seed as directed by the Resident. Placement shall be in accordance with Standard Specifications Section 619, Mulch. Payment will be made under Item No. 619.1401, Erosion Control Mix.

12. Place a 24-in. wide strip of Temporary Erosion Control Blanket on the sideslopes along the top of the riprap and behind the wingwalls.

13. An NCHRP350 compliant guardrail end treatment shall be installed concurrently with the placement of each section of beam guardrail.

14. Extended-use Erosion Control Blanket, seeded gutters, riprap downspouts, and other gutters lined with Stone Ditch Protection shall be constructed after paving and shoulder work is completed, where it is apparent that runoff will cause continual erosion. Payment will be made under the appropriate Contract items.

15. Protective Coating for Concrete Surfaces shall be applied to the following areas:

All exposed surfaces of concrete curbs and sidewalks.
Fascias down to the drip notch.
All exposed surfaces of Concrete Transition Barriers.
Concrete wearing surfaces adjacent to expansion joints.
Concrete wearing surface at semi-integral concrete backwalls and to one foot below tops of semi-integral concrete backwalls on the fill side.
Top of abutment backwalls and to one foot below the top of backwalls on the fill side.

16. Project information referred to below may be accessed at the following MaineDOT web address: http://www.maine.gov/mdot/contractors/*projecttbl

17. The existing bridge plans may be accessed at the MaineDOT web address. The plans are reproductions of the original drawings as prepared for the construction of the bridge. It is very unlikely that the plans will show any construction field changes or any alterations which may have been made to the bridge during its life span.

18. The hydrologic report of the bridge site may be accessed at the MaineDOT web address. The hydrologic report is based on MaineDOT's interpretation of the information obtained for the subject site. No assurance is given that the information or the conclusions of the report will be representative of actual conditions at the time of construction.

19. The Canal Bridge project geotechnical report titled: Geotechnical Design Report for the Replacement of Canal Bridge over Saco River Canal, MaineDOT Soils Report No. 2014-25, November 10, 2014, may be accessed at the MaineDOT web address.

20. The Bar Mills Bridge project geotechnical report titled: Geotechnical Design Report for the Replacement of Bar Mills Bridge over Saco River, State Route 4A, Hollis and Buxton, Maine, Soils Report No. 2014-16, August 13, 2014, may be accessed at the MaineDOT web address.

21. Geotechnical information furnished or referred to in this plan set is for the use of the Bidders and the Contractor. No assurance is given that the information or interpretations will be representative of actual subsurface conditions at the construction site. MaineDOT will not be responsible for the Bidders' or Contractor's interpretations of, or conclusions drawn from, the geotechnical information. The boring logs contained in the plan set present factual and interpretive subsurface information collected at discrete locations. Data provided may not be representative of the subsurface conditions between the boring locations.

22. Quantities included for pay items measured and paid for by Lump Sum are estimated quantities and are provided by MaineDOT for informational purposes only. Lump Sum pay items will be paid for at the Contract Bid amount, with no addition or reduction in payment to the Contractor if the actual final quantities are different from the MaineDOT provided estimated quantities, except as follows:

a. If a Lump Sum pay item is eliminated, the requirements of Standard Specifications Section 109.2, Elimination of Items, will take precedence.

b. If other Contract Documents specifically allow a change in payment for a Lump Sum pay item, those requirements will be followed.

c. If a design change results in changes to estimated quantities for Lump Sum pay items, price adjustments will be made in accordance with Standard Specifications Section 109.7, Equitable Adjustments to Compensation and Time.

23. The Contractor shall submit a Bridge Demolition Plan to the Resident at least 10 business days prior to the start of demolition work. The plan shall outline the methods and equipment to be used to remove and dispose of all materials included in the existing bridge. The bridge demolition plan shall be in accordance with Special Provision Section 501, Vibration and Movement Monitoring and Control. No work related to the removal of the bridge shall be undertaken by the Contractor until MaineDOT has reviewed the Bridge Demolition Plan for appropriateness and completeness. Payment for all work necessary for developing, submitting and finalizing the Demolition Plan will be considered incidental to the bridge removal pay item.

24. The existing bridge shall be removed by and become the property of the Contractor. The steel portions of the existing bridge are coated with a lead - based paint system. The Contractor is responsible for the containment, proper management and disposal of all lead - contaminated hazardous waste generated by the process of demolishing the bridge. The Contractor is responsible for implementing appropriate OSHA mandated personal protection standards related to this process. Once the existing bridge is removed, the Contractor is solely responsible for the care, custody and control of the components of the existing bridge and any hazardous waste generated as a result of the storage, recycling or disposal of the bridge components, including lead-coated steel. The Contractor shall recycle or reuse the steel in accordance with the Maine Department of Environmental Protection's "Maine Hazardous Waste Management Regulations," Chapter 850. A copy of this regulation is available at MaineDOT's offices on Child Street in Augusta. Payment for all labor, materials, equipment and other costs required to remove and dispose of the existing bridge will be considered incidental to the bridge removal pay item.

25. Existing Canal Bridge Abutment No. 1 upstream wingwall and parapet concrete shall be removed to EL. 154.50 between the centerline of construction and 18 feet right of the centerline of construction.

26. Existing Bar Mills Bridge Abutment No. 2 concrete shall be removed to elevation 151.00 and as directed by the Resident.

27. Existing bridge piers shall be removed to the existing streambed elevation.

28. Unless otherwise noted on the plans, removal of existing bridge components will be paid for under Item No. 202.19, Removing Existing Bridge.

29. The backwall, parapets, and wingwalls on Canal Bridge Abutment No. 2 and Bar Mills Bridge Abutment No. 1 shall be removed to sound concrete and capped with concrete as directed by the Resident. Payment will be made under Item No. 518.52, Repair of Upward Facing Surfaces >= 8 in. Drilling and grouting of new steel reinforcement will be considered incidental to this item. New steel reinforcement will be paid for under the appropriate Contract items. The Contractor should note that the required length of new reinforcement steel will vary with the depth of concrete removal. Refer to Sheet No. 12.

30. Existing substructure vertical wall faces to remain shall be rehabilitated as directed by the Resident. Payment for this work will be made under Item No. 518.60, Repair of Vertical Surfaces < 8 in.

31. Removal of existing retaining walls and cut stone blocks to the extent necessary to facilitate construction of Canal Bridge Abutment No. 1 and Bar Mills Bridge Abutment No. 1 will be paid for under Item No. 203.21, Rock Excavation.

32. Two layers of 6 mil polyethylene sheeting shall be installed under approach slabs at semi - integral backwalls (all approach slabs except at Bar Mills Abutment No. 1). Payment will be considered incidental to Item No. 502.31, Structural Concrete Approach Slab.

33. The Contractor shall provide the Resident access to all portions of the Work, including that which is only accessible by boat. The method, timing, and location of access will be approved by the Resident. Payment for access will not be made separately but will be considered incidental to the Contract.

34. Place a one foot layer of crushed stone between Canal Bridge Abutment 2 and the existing Saco River Canal retaining wall and two feet beyond the Canal Bridge fascia lines upstream and downstream. This work shall be done in accordance with Special Provision Section 501, Vibration and Movement Monitoring and Control. If compaction is required, it shall be approved by the Resident and it shall be achieved by means of light self-propelled vibratory plate compactors or similar equipment approved by the Resident.

35. Class A concrete shall have a minimum compressive strength as specified in the Basic Design Stresses section on the Title Sheet. All other minimum compressive strengths shall be as specified in the Standard Specifications.

36. Calcium Nitrite shall be added at the rate of 3 gallons per cubic yard to all Class "LP" concrete.

37. All existing pavement within the project limits shall be removed unless otherwise directed by the Resident. Payment for existing pavement removal within the limits of excavation will be considered incidental to the appropriate Contract items. Existing pavement removal outside the limits of excavation will be paid for under Item No. 202.20, Removing Bituminous Concrete Pavement.

38. The Contractor shall note that the bridge site experiences rapid changes in water level and velocity. Temporary structures and construction activities shall be planned accordingly. Retrieval and clean-up of materials displaced during flood events shall be the responsibility of the Contractor.

39. In addition to the provisions in Standard Specifications Section 105.2.2, Health and Safety Plan, the Contractor shall provide a copy of the Safety Plan to Brookfield Renewable Energy, Brian.Stetson@BrookfieldRenewable.com, prior to Contract award. The Safety Plan will be reviewed at the preconstruction meeting and any comments shall be resolved to the satisfaction of the Resident prior to the start of construction.

EXISTING CANAL & AUXILIARY SPILLWAY RETAINING WALL NOTES

1. Proposed bridge construction and existing bridge demolition shall be completed in accordance with requirements of Special Provision Section 501, Vibration and Movement Monitoring and Control.

2. Fill material of any kind shall be placed to a maximum of EL. 152.00 between Canal Bridge Abutment No. 2 and the existing Saco River Canal retaining wall and auxiliary spillway retaining wall.

3. Excavation below EL. 147.00 shall be prohibited within 15 feet of the existing Saco River Canal retaining wall and auxiliary spillway retaining wall.

4. Excavation within 5 feet of the existing Saco River Canal retaining wall and auxiliary spillway retaining wall shall be prohibited.

5. Grubbing and placement of crushed stone within 5 feet of the existing Saco River Canal retaining wall and auxiliary spillway retaining wall shall be done by hand. If compaction is required, it shall be approved by the Resident and it shall be achieved by means of light self-propelled vibratory plate compactors or similar equipment approved by the Resident.

6. No equipment, material stockpiles or other items capable of inducing surcharge loads onto the existing Saco River Canal retaining wall and auxiliary spillway retaining wall (as judged by the Resident) shall be located at any time within 15 feet of the existing Saco River Canal retaining wall and auxiliary spillway retaining wall.

7. The Contractor shall provide adequate drainage during construction to direct surface water away from the existing Saco River Canal retaining wall and auxiliary spillway retaining wall.

STATE OF MAINE
DEPARTMENT OF TRANSPORTATION

BR-1928(100)X & STP-1928(000)

WIN 19281.00 & 19280.00

BRIDGE NO. 1525 & 3333

BRIDGE PLANS

PROJ. MANAGER	M. Parlin	BY	DATE
DESIGN-DETAILED	GAG / DCE	Team South	Oct. 2014
CHECKED-REVIEWED	-----	-----	-----
DESIGN2-DETAILED2	-----	-----	-----
DESIGN3-DETAILED3	-----	-----	-----
REVISIONS 1	-----	-----	-----
REVISIONS 2	-----	-----	-----
REVISIONS 3	-----	-----	-----
REVISIONS 4	-----	-----	-----
FIELD CHANGES	-----	-----	-----

SIGNATURE

P.E. NUMBER

DATE

CANAL & BAR MILLS BRIDGES
SACO RIVER CANAL & SACO RIVER
HOLLIS & BUXTON YORK COUNTY

GENERAL CONSTRUCTION NOTES

SHEET NUMBER

3

OF 148

Filename: ...\003_General Construction Notes.dgn Division: BRIDGE Username: dana.damren Date:11/19/2014

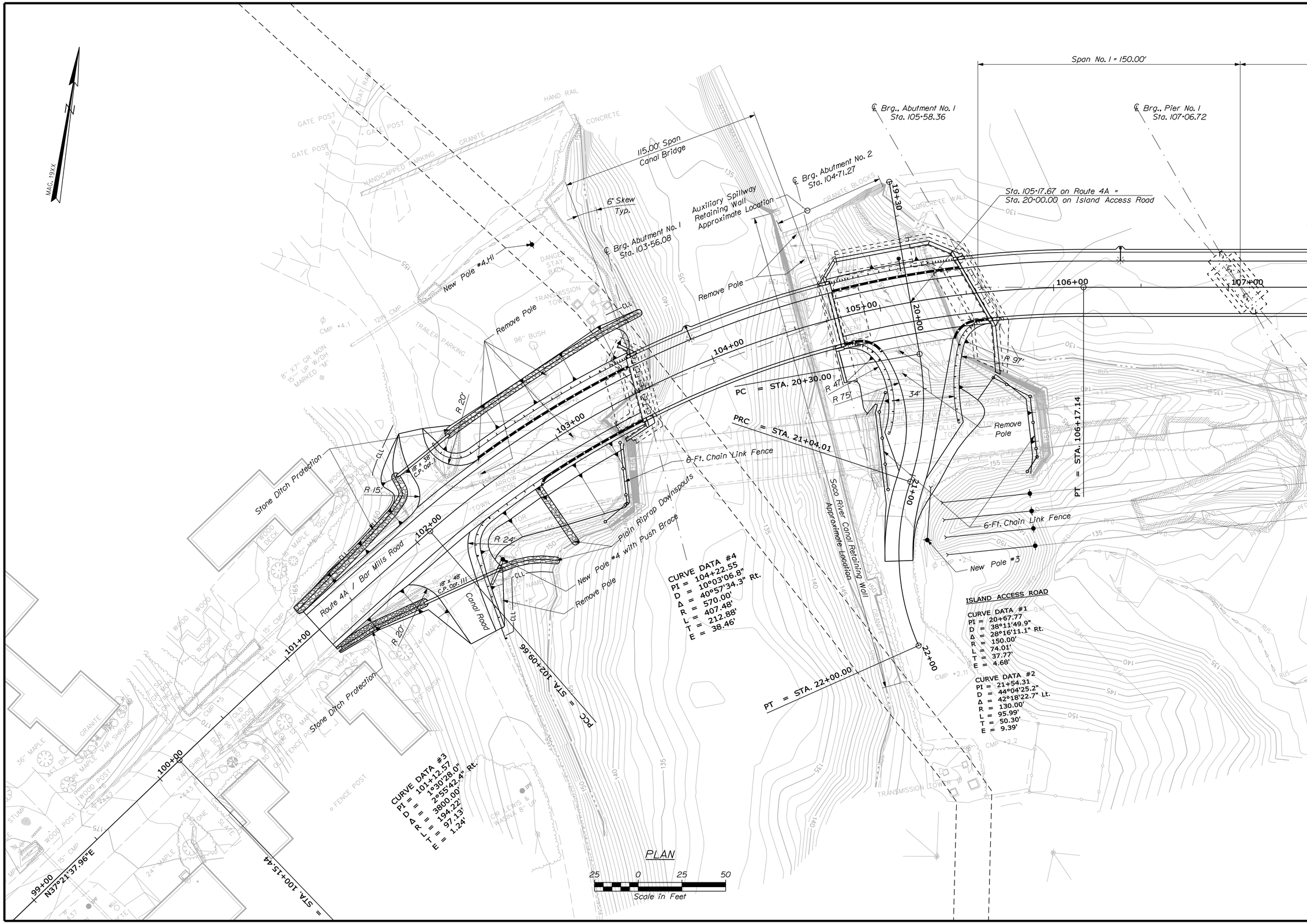

STATE OF MAINE
DEPARTMENT OF TRANSPORTATION

BR-1928(100)X & STP-1928(000)

WIN 19281.00 & 19280.00

BRIDGE NO. 1525 & 3333

BRIDGE PLANS

PROJ. MANAGER	M. Parlin	BY	DATE
DESIGN-DETAILED	GAG / DCE	Team South	Oct. 2014
CHECKED-REVIEWED	------	------	------
DESIGN2-DETAILED2	------	------	------
DESIGN3-DETAILED3	------	------	------
REVISIONS 1	------	------	------
REVISIONS 2	------	------	------
REVISIONS 3	------	------	------
REVISIONS 4	------	------	------
FIELD CHANGES	------	------	------

SIGNATURE

P.E. NUMBER

DATE

CANAL & BAR MILLS BRIDGES
SACO RIVER CANAL & SACO RIVER
HOLLIS & BUXTON YORK COUNTY

GENERAL PLAN

SHEET NUMBER

4

OF 148

Filename: ...\MSTA\004_General Plan.dgn Division: BRIDGE Username: dana.damren Date:11/20/2014

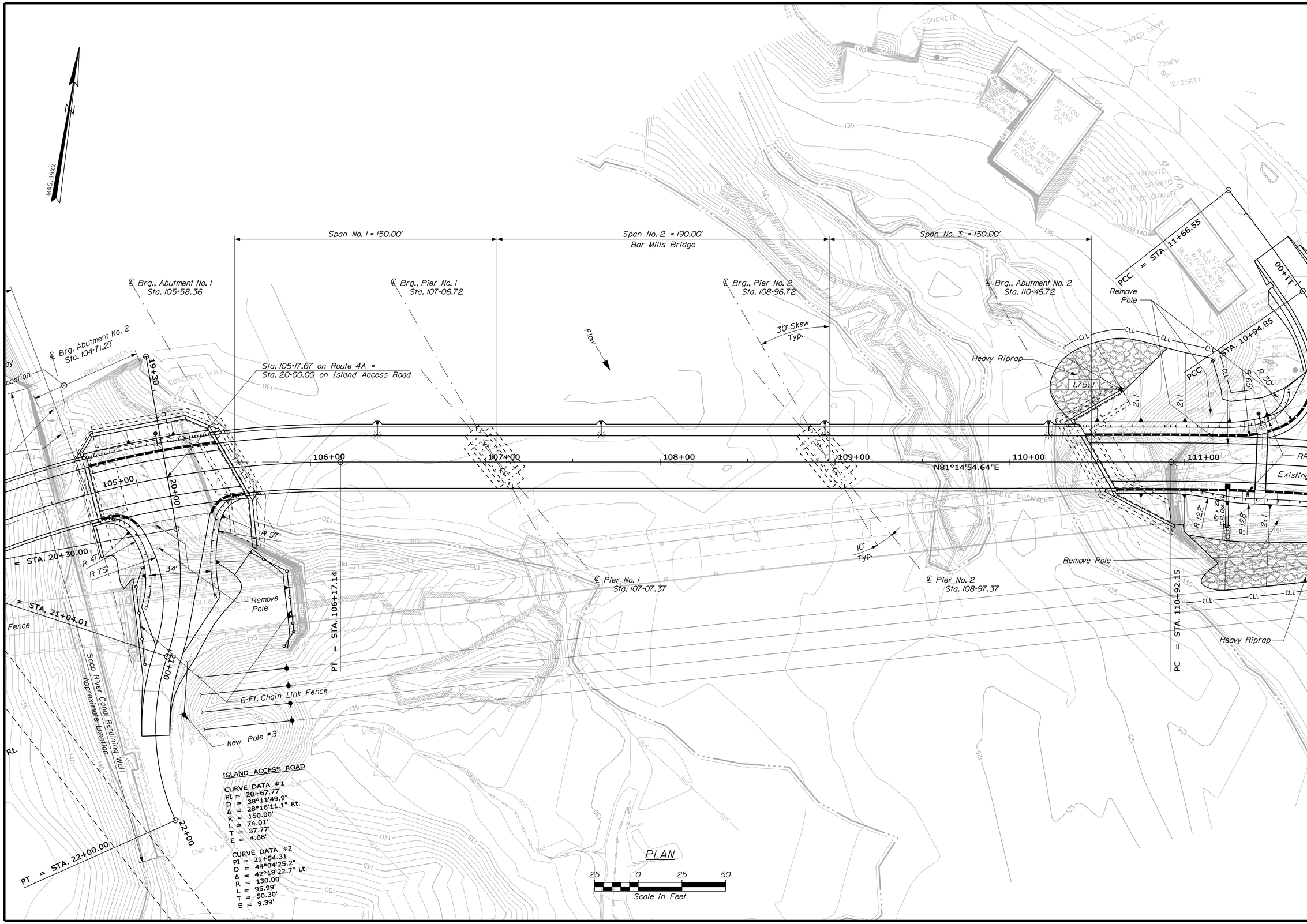

STATE OF MAINE
DEPARTMENT OF TRANSPORTATION

BR-1928(100)X & STP-1928(000)

WIN 19281.00 & 19280.00

BRIDGE NO. 1525 & 3333

BRIDGE PLANS

	BY	DATE
PROJ. MANAGER	M. Parlin	
DESIGN-DETAILED	GAG / DCE	Team South
CHECKED-REVIEWED	------	Oct. 2014
DESIGN2-DETAILED2	------	------
DESIGN3-DETAILED3	------	------
REVISIONS 1	------	------
REVISIONS 2	------	------
REVISIONS 3	------	------
REVISIONS 4	------	------
FIELD CHANGES	------	------

SIGNATURE

P.E. NUMBER

DATE

CANAL & BAR MILLS BRIDGES
SACO RIVER CANAL & SACO RIVER
HOLLIS & BUXTON YORK COUNTY

GENERAL PLAN

SHEET NUMBER

5

OF 148

Filename: ...\msta\005_General Plan.dgn Division: BRIDGE Username: dana.damren Date:11/20/2014

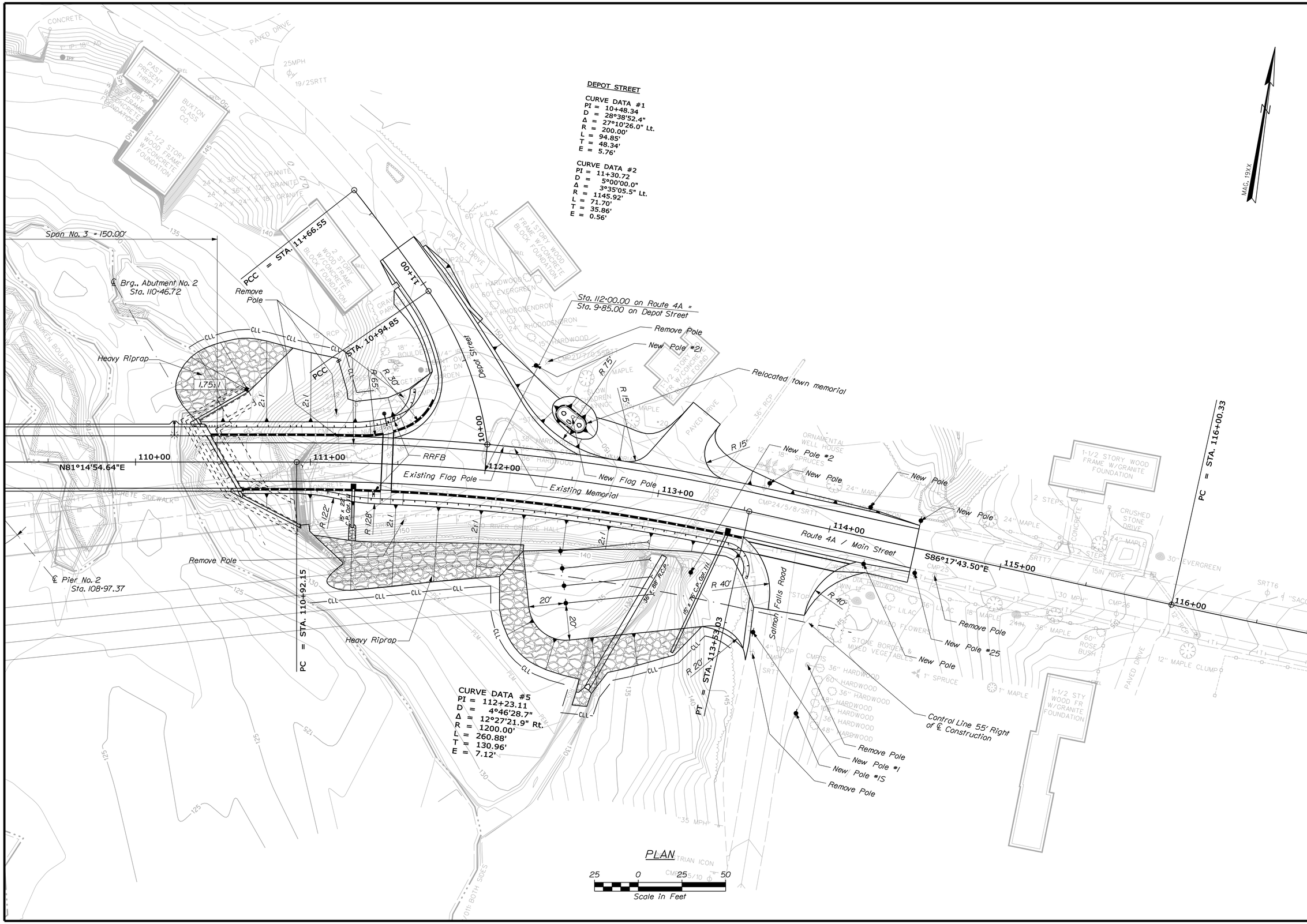

STATE OF MAINE
DEPARTMENT OF TRANSPORTATION

BR-1928(100)X & STP-1928(000)

WIN 19281.00 & 19280.00

BRIDGE NO. 1525 & 3333

BRIDGE PLANS

PROJ. MANAGER	M. Parlin	BY	DATE
DESIGN-DETAILED	GAD / DOE	Team South	Oct. 2014
CHECKED-REVIEWED	------	------	------
DESIGN2-DETAILED2	------	------	------
DESIGN3-DETAILED3	------	------	------
REVISIONS 1	------	------	------
REVISIONS 2	------	------	------
REVISIONS 3	------	------	------
REVISIONS 4	------	------	------
FIELD CHANGES	------	------	------

SIGNATURE

P.E. NUMBER

DATE

CANAL & BAR MILLS BRIDGES
SACO RIVER CANAL & SACO RIVER
HOLLIS & BUXTON
YORK COUNTY

GENERAL PLAN

SHEET NUMBER

6

OF 148

Filename: ...\msta\006_General Plan.dgn Division: BRIDGE Username: dana.damren Date:11/19/2014

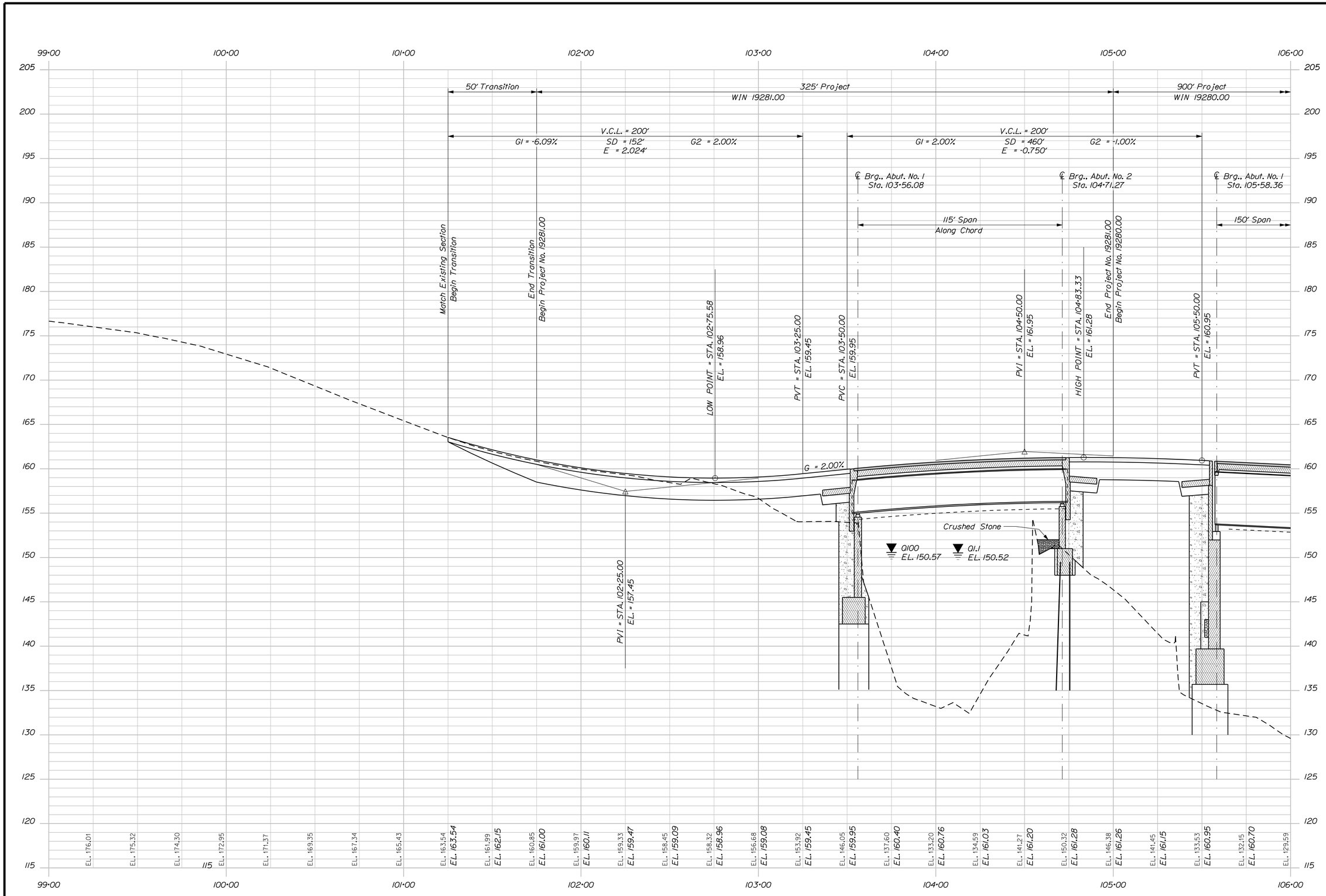

PROFILE ~ ROUTE 4A

STATE OF MAINE
DEPARTMENT OF TRANSPORTATION

BR-1928(100)X & STP-1928(000)

WIN 19281.00 & 19280.00

BRIDGE NO. 1525 & 3333

BRIDGE PLANS

PROJ. MANAGER	M. Parlin	BY	DATE
DESIGN-DETAILED	GAG / DCE	D. Damren	Oct. 2014
CHECKED-REVIEWED	------	------	------
DESIGN2-DETAILED2	------	------	------
DESIGN3-DETAILED3	------	------	------
REVISIONS 1	------	------	------
REVISIONS 2	------	------	------
REVISIONS 3	------	------	------
REVISIONS 4	------	------	------
FIELD CHANGES	------	------	------

SIGNATURE

P.E. NUMBER

DATE

CANAL & BAR MILLS BRIDGES
SACO RIVER CANAL & SACO RIVER
HOLLIS & BUXTON YORK COUNTY

PROFILE - ROUTE 4A

SHEET NUMBER

7

OF 148

Filename: ...\007_Profile - Route 4A.dgn Division: BRIDGE Username: Garrett.A.Gustafson Date:11/21/2014

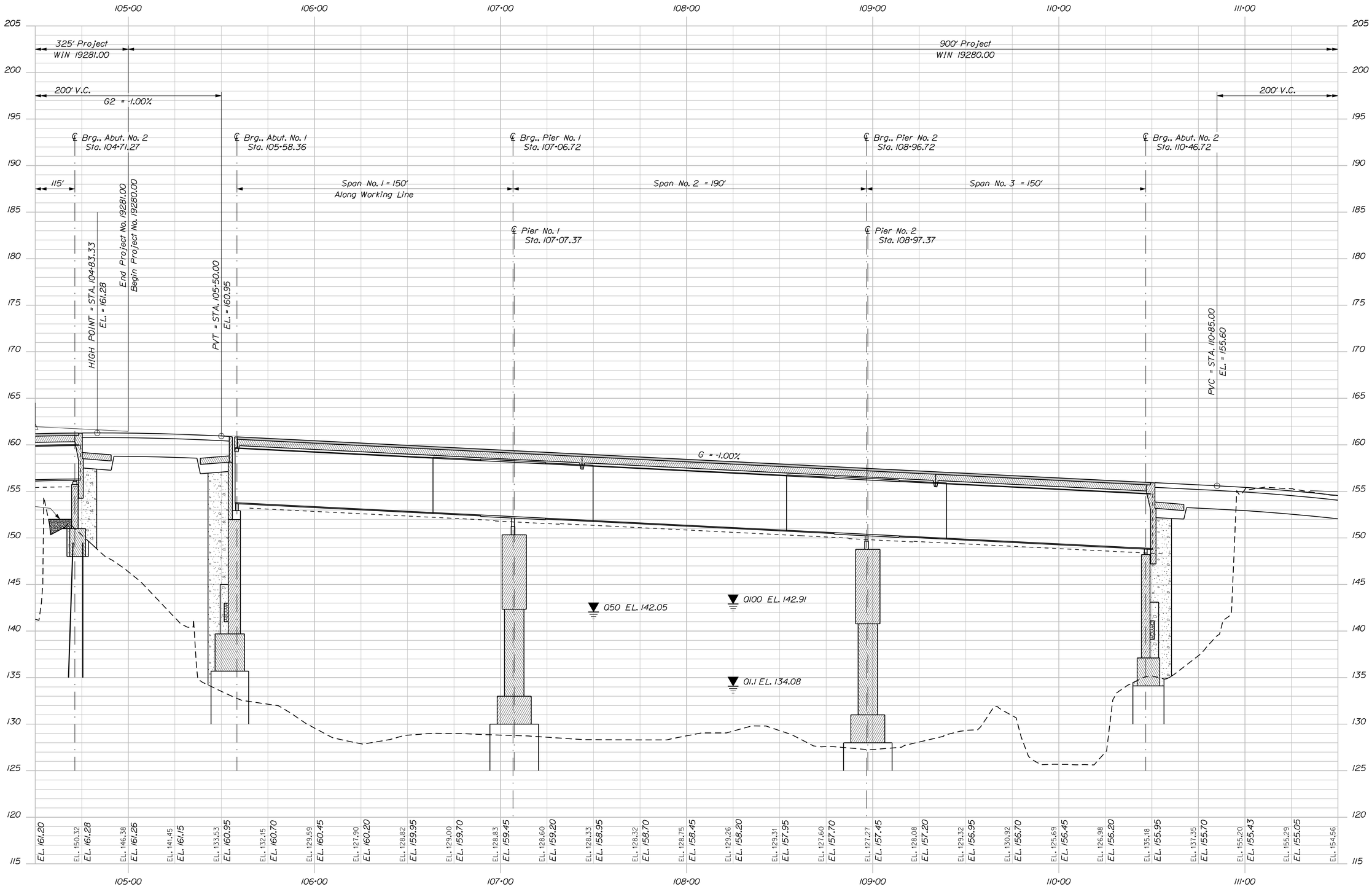

PROFILE ~ ROUTE 4A

STATE OF MAINE
DEPARTMENT OF TRANSPORTATION

BR-1928(100)X & STP-1928(000)

WIN 19281.00 & 19280.00

BRIDGE NO. 1525 & 3333

BRIDGE PLANS

PROJ. MANAGER	M. Parlin	BY	DATE
DESIGN-DETAILED	GAG / DCE	D. Damren	Oct. 2014
CHECKED-REVIEWED	------	------	------
DESIGN2-DETAILED2	------	------	------
DESIGN3-DETAILED3	------	------	------
REVISIONS 1	------	------	------
REVISIONS 2	------	------	------
REVISIONS 3	------	------	------
REVISIONS 4	------	------	------
FIELD CHANGES	------	------	------

SIGNATURE

P.E. NUMBER

DATE

CANAL & BAR MILLS BRIDGES
SACO RIVER CANAL & SACO RIVER
HOLLIS & BUXTON YORK COUNTY

PROFILE - ROUTE 4A

SHEET NUMBER

8

OF 148

Filename: ...\008_Profile - Route 4A.dgn Division: BRIDGE Username: dana.damren Date:12/3/2014

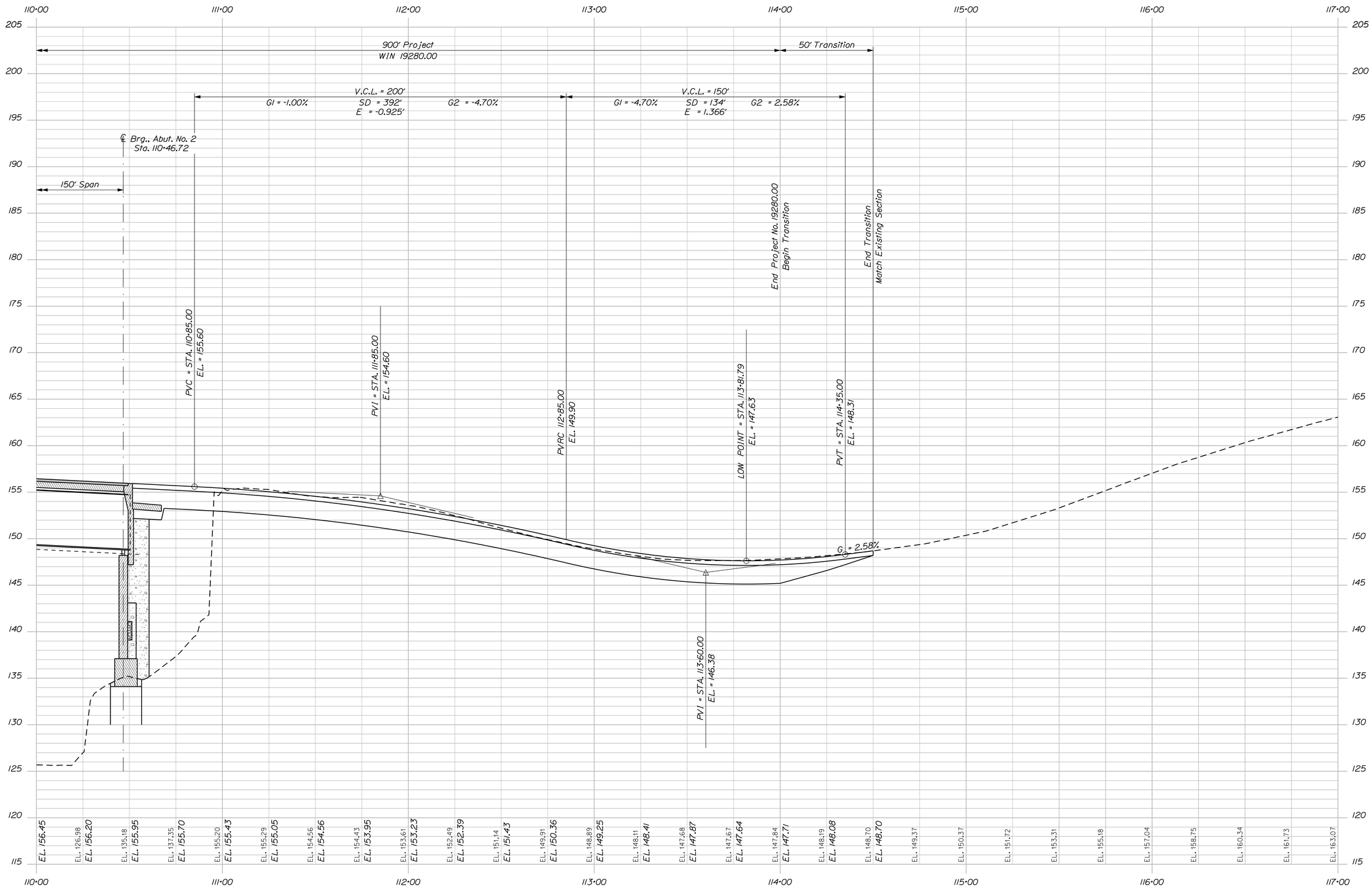

PROFILE ~ ROUTE 4A

STATE OF MAINE
DEPARTMENT OF TRANSPORTATION

BR-1928(100)X & STP-1928(000)

WIN 19281.00 & 19280.00

BRIDGE NO. 1525 & 3333

BRIDGE PLANS

PROJ. MANAGER	M. Parlin	BY	DATE
DESIGN-DETAILED	GAG / DCE	D. Damren	Oct. 2014
CHECKED-REVIEWED	------	------	------
DESIGN2-DETAILED2	------	------	------
DESIGN3-DETAILED3	------	------	------
REVISIONS 1	------	------	------
REVISIONS 2	------	------	------
REVISIONS 3	------	------	------
REVISIONS 4	------	------	------
FIELD CHANGES	------	------	------

SIGNATURE

P.E. NUMBER

DATE

CANAL & BAR MILLS BRIDGES
SACO RIVER CANAL & SACO RIVER
HOLLIS & BUXTON YORK COUNTY

PROFILE - ROUTE 4A

SHEET NUMBER

9

OF 148

Filename: ...\009_Profile - Route 4A.dgn Division: BRIDGE Username: dana.damren Date:11/19/2014

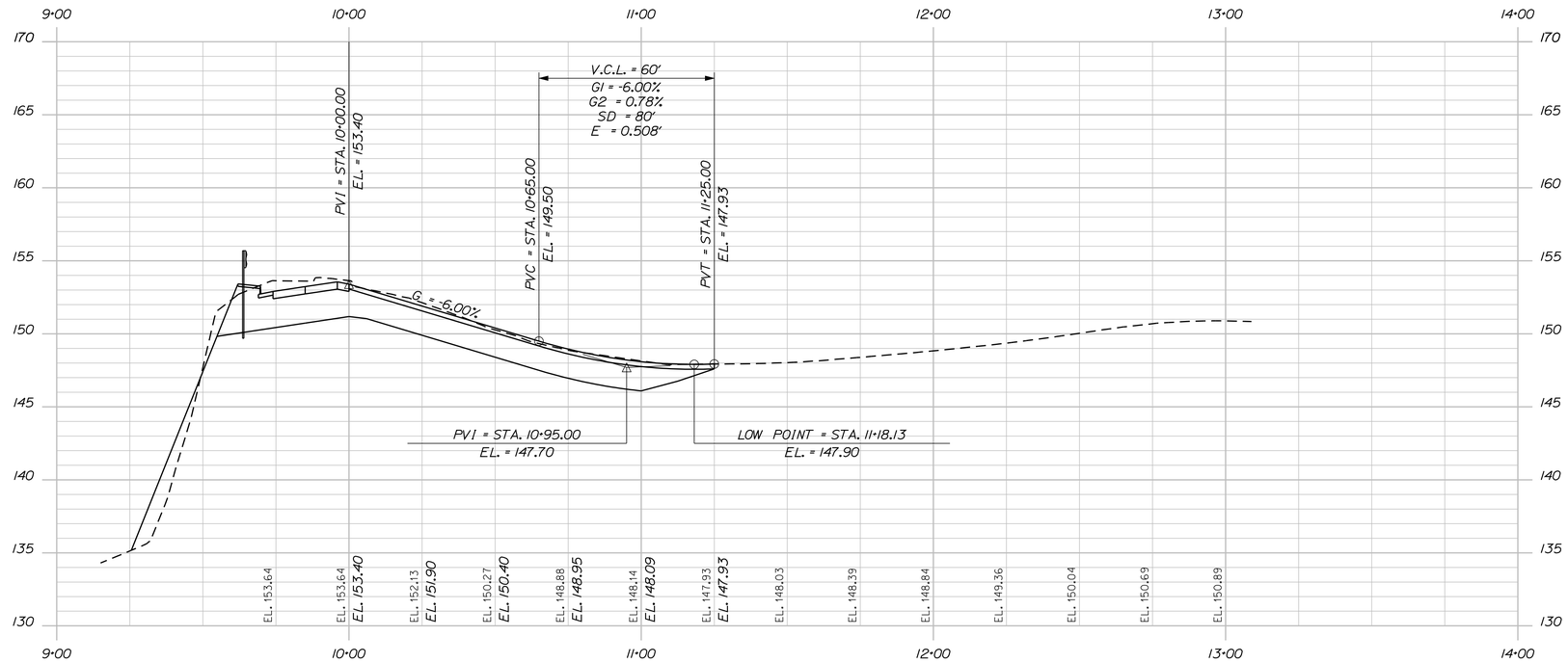

PROFILE ~ DEPOT STREET

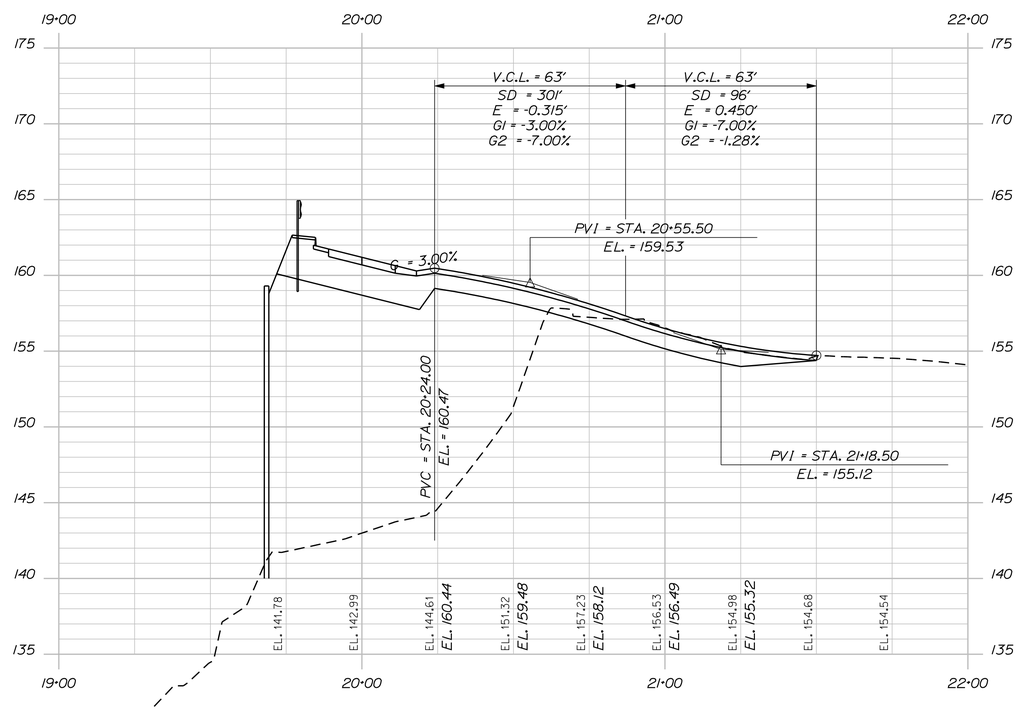

PROFILE ~ ISLAND ACCESS ROAD

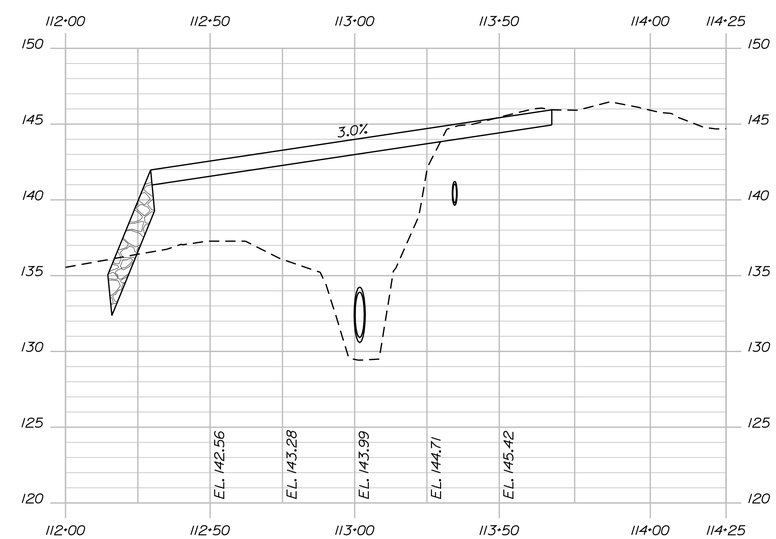

PROFILE - CONTROL LINE (55' RT. of ℄ Construction)

Filename: ...\010_Profile - Side Roads.dgn Division: BRIDGE Username: dana.damren Date:11/19/2014

STATE OF MAINE
DEPARTMENT OF TRANSPORTATION

BR-1928(100)X & STP-1928(000)

WIN 19281.00 & 19280.00

BRIDGE NO. 1525 & 3333

BRIDGE PLANS

PROJ. MANAGER	M. Parlen	BY	DATE
DESIGN-DETAILED	GAG / DCE	D. Damren	Oct. 2014
CHECKED-REVIEWED	------	------	------
DESIGN2-DETAILED2	------	------	------
DESIGN3-DETAILED3	------	------	------
REVISIONS 1	------	------	------
REVISIONS 2	------	------	------
REVISIONS 3	------	------	------
REVISIONS 4	------	------	------
FIELD CHANGES	------	------	------

SIGNATURE

P.E. NUMBER

DATE

CANAL & BAR MILLS BRIDGES
SACO RIVER CANAL & SACO RIVER
HOLLIS & BUXTON
YORK COUNTY

PROFILE - SIDE ROADS

SHEET NUMBER

10

OF 148

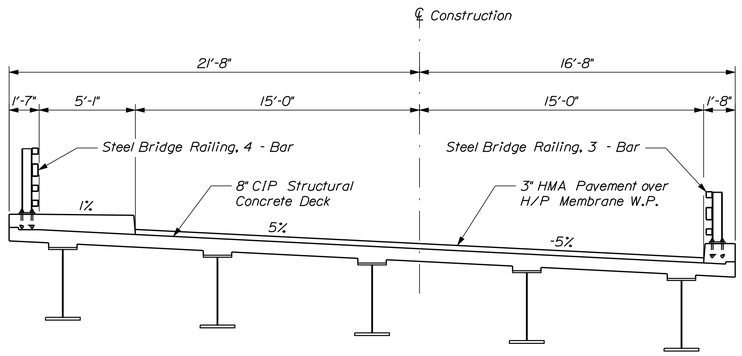

PROPOSED TRANSVERSE SECTION
Canal Bridge

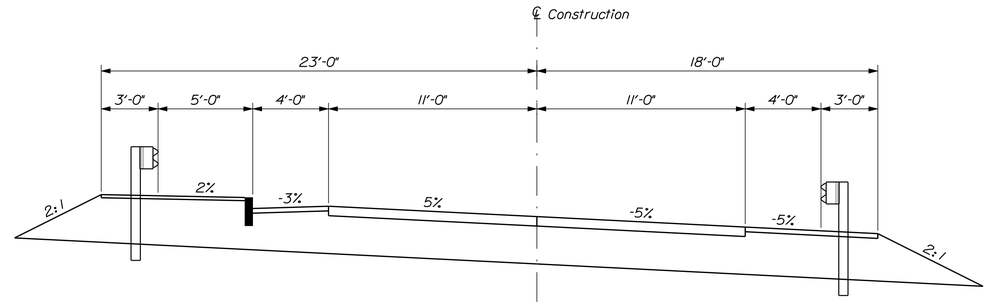

PROPOSED APPROACH DESIGN SECTION
~ Hollis Approach ~
6" Hot Mix Asphalt Pavement
24" Aggregate Subbase Course - Gravel

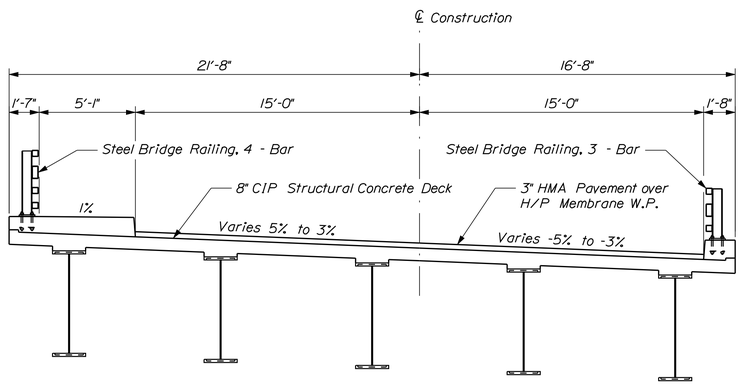

PROPOSED TRANSVERSE SECTION
Bar Mills Bridge (Abut. No. 1 End)

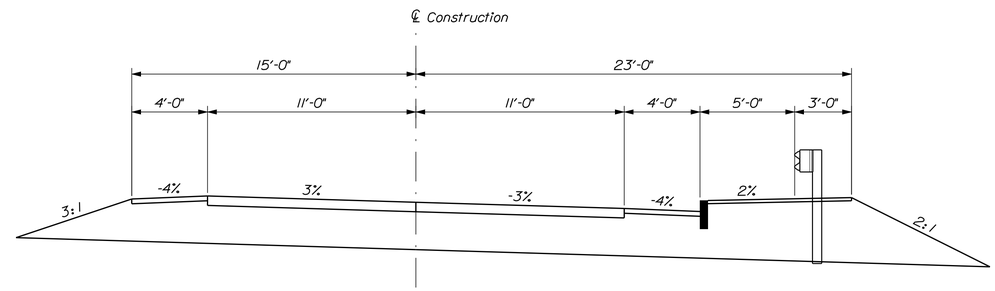

PROPOSED APPROACH DESIGN SECTION
~ Buxton Approach ~
6" Hot Mix Asphalt Pavement
24" Aggregate Subbase Course - Gravel

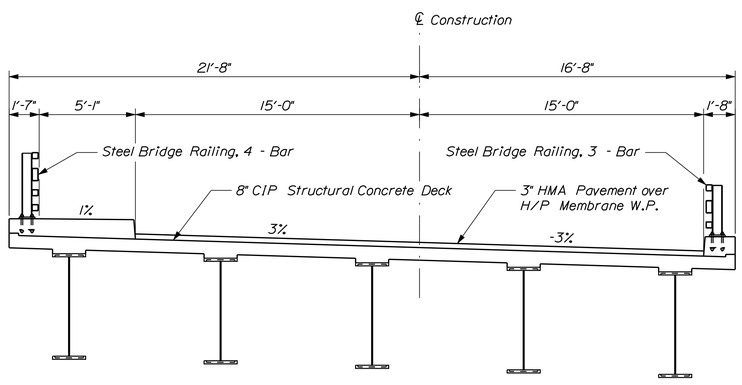

PROPOSED TRANSVERSE SECTION
Bar Mills Bridge (Typical)

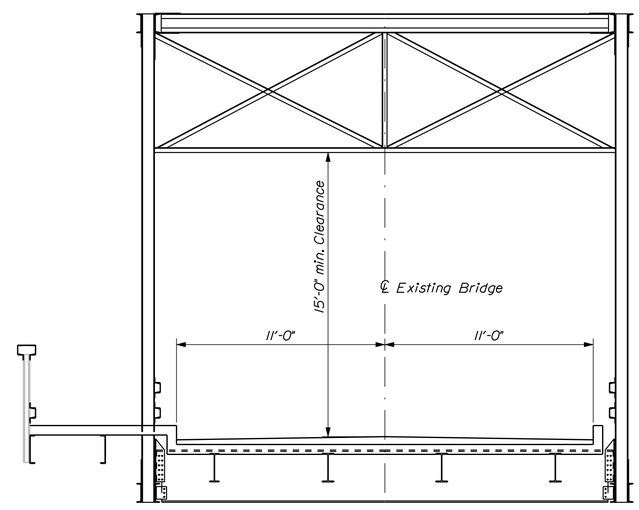

EXISTING TRANSVERSE SECTION

STATE OF MAINE
DEPARTMENT OF TRANSPORTATION

BR-1928(100)X & STP-1928(000)

WIN 19281.00 & 19280.00

BRIDGE NO. 1525 & 3333

BRIDGE PLANS

PROJ. MANAGER	M. Parlin			
DESIGN-DETAILED	GAG / DCE	BY	DATE	
CHECKED-REVIEWED	------	D. Damren	Oct. 2014	SIGNATURE
DESIGN2-DETAILED2	------	------	------	
DESIGN3-DETAILED3	------	------	------	P.E. NUMBER
REVISIONS 1	------	------	------	
REVISIONS 2	------	------	------	DATE
REVISIONS 3	------	------	------	
REVISIONS 4	------	------	------	
FIELD CHANGES	------	------	------	

CANAL & BAR MILLS BRIDGES
SACO RIVER CANAL & SACO RIVER
HOLLIS & BUXTON YORK COUNTY

TYPICAL SECTIONS

SHEET NUMBER
11
OF 148

Filename: ...\msta\011_TypicalSections.dgn Division: BRIDGE Username: dana.damren Date:11/19/2014

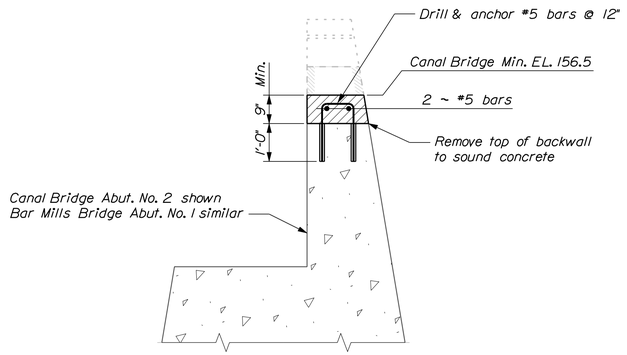

EXISTING BACKWALL REPAIR DETAIL

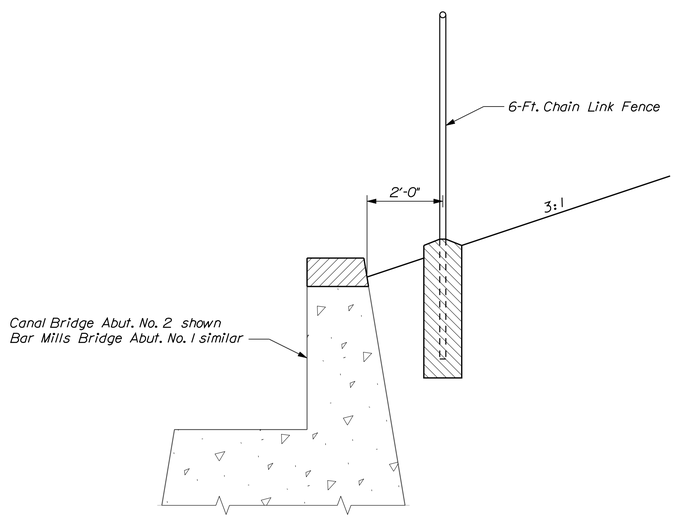

SLOPE & FENCE DETAIL AT EXISTING BACKWALL

Filename: ...\msto\012_Special Details.dgn Division: BRIDGE Username: dana.damren Date:11/19/2014

STATE OF MAINE
DEPARTMENT OF TRANSPORTATION

BR-1928(100)X & STP-1928(000)

WIN 19281.00 & 19280.00

BRIDGE NO. 1525 & 3333

BRIDGE PLANS

PROJ. MANAGER	M. Parlin	BY	DATE
DESIGN-DETAILED	CAG / DCE	D. Damren	Oct. 2014
CHECKED-REVIEWED	------	------	------
DESIGN2-DETAILED2	------	------	------
DESIGN3-DETAILED3	------	------	------
REVISIONS 1	------		------
REVISIONS 2	------		------
REVISIONS 3	------		------
REVISIONS 4	------		------
FIELD CHANGES	------		------

SIGNATURE

P.E. NUMBER

DATE

CANAL & BAR MILLS BRIDGES
SACO RIVER CANAL & SACO RIVER
HOLLIS & BUXTON YORK COUNTY

SPECIAL DETAILS

SHEET NUMBER

12

OF 148

Filename: ...\00\GEOTECH\MSTA\013_BLP1.dgn Division: BRIDGE Username: Brian.J.Nichols Date:11/12/2014

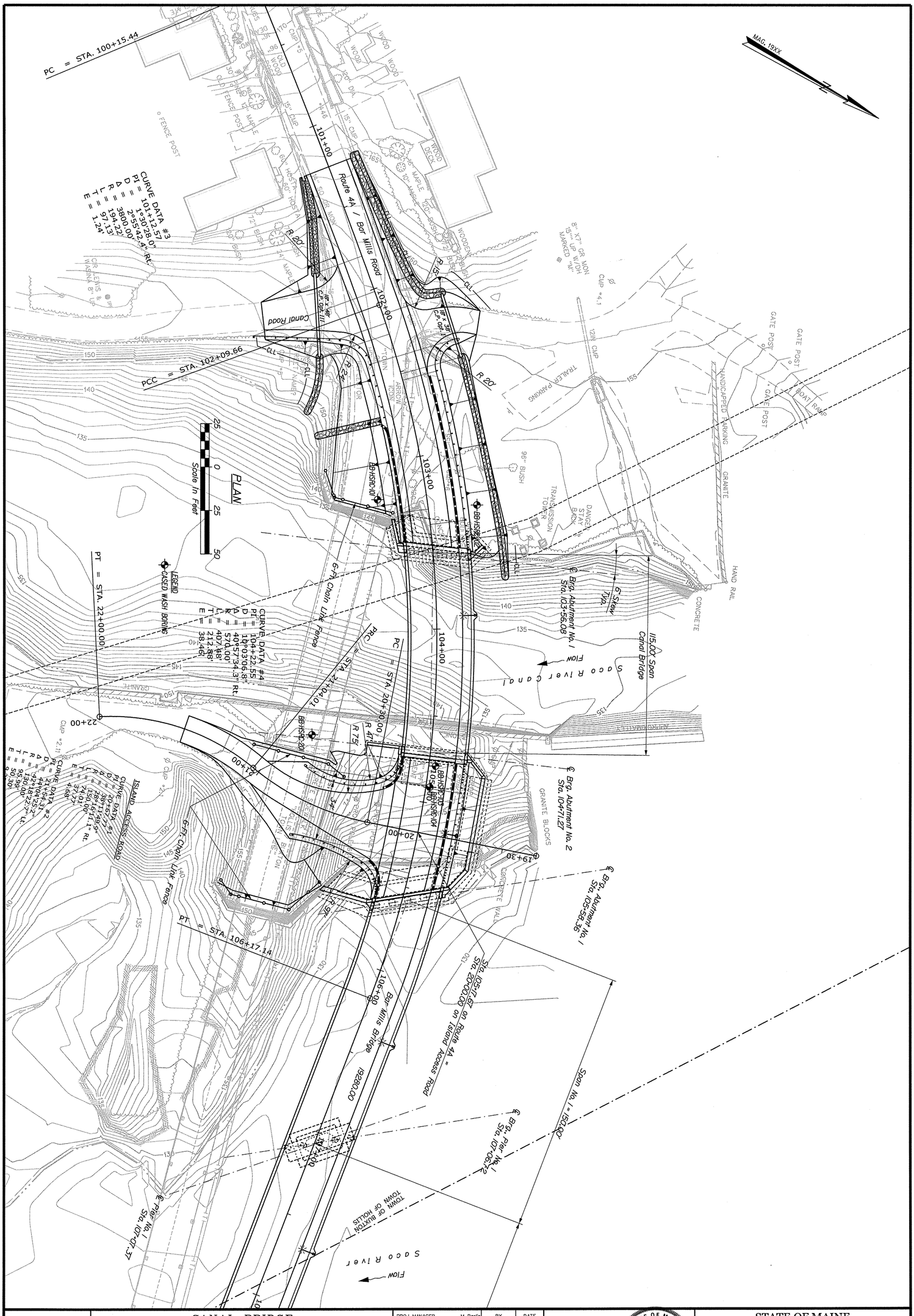

SHEET NUMBER 13 OF 148

CANAL BRIDGE
SACO RIVER CANAL
HOLLIS YORK COUNTY

BORING LOCATION PLAN

PROJ. MANAGER	M. Parlin	BY	DATE
DESIGN-DETAILED	D. Eaton	D. Damren	
CHECKED-REVIEWED			
DESIGN2-DETAILED2	K.MAGUIRE	T.WHITE	SEPT 2013
DESIGN3-DETAILED3			
REVISIONS 1			
REVISIONS 2			
REVISIONS 3			
REVISIONS 4			
FIELD CHANGES			

SIGNATURE
7120
P.E. NUMBER
11/12/14
DATE

STATE OF MAINE Kathleen Maguire 7120 LICENSED PROFESSIONAL ENGINEER

STATE OF MAINE
DEPARTMENT OF TRANSPORTATION

BR-1928(100)X

BRIDGE NO. 1525 WIN 19281.00 BRIDGE PLANS

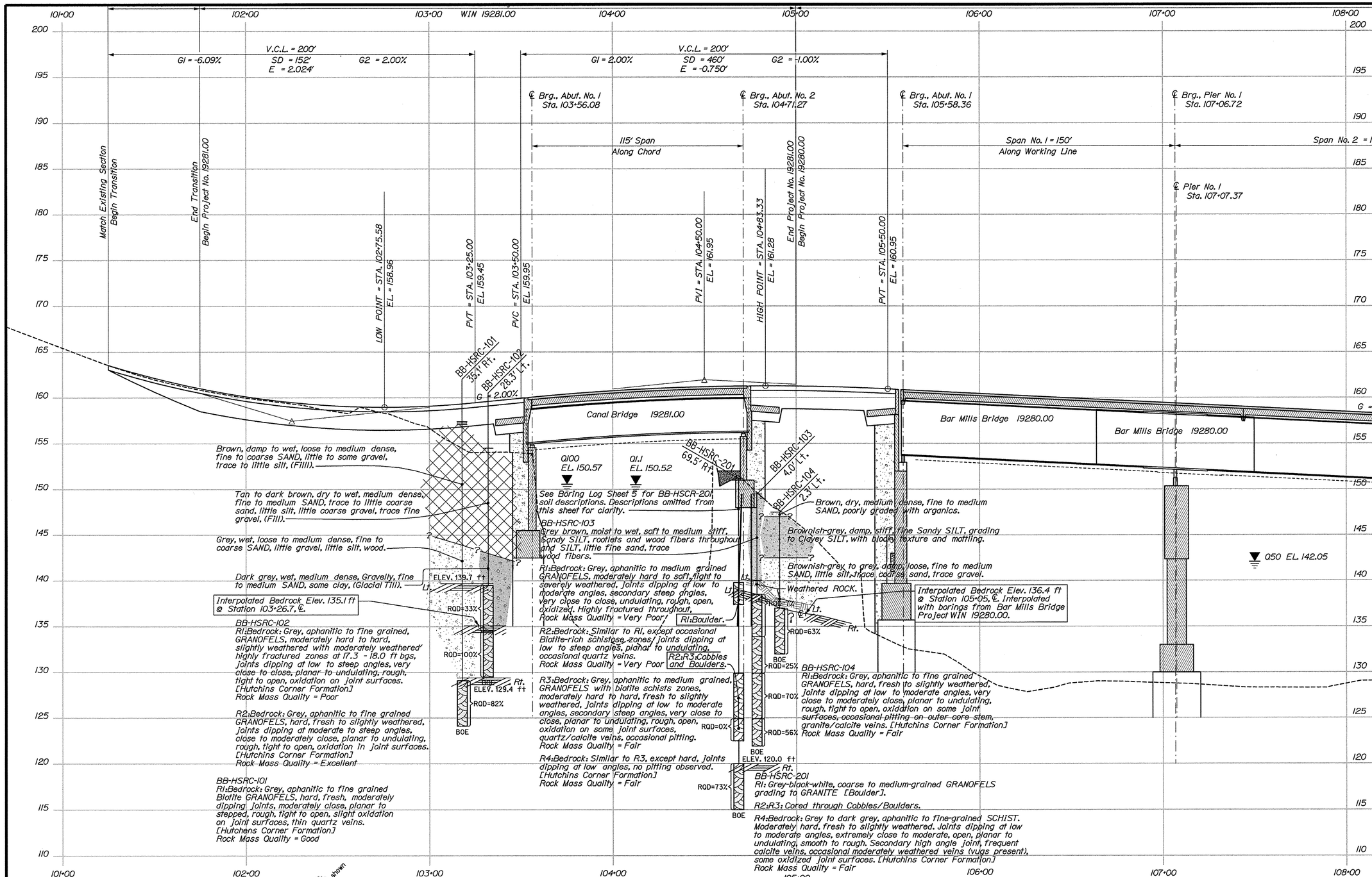

Note: This generalized interpretive soil profile is intended to convey trends in subsurface conditions. The boundaries between strata are approximate and idealized, and have been developed by interpretations of widely spaced explorations and samples. Actual soil transitions may vary and are probably more erratic. For more specific information refer to the exploration logs.

STATE OF MAINE
DEPARTMENT OF TRANSPORTATION

BR-1928(100)X

WIN 19281.00

BRIDGE PLANS

BRIDGE NO. 1525

STATE OF MAINE
Kathleen Magune
7120
LICENSED
PROFESSIONAL ENGINEER

SIGNATURE
P.E. NUMBER
DATE 12/5/14

		BY	DATE
PROJ. MANAGER	M. Parlin		
DESIGN-DETAILED	D. Eaton	D. Damren	
CHECKED-REVIEWED			
DESIGN2-DETAILED2	K.MAGUIRE	T.WHITE	JAN 2014
DESIGN3-DETAILED3			
REVISIONS 1			
REVISIONS 2			
REVISIONS 3			
REVISIONS 4			
FIELD CHANGES			

CANAL BRIDGE
SACO RIVER CANAL
HOLLIS YORK COUNTY

INTERPRETIVE SUBSURFACE PROFILE

SHEET NUMBER
14
OF 148

Filename: ...\00\GEOTECH\MSTA\014_ISP1.dgn Division: BRIDGE Username: dana.damren Date:12/3/2014

Filename: ...\MSTA\015_BORING LOGS1.dgn   Division: BRIDGE   Username: Brian.J.Nichols   Date:11/12/2014

Maine Department of Transportation — Soil/Rock Exploration Log — US CUSTOMARY UNITS

Project: Canal Bridge #1525 carries Route 4A over Saco River Canal		Location: Hollis, Maine		Boring No.:	BB-HSRC-101
				WIN:	19281.00
Driller:	MaineDOT	Elevation (ft.)	157.4	Auger ID/OD:	5" Solid Stem
Operator:	Giles/Doggett	Datum:	NAVD88	Sampler:	Standard Split Spoon
Logged By:	B. Wilder	Rig Type:	CME 45C	Hammer Wt./Fall:	140#/30"
Date Start/Finish:	9/11/2013; 07:30-14:30	Drilling Method:	Cased Wash Boring	Core Barrel:	NQ-2"
Boring Location:	103+17.8, 35.1 ft Rt.	Casing ID/OD:	HW & NW	Water Level*:	15.0 ft bgs.
Hammer Efficiency Factor: 0.867		Hammer Type:	Automatic ☒ Hydraulic ☐ Rope & Cathead ☐		

Definitions:
D = Split Spoon Sample
MD = Unsuccessful Split Spoon Sample attempt
U = Thin Wall Tube Sample
MU = Unsuccessful Thin Wall Tube Sample attempt
V = Insitu Vane Shear Test, PP = Pocket Penetrometer
MV = Unsuccessful Insitu Vane Shear Test attempt
R = Rock Core Sample
SSA = Solid Stem Auger
HSA = Hollow Stem Auger
RC = Roller Cone
WOH = weight of 140lb. hammer
WOR/C = weight of rods or casing
WO1P = Weight of one person
S_u = Insitu Field Vane Shear Strength (psf)
T_v = Pocket Torvane Shear Strength (psf)
q_p = Unconfined Compressive Strength (ksf)
N-uncorrected = Raw field SPT N-value
Hammer Efficiency Factor = Annual Calibration Value
N_{60} = SPT N-uncorrected corrected for hammer efficiency
N_{60} = (Hammer Efficiency Factor/60%)*N-uncorrected
$S_{u(lab)}$ = Lab Vane Shear Strength (psf)
WC = water content, percent
LL = Liquid Limit
PL = Plastic Limit
PI = Plasticity Index
G = Grain Size Analysis
C = Consolidation Test

Depth (ft.)	Sample No.	Pen./Rec. (in.)	Sample Depth (ft.)	Blows (/6 in.) Shear Strength (psf) or RQD (%)	N-uncorrected	N_{60}	Casing Blows	Elevation (ft.)	Visual Description and Remarks	Laboratory Testing Results/ AASHTO and Unified Class
0							SSA	157.07	4" Pavement — 0.33	
1	1D	24/17	1.00 - 3.00	5/7/5/6	12	17			Brown, damp, medium dense, fine to coarse SAND, some gravel, little silt. (Fill).	G#243052 A-1-b, SM WC=4.8%
5	2D	24/14	5.00 - 7.00	3/4/3/3	7	10			Brown, damp, loose, fine to coarse SAND, some gravel, trace silt. (Fill).	G#243053 A-1-b, SW-SM WC=4.2%
10	3D	24/9	10.00 - 12.00	3/4/2/3	6	9	15		Brown, wet, loose, fine to coarse SAND, little gravel, little silt. (Fill).	
11							21			
12							27			
13							39	143.90	— 13.50	
14							47			
15	4D	24/15	15.00 - 17.00	7/10/10/8	20	29	41		Grey, wet, medium dense, fine to coarse SAND, little gravel, little silt.	G#243054 A-1-b, SW-SM WC=12.3%
16							61			
17							56			
18							51			
19							36			
20	MD	21/0	20.00 - 21.75	4/3/2/2	5	7	15		Failed sample attempt, similar to above in wash, loose.	
21							20			
22							19			
23							20			
24							19			
25	5D	24/8	25.00 - 27.00	3/2/3/2	5	7	25		Grey, wet, loose, fine to coarse SAND, little gravel, little silt, wood.	
26							48			
27							80			
28	R1	60/54	28.30 - 33.30	RQD = 82%			NQ-2	129.40	— 28.00 Top of Bedrock at Elev. 129.4 ft. Roller Coned ahead to 28.3 ft bgs. R1:Bedrock: Grey, aphanitic to fine grained, Biotite GRANOFELS, hard, fresh, moderately dipping joints, moderately close, planar to stepped, rough, tight to open, slight oxidation on joint surfaces, thin quartz veins. [Hutchens Corner Formation] Rock Mass Quality = Good R1:Core Times (min:sec) 28.3-29.3 ft (5:03) 29.3-30.3 ft (6:19) 30.3-31.3 ft (6:12) 31.3-32.3 ft (6:03) 32.3-33.3 ft (6:00) 90% Recovery	
33								124.10	— 33.30 Bottom of Exploration at 33.30 feet below ground surface.	

Remarks:

300-400 lbs down pressure on Core Barrel.
bgs= below ground surface

Stratification lines represent approximate boundaries between soil types; transitions may be gradual.

* Water level readings have been made at times and under conditions stated. Groundwater fluctuations may occur due to conditions other than those present at the time measurements were made.

Page 1 of 1 — Boring No.: BB-HSRC-101

Maine Department of Transportation — Soil/Rock Exploration Log — US CUSTOMARY UNITS

Project: Canal Bridge #1525 carries Route 4A over Saco River Canal		Location: Hollis, Maine		Boring No.:	BB-HSRC-102
				WIN:	19281.00
Driller:	Northern Test Borings Inc.	Elevation (ft.)	154.5	Auger ID/OD:	5" Solid Stem
Operator:	M. Nadeau	Datum:	NAVD88	Sampler:	Standard Split Spoon
Logged By:	B. Steinert H&A	Rig Type:	Dietrich D-50 ATV	Hammer Wt./Fall:	140#/30"
Date Start/Finish:	9/9/2013-9/9/2013	Drilling Method:	Cased Wash Boring	Core Barrel:	NQ-2"
Boring Location:	103+32, 28.3 ft Lt.	Casing ID/OD:	HW	Water Level*:	None Observed
Hammer Efficiency Factor: 0.801		Hammer Type:	Automatic ☒ Hydraulic ☐ Rope & Cathead ☐		

Definitions:
D = Split Spoon Sample
MD = Unsuccessful Split Spoon Sample attempt
U = Thin Wall Tube Sample
MU = Unsuccessful Thin Wall Tube Sample attempt
V = Insitu Vane Shear Test, PP = Pocket Penetrometer
MV = Unsuccessful Insitu Vane Shear Test attempt
R = Rock Core Sample
SSA = Solid Stem Auger
HSA = Hollow Stem Auger
RC = Roller Cone
WOH = weight of 140lb. hammer
WOR/C = weight of rods or casing
WO1P = Weight of one person
S_u = Insitu Field Vane Shear Strength (psf)
T_v = Pocket Torvane Shear Strength (psf)
q_p = Unconfined Compressive Strength (ksf)
N-uncorrected = Raw field SPT N-value
Hammer Efficiency Factor = Annual Calibration Value
N_{60} = SPT N-uncorrected corrected for hammer efficiency
N_{60} = (Hammer Efficiency Factor/60%)*N-uncorrected
$S_{u(lab)}$ = Lab Vane Shear Strength (psf)
WC = water content, percent
LL = Liquid Limit
PL = Plastic Limit
PI = Plasticity Index
G = Grain Size Analysis
C = Consolidation Test

Depth (ft.)	Sample No.	Pen./Rec. (in.)	Sample Depth (ft.)	Blows (/6 in.) Shear Strength (psf) or RQD (%)	N-uncorrected	N_{60}	Casing Blows	Elevation (ft.)	Visual Description and Remarks	Laboratory Testing Results/ AASHTO and Unified Class
0	1D	24/12	0.00 - 2.00	3/8/9/8	17	23	SSA		Tan to dark brown, dry to moist, medium dense, fine to medium SAND, trace coarse sand, little silt, rootlets in top 6" of sample, (Fill).	
5	2D	24/6	5.00 - 7.00	12/6/5/2	11	15			Tan to brown, dry to moist, medium dense, fine to medium SAND, little coarse gravel and silt, trace fine gravel, (Fill). Dark brown, wet, medium dense, fine to medium SAND, little coarse sand and silt, (Fill).	
10	3D	24/12	10.00 - 12.00	8/6/5/5	11	15	42		Similar to above.	
11							85	143.00	— 11.50 Dark grey, wet, medium dense, Gravelly fine to medium SAND, some clay, (Glacial Till).	
12							297			
13							66		Similar material to above observed in wash water below approximately 13.0 ft bgs. 942 blows for 0.8 ft.	
14							942	139.70	— 14.80	
15	R1	60/60	15.00 - 20.00	RQD = 33%			NQ-2		Top of Bedrock at Elev. 139.7 ft. Roller Coned ahead to 15.0 ft bgs. R1:Bedrock: Grey, aphanitic to fine grained, GRANOFELS, moderately hard to hard, slightly weathered with moderately weathered, highly fractured zones at 17.3 to 18.0 ft bgs, joints dipping at low to steep angles, very close to close, planar to undulating, rough, tight to open, oxidation on joint surfaces. [Hutchins Corner Formation] Rock Mass Quality = Poor R1:Core Times (min:sec) 15.0-16.0 ft (2:04) 16.0-17.0 ft (2:10) 17.0-18.0 ft (1:47) 18.0-19.0 ft (2:05) 19.0-20.0 ft (2:32) 100% Recovery	
20	R2	60/60	20.00 - 25.00	RQD = 100%					R2:Bedrock: Grey, aphanitic to fine grained GRANOFELS, hard, fresh to slightly weathered, joints dipping at moderate to steep angles, close to moderately close, planar to undulating, rough, tight to open, oxidation in joint surfaces. [Hutchins Corner Formation] Rock Mass Quality = Excellent R2:Core Times (min:sec) 20.0-21.0 ft (3:43) 21.0-22.0 ft (2:49) 22.0-23.0 ft (1:54) 23.0-24.0 ft (2:37) 24.0-25.0 ft (1:47) 100% Recovery Bottom of Exploration at 25.00 feet below ground surface.	
25								129.50	— 25.00 Bottom of Exploration at 25.00 feet below ground surface.	

Remarks:

Drill Rig SN:283
bgs = below ground surface

Stratification lines represent approximate boundaries between soil types; transitions may be gradual.

* Water level readings have been made at times and under conditions stated. Groundwater fluctuations may occur due to conditions other than those present at the time measurements were made.

Page 1 of 1 — Boring No.: BB-HSRC-102

Maine Department of Transportation — Soil/Rock Exploration Log — US CUSTOMARY UNITS

Project: Canal Bridge #1525 carries Route 4A over Saco River Canal		Location: Hollis, Maine		Boring No.:	BB-HSRC-103
				WIN:	19281.00
Driller:	Northern Test Borings Inc.	Elevation (ft.)	149.5	Auger ID/OD:	5" Solid Stem
Operator:	M. Nadeau	Datum:	NAVD88	Sampler:	Standard Split Spoon
Logged By:	B. Steinert H&A	Rig Type:	Dietrich D-50 ATV	Hammer Wt./Fall:	140#/30"
Date Start/Finish:	9/11/2013-9/11/2013	Drilling Method:	Cased Wash Boring	Core Barrel:	NQ-2"
Boring Location:	104+78.5, 4.0 ft Lt.	Casing ID/OD:	HW	Water Level*:	None Observed
Hammer Efficiency Factor: 0.801		Hammer Type:	Automatic ☒ Hydraulic ☐ Rope & Cathead ☐		

Definitions:
D = Split Spoon Sample
MD = Unsuccessful Split Spoon Sample attempt
U = Thin Wall Tube Sample
MU = Unsuccessful Thin Wall Tube Sample attempt
V = Insitu Vane Shear Test, PP = Pocket Penetrometer
MV = Unsuccessful Insitu Vane Shear Test attempt
R = Rock Core Sample
SSA = Solid Stem Auger
HSA = Hollow Stem Auger
RC = Roller Cone
WOH = weight of 140lb. hammer
WOR/C = weight of rods or casing
WO1P = Weight of one person
S_u = Insitu Field Vane Shear Strength (psf)
T_v = Pocket Torvane Shear Strength (psf)
q_p = Unconfined Compressive Strength (ksf)
N-uncorrected = Raw field SPT N-value
Hammer Efficiency Factor = Annual Calibration Value
N_{60} = SPT N-uncorrected corrected for hammer efficiency
N_{60} = (Hammer Efficiency Factor/60%)*N-uncorrected
$S_{u(lab)}$ = Lab Vane Shear Strength (psf)
WC = water content, percent
LL = Liquid Limit
PL = Plastic Limit
PI = Plasticity Index
G = Grain Size Analysis
C = Consolidation Test

Depth (ft.)	Sample No.	Pen./Rec. (in.)	Sample Depth (ft.)	Blows (/6 in.) Shear Strength (psf) or RQD (%)	N-uncorrected	N_{60}	Casing Blows	Elevation (ft.)	Visual Description and Remarks	Laboratory Testing Results/ AASHTO and Unified Class
0	1D	24/10	0.00 - 2.00	1/2/3/3	5	7	SSA		Grey brown, moist, medium stiff, Sandy SILT, rootlets and wood fibers throughout.	
5	2D	24/6	5.00 - 7.00	2/2/WOH/1	2	3			Grey brown, wet, soft, SILT, little fine sand, trace wood fibers.	
9								140.00	— 9.50 Weathered BEDROCK.	
10	3D	9/9	10.00 - 10.75	45/50(3")	—			138.50	Roller Coned ahead to 11.0 ft bgs.	
11	R1	55.2/41	11.00 - 15.60	RQD = 7%			NQ-2		— 11.00 Top of Intact Bedrock at Elev. 138.5 ft. R1:Bedrock: Grey, aphanitic to medium grained, GRANOFELS, moderately hard to soft, light to severely weathered, joints dipping at low to moderate angles, secondary steep angles, very close to close, undulating, rough, open, oxidized. Highly fractured throughout. Rock Mass Quality = Very Poor R1:Core Times (min:sec) 11.0-12.0 ft (2:26) 12.0-13.0 ft (1:52) 13.0-14.0 ft (1:57) 14.0-15.0 ft (1:49) 15.0-15.6 ft (2:00) 75% Recovery	
15	R2	48/44	15.60 - 19.60	RQD = 25%					R2:Bedrock: Similar to R1, except occasional Biotite-rich schistose zones, joints dipping at low to steep angles, planar to undulating, occasional quartz veins. Rock Mass Quality = Very Poor R2:Core Times (min:sec) 15.6-16.0 ft (0:41) 16.0-17.0 ft (1:48) 17.0-18.0 ft (1:33) 18.0-19.0 ft (2:35) 19.0-19.6 ft (1:47) 92% Recovery	
19	R3	60/60	19.60 - 24.60	RQD = 70%					R3:Bedrock: Grey, aphanitic to medium grained, GRANOFELS with biotite schists zones, moderately hard to hard, fresh to slightly weathered, joints dipping at low to moderate angles, secondary steep angles, very close to close, planar to undulating, rough, open, oxidation on some joint surfaces, quartz/calcite veins, occasional pitting. Rock Mass Quality = Fair R3:Core Times (min:sec) 19.6-20.0 ft (1:43) 20.0-21.0 ft (2:33) 21.0-22.0 ft (2:25) 22.0-23.0 ft (3:29) 23.0-24.0 ft (5:09) 24.0-24.6 ft (1:40) 100% Recovery	
24	R4	36/36	24.60 - 27.60	RQD = 56%					R4:Bedrock: Similar to R3, except hard. Joints dipping at low angles, no pitting observed. [Hutchins Corner Formation] Rock Mass Quality = Fair R4:Core Times (min:sec) 24.6-25.0 ft (1:36) 25.0-26.0 ft (3:27) 26.0-27.0 ft (?) 27.0-27.6 ft (3:07) 100% Recovery	
27								121.90	— 27.60 Bottom of Exploration at 27.60 feet below ground surface.	

Remarks:

Drill Rig SN:283
bgs = below ground surface

Stratification lines represent approximate boundaries between soil types; transitions may be gradual.

* Water level readings have been made at times and under conditions stated. Groundwater fluctuations may occur due to conditions other than those present at the time measurements were made.

Page 1 of 1 — Boring No.: BB-HSRC-103

Maine Department of Transportation — Soil/Rock Exploration Log — US CUSTOMARY UNITS

Project: Canal Bridge #1525 carries Route 4A over Saco River Canal		Location: Hollis, Maine		Boring No.:	BB-HSRC-104
				WIN:	19281.00
Driller:	Northern Test Borings Inc.	Elevation (ft.)	147.5	Auger ID/OD:	5" Solid Stem
Operator:	M. Nadeau	Datum:	NAVD88	Sampler:	Standard Split Spoon
Logged By:	N. Dearden/B. Steinert H&A	Rig Type:	Dietrich D-50 ATV	Hammer Wt./Fall:	140#/30"
Date Start/Finish:	9/11/2013-9/11/2013	Drilling Method:	Cased Wash Boring	Core Barrel:	NQ-2"
Boring Location:	104+90.9, 2.3 ft Lt.	Casing ID/OD:	HW	Water Level*:	None Observed
Hammer Efficiency Factor: 0.801		Hammer Type:	Automatic ☒ Hydraulic ☐ Rope & Cathead ☐		

Definitions:
D = Split Spoon Sample
MD = Unsuccessful Split Spoon Sample attempt
U = Thin Wall Tube Sample
MU = Unsuccessful Thin Wall Tube Sample attempt
V = Insitu Vane Shear Test, PP = Pocket Penetrometer
MV = Unsuccessful Insitu Vane Shear Test attempt
R = Rock Core Sample
SSA = Solid Stem Auger
HSA = Hollow Stem Auger
RC = Roller Cone
WOH = weight of 140lb. hammer
WOR/C = weight of rods or casing
WO1P = Weight of one person
S_u = Insitu Field Vane Shear Strength (psf)
T_v = Pocket Torvane Shear Strength (psf)
q_p = Unconfined Compressive Strength (ksf)
N-uncorrected = Raw field SPT N-value
Hammer Efficiency Factor = Annual Calibration Value
N_{60} = SPT N-uncorrected corrected for hammer efficiency
N_{60} = (Hammer Efficiency Factor/60%)*N-uncorrected
$S_{u(lab)}$ = Lab Vane Shear Strength (psf)
WC = water content, percent
LL = Liquid Limit
PL = Plastic Limit
PI = Plasticity Index
G = Grain Size Analysis
C = Consolidation Test

Depth (ft.)	Sample No.	Pen./Rec. (in.)	Sample Depth (ft.)	Blows (/6 in.) Shear Strength (psf) or RQD (%)	N-uncorrected	N_{60}	Casing Blows	Elevation (ft.)	Visual Description and Remarks	Laboratory Testing Results/ AASHTO and Unified Class
0	1D	24/13	0.00 - 2.00	3/4/6/7	10	13	SSA	147.00	Brown, dry, medium dense, Silty, fine to medium SAND, poorly graded with organics. — 0.50 Brownish-grey, damp, stiff, fine Sandy SILT grading to clayey SILT with blocky texture and mottling.	
5	2D	24/11	5.00 - 7.00	3/5/2/2	7	9		142.50	— 5.00 Brownish-grey to gray, damp, loose, fine to medium SAND, little silt, trace coarse sand and gravel.	
9								138.00	— 9.50 Auger REFUSAL, probable Weathered BEDROCK.	
10	MD R1	1/0 60/60	10.00 - 10.08 10.50 - 15.50	50(1") RQD = 63%	—		NQ-2	137.00	Failed sample attempt. Roller Coned ahead to 10.5 ft bgs. — 10.50 Top of Intact Bedrock at Elev. 137.0 ft. R1:Bedrock: Grey, aphanitic to fine grained, GRANOFELS, hard, fresh to slightly weathered, joints dipping at low to moderate angles, very close to moderately close, planar to undulating, rough, tight to open, oxidation on some joint surfaces, occasional pitting on outer core stem, granite/calcite veins. [Hutchins Corner Formation] Rock Mass Quality = Fair R1:Core Times (min:sec) 10.5-11.5 ft (3:39) 11.5-12.5 ft (3:14) 12.5-13.5 ft (4:40) 13.5-14.5 ft (2:51) 14.5-15.5 ft (2:33) 100% Recovery	
15								132.00	— 15.50 Bottom of Exploration at 15.50 feet below ground surface.	

Remarks:

Drill Rig SN:283

Stratification lines represent approximate boundaries between soil types; transitions may be gradual.

* Water level readings have been made at times and under conditions stated. Groundwater fluctuations may occur due to conditions other than those present at the time measurements were made.

Page 1 of 1 — Boring No.: BB-HSRC-104

STATE OF MAINE
DEPARTMENT OF TRANSPORTATION

BR-1928(100)X

WIN 19281.00

BRIDGE PLANS

BRIDGE NO. 1525

STATE OF MAINE — Kathleen Maguire — 7120 — LICENSED PROFESSIONAL ENGINEER

SIGNATURE

P.E. NUMBER 7120

DATE 11/12/14

		BY	DATE
PROJ. MANAGER	M. Parlin		
DESIGN-DETAILED	D. Eaton	D. Damren	
CHECKED-REVIEWED			
DESIGN2-DETAILED2	K.MAGUIRE	T.WHITE	NOV 2014
DESIGN3-DETAILED3			
REVISIONS 1			
REVISIONS 2			
REVISIONS 3			
REVISIONS 4			
FIELD CHANGES			

HOLLIS

CANAL BRIDGE
SACO RIVER CANAL
YORK COUNTY

BORING LOGS

Maine Department of Transportation

Soil/Rock Exploration Log
US CUSTOMARY UNITS

Project: Canal Bridge Replacement		Boring No.:	BB-HSRC-201
Location: Hollis/Buxton, Maine		WIN:	19281.00
Driller:	MAINE DEPARTMENT OF Transportation	Elevation (ft.)	151.2 (est.)
Operator:	C. Giles	Datum:	NAVD 88
Logged By:	M. Snow	Rig Type:	CME 45
Date Start/Finish:	7-15-2014/7-15-2014	Drilling Method:	Cased Wash Boring
Boring Location:	1241NB/2L: 325.5 FT RT. 348 Remarks:	Casing ID/OD:	3.0 In.
Hammer Efficiency Factor: 0.667		Hammer Type:	Automatic ☒ Hydraulic ☐ Rope & Cathead ☐
Auger ID/OD:	--	Sampler:	SPLIT SPOON/1.375 IN. ID
Hammer Wt./Fall:	140#/30 In.	Core Barrel:	NQ-2.0 In.
Water Level*:	None observed		

Definitions:
S = Split Spoon Sample
SO = Unsuccessful Split Spoon Sample attempt
U = Thin Wall Tube Sample
UO = Unsuccessful Thin Wall Tube Sample attempt
V = Insitu Vane Shear Test. PP = Pocket Penetrometer
WOH = Weight of 140lb. hammer
WOR = Weight of rods or casing
WO1P = Weight of one person.
R = Rock Core Sample
HSA = Hollow Stem Auger
RC = Roller Cone
S_u = Insitu Field Vane Shear Strength (psf)
S_{ur} = Pocket Torvane Shear Strength (psf)
q_u = Unconfined Compressive Strength (ksf)
N-uncorrected = Raw Field SPT Bowcount
Hammer Efficiency Factor = Annual Calibration Value
N_{60} = SPT N-uncorrected corrected for hammer efficiency
N_{60} = Hammer Efficiency Factor/60%*N-uncorrected
$S_{ur(lab)}$ = Lab Vane Shear Strength (psf)
W_c = water content, percent
LL = Liquid Limit
PL = Plastic Limit
PI = Plasticity Index
G = Grain Size Analysis
C = Consolidation Test

Sample Information

Depth (ft.)	Sample No.	Pen./Rec. (in)	Sample Depth (ft.)	Blows (/6 in. Cumulative) (Last 12 or PEN 12)	N-uncorrected	N_{60}	Casing Blows	Elevation (ft.)	Graphic Log	Visual Description and Remarks	Laboratory Testing Results/ AASHTO Unified Class
0	1D	24/12	0.00 - 2.00	3/3/2/2	5	7	1			Brown, moist, loose, fine to medium SAND, little coarse sand and gravel, trace silt. (Fill).	
							10				
							15				
	2D	24/9	3.70 - 5.70	16/9/5/4	14	20	21	147.50		Broken rock FILL (slaty cleavage) ---------- 3.70	
							21	147.00		---------- 4.20 Brown, wet, medium dense, Silty fine to medium SAND, little coarse sand and gravel. (Fill).	
5							24				
							20				
							9				
	3D	24/4	8.70 - 10.70	7/3/3/5	6	9	12			Recovered 2 in. gravel wash. 2 in. brown, wet, loose, fine to medium SAND, some silt, little angular gravel, trace coarse sand, moderately bonded. (Fill).	
							13				
10							13				
	R1	29/26	11.40 - 13.82				8(8.0) 20(0.0)	135.80		Gray-black-white, coarse to medium-grained GRANOFELS grading to GRANITE. (Boulder). ---------- 11.40	
							32(2.0)				
							30(4.0)	133.70		---------- 13.50	
								131.10		Wood ---------- 14.10	
							SPIN UP	136.20		Note: Spun NW casing through probable boulder from 14.1 to 15.7 feet based on drill action.	
15										Note: Gray wash water at 15.7 feet. ---------- 15.00	
										(Probable Glacial Till)	
20	R2	60/17	21.30 - 26.30							Note: Cored through cobbles/boulders from 21.3 to 26.3 feet.	
25							SPIN UP				
	R3	29/2	26.30 - 28.72	RQD = 0%						Note: Cored through cobbles from 26.3 to 28.7 feet.	
	SO	24/5	28.70 - 30.70	4/3/5/6	8	12				Grey, wet, medium dense, fine to medium SAND, little gravel, trace coarse sand and silt. (Glacial Till).	
30											
	R4	60/60	31.20 - 36.20	RQD = 73%			NQ-2	120.00		Top of Bedrock at Elev. 120.0 ft. ---------- 31.20 Grey to dark Grey, aphanitic to fine-grained SCHIST. Moderately hard, fresh to slightly weathered. Joints dipping at low to moderate angles, extremely close to moderate, open, planar to undulating, smooth to rough. Secondary high angle joint, frequent calcite veins, occasional moderately weathered veins (vugs present), some oxidized joint surfaces. (Kutahdin Corner Formation). Rock Mass Quality = Fair Joint Spacing (Joints/meter) 31.2-32.7 ft (2x10) 32.2-33.2 ft (4x25) 33.2-34.2 ft (5x15) 34.2-35.2 ft (3x10) 35.2-36.2 ft (4x35) Recovery 100% ---------- 36.20 Bottom of Exploration at 36.20 feet below ground surface.	
35								115.00			
40											
45											
50											

Remarks:

1. As-drilled coordinates of test borings determined by MaineDOT and provided in NAD83 (96) ME2000 East Zone coordinate system. As-drilled coordinates related to baseline station and offset information by MaineDOT.
2. Boring Location from the Island Access Road = Sta. 204BL-4, 35.4 ft Rt.

Stratification lines represent approximate boundaries between soil types; transitions may be gradual.

* Water level readings have been made at times and under conditions stated. Groundwater fluctuations may occur due to conditions other than those present at the time measurements were made.

Page 1 of 1

Boring No.: BB-HSRC-201

Filename: ...\MSTA\016_BORING LOGS2.dgn Division: BRIDGE Username: Brian.J.Nichols Date:11/12/2014

STATE OF MAINE
DEPARTMENT OF TRANSPORTATION

BR-1928(100)X

WIN 19281.00

BRIDGE NO. 1525

BRIDGE PLANS

STATE OF MAINE Kathleen Maguire 7120 LICENSED PROFESSIONAL ENGINEER

SIGNATURE

P.E. NUMBER

11/12/14
DATE

		BY	DATE
PROJ. MANAGER	M. Parin		
DESIGN-DETAILED	D. Eaton	D. Damren	NOV 2014
CHECKED-REVIEWED		T.WHITE	
DESIGN2-DETAILED2	K.MAGUIRE		
DESIGN3-DETAILED3			
REVISIONS 1			
REVISIONS 2			
REVISIONS 3			
REVISIONS 4			
FIELD CHANGES			

CANAL BRIDGE
SACO RIVER CANAL
HOLLIS YORK COUNTY

BORING LOGS

SHEET NUMBER
16
OF 148

Filename: ...\00\GEOTECH\MSTA\017_BLP1.dgn Division: BRIDGE Username: Brian.J.Nichols Date:11/12/2014

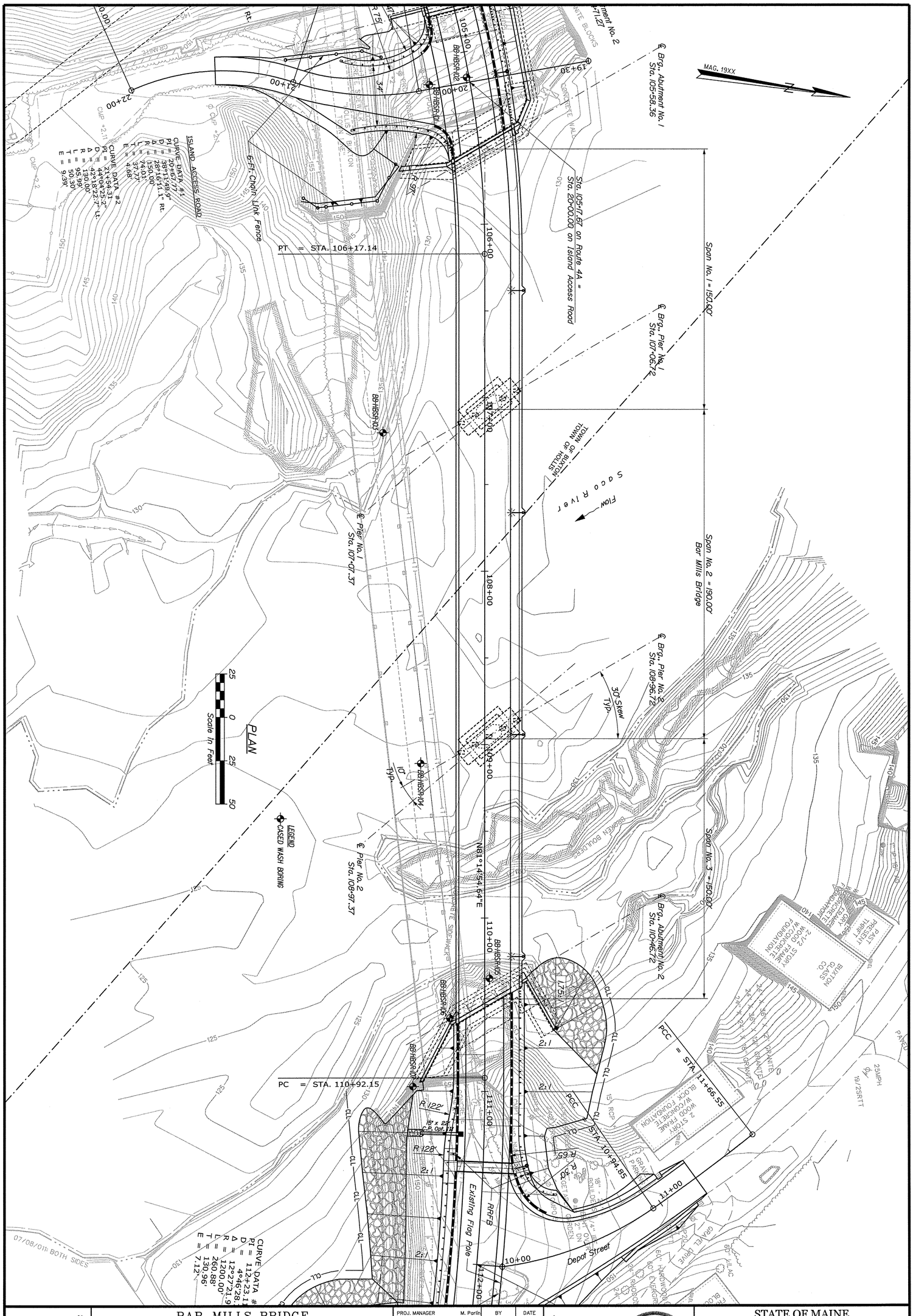

PROJ. MANAGER	M. Parlin	BY	DATE
DESIGN-DETAILED	D. Eaton	D. Damren	
CHECKED-REVIEWED			
DESIGN2-DETAILED2	K.MAGUIRE	T.WHITE	SEPT 2013
DESIGN3-DETAILED3			
REVISIONS 1			
REVISIONS 2			
REVISIONS 3			
REVISIONS 4			
FIELD CHANGES			

SIGNATURE 7/20
P.E. NUMBER 7120
DATE 11/12/14

STATE OF MAINE
Kathleen Maguire
7120
LICENSED PROFESSIONAL ENGINEER

BAR MILLS BRIDGE
SACO RIVER
HOLLIS-BUXTON YORK COUNTY

BORING LOCATION PLAN

STATE OF MAINE
DEPARTMENT OF TRANSPORTATION

STP-1928(000)

BRIDGE NO. 3333 WIN 19280.00 BRIDGE PLANS

SHEET NUMBER 17 OF 148

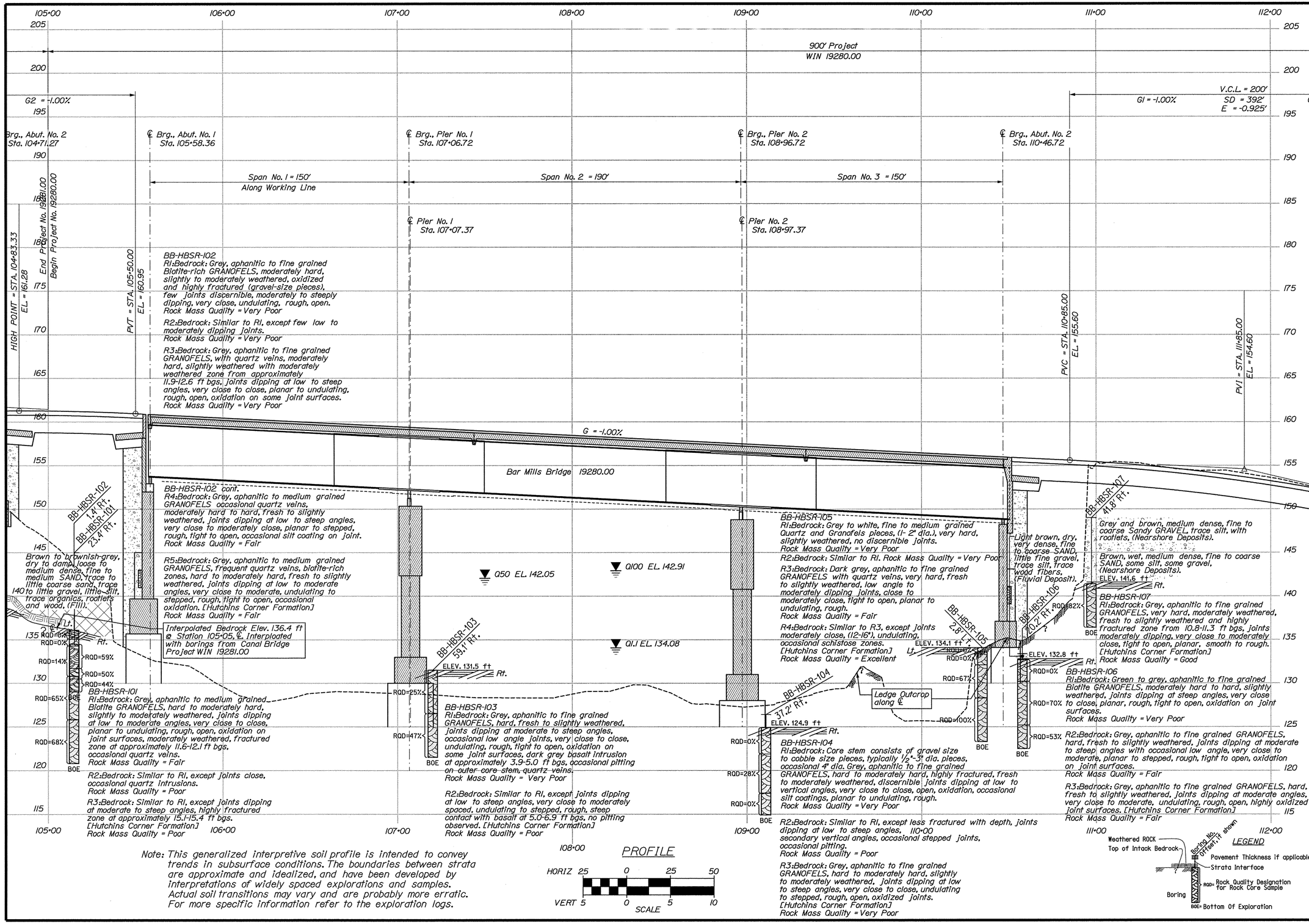

Note: This generalized interpretive soil profile is intended to convey trends in subsurface conditions. The boundaries between strata are approximate and idealized, and have been developed by interpretations of widely spaced explorations and samples. Actual soil transitions may vary and are probably more erratic. For more specific information refer to the exploration logs.

STATE OF MAINE
DEPARTMENT OF TRANSPORTATION

STP-1928(000)

WIN 19280.00

BRIDGE PLANS

BRIDGE NO. 3333

STATE OF MAINE ★ Nathan Magune 7120 ★ LICENSED PROFESSIONAL ENGINEER

SIGNATURE

7120
P.E. NUMBER

12/3/14
DATE

	BY	DATE
PROJ. MANAGER		
DESIGN-DETAILED	M. Perlin	
CHECKED-REVIEWED		
DESIGN-DETAILED	K.MAGURE	JUN 2014
CHECKED-REVIEWED	T. WHITE	
REVISIONS 1		
REVISIONS 2		
REVISIONS 3		
REVISIONS 4		
FIELD CHANGES		

BAR MILLS BRIDGE
SACO RIVER
HOLLIS-BUXTON YORK COUNTY

INTERPRETIVE SUBSURFACE PROFILE

SHEET NUMBER
18
OF 148

Filename: ...\00\GEOTECH\MSTA\018_ISP1.dgn Division: BRIDGE Date:12/3/2014 Username: dana.damren

Filename: ...\MSTA\019_BORING LOGS1.dgn   Division: BRIDGE   Username: Brian.J.Nichols   Date:11/12/2014

Maine Department of Transportation
Soil/Rock Exploration Log
US CUSTOMARY UNITS

Project: Bar Mills Bridge #3333 carries Route 4A over Saco River
Location: Hollis-Buxton, Maine

Boring No.: BB-HBSR-101
WIN: 19280.00

Driller:	Northern Test Boring, Inc.	Elevation (ft.)	145.0	Auger ID/OD:	5" Solid Stem
Operator:	M. Nadeau	Datum:	NAVD88	Sampler:	Standard Split Spoon
Logged By:	B. Steinert H&A	Rig Type:	Dietrich D-50 Track	Hammer Wt./Fall:	140#/30"
Date Start/Finish:	9/11/2013-9/11/2013	Drilling Method:	Cased Wash Boring	Core Barrel:	NQ-2"
Boring Location:	105+14.9, 23.4 ft Rt.	Casing ID/OD:	HW	Water Level*:	None Observed
Hammer Efficiency Factor: 0.801		Hammer Type:	Automatic ☒ Hydraulic ☐ Rope & Cathead ☐		

Definitions:
D = Split Spoon Sample
MD = Unsuccessful Split Spoon Sample attempt
U = Thin Wall Tube Sample
MU = Unsuccessful Thin Wall Tube Sample attempt
V = Insitu Vane Shear Test, PP = Pocket Penetrometer
MV = Unsuccessful Insitu Vane Shear Test attempt
R = Rock Core Sample
SSA = Solid Stem Auger
HSA = Hollow Stem Auger
RC = Roller Cone
WOH = weight of 140lb. hammer
WOR/C = weight of rods or casing
WO1P = Weight of one person
S_u = Insitu Field Vane Shear Strength (psf)
T_v = Pocket Torvane Shear Strength (psf)
q_p = Unconfined Compressive Strength (ksf)
N-uncorrected = Raw field SPT N-value
Hammer Efficiency Factor = Annual Calibration Value
N_{60} = SPT N-uncorrected corrected for hammer efficiency
N_{60} = (Hammer Efficiency Factor/60%)*N-uncorrected
$S_{u(lab)}$ = Lab Vane Shear Strength (psf)
WC = water content, percent
LL = Liquid Limit
PL = Plastic Limit
PI = Plasticity Index
G = Grain Size Analysis
C = Consolidation Test

Depth (ft.)	Sample No.	Pen./Rec. (in.)	Sample Depth (ft.)	Blows (/6 in.) Shear Strength (psf) or RQD (%)	N-uncorrected	N_{60}	Casing Blows	Elevation (ft.)	Graphic Log	Laboratory Testing Results/ AASHTO and Unified Class
0	1D	24/8	0.00 - 2.00	6/6/5/5	11	15	SSA			
5	2D	24/3	5.00 - 7.00	5/2/2/3	4	5				
								135.30		
10	R1	33.6/33.6	10.50 - 13.30	RQD = 59%			NQ-2			
	R2	14.4/14.4	13.30 - 14.50	RQD = 50%						
15	R3	18/18	14.50 - 16.00	RQD = 44%				129.00		

Visual Description and Remarks:

Brown, dry, medium dense, fine to medium SAND, little coarse sand, gravel and silt, rootlets, (Topsoil/Fill).

Brown, dry, loose, fine to medium SAND, little silt, trace coarse sand and gravel.

9.70
Top of Bedrock at Elev. 135.3 ft.
Auger REFUSAL at 9.7 ft bgs. Roller Coned ahead to 10.5 ft bgs.
R1:Bedrock: Grey, aphanitic to medium grained Biotite GRANOFELS, hard to moderately hard, slightly to moderately weathered, joints dipping at low to moderate angles, very close to close, planar to undulating, rough, open, oxidation on joint surfaces, moderately weathered, fractured zone at approximately 11.6-12.1 ft bgs, occasional quartz veins.
Rock Mass Quality = Fair
R1:Core Times (min:sec)
10.5-11.5 ft (2:45)
11.5-12.5 ft (3:10)
12.5-13.3 ft (3:49) 100% Recovery
R2:Bedrock: Similar to R1, except joints close, occasional quartz intrusions.
Rock Mass Quality = Poor
R2:Core Times (min:sec)
13.3-13.5 ft (0:51)
13.5-14.5 ft (3:57) 100% Recovery
R3:Bedrock: Similar to R1, except joints dipping at moderate to steep angles, highly fractured zone at approximately 15.1-15.4 ft bgs. [Hutchins Corner Formation]
Rock Mass Quality = Poor
R3:Core Times (min:sec)
14.5-16.0 ft (2:14) 100% Recovery
16.00
Bottom of Exploration at 16.00 feet below ground surface.

Remarks:

Stratification lines represent approximate boundaries between soil types; transitions may be gradual.
* Water level readings have been made at times and under conditions stated. Groundwater fluctuations may occur due to conditions other than those present at the time measurements were made.

Page 1 of 1
Boring No.: BB-HBSR-101

Maine Department of Transportation
Soil/Rock Exploration Log
US CUSTOMARY UNITS

Project: Bar Mills Bridge #3333 carries Route 4A over Saco River
Location: Hollis-Buxton, Maine

Boring No.: BB-HBSR-102
WIN: 19280.00

Driller:	Northern Test Boring, Inc.	Elevation (ft.)	143.6	Auger ID/OD:	N/A
Operator:	M. Nadeau	Datum:	NAVD88	Sampler:	Standard Split Spoon
Logged By:	D. Dearden H&A	Rig Type:	Dietrich D-50 Track	Hammer Wt./Fall:	140#/30"
Date Start/Finish:	9/10/2013-9/10/2013	Drilling Method:	Cased Wash Boring	Core Barrel:	NQ-2"
Boring Location:	105+14.7, 1.4 ft Rt.	Casing ID/OD:	HW	Water Level*:	None Observed
Hammer Efficiency Factor: 0.801		Hammer Type:	Automatic ☒ Hydraulic ☐ Rope & Cathead ☐		

Definitions:
D = Split Spoon Sample
MD = Unsuccessful Split Spoon Sample attempt
U = Thin Wall Tube Sample
MU = Unsuccessful Thin Wall Tube Sample attempt
V = Insitu Vane Shear Test, PP = Pocket Penetrometer
MV = Unsuccessful Insitu Vane Shear Test attempt
R = Rock Core Sample
SSA = Solid Stem Auger
HSA = Hollow Stem Auger
RC = Roller Cone
WOH = weight of 140lb. hammer
WOR/C = weight of rods or casing
WO1P = Weight of one person
S_u = Insitu Field Vane Shear Strength (psf)
T_v = Pocket Torvane Shear Strength (psf)
q_p = Unconfined Compressive Strength (ksf)
N-uncorrected = Raw field SPT N-value
Hammer Efficiency Factor = Annual Calibration Value
N_{60} = SPT N-uncorrected corrected for hammer efficiency
N_{60} = (Hammer Efficiency Factor/60%)*N-uncorrected
$S_{u(lab)}$ = Lab Vane Shear Strength (psf)
WC = water content, percent
LL = Liquid Limit
PL = Plastic Limit
PI = Plasticity Index
G = Grain Size Analysis
C = Consolidation Test

Depth (ft.)	Sample No.	Pen./Rec. (in.)	Sample Depth (ft.)	Blows (/6 in.) Shear Strength (psf) or RQD (%)	N-uncorrected	N_{60}	Casing Blows	Elevation (ft.)	Graphic Log	Laboratory Testing Results/ AASHTO and Unified Class
0	1D	24/6	0.00 - 2.00	1/2/2/3	4	5	RCA			
5	2D	20.4/4	5.00 - 6.70	2/2/2/50(2.4")	4	5				
	R1	12/10	7.50 - 8.50	RQD = 0%			NQ-2	136.10		
	R2	9.6/6	8.50 - 9.30	RQD = 0%						
10	R3	42/41	9.30 - 12.80	RQD = 14%						
	R4	60/60	12.80 - 17.80	RQD = 65%						
	R5	60/54	17.80 - 22.80	RQD = 68%				120.80		

Visual Description and Remarks:

Brown, dry, loose, fine to medium SAND, little silt, trace gravel, poorly graded with rootlets and trace organics. (Reworked Alluvium, Fill).

Brownish-grey, moist to damp, loose, fine to medium SAND, little silt, poorly graded with piece of decomposed wood 2" in length.

Advanced HW Casing to 7.4 ft bgs. Roller Coned ahead to 7.5 ft bgs.
7.50
Top of Bedrock at Elev. 136.1 ft.
R1:Bedrock: Grey, aphanitic to fine grained Biotite-rich GRANOFELS, moderately hard, slightly to moderately weathered, oxidized and highly fractured (gravel-size pieces), few joints discernible, moderately to steeply dipping, very close, undulating, rough, open.
Rock Mass Quality = Very Poor
R1:Core Times (min:sec)
7.5-8.5 ft (6:00) 83% Recovery
Core Barrel Jammed
R2:Bedrock: Similar to R1, except few low to moderately dipping joints.
Rock Mass Quality = Very Poor
R2:Core Times (min:sec)
8.5-9.3 ft (4:00) 60% Recovery
R3:Bedrock: Grey, aphanitic to fine grained GRANOFELS, with quartz veins, moderately hard, slightly weathered with moderately weathered zone from approximately 11.9-12.6 ft bgs, joints dipping at low to steep angles, very close to close, planar to undulating, rough, open, oxidation on some joint surfaces.
Rock Mass Quality = Very Poor
R3:Core Times (min:sec)
9.3-10.3 ft (2:00)
10.3-11.3 ft (2:00)
11.3-12.3 ft (2:00)
12.3-12.8 ft (1:48) 98% Recovery
R4:Bedrock: Grey, aphanitic to medium grained GRANOFELS, occasional quartz veins, moderately hard to hard, fresh to slightly weathered, joints dipping at low to steep angles, very close to moderately close, planar to stepped, rough, tight to open, occasional silt coating on joint.
Rock Mass Quality = Fair
R4:Core Times (min:sec)
12.8-13.8 ft (1:42)
13.8-14.8 ft (2:00)
14.8-15.8 ft (2:00)
15.8-16.8 ft (2:00)
16.8-17.8 ft (3:00) 100% Recovery
R5:Bedrock: Grey, aphanitic to medium grained GRANOFELS, frequent quartz veins, biotite-rich zones, hard to moderately hard, fresh to slightly weathered, joints dipping at low to moderate angles, very close to moderate, undulating to stepped, rough, tight to open, occasional oxidation.
[Hutchins Corner Formation]
Rock Mass Quality = Fair
R5:Core Times (min:sec)
17.8-18.8 ft (2:00)
18.8-19.8 ft (2:30)
19.8-20.8 ft (2:00)
20.8-21.8 ft (4:30)
21.8-22.8 ft (?) 90% Recovery
22.80
Bottom of Exploration at 22.80 feet below ground surface.

Remarks:

Stratification lines represent approximate boundaries between soil types; transitions may be gradual.
* Water level readings have been made at times and under conditions stated. Groundwater fluctuations may occur due to conditions other than those present at the time measurements were made.

Page 1 of 1
Boring No.: BB-HBSR-102

Maine Department of Transportation
Soil/Rock Exploration Log
US CUSTOMARY UNITS

Project: Bar Mills Bridge #3333 carries Route 4A over Saco River
Location: Hollis-Buxton, Maine

Boring No.: BB-HBSR-103
WIN: 19280.00

Driller:	MaineDOT	Elevation (ft.)	131.5	Auger ID/OD:	N/A
Operator:	Giles/Doggett	Datum:	NAVD88	Sampler:	N/A
Logged By:	B. Wilder	Rig Type:	CME 45C	Hammer Wt./Fall:	N/A
Date Start/Finish:	9/10/2013; 10:00-14:00	Drilling Method:	Cased Wash Boring	Core Barrel:	NQ-2"
Boring Location:	107+20.1, 59.1 ft Rt.	Casing ID/OD:	HW	Water Level*:	None Observed
Hammer Efficiency Factor: 0.867		Hammer Type:	Automatic ☒ Hydraulic ☐ Rope & Cathead ☐		

Definitions:
D = Split Spoon Sample
MD = Unsuccessful Split Spoon Sample attempt
U = Thin Wall Tube Sample
MU = Unsuccessful Thin Wall Tube Sample attempt
V = Insitu Vane Shear Test, PP = Pocket Penetrometer
MV = Unsuccessful Insitu Vane Shear Test attempt
R = Rock Core Sample
SSA = Solid Stem Auger
HSA = Hollow Stem Auger
RC = Roller Cone
WOH = weight of 140lb. hammer
WOR/C = weight of rods or casing
WO1P = Weight of one person
S_u = Insitu Field Vane Shear Strength (psf)
T_v = Pocket Torvane Shear Strength (psf)
q_p = Unconfined Compressive Strength (ksf)
N-uncorrected = Raw field SPT N-value
Hammer Efficiency Factor = Annual Calibration Value
N_{60} = SPT N-uncorrected corrected for hammer efficiency
N_{60} = (Hammer Efficiency Factor/60%)*N-uncorrected
$S_{u(lab)}$ = Lab Vane Shear Strength (psf)
WC = water content, percent
LL = Liquid Limit
PL = Plastic Limit
PI = Plasticity Index
G = Grain Size Analysis
C = Consolidation Test

Depth (ft.)	Sample No.	Pen./Rec. (in.)	Sample Depth (ft.)	Blows (/6 in.) Shear Strength (psf) or RQD (%)	N-uncorrected	N_{60}	Casing Blows	Elevation (ft.)	Graphic Log	Laboratory Testing Results/ AASHTO and Unified Class
0	R1	60/60	0.00 - 5.00	RQD = 25%			NQ-2			
5	R2	60/60	5.00 - 10.00	RQD = 47%						
10								121.50		

Visual Description and Remarks:

Top of Bedrock at Elev. 131.5 ft.
Spun HW Casing 0.4 ft into Bedrock.
R1:Bedrock: Grey, aphanitic to fine grained GRANOFELS, hard, fresh to slightly weathered, joints dipping at moderate to steep angles, occasional low angle joints, very close to close, undulating, rough, tight to open, oxidation on some joint surfaces, dark grey basalt intrusion at approximately 3.9-5.0 ft bgs, occasional pitting on outer core stem, quartz veins.
Rock Mass Quality = Very Poor
R1:Core Times (min:sec)
0.0-1.0 ft (5:45)
1.0-2.0 ft (7:00)
2.0-3.0 ft (7:50)
3.0-4.0 ft (8:25)
4.0-5.0 ft (8:30) 100% Recovery
R2:Bedrock: Similar to R1, except joints dipping at low to steep angles, very close to moderately spaced, undulating to stepped, rough, steep contact with basalt at 5.0-6.9 ft bgs, no pitting observed.
[Hutchins Corner Formation]
Rock Mass Quality = Poor
R2:Core Times (min:sec)
5.0-6.0 ft (6:15)
6.0-7.0 ft (7:20)
7.0-8.0 ft (7:35)
8.0-9.0 ft (7:35)
9.0-10.0 ft (7:50) 100% Recovery
10.00
Bottom of Exploration at 10.00 feet below ground surface.

Remarks:

27.0 ft from Bridge Deck to Ground. Top of Bedrock.
300-400 lbs of down presure on Core Barrel.

Stratification lines represent approximate boundaries between soil types; transitions may be gradual.
* Water level readings have been made at times and under conditions stated. Groundwater fluctuations may occur due to conditions other than those present at the time measurements were made.

Page 1 of 1
Boring No.: BB-HBSR-103

Maine Department of Transportation
Soil/Rock Exploration Log
US CUSTOMARY UNITS

Project: Bar Mills Bridge #3333 carries Route 4A over Saco River
Location: Hollis-Buxton, Maine

Boring No.: BB-HBSR-104
WIN: 19280.00

Driller:	MaineDOT/H&A	Elevation (ft.)	126.4	Auger ID/OD:	N/A
Operator:	Giles/Doggett	Datum:	NAVD88	Sampler:	N/A
Logged By:	B. Wilder/M. Snow	Rig Type:	CME 45C	Hammer Wt./Fall:	140#/30"
Date Start/Finish:	9/9/2013-9/10/2013	Drilling Method:	Cased Wash Boring	Core Barrel:	NQ-2"
Boring Location:	109+10.9, 37.2 ft Rt.	Casing ID/OD:	HW & NW	Water Level*:	None Observed
Hammer Efficiency Factor: 0.867		Hammer Type:	Automatic ☒ Hydraulic ☐ Rope & Cathead ☐		

Definitions:
D = Split Spoon Sample
MD = Unsuccessful Split Spoon Sample attempt
U = Thin Wall Tube Sample
MU = Unsuccessful Thin Wall Tube Sample attempt
V = Insitu Vane Shear Test, PP = Pocket Penetrometer
MV = Unsuccessful Insitu Vane Shear Test attempt
R = Rock Core Sample
SSA = Solid Stem Auger
HSA = Hollow Stem Auger
RC = Roller Cone
WOH = weight of 140lb. hammer
WOR/C = weight of rods or casing
WO1P = Weight of one person
S_u = Insitu Field Vane Shear Strength (psf)
T_v = Pocket Torvane Shear Strength (psf)
q_p = Unconfined Compressive Strength (ksf)
N-uncorrected = Raw field SPT N-value
Hammer Efficiency Factor = Annual Calibration Value
N_{60} = SPT N-uncorrected corrected for hammer efficiency
N_{60} = (Hammer Efficiency Factor/60%)*N-uncorrected
$S_{u(lab)}$ = Lab Vane Shear Strength (psf)
WC = water content, percent
LL = Liquid Limit
PL = Plastic Limit
PI = Plasticity Index
G = Grain Size Analysis
C = Consolidation Test

Depth (ft.)	Sample No.	Pen./Rec. (in.)	Sample Depth (ft.)	Blows (/6 in.) Shear Strength (psf) or RQD (%)	N-uncorrected	N_{60}	Casing Blows	Elevation (ft.)	Graphic Log	Laboratory Testing Results/ AASHTO and Unified Class
0							124			
	R1	36/36	1.50 - 4.50	RQD = 0%			a353 NQ-2	124.90		
5	R2	54/54	4.50 - 9.00	RQD = 28%						
10	R3	30/24	9.00 - 11.50	RQD = 0%				114.90		

Visual Description and Remarks:

30.4 ft of HW Casing, then set in NW Casing.
No description given.
a353 blows for 0.5 ft.
1.50
Top of Bedrock at Elev. 124.9 ft.
R1:Bedrock: Core stem consists of gravel size to cobble size pieces, typically .5"-3" dia. pieces, occasional 4" dia.
Grey, aphanitic to fine grained GRANOFELS, hard to moderately hard, highly fractured, fresh to moderately weathered, discernible joints dipping at low to vertical angles, very close to close, open, oxidation, occasional silt coatings, planar to undulating, rough.
Rock Mass Quality = Very Poor
R1:Core Times (min:sec)
1.5-2.5 ft (7:20)
2.5-3.5 ft (9:20)
3.5-4.5 ft (6:25) 100% Recovery
No water return.
Set in NW Casing to 2.5 ft bgs.
R2:Bedrock: Similar to R1, except less fractured with depth, joints dipping at low to steep angles, secondary vertical angles, occasional stepped joints, occasional pitting.
Rock Mass Quality = Poor
R2:Core Times (min:sec)
4.5-5.5 ft (4:39)
5.5-6.5 ft (4:37)
6.5-7.5 ft (4:15)
7.5-8.5 ft (3:30)
8.5-9.0 ft (5:00) 100% Recovery
Core Blocked, no water return.
R3:Bedrock: Grey, aphanitic to fine grained GRANOFELS, hard to moderately hard, slightly to moderately weathered. Joints dipping at low to steep angles, very close to close, undulating to stepped, rough, open, oxidized joints.
[Hutchins Corner Formation]
Rock Mass Quality = Very Poor
R3:Core Times (min:sec)
9.0-10.0 ft (7:10)
10.0-11.0 ft (4:45)
11.0-11.5 ft (4:00) 80% Recovery
No water return.
11.50
Bottom of Exploration at 11.50 feet below ground surface.

Remarks:

30.4 ft from Bridge Deck to Ground.
300-400 lbs of down presure on Core Barrel.

Stratification lines represent approximate boundaries between soil types; transitions may be gradual.
* Water level readings have been made at times and under conditions stated. Groundwater fluctuations may occur due to conditions other than those present at the time measurements were made.

Page 1 of 1
Boring No.: BB-HBSR-104

Maine Department of Transportation
Soil/Rock Exploration Log
US CUSTOMARY UNITS

Project: Bar Mills Bridge #3333 carries Route 4A over Saco River
Location: Hollis-Buxton, Maine

Boring No.: BB-HBSR-105
WIN: 19280.00

Driller:	Northern Test Boring, Inc.	Elevation (ft.)	134.1	Auger ID/OD:	N/A
Operator:	M. Nadeau	Datum:	NAVD88	Sampler:	N/A
Logged By:	M. Snow H&A	Rig Type:	Dietrich D-50 Track	Hammer Wt./Fall:	N/A
Date Start/Finish:	9/17/2013-9/17/2013	Drilling Method:	N/A	Core Barrel:	NQ-2"
Boring Location:	110+34.8, 2.8 ft Lt.	Casing ID/OD:	N/A	Water Level*:	None Observed
Hammer Efficiency Factor: 0.801		Hammer Type:	Automatic ☒ Hydraulic ☐ Rope & Cathead ☐		

Definitions:
D = Split Spoon Sample
MD = Unsuccessful Split Spoon Sample attempt
U = Thin Wall Tube Sample
MU = Unsuccessful Thin Wall Tube Sample attempt
V = Insitu Vane Shear Test, PP = Pocket Penetrometer
MV = Unsuccessful Insitu Vane Shear Test attempt
R = Rock Core Sample
SSA = Solid Stem Auger
HSA = Hollow Stem Auger
RC = Roller Cone
WOH = weight of 140lb. hammer
WOR/C = weight of rods or casing
WO1P = Weight of one person
S_u = Insitu Field Vane Shear Strength (psf)
T_v = Pocket Torvane Shear Strength (psf)
q_p = Unconfined Compressive Strength (ksf)
N-uncorrected = Raw field SPT N-value
Hammer Efficiency Factor = Annual Calibration Value
N_{60} = SPT N-uncorrected corrected for hammer efficiency
N_{60} = (Hammer Efficiency Factor/60%)*N-uncorrected
$S_{u(lab)}$ = Lab Vane Shear Strength (psf)
WC = water content, percent
LL = Liquid Limit
PL = Plastic Limit
PI = Plasticity Index
G = Grain Size Analysis
C = Consolidation Test

Depth (ft.)	Sample No.	Pen./Rec. (in.)	Sample Depth (ft.)	Blows (/6 in.) Shear Strength (psf) or RQD (%)	N-uncorrected	N_{60}	Casing Blows	Elevation (ft.)	Graphic Log	Laboratory Testing Results/ AASHTO and Unified Class
0	R1	6/6	0.00 - 0.50	RQD = 0%			NQ-2			
	R2	18/7	0.50 - 2.00	RQD = 0%						
	R3	45.6/42	2.00 - 5.80	RQD = 67%						
5	R4	60/60	5.80 - 10.80	RQD = 100%						
10								123.30		

Visual Description and Remarks:

Top of Bedrock at Elev. 134.1 ft.
R1:Bedrock: Grey to white, fine to medium grained Quartz and Granofels pieces, (1- 2" dia.), very hard, slightly weathered, no discernible joints.
Rock Mass Quality = Very Poor
R1:Core Times (min:sec)
0.0-0.5 ft (1:57) 100% Recovery
R2:Bedrock: Similar to R1.
Rock Mass Quality = Very Poor
R2:Core Times (min:sec)
0.5-1.5 ft (2:44)
1.5-2.0 ft (2:03) 39% Recovery
R3:Bedrock: Dark grey, aphanitic to fine grained GRANOFELS with quartz veins, very hard, fresh to slightly weathered, low angle to moderately dipping joints, close to moderately close, tight to open, planar to undulating, rough.
Rock Mass Quality = Fair
R3:Core Times (min:sec)
2.0-3.0 ft (8:16)
3.0-4.0 ft (8:00)
4.0-5.0 ft (9:31)
5.0-5.8 ft (7:39) 91% Recovery
R4:Bedrock: Similar to R3, except joints moderately close, (12-16"), undulating, occasional schistose zones.
[Hutchins Corner Formation]
Rock Mass Quality = Excellent
R4:Core Times (min:sec)
5.8-6.8 ft (12:30)
6.8-7.8 ft (11:10)
7.8-8.8 ft (15:21)
8.8-9.8 ft (12:30)
9.8-10.8 ft (10:46) 100% Recovery
10.80
Bottom of Exploration at 10.80 feet below ground surface.

Remarks:

Stratification lines represent approximate boundaries between soil types; transitions may be gradual.
* Water level readings have been made at times and under conditions stated. Groundwater fluctuations may occur due to conditions other than those present at the time measurements were made.

Page 1 of 1
Boring No.: BB-HBSR-105

Maine Department of Transportation
Soil/Rock Exploration Log
US CUSTOMARY UNITS

Project: Bar Mills Bridge #3333 carries Route 4A over Saco River
Location: Hollis-Buxton, Maine

Boring No.: BB-HBSR-106
WIN: 19280.00

Driller:	Northern Test Boring, Inc.	Elevation (ft.)	133.4	Auger ID/OD:	N/A
Operator:	M. Nadeau	Datum:	NAVD88	Sampler:	Standard Split Spoon
Logged By:	B. Steinert H&A	Rig Type:	Dietrich D-50 Track	Hammer Wt./Fall:	140#/30"
Date Start/Finish:	9/9/2013-9/9/2013	Drilling Method:	Cased Wash Boring	Core Barrel:	NQ-2"
Boring Location:	110+57.7, 20.2 ft Rt.	Casing ID/OD:	HW	Water Level*:	None Observed
Hammer Efficiency Factor: 0.801		Hammer Type:	Automatic ☒ Hydraulic ☐ Rope & Cathead ☐		

Definitions:
D = Split Spoon Sample
MD = Unsuccessful Split Spoon Sample attempt
U = Thin Wall Tube Sample
MU = Unsuccessful Thin Wall Tube Sample attempt
V = Insitu Vane Shear Test, PP = Pocket Penetrometer
MV = Unsuccessful Insitu Vane Shear Test attempt
R = Rock Core Sample
SSA = Solid Stem Auger
HSA = Hollow Stem Auger
RC = Roller Cone
WOH = weight of 140lb. hammer
WOR/C = weight of rods or casing
WO1P = Weight of one person
S_u = Insitu Field Vane Shear Strength (psf)
T_v = Pocket Torvane Shear Strength (psf)
q_p = Unconfined Compressive Strength (ksf)
N-uncorrected = Raw field SPT N-value
Hammer Efficiency Factor = Annual Calibration Value
N_{60} = SPT N-uncorrected corrected for hammer efficiency
N_{60} = (Hammer Efficiency Factor/60%)*N-uncorrected
$S_{u(lab)}$ = Lab Vane Shear Strength (psf)
WC = water content, percent
LL = Liquid Limit
PL = Plastic Limit
PI = Plasticity Index
G = Grain Size Analysis
C = Consolidation Test

Depth (ft.)	Sample No.	Pen./Rec. (in.)	Sample Depth (ft.)	Blows (/6 in.) Shear Strength (psf) or RQD (%)	N-uncorrected	N_{60}	Casing Blows	Elevation (ft.)	Graphic Log	Laboratory Testing Results/ AASHTO and Unified Class
0	1D	6/6	0.00 - 0.50	79	—		NQ-2	132.80		
	R1	30/10	0.70 - 3.20	RQD = 0%						
	R2	60/60	3.20 - 8.20	RQD = 70%						
	R3	32.4/32.4	8.20 - 10.90	RQD = 53%						
10								122.50		

Visual Description and Remarks:

Light brown, dry, very dense, fine to coarse SAND, little fine gravel, trace silt, trace wood fibers, (Fluvial Deposit).
Spoon REFUSAL at 0.5 ft bgs.
0.60
Top of Bedrock at Elev. 132.8 ft.
Advanced HW Casing to 0.6 ft bgs.
Roller Cone ahead to 0.7 ft bgs.
R1:Bedrock: Green to grey, aphanitic to fine grained Biotite GRANOFELS, moderately hard to hard, slightly weathered, joints dipping at steep angles, very close to close, planar, rough, tight to open, oxidation on joint surfaces.
Rock Mass Quality = Very Poor
R1:Core Times (min:sec)
0.7-1.7 ft (3:11)
1.7-2.7 ft (3:20)
2.7-3.2 ft (1:35) 33% Recovery
R2:Bedrock: Grey, aphanitic to fine grained GRANOFELS, hard, fresh to slightly weathered, joints dipping at moderate to steep angles with occasional low angle, very close to moderate, planar to stepped, rough, tight to open, oxidation on joint surfaces.
Rock Mass Quality = Fair
R2:Core Times (min:sec)
3.2-3.7 ft (1:22)
3.7-4.7 ft (3:05)
4.7-5.7 ft (2:58)
5.7-6.7 ft (2:45)
6.7-7.7 ft (3:09)
7.7-8.2 ft (1:23) 100% Recovery
R3:Bedrock: Grey, aphanitic to fine grained GRANOFELS, hard, fresh to slightly weathered, joints dipping at moderate angles, very close to moderate, undulating, rough, open, highly oxidized joint surfaces. [Hutchins Corner Formation]
Rock Mass Quality = Fair
R3:Core Times (min:sec)
8.2-8.7 ft (1:02)
8.7-9.7 ft (2:18)
9.7-10.7 ft (2:36)
10.7-10.9 ft (0:38) 100% Recovery
10.90
Bottom of Exploration at 10.90 feet below ground surface.

Remarks:

Boring drilled through existing Bridge Deck. Deck thickness 0.8 ft.
Distance from Deck to Ground is 22.8 ft (measured with drill rods).

Stratification lines represent approximate boundaries between soil types; transitions may be gradual.
* Water level readings have been made at times and under conditions stated. Groundwater fluctuations may occur due to conditions other than those present at the time measurements were made.

Page 1 of 1
Boring No.: BB-HBSR-106

Maine Department of Transportation
Soil/Rock Exploration Log
US CUSTOMARY UNITS

Project: Bar Mills Bridge #3333 carries Route 4A over Saco River
Location: Hollis-Buxton, Maine

Boring No.: BB-HBSR-107
WIN: 19280.00

Driller:	Northern Test Boring, Inc.	Elevation (ft.)	149.0	Auger ID/OD:	5" Solid Stem
Operator:	M. Nadeau	Datum:	NAVD88	Sampler:	Standard Split Spoon
Logged By:	M. Snow H&A	Rig Type:	Dietrich D-50 Track	Hammer Wt./Fall:	140#/30"
Date Start/Finish:	9/17/2013-9/17/2013	Drilling Method:	Cased Wash Boring	Core Barrel:	NQ-2"
Boring Location:	110+97.3, 41.8 ft Rt.	Casing ID/OD:	HW	Water Level*:	None Observed
Hammer Efficiency Factor: 0.801		Hammer Type:	Automatic ☒ Hydraulic ☐ Rope & Cathead ☐		

Definitions:
D = Split Spoon Sample
MD = Unsuccessful Split Spoon Sample attempt
U = Thin Wall Tube Sample
MU = Unsuccessful Thin Wall Tube Sample attempt
V = Insitu Vane Shear Test, PP = Pocket Penetrometer
MV = Unsuccessful Insitu Vane Shear Test attempt
R = Rock Core Sample
SSA = Solid Stem Auger
HSA = Hollow Stem Auger
RC = Roller Cone
WOH = weight of 140lb. hammer
WOR/C = weight of rods or casing
WO1P = Weight of one person
S_u = Insitu Field Vane Shear Strength (psf)
T_v = Pocket Torvane Shear Strength (psf)
q_p = Unconfined Compressive Strength (ksf)
N-uncorrected = Raw field SPT N-value
Hammer Efficiency Factor = Annual Calibration Value
N_{60} = SPT N-uncorrected corrected for hammer efficiency
N_{60} = (Hammer Efficiency Factor/60%)*N-uncorrected
$S_{u(lab)}$ = Lab Vane Shear Strength (psf)
WC = water content, percent
LL = Liquid Limit
PL = Plastic Limit
PI = Plasticity Index
G = Grain Size Analysis
C = Consolidation Test

Depth (ft.)	Sample No.	Pen./Rec. (in.)	Sample Depth (ft.)	Blows (/6 in.) Shear Strength (psf) or RQD (%)	N-uncorrected	N_{60}	Casing Blows	Elevation (ft.)	Graphic Log	Laboratory Testing Results/ AASHTO and Unified Class
0	1D	24/6	0.00 - 2.00	5/7/8/8	15	20	SSA			
5	2D	24/8	5.00 - 7.00	3/5/5/9	10	13				
	R1	60/60	7.60 - 12.60	RQD = 82%			NQ-2	141.60		
								136.40		

Visual Description and Remarks:

Grey and brown, medium dense, fine to coarse Sandy GRAVEL, trace silt, with rootlets, (Nearshore Deposits).

Brown, wet, medium dense, fine to coarse SAND, some silt, some gravel, (Nearshore Deposits).
7.40
Top of Bedrock at Elev. 141.6 ft.
R1:Bedrock: Grey, aphanitic to fine grained GRANOFELS, very hard, moderately weathered, fresh to slightly weathered and highly fractured zone from 10.8-11.3 ft bgs, joints moderately dipping, very close to moderately close, tight to open, planar, smooth to rough.
[Hutchins Corner Formation]
Rock Mass Quality = Good
R1:Core Times (min:sec)
7.6-8.6 ft (3:08)
8.6-9.6 ft (3:03)
9.6-10.6 ft (2:35)
10.6-11.6 ft (2:01)
11.6-12.6 ft (2:04) 100% Recovery
12.60
Bottom of Exploration at 12.60 feet below ground surface.

Remarks:

Stratification lines represent approximate boundaries between soil types; transitions may be gradual.
* Water level readings have been made at times and under conditions stated. Groundwater fluctuations may occur due to conditions other than those present at the time measurements were made.

Page 1 of 1
Boring No.: BB-HBSR-107

STATE OF MAINE
DEPARTMENT OF TRANSPORTATION
STP-1928(000)
WIN 19280.00
BRIDGE PLANS
BRIDGE NO. 3333

STATE OF MAINE Kathleen Maguire 7120 LICENSED PROFESSIONAL ENGINEER

SIGNATURE
P.E. NUMBER 7120
DATE 11/12/14

	BY	DATE
PROJ. MANAGER	M. Parlin	
DESIGN-DETAILED		
CHECKED-REVIEWED		
DESIGN2-DETAILED2	K.MAGUIRE	T.WHITE AUG 2014
DESIGN3-DETAILED3		
REVISIONS 1		
REVISIONS 2		
REVISIONS 3		
REVISIONS 4		
FIELD CHANGES		

BAR MILLS BRIDGE
SACO RIVER
HOLLIS-BUXTON YORK COUNTY

BORING LOGS

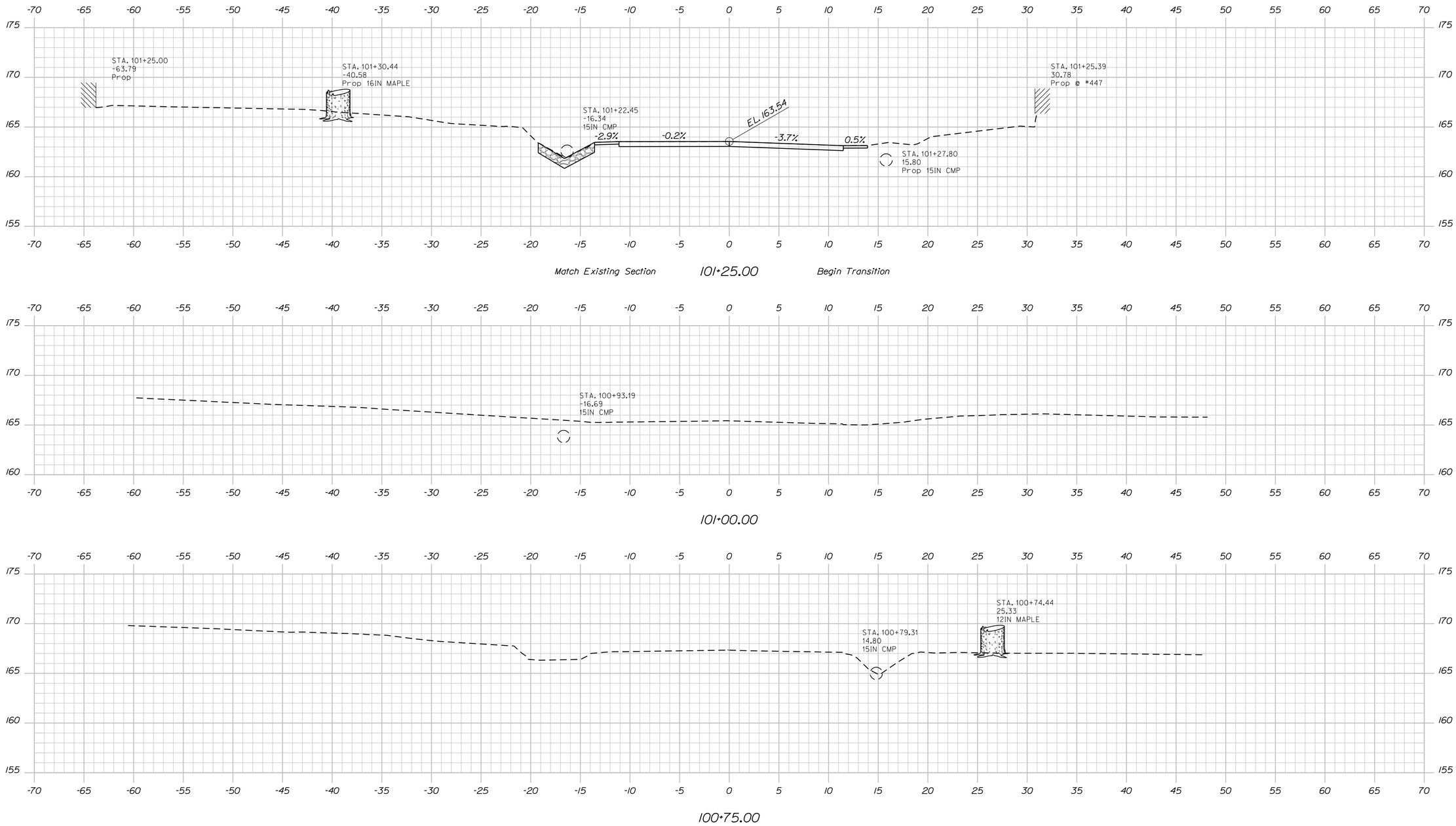

STATE OF MAINE
DEPARTMENT OF TRANSPORTATION

BR-1928(100)X

WIN 19281.00

BRIDGE NO. 1525

BRIDGE PLANS

PROJ. MANAGER	M. Perlin	BY	DATE
DESIGN-DETAILED	D. Eaton	D. Damren	Oct. 2014
CHECKED-REVIEWED	G. Gustafson	-----	Oct. 2014
DESIGN2-DETAILED2	-----	-----	-----
DESIGN3-DETAILED3	-----	-----	-----
REVISIONS 1	-----	-----	-----
REVISIONS 2	-----	-----	-----
REVISIONS 3	-----	-----	-----
REVISIONS 4	-----	-----	-----
FIELD CHANGES	-----	-----	-----

SIGNATURE

P.E. NUMBER

DATE

CANAL BRIDGE
SACO RIVER CANAL
HOLLIS YORK COUNTY

CROSS SECTIONS

SHEET NUMBER
20
OF 148

Sta. 100+75.00 to Sta. 101+25.00

Filename: ...\020_Xsect_Route 4A_100+75_001.dgn Division: BRIDGE Username: dana.damren Date:11/19/2014

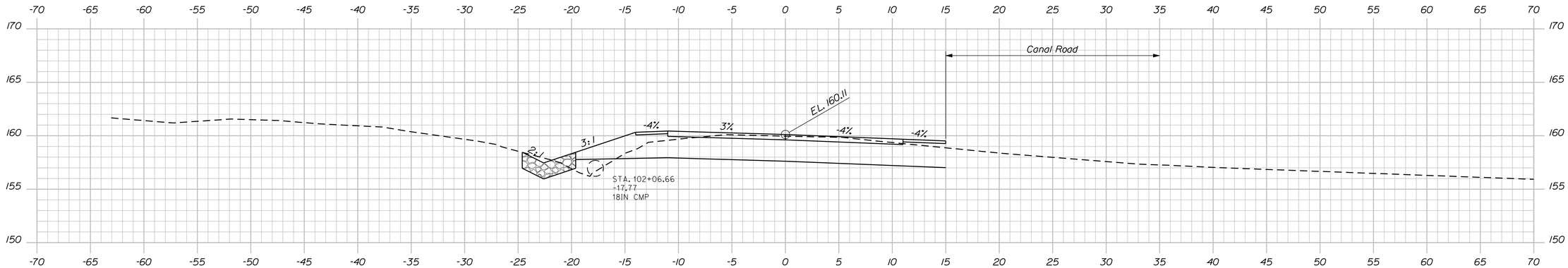

102+00.00

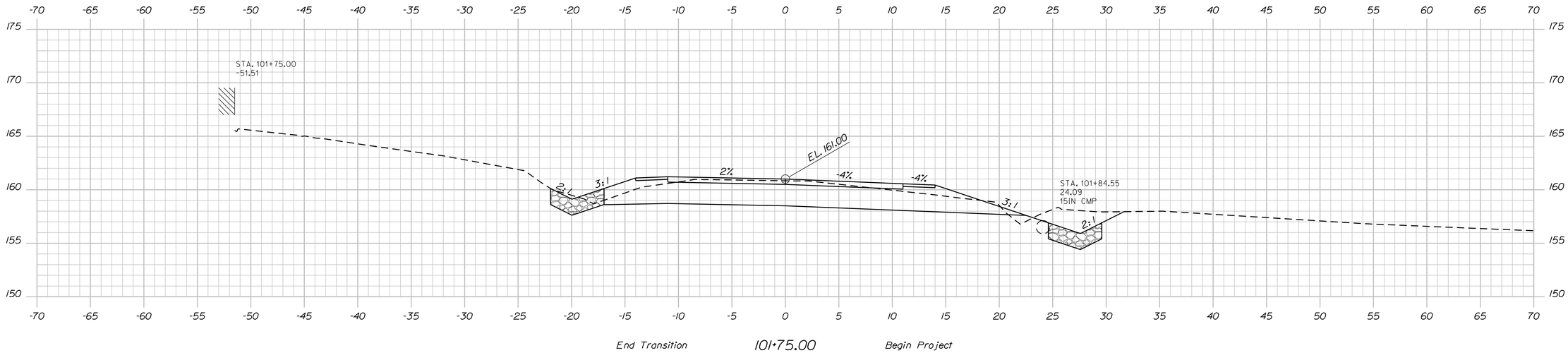

101+75.00

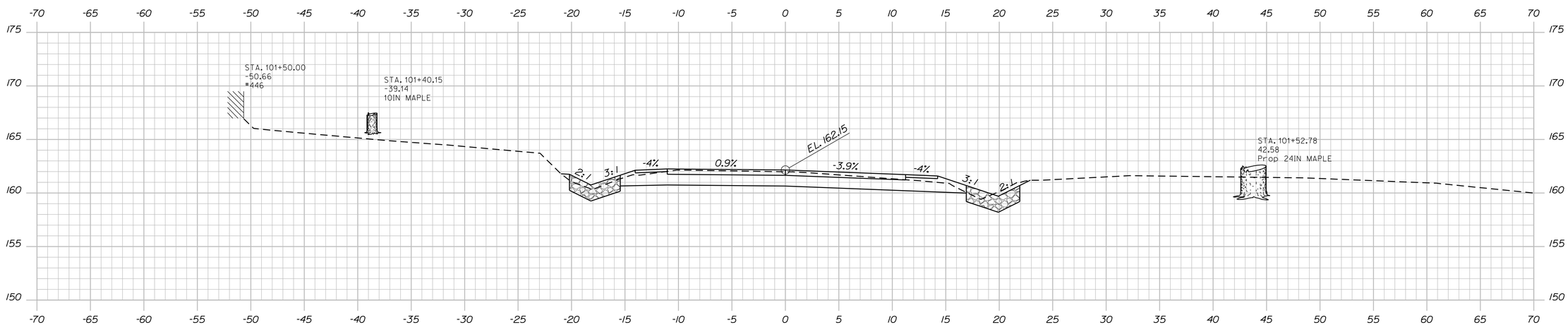

101+50.00

STATE OF MAINE
DEPARTMENT OF TRANSPORTATION

BR-1928(100)X

WIN 19281.00

BRIDGE NO. 1525

BRIDGE PLANS

		BY	DATE
PROJ. MANAGER	M. Perkin		
DESIGN-DETAILED	D. Eaton	D. Domren	Oct. 2014
CHECKED-REVIEWED	G. Gustafson	-----	Oct. 2014
DESIGN2-DETAILED2	-----	-----	-----
DESIGN3-DETAILED3	-----	-----	-----
REVISIONS 1	-----	-----	-----
REVISIONS 2	-----	-----	-----
REVISIONS 3	-----	-----	-----
REVISIONS 4	-----	-----	-----
FIELD CHANGES	-----	-----	-----

SIGNATURE

P.E. NUMBER

DATE

CANAL BRIDGE
SACO RIVER CANAL
HOLLIS YORK COUNTY

CROSS SECTIONS

SHEET NUMBER
21
OF 148

Filename: ...\021_Xsect_Route 4A_101+50_002.dgn Division: BRIDGE Username: dana.domren Date:11/19/2014

Sta. 101+50.00 to Sta. 102+00.00

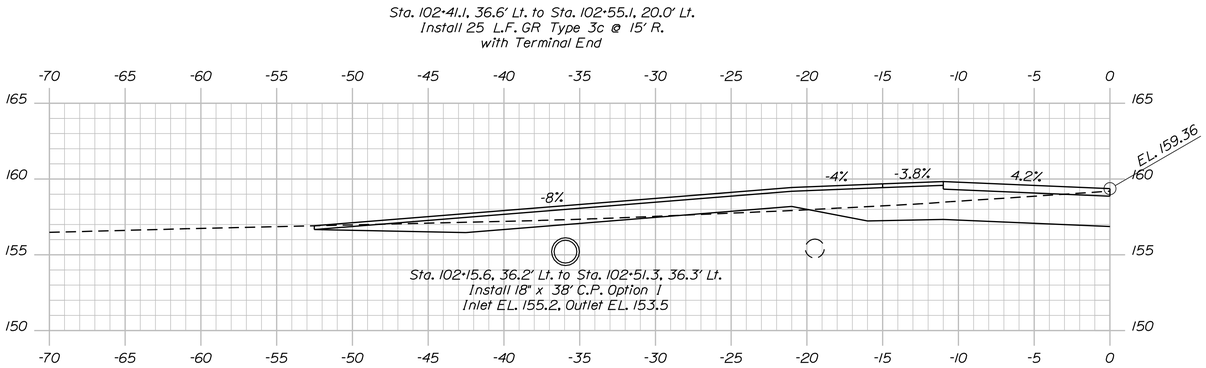

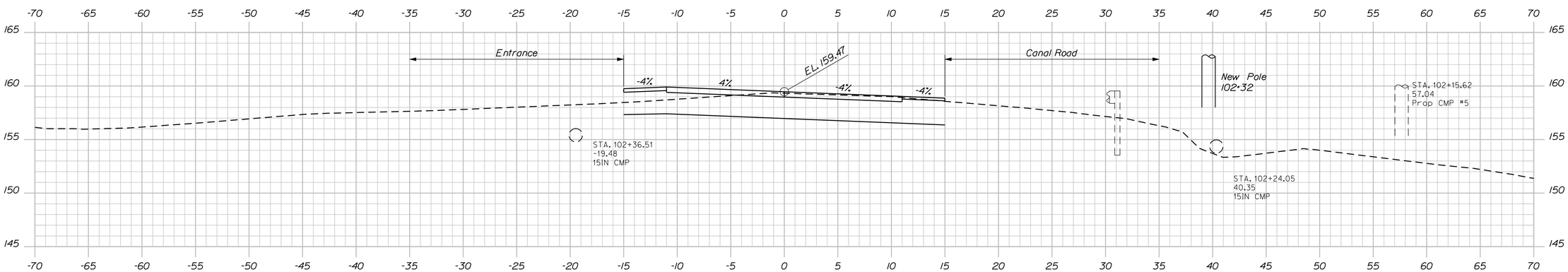

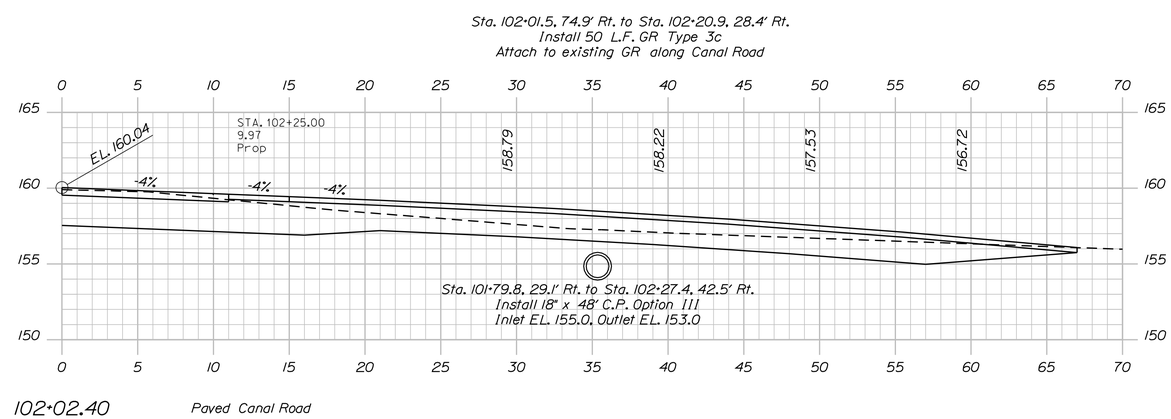

STATE OF MAINE
DEPARTMENT OF TRANSPORTATION

BR-1928(100)X

WIN 19281.00

BRIDGE NO. 1525

BRIDGE PLANS

		BY	DATE
PROJ. MANAGER	M. Parlin		
DESIGN-DETAILED	D. Eaton	D. Damren	Oct. 2014
CHECKED-REVIEWED	G. Gustafson	-----	Oct. 2014
DESIGN2-DETAILED2	-----	-----	-----
DESIGN3-DETAILED3	-----	-----	-----
REVISIONS 1	-----	-----	-----
REVISIONS 2	-----	-----	-----
REVISIONS 3	-----	-----	-----
REVISIONS 4	-----	-----	-----
FIELD CHANGES	-----	-----	-----

SIGNATURE

P.E. NUMBER

DATE

CANAL BRIDGE
SACO RIVER CANAL
HOLLIS YORK COUNTY

CROSS SECTIONS

SHEET NUMBER
22
OF 148

Sta. 102+04.00 to Sta. 102+25.00

Filename: ...\022_Xsect_Route 4A_102+04_003.dgnDivision: BRIDGE Username: dana.damren Date:11/19/2014

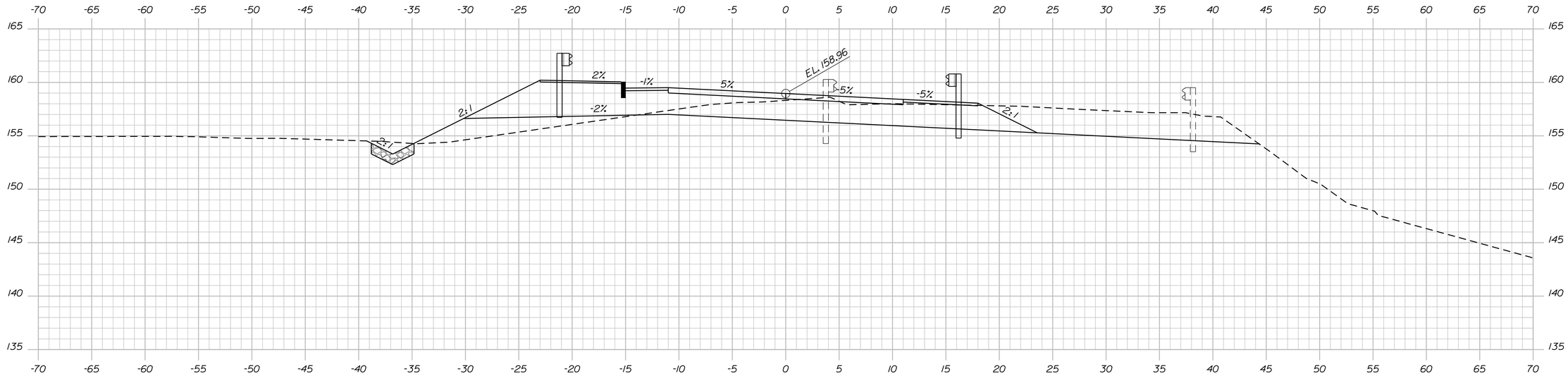

Sta. 102+55.1, 20.0' Lt. to Sta. 103+39.6, 20.0' Lt.
Install 87.5 L.F. GR Type 3c

102+75.00

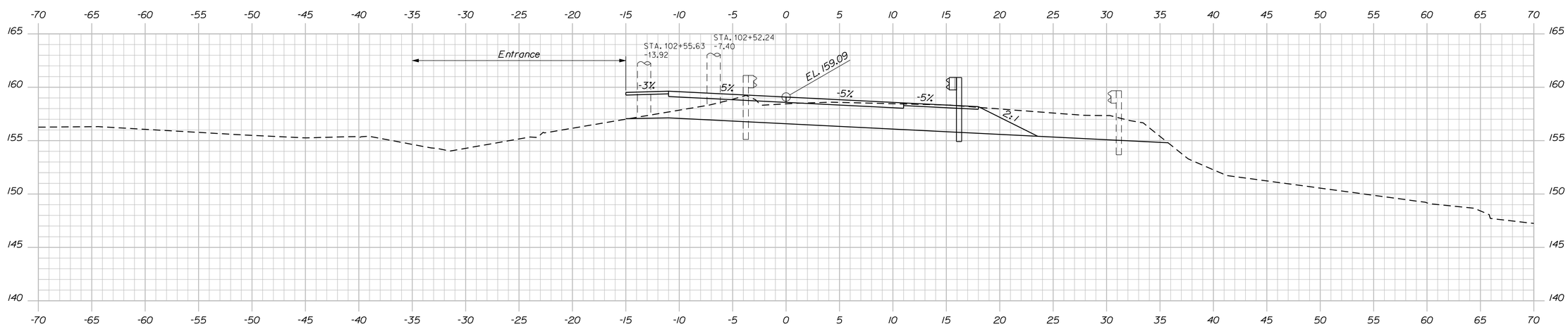

102+50.00

Sta. 102+40.8, 15.0' Rt. to Sta. 103+30.7, 15.0' Rt.
Install 87.5 L.F. GR Type 3c

STATE OF MAINE
DEPARTMENT OF TRANSPORTATION

BR-1928(100)X

WIN 19281.00

BRIDGE NO. 1525

BRIDGE PLANS

		BY	DATE
PROJ. MANAGER	M. Perrin		
DESIGN-DETAILED	D. Eaton	D. Domren	Oct. 2014
CHECKED-REVIEWED	G. Gustafson	-----	Oct. 2014
DESIGN2-DETAILED2	-----	-----	-----
DESIGN3-DETAILED3	-----	-----	-----
REVISIONS 1	-----	-----	-----
REVISIONS 2	-----	-----	-----
REVISIONS 3	-----	-----	-----
REVISIONS 4	-----	-----	-----
FIELD CHANGES	-----	-----	-----

SIGNATURE

P.E. NUMBER

DATE

CANAL BRIDGE
SACO RIVER CANAL
HOLLIS YORK COUNTY

CROSS SECTIONS

SHEET NUMBER
23
OF 148

Filename: ...\023_Xsect_Route 4A_102+50_004.dgn Division: BRIDGE Username: dana.domren Date:11/19/2014

Sta. 102+50.00 to Sta. 102+75.00

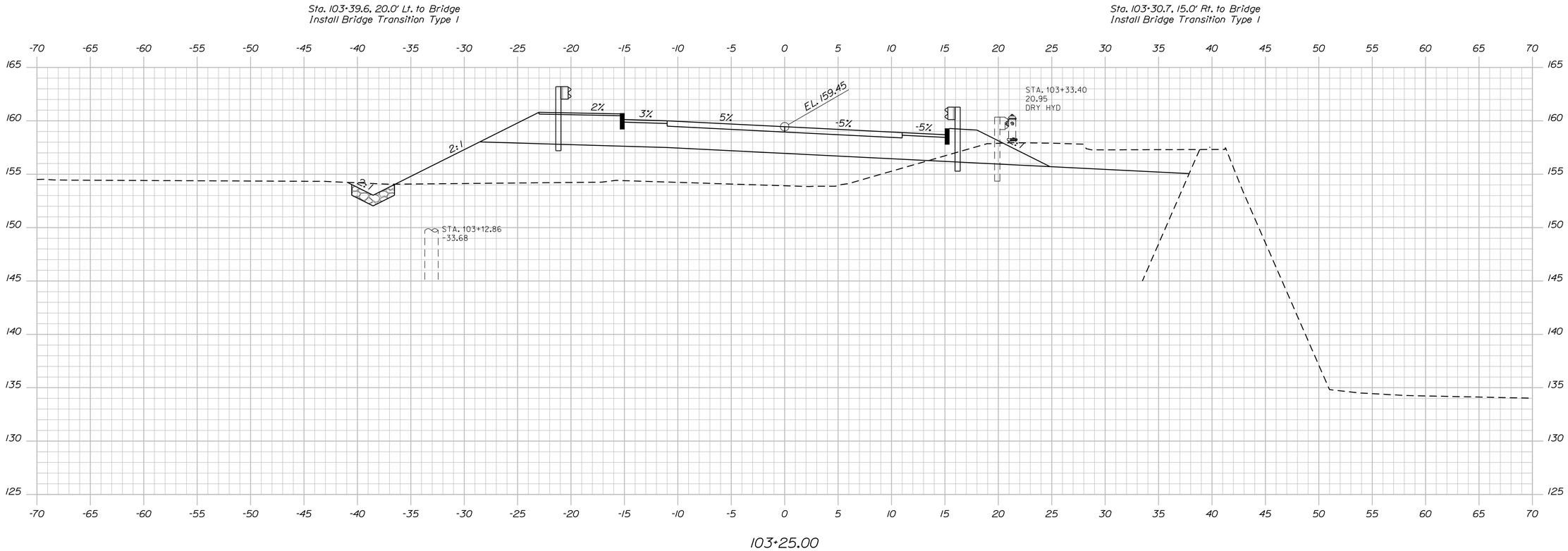

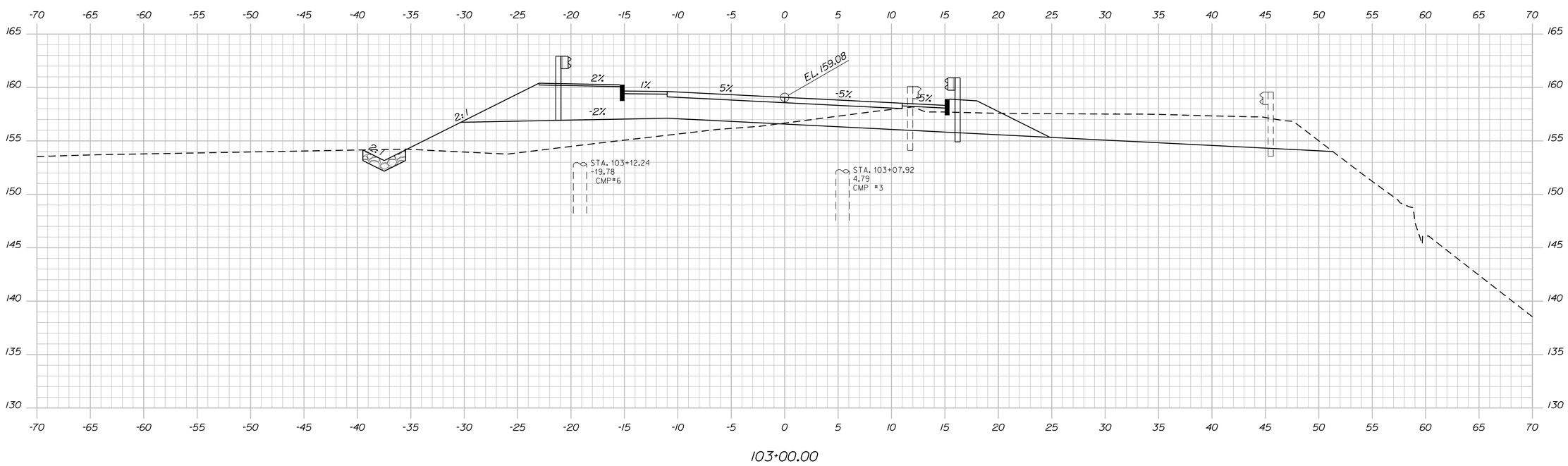

STATE OF MAINE
DEPARTMENT OF TRANSPORTATION

BR-1928(100)X

WIN 19281.00

BRIDGE NO. 1525

BRIDGE PLANS

		BY	DATE
PROJ. MANAGER	M. Perkin		
DESIGN-DETAILED	D. Eaton	D. Damren	Oct. 2014
CHECKED-REVIEWED	G. Gustafson	-----	Oct. 2014
DESIGN2-DETAILED2	-----	-----	-----
DESIGN3-DETAILED3	-----	-----	-----
REVISIONS 1	-----	-----	-----
REVISIONS 2	-----	-----	-----
REVISIONS 3	-----	-----	-----
REVISIONS 4	-----	-----	-----
FIELD CHANGES	-----	-----	-----

SIGNATURE

P.E. NUMBER

DATE

CANAL BRIDGE
SACO RIVER CANAL
HOLLIS YORK COUNTY

CROSS SECTIONS

SHEET NUMBER

24

OF 148

Sta. 103+00.00 to Sta. 103+25.00

Filename: ...\024_Xsect_Route 4A_103-00_005.dgn Division: BRIDGE Username: dana.damren Date:11/19/2014

Filename: ...\025_Xsect_Route 4A_103+50_006.dgnDivision: BRIDGE Username: dana.damren Date:11/19/2014

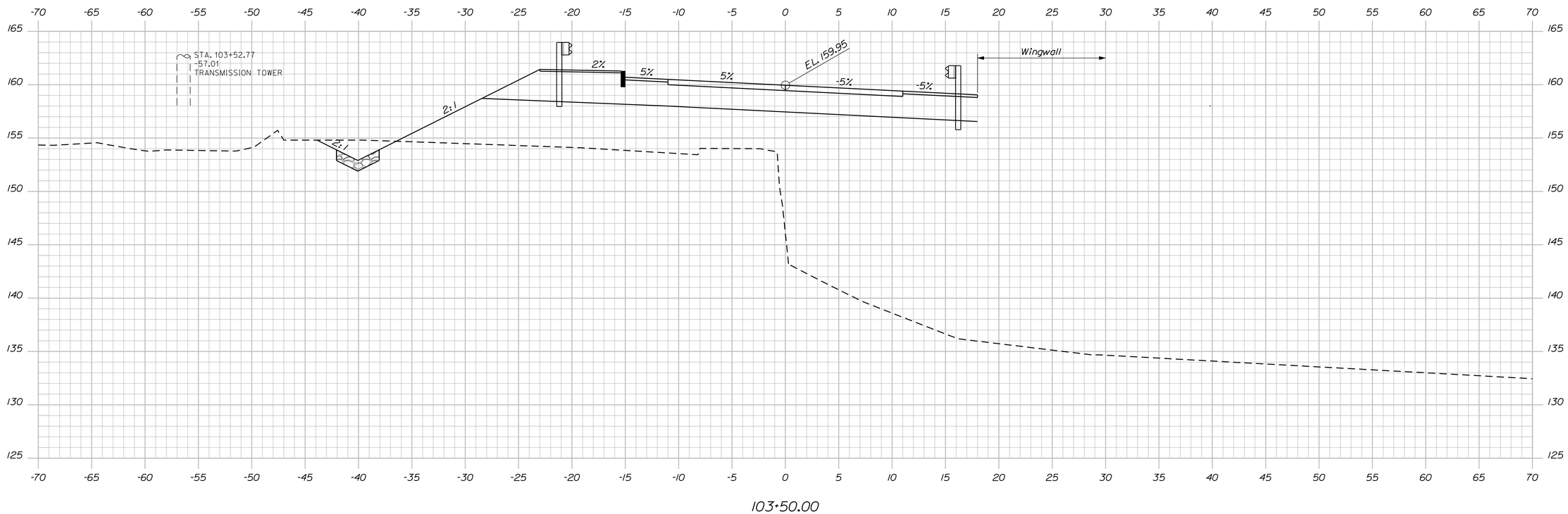

PROJ. MANAGER	M. Perkins	BY	DATE
DESIGN-DETAILED	D. Eaton	D. Damren	Oct. 2014
CHECKED-REVIEWED	C. Gustafson	------	Oct. 2014
DESIGN2-DETAILED2	------	------	SIGNATURE
DESIGN3-DETAILED3	------	------	------
REVISIONS 1	------	------	P.E. NUMBER
REVISIONS 2	------	------	------
REVISIONS 3	------	------	------
REVISIONS 4	------	------	DATE
FIELD CHANGES	------	------	------

STATE OF MAINE
DEPARTMENT OF TRANSPORTATION

BR-1928(100)X

WIN 19281.00

BRIDGE NO. 1525 BRIDGE PLANS

CANAL BRIDGE
SACO RIVER CANAL
HOLLIS YORK COUNTY

CROSS SECTIONS

SHEET NUMBER
25
OF 148

Sta. 103+50.00

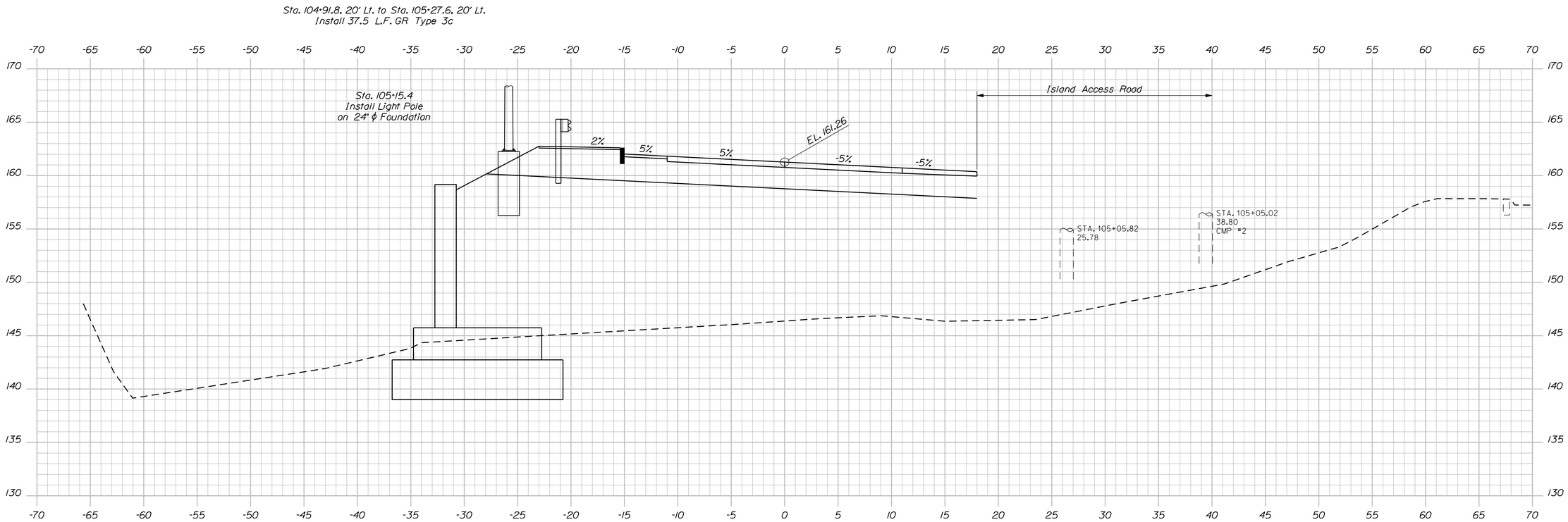

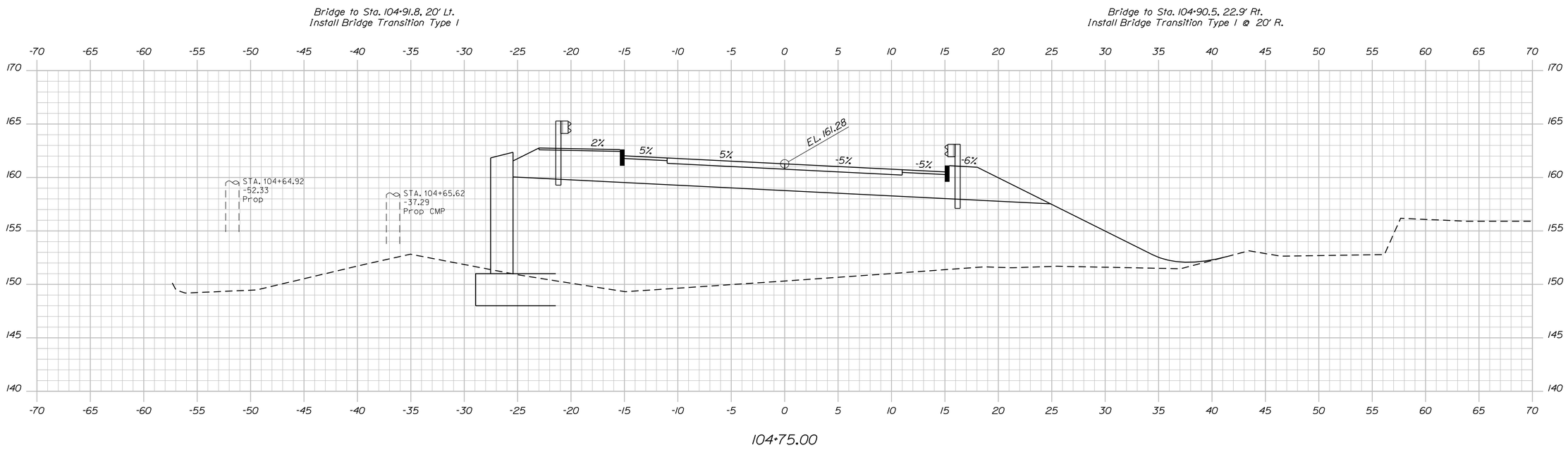

STATE OF MAINE
DEPARTMENT OF TRANSPORTATION

BR-1928(100)X

WIN 19281.00

BRIDGE NO. 1525

BRIDGE PLANS

PROJ. MANAGER	M. Perrin	BY	DATE
DESIGN-DETAILED	D. Eaton	D. Domren	Oct. 2014
CHECKED-REVIEWED	G. Gustafson	-----	Oct. 2014
DESIGN2-DETAILED2	-----	-----	-----
DESIGN3-DETAILED3	-----	-----	-----
REVISIONS 1	-----	-----	-----
REVISIONS 2	-----	-----	-----
REVISIONS 3	-----	-----	-----
REVISIONS 4	-----	-----	-----
FIELD CHANGES	-----	-----	-----

SIGNATURE

P.E. NUMBER

DATE

CANAL BRIDGE
SACO RIVER CANAL
HOLLIS YORK COUNTY

CROSS SECTIONS

SHEET NUMBER

26

OF 148

Sta. 104+75.00 to Sta. 105+00.00

Filename: ...\026_Xsect_Route 4A_104+75_007.dgnDivision: BRIDGE Username: dana.domren Date:11/19/2014

Sta. 105+27.6, 20' Lt. to Bridge
Install Bridge Transition Type I

Sta. 105+44.8, 22.9' Rt. to Bridge
Install Bridge Transition Type I @ 20' R.

Sta. 105+34.6, 71.2' Rt. to Sta. 105+44.8, 22.9' Rt.
Install 50 L.F. GR Type 3c @ 100' R.
with Terminal End

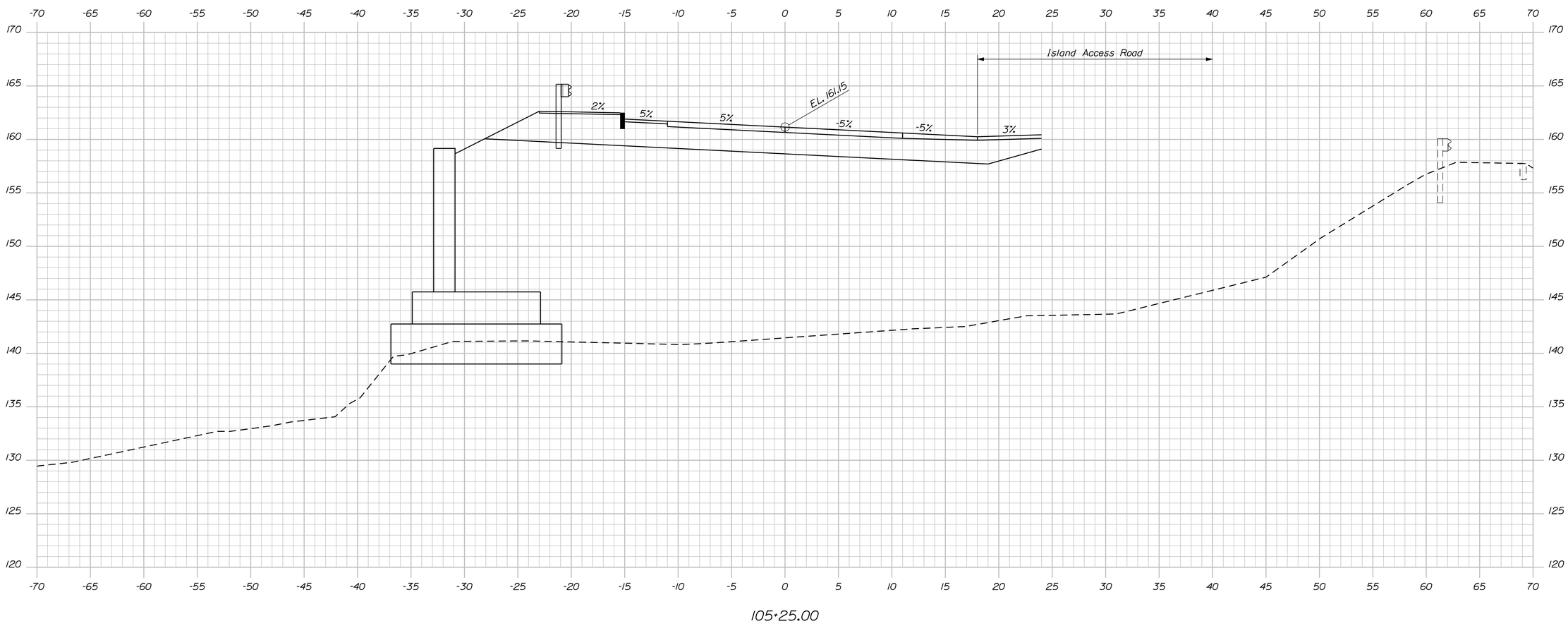

STATE OF MAINE
DEPARTMENT OF TRANSPORTATION

STP-1928(000)

WIN 19280.00

BRIDGE NO. 3333

BRIDGE PLANS

PROJ. MANAGER	M. Perkins	BY	DATE
DESIGN-DETAILED	D. Eaton	D. Damren	Oct. 2014
CHECKED-REVIEWED	G. Gustafson	-----	Oct. 2014
DESIGN2-DETAILED2	-----	-----	-----
DESIGN3-DETAILED3	-----	-----	-----
REVISIONS 1	-----	-----	-----
REVISIONS 2	-----	-----	-----
REVISIONS 3	-----	-----	-----
REVISIONS 4	-----	-----	-----
FIELD CHANGES	-----	-----	-----

SIGNATURE

P.E. NUMBER

DATE

BAR MILLS BRIDGE
SACO RIVER
HOLLIS & BUXTON YORK COUNTY

CROSS SECTIONS

SHEET NUMBER
27
OF 148

Sta. 105+25.00

Filename: ...\027_Xsect_Route 4A_105+25_001.dgnDivision: BRIDGE Username: dana.damren Date:11/19/2014

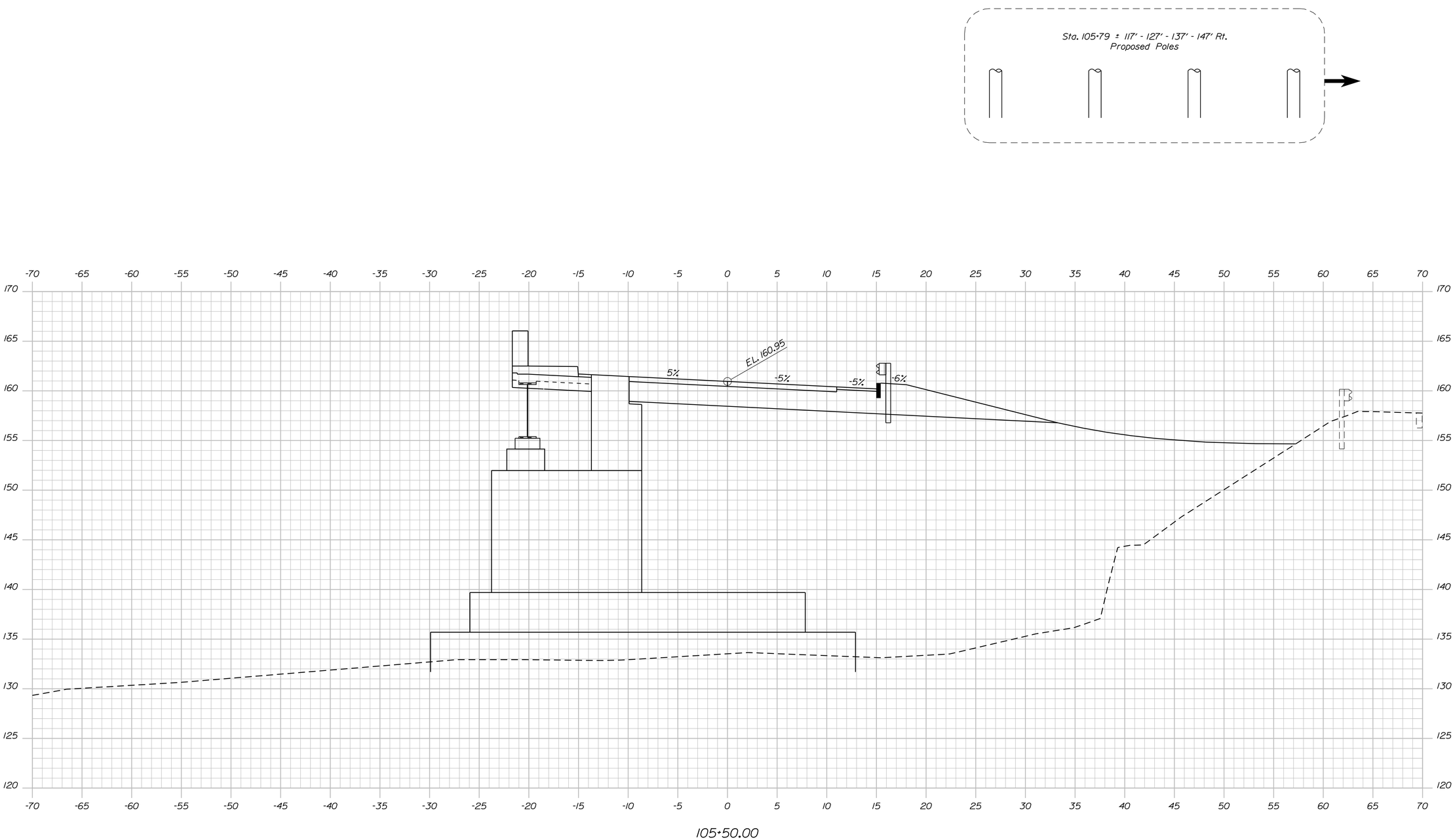

STATE OF MAINE
DEPARTMENT OF TRANSPORTATION

STP-1928(000)

WIN 19280.00

BRIDGE NO. 3333

BRIDGE PLANS

PROJ. MANAGER	M. Parlin	BY	DATE
DESIGN-DETAILED	D. Eaton	D. Damren	Oct. 2014
CHECKED-REVIEWED	C. Gustafson	-----	Oct. 2014
DESIGN2-DETAILED2	-----	-----	-----
DESIGN3-DETAILED3	-----	-----	-----
REVISIONS 1	-----	-----	-----
REVISIONS 2	-----	-----	-----
REVISIONS 3	-----	-----	-----
REVISIONS 4	-----	-----	-----
FIELD CHANGES	-----	-----	-----

SIGNATURE

P.E. NUMBER

DATE

BAR MILLS BRIDGE
SACO RIVER
HOLLIS & BUXTON YORK COUNTY

CROSS SECTIONS

SHEET NUMBER

28

OF 148

Sta. 105+50.00

Filename: ...\028_Xsect_Route 4A_105+50_002.dgn Division: BRIDGE Username: dana.damren Date:11/19/2014

Sta. 110+91.3, 15.0' Rt. to Sta. 111+16.5, 17.8' Rt.
Install 25 L.F. GR Type 3c @ 125' R. (Convex)

Sta. 110+57.6, 20' Lt. to Sta. 111+19.7, 20.0' Lt.
Install 62.5 L.F. GR Type 3c

Sta. 110+78.8, 15' Rt. to Sta. 110+91.3, 15.0' Rt.
Install 12.5 L.F. GR Type 3c

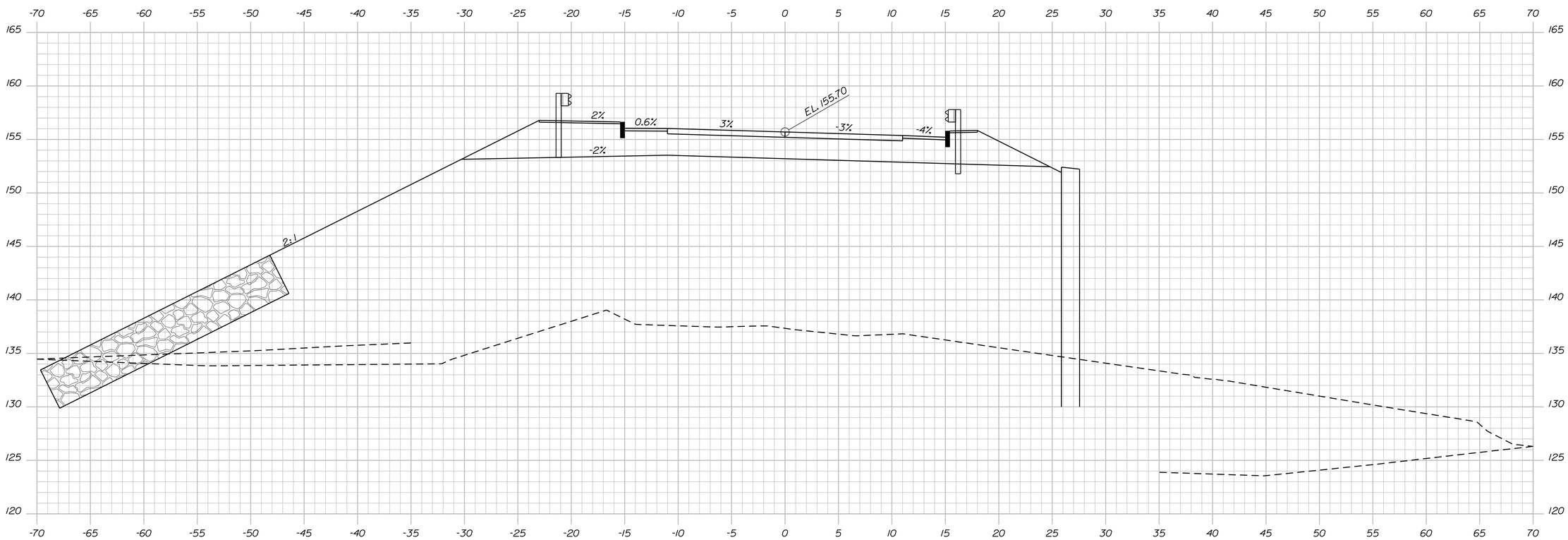

Bridge to Sta. 110+57.6, 20' Lt.
Install Bridge Transition Type 1

110+75.00

Bridge to Sta. 110+78.8, 15' Rt.
Install Bridge Transition Type 1

STATE OF MAINE
DEPARTMENT OF TRANSPORTATION

STP-1928(000)

WIN 19280.00

BRIDGE NO. 3333

BRIDGE PLANS

PROJ. MANAGER	M. Perkin	BY	DATE
DESIGN-DETAILED	D. Eaton	D. Damren	Oct. 2014
CHECKED-REVIEWED	G. Gustafson	-----	Oct. 2014
DESIGN2-DETAILED2	-----	-----	-----
DESIGN3-DETAILED3	-----	-----	-----
REVISIONS 1	-----	-----	-----
REVISIONS 2	-----	-----	-----
REVISIONS 3	-----	-----	-----
REVISIONS 4	-----	-----	-----
FIELD CHANGES	-----	-----	-----

SIGNATURE

P.E. NUMBER

DATE

BAR MILLS BRIDGE
SACO RIVER
HOLLIS & BUXTON YORK COUNTY

CROSS SECTIONS

SHEET NUMBER
29
OF 148

Sta. 110+75.00

Filename: ...\029_Xsect_Route 4A_110+75_003.dgnDivision: BRIDGE Username: dana.damren Date:11/19/2014

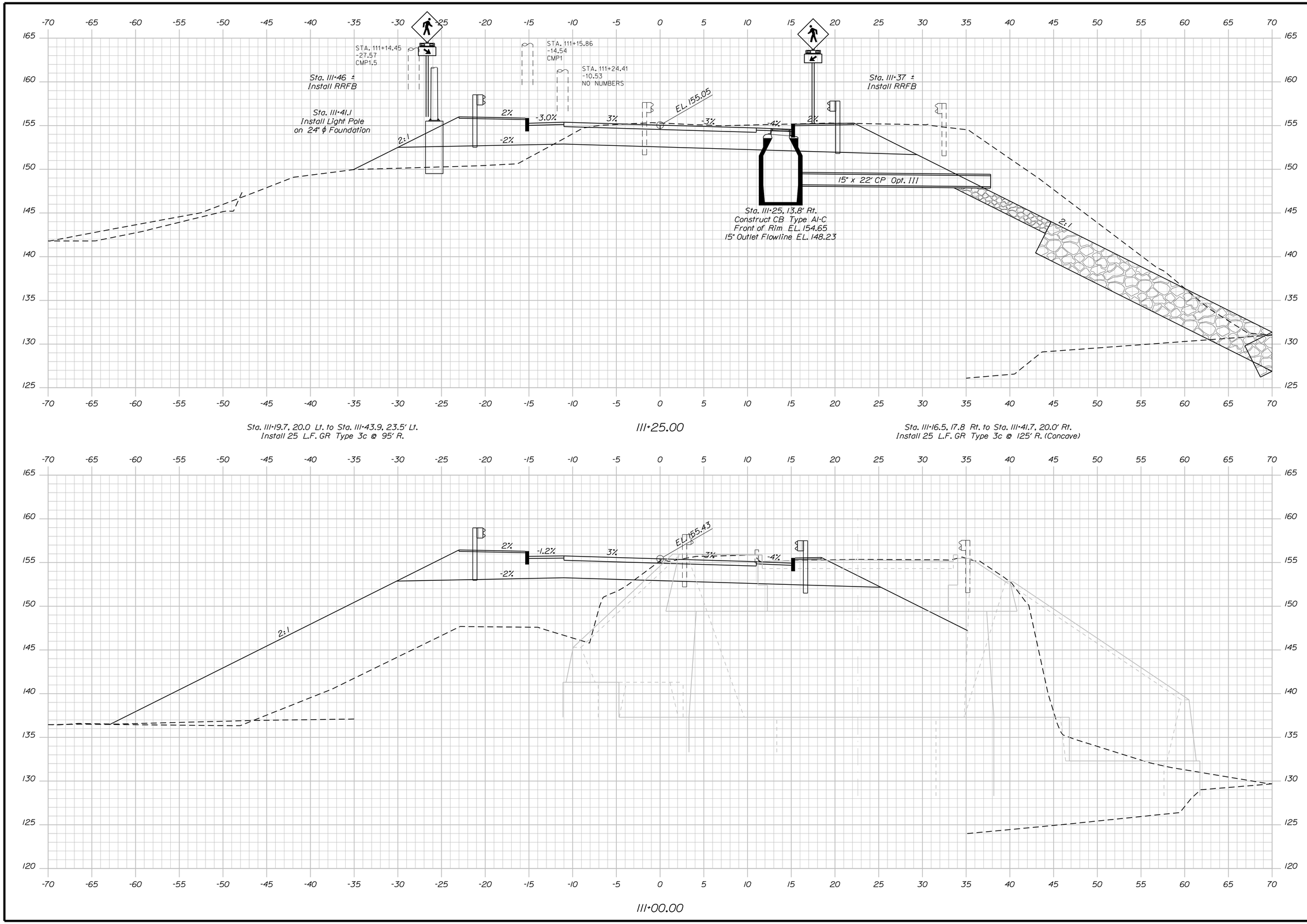

STATE OF MAINE
DEPARTMENT OF TRANSPORTATION

STP-1928(000)

WIN 19280.00

BRIDGE NO. 3333

BRIDGE PLANS

		BY	DATE
PROJ. MANAGER	M. Perrin		
DESIGN-DETAILED	D. Eaton	D. Damren	Oct. 2014
CHECKED-REVIEWED	G. Gustafson		Oct. 2014
DESIGN2-DETAILED2	-----	-----	-----
DESIGN3-DETAILED3	-----	-----	-----
REVISIONS 1	-----	-----	-----
REVISIONS 2	-----	-----	-----
REVISIONS 3	-----	-----	-----
REVISIONS 4	-----	-----	-----
FIELD CHANGES	-----	-----	-----

SIGNATURE

P.E. NUMBER

DATE

BAR MILLS BRIDGE
SACO RIVER
HOLLIS & BUXTON YORK COUNTY

CROSS SECTIONS

SHEET NUMBER

30

OF 148

Sta. 111+00.00 to Sta. 111+25.00

Filename: ...\030_Xsect_Route 4A_111+00_004.dgn Division: BRIDGE

Username: dana.damren

Date:11/19/2014

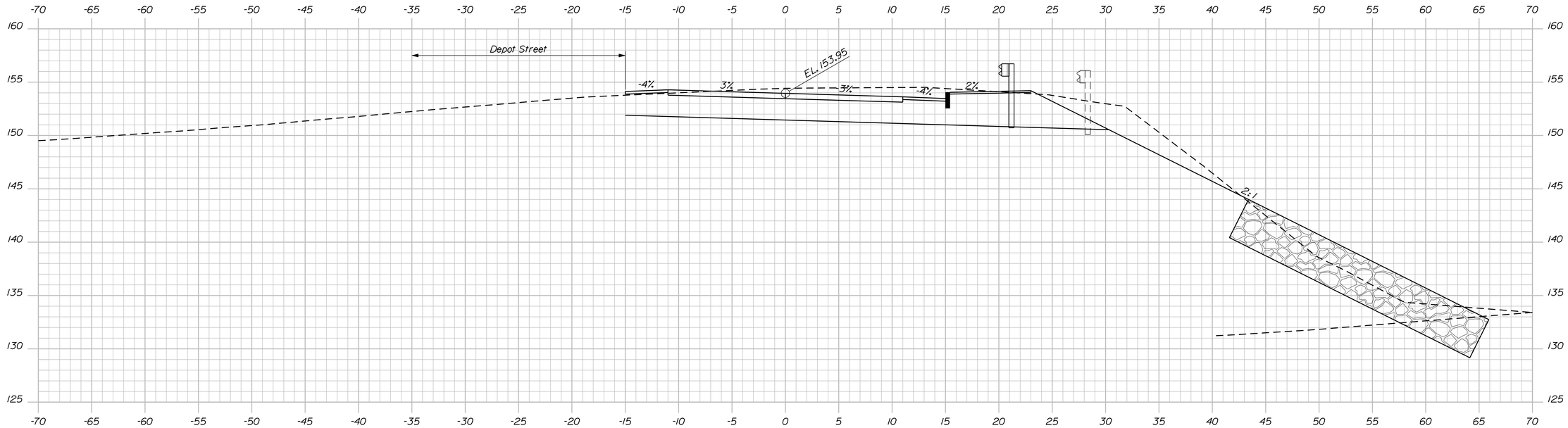

111+75.00

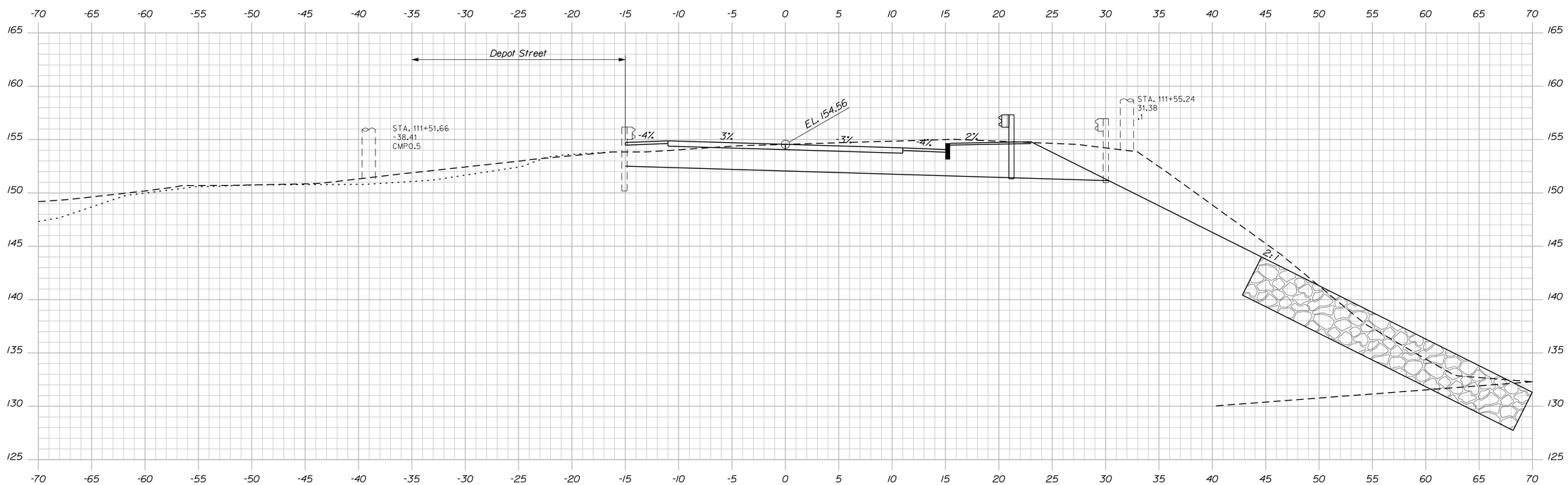

Sta. 111+43.9, 23.5' Lt. to Sta. 111+57.8, 42.1' Lt.
Install 25 L.F. GR Type 3c @ 20' R.
with Terminal End

111+50.00

Sta. 111+41.7, 20.0' Rt. to Sta. 113+45.1, 20.0' Rt.
Install 200 L.F. GR Type 3c

STATE OF MAINE
DEPARTMENT OF TRANSPORTATION

STP-1928(000)

WIN 19280.00

BRIDGE NO. 3333

BRIDGE PLANS

		BY	DATE
PROJ. MANAGER	M. Perkin		
DESIGN-DETAILED	D. Eaton	D. Domren	Oct. 2014
CHECKED-REVIEWED	G. Gustafson	-----	Oct. 2014
DESIGN2-DETAILED2	-----	-----	-----
DESIGN3-DETAILED3	-----	-----	-----
REVISIONS 1	-----	-----	-----
REVISIONS 2	-----	-----	-----
REVISIONS 3	-----	-----	-----
REVISIONS 4	-----	-----	-----
FIELD CHANGES	-----	-----	-----

SIGNATURE

P.E. NUMBER

DATE

BAR MILLS BRIDGE
SACO RIVER
HOLLIS & BUXTON YORK COUNTY

CROSS SECTIONS

SHEET NUMBER

31

OF 148

Sta. 111+50.00 to Sta. 111+75.00

Filename: ...\031_Xsect_Route 4A_111+50_005.dgn Division: BRIDGE

Username: dana.domren

Date:11/19/2014

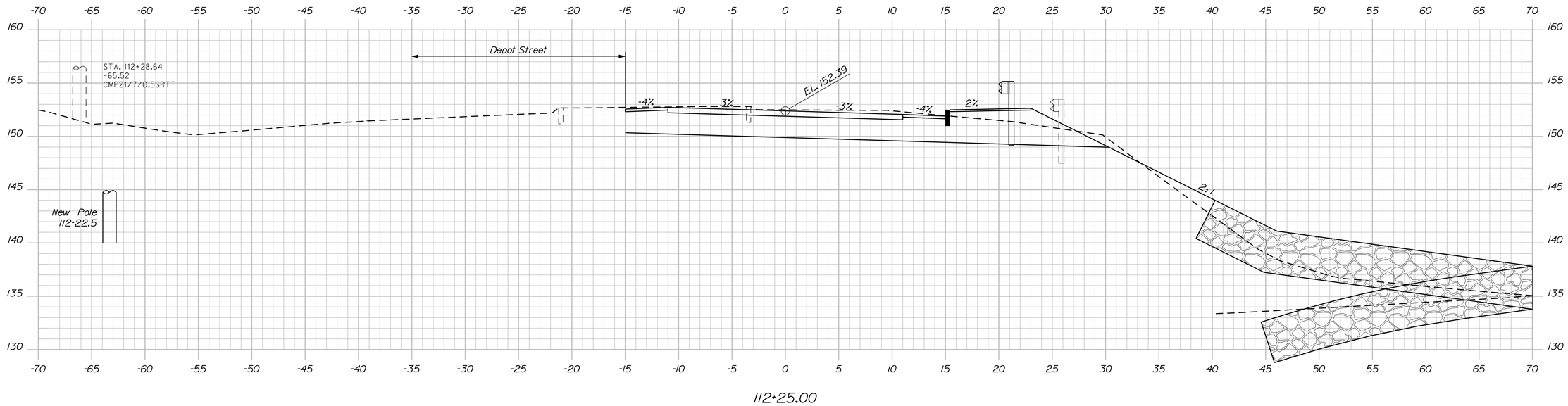

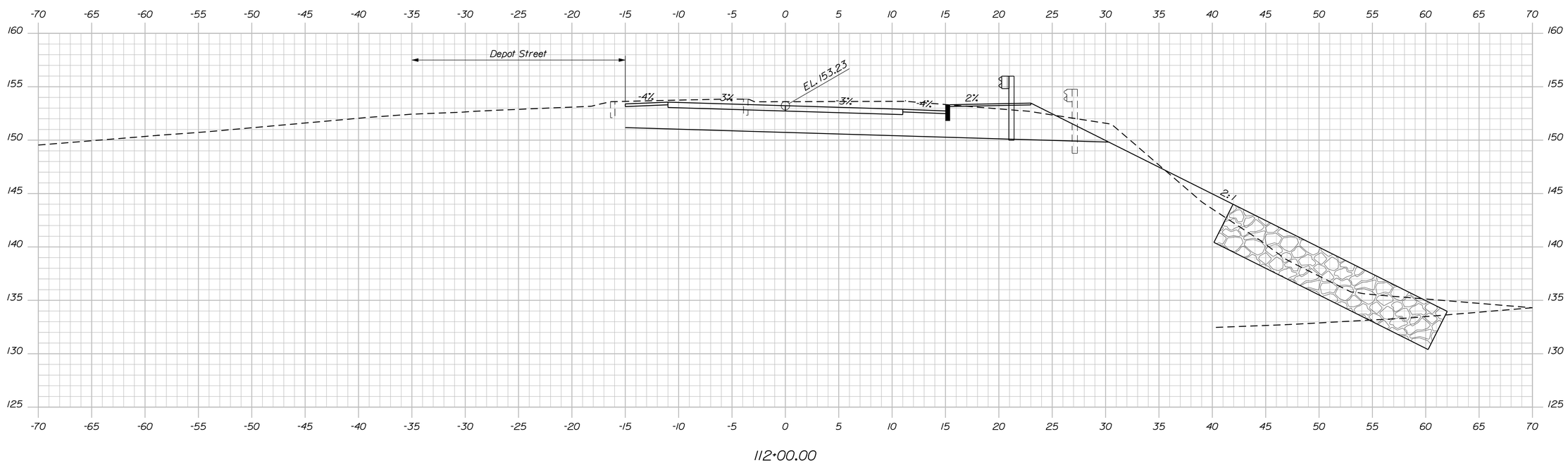

STATE OF MAINE
DEPARTMENT OF TRANSPORTATION

STP-1928(000)

WIN 19280.00

BRIDGE NO. 3333

BRIDGE PLANS

		BY	DATE
PROJ. MANAGER	M. Perrin		
DESIGN-DETAILED	D. Eaton	D. Damren	Oct. 2014
CHECKED-REVIEWED	G. Gustafson	-----	Oct. 2014
DESIGN2-DETAILED2	-----	-----	-----
DESIGN3-DETAILED3	-----	-----	-----
REVISIONS 1	-----	-----	-----
REVISIONS 2	-----	-----	-----
REVISIONS 3	-----	-----	-----
REVISIONS 4	-----	-----	-----
FIELD CHANGES	-----	-----	-----

SIGNATURE

P.E. NUMBER

DATE

BAR MILLS BRIDGE
SACO RIVER
HOLLIS & BUXTON YORK COUNTY

CROSS SECTIONS

SHEET NUMBER

32

OF 148

Sta. 112+00.00 to Sta. 112+25.00

Filename: ...\032_Xsect_Route 4A_112-00_006.dgnDivision: BRIDGE

Username: dana.damren Date:11/19/2014

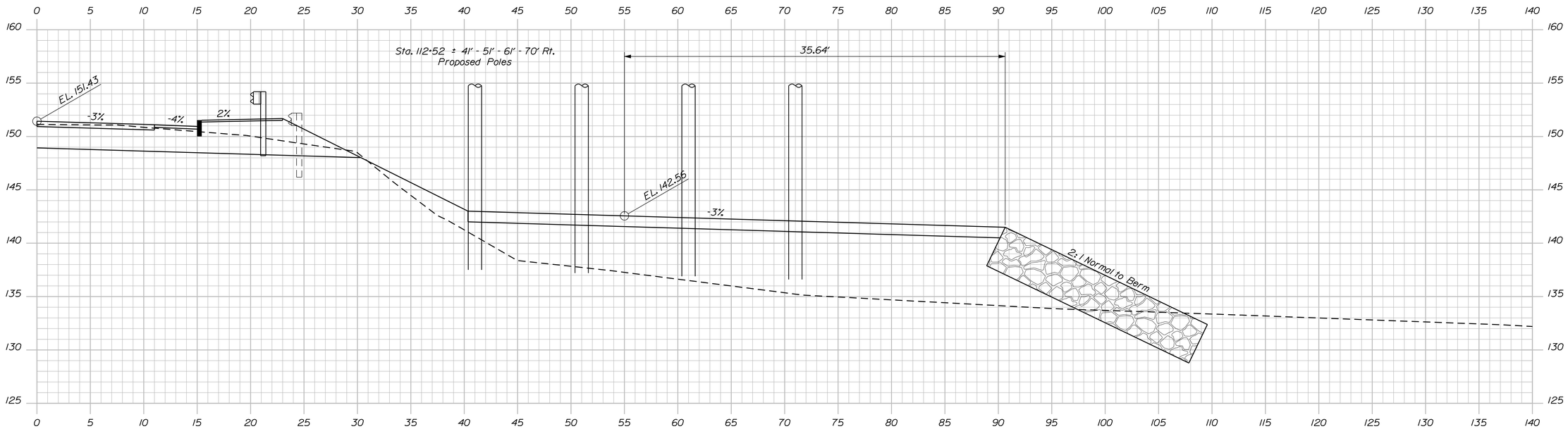

112+50.00 Extended

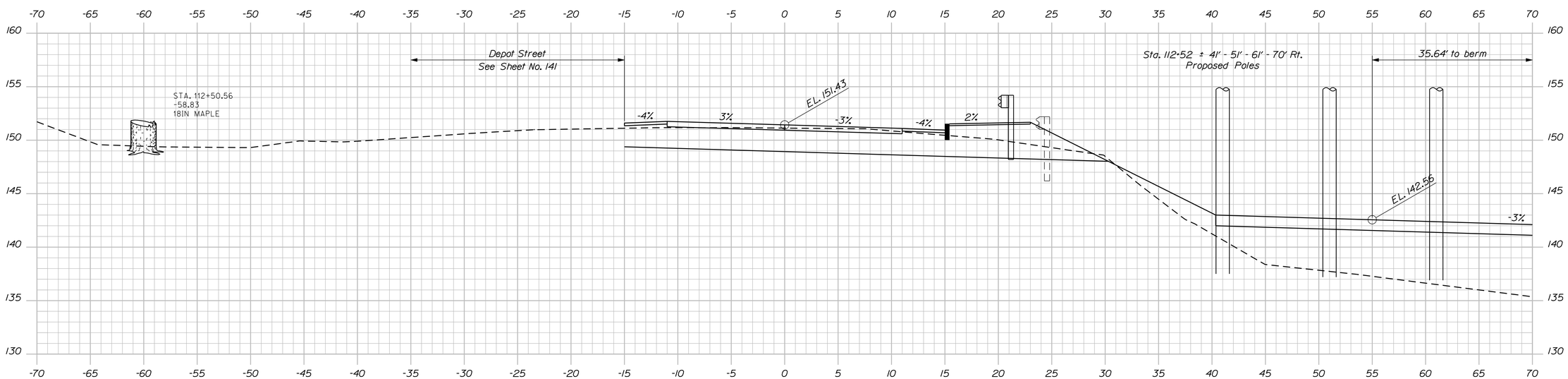

112+50.00

STATE OF MAINE
DEPARTMENT OF TRANSPORTATION

STP-1928(000)

WIN 19280.00

BRIDGE NO. 3333

BRIDGE PLANS

		BY	DATE
PROJ. MANAGER	M. Perrin		
DESIGN-DETAILED	D. Eaton	D. Damren	Oct. 2014
CHECKED-REVIEWED	G. Gustafson	-----	Oct. 2014
DESIGN2-DETAILED2	-----	-----	-----
DESIGN3-DETAILED3	-----	-----	-----
REVISIONS 1	-----	-----	-----
REVISIONS 2	-----	-----	-----
REVISIONS 3	-----	-----	-----
REVISIONS 4	-----	-----	-----
FIELD CHANGES	-----	-----	-----

SIGNATURE

P.E. NUMBER

DATE

BAR MILLS BRIDGE
SACO RIVER
HOLLIS & BUXTON YORK COUNTY

CROSS SECTIONS

SHEET NUMBER

33

OF 148

Sta. 112+50.00

Filename: ...\033_Xsect_Route 4A_112+50_007.dgn Division: BRIDGE Username: dana.damren Date:11/19/2014

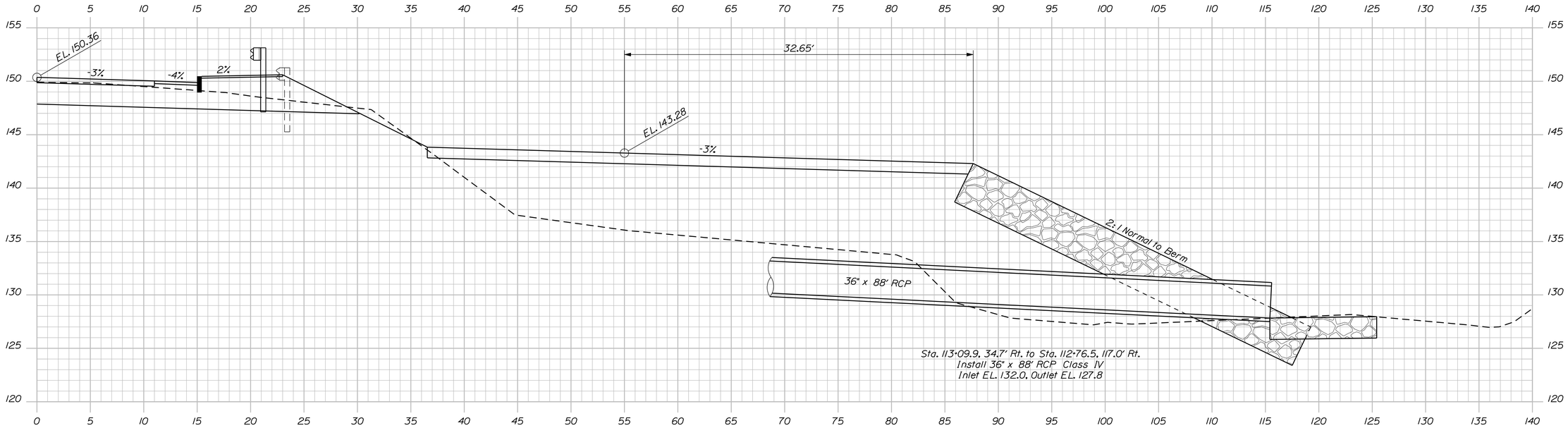

112+75.00 Extended

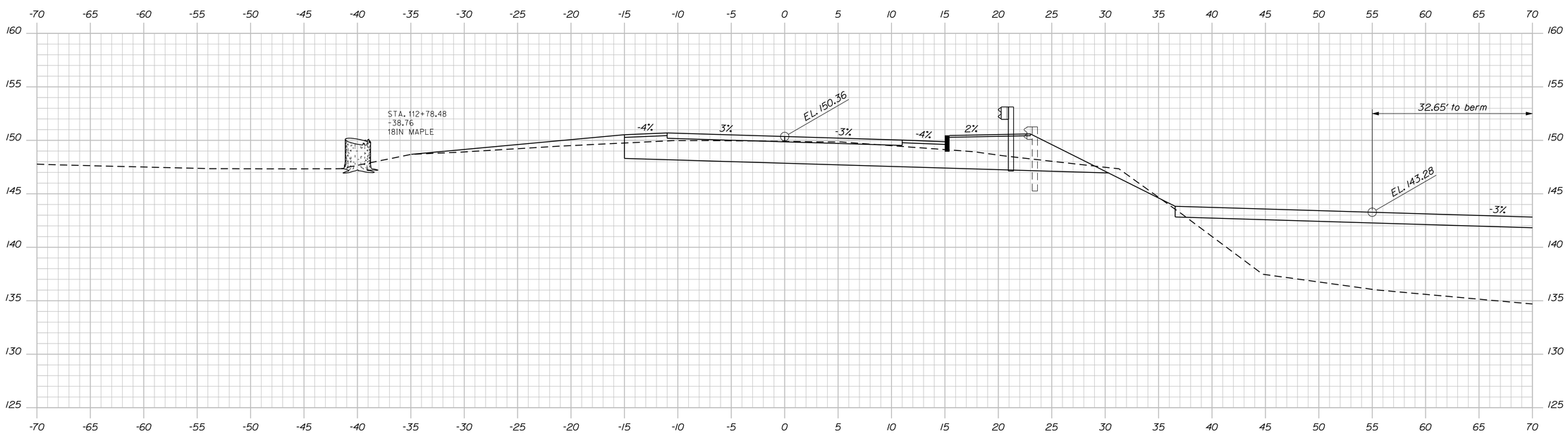

112+75.00

STATE OF MAINE
DEPARTMENT OF TRANSPORTATION

STP-1928(000)

WIN 19280.00

BRIDGE NO. 3333

BRIDGE PLANS

		BY	DATE
PROJ. MANAGER	M. Perrin		
DESIGN-DETAILED	D. Eaton	D. Damren	Oct. 2014
CHECKED-REVIEWED	G. Gustafson	-----	Oct. 2014
DESIGN2-DETAILED2	-----	-----	-----
DESIGN3-DETAILED3	-----	-----	-----
REVISIONS 1	-----	-----	-----
REVISIONS 2	-----	-----	-----
REVISIONS 3	-----	-----	-----
REVISIONS 4	-----	-----	-----
FIELD CHANGES	-----	-----	-----

SIGNATURE

P.E. NUMBER

DATE

BAR MILLS BRIDGE
SACO RIVER
HOLLIS & BUXTON YORK COUNTY

CROSS SECTIONS

SHEET NUMBER

34

OF 148

Sta. 112+75.00

Filename: ...\034_Xsect_Route 4A_112+75_008.dgnDivision: BRIDGE Username: dana.damren Date:11/19/2014

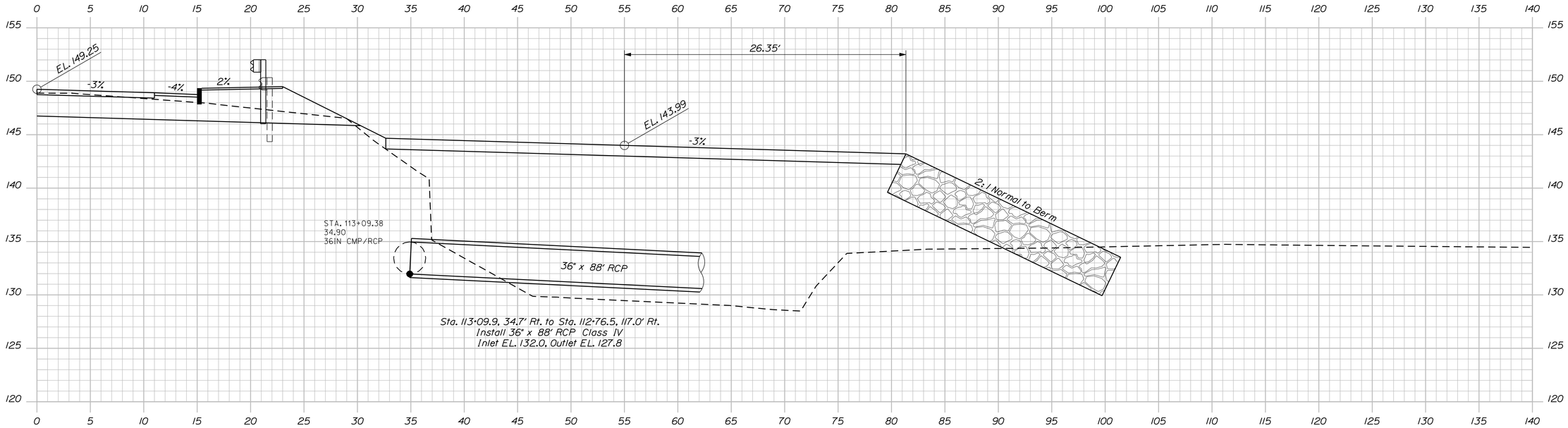

113+00.00 Extended

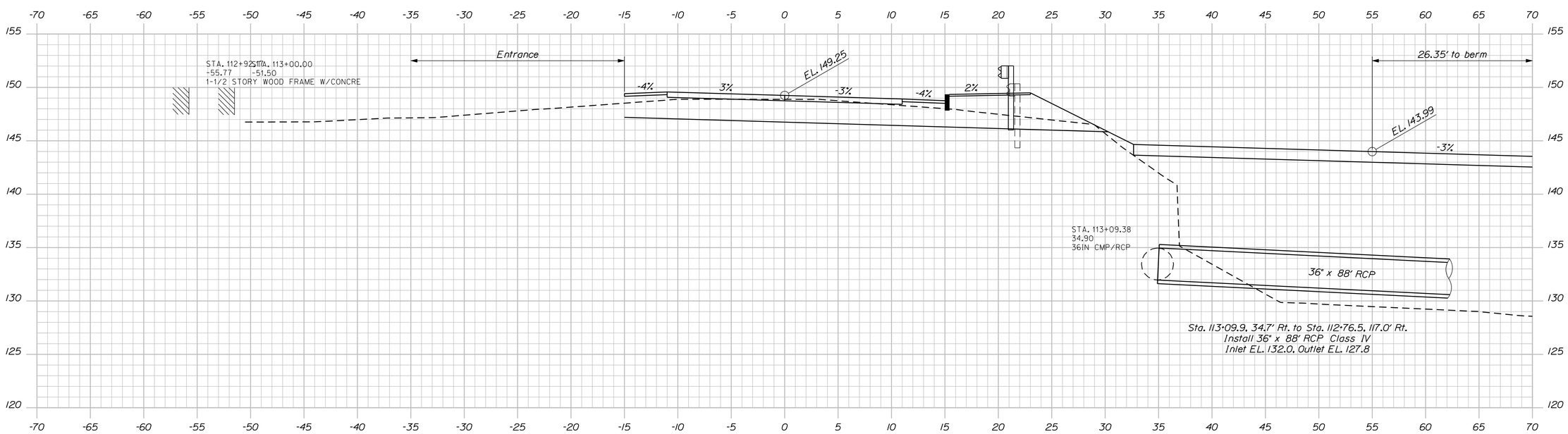

113+00.00

STATE OF MAINE
DEPARTMENT OF TRANSPORTATION

STP-1928(000)

WIN 19280.00

BRIDGE NO. 3333

BRIDGE PLANS

		BY	DATE
PROJ. MANAGER	M. Perrin		
DESIGN-DETAILED	D. Eaton	D. Damren	Oct. 2014
CHECKED-REVIEWED	G. Gustafson	-----	Oct. 2014
DESIGN2-DETAILED2	-----	-----	-----
DESIGN3-DETAILED3	-----	-----	-----
REVISIONS 1	-----	-----	-----
REVISIONS 2	-----	-----	-----
REVISIONS 3	-----	-----	-----
REVISIONS 4	-----	-----	-----
FIELD CHANGES	-----	-----	-----

SIGNATURE

P.E. NUMBER

DATE

BAR MILLS BRIDGE
SACO RIVER
HOLLIS & BUXTON YORK COUNTY

CROSS SECTIONS

SHEET NUMBER

35

OF 148

Filename: ...\035_Xsect_Route 4A_113+00_009.dgnDivision: BRIDGE Username: dana.damren Date:11/19/2014

Sta. 113+00.00

Sta. 113+45.1, 20.0' Rt. to Sta. 113+60.3, 36.4' Rt.
Install 25 L.F. GR Type 3c @ 15' R.
with Terminal End

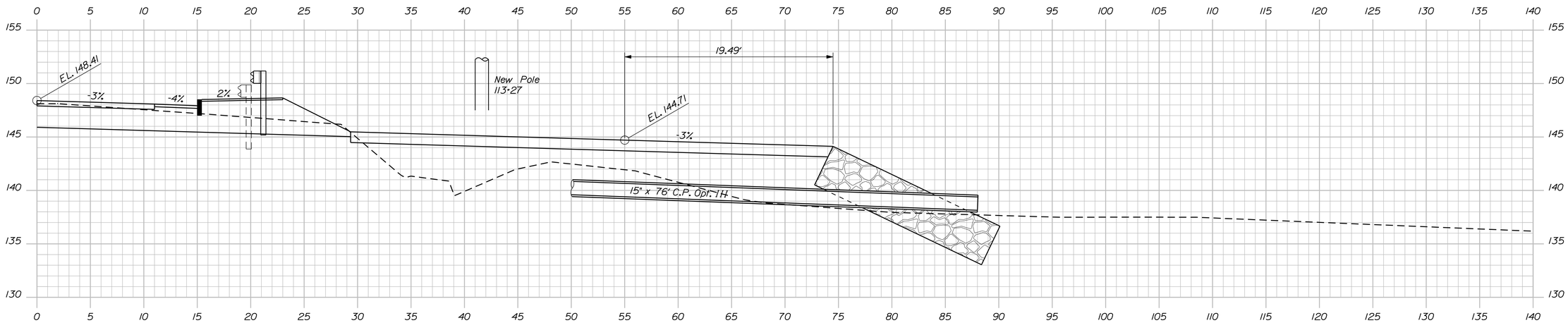

113+25.00 Extended

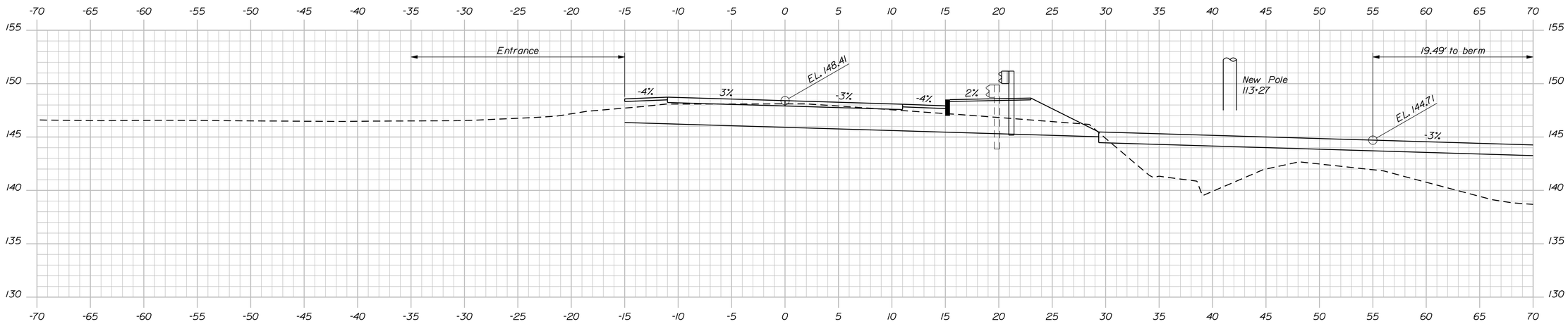

113+25.00

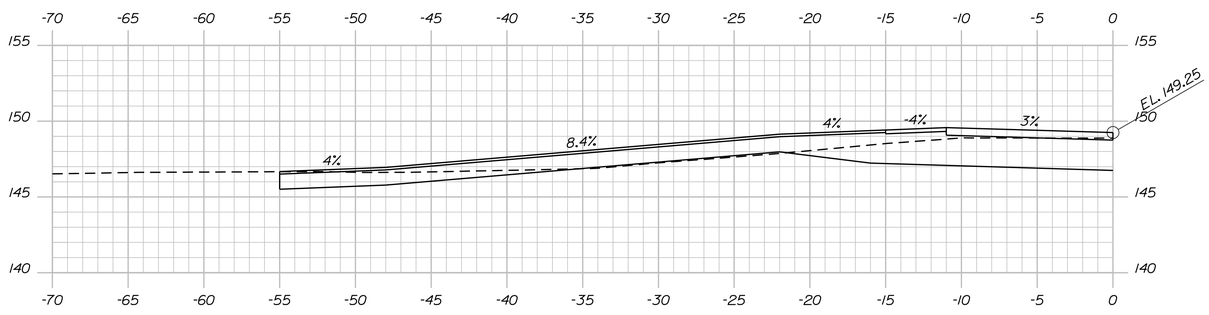

Paved Entrance Skewed Ahead 113+00.00

STATE OF MAINE
DEPARTMENT OF TRANSPORTATION

STP-1928(000)

WIN 19280.00

BRIDGE NO. 3333

BRIDGE PLANS

PROJ. MANAGER	M. Parlin	BY	DATE
DESIGN-DETAILED	D. Eaton	D. Damren	Oct. 2014
CHECKED-REVIEWED	C. Gustafson	-----	Oct. 2014
DESIGN2-DETAILED2	-----	-----	-----
DESIGN3-DETAILED3	-----	-----	-----
REVISIONS 1	-----	-----	-----
REVISIONS 2	-----	-----	-----
REVISIONS 3	-----	-----	-----
REVISIONS 4	-----	-----	-----
FIELD CHANGES	-----	-----	-----

SIGNATURE

P.E. NUMBER

DATE

BAR MILLS BRIDGE
SACO RIVER
HOLLIS & BUXTON YORK COUNTY

CROSS SECTIONS

SHEET NUMBER
36
OF 148

Sta. 113+00.00 to Sta. 113+25.00

Filename: ...\036_Xsect_Route 4A_113-00_010.dgn Division: BRIDGE Username: dana.damren Date:11/19/2014

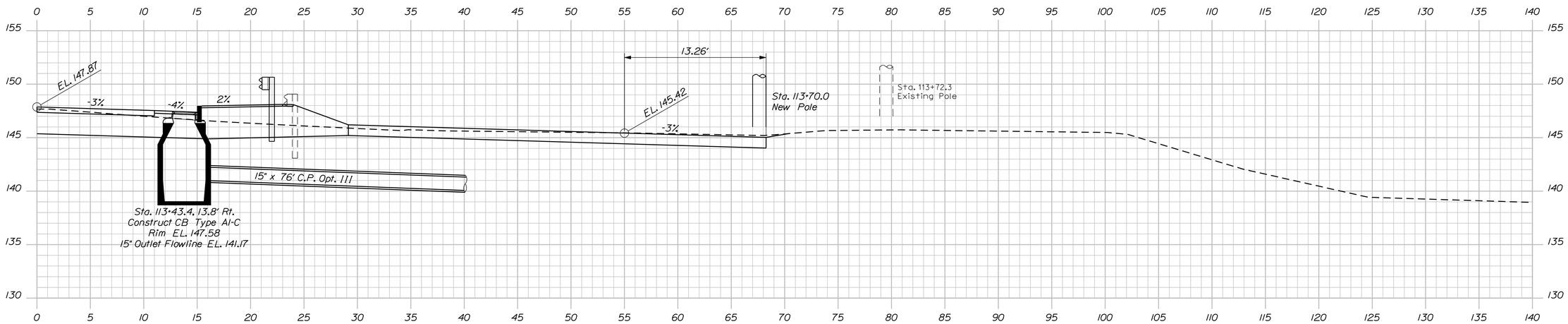

113+50.00 Extended

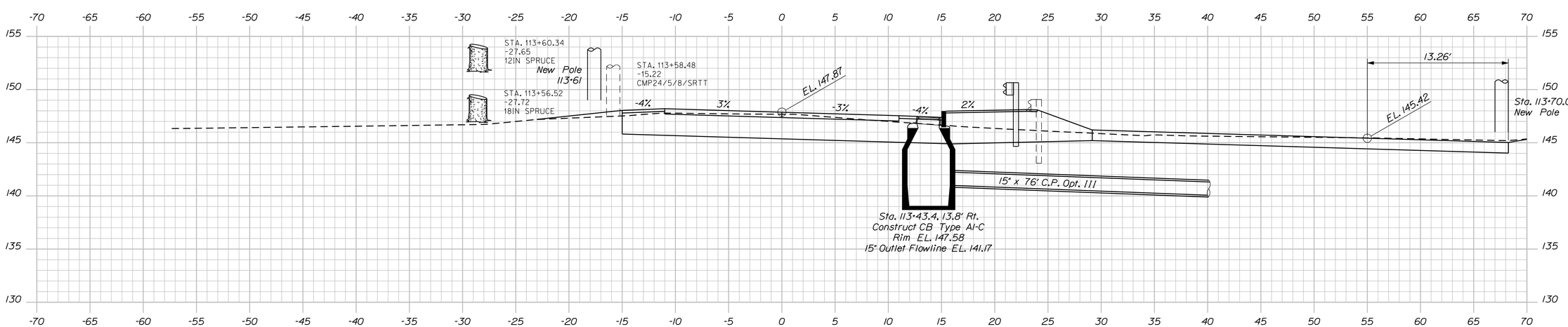

113+50.00

STATE OF MAINE
DEPARTMENT OF TRANSPORTATION

STP-1928(000)

WIN 19280.00

BRIDGE NO. 3333

BRIDGE PLANS

	BY	DATE
PROJ. MANAGER	M. Perkin	
DESIGN-DETAILED	D. Eaton	Oct. 2014
CHECKED-REVIEWED	G. Gustafson	-----
DESIGN2-DETAILED2	-----	-----
DESIGN3-DETAILED3	-----	-----
REVISIONS 1	-----	-----
REVISIONS 2	-----	-----
REVISIONS 3	-----	-----
REVISIONS 4	-----	-----
FIELD CHANGES	-----	-----

SIGNATURE

P.E. NUMBER

DATE

BAR MILLS BRIDGE
SACO RIVER
HOLLIS & BUXTON YORK COUNTY

CROSS SECTIONS

SHEET NUMBER

37

OF 148

Sta. 113+50.00

Filename: ...\037_Xsect_Route 4A_113+50_011.dgn Division: BRIDGE Username: dana.damren Date:11/19/2014

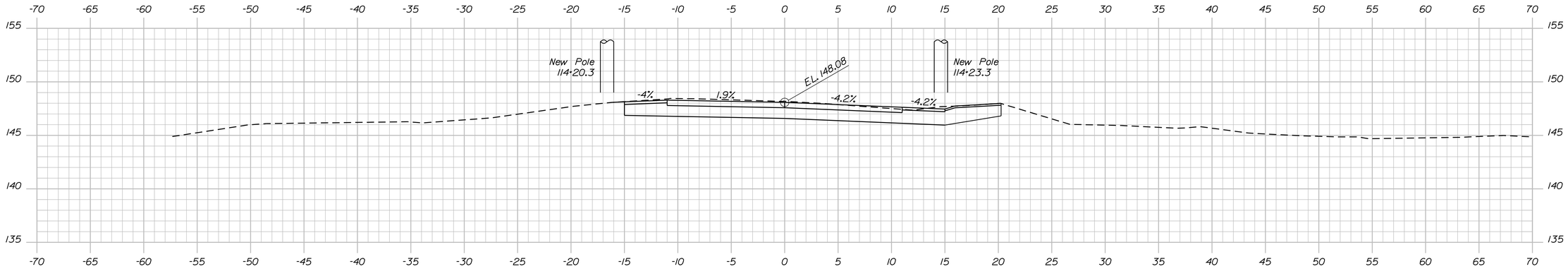

114+25.00

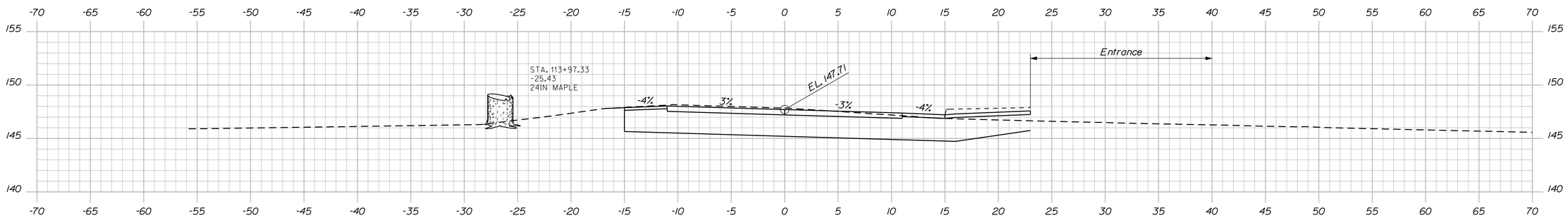

End Project 114+00.00 Begin Transition

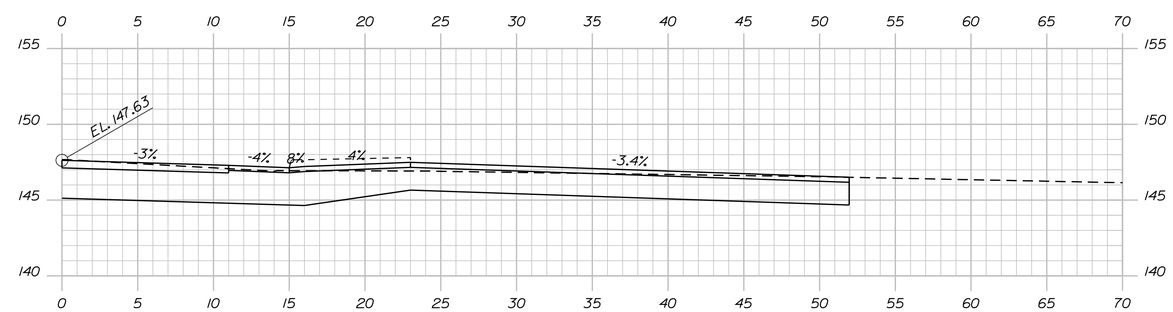

113+84.00 Paved Entrance

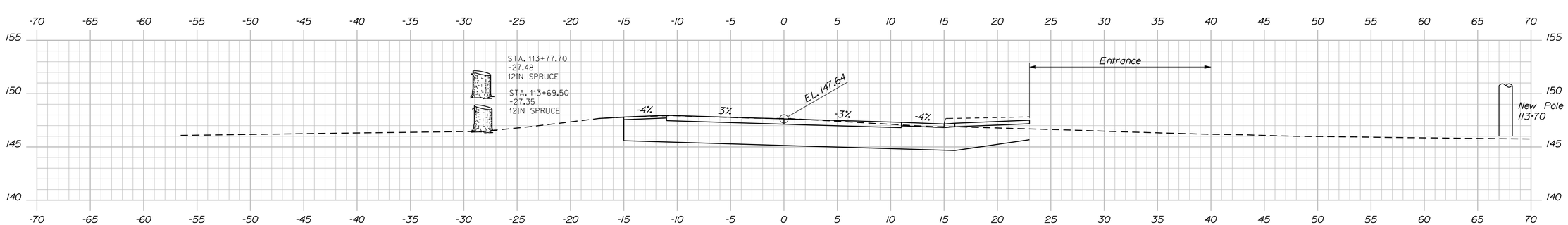

113+75.00

STATE OF MAINE
DEPARTMENT OF TRANSPORTATION

STP-1928(000)

WIN 19280.00

BRIDGE NO. 3333

BRIDGE PLANS

		BY	DATE
PROJ. MANAGER	M. Perkin		
DESIGN-DETAILED	D. Eaton	D. Domren	Oct. 2014
CHECKED-REVIEWED	G. Gustafson		Oct. 2014
DESIGN2-DETAILED2			
DESIGN3-DETAILED3			
REVISIONS 1			
REVISIONS 2			
REVISIONS 3			
REVISIONS 4			
FIELD CHANGES			

SIGNATURE

P.E. NUMBER

DATE

BAR MILLS BRIDGE
SACO RIVER
HOLLIS & BUXTON YORK COUNTY

CROSS SECTIONS

SHEET NUMBER

38

OF 148

Sta. 113+75.00 to Sta. 114+25.00

Filename: ...\038_Xsect_Route 4A_113+75_012.dgn Division: BRIDGE Username: dana.domren Date:11/19/2014

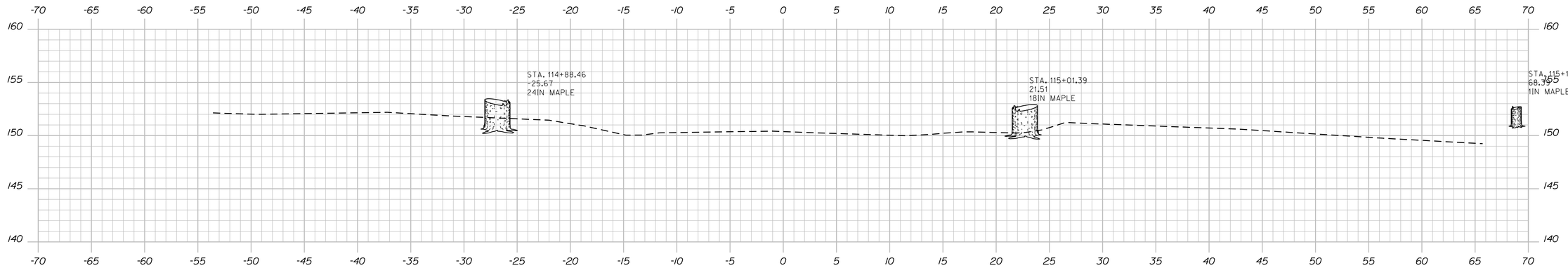

115+00.00

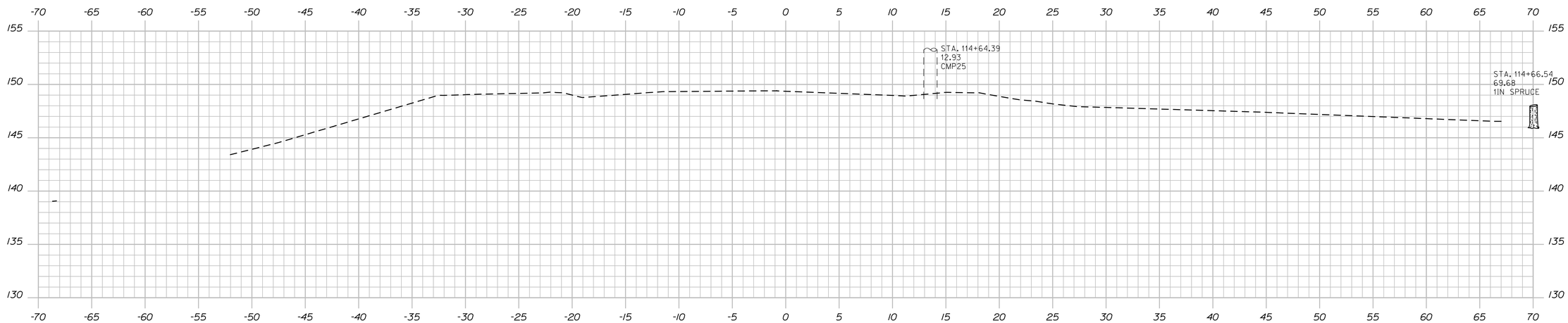

114+75.00

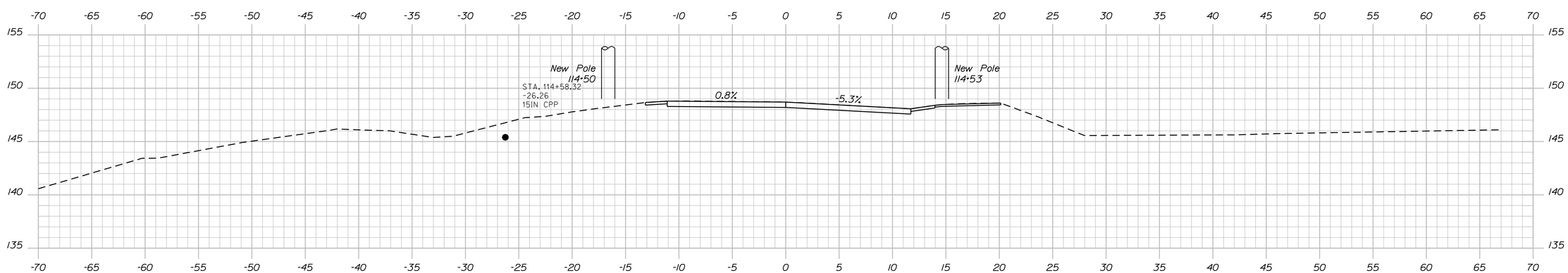

End Transition 114+50.00 Match Existing Roadway

Filename: ...\039_Xsect_Route 4A_114+50_013.dgn Division: BRIDGE Username: dana.damren Date:11/19/2014

STATE OF MAINE
DEPARTMENT OF TRANSPORTATION

STP-1928(000)

WIN 19280.00

BRIDGE NO. 3333

BRIDGE PLANS

		BY	DATE
PROJ. MANAGER	M. Perkins		
DESIGN-DETAILED	D. Eaton	D. Damren	Oct. 2014
CHECKED-REVIEWED	G. Gustafson	-----	Oct. 2014
DESIGN2-DETAILED2	-----	-----	-----
DESIGN3-DETAILED3	-----	-----	-----
REVISIONS 1	-----	-----	-----
REVISIONS 2	-----	-----	-----
REVISIONS 3	-----	-----	-----
REVISIONS 4	-----	-----	-----
FIELD CHANGES	-----	-----	-----

SIGNATURE

P.E. NUMBER

DATE

BAR MILLS BRIDGE
SACO RIVER
HOLLIS & BUXTON YORK COUNTY

CROSS SECTIONS

SHEET NUMBER

39

OF 148

Sta. 114+50.00 to Sta. 115+00.00

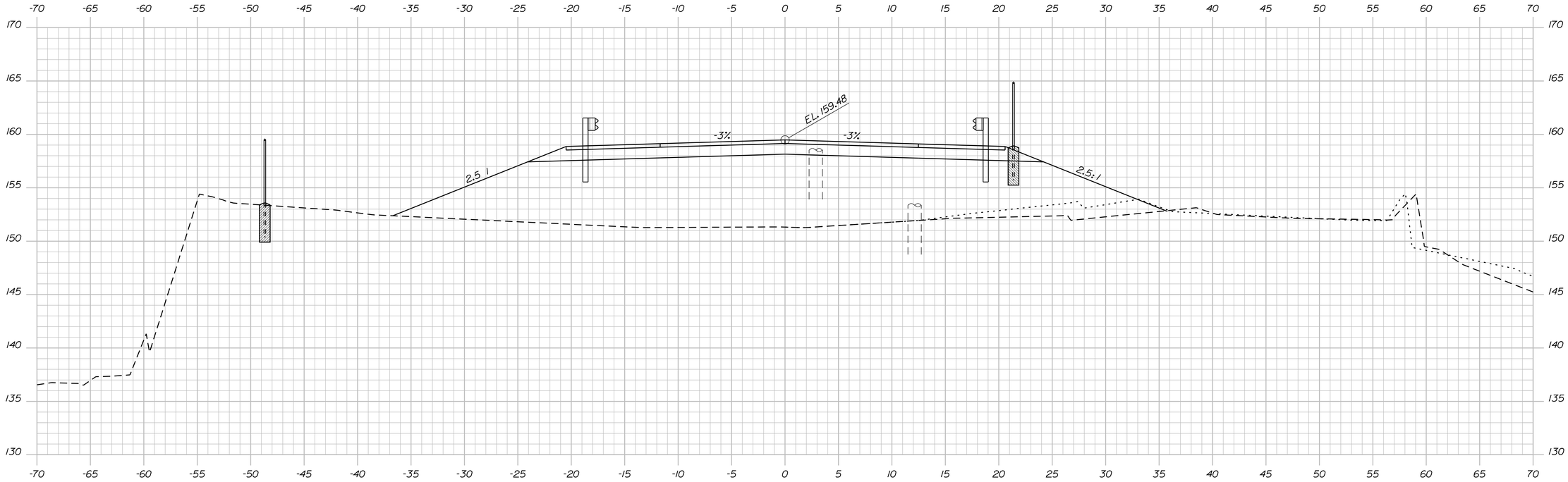

20+50.00

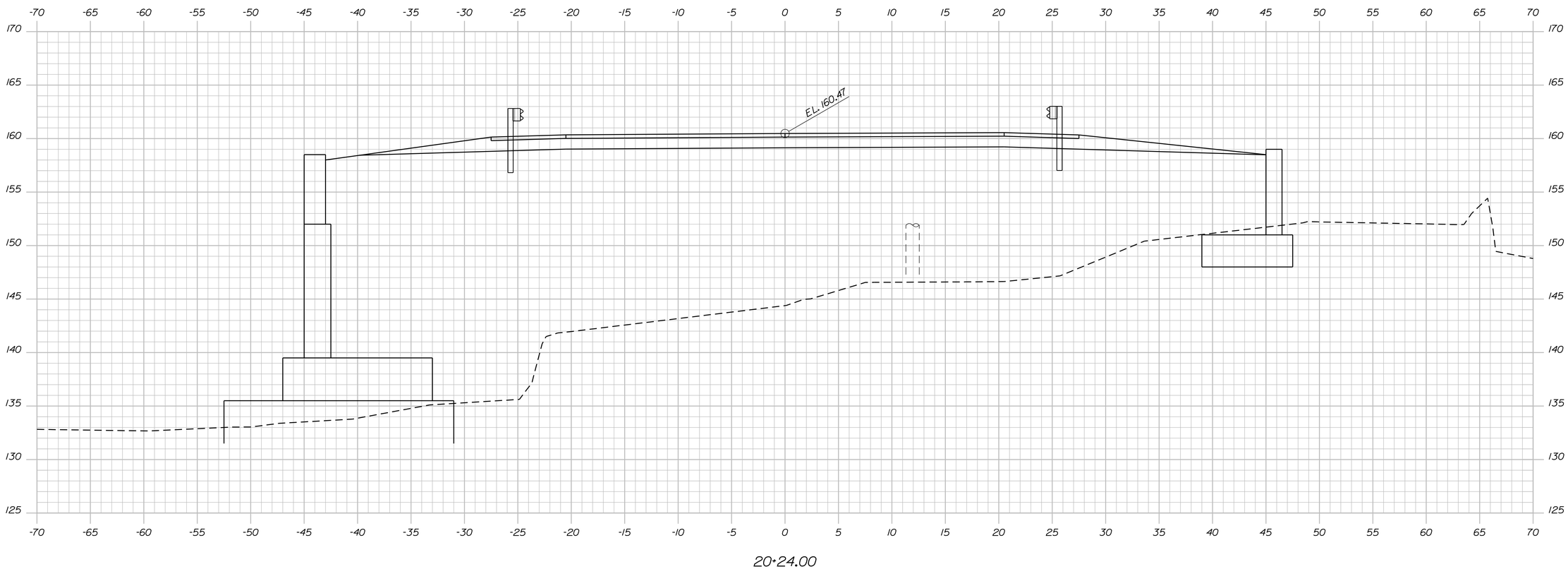

20+24.00

STATE OF MAINE
DEPARTMENT OF TRANSPORTATION

STP-1928(000)

WIN 19280.00

BRIDGE NO. 3333

BRIDGE PLANS

		BY	DATE
PROJ. MANAGER	M. Parlin		
DESIGN-DETAILED	D. Eaton	D. Damren	Oct. 2014
CHECKED-REVIEWED	G. Gustafson		Oct. 2014
DESIGN2-DETAILED2			
DESIGN3-DETAILED3			
REVISIONS 1			
REVISIONS 2			
REVISIONS 3			
REVISIONS 4			
FIELD CHANGES			

SIGNATURE

P.E. NUMBER

DATE

BAR MILLS BRIDGE
SACO RIVER
HOLLIS & BUXTON YORK COUNTY

CROSS SECTIONS

SHEET NUMBER

40

OF 148

Sta. 20+24.00 to Sta. 20+50.00

Filename: ...\040_Xsect_Island Access Road_20+24.00 to 20+50.00 BRIDGE

Username: dana.damren

Date:11/19/2014

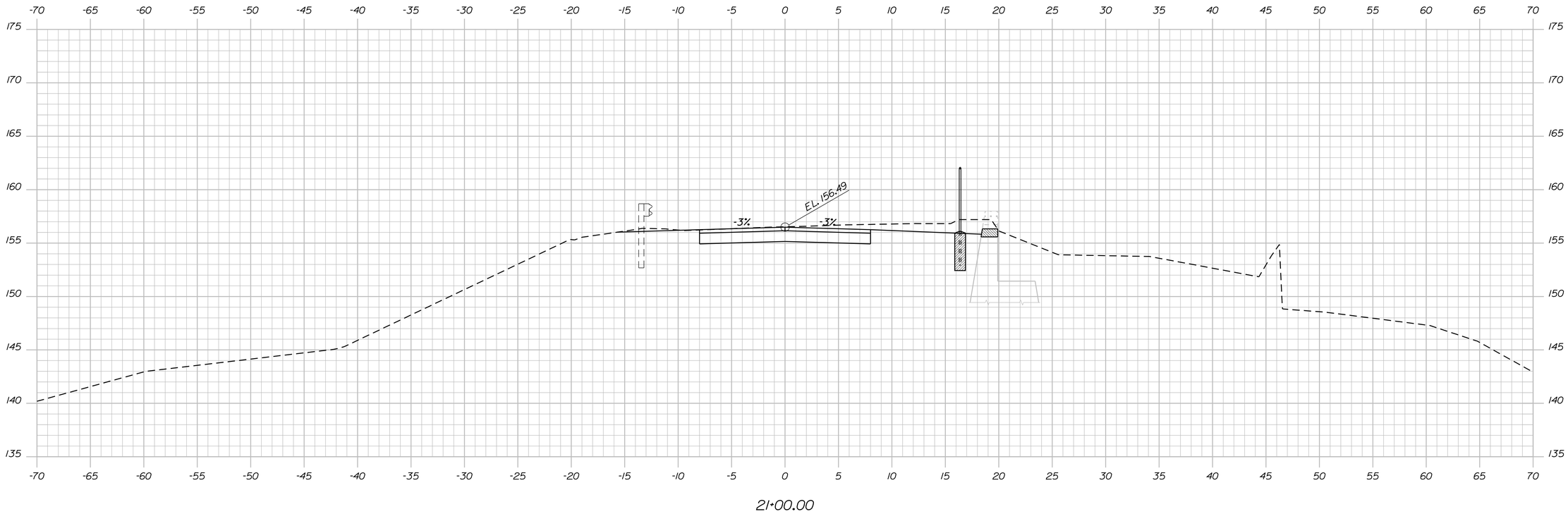

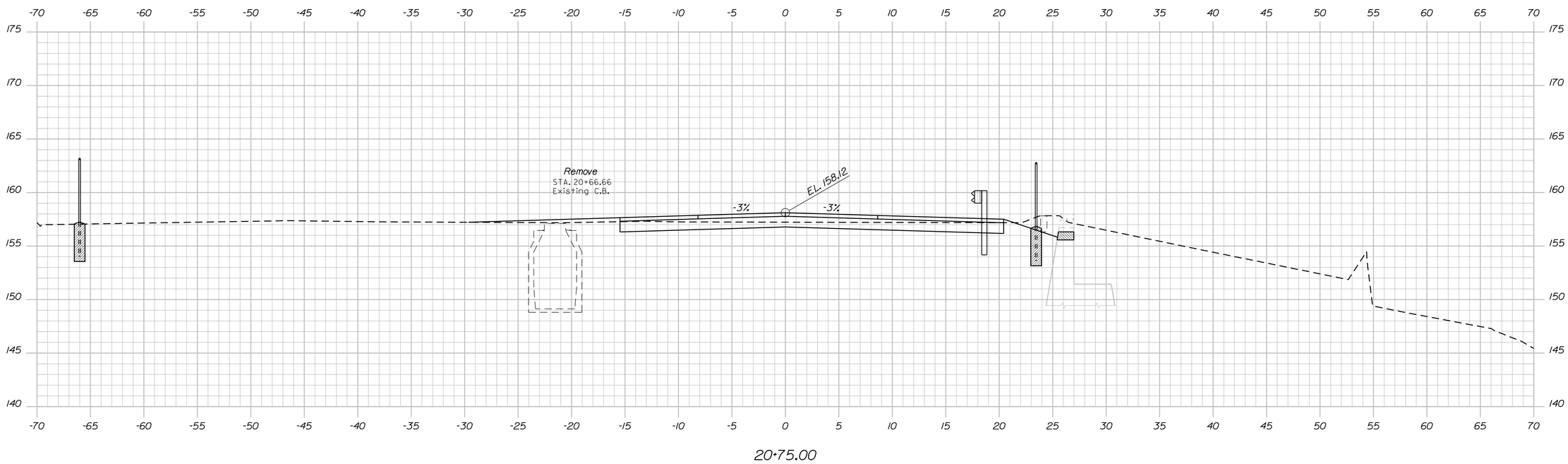

STATE OF MAINE
DEPARTMENT OF TRANSPORTATION

STP-1928(000)

WIN 19280.00

BRIDGE NO. 3333

BRIDGE PLANS

	BY	DATE
PROJ. MANAGER	M. Parlin	
DESIGN-DETAILED	D. Eaton	Oct. 2014
CHECKED-REVIEWED	G. Gustafson	Oct. 2014
DESIGN2-DETAILED2		
DESIGN3-DETAILED3		
REVISIONS 1		
REVISIONS 2		
REVISIONS 3		
REVISIONS 4		
FIELD CHANGES		

SIGNATURE

P.E. NUMBER

DATE

BAR MILLS BRIDGE
SACO RIVER
HOLLIS & BUXTON YORK COUNTY

CROSS SECTIONS

SHEET NUMBER

41

OF 148

Sta. 20+75.00 to Sta. 21+00.00

Filename: ...\041_Xsect_Island Access Road_20+75.DWG Design BRIDGE Username: dana.damren Date:11/19/2014

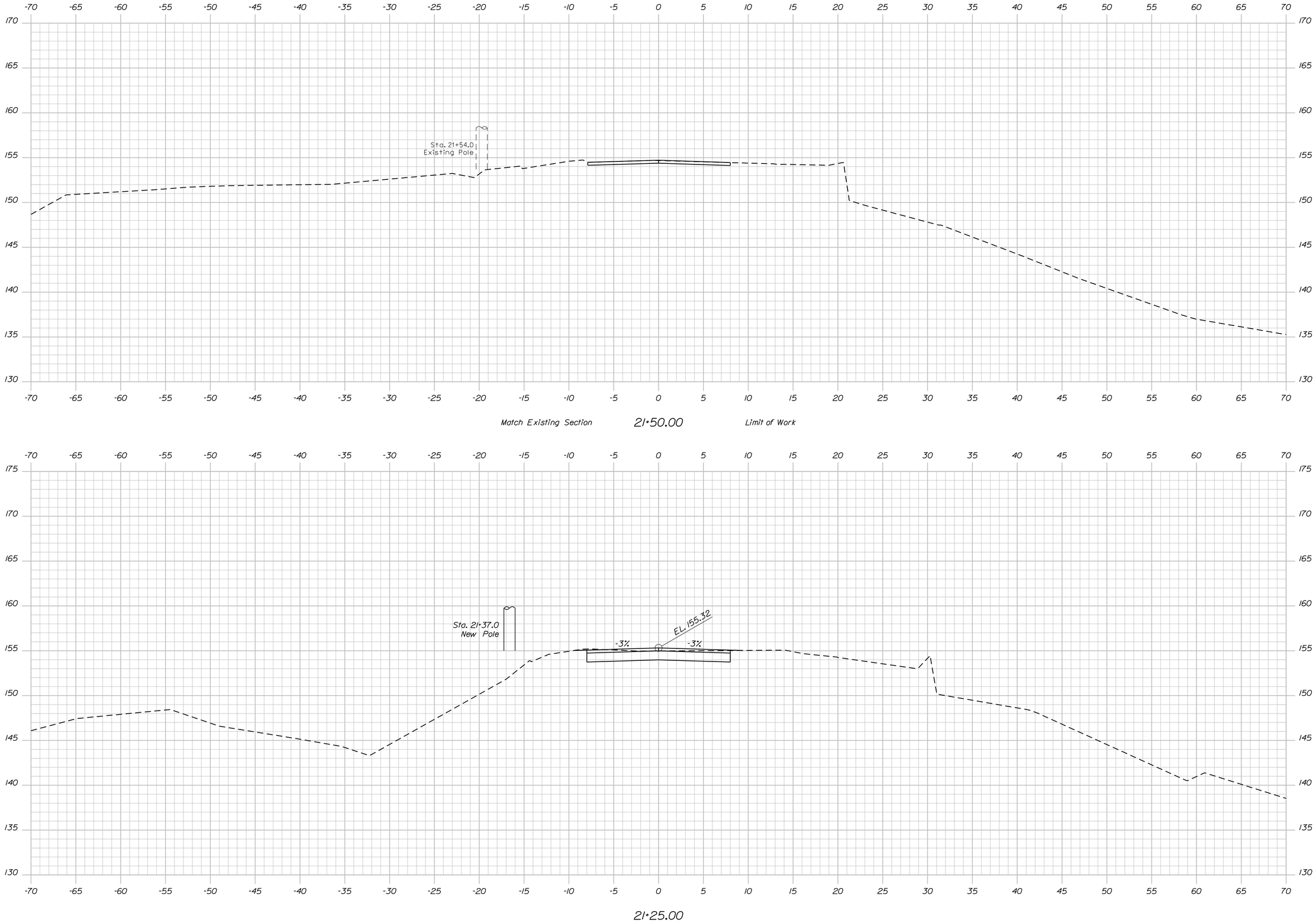

STATE OF MAINE
DEPARTMENT OF TRANSPORTATION

STP-1928(000)

WIN 19280.00

BRIDGE NO. 3333

BRIDGE PLANS

		BY	DATE
PROJ. MANAGER	M. Parlin		
DESIGN-DETAILED	D. Eaton	D. Damren	Oct. 2014
CHECKED-REVIEWED	G. Gustafson		Oct. 2014
DESIGN2-DETAILED2			
DESIGN3-DETAILED3			
REVISIONS 1			
REVISIONS 2			
REVISIONS 3			
REVISIONS 4			
FIELD CHANGES			

SIGNATURE

P.E. NUMBER

DATE

BAR MILLS BRIDGE
SACO RIVER
HOLLIS & BUXTON YORK COUNTY

CROSS SECTIONS

SHEET NUMBER

42

OF 148

Sta. 21+25.00 to Sta. 21+50.00

Filename: ...\042_Xsect_Island Access Road_21+25DD03.dgn BRIDGE Username: dana.damren Date:11/19/2014

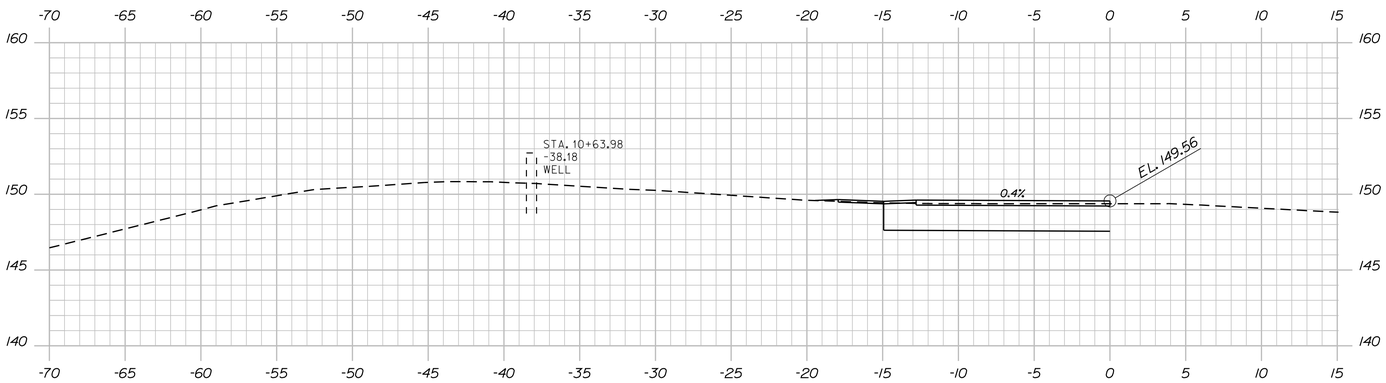

10+63.98

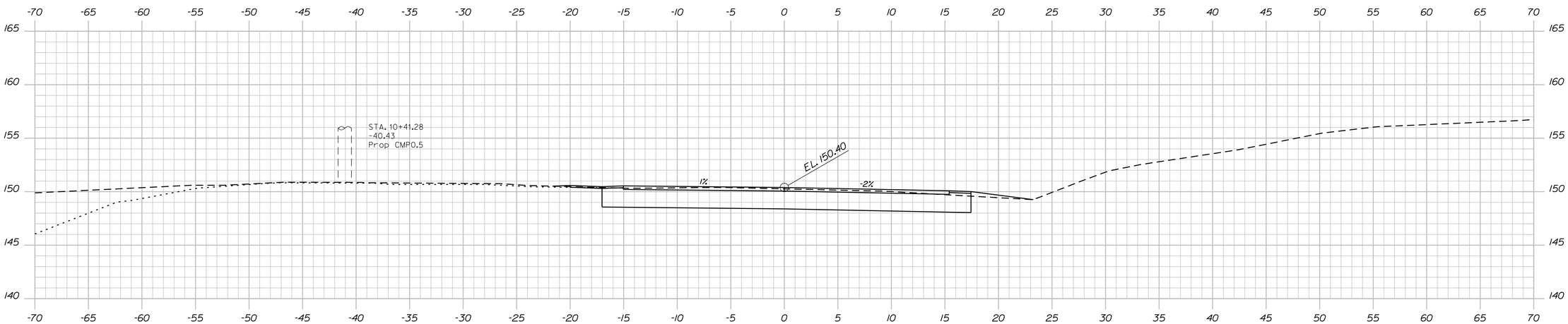

10+50.00

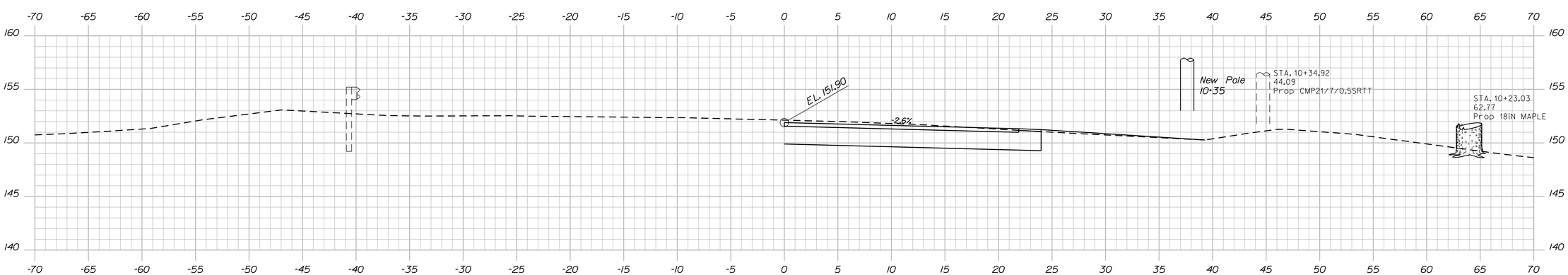

10+25.00

STATE OF MAINE
DEPARTMENT OF TRANSPORTATION

STP-1928(000)

WIN 19280.00

BRIDGE NO. 3333

BRIDGE PLANS

		BY	DATE
PROJ. MANAGER	M. Parlin		
DESIGN-DETAILED	D. Eaton	D. Domren	Oct. 2014
CHECKED-REVIEWED	G. Gustafson	-----	Oct. 2014
DESIGN2-DETAILED2	-----	-----	-----
DESIGN3-DETAILED3	-----	-----	-----
REVISIONS 1	-----	-----	-----
REVISIONS 2	-----	-----	-----
REVISIONS 3	-----	-----	-----
REVISIONS 4	-----	-----	-----
FIELD CHANGES	-----	-----	-----

SIGNATURE

P.E. NUMBER

DATE

BAR MILLS BRIDGE
SACO RIVER
HOLLIS & BUXTON YORK COUNTY

CROSS SECTIONS

SHEET NUMBER

43

OF 148

Sta. 10+25.00 to Sta. 10+63.98

Filename: ...\043_Xsect_Depot Street_10+25_001.dgn Division: BRIDGE Username: dana.domren Date:11/19/2014

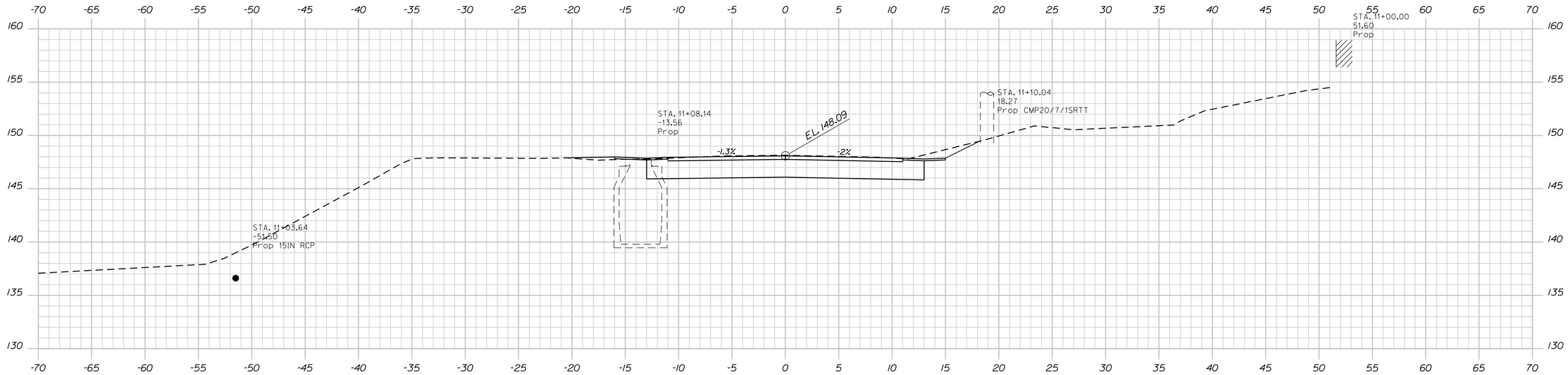

11+00.00

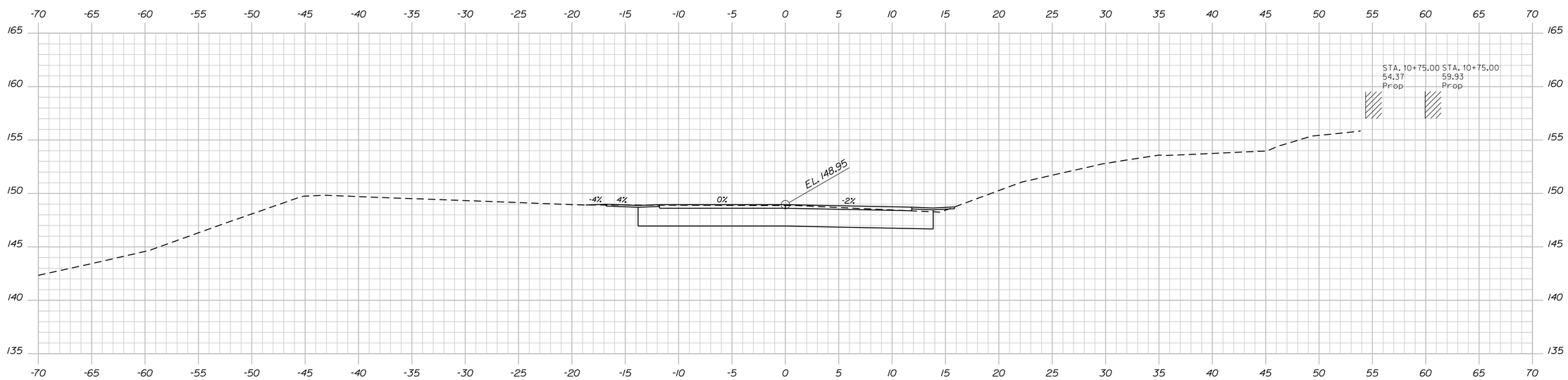

10+75.00

STATE OF MAINE
DEPARTMENT OF TRANSPORTATION

STP-1928(000)

WIN 19280.00

BRIDGE NO. 3333

BRIDGE PLANS

	BY	DATE
PROJ. MANAGER	M. Perrin	
DESIGN-DETAILED	D. Eaton	D. Domren	Oct. 2014
CHECKED-REVIEWED	G. Gustafson		Oct. 2014
DESIGN2-DETAILED2			
DESIGN3-DETAILED3			
REVISIONS 1			
REVISIONS 2			
REVISIONS 3			
REVISIONS 4			
FIELD CHANGES			

SIGNATURE

P.E. NUMBER

DATE

BAR MILLS BRIDGE
SACO RIVER
HOLLIS & BUXTON YORK COUNTY

CROSS SECTIONS

SHEET NUMBER

44

OF 148

Sta. 10+75.00 to Sta. 11+00.00

Filename: ...\044_Xsect_Depot Street_10+75_002.dgn Division: BRIDGE Username: dana.domren Date:11/19/2014

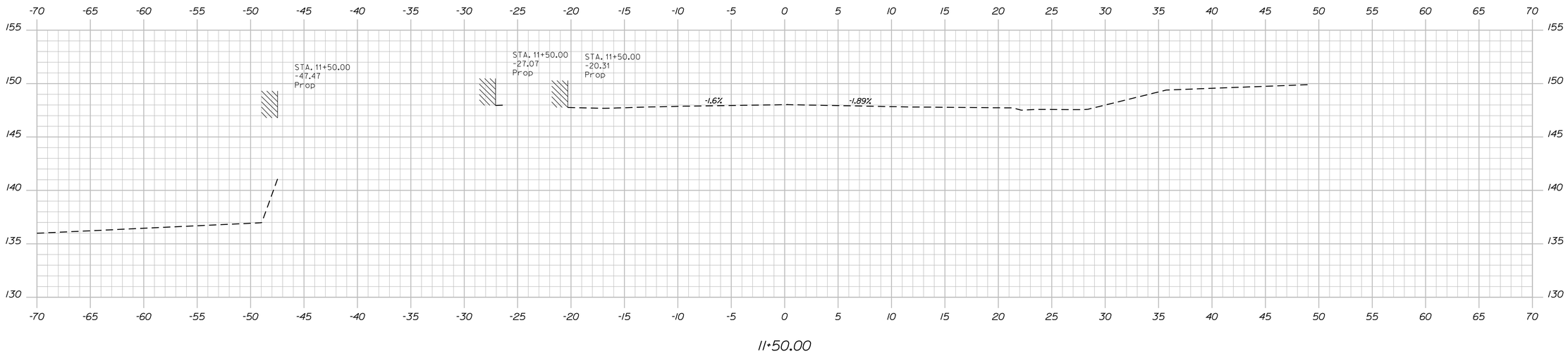

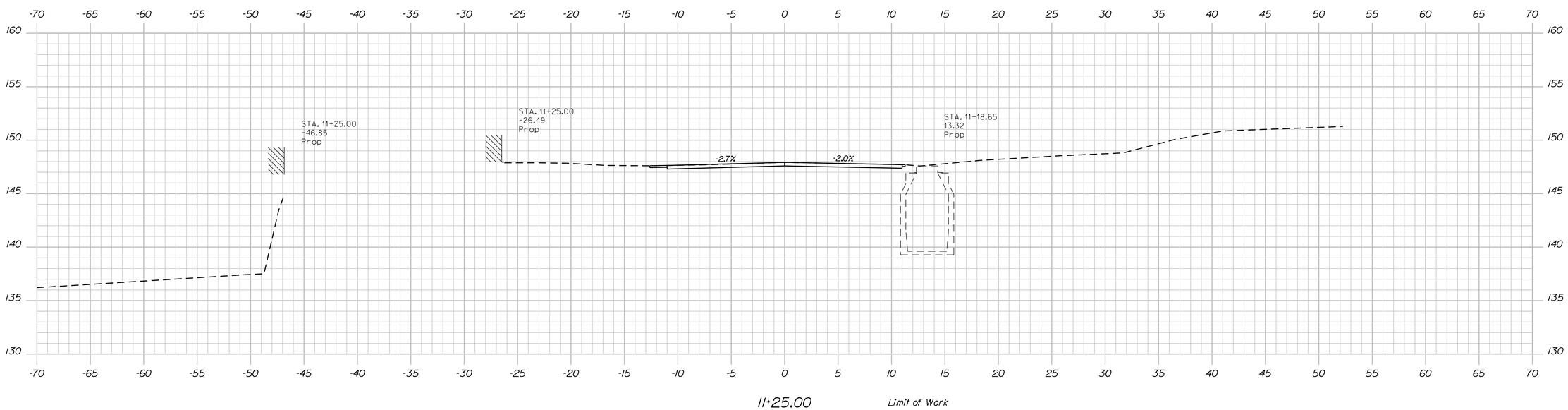

STATE OF MAINE
DEPARTMENT OF TRANSPORTATION

STP-1928(000)

WIN 19280.00

BRIDGE NO. 3333

BRIDGE PLANS

		BY	DATE
PROJ. MANAGER	M. Perrin		
DESIGN-DETAILED	D. Eaton	D. Domren	Oct. 2014
CHECKED-REVIEWED	G. Gustafson	-----	Oct. 2014
DESIGN2-DETAILED2	-----	-----	-----
DESIGN3-DETAILED3	-----	-----	-----
REVISIONS 1	-----	-----	-----
REVISIONS 2	-----	-----	-----
REVISIONS 3	-----	-----	-----
REVISIONS 4	-----	-----	-----
FIELD CHANGES	-----	-----	-----

SIGNATURE

P.E. NUMBER

DATE

BAR MILLS BRIDGE
SACO RIVER
HOLLIS & BUXTON YORK COUNTY

CROSS SECTIONS

SHEET NUMBER

45

OF 148

Sta. 11+25.00 to Sta. 11+50.00

Filename: ...\045_Xsect_Depot Street_11+25_003.dgn Division: BRIDGE Username: dana.domren Date:11/19/2014

ABUTMENT NOTES

1. The maximum factored applied footing pressure is 12.9 ksf.

2. Structural Earth Excavation, Abutments and Retaining Walls, required more than 12 inches below the bottom of the structure, will be paid for in accordance with Standard Specifications Section 206, Structural Excavation.

3. Reinforcing steel shall have a minimum concrete cover of 2 inches in the walls and 3 inches in the footings unless otherwise noted.

4. Place 4-in. diameter drains in the breastwall and wingwalls at 10-ft maximum spacing. The exact location will be determined by the Resident.

5. Cover joints where waterstops are not required in accordance with Standard Details Section 502.

6. Abutments, wingwalls and their footings shall be backfilled with Granular Borrow. Pay limits will be the structural excavation limits in cut areas and a vertical plane located 10 feet behind the walls in fill areas.

7. The concrete pedestal elevations shown are approximate. The actual elevations shall be adjusted to accommodate the bearings supplied by the Contractor. The elevations given assume the overall bearing heights designated in the Disc Bearing Design Table

8. Abutment No. 1 Seal shall be Class "S" concrete.

9. Install drainage geocomposite behind the abutment and wingwall shafts and behind the semi-integral backwall up to the approach slab seat elevation and in accordance with Special Provision Section 620, Drainage Geocomposite.

10. When bedrock protrudes above the bottom of footing shown, the footing may be raised and the vertical reinforcing may be cut in the field with the approval of the Resident. The minimum footing elevations are shown on the plans and shall not be lowered without prior approval of the Engineer of Record. Payment for adjusting the footing elevations and reinforcing steel will be considered incidental to the related Contract Items. No separate payment will be made.

11. Foundation concrete shall be placed on bedrock cleaned of all loose rock and soil. The bedrock subgrade shall be confirmed to be relatively level. Where the bedrock slope exceeds 4H:1V, the bedrock surface shall be benched to create level steps or made completely level.

SEAL COFFERDAM NOTES

1. When sheet piling is used for seal cofferdams, appropriate rolled corners shall be used, and the inside face of the sheet piling shall be at or outside of the seal concrete dimensions shown.

2. The seal concrete placement dimensions shown represent the minimum seal size necessary to meet design requirements and are not based on the use of any particular sheet pile section.

3. The horizontal pay limit for seal concrete will be to the dimensions shown on the plans. No additional payment will be made for concrete placed outside these limits.

4. The depth of the seal is set for a water elevation of 150.52. If the water elevation at the time of construction is higher, the depth of the seal shall be adjusted.

5. The method of placing dowels in the seal concrete shall be approved by the Resident.

STATE OF MAINE
DEPARTMENT OF TRANSPORTATION

BR-1928(100)X

WIN 19281.00

BRIDGE NO. 1525

BRIDGE PLANS

PROJ. MANAGER	M. Perlin	BY	DATE
DESIGN-DETAILED	G. Gustafson	D. Show	Nov. 2014
CHECKED-REVIEWED	J. Waugh		Nov. 2014
DESIGN2-DETAILED2			
DESIGN3-DETAILED3			
REVISIONS 1			
REVISIONS 2			
REVISIONS 3			
REVISIONS 4			
FIELD CHANGES			

SIGNATURE

P.E. NUMBER

DATE

CANAL BRIDGE
SACO RIVER CANAL
HOLLIS YORK COUNTY

ABUTMENT NOTES

Filename: ...\046_Canal_Abutment_Notes.dgn Division: BRIDGE Username: dana.damren Date:11/19/2014

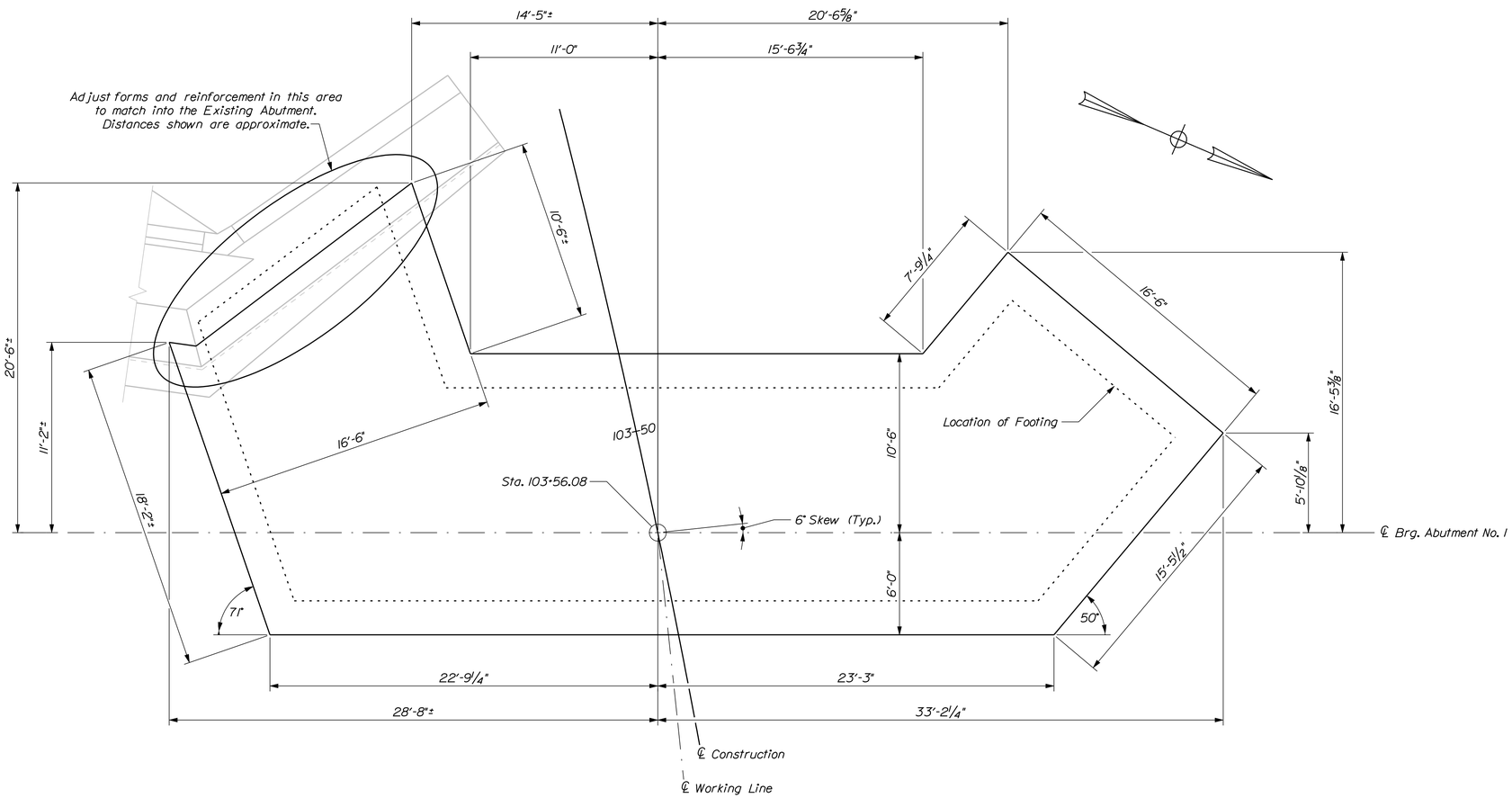

ABUTMENT NO. 1 SEAL PLAN

STATE OF MAINE
DEPARTMENT OF TRANSPORTATION

BR-1928(100)X

WIN 19281.00

BRIDGE NO. 1525

BRIDGE PLANS

PROJ. MANAGER	M. Parlin	BY	DATE
DESIGN-DETAILED	G. Gustafson	D. Show	Nov. 2014
CHECKED-REVIEWED			
DESIGN2-DETAILED2			
DESIGN3-DETAILED3			
REVISIONS 1			
REVISIONS 2			
REVISIONS 3			
REVISIONS 4			
FIELD CHANGES			

SIGNATURE

P.E. NUMBER

DATE

CANAL BRIDGE
SACO RIVER CANAL
HOLLIS YORK COUNTY

ABUTMENT NO. 1 SEAL

SHEET NUMBER

47

OF 148

Filename: ...\047_Canal_Abutment_No1_Seal.dgn Division: BRIDGE Username: dana.damren Date:11/19/2014

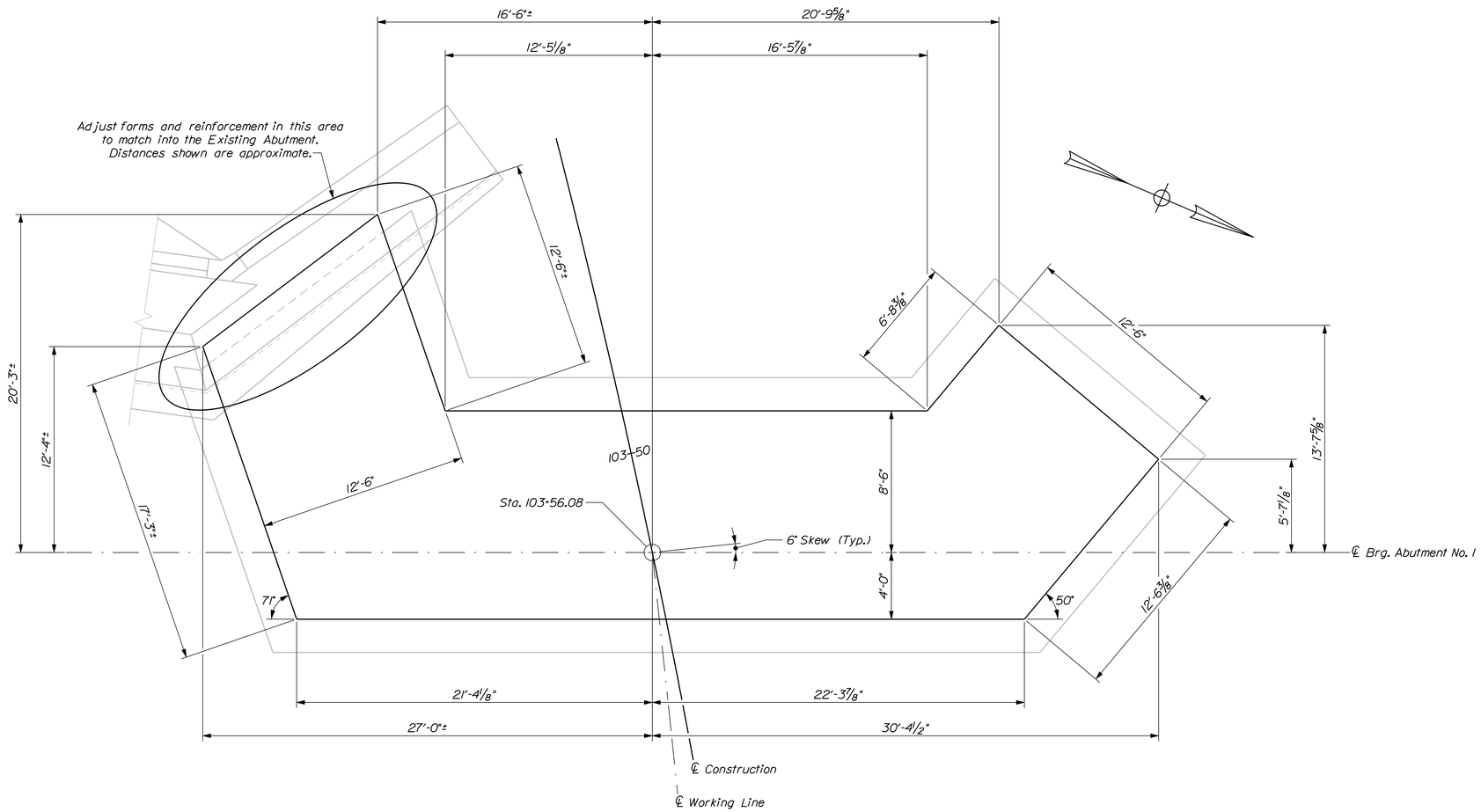

ABUTMENT NO. 1 FOOTING PLAN

Filename: ...\048_Canal_Abutment_No1_Footing.dgn Division: BRIDGE Username: dana.damren Date:11/19/2014

STATE OF MAINE
DEPARTMENT OF TRANSPORTATION

BR-1928(100)X

WIN 19281.00

BRIDGE NO. 1525

BRIDGE PLANS

PROJ. MANAGER	M. Perlin	BY	DATE
DESIGN-DETAILED	G. Gustafson	D. Show	Nov. 2014
CHECKED-REVIEWED			
DESIGN2-DETAILED2			
DESIGN3-DETAILED3			
REVISIONS 1			
REVISIONS 2			
REVISIONS 3			
REVISIONS 4			
FIELD CHANGES			

SIGNATURE

P.E. NUMBER

DATE

CANAL BRIDGE
SACO RIVER CANAL
HOLLIS YORK COUNTY

ABUTMENT NO. 1 FOOTING

SHEET NUMBER

48

OF 148

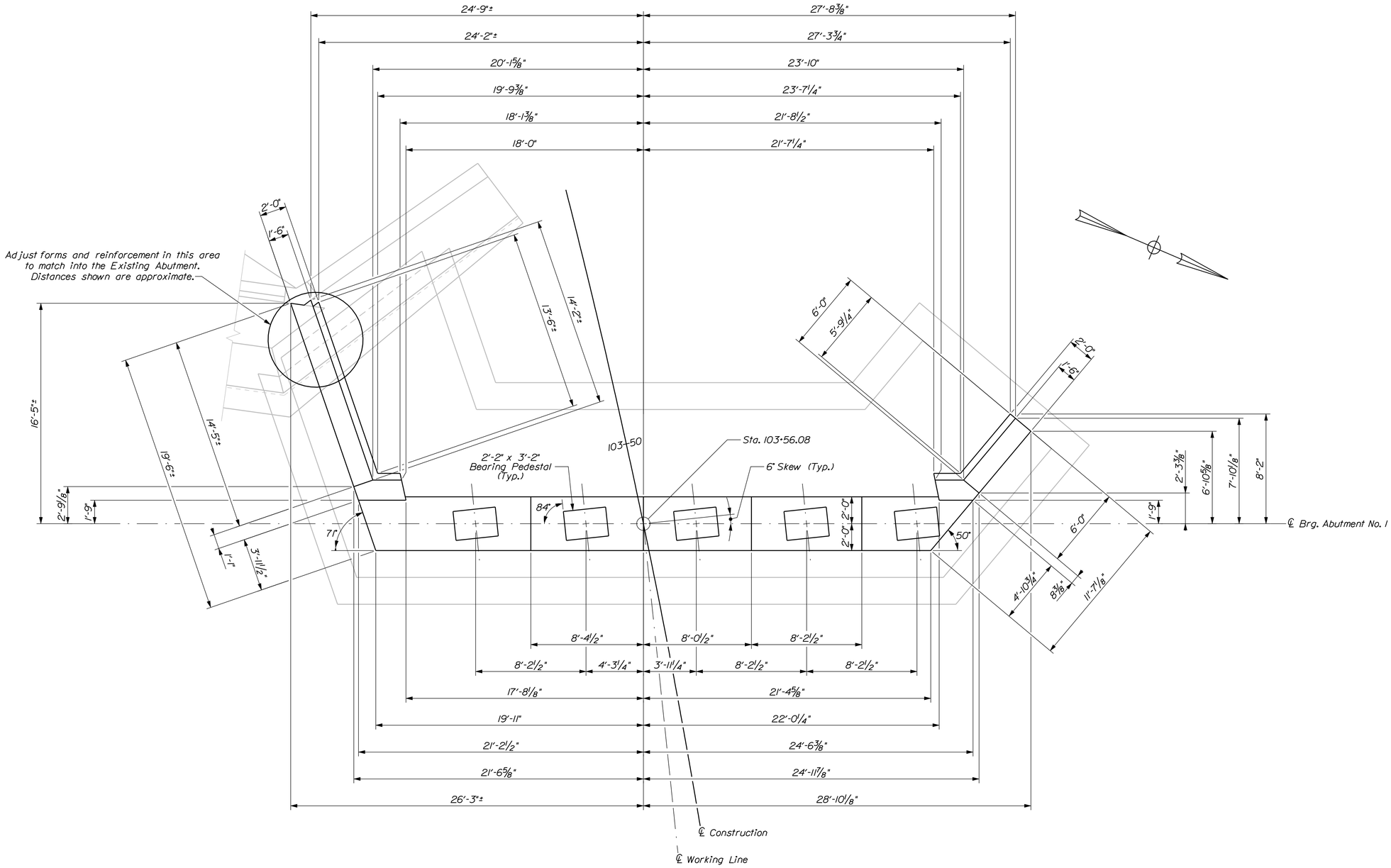

ABUTMENT NO. 1 SHAFT PLAN

STATE OF MAINE
DEPARTMENT OF TRANSPORTATION

BR-1928(100)X

WIN 19281.00

BRIDGE NO. 1525

BRIDGE PLANS

		BY	DATE
PROJ. MANAGER	M. Parlin		
DESIGN-DETAILED	G. Gustafson	D. Shaw	Nov. 2014
CHECKED-REVIEWED			
DESIGN2-DETAILED2			
DESIGN3-DETAILED3			
REVISIONS 1			
REVISIONS 2			
REVISIONS 3			
REVISIONS 4			
FIELD CHANGES			

SIGNATURE

P.E. NUMBER

DATE

CANAL BRIDGE
SACO RIVER CANAL
HOLLIS YORK COUNTY

ABUTMENT NO. 1 SHAFT

SHEET NUMBER

49

OF 148

Filename: ...\049_Canal_Abutment_No1_Shaft.dgn Division: BRIDGE Username: dana.damren Date:11/19/2014

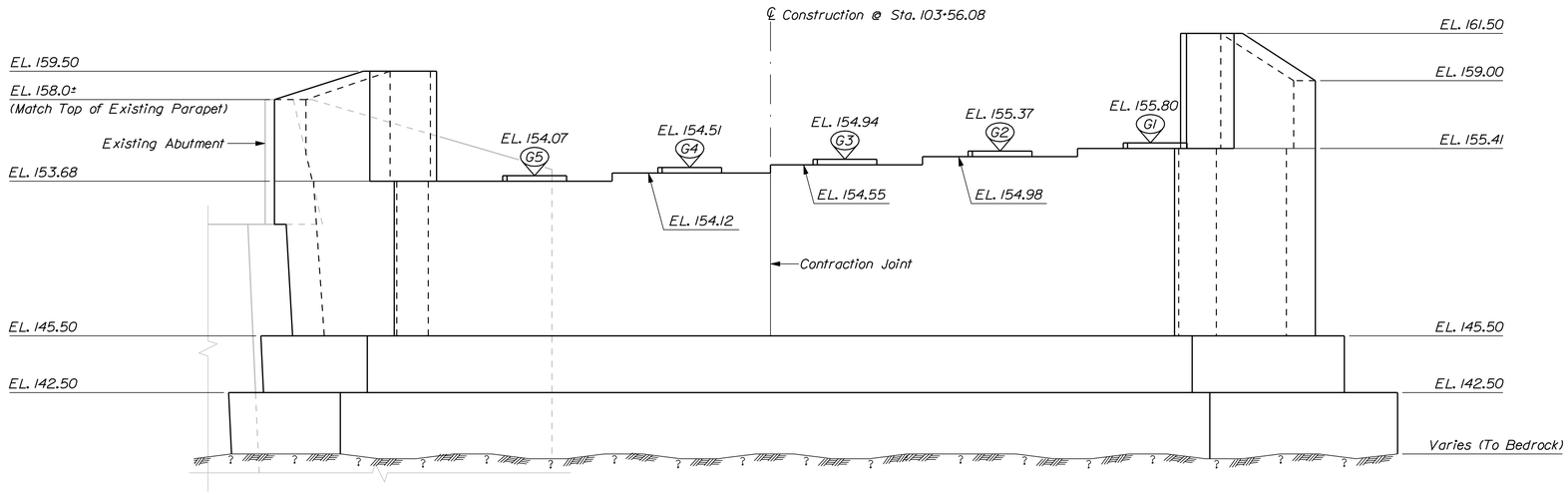

ELEVATION

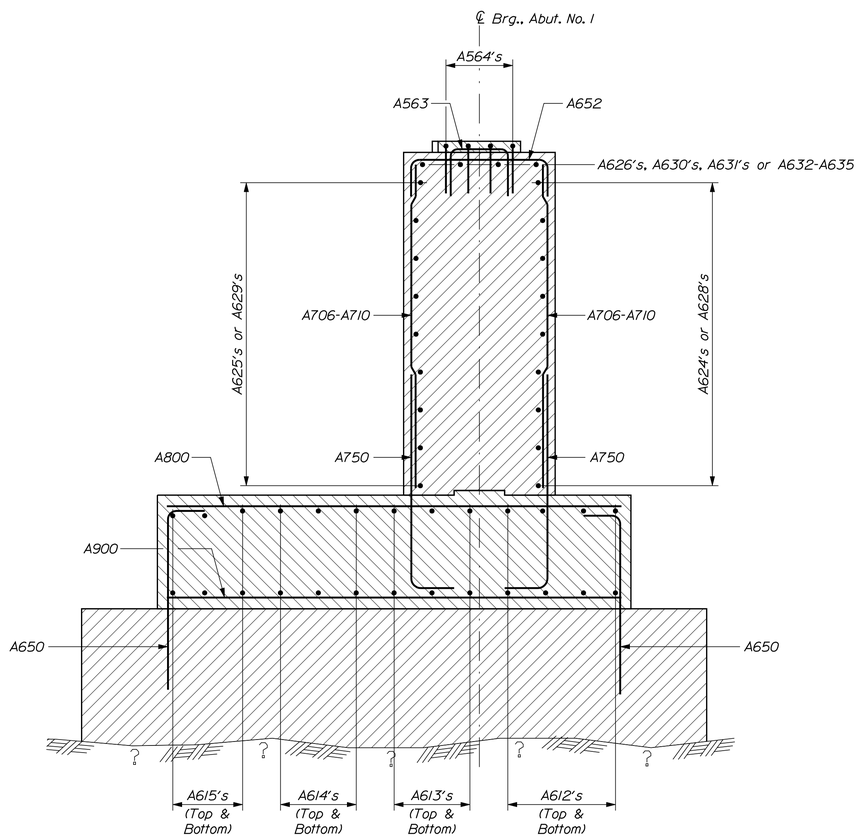

ABUTMENT NO. 1 BREASTWALL SECTION

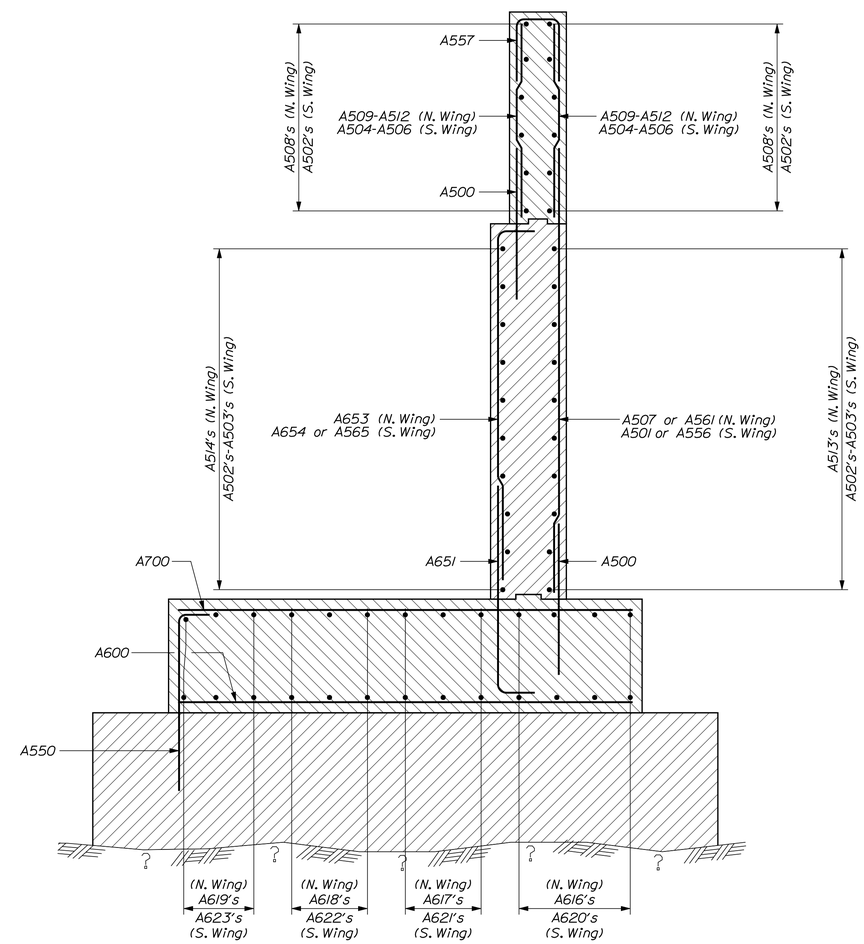

ABUTMENT NO. 1 WINGWALL SECTION

STATE OF MAINE
DEPARTMENT OF TRANSPORTATION

BR-1928(100)X

WIN 19281.00

BRIDGE NO. 1525

BRIDGE PLANS

		BY	DATE
PROJ. MANAGER	M. Purin		
DESIGN-DETAILED	G. Gustafson	D. Show	Nov. 2014
CHECKED-REVIEWED	J. Waugh		Nov. 2014
DESIGN2-DETAILED2			
DESIGN3-DETAILED3			
REVISIONS 1			
REVISIONS 2			
REVISIONS 3			
REVISIONS 4			
FIELD CHANGES			

SIGNATURE

P.E. NUMBER

DATE

CANAL BRIDGE
SACO RIVER CANAL
HOLLIS YORK COUNTY

ABUTMENT NO. 1 ELEVATION AND SECTIONS

SHEET NUMBER

50

OF 148

Filename: ...\050_Canal_Abutment_No_1_Elevation.dgn Division: BRIDGE Username: Garrett.A.Gustafson Date:11/20/2014

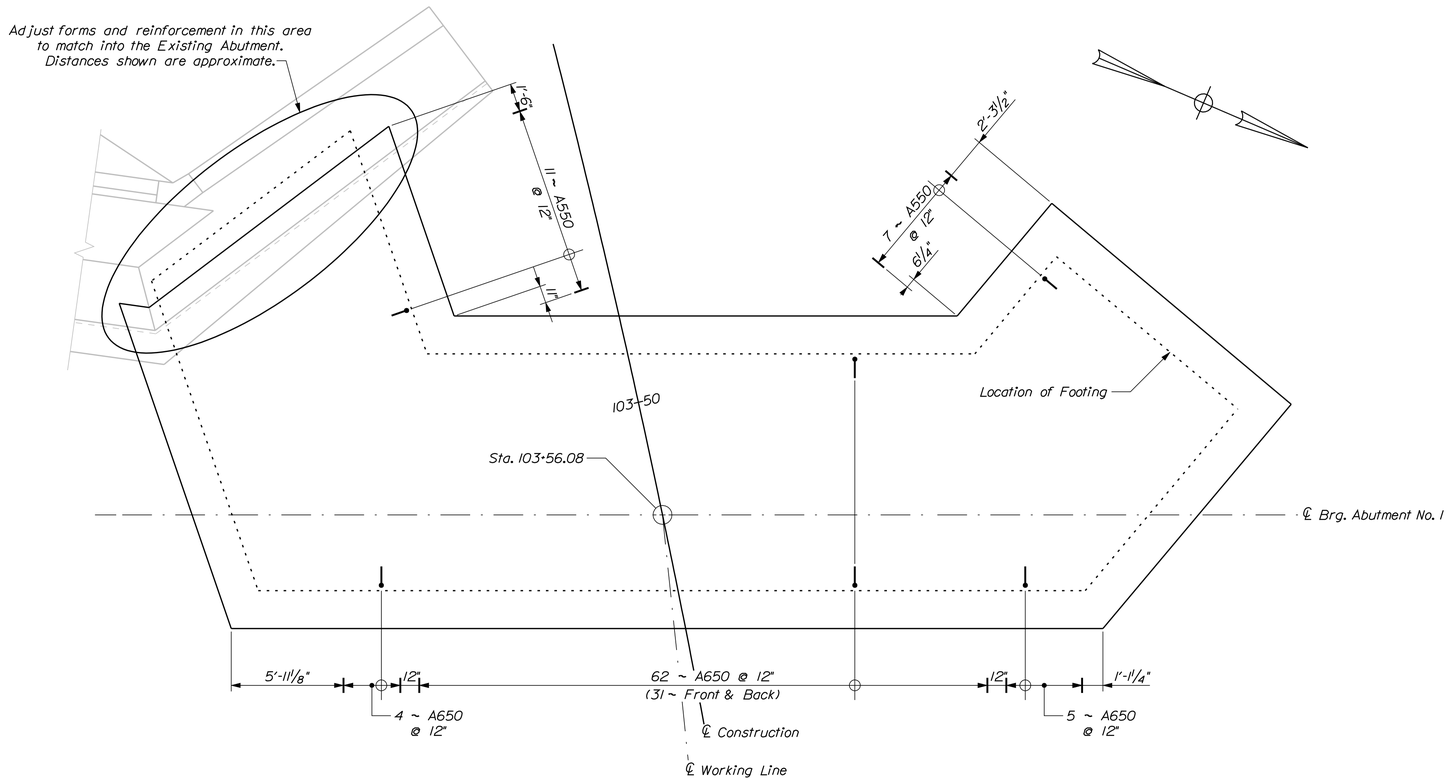

ABUTMENT NO. 1 SEAL PLAN

STATE OF MAINE
DEPARTMENT OF TRANSPORTATION

BR-1928(100)X

WIN 19281.00

BRIDGE NO. 1525

BRIDGE PLANS

		BY	DATE
PROJ. MANAGER	M. Perlin		
DESIGN-DETAILED	G. Gustafson	D. Shaw	Nov. 2014
CHECKED-REVIEWED	J. Waugh		Nov. 2014
DESIGN2-DETAILED2			
DESIGN3-DETAILED3			
REVISIONS 1			
REVISIONS 2			
REVISIONS 3			
REVISIONS 4			
FIELD CHANGES			

SIGNATURE

P.E. NUMBER

DATE

CANAL BRIDGE
SACO RIVER CANAL
HOLLIS YORK COUNTY

ABUTMENT NO. 1
SEAL REINFORCEMENT

SHEET NUMBER

51

OF 148

Filename: ...\051_Canal_Abutment_No_1_Seal_Reinforcing.dgn Division: BRIDGE Username: dana.damren Date:11/19/2014

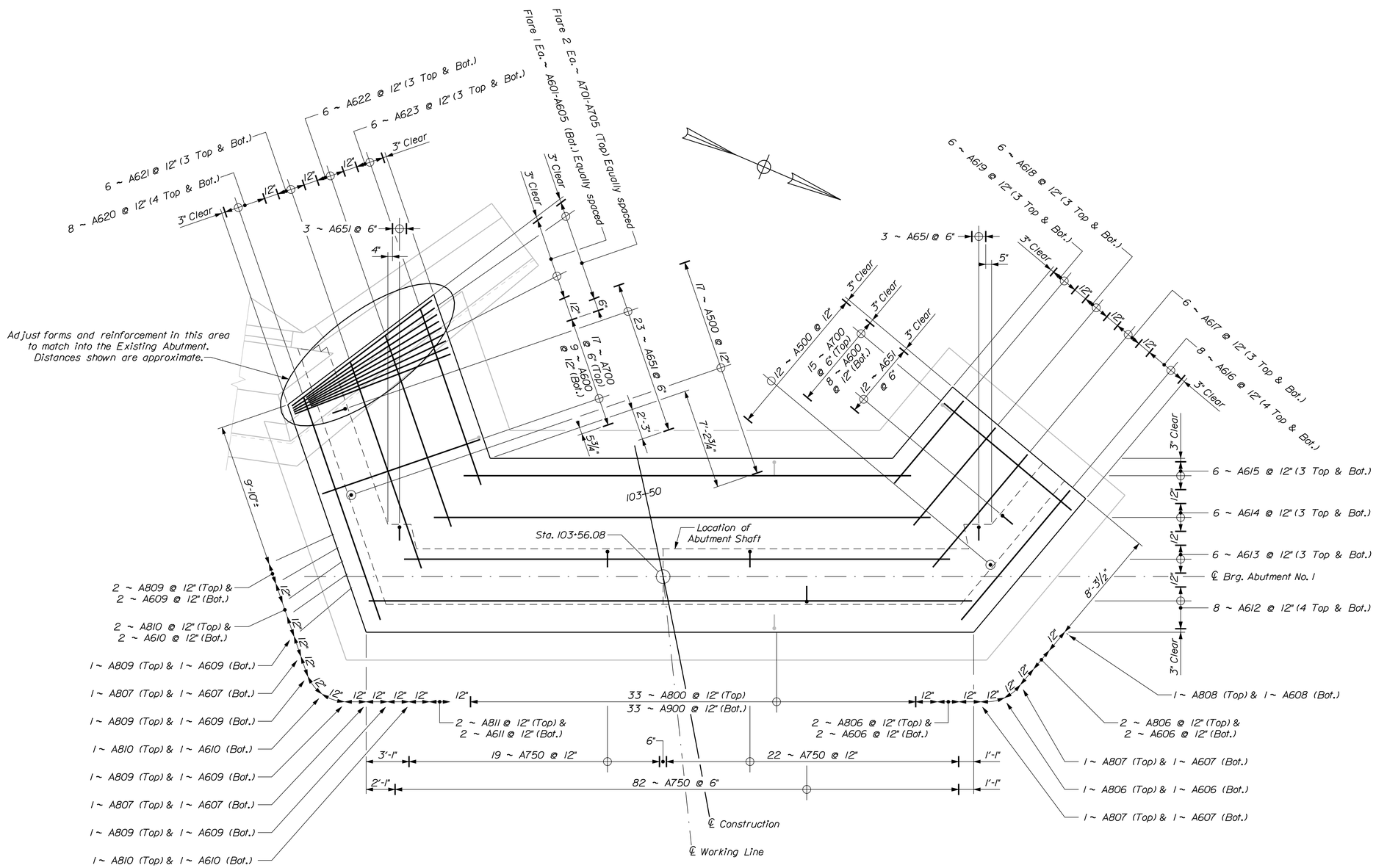

ABUTMENT NO. 1 FOOTING PLAN

STATE OF MAINE
DEPARTMENT OF TRANSPORTATION

BR-1928(100)X

WIN 19281.00

BRIDGE NO. 1525

BRIDGE PLANS

		BY	DATE
PROJ. MANAGER	M. Perrin		
DESIGN-DETAILED	G. Gustafson	D. Shaw	Nov. 2014
CHECKED-REVIEWED	J. Waugh		Nov. 2014
DESIGN2-DETAILED2			
DESIGN3-DETAILED3			
REVISIONS 1			
REVISIONS 2			
REVISIONS 3			
REVISIONS 4			
FIELD CHANGES			

SIGNATURE

P.E. NUMBER

DATE

CANAL BRIDGE
SACO RIVER CANAL
HOLLIS YORK COUNTY

ABUTMENT NO. 1
FOOTING REINFORCEMENT

SHEET NUMBER

52

OF 148

Filename: ...\052_Canal_Abutment_No1_Footing_Rev.dgn Division: BRIDGE Username: dana.damren Date:11/19/2014

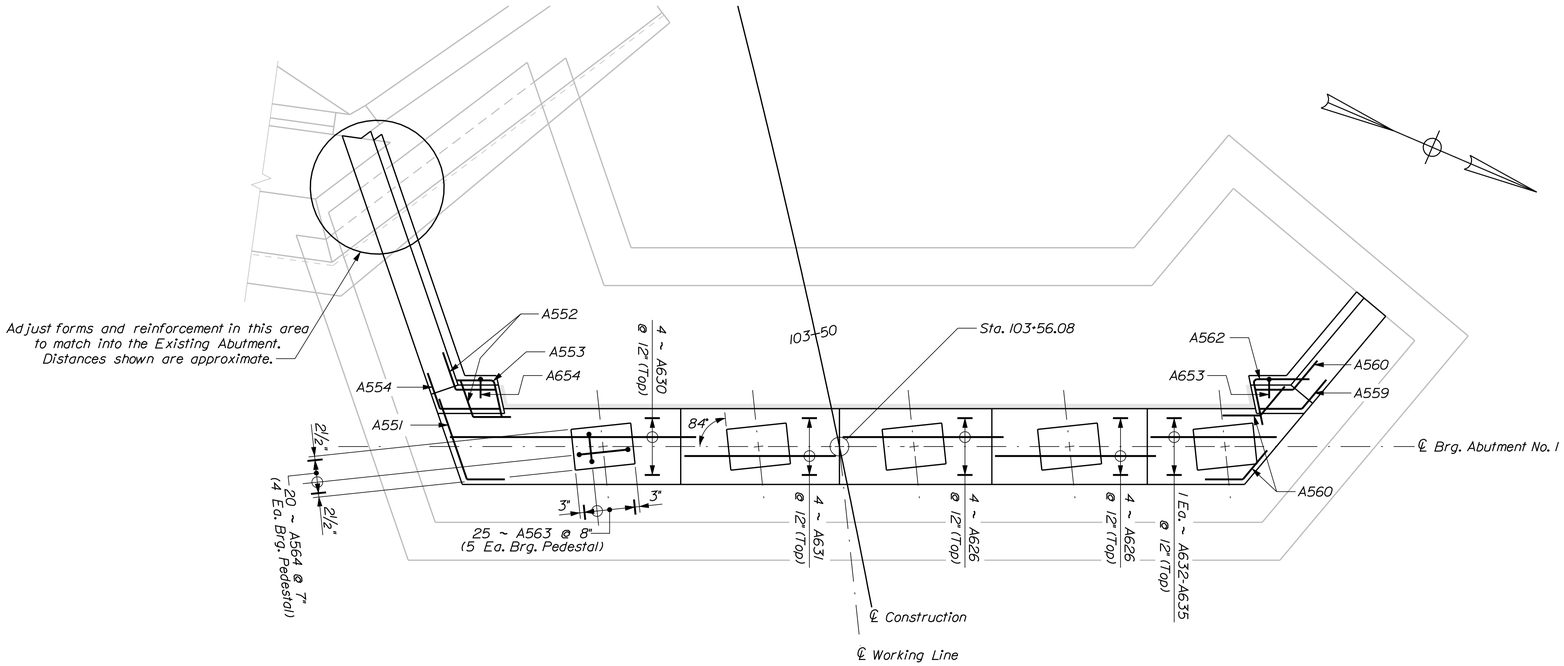

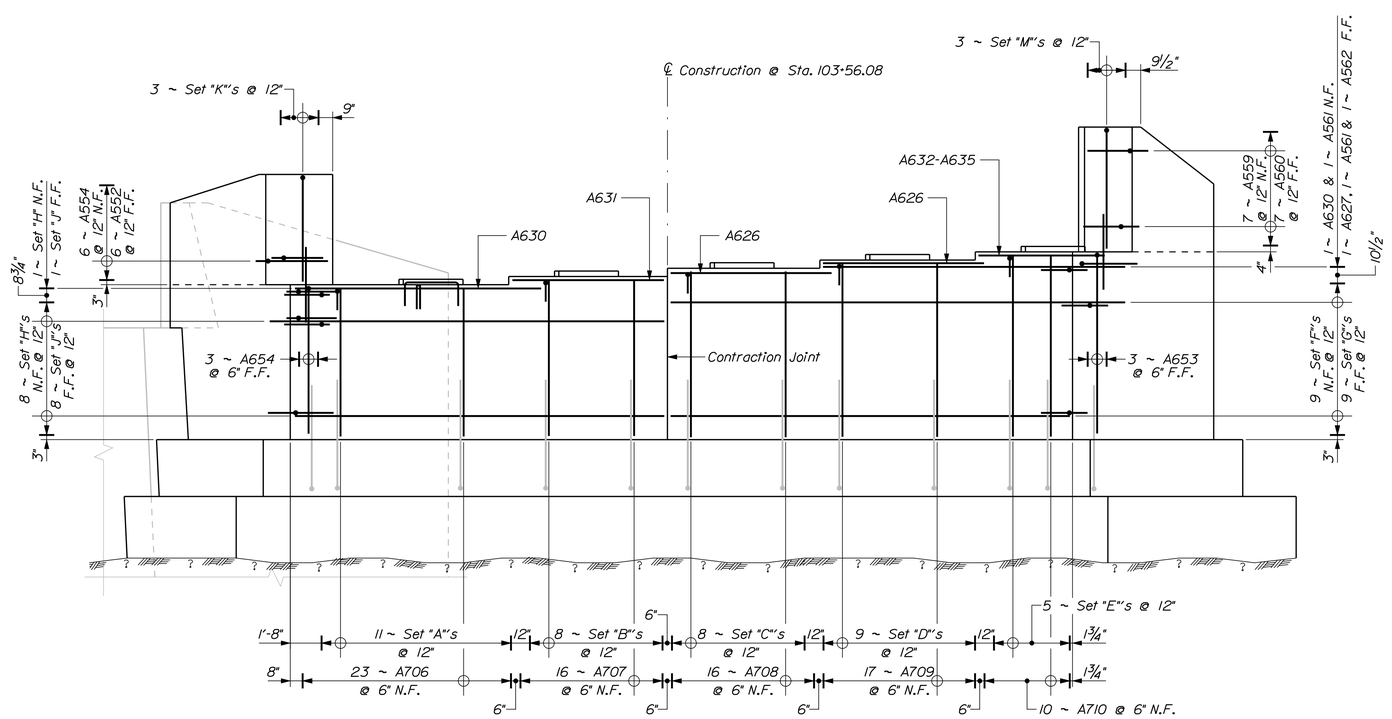

ABUTMENT NO. 1 ELEVATION

Set "A" = 1 ~ A706 F.F. & 1 ~ A652 (Top)
Set "B" = 1 ~ A707 F.F. & 1 ~ A652 (Top)
Set "C" = 1 ~ A708 F.F. & 1 ~ A652 (Top)
Set "D" = 1 ~ A709 F.F. & 1 ~ A652 (Top)
Set "E" = 1 ~ A710 F.F. & 1 ~ A652 (Top)
Set "F" = 1 ~ A624 N.F. & 1 ~ A560 (Corner)
Set "G" = 1 ~ A625 F.F., 1 ~ A560 (Corner) & 1 ~ A562 (Corner)
Set "H" = 1 ~ A628 & 1 ~ A551 (Corner)
Set "J" = 1 ~ A629, 1 ~ A552 (Corner) & 1 ~ A553 (Corner)
Set "K" = 1 ~ A555 & 1 ~ 500
Set "M" = 1 ~ A558 & 1 ~ 500

STATE OF MAINE
DEPARTMENT OF TRANSPORTATION

BR-1928(100)X

WIN 19281.00

BRIDGE NO. 1525

BRIDGE PLANS

		BY	DATE
PROJ. MANAGER	M. Parlin		
DESIGN-DETAILED	G. Gustafson	D. Shaw	Nov. 2014
CHECKED-REVIEWED	J. Waugh		Nov. 2014
DESIGN2-DETAILED2			
DESIGN3-DETAILED3			
REVISIONS 1			
REVISIONS 2			
REVISIONS 3			
REVISIONS 4			
FIELD CHANGES			

SIGNATURE

P.E. NUMBER

DATE

CANAL BRIDGE
SACO RIVER CANAL
HOLLIS YORK COUNTY

ABUTMENT NO. 1
SHAFT REINFORCEMENT

SHEET NUMBER
53
OF 148

Filename: ...\053_Canal_Abutment_No1_Shaft_Reinforcing.dgn Division: BRIDGE Username: dana.damren Date:11/19/2014

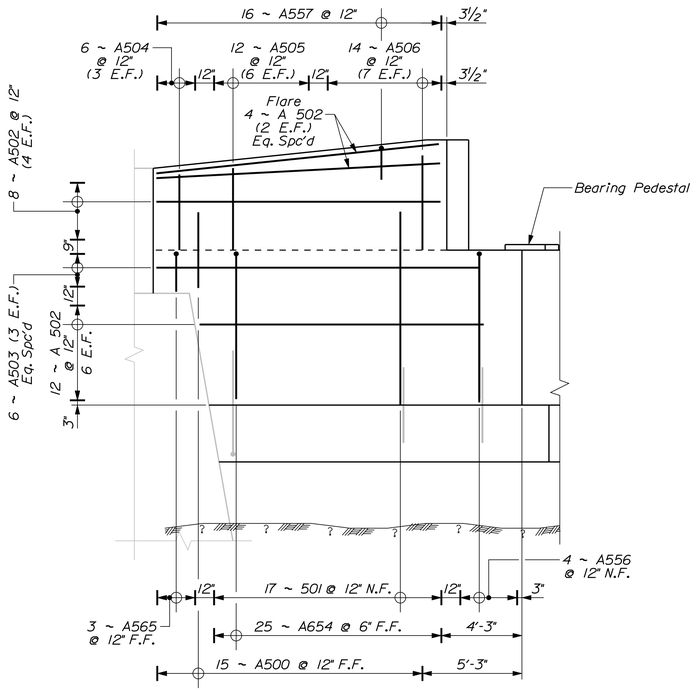

ABUTMENT NO. 1 SOUTH WINGWALL ELEVATION

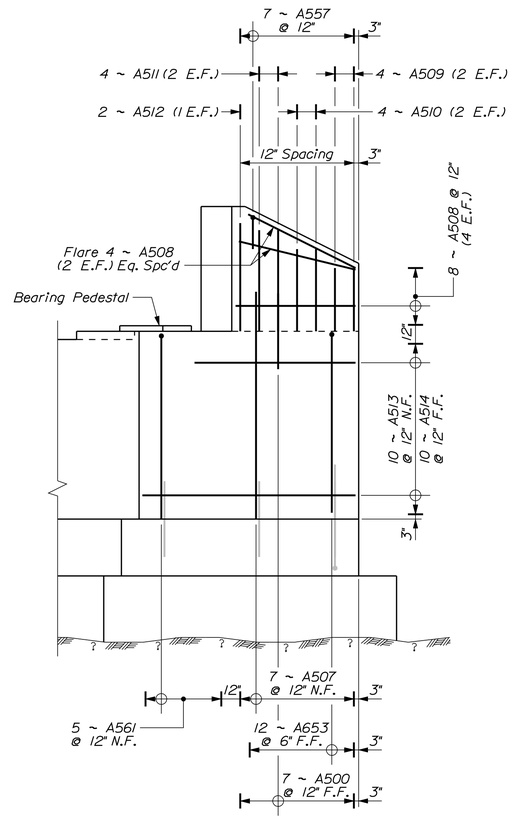

ABUTMENT NO. 1 NORTH WINGWALL ELEVATION

STATE OF MAINE
DEPARTMENT OF TRANSPORTATION

BR-1928(100)X

WIN 19281.00

BRIDGE NO. 1525

BRIDGE PLANS

		BY	DATE
PROJ. MANAGER	M. Parlin		
DESIGN-DETAILED	G. Gustafson	D. Shaw	Nov. 2014
CHECKED-REVIEWED	J. Waugh		Nov. 2014
DESIGN2-DETAILED2			
DESIGN3-DETAILED3			
REVISIONS 1			
REVISIONS 2			
REVISIONS 3			
REVISIONS 4			
FIELD CHANGES			

SIGNATURE

P.E. NUMBER

DATE

CANAL BRIDGE
SACO RIVER CANAL
HOLLIS YORK COUNTY

ABUTMENT NO. 1
WINGWALL REINFORCEMENT

SHEET NUMBER

54

OF 148

Filename: ...\054_Canal_Abutment_No1_Wingwall_Rev.dgn Division: BRIDGE Username: dana.damren Date:11/19/2014

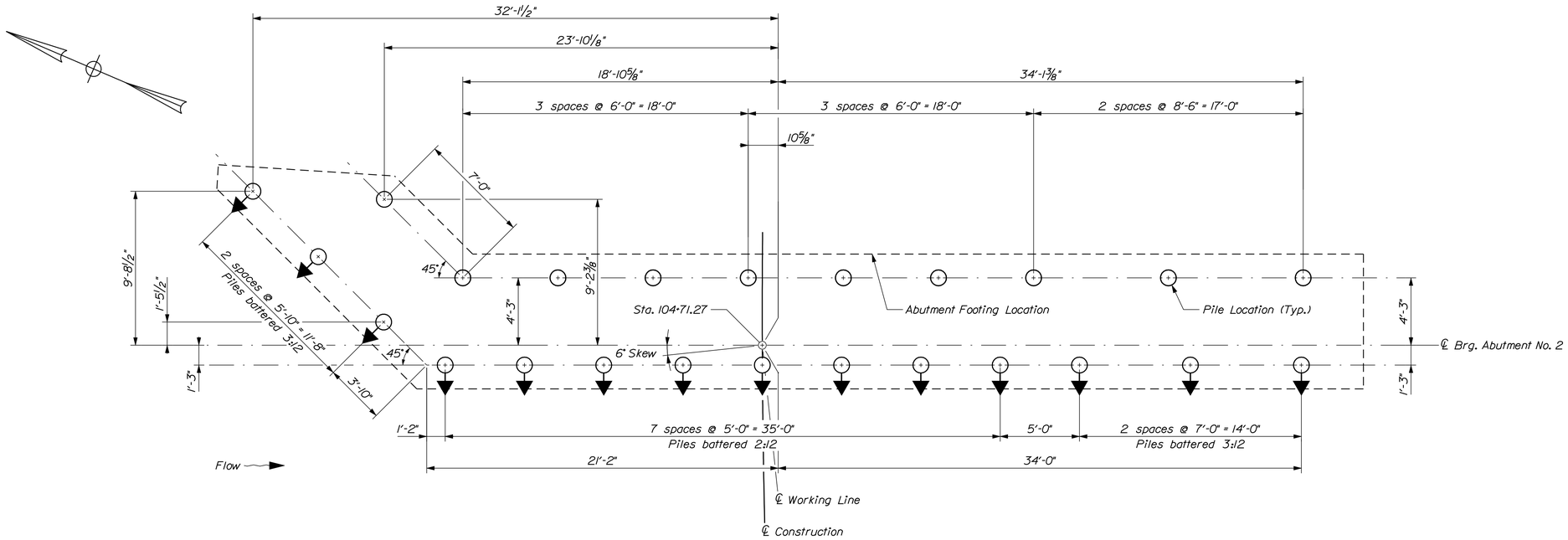

ABUTMENT NO. 2 PILE PLAN

Battered piles shown at bottom of footing EL. 148.0

STATE OF MAINE
DEPARTMENT OF TRANSPORTATION

BR-1928(100)X

WIN 19281.00

BRIDGE NO. 1525

BRIDGE PLANS

PROJ. MANAGER	M. Perlin	BY	DATE
DESIGN-DETAILED	G. Gustafson	D. Show	Nov. 2014
CHECKED-REVIEWED	J. Waugh		Nov. 2014
DESIGN2-DETAILED2			
DESIGN3-DETAILED3			
REVISIONS 1			
REVISIONS 2			
REVISIONS 3			
REVISIONS 4			
FIELD CHANGES			

SIGNATURE

P.E. NUMBER

DATE

CANAL BRIDGE
SACO RIVER CANAL
HOLLIS YORK COUNTY

ABUTMENT NO. 2
PILE LAYOUT

SHEET NUMBER

55

OF 148

Filename: ...\055_Canal_Abutment_No_2_Pile_Layout.dgn Design: BRIDGE Date:11/19/2014 Username: dana.damren

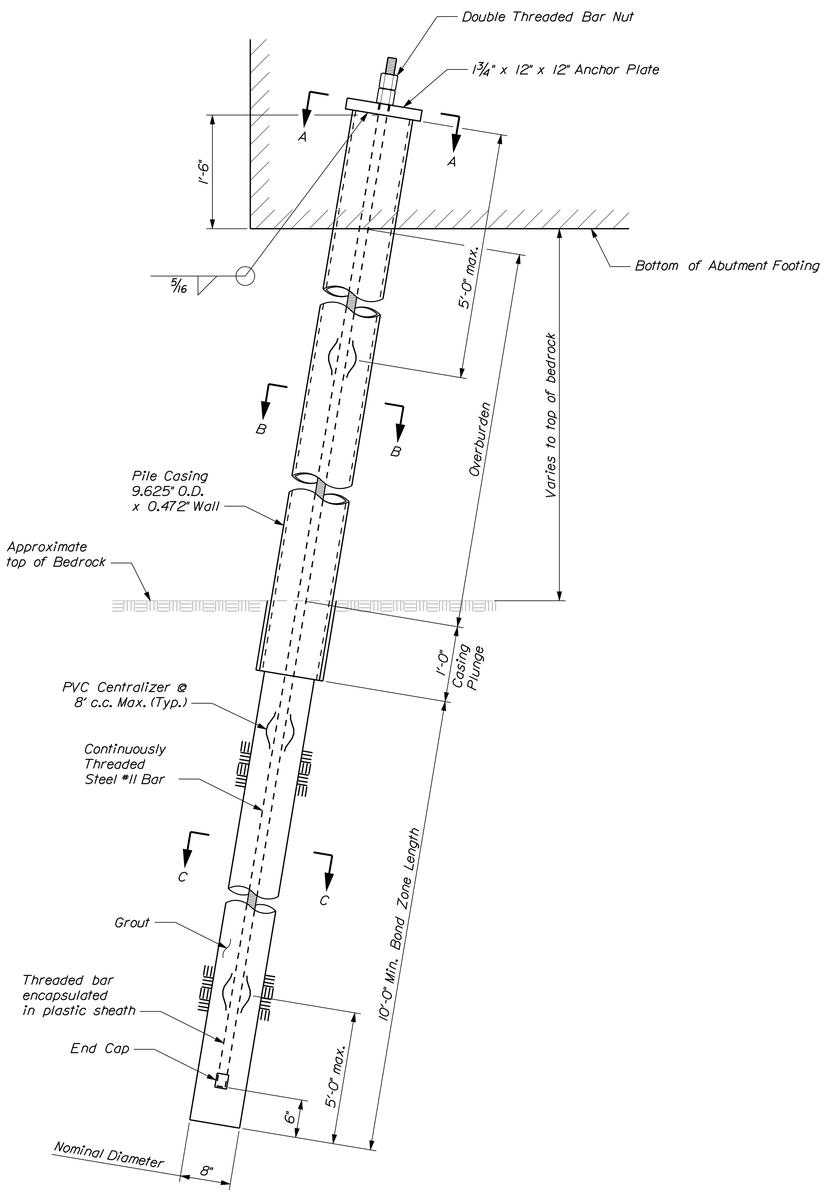

BATTERED MICROPILE ELEVATION

Plumb Micropile similar

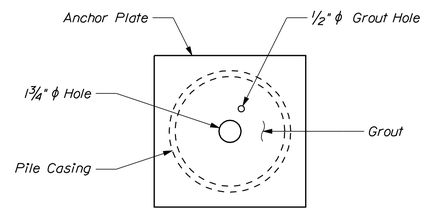

VIEW A - A

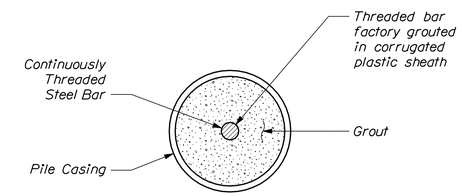

SECTION B - B

Cased Zone

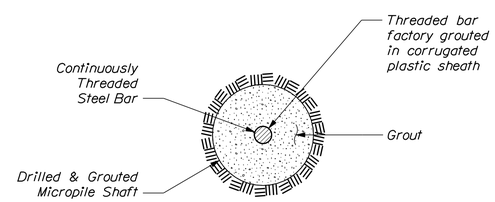

SECTION C - C

Bond Zone in Bedrock

MICROPILE NOTES

1. The micropiles are designed to support a maximum factored Service Limit State compressive axial load of 148 kips per pile and 0 kips per pile in tension. The micropiles are designed to support a maximum factored Strength Limit State compressive axial load of 187 kips per pile and 40 kips per pile in tension.

2. Construct micropiles in accordance with Special Provision Section 501, Micropiles and Special Provision Section 501, Vibration and Movement Monitoring and Control.

3. The pile casing shall be API 5CT Grade N80 or approved equal.

4. The anchor plate shall meet the requirements of ASTM A 709 Grade 50.

5. Grout shall have a minimum 28 day compressive strength of 5000 psi in accordance with ASTM C 109.

6. Micropile Verification and Proof Load Tests shall be performed in the presence of the Department and in accordance with Special Provision Section 501, Micropiles and Special Provision Section 501, Vibration and Movement Monitoring and Control.

7. Bond zone length shall be confirmed by test piles in accordance with Special Provision Section 501, Micropiles.

8. The reinforcing bar shall be continuously - threaded for the entire length and shall meet the requirements of ASTM A 615, Grade 75.

9. The threaded bar nuts shall conform to the threaded reinforcing bar manufacturer requirements and Special Provision Section 501, Micropiles.

10. Micropiles shall be constructed as plumb or battered as shown on the Abutment No. 2 Pile Layout sheet.

11. Grout shall be placed by tremie in accordance with Special Provision Section 501, Micropiles.

STATE OF MAINE
DEPARTMENT OF TRANSPORTATION

BR-1928(100)X

WIN 19281.00

BRIDGE NO. 1525

BRIDGE PLANS

		BY	DATE
PROJ. MANAGER	M. Perlin		
DESIGN-DETAILED	G. Gustafson	D. Damren	Nov. 2014
CHECKED-REVIEWED	J. Waugh	------	Nov. 2014
DESIGN2-DETAILED2	------	------	------
DESIGN3-DETAILED3	------	------	------
REVISIONS 1	------	------	------
REVISIONS 2	------	------	------
REVISIONS 3	------	------	------
REVISIONS 4	------	------	------
FIELD CHANGES	------	------	------

SIGNATURE

P.E. NUMBER

DATE

CANAL BRIDGE
SACO RIVER CANAL
HOLLIS YORK COUNTY

MICROPILE DETAILS

SHEET NUMBER

56

OF 148

Filename: ...\056_Canal Micropile Details.dgn Division: BRIDGE Username: dana.damren Date:11/19/2014

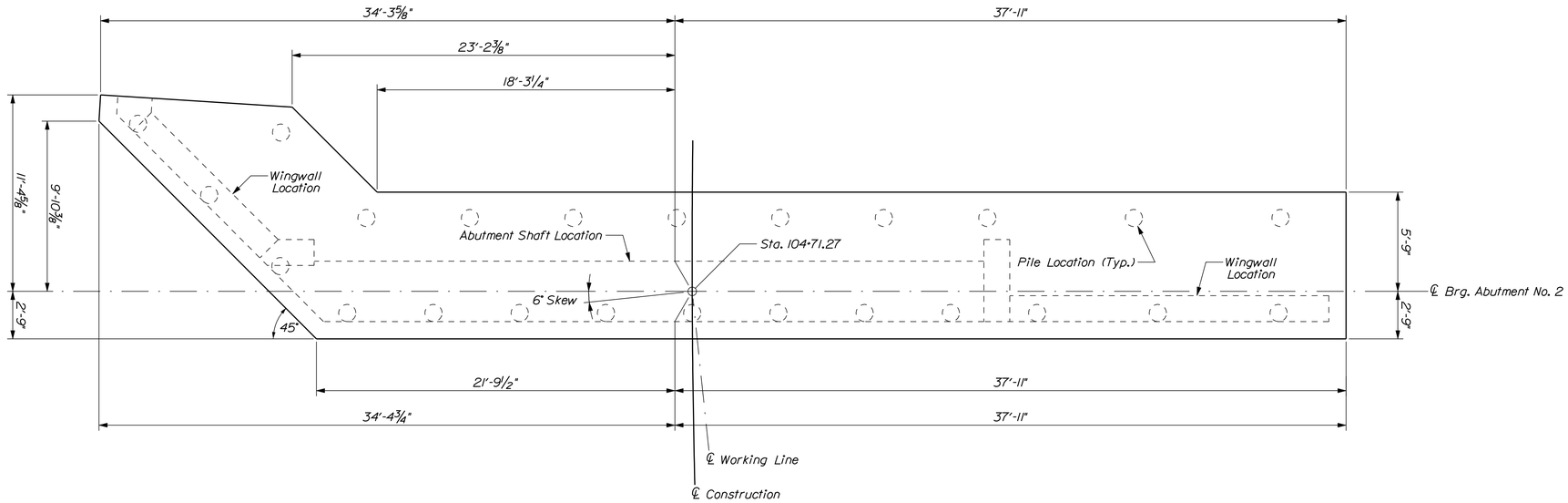

ABUTMENT NO. 2 FOOTING PLAN

Flow →

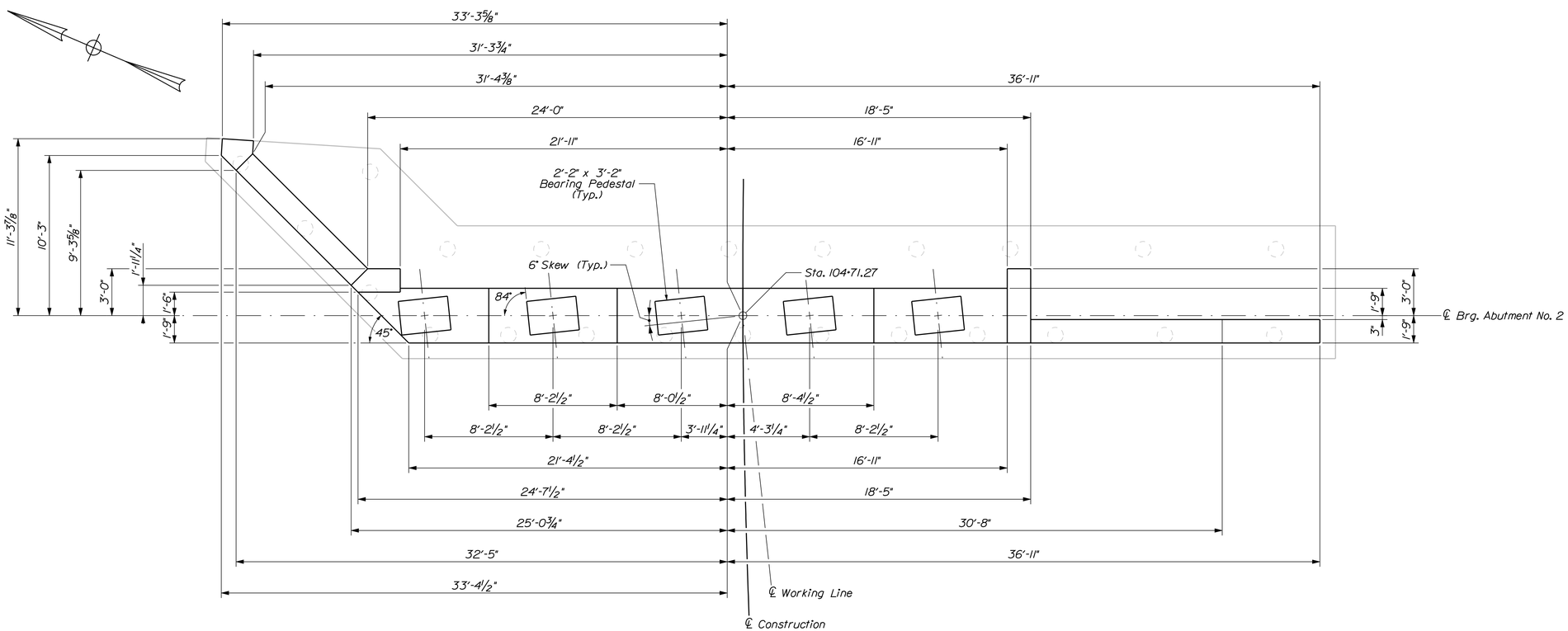

ABUTMENT NO. 2 SHAFT PLAN

Flow →

STATE OF MAINE
DEPARTMENT OF TRANSPORTATION

BR-1928(100)X

WIN 19281.00

BRIDGE NO. 1525

BRIDGE PLANS

PROJ. MANAGER	M. Perlin	BY	DATE
DESIGN-DETAILED	G. Gustafson	D. Show	Nov. 2014
CHECKED-REVIEWED			Nov. 2014
DESIGN2-DETAILED2			
DESIGN3-DETAILED3			
REVISIONS 1			
REVISIONS 2			
REVISIONS 3			
REVISIONS 4			
FIELD CHANGES			

SIGNATURE

P.E. NUMBER

DATE

CANAL BRIDGE
SACO RIVER CANAL
HOLLIS YORK COUNTY

ABUTMENT NO. 2
FOOTING AND SHAFT

SHEET NUMBER

57

OF 148

Filename: ...\057_Canal_Abutment_No. 2_Plan.dgn Division: BRIDGE Username: dana.damren Date:11/19/2014

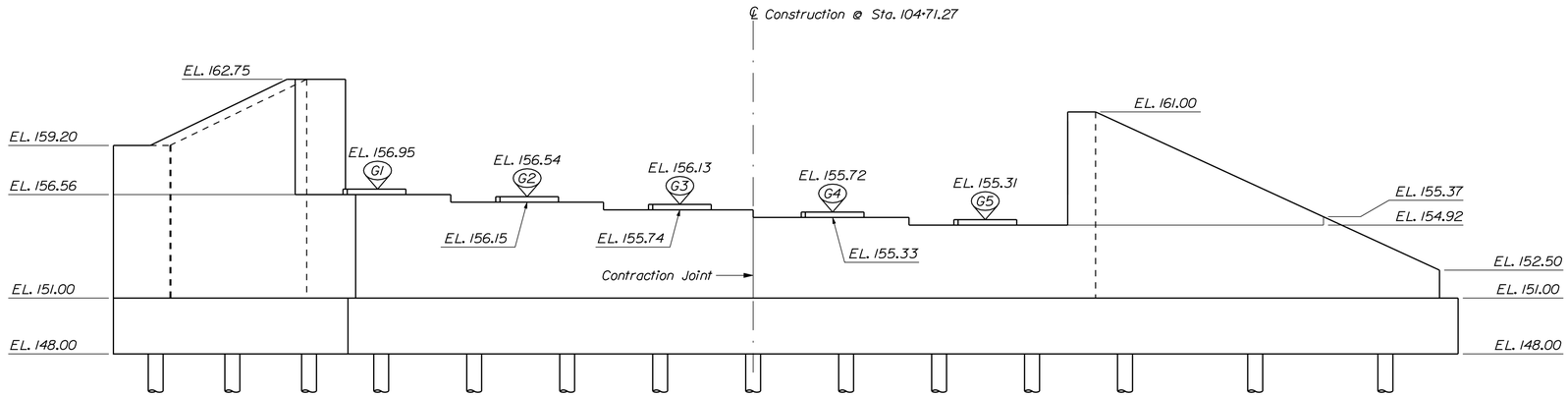

ABUTMENT NO. 2 ELEVATION

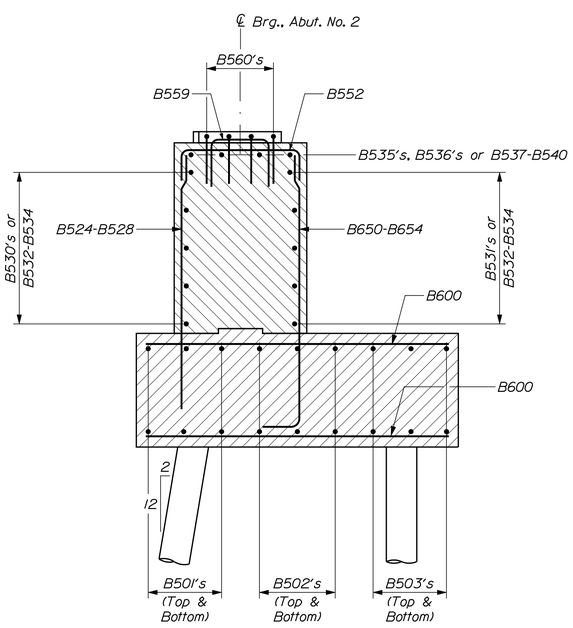

ABUTMENT NO. 2 BREASTWALL SECTION

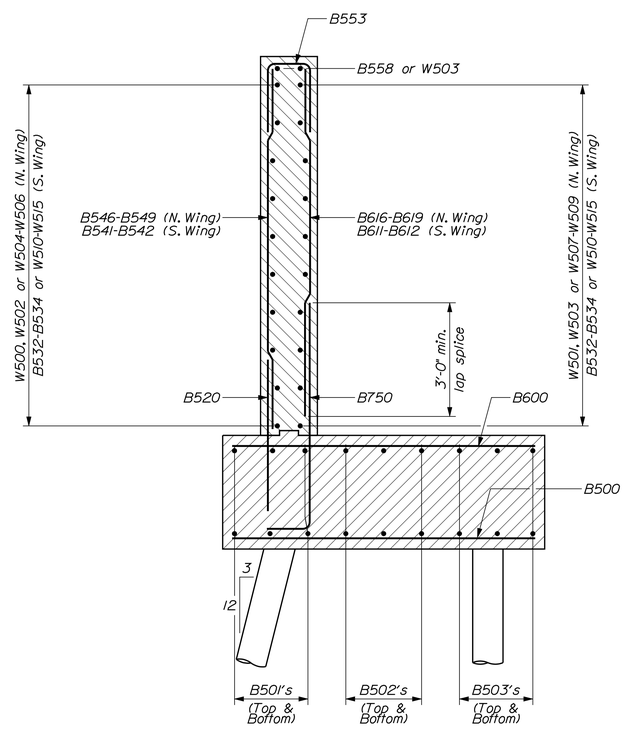

ABUTMENT NO. 2 WINGWALL SECTION

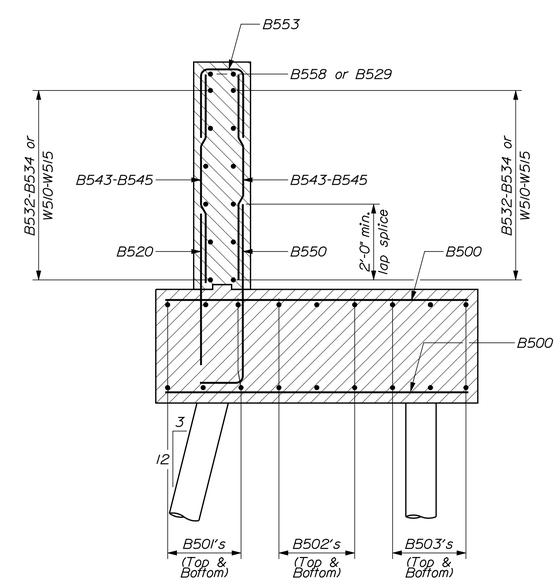

ABUTMENT NO. 2 SOUTH WINGWALL SHORT SECTION

STATE OF MAINE
DEPARTMENT OF TRANSPORTATION

BR-1928(100)X

WIN 19281.00

BRIDGE NO. 1525

BRIDGE PLANS

PROJ. MANAGER	M. Purin	BY	DATE
DESIGN-DETAILED	G. Gustafson	D. Show	Nov. 2014
CHECKED-REVIEWED	J. Waugh		Nov. 2014
DESIGN2-DETAILED2			
DESIGN3-DETAILED3			
REVISIONS 1			
REVISIONS 2			
REVISIONS 3			
REVISIONS 4			
FIELD CHANGES			

SIGNATURE

P.E. NUMBER

DATE

CANAL BRIDGE
SACO RIVER CANAL
HOLLIS YORK COUNTY

ABUTMENT NO. 2 ELEVATION AND SECTIONS

SHEET NUMBER

58

OF 148

Filename: ...\058_Canal_Abutment_No_2_Elevation.dgn Division: BRIDGE Username: Garrett.A.Gustafson Date:11/20/2014

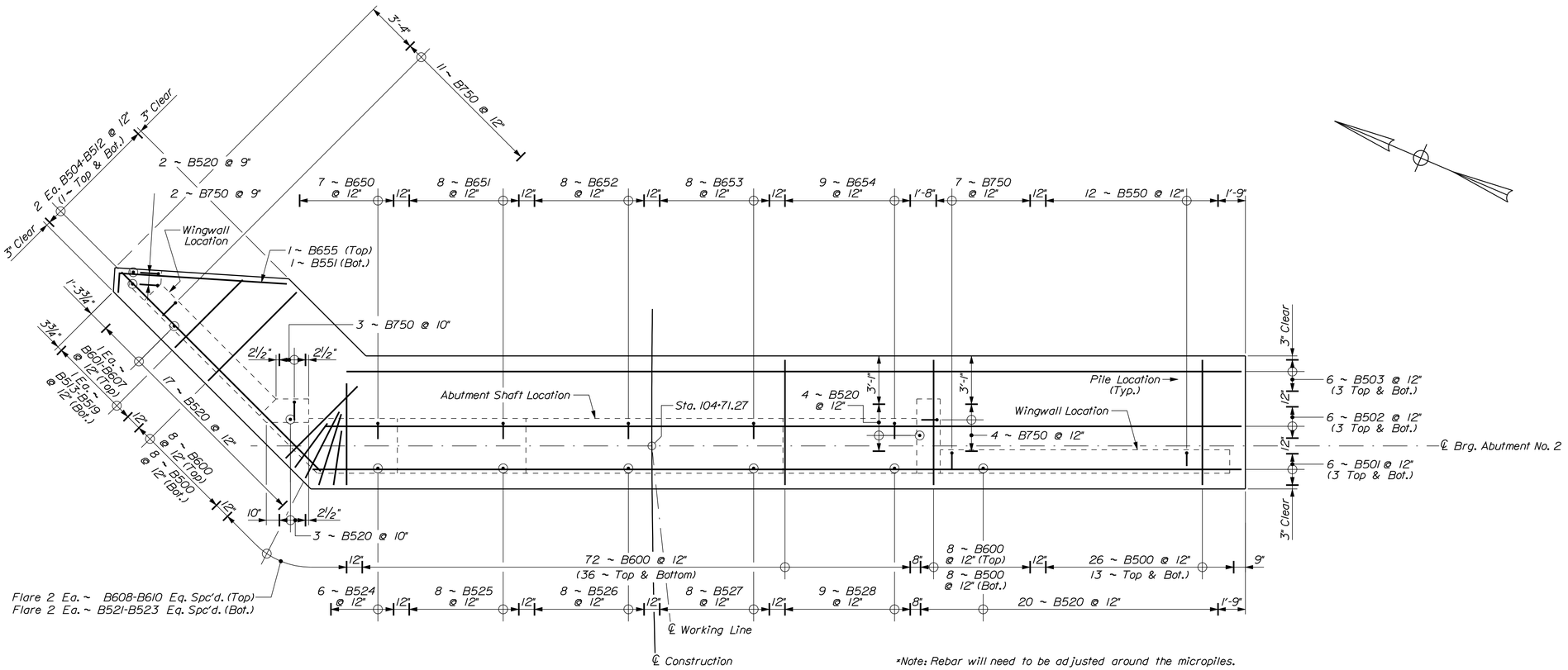

ABUTMENT NO. 2 FOOTING PLAN

STATE OF MAINE
DEPARTMENT OF TRANSPORTATION

BR-1928(100)X

WIN 19281.00

BRIDGE NO. 1525

BRIDGE PLANS

		BY	DATE
PROJ. MANAGER	M. Purin		
DESIGN-DETAILED	G. Gustafson	D. Shaw	Nov. 2014
CHECKED-REVIEWED	J. Waugh		Nov. 2014
DESIGN2-DETAILED2			
DESIGN3-DETAILED3			
REVISIONS 1			
REVISIONS 2			
REVISIONS 3			
REVISIONS 4			
FIELD CHANGES			

SIGNATURE

P.E. NUMBER

DATE

CANAL BRIDGE
SACO RIVER CANAL
HOLLIS YORK COUNTY

ABUTMENT NO. 2
FOOTING REINFORCEMENT

SHEET NUMBER

59

OF 148

Filename: ...\059_Canal_Abutment_No_2_Footing_Reinforcing.dgn Division: BRIDGE Username: dana.damren Date:11/19/2014

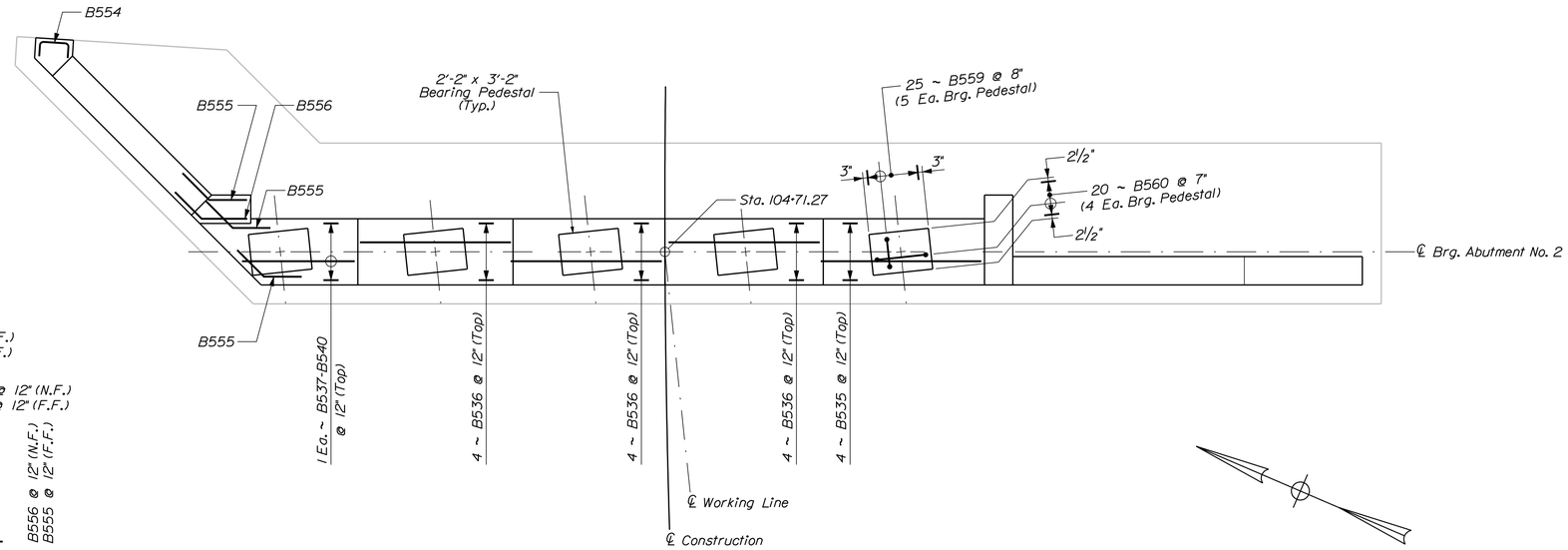

ABUTMENT NO. 2 SHAFT PLAN

Flow

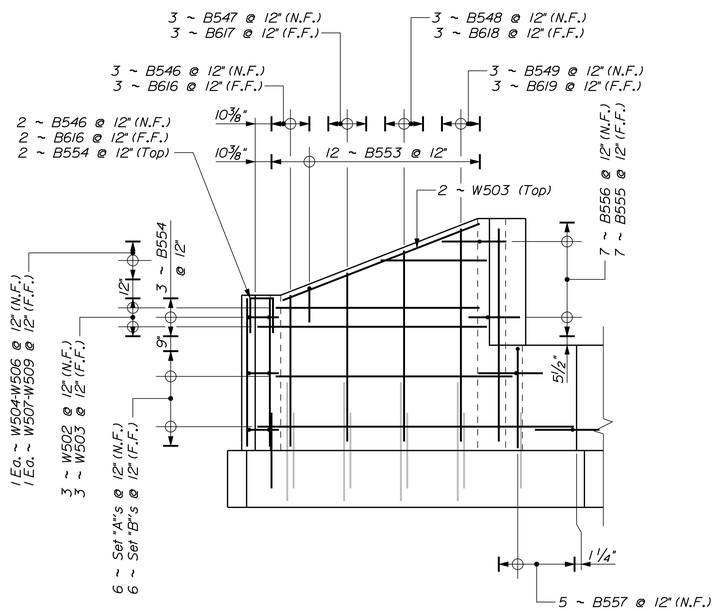

ABUTMENT NO. 2 NORTH WINGWALL

Set "A" = 1 ~W500 N.F., 1 ~ B554 (End wing) & 1 ~ B555 (Corner)
Set "B" = 1 ~ W501 F.F., 1 ~ B555 (Corner)

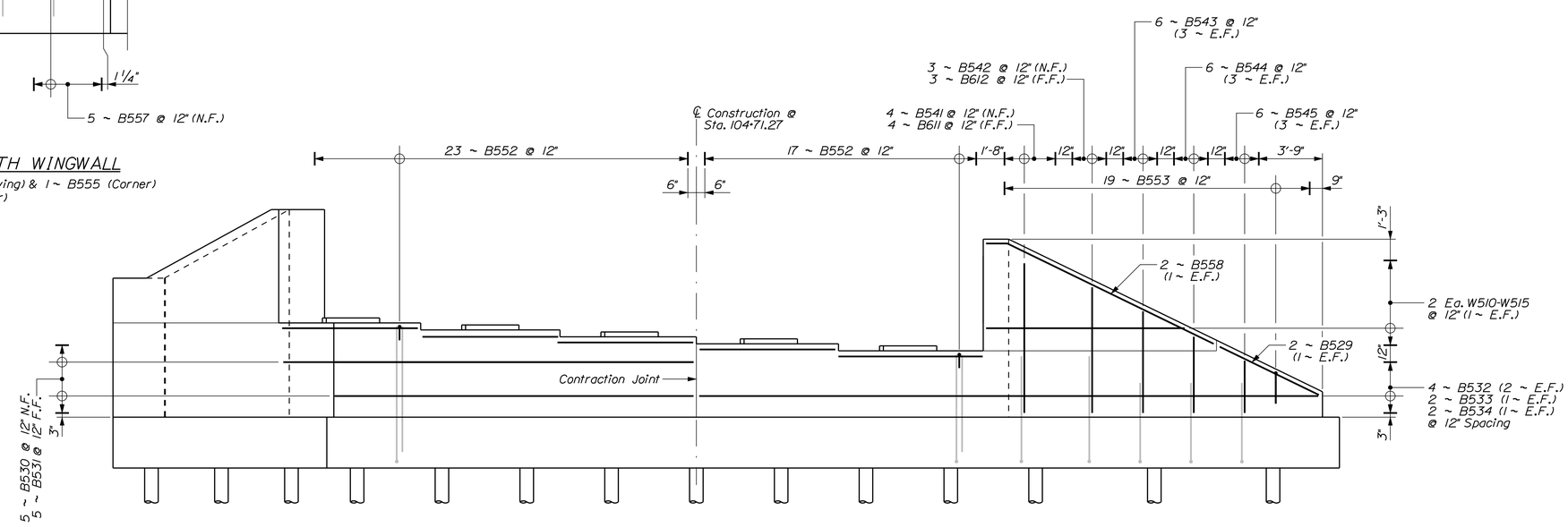

ABUTMENT NO. 2 ELEVATION

STATE OF MAINE
DEPARTMENT OF TRANSPORTATION

BR-1928(100)X

WIN 19281.00

BRIDGE NO. 1525

BRIDGE PLANS

	BY	DATE
PROJ. MANAGER	M. Parlin	
DESIGN-DETAILED	G. Gustafson	Nov. 2014
CHECKED-REVIEWED	J. Waugh	Nov. 2014
DESIGN2-DETAILED2		
DESIGN3-DETAILED3		
REVISIONS 1		
REVISIONS 2		
REVISIONS 3		
REVISIONS 4		
FIELD CHANGES		

SIGNATURE

P.E. NUMBER

DATE

CANAL BRIDGE
SACO RIVER CANAL
HOLLIS YORK COUNTY

ABUTMENT NO. 2 SHAFT AND WINGWALL REINFORCEMENT

SHEET NUMBER

60

OF 148

Filename: ...\060_Canal_Abutment_No.2_Shaft-Wingwall_Reinforcement.dgn Date:11/19/2014 Username: dana.damren

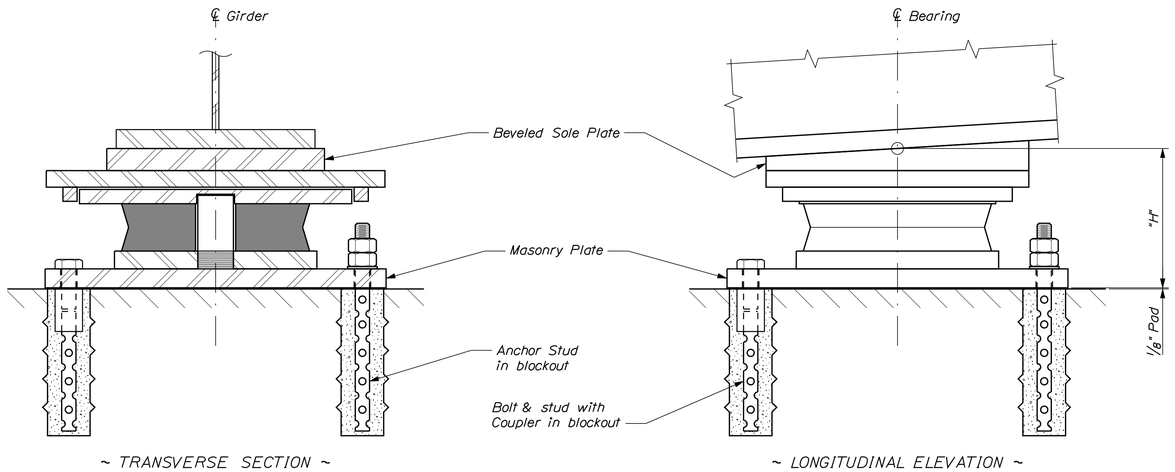

EXPANSION BEARING

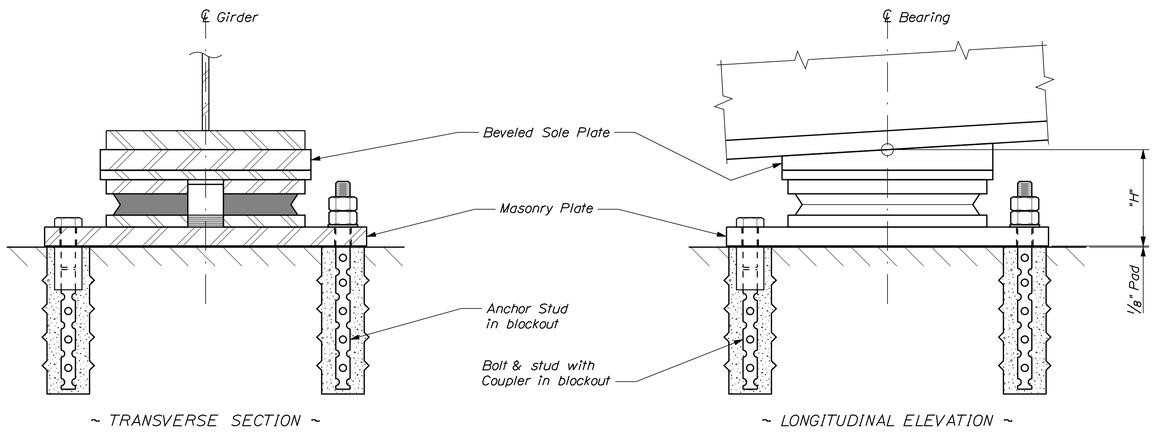

FIXED BEARING

DISC BEARING NOTES

1. The actual dimension "H" shall be the responsibility of the Contractor. Dimensions and sizes of plates not shown are dependent on design loads, capacity and the manufacturer of the bearings. The shop drawings, prepared by the manufacturer, shall provide all pertinent bearing information. The final bearing pedestal elevations shall be determined by the Contractor and submitted with the shop drawings for approval prior to construction of the substructure units.

2. Masonry plates shall be placed on 1/8" thick preformed pads in accordance with the specifications.

3. All steel, unless otherwise specified, shall meet the requirements of ASTM A709, Grade 50.

4. Bearing anchorage shall be either Anchor Stud with double nuts and washers in blockout, or Bolt & Stud with Coupler in blockout, at the Contractor's option.

5. Anchorage spacing shall be coordinated with the bearing manufacturer.

6. Anchor bolts shall meet the requirements of ASTM A325, Type 1.

7. Anchor rods shall meet the requirements of ASTM F1554, Grade 105 and shall be swedged on the embedded portion of the rod.

8. Heavy hex nuts shall meet the requirements of ASTM A563, Grade D or DH.

9. Anchor bolts, rods, washers and nuts shall be galvanized to ASTM A153 or ASTM B695, Class 50, Type 1. Payment for galvanizing will be considered incidental to the disc bearing pay items.

10. For all bearings, all steel shall be coated in accordance with Standard Specifications Section 506, Shop Applied Protective Coating - Steel (Thermal Spray Coating). Payment for Coatings for Disc Bearings will be considered incidental to Item No. 523.5551, Pot or Disc Bearings, Fixed, or Item No. 523.5552, Pot or Disc Bearings, Expansion as applicable.

11. The abbreviation "PTFE" indicates polytetraflouroethylene.

12. All PTFE, including guide and restraint surfaces, shall be unfilled.

13. PTFE minimum bearing pressure shall be 1 ksi under total service loading.

14. Average compressive stresses on the disc shall be computed using the minimum plan area of the unstressed disc, excluding the area of any holes.

15. The design temperature range shall be 125 °F (-20 °F to 105 °F).

16. Design of the sole plates and masonry plates is the responsibility of the Bearing Manufacturer. Payment shall be included under Item. 523.5551, Pot or Disc Bearings, Fixed or Item 523.5552, Pot or Disc Bearings, Expansion as applicable.

17. Sole plate shall be beveled according to the grade defined at each substructure location in the Disc Bearing Design Table.

18. Strength Limit State rotations shown in the Disc Bearing Design Table do not include an allowance for uncertainties of 0.005 radians, as defined in AASHTO LRFD Bridge Design Specifications, 6th Edition 2012.

19. Bearings shall be designed with a thermal load factor of 1.0.

20. Longitudinal horizontal forces do not include friction forces at expansion bearings.

21. All bearings shall be marked prior to shipping. The marks shall include the bearing location on the bridge, and a direction arrow that points upstation. All marks shall be permanent and shall be visible after the bearing is installed.

22. Bearing installation shall be in strict conformance with the Standard Specifications and the manufacturer's recommendations.

23. In the Disc Bearing Setting Corrections Table, a negative dimension indicates a direction away from the nearer expansion joint. A positive dimension indicates a direction toward the nearer expansion joint.

24. Temperatures shown in the Disc Bearing Setting Corrections Table are those of the steel girders and not necessarily the ambient air temperature.

DISC BEARING DESIGN TABLE

Location	Bearing Type	Design Loads Per Bearing (kips)										Dim. "H" (in.) (Note No. 1)	Design Rotation (Note No. 18)				Total Long. Movement (in.)	Sole Plate Bevel
		Vertical				Horizontal							Strength		Service			
		Strength	Extreme Event	Service		Strength		Extreme Event		Service								
		Total Load	Total Load	Dead Load	Total Load	Longitudinal (Note No. 20)	Transverse	Longitudinal (Note No. 20)	Transverse	Longitudinal (Note No. 20)	Transverse		Rotation (radians)	Coincident Total Load (kips)	Rotation (radians)	Coincident Total Load (kips)		
Abut. No. 1	Fixed	354	195	96	209	225	15	85	64	139	12	5 1/2	0.0239	166	0.0168	116	--	1.91%
Abut. No. 2	Uni - directional	358	195	96	211	--	51	--	64	--	34	5 1/2	0.0239	166	0.0168	116	1 1/8	0.19%

DISC BEARING SETTING CORRECTIONS TABLE

	Dimension "X" (Inches)					
	15 °F	30 °F	45 °F	60 °F	75 °F	90 °F
Abut. No. 1	--	--	--	--	--	--
Abut. No. 2	- 1/4	- 1/8	0	1/8	1/4	3/8

STATE OF MAINE
DEPARTMENT OF TRANSPORTATION

BR-1928(100)X

WIN 19281.00

BRIDGE NO. 1525

BRIDGE PLANS

		BY	DATE
PROJ. MANAGER	M. Parlin		
DESIGN-DETAILED	G. Gustafson	Team South	
CHECKED-REVIEWED	D. Eaton		
DESIGN2-DETAILED2			
DESIGN3-DETAILED3			
REVISIONS 1			
REVISIONS 2			
REVISIONS 3			
REVISIONS 4			
FIELD CHANGES			

SIGNATURE

P.E. NUMBER

DATE

CANAL BRIDGE
SACO RIVER CANAL
HOLLIS YORK COUNTY

DISC BEARINGS

SHEET NUMBER
61
OF 148

Filename: ...\MSTA\061_Canal Bearings.dgn Division: BRIDGE Username: devon.c.eaton Date:1/16/2015

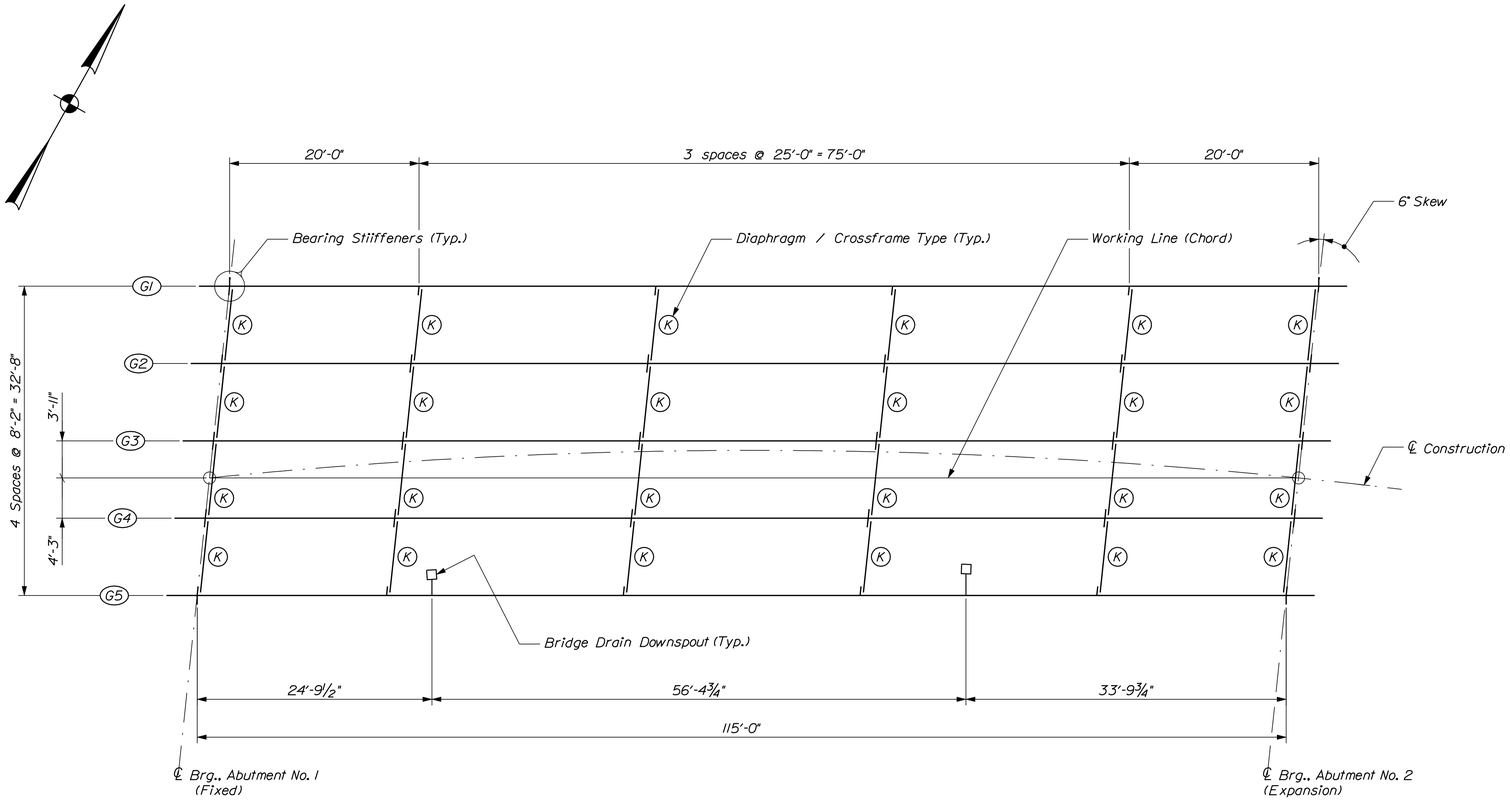

FRAMING PLAN

Dimensions are horizontal

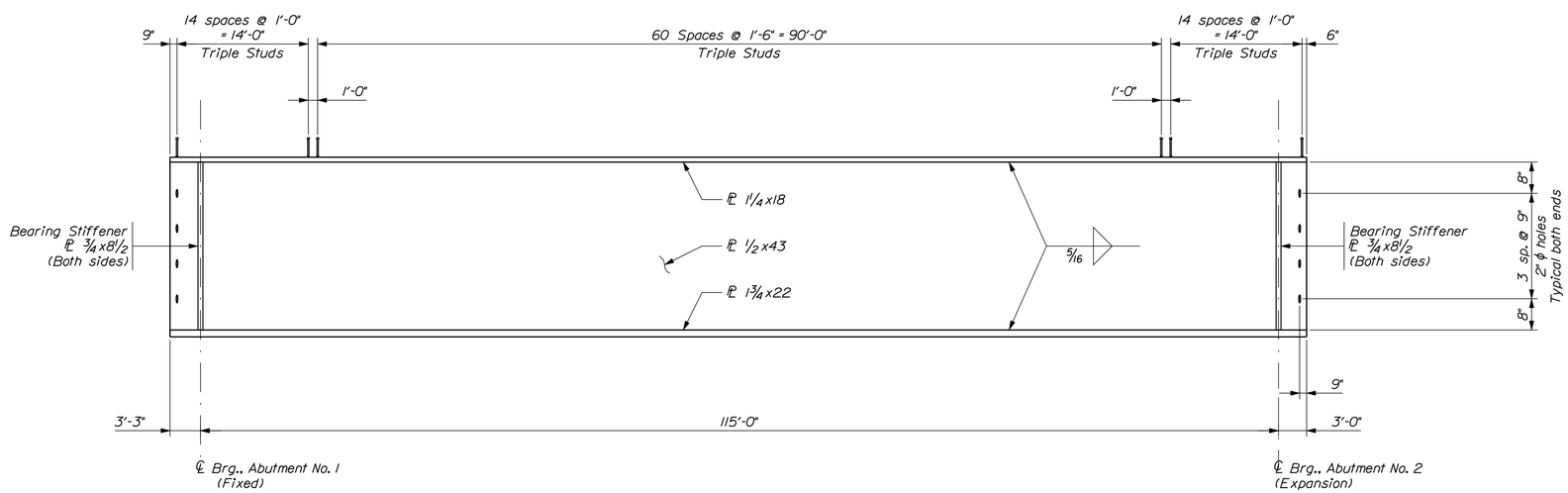

GIRDER ELEVATION

273 Studs per Girder x 5 Girders = 1365 Studs

STRUCTURAL STEEL NOTES

1. Camber ordinates, as shown, are computed to compensate for all dead load deflections and for the curvature of the finished grade profile.

2. No transverse butt weld splices will be allowed in the flange plates or web plates within 10 feet or 10 percent of the span length (whichever is greater) from the points of maximum positive moment. Butt weld splices in flanges shall be not less than 3 feet from transverse butt welds in the web plates and no transverse web or flange butt welds shall be located within 3 feet of other transverse welds (e.g. connection plates to web welds) on either flange or web.

3. Sections of flange plates or web plates between transverse shop splices or between a transverse shop splice and a field splice shall be not less than 20 feet in length unless otherwise shown on the plans.

4. Bearing stiffeners shall be plumb after erection and dead loading of the structure. Intermediate web stiffeners may be either plumb or normal to the top flange.

5. Crossframe or diaphragm connection plates may be either plumb or normal to the top flange.

6. Connection plates for diaphragms and crossframes shall have a minimum thickness of 1/2 inch.

7. Structural steel was designed with a vertical construction load of 50 lb/sf and a lateral wind velocity of 50 mph.

8. Canal Bridge structural steel including the girders, stiffeners, and connection plates shall be coated in accordance with Standard Specifications Section 506, Shop Applied Protective Coating - Steel (Thermal Spray Coating). At the Contractor's option, crossframes shall be coated in accordance with either Standard Specifications Section 506, Shop Applied Protective Coating - Steel (Thermal Spray Coating) or Standard Specifications Section 506, Shop Applied Protective Coating - Steel (Hot-Dip Galvanizing). Payment for all Canal Bridge structural steel coatings will be made under Item No. 506.9104, Thermal Spray Coating (Shop Applied).

9. The bend test referenced in Standard Specifications Section 506.33 may be conducted with a coating thickness between 7 mils and 12 mils.

10. Class B slip coefficient rating for faying surfaces is not required.

11. All bolts, nuts, and washers shall be hot dip galvanized in accordance with ASTM A 153.

STRUCTURAL STEEL MATERIALS

All Material (unless noted) . . . . . ASTM A 709, Grade 50 or 50W
High Strength Bolts . . . . . ASTM A 325, Type 1

STATE OF MAINE
DEPARTMENT OF TRANSPORTATION

BR-1928(100)X

WIN 19281.00

BRIDGE NO. 1525

BRIDGE PLANS

PROJ. MANAGER	M. Purdin	BY	DATE	
DESIGN-DETAILED	G. Gustafson	Team South	Oct. 2014	SIGNATURE
CHECKED-REVIEWED	J. Waugh	-----	Oct. 2014	-----
DESIGN2-DETAILED2	-----	-----	-----	P.E. NUMBER
DESIGN3-DETAILED3	-----	-----	-----	-----
REVISIONS 1	-----	-----	-----	DATE
REVISIONS 2	-----	-----	-----	-----
REVISIONS 3	-----	-----	-----	-----
REVISIONS 4	-----	-----	-----	-----
FIELD CHANGES	-----	-----	-----	-----

CANAL BRIDGE
SACO RIVER CANAL
HOLLIS YORK COUNTY

FRAMING PLAN & GIRDER ELEV.

SHEET NUMBER
62
OF 148

Filename: ...\062_Canal Framing Plan.dgn Division: BRIDGE Username: dana.damren Date:11/19/2014

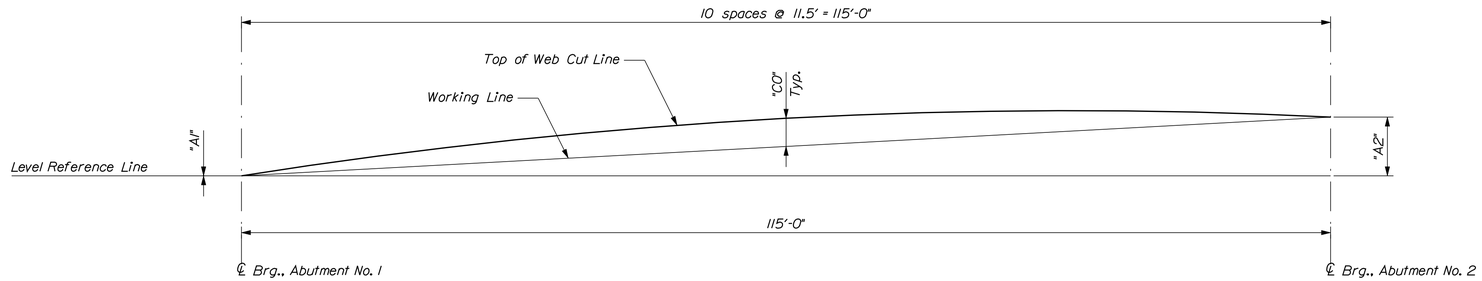

CAMBER DIAGRAM

TABLE OF CAMBER DIMENSIONS (Feet)		
Girder	"A1"	"A2"
G1	0.00	1.15
G2	0.00	1.17
G3	0.00	1.19
G4	0.00	1.22
G5	0.00	1.24

TABLE OF CAMBER ORDINATES "CO" (Inches)												
Girder	℄ A1	11.5'	23'	34.5'	46'	57.5'	69'	80.5'	92'	103.5'	℄ A2	Girder
G1	0	2 1/4	4 1/4	5 13/16	6 3/4	7 1/8	6 3/4	5 13/16	4 1/4	2 1/4	0	G1
G2	0	2 5/16	4 3/8	5 15/16	6 15/16	7 5/16	6 15/16	5 15/16	4 3/8	2 5/16	0	G2
G3	0	2 3/8	4 3/8	6	7	7 3/8	7	6	4 7/16	2 3/8	0	G3
G4	0	2 3/8	4 7/16	6 1/16	7 1/16	7 7/16	7 1/16	6 1/16	4 7/16	2 3/8	0	G4
G5	0	2 1/8	3 15/16	5 3/8	6 1/4	6 9/16	6 1/4	5 3/8	3 15/16	2 1/8	0	G5

BOTTOM OF SLAB ELEVATIONS													
Girder	℄ A1	10'	20'	30'	40'	50'	60'	70'	80'	90'	100'	110'	℄ A2	Girder
G1	160.20	160.44	160.66	160.87	161.04	161.18	161.29	161.37	161.41	161.42	161.41	161.37	161.35	G1
G2	159.77	160.01	160.24	160.45	160.63	160.77	160.88	160.96	161.00	161.01	161.00	160.96	160.94	G2
G3	159.34	159.59	159.82	160.02	160.21	160.35	160.47	160.54	160.59	160.60	160.59	160.55	160.53	G3
G4	158.91	159.15	159.39	159.60	159.78	159.94	160.05	160.13	160.17	160.19	160.18	160.14	160.12	G4
G5	158.47	158.70	158.92	159.12	159.30	159.44	159.56	159.64	159.70	159.73	159.73	159.72	159.71	G5

TABLE OF DEFLECTIONS ~ GIRDER 1 (Inches)											
	℄ A1	11.5'	23'	34.5'	46'	57.5'	69'	80.5'	92'	103.5'	℄ A2
Steel Dead Load	0.00	0.39	0.73	1.00	1.17	1.23	1.17	1.00	0.73	0.39	0.00
Fluid Dead Load	0.00	1.11	2.12	2.90	3.40	3.57	3.40	2.90	2.11	1.11	0.00
Superimposed Dead Load	0.00	0.20	0.38	0.52	0.61	0.64	0.61	0.52	0.38	0.20	0.00
Wearing Surface & Utility D.L.	0.00	0.17	0.33	0.45	0.53	0.56	0.53	0.45	0.33	0.17	0.00

TABLE OF DEFLECTIONS ~ INTERIOR GIRDERS (Inches)											
	℄ A1	11.5'	23'	34.5'	46'	57.5'	69'	80.5'	92'	103.5'	℄ A2
Steel Dead Load	0.00	0.40	0.76	1.04	1.22	1.28	1.22	1.04	0.76	0.40	0.00
Fluid Dead Load	0.00	1.15	2.17	2.98	3.48	3.66	3.48	2.98	2.17	1.15	0.00
Superimposed Dead Load	0.00	0.20	0.38	0.52	0.61	0.64	0.61	0.52	0.38	0.20	0.00
Wearing Surface & Utility D.L.	0.00	0.17	0.33	0.45	0.53	0.56	0.53	0.45	0.33	0.17	0.00

TABLE OF DEFLECTIONS ~ GIRDER 5 (Inches)											
	℄ A1	11.5'	23'	34.5'	46'	57.5'	69'	80.5'	92'	103.5'	℄ A2
Steel Dead Load	0.00	0.39	0.73	1.00	1.17	1.23	1.17	1.00	0.73	0.39	0.00
Fluid Dead Load	0.00	0.88	1.66	2.27	2.65	2.78	2.65	2.27	1.66	0.87	0.00
Superimposed Dead Load	0.00	0.20	0.38	0.52	0.61	0.64	0.61	0.52	0.38	0.20	0.00
Wearing Surface & Utility D.L.	0.00	0.17	0.33	0.45	0.53	0.56	0.53	0.45	0.33	0.17	0.00

STATE OF MAINE
DEPARTMENT OF TRANSPORTATION

BR-1928(100)X

WIN 19281.00

BRIDGE NO. 1525

BRIDGE PLANS

		BY	DATE
PROJ. MANAGER	M. Parlin		
DESIGN-DETAILED	G. Gustafson	Team South	Oct. 2014
CHECKED-REVIEWED	D. Eaton	-----	Oct. 2014
DESIGN2-DETAILED2	-----	-----	-----
DESIGN3-DETAILED3	-----	-----	-----
REVISIONS 1	-----	-----	-----
REVISIONS 2	-----	-----	-----
REVISIONS 3	-----	-----	-----
REVISIONS 4	-----	-----	-----
FIELD CHANGES	-----	-----	-----

SIGNATURE

P.E. NUMBER

DATE

CANAL BRIDGE
SACO RIVER CANAL
HOLLIS YORK COUNTY

CAMBER & BOS ELEVATIONS

SHEET NUMBER
63
OF 148

Filename: ...\063_Canal Camber & BOS.dgn Division: BRIDGE Username: dana.damren Date:11/19/2014

SUPERSTRUCTURE SLAB FASCIA OFFSETS

PROJ. MANAGER	M. Purdin	BY	DATE
DESIGN-DETAILED	G. Gustafson	Team South	Sept. 2014
CHECKED-REVIEWED	D. Eaton	-----	Oct. 2014
DESIGN2-DETAILED2	-----	-----	-----
DESIGN3-DETAILED3	-----	-----	-----
REVISIONS 1	-----	-----	-----
REVISIONS 2	-----	-----	-----
REVISIONS 3	-----	-----	-----
REVISIONS 4	-----	-----	-----
FIELD CHANGES	-----	-----	-----

SIGNATURE

P.E. NUMBER

DATE

STATE OF MAINE
DEPARTMENT OF TRANSPORTATION

BR-1928(100)X

WIN 19281.00

BRIDGE NO. 1525

BRIDGE PLANS

CANAL BRIDGE
SACO RIVER CANAL
HOLLIS YORK COUNTY

SLAB FASCIA OFFSETS

SHEET NUMBER

64

OF 148

Filename: ...\064_Canal Slab Fascia Offsets.dgn Division: BRIDGE Username: dana.damren Date:11/19/2014

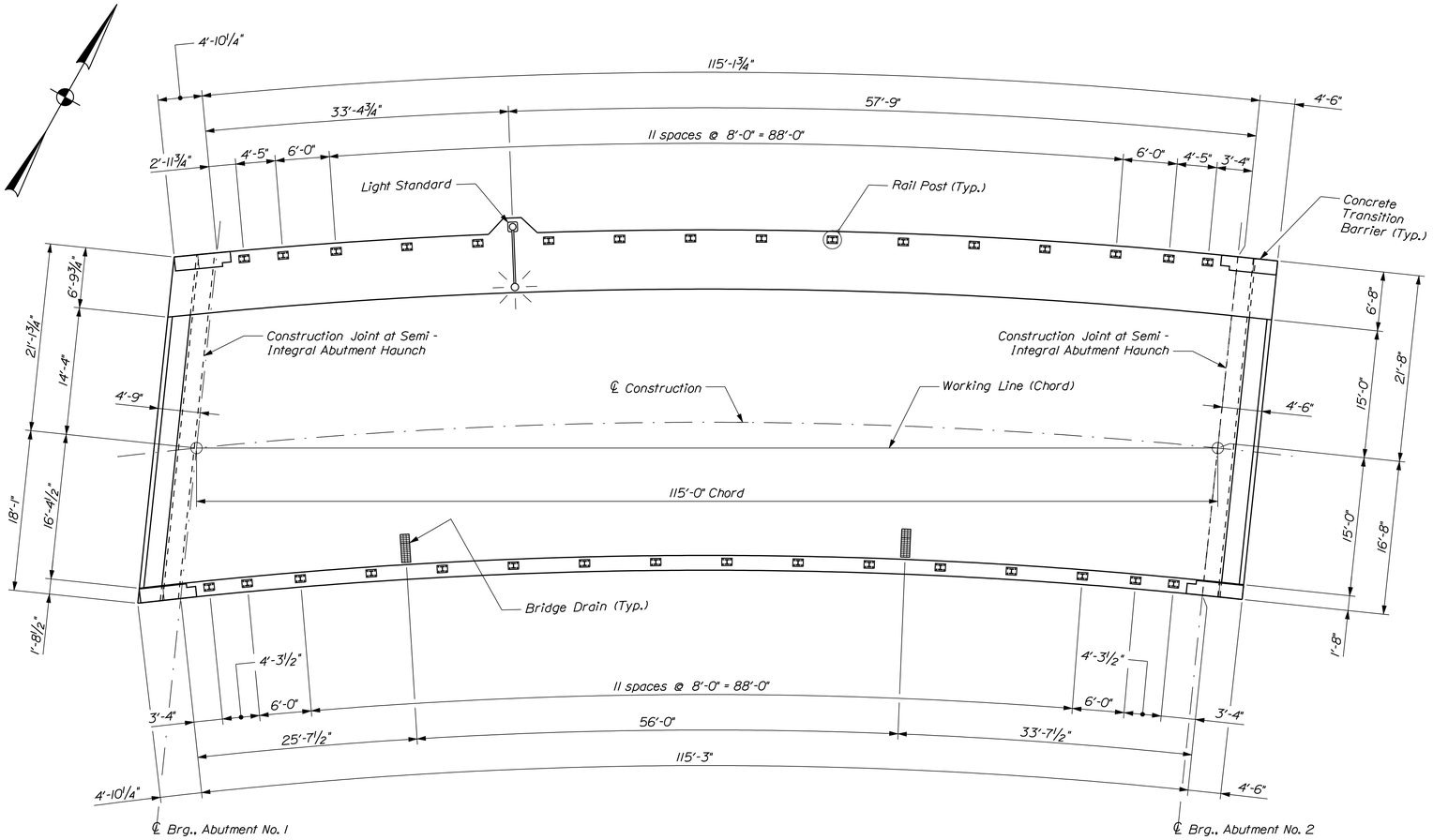

SUPERSTRUCTURE PLAN

SUPERSTRUCTURE NOTES

1. The theoretical blocking used for design of the structure is 2½ inch at the centerline of bearing of the abutments. Refer to Standard Detail 502(02) for blocking details.

2. Reinforcing steel shall have a minimum concrete cover of 2 inches unless otherwise noted.

3. Adjust reinforcing steel to fit around the bridge drains in a manner approved by the Resident. Do not cut transverse reinforcing bars.

4. Form a one inch V-groove on the fascias at the horizontal joint between the curb and slab.

5. The superstructure slab concrete shall be placed in one continuous operation, with the exception of the semi - integral backwalls, and the deck concrete shall be kept plastic until the entire placement has been completed. The Construction Joint adjacent to the semi - integral backwall at both abutments is mandatory. The semi - integral backwall shall be placed after the deck concrete placement has been completed.

6. Semi - integral backwall concrete at both abutments shall be Class "LP" concrete.

7. At the Contractor's option, Precast Deck Panels may be used in place of the full depth cast-in-place deck slab, in accordance with Standard Specifications Section 535 and the Standard Details.

8. Payment for reinforcing steel fabricated, delivered, and placed in the cast-in-place portion of the structural concrete slab, including the semi - integral backwalls, will be considered incidental to the appropriate Standard Specifications Section 502 pay item.

9. The Contractor shall install Transition Barrier vertical closed stirrups, as shown in Standard Details Section 526 and on the reinforcing details in this plan set, prior to the placement of the curb or sidewalk concrete.

STATE OF MAINE
DEPARTMENT OF TRANSPORTATION

BR-1928(100)X

WIN 19281.00

BRIDGE NO. 1525

BRIDGE PLANS

PROJ. MANAGER	M. Parlin	BY	DATE
DESIGN-DETAILED	G. Gustafson	Team South	Sept. 2014
CHECKED-REVIEWED	J. Waugh	-----	Oct. 2014
DESIGN2-DETAILED2	-----	-----	-----
DESIGN3-DETAILED3	-----	-----	-----
REVISIONS 1	-----	-----	-----
REVISIONS 2	-----	-----	-----
REVISIONS 3	-----	-----	-----
REVISIONS 4	-----	-----	-----
FIELD CHANGES	-----	-----	-----

SIGNATURE

P.E. NUMBER

DATE

CANAL BRIDGE
SACO RIVER CANAL
HOLLIS YORK COUNTY

SUPERSTRUCTURE PLAN

SHEET NUMBER
65
OF 148

Filename: ...\065_Canal Superstructure.dgn Division: BRIDGE Username: dana.damren Date:11/19/2014

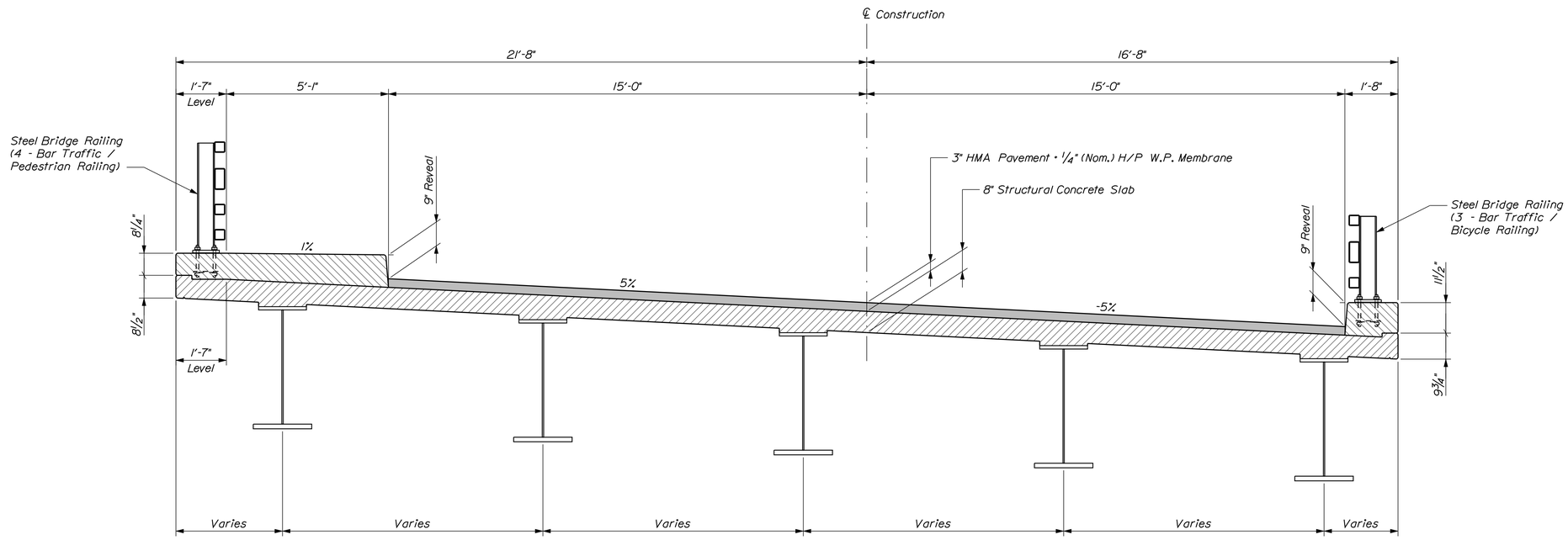

TRANSVERSE SECTION

STATE OF MAINE
DEPARTMENT OF TRANSPORTATION

BR-1928(100)X

WIN 19281.00

BRIDGE NO. 1525

BRIDGE PLANS

		BY	DATE
PROJ. MANAGER	M. Parlin		
DESIGN-DETAILED	G. Gustafson	Team South	Sept. 2014
CHECKED-REVIEWED	J. Waugh	-----	Oct. 2014
DESIGN2-DETAILED2	-----	-----	-----
DESIGN3-DETAILED3	-----	-----	-----
REVISIONS 1	-----	-----	-----
REVISIONS 2	-----	-----	-----
REVISIONS 3	-----	-----	-----
REVISIONS 4	-----	-----	-----
FIELD CHANGES	-----	-----	-----

SIGNATURE

P.E. NUMBER

DATE

CANAL BRIDGE
SACO RIVER CANAL
HOLLIS YORK COUNTY

TRANSVERSE SECTION

SHEET NUMBER

66

OF 148

Filename: ...\066_Canal Transverse Section.dgn Division: BRIDGE Username: dana.damren Date:11/19/2014

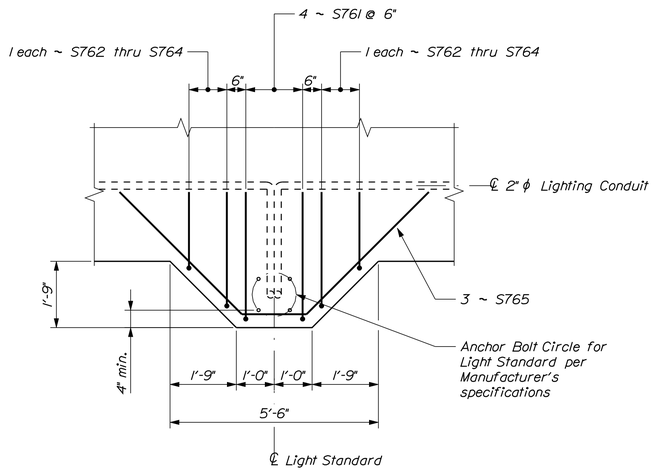

LIGHT STANDARD SUPPORT PLAN

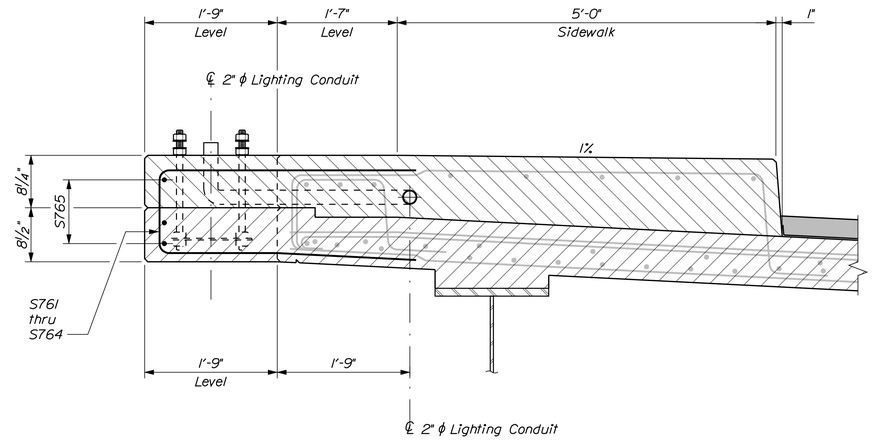

LIGHT STANDARD SUPPORT SECTION

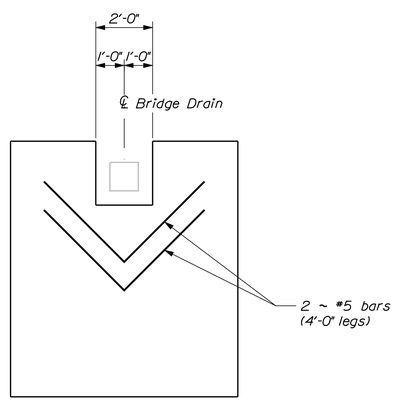

TYPICAL PRECAST DECK PANEL PLAN

Showing Bridge Drain Blockout

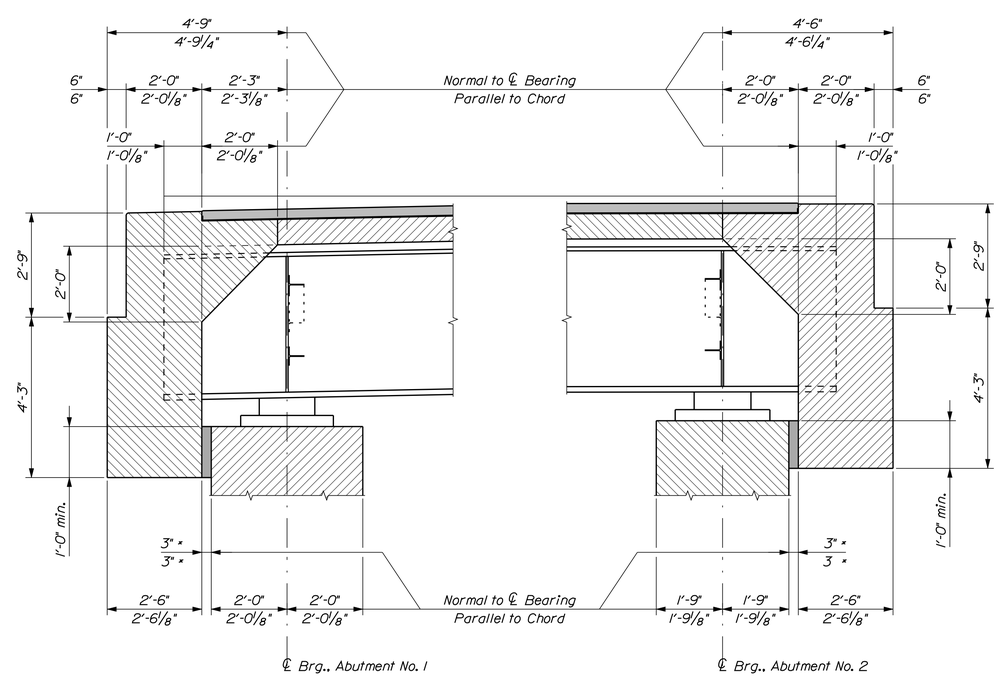

LONGITUDINAL SECTION AT ABUTMENTS

* Refer to Special Provisions Section 620 - Synthetic Compressible Inclusion

STATE OF MAINE
DEPARTMENT OF TRANSPORTATION

BR-1928(100)X

WIN 19281.00

BRIDGE NO. 1525

BRIDGE PLANS

PROJ. MANAGER	M. Purslen	BY	DATE
DESIGN-DETAILED	G. Gustafson	Team South	Sept. 2014
CHECKED-REVIEWED	J. Waugh	-----	Oct. 2014
DESIGN2-DETAILED2	-----	-----	-----
DESIGN3-DETAILED3	-----	-----	-----
REVISIONS 1	-----	-----	-----
REVISIONS 2	-----	-----	-----
REVISIONS 3	-----	-----	-----
REVISIONS 4	-----	-----	-----
FIELD CHANGES	-----	-----	-----

SIGNATURE

P.E. NUMBER

DATE

CANAL BRIDGE
SACO RIVER CANAL
HOLLIS YORK COUNTY

SUPERSTRUCTURE DETAILS

SHEET NUMBER

67

OF 148

Filename: ...\067_Canal Superstructure Details.dgn Division: BRIDGE Username: dana.damren Date:12/1/2014

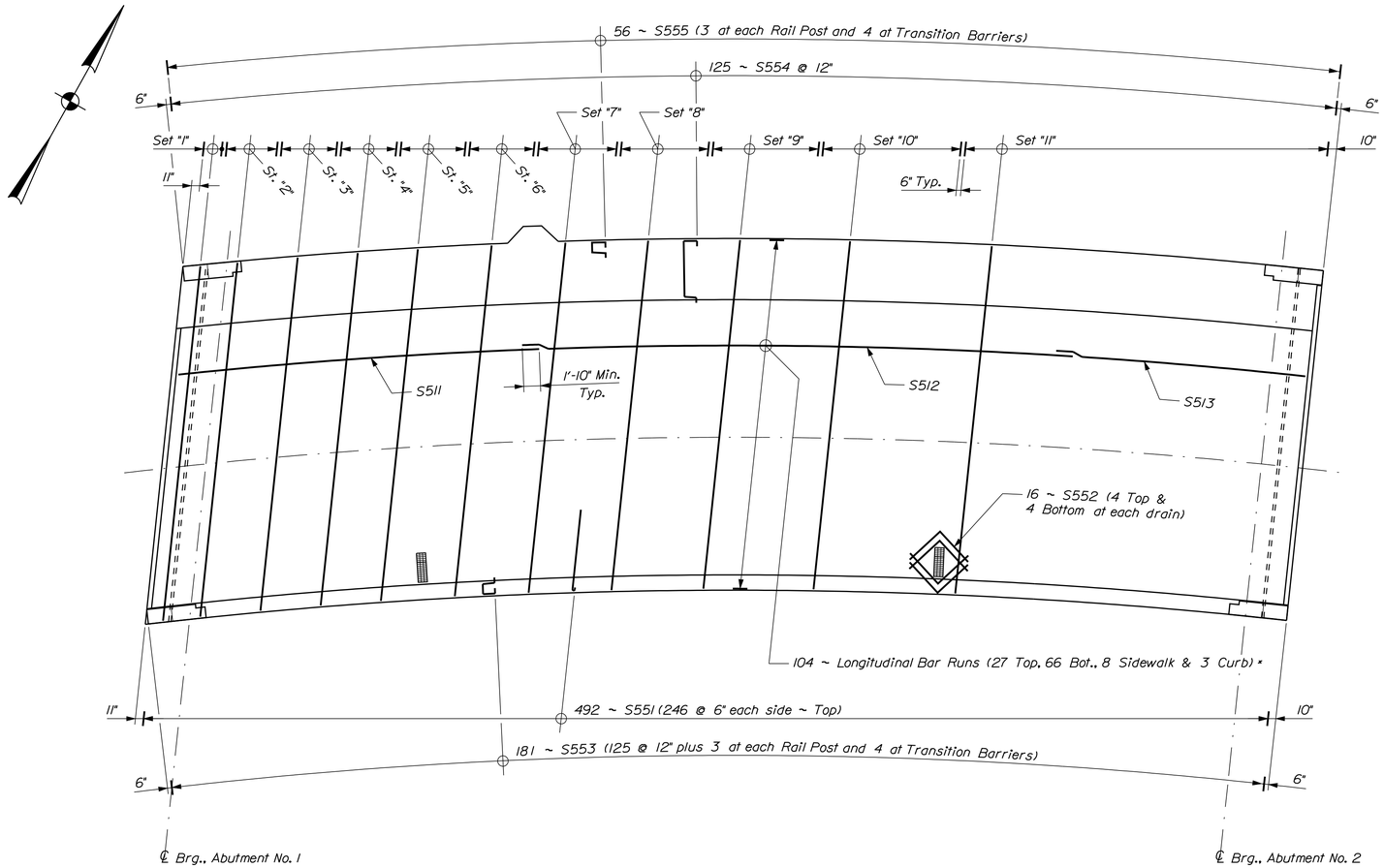

SUPERSTRUCTURE PLAN

* See "Half Upstream / Downstream Slab Reinforcing Section" and "Slab Reinforcing Table"

SLAB REINFORCING TABLE

Longitudinal Bar Runs					
Location	No. Runs	Bars	Qty. S511	Qty. S512	Qty. S513
Slab	93	1 each ~ S511, S512, S513	93	93	93
Curb	3	1 each ~ S511, S512, S513	3	3	3
Sidewalk	8	1 each ~ S511, S512, S513	8	8	8
Total Bars			104	104	104

Transverse Bar Sets			
Set No.	Bar	Qty.	Layout
Set "1"	S501-A	10	5 ~ S501-A @ 6" Top & Bottom
Set "2"	S501-B	24	12 ~ S501-B @ 6" Top & Bottom
Set "3"	S501-C	26	13 ~ S501-C @ 6" Top & Bottom
Set "4"	S501-D	26	13 ~ S501-D @ 6" Top & Bottom
Set "5"	S501-E	30	15 ~ S501-E @ 6" Top & Bottom
Set "6"	S501-F	30	15 ~ S501-F @ 6" Top & Bottom
Set "7"	S501-G	36	18 ~ S501-G @ 6" Top & Bottom
Set "8"	S501-H	40	20 ~ S501-H @ 6" Top & Bottom
Set "9"	S501-I	48	24 ~ S501-I @ 6" Top & Bottom
Set "10"	S501-J	62	31 ~ S501-J @ 6" Top & Bottom
Set "11"	S501-K	160	80 ~ S501-K @ 6" Top & Bottom

STATE OF MAINE
DEPARTMENT OF TRANSPORTATION

BR-1928(100)X

WIN 19281.00

BRIDGE NO. 1525

BRIDGE PLANS

		BY	DATE
PROJ. MANAGER	M. Purslen		
DESIGN-DETAILED	G. Gustafson	Team South	Sept. 2014
CHECKED-REVIEWED	J. Waugh	-----	Oct. 2014
DESIGN2-DETAILED2	-----	-----	-----
DESIGN3-DETAILED3	-----	-----	-----
REVISIONS 1	-----	-----	-----
REVISIONS 2	-----	-----	-----
REVISIONS 3	-----	-----	-----
REVISIONS 4	-----	-----	-----
FIELD CHANGES	-----	-----	-----

SIGNATURE

P.E. NUMBER

DATE

CANAL BRIDGE
SACO RIVER CANAL
HOLLIS YORK COUNTY

SLAB REINFORCING PLAN

SHEET NUMBER

68

OF 148

Filename: ...\068_Canal Slab Reinforcing Plan.dgn Division: BRIDGE Username: dana.damren Date:11/19/2014

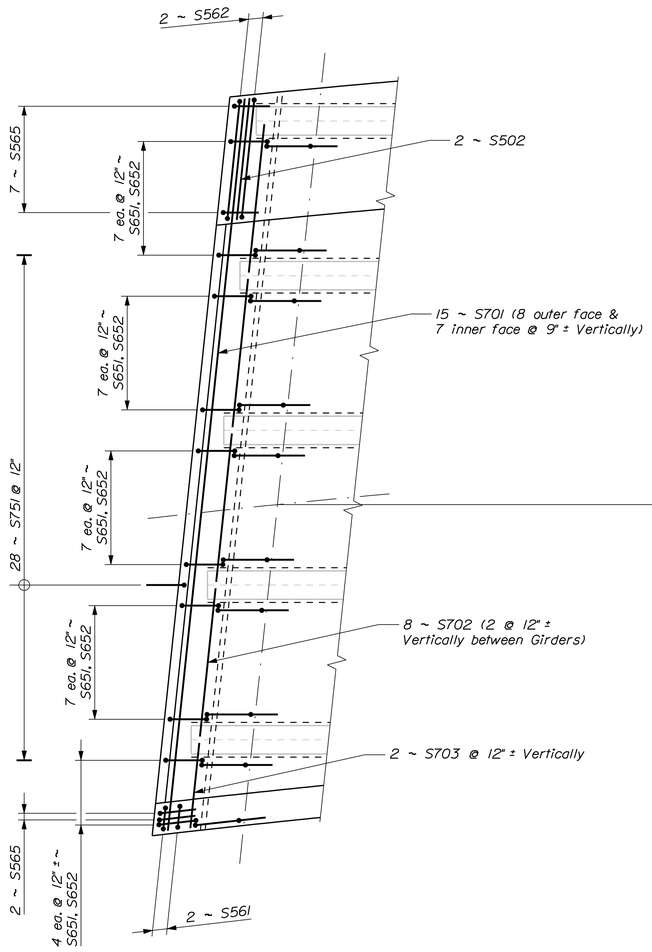

SLAB END REINFORCING PLAN ~ ABUTMENT NO. 1

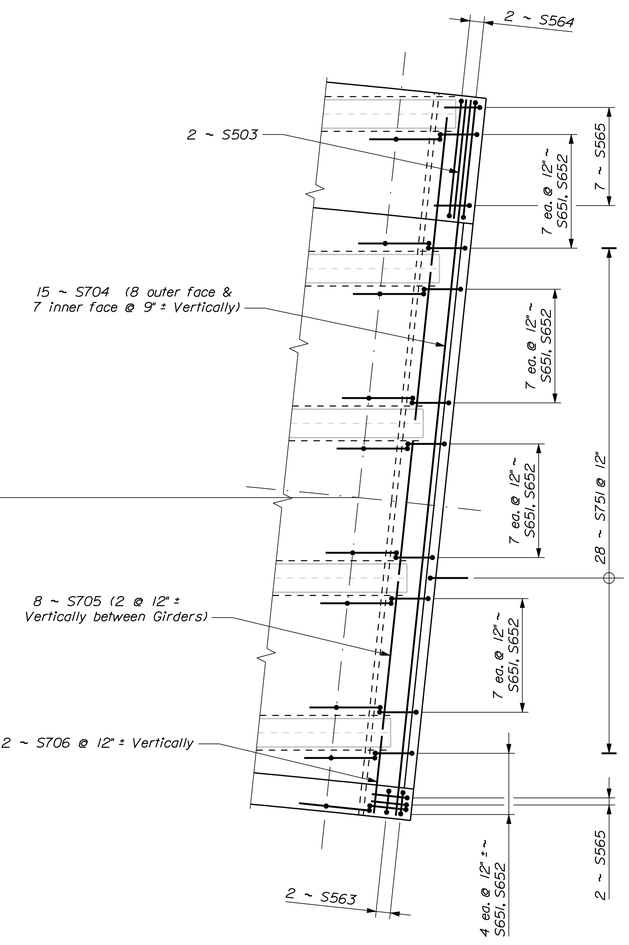

SLAB END REINFORCING PLAN ~ ABUTMENT NO. 2

STATE OF MAINE
DEPARTMENT OF TRANSPORTATION

BR-1928(100)X

WIN 19281.00

BRIDGE NO. 1525

BRIDGE PLANS

		BY	DATE
PROJ. MANAGER	M. Parlin		
DESIGN-DETAILED	G. Gustafson	Team South	Sept. 2014
CHECKED-REVIEWED	J. Waugh	-----	Oct. 2014
DESIGN2-DETAILED2	-----	-----	-----
DESIGN3-DETAILED3	-----	-----	-----
REVISIONS 1	-----	-----	-----
REVISIONS 2	-----	-----	-----
REVISIONS 3	-----	-----	-----
REVISIONS 4	-----	-----	-----
FIELD CHANGES	-----	-----	-----

SIGNATURE

P.E. NUMBER

DATE

CANAL BRIDGE
SACO RIVER CANAL
HOLLIS YORK COUNTY

SLAB END REINF. PLAN

SHEET NUMBER

69

OF 148

Filename: ...\069_Canal Slab End Reinforcing Plan.dgn Division: BRIDGE Username: dana.damren Date:11/19/2014

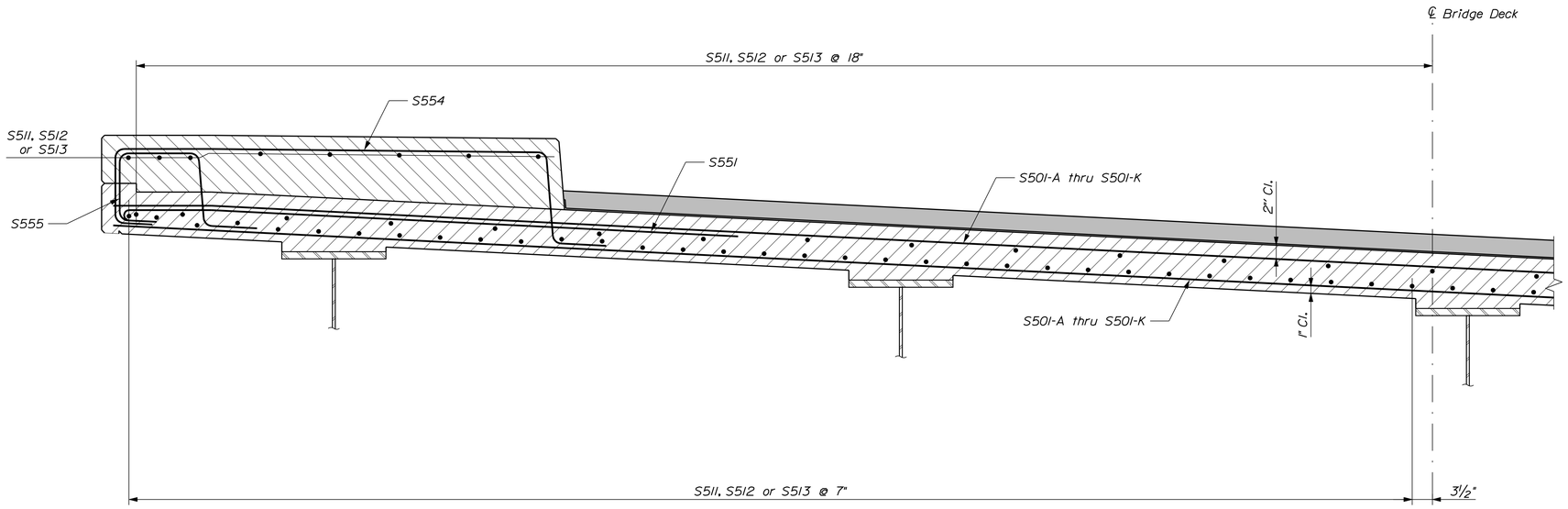

HALF UPSTREAM TRANSVERSE REINFORCING SECTION

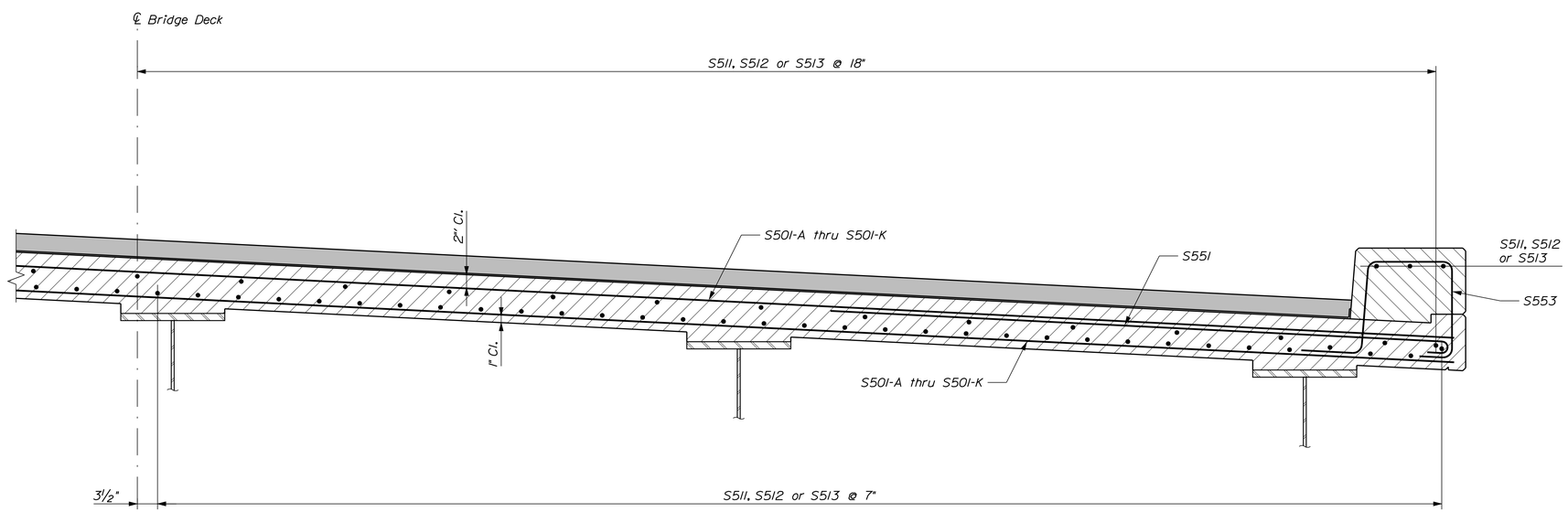

HALF DOWNSTREAM TRANSVERSE REINFORCING SECTION

STATE OF MAINE
DEPARTMENT OF TRANSPORTATION

BR-1928(100)X

WIN 19281.00

BRIDGE NO. 1525

BRIDGE PLANS

		BY	DATE
PROJ. MANAGER	M. Parsles		
DESIGN-DETAILED	G. Gustafson	Team South	Sept. 2014
CHECKED-REVIEWED	J. Waugh	-----	Oct. 2014
DESIGN2-DETAILED2	-----	-----	-----
DESIGN3-DETAILED3	-----	-----	-----
REVISIONS 1	-----	-----	-----
REVISIONS 2	-----	-----	-----
REVISIONS 3	-----	-----	-----
REVISIONS 4	-----	-----	-----
FIELD CHANGES	-----	-----	-----

SIGNATURE

P.E. NUMBER

DATE

CANAL BRIDGE
SACO RIVER CANAL
HOLLIS YORK COUNTY

SLAB REINF. SECTIONS

SHEET NUMBER

70

OF 148

Filename: ...\070_Canal Slab Reinforcing Sections.dgn Division: BRIDGE Username: dana.damren Date:11/19/2014

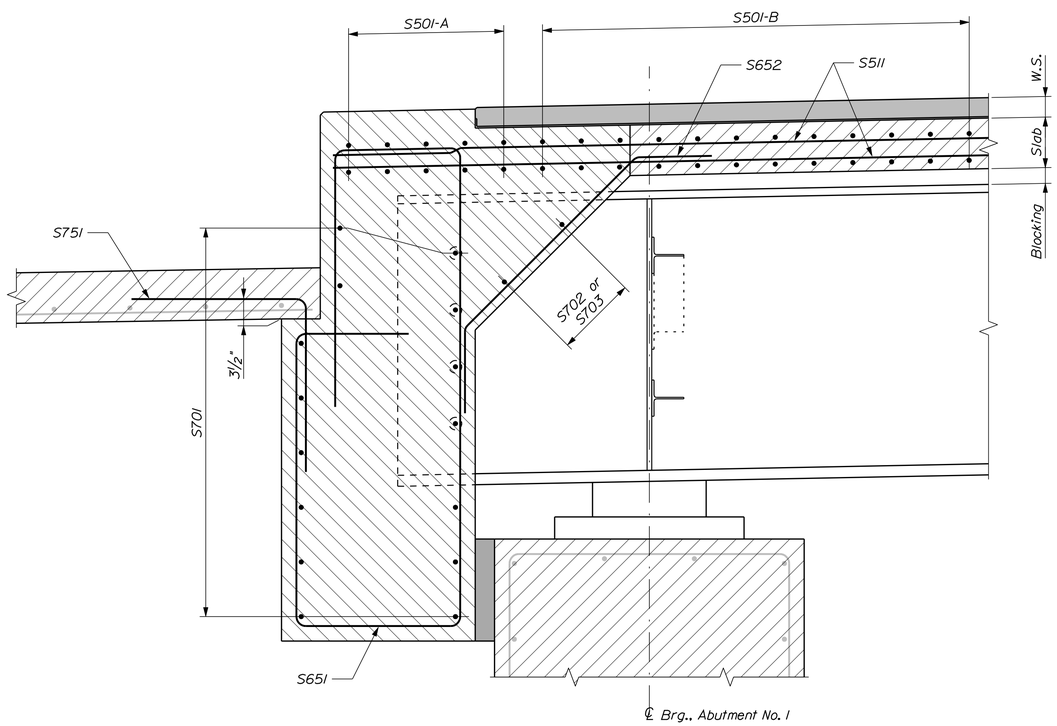

LONGITUDINAL SECTION AT ABUTMENT NO. 1
Section at Roadway

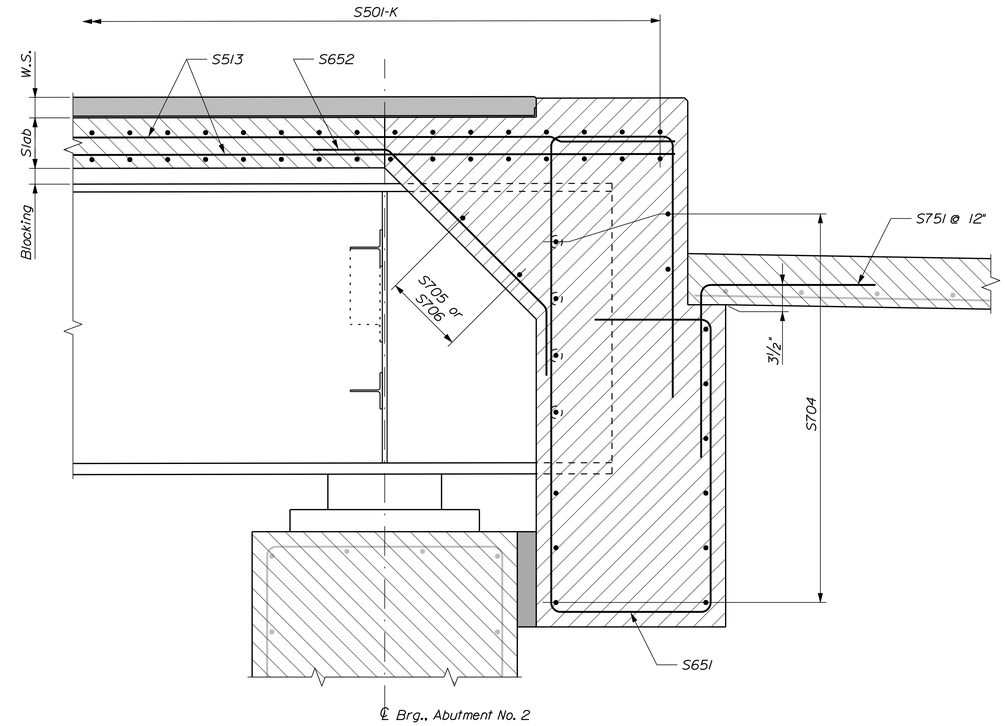

LONGITUDINAL SECTION AT ABUTMENT NO. 2
Section at Roadway

STATE OF MAINE
DEPARTMENT OF TRANSPORTATION

BR-1928(100)X

WIN 19281.00

BRIDGE NO. 1525

BRIDGE PLANS

		BY	DATE
PROJ. MANAGER	M. Purdin		
DESIGN-DETAILED	G. Gustafson	Team South	Sept. 2014
CHECKED-REVIEWED	J. Waugh	-----	Oct. 2014
DESIGN2-DETAILED2	-----	-----	-----
DESIGN3-DETAILED3	-----	-----	-----
REVISIONS 1	-----	-----	-----
REVISIONS 2	-----	-----	-----
REVISIONS 3	-----	-----	-----
REVISIONS 4	-----	-----	-----
FIELD CHANGES	-----	-----	-----

SIGNATURE

P.E. NUMBER

DATE

CANAL BRIDGE
SACO RIVER CANAL
HOLLIS YORK COUNTY

SLAB REINF. SECTIONS

SHEET NUMBER
71
OF 148

Filename: ...\071_Canal Slab Reinforcing Sections.dgn Division: BRIDGE Username: dana.damren Date:11/19/2014

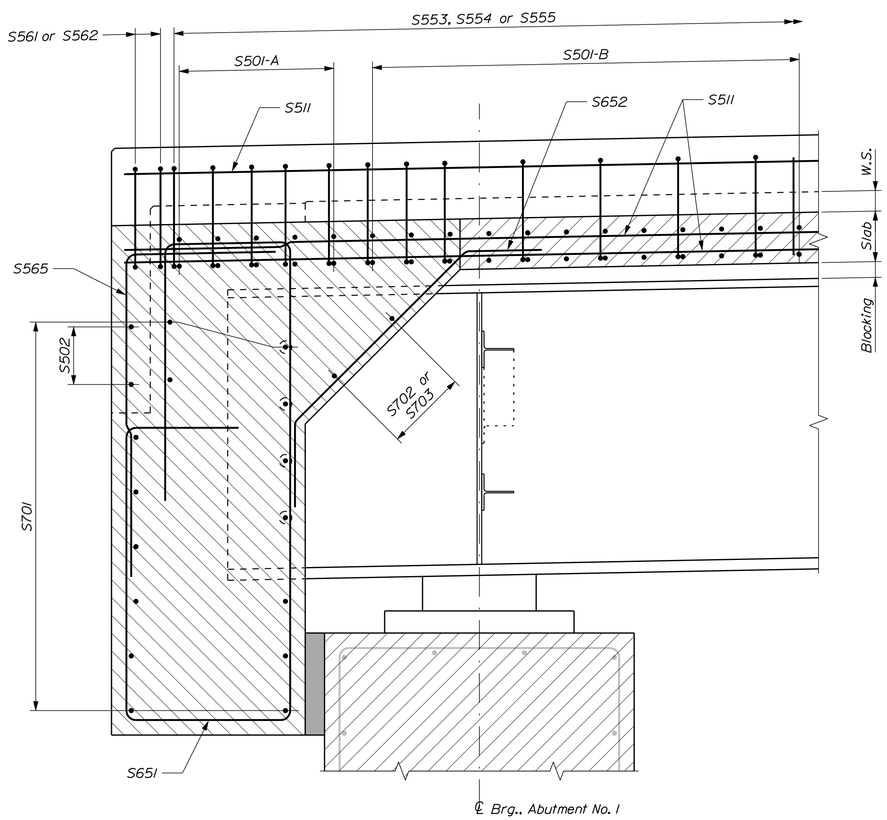

LONGITUDINAL SECTION AT ABUTMENT NO. 1

Section at Curb or Sidewalk

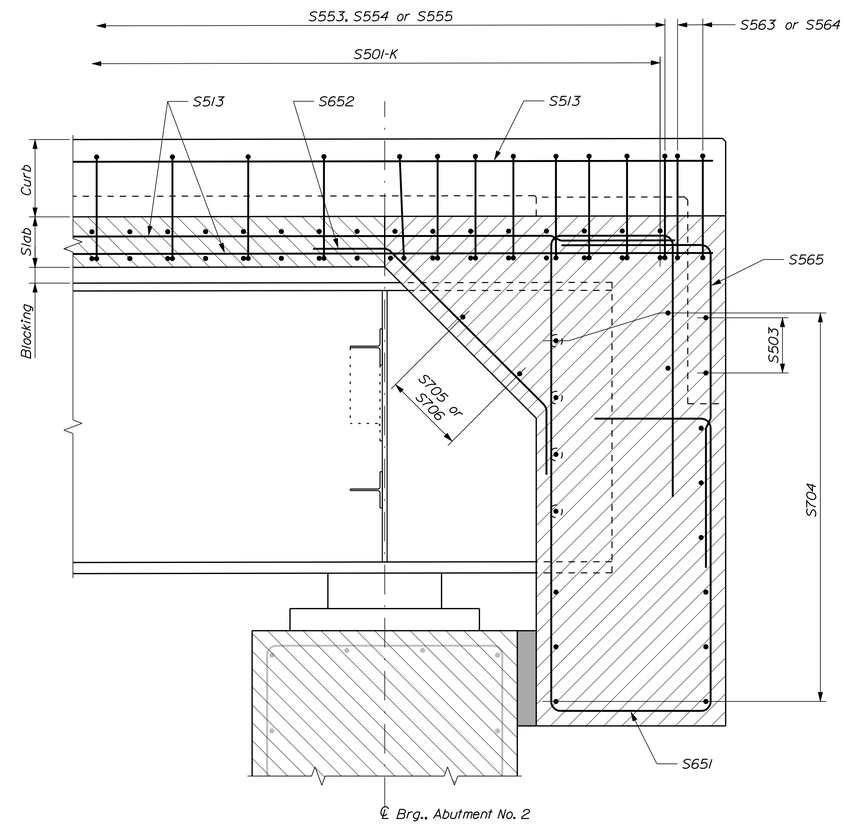

LONGITUDINAL SECTION AT ABUTMENT NO. 2

Section at Curb or Sidewalk

STATE OF MAINE
DEPARTMENT OF TRANSPORTATION

BR-1928(100)X

WIN 19281.00

BRIDGE NO. 1525

BRIDGE PLANS

		BY	DATE
PROJ. MANAGER	M. Purdin		
DESIGN-DETAILED	G. Gustafson	Team South	Sept. 2014
CHECKED-REVIEWED	J. Waugh	-----	Oct. 2014
DESIGN2-DETAILED2	-----	-----	-----
DESIGN3-DETAILED3	-----	-----	-----
REVISIONS 1	-----	-----	-----
REVISIONS 2	-----	-----	-----
REVISIONS 3	-----	-----	-----
REVISIONS 4	-----	-----	-----
FIELD CHANGES	-----	-----	-----

SIGNATURE

P.E. NUMBER

DATE

CANAL BRIDGE
SACO RIVER CANAL
HOLLIS YORK COUNTY

SLAB REINF. SECTIONS

SHEET NUMBER

72

OF 148

Filename: ...\072_Canal Slab Reinforcing Sections.dgn Division: BRIDGE Username: dana.damren Date:11/19/2014

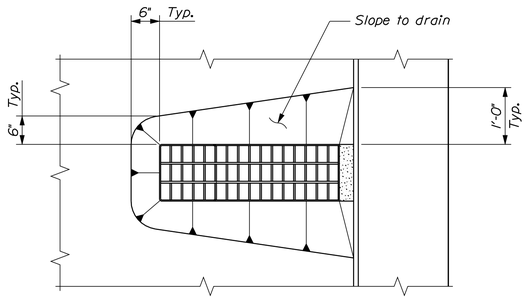

BRIDGE DRAIN PLAN

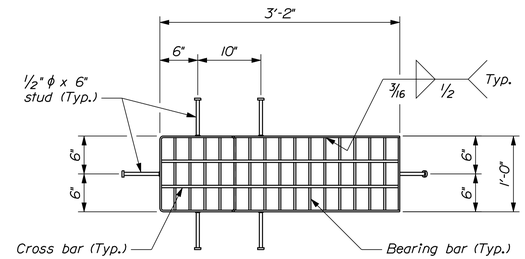

~ DRAIN TOP VIEW ~

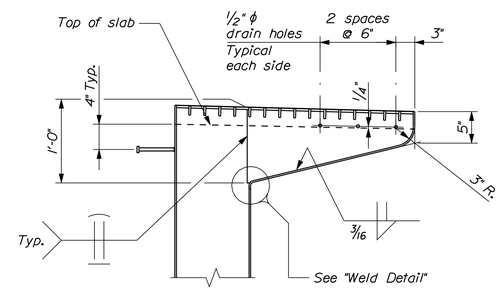

~ DRAIN SECTION ~

BRIDGE DRAIN

BRIDGE DRAIN NOTES

1. All plates shall be 1/4 inch thick.

2. The grating shall be a commercial heavy - duty grating with 1 1/2" x 5/16" bearing bars spaced at 2 3/8 inches and 3/8" ϕ cross bars spaced at 4 inches. The grating shall be centered in the drain top.

3. Drains, including C 9x13.4, shall be blast cleaned to the requirements of SSPC-SP6/NACE 3 and galvanized in accordance with ASTM A 123.

4. For structural steel beams / girders, the WT 6x13 and associated bolts shall meet the material and protective coating requirements of the structural steel.

5. Shear connectors welded to the top flange of steel beams / girders may require adjustment to clear the bridge drains.

6. Payment for bridge drains will be as specified under Subsection 502.19 of the Standard Specifications.

MATERIALS

Downspout . . . . . ASTM A 500, Grade B.
Shapes & plates . . . . . AASHTO M 270M/M 270, Grade 50
Bolts . . . . . ASTM A 307, Grade A

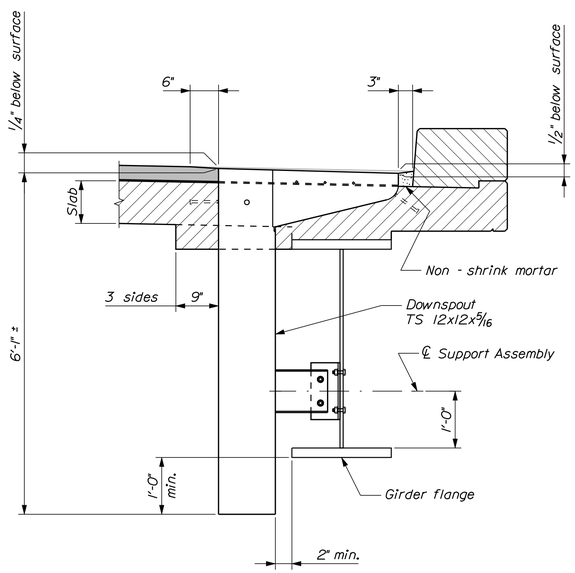

BRIDGE DRAIN ELEVATION

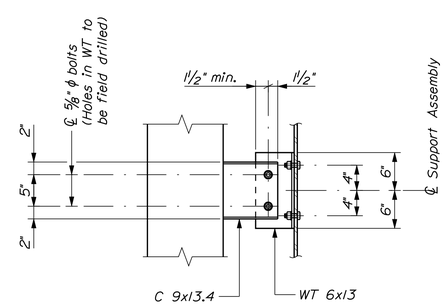

~ SUPPORT ASSEMBLY DETAIL~

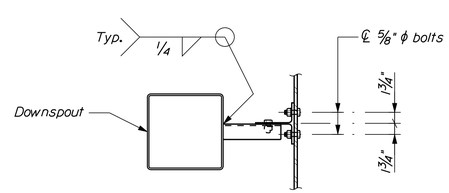

~ SUPPORT ASSEMBLY TOP VIEW ~

SUPPORT ASSEMBLY

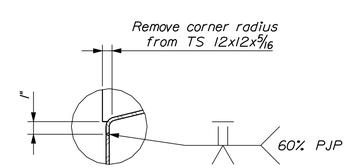

WELD DETAIL

STATE OF MAINE
DEPARTMENT OF TRANSPORTATION

BR-1928(100)X

WIN 19281.00

BRIDGE NO. 1525

BRIDGE PLANS

PROJ. MANAGER	M. Parlin			
		BY	DATE	
DESIGN-DETAILED	G. Gustafson	Team South	Oct. 2014	SIGNATURE
CHECKED-REVIEWED	------	------	------	
DESIGN2-DETAILED2	------	------	------	P.E. NUMBER
DESIGN3-DETAILED3	------	------	------	
REVISIONS 1	------	------	------	
REVISIONS 2	------	------	------	DATE
REVISIONS 3	------	------	------	
REVISIONS 4	------	------	------	
FIELD CHANGES	------	------	------	

CANAL BRIDGE
SACO RIVER CANAL
HOLLIS YORK COUNTY

BRIDGE DRAINS

SHEET NUMBER
73
OF 148

Filename: ...\073_CanalBridge_Drains.dgn Division: BRIDGE Username: Garrett.A.Gustafson Date:11/24/2014

Filename: ...\074_Canal_Bridge_Abutment_Rebar.dgn Division: BRIDGE Username: dana.damren Date:11/19/2014

STRAIGHT BARS

MARK	QTY.	LENGTH	LOCATION
ABUTMENT NO. 1			
A500	57	4'-0"	Footing/Parapet/Wingwall
A501	17	10'-2½"	Wingwall
A502	24	15'-0"	Wingwall
A503	6	17'-0"	Wingwall
A504	6	4'-0"	Wingwall
A505	12	4'-4"	Wingwall
A506	14	5'-0"	Wingwall
A507	7	12'-0"	Wingwall
A508	12	6'-4"	Wingwall
A509	4	3'-4"	Wingwall
A510	4	4'-4"	Wingwall
A511	4	5'-4"	Wingwall
A512	2	6'-4"	Wingwall
A513	10	11'-3"	Wingwall
A514	10	8'-5"	Wingwall
A600	17	12'-0"	Abutment Footing
A601	1	12'-7"	Abutment Footing
A602	1	12'-4½"	Abutment Footing
A603	1	12'-2½"	Abutment Footing
A604	1	12'-1½"	Abutment Footing
A605	1	12'-0½"	Abutment Footing
A606	5	4'-6"	Abutment Footing
A607	4	8'-0"	Abutment Footing
A608	1	9'-6"	Abutment Footing
A609	6	5'-6"	Abutment Footing
A610	4	11'-0"	Abutment Footing
A611	2	6'-6"	Abutment Footing
A612	8	43'-4"	Abutment Footing
A613	6	39'-3"	Abutment Footing
A614	6	35'-9"	Abutment Footing
A615	6	32'-2"	Abutment Footing
A616	8	12'-2"	Abutment Footing
A617	6	10'-7"	Abutment Footing
A618	6	9'-2"	Abutment Footing
A619	6	7'-9"	Abutment Footing
A620	8	16'-11"	Abutment Footing
A621	6	15'-9"	Abutment Footing
A622	6	14'-7"	Abutment Footing
A623	6	13'-5"	Abutment Footing
A624	9	21'-1"	Abutment Shaft
A625	9	24'-0"	Abutment Shaft
A626	8	8'-6"	Abutment Shaft
A627	1	15'-11"	Abutment Shaft
A628	9	19'-6"	Abutment Shaft
A629	9	20'-10"	Abutment Shaft
A630	5	13'-0"	Abutment Shaft
A631	4	8'-0"	Abutment Shaft
A632	1	4'-10"	Abutment Shaft
A633	1	5'-9"	Abutment Shaft
A634	1	6'-8"	Abutment Shaft
A635	1	7'-7"	Abutment Shaft
A700	32	12'-0"	Abutment Footing
A701	2	12'-6"	AbutmentFooting
A702	2	12'-3½"	Abutment Footing
A703	2	12'-1½"	Abutment Footing
A704	2	12'-0½"	Abutment Footing
A705	2	12'-0¼"	Abutment Footing
A706	34	7'-10"	Abutment Shaft
A707	24	8'-3"	Abutment Shaft
A708	24	8'-9"	Abutment Shaft
A709	26	9'-2"	Abutment Shaft
A710	15	9'-7"	Abutment Shaft
A800	33	12'-0"	Abutment Footing
A806	5	4'-6"	AbutmentFooting
A807	4	8'-0"	Abutment Footing
A808	1	9'-6"	Abutment Footing
A809	6	5'-6"	Abutment Footing
A810	4	11'-0"	Abutment Footing
A811	2	6'-6"	Abutment Footing
A900	33	12'-0"	Abutment Footing

MARK	QTY.	LENGTH	LOCATION
ABUTMENT NO. 2			
B500	42	8'-0"	Abutment Footing
B501	6	59'-4"	Abutment Footing
B502	6	58'-6"	Abutment Footing
B503	6	57'-2"	Abutment Footing
B504	2	17'-7"	Abutment Footing
B505	2	18'-0"	Abutment Footing
B506	2	16'-6"	Abutment Footing
B507	2	15'-0"	Abutment Footing
B508	2	13'-6"	Abutment Footing
B509	2	11'-11"	Abutment Footing
B510	2	10'-4"	Abutment Footing
B511	2	8'-9"	Abutment Footing
B512	2	7'-3"	Abutment Footing
B513	1	1'-8½"	Abutment Footing
B514	1	2'-7"	Abutment Footing
B515	1	3'-5¾"	Abutment Footing
B516	1	4'-4"	Abutment Footing
B517	1	5'-2½"	Abutment Footing
B518	1	6'-1½"	Abutment Footing
B519	1	7'-0"	Abutment Footing
B520	46	4'-0"	Abutment Footing
B521	2	6'-6"	Abutment Footing
B522	2	4'-9"	Abutment Footing
B523	2	3'-6"	Abutment Footing
B524	6	7'-5"	Abutment Footing
B525	8	7'-0"	Abutment Footing
B526	8	6'-7"	Abutment Footing
B527	8	6'-2"	Abutment Footing
B528	9	5'-9"	Abutment Footing
B529	2	6'-6"	South Wingwall (Top)
B530	5	21'-2"	Abutment Breastwall
B531	5	24'-2"	Abutment Breastwall
B532	4	36'-6"	Abutment Breastwall
B533	2	34'-8"	Abutment Breastwall
B534	2	32'-8"	Abutment Breastwall
B535	4	8'-6"	Abutment Breastwall (Top)
B536	12	8'-0"	Abutment Breastwall (Top)
B537	1	4'-11"	Abutment Breastwall (Top)
B538	1	5'-11"	Abutment Breastwall (Top)
B539	1	6'-11"	Abutment Breastwall (Top)
B540	1	7'-11"	Abutment Breastwall (Top)
B541	4	8'-10"	South Wingwall
B542	3	7'-5"	South Wingwall
B543	6	6'-0"	South Wingwall
B544	6	4'-6"	South Wingwall
B545	6	3'-1"	South Wingwall
B546	5	8'-0"	North Wingwall
B547	3	8'-11"	North Wingwall
B548	3	10'-1"	North Wingwall
B549	3	11'-3"	North Wingwall
W500	6	16'-8"	North Wingwall
W501	6	12'-6"	North Wingwall
W502	3	12'-1½"	North Wingwall
W503	5	10'-9"	North Wingwall
W504	1	8'-2"	North Wingwall
W505	1	5'-7"	North Wingwall
W506	1	3'-0"	North Wingwall
W507	1	8'-2"	North Wingwall
W508	1	5'-7"	North Wingwall
W509	1	3'-0"	North Wingwall
W510	2	13'-4"	South Wingwall
W511	2	11'-8½"	South Wingwall
W512	2	9'-7½"	South Wingwall
W513	2	7'-7"	South Wingwall
W514	2	5'-6"	South Wingwall
W515	2	3'-6"	South Wingwall
B600	88	8'-0"	Abutment Footing
B601	1	1'-8½"	Abutment Footing
B602	1	2'-7"	Abutment Footing
B603	1	3'-5¾"	Abutment Footing
B604	1	4'-4"	Abutment Footing
B605	1	5'-2½"	Abutment Footing
B606	1	6'-1½"	Abutment Footing
B607	1	7'-0"	Abutment Footing
B608	2	6'-6"	Abutment Footing
B609	2	4'-9"	Abutment Footing
B610	2	3'-6"	Abutment Footing

MARK	QTY.	LENGTH	LOCATION
ABUTMENT NO. 2 (Continued)			
B611	4	8'-10"	Abutment Wingwall
B612	3	7'-5"	Abutment Wingwall
B616	5	7'-11"	Abutment Wingwall
B617	3	8'-11"	Abutment Wingwall
B618	3	10'-1"	Abutment Wingwall
B619	3	11'-3"	Abutment Wingwall

BENT BARS

MARK	QTY.	LENGTH	TYPE	A	B	C	D	E	F	G	H	O	R	LOCATION
ABUTMENT NO. 1														
A550	18	5'-7"	L	4'-9"	10"									Abutment Seal
A551	9	6'-6"	V				4'-6"	2'-0"			1'-10¾"			Abutment Shaft
A552	15	4'-2"	V				2'-1"	2'-1"			1'-11⅝"			Abutment Shaft
A553	9	4'-0"	V				2'-0"	2'-0"			1'-11½"			Abutment Shaft
A554	6	5'-2"	V				2'-0"	3'-2"			3'-0"			Abutment Shaft
A555	3	12'-2"	U	5'-6"	1'-2"	5'-6"								Abutment Parapet
A556	4	8'-6"	L	7'-8"	10"									Abutment Shaft
A557	23	4'-6"	U	1'-8"	1'-2"	1'-8"								Top of Wingwall
A558	3	13'-8"	U	6'-3"	1'-2"	6'-3"								Abutment Parapet
A559	7	4'-3"	V				2'-3"	2'-0"			1'-6⅜"			Abutment Shaft Corner
A560	27	4'-0"	V				2'-0"	2'-0"			1'-6⅜"			Abutment Shaft Corner
A561	5	10'-6"	L	9'-8"	10"									Abutment Shaft Corner
A562	10	5'-6"	A				2'-6"	3'-0"			2'-11¼"			Abutment Shaft Corner
A563	25	4'-2¼"	U	1'-3"	1'-8¼"	1'-3"								Bearing Pedestal
A564	20	5'-3¾"	U	1'-3"	2'-9¾"	1'-3"								Bearing Pedestal
A565	3	2'-10"	L	2'-0"	10"									Abutment Shaft
A650	71	5'-9"	L	4'-9"	12"									Abutment Seal
A651	41	6'-6"	L	5'-6"	12"									Abutment Footing
A652	41	5'-8"	U	12"	3'-8"	12"								Abutment Shaft - Top
A653	15	10'-5"	L	12"	9'-5"									Abutment Shaft Corner
A654	28	8'-8"	L	12"	7'-8"									Abutment Shaft Corner
A750	123	7'-0"	L	5'-10"	1'-2"									Abutment Footing
ABUTMENT NO. 2														
B550	12	5'-8"	L	4'-10"	10"									Abutment Footing
B551	1	11'-11½"	L	10'-8½"	1'-3"									Abutment Footing
B552	40	4'-10"	U	10"	3'-2"	10"								Breastwall (Top)
B553	31	4'-10"	U	1'-10"	1'-2"	1'-10"								Wingwalls (Top)
B554	11	3'-4"	U	10"	1'-8"	10"								North Wingwall (End)
B555	19	4'-0"	V				2'-0"	2'-0"			1'-5"			Corner Wingwall/Breastwall/Parapet
B556	7	4'-5"	V				2'-0"	2'-5"			1'-8½"			North Wingwall Parapet
B557	5	6'-5"	L	5'-3"	1'-2"									Corner North Wingwall/Breastwall
B558	2	14'-9"	V				13'-6"	1'-3"			6½"			South Wingwall (Top)
B559	25	4'-2¼"	U	1'-3"	1'-8¼"	1'-3"								Bearing Pedestal
B560	20	5'-3¾"	U	1'-3"	2'-9¾"	1'-3"								Bearing Pedestal
B650	7	9'-0"	L	8'-0"	12"									Abutment Footing
B651	8	8'-7"	L	7'-7"	12"									Abutment Footing
B652	8	8'-2"	L	7'-2"	12"									Abutment Footing
B653	8	7'-9"	L	6'-9"	12"									Abutment Footing
B654	9	7'-4"	L	6'-4"	12"									Abutment Footing
B655	1	11'-11½"	L	10'-8½"	1'-3"									Abutment Footing
B750	27	7'-0"	L	5'-10"	1'-2"									Abutment Footing

TYPE - BENDING DIAGRAMS

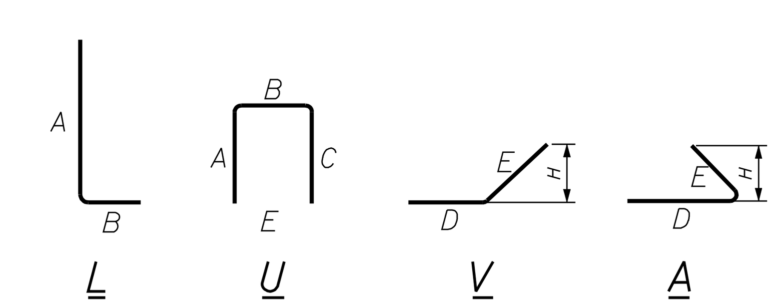

All dimensions are out-to-out of bar.

Bending details and hooks shall conform to the recommendations of the current revision of ACI Standard 315 and ACI Standard 318.

Reinforcing Bar: ASTM A615/A615M, Grade 60

GENERAL NOTES

The first two digits following the letter(s) of the mark indicate the size of the bar:

Mark "A502" = bar size #5
Mark "P805" = bar size #8
Mark "S650" = bar size #6

Each crank bar, Type B, may be replaced by two (2) straight bars (one top and one bottom) of the same bar size as the crank bar. Payment in either case shall be based on crank bars as schedule on the plans.

STATE OF MAINE
DEPARTMENT OF TRANSPORTATION

BR-1928(100)X

WIN 19281.00

BRIDGE NO. 1525

BRIDGE PLANS

SIGNATURE | P.E. NUMBER | DATE

	BY	DATE
PROJ. MANAGER	M. Parlin	
DESIGN-DETAILED	G. Gustafson	D. Shaw	Nov. 2014
CHECKED-REVIEWED	J. Waugh	Nov. 2014
DESIGN2-DETAILED2		
DESIGN3-DETAILED3		
REVISIONS 1		
REVISIONS 2		
REVISIONS 3		
REVISIONS 4		
FIELD CHANGES		

CANAL BRIDGE
SACO RIVER CANAL
HOLLIS YORK COUNTY

REINFORCING STEEL SCHEDULE

SHEET NUMBER
74
OF 148

STRAIGHT BARS

MARK	QTY.	LENGTH	LOCATION	MARK	QTY.	LENGTH	LOCATION
		SUPERSTRUCTURE					
S501-A	10	38'-10"	Transverse				
S501-B	24	38'-9"	Transverse				
S501-C	26	38'-8"	Transverse				
S501-D	26	38'-7"	Transverse				
S501-E	30	38'-6"	Transverse				
S501-F	30	38'-5"	Transverse				
S501-G	36	38'-4"	Transverse				
S501-H	40	38'-3"	Transverse				
S501-I	48	38'-2"	Transverse				
S501-J	62	38'-1"	Transverse				
S501-K	160	38'-0"	Transverse				
S502	2	6'-5"	Abut. No. 1 Semi - Int. Backwall				
S503	2	6'-4"	Abut. No. 2 Semi - Int. Backwall				
S511	104	40'-0"	Longitudinal				
S512	104	60'-0"	Longitudinal				
S513	104	28'-0"	Longitudinal				
S701	15	38'-10"	Abut. No. 1 Semi - Int. Backwall				
S702	8	7'-10"	Abut. No. 1 Semi - Int. Backwall				
S703	2	4'-6"	Abut. No. 1 Semi - Int. Backwall				
S704	15	38'-0"	Abut. No. 2 Semi - Int. Backwall				
S705	8	7'-10"	Abut. No. 2 Semi - Int. Backwall				
S706	2	4'-1"	Abut. No. 2 Semi - Int. Backwall				
		APPROACH SLABS					
AS500-1	16	29'-4"	Transverse - Abutment No. 1				
AS500-2	16	28'-8"	Transverse - Abutment No. 2				
AS600	116	15'-0"	Longitudinal - 58 each				
MARK	QTY.	LENGTH	LOCATION	MARK	QTY.	LENGTH	LOCATION

BENT BARS

MARK	QTY.	LENGTH	TYPE	A	B	C	D	E	F	G	H	O	R	LOCATION
						SUPERSTRUCTURE								
S551	492	9'-7"	C	0'-7"	9'-0"	0	--	--	--	--	--	--	--	Overhangs
S552	16	9'-0"	L	4'-6"	4'-6"	--	--	--	--	--	--	--	--	Drains
S553	181	5'-9"	SC	0'-10"	1'-5"	1'-3"	1'-5"	--	--	0'-10"	--	1'-4"	--	Curb
S554	125	10'-6"	SC	0'-10"	1'-2"	6'-3"	1'-5"	--	--	0'-10"	--	6'-4"	--	Sidewalk
S555	56	5'-3"	SC	0'-10"	1'-2"	1'-3"	1'-2"	--	--	0'-10"	--	1'-4"	--	Sidewalk at Rail Post
S561	2	5'-9"	SA	0'-10"	1'-5"	1'-3"	1'-5"	--	--	0'-10"	--	1'-4"	--	Curb At Abut. No. 1
S562	2	10'-7"	SA	0'-10"	1'-2"	6'-4"	1'-5"	--	--	0'-10"	--	6'-5"	--	Sidewalk at Abut. No. 1
S563	2	5'-9"	SA	0'-10"	1'-5"	1'-3"	1'-5"	--	--	0'-10"	--	1'-4"	--	Curb at Abut. No. 2
S564	2	10'-6"	SA	0'-10"	1'-2"	6'-3"	1'-5"	--	--	0'-10"	--	6'-4"	--	Sidewalk at Abut. No. 2
S565	18	5'-6"	L	3'-6"	2'-0"	--	--	--	--	--	--	--	--	Concrete Diaphragms
S651	64	18'-4"	EP	1'-6"	3'-7"	2'-2"	6'-0"	1'-8"	3'-5"	--	--	--	--	Semi - Integral Backwalls
S652	64	6'-6"	D	1'-8"	3'-2"	1'-8"	--	--	--	--	--	--	--	Semi - Integral Backwalls
S751	56	4'-8"	L	2'-4"	2'-4"	--	--	--	--	--	--	--	--	Approach Slab Seat
S761	4	8'-1"	S	0	3'-6"	1'-1"	3'-6"	--	--	0	--	--	--	Light Support
S762	2	7'-3"	S	0	3'-1"	1'-1"	3'-1"	--	--	0	--	--	--	Light Support
S763	2	6'-3"	S	0	2'-7"	1'-1"	2'-7"	--	--	0	--	--	--	Light Support
S764	2	5'-3"	S	0	2'-1"	1'-1"	2'-1"	--	--	0	--	--	--	Light Support
S765	3	10'-10"	CJ	0	4'-7"	1'-8"	4'-7"	0	--	--	--	--	--	Light Support
MARK	QTY.	LENGTH	TYPE	A	B	C	D	E	F	G	H	O	R	LOCATION

TYPE - BENDING DIAGRAMS

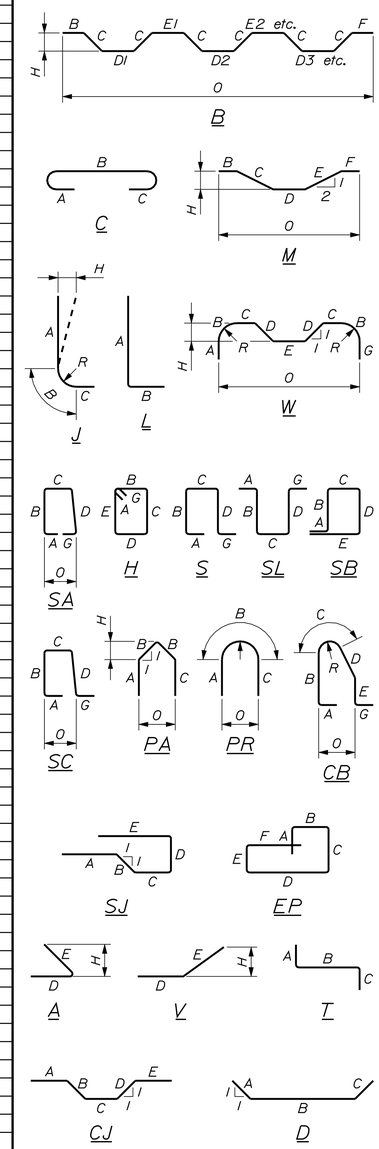

All dimensions are out-to-out of bar.

Bending details and hooks shall conform to the recommendations of the current revision of ACI Standard 315 and ACI Standard 318.

Reinforcing Bar: ASTM A 615/A 615M, Grade 60

GENERAL NOTES

1. The first two digits following the letter(s) of the mark indicate the size of the bar:

   Mark "A502" = bar size #5
   Mark "P805" = bar size #8
   Mark "S650" = bar size #6

2. Each crank bar, Type B, may be replaced by two (2) straight bars (one top and one bottom) of the same bar size as the crank bar. Payment in either case will be based on crank bars as scheduled on the plans.

STATE OF MAINE
DEPARTMENT OF TRANSPORTATION

BR-1928(100)X

WIN 19281.00

BRIDGE NO. 1525

BRIDGE PLANS

	BY	DATE
PROJ. MANAGER	M. Parlin	
DESIGN-DETAILED	G. Gustafson	Team South Oct. 2014
CHECKED-REVIEWED	J. Waugh	Oct. 2014
DESIGN2-DETAILED2	-----	-----
DESIGN3-DETAILED3	-----	-----
REVISIONS 1	-----	-----
REVISIONS 2	-----	-----
REVISIONS 3	-----	-----
REVISIONS 4	-----	-----
FIELD CHANGES	-----	-----

SIGNATURE

P.E. NUMBER

DATE

CANAL BRIDGE
SACO RIVER CANAL
HOLLIS YORK COUNTY

REINFORCING STEEL SCHEDULE

SHEET NUMBER

75

OF 148

Filename: ...\075_Canal Bridge Superstructure Rebar.dgn Division: BRIDGE Username: dana.damren Date:11/19/2014

SEAL COFFERDAM NOTES

1. When sheet piling is used for seal cofferdams, appropriate rolled corners shall be used, and the inside face of the sheet piling shall be at or outside of the seal concrete dimensions shown.

2. The seal concrete placement dimensions shown represent the minimum seal size necessary to meet design requirements and are not based on the use of any particular sheet pile section.

3. The horizontal pay limit for seal concrete will be to the dimensions shown on the plans. No additional payment will be made for concrete placed outside these limits.

4. The depth of the seal is set for a water elevation of 139.87. If the water elevation at the time of construction is higher, the depth of the seal shall be adjusted.

5. The method of placing dowels in the seal concrete shall be approved by the Resident.

ABUTMENT NOTES

1. The maximum factored applied footing pressure is 23 ksf.

2. Structural Earth Excavation, Abutments and Retaining Walls, required more than 12 inches below the bottom of the structure, will be paid for in accordance with Standard Specifications Section 206, Structural Excavation.

3. Reinforcing steel shall have a minimum concrete cover of 2 inches in the walls and 3 inches in the footings unless otherwise noted.

4. Place 4-in. diameter drains in the breastwall and wingwalls at 10-ft maximum spacing. The exact location will be determined by the Resident.

5. Cover joints where waterstops are not required in accordance with Standard Details Section 502.

6. Abutments, wingwalls and their footings shall be backfilled with Granular Borrow. Pay limits will be the structural excavation limits in cut areas and a vertical plane located 10 feet behind the walls in fill areas.

7. The concrete pedestal elevations shown are approximate. The actual elevations shall be adjusted to accommodate the bearings supplied by the Contractor. The elevations given assume the overall bearing heights designated in the Disc Bearing Design Table.

8. Abutment seals shall be Class "A" concrete.

9. Concrete placed above the approach slab seat for the Abutment No. 1 backwall shall be Class "LP" concrete.

10. Construct French Drains behind the abutments and wingwalls in accordance with Standard Specifications Section 512, French Drains.

11. When bedrock protrudes above the bottom of footing shown, the footing may be raised and the vertical reinforcing may be cut in the field with the approval of the Resident. The minimum footing elevations are shown on the plans and shall not be lowered without prior approval of the Engineer of Record. Payment for adjusting the footing elevations and reinforcing steel will be considered incidental to the related Contract Items. No separate payment will be made.

12. Foundation concrete shall be placed on bedrock cleaned of all loose rock and soil. The bedrock subgrade shall be confirmed to be relatively level. Where the bedrock slope exceeds 4H:1V, the bedrock surface shall be benched to create level steps or made completely level.

Filename: ...\076_Bar Mills Abutment Notes.dgn Division: BRIDGE Username: Garrett.A.Gustafson Date:11/20/2014

STATE OF MAINE
DEPARTMENT OF TRANSPORTATION

STP-1928(000)

WIN 19280.00

BRIDGE NO. 3333 BRIDGE PLANS

PROJ. MANAGER	M. Perlin	BY	DATE
DESIGN-DETAILED	D. Eaton	B. Nichols	OCT 2014
CHECKED-REVIEWED	J. Waugh	-----	-----
DESIGN2-DETAILED2	-----	-----	-----
DESIGN3-DETAILED3	-----	-----	-----
REVISIONS 1	-----	-----	-----
REVISIONS 2	-----	-----	-----
REVISIONS 3	-----	-----	-----
REVISIONS 4	-----	-----	-----
FIELD CHANGES	-----	-----	-----

SIGNATURE

P.E. NUMBER

DATE

BAR MILLS BRIDGE
SACO RIVER
HOLLIS & BUXTON YORK COUNTY

ABUTMENT NOTES

SHEET NUMBER

76

OF 148

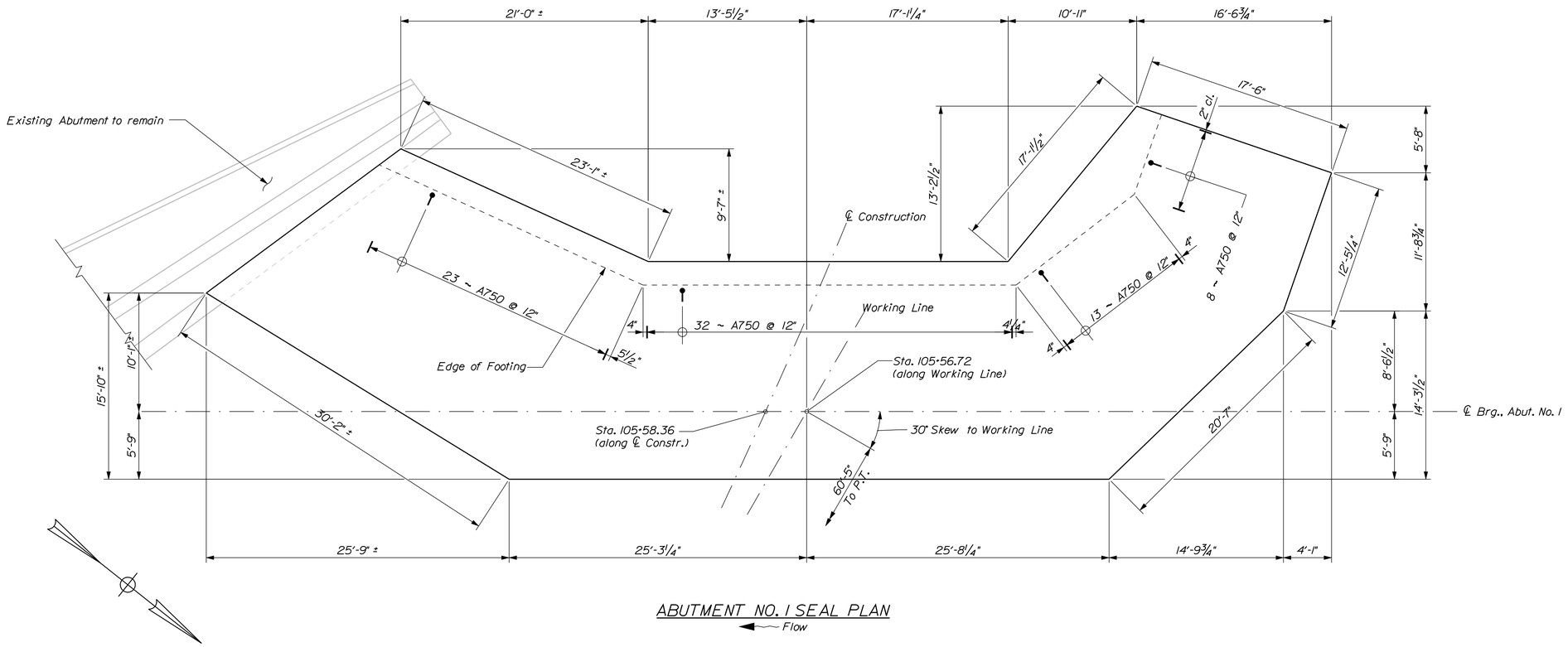

ABUTMENT NO. 1 SEAL PLAN

Flow

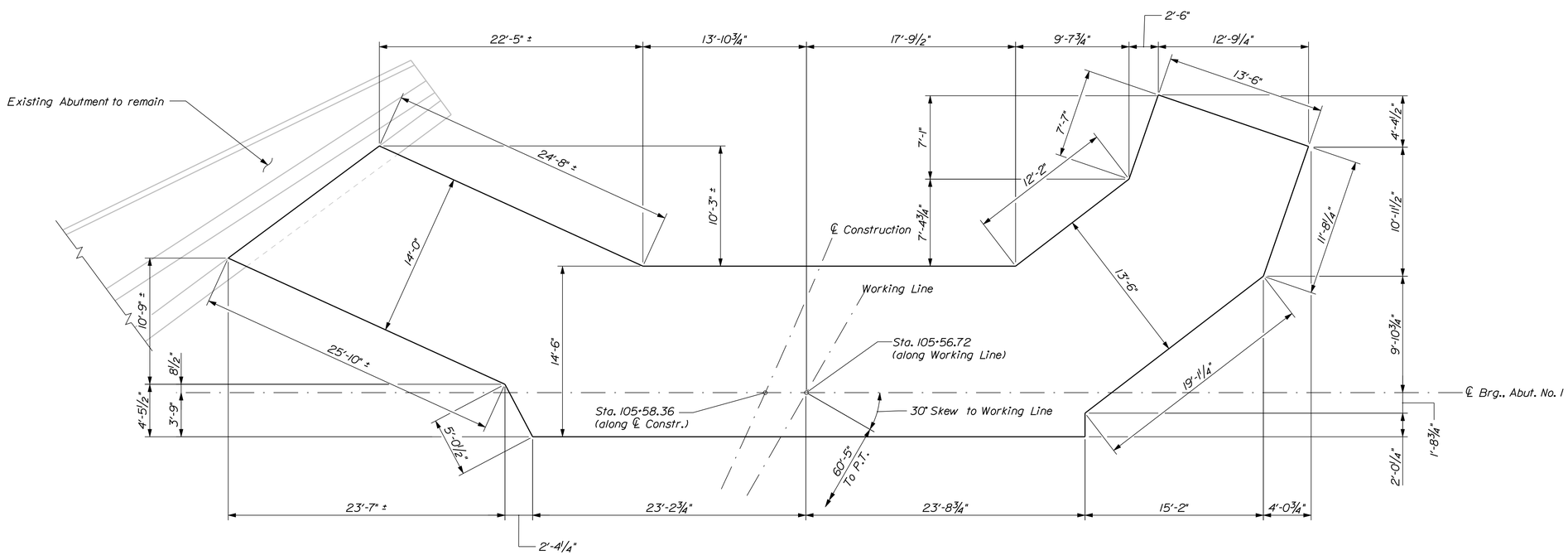

ABUTMENT NO. 1 FOOTING PLAN

Flow

STATE OF MAINE
DEPARTMENT OF TRANSPORTATION

STP-1928(000)

WIN 19280.00

BRIDGE NO. 3333

BRIDGE PLANS

PROJ. MANAGER	M. Perlin	BY	DATE
DESIGN-DETAILED	D. Eaton	B. Nichols	OCT 2014
CHECKED-REVIEWED	J. Waugh	-----	-----
DESIGN2-DETAILED2	-----	-----	-----
DESIGN3-DETAILED3	-----	-----	-----
REVISIONS 1	-----	-----	-----
REVISIONS 2	-----	-----	-----
REVISIONS 3	-----	-----	-----
REVISIONS 4	-----	-----	-----
FIELD CHANGES	-----	-----	-----

SIGNATURE

P.E. NUMBER

DATE

BAR MILLS BRIDGE
SACO RIVER
HOLLIS & BUXTON YORK COUNTY

ABUT. NO. 1 FOOTING PLAN

SHEET NUMBER

77

OF 148

Filename: ...\077_Bar Mills Abutment_ 1_Ftg Plan.dgn Division: BRIDGE Username: dana.damren Date:11/19/2014

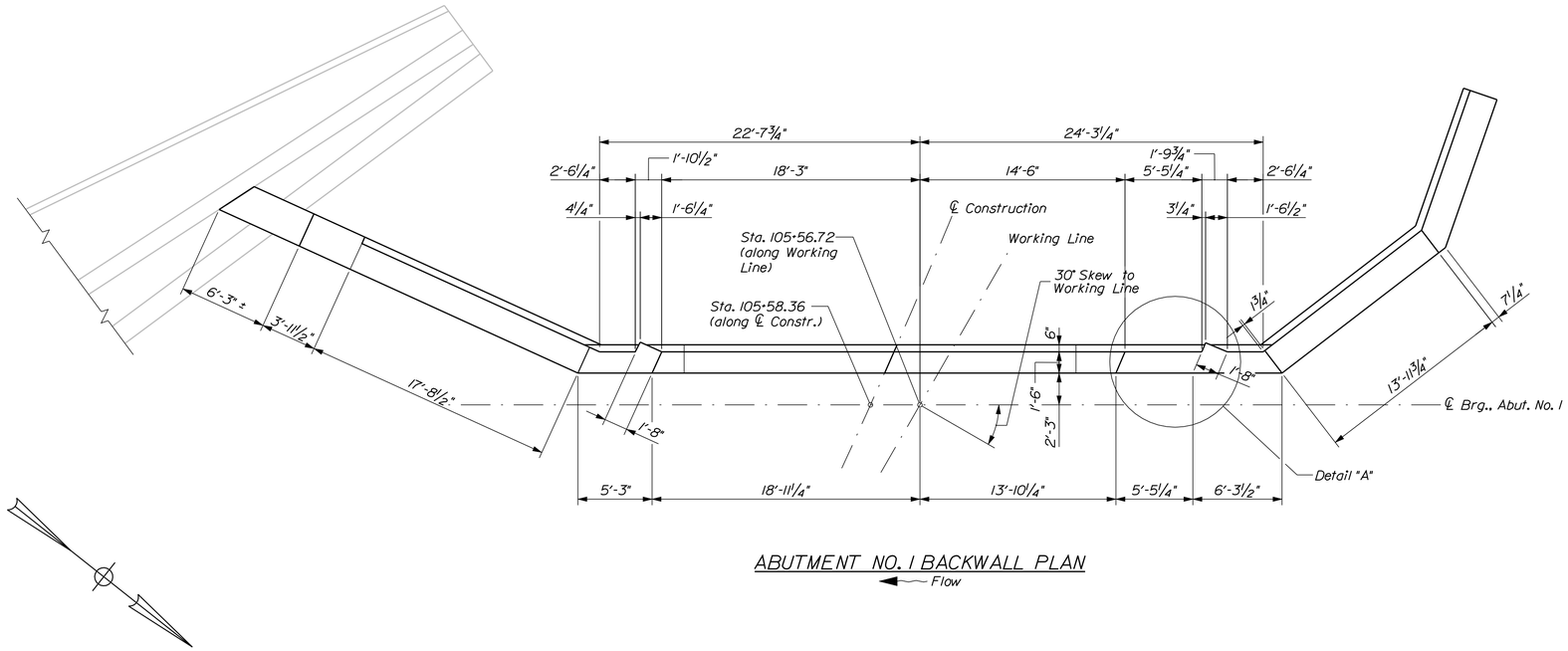

ABUTMENT NO. 1 BACKWALL PLAN

Flow

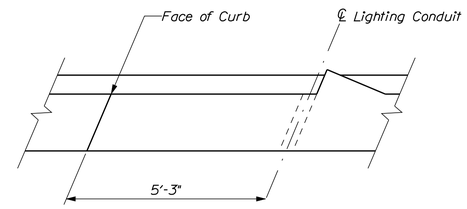

DETAIL "A"

See Superstructure Details for vertical placement

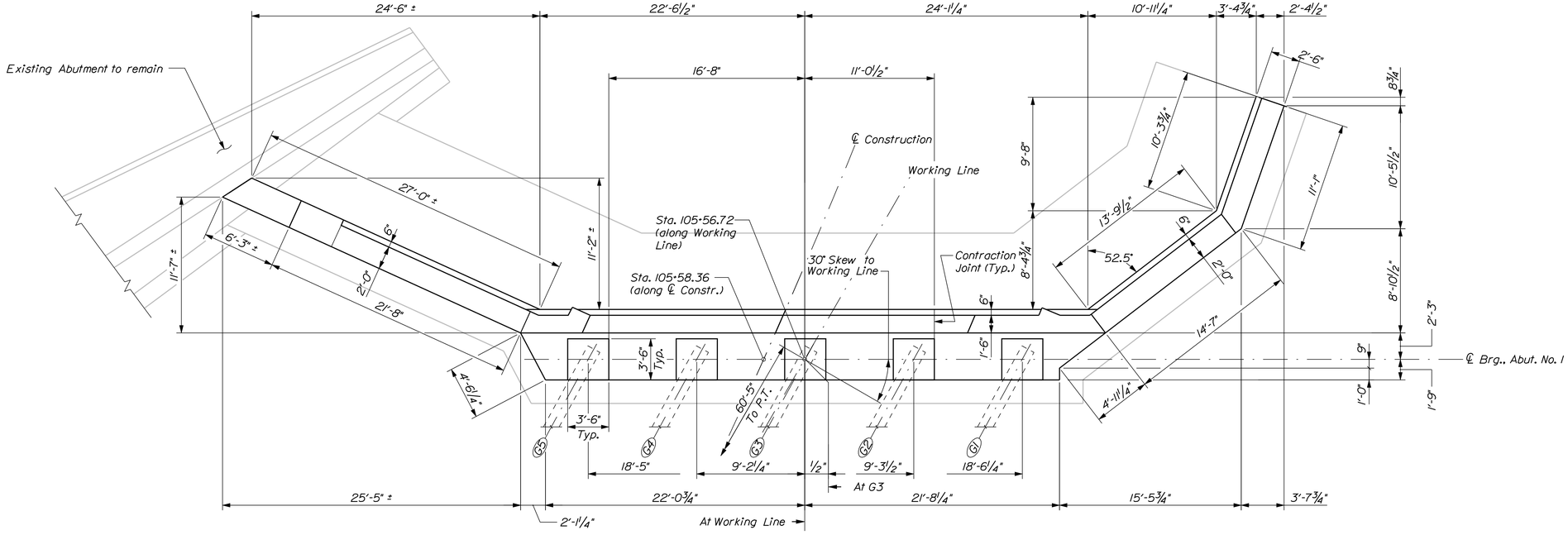

ABUTMENT NO. 1 PLAN

Flow

STATE OF MAINE
DEPARTMENT OF TRANSPORTATION

STP-1928(000)

WIN 19280.00

BRIDGE NO. 3333

BRIDGE PLANS

PROJ. MANAGER	M. Perlin	BY	DATE
DESIGN-DETAILED	D. Eaton	B. Nichols	OCT 2014
CHECKED-REVIEWED	J. Waugh	-----	-----
DESIGN2-DETAILED2	-----	-----	-----
DESIGN3-DETAILED3	-----	-----	-----
REVISIONS 1	-----	-----	-----
REVISIONS 2	-----	-----	-----
REVISIONS 3	-----	-----	-----
REVISIONS 4	-----	-----	-----
FIELD CHANGES	-----	-----	-----

SIGNATURE

P.E. NUMBER

DATE

BAR MILLS BRIDGE
SACO RIVER
HOLLIS & BUXTON YORK COUNTY

ABUTMENT NO. 1 PLAN

SHEET NUMBER

78

OF 148

Filename: ...\078_Bar Mills Abutment_ 1_Plan.dgn Division: BRIDGE Username: dana.damren Date:11/19/2014

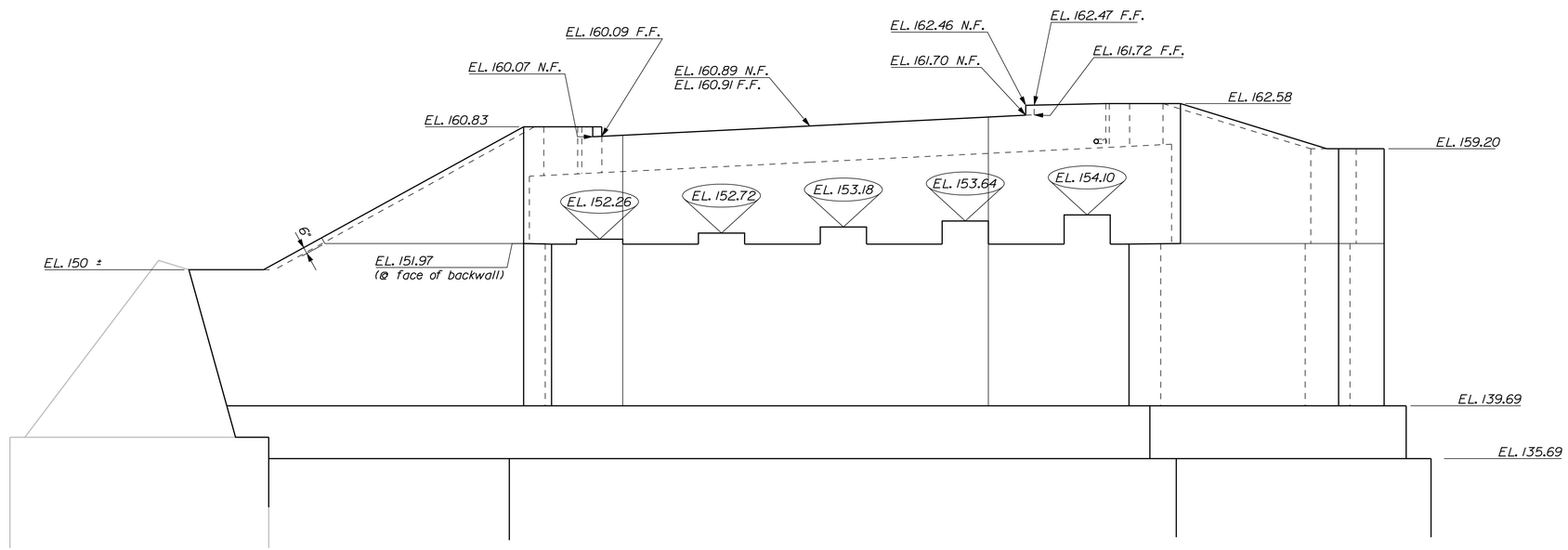

ABUTMENT NO. 1 ELEVATION

Flow

STATE OF MAINE
DEPARTMENT OF TRANSPORTATION

STP-1928(000)

WIN 19280.00

BRIDGE NO. 3333

BRIDGE PLANS

PROJ. MANAGER	M. Parlin	BY	DATE	
DESIGN-DETAILED	D. Eaton	B. Nichols	OCT 2014	SIGNATURE
CHECKED-REVIEWED	J. Waugh	-----	-----	
DESIGN2-DETAILED2	-----	-----	-----	P.E. NUMBER
DESIGN3-DETAILED3	-----	-----	-----	
REVISIONS 1	-----	-----	-----	DATE
REVISIONS 2	-----	-----	-----	
REVISIONS 3	-----	-----	-----	
REVISIONS 4	-----	-----	-----	
FIELD CHANGES	-----	-----	-----	

BAR MILLS BRIDGE
SACO RIVER
HOLLIS & BUXTON YORK COUNTY

ABUT. NO. 1 ELEVATION

SHEET NUMBER

79

OF 148

Filename: ...\079_Bar Mills Abutment_ 1_Elev.dgn Division: BRIDGE Username: dana.damren Date:11/19/2014

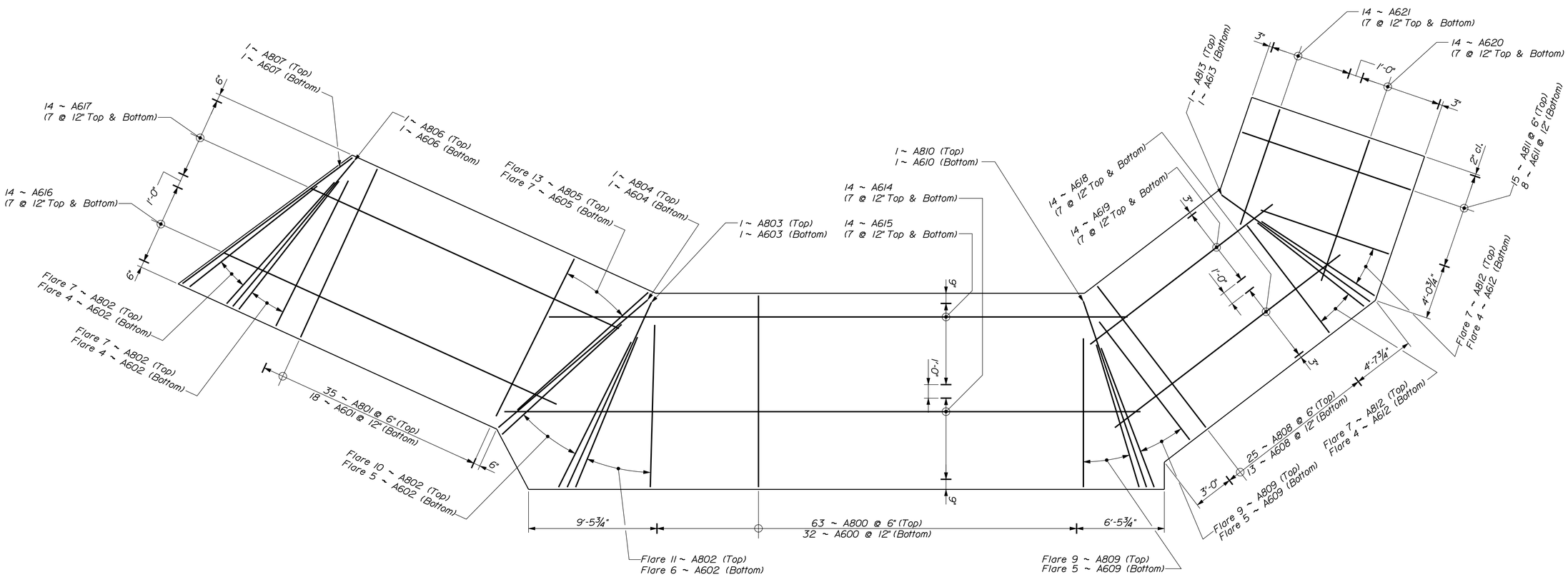

ABUTMENT NO. 1 FOOTING REINFORCING PLAN

STATE OF MAINE
DEPARTMENT OF TRANSPORTATION

STP-1928(000)

WIN 19280.00

BRIDGE NO. 3333

BRIDGE PLANS

PROJ. MANAGER	M. Perlin	BY	DATE
DESIGN-DETAILED	D. Eaton	B. Nichols	OCT 2014
CHECKED-REVIEWED	J. Waugh	-----	-----
DESIGN2-DETAILED2	-----	-----	-----
DESIGN3-DETAILED3	-----	-----	-----
REVISIONS 1	-----	-----	-----
REVISIONS 2	-----	-----	-----
REVISIONS 3	-----	-----	-----
REVISIONS 4	-----	-----	-----
FIELD CHANGES	-----	-----	-----

SIGNATURE

P.E. NUMBER

DATE

BAR MILLS BRIDGE
SACO RIVER
HOLLIS & BUXTON YORK COUNTY

ABUT. NO. 1 FOOTING REINF.

SHEET NUMBER

80

OF 148

Filename: ...\080_Bar Mills Abutment_ 1_FTG-REINF.dgn Division: BRIDGE Username: dana.damren Date:11/19/2014

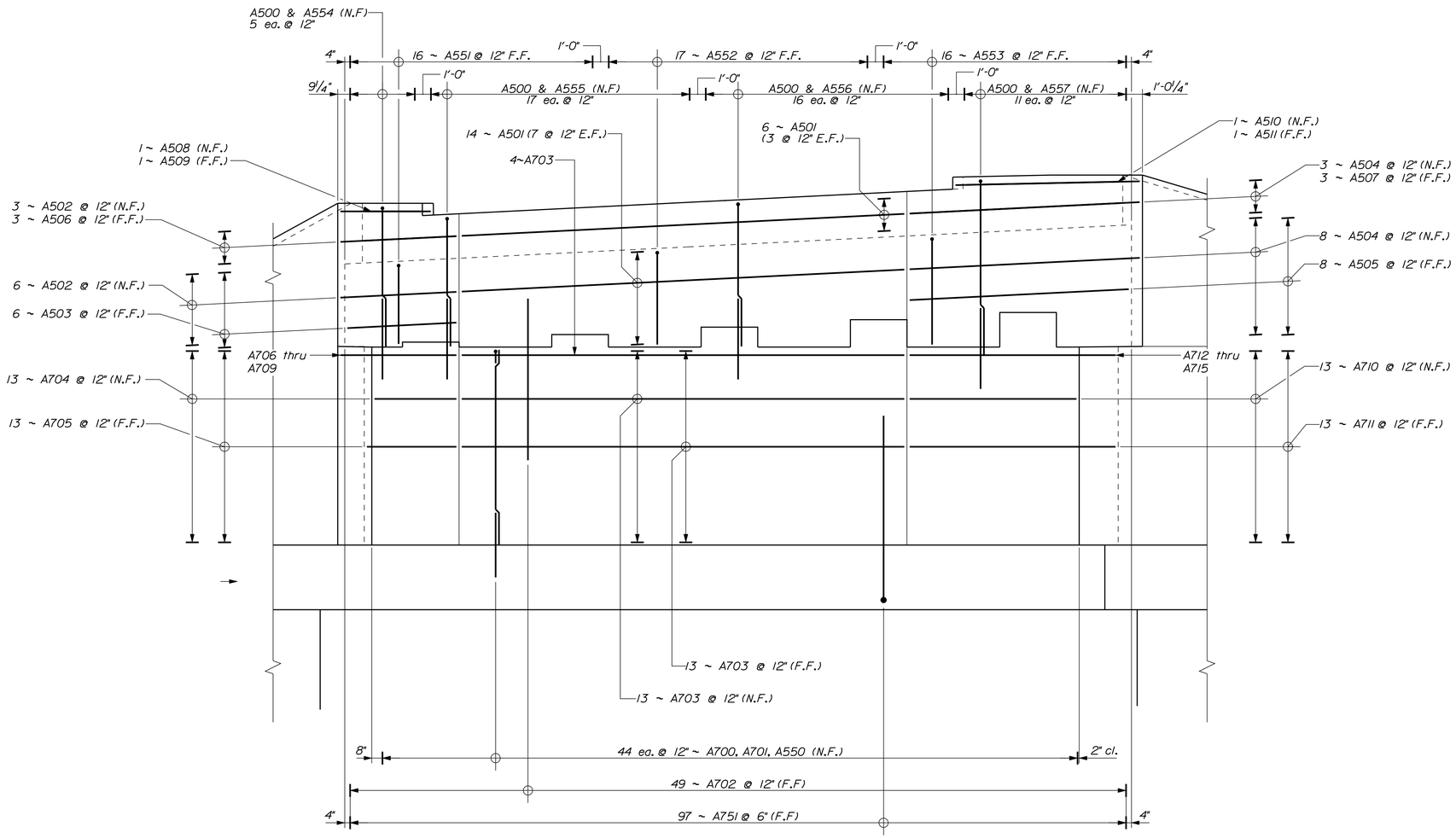

ABUTMENT NO. 1 REINFORCING ELEVATION

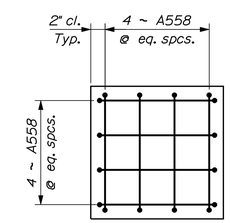

BEARING PEDESTAL
REINFORCING PLAN

LEGEND

N.F. = Near Face
F.F. = Far Face
E.F. = Each Face

STATE OF MAINE
DEPARTMENT OF TRANSPORTATION

STP-1928(000)

WIN 19280.00

BRIDGE NO. 3333

BRIDGE PLANS

		BY	DATE
PROJ. MANAGER	M. Perlin		
DESIGN-DETAILED	D. Eaton	B. Nichols	OCT 2014
CHECKED-REVIEWED	J. Waugh	-----	-----
DESIGN2-DETAILED2	-----	-----	-----
DESIGN3-DETAILED3	-----	-----	-----
REVISIONS 1	-----	-----	-----
REVISIONS 2	-----	-----	-----
REVISIONS 3	-----	-----	-----
REVISIONS 4	-----	-----	-----
FIELD CHANGES	-----	-----	-----

SIGNATURE

P.E. NUMBER

DATE

BAR MILLS BRIDGE
SACO RIVER
HOLLIS & BUXTON YORK COUNTY

ABUT. NO. 1 REINFORCING ELEV.

SHEET NUMBER

81

OF 148

Filename: ...\081_Bar Mills Abutment_ 1_REINF-Elev.dgn Division: BRIDGE Username: dana.damren Date:11/19/2014

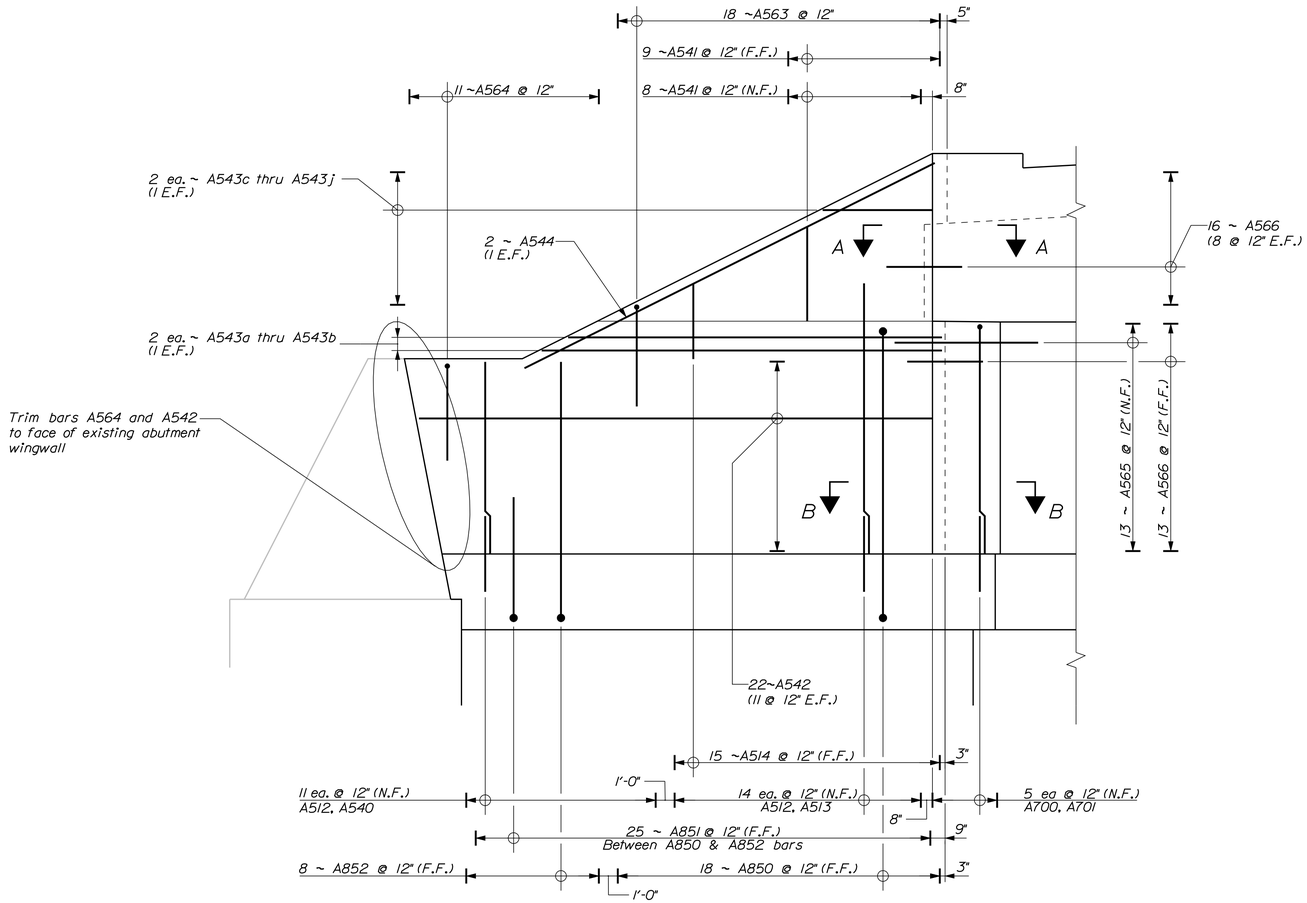

DOWNSTREAM WING ELEVATION

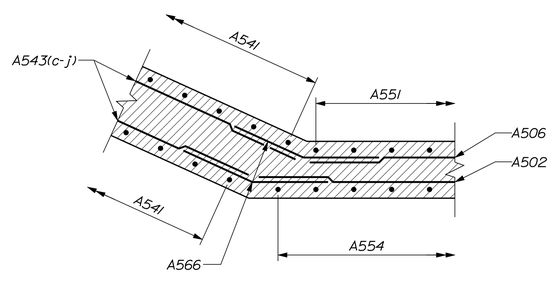

SECTION "A-A"

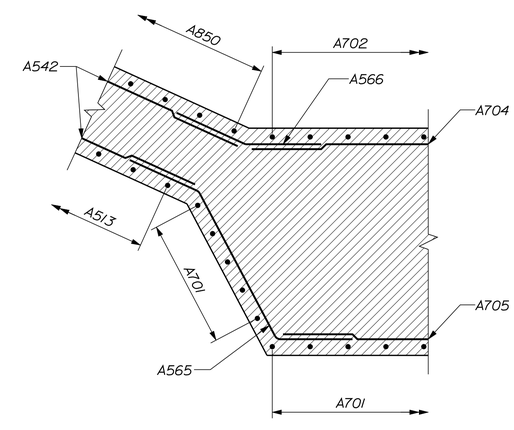

SECTION "B-B"

LEGEND

N.F. = Near Face
F.F. = Far Face
E.F. = Each Face

STATE OF MAINE
DEPARTMENT OF TRANSPORTATION

STP-1928(000)

WIN 19280.00

BRIDGE NO. 3333

BRIDGE PLANS

PROJ. MANAGER	M. Perlin	BY	DATE
DESIGN-DETAILED	D. Eaton	B. Nichols	OCT 2014
CHECKED-REVIEWED	J. Waugh	-----	-----
DESIGN2-DETAILED2	-----	-----	-----
DESIGN3-DETAILED3	-----	-----	-----
REVISIONS 1	-----	-----	-----
REVISIONS 2	-----	-----	-----
REVISIONS 3	-----	-----	-----
REVISIONS 4	-----	-----	-----
FIELD CHANGES	-----	-----	-----

SIGNATURE

P.E. NUMBER

DATE

BAR MILLS BRIDGE
SACO RIVER
HOLLIS & BUXTON YORK COUNTY

ABUT. NO. 1 DOWNSTREAM
WING REINFORCING ELEVATION

SHEET NUMBER

82

OF 148

Filename: ...\082_Bar Mills Abutment_ 1_DSWING-REINFORCING.dgn Date:11/19/2014 Username: dana.damren

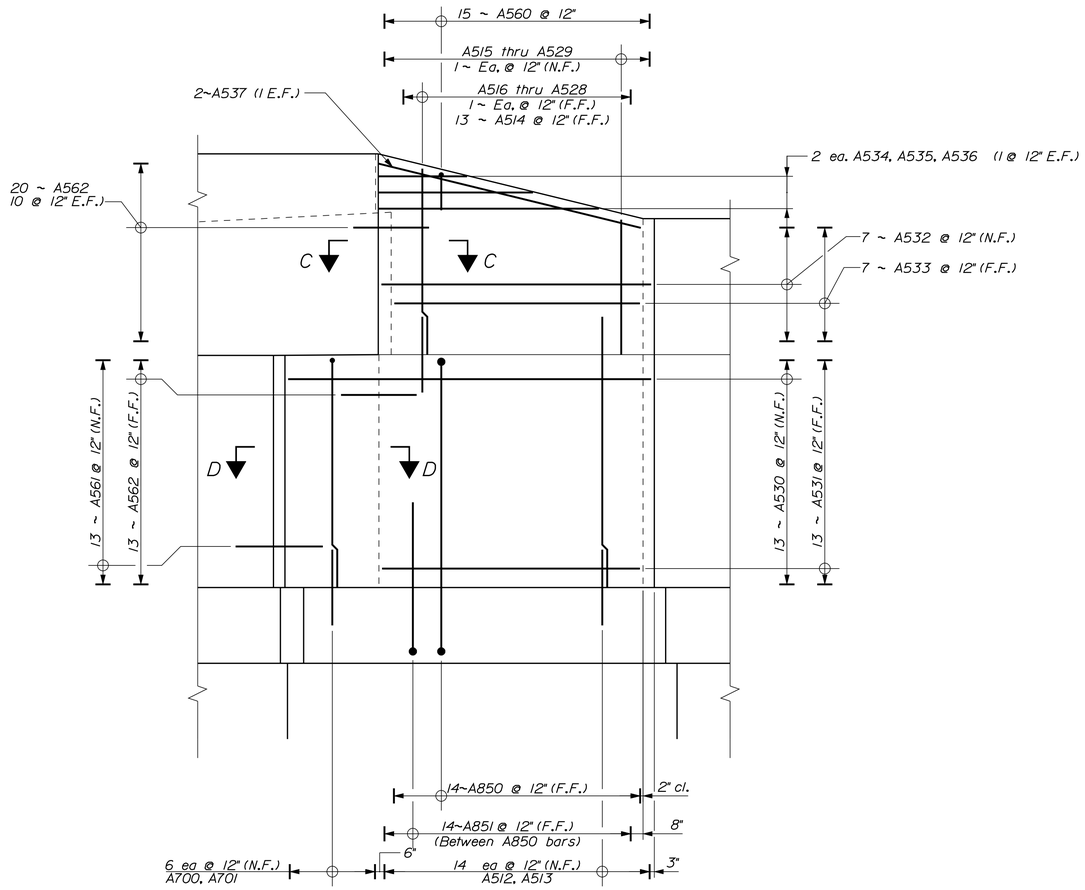

PARTIAL UPSTREAM WING ELEVATION
Portion of wing adjacent to breastwall

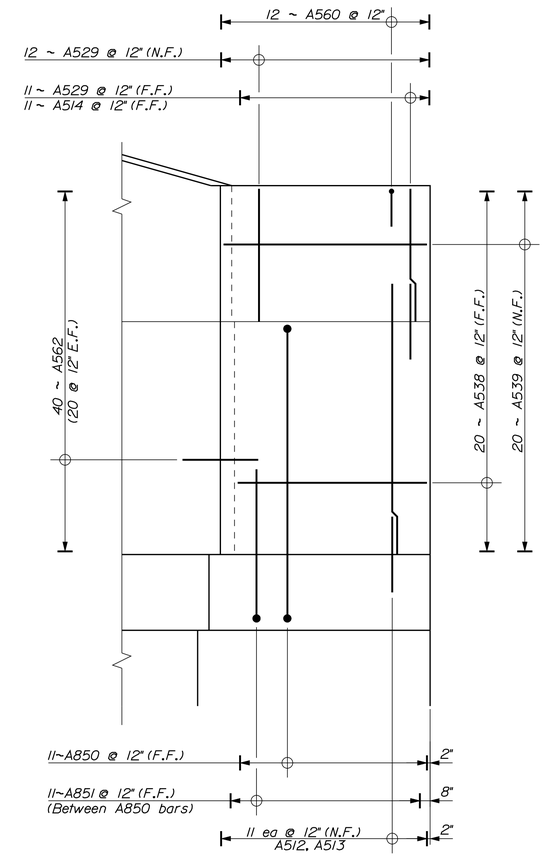

PARTIAL UPSTREAM WING ELEVATION
Portion of wing adjacent to retaining wall

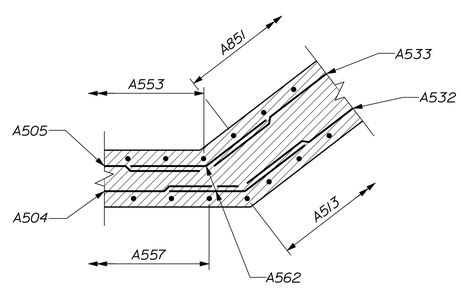

SECTION "C-C"

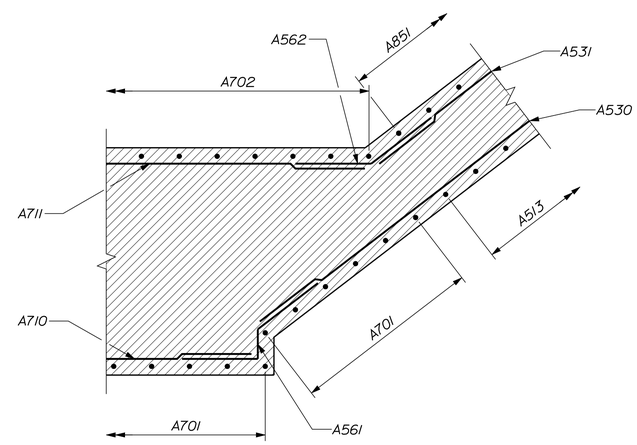

SECTION "D-D"

LEGEND
N.F. = Near Face
F.F. = Far Face
E.F. = Each Face

STATE OF MAINE
DEPARTMENT OF TRANSPORTATION

STP-1928(000)

WIN 19280.00
BRIDGE NO. 3333
BRIDGE PLANS

		BY	DATE
PROJ. MANAGER	M. Parlin		
DESIGN-DETAILED	D. Eaton	B. Nichols	OCT 2014
CHECKED-REVIEWED	J. Waugh		
DESIGN2-DETAILED2			
DESIGN3-DETAILED3			
REVISIONS 1			
REVISIONS 2			
REVISIONS 3			
REVISIONS 4			
FIELD CHANGES			

SIGNATURE
P.E. NUMBER
DATE

BAR MILLS BRIDGE
SACO RIVER
HOLLIS & BUXTON YORK COUNTY

ABUT. NO. 1 UPSTREAM
WING REINFORCING ELEVATION

SHEET NUMBER
83
OF 148

Filename: ...\083_Bar Mills Abutment_ 1_USWING-REINFORCE.dgn
Date:11/19/2014
Username: dana.damren

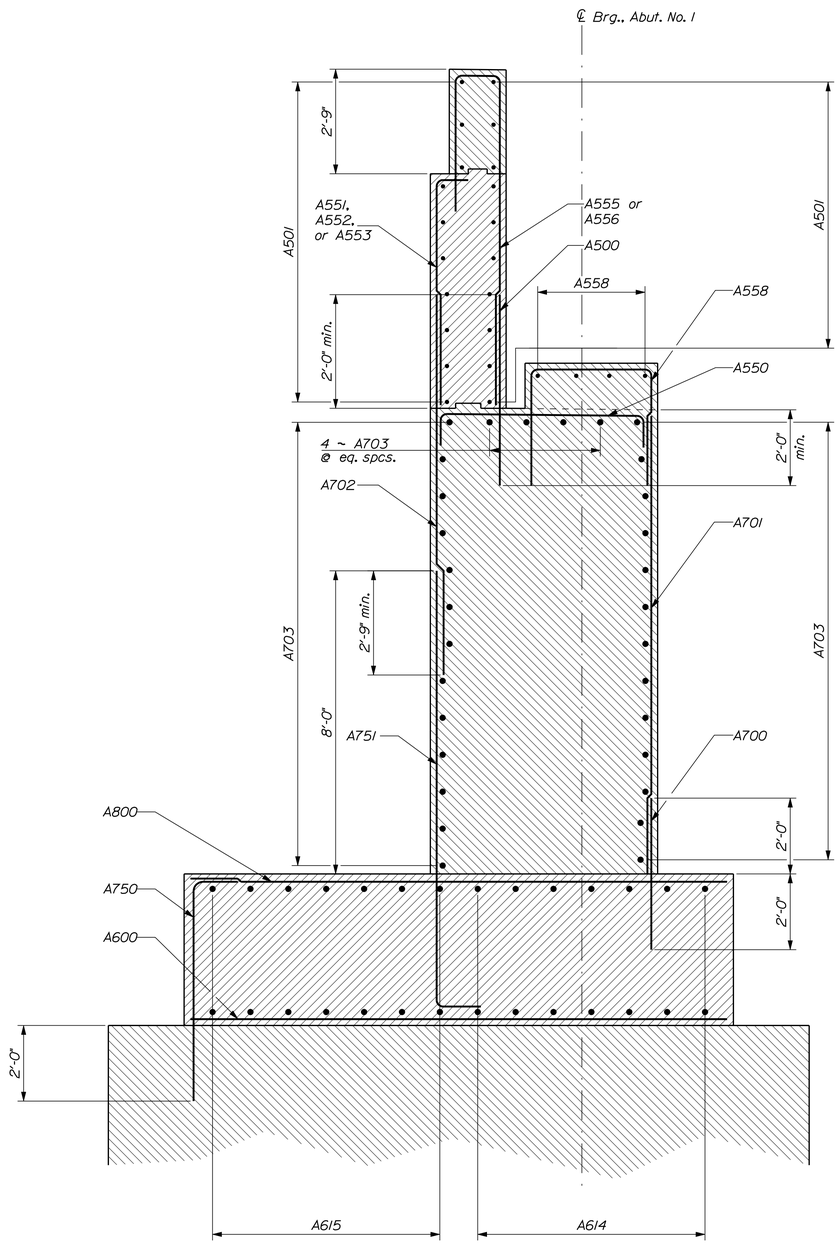

ABUTMENT NO. 1 CENTER BREASTWALL SECTION

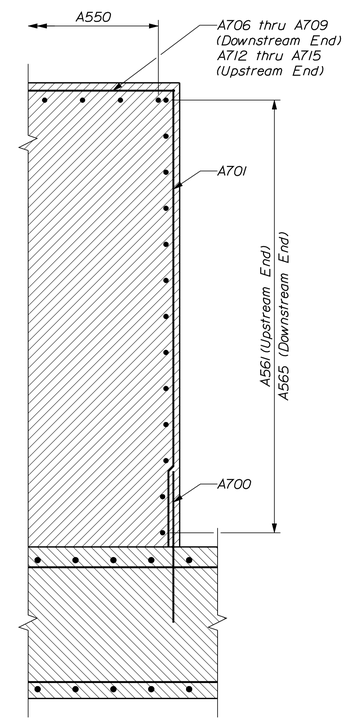

BREASTWALL END SECTION
Section along ℄ Bearing

STATE OF MAINE
DEPARTMENT OF TRANSPORTATION

STP-1928(000)

WIN 19280.00

BRIDGE NO. 3333

BRIDGE PLANS

PROJ. MANAGER	M. Perlin	BY	DATE
DESIGN-DETAILED	D. Eaton	B. Nichols	OCT 2014
CHECKED-REVIEWED	J. Waugh	-----	-----
DESIGN2-DETAILED2	-----	-----	-----
DESIGN3-DETAILED3	-----	-----	-----
REVISIONS 1	-----		-----
REVISIONS 2	-----		-----
REVISIONS 3	-----		-----
REVISIONS 4	-----		-----
FIELD CHANGES	-----		-----

SIGNATURE

P.E. NUMBER

DATE

BAR MILLS BRIDGE
SACO RIVER
HOLLIS & BUXTON YORK COUNTY

ABUT. NO. 1 SECTIONS

SHEET NUMBER

84

OF 148

Filename: ...\084_Bar Mills Abutment_ 1_sections_10.dgn Division: BRIDGE Username: dana.damren Date:11/19/2014

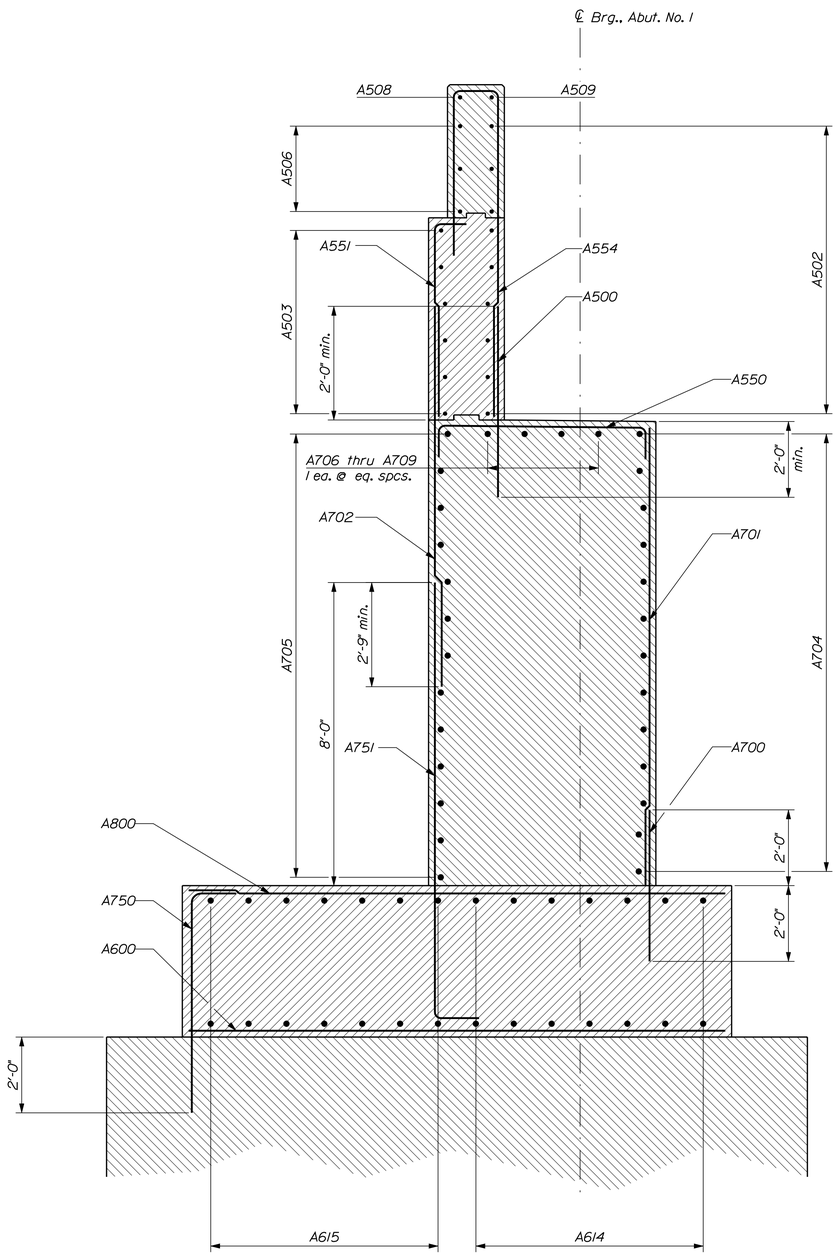

ABUTMENT NO. 1 DOWNSTREAM BREASTWALL
SECTION THROUGH PARAPET

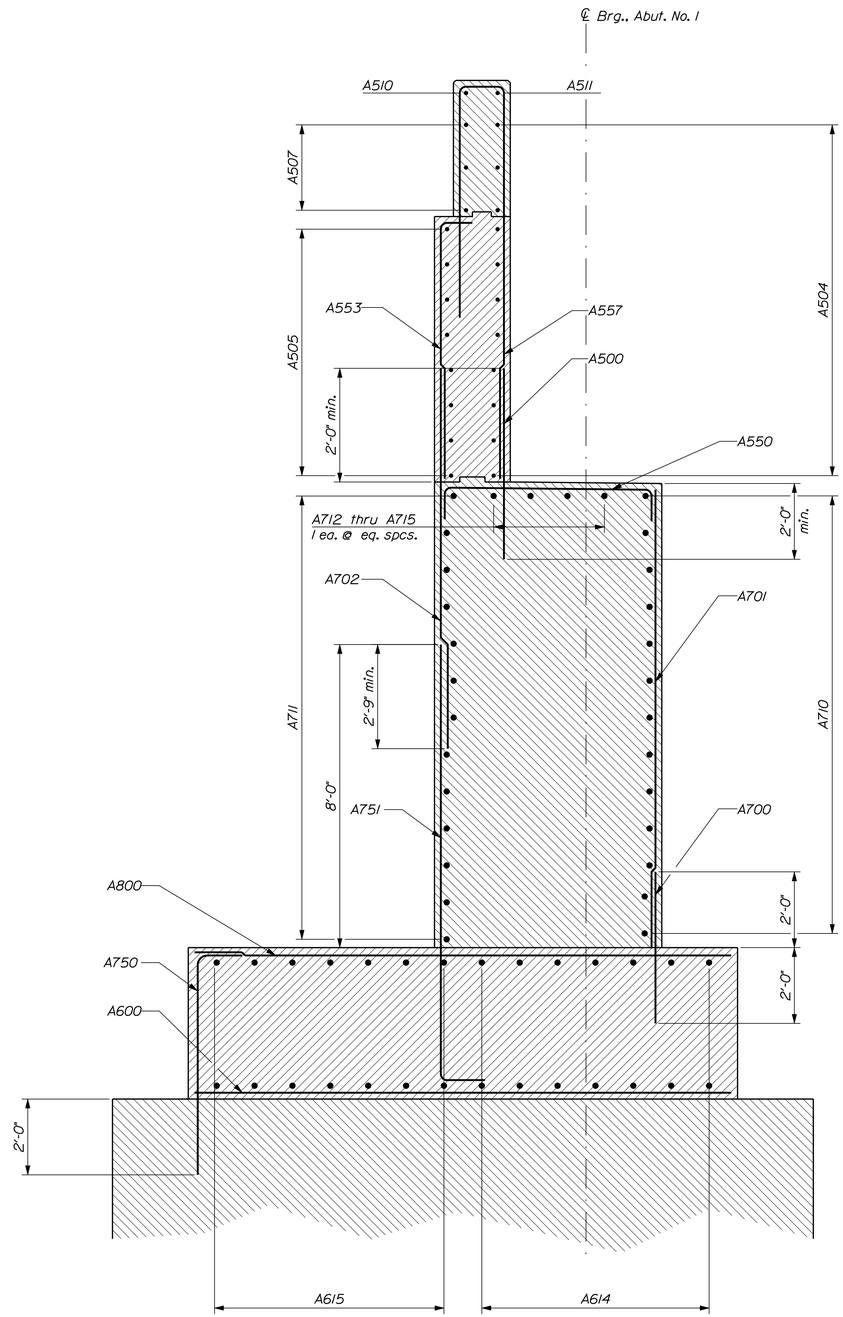

ABUTMENT NO. 1 UPSTREAM BREASTWALL
SECTION THROUGH PARAPET

STATE OF MAINE
DEPARTMENT OF TRANSPORTATION

STP-1928(000)

WIN 19280.00

BRIDGE NO. 3333

BRIDGE PLANS

PROJ. MANAGER	M. Purin	BY	DATE
DESIGN-DETAILED	D. Eaton	B. Nichols	OCT 2014
CHECKED-REVIEWED	J. Waugh	-----	-----
DESIGN2-DETAILED2	-----	-----	-----
DESIGN3-DETAILED3	-----	-----	-----
REVISIONS 1	-----	-----	-----
REVISIONS 2	-----	-----	-----
REVISIONS 3	-----	-----	-----
REVISIONS 4	-----	-----	-----
FIELD CHANGES	-----	-----	-----

SIGNATURE

P.E. NUMBER

DATE

BAR MILLS BRIDGE
SACO RIVER
HOLLIS & BUXTON YORK COUNTY

ABUT. NO. 1 SECTIONS

SHEET NUMBER

85

OF 148

Filename: ...\085_Bar Mills Abutment_1_sections_2.dgn Division: BRIDGE Username: dana.damren Date:11/19/2014

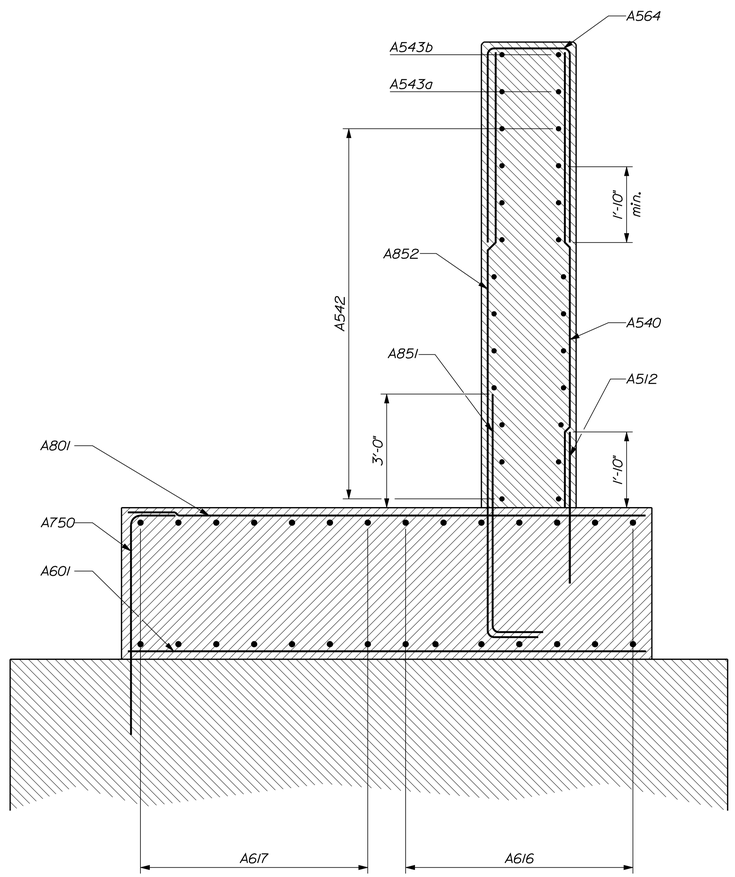

DOWNSTREAM WINGWALL SECTION

Section at end of wing

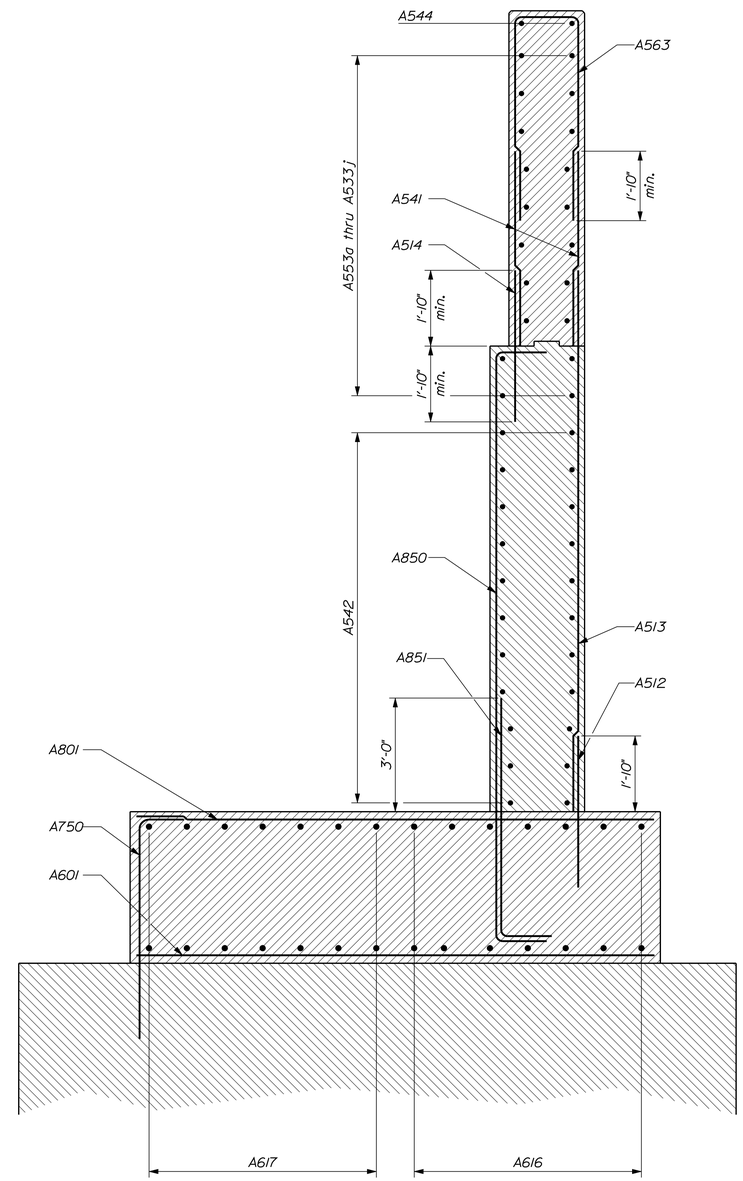

DOWNSTREAM WINGWALL SECTION

Section at parapet

STATE OF MAINE
DEPARTMENT OF TRANSPORTATION

STP-1928(000)

WIN 19280.00

BRIDGE NO. 3333

BRIDGE PLANS

PROJ. MANAGER	M. Perlin	BY	DATE
DESIGN-DETAILED	D. Eaton	B. Nichols	OCT 2014
CHECKED-REVIEWED	J. Waugh	-----	-----
DESIGN2-DETAILED2	-----	-----	-----
DESIGN3-DETAILED3	-----	-----	-----
REVISIONS 1	-----	-----	-----
REVISIONS 2	-----	-----	-----
REVISIONS 3	-----	-----	-----
REVISIONS 4	-----	-----	-----
FIELD CHANGES	-----	-----	-----

SIGNATURE

P.E. NUMBER

DATE

BAR MILLS BRIDGE
SACO RIVER
HOLLIS & BUXTON YORK COUNTY

ABUT. NO. 1
DOWNSTREAM WING SECTIONS

SHEET NUMBER

86

OF 148

Filename: ...\086_Bar Mills Abutment_ 1_sections_3.dgn Division: BRIDGE Username: dana.damren Date:11/19/2014

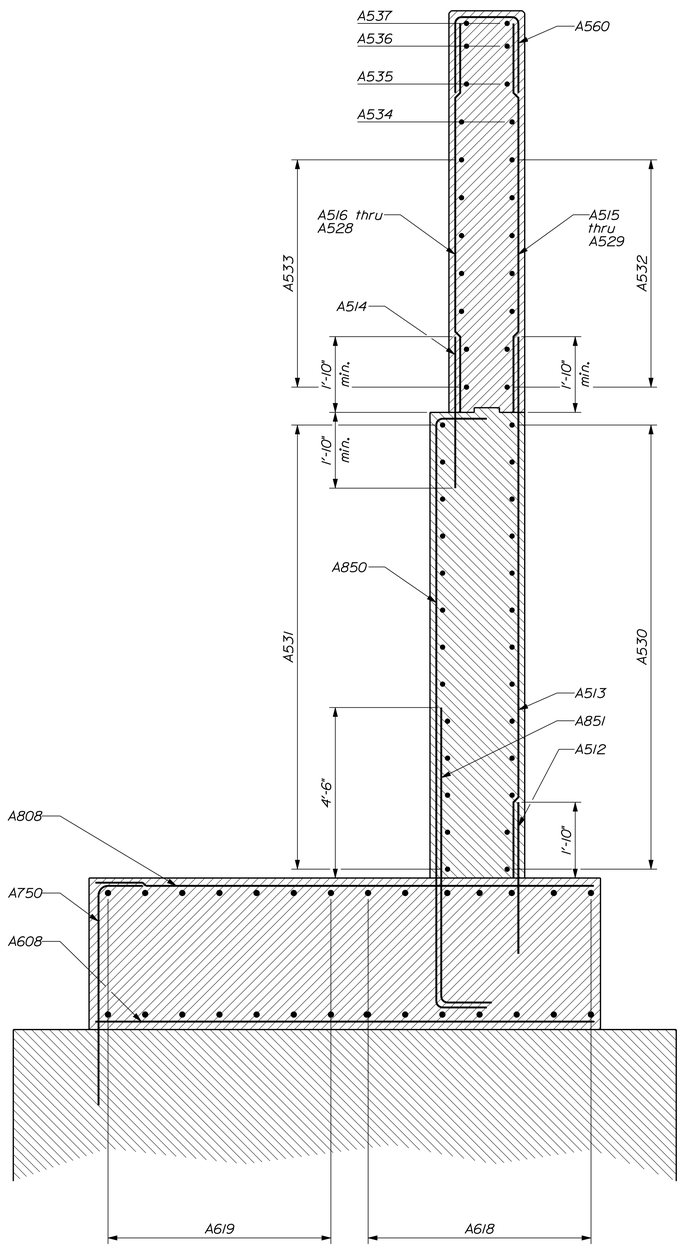

UPSTREAM WINGWALL SECTION
Portion of wing adjacent to breastwall

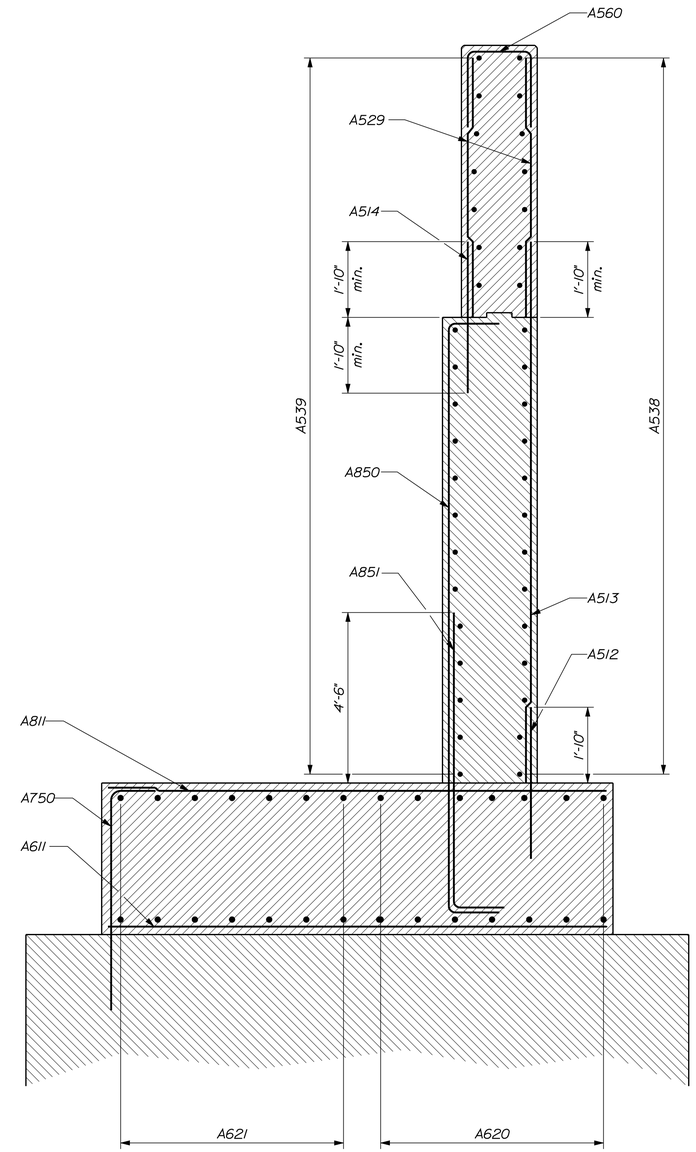

UPSTREAM WINGWALL SECTION
Portion of wing adjacent to retaining wall

STATE OF MAINE
DEPARTMENT OF TRANSPORTATION

STP-1928(000)

WIN 19280.00

BRIDGE NO. 3333

BRIDGE PLANS

PROJ. MANAGER	M. Perlin	BY	DATE
DESIGN-DETAILED	D. Eaton	B. Nichols	OCT 2014
CHECKED-REVIEWED	J. Waugh	-----	-----
DESIGN2-DETAILED2	-----	-----	-----
DESIGN3-DETAILED3	-----	-----	-----
REVISIONS 1	-----	-----	-----
REVISIONS 2	-----	-----	-----
REVISIONS 3	-----	-----	-----
REVISIONS 4	-----	-----	-----
FIELD CHANGES	-----	-----	-----

SIGNATURE

P.E. NUMBER

DATE

BAR MILLS BRIDGE
SACO RIVER
HOLLIS & BUXTON YORK COUNTY

ABUT. NO. 1
UPSTREAM WING SECTIONS

SHEET NUMBER
87
OF 148

Filename: ...\087_Bar Mills Abutment_ 1_sections_4.dgn Division: BRIDGE Username: dana.damren Date:11/19/2014

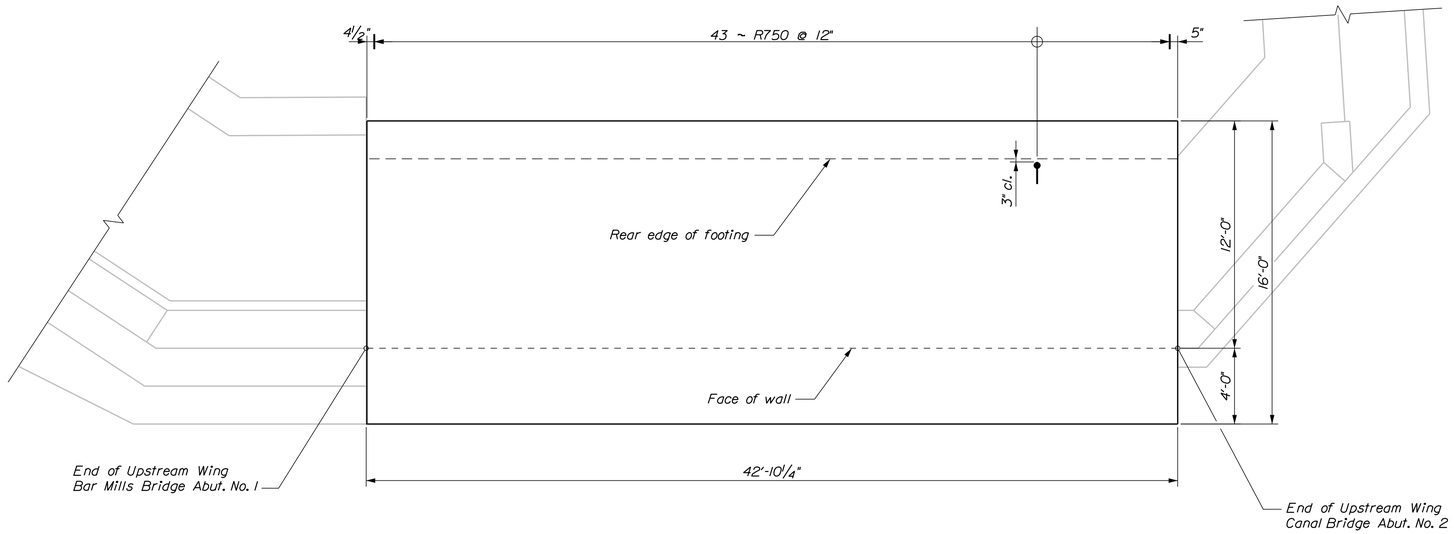

RETAINING WALL SEAL PLAN

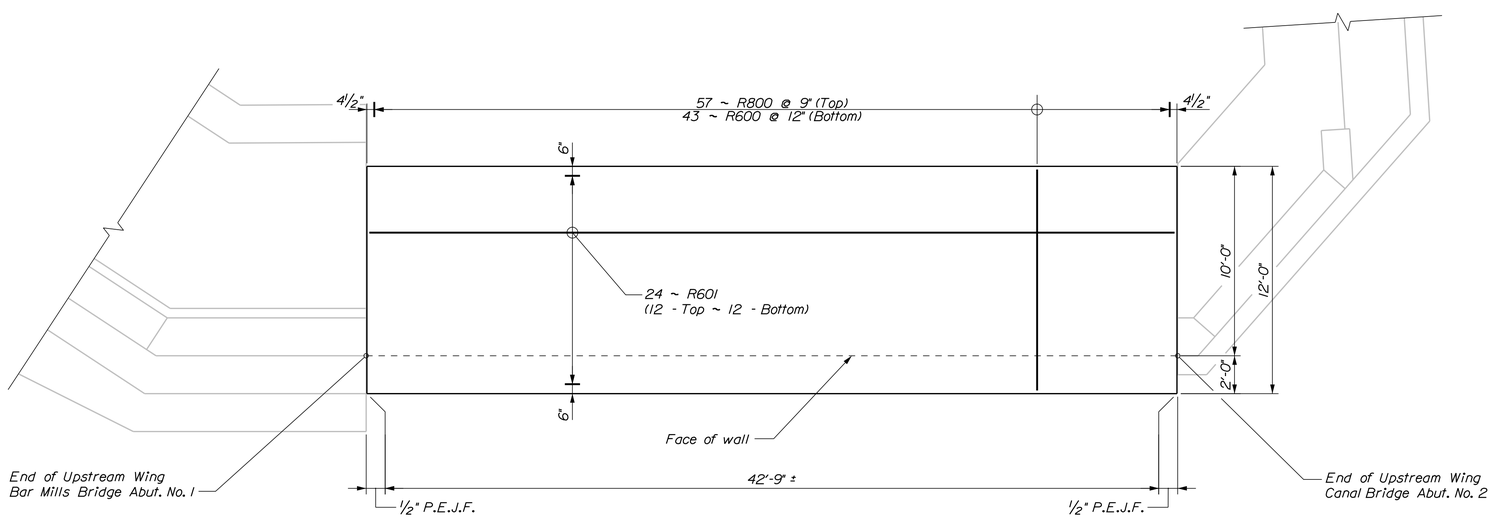

RETAINING WALL FOOTING PLAN

STATE OF MAINE
DEPARTMENT OF TRANSPORTATION

STP-1928(000)

WIN 19280.00

BRIDGE NO. 3333

BRIDGE PLANS

PROJ. MANAGER	M. Parlin	BY	DATE
DESIGN-DETAILED	D. Eaton	B. Nichols	OCT 2014
CHECKED-REVIEWED	J. Waugh	-----	-----
DESIGN2-DETAILED2	------	------	------
DESIGN3-DETAILED3	------	------	------
REVISIONS 1	------	------	------
REVISIONS 2	------	------	------
REVISIONS 3	------	------	------
REVISIONS 4	------	------	------
FIELD CHANGES	------	------	------

SIGNATURE

P.E. NUMBER

DATE

BAR MILLS BRIDGE
SACO RIVER
HOLLIS & BUXTON YORK COUNTY

RETAINING WALL
FOOTING & SEAL PLANS

SHEET NUMBER

88

OF 148

Filename: ...\088_Bar Mills Retaining Wall_1.dgn Division: BRIDGE Username: Brian.J.Nichols Date:11/25/2014

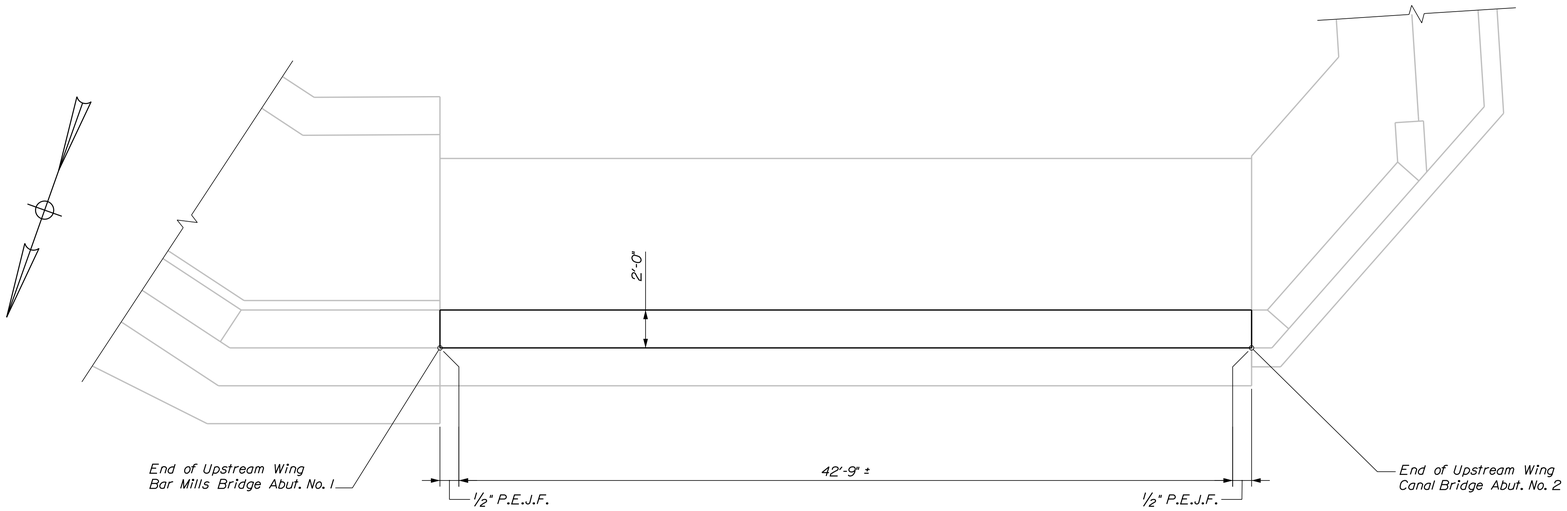

RETAINING WALL PLAN

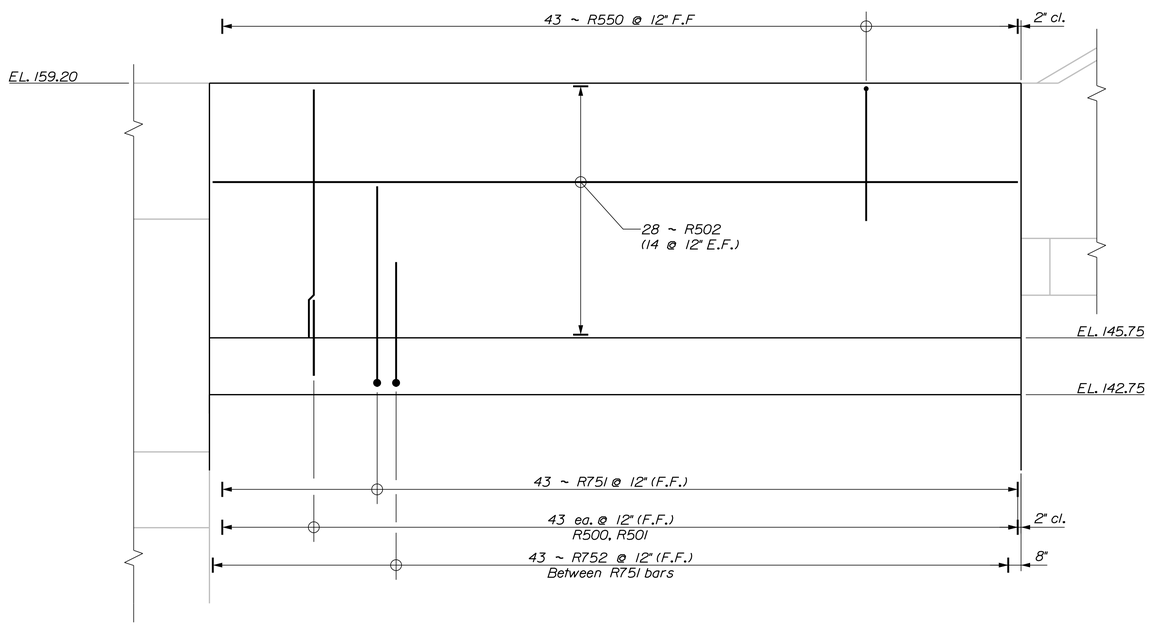

RETAINING WALL ELEVATION

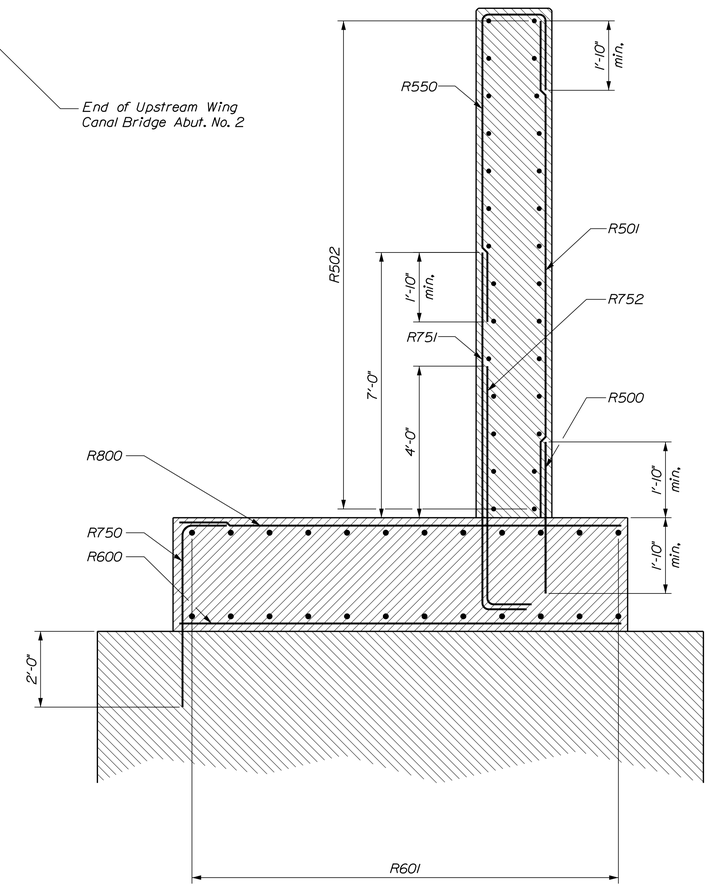

RETAINING WALL SECTION

LEGEND

N.F. = Near Face
F.F. = Far Face
E.F. = Each Face

STATE OF MAINE
DEPARTMENT OF TRANSPORTATION

STP-1928(000)

WIN 19280.00

BRIDGE NO. 3333

BRIDGE PLANS

PROJ. MANAGER	M. Perlin	BY	DATE
DESIGN-DETAILED	D. Eaton	B. Nichols	OCT 2014
CHECKED-REVIEWED	J. Waugh	-----	-----
DESIGN2-DETAILED2	-----	-----	-----
DESIGN3-DETAILED3	-----	-----	-----
REVISIONS 1	-----	-----	-----
REVISIONS 2	-----	-----	-----
REVISIONS 3	-----	-----	-----
REVISIONS 4	-----	-----	-----
FIELD CHANGES	-----	-----	-----

SIGNATURE

P.E. NUMBER

DATE

BAR MILLS BRIDGE
SACO RIVER
HOLLIS & BUXTON YORK COUNTY

RETAINING WALL
PLAN & ELEVATION

SHEET NUMBER

89

OF 148

Filename: ...\089_Bar Mills Retaining Wall_2.dgn Division: BRIDGE Username: Brian.J.Nichols Date:11/25/2014

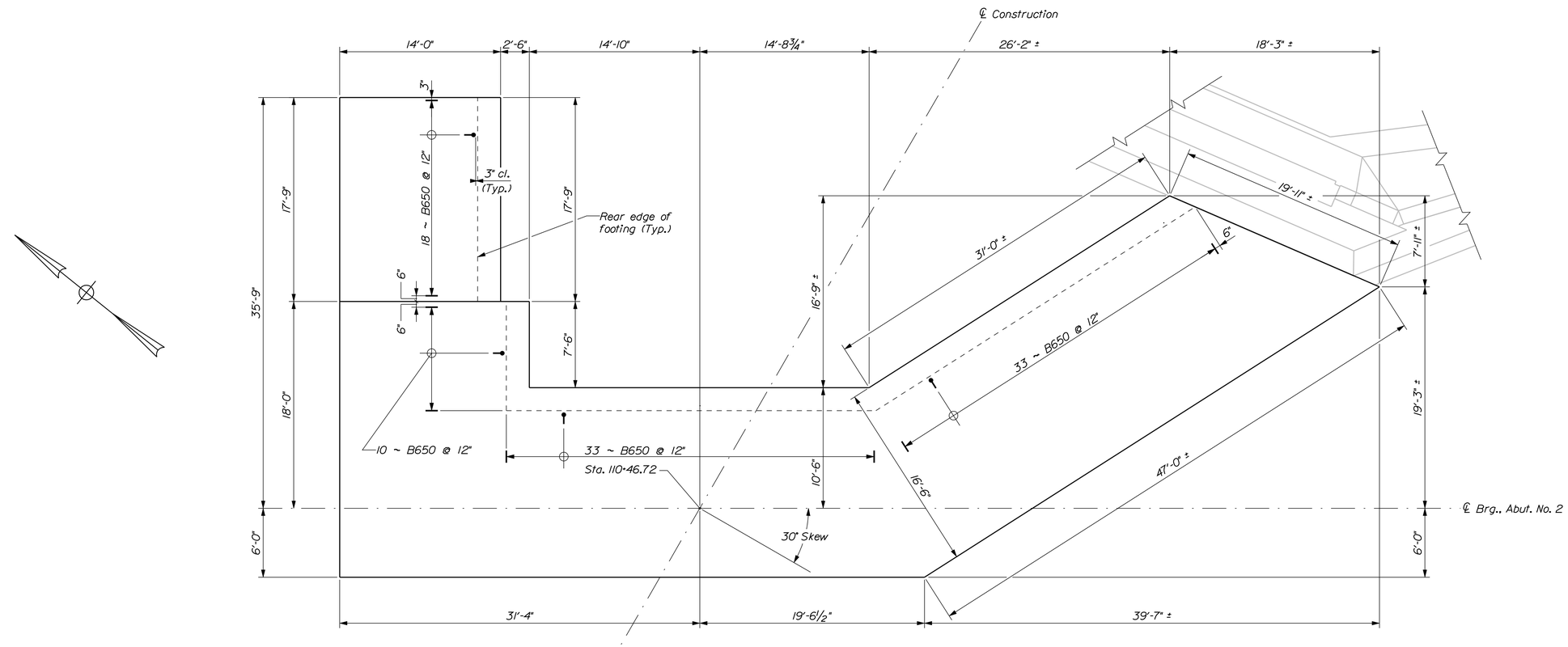

ABUTMENT NO. 2 SEAL PLAN

Flow

STATE OF MAINE
DEPARTMENT OF TRANSPORTATION

STP-1928(000)

WIN 19280.00

BRIDGE NO. 3333

BRIDGE PLANS

PROJ. MANAGER	M. Perlin	BY	DATE
DESIGN-DETAILED	D. Eaton	B. Nichols	Oct. 2014
CHECKED-REVIEWED	J. Waugh	-----	-----
DESIGN2-DETAILED2	-----	-----	-----
DESIGN3-DETAILED3	-----	-----	-----
REVISIONS 1	-----	-----	-----
REVISIONS 2	-----	-----	-----
REVISIONS 3	-----	-----	-----
REVISIONS 4	-----	-----	-----
FIELD CHANGES	-----	-----	-----

SIGNATURE

P.E. NUMBER

DATE

BAR MILLS BRIDGE
SACO RIVER
HOLLIS & BUXTON YORK COUNTY

ABUT. NO. 2 SEAL PLAN

SHEET NUMBER

90

OF 148

Filename: ...\090_Bar Mills Abutment_ 2_SealPlan.dgn Division: BRIDGE Username: dana.damren Date:11/19/2014

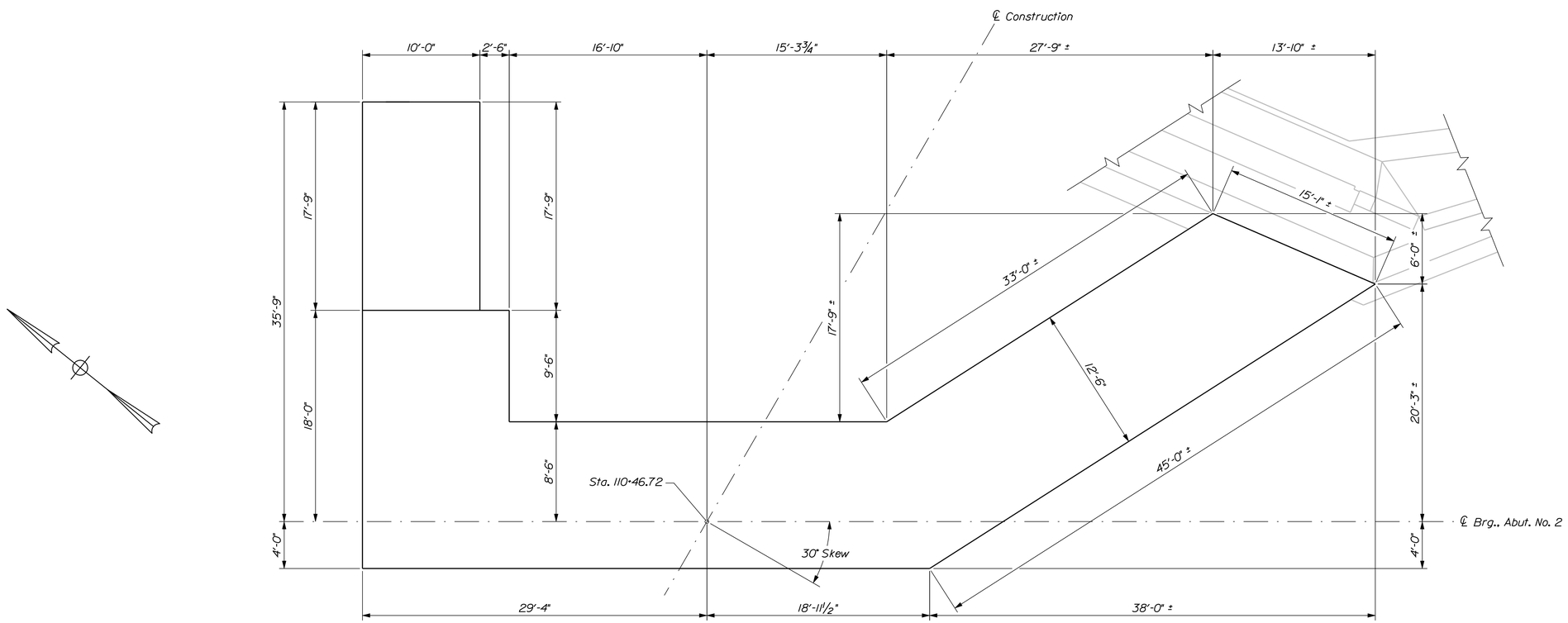

ABUTMENT NO. 2 FOOTING PLAN

Flow

STATE OF MAINE
DEPARTMENT OF TRANSPORTATION

STP-1928(000)

WIN 19280.00

BRIDGE NO. 3333

BRIDGE PLANS

PROJ. MANAGER	M. Perlin	BY	DATE
DESIGN-DETAILED	D. Eaton	B. Nichols	Oct. 2014
CHECKED-REVIEWED	J. Waugh	-----	-----
DESIGN2-DETAILED2	-----	-----	-----
DESIGN3-DETAILED3	-----	-----	-----
REVISIONS 1	-----	-----	-----
REVISIONS 2	-----	-----	-----
REVISIONS 3	-----	-----	-----
REVISIONS 4	-----	-----	-----
FIELD CHANGES	-----	-----	-----

SIGNATURE

P.E. NUMBER

DATE

BAR MILLS BRIDGE
SACO RIVER
HOLLIS & BUXTON YORK COUNTY

ABUT. NO. 2 FOOTING PLAN

SHEET NUMBER

91

OF 148

Filename: ...\091_Bar Mills Abutment_ 2_Ftg Plan.dgn Division: BRIDGE Username: dana.damren Date:11/19/2014

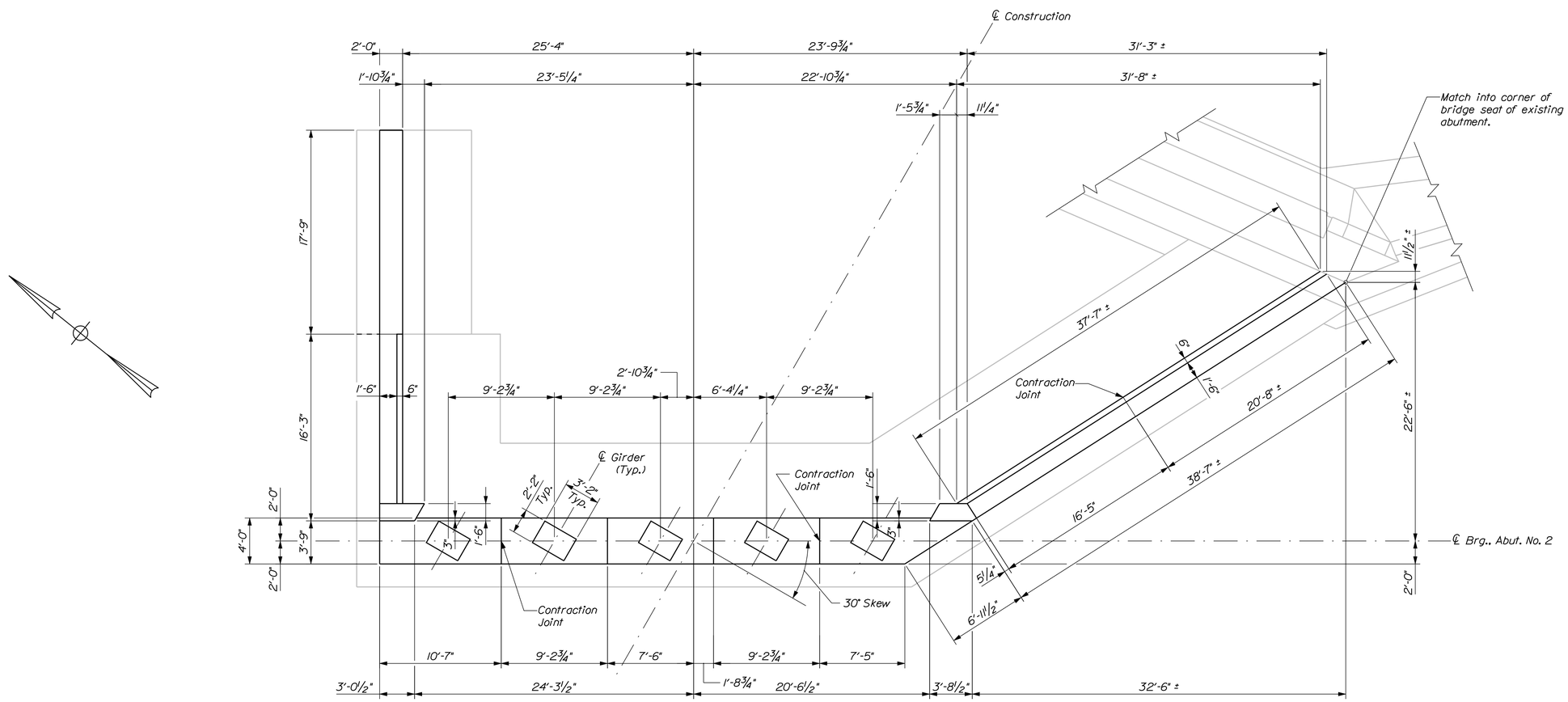

ABUTMENT NO. 2 PLAN

Flow

STATE OF MAINE
DEPARTMENT OF TRANSPORTATION

STP-1928(000)

WIN 19280.00

BRIDGE NO. 3333

BRIDGE PLANS

		BY	DATE
PROJ. MANAGER	M. Perin		
DESIGN-DETAILED	D. Eaton	B. Nichols	Oct. 2014
CHECKED-REVIEWED	J. Waugh	-----	-----
DESIGN2-DETAILED2	-----	-----	-----
DESIGN3-DETAILED3	-----	-----	-----
REVISIONS 1	-----	-----	-----
REVISIONS 2	-----	-----	-----
REVISIONS 3	-----	-----	-----
REVISIONS 4	-----	-----	-----
FIELD CHANGES	-----	-----	-----

SIGNATURE

P.E. NUMBER

DATE

BAR MILLS BRIDGE
SACO RIVER
HOLLIS & BUXTON YORK COUNTY

ABUTMENT NO. 2 PLAN

SHEET NUMBER

92

OF 148

Filename: ...\092_Bar Mills Abutment_ 2_Plan.dgn Division: BRIDGE Username: dana.damren Date:11/19/2014

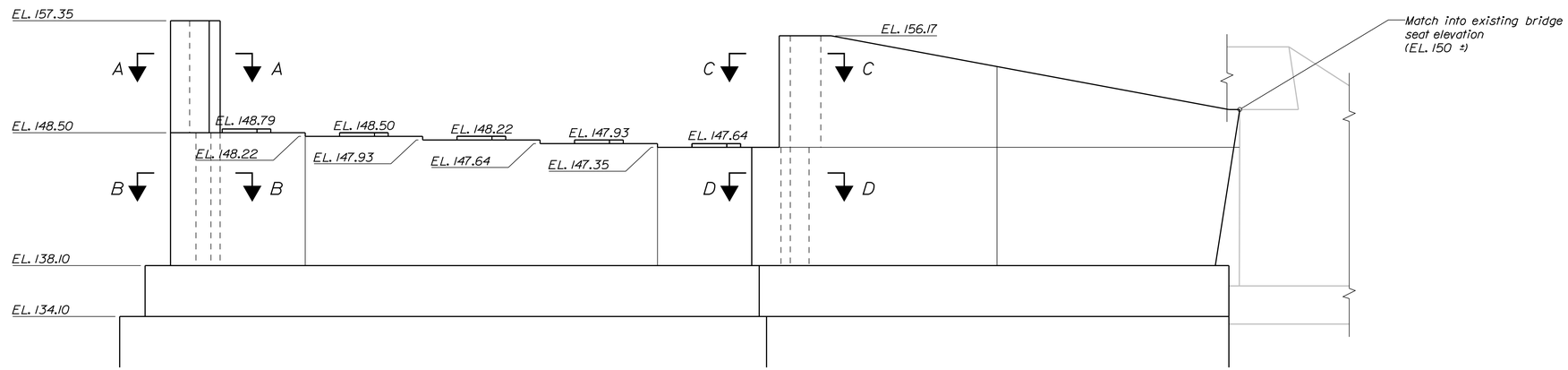

ABUTMENT NO. 2 ELEVATION

Flow →

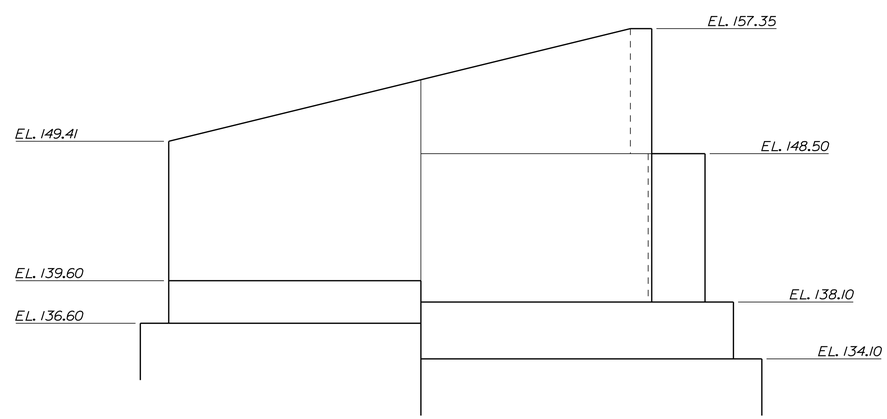

ABUTMENT NO. 2 UPSTREAM WING ELEVATION

STATE OF MAINE
DEPARTMENT OF TRANSPORTATION

STP-1928(000)

WIN 19280.00

BRIDGE NO. 3333

BRIDGE PLANS

PROJ. MANAGER	M. Parlin	BY	DATE
DESIGN-DETAILED	D. Eaton	B. Nichols	Oct. 2014
CHECKED-REVIEWED	J. Waugh	-----	-----
DESIGN2-DETAILED2	-----	-----	-----
DESIGN3-DETAILED3	-----	-----	-----
REVISIONS 1	-----	-----	-----
REVISIONS 2	-----	-----	-----
REVISIONS 3	-----	-----	-----
REVISIONS 4	-----	-----	-----
FIELD CHANGES	-----	-----	-----

SIGNATURE

P.E. NUMBER

DATE

BAR MILLS BRIDGE
SACO RIVER
HOLLIS & BUXTON YORK COUNTY

ABUT. NO. 2 ELEVATION

SHEET NUMBER

93

OF 148

Filename: ...\093_Bar Mills Abutment_2_Elev.dgn Division: BRIDGE Username: dana.damren Date:11/19/2014

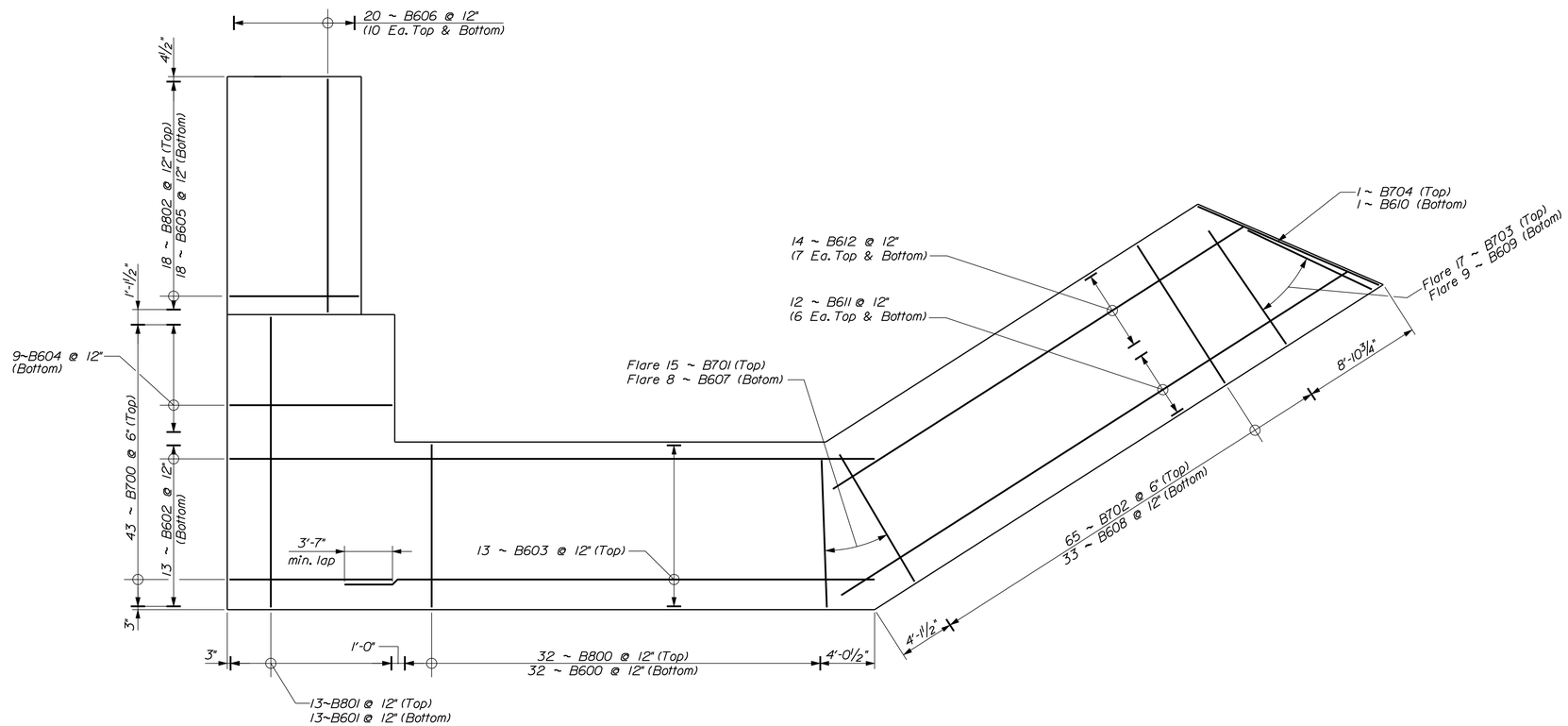

ABUTMENT NO. 2 FOOTING REINFORCING PLAN

Flow →

STATE OF MAINE
DEPARTMENT OF TRANSPORTATION

STP-1928(000)

WIN 19280.00

BRIDGE NO. 3333

BRIDGE PLANS

PROJ. MANAGER	M. Perlin	BY	DATE
DESIGN-DETAILED	D. Eaton	B. Nichols	Oct. 2014
CHECKED-REVIEWED	J. Waugh	-----	-----
DESIGN2-DETAILED2	-----	-----	-----
DESIGN3-DETAILED3	-----	-----	-----
REVISIONS 1	-----	-----	-----
REVISIONS 2	-----	-----	-----
REVISIONS 3	-----	-----	-----
REVISIONS 4	-----	-----	-----
FIELD CHANGES	-----	-----	-----

SIGNATURE

P.E. NUMBER

DATE

BAR MILLS BRIDGE
SACO RIVER
HOLLIS & BUXTON YORK COUNTY

ABUT. NO. 2 FOOTING REINF.

SHEET NUMBER

94

OF 148

Filename: ...\094_Bar Mills Abutment_2_FTG-REINF.dgn Division: BRIDGE Username: dana.damren Date:11/19/2014

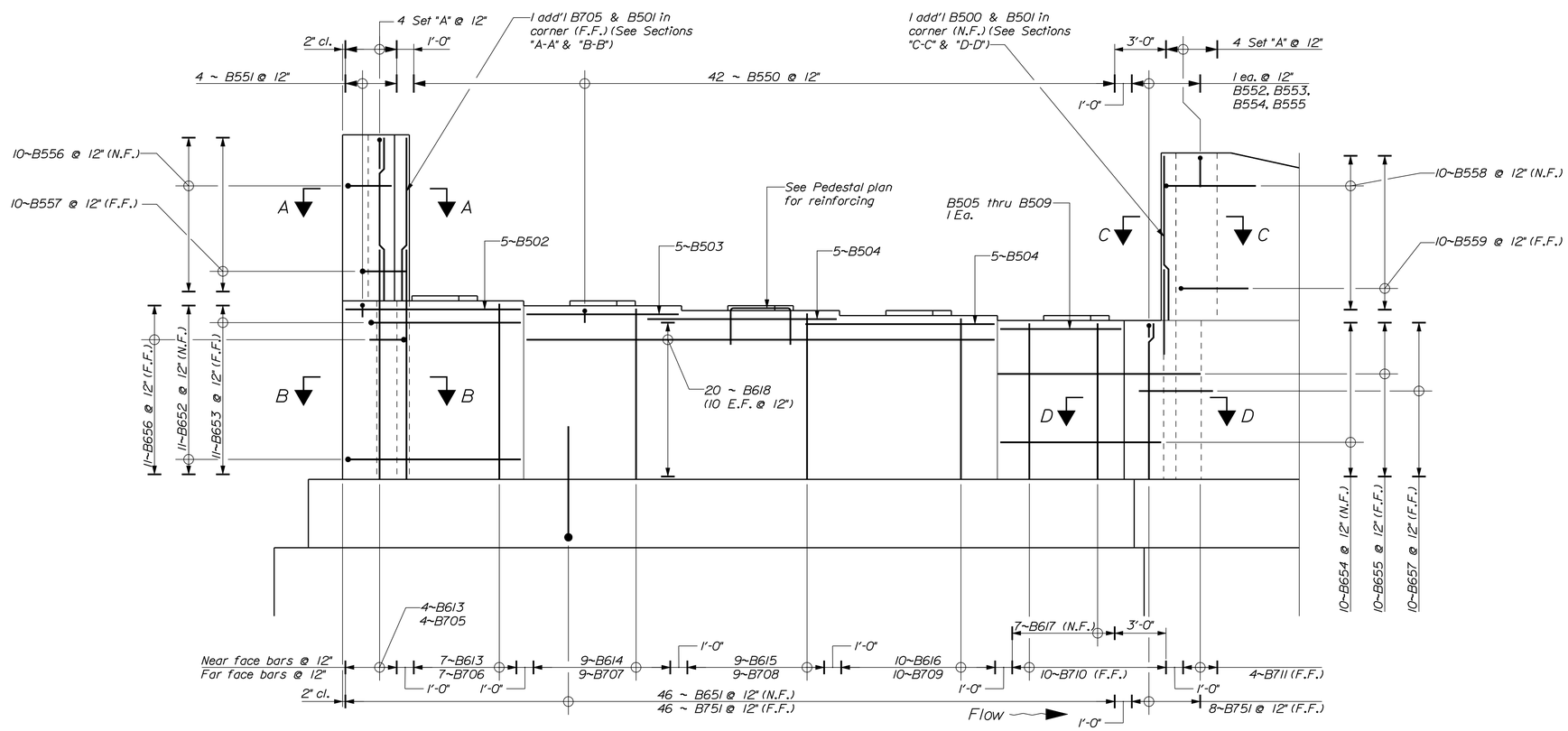

ABUTMENT NO. 2 REINFORCING ELEVATION

Set "A" = 1~B500 (N.F.), 2~B501 (1 E.F.), 1~B570

LEGEND

N.F. = Near Face
F.F. = Far Face
E.F. = Each Face

STATE OF MAINE
DEPARTMENT OF TRANSPORTATION

STP-1928(000)

WIN 19280.00

BRIDGE NO. 3333

BRIDGE PLANS

		BY	DATE
PROJ. MANAGER	M. Perlin		
DESIGN-DETAILED	D. Eaton	B. Nichols	Oct. 2014
CHECKED-REVIEWED	J. Waugh		
DESIGN2-DETAILED2			
DESIGN3-DETAILED3			
REVISIONS 1			
REVISIONS 2			
REVISIONS 3			
REVISIONS 4			
FIELD CHANGES			

SIGNATURE

P.E. NUMBER

DATE

BAR MILLS BRIDGE
SACO RIVER
HOLLIS & BUXTON YORK COUNTY

ABUTMENT NO. 2
REINFORCING ELEVATION

SHEET NUMBER

95

OF 148

Filename: ...\095_Bar Mills Abutment_2_REINF_Elev.dgn Division: BRIDGE Username: dana.damren Date:11/19/2014

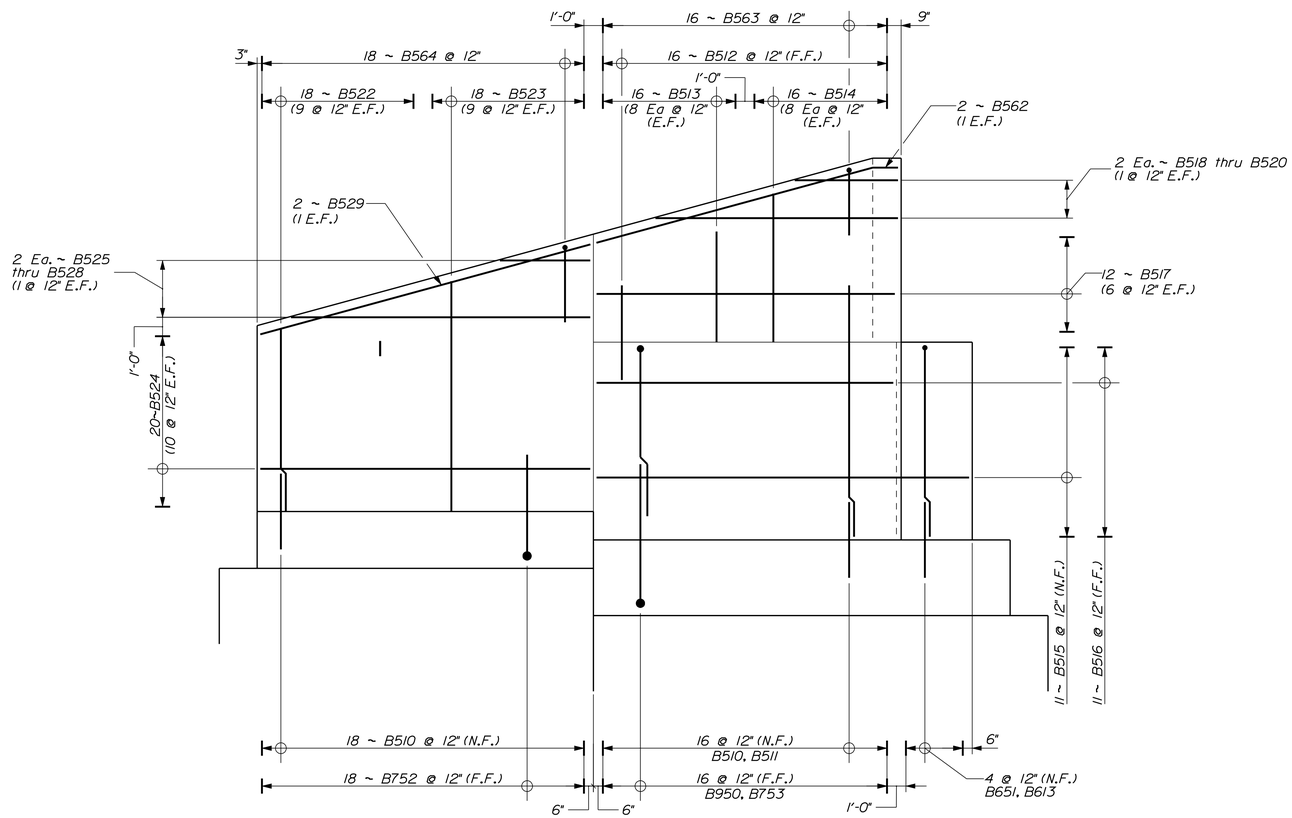

UPSTREAM WING REINFORCING ELEVATION

LEGEND

N.F. = Near Face
F.F. = Far Face
E.F. = Each Face

STATE OF MAINE
DEPARTMENT OF TRANSPORTATION

STP-1928(000)

WIN 19280.00

BRIDGE NO. 3333

BRIDGE PLANS

		BY	DATE
PROJ. MANAGER	M. Parlin		
DESIGN-DETAILED	D. Eaton	B. Nichols	Oct. 2014
CHECKED-REVIEWED	J. Waugh		
DESIGN2-DETAILED2			
DESIGN3-DETAILED3			
REVISIONS 1			
REVISIONS 2			
REVISIONS 3			
REVISIONS 4			
FIELD CHANGES			

SIGNATURE

P.E. NUMBER

DATE

BAR MILLS BRIDGE
SACO RIVER
HOLLIS & BUXTON YORK COUNTY

ABUTMENT NO. 2
UPSTREAM WING ELEVATION

SHEET NUMBER

96

OF 148

Filename: ...\096_Bar Mills Abutment_2_UpstrmWingDetailed.dgn Date:11/19/2014 Username: dana.damren

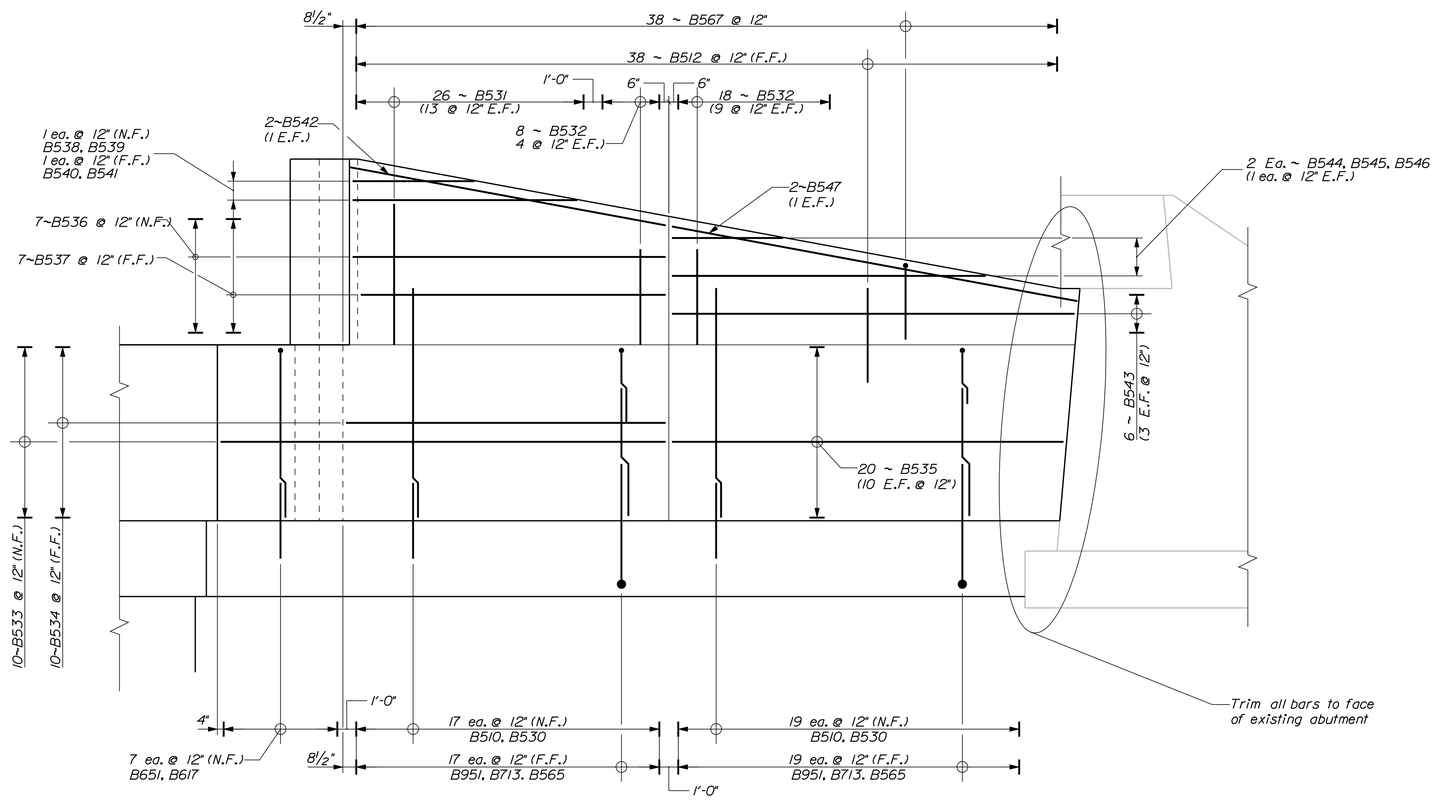

DOWNSTREAM WING REINFORCING ELEVATION

LEGEND

N.F. = Near Face
F.F. = Far Face
E.F. = Each Face

STATE OF MAINE
DEPARTMENT OF TRANSPORTATION

STP-1928(000)

WIN 19280.00

BRIDGE NO. 3333

BRIDGE PLANS

PROJ. MANAGER	M. Perlin	BY	DATE
DESIGN-DETAILED	D. Eaton	B. Nichols	Oct. 2014
CHECKED-REVIEWED	J. Waugh	-----	-----
DESIGN2-DETAILED2	-----	-----	-----
DESIGN3-DETAILED3	-----	-----	-----
REVISIONS 1	-----	-----	-----
REVISIONS 2	-----	-----	-----
REVISIONS 3	-----	-----	-----
REVISIONS 4	-----	-----	-----
FIELD CHANGES	-----	-----	-----

SIGNATURE

P.E. NUMBER

DATE

BAR MILLS BRIDGE
SACO RIVER
HOLLIS & BUXTON YORK COUNTY

ABUTMENT NO. 2
DOWNSTREAM WING ELEV.

SHEET NUMBER

97

OF 148

Filename: ...\097_Bar Mills Abutment_2_DownstrmWingElev.dgn Date:11/19/2014 Username: dana.damren

Filename: ...\098_Bar Mills Abutment_2_Abut_sect.dgn Division: BRIDGE Username: dana.damren Date:11/19/2014

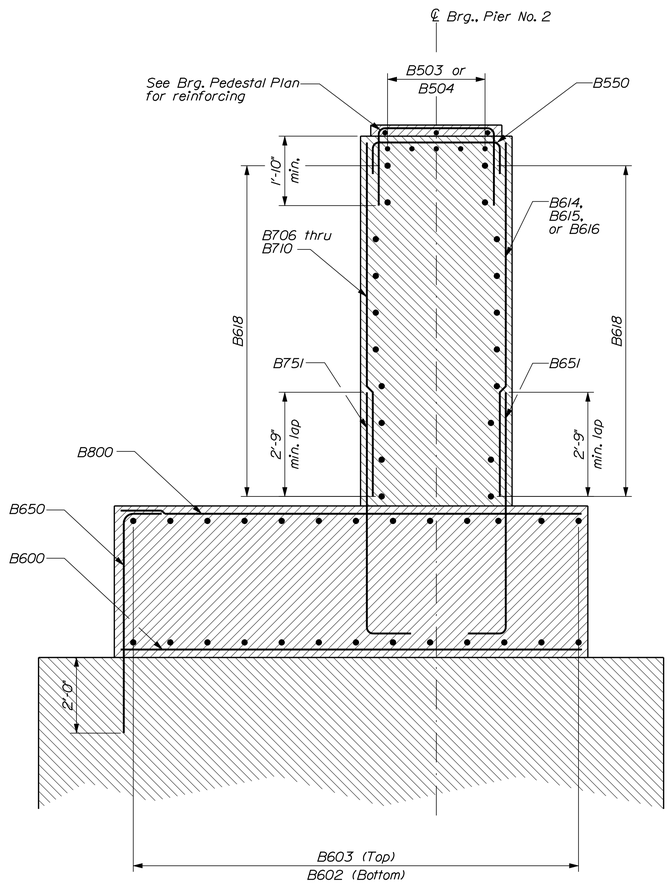

ABUTMENT BREASTWALL SECTION

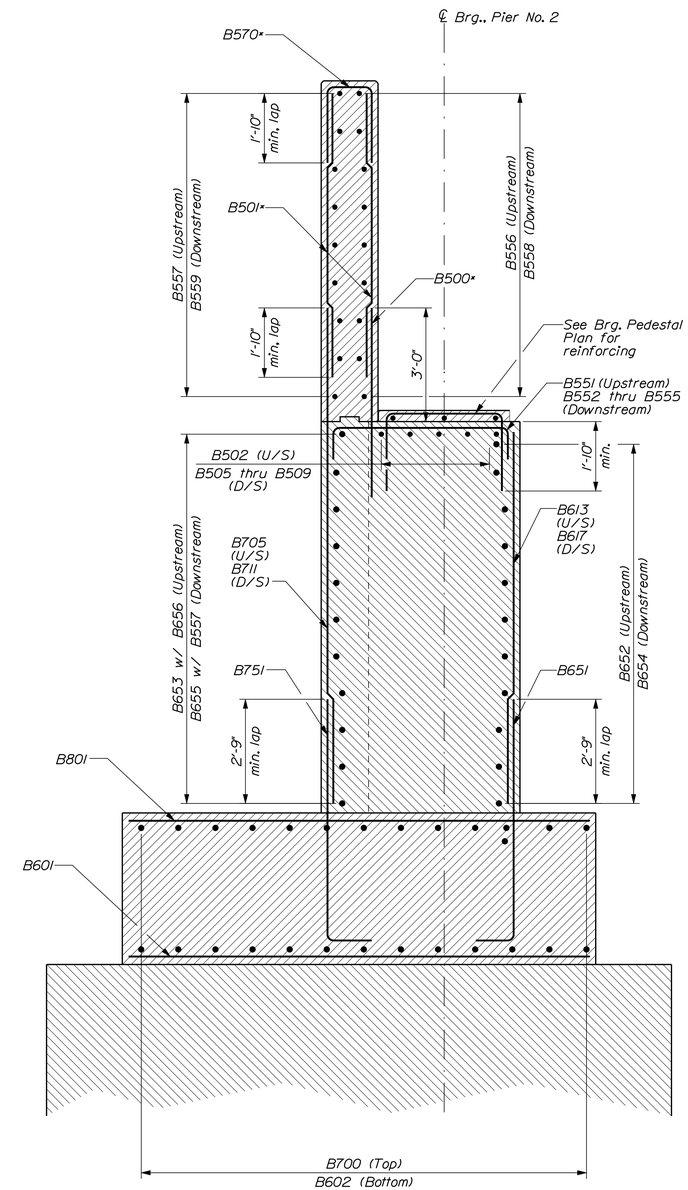

ABUTMENT PARAPET SECTION

* = inc. in Set "A"

STATE OF MAINE
DEPARTMENT OF TRANSPORTATION

STP-1928(000)

WIN 19280.00

BRIDGE NO. 3333

BRIDGE PLANS

PROJ. MANAGER	M. Perlin	BY	DATE
DESIGN-DETAILED	D. Eaton	B. Nichols	Oct. 2014
CHECKED-REVIEWED	J. Waugh	-----	-----
DESIGN2-DETAILED2	-----	-----	-----
DESIGN3-DETAILED3	-----	-----	-----
REVISIONS 1	-----	-----	-----
REVISIONS 2	-----	-----	-----
REVISIONS 3	-----	-----	-----
REVISIONS 4	-----	-----	-----
FIELD CHANGES	-----	-----	-----

SIGNATURE

P.E. NUMBER

DATE

BAR MILLS BRIDGE
SACO RIVER
HOLLIS & BUXTON YORK COUNTY

ABUTMENT NO. 2 SECTIONS

SHEET NUMBER

98

OF 148

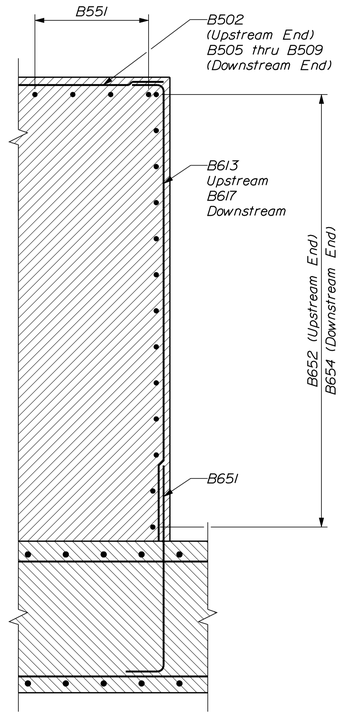

BREASTWALL END SECTION
Section along ℄ Bearing

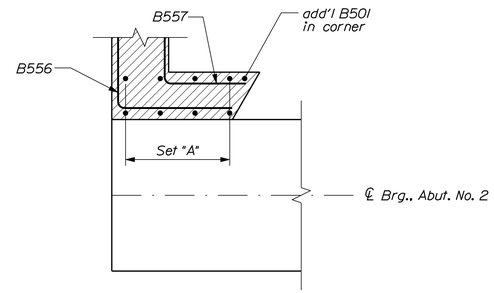

SECTION "A-A"

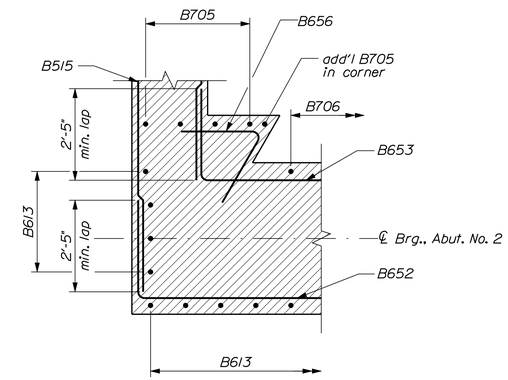

SECTION "B-B"

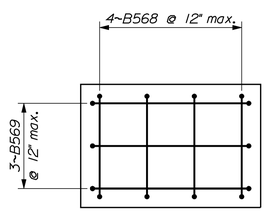

BEARING PEDESTAL PLAN

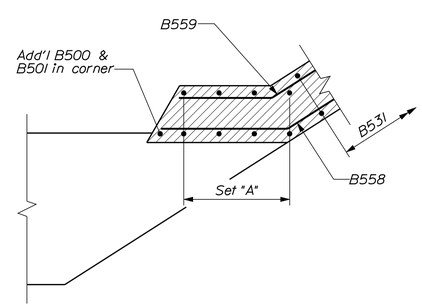

SECTION "C-C"

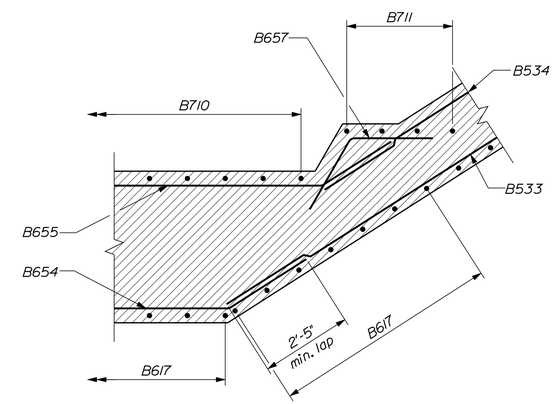

SECTION "D-D"

STATE OF MAINE
DEPARTMENT OF TRANSPORTATION

STP-1928(000)

WIN 19280.00

BRIDGE NO. 3333

BRIDGE PLANS

PROJ. MANAGER	M. Parlin	BY	DATE
DESIGN-DETAILED	D. Eaton	B. Nichols	Oct. 2014
CHECKED-REVIEWED	J. Waugh	------	------
DESIGN2-DETAILED2	------	------	------
DESIGN3-DETAILED3	------	------	------
REVISIONS 1	------	------	------
REVISIONS 2	------	------	------
REVISIONS 3	------	------	------
REVISIONS 4	------	------	------
FIELD CHANGES	------	------	------

SIGNATURE

P.E. NUMBER

DATE

BAR MILLS BRIDGE
SACO RIVER
HOLLIS & BUXTON YORK COUNTY

ABUTMENT NO. 2 SECTIONS

SHEET NUMBER
99
OF 148

Filename: ...\099_Bar Mills Abutment_2_Abut_sect_Division: BRIDGE Username: dana.damren Date:11/19/2014

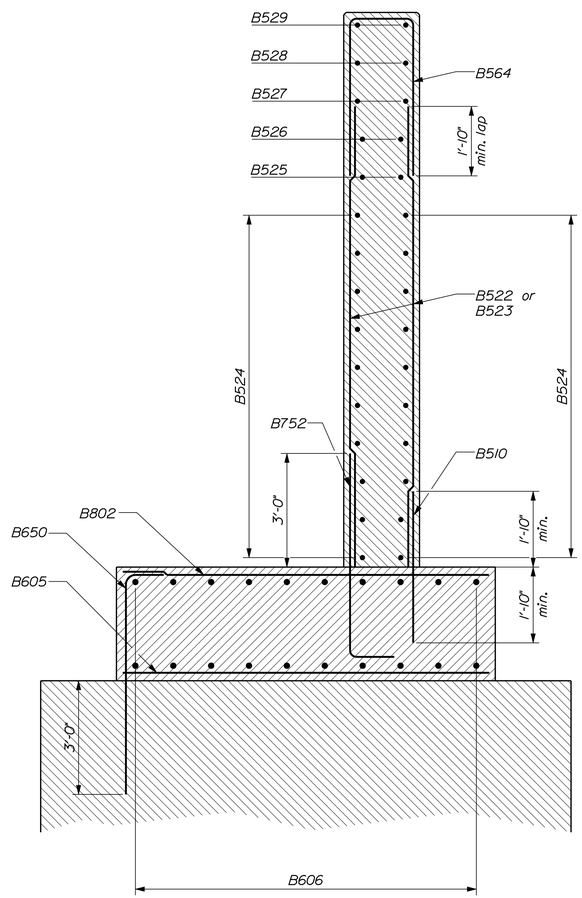

UPSTREAM WING SECTION
End portion of wing

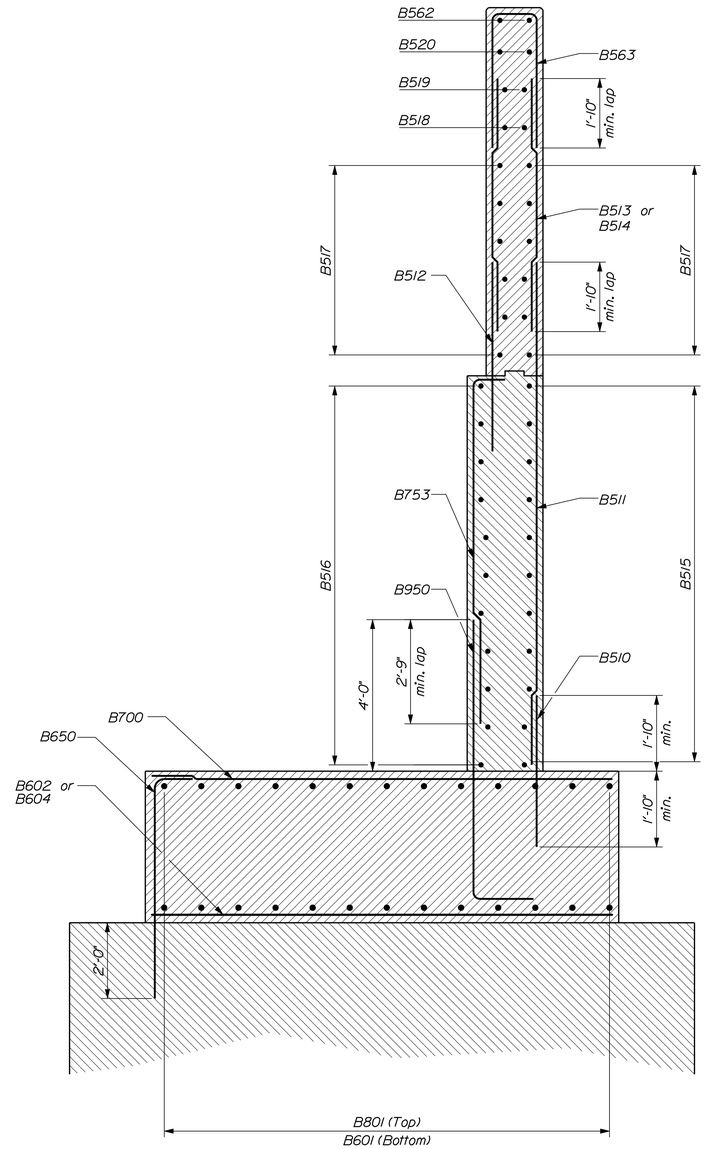

UPSTREAM WING SECTION
Portion of wing adjacent to breastwall

STATE OF MAINE
DEPARTMENT OF TRANSPORTATION

STP-1928(000)

WIN 19280.00

BRIDGE NO. 3333

BRIDGE PLANS

		BY	DATE
PROJ. MANAGER	M. Perlin		
DESIGN-DETAILED	D. Eaton	B. Nichols	Oct. 2014
CHECKED-REVIEWED	J. Waugh	-----	-----
DESIGN2-DETAILED2	-----	-----	-----
DESIGN3-DETAILED3	-----	-----	-----
REVISIONS 1	-----	-----	-----
REVISIONS 2	-----	-----	-----
REVISIONS 3	-----	-----	-----
REVISIONS 4	-----	-----	-----
FIELD CHANGES	-----	-----	-----

SIGNATURE

P.E. NUMBER

DATE

BAR MILLS BRIDGE
SACO RIVER
HOLLIS & BUXTON YORK COUNTY

ABUTMENT NO. 2
UPSTREAM WING SECTIONS

SHEET NUMBER
100
OF 148

Filename: ...\100_Bar Mills Abutment_2_UpstrnWing_Details.dgn Design BRIDGE Username: dana.damren Date:11/19/2014

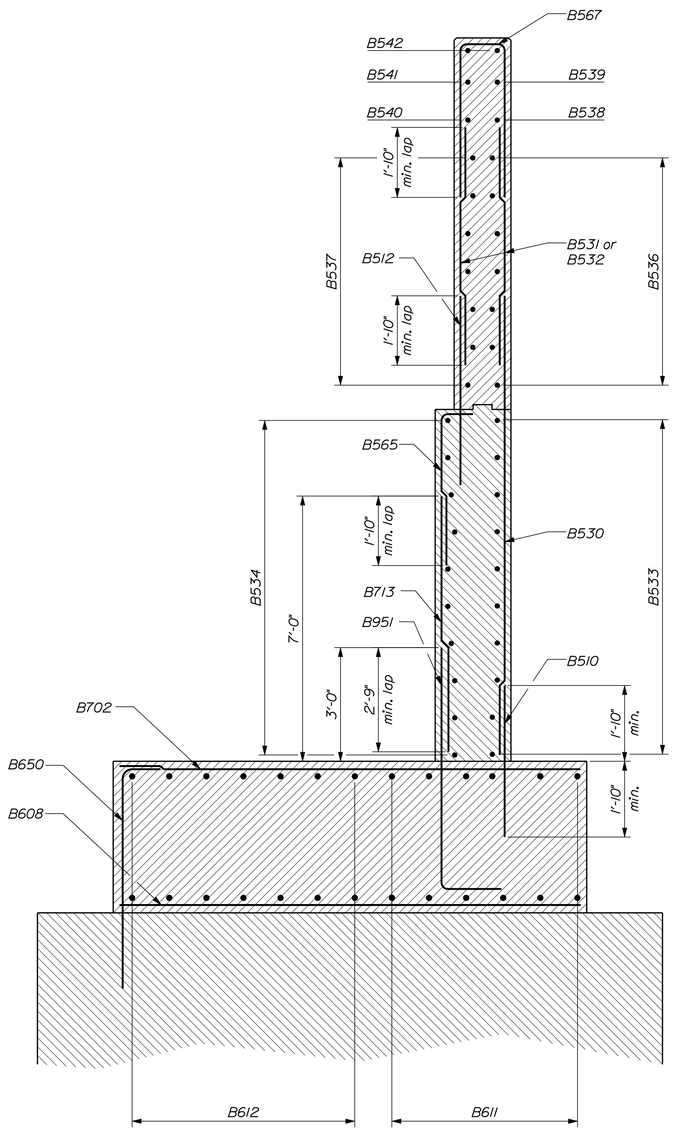

DOWMNSTREAM WING SECTION
Portion of wing adjacent to breastwall

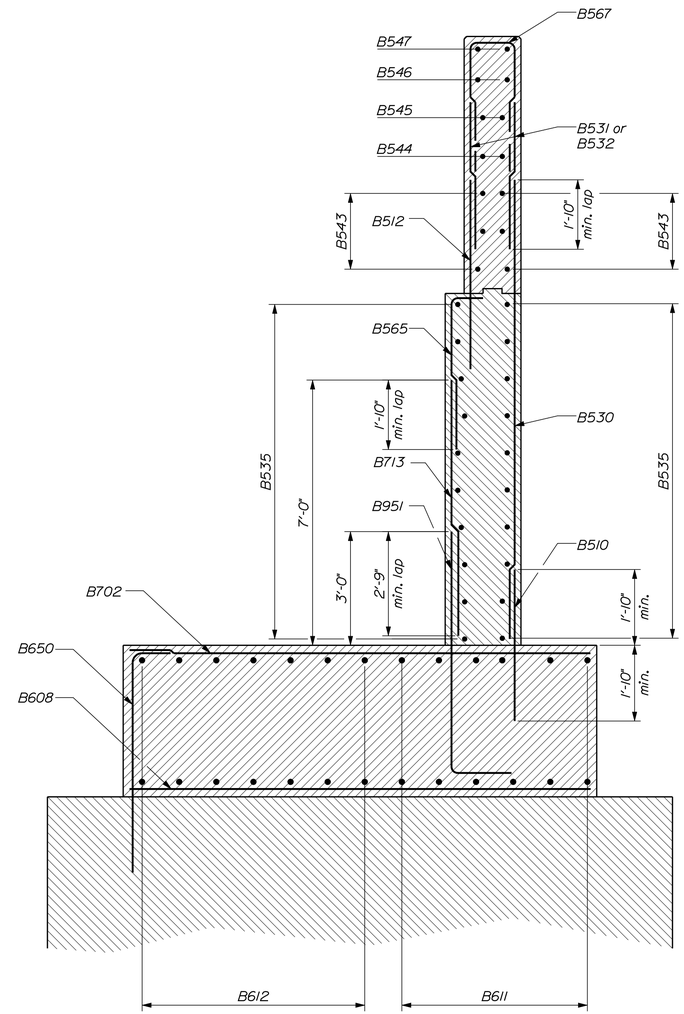

DOWMNSTREAM WING SECTION
End portion of wing

STATE OF MAINE
DEPARTMENT OF TRANSPORTATION

STP-1928(000)

BRIDGE NO. 3333

WIN 19280.00

BRIDGE PLANS

		BY	DATE
PROJ. MANAGER	M. Parlin		
DESIGN-DETAILED	D. Eaton	B. Nichols	Oct. 2014
CHECKED-REVIEWED	J. Waugh		
DESIGN2-DETAILED2			
DESIGN3-DETAILED3			
REVISIONS 1			
REVISIONS 2			
REVISIONS 3			
REVISIONS 4			
FIELD CHANGES			

SIGNATURE

P.E. NUMBER

DATE

BAR MILLS BRIDGE
SACO RIVER
HOLLIS & BUXTON YORK COUNTY

ABUTMENT NO. 2
DOWNSTREAM WING SECTIONS

SHEET NUMBER
101
OF 148

Filename: ...\101_Bar Mills Abutment_2_DwnstrnWingDesign.dgn Date:11/19/2014
Username: dana.damren

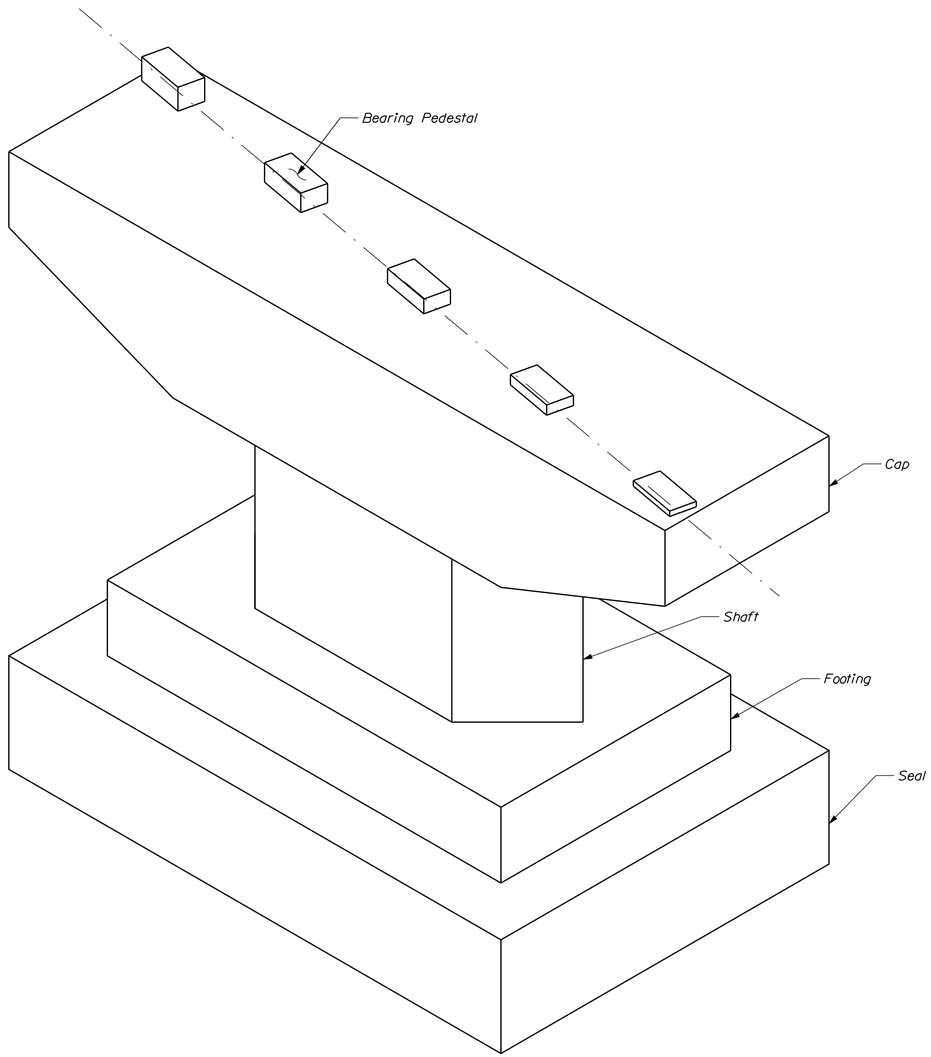

PIER ISOMETRIC VIEW
(Pier No. 1 Shown)

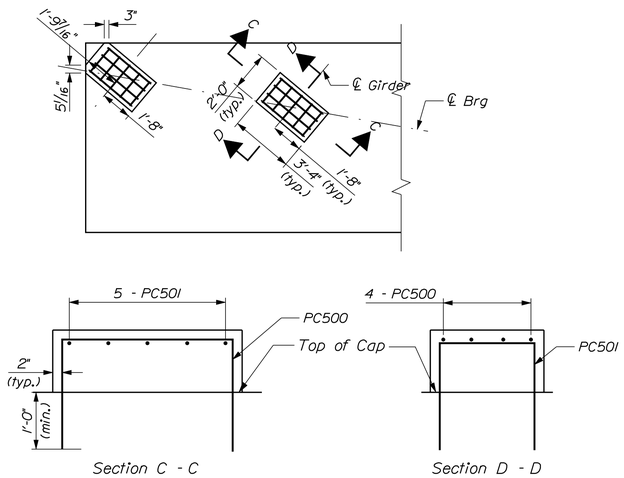

BEARING PEDESTAL DETAILS

SEAL COFFERDAM NOTES

1. When sheet piling is used for seal cofferdams, appropriate rolled corners shall be used, and the inside face of the sheet piling shall be at or outside of the seal concrete dimensions shown.

2. The seal concrete placement dimensions shown represent the minimum seal size necessary to meet design requirements and are not based on the use of any particular sheet pile section.

3. The horizontal pay limit for seal concrete will be to the dimensions shown on the plans. No additional payment will be made for concrete placed outside these limits.

4. The depth of the seal is set for a water elevation of 139.87. If the water elevation at the time of construction is higher, the depth of the seal shall be adjusted as approved by the Resident.

5. The method of placing dowels in the seal concrete shall be approved by the Resident.

PIER DESIGN CRITERIA

1. Critical AASHTO Load Combination - Strength 1

2. Buoyancy: Water level assumed at EL. 142.91.

3. Stream flow: Velocity of 5.09 fps skewed at 10° to longitudinal centerline of pier.

4. Wind: 0.052 ksf.

5. Ice: Thickness 1.5 feet, pressure 28.8 ksf at EL. 134.08, 30% of nose force applied transverse to pier.

PIER NOTES

1. The maximum factored applied footing pressure is 23.3 ksf (Str. 1).

2. Reinforcing steel shall have a minimum concrete cover of 3 inches unless otherwise noted.

3. Bridge pedestal elevations shown are based on bearing heights given in the "Disc Bearing Design Table" on Sheet No. 107. Adjustments to the elevations shall be made, if necessary, according to the provisions stated there.

4. When bedrock protrudes above the bottom of footing shown, the footing may be raised and the vertical reinforcing may be cut in the field with the approval of the Resident. The minimum footing elevations are shown on the plans and shall not be lowered without prior approval of the Engineer of Record. Payment for adjusting the footing elevations and reinforcing steel will be considered incidental to the related Contract Items. No separate payment will be made.

5. Pier Seal Concrete shall be Class "A" concrete.

STATE OF MAINE
DEPARTMENT OF TRANSPORTATION

STP-1928(000)

WIN 19280.00

BRIDGE NO. 3333

BRIDGE PLANS

		BY	DATE
PROJ. MANAGER	M. Perlin		
DESIGN-DETAILED	JDW	MPC	09/14
CHECKED-REVIEWED	WJS	TRC	09/14
DESIGN2-DETAILED2			
DESIGN3-DETAILED3			
REVISIONS 1			
REVISIONS 2			
REVISIONS 3			
REVISIONS 4			
FIELD CHANGES			

SIGNATURE

P.E. NUMBER

DATE

BAR MILLS BRIDGE
SACO RIVER
HOLLIS & BUXTON YORK COUNTY

PIER NOTES

SHEET NUMBER
102
OF 148

Filename: ...\BRIDGE\MSTA\102_Pier_Notes.dgn Division: BRIDGE Username: dana.damren Date:11/19/2014

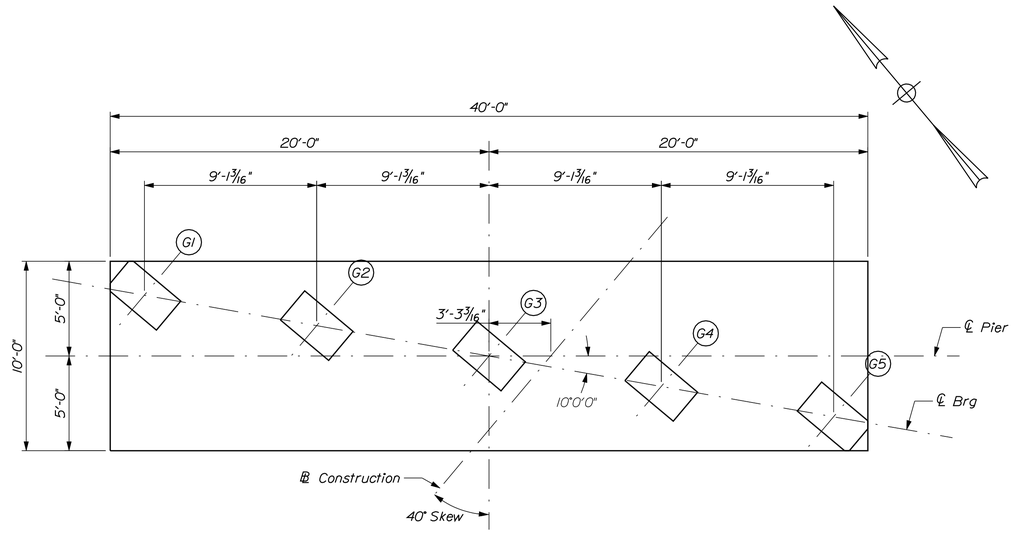

PIER CAP PLAN

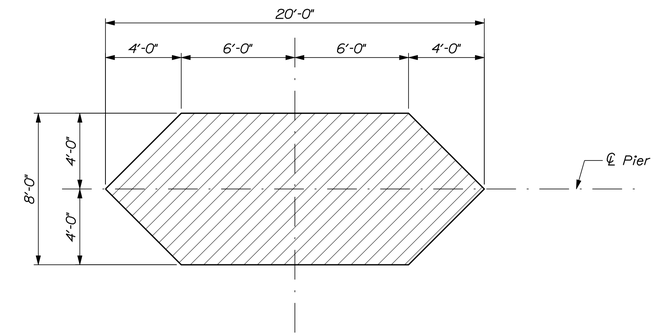

PIER SHAFT SECTION

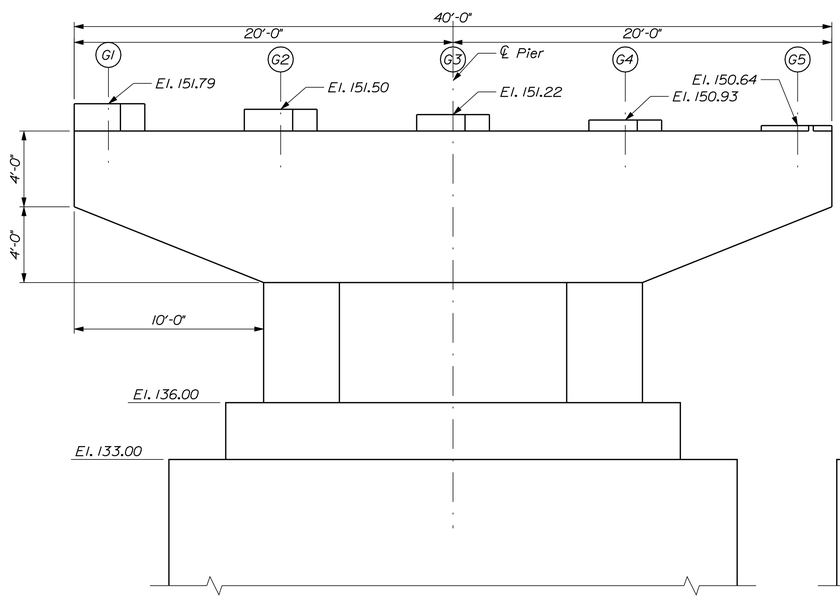

PIER ELEVATION

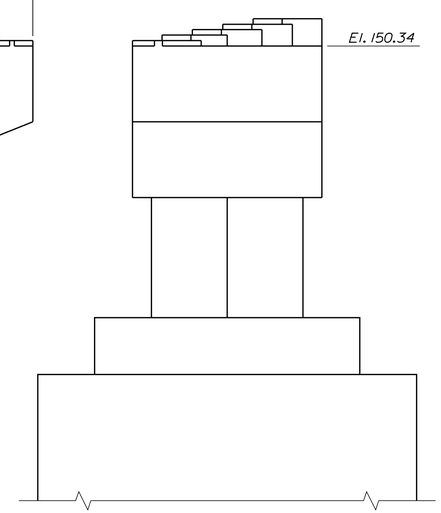

PIER END ELEVATION

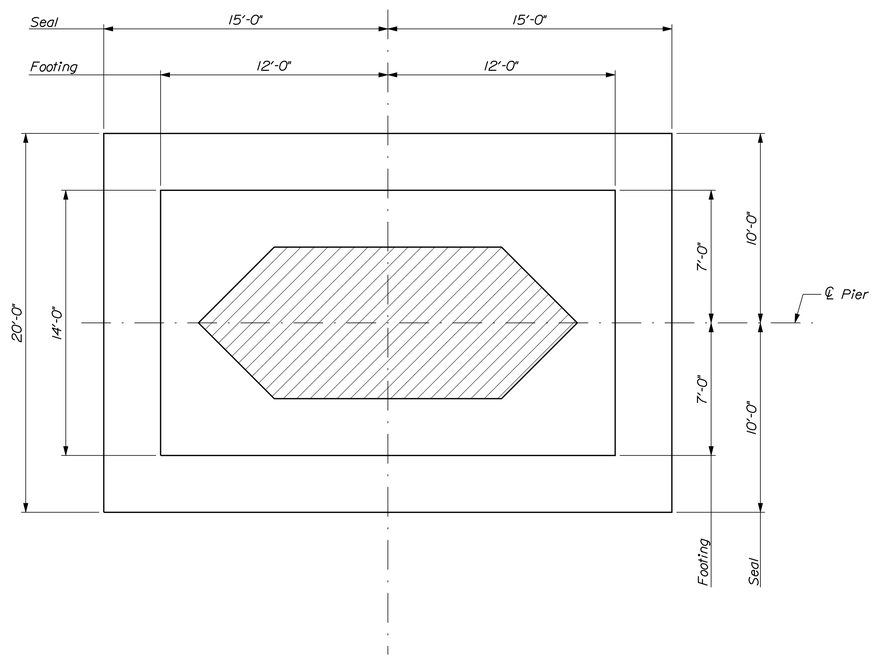

PIER SEAL & FOOTING PLAN

STATE OF MAINE
DEPARTMENT OF TRANSPORTATION

STP-1928(000)

WIN 19280.00

BRIDGE NO. 3333

BRIDGE PLANS

PROJ. MANAGER	M. Perlin		
DESIGN-DETAILED	JDW	BY	DATE
CHECKED-REVIEWED	WJS	MPC	09/14
DESIGN2-DETAILED2		TRC	09/14
DESIGN3-DETAILED3			
REVISIONS 1			
REVISIONS 2			
REVISIONS 3			
REVISIONS 4			
FIELD CHANGES			

SIGNATURE

P.E. NUMBER

DATE

BAR MILLS BRIDGE
SACO RIVER
HOLLIS & BUXTON YORK COUNTY

PIER 1 GEOMETRY

SHEET NUMBER

103

OF 148

Filename: ...\00\BRIDGE\MSTA\103_Pier1.dgn Division: BRIDGE Username: dana.damren Date:11/19/2014

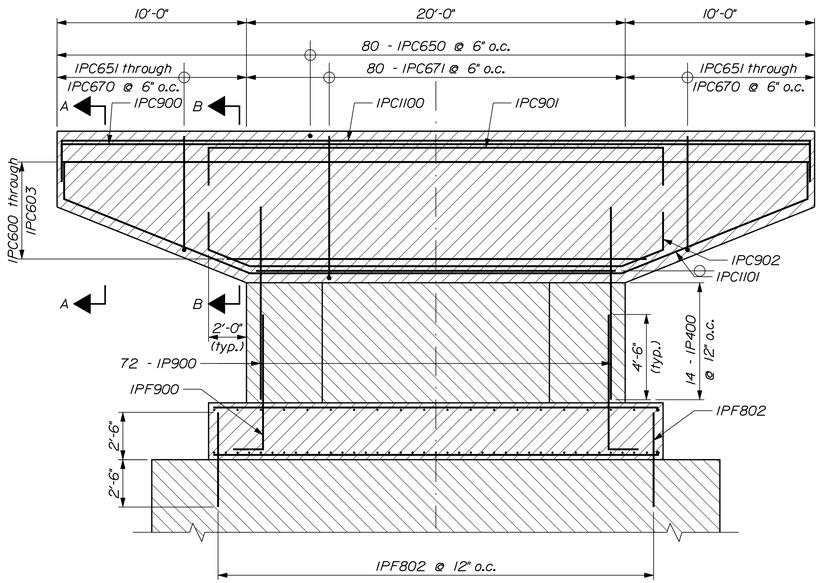

VERTICAL SECTION THROUGH PIER

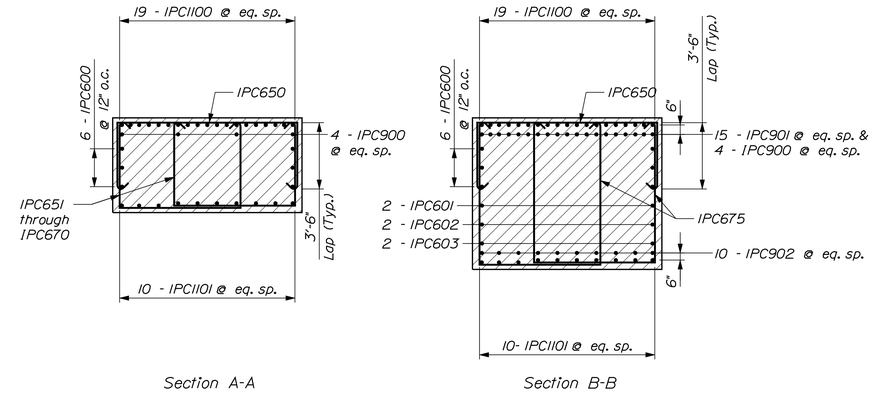

PIER CAP SECTIONS

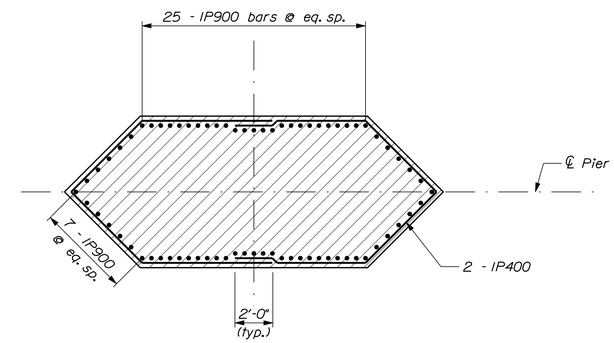

HORIZONTAL SECTION THROUGH SHAFT

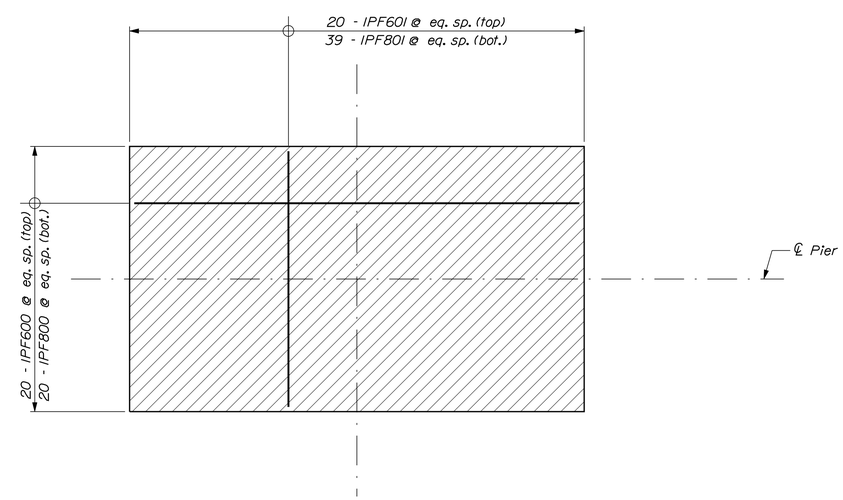

HORIZONTAL SECTION THROUGH FOOTING

STATE OF MAINE
DEPARTMENT OF TRANSPORTATION

STP-1928(000)

WIN 19280.00

BRIDGE NO. 3333

BRIDGE PLANS

PROJ. MANAGER	M. Perin	BY	DATE
DESIGN-DETAILED	JDW	MPC	09/14
CHECKED-REVIEWED	WJS	TRC	09/14
DESIGN2-DETAILED2			
DESIGN3-DETAILED3			
REVISIONS 1			
REVISIONS 2			
REVISIONS 3			
REVISIONS 4			
FIELD CHANGES			

SIGNATURE

P.E. NUMBER

DATE

BAR MILLS BRIDGE
SACO RIVER
HOLLIS & BUXTON YORK COUNTY

PIER 1 REINFORCING

SHEET NUMBER

104

OF 148

Filename: ...\MSTA\104_Pier1Reinforcing.dgn Division: BRIDGE Username: dana.damren Date:11/19/2014

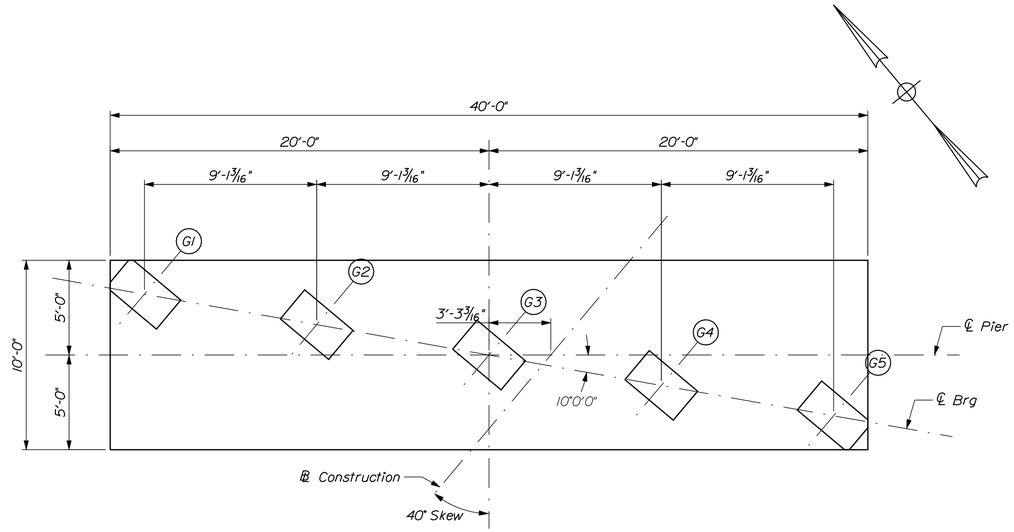

PIER CAP PLAN

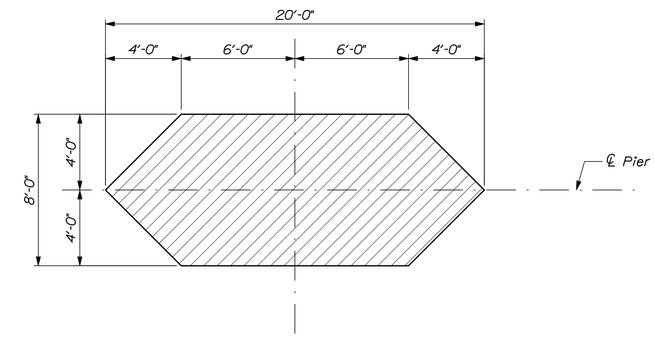

PIER SHAFT SECTION

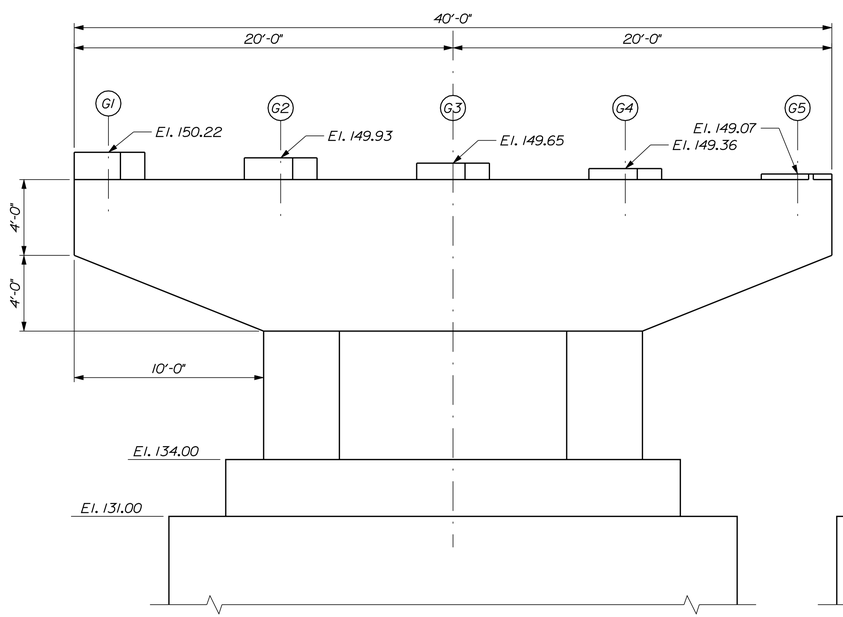

PIER ELEVATION

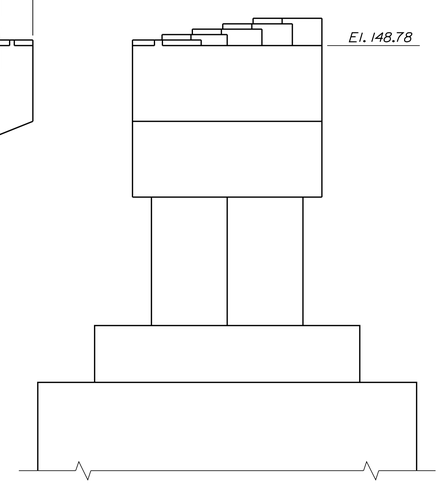

PIER END ELEVATION

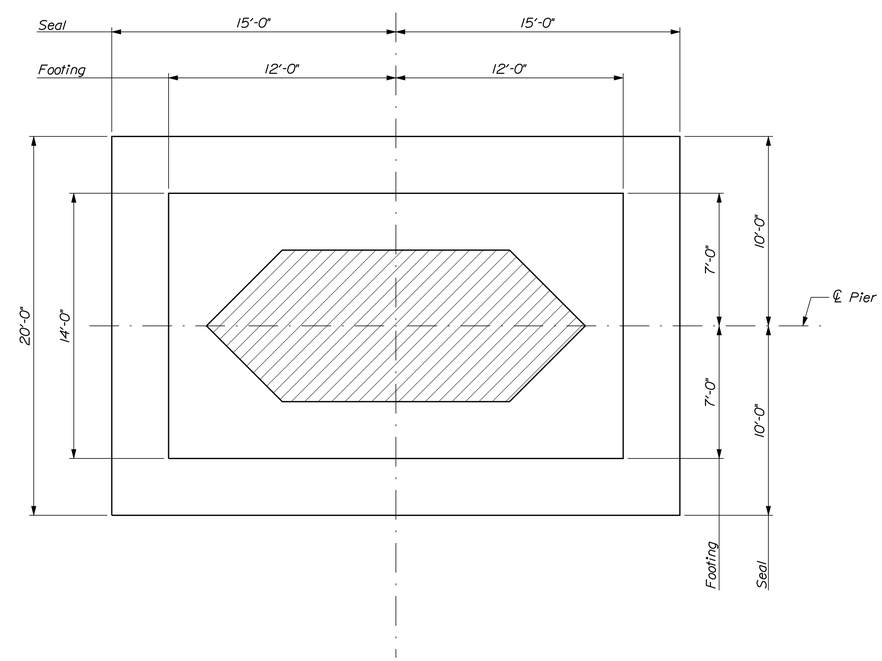

PIER SEAL & FOOTING PLAN

STATE OF MAINE
DEPARTMENT OF TRANSPORTATION

STP-1928(000)

WIN 19280.00

BRIDGE NO. 3333

BRIDGE PLANS

		BY	DATE
PROJ. MANAGER	M. Perlin		
DESIGN-DETAILED	JDW	MPC	09/14
CHECKED-REVIEWED	WJS	TRC	09/14
DESIGN2-DETAILED2			
DESIGN3-DETAILED3			
REVISIONS 1			
REVISIONS 2			
REVISIONS 3			
REVISIONS 4			
FIELD CHANGES			

SIGNATURE

P.E. NUMBER

DATE

BAR MILLS BRIDGE
SACO RIVER
HOLLIS & BUXTON YORK COUNTY

PIER 2 GEOMETRY

SHEET NUMBER

105

OF 148

Filename: ...\00\BRIDGE\MSTA\105_Pier2.dgn Division: BRIDGE Username: dana.damren Date:11/19/2014

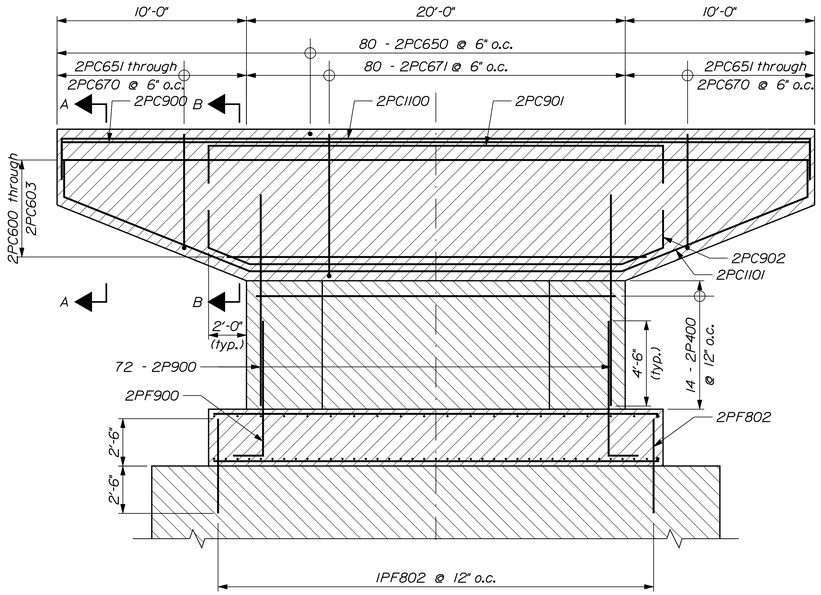

VERTICAL SECTION THROUGH PIER

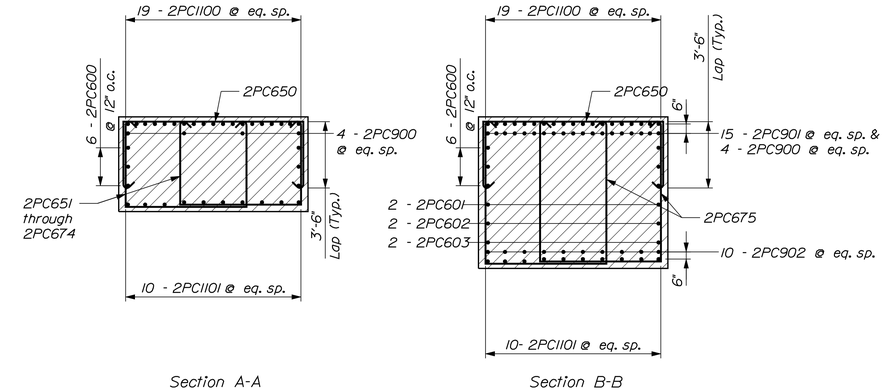

PIER CAP SECTIONS

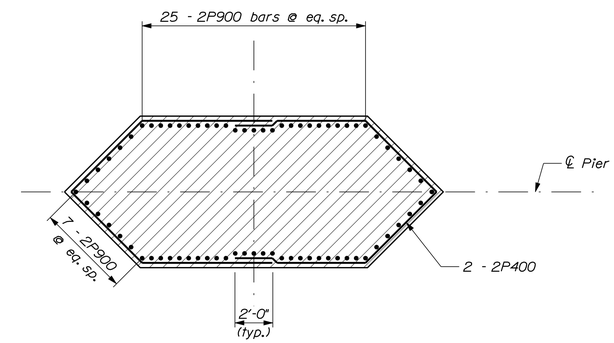

HORIZONTAL SECTION THROUGH SHAFT

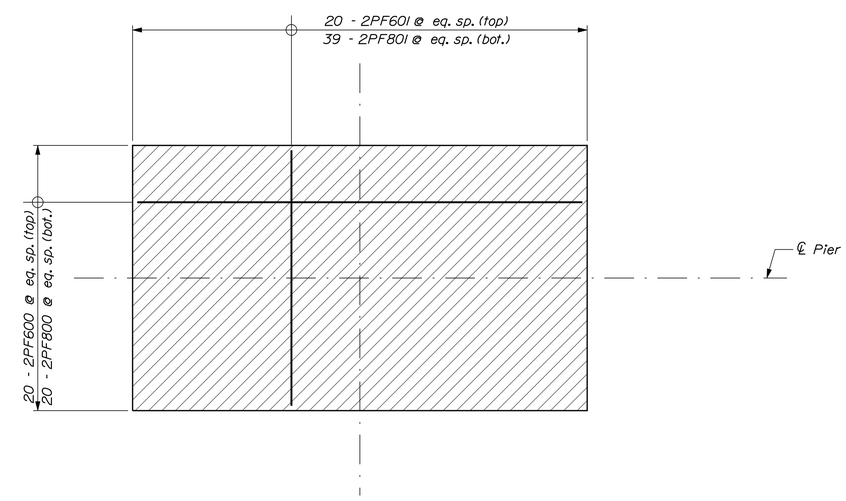

HORIZONTAL SECTION THROUGH FOOTING

STATE OF MAINE
DEPARTMENT OF TRANSPORTATION

STP-1928(000)

WIN 19280.00

BRIDGE NO. 3333

BRIDGE PLANS

PROJ. MANAGER	M. Parlin	BY	DATE
DESIGN-DETAILED	JDW	MPC	09/14
CHECKED-REVIEWED	WJS	TRC	09/14
DESIGN2-DETAILED2			
DESIGN3-DETAILED3			
REVISIONS 1			
REVISIONS 2			
REVISIONS 3			
REVISIONS 4			
FIELD CHANGES			

SIGNATURE

P.E. NUMBER

DATE

BAR MILLS BRIDGE
SACO RIVER
HOLLIS & BUXTON YORK COUNTY

PIER 2 REINFORCING

SHEET NUMBER

106

OF 148

Filename: ...\MSTA\106_Pier2Reinforcing.dgn Division: BRIDGE Username: dana.damren Date:11/19/2014

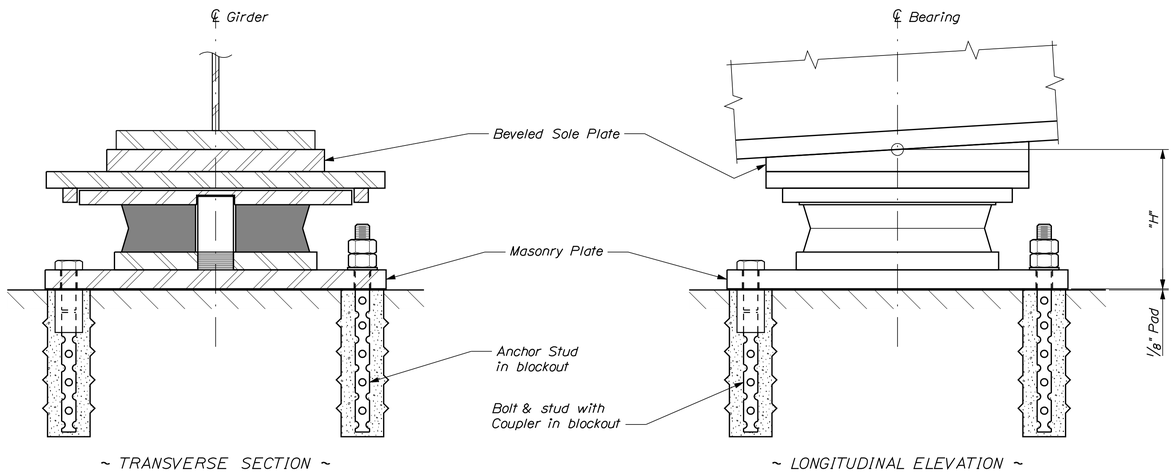

EXPANSION BEARING

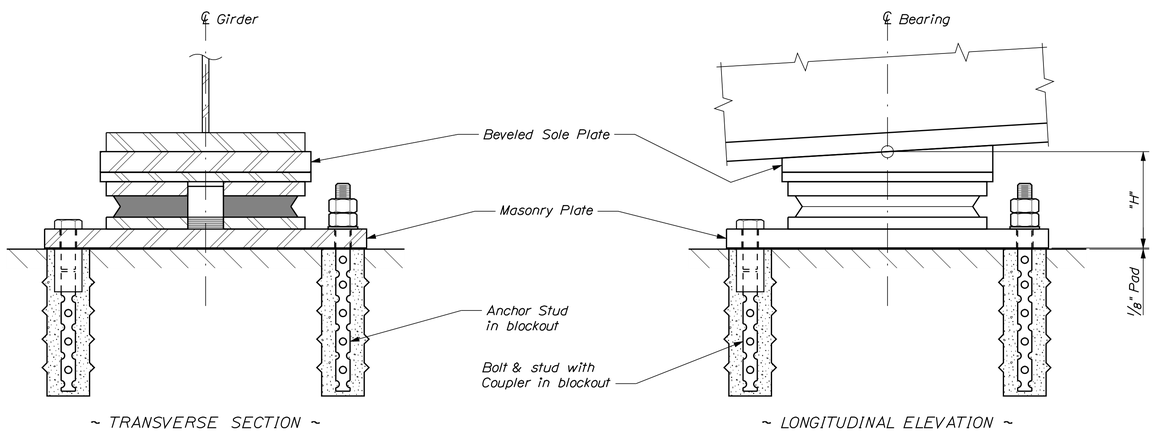

FIXED BEARING

DISC BEARING NOTES

1. The actual dimension "H" shall be the responsibility of the Contractor. Dimensions and sizes of plates not shown are dependent on design loads, capacity and the manufacturer of the bearings. The shop drawings, prepared by the manufacturer, shall provide all pertinent bearing information. The final bearing pedestal elevations shall be determined by the Contractor and submitted with the shop drawings for approval prior to construction of the substructure units.

2. Masonry plates shall be placed on 1/8" thick preformed pads in accordance with the specifications.

3. All steel, unless otherwise specified, shall meet the requirements of ASTM A709, Grade 50W.

4. Bearing anchorage shall be either Anchor Stud with double nuts and washers in blockout, or Bolt & Stud with Coupler in blockout, at the Contractor's option.

5. Anchorage spacing shall be coordinated with the bearing manufacturer.

6. Anchor bolts shall meet the requirements of ASTM A325, Type 1.

7. Anchor rods shall meet the requirements of ASTM F1554, Grade 105 and shall be swedged on the embedded portion of the rod.

8. Heavy hex nuts for anchor rods shall meet the requirements of ASTM A563, Grade D or DH.

9. Anchor bolts, rods, washers and nuts shall be galvanized to ASTM A153 or ASTM B695, Class 50, Type 1. Payment for galvanizing will be considered incidental to the disc bearing pay items.

10. For abutment bearings, all steel located below the polyether urethane disc shall be coated in accordance with Standard Specifications, Section 506, Protective Coating - Steel (Thermal Spray Coating). All remaining steel shall be coated in accordance with Standard Specifications, Section 506, Protective Coating - Steel (Zinc Rich Coating System). Payment for Coatings for Disc Bearings will be considered incidental to Item 523.5551, Pot or Disc Bearings, Fixed, or Item 523.5552, Pot or Disc Bearings, Expansion as applicable.

11. For pier bearings, all steel located below the polyether urethane disc shall be coated in accordance with Standard Specifications, Section 506, Protective Coating - Steel (Thermal Spray Coating). All remaining steel shall remain uncoated. Payment for Coatings for Disc Bearings will be considered incidental to Item 523.5551, Pot or Disc Bearings, Fixed, or Item 523.5552, Pot or Disc Bearings, Expansion as applicable.

12. The abbreviation "PTFE" indicates polytetraflouroethylene.

13. All PTFE, including guide and restraint surfaces, shall be unfilled.

14. PTFE minimum bearing pressure shall be 1 ksi under total service loading and 3 ksi under total strength loading.

15. Average compressive stresses on the disc shall be computed using the minimum plan area of the unstressed disc, excluding the area of any holes.

16. The design temperature range shall be 125 °F (-20 °F to 105 °F).

17. Design of the sole plates and masonry plates is the responsibility of the Bearing Manufacturer. Payment for these shall be made under Item 523.5551, Pot or Disc Bearings, Fixed or Item 523.5552, Pot or Disc Bearings, Expansion as applicable.

18. Sole plate shall be beveled according to the grade defined at each substructure location in the Disc Bearing Design Table.

19. Strength Limit State rotations shown in the Disc Bearing Design Table do not include an allowance for uncertainties of 0.005 radians, as defined in AASHTO LRFD Bridge Design Specifications, 6th Edition 2012.

20. Bearings shall be designed with a thermal load factor of 1.0.

21. Longitudinal horizontal forces do not include friction forces at expansion bearings.

22. All bearings shall be marked prior to shipping. The marks shall include the bearing location on the bridge, and a direction arrow that points upstation. All marks shall be permanent and shall be visible after the bearing is installed.

23. Bearing installation shall be in strict conformance with the Standard Specifications and the manufacturer's recommendations.

24. In the Disc Bearing Setting Corrections Table, a negative dimension indicates a direction away from the nearer expansion joint. A positive dimension indicates a direction toward the nearer expansion joint.

25. Temperatures shown in the Disc Bearing Setting Corrections Table are those of the steel girders and not necessarily the ambient air temperature.

26. Pier No. 2 bearings shall be welded to the girder prior to welding of any other bearings. Bearing stiffeners at Pier No. 2 shall be within 1/2 inch of the centerline of bearing at the time of welding.

DISC BEARING DESIGN TABLE

Location	Bearing Type	Design Loads Per Bearing (kips)										Dim. "H" (in.) (Note No. 1)	Design Rotation (Note No. 19)				Total Long. Movement (in.)	Sole Plate Bevel
		Vertical				Horizontal												
		Strength	Extreme Event	Service		Strength		Extreme Event		Service			Strength		Service			
		Total Load	Total Load	Dead Load	Total Load	Longitudinal (Note No. 21)	Transverse	Longitudinal (Note No. 21)	Transverse	Longitudinal (Note No. 21)	Transverse		Rotation (radians)	Coincident Total Load (kips)	Rotation (radians)	Coincident Total Load (kips)		
Abut. No. 1	Uni - directional	353	187	85	206	--	19	--	58	--	10	8	0.0170	118	0.0096	98	3 3/8	-1%
Pier No. 1	Uni - directional	927	623	333	587	--	40	--	198	--	14	12	0.0100	204	0.0024	351	1 7/8	-1%
Pier No. 2	Fixed	927	623	333	587	344	40	307	198	225	14	8	0.0100	204	0.0024	351	--	-1%
Abut. No. 2	Uni - directional	379	187	96	226	--	322	--	76	--	207	8	0.0170	118	0.0096	66	1 1/2	-1%

DISC BEARING SETTING CORRECTIONS TABLE

	Dimension "X" (Inches)					
	15 °F	30 °F	45 °F	60 °F	75 °F	90 °F
Abut. No. 1	- 7/8	- 1/2	0	1/2	7/8	1 1/4
Pier No. 1	- 1/2	- 1/4	0	1/4	1/2	3/4
Pier No. 2	--	--	--	--	--	--
Abut. No. 2	- 3/8	- 1/4	0	1/4	3/8	5/8

STATE OF MAINE
DEPARTMENT OF TRANSPORTATION

STP-1928(000)

WIN 19280.00

BRIDGE NO. 3333

BRIDGE PLANS

		BY	DATE
PROJ. MANAGER	M. Parlin		
DESIGN-DETAILED	D. Eaton	Team South	May 2014
CHECKED-REVIEWED	G. Gustafson		
DESIGN2-DETAILED2	-----	-----	-----
DESIGN3-DETAILED3	-----	-----	-----
REVISIONS 1	-----	-----	-----
REVISIONS 2	-----	-----	-----
REVISIONS 3	-----	-----	-----
REVISIONS 4	-----	-----	-----
FIELD CHANGES	-----	-----	-----

SIGNATURE

P.E. NUMBER

DATE

BAR MILLS BRIDGE
SACO RIVER
HOLLIS & BUXTON YORK COUNTY

DISC BEARINGS

SHEET NUMBER
107
OF 148

Filename: ...\107_Bar Mills Bearings.dgn Division: BRIDGE Username: devon.c.eaton Date:1/16/2015

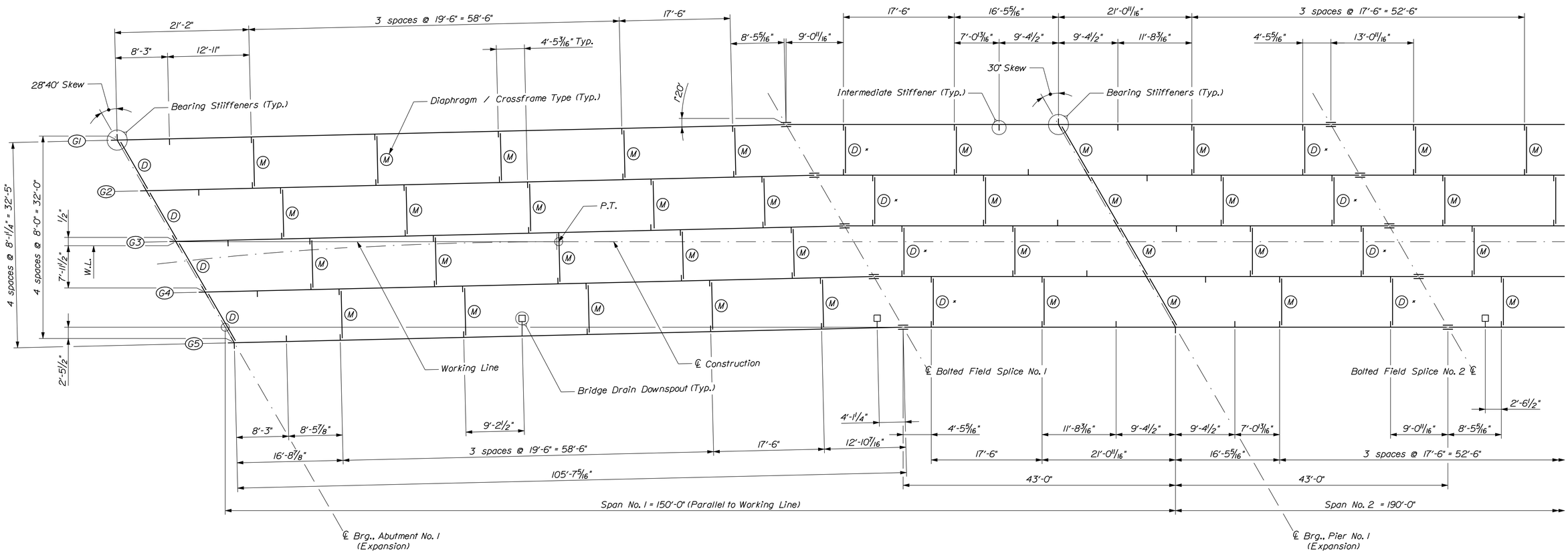

FRAMING PLAN ~ SPAN NO. 1

Dimensions are horizontal

Filename: ...\108_Bar Mills Framing Plan Span No. 1.dgn Division: BRIDGE Username: dana.damren Date:12/2/2014

BAR MILLS BRIDGE
SACO RIVER
HOLLIS & BUXTON YORK COUNTY

FRAMING PLAN SPAN NO. 1

PROJ. MANAGER	M. Parlin	BY	DATE
DESIGN-DETAILED	D. Eaton	Team South	Feb. 2014
CHECKED-REVIEWED	J. Waugh	------	------
DESIGN2-DETAILED2	------	------	------
DESIGN3-DETAILED3	------	------	------
REVISIONS 1	------		------
REVISIONS 2	------		------
REVISIONS 3	------		------
REVISIONS 4	------		------
FIELD CHANGES	------		------

SIGNATURE

P.E. NUMBER

DATE

STATE OF MAINE
DEPARTMENT OF TRANSPORTATION

STP-1928(000)

BRIDGE NO. 3333 WIN 19280.00 BRIDGE PLANS

SHEET NUMBER 108 OF 148

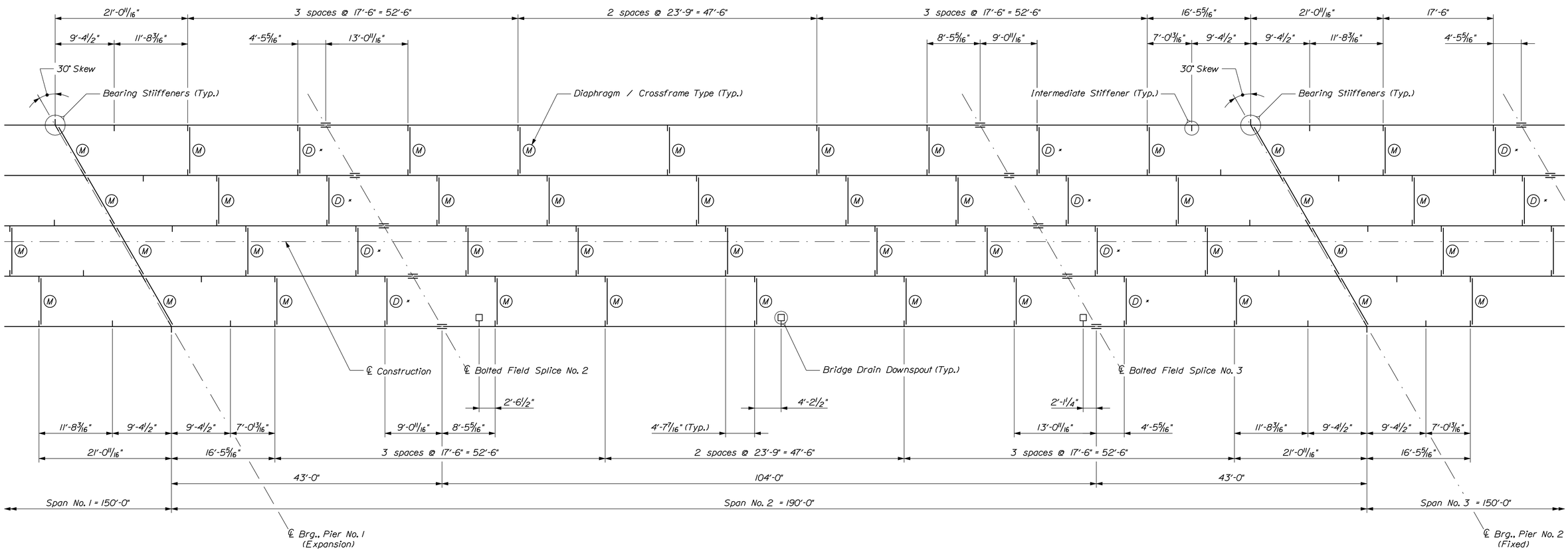

FRAMING PLAN ~ SPAN NO. 2

Dimensions are horizontal

Filename: ...\109_Bar Mills Framing Plan Span No. 2.dgn Division: BRIDGE Username: dana.damren Date:11/19/2014

BAR MILLS BRIDGE
SACO RIVER
HOLLIS & BUXTON YORK COUNTY

FRAMING PLAN SPAN NO. 2

PROJ. MANAGER	M. Parlin	BY	DATE
DESIGN-DETAILED	D. Eaton	Team South	Feb. 2014
CHECKED-REVIEWED	J. Waugh	X	X X
DESIGN2-DETAILED2	------	------	------
DESIGN3-DETAILED3	------	------	------
REVISIONS 1	------		------
REVISIONS 2	------		------
REVISIONS 3	------		------
REVISIONS 4	------		------
FIELD CHANGES	------		------

SIGNATURE

P.E. NUMBER

DATE

STATE OF MAINE
DEPARTMENT OF TRANSPORTATION

STP-1928(000)

BRIDGE NO. 3333 WIN 19280.00 BRIDGE PLANS

SHEET NUMBER 109 OF 148

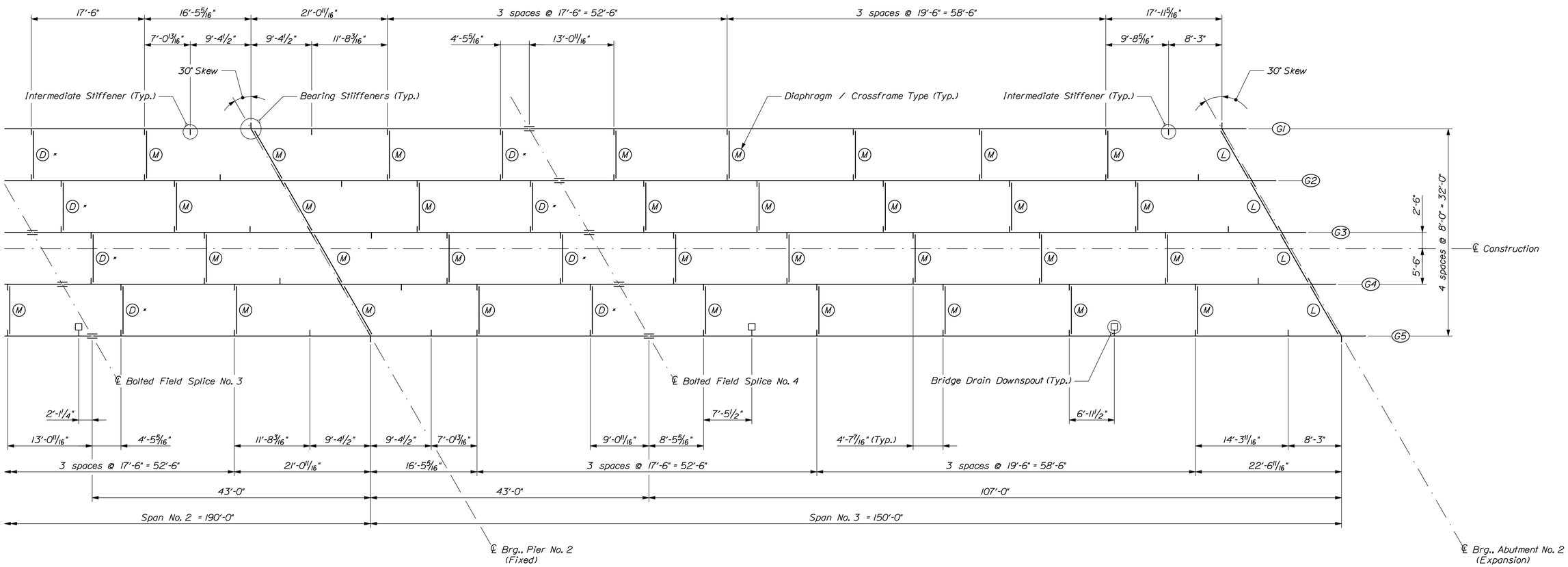

FRAMING PLAN ~ SPAN NO. 3

Dimensions are horizontal

Filename: ...\110_Bar Mills Framing Plan Span No. 3.dgn Division: BRIDGE Username: dana.damren Date:12/2/2014

BAR MILLS BRIDGE SACO RIVER HOLLIS & BUXTON YORK COUNTY	PROJ. MANAGER	M. Parlin	BY	DATE	
	DESIGN-DETAILED	D. Eaton	Team South	Feb. 2014	
	CHECKED-REVIEWED	J. Waugh	X	X X	SIGNATURE
	DESIGN2-DETAILED2	------	------	------	
	DESIGN3-DETAILED3	------	------	------	P.E. NUMBER
FRAMING PLAN SPAN NO. 3	REVISIONS 1	------		------	
	REVISIONS 2	------		------	
	REVISIONS 3	------		------	DATE
	REVISIONS 4	------		------	
	FIELD CHANGES	------		------	

STATE OF MAINE
DEPARTMENT OF TRANSPORTATION

STP-1928(000)

BRIDGE NO. 3333 WIN 19280.00 BRIDGE PLANS

SHEET NUMBER 110 OF 148

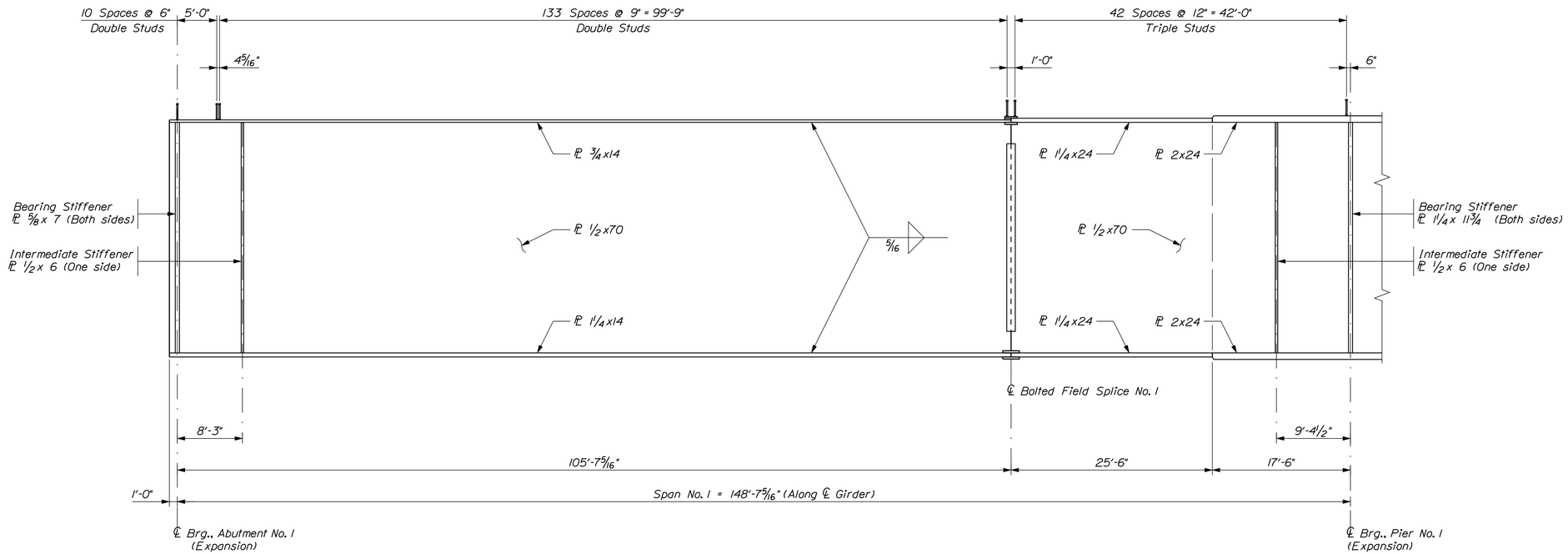

GIRDER ELEVATION ~ SPAN NO. 1

419 Studs per Girder x 5 Girders = 2095 Studs
Adjust spacing to clear field splice bolts

TABLE OF DEFLECTIONS ~ GIRDER 1 (Inches)

		Piece No. 1										Piece No. 2										Piece No. 3									
	℄ A1	10.56'	21.12'	31.68'	42.24'	52.80'	63.37'	73.93'	84.49'	95.05'	FS1	8.6'	17.2'	25.8'	34.4'	℄ P1	51.6'	60.2'	68.8'	77.4'	FS2	10.4'	20.8'	31.2'	41.6'	52.0'	62.4'	72.8'	83.2'	93.6'	FS3
Steel Dead Load	0.00	0.16	0.30	0.42	0.50	0.54	0.55	0.51	0.45	0.36	0.26	0.18	0.11	0.06	0.02	0.00	0.01	0.04	0.09	0.15	0.22	0.31	0.40	0.47	0.51	0.53	0.51	0.46	0.39	0.31	0.22
Fluid Dead Load	0.00	0.57	1.09	1.52	1.83	1.99	2.02	1.90	1.66	1.35	0.99	0.71	0.45	0.24	0.08	0.00	-0.01	0.05	0.17	0.34	0.55	0.83	1.09	1.31	1.45	1.50	1.46	1.32	1.11	0.85	0.58
Superimposed Dead Load	0.00	0.21	0.41	0.57	0.67	0.73	0.75	0.71	0.62	0.50	0.36	0.25	0.15	0.07	0.02	0.00	0.02	0.07	0.16	0.26	0.37	0.51	0.64	0.75	0.81	0.83	0.81	0.74	0.64	0.51	0.37

TABLE OF DEFLECTIONS ~ GIRDER 1 (Inches)

		Piece No. 4										Piece No. 5									
	FS3	8.6'	17.2'	25.8'	34.4'	℄ P2	51.6'	60.2'	68.8'	77.4'	FS4	10.7'	21.4'	32.1'	42.8'	53.5'	64.2'	74.9'	85.6'	96.3'	℄ A2
Steel Dead Load	0.22	0.14	0.08	0.04	0.01	0.00	0.02	0.06	0.12	0.19	0.27	0.38	0.47	0.54	0.57	0.57	0.52	0.44	0.31	0.16	0.00
Fluid Dead Load	0.58	0.37	0.19	0.07	0.00	0.00	0.07	0.22	0.41	0.65	0.92	1.27	1.57	1.80	1.92	1.91	1.75	1.46	1.06	0.55	0.00
Superimposed Dead Load	0.37	0.25	0.15	0.07	0.02	0.00	0.02	0.07	0.16	0.26	0.37	0.52	0.64	0.73	0.78	0.78	0.71	0.59	0.43	0.22	0.00

BAR MILLS BRIDGE
SACO RIVER
HOLLIS & BUXTON YORK COUNTY

GIRDER ELEVATION SPAN NO. 1

PROJ. MANAGER	M. Parlin	BY	DATE
DESIGN-DETAILED	D. Eaton	Team South	Feb. 2014
CHECKED-REVIEWED	J. Waugh	X	X X
DESIGN2-DETAILED2	------	------	------
DESIGN3-DETAILED3	------	------	------
REVISIONS 1	------		------
REVISIONS 2	------		------
REVISIONS 3	------		------
REVISIONS 4	------		------
FIELD CHANGES	------		------

SIGNATURE
P.E. NUMBER
DATE

STATE OF MAINE
DEPARTMENT OF TRANSPORTATION

STP-1928(000)

BRIDGE NO. 3333 WIN 19280.00 BRIDGE PLANS

SHEET NUMBER
111
OF 148

Filename: ...\111_Bar Mills Girder Elevation Span 1.dgn Division: BRIDGE Username: dana.damren Date:12/2/2014

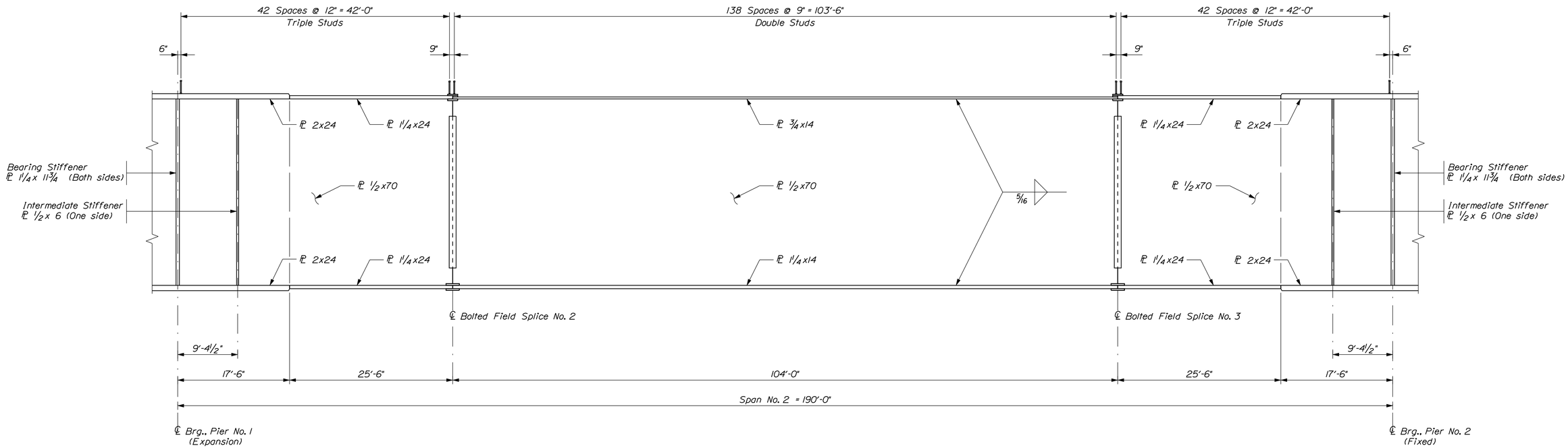

GIRDER ELEVATION ~ SPAN NO. 2

536 Studs per Girder x 5 Girders = 2680 Studs
Adjust spacing to clear field splice bolts

TABLE OF DEFLECTIONS ~ INTERIOR GIRDERS (Inches)

		Piece No. 1										Piece No. 2										Piece No. 3									
	℄ A1	10.56'	21.12'	31.68'	42.24'	52.80'	63.37'	73.93'	84.49'	95.05'	FS1	8.6'	17.2'	25.8'	34.4'	℄ P1	51.6'	60.2'	68.8'	77.4'	FS2	10.4'	20.8'	31.2'	41.6'	52.0'	62.4'	72.8'	83.2'	93.6'	FS3
Steel Dead Load	0.00	0.16	0.31	0.43	0.52	0.56	0.57	0.53	0.47	0.37	0.27	0.19	0.12	0.06	0.02	0.00	0.01	0.04	0.09	0.16	0.23	0.32	0.41	0.49	0.53	0.55	0.53	0.48	0.41	0.32	0.22
Fluid Dead Load	0.00	0.57	1.10	1.53	1.83	1.99	2.00	1.87	1.63	1.31	0.94	0.66	0.41	0.21	0.06	0.00	0.02	0.11	0.26	0.47	0.71	1.04	1.34	1.58	1.74	1.79	1.73	1.57	1.32	1.01	0.70
Superimposed Dead Load	0.00	0.21	0.41	0.57	0.67	0.73	0.75	0.71	0.62	0.50	0.36	0.25	0.15	0.07	0.02	0.00	0.02	0.07	0.16	0.26	0.37	0.51	0.64	0.75	0.81	0.83	0.81	0.74	0.64	0.51	0.37

TABLE OF DEFLECTIONS ~ INTERIOR GIRDERS (Inches)

		Piece No. 4										Piece No. 5									
	FS3	8.6'	17.2'	25.8'	34.4'	℄ P2	51.6'	60.2'	68.8'	77.4'	FS4	10.7'	21.4'	32.1'	42.8'	53.5'	64.2'	74.9'	85.6'	96.3'	℄ A2
Steel Dead Load	0.22	0.15	0.09	0.04	0.01	0.00	0.02	0.06	0.12	0.20	0.29	0.39	0.49	0.56	0.60	0.59	0.55	0.46	0.33	0.17	0.00
Fluid Dead Load	0.70	0.46	0.25	0.09	0.01	0.00	0.07	0.22	0.43	0.69	0.99	1.37	1.70	1.96	2.09	2.08	1.91	1.60	1.16	0.61	0.00
Superimposed Dead Load	0.37	0.25	0.15	0.07	0.02	0.00	0.02	0.07	0.16	0.26	0.37	0.52	0.64	0.73	0.78	0.78	0.71	0.59	0.43	0.22	0.00

BAR MILLS BRIDGE
SACO RIVER
HOLLIS & BUXTON YORK COUNTY

GIRDER ELEV. SPAN NO. 2

PROJ. MANAGER	M. Parlin	BY	DATE
DESIGN-DETAILED	D. Eaton	Team South	Feb. 2014
CHECKED-REVIEWED	J. Waugh	X	X X
DESIGN2-DETAILED2	------	------	------
DESIGN3-DETAILED3	------	------	------
REVISIONS 1	------		------
REVISIONS 2	------		------
REVISIONS 3	------		------
REVISIONS 4	------		------
FIELD CHANGES	------		------

SIGNATURE
P.E. NUMBER
DATE

STATE OF MAINE
DEPARTMENT OF TRANSPORTATION

STP-1928(000)

BRIDGE NO. 3333 WIN 19280.00 BRIDGE PLANS

SHEET NUMBER
112
OF 148

Filename: ...\112_Bar Mills Girder Elevation Span 2.dgn Division: BRIDGE Username: dana.damren Date:11/19/2014

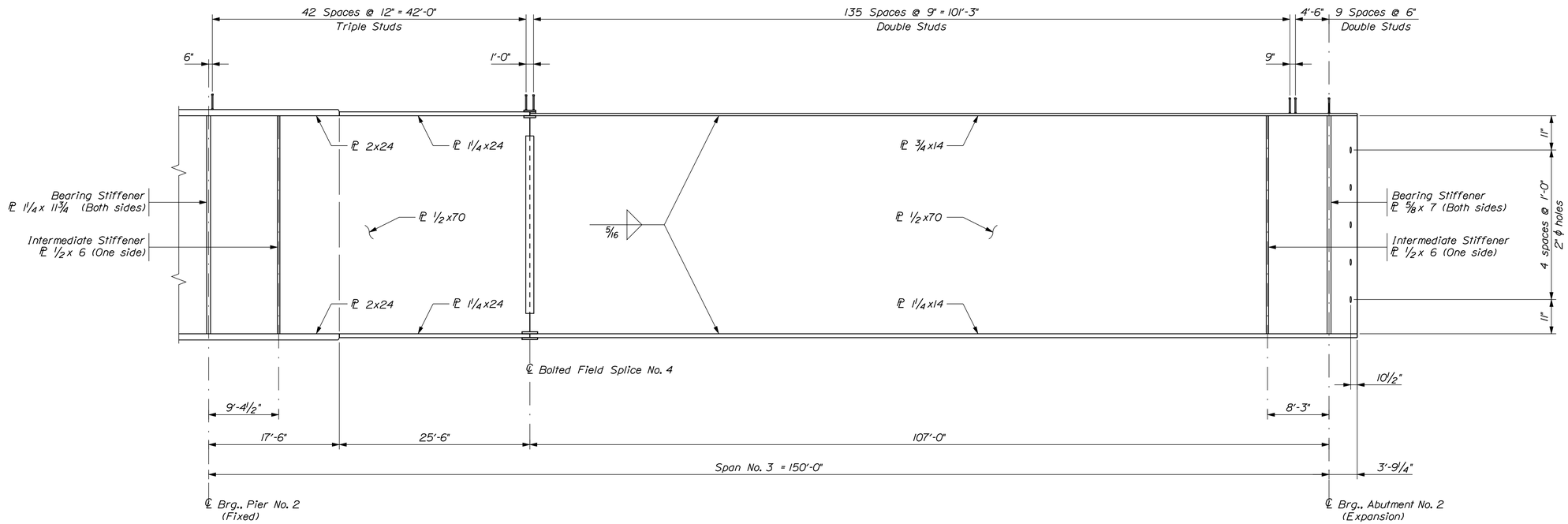

GIRDER ELEVATION ~ SPAN NO. 3

421 Studs per Girder x 5 Girders = 2105 Studs
Adjust spacing to clear field splice bolts

TABLE OF DEFLECTIONS ~ GIRDER 5 (Inches)

		Piece No. 1										Piece No. 2										Piece No. 3									
	℄ A1	10.56'	21.12'	31.68'	42.24'	52.80'	63.37'	73.93'	84.49'	95.05'	FS1	8.6'	17.2'	25.8'	34.4'	℄ P1	51.6'	60.2'	68.8'	77.4'	FS2	10.4'	20.8'	31.2'	41.6'	52.0'	62.4'	72.8'	83.2'	93.6'	FS3
Steel Dead Load	0.00	0.16	0.30	0.42	0.50	0.54	0.55	0.51	0.45	0.36	0.26	0.18	0.11	0.06	0.02	0.00	0.01	0.04	0.09	0.15	0.22	0.31	0.40	0.47	0.51	0.53	0.51	0.46	0.39	0.31	0.22
Fluid Dead Load	0.00	0.42	0.81	1.12	1.34	1.45	1.45	1.34	1.15	0.90	0.63	0.42	0.24	0.10	0.02	0.00	0.05	0.17	0.34	0.55	0.80	1.11	1.39	1.61	1.75	1.78	1.72	1.56	1.31	1.01	0.71
Superimposed Dead Load	0.00	0.21	0.41	0.57	0.67	0.73	0.75	0.71	0.62	0.50	0.36	0.25	0.15	0.07	0.02	0.00	0.02	0.07	0.16	0.26	0.37	0.51	0.64	0.75	0.81	0.83	0.81	0.74	0.64	0.51	0.37

TABLE OF DEFLECTIONS ~ GIRDER 5 (Inches)

		Piece No. 4										Piece No. 5									
	FS3	8.6'	17.2'	25.8'	34.4'	℄ P2	51.6'	60.2'	68.8'	77.4'	FS4	10.7'	21.4'	32.1'	42.8'	53.5'	64.2'	74.9'	85.6'	96.3'	℄ A2
Steel Dead Load	0.22	0.14	0.08	0.04	0.01	0.00	0.02	0.06	0.12	0.19	0.27	0.38	0.47	0.54	0.57	0.57	0.52	0.44	0.31	0.16	0.00
Fluid Dead Load	0.71	0.47	0.27	0.11	0.02	0.00	0.05	0.18	0.35	0.58	0.84	1.17	1.47	1.70	1.83	1.83	1.68	1.41	1.02	0.54	0.00
Superimposed Dead Load	0.37	0.25	0.15	0.07	0.02	0.00	0.02	0.07	0.16	0.26	0.37	0.52	0.64	0.73	0.78	0.78	0.71	0.59	0.43	0.22	0.00

BAR MILLS BRIDGE
SACO RIVER
HOLLIS & BUXTON YORK COUNTY

GIRDER ELEVATION SPAN NO. 3

PROJ. MANAGER	M. Parlin	BY	DATE
DESIGN-DETAILED	D. Eaton	Team South	Feb. 2014
CHECKED-REVIEWED	J. Waugh	X	X X
DESIGN2-DETAILED2	------	------	------
DESIGN3-DETAILED3	------	------	------
REVISIONS 1	------		------
REVISIONS 2	------		------
REVISIONS 3	------		------
REVISIONS 4	------		------
FIELD CHANGES	------		------

SIGNATURE
P.E. NUMBER
DATE

STATE OF MAINE
DEPARTMENT OF TRANSPORTATION

STP-1928(000)

BRIDGE NO. 3333 WIN 19280.00 BRIDGE PLANS

SHEET NUMBER
113
OF 148

Filename: ...\113_Bar Mills Girder Elevation Span 3.dgn Division: BRIDGE Username: dana.damren Date:12/2/2014

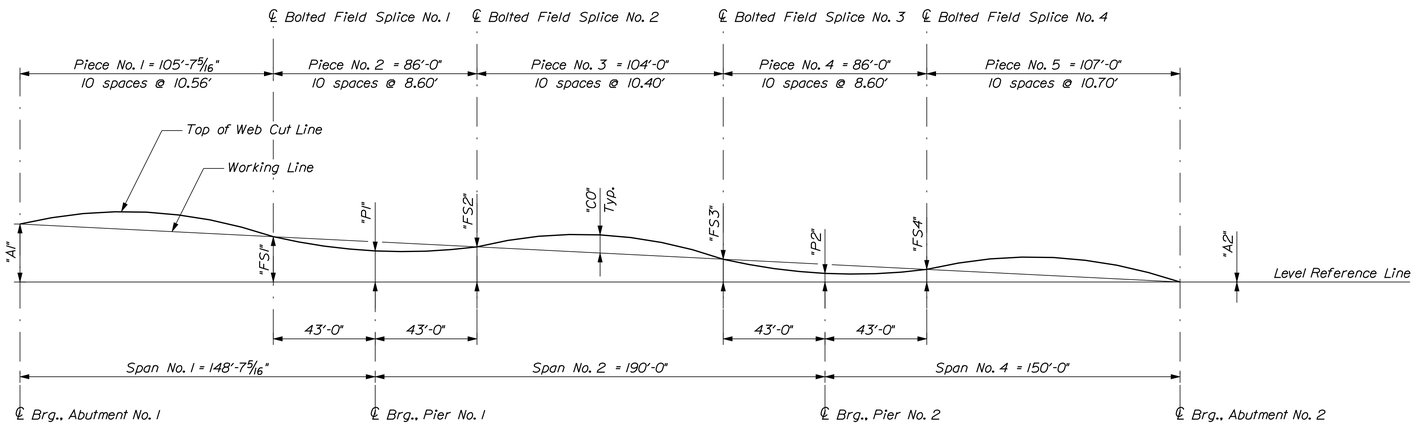

CAMBER DIAGRAM

TABLE OF CAMBER DIMENSIONS (Feet)									
Girder	"A1"	"FS1"	"P1"	"FS2"	"FS3"	"P2"	"FS4"	"A2"	Girder
G1	5.31	3.96	3.40	3.07	2.03	1.50	1.20	0.00	G1
G2	5.15	3.96	3.40	3.08	2.04	1.50	1.21	0.00	G2
G3	4.97	3.96	3.40	3.08	2.04	1.50	1.21	0.00	G3
G4	4.80	3.96	3.40	3.08	2.04	1.50	1.21	0.00	G4
G5	4.63	3.93	3.40	3.09	2.04	1.50	1.19	0.00	G5

TABLE OF CAMBER ORDINATES "CO" (Inches)

		Piece No. 1									Piece No. 2									
Girder	℄ A1	10.56'	21.12'	31.68'	42.24'	52.80'	63.37'	73.93'	84.49'	95.05'	FS1	8.60'	17.20'	25.80'	34.40'	℄ P1	51.60'	60.20'	68.80'	77.40'	FS2	Girder
G1	0	0 3/16	1 11/16	2 1/2	3 1/16	3 9/16	3 3/16	2 11/16	1 13/16	0 7/8	0	-0 1/2	-0 13/16	-1 1/8	-1 1/4	-1 3/8	-1 3/8	-1 1/8	-0 13/16	-0 3/8	0	G1
G2	0	0 9/16	1 1/4	1 15/16	2 3/8	2 9/16	2 7/16	1 15/16	1 5/16	0 9/16	0	-0 3/8	-0 13/16	-1 1/16	-1 5/16	-1 7/16	-1 5/16	-1 1/8	-0 3/4	-0 3/8	0	G2
G3	0	0 1/2	0 7/8	1 3/8	1 5/8	1 3/4	1 13/16	1 9/16	1 3/16	0 1/2	0	-0 1/2	-0 13/16	-1 3/16	-1 7/16	-1 7/16	-1 7/16	-1 1/8	-0 7/8	-0 1/2	0	G3
G4	0	0 5/16	0 9/16	0 13/16	1 1/8	1 7/16	1 5/8	1 11/16	1 3/8	0 13/16	0	-0 3/8	-0 13/16	-1 3/16	-1 5/16	-1 7/16	-1 5/16	-1 1/8	-0 7/8	-0 3/8	0	G4
G5	0	0 1/16	0	0	0 7/16	1	1 9/16	1 11/16	1 3/4	0 15/16	0	-0 5/16	-0 3/4	-0 15/16	-1 3/16	-1 5/16	-1 3/16	-1 1/16	-0 11/16	-0 3/8	0	G5

TABLE OF CAMBER ORDINATES "CO" (Inches)

		Piece No. 3										Piece No. 4										Piece No. 5									
Girder	FS2	10.40'	20.80'	31.20'	41.60'	52.00'	62.40'	72.80'	83.20'	93.60'	FS3	8.60'	17.20'	25.80'	34.40'	℄ P2	51.60'	60.20'	68.80'	77.40'	FS4	10.70'	21.40'	32.10'	42.80'	53.50'	64.20'	74.90'	85.60'	96.30'	℄ A2	Girder
G1	0	0 9/16	0 15/16	1 3/8	1 9/16	1 11/16	1 11/16	1 5/16	1	0 7/16	0	-0 1/2	-0 13/16	-1 1/8	-1 1/4	-1 3/8	-1 5/16	-1 1/16	-0 13/16	-0 3/8	0	0 3/4	1 1/2	2	2 5/16	2 7/16	2 3/8	2	1 7/16	0 13/16	0	G1
G2	0	0 5/8	1 3/16	1 9/16	1 7/8	1 7/8	1 13/16	1 9/16	1 1/8	0 5/8	0	-0 3/8	-0 7/8	-1 1/8	-1 3/8	-1 1/2	-1 5/16	-1 3/16	-0 3/4	-0 7/16	0	0 7/8	1 9/16	2 1/8	2 9/16	2 11/16	2 9/16	2 1/8	1 11/16	0 7/8	0	G2
G3	0	0 1/2	1 1/16	1 9/16	1 3/4	1 7/8	1 11/16	1 1/2	1 1/8	0 1/2	0	-0 1/2	-0 7/8	-1 1/4	-1 7/16	-1 1/2	-1 7/16	-1 3/16	-0 7/8	-0 9/16	0	0 3/4	1 7/16	2 1/8	2 7/16	2 9/16	2 9/16	2 1/8	1 9/16	0 3/4	0	G3
G4	0	0 5/8	1 1/16	1 9/16	1 7/8	1 7/8	1 13/16	1 1/2	1 1/8	0 5/8	0	-0 3/8	-0 7/8	-1 1/4	-1 3/8	-1 1/2	-1 5/16	-1 3/16	-0 7/8	-0 7/16	0	0 3/4	1 9/16	2 1/8	2 7/16	2 11/16	2 9/16	2 1/8	1 11/16	0 7/8	0	G4
G5	0	0 5/8	1 1/8	1 1/2	1 13/16	1 13/16	1 3/4	1 1/2	1 1/16	0 9/16	0	-0 3/8	-0 13/16	-1 1/16	-1 1/4	-1 3/8	-1 1/4	-1 1/16	-0 11/16	-0 3/8	0	0 13/16	1 7/16	1 15/16	2 3/8	2 1/2	2 5/16	2 1/8	1 9/16	0 13/16	0	G5

STATE OF MAINE
DEPARTMENT OF TRANSPORTATION

STP-1928(000)

WIN 19280.00

BRIDGE NO. 3333

BRIDGE PLANS

PROJ. MANAGER	M. Parsons	BY	DATE
DESIGN-DETAILED	D. Eaton	Team South	May 2014
CHECKED-REVIEWED	G. Gustafson		
DESIGN2-DETAILED2			
DESIGN3-DETAILED3			
REVISIONS 1			
REVISIONS 2			
REVISIONS 3			
REVISIONS 4			
FIELD CHANGES			

SIGNATURE

P.E. NUMBER

DATE

BAR MILLS BRIDGE
SACO RIVER
HOLLIS & BUXTON YORK COUNTY

CAMBER DIAGRAM

SHEET NUMBER

114

OF 148

Filename: ...\MSTA\114_Bar Mills Camber.dgn Division: BRIDGE Username: dana.damren Date:11/19/2014

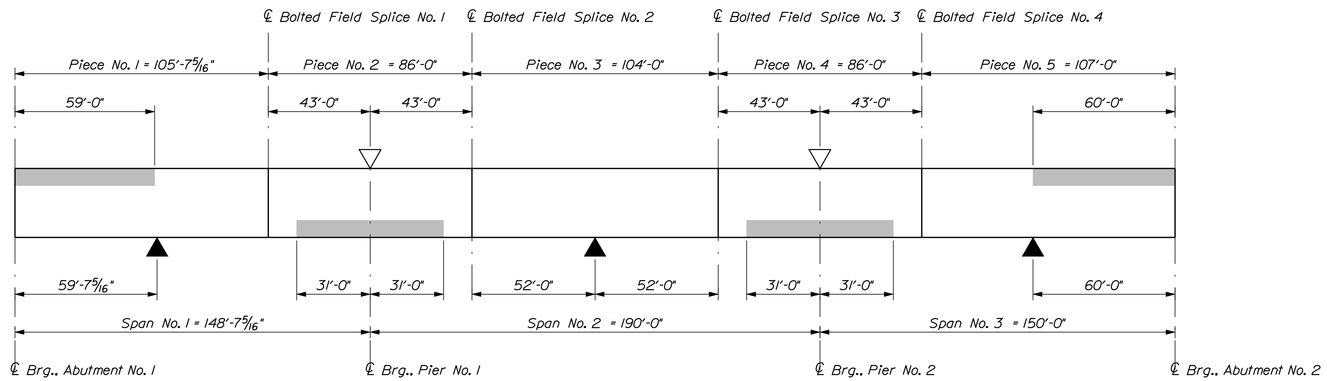

GIRDER STRESS DIAGRAM

▽ Maximum Negative Moment ▲ Maximum Positive Moment

Shaded areas are always in compression.
Other areas are in tension or have stress reversal.

BOTTOM OF SLAB ELEVATIONS

Span No. 1

Girder	℄ A1	10'	20'	30'	40'	50'	60'	70'	80'	90'	100'	110'	120'	130'	140'	℄ P1	Girder
G1	161.02	160.95	160.87	160.79	160.72	160.64	160.49	160.33	160.15	159.95	159.75	159.59	159.46	159.33	159.21	159.11	G1
G2	160.57	160.49	160.42	160.34	160.27	160.18	160.05	159.91	159.76	159.60	159.44	159.30	159.16	159.03	158.91	158.82	G2
G3	160.10	160.03	159.96	159.89	159.81	159.73	159.64	159.53	159.41	159.28	159.15	159.01	158.87	158.74	158.62	158.54	G3
G4	159.64	159.57	159.51	159.44	159.37	159.32	159.26	159.19	159.10	159.00	158.87	158.73	158.59	158.46	158.34	158.25	G4
G5	159.18	159.10	159.03	158.95	158.90	158.89	158.86	158.82	158.77	158.67	158.54	158.42	158.29	158.17	158.05	157.96	G5

Span No. 2

Girder	℄ P1	10'	20'	30'	40'	50'	60'	70'	80'	90'	100'	110'	120'	130'	140'	150'	160'	170'	180'	℄ P2	Girder
G1	159.11	159.01	158.92	158.85	158.78	158.71	158.64	158.57	158.49	158.41	158.31	158.19	158.07	157.94	157.81	157.68	157.55	157.42	157.31	157.21	G1
G2	158.82	158.72	158.64	158.57	158.50	158.44	158.37	158.31	158.23	158.14	158.04	157.93	157.80	157.67	157.53	157.40	157.26	157.14	157.02	156.92	G2
G3	158.54	158.44	158.36	158.29	158.22	158.16	158.09	158.03	157.95	157.86	157.76	157.65	157.52	157.39	157.25	157.12	156.98	156.86	156.74	156.64	G3
G4	158.25	158.15	158.07	158.00	157.93	157.87	157.80	157.74	157.66	157.57	157.47	157.36	157.23	157.10	156.96	156.83	156.69	156.57	156.45	156.35	G4
G5	157.96	157.87	157.79	157.71	157.65	157.58	157.52	157.45	157.37	157.28	157.18	157.06	156.94	156.81	156.67	156.54	156.41	156.28	156.16	156.06	G5

Span No. 3

Girder	℄ P1	10'	20'	30'	40'	50'	60'	70'	80'	90'	100'	110'	120'	130'	140'	℄ A2	Girder
G1	157.21	157.12	157.04	156.97	156.91	156.84	156.78	156.71	156.63	156.54	156.43	156.31	156.17	156.02	155.87	155.71	G1
G2	156.92	156.83	156.75	156.68	156.62	156.56	156.50	156.43	156.35	156.26	156.15	156.03	155.89	155.74	155.58	155.42	G2
G3	156.64	156.55	156.47	156.40	156.34	156.28	156.22	156.15	156.07	155.98	155.87	155.75	155.61	155.46	155.30	155.14	G3
G4	156.35	156.26	156.18	156.11	156.05	155.99	155.93	155.86	155.78	155.69	155.58	155.46	155.32	155.17	155.01	154.85	G4
G5	156.06	155.97	155.88	155.81	155.75	155.69	155.62	155.55	155.47	155.38	155.27	155.15	155.02	154.87	154.72	154.56	G5

STATE OF MAINE
DEPARTMENT OF TRANSPORTATION

STP-1928(000)

WIN 19280.00

BRIDGE NO. 3333

BRIDGE PLANS

PROJ. MANAGER	M. Parlin	BY	DATE
DESIGN-DETAILED	D. Eaton	Team South	May 2014
CHECKED-REVIEWED	J. Waugh	-----	-----
DESIGN2-DETAILED2	-----	-----	-----
DESIGN3-DETAILED3	-----	-----	-----
REVISIONS 1	-----	-----	-----
REVISIONS 2	-----	-----	-----
REVISIONS 3	-----	-----	-----
REVISIONS 4	-----	-----	-----
FIELD CHANGES	-----	-----	-----

SIGNATURE

P.E. NUMBER

DATE

BAR MILLS BRIDGE
SACO RIVER
HOLLIS & BUXTON YORK COUNTY

GIRDER STRESS & BOS ELEV'S

SHEET NUMBER
115
OF 148

Filename: ...\115_Bar Mills Stress & BOS.dgn Division: BRIDGE Username: Garrett.A.Gustafson Date:11/20/2014

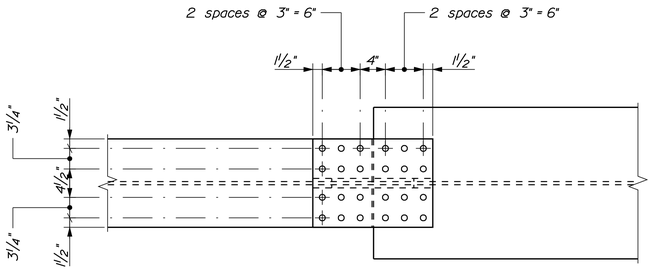

~ TOP VIEW ~

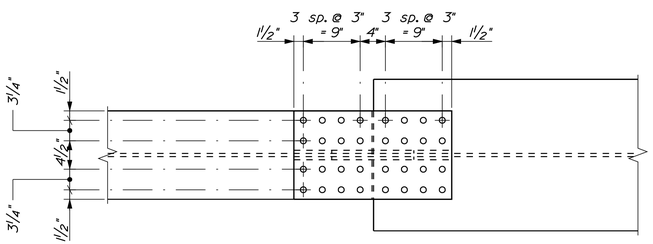

~ BOTTOM VIEW ~

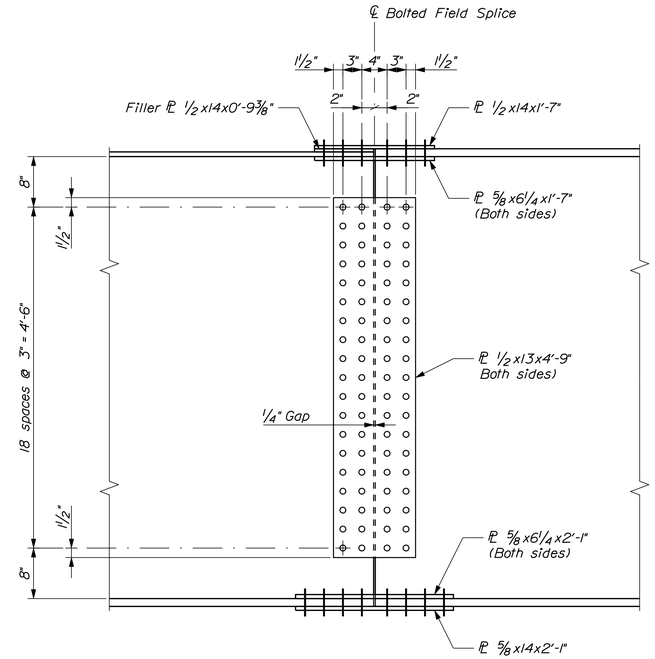

~ ELEVATION ~

BOLTED FIELD SPLICE

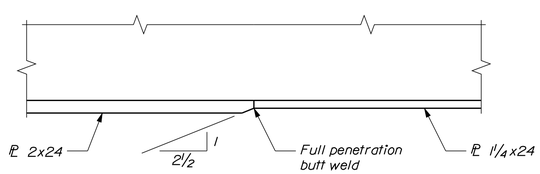

FLANGE TRANSITION DETAIL

Typical Top & Bottom Flange

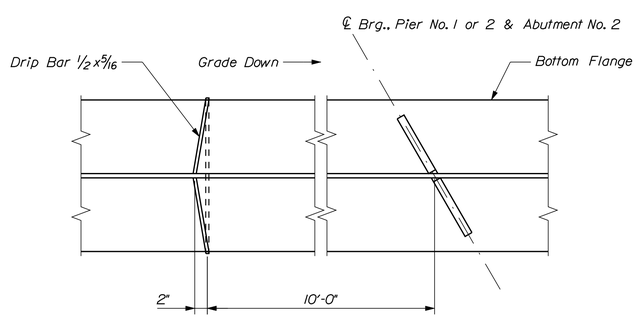

DRIP BAR PLAN

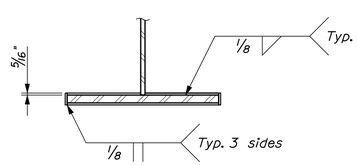

DRIP BAR SECTION

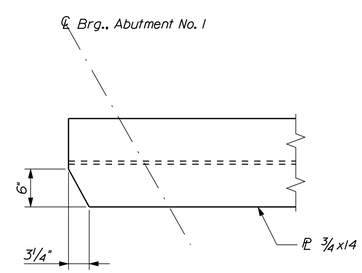

TOP FLANGE CLIP ~ SPAN NO. 1

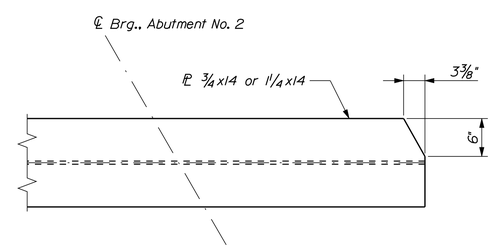

FLANGE CLIP ~ SPAN NO. 3

STRUCTURAL STEEL NOTES

1. Camber ordinates, as shown, are computed to compensate for all dead load deflections and for the curvature of the finished grade profile.

2. All web, flange, and field splice plates in tension or stress reversal areas shall be impact tested in accordance with AASHTO M 270 (2014 ed.), Table 9, Zone 2

3. No transverse butt weld splices will be allowed in the flange plates or web plates within 10 feet or 10 percent of the span length (whichever is greater) from the points of maximum negative moment or maximum positive moment. Butt weld splices in flanges shall be not less than 3 feet from transverse butt welds in the web plates and no transverse web or flange butt welds shall be located within 3 feet of other transverse welds (e.g. connection plates to web welds) on either flange or web. No transverse butt weld splices will be allowed in areas of stress reversal.

4. Sections of flange plates or web plates between transverse shop splices or between a transverse shop splice and a field splice shall be not less than 20 feet in length unless otherwise shown on the plans.

5. Bearing stiffeners shall be plumb after erection and dead loading of the structure. Intermediate web stiffeners may be either plumb or normal to the top flange.

6. Connection plates for diaphragms and crossframes shall have a minimum thickness of ½ inch.

7. Crossframe or diaphragm connection plates may be either plumb or normal to the top flange.

8. At locations marked with an asterisk (*), the designated diaphragms shall be changed to a Type "D" diaphragm as required to accommodate the Contractor's deck placement sequence. No extra compensation will be allowed for any diaphragms so substituted, and any additional costs will be considered incidental to Contract items.

9. The "Drip Bar" detail shall be used on the high side of each pier and abutments on all girders.

10. Bolted field splice connections shall be made using ⅞-in. ASTM A 325 H.S. bolts. Hole size shall be 15/16 inch diameter. Bolt threads shall be excluded from the shear plane of the field splice connections.

11. Filler plates may be steel conforming to the requirements of ASTM A 709, Grade 36.

12. Girder ends and end cross frames shall be coated to a distance of 10 feet from the centerline of bearing in accordance with Standard Specifications Section 506, Shop Applied Protective Coating - Steel (Zinc Rich Coating System).

13. After placement of the superstructure concrete, the abutments and piers shall be thoroughly cleaned of all stains by a method approved by the Resident. Payment will be considered incidental to Contract items.

14. Structural Steel was designed with a vertical construction load of 50 lb/sf and a lateral construction wind velocity of 50 mph.

STRUCTURAL STEEL MATERIALS

All Material (unless noted) . . . . . ASTM A 709, Grade 50W
High Strength Bolts . . . . . ASTM A 325, Type 3

STATE OF MAINE
DEPARTMENT OF TRANSPORTATION

STP-1928(000)

WIN 19280.00

BRIDGE NO. 3333

BRIDGE PLANS

PROJ. MANAGER	M. Parlin	BY	DATE	
DESIGN-DETAILED	D. Eaton	Team South	May 2014	
CHECKED-REVIEWED	J. Waugh	---	---	SIGNATURE
DESIGN2-DETAILED2	-----	-----	-----	
DESIGN3-DETAILED3	-----	-----	-----	P.E. NUMBER
REVISIONS 1	-----	-----	-----	
REVISIONS 2	-----	-----	-----	
REVISIONS 3	-----	-----	-----	DATE
REVISIONS 4	-----	-----	-----	
FIELD CHANGES	-----	-----	-----	

BAR MILLS BRIDGE
SACO RIVER
HOLLIS & BUXTON
YORK COUNTY

STRUCTURAL STEEL DETAILS

SHEET NUMBER
116
OF 148

Filename: ...\116_Bar Mills SteelDetails.dgn Division: BRIDGE Username: Garrett.A.Gustafson Date:12/17/2014

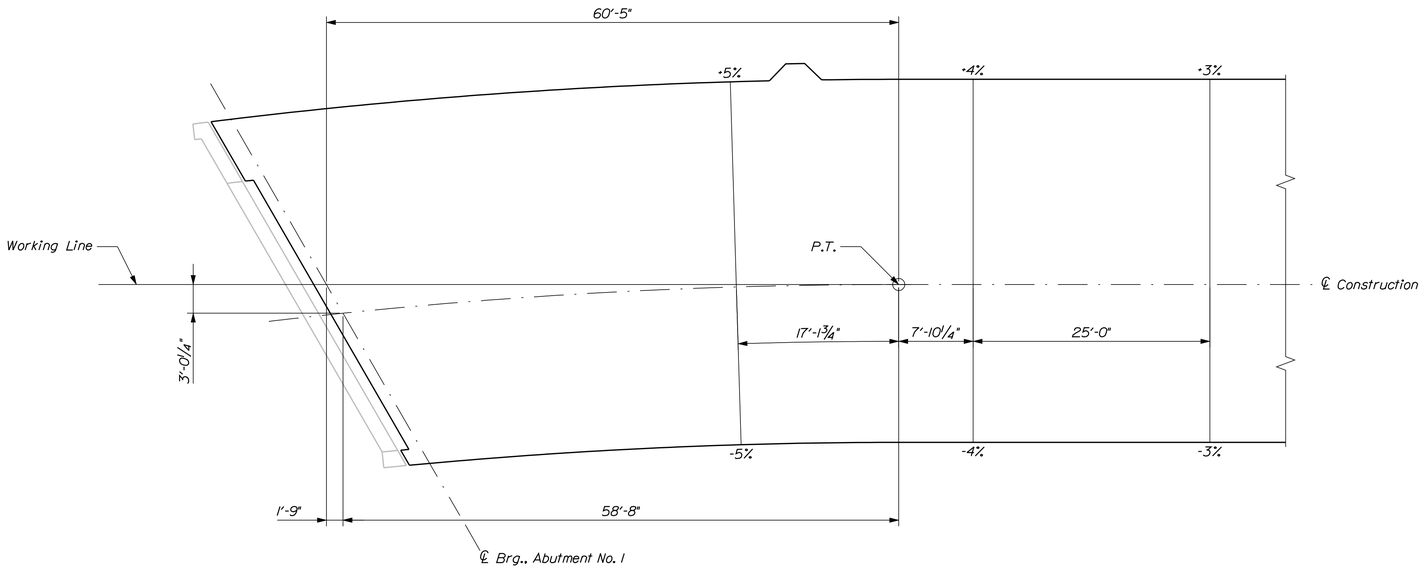

SUPERELEVATION TRANSITION

SUPERSTRUCTURE NOTES

1. The theoretical blocking used for design of the structure is 3¾ inches at the centerline of bearing of the abutments and piers. Refer to Standard Detail 502(02) for blocking details.

2. Reinforcing steel shall have a minimum concrete cover of 2 inches unless otherwise noted.

3. Adjust reinforcing steel to fit around the bridge drains in a manner approved by the Resident. Do not cut transverse reinforcing bars.

4. Form a one inch V-groove on the fascias at the horizontal joint between the curb and slab.

5. Unless the superstructure slab concrete is placed in one continuous operation, the initial placement shall begin at a simply supported end of the deck slab and shall terminate at the completion of a positive moment section. Successive placements shall proceed from the end of the previous placement, terminate at the completion of a positive moment section, and include two or more spans. Concrete in a placement shall be kept plastic one complete span behind the span being placed. A minimum of 5 days shall elapse between successive partial placements. The superstructure slab concrete placement sequence shall be approved by the Resident.

6. At the Contractor's option, Precast Deck Panels may be used in place of the full depth cast-in-place deck slab, in accordance with Standard Specifications Section 535 and the Standard Details.

7. Payment for reinforcing steel fabricated, delivered, and placed in the cast-in-place portion of the structural concrete slab, including the semi - integral backwall, will be considered incidental to the appropriate Standard Specifications Section 502 pay item.

8. The Contractor shall install Transition Barrier vertical closed stirrups, as shown in Standard Details Section 526, prior to the placement of the curb or sidewalk concrete.

9. The Construction Joint adjacent to the semi - integral backwall at Abutment No. 2 is mandatory. The semi - integral backwall shall be placed after all other concrete deck placements have been completed.

10. Semi - integral backwall concrete at Abutment No. 2 shall be Class "LP" concrete.

BAR MILLS BRIDGE
SACO RIVER
HOLLIS & BUXTON YORK COUNTY

SUPERELEVATION TRANSITION

		BY	DATE
PROJ. MANAGER	M. Parlin		
DESIGN-DETAILED	D. Eaton	Team South	Feb. 2014
CHECKED-REVIEWED	G. Gustafson	X	X
DESIGN2-DETAILED2	------	------	------
DESIGN3-DETAILED3	------	------	------
REVISIONS 1	------		------
REVISIONS 2	------		------
REVISIONS 3	------		------
REVISIONS 4	------		------
FIELD CHANGES	------		------

SIGNATURE
P.E. NUMBER
DATE

STATE OF MAINE
DEPARTMENT OF TRANSPORTATION

STP-1928(000)

BRIDGE NO. 3333 WIN 19280.00 BRIDGE PLANS

SHEET NUMBER
117
OF 148

Filename: ...\117_Bar Mills Superstructure Superelevation Transition.dgn Division: BRIDGE Username: dana.damren Date:11/20/2014

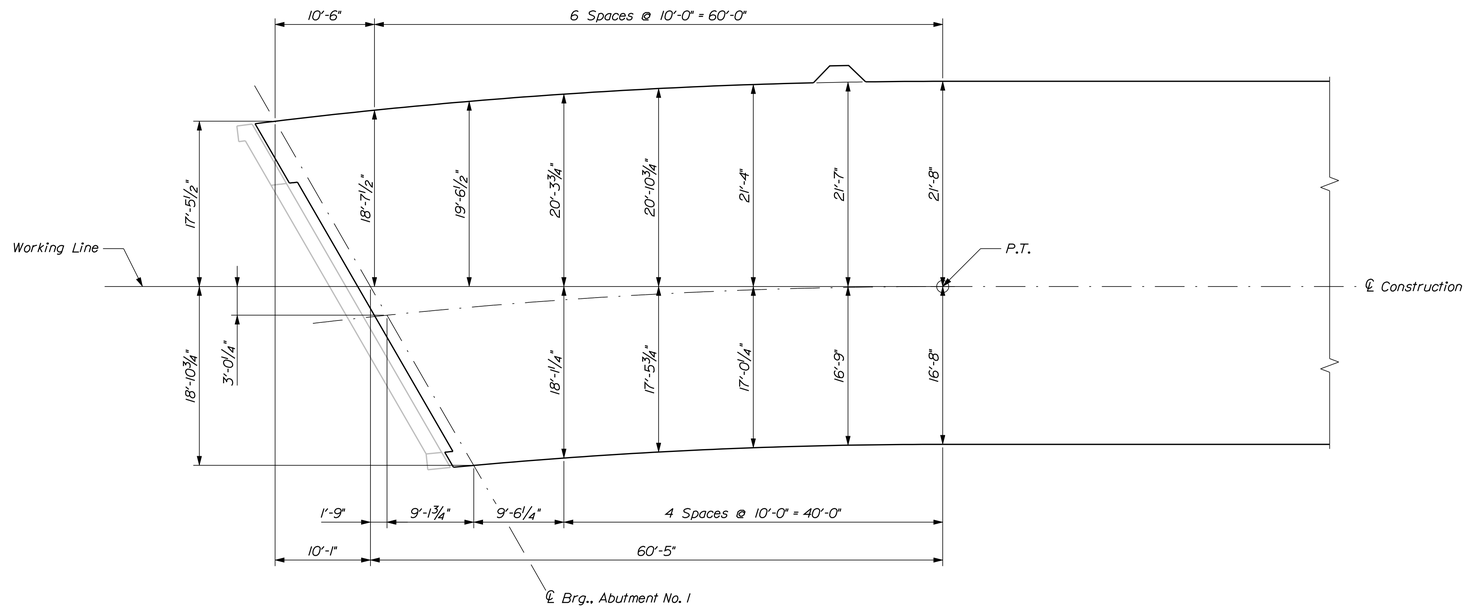

SUPERSTRUCTURE SLAB FASCIA OFFSETS

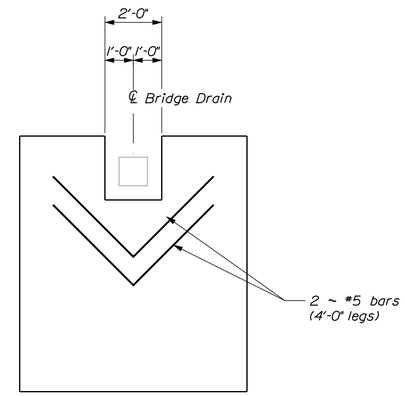

TYPICAL PRECAST DECK PANEL PLAN
Showing Bridge Drain Blockout

BAR MILLS BRIDGE
SACO RIVER
HOLLIS & BUXTON YORK COUNTY

FASCIA OFFSETS

PROJ. MANAGER	M. Parlin	BY	DATE
DESIGN-DETAILED	D. Eaton	Team South	Feb. 2014
CHECKED-REVIEWED	G. Gustafson	X	X
DESIGN2-DETAILED2	------	------	------
DESIGN3-DETAILED3	------	------	------
REVISIONS 1	------		------
REVISIONS 2	------		------
REVISIONS 3	------		------
REVISIONS 4	------		------
FIELD CHANGES	------		------

SIGNATURE
P.E. NUMBER
DATE

STATE OF MAINE
DEPARTMENT OF TRANSPORTATION

STP-1928(000)

BRIDGE NO. 3333 WIN 19280.00 BRIDGE PLANS

SHEET NUMBER
118
OF 148

Filename: ...\118_Bar Mills Superstructure Fascia Offsets.dgn Date:11/19/2014 Username: dana.damren

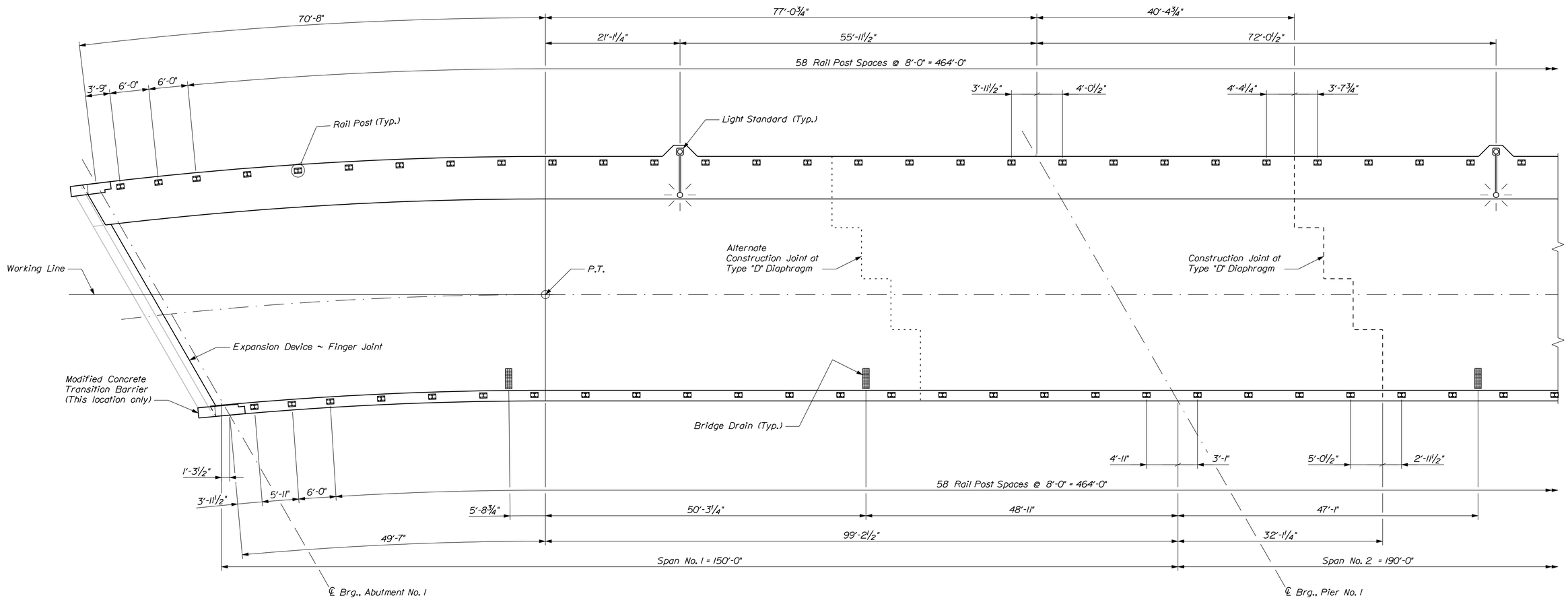

SUPERSTRUCTURE SLAB ~ SPAN NO. 1

Filename: ...\119_Bar Mills Superstructure Span No. 1.dgn Division: BRIDGE Username: dana.damren Date:11/19/2014

BAR MILLS BRIDGE
SACO RIVER
HOLLIS & BUXTON YORK COUNTY

SPRSTR. PLAN SPAN NO. 1

		BY	DATE	
PROJ. MANAGER	M. Parlin			
DESIGN-DETAILED	D. Eaton	Team South	Feb. 2014	
CHECKED-REVIEWED	J. Waugh	X	X X	SIGNATURE
DESIGN2-DETAILED2	------	------	------	
DESIGN3-DETAILED3	------	------	------	P.E. NUMBER
REVISIONS 1	------		------	
REVISIONS 2	------		------	
REVISIONS 3	------		------	DATE
REVISIONS 4	------		------	
FIELD CHANGES	------		------	

STATE OF MAINE
DEPARTMENT OF TRANSPORTATION

STP-1928(000)

BRIDGE NO. 3333 WIN 19280.00 BRIDGE PLANS

SHEET NUMBER
119
OF 148

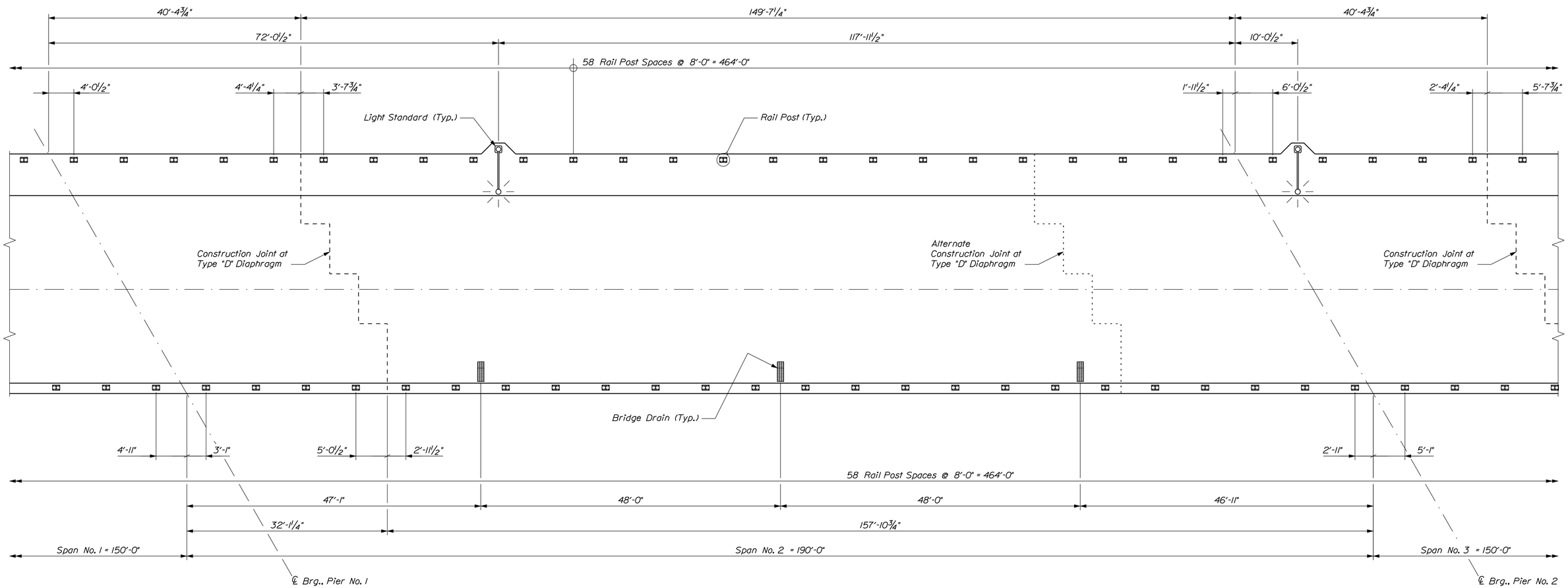

SUPERSTRUCTURE SLAB ~ SPAN NO. 2

BAR MILLS BRIDGE
SACO RIVER
HOLLIS & BUXTON YORK COUNTY

SPRSTR. PLAN SPAN NO. 2

PROJ. MANAGER	M. Parlin	BY	DATE
DESIGN-DETAILED	D. Eaton	Team South	Feb. 2014
CHECKED-REVIEWED	J. Waugh	X	X X
DESIGN2-DETAILED2	------	------	------
DESIGN3-DETAILED3	------	------	------
REVISIONS 1	------		------
REVISIONS 2	------		------
REVISIONS 3	------		------
REVISIONS 4	------		------
FIELD CHANGES	------		------

SIGNATURE
P.E. NUMBER
DATE

STATE OF MAINE
DEPARTMENT OF TRANSPORTATION

STP-1928(000)

BRIDGE NO. 3333 WIN 19280.00 BRIDGE PLANS

SHEET NUMBER
120
OF 148

Filename: ...\120_Bar Mills Superstructure Span No.2.dgn Division: BRIDGE Username: dana.damren Date:11/19/2014

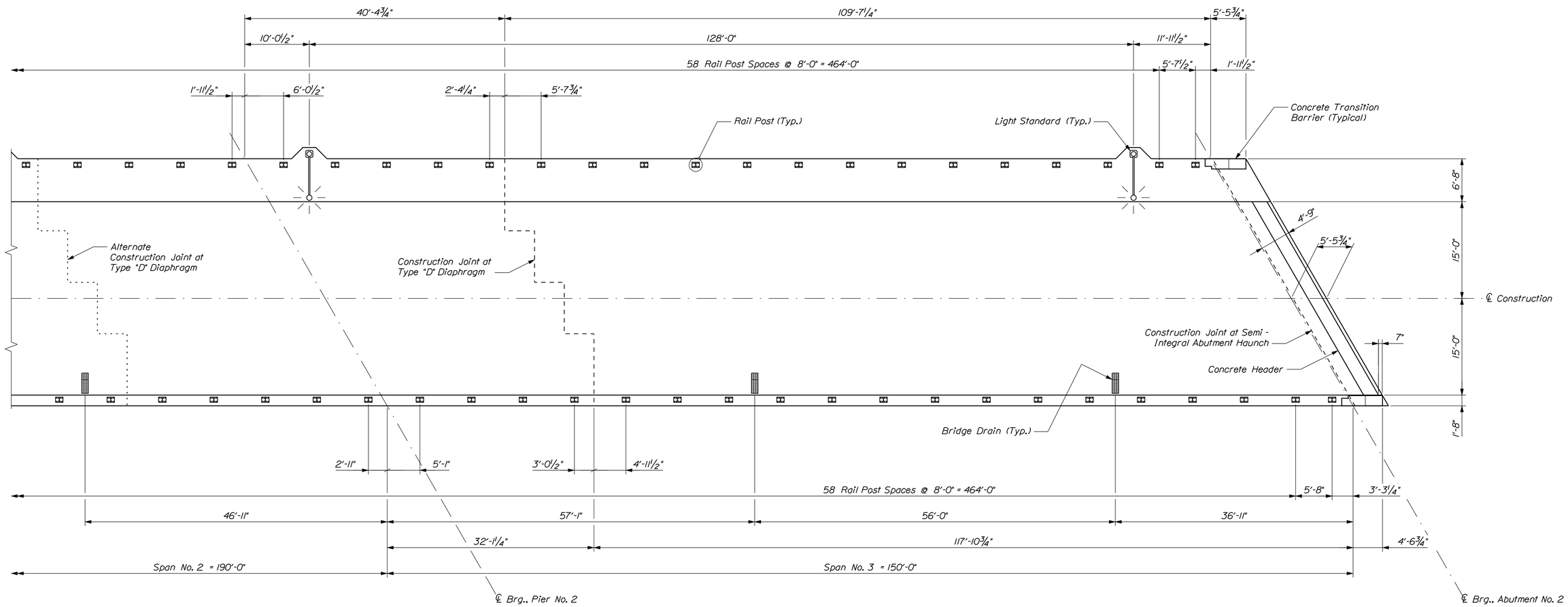

SUPERSTRUCTURE SLAB ~ SPAN NO. 3

BAR MILLS BRIDGE
SACO RIVER
HOLLIS & BUXTON YORK COUNTY

SPRSTR. PLAN SPAN NO. 3

		BY	DATE
PROJ. MANAGER	M. Parlin		
DESIGN-DETAILED	D. Eaton	Team South	Feb. 2014
CHECKED-REVIEWED	J. Waugh	X	X X
DESIGN2-DETAILED2	------	------	------
DESIGN3-DETAILED3	------	------	------
REVISIONS 1	------		------
REVISIONS 2	------		------
REVISIONS 3	------		------
REVISIONS 4	------		------
FIELD CHANGES	------		------

SIGNATURE
P.E. NUMBER
DATE

STATE OF MAINE
DEPARTMENT OF TRANSPORTATION

STP-1928(000)

BRIDGE NO. 3333 WIN 19280.00 BRIDGE PLANS

SHEET NUMBER
121
OF 148

Filename: ...\121_Bar Mills Superstructure Span No. 3.dgn Division: BRIDGE Username: dana.damren Date:11/19/2014

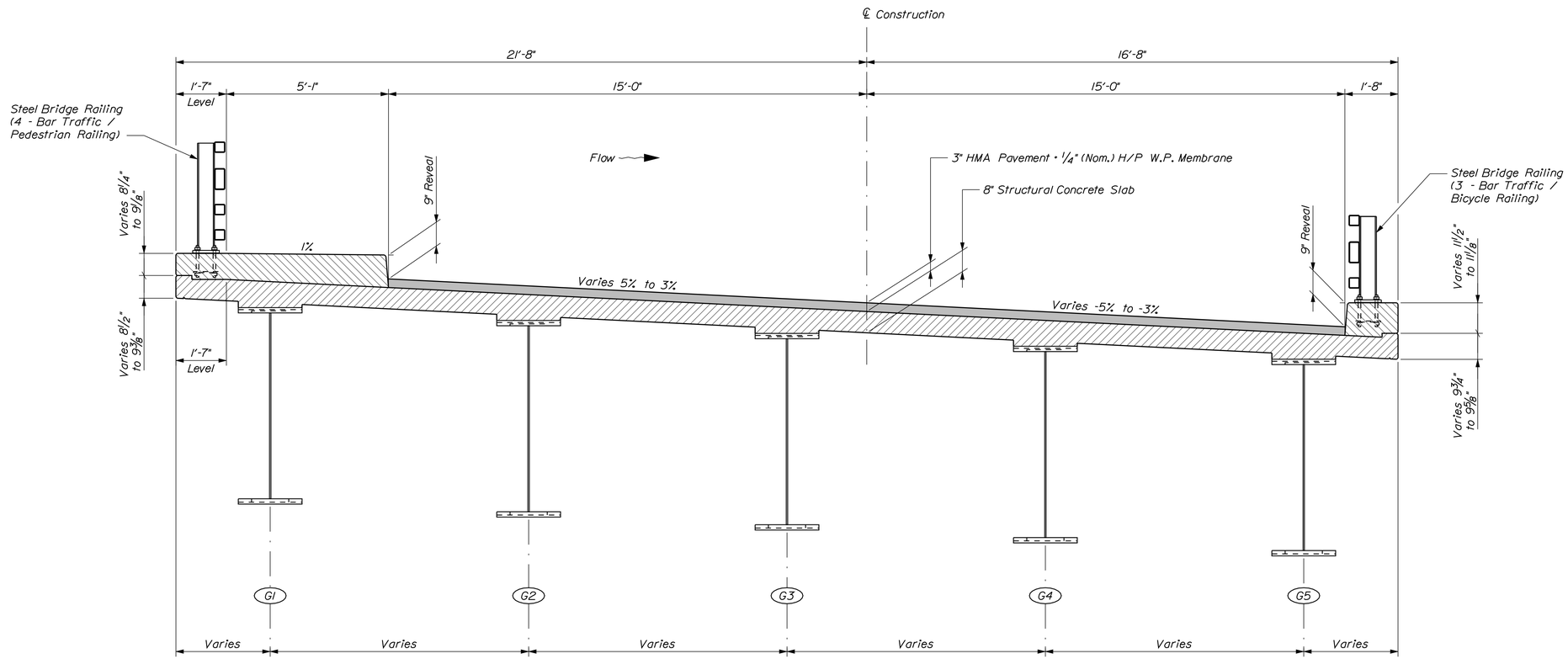

TRANSVERSE SECTION
Abutment No. 1 to Field Splice No. 1

Filename: ...\122_Bar Mills Transverse Section.dgn Division: BRIDGE Username: dana.damren Date:11/20/2014

STATE OF MAINE
DEPARTMENT OF TRANSPORTATION

STP-1928(000)

WIN 19280.00

BRIDGE NO. 3333

BRIDGE PLANS

		BY	DATE
PROJ. MANAGER	M. Purin		
DESIGN-DETAILED	D. Eaton	Team South	May 2014
CHECKED-REVIEWED	J. Waugh		
DESIGN2-DETAILED2			
DESIGN3-DETAILED3			
REVISIONS 1			
REVISIONS 2			
REVISIONS 3			
REVISIONS 4			
FIELD CHANGES			

SIGNATURE

P.E. NUMBER

DATE

BAR MILLS BRIDGE
SACO RIVER
HOLLIS & BUXTON YORK COUNTY

TRANS. SECTION ~ CURVED DECK

SHEET NUMBER

122

OF 148

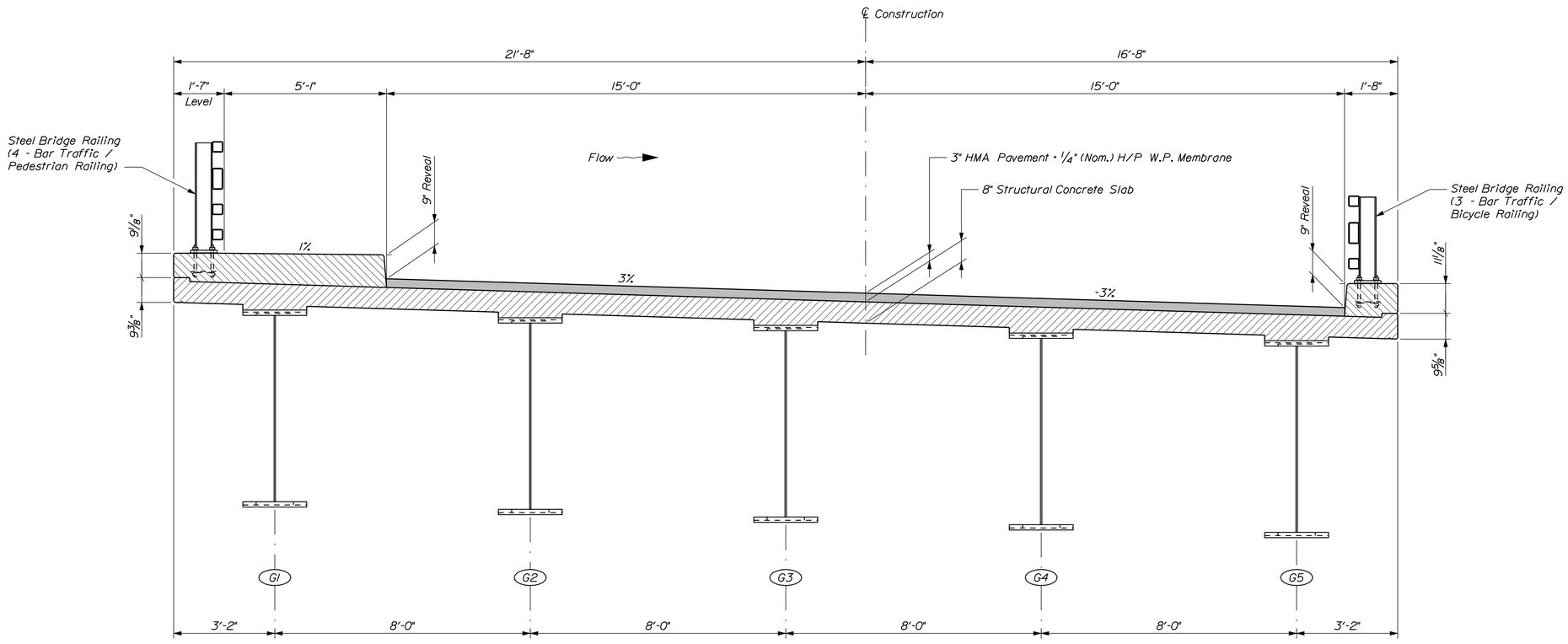

TRANSVERSE SECTION
Field Splice No. 1 to Abutment No. 2

STATE OF MAINE
DEPARTMENT OF TRANSPORTATION

STP-1928(000)

WIN 19280.00

BRIDGE NO. 3333

BRIDGE PLANS

PROJ. MANAGER	M. Parlin	BY	DATE
DESIGN-DETAILED	D. Eaton	Team South	May 2014
CHECKED-REVIEWED	J. Waugh	---	---
DESIGN2-DETAILED2	-----	-----	-----
DESIGN3-DETAILED3	-----	-----	-----
REVISIONS 1	-----	-----	-----
REVISIONS 2	-----	-----	-----
REVISIONS 3	-----	-----	-----
REVISIONS 4	-----	-----	-----
FIELD CHANGES	-----	-----	-----

SIGNATURE

P.E. NUMBER

DATE

BAR MILLS BRIDGE
SACO RIVER
HOLLIS & BUXTON YORK COUNTY

TRANS. SECT. ~ TANGENT DECK

SHEET NUMBER

123

OF 148

Filename: ...\123_Bar Mills Transverse Section.dgn Division: BRIDGE Username: dana.damren Date:11/19/2014

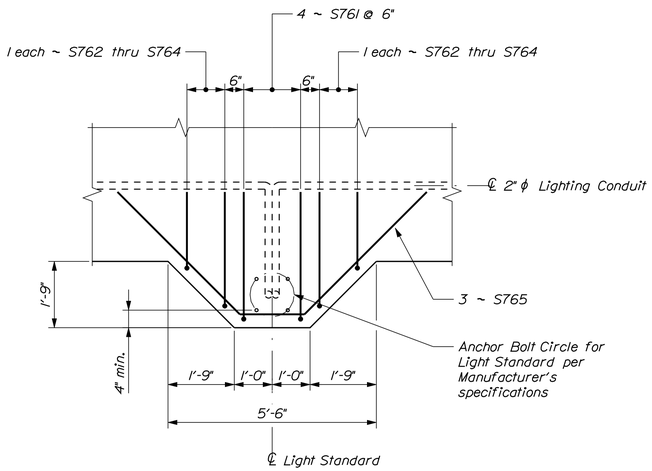

LIGHT STANDARD SUPPORT PLAN

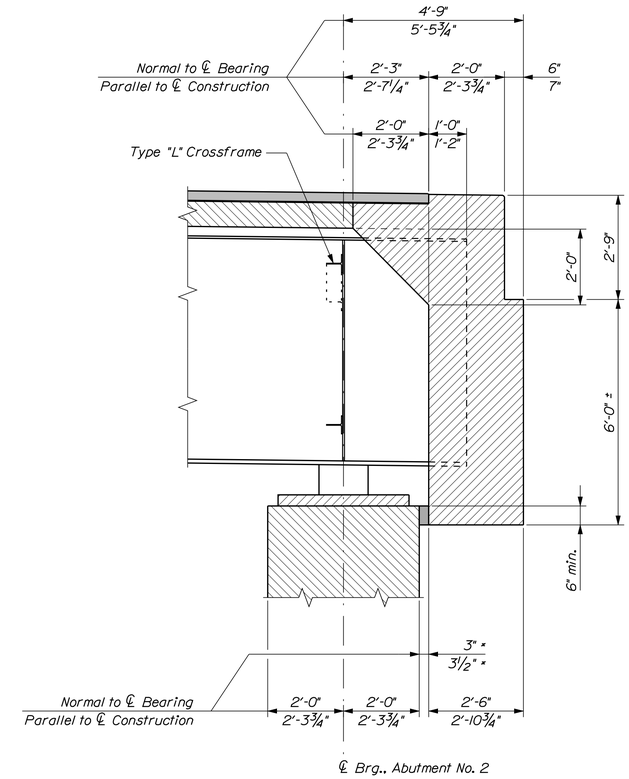

LONGITUDINAL SECTION AT ABUTMENT NO. 2

* Synthetic Compressible Inclusion
(Refer to Special Provisions Section 620)

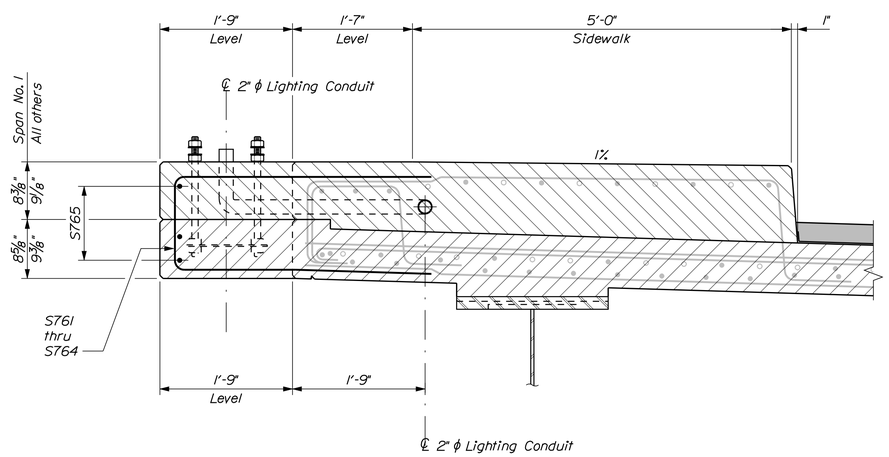

LIGHT STANDARD SUPPORT SECTION

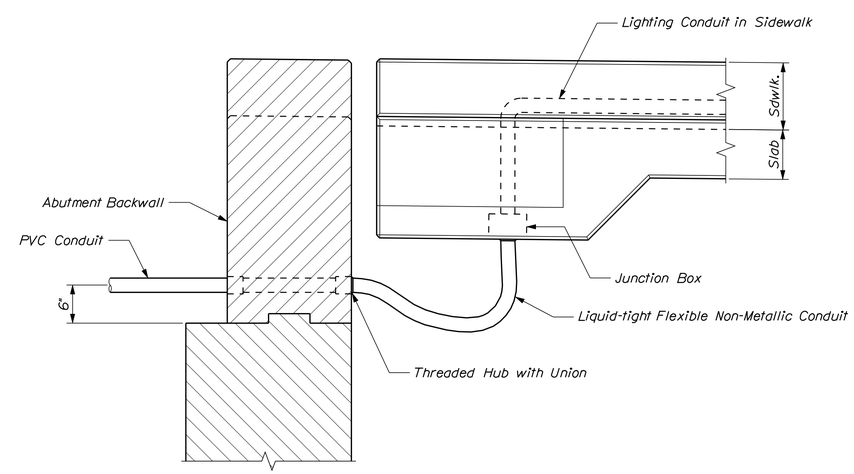

LIGHTING CONDUIT EXPANSION DETAIL

STATE OF MAINE
DEPARTMENT OF TRANSPORTATION

STP-1928(000)

WIN 19280.00

BRIDGE NO. 3333

BRIDGE PLANS

PROJ. MANAGER	M. Parlin	BY	DATE
DESIGN-DETAILED	D. Eaton	Team South	May 2014
CHECKED-REVIEWED	J. Waugh		
DESIGN2-DETAILED2			
DESIGN3-DETAILED3			
REVISIONS 1			
REVISIONS 2			
REVISIONS 3			
REVISIONS 4			
FIELD CHANGES			

SIGNATURE

P.E. NUMBER

DATE

BAR MILLS BRIDGE
SACO RIVER
HOLLIS & BUXTON YORK COUNTY

SUPERSTRUCTURE DETAILS

SHEET NUMBER
124
OF 148

Filename: ...\124_Bar Mills Superstructure Details.dgn Division: BRIDGE Username: dana.damren Date:12/1/2014

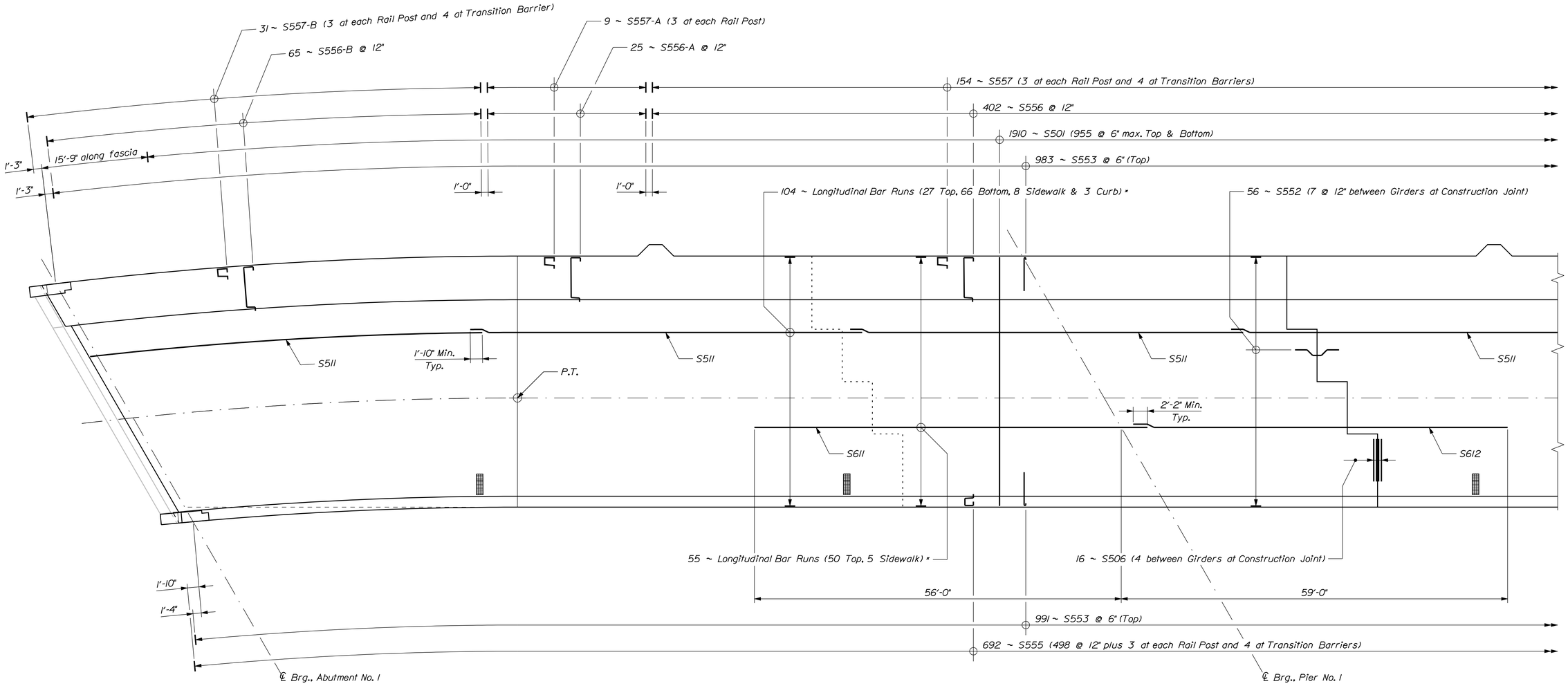

SLAB REINFORCING PLAN ~ SPAN NO. 1

* See "Half Upstream / Downstream Slab Reinforcing Section" and "Slab Reinforcing Table"

SLAB REINFORCING TABLE				
Main Longitudinal Bar Runs				
Location	No. Runs	Bars	Qty. S511	Qty. S512
Slab	93	8 ~ S511, 1 ~ S512	744	93
Curb	3	8 ~ S511, 1 ~ S512	24	3
Sidewalk	8	8 ~ S511, 1 ~ S512	64	8
Total Bars			832	104
Negative Moment Longitudinal Bar Runs				
Location	No. Runs	Bars	Qty. S611	Qty. S612
Slab	50 x 2	1 ~ S611, 1 ~ S612	100	100
Sidewalk	5 x 2	1 ~ S611, 1 ~ S612	10	10
Total Bars			110	110

BAR MILLS BRIDGE
SACO RIVER
HOLLIS & BUXTON YORK COUNTY

SLAB REINF. PLAN SPAN NO. 1

PROJ. MANAGER	M. Parlin	BY	DATE
DESIGN-DETAILED	D. Eaton	Team South	Feb. 2014
CHECKED-REVIEWED	J. Waugh	X	X X
DESIGN2-DETAILED2	------	------	------
DESIGN3-DETAILED3	------	------	------
REVISIONS 1	------		------
REVISIONS 2	------		------
REVISIONS 3	------		------
REVISIONS 4	------		------
FIELD CHANGES	------		------

SIGNATURE
P.E. NUMBER
DATE

STATE OF MAINE
DEPARTMENT OF TRANSPORTATION

STP-1928(000)

BRIDGE NO. 3333 WIN 19280.00 BRIDGE PLANS

SHEET NUMBER 125 OF 148

Filename: ...\125_Bar Mills Slab Reinforcing Plan Span No.1.dgn Division: BRIDGE Username: dana.damren Date:11/19/2014

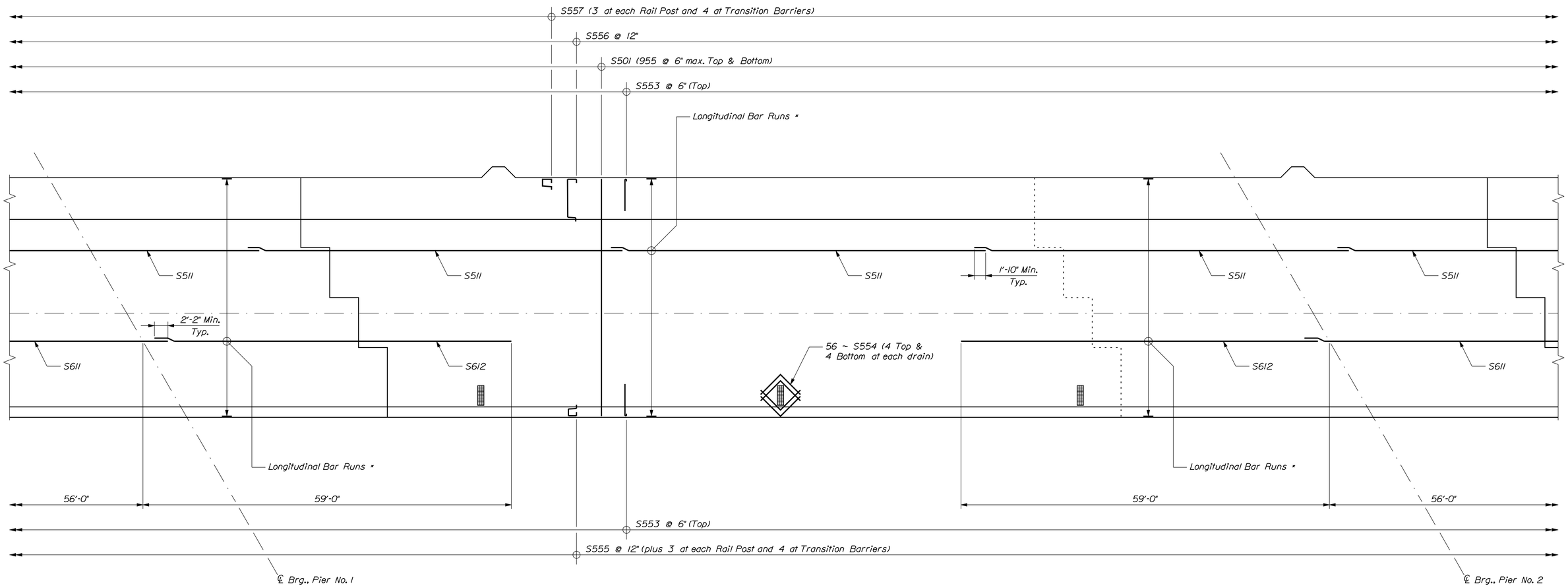

SLAB REINFORCING PLAN ~ SPAN NO. 2

* See "Half Upstream / Downstream Slab Reinforcing Section" and "Slab Reinforcing Table"

BAR MILLS BRIDGE
SACO RIVER
HOLLIS & BUXTON YORK COUNTY

SLAB REINF. PLAN SPAN NO. 2

PROJ. MANAGER	M. Parlin	BY	DATE
DESIGN-DETAILED	D. Eaton	Team South	Feb. 2014
CHECKED-REVIEWED	J. Waugh	X	X X
DESIGN2-DETAILED2	------	------	------
DESIGN3-DETAILED3	------	------	------
REVISIONS 1	------		------
REVISIONS 2	------		------
REVISIONS 3	------		------
REVISIONS 4	------		------
FIELD CHANGES	------		------

SIGNATURE

P.E. NUMBER

DATE

STATE OF MAINE
DEPARTMENT OF TRANSPORTATION

STP-1928(000)

BRIDGE NO. 3333 WIN 19280.00 BRIDGE PLANS

SHEET NUMBER 126 OF 148

Filename: ...\126_Bar Mills Slab Reinforcing Plan Span No. 2.dgn Division: BRIDGE Username: dana.damren Date:11/19/2014

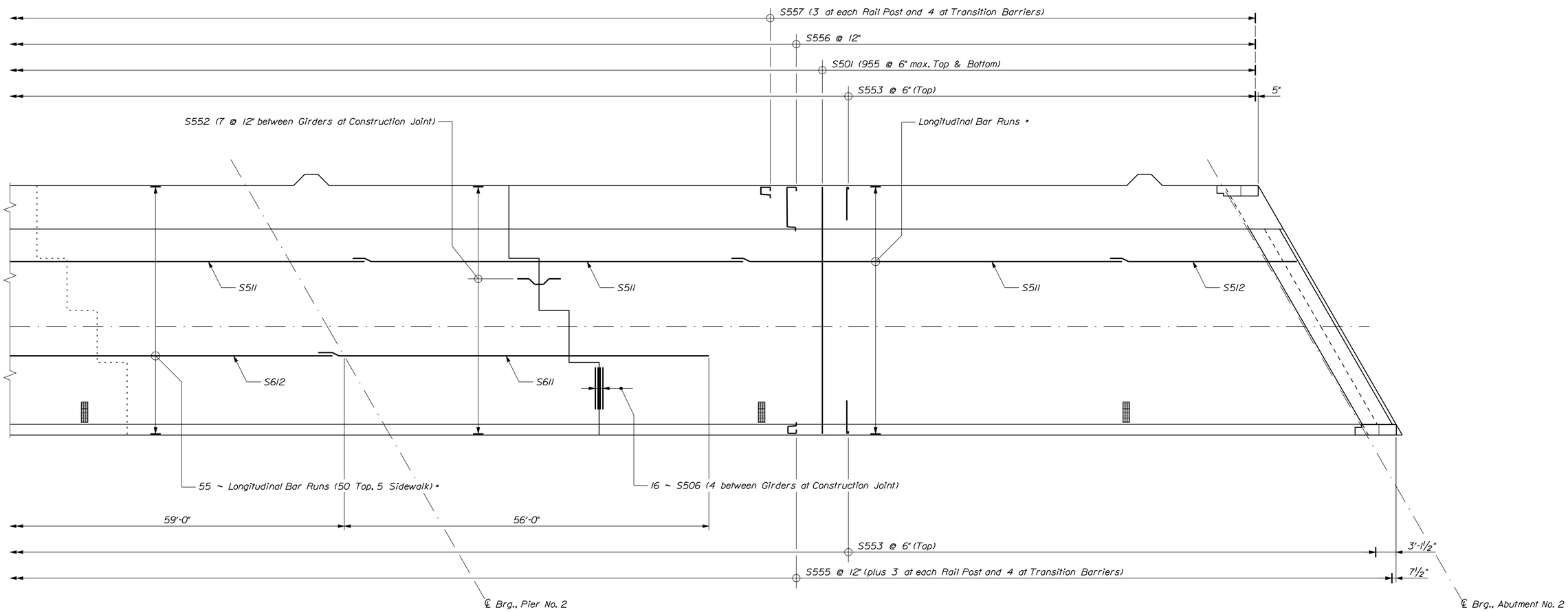

SLAB REINFORCING PLAN ~ SPAN NO. 3

* See "Half Upstream / Downstream Slab Reinforcing Section" and "Slab Reinforcing Table"

BAR MILLS BRIDGE
SACO RIVER
HOLLIS & BUXTON YORK COUNTY

SLAB REINF. PLAN SPAN NO. 3

		BY	DATE	
PROJ. MANAGER	M. Parlin			
DESIGN-DETAILED	D. Eaton	Team South	Feb. 2014	
CHECKED-REVIEWED	J. Waugh	X	X X	SIGNATURE
DESIGN2-DETAILED2	------	------	------	
DESIGN3-DETAILED3	------	------	------	P.E. NUMBER
REVISIONS 1	------		------	
REVISIONS 2	------		------	
REVISIONS 3	------		------	DATE
REVISIONS 4	------		------	
FIELD CHANGES	------		------	

STATE OF MAINE
DEPARTMENT OF TRANSPORTATION

STP-1928(000)

BRIDGE NO. 3333 WIN 19280.00 BRIDGE PLANS

SHEET NUMBER 127 OF 148

Filename: ...\127_Bar Mills Slab Reinforcing Plan Span No.3.dgn Division: BRIDGE Username: dana.damren Date:11/19/2014

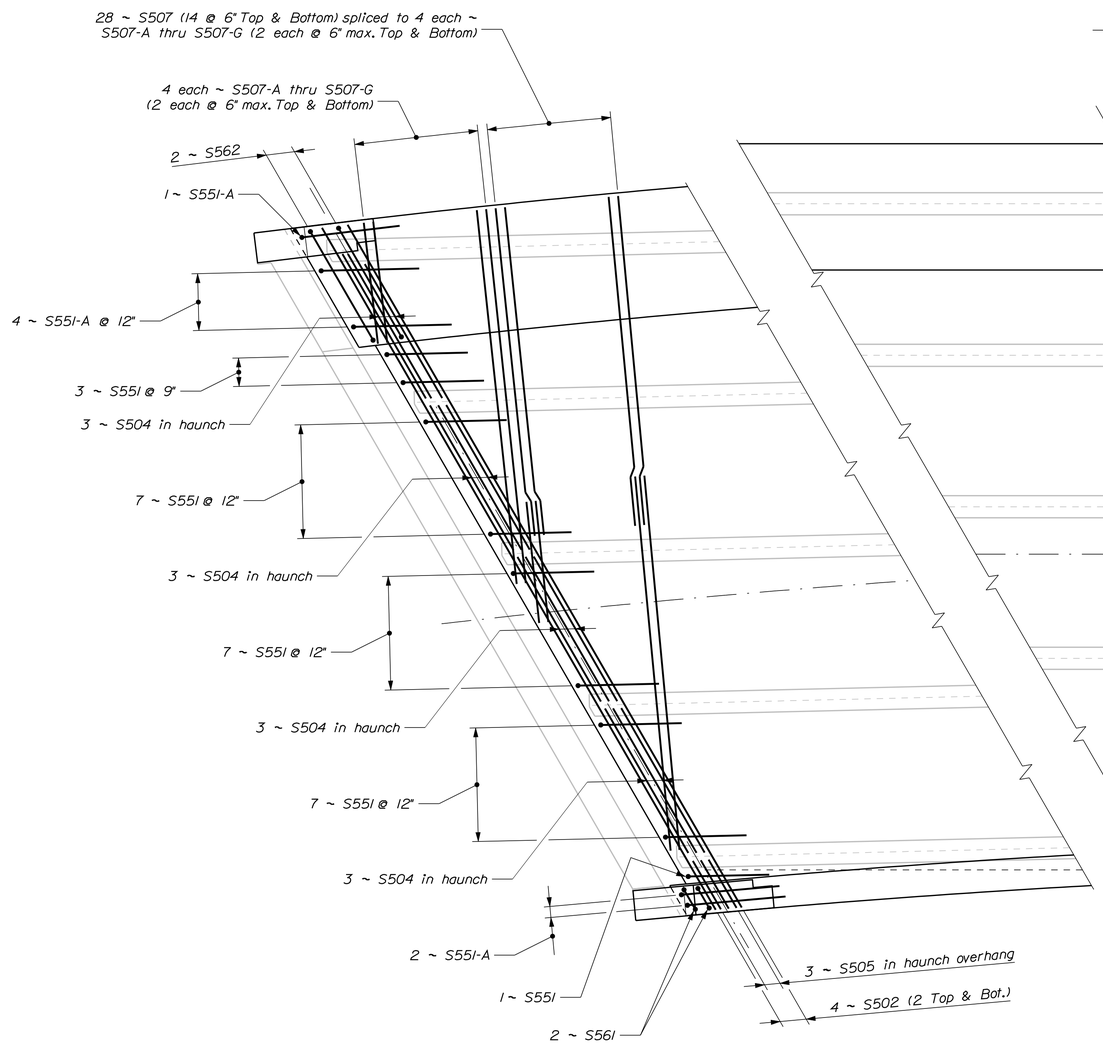

SLAB END REINFORCING PLAN ~ SPAN NO. 1

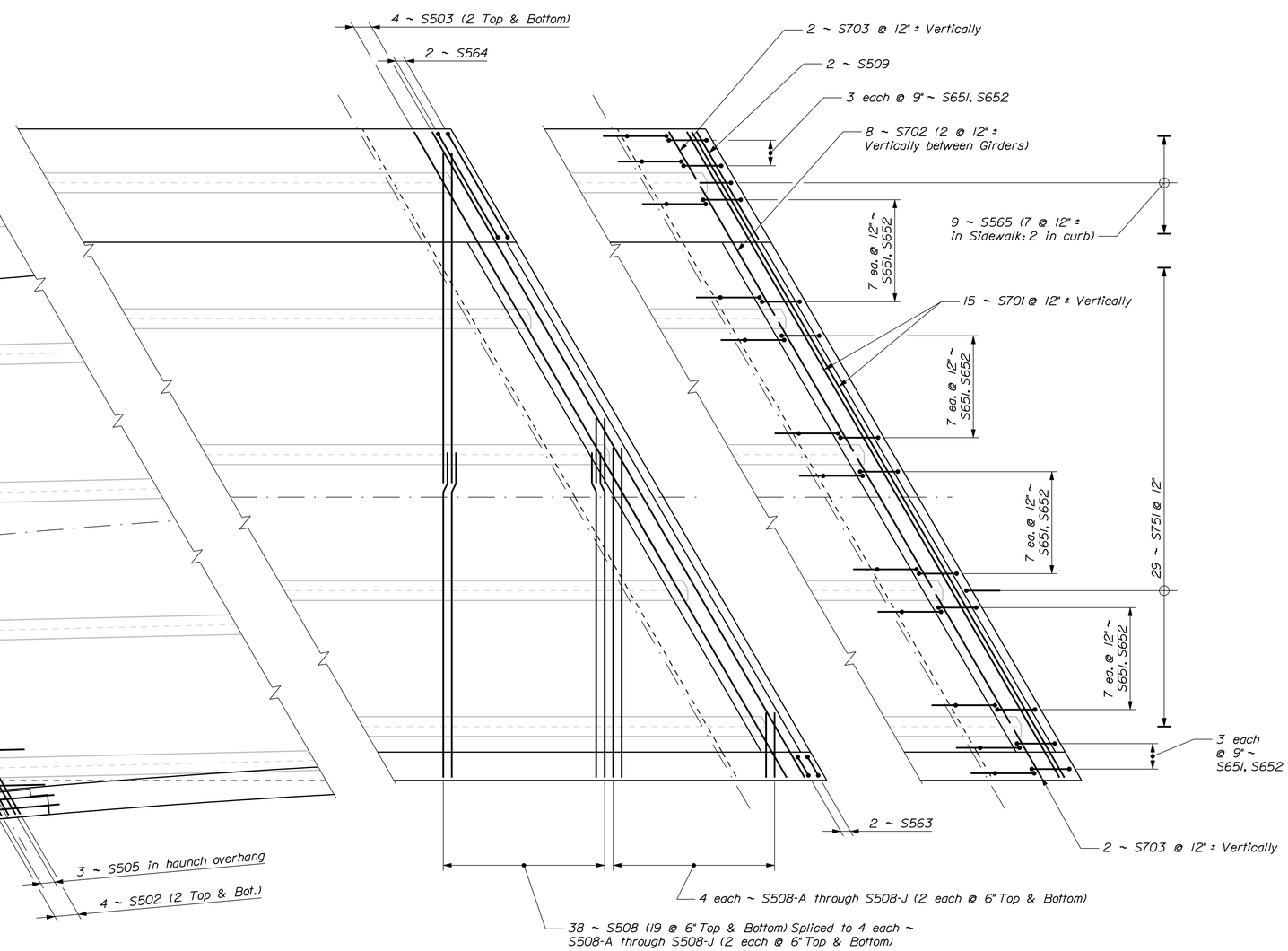

SLAB END REINFORCING PLAN ~ SPAN NO. 3

STATE OF MAINE
DEPARTMENT OF TRANSPORTATION

STP-1928(000)

WIN 19280.00

BRIDGE NO. 3333

BRIDGE PLANS

PROJ. MANAGER	M. Parlin	BY	DATE
DESIGN-DETAILED	D. Eaton	Team South	May 2014
CHECKED-REVIEWED	J. Waugh	---	---
DESIGN2-DETAILED2	-----	-----	-----
DESIGN3-DETAILED3	-----	-----	-----
REVISIONS 1	-----	-----	-----
REVISIONS 2	-----	-----	-----
REVISIONS 3	-----	-----	-----
REVISIONS 4	-----	-----	-----
FIELD CHANGES	-----	-----	-----

SIGNATURE

P.E. NUMBER

DATE

BAR MILLS BRIDGE
SACO RIVER
HOLLIS & BUXTON YORK COUNTY

SLAB END REINFORCING PLANS

SHEET NUMBER

128

OF 148

Filename: ...\128_Bar Mills Slab End Reinforcing Plan.dgn Division: BRIDGE Username: dana.damren Date:11/19/2014

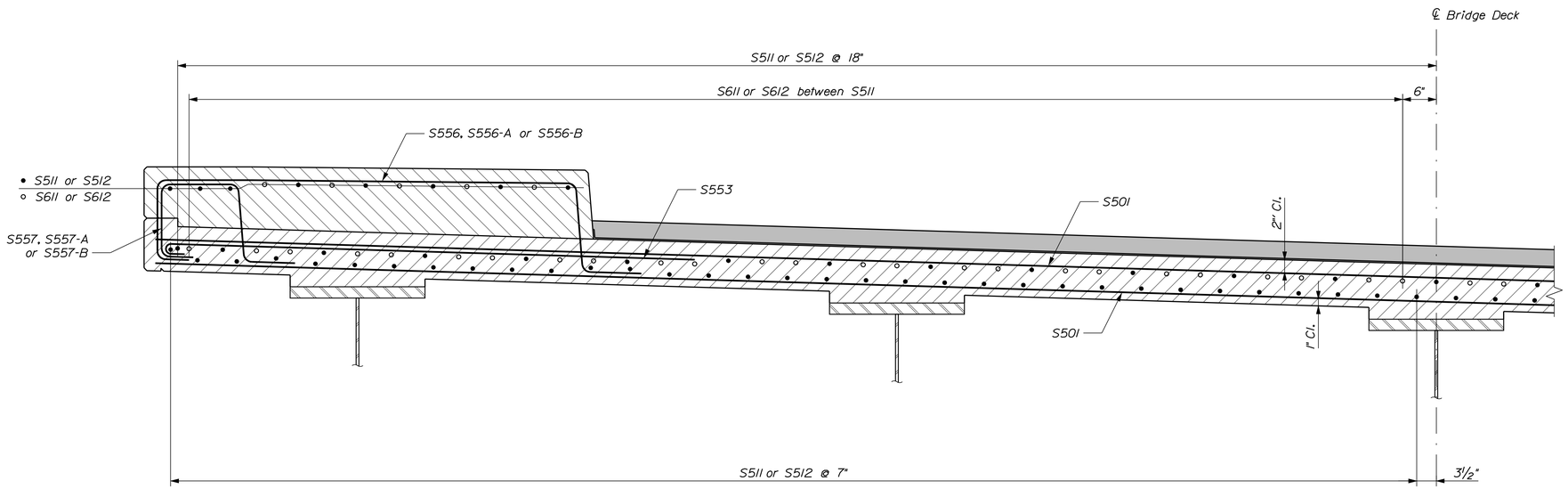

HALF UPSTREAM TRANSVERSE REINFORCING SECTION

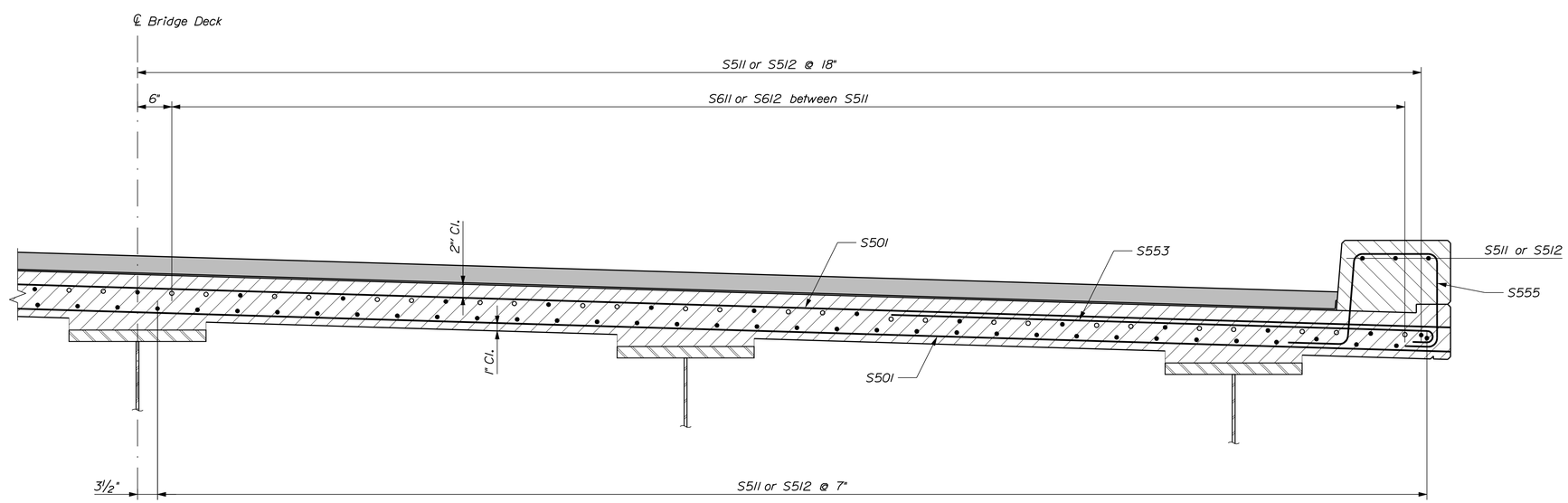

HALF DOWNSTREAM TRANSVERSE REINFORCING SECTION

STATE OF MAINE
DEPARTMENT OF TRANSPORTATION

STP-1928(000)

WIN 19280.00

BRIDGE NO. 3333

BRIDGE PLANS

PROJ. MANAGER	M. Parlin	BY	DATE
DESIGN-DETAILED	D. Eaton	Team South	May 2014
CHECKED-REVIEWED	J. Waugh	-----	---
DESIGN2-DETAILED2	-----	-----	-----
DESIGN3-DETAILED3	-----	-----	-----
REVISIONS 1	-----	-----	-----
REVISIONS 2	-----	-----	-----
REVISIONS 3	-----	-----	-----
REVISIONS 4	-----	-----	-----
FIELD CHANGES	-----	-----	-----

SIGNATURE

P.E. NUMBER

DATE

BAR MILLS BRIDGE
SACO RIVER
HOLLIS & BUXTON YORK COUNTY

TRANSVERSE REINF. SECTIONS

SHEET NUMBER

129

OF 148

Filename: ...\129_Bar Mills Slab Reinforcing Sections.dgn Division: BRIDGE Username: dana.damren Date:11/19/2014

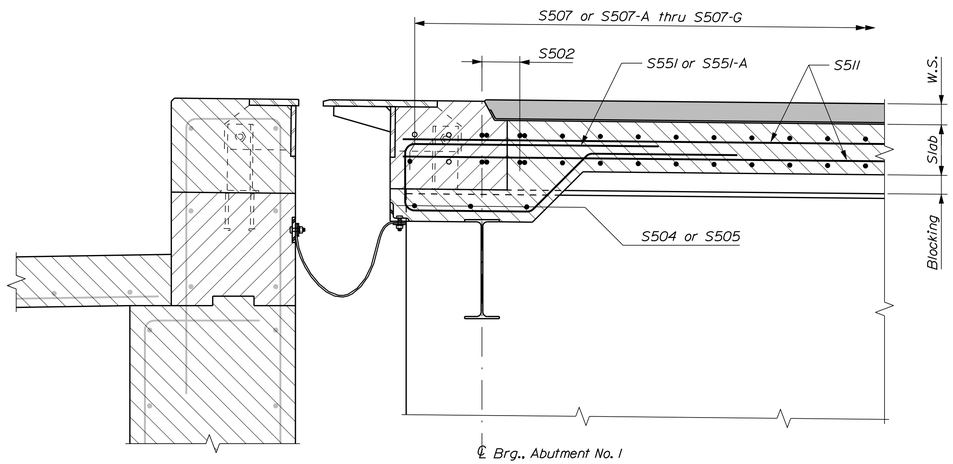

LONGITUDINAL SECTION AT ABUTMENT NO. 1

* Cut bar to clear obstructions

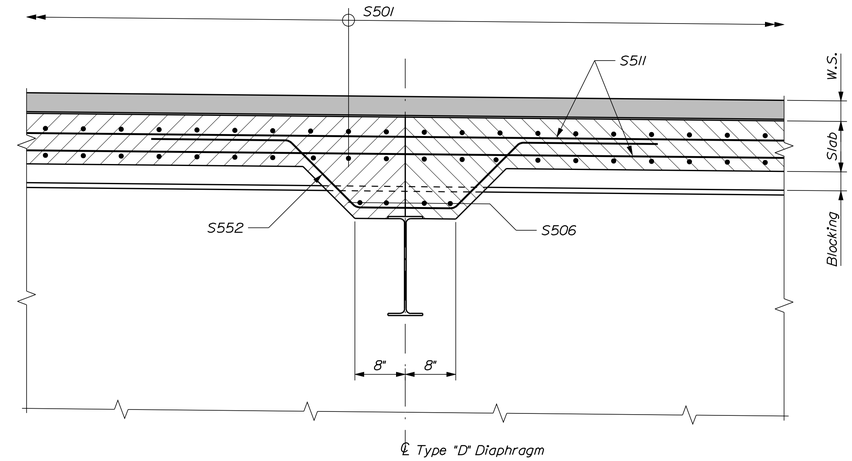

LONGITUDINAL SECTION AT CONSTRUCTION JOINT

STATE OF MAINE
DEPARTMENT OF TRANSPORTATION

STP-1928(000)

WIN 19280.00

BRIDGE NO. 3333

BRIDGE PLANS

PROJ. MANAGER	M. Perin	BY	DATE
DESIGN-DETAILED	D. Eaton	Team South	May 2014
CHECKED-REVIEWED	J. Waugh	-----	---
DESIGN2-DETAILED2	-----	-----	-----
DESIGN3-DETAILED3	-----	-----	-----
REVISIONS 1	-----	-----	-----
REVISIONS 2	-----	-----	-----
REVISIONS 3	-----	-----	-----
REVISIONS 4	-----	-----	-----
FIELD CHANGES	-----	-----	-----

SIGNATURE

P.E. NUMBER

DATE

BAR MILLS BRIDGE
SACO RIVER
HOLLIS & BUXTON YORK COUNTY

LONGITUDIANL SUPERSTR. SECTIONS

SHEET NUMBER

130

OF 148

Filename: ...\130_Bar Mills Slab Reinforcing Sections.dgn Division: BRIDGE Username: dana.damren Date:11/19/2014

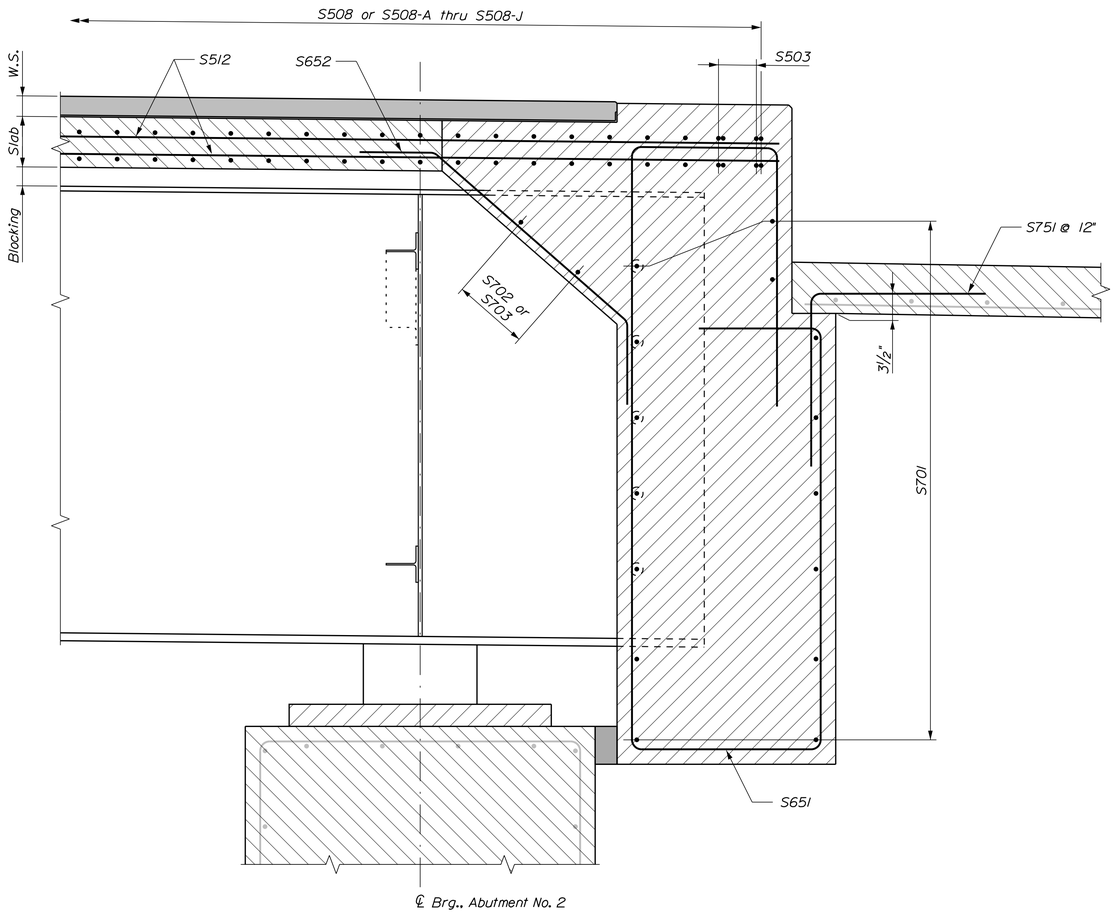

LONGITUDINAL SECTION AT ABUTMENT NO. 2
Section at Roadway

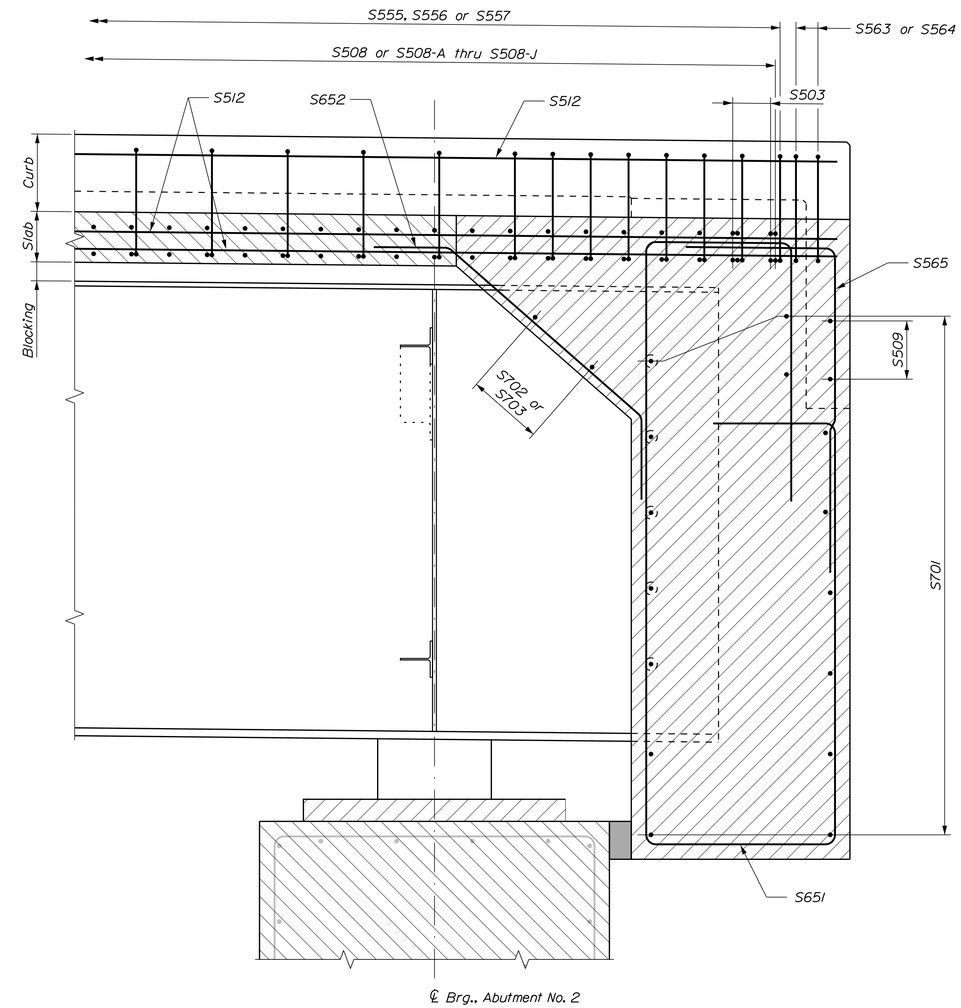

LONGITUDINAL SECTION AT ABUTMENT NO. 2
Section at Sidewalk or Curb

STATE OF MAINE
DEPARTMENT OF TRANSPORTATION

STP-1928(000)

WIN 19280.00

BRIDGE NO. 3333

BRIDGE PLANS

PROJ. MANAGER	M. Parlin	BY	DATE
DESIGN-DETAILED	D. Eaton	Team South	May 2014
CHECKED-REVIEWED	J. Waugh	------	------
DESIGN2-DETAILED2	------	------	------
DESIGN3-DETAILED3	------	------	------
REVISIONS 1	------	------	------
REVISIONS 2	------	------	------
REVISIONS 3	------	------	------
REVISIONS 4	------	------	------
FIELD CHANGES	------	------	------

SIGNATURE

P.E. NUMBER

DATE

BAR MILLS BRIDGE
SACO RIVER
HOLLIS & BUXTON YORK COUNTY

LONGITUDIANL SUPERSTR. SECTIONS

SHEET NUMBER
131
OF 148

Filename: ...\131_Bar Mills Slab Reinforcing Sections.dgn Division: BRIDGE Username: Brian.J.Nichols Date:11/21/2014

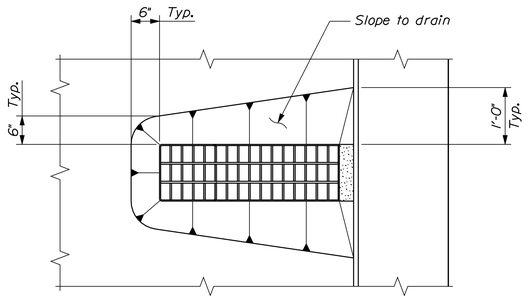

BRIDGE DRAIN PLAN

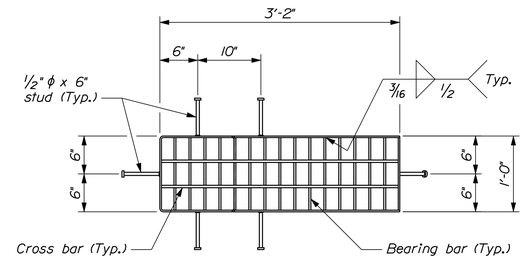

~ DRAIN TOP VIEW ~

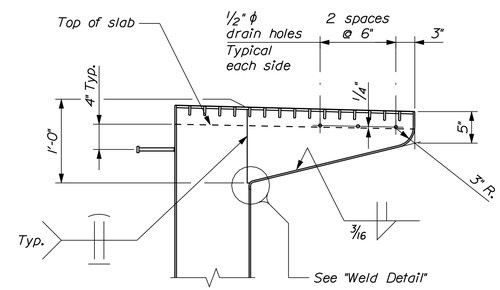

~ DRAIN SECTION ~

BRIDGE DRAIN

BRIDGE DRAIN NOTES

1. All plates shall be 1/4 inch thick.

2. The grating shall be a commercial heavy - duty grating with 1 1/2" x 5/16" bearing bars spaced at 2 3/8 inches and 3/8" ϕ cross bars spaced at 4 inches. The grating shall be centered in the drain top.

3. Drains, including C 9x13.4, shall be blast cleaned to the requirements of SSPC-SP6/NACE 3 and galvanized in accordance with ASTM A 123.

4. For structural steel beams / girders, the WT 6x13 and associated bolts shall meet the material and protective coating requirements of the structural steel.

5. Shear connectors welded to the top flange of steel beams / girders may require adjustment to clear the bridge drains.

6. Payment for bridge drains will be as specified under Subsection 502.19 of the Standard Specifications.

MATERIALS

Downspout . . . . . ASTM A 500, Grade B.
Shapes & plates . . . . . AASHTO M 270M/M 270, Grade 50
Bolts . . . . . ASTM A 307, Grade A

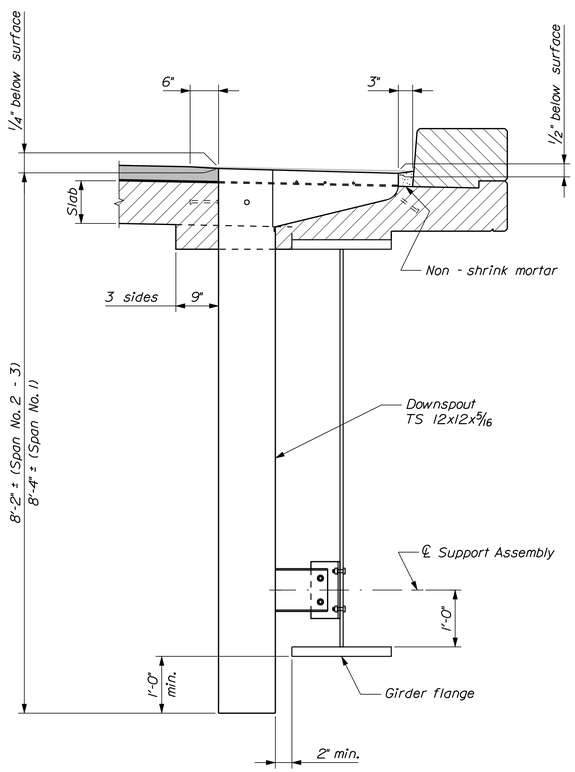

BRIDGE DRAIN ELEVATION

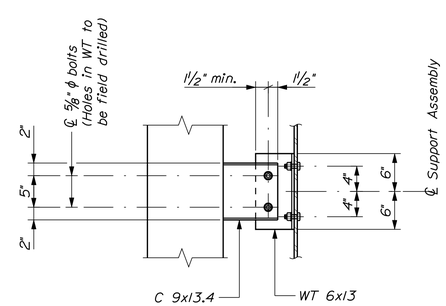

~ SUPPORT ASSEMBLY DETAIL~

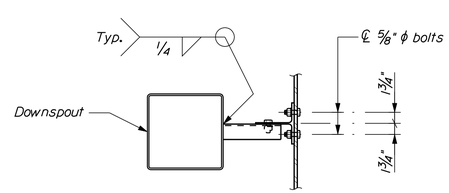

~ SUPPORT ASSEMBLY TOP VIEW ~

SUPPORT ASSEMBLY

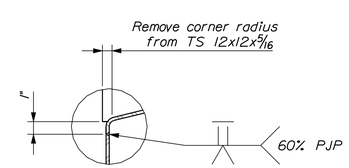

WELD DETAIL

STATE OF MAINE
DEPARTMENT OF TRANSPORTATION

STP-1928(000)

WIN 19280.00

BRIDGE NO. 3333

BRIDGE PLANS

PROJ. MANAGER	M. Parlin	BY	DATE
DESIGN-DETAILED	D. Eaton	Team South	Aug. 2014
CHECKED-REVIEWED	------	------	------
DESIGN2-DETAILED2	------	------	------
DESIGN3-DETAILED3	------	------	------
REVISIONS 1	------	------	------
REVISIONS 2	------	------	------
REVISIONS 3	------	------	------
REVISIONS 4	------	------	------
FIELD CHANGES	------	------	------

SIGNATURE

P.E. NUMBER

DATE

BAR MILLS BRIDGE
SACO RIVER
HOLLIS & BUXTON YORK COUNTY

BRIDGE DRAINS

SHEET NUMBER

132

OF 148

Filename: ...\132_Bar Mills Bridge_Drains.dgn Division: BRIDGE Username: Garrett.A.Gustafson Date:11/24/2014

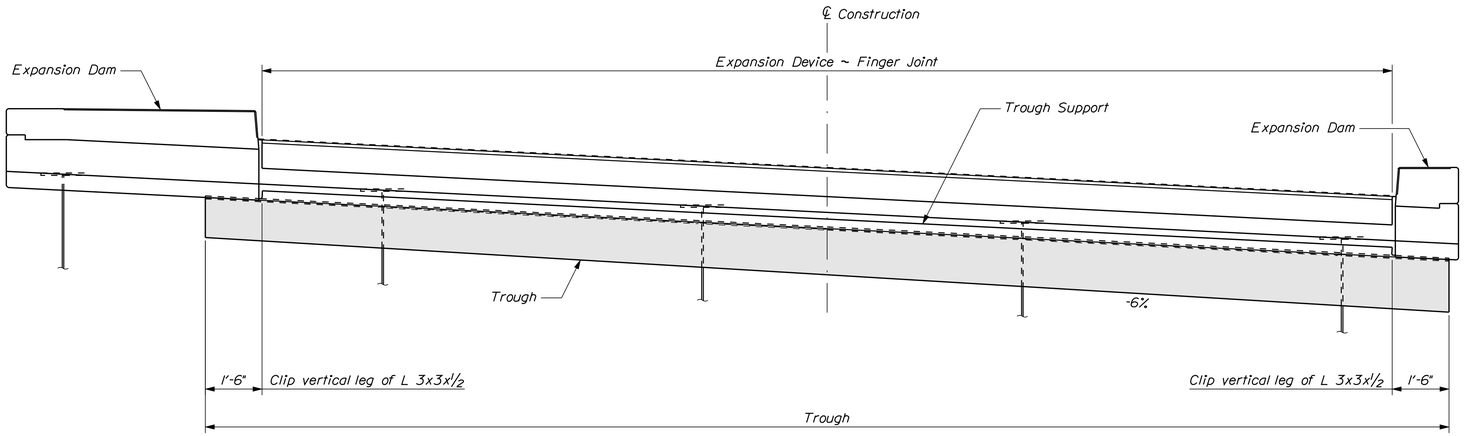

FINGER JONT ELEVATION
View shown Normal to ℄ Construction

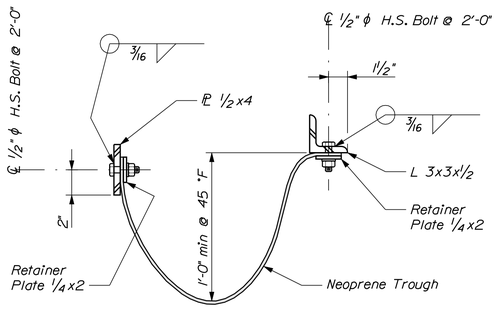

TROUGH DETAIL

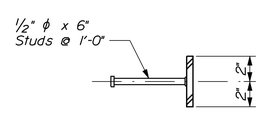

TROUGH SUPPORT
Backwall

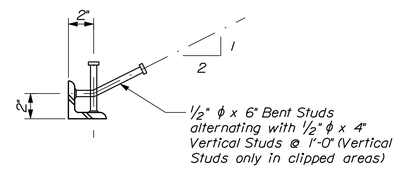

TROUGH SUPPORT
Superstructure

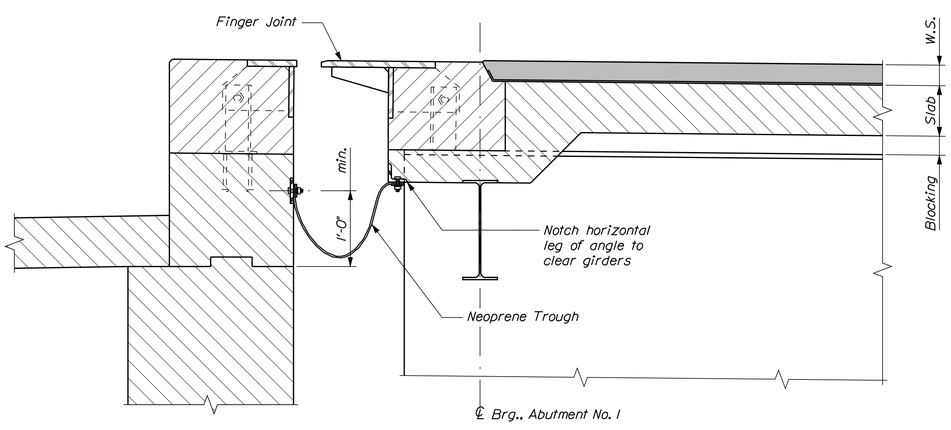

LONGITUDINAL SECTION AT EXPANSION DEVICE
Roadway

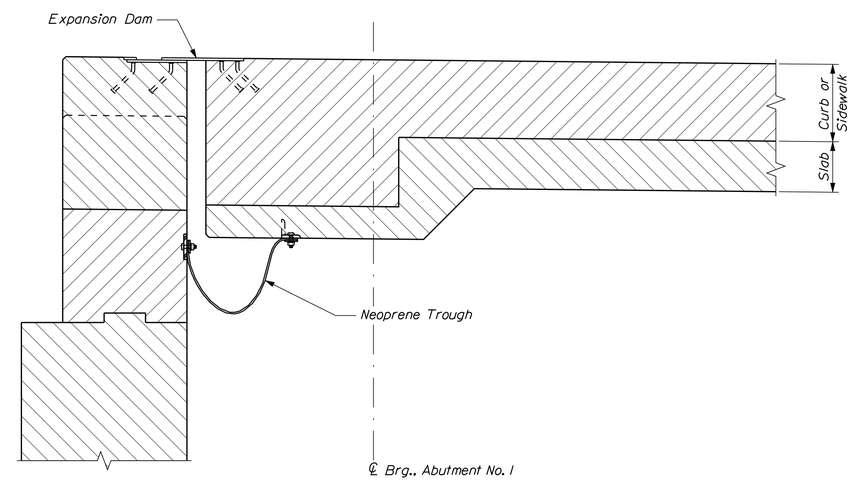

LONGITUDINAL SECTION AT EXPANSION DEVICE
Curb or Sidewalk

STATE OF MAINE
DEPARTMENT OF TRANSPORTATION

STP-1928(000)

WIN 19280.00

BRIDGE NO. 3333

BRIDGE PLANS

PROJ. MANAGER	M. Parlin	BY	DATE
DESIGN-DETAILED	D. Eaton	Team South	Aug. 2014
CHECKED-REVIEWED	-----	-----	-----
DESIGN2-DETAILED2	-----	-----	-----
DESIGN3-DETAILED3	-----	-----	-----
REVISIONS 1	-----	-----	-----
REVISIONS 2	-----	-----	-----
REVISIONS 3	-----	-----	-----
REVISIONS 4	-----	-----	-----
FIELD CHANGES	-----	-----	-----

SIGNATURE

P.E. NUMBER

DATE

BAR MILLS BRIDGE
SACO RIVER
HOLLIS & BUXTON YORK COUNTY

EXPANSION DEVICE

SHEET NUMBER
133
OF 148

Filename: ...\133_Bar Mills Expansion Device.dgn Division: BRIDGE Username: dana.damren Date:11/20/2014

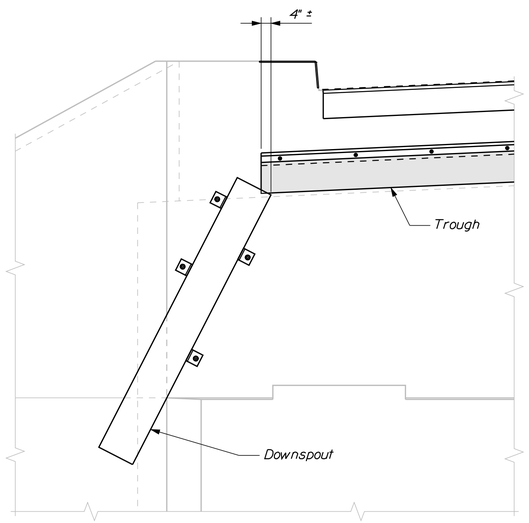

DOWNSPOUT INSTALLATION

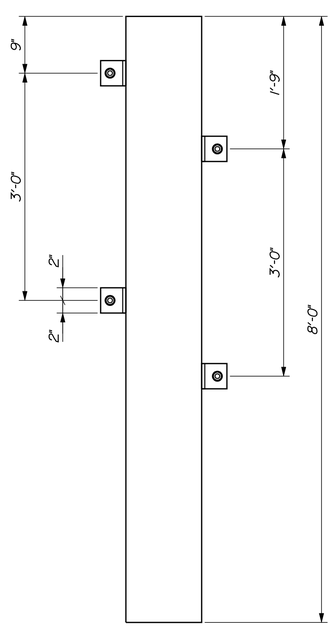

DOWNSPOUT ELEVATION

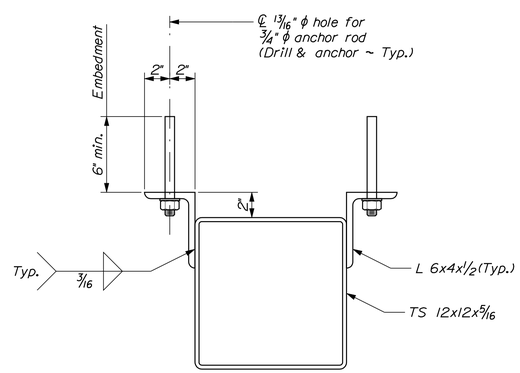

DOWNSPOUT SECTION

DOWNSPOUT NOTES

1. One downspout is required at the lower end of the expansion joint trough. The exact location of the downspout will be determined in the field.

2. The downspout shall be galvanized to the requirements of the Expansion Device - Finger Joint.

STATE OF MAINE
DEPARTMENT OF TRANSPORTATION

STP-1928(000)

WIN 19280.00

BRIDGE NO. 3333

BRIDGE PLANS

PROJ. MANAGER	M. Parlin	BY	DATE
DESIGN-DETAILED	D. Eaton	Team South	Aug. 2014
CHECKED-REVIEWED	-----	-----	-----
DESIGN2-DETAILED2	-----	-----	-----
DESIGN3-DETAILED3	-----	-----	-----
REVISIONS 1	-----		-----
REVISIONS 2	-----		-----
REVISIONS 3	-----		-----
REVISIONS 4	-----		-----
FIELD CHANGES	-----		-----

SIGNATURE

P.E. NUMBER

DATE

BAR MILLS BRIDGE
SACO RIVER
HOLLIS & BUXTON YORK COUNTY

EXP. DEVICE DOWNSPOUT

SHEET NUMBER

134

OF 148

Filename: ...\134_Bar Mills Expansion Device Downspout.dgn Division: BRIDGE Username: Garrett.A.Gustafson Date:11/21/2014

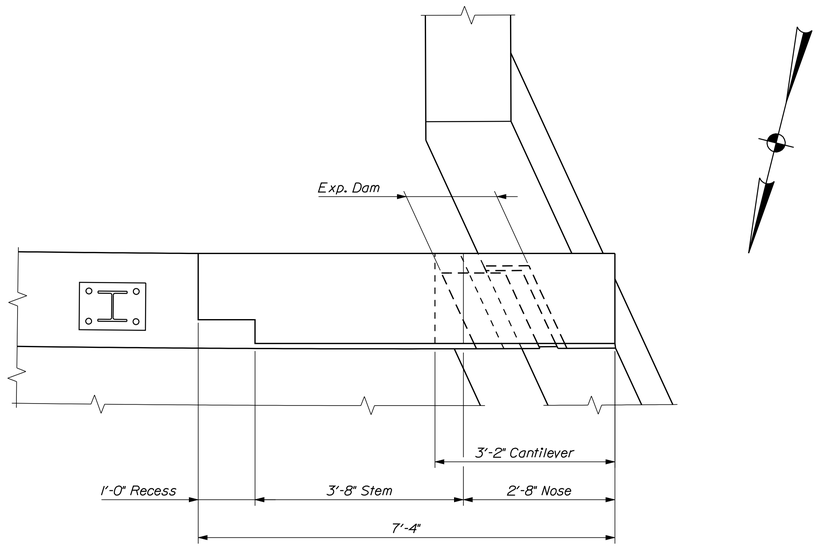

MODIFIED TRANSITION BARRIER PLAN

REINFORCING STEEL SCHEDULE			
Mark	Qty.	Length	Location
TB501	2	2'-2"	Vertical
TB502	2	2'-0"	Vertical
TB503	2	1'-10"	Vertical
TB504	2	1'-8"	Vertical
TB505	2	1'-6"	Vertical
TB506	2	4'-8"	Horizontal
TB550	6	12'-2"	Horizontal
TB600	4	2'-7"	Vertical
TB650	7	5'-10"	Vertical
TB651	2	7'-11"	Vertical
TB652	6	8'-9"	Vertical
TB700	10	5'-6"	Horizontal

Notes:

The first digit following the etters of the mark indicate the size of the reinforcing bar. (TB501 = bar size #5.)
All dimensions are out - to - out of bar.

Quantities given are for one Transition Barrier.

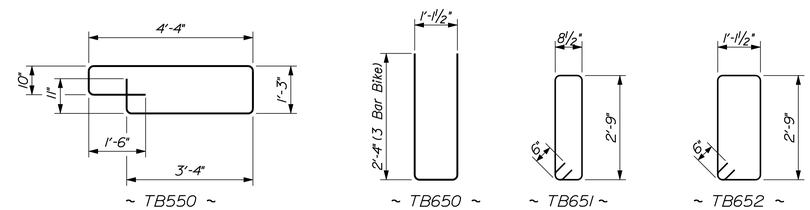

TYPE BENDING DIAGRAMS

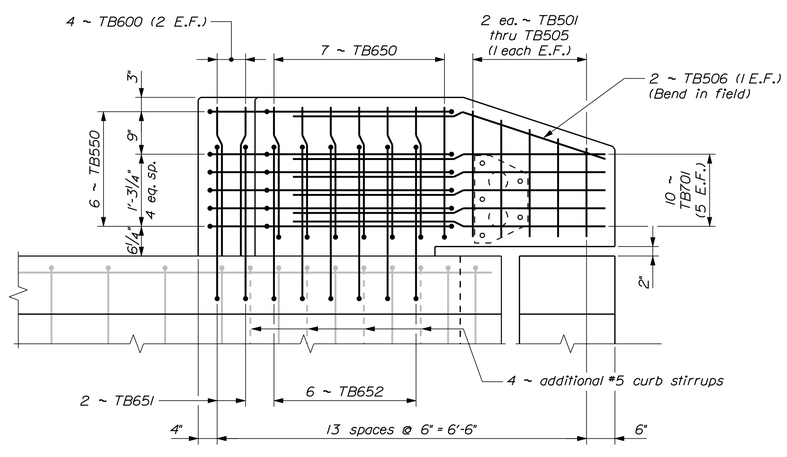

MODIFIED CONCRETE TRANSITION BARRIER ELEVATION
(3 - Bar Traffic / Bicycle Railing)

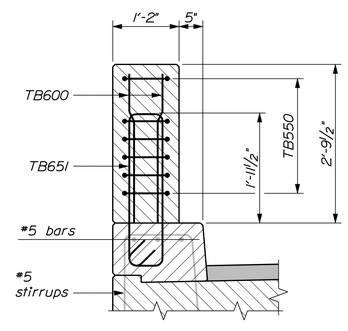

SECTION THRU RECESS

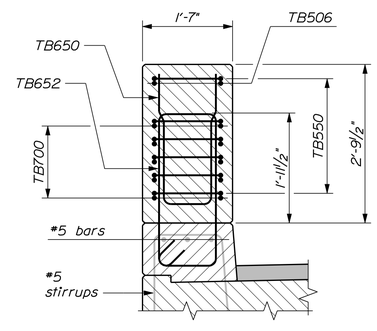

SECTION THRU STEM

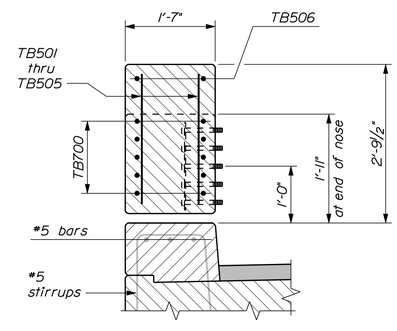

SECTION THRU NOSE

STATE OF MAINE
DEPARTMENT OF TRANSPORTATION

STP-1928(000)

WIN 19280.00

BRIDGE NO. 3333

BRIDGE PLANS

PROJ. MANAGER	M. Perkins	BY	DATE
DESIGN-DETAILED	D. Eaton	Team South	Aug. 2014
CHECKED-REVIEWED	J. Waugh	------	Oct. 2014
DESIGN2-DETAILED2	------	------	------
DESIGN3-DETAILED3	------	------	------
REVISIONS 1	------	------	------
REVISIONS 2	------	------	------
REVISIONS 3	------	------	------
REVISIONS 4	------	------	------
FIELD CHANGES	------	------	------

SIGNATURE

P.E. NUMBER

DATE

BAR MILLS BRIDGE
SACO RIVER
HOLLIS & BUXTON YORK COUNTY

MODIFIED TRANSITION BARRIER

SHEET NUMBER
135
OF 148

Filename: ...\135_Bar Mills Modified Transition Barrier.dgn Division: BRIDGE Username: dana.damren Date:11/19/2014

STRAIGHT BARS

MARK	QTY.	LENGTH	LOCATION	MARK	QTY.	LENGTH	LOCATION
A512	50	4'-0"	Ftg Dowel	A500	49	5'-0"	Backwall Dowel
				A501	20	27'-4"	Backwall Horiz.
A600	32	14'-2"	Footing	A502	9	7'-2"	Backwall Horiz.
A601	18	13'-8"	Footing	A503	6	6'-9"	Backwall Horiz.
A602	20	12'-0"	Footing	A504	11	14'-3"	Backwall Horiz.
A603	1	15'-0"	Footing	A505	8	13'-7"	Backwall Horiz.
A604	1	14'-6"	Footing	A506	3	5'-7"	Backwall Horiz.
A605	7	13'-0"	Footing	A507	3	13'-0"	Backwall Horiz.
A606	1	14'-0"	Footing	A508	1	4'-11"	Parapet Horiz.
A607	1	15'-7"	Footing	A509	1	4'-1"	Parapet Horiz.
A608	13	13'-2"	Footing	A510	1	11'-5"	Parapet Horiz.
A609	10	11'-0"	Footing	A511	1	9'-6"	Parapet Horiz.
A610	1	14'-6"	Footing	A513	39	14'-4"	Wing Vert.
A611	8	13'-2"	Footing	A514	39	4'-0"	Wing Vert.
A612	8	10'-0"	Footing	A515	2	10'-2"	Upstream Wing Vert.
A613	1	13'-6"	Footing	A516	2	9'-11"	Upstream Wing Vert.
A614	14	47'-0"	Footing	A517	2	9'-9"	Upstream Wing Vert.
A615	14	42'-9"	Footing	A518	2	9'-6"	Upstream Wing Vert.
A616	14	27'-0"	Footing	A519	2	9'-3"	Upstream Wing Vert.
A617	14	25'-0"	Footing	A520	2	9'-0"	Upstream Wing Vert.
A618	14	21'-0"	Footing	A521	2	8'-9"	Upstream Wing Vert.
A619	14	17'-0"	Footing	A522	2	8'-6"	Upstream Wing Vert.
A620	14	11'-0"	Footing	A523	2	8'-3"	Upstream Wing Vert.
A621	14	9'-0"	Footing	A524	2	8'-0"	Upstream Wing Vert.
				A525	2	7'-9"	Upstream Wing Vert.
A700	55	4'-0"	Ftg Dowel	A526	2	7'-6"	Upstream Wing Vert.
				A527	2	7'-3"	Upstream Wing Vert.
A800	63	14'-2"	Footing	A528	2	7'-0"	Upstream Wing Vert.
A801	35	13'-8"	Footing	A529	25	6'-10"	Upstream Wing Vert.
A802	36	12'-0"	Footing	A530	13	19'-2"	Upstream Wing Horz.
A803	1	15'-0"	Footing	A531	13	13'-8"	Upstream Wing Horz.
A804	1	14'-6"	Footing	A532	7	14'-3"	Upstream Wing Horz.
A805	13	13'-0"	Footing	A533	7	13'-0"	Upstream Wing Horz.
A806	1	14'-0"	Footing	A534	2	11'-8"	Upstream Wing Horz.
A807	1	15'-7"	Footing	A535	2	7'-7"	Upstream Wing Horz.
A808	25	13'-2"	Footing	A536	2	3'-6"	Upstream Wing Horz.
A809	18	11'-0"	Footing	A537	2	14'-3"	Top of Upstream Wing
A810	1	14'-6"	Footing	A538	20	10'-0"	Upstream Wing Horz.
A811	15	13'-2"	Footing	A539	20	10'-9"	Upstream Wing Horz.
A812	14	10'-0"	Footing	A540	11	12'-0"	Downstream Wing Vert.
A813	1	13'-6"	Footing	A541	17	5'-0"	Downstream Wing Vert.
				A542	22	27'-4"	Downstream Wing Horiz.
				A543a	2	19'-10"	Downstream Wing Horiz.
				A543b	2	17'-10"	Downstream Wing Horiz.
				A543c	2	15'-10"	Downstream Wing Horiz.
				A543d	2	13'-10"	Downstream Wing Horiz.
				A543e	2	11'-10"	Downstream Wing Horiz.
				A543f	2	9'-10"	Downstream Wing Horiz.
				A543g	2	7'-10"	Downstream Wing Horiz.
				A543h	2	5'-10"	Downstream Wing Horiz.
				A543i	2	3'-10"	Downstream Wing Horiz.
				A543j	2	1'-10"	Downstream Wing Horiz.
				A544	2	24'-3"	Downstream Wing Horiz.
				A701	55	12'-1"	Breastwall Vert.
				A702	49	10'-0"	Breastwall Vert.
				A703	30	27'-4"	Breastwall Horiz.
				A704	13	5'-1"	Breastwall Horiz.
				A705	13	7'-0"	Breastwall Horiz.
				A706	1	6'-7"	Breastwall Horiz.
				A707	1	6'-2"	Breastwall Horiz.
			Retaining Wall	A708	1	5'-8"	Breastwall Horiz.
R500	43	4'-0"	Retaining Wall Footing Dowel	A709	1	5'-2"	Breastwall Horiz.
R501	43	13'-1"	Retaining Wall Vert.	A710	13	10'-4"	Breastwall Horiz.
R502	28	42'-6"	Retaining Wall Horiz.	A711	13	12'-9"	Breastwall Horiz.
				A712	1	12'-9"	Breastwall Horiz.
R600	43	11'-8"	Retaining Wall Footing	A713	1	11'-8"	Breastwall Horiz.
R601	24	42'-6"	Retaining Wall Footing	A714	1	10'-6"	Breastwall Horiz.
				A715	1	10'-4"	Breastwall Horiz.
R800	57	11'-8"	Retaining Wall Footing				

BENT BARS

MARK	QTY.	LENGTH	TYPE	A	B	C	D	E	F	G	H	O	R	LOCATION
A750	76	7'-0"	L	1'-2"	5'-10"	-	-	-	-	-	-	-	-	Seal Dowel
A751	97	12'-7"	L	1'-2"	11'-5"	-	-	-	-	-	-	-	-	Footing Hook
A850	25	18'-2"	S	-	1'-4"	15'-6"	1'-4"	-	-	-	-	-	-	Footing Hook
A851	25	9'-6"	L	1'-4"	8'-2"	-	-	-	-	-	-	-	-	Footing Hook
A852	8	16'-11"	L	15'-7"	1'-4"	-	-	-	-	-	-	-	-	Footing Hook
A550	44	7'-4"	S	-	0'-10"	5'-8"	0'-10"	-	-	-	-	-	-	Bridge Seat Stirrup
A551	16	5'-9"	L	0'-10"	4'-11"	-	-	-	-	-	-	-	-	Approach Slab Seat Hook
A552	17	6'-7"	L	0'-10"	5'-9"	-	-	-	-	-	-	-	-	Approach Slab Seat Hook
A553	16	7'-6"	L	0'-10"	6'-8"	-	-	-	-	-	-	-	-	Approach Slab Seat Hook
A554	5	14'-4"	S	-	4'-6"	1'-2"	8'-8"	-	-	-	-	-	-	Backwall Stirrup
A555	17	12'-8"	S	-	3'-7"	1'-2"	7'-11"	-	-	-	-	-	-	Backwall Stirrup
A556	16	13'-6"	S	-	3'-7"	1'-2"	8'-9"	-	-	-	-	-	-	Backwall Stirrup
A557	11	15'-10"	S	-	4'-4"	1'-2"	10'-4"	-	-	-	-	-	-	Backwall Stirrup
A558	40	11'-2"	S	-	4'-0"	3'-2"	4'-0"	-	-	-	-	-	-	Brg. Pedestal
A560	27	5'-8"	S	-	2'-0"	1'-8"	2'-0"	-	-	-	-	-	-	Upstream Wing Stirrup
A561	13	5'-0"	VX	2'-0"	1'-0"	2'-0"	-	-	-	-	1'-7"	-	-	Upstream Wing Horz.
A562	73	4'-0"	V	-	-	-	2'-0"	2'-0"	-	-	1'-2"	-	-	Upstream Wing Horz.
A563	18	12'-4"	S	-	5'-4"	1'-8"	5'-4"	-	-	-	-	-	-	Downstream Wing Stirrup
A564	11	12'-6"	S	-	5'-2"	2'-2"	5'-2"	-	-	-	-	-	-	Downstream Wing Stirrup
A565	13	8'-6"	VW	2'-0"	4'-6"	2'-0"	-	-	-	-	1'-3"	1'-9"	-	Upstream Wing Horz.
A566	29	4'-0"	V	-	-	-	2'-0"	2'-0"	-	-	0'-10"	-	-	Upstream Wing Horz.
R750	43	7'-0"	L	1'-2"	5'-10"	-	-	-	-	-	-	-	-	Retaining Wall Seal Hook
R751	43	11'-9"	L	1'-2"	10'-7"	-	-	-	-	-	-	-	-	Retaining Wall Ftg. Hook
R752	43	8'-9"	L	1'-2"	7'-7"	-	-	-	-	-	-	-	-	Retaining Wall Ftg. Hook
R550	43	11'-10"	S	-	8'-2"	1'-8"	2'-0"	-	-	-	-	-	-	Retaining Wall Vert.

TYPE - BENDING DIAGRAMS

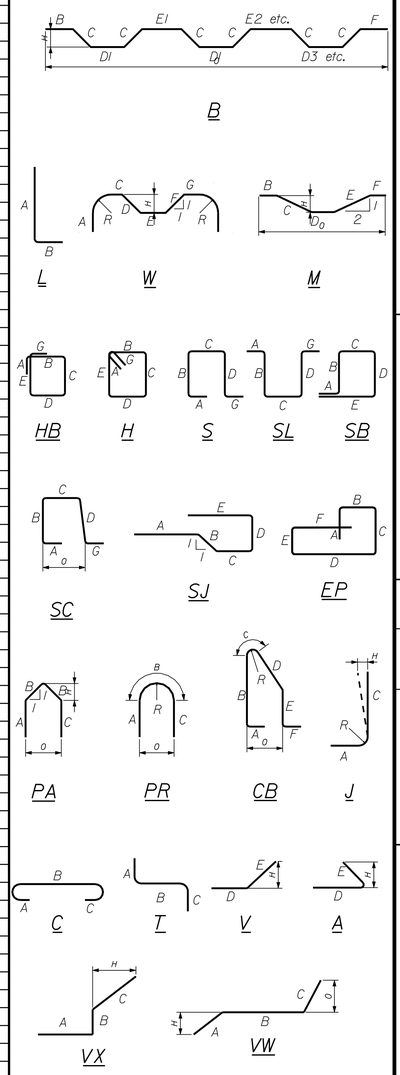

All dimensions are out-to-out of bar.

Bending details and hooks shall conform to the recommendations of the current revision of ACI Standard 315 and ACI Standard 318.

Reinforcing Bar: ASTM A615/A615M, Grade 60

GENERAL NOTES

1. The first two digits following the letter(s) of the mark indicate the size ofthe bar:

   Mark "A502" = bar size #5
   Mark "P805" = bar size #8
   Mark "S650" = bar size #6

2. Each crank bar, Type B, may be replaced by two (2) straight bars (one top and one bottom) of the same bar size as the crank bar. Payment in either case shall be based on crank bars as schedule on the plans.

STATE OF MAINE
DEPARTMENT OF TRANSPORTATION

STP-1928(000)

WIN 19280.00

BRIDGE PLANS

BRIDGE NO. 3333

		BY	DATE
PROJ. MANAGER	M. Parlin		
DESIGN-DETAILED	D. Eaton	B. Nichols	Nov. 2014
CHECKED-REVIEWED	J. Waugh	------	Nov. 2014
DESIGN2-DETAILED2	------	------	------
DESIGN3-DETAILED3	------	------	------
REVISIONS 1	------	------	------
REVISIONS 2	------	------	------
REVISIONS 3	------	------	------
REVISIONS 4	------	------	------
FIELD CHANGES	------	------	------

SIGNATURE

P.E. NUMBER

DATE

BAR MILLS BRIDGE
SACO RIVER
HOLLIS & BUXTON YORK COUNTY

ABUT. NO. 1 & RETAINING WALL
REINFORCING STEEL SCHEDULE

SHEET NUMBER

136

OF 148

Filename: ...\136_Rebar_Bar Mills Abutment_1.dgn Division: BRIDGE Username: dana.damren Date:11/19/2014

STRAIGHT BARS

MARK	QTY.	LENGTH	LOCATION	MARK	QTY.	LENGTH	LOCATION
B600	32	12'-2"	Footing	B500	9	5'-0"	Back Wall Vert.
B601	13	21'-8"	Footing	B501	18	8'-6"	Back Wall Vert.
B602	13	48'-2"	Footing	B502	5	10'-3"	Top of Breastwall
B603	13	39'-7"	Footing	B503	5	8'-10"	Top of Breastwall
B604	9	12'-2"	Footing	B504	10	11'-1"	Top of Breastwall
B605	18	9'-8"	Footing	B505	1	12'-8"	Top of Breastwall
B606	20	17'-5"	Footing	B506	1	11'-3"	Top of Breastwall
B607	8	10'-9"	Footing	B507	1	9'-11"	Top of Breastwall
B608	33	12'-2"	Footing	B508	1	8'-6"	Top of Breastwall
B609	9	10'-3"	Footing	B509	1	7'-1"	Top of Breastwall
B610	1	14'-9"	Footing	B511	16	13'-3"	Upstream Wing Vert.
B611	12	44'-10"	Footing	B512	54	5'-0"	Wing Vert.
B612	14	36'-4"	Footing	B513	16	5'-10"	Upstream Wing Vert.
				B514	16	7'-10"	Upstream Wing Vert.
B510	70	4'-0"	Footing Dowel	B515	11	19'-8"	Upstream Wing Horiz.
				B516	11	15'-8"	Upstream Wing Horiz.
B700	43	12'-2"	Footing	B517	12	15'-9"	Upstream Wing Horiz.
B701	15	10'-9"	Footing	B518	2	12'-9"	Upstream Wing Horiz.
B702	65	12'-2"	Footing	B519	2	9'-1"	Upstream Wing Horiz.
B703	17	10'-3"	Footing	B520	2	5'-4"	Upstream Wing Horiz.
B704	1	14'-9"	Footing	B522	18	9'-7"	Upstream Wing Vert.
				B523	18	12'-2"	Upstream Wing Vert.
B800	32	12'-2"	Footing	B524	20	17'-5"	Upstream Wing Horiz.
B801	13	21'-8"	Footing	B525	2	15'-9"	Upstream Wing Horiz.
B802	18	9'-8"	Footing	B526	2	12'-2"	Upstream Wing Horiz.
				B527	2	8'-5"	Upstream Wing Horiz.
				B528	2	4'-9"	Upstream Wing Horiz.
				B529	2	18'-0"	Top of Upstream Wing
				B530	36	12'-2"	Downstream Wing Vert.
				B531	26	7'-5"	Downstream Wing Vert.
				B532	26	4'-9"	Downstream Wing Vert.
				B533	10	23'-6"	Downstream Wing Horiz.
				B534	10	16'-10"	Downstream Wing Horiz.
				B535	20	21'-3"	Downstream Wing Horiz.
				B536	7	16'-6"	Downstream Wing Horiz.
				B537	7	16'-1"	Downstream Wing Horiz.
				B538	1	11'-10"	Downstream Wing Horiz.
				B539	1	6'-5"	Downstream Wing Horiz.
				B540	1	11'-5"	Downstream Wing Horiz.
				B541	1	6'-0"	Downstream Wing Horiz.
				B542	2	16'-11"	Top of Downstream Wing
				B543	6	21'-3"	Downstream Wing Horiz.
				B544	2	16'-7"	Downstream Wing Horiz.
				B545	2	11'-3"	Downstream Wing Horiz.
				B546	2	5'-10"	Downstream Wing Horiz.
				B547	2	21'-9"	Top of Downstream Wing
				B613	15	10'-3"	Breastwall Vert
				B614	9	9'-11"	Breastwall Vert
				B615	9	9'-8"	Breastwall Vert
				B616	10	9'-5"	Breastwall Vert
				B617	14	9'-1"	Breastwall Vert
				B618	20	27'-4"	Breastwall Horiz.
				B705	5	13'-5"	Breastwall Vert
				B706	7	10'-3"	Breastwall Vert
				B707	9	9'-11"	Breastwall Vert
				B708	9	9'-8"	Breastwall Vert
				B709	10	9'-5"	Breastwall Vert
				B710	10	9'-1"	Breastwall Vert
				B711	5	12'-3"	Breastwall Vert
				B713	36	7'-0"	Downstream Wing Vert.

BENT BARS

MARK	QTY.	LENGTH	TYPE	A	B	C	D	E	F	G	H	O	R	LOCATION
B650	94	6'-9"	L	5'-9"	1'-0"	-	-	-	-	-	-	-	-	Seal Dowel
B651	57	7'-7"	L	6'-7"	1'-0"	-	-	-	-	-	-	-	-	Footing Hook
B751	54	7'-9"	L	6'-7"	1'-2"	-	-	-	-	-	-	-	-	Footing Hook
B752	18	6'-9"	L	5'-7"	1'-2"	-	-	-	-	-	-	-	-	Footing Hook
B950	16	9'-2"	L	7'-7"	1'-7"	-	-	-	-	-	-	-	-	Footing Hook
B951	36	8'-2"	L	6'-7"	1'-7"	-	-	-	-	-	-	-	-	Footing Hook
B550	42	5'-4"	S	-	0'-10"	3'-8"	0'-10"	-	-	-	-	-	-	Top of Breastwall
B551	4	6'-7"	S	-	0'-10"	4'-11"	0'-10"	-	-	-	-	-	-	Top of Breastwall
B552	1	4'-8"	S	-	0'-10"	3'-0"	0'-10"	-	-	-	-	-	-	Top of Breastwall
B553	1	4'-1"	S	-	0'-10"	2'-5"	0'-10"	-	-	-	-	-	-	Top of Breastwall
B554	1	3'-7"	S	-	0'-10"	1'-11"	0'-10"	-	-	-	-	-	-	Top of Breastwall
B555	1	2'-5"	S	-	0'-10"	0'-9"	0'-10"	-	-	-	-	-	-	Top of Breastwall
B556	10	5'-5"	L	3'-0"	2'-5"	-	-	-	-	-	-	-	-	Parapet Horiz.
B557	10	4'-7"	L	2'-2"	2'-5"	-	-	-	-	-	-	-	-	Parapet Horiz.
B558	10	5'-6"	V	-	-	-	2'-2"	3'-4"	-	-	1'-9"	-	-	Parapet Horiz.
B559	10	4'-10"	V	-	-	-	2'-2"	2'-8"	-	-	1'-4"	-	-	Parapet Horiz.
B562	2	16'-7"	V	-	-	-	15'-3"	1'-4"	-	-	0'-4"	-	-	Top of Upstream Wing
B563	16	8'-4"	S	-	3'-7"	1'-2"	3'-7"	-	-	-	-	-	-	Upstream Wing Stirrup
B564	18	10'-0"	S	-	4'-2"	1'-8"	4'-2"	-	-	-	-	-	-	Upstream Wing Stirrup
B565	36	4'-10"	L	4'-0"	0'-10"	-	-	-	-	-	-	-	-	Downstream Wing Vert.
B567	38	9'-4"	S	-	4'-1"	1'-2"	4'-1"	-	-	-	-	-	-	Downstream Wing Stirrup
B568	20	6'-0"	S	-	2'-1"	1'-10"	2'-1"	-	-	-	-	-	-	Bearing Pedestal
B569	15	7'-0"	S	-	2'-1"	2'-10"	2'-1"	-	-	-	-	-	-	Bearing Pedestal
B570	8	4'-10"	S	-	1'-10"	1'-2"	1'-10"	-	-	-	-	-	-	Top of Parapet
B652	11	12'-8"	L	10'-3"	2'-5"	-	-	-	-	-	-	-	-	Breastwall Horiz.
B653	11	11'-4"	L	8'-11"	2'-5"	-	-	-	-	-	-	-	-	Breastwall Horiz.
B654	10	11'-10"	V	-	-	-	9'-5"	2'-5"	-	-	1'-2"	-	-	Breastwall Horiz.
B655	10	14'-3"	V	-	-	-	11'-10"	2'-5"	-	-	1'-2"	-	-	Breastwall Horiz.
B656	11	4'-4"	A	-	-	-	2'-2"	2'-2"	-	-	1'-10"	-	-	Breastwall Horiz.
B657	10	4'-4"	V	-	-	-	2'-2"	2'-2"	-	-	1'-10"	-	-	Breastwall Horiz.
B753	16	10'-3"	L	9'-1"	1'-2"	-	-	-	-	-	-	-	-	Upstream Wing Vert.

TYPE - BENDING DIAGRAMS

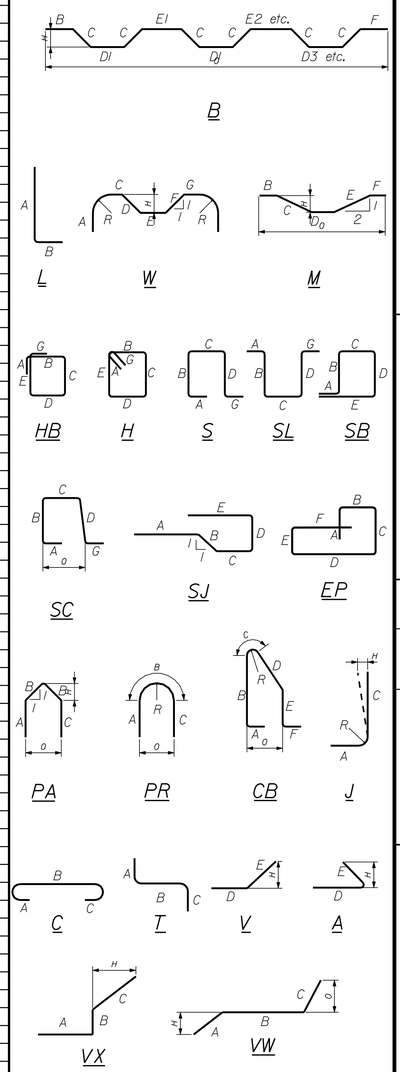

All dimensions are out-to-out of bar.

Bending details and hooks shall conform to the recommendations of the current revision of ACI Standard 315 and ACI Standard 318.

Reinforcing Bar: ASTM A615/A615M, Grade 60

GENERAL NOTES

1. The first two digits following the letter(s) of the mark indicate the size ofthe bar:

   Mark "A502" = bar size #5
   Mark "P805" = bar size #8
   Mark "S650" = bar size #6

2. Each crank bar, Type B, may be replaced by two (2) straight bars (one top and one bottom) of the same bar size as the crank bar. Payment in either case shall be based on crank bars as schedule on the plans.

STATE OF MAINE
DEPARTMENT OF TRANSPORTATION

STP-1928(000)

WIN 19280.00

BRIDGE PLANS

BRIDGE NO. 3333

		BY	DATE
PROJ. MANAGER	M. Perlin		
DESIGN-DETAILED	D. Eaton	B. Nichols	Nov. 2014
CHECKED-REVIEWED	J. Waugh	------	Nov. 2014
DESIGN2-DETAILED2	------	------	------
DESIGN3-DETAILED3	------	------	------
REVISIONS 1	------	------	------
REVISIONS 2	------	------	------
REVISIONS 3	------	------	------
REVISIONS 4	------	------	------
FIELD CHANGES	------	------	------

SIGNATURE

P.E. NUMBER

DATE

BAR MILLS BRIDGE
SACO RIVER
HOLLIS & BUXTON YORK COUNTY

ABUTMENT NO. 2
REINFORCING STEEL SCHEDULE

SHEET NUMBER

137

OF 148

Filename: ...\137_Rebar_Bar Mills Abutment_2.dgn Division: BRIDGE Username: dana.damren Date:11/19/2014

STRAIGHT BARS

MARK	QTY.	LENGTH	LOCATION
			PIER NO. 1
1PF600	20	23'-6"	Pier Ftg. Long. Top
1PF601	20	13'-6"	Pier Ftg. Trans. Top
1PF800	20	23'-6"	Pier Ftg. Long. Btm.
1PF801	39	13'-6"	Pier Ftg. Trans. Btm.
1PF803	72	5'-0"	Pier Ftg. Dowel
1P900	72	10'-1"	Pier Shaft Vertical
1PC600	6	39'-6"	Pier Cap Skin
1PC601	2	34'-6"	Pier Cap Skin
1PC602	2	29'-6"	Pier Cap Skin
1PC603	2	24'-6"	Pier Cap Skin
			PIER NO. 2
2PF600	20	23'-6"	Pier Ftg. Long. Top
2PF601	20	13'-6"	Pier Ftg. Trans. Top
2PF800	20	23'-6"	Pier Ftg. Long. Btm.
2PF801	39	13'-6"	Pier Ftg. Trans. Btm.
2PF803	72	5'-0"	Pier Ftg. Dowel
2P900	72	10'-1"	Pier Shaft Vertical
2PC600	6	39'-6"	Pier Cap Skin
2PC601	2	34'-6"	Pier Cap Skin
2PC602	2	29'-6"	Pier Cap Skin
2PC603	2	24'-6"	Pier Cap Skin

BENT BARS

MARK	QTY.	LENGTH	TYPE	A	B	C	D	E	F	G	H	O	R	LOCATION
								PIER NO. 1						
1PF900	72	8'-11"	L	7'-4"	1'-7"	--	--	--	--	--	--	--	--	Pier Shaft Dowel
1P400	14	24'-5 1/4"	PA	6'-11"	5'-3 5/8"	6'-11"	--	--	--	--	3'-9"	7'-6"	--	Pier Shaft Transverse
1PC500	20	7'-8"	SL	0"	2'-4"	3'-0"	2'-4"	--	--	0"	--	--	--	Pedestal Reinforcement
1PC501	25	6'-4"	SL	0"	2'-4"	1'-8"	2'-4"	--	--	0"	--	--	--	Pedestal Reinforcement
1PC650	80	17'-10"	SK	9'-6"	3'-6"	8"	4 1/2"	--	--	--	--	--	--	Pier Cap Trans. Top
1PC651	4	14'-10 1/2"	SK	6'-4"	3'-7 1/4"	8"	4 1/2"	--	--	--	--	--	--	Pier Cap Trans. Vertical
1PC652	4	15'-3 1/4"	SK	6'-4"	3'-9 5/8"	8"	4 1/2"	--	--	--	--	--	--	Pier Cap Trans. Vertical
1PC653	4	15'-8"	SK	6'-4"	4'-0"	8"	4 1/2"	--	--	--	--	--	--	Pier Cap Trans. Vertical
1PC654	4	16'-0 3/4"	SK	6'-4"	4'-2 3/8"	8"	4 1/2"	--	--	--	--	--	--	Pier Cap Trans. Vertical
1PC655	4	16'-5 1/2"	SK	6'-4"	4'-4 3/4"	8"	4 1/2"	--	--	--	--	--	--	Pier Cap Trans. Vertical
1PC656	4	16'-10 1/4"	SK	6'-4"	4'-7 1/8"	8"	4 1/2"	--	--	--	--	--	--	Pier Cap Trans. Vertical
1PC657	4	17'-3"	SK	6'-4"	4'-9 1/2"	8"	4 1/2"	--	--	--	--	--	--	Pier Cap Trans. Vertical
1PC658	4	17'-7 3/4"	SK	6'-4"	4'-11 7/8"	8"	4 1/2"	--	--	--	--	--	--	Pier Cap Trans. Vertical
1PC659	4	18'-0 1/2"	SK	6'-4"	5'-2 1/4"	8"	4 1/2"	--	--	--	--	--	--	Pier Cap Trans. Vertical
1PC660	4	18'-5 1/4"	SK	6'-4"	5'-4 5/8"	8"	4 1/2"	--	--	--	--	--	--	Pier Cap Trans. Vertical
1PC661	4	18'-10"	SK	6'-4"	5'-7"	8"	4 1/2"	--	--	--	--	--	--	Pier Cap Trans. Vertical
1PC662	4	19'-2 3/4"	SK	6'-4"	5'-9 3/8"	8"	4 1/2"	--	--	--	--	--	--	Pier Cap Trans. Vertical
1PC663	4	19'-7 1/2"	SK	6'-4"	5'-11 3/4"	8"	4 1/2"	--	--	--	--	--	--	Pier Cap Trans. Vertical
1PC664	4	20'-0 1/4"	SK	6'-4"	6'-2 1/8"	8"	4 1/2"	--	--	--	--	--	--	Pier Cap Trans. Vertical
1PC665	4	20'-5"	SK	6'-4"	6'-4 1/2"	8"	4 1/2"	--	--	--	--	--	--	Pier Cap Trans. Vertical
1PC666	4	20'-9 3/4"	SK	6'-4"	6'-6 7/8"	8"	4 1/2"	--	--	--	--	--	--	Pier Cap Trans. Vertical
1PC667	4	21'-2 1/2"	SK	6'-4"	6'-9 1/4"	8"	4 1/2"	--	--	--	--	--	--	Pier Cap Trans. Vertical
1PC668	4	21'-7 1/4"	SK	6'-4"	6'-11 5/8"	8"	4 1/2"	--	--	--	--	--	--	Pier Cap Trans. Vertical
1PC669	4	22'-0"	SK	6'-4"	7'-2"	8"	4 1/2"	--	--	--	--	--	--	Pier Cap Trans. Vertical
1PC670	4	22'-4 3/4"	SK	6'-4"	7'-4 3/8"	8"	4 1/2"	--	--	--	--	--	--	Pier Cap Trans. Vertical
1PC671	80	22'-8"	SK	6'-4"	7'-6"	8"	4 1/2"	--	--	--	--	--	--	Pier Cap Trans. Vertical
1PC900	4	42'-8"	SL	0"	1'-7"	39'-6"	1'-7"	--	--	0"	--	--	--	Pier Cap Long. Top
1PC901	15	27'-2"	SL	0"	1'-7"	24'-0"	1'-7"	--	--	0"	--	--	--	Pier Cap Long. Top
1PC902	10	27'-5 3/4"	F	19'-10 3/4"	2'-2 1/2"	1'-7"	2'-0 5/8"	9 7/8"	--	--	2'-4 7/8"	24'-0"	--	Pier Cap Long. Btm.
1PC1100	19	43'-6"	SL	0"	2'-0"	39'-6"	2'-0"	--	--	0"	--	--	--	Pier Cap Long. Top
1PC1101	10	45'-0 1/4"	F	19'-10 3/4"	10'-6 3/4"	2'-0"	9'-9 5/8"	3'-11"	--	--	5'-11"	39'-6"	--	Pier Cap Long. Btm.
								PIER NO. 2						
2PF900	72	8'-11"	L	7'-4"	1'-7"	--	--	--	--	--	--	--	--	Pier Shaft Dowel
2P400	14	24'-5 1/4"	PA	6'-11"	5'-3 5/8"	6'-11"	--	--	--	--	3'-9"	7'-6"	--	Pier Shaft Transverse
2PC500	20	7'-8"	SL	0"	2'-4"	3'-0"	2'-4"	--	--	0"	--	--	--	Pedestal Reinforcement
2PC501	25	6'-4"	SL	0"	2'-4"	1'-8"	2'-4"	--	--	0"	--	--	--	Pedestal Reinforcement
2PC650	80	17'-10"	SK	9'-6"	3'-6"	8"	4 1/2"	--	--	--	--	--	--	Pier Cap Trans. Top
2PC651	4	14'-10 1/2"	SK	6'-4"	3'-7 1/4"	8"	4 1/2"	--	--	--	--	--	--	Pier Cap Trans. Vertical
2PC652	4	15'-3 1/4"	SK	6'-4"	3'-9 5/8"	8"	4 1/2"	--	--	--	--	--	--	Pier Cap Trans. Vertical
2PC653	4	15'-8"	SK	6'-4"	4'-0"	8"	4 1/2"	--	--	--	--	--	--	Pier Cap Trans. Vertical
2PC654	4	16'-0 3/4"	SK	6'-4"	4'-2 3/8"	8"	4 1/2"	--	--	--	--	--	--	Pier Cap Trans. Vertical
2PC655	4	16'-5 1/2"	SK	6'-4"	4'-4 3/4"	8"	4 1/2"	--	--	--	--	--	--	Pier Cap Trans. Vertical
2PC656	4	16'-10 1/4"	SK	6'-4"	4'-7 1/8"	8"	4 1/2"	--	--	--	--	--	--	Pier Cap Trans. Vertical
2PC657	4	17'-3"	SK	6'-4"	4'-9 1/2"	8"	4 1/2"	--	--	--	--	--	--	Pier Cap Trans. Vertical
2PC658	4	17'-7 3/4"	SK	6'-4"	4'-11 7/8"	8"	4 1/2"	--	--	--	--	--	--	Pier Cap Trans. Vertical
2PC659	4	18'-0 1/2"	SK	6'-4"	5'-2 1/4"	8"	4 1/2"	--	--	--	--	--	--	Pier Cap Trans. Vertical
2PC660	4	18'-5 1/4"	SK	6'-4"	5'-4 5/8"	8"	4 1/2"	--	--	--	--	--	--	Pier Cap Trans. Vertical
2PC661	4	18'-10"	SK	6'-4"	5'-7"	8"	4 1/2"	--	--	--	--	--	--	Pier Cap Trans. Vertical
2PC662	4	19'-2 3/4"	SK	6'-4"	5'-9 3/8"	8"	4 1/2"	--	--	--	--	--	--	Pier Cap Trans. Vertical
2PC663	4	19'-7 1/2"	SK	6'-4"	5'-11 3/4"	8"	4 1/2"	--	--	--	--	--	--	Pier Cap Trans. Vertical
2PC664	4	20'-0 1/4"	SK	6'-4"	6'-2 1/8"	8"	4 1/2"	--	--	--	--	--	--	Pier Cap Trans. Vertical
2PC665	4	20'-5"	SK	6'-4"	6'-4 1/2"	8"	4 1/2"	--	--	--	--	--	--	Pier Cap Trans. Vertical
2PC666	4	20'-9 3/4"	SK	6'-4"	6'-6 7/8"	8"	4 1/2"	--	--	--	--	--	--	Pier Cap Trans. Vertical
2PC667	4	21'-2 1/2"	SK	6'-4"	6'-9 1/4"	8"	4 1/2"	--	--	--	--	--	--	Pier Cap Trans. Vertical
2PC668	4	21'-7 1/4"	SK	6'-4"	6'-11 5/8"	8"	4 1/2"	--	--	--	--	--	--	Pier Cap Trans. Vertical
2PC669	4	22'-0"	SK	6'-4"	7'-2"	8"	4 1/2"	--	--	--	--	--	--	Pier Cap Trans. Vertical
2PC670	4	22'-4 3/4"	SK	6'-4"	7'-4 3/8"	8"	4 1/2"	--	--	--	--	--	--	Pier Cap Trans. Vertical
2PC671	80	22'-8"	SK	6'-4"	7'-6"	8"	4 1/2"	--	--	--	--	--	--	Pier Cap Trans. Vertical
2PC900	4	42'-8"	SL	0"	1'-7"	39'-6"	1'-7"	--	--	0"	--	--	--	Pier Cap Long. Top
2PC901	15	27'-2"	SL	0"	1'-7"	24'-0"	1'-7"	--	--	0"	--	--	--	Pier Cap Long. Top
2PC902	10	27'-5 3/4"	F	19'-10 3/4"	2'-2 1/2"	1'-7"	2'-0 5/8"	9 7/8"	--	--	2'-4 7/8"	24'-0"	--	Pier Cap Long. Btm.
2PC1100	19	43'-6"	SL	0"	2'-0"	39'-6"	2'-0"	--	--	0"	--	--	--	Pier Cap Long. Top
2PC1101	10	45'-0 1/4"	F	19'-10 3/4"	10'-6 3/4"	2'-0"	9'-9 5/8"	3'-11"	--	--	5'-11"	39'-6"	--	Pier Cap Long. Btm.

TYPE - BENDING DIAGRAMS

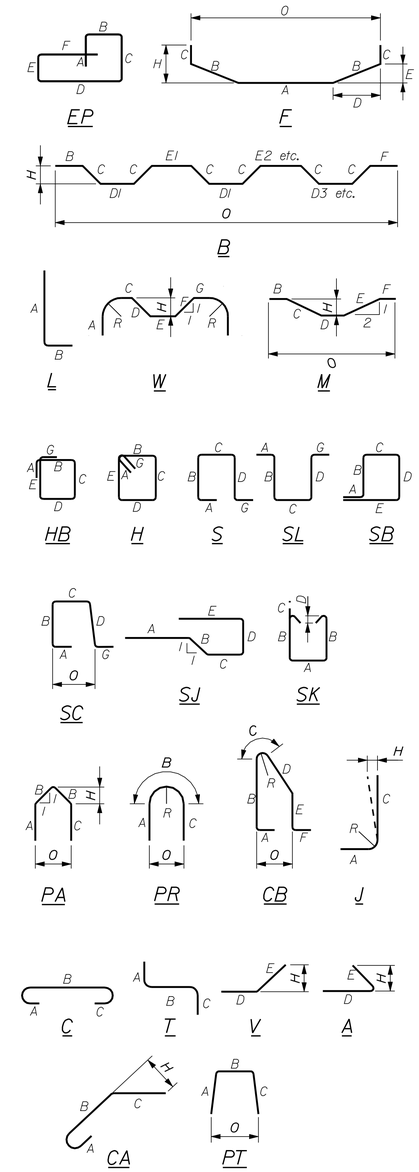

* Bar is incidental to related concrete pay item.

All dimensions are out-to-out of bar.

Bending details and hooks shall conform to the recommendations of the current revision of ACI Standard 315 and ACI Standard 318.

Reinforcing Bar: ASTM A615/A615M, Grade 60

GENERAL NOTES

1. The first two digits following the letter(s) of the mark indicate the size of the bar:

   Mark "A502" = bar size #5
   Mark "P805" = bar size #8
   Mark "S650" = bar size #6

2. Each crank bar, Type B, may be replaced by two (2) straight bars (one top and one bottom) of the same bar size as the crank bar. Payment in either case shall be based on crank bars as schedule on the plans.

STATE OF MAINE
DEPARTMENT OF TRANSPORTATION

STP-1928(000)

WIN 19280.00

BRIDGE PLANS

BRIDGE NO. 3333

	BY	DATE
PROJ. MANAGER	M. Parlin	
DESIGN-DETAILED	JDW	09/14
CHECKED-REVIEWED	WJS	09/14
DESIGN2-DETAILED2	MPC	09/14
DESIGN3-DETAILED3	TRC	09/14
REVISIONS 1		
REVISIONS 2		
REVISIONS 3		
REVISIONS 4		
FIELD CHANGES		

SIGNATURE

P.E. NUMBER

DATE

BAR MILLS BRIDGE
SACO RIVER
HOLLIS & BUXTON YORK COUNTY

PIER REINFORCING STEEL SCHEDULE

SHEET NUMBER
138
OF 148

Filename: ...\138_Bar Mills Pier Bar Schedule.dgn Division: BRIDGE Username: dana.damren Date:11/19/2014

STRAIGHT BARS

MARK	QTY.	LENGTH	LOCATION	MARK	QTY.	LENGTH	LOCATION
		SUPERSTRUCTURE					
S501	1910	38'-0"	Transverse				
S502	4	41'-7"	Transverse - Abutment No. 1				
S503	4	43'-10"	Transverse - Abutment No. 2				
S504	12	8'-9"	Transverse - Abut. No. 1 Haunch				
S505	3	2'-11"	Transverse - Abut. No. 1 Haunch				
S506	32	7'-6"	Trans. - Constr. Joint Haunch				
S507	28	17'-6"	Transverse - Abut. No. 1 Taper				
S507-A	8	19'-10"	Transverse - Abut. No. 1 Taper				
S507-B	8	17'-8"	Transverse - Abut. No. 1 Taper				
S507-C	8	15'-5"	Transverse - Abut. No. 1 Taper				
S507-D	8	13'-2"	Transverse - Abut. No. 1 Taper				
S507-E	8	10'-11"	Transverse - Abut. No. 1 Taper				
S507-F	8	8'-8"	Transverse - Abut. No. 1 Taper				
S507-G	8	6'-5"	Transverse - Abut. No. 1 Taper				
S508	38	19'-2"	Transverse - Abut. No. 2 Taper				
S508-A	8	19'-5"	Transverse - Abut. No. 2 Taper				
S508-B	8	17'-8"	Transverse - Abut. No. 2 Taper				
S508-C	8	15'-11"	Transverse - Abut. No. 2 Taper				
S508-D	8	14'-2"	Transverse - Abut. No. 2 Taper				
S508-E	8	12'-5"	Transverse - Abut. No. 2 Taper				
S508-F	8	10'-9"	Transverse - Abut. No. 2 Taper				
S508-G	8	9'-0"	Transverse - Abut. No. 2 Taper				
S508-H	8	7'-3"	Transverse - Abut. No. 2 Taper				
S508-I	8	5'-6"	Transverse - Abut. No. 2 Taper				
S508-J	8	3'-10"	Transverse - Abut. No. 2 Taper				
S509	2	7'-3"	Abut. No. 2 Semi - Int. Backwall				
S511	832	60'-0"	Longitudinal				
S512	104	30'-0"	Longitudinal				
S611	110	60'-0"	Longitudinal - Over Piers				
S612	110	57'-6"	Longitudinal - Over Piers				
S701	15	43'-10"	Abut. No. 2 Semi - Int. Backwall				
S702	8	8'-10"	Abut. No. 2 Semi - Int. Backwall				
S703	4	3'-3"	Abut. No. 2 Semi - Int. Backwall				
		APPROACH SLABS					
AS500-1	16	31'-0"	Transverse - Abutment No. 1				
AS500-2	16	33'-0"	Transverse - Abutment No. 2				
AS600	116	15'-0"	Longitudinal - 58 each				
MARK	QTY.	LENGTH	LOCATION	MARK	QTY.	LENGTH	LOCATION

BENT BARS

MARK	QTY.	LENGTH	TYPE	A	B	C	D	E	F	G	H	O	R	LOCATION
						SUPERSTRUCTURE								
S551	19	9'-2"	SJ	2'-0"	1'-0"	1'-8"	1'-0"	3'-6"	--	--	--	--	--	Abutment No. 1 Haunch
S551-A	7	10'-10"	SJ	2'-0"	1'-0"	2'-6"	1'-0"	4'-4"	--	--	--	--	--	Abutment No. 1 Haunch
S552	32	7'-9"	CJ	2'-0"	1'-4"	1'-1"	1'-4"	2'-0"	--	--	--	--	--	Construction Joint Haunch
S553	1974	8'-7"	C	0'-7"	8'-0"	0	--	--	--	--	--	--	--	Overhangs
S554	56	9'-0"	L	4'-6"	4'-6"	--	--	--	--	--	--	--	--	Drains
S555	692	5'-9"	SC	0'-10"	1'-5"	1'-3"	1'-5"	--	--	0'-10"	--	1'-4"	--	Curb
S556	402	10'-7"	SC	0'-10"	1'-3"	6'-3"	1'-5"	--	--	0'-10"	--	6'-4"	--	Sidewalk
S556-A	25	10'-6"	SC	0'-10"	1'-2"	6'-3"	1'-5"	--	--	0'-10"	--	6'-4"	--	Sidewalk (Curve)
S556-B	65	10'-6"	SC	0'-10"	1'-2"	6'-3"	1'-5"	--	--	0'-10"	--	6'-4"	--	Sidewalk (Curve)
S557	154	5'-5"	SC	0'-10"	1'-3"	1'-3"	1'-3"	--	--	0'-10"	--	1'-4"	--	Sidewalk at Rail Post
S557-A	9	5'-3"	SC	0'-10"	1'-2"	1'-3"	1'-2"	--	--	0'-10"	--	1'-4"	--	Sidewalk at Rail Post (Curve)
S557-B	31	5'-3"	SC	0'-10"	1'-2"	1'-3"	1'-2"	--	--	0'-10"	--	1'-4"	--	Sidewalk at Rail Post (Curve)
S561	2	7'-3"	SA	0'-10"	2'-1"	1'-5"	2'-1"	--	--	0'-10"	--	1'-6"	--	Curb At Abut. No. 1
S562	2	12'-8"	SA	0'-10"	2'-1"	6'-10"	2'-1"	--	--	0'-10"	--	6'-11"	--	Sidewalk at Abut. No. 1
S563	2	5'-11"	SA	0'-10"	1'-5"	1'-5"	1'-5"	--	--	0'-10"	--	1'-7"	--	Curb at Abut. No. 2
S564	2	11-6"	SA	0'-10"	1'-3"	7'-2"	1'-5"	--	--	0'-10"	--	7'-4"	--	Sidewalk at Abut. No. 2
S565	9	5'-6"	L	3'-6"	2'-0"	--	--	--	--	--	--	--	--	Abut. No. 2 Semi - Int. Backwall
S651	34	23'-4"	EP	1'-8"	5'-7"	2'-6"	8'-3"	1'-10"	3'-7"	--	--	--	--	Abut. No. 2 Semi - Int. Backwall
S652	34	6'-8"	D	1'-8"	3'-4"	1'-8"	--	--	--	--	--	--	--	Abut. No. 2 Semi - Int. Backwall
S751	29	4'-8"	L	2'-4"	2'-4"	--	--	--	--	--	--	--	--	Approach Slab Seat
S761	16	8'-3"	S	0	3'-6"	1'-3"	3'-6"	--	--	0	--	--	--	Light Support
S762	8	7'-5"	S	0	3'-1"	1'-3"	3'-1"	--	--	0	--	--	--	Light Support
S763	8	6'-5"	S	0	2'-7"	1'-3"	2'-7"	--	--	0	--	--	--	Light Support
S764	8	5'-5"	S	0	2'-1"	1'-3"	2'-1"	--	--	0	--	--	--	Light Support
S765	12	10'-11"	CJ	0	4'-7"	1'-9"	4'-7"	0	--	--	--	--	--	Light Support
MARK	QTY.	LENGTH	TYPE	A	B	C	D	E	F	G	H	O	R	LOCATION

TYPE - BENDING DIAGRAMS

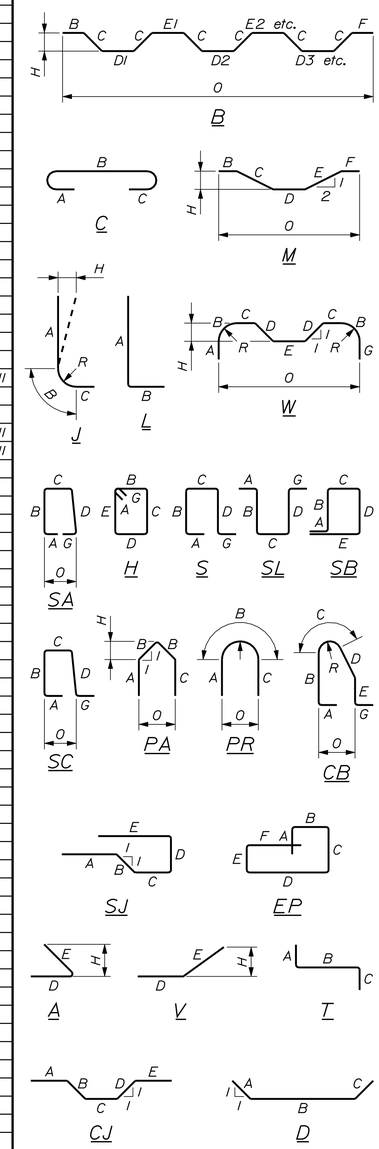

All dimensions are out-to-out of bar.

Bending details and hooks shall conform to the recommendations of the current revision of ACI Standard 315 and ACI Standard 318.

Reinforcing Bar: ASTM A 615/A 615M, Grade 60

GENERAL NOTES

1. The first two digits following the letter(s) of the mark indicate the size of the bar:

   Mark "A502" = bar size #5
   Mark "P805" = bar size #8
   Mark "S650" = bar size #6

2. Each crank bar, Type B, may be replaced by two (2) straight bars (one top and one bottom) of the same bar size as the crank bar. Payment in either case will be based on crank bars as scheduled on the plans.

STATE OF MAINE
DEPARTMENT OF TRANSPORTATION

STP-1928(000)

WIN 19280.00

BRIDGE NO. 3333

BRIDGE PLANS

PROJ. MANAGER	M. Parlin	BY	DATE
DESIGN-DETAILED	D. Eaton	Team South	Oct. 2014
CHECKED-REVIEWED	J. Waugh	-----	Oct. 2014
DESIGN2-DETAILED2	-----	-----	-----
DESIGN3-DETAILED3	-----	-----	-----
REVISIONS 1	-----	-----	-----
REVISIONS 2	-----	-----	-----
REVISIONS 3	-----	-----	-----
REVISIONS 4	-----	-----	-----
FIELD CHANGES	-----	-----	-----

SIGNATURE

P.E. NUMBER

DATE

BAR MILLS BRIDGE
SACO RIVER
HOLLIS & BUXTON YORK COUNTY

REINFORCING STEEL SCHEDULE

SHEET NUMBER

139

OF 148

Filename: ...\139_Bar Mills Superstructure Rebar.dgn Division: BRIDGE Username: dana.damren Date:11/19/2014

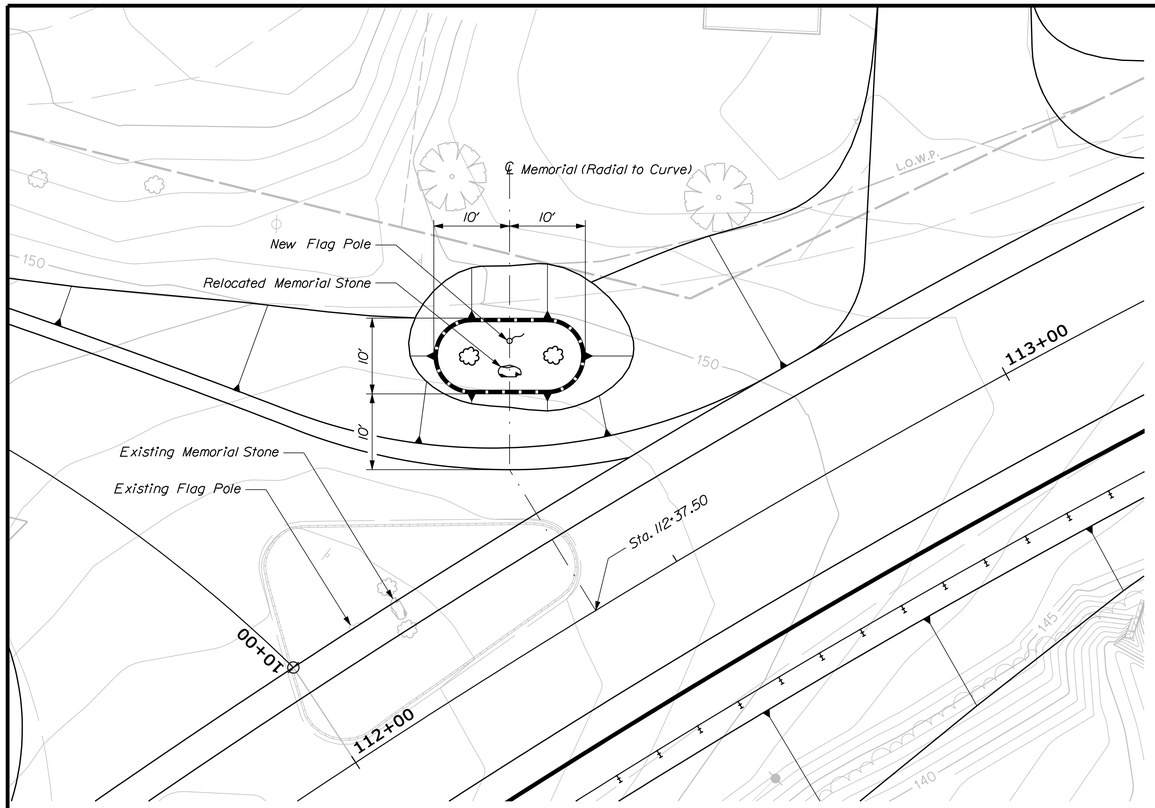

MEMORIAL PLAN

10 0 10 20
Scale in Feet

Filename: ...\msta\140_MemorialPlan.dgn Division: BRIDGE Username: dana.damren Date:11/20/2014

STATE OF MAINE
DEPARTMENT OF TRANSPORTATION

STP-1928(000)

WIN 19280.00

BRIDGE NO. 3333 BRIDGE PLANS

PROJ. MANAGER	M. Parlin	BY	DATE
DESIGN-DETAILED	D. Eaton	D. Damren	Nov. 2014
CHECKED-REVIEWED	C. Gustafson	------	Nov. 2014
DESIGN2-DETAILED2	------	------	SIGNATURE
DESIGN3-DETAILED3	------	------	P.E. NUMBER
REVISIONS 1	------	------	
REVISIONS 2	------	------	DATE
REVISIONS 3	------	------	
REVISIONS 4	------	------	
FIELD CHANGES	------	------	

BAR MILLS BRIDGE
SACO RIVER
HOLLIS & BUXTON YORK COUNTY

MEMORIAL PLAN

SHEET NUMBER
140
OF 148

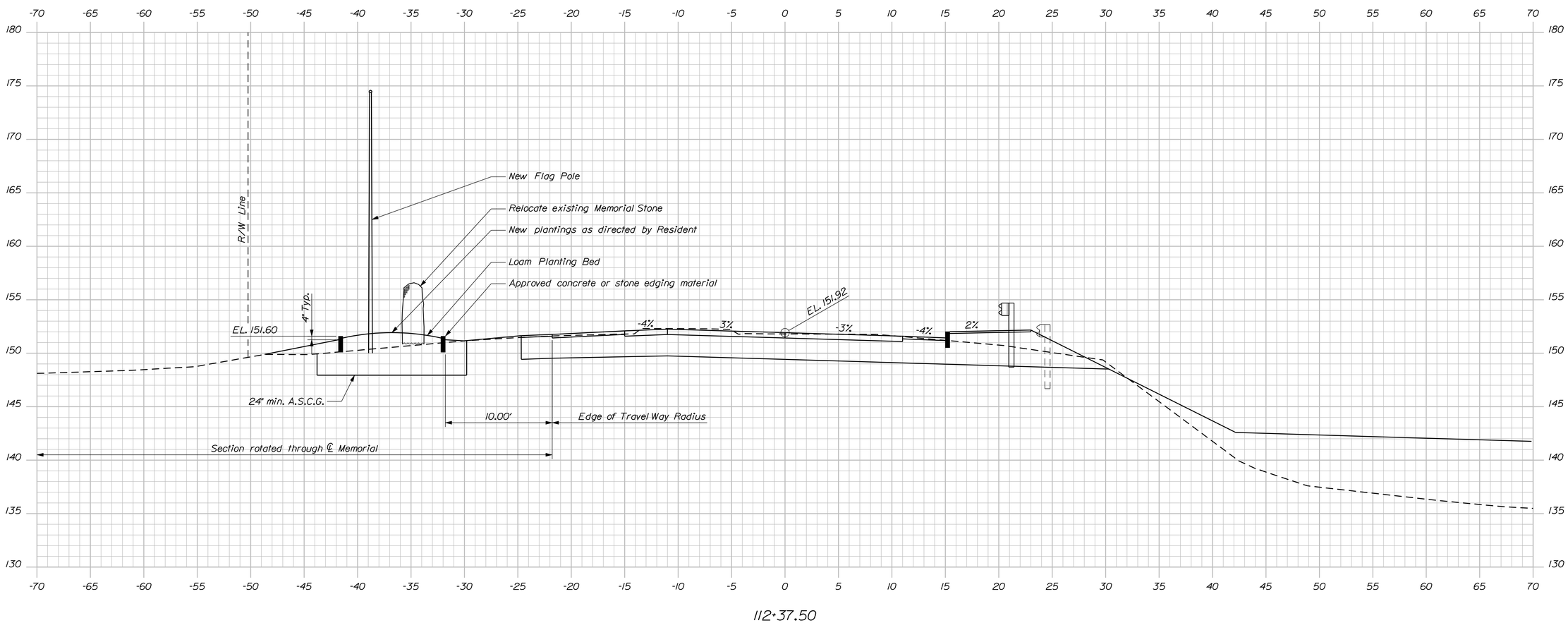

STATE OF MAINE
DEPARTMENT OF TRANSPORTATION

STP-1928(000)

WIN 19280.00

BRIDGE NO. 3333

BRIDGE PLANS

		BY	DATE
PROJ. MANAGER	Mark Pierlin		
DESIGN-DETAILED	D. Eaton	D. Damren	Oct. 2014
CHECKED-REVIEWED	G. Gustafson	------	Nov. 2014
DESIGN2-DETAILED2	------	------	------
DESIGN3-DETAILED3	------	------	------
REVISIONS 1	------	------	------
REVISIONS 2	------	------	------
REVISIONS 3	------	------	------
REVISIONS 4	------	------	------
FIELD CHANGES	------	------	------

SIGNATURE

P.E. NUMBER

DATE

BAR MILLS BRIDGE BRIDGE
SACO RIVER
HOLLIS & BUXTON YORK COUNTY

MEMORIAL CROSS SECTION

SHEET NUMBER

141

OF 148

Sta. 112+37.50

Filename: ...\MSTA\141_Xsect_Memorial.dgn Division: BRIDGE Username: dana.damren Date:11/19/2014

Filename: ...\142_Traffic ControlPlan.dgn Division: TRAFFIC Username: Dana.Hanks Date:11/12/2014

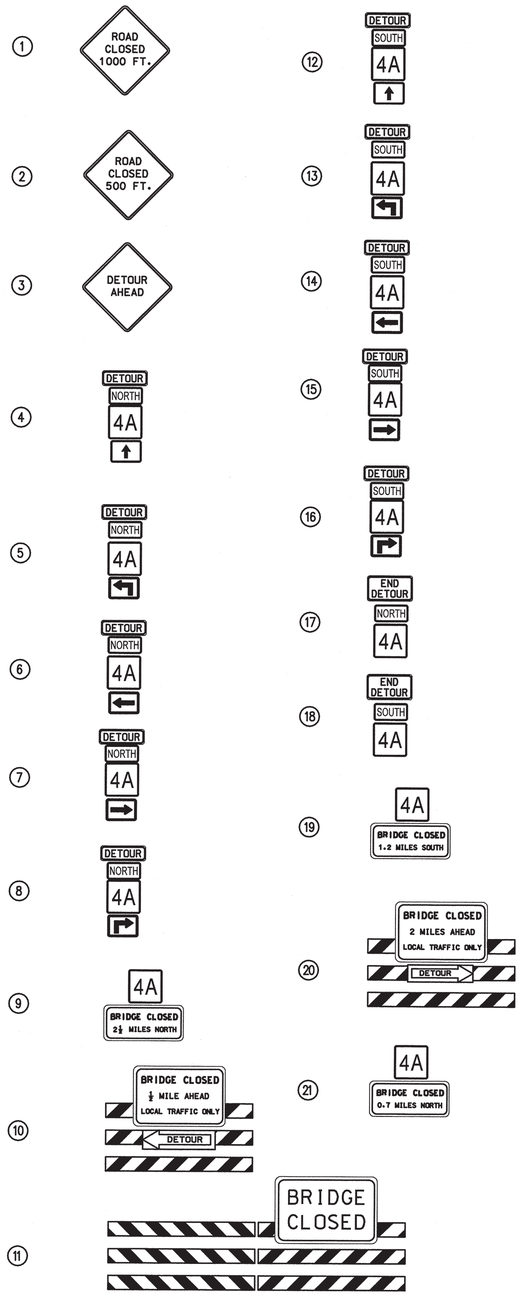

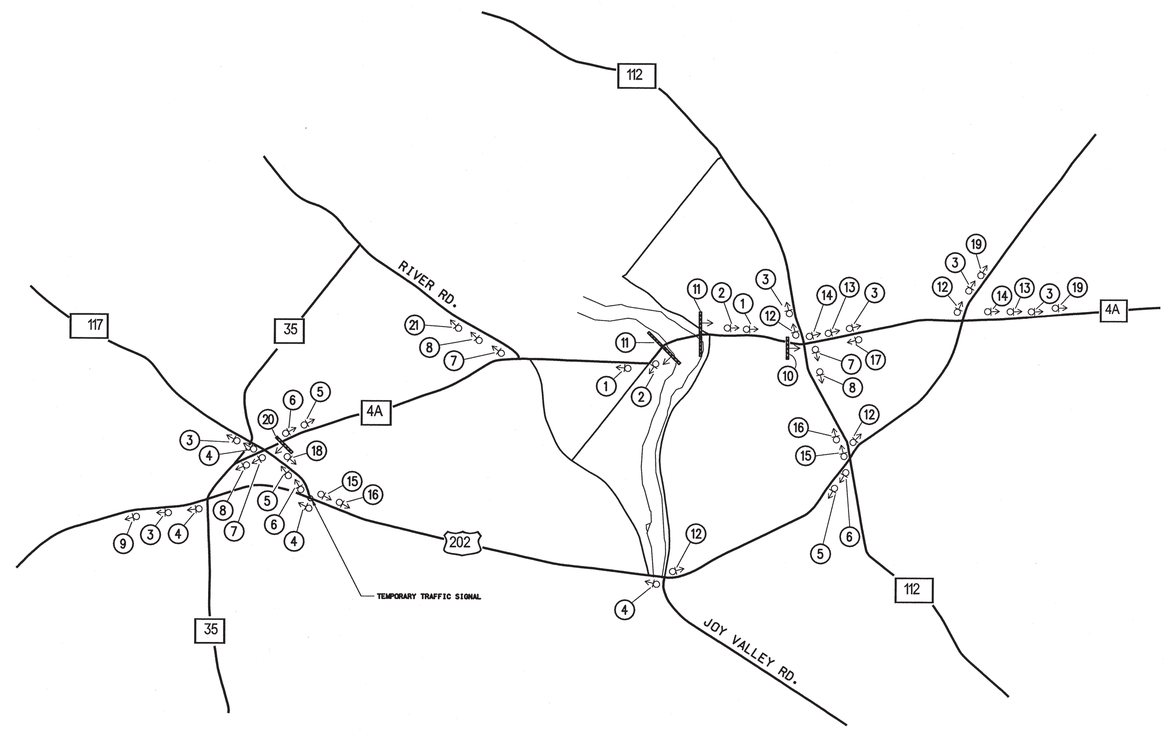

General Notes

1) Other signs may be needed as directed by the Resident.
2) The Resident shall approve locations and text on message boards.
3) Cover all conflicting route and directional signs.
4) The design and timing of the temporary traffic signal shall be approved and stamped by a licensed professional engineer.

STATE OF MAINE
Dana McLean Hanks
No. 6363
LICENSED
PROFESSIONAL ENGINEER

NOT TO SCALE

STATE OF MAINE
DEPARTMENT OF TRANSPORTATION

BR-1928(100)X & STP-1928(000)

WIN 19281.00 & 19280.00

BRIDGE NO. 1525 & 3333

BRIDGE PLANS

		BY	DATE
PROJ. MANAGER	M. PARLIN		
DESIGN-DETAILED		D. HANKS	NOV. 2014
CHECKED-REVIEWED			
DESIGN2-DETAILED2			
DESIGN3-DETAILED3			
REVISIONS 1			
REVISIONS 2			
REVISIONS 3			
REVISIONS 4			
FIELD CHANGES			

SIGNATURE

P.E. NUMBER

DATE

CANAL & BAR MILLS BRIDGES
SACO RIVER CANAL & SACO RIVER
HOLLIS & BUXTON YORK COUNTY

DETOUR SIGNING PLAN

SHEET NUMBER

142

OF 148

GENERAL NOTES - HIGHWAY AND BRIDGE LIGHTING

1. SCOPE OF WORK - INSTALL HIGHWAY AND BRIDGE LIGHTING AS SHOWN ON THIS PLAN. INSTALL CONDUIT, WIRING, FOUNDATIONS, POLES, L.E.D. LUMINAIRES AND RELATED HARDWARE.
2. ALL MATERIALS AND WORKMANSHIP SHALL CONFORM TO APPLICABLE PROVISIONS OF THE MAINE DEPARTMENT OF TRANSPORTATION STANDARD SPECIFICATIONS AND STANDARD DETAILS, NATIONAL ELECTRICAL CODE AND ANY REQUIREMENTS OF THE POWER COMPANY.
3. THE CONTRACTOR SHOULD VISIT THE SITE PRIOR TO BIDDING TO ENSURE AWARENESS OF SITE CONDITIONS THAT COULD AFFECT THE BID.
4. ALL LIGHTING CIRCUITS ARE TO BE PHOTOCELL ACTIVATED BY PHOTOCELL ON CONTROL CABINET.
5. LIGHTING FIXTURE VOLTAGE SHALL BE 240 VOLTS.
6. LIGHTING FIXTURES SHALL BE IES FULL CUTOFF, INDIRECT VIEW LIGHT EMITTING DIODE (LED) FIXTURES, IES DISTRIBUTION TYPE 1.
7. INSTALL LIGHTING FIXTURES ON 30 FOOT POLES. POLES MAY BE EITHER ALUMINUM OR GALVANIZED STEEL.
8. ALL FIXTURES SHALL BE GASKETED, HAVE AN EXTENDED LIFE DRIVER, SURGE PROTECTION, AND A DOUBLE FUSE KIT. ALL FIXTURES SHALL BE GRAY. THE LIGHTING LAYOUT WAS DONE USING HOLOPHANE LEDGEND LED ROADWAY LIGHTING LUMINAIRES, CATALOG NUMBER:
   LEDG 036 35 4K AS 2H L1; 7 - TYPE 1 FIXTURES
   LED COLOR TEMPERATURE FOR FIXTURE ACTUALLY INSTALLED SHALL BE 5000K.
   IF DIFFERENT FIXTURES ARE PROPOSED, THEY SHALL BE IES FULL CUTOFF, TYPE 1 IES DISTRIBUTION, INDIRECT VIEW LED LUMINAIRES. THE CONTRACTOR MUST DEMONSTRATE THAT THE PROPOSED FIXTURES WILL REASONABLY EQUAL THE LIGHT LEVELS AND DISTRIBUTIONS SHOWN ON THE PLANS, IN THE OPINION OF MAINEDOT.
9. EVALUATION BY MAINEDOT OF ALTERNATIVE LED LUMINAIRES THAT MAY BE PROPOSED BY THE CONTRACTOR FOR SUBSTITUTION WILL REQUIRE SUBMITTAL OF THE FOLLOWING, AT MINIMUM:
   IES LM-79-08 ABSOLUTE TESTING REPORT FOR THE PROPOSED ALTERNATIVE LUMINAIRE;
   IES LM-80-08 TESTING REPORT FOR LED CHIPS TO BE USED IN THE ALTERNATIVE LUMINAIRE, DOCUMENTING TESTING FOR A MINIMUM OF 8500 HOURS;
   IES TM-21-11 REPORT FOR PROJECTED LONG TERM LUMEN MAINTENANCE, INCLUDING INCREMENTAL LUMEN DEPRECIATION TABLE AT 25 DEGREES CELSIUS TO A MINIMUM OF 50,000 HOURS;
   IES PHOTOMETRIC FILE FROM THE MANUFACTURER FOR THE PROPOSED ALTERNATIVE LUMINAIRE;
   PHOTOMETRIC PLOT, OVERLAID ON THE LAYOUT OF THE LUMINAIRE LOCATIONS FOR THIS SPECIFIC PROJECT, SHOWING LIGHT CONTOURS, ILLUMINATION STATISTICS FOR EACH OF THE LIGHTING GROUPS, AND VALUE OF LIGHT LOSS FACTOR USED IN THE ANALYSIS;
   VALUES OF LLD, LDD, BALLAST FACTOR AND OTHER FACTORS USED FOR CALCULATION OF THE ASSUMED LIGHT LOSS FACTOR;
   SPECIFICATION DATA REGARDING OPTICS, CHROMATIC COLOR TEMPERATURE, DRIVER, SURGE PROTECTION, HOUSING AND GASKETING.

GENERAL NOTES , CONTINUED

10. CONDUIT SHALL BE 2" MINIMUM, PVC SCHEDULE 40. CONDUIT UNDER PAVEMENT SHALL BE SCHEDULE 80. MINIMUM BURIAL DEPTH FOR CONDUIT SHALL BE 36".
11. THERE SHALL BE NO SPLICES OR JUNCTION BOXES BETWEEN POLES. THE WIRE IN CONDUITS SHALL BE CONTINUOUS BETWEEN POLES.
12. IF STRUCTURAL ROCK IS ENCOUNTERED DURING INSTALLATION OF FOUNDATIONS, PAYMENT FOR EXCAVATION AND DOWELING REINFORCING INTO ROCK SHALL BE CONSIDERED INCIDENTAL TO FOUNDATION ITEMS.
13. BREAKAWAY DEVICES FOR LIGHT POLES SHALL CONFORM TO THE LATEST VERSION OF "AASHTO STANDARD SPECIFICATIONS FOR STRUCTURAL SUPPORTS FOR HIGHWAY SIGNS, LUMINAIRES AND TRAFFIC SIGNALS" AND NCHRP REPORT 350. THE BREAKAWAY DEVICE SHALL BE DESIGNED SO THAT THE ANCHOR BOLTS WILL NOT BEND WHEN A VEHICLE HITS THE POLE. A FRANGIBLE COUPLING SUCH AS TRANSPO POLE-SAFE 5000 SERIES, THE MANITOBA SAFETY BASE WITH REACTION PLATE, OR APPROVED EQUAL SHALL BE USED. BREAKAWAY DEVICES SHALL BE INSTALLED ON ALL POLES EXCEPT THOSE LOCATED MORE THAN 4' BEHIND GUARDRAIL.
14. PAYMENT UNDER ITEM 634.16, HIGHWAY LIGHTING WILL INCLUDE ALL MATERIALS, LABOR AND EQUIPMENT NECESSARY TO PROVIDE A FULLY FUNCTIONING HIGHWAY AND BRIDGE LIGHTING SYSTEM, EXCEPT THOSE ITEMS TO BE PAID UNDER OTHER RELATED BID ITEMS IN THE CONTRACT.
15. ALL LIGHT BASES SHALL HAVE A GROUND ROD LOCATED IN THE FOUNDATION THAT IS BONDED TO THE GROUNDING CONDUCTOR. PAYMENT FOR THE GROUND ROD SHALL BE INCLUDED IN ITEM 634.16, HIGHWAY LIGHTING.
16. PAYMENT UNDER ITEM ~~634.25~~ 634.210, CONVENTIONAL LIGHT STANDARD, WILL INCLUDE BUT NOT BE LIMITED TO NEW POLES, TRANSFORMER BASES AND BREAKAWAY DEVICES.
17. INSTALL SERVICE AND CONTROL CABINET AS SHOWN. THE CONTRACTOR SHALL ALSO INSTALL A METER DISCONNECT IN A SEPARATE NEMA 3R CABINET. CABINETS SHALL BE LOCKABLE.
18. WIRE SIZE SHALL BE #12 STRANDED COPPER XHHW-2.
19. ATTACHMENT OF POLES TO THE BRIDGE DECK AND CONDUIT IN THE BRIDGE DECK IS SHOWN ELSEWHERE IN THESE PLANS.
20. THE TOP 3"OF CONDUIT SHALL BE SEALED TO PREVENT ENTRY OF RODENTS.
21. CONDUIT, JUNCTION BOXES, EXPANSION CONNECTIONS, WIRING, GROUNDING, BONDING AND OTHER ELECTRICAL WORK NECESSARY FOR A FULLY FUNCTIONING LIGHTING SYSTEM FOR THE PORTION OF THE WORK ON BRIDGE STRUCTURES WILL BE INCIDENTAL TO LUMP SUM PAYMENT UNDER ITEM 638.01 EMBEDDED WORK IN STRUCTURE.
22. LIGHTING CONDUIT AT INTEGRAL BRIDGE BACKWALL LOCATIONS SHALL ALLOW FOR BACKWALL MOVEMENT. SEE SPECIAL DETAIL THIS SHEET. PRECAST OR CORED OPENING IN JUNCTION BOX WALL FOR LIGHTING CONDUIT SCHEDULE 80 PVC SLEEVE SHALL BE 0.5 INCH MINIMUM LARGER THAN SLEEVE OUTSIDE DIAMETER. INSTALL FLEXIBLE BUSHING AROUND SLEEVE TO SEAL OPENING IN JUNCTION BOX. SLEEVE SHALL BE SIZED TO ALLOW FREE MOVEMENT OF FLEXIBLE CONDUIT WITHIN SLEEVE. LENGTH OF TYPE LFNC FLEXIBLE CONDUIT SHALL ALLOW FOR 2 INCHES MINIMUM HORIZONTAL MOVEMENT WITHIN SLEEVE. PAYMENT FOR SCHEDULE 80 PVC SLEEVE, RUBBER PIPE SLEEVE SEAL, FLEXIBLE BUSHING, AND CORING OR PRECASTING OPENING FOR SLEEVE IN JUNCTION BOX WALL WILL BE INCIDENTAL TO ITEM 626.11. LFNC FLEXIBLE CONDUIT WILL BE PAID AS ITEM 626.22.

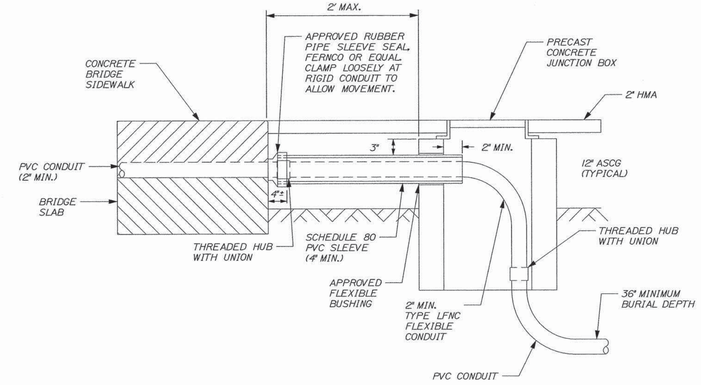

LIGHTING CONDUIT AT INTEGRAL BACKWALL

NOT TO SCALE

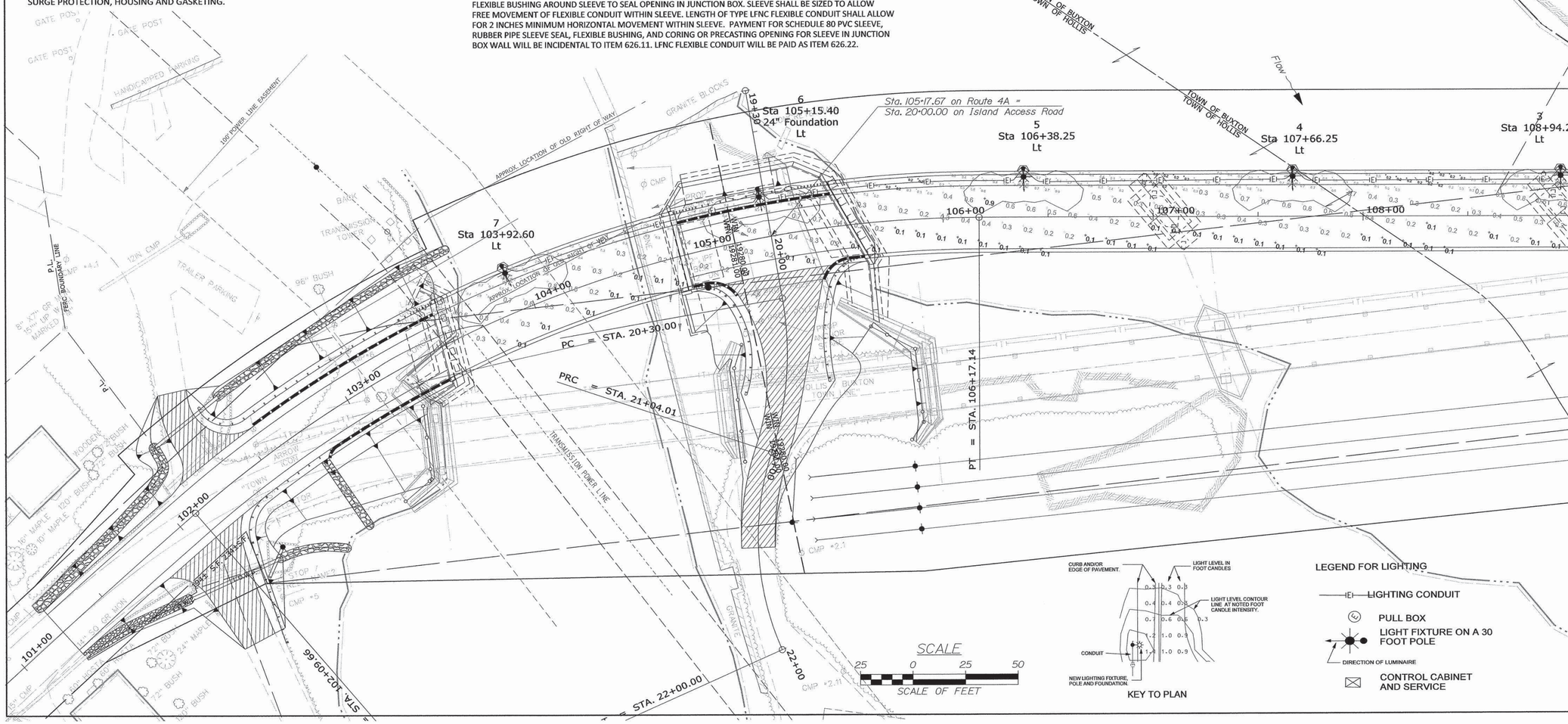

KEY TO PLAN

LEGEND FOR LIGHTING

- LIGHTING CONDUIT
- PULL BOX
- LIGHT FIXTURE ON A 30 FOOT POLE
- DIRECTION OF LUMINAIRE
- CONTROL CABINET AND SERVICE

STATE OF MAINE
DEPARTMENT OF TRANSPORTATION

BR-1928(100)X & STP-1928(000)

WIN 19281.00 & 19280.00

BRIDGE NO. 1525 & 3333

BRIDGE PLANS

STATE OF MAINE ALBERT L. GODFREY No. 4226 LICENSED PROFESSIONAL ENGINEER

SIGNATURE 4226 P.E. NUMBER 11-7-14 DATE

	BY	DATE
PROJ. MANAGER	M. PARLIN	
DESIGN-DETAILED	RAL	JUNE, 2014
DESIGN2-DETAILED2	ALG	SEPT, 2014
DESIGN3-DETAILED3		
REVISIONS 1		
REVISIONS 2		
REVISIONS 3		
REVISIONS 4		
FIELD CHANGES		

CANAL & BAR MILLS BRIDGES
SACO RIVER CANAL & SACO RIVER
HOLLIS & BUXTON YORK COUNTY

HIGHWAY LIGHTING PLANS

SHEET NUMBER
143
OF 148

FILENAME: $FILE$ DIVISION: $WKGROUP$ USERNAME: $USER$ DATE:$DATE$

STATISTICS

Description	Symbol	Avg	Max	Min	Max/Min	Avg/Min
Bridge	+	0.3 fc	0.9 fc	0.1 fc	9.0:1	3.0:1
Sidewalk	+	0.5 fc	1.1 fc	0.2 fc	5.5:1	2.5:1

LUMINAIRE SCHEDULE

Symbol	Qty	Catalog Number	Description	Lamp	File	Lumens	LLF	Watts
	7	LEDG 036 35 5K AS 2H L1	LEDGEND	42W 6X6 5K LED ARRAY Cree XP-G	LEDG_036_35_4K_AS_2H_L1.ies	Absolute	0.81	41.6

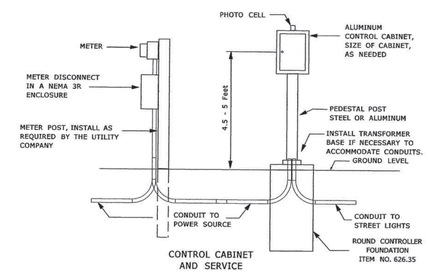

CONTROL CABINET AND SERVICE

TYPICAL SECTIONS - PLACEMENT OF POLES

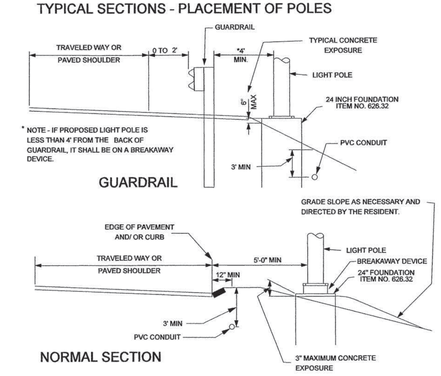

NORMAL SECTION

ATTACHMENT OF POLES TO AND CONDUIT IN THE BRIDGE IS SHOWN ELSEWHERE IN THESE PLANS.

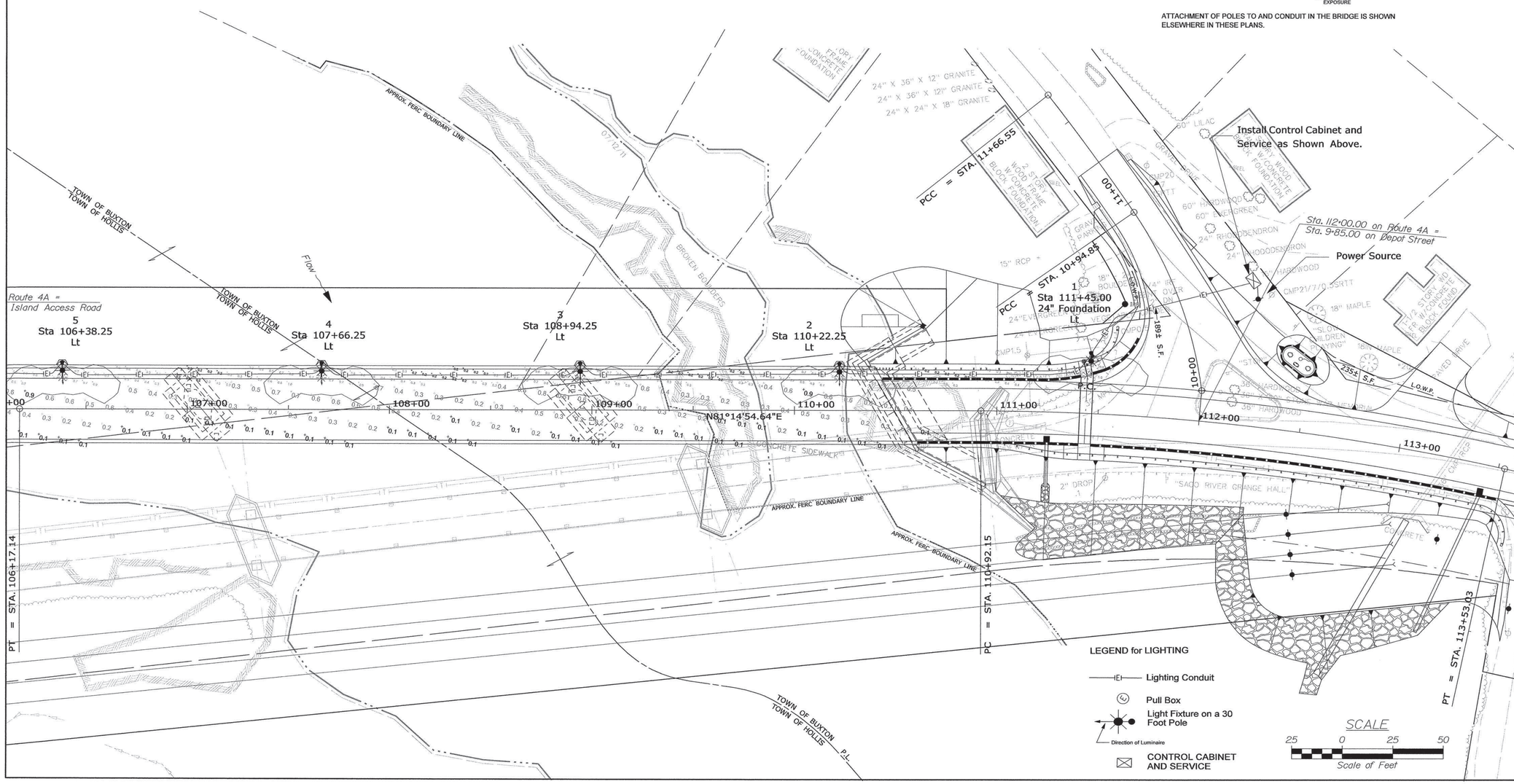

STATE OF MAINE
DEPARTMENT OF TRANSPORTATION

BR-1928(100)X & STP-1928(100)

WIN 19281.00 & 19280.00

BRIDGE PLANS

BRIDGE NO. 1525 & 3333

STATE OF MAINE
ALBERT L. GODFREY
No. 4226
LICENSED PROFESSIONAL ENGINEER

PROJ. MANAGER	M. PARLIN		
DESIGN-DETAILED	RAL	RAL	June, 2014
CHECKED-REVIEWED	ALG	ALG	SEPT, 2014
DESIGN2-DETAILED2			
DESIGN3-DETAILED3			
REVISIONS 1			
REVISIONS 2			
REVISIONS 3			
REVISIONS 4			
FIELD CHANGES			

SIGNATURE 4226

P.E. NUMBER 11-7-14

DATE

CANAL & BAR MILLS BRIDGES
SACO RIVER CANAL & SACO RIVER
HOLLIS & BUXTON YORK COUNTY

HIGHWAY LIGHTING PLANS

SHEET NUMBER

144

OF 148

Filename: ...\Lighting PlanSht2.dgn Division: HIGHWAY Username: common Date:11/7/2014

HORIZONTAL DATUM - US STATE PLANE NAD83(1996)
ZONE - MAINE 2000 WEST ZONE
VERTICAL DATUM - NAVD 88
COMBINDED SCALE FACTOR - 0.9999750

NOTE:
FOR RIGHT OF WAY REFERENCES
SEE RIGHT OF WAY SHEET 3 OF 4

PLAN SHOWING A STANDARD BOUNDARY SURVEY
FOR SAMUEL D. DRUMMOND, III
BY CORNER POST LAND SURVEYING, INC.
DATED - JULY 1, 1998
REVISION DATED - NOVEMBER 19, 1998
JOB NO. 97075

WIN 19280.00 - HOLLIS/BUXTON

BROOKFIELD WHITE PINE HYDRO, LLC
PARCEL NO. (3)
LAND = 0.06± AC. (UPLAND)
LAND = 0.14± AC. (SUBMERGED - CANAL)
LAND = 0.17± AC. (UPLAND - ISLAND)
LAND = 0.51± AC. (SUBMERGED - RIVER)
TOTAL LAND = 0.88± AC. (EASEMENT FOR HIGHWAY PURPOSES)
TEMP. CONST. RIGHTS = 0.61± AC. (3)
TOTAL AREA - VAST HOLDINGS

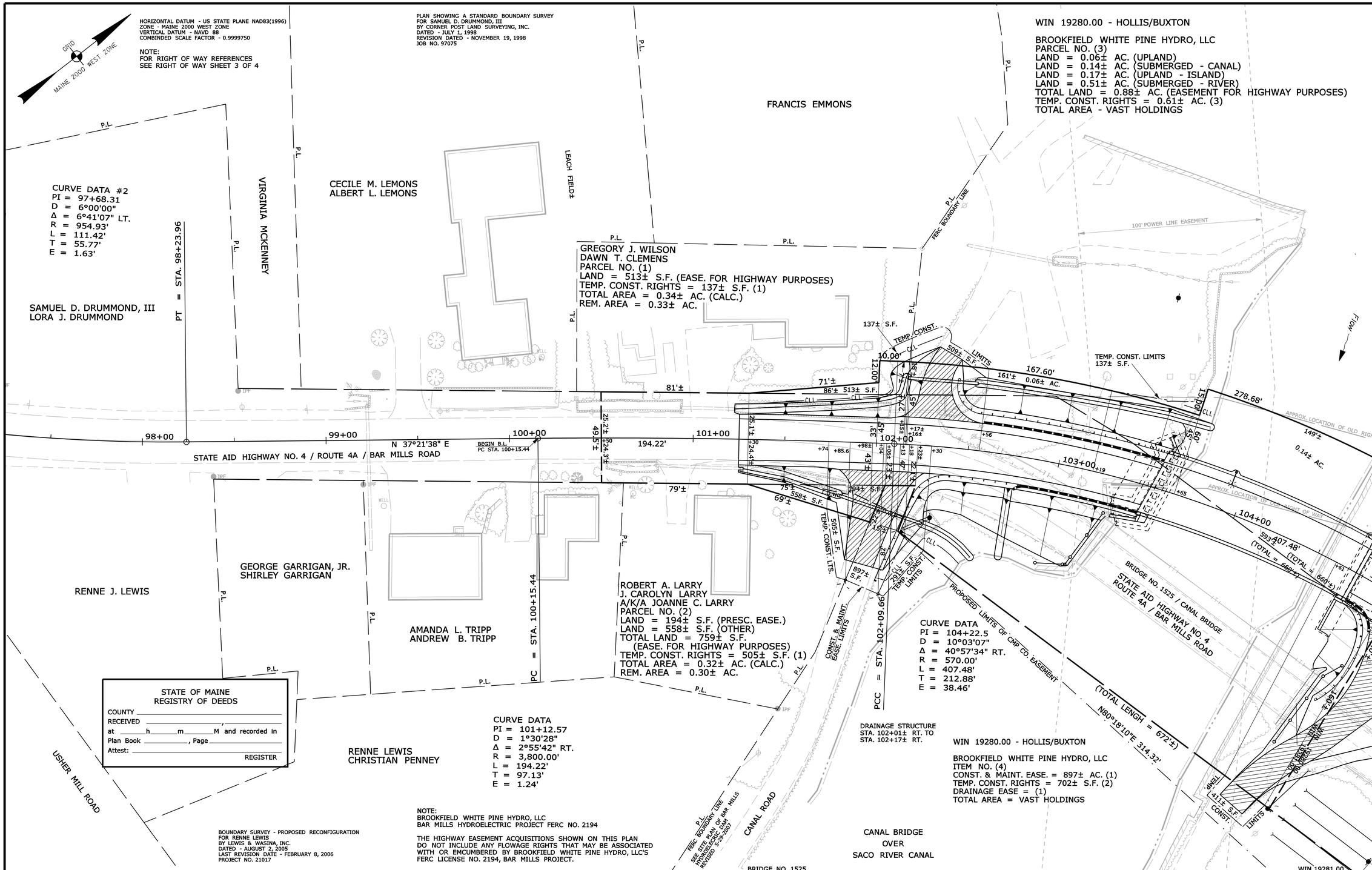

BOUNDARY SURVEY - PROPOSED RECONFIGURATION
FOR RENNE LEWIS
BY LEWIS & WASINA, INC.
DATED - AUGUST 2, 2005
LAST REVISION DATE - FEBRUARY 8, 2006
PROJECT NO. 21017

NOTE:
BROOKFIELD WHITE PINE HYDRO, LLC
BAR MILLS HYDROELECTRIC PROJECT FERC NO. 2194

THE HIGHWAY EASEMENT ACQUISITIONS SHOWN ON THIS PLAN DO NOT INCLUDE ANY FLOWAGE RIGHTS THAT MAY BE ASSOCIATED WITH OR EMCUMBERED BY BROOKFIELD WHITE PINE HYDRO, LLC'S FERC LICENSE NO. 2194, BAR MILLS PROJECT.

SYMBOLS
- IP or IPF (IRON PIPE or PIN FOUND)
- S.T. (SEPTIC TANK)
- (ROW MONUMENT)
- (TRAVERSE POINT)
- WELL
- GROUNDING UNIT LINE
- CONSTRUCTION LIMIT LINE
- PROPERTY LINE
- LIMITS OF VARIOUS RIGHT PORTION (L.O.V.R.P.)
- EXISTING RIGHT OF WAY
- NEW RIGHT OF WAY
- NEW ROW WITHIN EXIST. ROW
- CONTROL OF ACCESS
- WATER LINE
- GAS LINE
- ELECTRIC LINE
- TELEPHONE LINE
- SEWER LINE

ITEM	TECH	CHECKED
BASE MAP		
EXIST. R/W	G.L.L.	C.W.K.
PROP. LINES	G.L.L.	
AREAS	G.L.L.	R.M.C.

STATE OF MAINE
DEPARTMENT OF TRANSPORTATION
16 STATE HOUSE STATION - AUGUSTA, ME 04333-0016

HOLLIS/BUXTON
RIGHT OF WAY MAP

REVISIONS			
NO.	DATE	DESCRIPTION	BY

PLAN FILED IN PLAN BOOK			PAGE	COUNTY RECORD			
NO.	GRANTOR		INSTRUMENT	DATE	BOOK	PAGE
			COND.	11/3/14	16917	380

DAVID BERNHARDT
COMMISSIONER
JOYCE NOEL TAYLOR
CHIEF ENGINEER
DATE

To the best of my knowledge and belief the Highway Right of Way lines depicted hereon are based upon a survey conforming to the Standards of Practice promulgated by the Maine Board of Licensure for Professional Land Surveyors 02-360 CMR, Chapter 90; Exceptions: (1) No separate survey report, (2) Monumentation only as shown on plan. See sheet X of this plan set for coordinates. (3) Other boundary lines, including lines between abutters are approximate and for general reference purposes only.

CADD FILE:
Y:\ PIN \ 19281 \ 00 \ ROW \ MSTA \ 001_RWPLAN1.DGN

STATE AID HIGHWAY NO. 4
ROUTE 4A / BAR MILLS ROAD
HOLLIS YORK COUNTY
FEDERAL AID PROJECT NO. BR-1928(100)X

SEPTEMBER 2014 | RIGHT-OF-WAY MAP | D.O.T. FILE NO. 16-500
SCALE 1" = 25' | SHEET 1 OF 4

SHEET NUMBER
145
OF 148

Filename: ...\00\ROW\MSTA\145_RWPLAN1.dgn Division: BRIDGE Username: dana.damren Date:11/19/2014

HORIZONTAL DATUM - US STATE PLANE NAD83(1996)
ZONE - MAINE 2000 WEST ZONE
VERTICAL DATUM - NAVD 88
COMBINED SCALE FACTOR - 0.9999750

NOTE:
FOR RIGHT OF WAY REFERENCES
SEE RIGHT OF WAY SHEET 3 OF 4

STATE OF MAINE
REGISTRY OF DEEDS
COUNTY _____
RECEIVED _____, _____
at _____h_____m_____M and recorded in
Plan Book _____, Page _____
Attest: _____
REGISTER

SITE PLAN
OF BAR MILLS HYDROELECTRIC DAM
IN HOLLIS/BUXTON
OWNER - CENTRAL MAINE POWER
PREPARED FOR PPL ENERGY MAINE, INC.
BY NORTHEAST CIVIL SOLUTIONS, INC.
DATED - MARCH 27, 1998
REVISED DATE - MAY 29, 2007
JOBE NO. 16196/30025

BAR MILLS PROJECT PLAN
GENERAL MAP - SACO RIVER
RESERVOIR
BUXTON/HOLLIS, YORK COUNTY, MAINE
RECORDED OWNER - CENTRAL MAINE POWER COMPANY
DATED MARCH 26, 0999
PLAN 325-22-001
YORK COUNTY REGISTRY OF DEEDS
PLAN BOOK 247, PAGE 22 & 23

PLAN OF PROPERTY
FOR ROGERS PLANT COLONIAL FIBER COMPANY
BY H.I. & E.C. JORDAN
DATED - APRIL 30, 1977
PLAN FILE NO. R4105

NOTE:
BROOKFIELD WHITE PINE HYDRO, LLC
BAR MILLS HYDROELECTRIC PROJECT FERC NO. 2194

THE HIGHWAY EASEMENT ACQUISITIONS SHOWN ON THIS PLAN DO NOT INCLUDE ANY FLOWAGE RIGHTS THAT MAY BE ASSOCIATED WITH OR EMCUMBERED BY BROOKFIELD WHITE PINE HYDRO, LLC'S FERC LICENSE NO. 2194, BAR MILLS PROJECT.

WIN 19280.00 - HOLLIS/BUXTON

BROOKFIELD WHITE PINE HYDRO LLC
PARCEL NO. (3)
LAND = 0.06± AC. (UPLAND)
LAND = 0.14± AC. (SUBMERGED - CANAL)
LAND = 0.17± AC. (UPLAND - ISLAND)
LAND = 0.51± AC. (SUBMERGED - RIVER)
TOTAL LAND = 0.88± AC. (EASEMENT FOR HIGHWAY PURPOSES)
TEMP. CONST. RIGHTS = 0.61± AC. (3)
TOTAL AREA - VAST HOLDINGS

PARCEL NO. (5)
OMITTED

TOWN OF BUXTON
ITEM NO. (6)
TEMP. CONST. RIGHTS = 0.68± AC. (1)
TOTAL AREA = 5.0± AC. (PER PLAN OF PROPERTY)

PLAN OF PROPERTY
FOR ROGERS PLANT
COLONIAL FIBBER COMPANY
BY H.I. & E.C. JORDAN - SURVEYORS
DATED - APRIL 30, 1977
PLAN FILE NO. R-4105

CURVE DATA
PI = 104+22.5
D = 10°03'07"
Δ = 40°57'34" RT.
R = 570.00'
L = 407.48'
T = 212.88'
E = 38.46'

SHARON FORBIS
BRETT KELEIHOR
TO LOWER EGYPT ROAD
DEPOT STREET
STA. 108+68± O/S 202± LT.
STA. 109+55± O/S 202± LT.
TEMP. CONST. LIMITS
TEMP. P.L.
CONST. P.L.
LIMITS
P.L.
APPROX. FERC BOUNDARY LINE
TEMP. CONST. LIMITS
TOWN OF BUXTON
TOWN OF HOLLIS
SACO RIVER
FLOW
0.60± AC.
0.68± AC.
DAVID W. BALDWIN, SR.
PARCEL NO. (7)
LAND = 0.06± AC. (SUBMERGED - RIVER)
(EASE. FOR HIGHWAY PURPOSES) = 0.13± AC. (1)
TEMP. CONST. RIGHTS = 0.36± AC. (CALC.)
TOTAL AREA = 0.30± AC.
REM. AREA
CONST. LTS.
BERT GENEST
PARCEL NO. (9)
SEE R/W SHEET 4 OF 4
APPROX. LOCATION OF OLD RIGHT OF WAY
278.68'
149'±
129'±
95'±
180'±
(275'±)
0.14± AC.
0.17± AC.
0.36± AC.
0.15± AC.
0.06± AC.
0.08± AC.
0.13± AC.
0.07± AC.
60'
60.00'
45'
103'±
58'±
63'±
54'±
(183'± TOTAL)
(213'± TOTAL) 153'±
457.86'
120'±
SLOPE EASE.
862± S.F.
26'±
34'±
104+00
105+00
106+00
107+00
108+00
109+00
110+00
407.48'
593'± (TOTAL = 660'±)
(TOTAL = 660'±)
67'±
60'±
PT = STA. 106+17.14
N 81°14'54" E 475.01'
PC = STA. 110+92.15
PCC = STA.
BRIDGE NO. 1525 / CANAL BRIDGE
STATE AID HIGHWAY NO. 4
ROUTE 4A / BAR MILLS ROAD
CANAL BRIDGE
OVER
SACO RIVER CANAL
BRIDGE NO. 1525
WIN 19281.00
(TOTAL LENGH = 672'±)
N80°18'10"E 314.32'
CO. EASEMENT
411± S.F.
CONST.
TEMP.
LIMITS
220'±
160'±
WIN 19280.00
WIN 19281.00
BRIDGE NO. 3333 / BAR MILLS BRIDGE
STATE AID HIGHWAY NO. 4
ROUTE 4A / BAR MILLS ROAD
PROPOSED LIMITS OF CMP CO. EASEMENT
PROPOSED CMP CO. EASEMENT
AREA = 0.36± AC.
(TOTAL LENGH = 672'±)
101'±
131'±
STATE AID HIGHWAY NO. 2
ROUTE 4A / MAIN STREET
APPROX. FERC BOUNDARY LINE
BAR MILLS BRIDGE
OVER
SACO RIVER
BRIDGE NO. 3333
WIN 19281.00
WIN 19280.00

SYMBOLS
IP or IPF (IRON PIPE or PIN FOUND)
ST. (SEPTIC TANK)
(ROW MONUMENT)
BM (TRAVERSE POINT)
WELL
GROUNDING UNIT LINE
CONSTRUCTION LIMIT LINE
PROPERTY LINE
LIMITS OF VARIOUS RIGHT OF WAY PORTION (L.O.V.R.P.)
EXISTING RIGHT OF WAY
NEW RIGHT OF WAY
NEW ROW WITHIN EXIST. ROW
CONTROL OF ACCESS
WATER LINE
GAS LINE
ELECTRIC LINE
TELEPHONE LINE
SEWER LINE

ITEM	TECH	CHECKED
BASE MAP	G.L.L.	C.W.K.
EXIST. R/W	G.L.L.	
PROP. LINES	G.L.L.	R.M.C.
AREAS	G.L.L.	

STATE OF MAINE
DEPARTMENT OF TRANSPORTATION
16 STATE HOUSE STATION - AUGUSTA, ME 04333-0016
HOLLIS/BUXTON
RIGHT OF WAY MAP

REVISIONS

NO.	DATE	DESCRIPTION	BY

PLAN FILED IN PLAN BOOK PAGE COUNTY RECORD

NO.	GRANTOR	INSTRUMENT	DATE	BOOK	PAGE
		COND.	11/3/14	16917	380

DAVID BERNHARDT
COMMISSIONER
JOYCE NOEL TAYLOR
CHIEF ENGINEER

DATE

To the best of my knowledge and belief the Highway Right of Way lines depicted hereon are based upon a survey conforming to the Standards of Practice promulgated by the Maine Board of Licensure for Professional Land Surveyors 02-360 CMR, Chapter 90; Exceptions: (1) No separate survey report, (2) Monumentation only as shown on plan. See sheet X of this plan set for coordinates. (3) Other boundary lines, including lines between abutters are approximate and for general reference purposes only.

CADD FILE:
Y:\ PIN \ 19281 \ 00 \ ROW \ MSTA \ 002_RWPLAN2.DGN

STATE AID HIGHWAY NO. 4 & 2
ROUTE 4A / BAR MILLS ROAD & MAIN STREET
HOLLIS/BUXTON YORK COUNTY
FEDERAL AID PROJECT NO. BR-1928(100)X
FEDERAL AID PROJECT NO. STP-1928(000)

SEPTEMBER 2014 | RIGHT-OF-WAY MAP
SCALE 1" = 25' | SHEET 2 OF 4
D.O.T. FILE NO. 16-500

SHEET NUMBER
146
OF 148

Filename: ...\00\ROW\MSTA\146_RWPLAN2.dgn Division: BRIDGE Username: dond.damren Date:11/19/2014

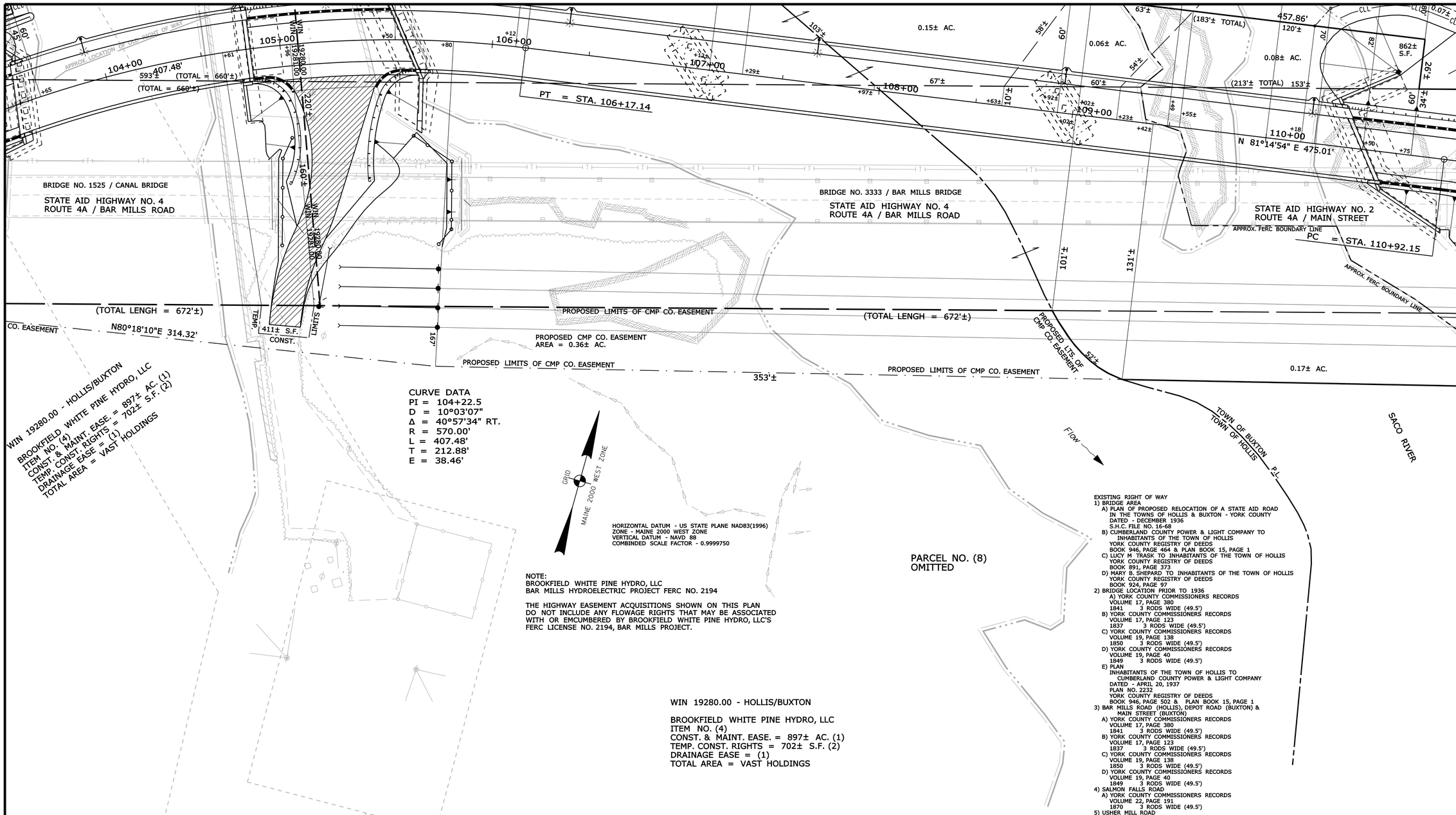

NOTE:
BROOKFIELD WHITE PINE HYDRO, LLC
BAR MILLS HYDROELECTRIC PROJECT FERC NO. 2194

THE HIGHWAY EASEMENT ACQUISITIONS SHOWN ON THIS PLAN DO NOT INCLUDE ANY FLOWAGE RIGHTS THAT MAY BE ASSOCIATED WITH OR EMCUMBERED BY BROOKFIELD WHITE PINE HYDRO, LLC'S FERC LICENSE NO. 2194, BAR MILLS PROJECT.

EXISTING RIGHT OF WAY
1) BRIDGE AREA
A) PLAN OF PROPOSED RELOCATION OF A STATE AID ROAD IN THE TOWNS OF HOLLIS & BUXTON - YORK COUNTY
DATED - DECEMBER 1936
S.H.C. FILE NO. 16-68
B) CUMBERLAND COUNTY POWER & LIGHT COMPANY TO INHABITANTS OF THE TOWN OF HOLLIS
YORK COUNTY REGISTRY OF DEEDS
BOOK 946, PAGE 464 & PLAN BOOK 15, PAGE 1
C) LUCY M TRASK TO INHABITANTS OF THE TOWN OF HOLLIS
YORK COUNTY REGISTRY OF DEEDS
BOOK 891, PAGE 373
D) MARY B. SHEPARD TO INHABITANTS OF THE TOWN OF HOLLIS
YORK COUNTY REGISTRY OF DEEDS
BOOK 924, PAGE 97
2) BRIDGE LOCATION PRIOR TO 1936
A) YORK COUNTY COMMISSIONERS RECORDS
VOLUME 17, PAGE 380
1841 3 RODS WIDE (49.5')
B) YORK COUNTY COMMISSIONERS RECORDS
VOLUME 17, PAGE 123
1837 3 RODS WIDE (49.5')
C) YORK COUNTY COMMISSIONERS RECORDS
VOLUME 19, PAGE 138
1850 3 RODS WIDE (49.5')
D) YORK COUNTY COMMISSIONERS RECORDS
VOLUME 19, PAGE 40
1849 3 RODS WIDE (49.5')
E) PLAN
INHABITANTS OF THE TOWN OF HOLLIS TO CUMBERLAND COUNTY POWER & LIGHT COMPANY
DATED - APRIL 20, 1937
PLAN NO. 2232
YORK COUNTY REGISTRY OF DEEDS
BOOK 946, PAGE 502 & PLAN BOOK 15, PAGE 1
3) BAR MILLS ROAD (HOLLIS), DEPOT ROAD (BUXTON) & MAIN STREET (BUXTON)
A) YORK COUNTY COMMISSIONERS RECORDS
VOLUME 17, PAGE 380
1841 3 RODS WIDE (49.5')
B) YORK COUNTY COMMISSIONERS RECORDS
VOLUME 17, PAGE 123
1837 3 RODS WIDE (49.5')
C) YORK COUNTY COMMISSIONERS RECORDS
VOLUME 19, PAGE 138
1850 3 RODS WIDE (49.5')
D) YORK COUNTY COMMISSIONERS RECORDS
VOLUME 19, PAGE 40
1849 3 RODS WIDE (49.5')
4) SALMON FALLS ROAD
A) YORK COUNTY COMMISSIONERS RECORDS
VOLUME 22, PAGE 191
1870 3 RODS WIDE (49.5')
5) USHER MILL ROAD
A) YORK COUNTY COMMISSIONERS RECORDS
VOLUME 28, PAGE 289
1946 3 RODS WIDE (49.5') AND DISCONTINUANCE
B) YORK COUNTY COMMISSIONERS RECORDS
VOLUME 24, PAGE 215
1891 3 RODS WIDE (49.5')

BRIDGE AS-BUILT PLAN
1) STATE OF MAINE - STATE HIGHWAY COMMISSION
PLAN & PROFILE
BAR MILLS BRIDGE OF SACO RIVER
HOLLIS-BUXTON, YORK COUNTY
U.S.W.P.F.R. PROJECT NO. 14

TAX MAP INFORMATION
1) TOWN OF HOLLIS
TAX MAP 3
2) TOWN OF BUXTON
TAX MAP 12

SITE PLAN
OF BAR MILLS HYDROELECTRIC DAM
IN HOLLIS/BUXTON
OWNER - CENTRAL MAINE POWER
PREPARED FOR FPL ENERGY MAINE. INC.
BY NORTHEAST CIVIL SOLUTIONS, INC.
DATED - MARCH 27, 1998
REVISED DATE - MAY 29, 2007
JOBE NO. 16196/30025

BAR MILLS PROJECT PLAN
GENERAL MAP - SACO RIVER
RESERVOIR
BUXTON/HOLLIS, YORK COUNTY, MAINE
RECORDED OWNER - CENTRAL MAINE POWER COMPANY
DATED MARCH 26, 0999
PLAN 325-22-001
YORK COUNTY REGISTRY OF DEEDS
PLAN BOOK 247, PAGE 22 & 23

BRIDGE NO. 1525
CANAL BRIDGE
OVER
SACO RIVER CANAL
WIN 19281.00

BRIDGE NO. 3333
BAR MILLS BRIDGE
OVER
SACO RIVER
WIN 19281.00
WIN 19280.00

STATE OF MAINE
REGISTRY OF DEEDS
COUNTY _____
RECEIVED _____, _____
at _____h_____m_____M and recorded in
Plan Book _____, Page _____
Attest: _____
REGISTER

SYMBOLS
IP or ●IPF (IRON PIPE or PIN FOUND)
S.T. (SEPTIC TANK)
(ROW MONUMENT)
BM (TRAVERSE POINT)
WELL (WELL)
GRADING LIMIT LINE
CONSTRUCTION LIMIT LINE
PROPERTY LINE
LIMITS OF "ARC" RIGHT PORTION (L.O.W.P.)
EXISTING RIGHT OF WAY
NEW RIGHT OF WAY
NEW ROW WITHIN EXIST. ROW
CONTROL OF ACCESS
WATER LINE
GAS LINE
ELECTRIC LINE
TELEPHONE LINE
SEWER LINE

ITEM	TECH	CHECKED
BASE MAP		
EXIST. R/W	G.L.L.	C.W.K.
PROP. LINES	G.L.L.	
AREAS	G.L.L.	R.M.C.

STATE OF MAINE
DEPARTMENT OF TRANSPORTATION
16 STATE HOUSE STATION - AUGUSTA, ME 04333-0016
HOLLIS/BUXTON
RIGHT OF WAY MAP

REVISIONS

NO.	DATE	DESCRIPTION	BY

PLAN FILED IN PLAN BOOK PAGE COUNTY RECORD

NO.	GRANTOR	INSTRUMENT	DATE	BOOK	PAGE
		COND.	11/3/14	16917	380

DAVID BERNHARDT
COMMISSIONER
JOYCE NOEL TAYLOR
CHIEF ENGINEER
DATE

To the best of my knowledge and belief the Highway Right of Way lines depicted hereon are based upon a survey conforming to the Standards of Practice promulgated by the Maine Board of Licensure for Professional Land Surveyors 02-360 CMR, Chapter 90; Exceptions: (1) No separate survey report, (2) Monumentation only as shown on plan. See sheet X of this plan set for coordinates. (3) Other boundary lines, including lines between abutters are approximate and for general reference purposes only.

CADD FILE:
Y:\ PIN \ 19281 \ 00 \ ROW \ MSTA \ 003_RWPLAN3.DGN

STATE AID HIGHWAY NO. 4 & 2
ROUTE 4A / BAR MILLS ROAD & MAIN STREET
HOLLIS/BUXTON YORK COUNTY
FEDERAL AID PROJECT NO. BR-1928(100)X
FEDERAL AID PROJECT NO. STP-1928(000)

SEPTEMBER 2014 | RIGHT-OF-WAY MAP | D.O.T. FILE NO. 16-500
SCALE 1" = 25' | SHEET 3 OF 4

SHEET NUMBER
147
OF 148

Filename: ...\00\ROW\MSTA\147_RWPLAN3.dgn Division: BRIDGE Username: dana.damren Date:11/19/2014

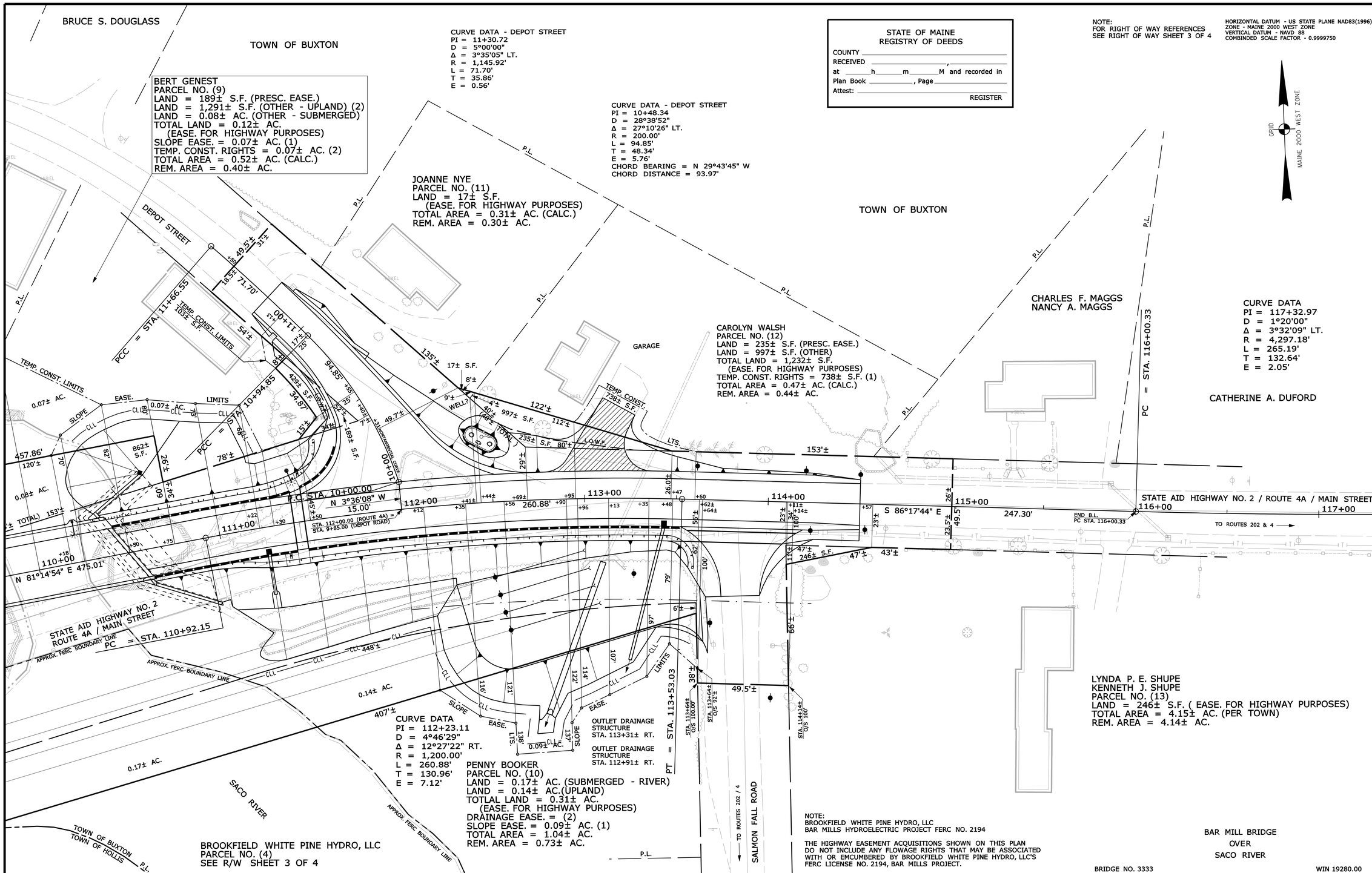

STATE OF MAINE
REGISTRY OF DEEDS
COUNTY _____
RECEIVED _____, _____
at _____h_____m_____M and recorded in
Plan Book _____, Page _____
Attest: _____
REGISTER

NOTE:
FOR RIGHT OF WAY REFERENCES
SEE RIGHT OF WAY SHEET 3 OF 4

HORIZONTAL DATUM - US STATE PLANE NAD83(1996)
ZONE - MAINE 2000 WEST ZONE
VERTICAL DATUM - NAVD 88
COMBINDED SCALE FACTOR - 0.9999750

NOTE:
BROOKFIELD WHITE PINE HYDRO, LLC
BAR MILLS HYDROELECTRIC PROJECT FERC NO. 2194

THE HIGHWAY EASEMENT ACQUISITIONS SHOWN ON THIS PLAN DO NOT INCLUDE ANY FLOWAGE RIGHTS THAT MAY BE ASSOCIATED WITH OR EMCUMBERED BY BROOKFIELD WHITE PINE HYDRO, LLC'S FERC LICENSE NO. 2194, BAR MILLS PROJECT.

SYMBOLS
- IP or IPF (IRON PIPE or PIN FOUND)
- ST. (SEPTIC TANK)
- (ROW MONUMENT)
- BM (TRAVERSE POINT)
- WELL
- GROUNDING UNIT LINE
- CONSTRUCTION LIMIT LINE
- PROPERTY LINE
- LIMITS OF "VARIOUS" RIGHT PORTION (L.O.W.P.)
- EXISTING RIGHT OF WAY
- NEW RIGHT OF WAY
- NEW ROW WITHIN EXIST. ROW
- CONTROL OF ACCESS
- WATER LINE
- GAS LINE
- ELECTRIC LINE
- TELEPHONE LINE
- SEWER LINE

ITEM	TECH	CHECKED
BASE MAP		
EXIST. R/W	G.L.L.	C.W.K.
PROP. LINES	G.L.L.	
AREAS	G.L.L.	R.M.C.

STATE OF MAINE
DEPARTMENT OF TRANSPORTATION
16 STATE HOUSE STATION - AUGUSTA, ME 04333-0016
HOLLIS/BUXTON
RIGHT OF WAY MAP

REVISIONS

NO.	DATE	DESCRIPTION	BY

PLAN FILED IN PLAN BOOK			PAGE	COUNTY RECORD		
NO.	GRANTOR	INSTRUMENT	DATE	BOOK	PAGE	
		COND.	11/3/14	16917	380	

DAVID BERNHARDT
COMMISSIONER
JOYCE NOEL TAYLOR
CHIEF ENGINEER
DATE

To the best of my knowledge and belief the Highway Right of Way lines depicted hereon are based upon a survey conforming to the Standards of Practice promulgated by the Maine Board of Licensure for Professional Land Surveyors 02-360 CMR, Chapter 90; Exceptions: (1) No separate survey report, (2) Monumentation only as shown on plan. See sheet X of this plan set for coordinates. (3) Other boundary lines, including lines between abutters are approximate and for general reference purposes only.

CADD FILE:
Y:\ PIN \ 19281 \ 00 \ ROW \ MSTA \ 004_RWPLAN4.DGN

STATE AID HIGHWAY NO. 2
ROUTE 4A / MAIN STREET
BUXTON YORK COUNTY
FEDERAL AID PROJECT NO. STP-1928(000)

SEPTEMBER 2014 | RIGHT-OF-WAY MAP | D.O.T. FILE NO. 16-500
SCALE 1" = 25' | SHEET 4 OF 4

SHEET NUMBER
148
OF 148

Filename: ...\00\ROW\MSTA\148_RWPLAN4.dgn Division: BRIDGE Username: dond.damren Date:11/19/2014