B. P. R. REG. NO.	STATE	PROJECT NUMBER	SHEET NO.	TOTAL SHEETS
1	MAINE	I295 3(60)	60	236

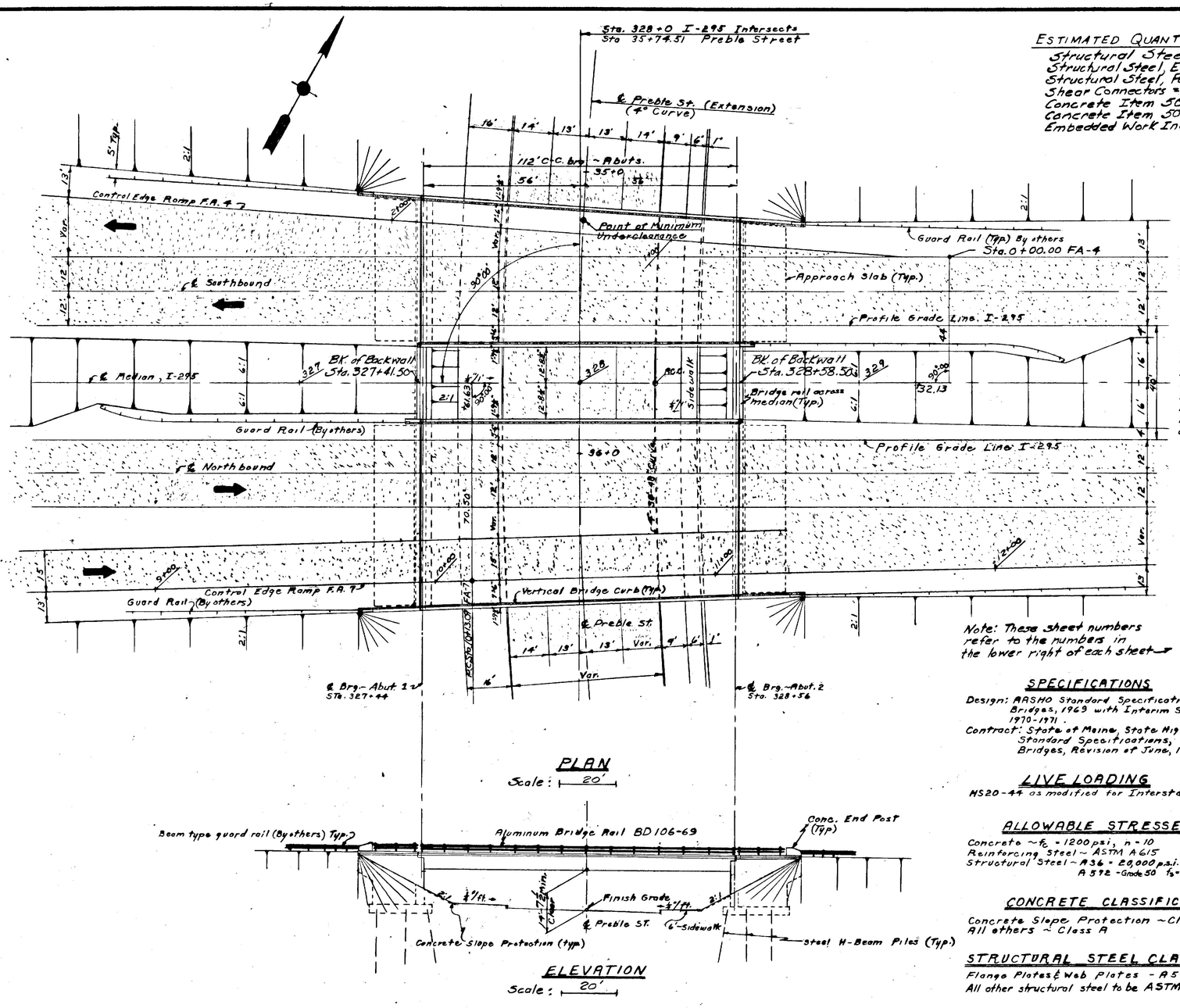

PLAN

Scale: 20'

ELEVATION

Scale: 20'

NOTE: This plan and elevation shows the completed bridge. This contract is a stage construction contract which calls for the construction of the bridge structures and part of the embankments. For details of work to be completed see the detailed plans.

ESTIMATED QUANTITIES FOR LUMP SUM ITEMS

Structural Steel, Fab. & Del. =	492,000	lbs.
Structural Steel, Erection =	492,000	lbs.
Structural Steel, Painting =	492,000	lbs.
Shear Connectors = 3276 Studs =	3200	lbs.
Concrete Item 502.2602	360	C.Y.
Concrete Item 502.3102	80	C.Y.
Embedded Work In Structures = 320' of 3" ϕ PVC plus fittings		

INDEX OF SHEETS

1 General Plan
2-3 Foundation Survey
4 Boring Details
5 Footing Plan
6 Part-Abut. No. 1 (N.B.)
7 Part-Abut. No. 1 (S.B.)
8 Part-Abut. No. 2 (N.B.)
9 Part-Abut No 2 (S.B.)
10 Architectural Treatment
11 Abut. Details & App. Slabs
12 Concrete Slope Protection
13 Structural Steel
14 Blocking Table
15 Armored Joint
16 Superstructure (N.B.)
17 Superstructure (S.B.)
18 Part-Superstructure Reinf.
19 Bridge Rail Layout
20 Reinforcing Steel Schedule
BD 101-70 37/236
BD 104-71 38/236
BD 101-70 39/236

Note: These sheet numbers refer to the numbers in the lower right of each sheet.

ESTIMATED BRIDGE QUANTITES

Item No.	Description	Unit	Quant.
304.10	Aggregate Subbase Course - Gravel	C.Y.	120
501.217	Steel H-beam Piles 89 lbs/Lf.	L.F.	13,100
50221	Structural Concrete, Abuts. & Retaining Walls	Cu.Yd.	920
502.2600	Struct. Conc., R'way & Sidewalk Slabs on Str. Br.	L.S.	1
502.3102	Structural Concrete, Approach Slabs	L.S.	1
503.12	Reinforcing Steel, Fab. & Delivered	Lb.	172,000
503.13	Reinforcing Steel, Placing	Lb.	172,000
504.7002	Structural Steel, Fab & Delivered	L.S.	1
504.7102	Structural Steel, Erection	L.S.	1
505.0800	Shear Connectors	L.S.	1
506.1802	Field Painting Structural Steel	L.S.	1
507.08	Bridge Railing	L.F.	578
* 508.10	Membrane Waterproofing	Sq.Yd.	1370
512.07	French Drains (Stones Only)	Cu. Yd.	48
513.09	Slope Protection - Portland Cement Conc.	Sq.Yd.	456
515.20	Protective Coating for Concrete Surfaces	Sq.Yd.	214
609.13	Vertical Bridge Curb-Type 1	L.F.	557
638.0102	Embedded Work in Structures	L.S.	1

* Item by others, not a part of this contract

SPECIFICATIONS

Design: AASHO Standard Specifications for Highway Bridges, 1969 with Interim Specifications 1970-1971.
Contract: State of Maine, State Highway Commission Standard Specifications, Highways & Bridges, Revision of June, 1968.

LIVE LOADING

HS20-44 as modified for Interstate.

ALLOWABLE STRESSES

Concrete ~ f_c = 1200 p.s.i., n = 10
Reinforcing Steel ~ ASTM A615 Grade 60 = 24,000 p.s.i.
Structural Steel ~ A36 = 20,000 p.s.i.
A 572 - Grade 50 f_s = 27,000 p.s.i.

CONCRETE CLASSIFICATION

Concrete Slope Protection ~ Class A
All others ~ Class A

STRUCTURAL STEEL CLASSIFICATION

Flange Plates & Web Plates - A 572 - Grade 50
All other structural steel to be ASTM A36 unless otherwise noted.

REINFORCING STEEL

A.S.T.M. A615 Grade 60.

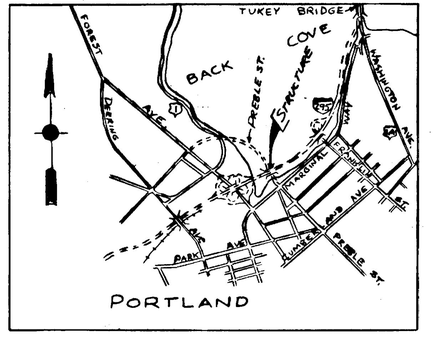

LOCATION MAP

0 .5 1 Miles

DESIGN –
TRACE –
CHECK –
BRIDGE NO.
SURVEY –
PLOT –

STATE HIGHWAY COMMISSION

INTERSTATE 295
OVER
PREBLE STREET
IN THE CITY OF
PORTLAND
CUMBERLAND COUNTY

GENERAL PLAN

SHEET 1 OF 20 AUGUSTA, MAINE April 1972

PORTLAND

B. P. R. REG. NO.	STATE	PROJECT NUMBER	SHEET NO.	TOTAL SHEETS
1	MAINE	I295 3(60)	72	236

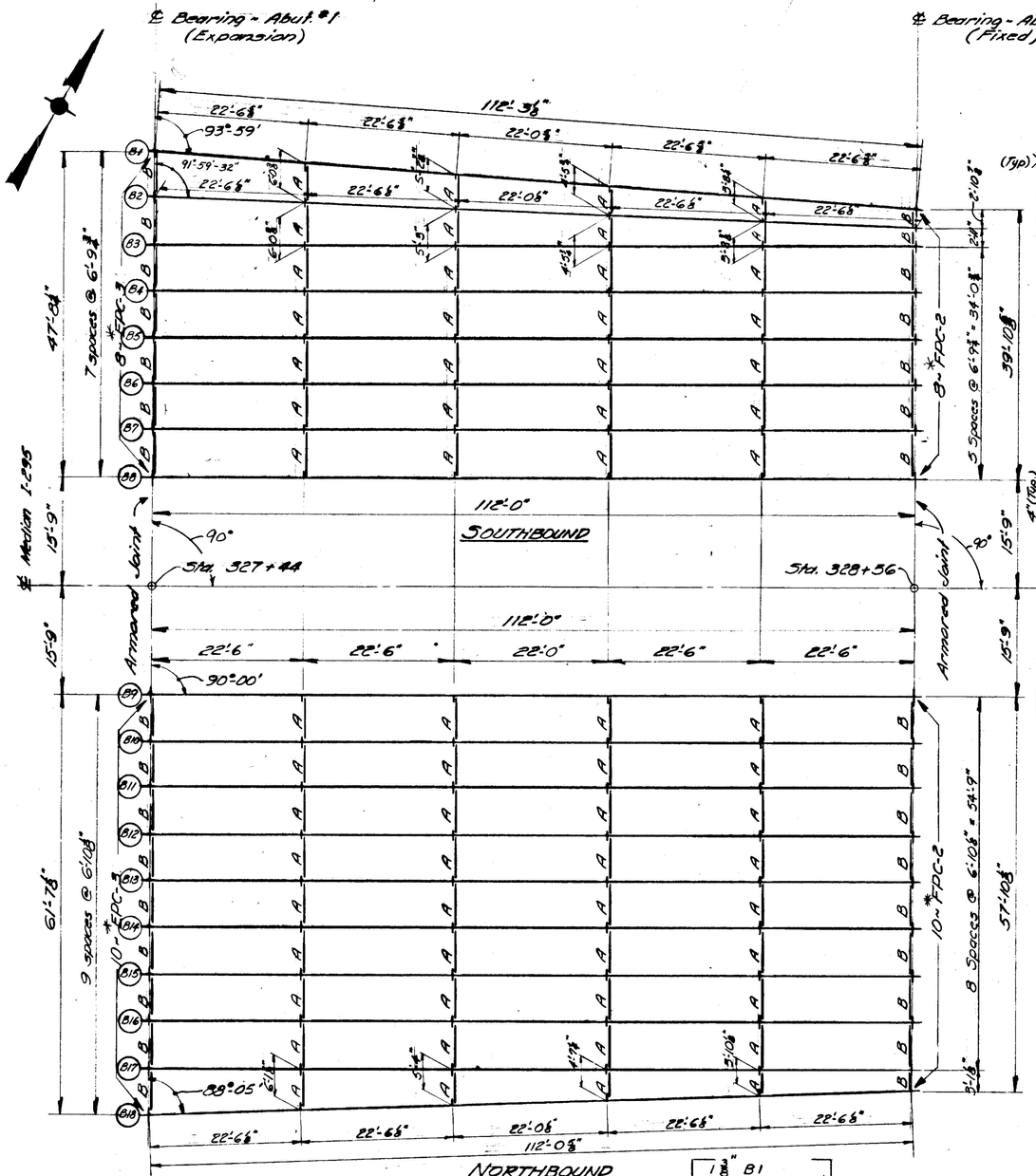

ERECTION DIAGRAM

All dimensions are horizontal

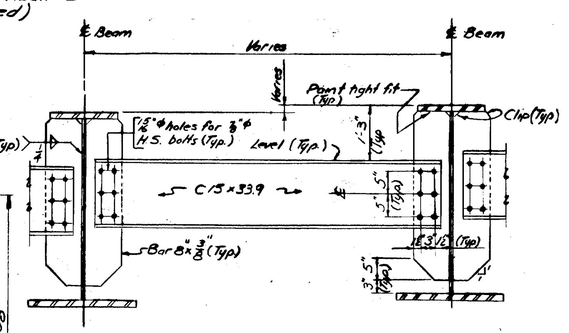

DIAPHRAGM A

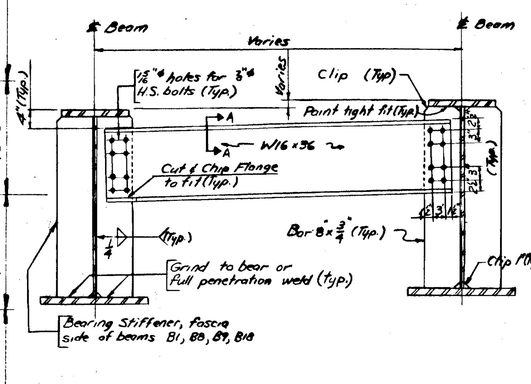

DIAPHRAGM B

* Note: Modify Bearing Assemblies at Beams B1, B8, B9, B10, B17, and B18 By increasing dimension C" ¾" more than shown on Standard Detail Sheet BD 101-70

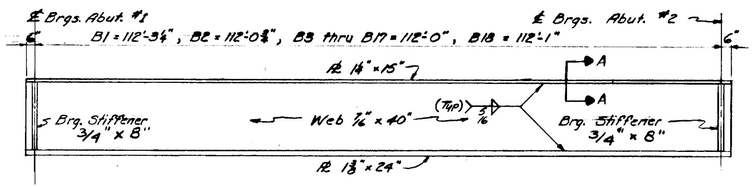

BEAM ELEVATION SCHEME A

(Flanges full width for their full length)

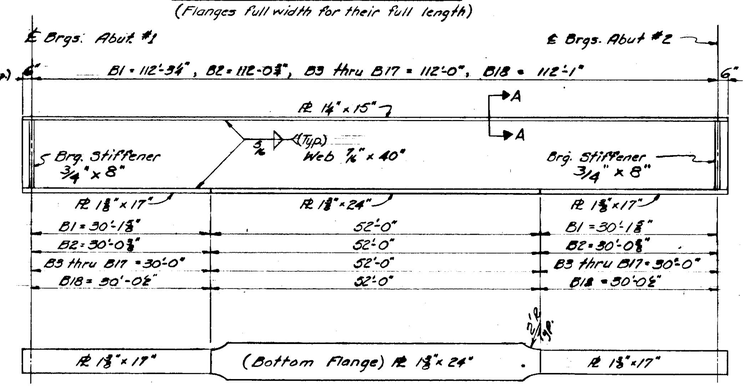

BEAM LAYOUT SCHEME B

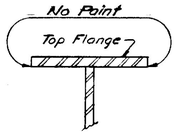

SECTION A-A

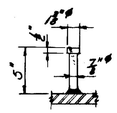

SHEAR CONNECTOR DETAIL

NOTE: Shear Connectors shall be granular or solid flux filled and automatically end welded to top flange in the shop or field.

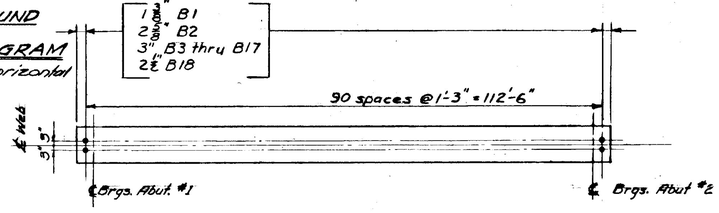

SHEAR CONNECTOR LAYOUT

Total Studs Required = 3276

STRUCTURAL STEEL NOTES

1. At the option of the contractor scheme A or scheme B may be selected. If scheme A is selected one shop butt weld splice will be permitted to fabricate the top and bottom flanges. Shop butt weld splices shall not be nearer than 10'-0" either side of the center line of the beam. Location and details of shop butt weld splices shall be shown on shop detail drawings for approval by the engineer.
2. A maximum of two(2) transverse shop butt weld splices will be permitted to fabricate any one web. Transverse web splices shall not be nearer than 1'-6" to a flange splice.
3. Bearing stiffeners shall be plumb after erection and dead loading of the structure. All diaphragm connection plates may be plumb or normal to the top flange at the option of the contractor.
4. Estimated wt. of Struct. Steel is based on scheme "B"

See Sheet No. 1 for Structural Stee Specifications

Project Designed By: RLL

DESIGN- DETAIL- CHECK- CMH

BRIDGE NO. SURVEY- PLOT-

STATE HIGHWAY COMMISSION

INTERSTATE 295 OVER PREBLE STREET IN THE CITY OF PORTLAND CUMBERLAND COUNTY

STRUCTURAL STEEL

SHEET 13 OF 20 AUGUSTA, MAINE April 1972

PORTLAND

B. P. R. REG. NO.	STATE	PROJECT NUMBER	SHEET NO.	TOTAL SHEETS
1	MAINE	I-295 3(66)	75	236

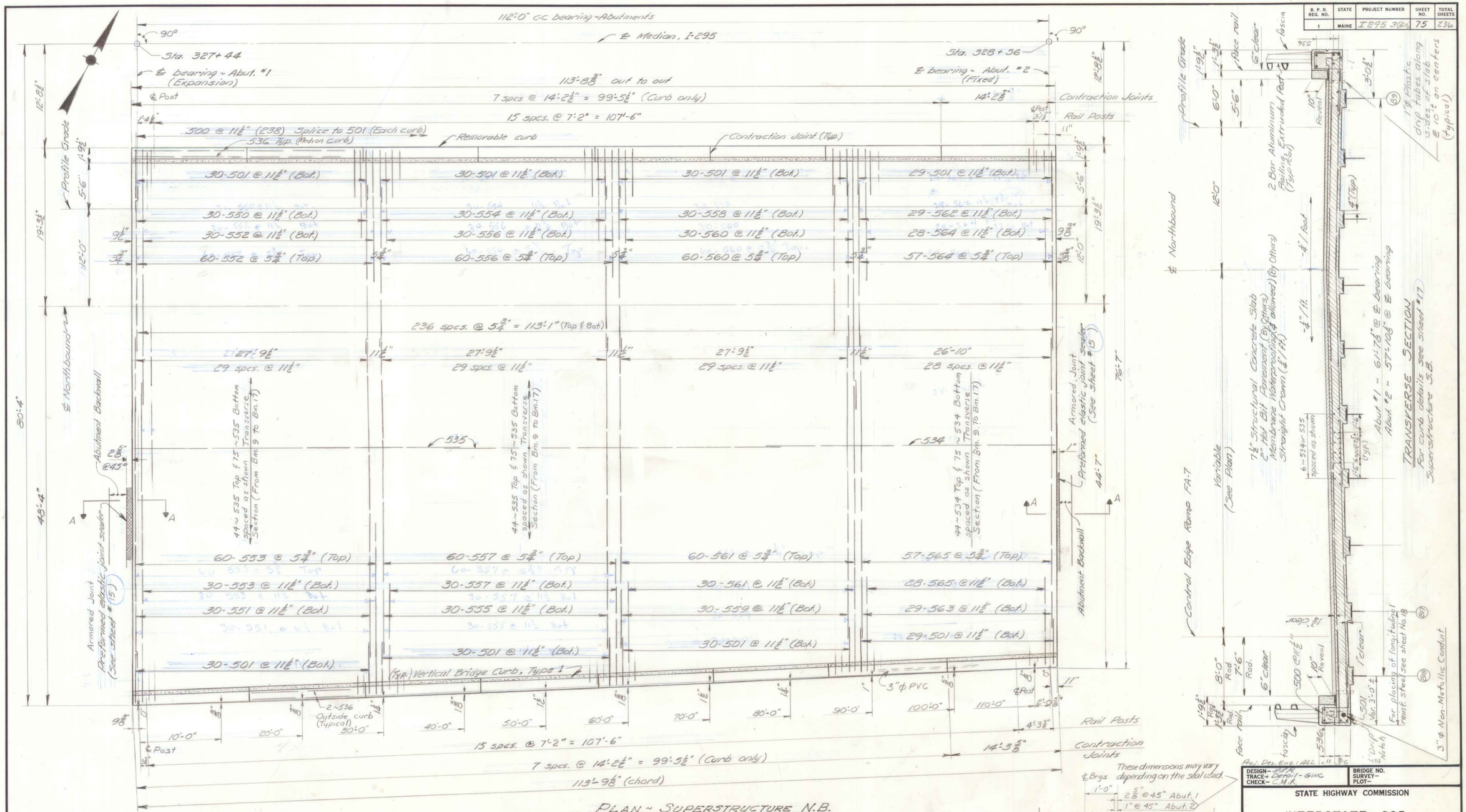

PLAN ~ SUPERSTRUCTURE N.B.

Bridge Rail not shown

Note:
The "steel spacers" in the anchorage assembly for the bridge rail shall be notched to fit around the reinforcing steel curb Stirrups (Typical Northbound & Southbound)

TRANSVERSE SECTION

For curb details see sheet #17

Superstructure S.B.

Appl. Des. Eng. ALL

DESIGN- STATE
TRACE- Detail - G.W.C.
CHECK- C.M.K.

BRIDGE NO.
SURVEY-
PLOT-

STATE HIGHWAY COMMISSION

INTERSTATE 295
OVER
PREBLE STREET
IN THE CITY OF
PORTLAND
CUMBERLAND COUNTY

SUPERSTRUCTURE N.B.

SHEET 16 OF 20 AUGUSTA, MAINE April 1972

PORTLAND

B. P. R. REG. NO.	STATE	PROJECT NUMBER	SHEET NO.	TOTAL SHEETS
1	MAINE	I 295 3(60)	76	236

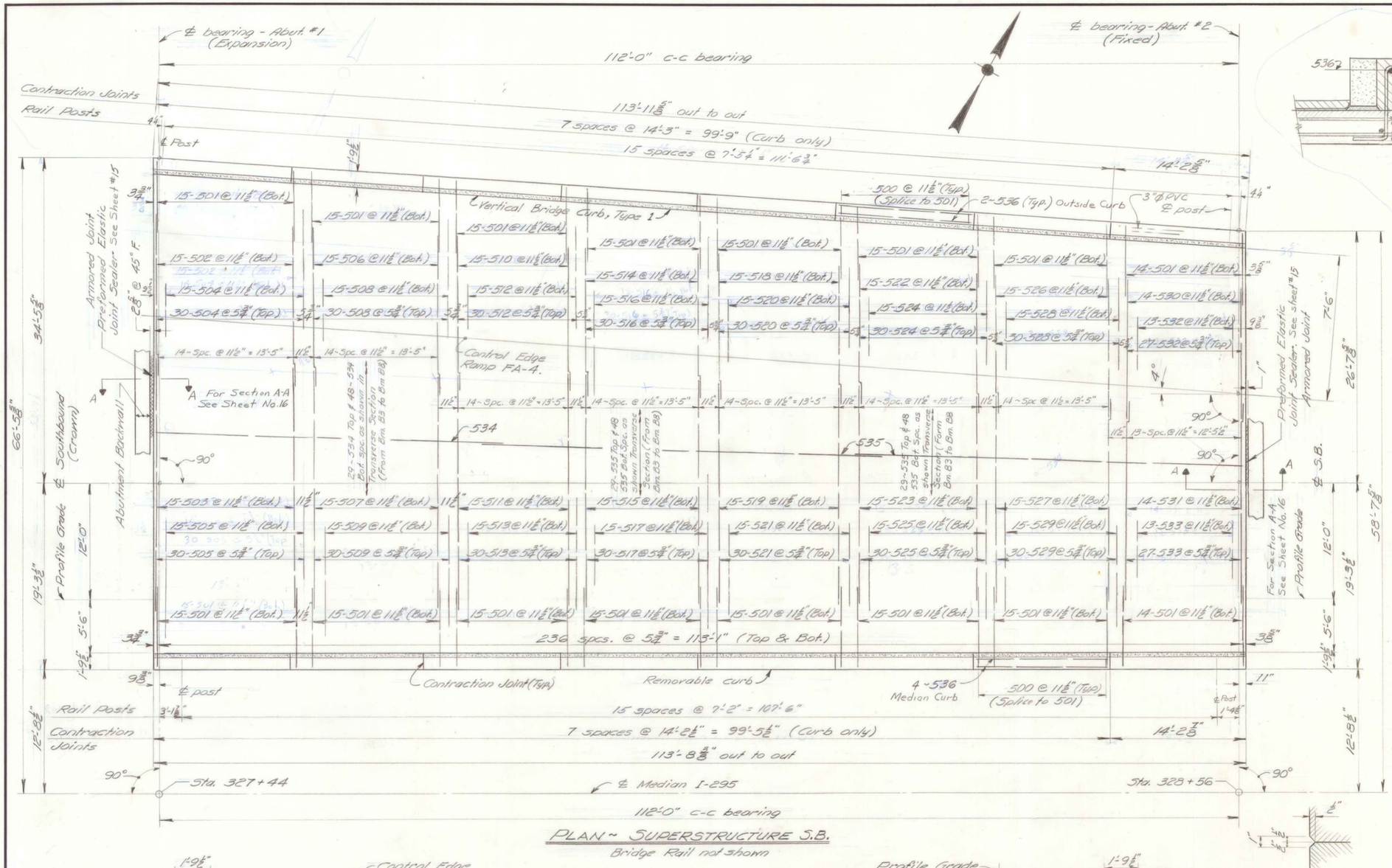

PLAN ~ SUPERSTRUCTURE S.B.

Bridge Rail not shown

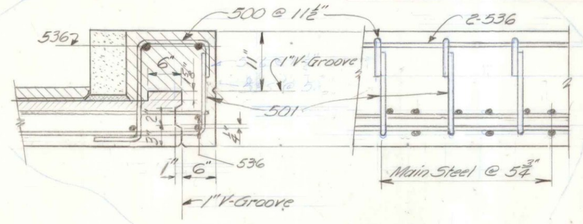

DETAIL "A"

Removable Curb

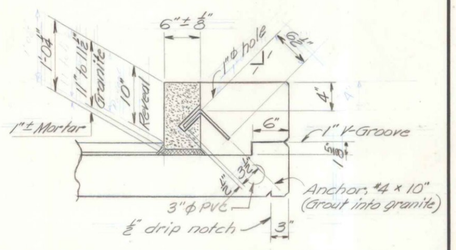

VERTICAL BRIDGE CURB - TYPE 1

Note: See sheet #11 for circular curb

GENERAL SUPERSTRUCTURE NOTES

1. At all contraction joints in concrete curbs break the bond between concrete surfaces by a method to be approved by the Engineer
2. Form 1" V groove on the outside face of curb at each vertical joint
3. Provide joints in Vertical Bridge Curb, type 1 at curb contraction joints.
4. Apply Protective Coating for Concrete Surfaces to top of curbs; completely coat Fascia and concrete End Posts.
5. All exposed edges of concrete to be chamfered 1/2".
6. All reinforcing steel to have 2" clear cover unless otherwise noted.
7. All reinforcing steel shall have a minimum splice of 36 bar diameters.
8. Place one (1) inch Dia. Plastic tube drains at 10 foot ± intervals along the low sides of the superstructure and described in Subsection 502.17 of the Standard Specifications.
9. For Section A-A see sheet #16
10. Mortar for bedding and for joints in the granite curb shall contain an approved non-shrink additive.
11. See I295 over Forest Ave. plans for 3"ϕ PVC and Fittings Details

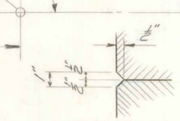

1" V-GROOVE

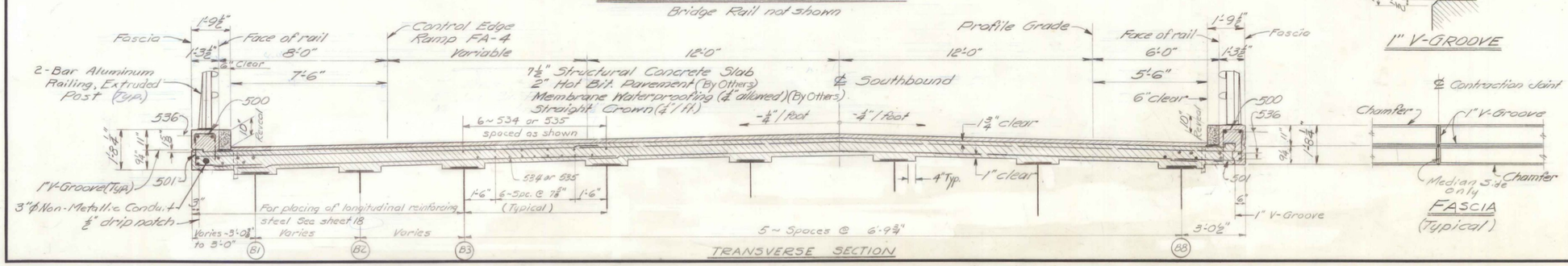

FASCIA (Typical)

TRANSVERSE SECTION

Proj. Des. Eng.: ALL

DESIGN- J.R.R.
TRACE- Detail- GWC
CHECK- C.M.R.

BRIDGE NO.
SURVEY-
PLOT-

STATE HIGHWAY COMMISSION

INTERSTATE 295
OVER
PREBLE STREET
IN THE CITY OF
PORTLAND
CUMBERLAND COUNTY
SUPERSTRUCTURE S.B.

SHEET 17 OF 20 AUGUSTA, MAINE April 1972

PORTLAND

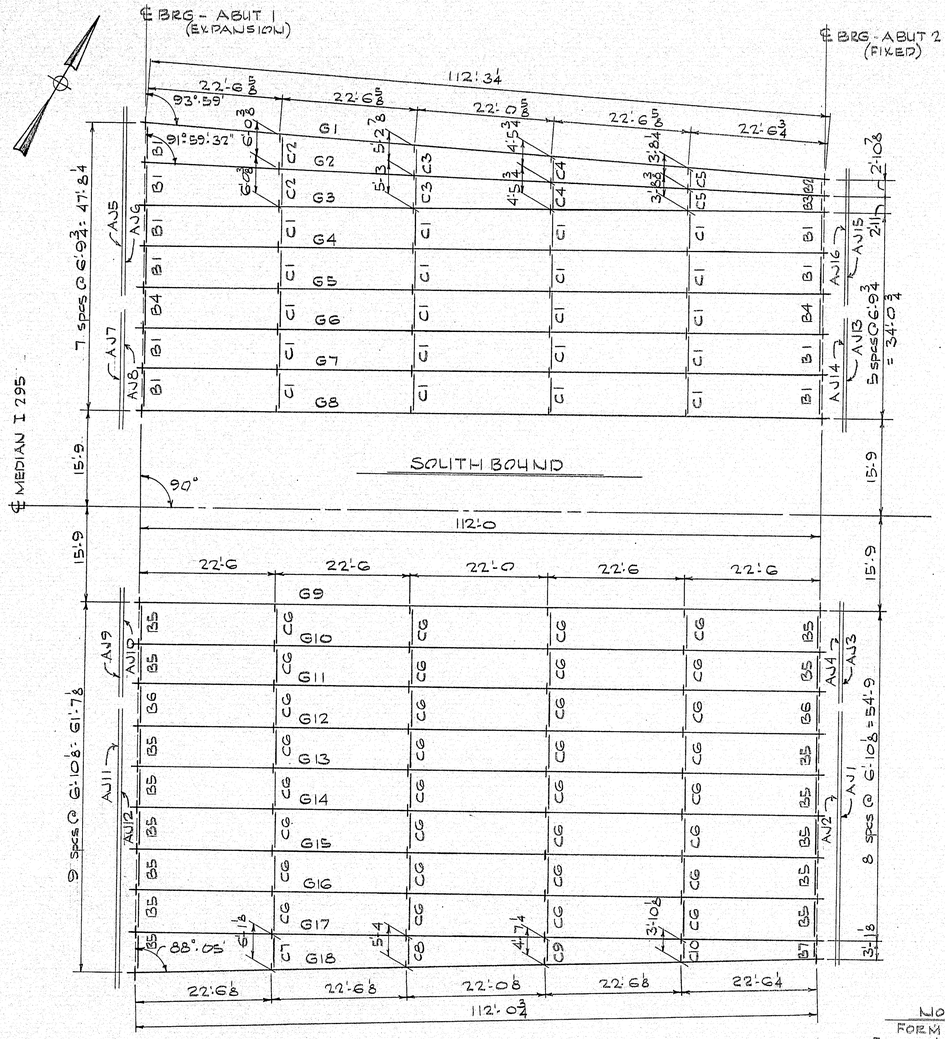

ALL DIMENSIONS ARE HORIZONTAL

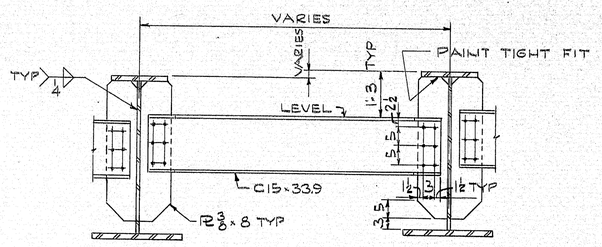

DIAPHRAGM A

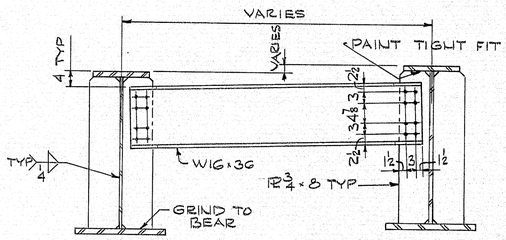

DIAPHRAGM B

NOTE:
FORM BRACKET HOLES ARE TO BE PLUGGED WITH ⅛ DIA ¼ × ⅛ CARRIAGE BOLTS, HEADS TO BE ON OUTSIDE. HOLES TO BE COMPLETELY COVERED. TACK WELD NUTS TO GIRDER WEB.

APPROVED AS NOTED: 8-7-72

ITEM NO: 504.7002
PROJ. NO: I 295 3(60)

FRAMING PLAN

PRINT DIST.		
2p	7-26-72	FA
1SEPIA	8-29-72	BREWER
8p	8-29-72	STATE
2p	10-12-72	Cust

Bancroft & Martin Inc.
South Portland, Maine 04106

JOB: I 295 OVER PREBLE STREET PORTLAND MAINE

CUSTOMER: BLUE ROCK INDUSTRIES

DESIGNER: MSHC BRIDGE DIV

REV.		
CHECKED		RGM
DRAWN	7-12-72	DWL

ORDER NO.	JOB NO.	DRAWING NO.
	872-227	E1

140-40

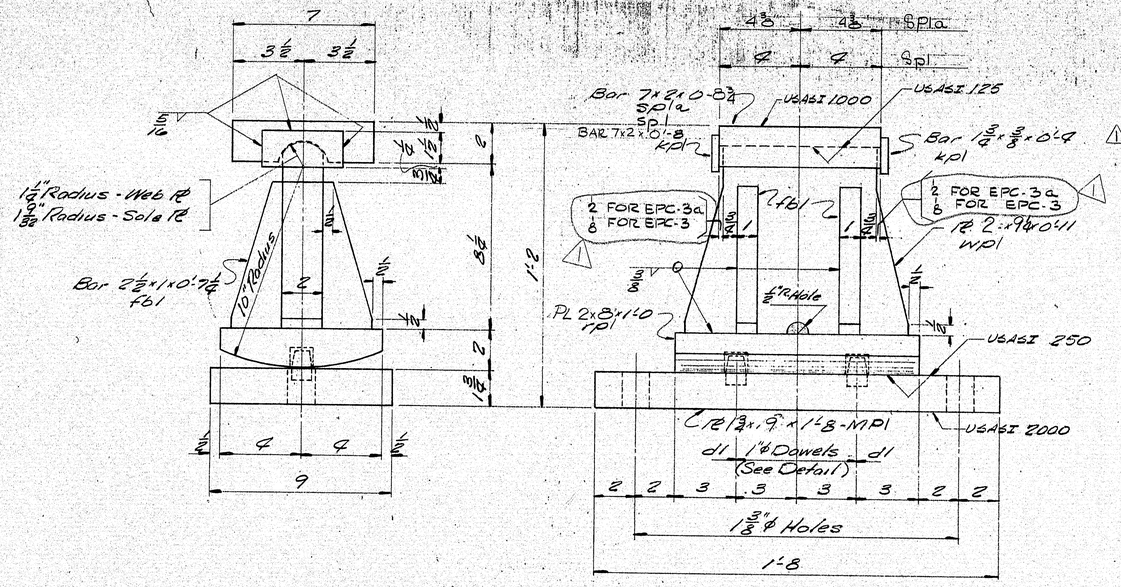

EPC - 3a @ G1, 8, 9, 10, 17, 18 - 6 REQ'D
EPC - 3 @ G2 THRU 7, 11 THRU 16 - 12 REQ'D

EXPANSION PEDESTAL

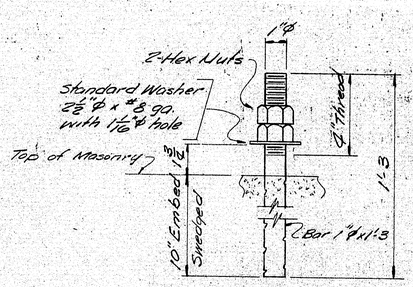

ANCHOR BOLT AB1

36 REQ'D.

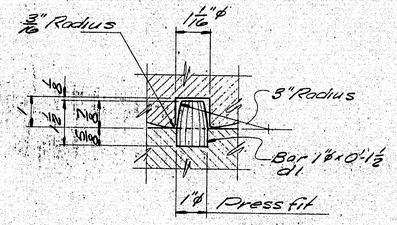

DOWEL DETAIL

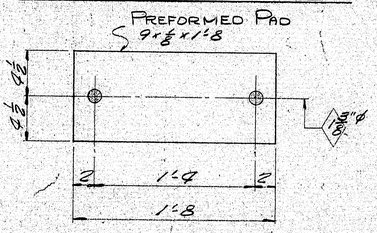

PREFORMED PAD

FP1 - 18 REQ'D.

PAINT NOTE:

No paint on top of sole plates "sp" and 1" down from top on sides, coat with boiled linseed oil.
No paint on surface with USASI 125 finish, coat with mixture of white lead and tallow.
No paint on Anchor Bolts - Oil thds.
Masonry PL's & bearing surfaces of expansion bearing rockers shall receive 2 coats of shop paint.

SHIP	BILL OF MATERIAL JOB NO. 872-227 DWG. NO. 51-1							
MARK	NO.	MARK	SHAPE	LENGTH		WT.	REMARKS	ITEM NO.
EPC-3a	6		EXPANSION PEDESTAL ASS'Y					
EPC-3	12		EXPANSION PEDESTAL ASS'Y.					
MP1	18		PL 1¾×9	1	8			27
	18	rpl	PL 2×8	1	0			28
	18	wpl	PL 2×9¼	0	11			29
SP1	12		Bar 7×2	0	8			31
	72	fbl	Bar 2½×1	0	7¼			30
	36	dl	Bar 1"φ	0	1½			40
	36	kp	Bar 1¾×⅜	0	4			32
AB1	36		Bar 1"φ	1	3		Swedged	37
	72	shop	1" Hex. Nut					38
Field	36		1" washer				Std. washer - 2½" O.D. × #8 ga. with 1 1/16"φ hole.	39
FP1	18		Pad 9×⅛	1	8		PREFORMED PAD REQ. NO. 3324	
SP1a	6		BAR 7×2	0	8¾			31

APPR. JULY 27, 1972
ITEM: 504.7002
PROJECT NO: I-295-3(60)
Sole plates "sp" to be field welded to stringers.

Bearing material to be ASTM A36, Anchor bolts to be A36.
WELD: ELECTRODE E70S-1B - SEE WELDING PROCEDURES
SHOP CONNECTIONS: Welded
FIELD CONNECTIONS: BOLTED
HOLES: As noted
PAINT: Red lead per Maine S.H.C. spec., and as noted.

Cust	10-12-72	2p
SHOP	8-7-72	4p
STATE	8-7-72	6p
STATE	8-1-72	8p
SHOP	8-1-72	4p
F.A.	7-14-72	2p
CH'K	7-11-72	DWL
DRAWN	7-5-72	T.J.P.
REVISION	8-4-72	DWL
REVISION		
REVISION		

BEARING PEDESTAL DETAIL

Bancroft & Martin Inc.
South Portland 7, Maine

I-295 OVERT PREBLE STREET
PORTLAND, MAINE

CUSTOMER BLUE ROCK INDUSTRIES
DESIGNER M.S.H.C. BRIDGE DIV.

JOB NO. 872-227 DWG. NO. 51-1

140-41 Pc Mk. Rev

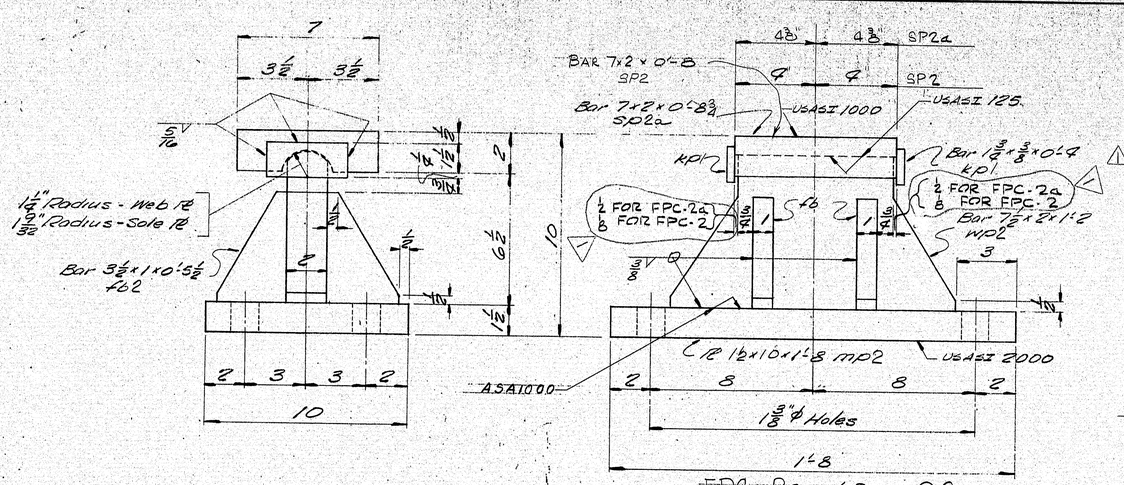

FPC-2a 6 REQ'D @ G1, 8, 9, 10, 17 & 18

FPC-2 12 REQ'D @ G2 THRU 7, 11 THRU 16

FIXED PEDESTAL . FPC-2

Rec'd

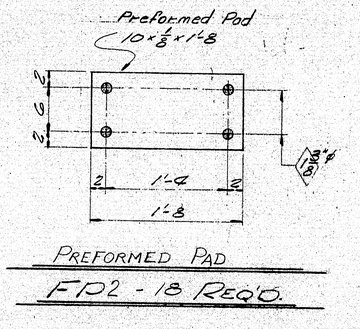

PREFORMED PAD

FP2 - 18 REQ'D.

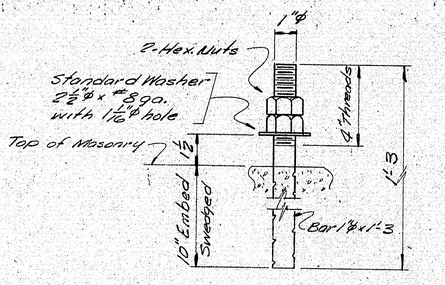

ANCHOR BOLT AB1

72 REQ'D.

SHIP MARK	NO.	MARK	SHAPE	LENGTH	WT.	REMARKS	ITEM NO.
FPC-2a	6		FIXED PEDESTAL ASS'Y				
FPC2	12		FIXED PEDESTAL ASS'Y.				
	18	mp2	℄ 12 x 10	1 8			33
	18	wp2	Bar 7½ x 2	1 2			34
SP2	12		Bar 7 x 2	0 8			36
	36	kpl	Bar 1⅜ x ⅜	0 4			32
	72	fb2	Bar 3½ x 1	0 5½			35
AB1	72		Bar 1" ϕ	1 3		Swedged	37
	144	shop	1" Hex. Nut				38
field	72		1" washer			Std. washer 2½" O.D. x #8ga. with 1 5/16" ϕ hole.	39
FP2	18		10 x ⅛	1 8		Preformed Pad Req. # 3324	
SP2a	6		BAR 7 x 2	0 8¾			

APPR. 7-27-72
ITEM 508.7002
PROJECT NO. F-295-3(60)

Sole plates "SP" to be field welded to stringers.

Bearing material to be ASTM A36, Anchor bolts to be A36.
WELDING ELECTRODES: E70S-1B SEE WELDING PROCEDURE
SHOP CONNECTIONS: Welded
FIELD CONNECTIONS: BOLTED
HOLES: As noted
PAINT: RED LEAD AS PER MAINE spec., and as noted.

PAINT NOTE:

No paint on top of sole plates "SP" and 1" down from top on sides, coat with boiled linseed oil.
No paint on surface with USASI 125 finish, coat with mixture of white lead and tallow.
No paint on Anchor bolts - Oil thas.

Cust	10-12-72	2P
SHOP	8-7-72	4P
STATE	8-7-72	6P
STATE	8-1-72	8P
SHOP	8-1-72	4P
FA	7-14-72	2P
CK'D	7-11-72	DWL

DRAWN	7-5-72	TJP
⚠ REVISION	8-4-72	DWL
REVISION		
REVISION		

BEARING PEDESTAL DETAIL

Bancroft & Martin Inc.
South Portland 7, Maine

JJ-295 OVER PREBLE STREET
PORTLAND, MAINE

CUSTOMER BLUE ROCK INDUSTRIES
DESIGNER MS.H.C. BRIDGE DIV.

JOB NO. 372-227 DWG. NO. J1-2

140-42 Pc Mk. Rev.

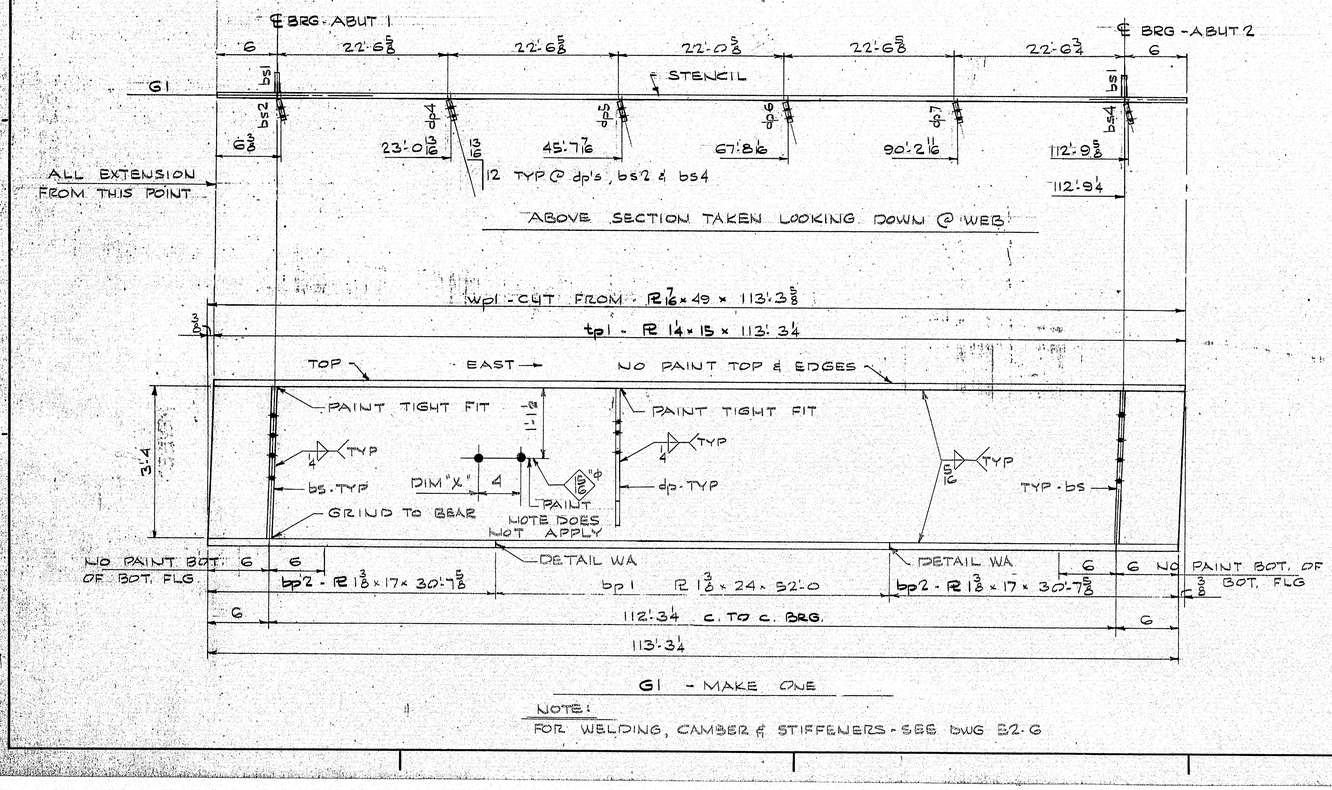

SHIP MARK	NO.	MARK	SHAPE	LENGTH		WT.	ITEM NO.		REMARKS
G1	1		GIRDER	113	3⅝	—			
			CUT FROM						
	1	wp1	PL ⅞ x 49	113	3⅝		1		
	1	tp1	PL 1¼ x 15	113	3¼		3		
	1	bp1	PL ⅜ x 24	52	0		7		
	2	bp2	PL ⅜ x 17	30	7⅝		5		
	2	bs1	PL ¾ x 8	3	4		9		
	1	bs2	do	3	4		9		
	1	bs4	do	3	4		9		A36
	1	dp4	PL ⅜ x 8	3	1		8		
	1	dp5	do	3	1		8		
	1	dp6	do	3	1		8		
	1	dp7	do	3	1		8		
			ITEM NO: 30	4.7	002				HOLES ARE FOR HIGH TENSILE BOLTS They are to be free from burrs and shall not be painted on any surface within 3" of such open holes.
			PROJ. NO: I 295 3 (60)						

DIM "X"
2'-3
6'-4
10'-6
14'-7
18'-9
22'-10⅞
27'-4
31'-10
36'-5
40'-11
45'-5½
49'-10
54'-3
58'-8
63'-1
67'-6⅝
72'-0
76'-6
81'-0
85'-6
90'-0⅜
94'-2
98'-4
102'-6"
106'-8
110'-9

STEEL: ASTM. A572 GR 50 & A36. AS NOTED
WELDING ELECTRODE F72-EM 12K, E7018, E7028 SEE WELDING PROCEDURES
SHOP CONN: WELDED
FIELD CONN: BOLTED
HOLES: 15/16"ϕ
PAINT: RED LEAD PER MAINE SPECS & AS NOTED
SPECIAL CLEANING: BLAST CLEAN
APPROVED: AS NOTED: 8-7-72

GIRDER G1 S.B.

PRINT DIST.		
2p	7-26-72	FA
1 Sepia	8-24-72	Brewer
8p	8-29-72	State
2 lp	10-12-72	Cust

Bancroft & Martin Inc.
South Portland, Maine 04106

JOB: I 295 OVER PREBLE STREET PORTLAND MAINE

CUSTOMER: BLUE ROCK INDUSTRIES

DESIGNER: M.S.H.C. BRIDGE DIV.

REV.		
CHECKED		RGM
DRAWN	7-13-72	DWL

ORDER NO.	JOB NO.	DRAWING NO.
	B72.227	S2-1

140-43

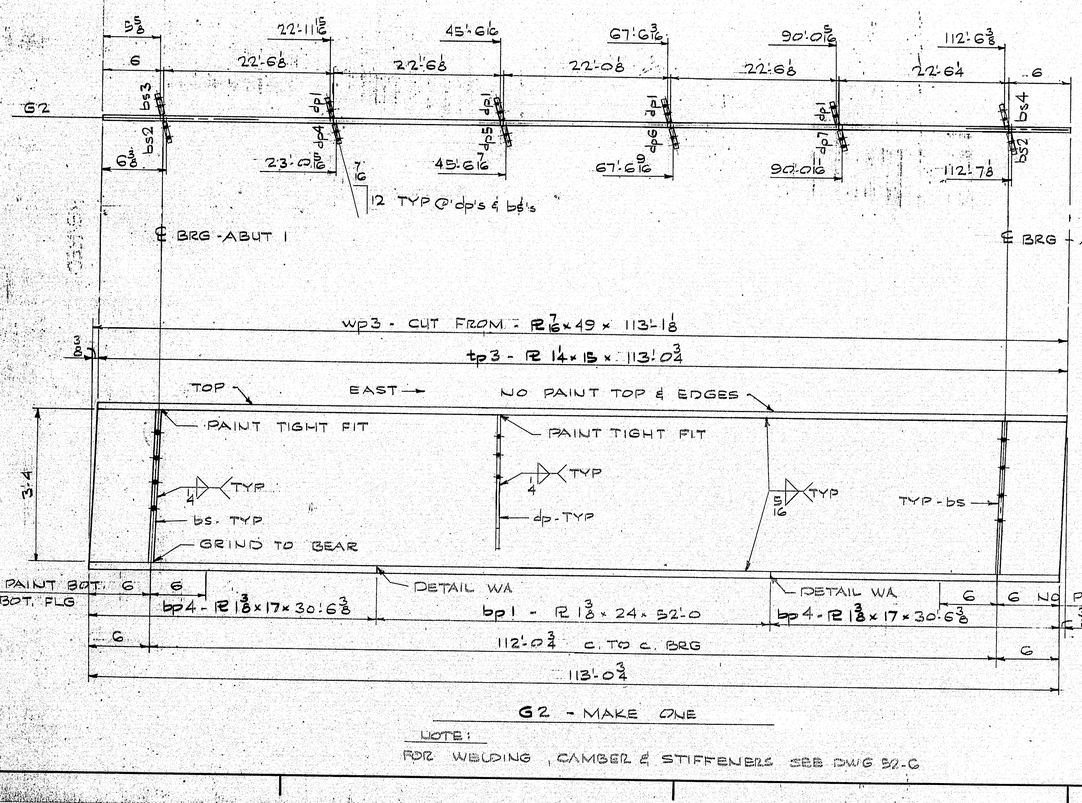

G2 - MAKE ONE

NOTE:
FOR WELDING, CAMBER & STIFFENERS SEE DWG 52-C

SHIP	BILL OF MATERIAL					JOB NO. B72-227	DWG. NO. 52-2	
MARK	NO.	MARK	SHAPE	LENGTH		WT.	ITEM NO.	REMARKS
G2	1		GIRDER	113	1⅛	—		
			CUT FROM					
	1	wp3	PL ⅞ x 49	113	1⅛		2	
	1	tp3	PL 1¼ x 15	113	0¾		4	
	1	bp1	PL 1⅜ x 24	52	0		7	
	2	bp4	PL 1⅜ x 17	30	6⅜		6	
	2	bs2	PL ¾ x 8	3	4		9	
	1	bs3	do	3	4		9	
	1	bs4	do	3	4		9	A36
	4	dp1	PL ⅜ x 8	3	1		8	
	1	dp4	do	3	1		8	
	1	dp5	do	3	1		8	
	1	dp6	do	3	1		8	
	1	dp7	do	3	1		8	

ITEM NO: 50 4.7002
PROJ. NO: I 295 3(60)

HOLES ARE FOR HIGH TENSILE BOLTS They are to be free from burrs and shall not be painted on any surface within 5" of such open holes.

STEEL: ASTM. A572 GR 50 & A36 AS NOTED
WELDING ELECTRODE F72-EM 12K, E7018, E7028 SEE WELDING PROCEDURES
SHOP CONN: WELDED
FIELD CONN: BOLTED
HOLES: 15/16 ø
PAINT: RED LEAD PER MAINE SPECS & AS NOTED
SPECIAL CLEANING: BLAST CLEAN
APPROVED: AS NOTED: 8-7-72

GIRDER 2 - SOUTHBOUND

PRINT DIST.		
2p	7-26-72	FA
15 sepia	8-29-72	Brewer
8 p	8-29-72	State
2 p	10-12-72	Cust
REV.		
CHECKED		
DRAWN	7-13-72	DWL

Bancroft & Martin Inc
South Portland, Maine 04106

JOB: I 295 OVER PREBLE STREET PORTLAND MAINE

CUSTOMER: BLUE ROCK INDUSTRIES
DESIGNER: M.S.H.C. BRIDGE DIV.

ORDER NO.	JOB NO.	DRAWING NO.
	B72.227	52-2

140-44

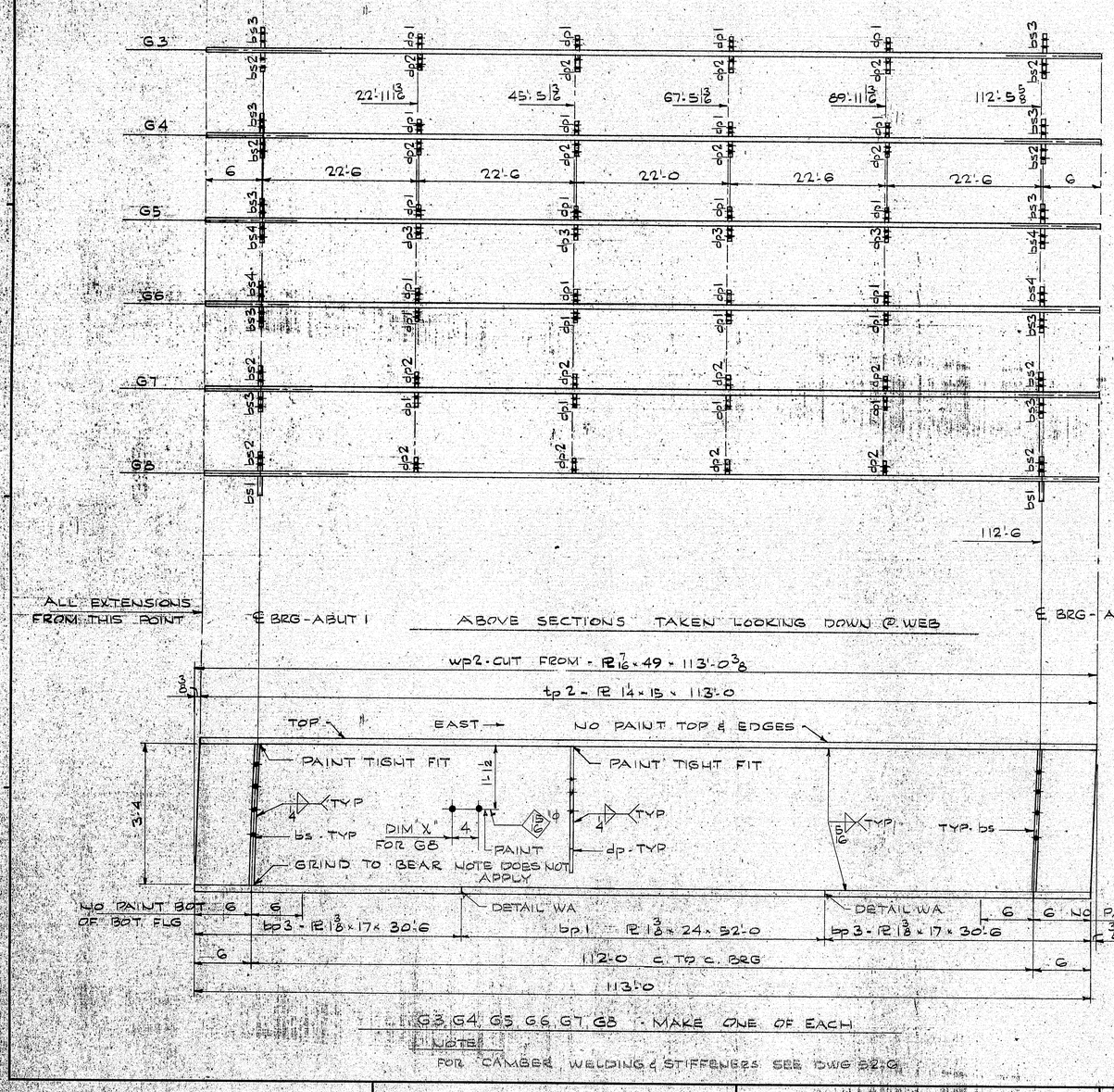

G8 ONLY
DIM "X"
2'-3
6'-4
10'-5
14'-7
18'-8
22'-10
27'-4
31'-10
36'-4
40'-10
45'-4
49'-8
54'-1
58'-6
62'-11
67'-4
71'-10
76'-4
80'-10
85'-4
89'-10
93'-11
98'-1 1/2
102'-34
106'-5
110'-5

SHIP — **BILL OF MATERIAL** — JOB NO. 372.227 — DWG. NO. 52.3

MARK	NO.	MARK	SHAPE	LENGTH	WT.	ITEM NO.	REMARKS
G3	1		GIRDER	113 0 3/8	—		
G4	1		do	113 0 3/8	—		
G5	1		do	113 0 3/8	—		
G6	1		do	113 0 3/8	—		
G7	1		do	113 0 3/8	—		
G8	1		do	113 0 3/8	—		
			CUT FROM				
	6	wp2	PL 7/16 x 49	113 0 3/8		2	
	6	tp2	PL 1/4 x 15	113 0		4	
	6	bp1	PL 1 3/8 x 24	52 0		7	
	12	bp3	PL 3/8 x 17	30 6		6	
	2	bs1	PL 3/4 x 8	3 4		9	
	8	bs2	do	3 4		—	Y A36
	10	bs3	do	3 4		—	
	4	bs4	do	3 4		9	
	24	dp1	PL 3/8 x 8	3 1		8	
	16	dp2	do	3 1		8	
	4	dp3	do	3 1		8	

ITEM NO: 504.7002
PROJ. NO: I 295 3(60)

HOLES ARE FOR HIGH TENSILE BOLTS They are to be free from burrs and shall not be painted on any surface within 5" of such oval holes.

STEEL: ASTM A572 GR 50 & A36 AS NOTED
WELDING ELECTRODE F72-EM 12K, E7018, E7028 SEE WELDING PROCEDURES
SHOP CONN: WELDED
FIELD CONN: BOLTED
HOLES: 13/16" ϕ
PAINT: RED LEAD PER MAINE SPECS & AS NOTED
SPECIAL CLEANING: BLAST CLEAN
APPROVED: AS NOTED: 8-7-72

GIRDERS G3 THRU G8 S.B

PRINT DIST.		
2p	7-26-72	FA
1Sepia	8-29-72	Brewery
8p	8-29-72	Std.
2p	10-12-72	Cust.

Bancroft & Martin, Inc.
South Portland, Maine 04106

JOB: I 295 OVER PREBLE STREET PORTLAND MAINE

CUSTOMER: BLUE ROCK INDUSTRIES
DESIGNER: M.S.H.C. BRIDGE DIV.

REV.		
CHECKED		RGM
DRAWN	7-13-72	DWL

ORDER NO.	JOB NO.	DRAWING NO.
	B72.227	52.3

140-45

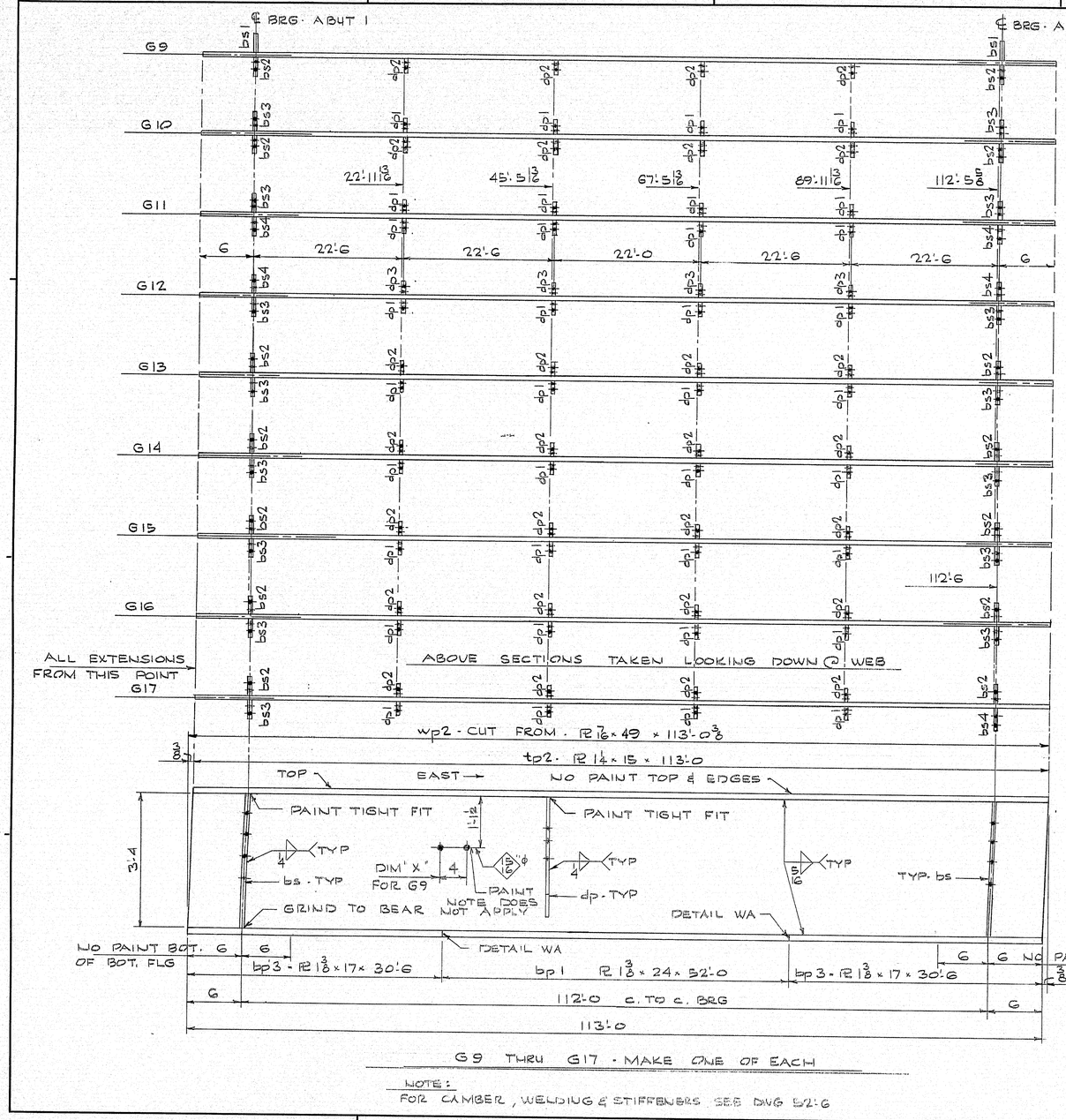

G9 - MAKE ONE OF EACH

NOTE:
FOR CAMBER, WELDING & STIFFENERS SEE DWG 52-6

G9 ONLY DIM "X"
2'-3
6'-4
10'-5
14'-7
18'-8
22'-10
27'-4
31'-10
36'-4
40'-10
45'-4
49'-8
54'-1
58'-6
62'-11
67'-4
71'-10
76'-4
80'-10
85'-4
89'-10
93'-11
98'-1
102'-3
106'-5
110'-5

SHIP | **BILL OF MATERIAL** | JOB NO. B72-227 | DWG. NO. 52-4

MARK	NO.	MARK	SHAPE	LENGTH	WT.	ITEM NO.	REMARKS
G9	1		GIRDER	113 0 3/8	—		
G10	1		do	113 0 3/8	—		
G11	1		do	113 0 3/8	—		
G12	1		do	113 0 3/8	—		
G13	1		do	113 0 3/8	—		
G14	1		do	113 0 3/8	—		
G15	1		do	113 0 3/8	—		
G16	1		do	113 0 3/8	—		
G17	1		do	113 0 3/8	—		
			CUT FROM				
	9	wp2	PL 7/16 x 49	113 0 3/8		2	
	9	tp2	PL 1/4 x 15	113 0		4	
	9	bp1	PL 1 3/8 x 24	52 0		7	
	18	bp3	PL 1 3/8 x 17	30 6		6	
	2	bs1	PL 3/4 x 8	3 4		9	
	14	bs2	do	3 4		1	A36
	15	bs3	do	3 4		1	
	5	bs4	PL 3/4 x 8	3 4		9	
	36	dp1	PL 3/8 x 8	3 1		8	
	28	dp2	do	3 1		8	
	4	dp3	do	3 1		8	

HOLES ARE FOR HIGH TENSILE BOLTS They are to be free from burrs and shall not be painted on any surface within 5" of such open holes.

ITEM NO: 504.7002
PROJ. NO: I 295 3 (60)

STEEL: ASTM. A572 GR 50 & A36 AS NOTED
WELDING ELECTRODE F72-EM 12K, E7018, E7028 SEE WELDING PROCEDURES
SHOP CONN: WELDED
FIELD CONN: BOLTED
HOLES: 15/16" ϕ
PAINT: RED LEAD PER MAINE SPECS & AS NOTED
SPECIAL CLEANING: BLAST CLEAN
APPROVED: AS NOTED: 8-7-72

N.B. GIRDERS G9 THRU G17

PRINT DIST.		
2p	7-26-72	FA
Sepia	8-29-72	Brewer
8p	8-29-72	State
2p	10-18-72	Cost

REV.		
CHECKED		RGM
DRAWN	7-13-72	DWL

Bancroft & Martin Inc.
South Portland, Maine 04106

JOB: I 295 OVER PREBLE STREET PORTLAND MAINE

CUSTOMER: BLUE ROCK INDUSTRIES

DESIGNER: M.S.H.C. BRIDGE DIV.

ORDER NO.	JOB NO.	DRAWING NO.
	B72.227	52-4

140-46

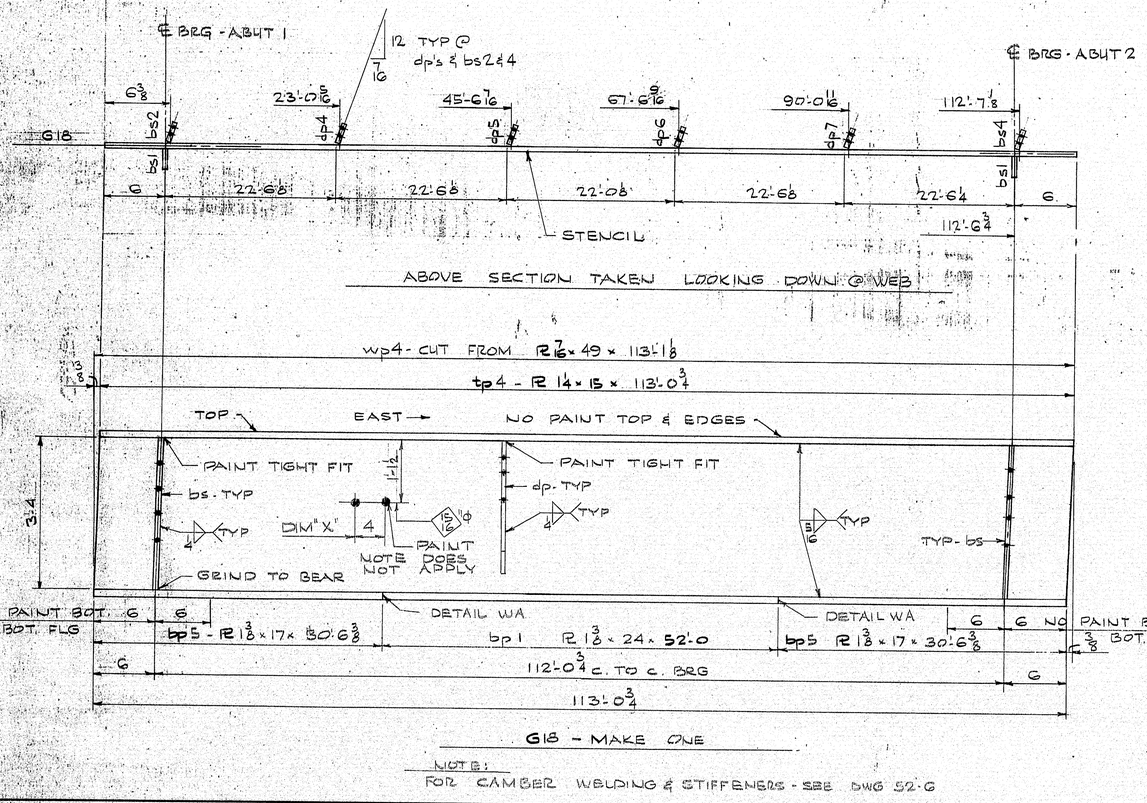

NOTE:
FOR CAMBER WELDING & STIFFENERS - SEE DWG 52-G

DIM "X"
2'-3
6'-4
10'-5
14'-7
18'-8
22'-10 3/8
27'-4
31'-10
36'-4
40'-10
45'-4 1/2
49'-8
54'-1
58'-6
62'-11
67'-4 5/8
71'-10
76'-4
80'-10
85'-4
89'-10 3/4
94'-1
98'-3
102'-5
106'-7
110'-6

SHIP MARK | **BILL OF MATERIAL** | JOB NO. B72-227 | DWG. NO. 52-5

MARK	NO.	MARK	SHAPE	LENGTH	WT.	ITEM NO.	REMARKS
G18	1		GIRDER	113 0 3/4	—		
			CUT FROM				
	1	wp4	PL 7/16 x 49	113 1 1/8		2	
	1	tp4	PL 14 x 15/16	113 0 3/4		4	
	1	bp1	PL 1 3/8 x 24	52 0		7	
	2	bp5	PL 1 3/8 x 17	30 6 3/8		6	
	2	bs1	PL 3/4 x 8	3 4		9	
	1	bs2	do	3 4		9	
	1	bs4	do	3 4		9	A36
	1	dp4	PL 3/8 x 8	3 1		8	
	1	dp5	do	3 1		8	
	1	dp6	do	3 1		8	
	1	dp7	do	3 1		8	

ITEM NO: 504.7002
PROJ. NO: I 295 3(60)

HOLES ARE FOR HIGH TENSILE BOLTS. They are to be free from burrs and shall not be painted on any surface within 5" of such oversize holes.

STEEL: ASTM. A572 GR 50 & A36 AS NOTED
WELDING ELECTRODE F72-EM 12K, E7018, E7028 SEE WELDING PROCEDURES
SHOP CONN: WELDED
FIELD CONN: BOLTED
HOLES: 15/16 ϕ
PAINT: RED LEAD PER MAINE SPECS & AS NOTED
SPECIAL CLEANING: BLAST CLEAN
APPROVED: AS NOTED; 8-7-72

GIRDER G18 N.B.

PRINT DIST.		
2p	7-26-72	FA
1 Sepia	8-29-72	Brewer
8p	8-29-72	State
2p	10-12-72	Cust

Bancroft & Martin Inc.
South Portland, Maine 04106

JOB: I 295 OVER PREBLE STREET PORTLAND MAINE

CUSTOMER: BLUE ROCK INDUSTRIES
DESIGNER: M.S.H.C. BRIDGE DIV.

REV.		
CHECKED		TGM
DRAWN	7-13-72	DWL

ORDER NO. | JOB NO. B72.227 | DRAWING NO. 52-5

140-47

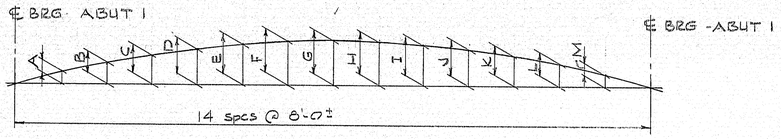

CAMBER DIAGRAM

GIRDER	A	B	C	D	E	F	G	H	I	J	K	L	M
G1	1 3/16	2 5/16	3 5/16	4 1/8	4 11/16	5 1/16	5 1/4	5 1/16	4 11/16	4 1/8	3 5/16	2 5/16	1 3/16
G2	1 1/8	2 1/8	3 1/8	3 13/16	4 7/16	4 3/4	4 7/8	4 3/4	4 7/16	3 13/16	3 1/8	2 1/8	1 1/8
G3 & G17	1 1/4	2 3/8	3 9/16	4 5/16	4 15/16	5 5/16	5 1/2	5 5/16	4 15/16	4 5/16	3 9/16	2 3/8	1 1/4
G4 THRU G16	1 3/8	2 11/16	3 15/16	4 3/4	5 7/16	5 15/16	6 1/16	5 15/16	5 7/16	4 3/4	3 13/16	2 11/16	1 3/8
G18	1 1/4	2 3/8	3 3/8	4 1/16	4 13/16	5 3/16	5 5/16	5 3/16	4 13/16	4 1/16	3 3/8	2 3/8	1 1/4

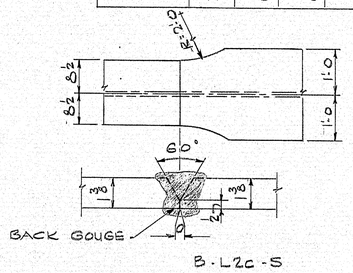

B-L2c-5
DETAIL WA
SEE WELDING PROCEDURE #3

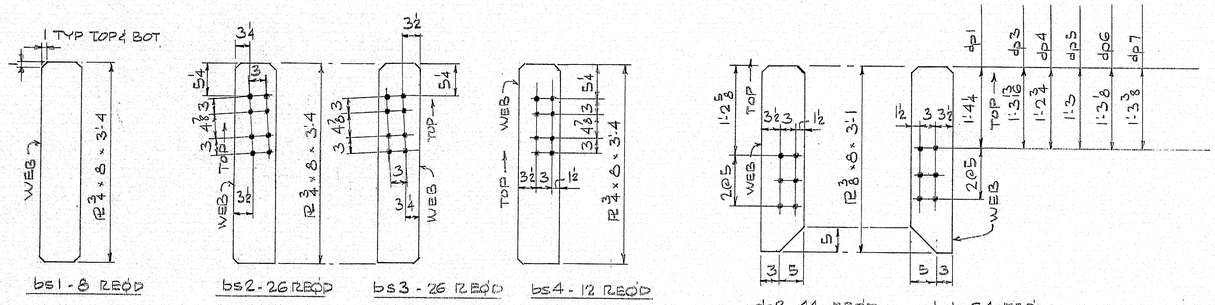

HOLES ARE FOR HIGH TENSILE BOLTS
They are to be free from burrs and shall not be painted on any surface within 5" of such open holes.

ITEM NO: 504.7002
PROJ. NO: I 295-3(60)

APPROVED AS NOTED: 8-7-72

CAMBER - WELDING - STIFFENERS

PRINT DIST.		
2p	7-26-72	FA
1 sepia	8-29-72	Brewer
8p	8-29-72	State
2p	10-12-72	Cust

Bancroft & Martin Inc.
South Portland, Maine 04106

JOB: I 295 OVER PREBLE STREET PORTLAND, MAINE

CUSTOMER: BLUE ROCK INDUSTRIES

DESIGNER: MSHC BRIDGE DV

REV.			ORDER NO.	JOB NO.	DRAWING NO.
CHECKED		RGM		B72-227	52-6
DRAWN	7-17-72	DWL			

140-48

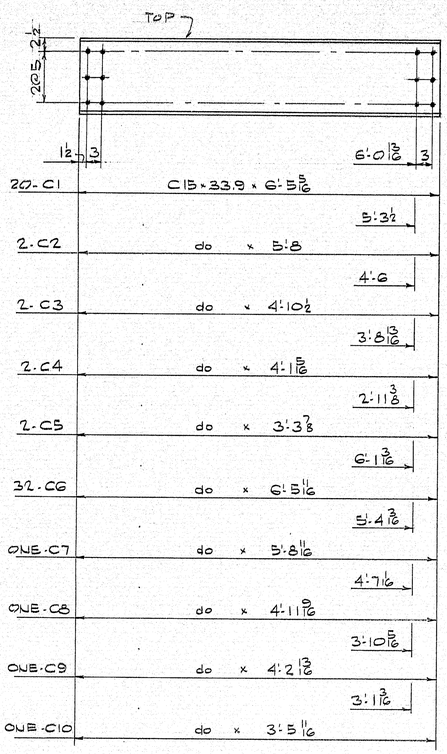

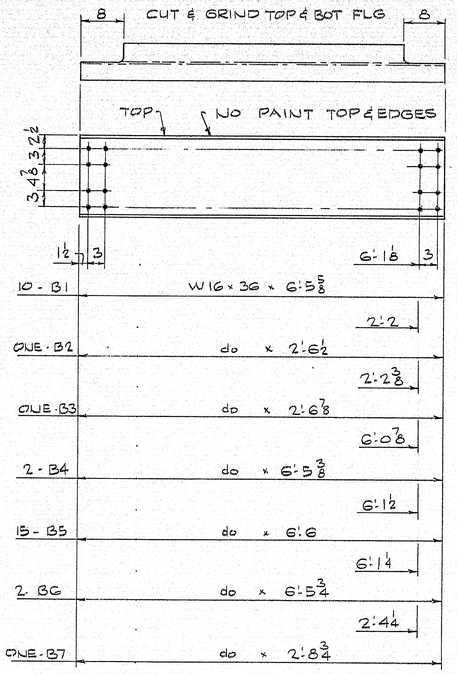

SHIP	BILL OF MATERIAL			JOB NO. B72-227	DWG. NO. 53-1			
MARK	NO.	MARK	SHAPE	LENGTH	WT.	ITEM NO.		REMARKS
B1	10		W16 x 36	6 5 5/8		15		
B2	1		do	2 6½		16		
B3	1		do	2 6 7/8		16		
B4	2		do	6 5 3/8		15		
B5	15		do	6 6		15		
B6	2		do	6 5 3/4		15		
B7	1		do	2 8 3/4		16		
C1	20		C15 x 33.9	6 5 5/16		10		
C2	2		do	5 8		14		
C3	2		do	4 10½		13		
C4	2		do	4 1 5/16		12		
C5	2		do	3 3 7/8		11		
C6	32		do	6 5 11/16		10		
C7	1		do	5 8 11/16		14		
C8	1		do	4 11 9/16		13		
C9	1		do	4 2 13/16		12		
C10	1		do	3 5 11/16		11		
FIELD	784		⅞"φ H.S. BOLT	0 2¼				"C" DIA
do	522		do	0 2½				"B" DIA
do	306		⅞"φ HARD WASHERS					
FIELD	218		⅝"φ CARRIAGE BOLT	0 1½				BRKTS

ITEM NO: 304.7002
PROJ NO: I 295 - 3(60)

HOLES ARE FOR HIGH TENSILE BOLTS They are to be free from burrs and shall not be painted on any surface within ½" of such open holes.

STEEL: ASTM. A36
WELDING ELECTRODE —
SHOP CONN: —
FIELD CONN: BOLTED
HOLES: 15/16"φ
PAINT: RED LEAD PER MAINE SPECS & AS NOTED
SPECIAL CLEANING: BLAST CLEAN
APPROVED: AS NOTED: 8-7-72

DIAPHRAGMS

PRINT DIST.		
2p	7-26-72	FA
1 sepia	8-29-72	Brewer
8p	8-29-72	State
2p	10-12-72	Cust

Bancroft & Martin Inc.
South Portland, Maine 04106

JOB: I 295 OVER PREBLE STREET PORTLAND MAINE

CUSTOMER: BLUE ROCK INDUSTRIES

DESIGNER: M.S.H.C. BRIDGE DIV.

REV.			ORDER NO.	JOB NO.	DRAWING NO.
CHECKED		TGM		B72-227	53-1
DRAWN	7-17-72	DWL			

140-49

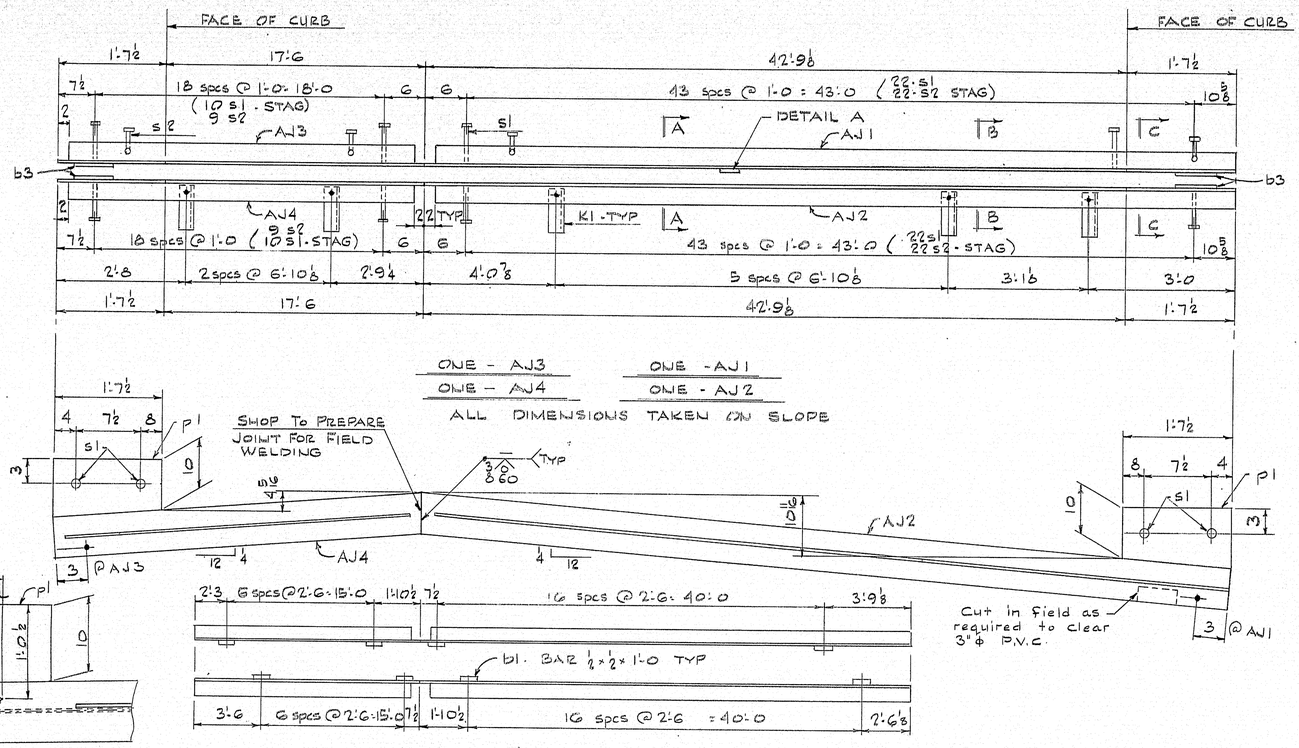

SHIP	BILL OF MATERIAL					JOB NO. 872-227	DWG. NO. S8-1
MARK	NO.	MARK	SHAPE	LENGTH	WT.	ITEM NO.	REMARKS
AJ1	1		WT 4×24	44 4⅝		20	
AJ2	1		do	44 4⅝		20	
AJ3	1		do	19 1½		17	
AJ4	1		do	19 1½		17	
	10	K1	L 3½ × 3½ × ⅜	0 11¾		25	
	48	b1	BAR ½ × ½	1 0		23	
	10	b2	BAR 3 × ⅜	0 6¾		24	
	4	P1	R 5/8 × 10 7/16	1 7½		26	
	72	S1	¾" ϕ STUD ANCHOR	8		22	
	4	b3	BAR ½ × ½	0 9		23	
	20	SHOP	⅞" ϕ H.S. BOLT	0 2¼			
	20	do	⅞" ϕ HARD	WASHERS			
	62	S2	¾" ϕ STUD	0 8		22	

ITEM NO: 5004.002
PROJ. NO: I-295 3(60)

STEEL: ASTM. A36
WELDING ELECTRODE E7018-E7028-SEE WELDING PROCEDURES
SHOP CONN: WELDED & BOLTED
FIELD CONN: BOLTED & WELDED
HOLES: AS NOTED
PAINT: RED LEAD PER MAINE SPECS & AS NOTED
SPECIAL CLEANING: BLAST CLEAN
APPROVED: As Noted: 10-20-72

N.B. — ARMORED JOINT - ABUT 2

PRINT DIST.		
2P	10-13-72	A
1 Sepia	10-24-72	Brewer
3P	10-24-72	State
2P	10-24-72	Cust
REV.		
CHECKED	10-11-72	RGM
DRAWN	7-18-72	DWL

Bancroft & Martin Inc.
South Portland, Maine 04106

JOB: I 295 OVER PREBLE STREET PORTLAND MAINE

CUSTOMER: BLUE ROCK INDUSTRIES
DESIGNER: MSHC BRIDGE DIV

ORDER NO.	JOB NO.	DRAWING NO.
	872-227	58-1

140-50

ONE - AJ11 ONE - AJ9

ONE - AJ12 ONE - AJ10

ALL DIMENSIONS TAKEN ON SLOPE

TYP CURB ℞ DETAIL

DETAIL A

SECTION A-A

SECTION B-B

b2 - DETAIL

NO PAINT - BOLT TO K1 FOR SHIPMENT
USE ⅞ φ × 2¼ H.S. BOLTS

SECTION C-C

SHIP	BILL OF MATERIAL						JOB NO. B72-227	DWG. NO. 58-2
MARK	NO.	MARK	SHAPE	LENGTH		WT.	ITEM NO.	REMARKS
AJ9	1		WT 4 × 24	19	1½		17	
AJ10	1		do	19	1½		17	
AJ11	1		do	48	2⅜		21	
AJ12	1		do	48	2⅜		21	
	10	K1	L 3½ × 3½ × ⅜	0	11¾		25	
	51	b1	BAR ½ × ½	1	0		23	
	10	b2	BAR 3 × ⅜	0	6¾		24	
	4	p1	℞ ⅝ × 10 7/16	1	7½		26	
	76	s1	¾" φ STUD ANCHOR	0	8		22	
	66	s2	¾" φ STUD	0	8		22	
	4	b3	BAR ½ × ½	0	9		23	
	1	b4	BAR ½ × ½	0	8		23	
	10	Shop	⅞" φ HS Bolt	0	2¼			
	10	do	⅞ φ HARD WASHERS					

ITEM NO: 504.7002
PROJ. NO: I 295 3(60)

STEEL: ASTM. A36
WELDING ELECTRODE E7018 - E7028 - SEE WELDING PROCEDURES
SHOP CONN: WELDED & BOLTED
FIELD CONN: BOLTED & WELDED
HOLES: AS NOTED
PAINT: RED LEAD PER MAINE SPECS & AS NOTED
SPECIAL CLEANING: BLAST CLEAN
APPROVED: As Noted! 10-20-72

N.B. - ARMORED JOINT - ABUT. 1

PRINT DIST.		
2p	10-13-72	A
1 Sepia	10-24-72	Brewer
8p	10-24-72	State
2p	10-24-72	Cust

Bancroft & Martin Inc.
South Portland, Maine 04106

JOB: I 295 OVER PREBLE STREET PORTLAND MAINE
CUSTOMER: BLUE ROCK INDUSTRIES
DESIGNER: MSHC BRIDGE DIV

REV.			ORDER NO.	JOB NO.	DRAWING NO.
CHECKED	10-11-72	RGM		B72-227	58-2
DRAWN	7-18-72	DWL			

140-51

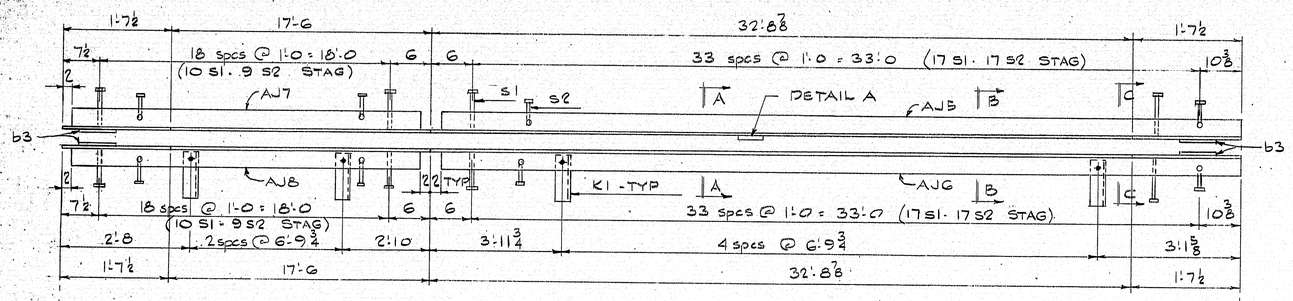

ONE - AJ7 ONE - AJ5

ONE - AJ8 ONE - AJ6

ALL DIMENSIONS TAKEN ON SLOPE

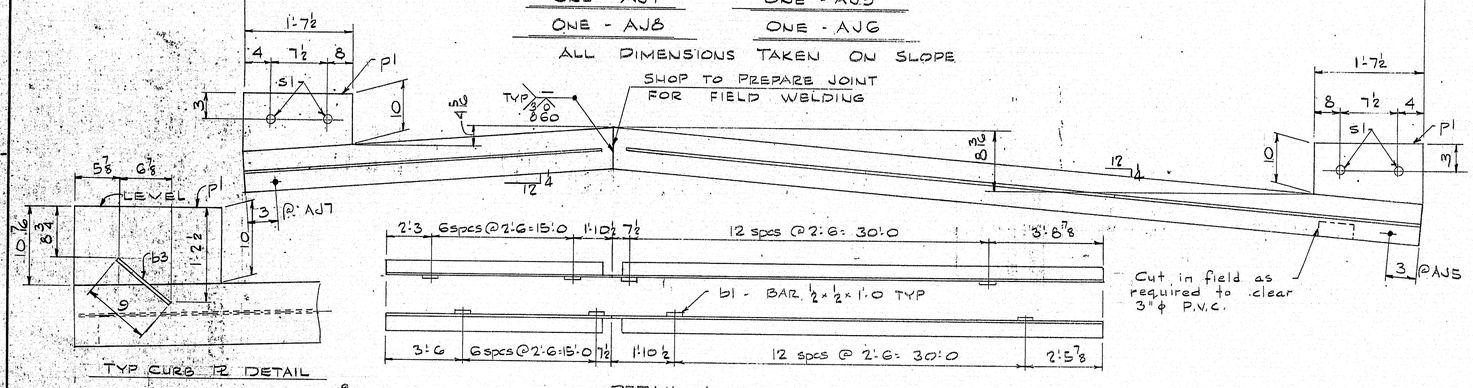

TYP CURB R DETAIL

DETAIL A

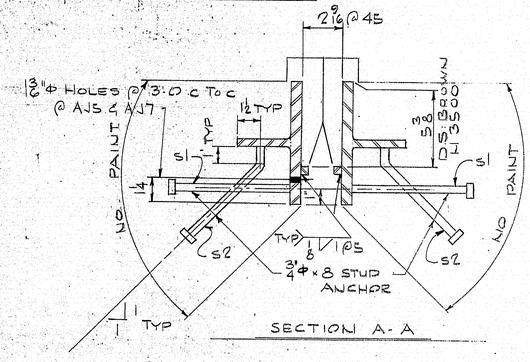

SECTION A-A

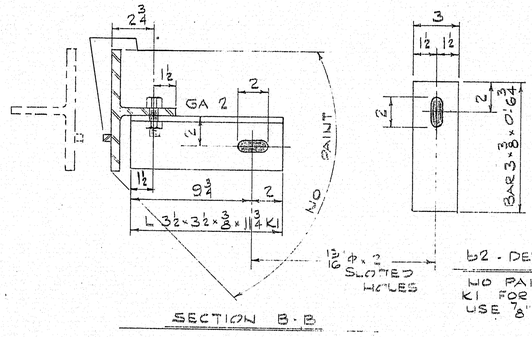

SECTION B-B

b2 - DETAIL

NO PAINT · BOLT TO K1 FOR SHIPMENT USE ⅞" ϕ × 2¼ H.S BOLTS

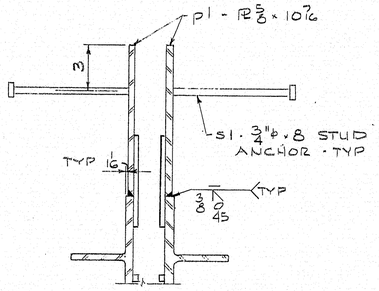

SECTION C-C

SHIP MARK	NO.	MARK	SHAPE	LENGTH	WT.	ITEM NO.	REMARKS
AJ5	1		WT 4×24	34 4⅜		19	
AJ6	1		do	34 4⅜		19	
AJ7	1		do	19 1½		17	
AJ8	1		do	19 1½		17	
	8	K1	L 3½×3½×⅜	0 11¾		25	
	40	b1	BAR ½ × ½	1 0		23	
	8	b2	BAR 3 × ⅜	0 6¾		24	
	62	S1	¾" ϕ STUD ANCHOR	0 8		22	
	4	P1	PL ⅝ × 10⅞	1 7½		26	
	52	S2	¾" ϕ STUD	0 8		22	
	4	b3	BAR ½ × ½	0 9		23	
	16	SHOP	⅞" ϕ H.S BOLT	0 2¼			
	16	do	⅞" HARD WASHERS				

ITEM NO: B04.7002
PROJ. NO: I295 3(60)

STEEL: ASTM. A36
WELDING ELECTRODE E7018-E7028-SEE WELDING PROCEDURES
SHOP CONN: WELDED & BOLTED
FIELD CONN: BOLTED & WELDED
HOLES: AS NOTED
PAINT: RED LEAD PER MAINE SPECS & AS NOTED
SPECIAL CLEANING: BLAST CLEAN
APPROVED: As Noted! 10-20-72

S.B.—ARMORED JOINT—ABUT 1

PRINT DIST.		
2p	10-13-72	A
Sepia	10-24-72	Brewer
8p	10-24-72	State
2p	10-24-72	Cust

REV.		
CHECKED	10-12-72	RGM
DRAWN	7-18-72	DWL

Bancroft & Martin Inc.
South Portland, Maine 04106

JOB: I-295 OVER PREBLE STREET PORTLAND MAINE

CUSTOMER: BLUE ROCK INDUSTRIES
DESIGNER: MSHC BRIDGE DIV

ORDER NO.	JOB NO.	DRAWING NO.
	B72.227	58-3

140-52

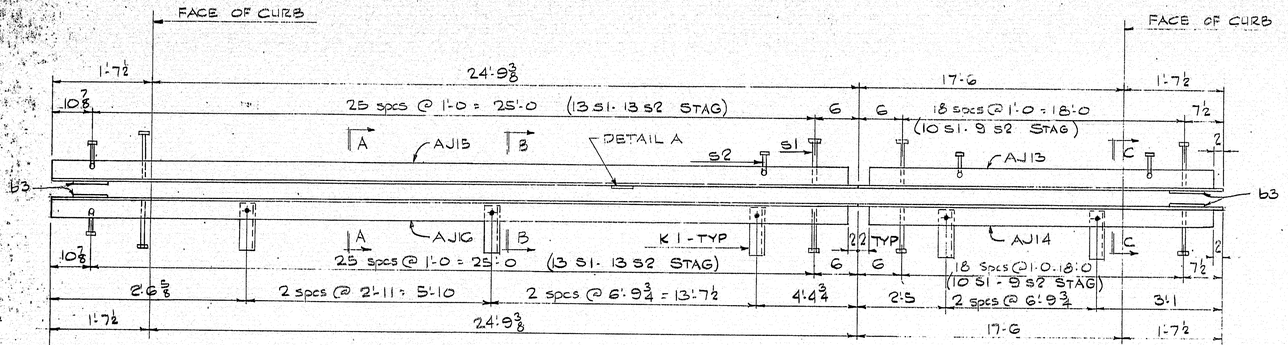

ONE - AJ15 ONE - AJ13

ONE - AJ16 ONE - AJ14

ALL DIMENSIONS TAKEN ON SLOPE

SHOP TO PREPARE JOINT FOR FIELD WELDING

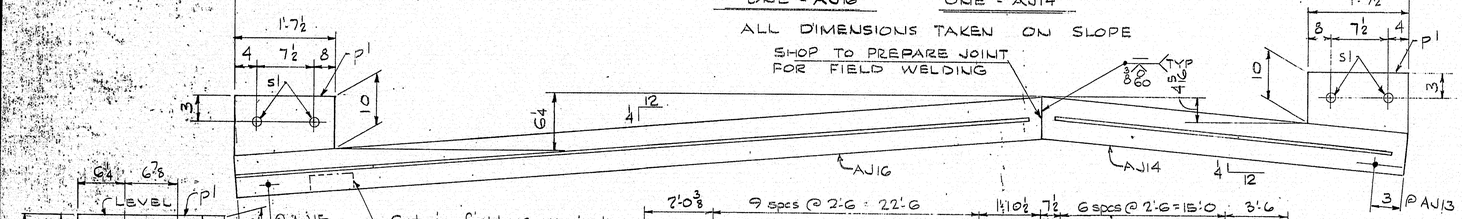

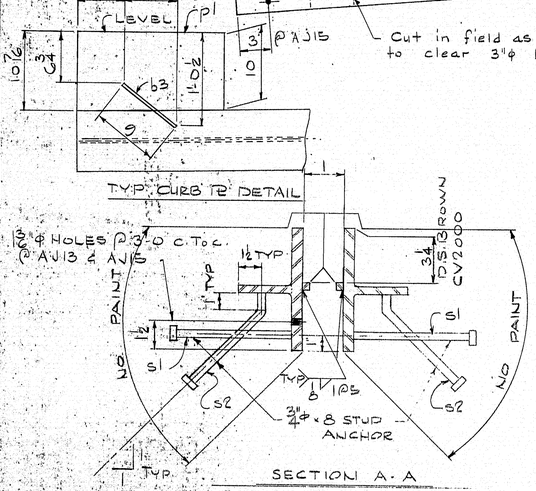

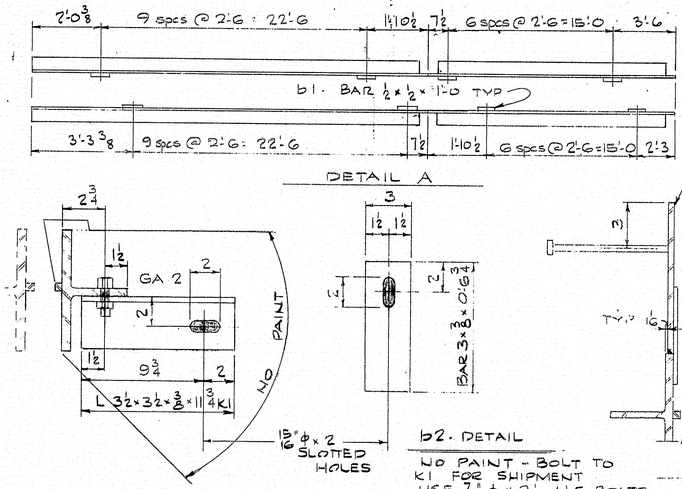

SHIP	BILL OF MATERIAL					JOB NO. B72-227	DWG. NO. 58-4
MARK	NO.	MARK	SHAPE	LENGTH	WT.	ITEM NO.	REMARKS
AJ13	1		WT 4x24	19	1½	17	
AJ14	1		do	19	1½	17	
AJ15	1		do	26	4⅞	18	
AJ16	1		do	26	4⅞	18	
	8	K1	L 3½ x 3½ x ⅜	0	11¾	25	
	34	b1	BAR ½ x ½	1	0	23	
	8	b2	BAR 3 x ⅜	0	8¾	24	
	4	P1	PL ⅝ x 10⅞	1	7½	26	
	54	S1	¾"ϕ STUD ANCHOR	0	8	22	
	44	S2	¾"ϕ STUDS	0	8	22	
	4	b3	BAR ½ x ½	0	9	23	
	16	SHOP	⅞"ϕ HS BOLT	0	2¼		
	16	do	⅞" HARD WASHERS				

ITEM NO: 504.7002
PROJ. NO: I 295 3(6A)

STEEL: ASTM. A36
WELDING ELECTRODE E7018-E7028 SEE WELDING PROCEDURES
SHOP CONN: WELDED & BOLTED
FIELD CONN: BOLTED & WELDED
HOLES: AS NOTED
PAINT: RED LEAD PER MAINE SPECS & AS NOTED
SPECIAL CLEANING: BLAST CLEAN
APPROVED: As Noted: 10-20-72

S.B. - ARMORED JOINT - ABUT. 2

PRINT DIST.			
2p	10-12-72	A	
1 Sepia	10-24-72	Brewer	
8p	10-24-72	State	
2p	10-24-72	Cust	

Bancroft & Martin Inc.
South Portland, Maine 04106

JOB: I 295 OVER PREBLE STREET PORTLAND MAINE

CUSTOMER: BLUE ROCK INDUSTRIES

DESIGNER: MSHC BRIDGE DIV

REV.		
CHECKED	10-12-72	RGM
DRAWN	7-18-72	PWL

ORDER NO.	JOB NO.	DRAWING NO.
	B72-227	58-4

140-53