STATE OF MAINE
DEPARTMENT OF TRANSPORTATION

SPECIFICATIONS

Design: Load and Resistance Factor Design per AASHTO LRFD Bridge Design Specifications, Sixth Edition 2012 and Interim Specifications 2013.

DESIGN LOADING

Live Load ..... HL - 93 Modified for Strength I

TRAFFIC DATA

Current (2012) AADT	6240
Future (2032) AADT	7490
DHV - % of AADT	10
Design Hour Volume	749
Heavy Trucks (% of AADT)	4
Heavy Trucks (% of DHV)	2
Directional Distribution (% of DHV)	55
18 kip Equivalent P 2.0	90
18 kip Equivalent P 2.5	86
Design Speed (mph)	40

HYDROLOGIC DATA

Drainage Area	1680 sq mi
Design Discharge (Q50)	50,000 cfs
Check Discharge (Q100)	61,000 cfs
Headwater Elevation (Q50)	55.2 ft
Headwater Elevation (Q100)	56.3 ft
Headwater Elevation (Q1.1)	49.2 ft
Headwater Elevation (Q10)	52.6 ft
Headwater Elevation (Q25)	54.1 ft

MATERIALS

Concrete:	
Curb, Sidewalk & Transition Barriers	Class "LP"
Seals	Class "A" or "S"
All Other	Class "A"
Reinforcing Steel	ASTM A 615/A 615M, Grade 60
Structural Steel:	
Flanges at Pier Pieces	ASTM A 709, Grade HPS 70W
All Other Material (except as noted)	ASTM A 709, Grade 50W
High Strength Bolts	ASTM A 325, Type 3

BASIC DESIGN STRESSES

Concrete	
Class "LP"	f 'c = 5000 psi
Class "S"	f 'c = 3000 psi
Class "A"	f 'c = 4350 psi
Reinforcing Steel	f y = 60,000 psi
Structural Steel:	
ASTM A 709, Grade HPS 70W	F y = 70,000 psi
ASTM A 709, Grade 50W	F y = 50,000 psi
ASTM A 709, Grade 36	F y = 36,000 psi
ASTM A 325	F μ = 120,000 psi

SACO & BIDDEFORD
YORK COUNTY
SOMESVILLE BRIDGE
OVER
SACO RIVER
MARKET STREET / PINE STREET
PROJECT NO. BH-1823(300)X
PROJECT LENGTH 0.085 mi.
BRIDGE NO. 3412

LIST OF DRAWINGS

Title Sheet	1
Estimated Quantities & General Construction Notes	2
General Plan	3
Profile	4
Typical Sections & General Construction Notes	5
Boring Location Plan	6
Interpretive Subsurface Profile	7
Interpretive Subsurface Transverse Sections	8
Boring Logs	9 - 10
Highway Approach Cross - Sections	11 - 13
Abutment No. 1	14 - 23
Abutment No. 2	24 - 33
Pier	34 - 36
Bearings	37
Structural Steel	38 - 41
Superstructure	42 - 46
Bridge Drains	47
Reinforcing Steel Schedule	48 - 49
Detour Plan	50
Bridge Lighting Plan	51
Block Gravity Wall	52
Dry - Laid Granite Wall	52A
Right of Way Map	53
Utility Plans	1 - 4

UTILITIES

Central Maine Power Company
Fairpoint Communications
Time Warner Cable
Biddeford and Saco Water Co.
City of Biddeford Sewer
City of Saco Sewer

MAINTENANCE OF TRAFFIC

The bridge will be closed to traffic during construction.

PROJECT LOCATION	Bridge Replacement: Somesville Bridge #3412 carrying Market Street (Saco) & Pine Street (Biddeford) over the Saco River. Located on the Saco and Biddeford City Line. Lat./Long. 43°29'57.1" N 70°27'23.2" W
PROGRAM AREA	Highway Bridges - Traditional
OUTLINE OF WORK	Bridge Replacement

WIN 18233.00

BH-1823(300)X

STATE OF MAINE
DEPARTMENT OF TRANSPORTATION
APPROVED
COMMISSIONER: DATE 2/12/15
CHIEF ENGINEER: DATE 2-11-15

STATE OF MAINE · GARRETT A GUSTAFSON 13553 · LICENSED PROFESSIONAL ENGINEER
SIGNATURE
P.E. NUMBER 13553
DATE 2/9/15

PROJECT INFORMATION

PROGRAM	BRIDGE PROGRAM
PROJECT MANAGER	JOEL MITTHEDGE
DESIGNER	G. GUSTAFSON / R. NADUS
CONSULTANT	N/A
PROJECT RESIDENT	
CONTRACTOR	
PROJECT COMPLETION DATE	

SACO & BIDDEFORD
SOMESVILLE BRIDGE

TITLE SHEET

SHEET NUMBER
1
OF 53

Filename:\00\BRIDGE\MSTA\001_Title.dgn Division: BRIDGE Username: dana.damren Date:2/3/2015

ESTIMATED QUANTITIES			
ITEM NO.	DESCRIPTION	QUANTITY	UNIT
201.23	REMOVING SINGLE TREE TOP ONLY	5	EA
201.24	REMOVING STUMP	5	EA
202.08	REMOVING BUILDING NO. 1	1	LS
202.08	REMOVING BUILDING NO. 2	1	LS
202.13	REMOVING EXISTING RAILINGS (RET. BY DEPT.)	763	LF
202.19	REMOVING EXISTING BRIDGE (416,000 LB) (2130 CY)	1	LS
203.20	COMMON EXCAVATION	350	CY
203.2318	DISPOSAL OF SPECIAL WASTE	3100	T
203.24	COMMON BORROW	240	CY
203.25	GRANULAR BORROW	610	CY
206.082	STRUC. EARTH EXC. - MAJOR STRUCTURES	2200	CY
206.092	STRUC. ROCK EXC. - MAJOR STRUCTURES	60	CY
206.10	STRUC. EARTH EXC. - PIERS	10	CY
206.11	STRUC. ROCK EXCAVATION - PIERS	10	CY
304.10	AGGREGATE SUBBASE COURSE - GRAVEL	390	CY
403.208	HOT MIX ASPHALT 12.5 MM HMA SURFACE	151	T
403.209	HOT MIX ASPHALT 9.5 MM HMA (SDWLKS., DRIVES, INC.)	17	T
403.213	HOT MIX ASPHALT 12.5 MM BASE	181	T
409.15	BITUMINOUS TACK COAT - APPLIED	80	G
502.219	STRUC. CONC. ABUTS. AND RET. WALLS (552 CY)	1	LS
502.22	STRUC. CONC. ABUTS. AND RET. WALLS (PLACED U.W.)	2000	CY
502.239	STRUC. CONC. PIERS (51 CY)	1	LS
502.24	STRUC. CONC. PIERS (PLACED U.W.)	110	CY
502.26	STRUC. CONC. RDWY. & SDWLK. SLABS ON STEEL BRIDGES (377 CY)	1	LS
502.31	STRUC. CONC. APPROACH SLABS (24 CY)	1	LS
502.49	STRUC. CONC. CURBS AND SIDEWALK (122 CY)	1	LS
503.12	REINFORCING STEEL, FABRICATED AND DELIVERED	67,900	LB
503.13	REINFORCING STEEL, PLACING	67,900	LB
504.702	STRUCTURAL STEEL FAB. AND DELIVERED, WELDED (571,700 LB)	1	LS
504.71	STRUCTURAL STEEL ERECTION (571,700 LB)	1	LS
505.08	SHEAR CONNECTORS (2730 EA)	1	LS
507.0821	STEEL BRIDGE RAILING, 3 BAR (391 LF)	1	LS
507.0831	STEEL BRIDGE RAILING, 4 BAR (381 LF)	1	LS
508.14	HIGH PERFORMANCE W/P MEMBRANE (1216 SY)	1	LS
511.07	COFFERDAM: ABUT. NO. 1	1	LS
511.07	COFFERDAM: PIER	1	LS
511.07	COFFERDAM: ABUT. NO. 2	1	LS
512.081	FRENCH DRAINS (170 LF)	1	LS
514.06	CURING BOX FOR CONCRETE CYLINDERS	1	EA
515.21	PROTECTIVE COATING FOR CONCRETE SURFACES (660 SY)	1	LS
520.21	EXPANSION DEVICE - GLAND SEAL	2	EA
523.52	BEARING INSTALLATION	15	EA
523.5551	POT OR DISC BEARINGS, FIXED	5	EA
523.5552	POT OR DISC BEARINGS, EXPANSION	10	EA
525.30	GRANITE MASONRY -- DRY - LAID	250	SF
526.301	TEMPORARY CONCRETE BARRIER TYPE 1 (100 LF)	1	LS
526.34	PERMANENT CONCRETE TRANSITION BARRIER	4	EA
606.1722	BRIDGE TRANSITION - TYPE 2	4	EA
606.231	GUARDRAIL TYPE 3C - 15 FOOT RADIUS AND LESS	12.5	LF
606.232	GUARDRAIL TYPE 3C - OVER 15 FOOT RADIUS	25	LF
606.265	TERMINAL END - SINGLE RAIL - GALVANIZED STEEL	3	EA
606.353	REFLECTORIZED FLEXIBLE GUARDRAIL MARKER	8	EA
606.81	TANGENT GUARDRAIL TERMINAL - ENERGY ABSORBING	1	EA
607.162	ALUMINUM FENCE - 4 FOOT	20	LF
607.25	REMOVE AND RESET CHAIN LINK FENCE	25	LF
609.11	VERTICAL CURB TYPE 1	150	LF
609.237	TERMINAL CURB TYPE 1-7 FOOT	3	EA
610.08	PLAIN RIPRAP	100	CY
610.60	BARRIER BOULDER	3	EA

ESTIMATED QUANTITIES			
ITEM NO.	DESCRIPTION	QUANTITY	UNIT
613.319	EROSION CONTROL BLANKET	10	SY
615.07	LOAM	10	CY
618.13	SEEDING METHOD NUMBER 1	2	UN
619.1201	MULCH - PLAN QUANTITY	2	UN
620.58	EROSION CONTROL GEOTEXTILE	100	SY
626.11	PRECAST CONCRETE JUNCTION BOX	3	EA
626.21	METALLIC CONDUIT	15	LF
626.22	NON-METALLIC CONDUIT	170	LF
627.733	4 INCH WHITE OR YELLOW PAINTED PAVE MRK LINE	1650	LF
627.75	WHITE OR YELLOW PAVEMENT & CURB MARKING	92	SF
627.77	REMOVING PAVEMENT MARKINGS	100	SF
629.05	HAND LABOR, STRAIGHT TIME	30	HR
631.12	ALL PURPOSE EXCAVATOR (INCLUDING OPERATOR)	10	HR
631.172	TRUCK - LARGE (INCLUDING OPERATOR)	10	HR
631.22	FRONT END LOADER (INCLUDING OPERATOR)	10	HR
634.210	CONVENTIONAL LIGHT STANDARD	4	EA
637.071	DUST CONTROL	1	LS
638.01	EMBEDDED WORK IN STRUCTURE	1	LS
639.18	FIELD OFFICE TYPE A	1	EA
643.71	TRAFFIC SIGNAL MODIFICATION	1	LS
645.103	DEMOUNT GUIDE SIGN	4	EA
645.106	DEMOUNT REG., WARNING, CONF. & RTE. MARKER ASSEMBLY SIGN	1	EA
645.116	REINSTALL REG., WARNING, CONF. & RTE. MARKER ASSEMBLY SIGN	1	EA
645.261	BRIDGE GUIDE SIGN, TYPE 1	8	SF
652.312	TYPE III BARRICADE	8	EA
652.33	DRUM	10	EA
652.34	CONE	10	EA
652.35	CONSTRUCTION SIGNS	305	SF
652.361	MAINTENANCE OF TRAFFIC CONTROL DEVICES (400 CD)	1	LS
652.38	FLAGGER	100	HR
652.41	PORTABLE CHANGEABLE MESSAGE SIGN	3	EA
656.75	TEMPORARY SOIL EROSION AND WATER POLLUTION CONTROL	1	LS
659.10	MOBILIZATION	1	LS
910.301	SPECIAL WORK - NEW TELEPHONE SYSTEM	1	LS

ESTIMATED QUANTITIES - ALTERNATIVE 1			
ITEM NO.	DESCRIPTION	QUANTITY	UNIT
672.10	PRECAST CONCRETE BLOCK GRAVITY WALL	220	SF

ESTIMATED QUANTITIES - ALTERNATIVE 2			
ITEM NO.	DESCRIPTION	QUANTITY	UNIT
681.10	PRECAST AGGREGATE - FILLED CONCRETE BLOCK GRAVITY WALL	220	SF

GENERAL CONSTRUCTION NOTES

1. During construction, the road will be closed to traffic for a time period specified in the Special Provisions.

2. For easements, construction limits and right of way lines, refer to Right of Way Map.

3. Payment for clearing will be considered incidental to Contract items.

4. All utility facilities shall be adjusted by the respective utilities unless otherwise noted.

5. Do not excavate for Aggregate Subbase Course where existing material is suitable as determined by the Resident.

6. In areas where the Resident directs the Contractor not to excavate to the subgrade line shown on the plans, payment for removing existing pavement, grubbing, shaping, ditching, and compacting the existing subbase and layers of new subbase 6 inches or less thick will be made under appropriate equipment rental items.

7. All embankment material, except as otherwise shown, placed below EL. 56.0 shall be Granular Borrow meeting the requirements of Subsection 703.19, Material for Underwater Backfill.

8. Place riprap on sideslopes up to EL. 56.0.

9. Place loam 2 inches deep on all new or reconstructed sideslopes or as directed by the Resident.

10. Place a 24-in. wide strip of Temporary Erosion Control Blanket on the sideslopes along the top of the riprap and behind the wingwalls.

11. Extended-use Erosion Control Blanket, seeded gutters, riprap downspouts, and other gutters lined with Stone Ditch Protection shall be constructed after paving and shoulder work is completed, where it is apparent that runoff will cause continual erosion. Payment will be made under the appropriate Contract items.

12. Protective Coating for Concrete Surfaces shall be applied to the following areas:

All exposed surfaces of concrete curbs and sidewalks.
Fascias down to the drip notch.
Return wingwalls down to the approach slab seat construction joint.
All exposed surfaces of Concrete Transition Barriers.
Concrete headers at Expansion Devices
Top of abutment backwalls and to one foot below the top of backwalls on the back side.

13. Project information referred to below may be accessed at the following MaineDOT web address: http://www.maine.gov/mdot/contractors/*projecttbl

14. The existing bridge plans may be accessed at the MaineDOT web address. The plans are reproductions of the original drawings as prepared for the construction of the bridge. It is very unlikely that the plans will show any construction field changes or any alterations which may have been made to the bridge during its life span.

15. The hydrologic report of the bridge site may be accessed at the MaineDOT web address. The hydrologic report is based on MaineDOT's interpretation of the information obtained for the subject site. No assurance is given that the information or the conclusions of the report will be representative of actual conditions at the time of construction.

16. The project geotechnical report titled: GEOTECHNICAL DESIGN REPORT For the Replacement of SOMESVILLE BRIDGE OVER SACO RIVER, SACO AND BIDDEFORD, MAINE, Soils Report No. 2014-14, May 28, 2014, may be accessed at the MaineDOT web address.

17. Geotechnical information furnished or referred to in this plan set is for the use of the Bidders and the Contractor. No assurance is given that the information or interpretations will be representative of actual subsurface conditions at the construction site. MaineDOT will not be responsible for the Bidders' or Contractor's interpretations of, or conclusions drawn from, the geotechnical information. The boring logs contained in the plan set present factual and interpretive subsurface information collected at discrete locations. Data provided may not be representative of the subsurface conditions between the boring locations.

18. In addition to the provisions in Standard Specifications Section 105.2.2, Health and Safety Plan, the Contractor shall provide a copy of the Safety Plan to Brookfield Renewable Energy, Brian.Stetson@BrookfieldRenewable.com, prior to Contract award. The Safety Plan will be reviewed at the pre-construction meeting and any comments shall be resolved to the satisfaction of the Resident prior to the start of construction.

~ General Construction Notes continued on Sheet No. 5 ~

STATE OF MAINE
DEPARTMENT OF TRANSPORTATION

BH-1823(300)X

WIN 18233.00

BRIDGE NO. 3412

BRIDGE PLANS

	BY	DATE
PROJ. MANAGER	J. Kittredge	
DESIGN-DETAILED	G. Gustafson	July 2014
CHECKED-REVIEWED	E. Caswell	Sept. 2014
DESIGN2-DETAILED2	-----	-----
DESIGN3-DETAILED3	-----	-----
REVISIONS 1	-----	-----
REVISIONS 2	-----	-----
REVISIONS 3	-----	-----
REVISIONS 4	-----	-----
FIELD CHANGES	-----	-----

SIGNATURE

P.E. NUMBER

DATE

SOMESVILLE BRIDGE
SACO RIVER
SACO & BIDDEFORD YORK COUNTY

EST. QUANTITIES & GEN. NOTES

SHEET NUMBER

2

OF 53

Filename: ...\BRIDGE\MSTA\002_Estimate.dgn Division: BRIDGE Username: dana.damren Date:2/12/2015

Filename: ...\MSTA\003_GeneralPlan.dgn Username: dana.damren Division: BRIDGE Date:2/9/2015

MAG. 19XX

℄ Brg., Abut. No. 1
Sta. 13+32.00

℄ Brg., Pier
Sta. 15+02.00

℄ Brg., Abut. No. 2
Sta. 16+72.00

APPROXIMATE THREAD

SACO
BIDDEFORD

Span No. 1 = 170'-0"

Span No. 2 = 170'-0"

Pave parking area after reconstruction

Install Block Gravity Wall

Remove Building No. 2

Install 4-ft. Aluminum Fence and Barrier Boulders

Reconstruct Dry-Laid Granite Wall

2 ~ 1-1/4" IRON ROD/FENCE POSTS 30"AG

Plain Riprap (Typ.)

Market Street

S40°16'11.98"E

Pine Street

S39°41'36.75"E

S39°40'50.33"E

12+00 13+00 14+00 15+00 16+00 17+00 18+00

PI = STA. 13+11.71

PI = STA. 17+05.22

Pole to be removed by others

Remove Building No. 1
(Existing house foundation
to be left intact where
necessary to avoid impact
to adjacent property)

Minimal tree removal as
directed by the Resident

Remove and reset Chain Link Fence

Reconstruct Dry-Laid Granite Wall

Remove trees

APPROXIMATE TOWN LINE

Flow

Saco River

PLAN

25 0 25 50

Scale in Feet

STATE OF MAINE
DEPARTMENT OF TRANSPORTATION

BH-1823(300)X

WIN 18233.00

BRIDGE NO. 3412

BRIDGE PLANS

	BY	DATE
PROJ. MANAGER	J. Kittredge	
DESIGN-DETAILED	G. Gustafson	July 2014
CHECKED-REVIEWED	E. Caswell	Sept. 2014
DESIGN2-DETAILED2	-----	-----
DESIGN3-DETAILED3	-----	-----
REVISIONS 1	-----	-----
REVISIONS 2	-----	-----
REVISIONS 3	-----	-----
REVISIONS 4	-----	-----
FIELD CHANGES	-----	-----

SIGNATURE

P.E. NUMBER

DATE

SOMESVILLE BRIDGE
SACO RIVER
SACO & BIDDEFORD YORK COUNTY

GENERAL PLAN

SHEET NUMBER

3

OF 53

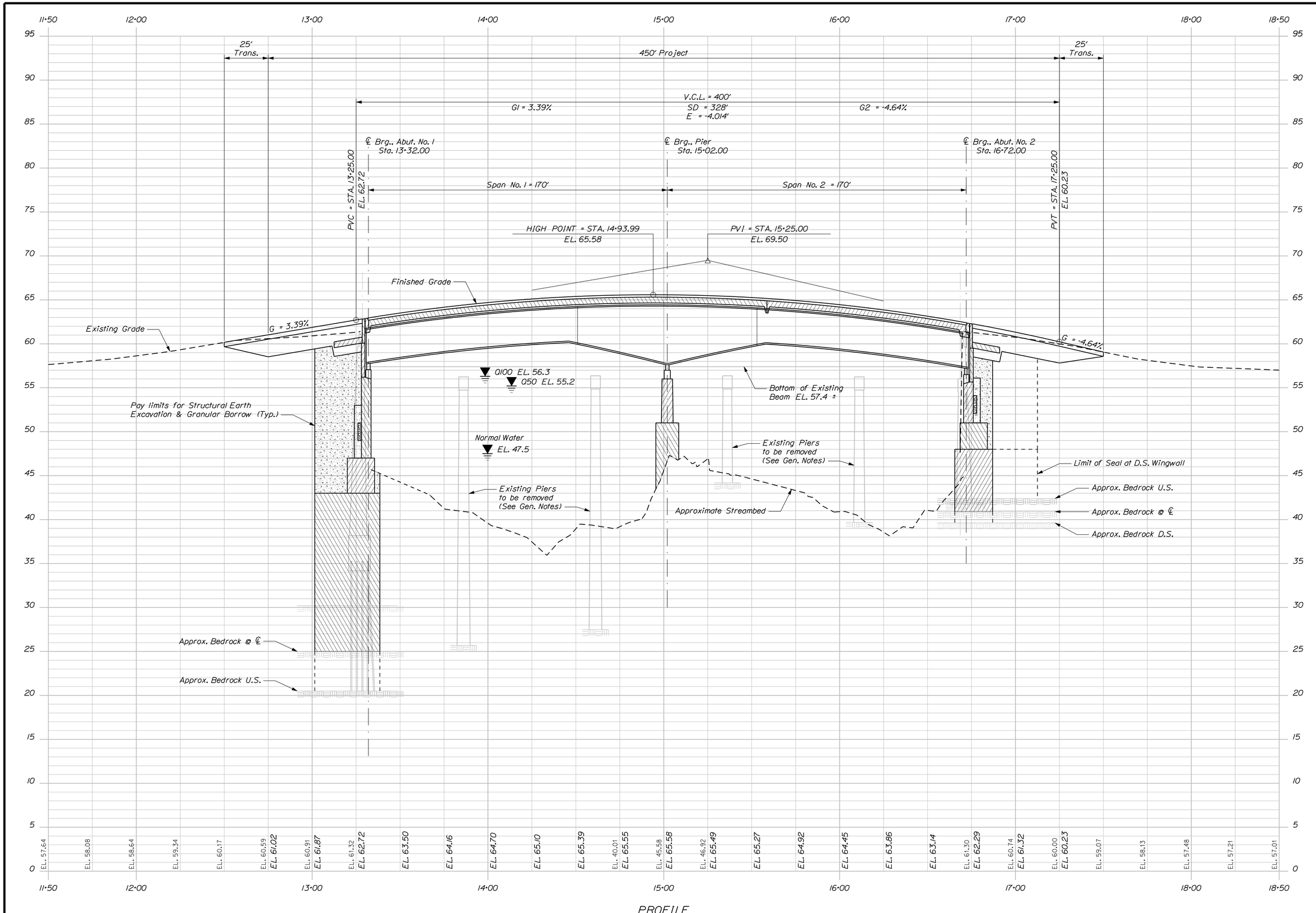

PROFILE

STATE OF MAINE
DEPARTMENT OF TRANSPORTATION

BH-1823(300)X

WIN 18233.00

BRIDGE NO. 3412

BRIDGE PLANS

	BY	DATE
PROJ. MANAGER	J. Kittredge	
DESIGN-DETAILED	G. Gustafson	July 2014
CHECKED-REVIEWED	E. Caswell	Sept. 2014
DESIGN2-DETAILED2	-----	-----
DESIGN3-DETAILED3	-----	-----
REVISIONS 1	-----	-----
REVISIONS 2	-----	-----
REVISIONS 3	-----	-----
REVISIONS 4	-----	-----
FIELD CHANGES	-----	-----

SIGNATURE

P.E. NUMBER

DATE

SOMESVILLE BRIDGE
SACO RIVER
SACO & BIDDEFORD YORK COUNTY

PROFILE

SHEET NUMBER

4

OF 53

Filename: ...\00\bridge\msto\004_Profile.dgn Division: BRIDGE Username: dana.damren Date:2/3/2015

Username: dona.damren Date:2/3/2015
Filename: ...\ms1o\005_TypicalSections.dgn Division: BRIDGE

GENERAL CONSTRUCTION NOTES

~ General Construction Notes continued from Sheet No. 2 ~

19. Quantities included for pay items measured and paid for by Lump Sum are estimated quantities and are provided by MaineDOT for informational purposes only. Lump Sum pay items will be paid for at the Contract Bid amount, with no addition or reduction in payment to the Contractor if the actual final quantities are different from the MaineDOT provided estimated quantities, except as follows:

a. If a Lump Sum pay item is eliminated, the requirements of Standard Specifications Section 109.2, Elimination of Items, will take precedence.
b. If other Contract Documents specifically allow a change in payment for a Lump Sum pay item, those requirements will be followed.

b. If other Contract Documents specifically allow a change in payment for a Lump Sum pay item, those requirements will be followed.

c. If a design change results in changes to estimated quantities for Lump Sum pay items, price adjustments will be made in accordance with Standard Specifications Section 109.7, Equitable Adjustments to Compensation and Time.

20. The Contractor shall submit a Bridge Demolition Plan to the Resident at least 10 business days prior to the start of demolition work. The plan shall outline the methods and equipment to be used to remove and dispose of all materials included in the existing bridge. No work related to the removal of the bridge shall be undertaken by the Contractor until MaineDOT has reviewed the Bridge Demolition Plan for appropriateness and completeness. Payment for all work necessary for developing, submitting and finalizing the Demolition Plan will be considered incidental to the bridge removal pay item.

21. The existing bridge shall be removed by and become the property of the Contractor. The steel portions of the existing bridge are coated with a lead-based paint system. The Contractor is responsible for the containment, proper management and disposal of all lead-contaminated hazardous waste generated by the process of demolishing the bridge. The Contractor is responsible for implementing appropriate OSHA mandated personal protection standards related to this process. Once the existing bridge is removed, the Contractor is solely responsible for the care, custody and control of the components of the existing bridge and any hazardous waste generated as a result of the storage, recycling or disposal of the bridge components, including lead-coated steel. The Contractor shall recycle or reuse the steel in accordance with the Maine Department of Environmental Protection's "Maine Hazardous Waste Management Regulations," Chapter 850. A copy of this regulation is available at MaineDOT's offices on Child Street in Augusta. Payment for all labor, materials, equipment and other costs required to remove and dispose of the existing bridge will be considered incidental to the bridge removal pay item.

22. The existing bridge piers shall be removed to 1 foot below streambed. The existing abutments shall be removed to bedrock.

23. The Contractor shall provide the Resident access to all portions of the Work, including that which is only accessible by boat. The method, timing, and location of access will be approved by the Resident. Payment for access will not be made separately but will be considered incidental to the Contract.

24. Class "A" concrete shall have a minimum compressive strength as specified in the Basic Design Stresses section on the Title Sheet. All other minimum compressive strengths shall be as specified in the Standard Specifications.

25. Calcium Nitrite shall be added at the rate of 3 gallons per cubic yard to all Class "LP" concrete.

26. The four "No Jumping" signs strapped to the existing bridge lighting shall be removed and new "No Jumping" signs shall be fabricated and installed on new sign posts attached to the bridge deck or bridge rail by means approved by the Resident. The new signs shall be on the sidewalk side of the bridge and the final location will be determined by the Resident. Payment for removal will be made under Item No. 645.103, Demount Guide Sign and payment for installation of new signs will be made under Item No. 645.261, Bridge Guide Sign, Type 1.

27. The existing "Open Spillway" sign located on the upstream bridge rail shall be carefully removed and reinstalled on the new bridge rail as directed by the Resident. Payment for removal will be made under Item No. 645.106, Demount Regulatory, Warning, Confirmation and Route Marker Assembly Sign and payment for reinstallation will be made under Item No. 645.116, Reinstall Regulatory, Warning, Confirmation and Route Marker Assembly Sign.

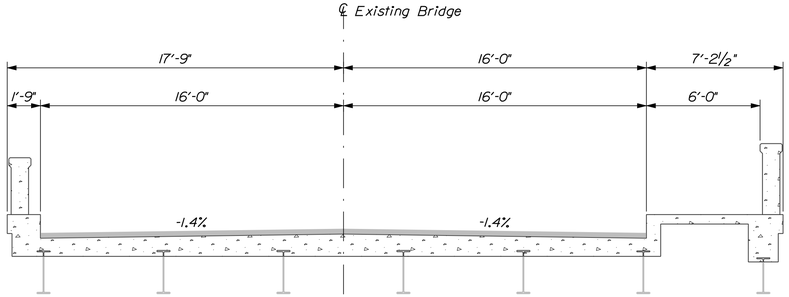

EXISTING TRANSVERSE SECTION

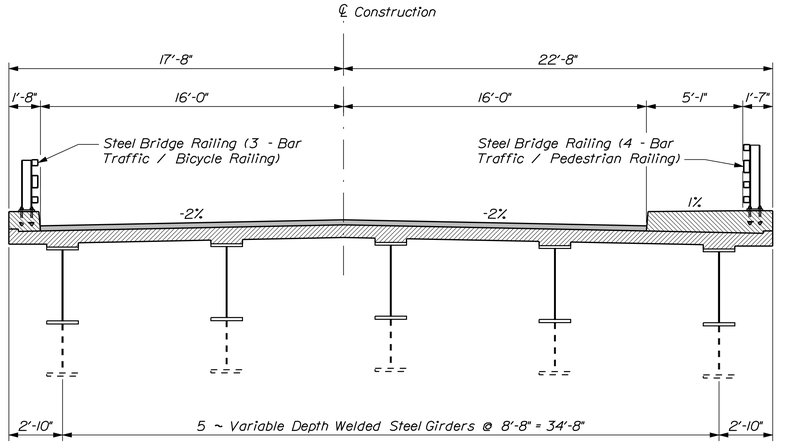

PROPOSED TRANSVERSE SECTION

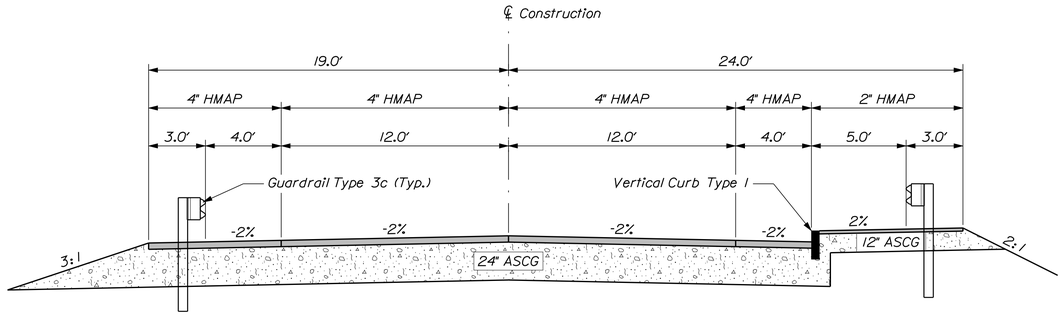

PROPOSED APPROACH DESIGN SECTION

STATE OF MAINE
DEPARTMENT OF TRANSPORTATION

BH-1823(300)X

WIN 18233.00

BRIDGE NO. 3412

BRIDGE PLANS

PROJ. MANAGER	J. Kittredge				
DESIGN-DETAILED	G. Gustafson	D. Damren	July 2014	SIGNATURE	
CHECKED-REVIEWED	E. Caswell	-----	Sept. 2014		
DESIGN2-DETAILED2	-----	-----	-----	P.E. NUMBER	
DESIGN3-DETAILED3	-----	-----	-----		
REVISIONS 1	-----	-----	-----	DATE	
REVISIONS 2	-----	-----	-----		
REVISIONS 3	-----	-----	-----		
REVISIONS 4	-----	-----	-----		
FIELD CHANGES	-----	-----	-----		

SOMESVILLE BRIDGE
SACO RIVER
SACO & BIDDEFORD YORK COUNTY

TYP. SECTIONS & GEN. NOTES

SHEET NUMBER

5

OF 53

Filename: ...\00\GEOTECH\MSTA\006_BLP1.dgn Division: BRIDGE Username: dana.damren Date:2/3/2015

℄ Brg., Abut. No. 1
Sta. 13+32.00

℄ Brg., Pier
Sta. 15+02.00

℄ Brg., Abut. No. 2
Sta. 16+72.00

Span No. 1 = 170'-0"

Span No. 2 = 170'-0"

Pave parking area after reconstruction

Install Block Gravity Wall

Remove Building No. 2

Install 4-ft. Chain Link Fence and Barrier Boulders

Reconstruct Dry-Laid Granite Wall

Plain Riprap (Typ.)

BB-SBSR-104A

BB-SBSR-104

BB-SBSR-102

BB-SBSR-201

BB-SBSR-101

BB-SBSR-101A

BB-SBSR-103

BB-SBSR-202

Market Street

Pine Street

12+00

13+00

14+00

15+00

16+00

17+00

18+00

S40°16'11.98"E

S39°41'36.75"E

S39°40'50.33"E

PI = STA. 13+11.71

PI = STA. 17+05.22

Remove and reset Chain Link Fence

Reconstruct Dry-Laid Granite Wall

Remove trees

Pole to be removed by others

Remove Building No. 1
(Existing house foundation to be left intact where necessary to avoid impact to adjacent property)

Minimal tree removal as directed by the Resident

Flow

SACO RIVER

Saco River

PLAN

25 0 25 50

Scale in Feet

LEGEND

CASED WASH BORING

STATE OF MAINE
DEPARTMENT OF TRANSPORTATION

BH-1823(300)X

WIN 18233.00

BRIDGE NO. 3412

BRIDGE PLANS

	BY	DATE
PROJ. MANAGER	J. Kittredge	July 2014
DESIGN-DETAILED	G.Gustafson	Sept. 2014
CHECKED-REVIEWED	E. Caswell	-----
DESIGN2-DETAILED2	K.MAGUIRE	JAN 2015
DESIGN3-DETAILED3	T. WHITE	-----
REVISIONS 1	-----	-----
REVISIONS 2	-----	-----
REVISIONS 3	-----	-----
REVISIONS 4	-----	-----
FIELD CHANGES	-----	-----

SIGNATURE

P.E. NUMBER

DATE

SOMESVILLE BRIDGE
SACO RIVER
SACO & BIDDEFORD YORK COUNTY

BORING LOCATION PLAN

SHEET NUMBER

6

OF 53

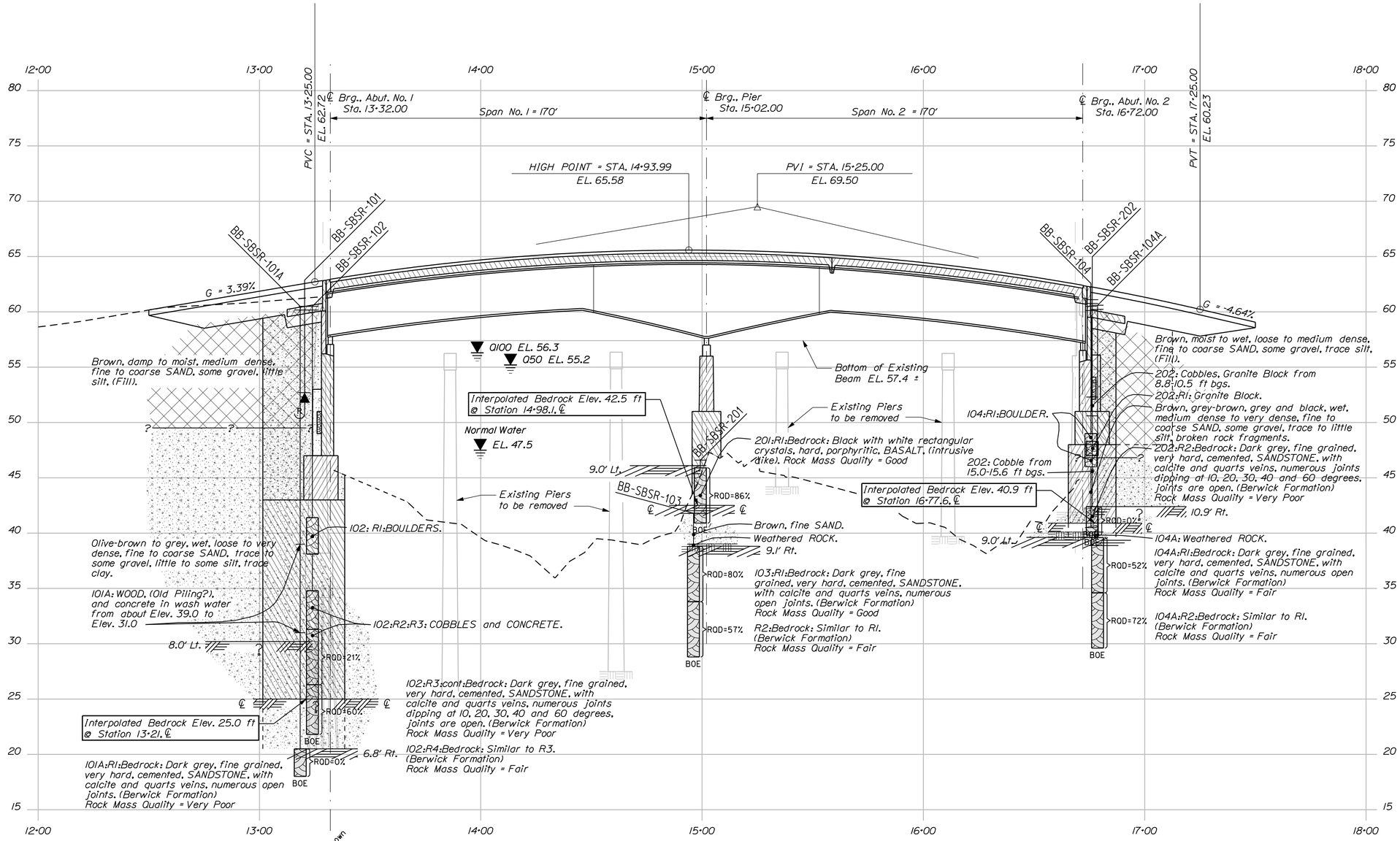

LEGEND

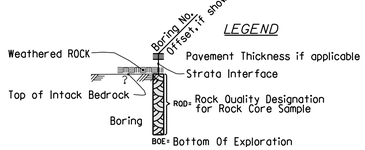

PROFILE

Horiz. 25 0 25 50

Vert. 5 0 5 10

Scale of Feet

Note: This generalized interpretive soil profile is intended to convey trends in subsurface conditions. The boundaries between strata are approximate and idealized, and have been developed by interpretations of widely spaced explorations and samples. Actual soil transitions may vary and are probably more erratic. For more specific information refer to the exploration logs.

STATE OF MAINE
DEPARTMENT OF TRANSPORTATION

BH-1823(300)X

WIN 18233.00

BRIDGE NO. 3412

BRIDGE PLANS

		BY	DATE
PROJ. MANAGER	J. Kittredge		
DESIGN-DETAILED	G.Gustafson	D. Domren	July 2014
CHECKED-REVIEWED	E. Caswell	-----	Sept. 2014
DESIGN2-DETAILED2	K.MAGUIRE	T. WHITE	JAN 2015
DESIGN3-DETAILED3	-----	-----	-----
REVISIONS 1	-----	-----	-----
REVISIONS 2	-----	-----	-----
REVISIONS 3	-----	-----	-----
REVISIONS 4	-----	-----	-----
FIELD CHANGES	-----	-----	-----

SIGNATURE

P.E. NUMBER

DATE

SOMESVILLE BRIDGE
SACO RIVER
SACO & BIDDEFORD YORK COUNTY

INTERPRETIVE SUBSURFACE PROFILE

SHEET NUMBER

7

OF 53

Filename: ...\00\GEOTECH\MSTA\007_LSP1.dgn Division: BRIDGE Username: dana.domren Date:2/3/2015

Filename: ...\00\GEOTECH\MSTA\008_ISTS1.dgn Username: dana.damren Date:2/3/2015 Division: BRIDGE

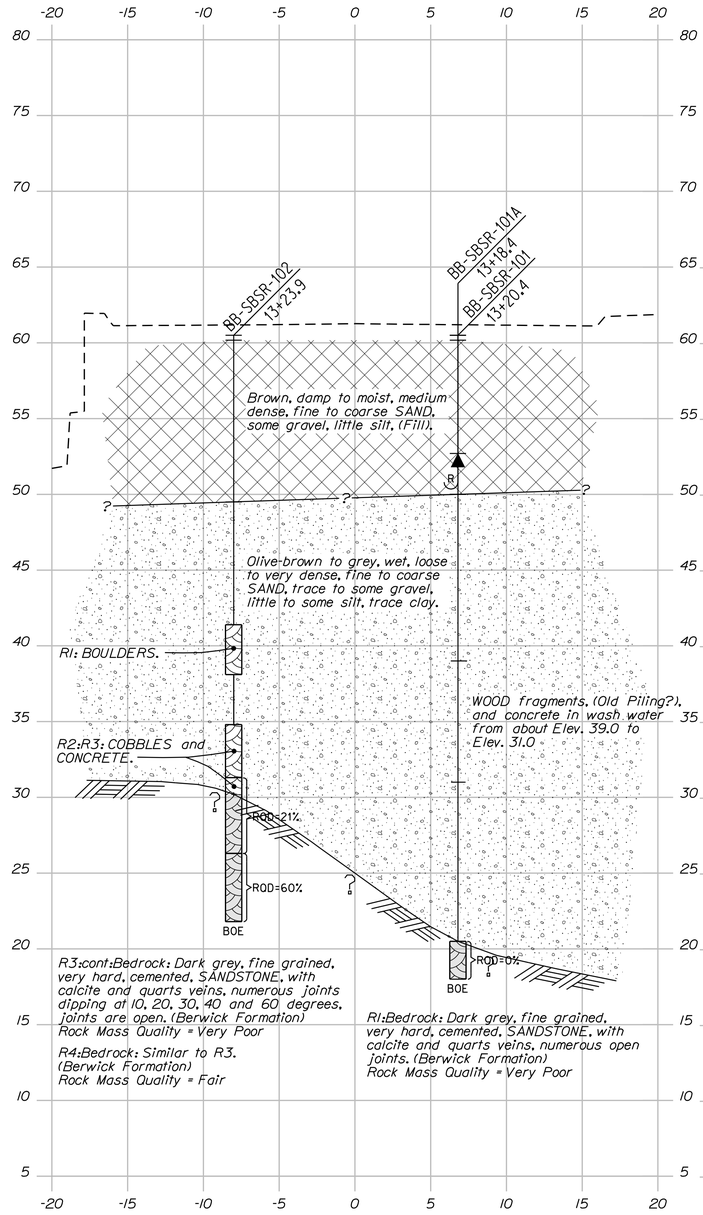

13+22.00

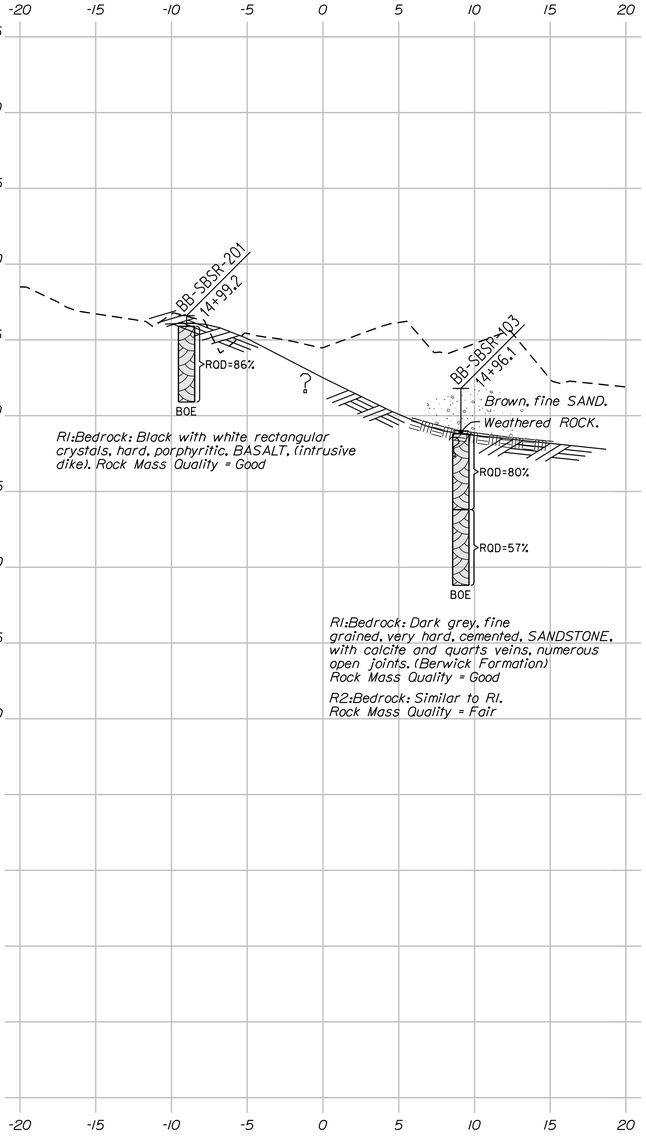

14+98.00

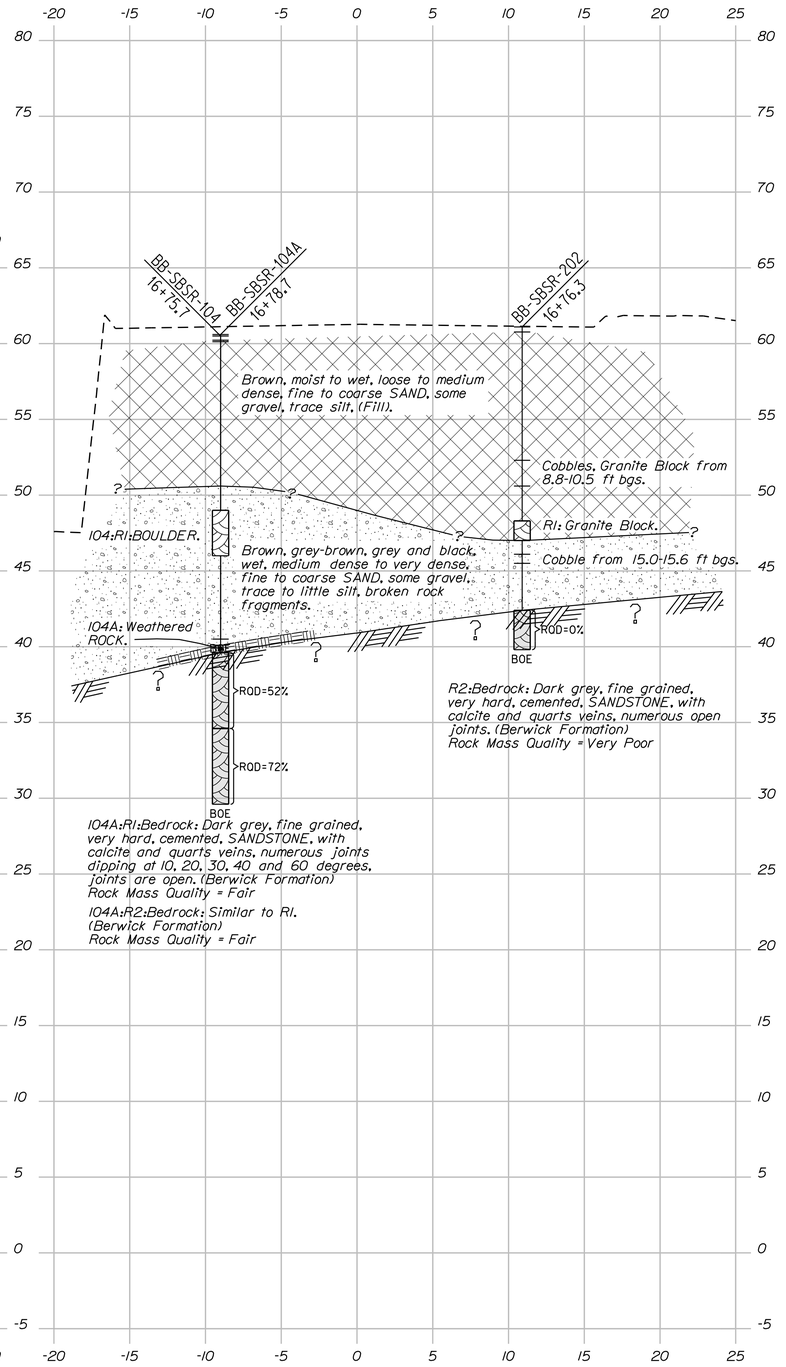

16+76.00

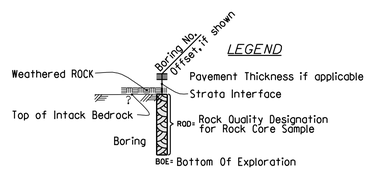

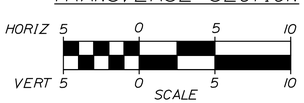

TRANSVERSE SECTION

Note: This generalized interpretive soil transverse section is intended to convey trends in subsurface conditions. The boundaries between strata are approximate and idealized, and have been developed by interpretations of widely spaced explorations and samples. Actual soil transitions may vary and are probably more erratic. For more specific information refer to the exploration logs.

STATE OF MAINE
DEPARTMENT OF TRANSPORTATION

BH-1823(300)X

WIN 18233.00

BRIDGE NO. 3412

BRIDGE PLANS

	BY	DATE
PROJ. MANAGER	J. Kittredge	
DESIGN-DETAILED	G.Gustafson	July 2014
CHECKED-REVIEWED	E. Caswell	Sept. 2014
DESIGN2-DETAILED2	K.MAGUIRE	JAN 2015
DESIGN3-DETAILED3	-----	-----
REVISIONS 1	-----	-----
REVISIONS 2	-----	-----
REVISIONS 3	-----	-----
REVISIONS 4	-----	-----
FIELD CHANGES	-----	-----

SIGNATURE

P.E. NUMBER

DATE

SOMESVILLE BRIDGE
SACO RIVER YORK COUNTY
SACO & BIDDEFORD

INTERPRETIVE SUBSURFACE TRANSVERSE SECTIONS

SHEET NUMBER

8

OF 53

Filename: ...\MSTA\009_BORING LOGS1.dgn Division: BRIDGE Username: dana.damren Date:2/3/2015

Maine Department of Transportation
Soil/Rock Exploration Log
US CUSTOMARY UNITS

Project: Somesville Bridge #3412 carries Pine and Market Street over the
Location: Saco-Biddeford, Maine

Boring No.: BB-SBSR-101A
WIN: 18233.00

Driller:	MaineDOT	Elevation (ft.)	60.5	Auger ID/OD:	5" Dia. Solid Stem
Operator:	Giles/Daggett	Datum:	NAVD88	Sampler:	Standard Split Spoon
Logged By:	B. Wilder	Rig Type:	CME 45C	Hammer Wt./Fall:	140#/30"
Date Start/Finish:	5/30/13; 08:00-14:30	Drilling Method:	Cased Wash Boring	Core Barrel:	NQ-2"
Boring Location:	13+18.4, 6.8 ft Rt.	Casing ID/OD:	NW	Water Level*:	12.0 ft bgs.
Hammer Efficiency Factor: 0.756		Hammer Type:	Automatic ☒ Hydraulic ☐ Rope & Cathead ☐		

Definitions:
D = Split Spoon Sample
MD = Unsuccessful Split Spoon Sample attempt
U = Thin Wall Tube Sample
MU = Unsuccessful Thin Wall Tube Sample attempt
V = Insitu Vane Shear Test, PP = Pocket Penetrometer
MV = Unsuccessful Insitu Vane Shear Test attempt
R = Rock Core Sample
SSA = Solid Stem Auger
HSA = Hollow Stem Auger
RC = Roller Cone
WOH = weight of 140lb. hammer
WOR/C = weight of rods or casing
WO1P = Weight of one person
S_u = Insitu Field Vane Shear Strength (psf)
T_v = Pocket Torvane Shear Strength (psf)
q_p = Unconfined Compressive Strength (ksf)
N-uncorrected = Raw field SPT N-value
Hammer Efficiency Factor = Annual Calibration Value
N_{60} = SPT N-uncorrected corrected for hammer efficiency
N_{60} = (Hammer Efficiency Factor/60%)*N-uncorrected
$S_{u(lab)}$ = Lab Vane Shear Strength (psf)
WC = water content, percent
LL = Liquid Limit
PL = Plastic Limit
PI = Plasticity Index
G = Grain Size Analysis
C = Consolidation Test

Depth (ft.)	Sample No.	Pen./Rec. (in.)	Sample Depth (ft.)	Blows (/6 in.) Shear Strength (psf) or RQD (%)	N-uncorrected	N_{60}	Casing Blows	Elevation (ft.)	Graphic Log	Visual Description and Remarks	Laboratory Testing Results/ AASHTO and Unified Class
0							SSA	60.17		4" Pavement —0.33 See BB-SBSR-101 for description of upper 0 to 7.8 feet of soil.	
5											
10	1D/A	24/18	10.00 - 12.00	6/7/8/9	15	19	22	50.00		1D (10.0-10.5 ft) Brown, moist, medium dense, fine to coarse SAND, some gravel, little silt, (Fill). —10.50 1D/A (10.5-12.0 ft) Olive-brown, wet, medium dense, fine to coarse SAND, some gravel, little silt, trace clay.	G#266627 A-1-b, SC-SM WC=14.2%
							20				
							14				
							30				
							38	46.00		—14.50	
15	2D	24/7	15.00 - 17.00	5/2/2/2	4	5	12			Grey, wet, loose, fine to coarse SAND, little silt, trace gravel, trace clay.	G#266628 A-2-4, SC-SM WC=22.2%
							14				
							12				
							8				
							10				
20	3D	24/9	20.00 - 22.00	2/1/3/3	4	5	8			Grey, wet, loose, fine to coarse SAND, some gravel, little silt, wood fragments.	
							20				
							24				
							84				
							53				
25	4D	24/6	25.00 - 27.00	5/4/3/3	7	9	42			WOOD, possible Bridge Pile. Bent Casing.	
							45				
							46				
							59				
							44			End of wood, concrete in wash water. Roller Coned ahead to 29.0-31.0 ft bgs.	
30							31				
	5D	24/14	31.00 - 33.00	3/5/5/11	10	13	38			Grey, wet, medium dense, fine to coarse SAND, some silt, little gravel, trace clay, wood fragments.	G#266629 A-2-4, SC-SM WC=12.1%
							81				
							60				
							137				
35							35				
	6D	24/18	36.00 - 38.00	11/54/18/11	72	91	120			Grey, wet, very dense, fine to coarse SAND, some gravel, little silt, trace clay.	G#266630 A-1-b, SC-SM WC=9.0%
							99				
							64				
							a150			a150 blows for 0.8 ft.	
40	R1	30/8	40.00 - 42.50	RQD = 0%			NQ-2	20.50		—40.00 Top of Bedrock at Elev. 20.5 ft. R1: Dark grey, fine grained, very hard, cemented, SANDSTONE, with calcite and quartz veins, numerous open joints, (Berwick Formation). Rock Mass Quality = Very Poor. R1:Core Times (min:sec) 40.0-41.0 ft (4:25) 41.0-42.0 ft (9:00) 42.0-42.5 ft (5:00) Core Blocked. Bent casing, could not get core barrel back down hole. Core Run in sample cup.	
								18.00		—42.50 Bottom of Exploration at 42.50 feet below ground surface.	
45											
50											

Remarks:

Stratification lines represent approximate boundaries between soil types; transitions may be gradual.

* Water level readings have been made at times and under conditions stated. Groundwater fluctuations may occur due to conditions other than those present at the time measurements were made.

Page 1 of 1
Boring No.: BB-SBSR-101A

Maine Department of Transportation
Soil/Rock Exploration Log
US CUSTOMARY UNITS

Project: Somesville Bridge #3412 carries Pine and Market Street over the
Location: Saco-Biddeford, Maine

Boring No.: BB-SBSR-101
WIN: 18233.00

Driller:	MaineDOT	Elevation (ft.)	60.5	Auger ID/OD:	5" Dia.
Operator:	Giles/Daggett	Datum:	NAVD88	Sampler:	Standard Split Spoon
Logged By:	B. Wilder	Rig Type:	CME 45C	Hammer Wt./Fall:	140#/30"
Date Start/Finish:	5/30/13; 07:30-08:00	Drilling Method:	Solid Stem Auger	Core Barrel:	N/A
Boring Location:	13+20.4, 6.8 ft Rt.	Casing ID/OD:	N/A	Water Level*:	None Observed
Hammer Efficiency Factor: 0.756		Hammer Type:	Automatic ☒ Hydraulic ☐ Rope & Cathead ☐		

Definitions:
D = Split Spoon Sample
MD = Unsuccessful Split Spoon Sample attempt
U = Thin Wall Tube Sample
MU = Unsuccessful Thin Wall Tube Sample attempt
V = Insitu Vane Shear Test, PP = Pocket Penetrometer
MV = Unsuccessful Insitu Vane Shear Test attempt
R = Rock Core Sample
SSA = Solid Stem Auger
HSA = Hollow Stem Auger
RC = Roller Cone
WOH = weight of 140lb. hammer
WOR/C = weight of rods or casing
WO1P = Weight of one person
S_u = Insitu Field Vane Shear Strength (psf)
T_v = Pocket Torvane Shear Strength (psf)
q_p = Unconfined Compressive Strength (ksf)
N-uncorrected = Raw field SPT N-value
Hammer Efficiency Factor = Annual Calibration Value
N_{60} = SPT N-uncorrected corrected for hammer efficiency
N_{60} = (Hammer Efficiency Factor/60%)*N-uncorrected
$S_{u(lab)}$ = Lab Vane Shear Strength (psf)
WC = water content, percent
LL = Liquid Limit
PL = Plastic Limit
PI = Plasticity Index
G = Grain Size Analysis
C = Consolidation Test

Depth (ft.)	Sample No.	Pen./Rec. (in.)	Sample Depth (ft.)	Blows (/6 in.) Shear Strength (psf) or RQD (%)	N-uncorrected	N_{60}	Casing Blows	Elevation (ft.)	Graphic Log	Visual Description and Remarks	Laboratory Testing Results/ AASHTO and Unified Class
0							SSA	60.17		4" Pavement —0.33	
5	1D	24/19	5.00 - 7.00	11/8/6/9	14	18				Brown, damp, medium dense, fine to coarse SAND, some gravel, little silt, (Fill).	G#266626 A-1-b, SW-SM WC=4.4%
								52.70		—7.80 Bottom of Exploration at 7.80 feet below ground surface. REFUSAL on obstruction, moved to BB-SBSR-101A.	
10											
15											
20											
25											

Remarks:

Stratification lines represent approximate boundaries between soil types; transitions may be gradual.

* Water level readings have been made at times and under conditions stated. Groundwater fluctuations may occur due to conditions other than those present at the time measurements were made.

Page 1 of 1
Boring No.: BB-SBSR-101

Maine Department of Transportation
Soil/Rock Exploration Log
US CUSTOMARY UNITS

Project: Somesville Bridge #3412 carries Pine and Market Street over the
Location: Saco-Biddeford, Maine

Boring No.: BB-SBSR-102
WIN: 18233.00

Driller:	MaineDOT	Elevation (ft.)	60.5	Auger ID/OD:	5" Solid Stem
Operator:	Enos/Giles/Daggett	Datum:	NAVD88	Sampler:	Standard Split Spoon
Logged By:	B. Wilder	Rig Type:	CME 45C	Hammer Wt./Fall:	140#/30"
Date Start/Finish:	5/15/13; 07:00-13:00	Drilling Method:	Cased Wash Boring	Core Barrel:	NQ-2"
Boring Location:	13+23.9, 8.0 ft Lt.	Casing ID/OD:	NW	Water Level*:	None Observed
Hammer Efficiency Factor: 0.756		Hammer Type:	Automatic ☒ Hydraulic ☐ Rope & Cathead ☐		

Definitions:
D = Split Spoon Sample
MD = Unsuccessful Split Spoon Sample attempt
U = Thin Wall Tube Sample
MU = Unsuccessful Thin Wall Tube Sample attempt
V = Insitu Vane Shear Test, PP = Pocket Penetrometer
MV = Unsuccessful Insitu Vane Shear Test attempt
R = Rock Core Sample
SSA = Solid Stem Auger
HSA = Hollow Stem Auger
RC = Roller Cone
WOH = weight of 140lb. hammer
WOR/C = weight of rods or casing
WO1P = Weight of one person
S_u = Insitu Field Vane Shear Strength (psf)
T_v = Pocket Torvane Shear Strength (psf)
q_p = Unconfined Compressive Strength (ksf)
N-uncorrected = Raw field SPT N-value
Hammer Efficiency Factor = Annual Calibration Value
N_{60} = SPT N-uncorrected corrected for hammer efficiency
N_{60} = (Hammer Efficiency Factor/60%)*N-uncorrected
$S_{u(lab)}$ = Lab Vane Shear Strength (psf)
WC = water content, percent
LL = Liquid Limit
PL = Plastic Limit
PI = Plasticity Index
G = Grain Size Analysis
C = Consolidation Test

Depth (ft.)	Sample No.	Pen./Rec. (in.)	Sample Depth (ft.)	Blows (/6 in.) Shear Strength (psf) or RQD (%)	N-uncorrected	N_{60}	Casing Blows	Elevation (ft.)	Graphic Log	Visual Description and Remarks	Laboratory Testing Results/ AASHTO and Unified Class
0							SSA	60.17		4" Pavement —0.33	
	1D	24/16	1.00 - 3.00	7/13/11/10	24	30				Brown, damp, medium dense, fine to coarse SAND, some gravel, little silt, (Fill).	
5	2D	24/19	5.00 - 7.00	8/5/7/7	12	15				Brown, damp, medium dense, fine to coarse SAND, some gravel, little silt, (Fill).	G#266631 A-1-b, SW-SM WC=4.7%
10	3D/A	24/20	10.00 - 12.00	7/8/13/15	21	26	62	49.50		3D (10.0-11.0 ft) Similar to above. —11.00 3D/A (11.0-12.0 ft) Grey, wet, medium dense, fine to coarse SAND, some gravel, little silt, trace clay.	G#266632 A-1-b, SC-SM WC=13.5%
	3D/A						79				
							65				
							59				
							54				
15	4D	24/10	15.00 - 17.00	5/2/2/1	4	5	71			Grey, wet, loose, fine to coarse SAND, some gravel, little silt, trace clay.	G#266633 A-1-b, SC-SM WC=12.4%
							65				
							60				
							72				
	R1	39.6/ 39.6	19.10 - 22.40				NQ-2	41.40		—19.10 R1:BOULDER - Grey SANDSTONE. R1:Core Times (min:sec) 19.1-20.1 ft (7:10) 20.1-21.1 ft (4:15) 21.1-22.1 ft (4:14) 22.1-22.4 ft (2:20)	
20											
								38.10		—22.40	
25	5D R2	8.4/5 42/42	25.00 - 25.70 25.70 - 29.20	5/30(2.4")	---		NQ-2	34.80		Grey, wet, dense, fine to coarse SAND, little silt, little gravel. —25.70 R2:COBBLE and CONCRETE. R2:Core Times (min:sec) 25.7-26.7 ft (3:00) 26.7-27.7 ft (2:15) 27.7-28.7 ft (2:10) 28.7-29.2 ft (1:00) Core Blocked	G#266634 A-2-4, SM WC=26.1%
	R3	60/60	29.20 - 34.20	RQD = 21%						R3:CONCRETE. No Core Times taken.	
30								30.20		—30.30 Top of Bedrock at Elev. 30.2 ft. R3:Cont:Bedrock: Dark grey, fine grained, very hard, cemented, SANDSTONE, with calcite and quartz veins, numerous joints dipping at 20, 30, 40 and 60 degrees, joints are open, (Berwick Formation.) Rock Mass Quality = Very Poor. 100% Recovery	
	R4	54/54	34.20 - 38.70	RQD = 60%						R4:Bedrock: Similar to R3 with minor iron staining and more low angle joints at 10 to 20 degrees, (Berwick Formation). Rock Mass Quality = Fair. R4:Core Times (min:sec) 34.2-35.2 ft (2:19) 35.2-36.2 ft (2:35) 36.2-37.2 ft (2:27) 37.2-38.2 ft (2:10) 38.2-38.7 ft (1:30) 100% Recovery Core Blocked	
35											
								21.80		—38.70 Bottom of Exploration at 38.70 feet below ground surface.	
40											
45											
50											

Remarks:

Stratification lines represent approximate boundaries between soil types; transitions may be gradual.

* Water level readings have been made at times and under conditions stated. Groundwater fluctuations may occur due to conditions other than those present at the time measurements were made.

Page 1 of 1
Boring No.: BB-SBSR-102

Maine Department of Transportation
Soil/Rock Exploration Log
US CUSTOMARY UNITS

Project: Somesville Bridge #3412 carries Pine and Market Street over the
Location: Saco-Biddeford, Maine

Boring No.: BB-SBSR-103
WIN: 18233.00

Driller:	MaineDOT	Elevation (ft.)	41.8	Auger ID/OD:	N/A
Operator:	Enos/Giles/Daggett	Datum:	NAVD88	Sampler:	Standard Split Spoon
Logged By:	B. Wilder	Rig Type:	CME 45C	Hammer Wt./Fall:	140#/30"
Date Start/Finish:	5/14/13; 10:00-15:00	Drilling Method:	Cased Wash Boring	Core Barrel:	NQ-2"
Boring Location:	14+96.1, 9.1 ft Rt.	Casing ID/OD:	HW	Water Level*:	Water Boring
Hammer Efficiency Factor: 0.756		Hammer Type:	Automatic ☒ Hydraulic ☐ Rope & Cathead ☐		

Definitions:
D = Split Spoon Sample
MD = Unsuccessful Split Spoon Sample attempt
U = Thin Wall Tube Sample
MU = Unsuccessful Thin Wall Tube Sample attempt
V = Insitu Vane Shear Test, PP = Pocket Penetrometer
MV = Unsuccessful Insitu Vane Shear Test attempt
R = Rock Core Sample
SSA = Solid Stem Auger
HSA = Hollow Stem Auger
RC = Roller Cone
WOH = weight of 140lb. hammer
WOR/C = weight of rods or casing
WO1P = Weight of one person
S_u = Insitu Field Vane Shear Strength (psf)
T_v = Pocket Torvane Shear Strength (psf)
q_p = Unconfined Compressive Strength (ksf)
N-uncorrected = Raw field SPT N-value
Hammer Efficiency Factor = Annual Calibration Value
N_{60} = SPT N-uncorrected corrected for hammer efficiency
N_{60} = (Hammer Efficiency Factor/60%)*N-uncorrected
$S_{u(lab)}$ = Lab Vane Shear Strength (psf)
WC = water content, percent
LL = Liquid Limit
PL = Plastic Limit
PI = Plasticity Index
G = Grain Size Analysis
C = Consolidation Test

Depth (ft.)	Sample No.	Pen./Rec. (in.)	Sample Depth (ft.)	Blows (/6 in.) Shear Strength (psf) or RQD (%)	N-uncorrected	N_{60}	Casing Blows	Elevation (ft.)	Graphic Log	Visual Description and Remarks	Laboratory Testing Results/ AASHTO and Unified Class
0	MD	24/0	0.00 - 2.00	1/1/1/1	2	3	41			Failed sample attempt. Brown, fine SAND in wash water.	
							52				
							a210			a210 blows for 0.8 ft.	
								39.00 38.80		—2.80 Weathered ROCK. —3.00	
	R1	60/57	3.00 - 8.00	RQD = 80%			NQ-2			Top of Intact Bedrock at Elev. 38.8 ft. R1:Bedrock: Dark grey, fine grained, very hard, cemented, SANDSTONE, with calcite and quartz veins, numerous open joints, (Berwick Formation). Rock Mass Quality = Good. R1:Core Times (min:sec) 3.0-4.0 ft (7:00) 4.0-5.0 ft (3:50) 5.0-6.0 ft (5:25) 6.0-7.0 ft (4:45) 7.0-8.0 ft (4:32) 95% Recovery	
5											
	R2	60/60	8.00 - 13.00	RQD = 57%						R2:Bedrock: Similar to R1. Rock Mass Quality = Fair. R2:Core Times (min:sec) 8.0-9.0 ft (2:25) 9.0-10.0 ft (4:15) 10.0-11.0 ft (2:30) 11.0-12.0 ft (2:10) 12.0-13.0 ft (2:10) 100% Recovery	
10											
								28.80		—13.00 Bottom of Exploration at 13.00 feet below ground surface.	
15											
20											
25											

Remarks:

Bridge Deck: 4" Pavement, 9" Concrete.
19.7 ft from Bridge Deck to Ground.

Stratification lines represent approximate boundaries between soil types; transitions may be gradual.

* Water level readings have been made at times and under conditions stated. Groundwater fluctuations may occur due to conditions other than those present at the time measurements were made.

Page 1 of 1
Boring No.: BB-SBSR-103

STATE OF MAINE
DEPARTMENT OF TRANSPORTATION

BH-1823(300)X

WIN
18233.00

BRIDGE PLANS
BRIDGE NO. 3412

SIGNATURE
P.E. NUMBER
DATE

			DATE
PROJ. MANAGER	J. Kittredge	BY	DATE
DESIGN-DETAILED	G.Gustafson	D. Damren	July 2014
CHECKED-REVIEWED	E. Caswell	-----	Sept. 2014
DESIGN2-DETAILED2	K.MAGUIRE	T.WHITE	JAN 2015
DESIGN3-DETAILED3	-----	-----	-----
REVISIONS 1	-----		-----
REVISIONS 2	-----		-----
REVISIONS 3	-----		-----
REVISIONS 4	-----		-----
FIELD CHANGES	-----		-----

SOMESVILLE BRIDGE
SACO RIVER
SACO & BIDDEFORD YORK COUNTY

BORING LOGS

SHEET NUMBER
9
OF 53

Filename: ...\MSTA\010_BORING LOGS2.dgn   Division: BRIDGE   Username: dana.damren   Date:2/3/2015

Maine Department of Transportation — Soil/Rock Exploration Log — US CUSTOMARY UNITS

Project: Somesville Bridge #3412 carries Pine and Market Street over the
Location: Saco-Biddeford, Maine

Boring No.: BB-SBSR-201   WIN: 18233.00

Driller: MaineDOT	Elevation (ft.): 46.6	Auger ID/OD: N/A	
Operator: Giles/Daggett	Datum: NAVD88	Sampler: Standard Split Spoon	
Logged By: B. Wilder	Rig Type: CME 45C	Hammer Wt./Fall: 140#/30"	
Date Start/Finish: 4/9/14; 08:00-11:30	Drilling Method: Cased Wash Boring	Core Barrel: NQ-2"	
Boring Location: 14+99.2, 9.0 ft Lt.	Casing ID/OD: NW	Water Level*: None Observed	
Hammer Efficiency Factor: 0.867	Hammer Type: Automatic ☒ Hydraulic ☐ Rope & Cathead ☐		

Definitions:
D = Split Spoon Sample
MD = Unsuccessful Split Spoon Sample attempt
U = Thin Wall Tube Sample
MU = Unsuccessful Thin Wall Tube Sample attempt
V = Insitu Vane Shear Test, PP = Pocket Penetrometer
MV = Unsuccessful Insitu Vane Shear Test attempt
R = Rock Core Sample
SSA = Solid Stem Auger
HSA = Hollow Stem Auger
RC = Roller Cone
WOH = weight of 140lb. hammer
WOR/C = weight of rods or casing
WO1P = Weight of one person
S_u = Insitu Field Vane Shear Strength (psf)
T_v = Pocket Torvane Shear Strength (psf)
q_p = Unconfined Compressive Strength (ksf)
N-uncorrected = Raw field SPT N-value
Hammer Efficiency Factor = Annual Calibration Value
N_{60} = SPT N-uncorrected corrected for hammer efficiency
N_{60} = (Hammer Efficiency Factor/60%)*N-uncorrected
$S_{u(lab)}$ = Lab Vane Shear Strength (psf)
WC = water content, percent
LL = Liquid Limit
PL = Plastic Limit
PI = Plasticity Index
G = Grain Size Analysis
C = Consolidation Test

Depth (ft.)	Sample No.	Pen./Rec. (in.)	Sample Depth (ft.)	Blows (/6 in.) Shear Strength (psf) or RQD (%)	N-uncorrected	N_{60}	Casing Blows	Elevation (ft.)	Visual Description and Remarks	Laboratory Testing Results/ AASHTO and Unified Class
0	R1	60/60	0.70 - 5.70	RQD = 86%			NQ-2	46.10	Roller Coned ahead to 0.7 ft bgs. —0.50— Top of Bedrock at Elev. 46.1 ft. R1:Bedrock:Black with white rectangular crystals, hard, porphyritic, BASALT, (intrusive dike). Rock Mass Quality = Good. R1:Core Times (min:sec) 0.7-1.7 ft (5:10) 1.7-2.7 ft (5:00) 2.7-3.7 ft (3:30) 3.7-4.7 ft (3:20) 4.7-5.7 ft (3:15) 100% Recovery	
5								40.90	—5.70— Bottom of Exploration at 5.70 feet below ground surface.	
10										
15										
20										
25										

Remarks:
15.0 ft from Bridge Deck to Ground.

Stratification lines represent approximate boundaries between soil types; transitions may be gradual.
* Water level readings have been made at times and under conditions stated. Groundwater fluctuations may occur due to conditions other than those present at the time measurements were made.

Page 1 of 1   Boring No.: BB-SBSR-201

Maine Department of Transportation — Soil/Rock Exploration Log — US CUSTOMARY UNITS

Project: Somesville Bridge #3412 carries Pine and Market Street over the
Location: Saco-Biddeford, Maine

Boring No.: BB-SBSR-104   WIN: 18233.00

Driller: MaineDOT	Elevation (ft.): 60.5	Auger ID/OD: 5" Solid Stem	
Operator: Enos/Giles/Daggett	Datum: NAVD88	Sampler: Standard Split Spoon	
Logged By: B. Wilder	Rig Type: CME 45C	Hammer Wt./Fall: 140#/30"	
Date Start/Finish: 5/13/13; 08:30-13:00	Drilling Method: Cased Wash Boring	Core Barrel: NQ-2"	
Boring Location: 16+75.7, 9.0 ft Lt.	Casing ID/OD: HW & NW	Water Level*: None Observed	
Hammer Efficiency Factor: 0.756	Hammer Type: Automatic ☒ Hydraulic ☐ Rope & Cathead ☐		

Definitions: D = Split Spoon Sample; MD = Unsuccessful Split Spoon Sample attempt; U = Thin Wall Tube Sample; MU = Unsuccessful Thin Wall Tube Sample attempt; V = Insitu Vane Shear Test, PP = Pocket Penetrometer; MV = Unsuccessful Insitu Vane Shear Test attempt; R = Rock Core Sample; SSA = Solid Stem Auger; HSA = Hollow Stem Auger; RC = Roller Cone; WOH = weight of 140lb. hammer; WOR/C = weight of rods or casing; WO1P = Weight of one person; S_u = Insitu Field Vane Shear Strength (psf); T_v = Pocket Torvane Shear Strength (psf); q_p = Unconfined Compressive Strength (ksf); N-uncorrected = Raw field SPT N-value; Hammer Efficiency Factor = Annual Calibration Value; N_{60} = SPT N-uncorrected corrected for hammer efficiency; N_{60} = (Hammer Efficiency Factor/60%)*N-uncorrected; $S_{u(lab)}$ = Lab Vane Shear Strength (psf); WC = water content, percent; LL = Liquid Limit; PL = Plastic Limit; PI = Plasticity Index; G = Grain Size Analysis; C = Consolidation Test

Depth (ft.)	Sample No.	Pen./Rec. (in.)	Sample Depth (ft.)	Blows (/6 in.) Shear Strength (psf) or RQD (%)	N-uncorrected	N_{60}	Casing Blows	Elevation (ft.)	Visual Description and Remarks	Laboratory Testing Results/ AASHTO and Unified Class
0							SSA	60.13	4.5" Pavement —0.38—	
	1D	24/15	1.00 - 3.00	7/9/10/8	19	24			Brown, moist, medium dense, fine to coarse SAND, trace silt, some gravel, (Fill).	G#266635 A-1-b, SW-SM WC=4.1%
5	2D	24/13	5.00 - 7.00	4/2/4/4	6	8	15		Similar to above, except loose.	
							21			
							38			
							23	51.50	—9.00—	
							17			
10	3D	24/12	10.00 - 12.00	24/56/14/13	70	88			Brown, very wet, very dense, fine to coarse SAND, some gravel, little silt, occasional cobbles.	G#266636 A-1-b, SM WC=11.6%
	R1	36/36	11.50 - 14.50				RC	49.00	—11.50— R1:BOULDER, roller coned with large roller coned through boulder, then dropped in NW Casing.	
								46.00	—14.50—	
15	4D	24/8	15.00 - 17.00	6/11/6/12	17	21	21		Grey brown, wet, medium dense, fine to coarse SAND, some gravel, little silt, with broken rock fragments.	
							33			
							96			
							114			
							78			
20								40.50	—20.00— Bottom of Exploration at 20.00 feet below ground surface. Broke casing, left 5 ft NW Casing in bore hole. Moved to BB-SBSR-104A.	
25										

Remarks:

Stratification lines represent approximate boundaries between soil types; transitions may be gradual.
* Water level readings have been made at times and under conditions stated. Groundwater fluctuations may occur due to conditions other than those present at the time measurements were made.

Page 1 of 1   Boring No.: BB-SBSR-104

Maine Department of Transportation — Soil/Rock Exploration Log — US CUSTOMARY UNITS

Project: Somesville Bridge #3412 carries Pine and Market Street over the
Location: Saco-Biddeford, Maine

Boring No.: BB-SBSR-104A   WIN: 18233.00

Driller: MaineDOT	Elevation (ft.): 60.6	Auger ID/OD: 5" Solid Stem	
Operator: Enos/Giles/Daggett	Datum: NAVD88	Sampler: Standard Split Spoon	
Logged By: B. Wilder	Rig Type: CME 45C	Hammer Wt./Fall: 140#/30"	
Date Start/Finish: 5/13/13-5/14/13	Drilling Method: Cased Wash Boring	Core Barrel: NQ-2"	
Boring Location: 16+78.7, 9.0 ft Lt.	Casing ID/OD: HW	Water Level*: None Observed	
Hammer Efficiency Factor: 0.756	Hammer Type: Automatic ☒ Hydraulic ☐ Rope & Cathead ☐		

Definitions: D = Split Spoon Sample; MD = Unsuccessful Split Spoon Sample attempt; U = Thin Wall Tube Sample; MU = Unsuccessful Thin Wall Tube Sample attempt; V = Insitu Vane Shear Test, PP = Pocket Penetrometer; MV = Unsuccessful Insitu Vane Shear Test attempt; R = Rock Core Sample; SSA = Solid Stem Auger; HSA = Hollow Stem Auger; RC = Roller Cone; WOH = weight of 140lb. hammer; WOR/C = weight of rods or casing; WO1P = Weight of one person; S_u = Insitu Field Vane Shear Strength (psf); T_v = Pocket Torvane Shear Strength (psf); q_p = Unconfined Compressive Strength (ksf); N-uncorrected = Raw field SPT N-value; Hammer Efficiency Factor = Annual Calibration Value; N_{60} = SPT N-uncorrected corrected for hammer efficiency; N_{60} = (Hammer Efficiency Factor/60%)*N-uncorrected; $S_{u(lab)}$ = Lab Vane Shear Strength (psf); WC = water content, percent; LL = Liquid Limit; PL = Plastic Limit; PI = Plasticity Index; G = Grain Size Analysis; C = Consolidation Test

Depth (ft.)	Sample No.	Pen./Rec. (in.)	Sample Depth (ft.)	Blows (/6 in.) Shear Strength (psf) or RQD (%)	N-uncorrected	N_{60}	Casing Blows	Elevation (ft.)	Visual Description and Remarks	Laboratory Testing Results/ AASHTO and Unified Class
0							SSA	60.23	4.5" Pavement —0.38— See BB-SBSR-104 for description of upper 0 to 18.0 feet of soil.	
5										
								51.60	—9.00—	
10										
15							32			
							31			
							11			
							10			
							10			
20	1D	12/10	20.00 - 21.00	8/40	---			40.10	Black, wet, dense, fine to coarse SAND, some gravel, little silt, weathered ROCK in spoon tip. —20.50—	G#266637 A-1-b, SW-SM WC=14.7%
	R1	60/60	21.00 - 26.00	RQD = 52%			NQ-2	39.60	Weathered ROCK. —21.00— Top of Intact Bedrock at Elev. 39.6 ft. R1:Bedrock: Dark grey, fine grained, very hard, cemented, SANDSTONE, with calcite and quartz veins, numerous joints dipping at 20, 30, 40 and 60 degrees, joints are open. (Berwick Formation). Rock Mass Quality = Fair. R1:Core Times (min:sec) 21.0-22.0 ft (5:30) 22.0-23.0 ft (5:40) 23.0-24.0 ft (5:45) 24.0-25.0 ft (3:10) 25.0-26.0 ft (3:35) 100% Recovery	
25	R2	60/58	26.00 - 31.00	RQD = 72%					R2:Bedrock: Similar to R1, (Berwick Formation). Rock Mass Quality = Fair. R2:Core Times (min:sec) 26.0-27.0 ft (5:45) 27.0-28.0 ft (6:50) 28.0-29.0 ft (4:10) 29.0-30.0 ft (3:10) 30.0-31.0 ft (3:35) 97% Recovery	
30								29.60	—31.00— Bottom of Exploration at 31.00 feet below ground surface.	
35										
40										
45										
50										

Remarks:

Stratification lines represent approximate boundaries between soil types; transitions may be gradual.
* Water level readings have been made at times and under conditions stated. Groundwater fluctuations may occur due to conditions other than those present at the time measurements were made.

Page 1 of 1   Boring No.: BB-SBSR-104A

Maine Department of Transportation — Soil/Rock Exploration Log — US CUSTOMARY UNITS

Project: Somesville Bridge #3412 carries Pine and Market Street over the
Location: Saco-Biddeford, Maine

Boring No.: BB-SBSR-202   WIN: 18233.00

Driller: MaineDOT	Elevation (ft.): 61.1	Auger ID/OD: 5" Soild Stem	
Operator: Giles/Daggett	Datum: NAVD88	Sampler: Standard Split Spoon	
Logged By: B. Wilder	Rig Type: CME 45C	Hammer Wt./Fall: 140#/30"	
Date Start/Finish: 4/9/14; 08:00-11:30	Drilling Method: Cased Wash Boring	Core Barrel: NQ-2"	
Boring Location: 16+76.3, 10.9 ft Rt.	Casing ID/OD: NW & HW	Water Level*: 9.0 ft bgs.	
Hammer Efficiency Factor: 0.867	Hammer Type: Automatic ☒ Hydraulic ☐ Rope & Cathead ☐		

Definitions: D = Split Spoon Sample; MD = Unsuccessful Split Spoon Sample attempt; U = Thin Wall Tube Sample; MU = Unsuccessful Thin Wall Tube Sample attempt; V = Insitu Vane Shear Test, PP = Pocket Penetrometer; MV = Unsuccessful Insitu Vane Shear Test attempt; R = Rock Core Sample; SSA = Solid Stem Auger; HSA = Hollow Stem Auger; RC = Roller Cone; WOH = weight of 140lb. hammer; WOR/C = weight of rods or casing; WO1P = Weight of one person; S_u = Insitu Field Vane Shear Strength (psf); T_v = Pocket Torvane Shear Strength (psf); q_p = Unconfined Compressive Strength (ksf); N-uncorrected = Raw field SPT N-value; Hammer Efficiency Factor = Annual Calibration Value; N_{60} = SPT N-uncorrected corrected for hammer efficiency; N_{60} = (Hammer Efficiency Factor/60%)*N-uncorrected; $S_{u(lab)}$ = Lab Vane Shear Strength (psf); WC = water content, percent; LL = Liquid Limit; PL = Plastic Limit; PI = Plasticity Index; G = Grain Size Analysis; C = Consolidation Test

Depth (ft.)	Sample No.	Pen./Rec. (in.)	Sample Depth (ft.)	Blows (/6 in.) Shear Strength (psf) or RQD (%)	N-uncorrected	N_{60}	Casing Blows	Elevation (ft.)	Visual Description and Remarks	Laboratory Testing Results/ AASHTO and Unified Class
0							SSA	60.77	4" Pavement —0.33—	
5	1D	24/17	5.00 - 7.00	12/6/7/9	13	19			Brown, damp, medium dense, fine to coarse SAND, some gravel, trace silt, (Fill).	
								52.30	—8.80— Cobbles or Granite Block, augered thru, set in HW Casing. a40 blows for 0.5 ft.	
							a40			
10							25	50.60	—10.50—	
	2D	21.6/13	11.00 - 12.80	5/6/7/30(3.6")	13	19	66		Brown, wet, medium dense, fine to coarse SAND, some silt, some gravel.	
	R1	15.6/ 15.6	12.80 - 14.10				57	48.30	—12.80— R1: Granite Block, cored thru with large Roller Coned. Set in NW Casing.	
							60	47.00	—14.10—	
15	3D	6/5	14.50 - 15.00	60	---				Grey, wet, dense, fine to coarse SAND, some gravel, trace silt. Cobble from 15.0-15.6 ft bgs.	
							38			
							72			
							70			
	R2	31.2/ 31.2	18.70 - 21.30	RQD = 0%			b100 NQ-2	42.40	b100 blows for 0.7 ft. —18.70— Top of Bedrock at Elev. 42.4 ft. R2:Bedrock: Dark grey, fine grained, very hard, cemented, SANDSTONE, with calcite and quartz veins, numerous open joints. (Berwick Formation). Rock Mass Quality = Very poor. R2:Core Times (min:sec) 18.7-19.7 ft (4:02) 19.7-20.7 ft (5:30) 20.7-21.3 ft (6:00) 100% Recovery	
20								39.80	—21.30— Bottom of Exploration at 21.30 feet below ground surface.	
25										

Remarks:
Granite block moved while coring, tore up core barrel, could not get back down.

Stratification lines represent approximate boundaries between soil types; transitions may be gradual.
* Water level readings have been made at times and under conditions stated. Groundwater fluctuations may occur due to conditions other than those present at the time measurements were made.

Page 1 of 1   Boring No.: BB-SBSR-202

STATE OF MAINE
DEPARTMENT OF TRANSPORTATION
BH-1823(300)X
WIN 18233.00
BRIDGE NO. 3412   BRIDGE PLANS

		BY	DATE
PROJ. MANAGER	J. Kittredge		
DESIGN-DETAILED	G.Gustafson	D. Damren	July 2014
CHECKED-REVIEWED	E. Caswell	-----	Sept. 2014
DESIGN2-DETAILED2	K.MAGUIRE	T.WHITE	JAN 2015
DESIGN3-DETAILED3	-----	-----	-----
REVISIONS 1	-----		-----
REVISIONS 2	-----		-----
REVISIONS 3	-----		-----
REVISIONS 4	-----		-----
FIELD CHANGES	-----		-----

SIGNATURE
P.E. NUMBER
DATE

SOMESVILLE BRIDGE
SACO RIVER
SACO & BIDDEFORD   YORK COUNTY

BORING LOGS

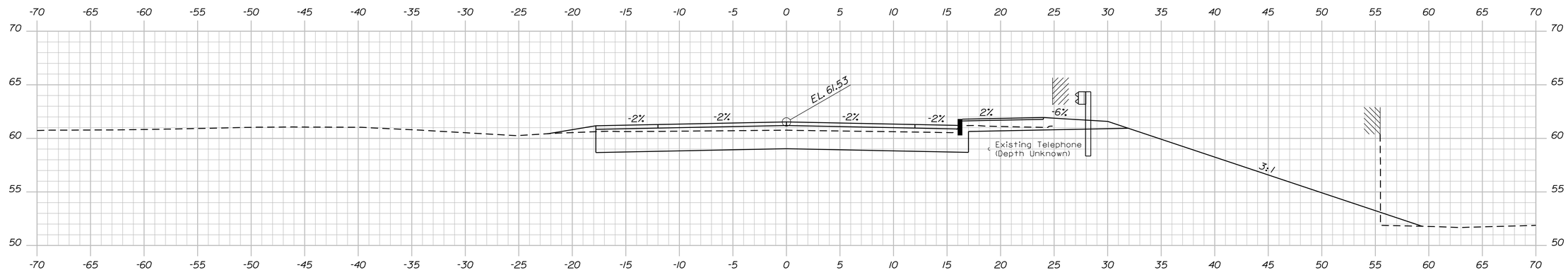

12+90.00

Sta. 12+89.5, 27.5' Rt. to Bridge
Install Terminal End - Single Rail, 6.25 L.F. GR Type 3c @ 25' R.
and Bridge Transition Type "2" @ 25' R.

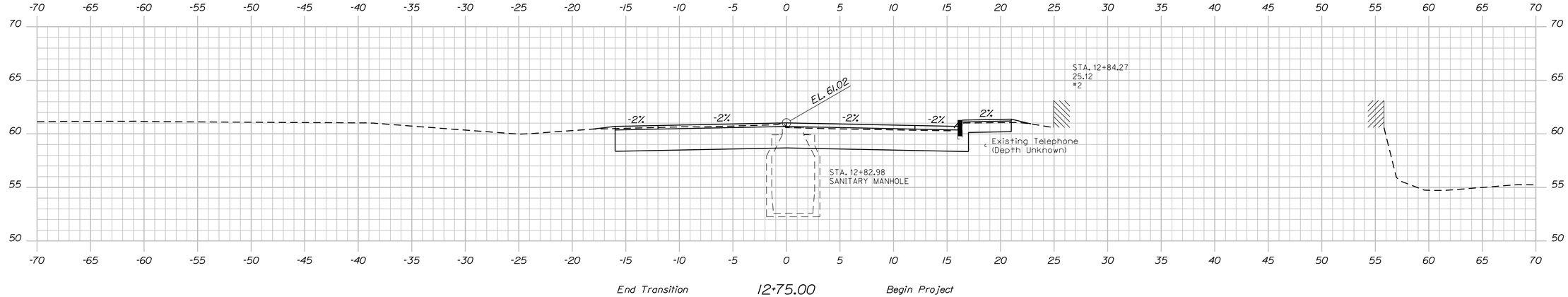

End Transition 12+75.00 Begin Project

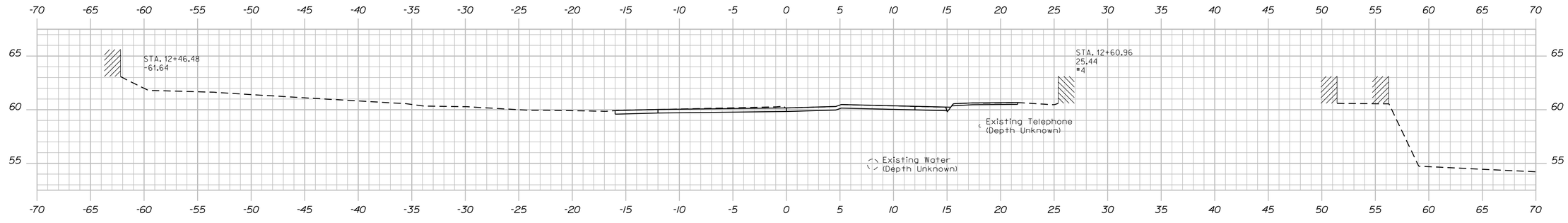

Match Existing Section 12+50.00 Begin Transition

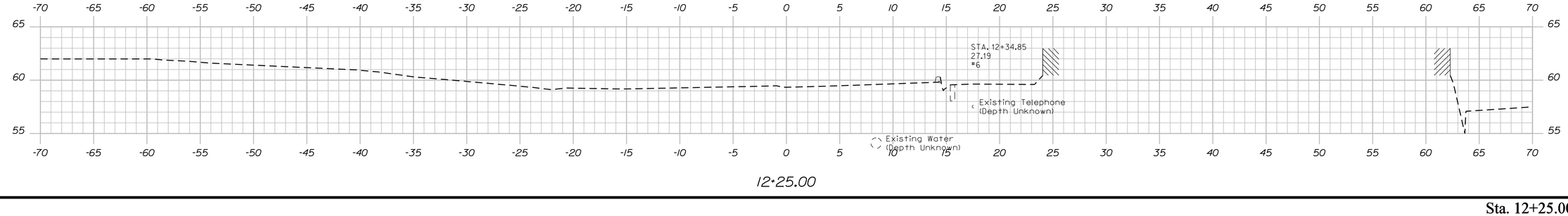

12+25.00

STATE OF MAINE
DEPARTMENT OF TRANSPORTATION

BH-1823(300)X

WIN 18233.00

BRIDGE NO. 3412

BRIDGE PLANS

PROJ. MANAGER	J. Kittredge		
DESIGN-DETAILED	G. Custafson	D. Domren	July 2014
CHECKED-REVIEWED	E. Caswell	-----	Sept. 2014
DESIGN2-DETAILED2	-----	-----	-----
DESIGN3-DETAILED3	-----	-----	-----
REVISIONS 1	-----	-----	-----
REVISIONS 2	-----	-----	-----
REVISIONS 3	-----	-----	-----
REVISIONS 4	-----	-----	-----
FIELD CHANGES	-----	-----	-----

SIGNATURE

P.E. NUMBER

DATE

SOMESVILLE BRIDGE
SACO RIVER
SACO & BIDDEFORD YORK COUNTY

CROSS SECTIONS

SHEET NUMBER

11

OF 53

Sta. 12+25.00 to Sta. 12+75.00

Filename: ...\MSTA\011_Xsect_12+25_001.dgn Division: BRIDGE Username: dana.domren Date:2/3/2015

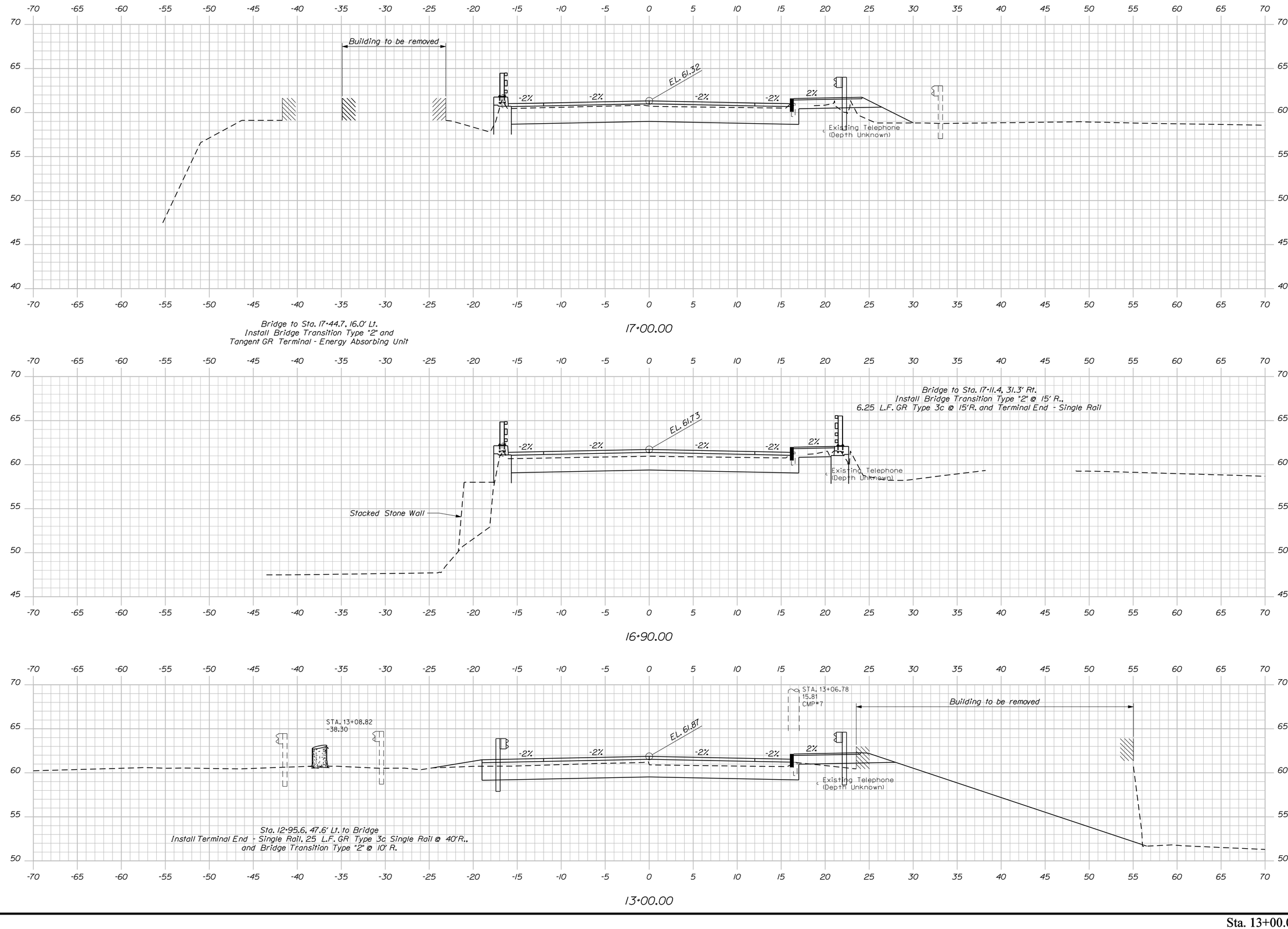

STATE OF MAINE
DEPARTMENT OF TRANSPORTATION

BH-1823(300)X

WIN 18233.00

BRIDGE NO. 3412

BRIDGE PLANS

	BY	DATE
PROJ. MANAGER	J. Kittredge	
DESIGN-DETAILED	G. Gustafson	July 2014
CHECKED-REVIEWED	E. Caswell	Sept. 2014
DESIGN2-DETAILED2	-----	-----
DESIGN3-DETAILED3	-----	-----
REVISIONS 1	-----	-----
REVISIONS 2	-----	-----
REVISIONS 3	-----	-----
REVISIONS 4	-----	-----
FIELD CHANGES	-----	-----

SIGNATURE

P.E. NUMBER

DATE

SOMESVILLE BRIDGE
SACO RIVER
SACO & BIDDEFORD YORK COUNTY

CROSS SECTIONS

SHEET NUMBER

12

OF 53

Sta. 13+00.00 to Sta. 17+00.00

Filename: ...\MSTA\012_Xsect_13+00_002.dgn Division: BRIDGE Username: dana.damren Date:2/3/2015

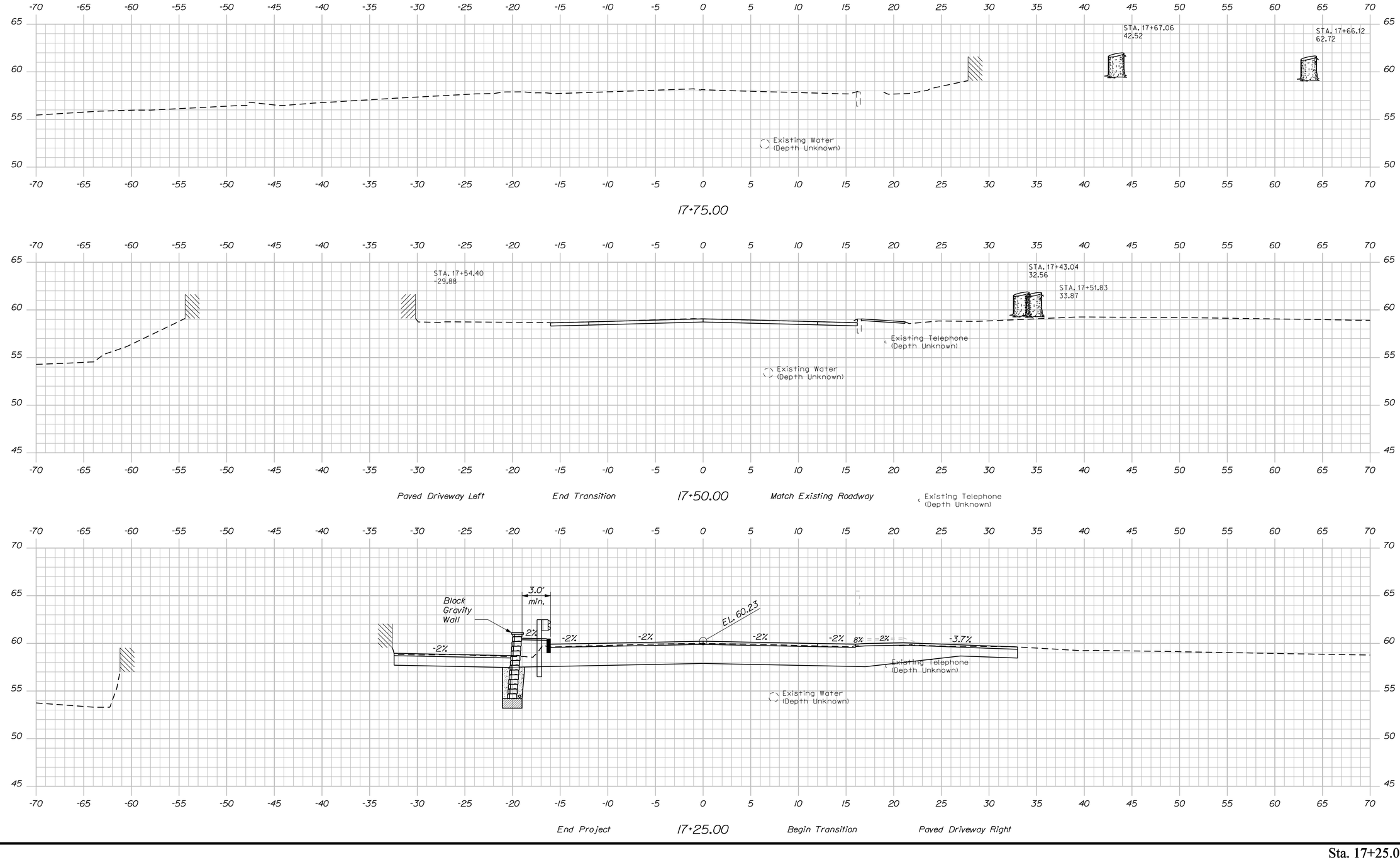

STATE OF MAINE
DEPARTMENT OF TRANSPORTATION

BH-1823(300)X

WIN 18233.00

BRIDGE NO. 3412

BRIDGE PLANS

	BY	DATE
PROJ. MANAGER	J. Kittredge	
DESIGN-DETAILED	G. Gustafson	July 2014
CHECKED-REVIEWED	D. Damren	Sept. 2014
DESIGN2-DETAILED2	E. Caswell	-----
DESIGN3-DETAILED3	-----	-----
REVISIONS 1	-----	-----
REVISIONS 2	-----	-----
REVISIONS 3	-----	-----
REVISIONS 4	-----	-----
FIELD CHANGES	-----	-----

SIGNATURE

P.E. NUMBER

DATE

SOMESVILLE BRIDGE
SACO RIVER
SACO & BIDDEFORD — YORK COUNTY

CROSS SECTIONS

SHEET NUMBER

13

OF 53

Sta. 17+25.00 to Sta. 17+75.00

Filename: ...\MSTA\013_Xsect_17+50_003.dgn Division: BRIDGE Username: dana.damren Date:2/3/2015

Filename: ...\014_Abutment_No. 1 Seal Plan.dgn Division: BRIDGE Username: dana.damren Date:2/3/2015

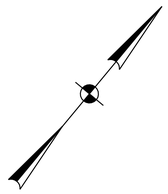

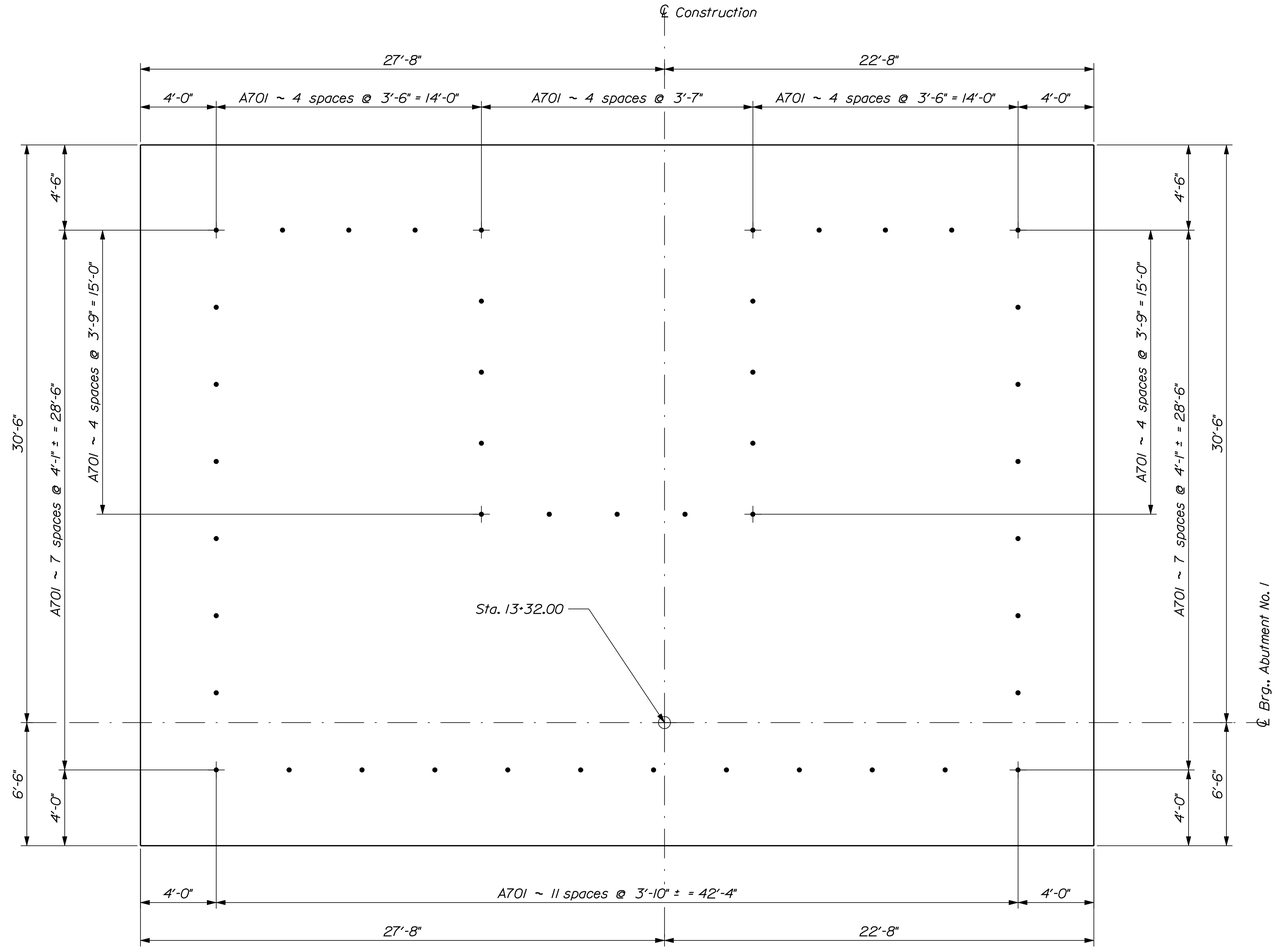

ABUTMENT NO. 1 SEAL PLAN

Flow

SEAL COFFERDAM NOTES

1. When sheet piling is used for seal cofferdams, appropriate rolled corners shall be used, and the inside face of the sheet piling shall be at or outside of the seal concrete dimensions shown.

2. The seal concrete placement dimensions shown represent the minimum seal size necessary to meet design requirements and are not based on the use of any particular sheet pile section.

3. The horizontal pay limit for seal concrete will be to the dimensions shown on the plans. No additional payment will be made for concrete placed outside these limits.

4. The depth of the seal is set for a water elevation of 51.00. If the water elevation at the time of construction is higher, the depth of the seal shall be adjusted.

5. The method of placing dowels in the seal concrete shall be approved by the Resident.

STATE OF MAINE
DEPARTMENT OF TRANSPORTATION

BH-1823(300)X

WIN 18233.00

BRIDGE NO. 3412 BRIDGE PLANS

PROJ. MANAGER	J. Kittredge	BY	DATE
DESIGN-DETAILED	R. Noous	D. Damren	July 2014
CHECKED-REVIEWED	E. Caswell	-----	Sept. 2014
DESIGN2-DETAILED2	-----	-----	-----
DESIGN3-DETAILED3	-----	-----	-----
REVISIONS 1	-----	-----	-----
REVISIONS 2	-----	-----	-----
REVISIONS 3	-----	-----	-----
REVISIONS 4	-----	-----	-----
FIELD CHANGES	-----	-----	-----

SIGNATURE

P.E. NUMBER

DATE

SOMESVILLE BRIDGE
SACO RIVER
SACO & BIDDEFORD YORK COUNTY

ABUTMENT NO. 1 SEAL PLAN

SHEET NUMBER

14

OF 53

Filename: ...\015_Abutment_No.1 Footing Plan.dgn Division: BRIDGE Username: dana.damren Date:2/10/2015

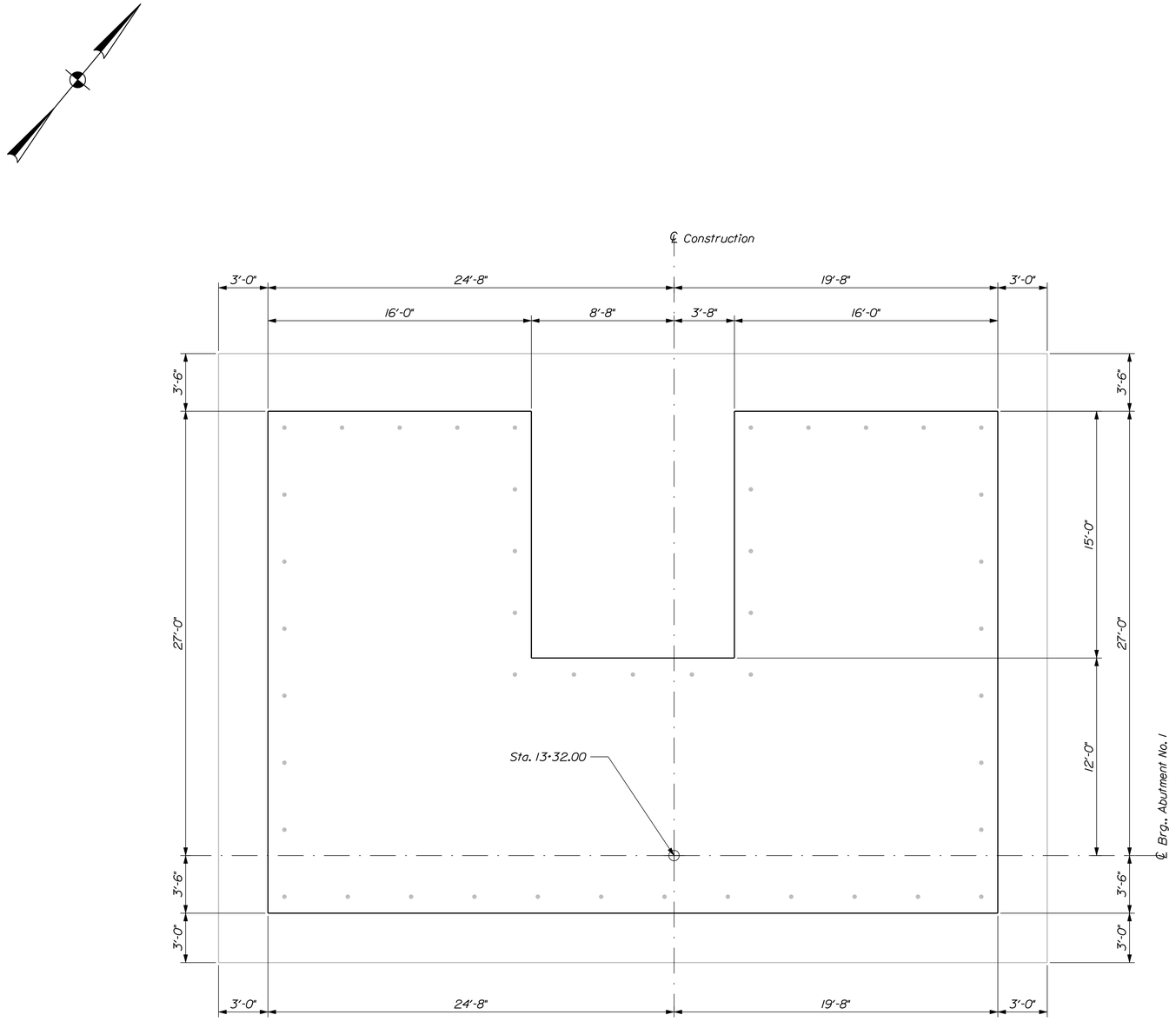

ABUTMENT NO. 1 FOOTING PLAN

Flow →

ABUTMENT NOTES

1. The maximum factored applied footing pressure is 11.5 ksf.

2. Foundation concrete shall be placed on bedrock cleaned of all loose rock and soil. The bedrock subgrade shall be confirmed to be relatively level. Where the bedrock surface slope exceeds 6H:1V, the bedrock surface shall be benched to create level steps or made completely level.

3. When bedrock protrudes above the bottom of footing shown, the footing may be raised and the vertical reinforcing may be cut in the field with the approval of the Resident. The minimum footing elevations are shown on the plans and shall not be lowered without prior approval of the Engineer of Record. Payment for adjusting the footing elevations and reinforcing steel will be considered incidental to the related Contract Items. No separate payment will be made.

4. The Utility Conduits passing through the abutment backwalls shall be either cast in place or run through a utility blockout, at the option of the Contractor. Additional reinforcing steel shall be provided around the Utility Conduit for either option, as shown on the plans. If blockouts are used, all voids around the Conduits shall be fully grouted with a MaineDOT pre-approved product.

5. Reinforcing steel shall have a minimum concrete cover of 2 inches in the walls and 3 inches in the footings unless otherwise noted.

6. Place 4-in. diameter drains in the breastwall and wingwalls at 10-ft maximum spacing. The exact location will be determined by the Resident.

7. Bridge pedestal elevations shown are based on bearing heights given in the Disc Bearing Design Table. The actual pedestal elevations shall be adjusted to accommodate the bearings supplied by the Contractor. Adjustments to the pedestal elevations shall be made, if necessary, according to the provisions on the Disc Bearings Sheet.

8. Provide 4 additional stirrups in the curbs at each Transition Barrier location.

9. The Contractor shall install Transition Barrier vertical closed stirrups, as shown in Standard Details Section 526, prior to the placement of the curb concrete.

10. Cover joints where waterstops are not required in accordance with Standard Details Section 502.

11. Construct French Drains behind the abutments and wingwalls in accordance with Standard Specifications Section 512, French Drains.

12. Abutments, wingwalls and their footings shall be backfilled with Granular Borrow. Pay limits will be the structural excavation limits in cut areas and a vertical plane located 10 feet behind the walls in fill areas.

13. Payment for the top (curb) portions of the return wingwalls will be made under Item No. 502.49, Structural Concrete Curbs and Sidewalks.

14. Abutment No. 2 Seal shall be Class "A" concrete.

15. Abutment concrete placed above the approach slab seat shall be Class "LP".

PLAIN REINFORCING STEEL MINIMUM LAP SPLICE LENGTHS	
Bar Size	Minimum Lap Splice
#5	2'-2"
#6	2'-7"
Note: When splicing bars of 2 different sizes, use the splice length for the smaller bar.	

STATE OF MAINE
DEPARTMENT OF TRANSPORTATION

BH-1823(300)X

WIN 18233.00

BRIDGE NO. 3412

BRIDGE PLANS

			DATE
PROJ. MANAGER	J. Kittredge	BY	
DESIGN-DETAILED	R. Noous	D. Damren	July 2014
CHECKED-REVIEWED	E. Coswell	-----	Sept. 2014
DESIGN2-DETAILED2	-----	-----	-----
DESIGN3-DETAILED3	-----	-----	-----
REVISIONS 1	-----	-----	-----
REVISIONS 2	-----	-----	-----
REVISIONS 3	-----	-----	-----
REVISIONS 4	-----	-----	-----
FIELD CHANGES	-----	-----	-----

SIGNATURE

P.E. NUMBER

DATE

SOMESVILLE BRIDGE
SACO RIVER
SACO & BIDDEFORD YORK COUNTY

ABUT. NO. 1 FOOTING PLAN

SHEET NUMBER

15

OF 53

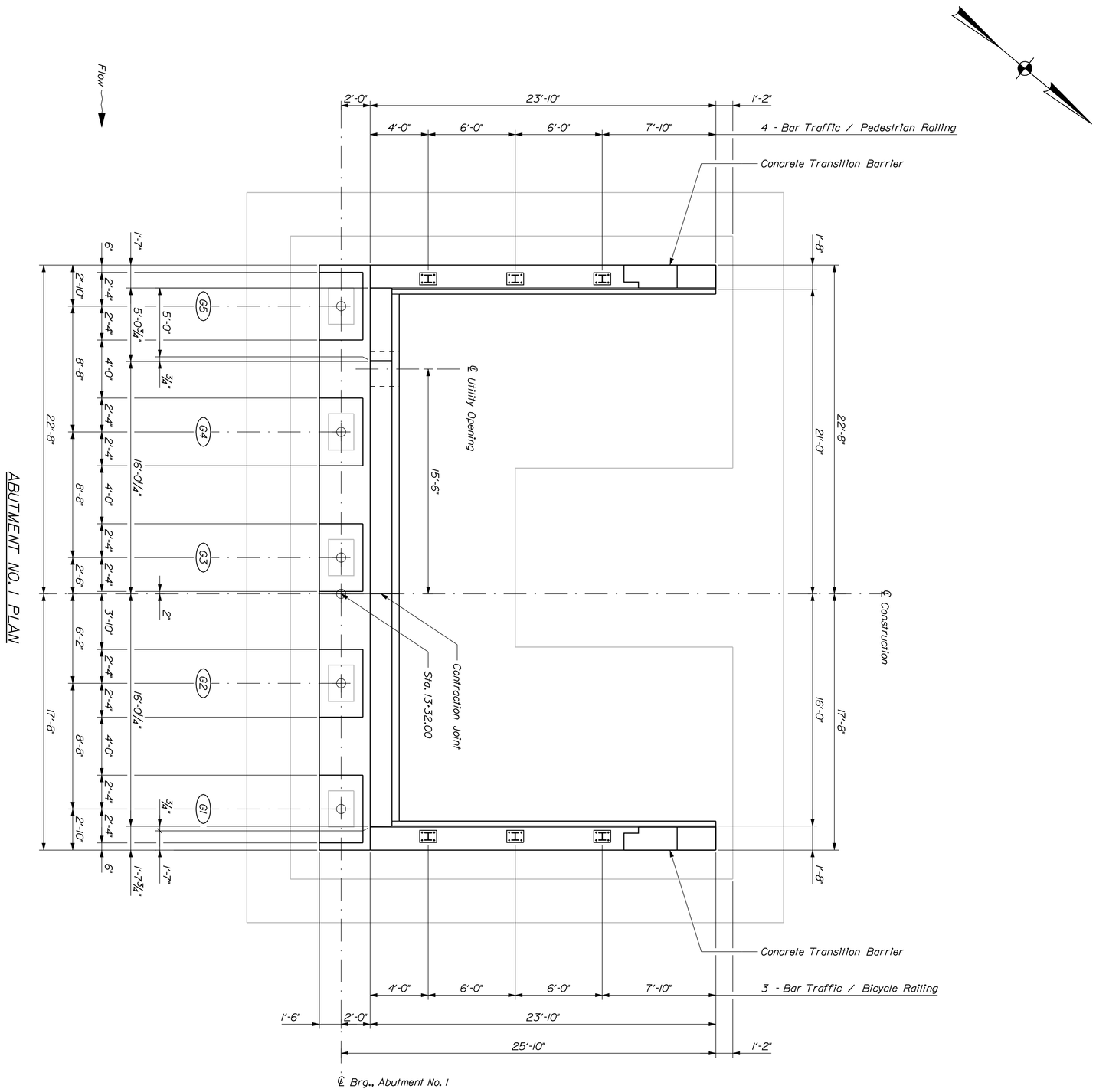

ABUTMENT NO. 1 PLAN

SOMESVILLE BRIDGE
SACO RIVER
SACO & BIDDEFORD YORK COUNTY

ABUTMENT NO. 1 PLAN

SHEET NUMBER 16 OF 53

PROJ. MANAGER	J. Kittredge	BY	DATE
DESIGN-DETAILED	R. Naous	D. Damren	July 2014
CHECKED-REVIEWED	E. Caswell	_____	Sept. 2014
DESIGN2-DETAILED2	_____	_____	_____
DESIGN3-DETAILED3	_____	_____	_____
REVISIONS 1	_____		_____
REVISIONS 2	_____		_____
REVISIONS 3	_____		_____
REVISIONS 4	_____		_____
FIELD CHANGES	_____		_____

SIGNATURE

P.E. NUMBER

DATE

STATE OF MAINE
DEPARTMENT OF TRANSPORTATION

BH-1823(300)X

BRIDGE NO. 3412 WIN 18233.00 BRIDGE PLANS

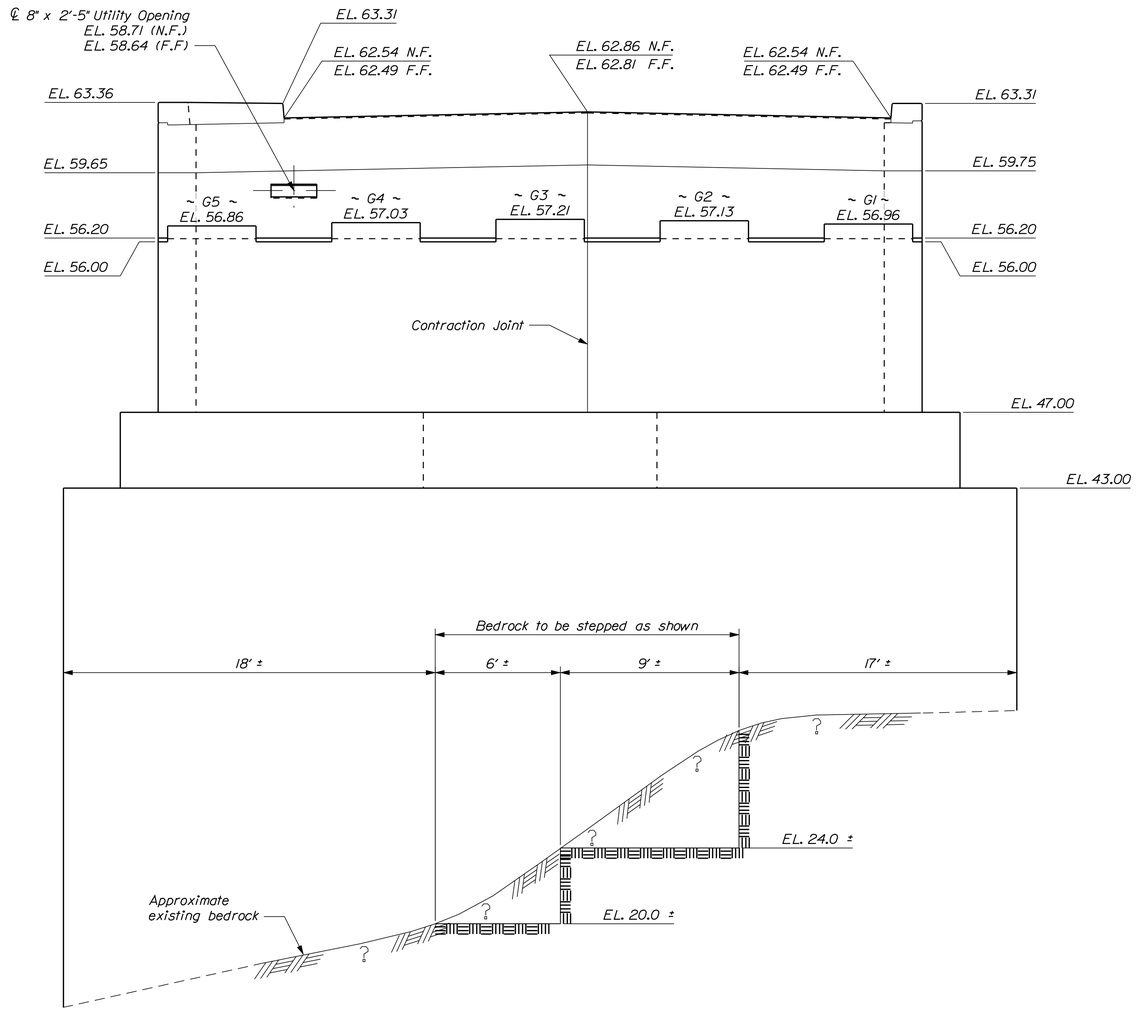

ABUTMENT NO. 1 ELEVATION

LEGEND

N.F. = Near Face
F.F. = Far Face

Filename: ...\017_Abutment_No. 1 Elevation.dgn Division: BRIDGE Username: dona.damren Date:2/3/2015

STATE OF MAINE
DEPARTMENT OF TRANSPORTATION

BH-1823(300)X

WIN 18233.00

BRIDGE NO. 3412

BRIDGE PLANS

PROJ. MANAGER	J. Kittredge		
DESIGN-DETAILED	R. Noous	D. Damren	July 2014
CHECKED-REVIEWED	E. Caswell	------	Sept. 2014
DESIGN2-DETAILED2	------	------	------
DESIGN3-DETAILED3	------	------	------
REVISIONS 1	------	------	------
REVISIONS 2	------	------	------
REVISIONS 3	------	------	------
REVISIONS 4	------	------	------
FIELD CHANGES	------	------	------

SIGNATURE

P.E. NUMBER

DATE

SOMESVILLE BRIDGE
SACO RIVER
SACO & BIDDEFORD YORK COUNTY

ABUTMENT NO. 1 ELEVATION

SHEET NUMBER

17

OF 53

Filename: ...\018_Abutment_No. 1 Wingwall Elevations.dgn Division: BRIDGE Username: dana.damren Date:2/3/2015

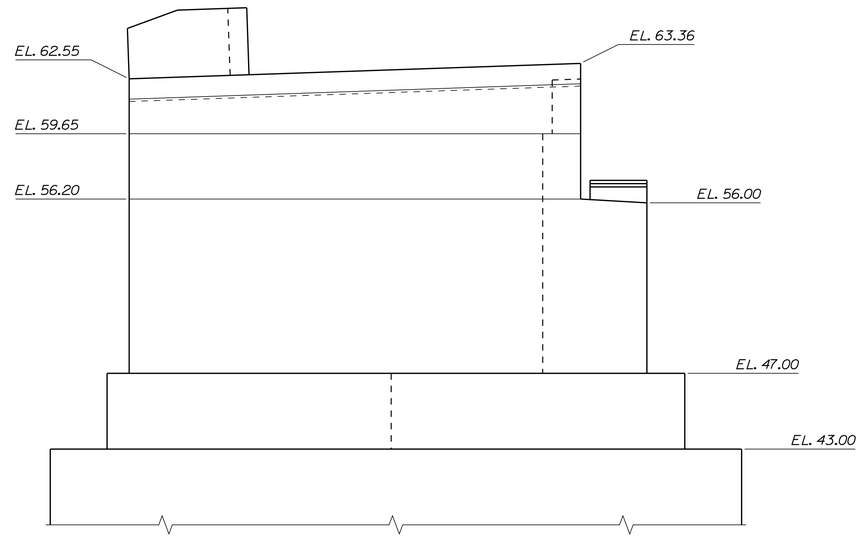

ABUTMENT NO. 1 UPSTREAM WINGWALL ELEVATION

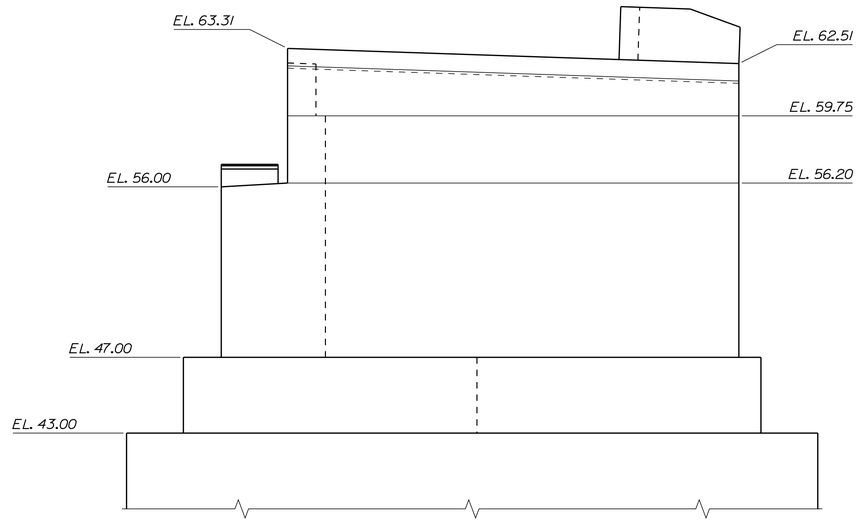

ABUTMENT NO. 1 DOWNSTREAM WINGWALL ELEVATION

STATE OF MAINE
DEPARTMENT OF TRANSPORTATION

BH-1823(300)X

WIN 18233.00

BRIDGE NO. 3412 BRIDGE PLANS

	BY	DATE
PROJ. MANAGER	J. Kittredge	
DESIGN-DETAILED	R. Noous	July 2014
CHECKED-REVIEWED	E. Caswell	Sept. 2014
DESIGN2-DETAILED2	-----	-----
DESIGN3-DETAILED3	-----	-----
REVISIONS 1	-----	-----
REVISIONS 2	-----	-----
REVISIONS 3	-----	-----
REVISIONS 4	-----	-----
FIELD CHANGES	-----	-----

SIGNATURE

P.E. NUMBER

DATE

SOMESVILLE BRIDGE
SACO RIVER
SACO & BIDDEFORD YORK COUNTY

ABUT. NO. 1 WINGWALL ELEVS.

SHEET NUMBER

18

OF 53

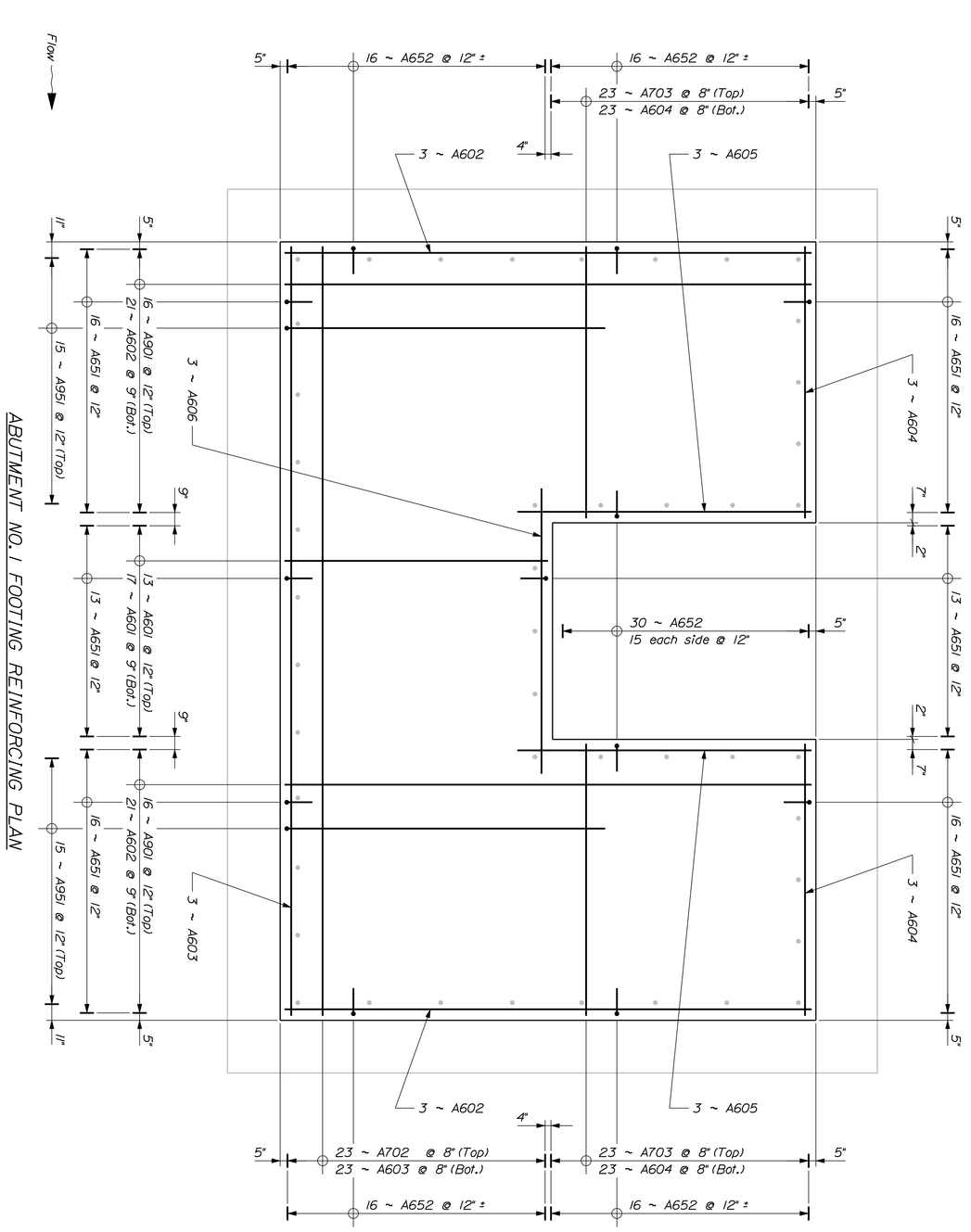

ABUTMENT NO.1 FOOTING REINFORCING PLAN

SOMESVILLE BRIDGE
SACO RIVER
SACO & BIDDEFORD YORK COUNTY

ABUT. NO. 1 FTG. REINF. PLAN

PROJ. MANAGER	J. Kittredge	BY	DATE
DESIGN-DETAILED	R. Naous	D. Damren	July 2014
CHECKED-REVIEWED	E. Caswell	_____	Sept. 2014
DESIGN2-DETAILED2	_____	_____	_____
DESIGN3-DETAILED3	_____	_____	_____
REVISIONS 1	_____		_____
REVISIONS 2	_____		_____
REVISIONS 3	_____		_____
REVISIONS 4	_____		_____
FIELD CHANGES	_____		_____

SIGNATURE

P.E. NUMBER

DATE

STATE OF MAINE
DEPARTMENT OF TRANSPORTATION

BH-1823(300)X

BRIDGE NO. 3412 WIN 18233.00 BRIDGE PLANS

SHEET NUMBER 19 OF 53

Filename: ...\020_Abutment_No.1 Reinforcing Elevation.dgn Division: BRIDGE Username: dana.damren Date:2/10/2015

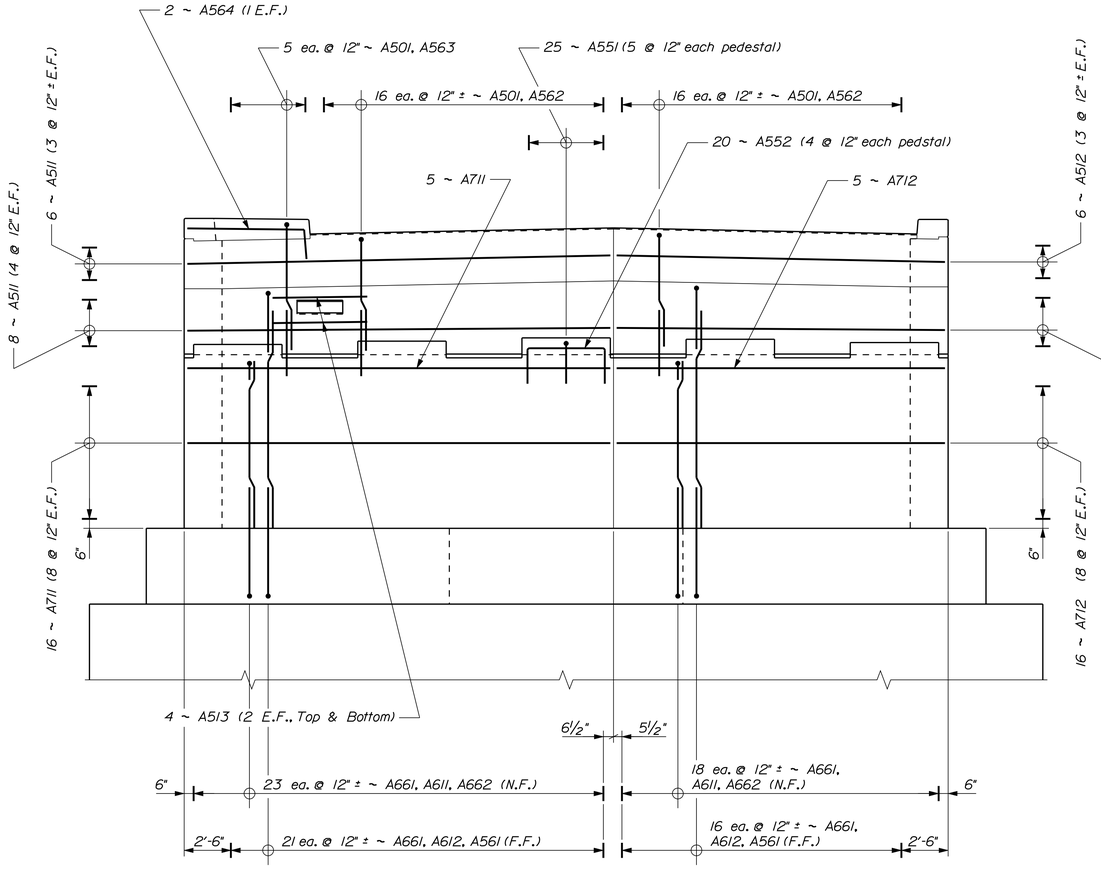

ABUTMENT NO. 1 REINFORCING ELEVATION

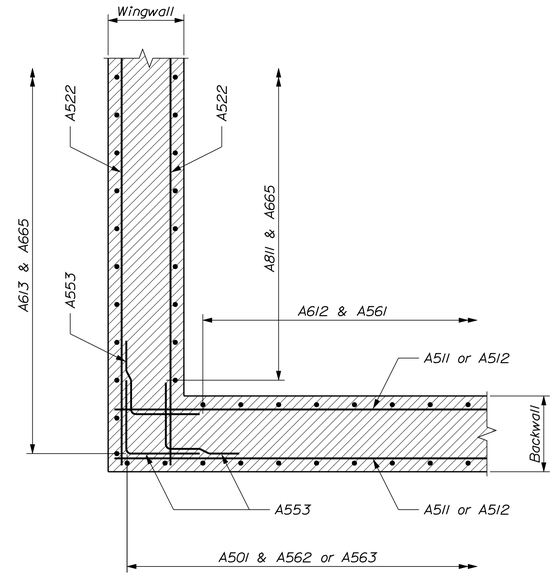

ABUTMENT CORNER REINFORCING
Horizontal Section through Backwall
Upstream corner shown; downstream corner similar

ABUTMENT CORNER REINFORCING
Horizontal Section through Breastwall
Upstream corner shown; downstream corner similar

LEGEND

N.F. = Near Face
F.F. = Far Face
E.F. = Each Face

STATE OF MAINE
DEPARTMENT OF TRANSPORTATION

BH-1823(300)X

WIN 18233.00

BRIDGE NO. 3412

BRIDGE PLANS

PROJ. MANAGER	J. Kittredge		
DESIGN-DETAILED	R. Noous	D. Damren	July 2014
CHECKED-REVIEWED	E. Caswell	-----	Sept. 2014
DESIGN2-DETAILED2	-----	-----	-----
DESIGN3-DETAILED3	-----	-----	-----
REVISIONS 1	-----	-----	-----
REVISIONS 2	-----	-----	-----
REVISIONS 3	-----	-----	-----
REVISIONS 4	-----	-----	-----
FIELD CHANGES	-----	-----	-----

SIGNATURE

P.E. NUMBER

DATE

SOMESVILLE BRIDGE
SACO RIVER
SACO & BIDDEFORD YORK COUNTY

ABUT. NO. 1 REINF. ELEVATION

SHEET NUMBER

20

OF 53

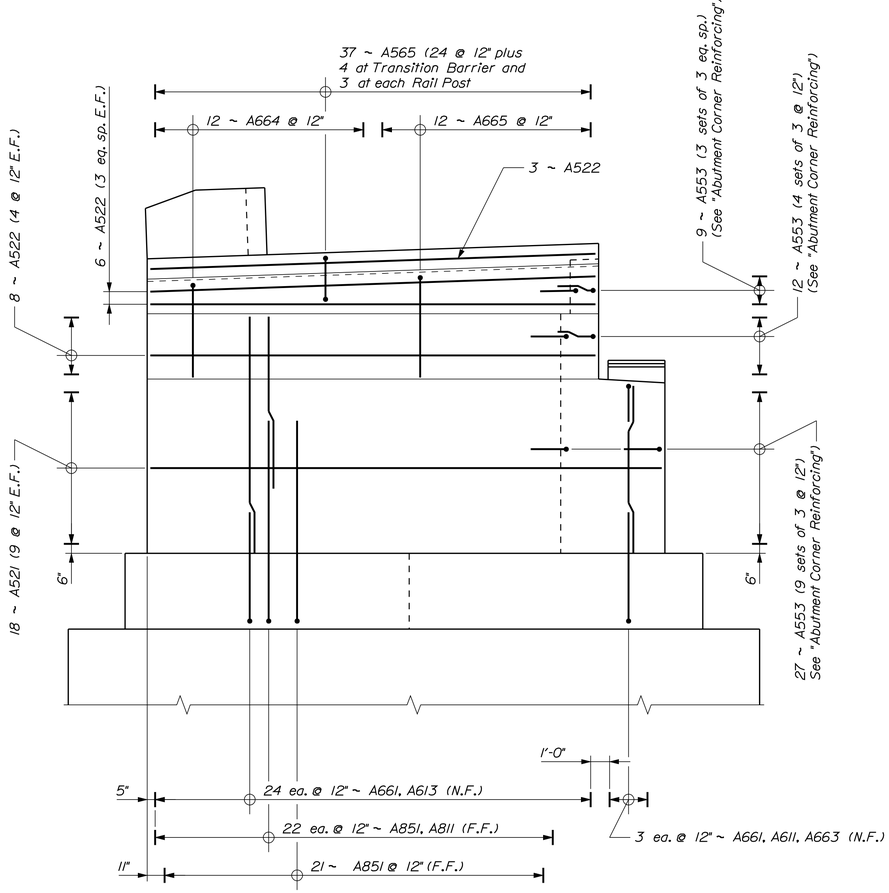

ABUTMENT NO. 1 UPSTREAM WINGWALL REINFORCING ELEVATION

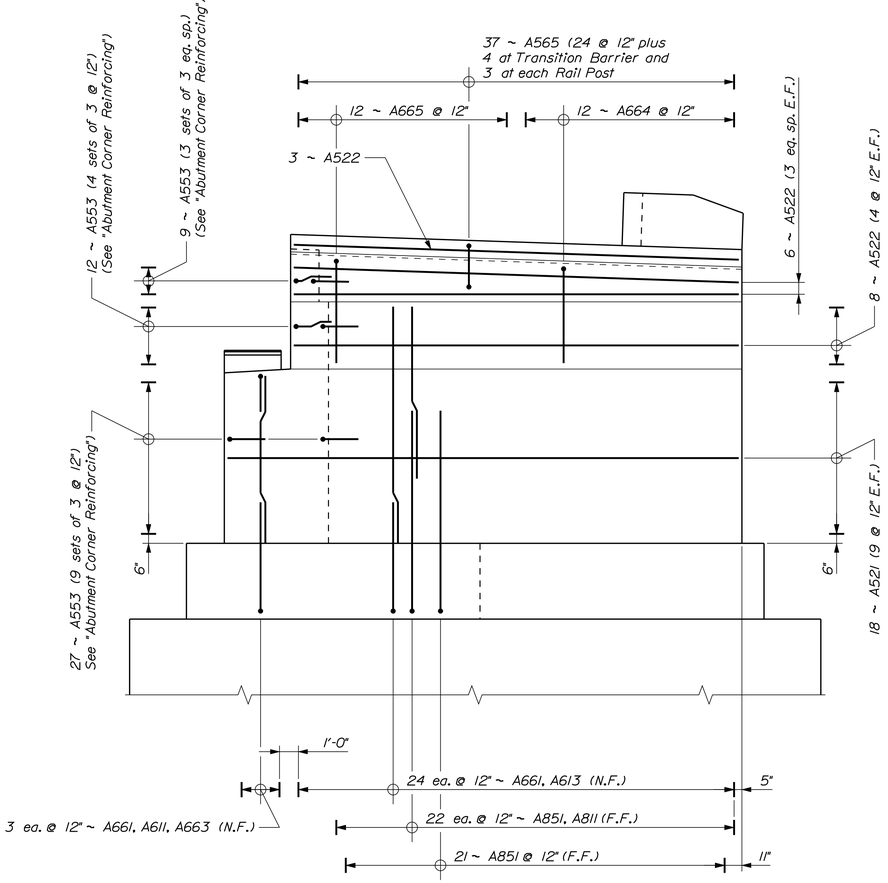

ABUTMENT NO. 1 DOWNSTREAM WINGWALL REINFORCING ELEVATION

LEGEND

N.F. = Near Face
F.F. = Far Face
E.F. = Each Face

STATE OF MAINE
DEPARTMENT OF TRANSPORTATION

BH-1823(300)X

WIN 18233.00

BRIDGE NO. 3412

BRIDGE PLANS

		BY	DATE
PROJ. MANAGER	J. Kilty-edge		
DESIGN-DETAILED	R. Noous	D. Damren	July 2014
CHECKED-REVIEWED	E. Caswell	-----	Sept. 2014
DESIGN2-DETAILED2	-----	-----	-----
DESIGN3-DETAILED3	-----	-----	-----
REVISIONS 1	-----	-----	-----
REVISIONS 2	-----	-----	-----
REVISIONS 3	-----	-----	-----
REVISIONS 4	-----	-----	-----
FIELD CHANGES	-----	-----	-----

SIGNATURE

P.E. NUMBER

DATE

SOMESVILLE BRIDGE
SACO RIVER
SACO & BIDDEFORD YORK COUNTY

ABUT. NO. 1 WINGWALL REINF.

SHEET NUMBER

21

OF 53

Filename: ...\021_Abutment_No. 1 Wingwall Reinforcing Elevation.dgn Username: dona.damren Date:2/10/2015

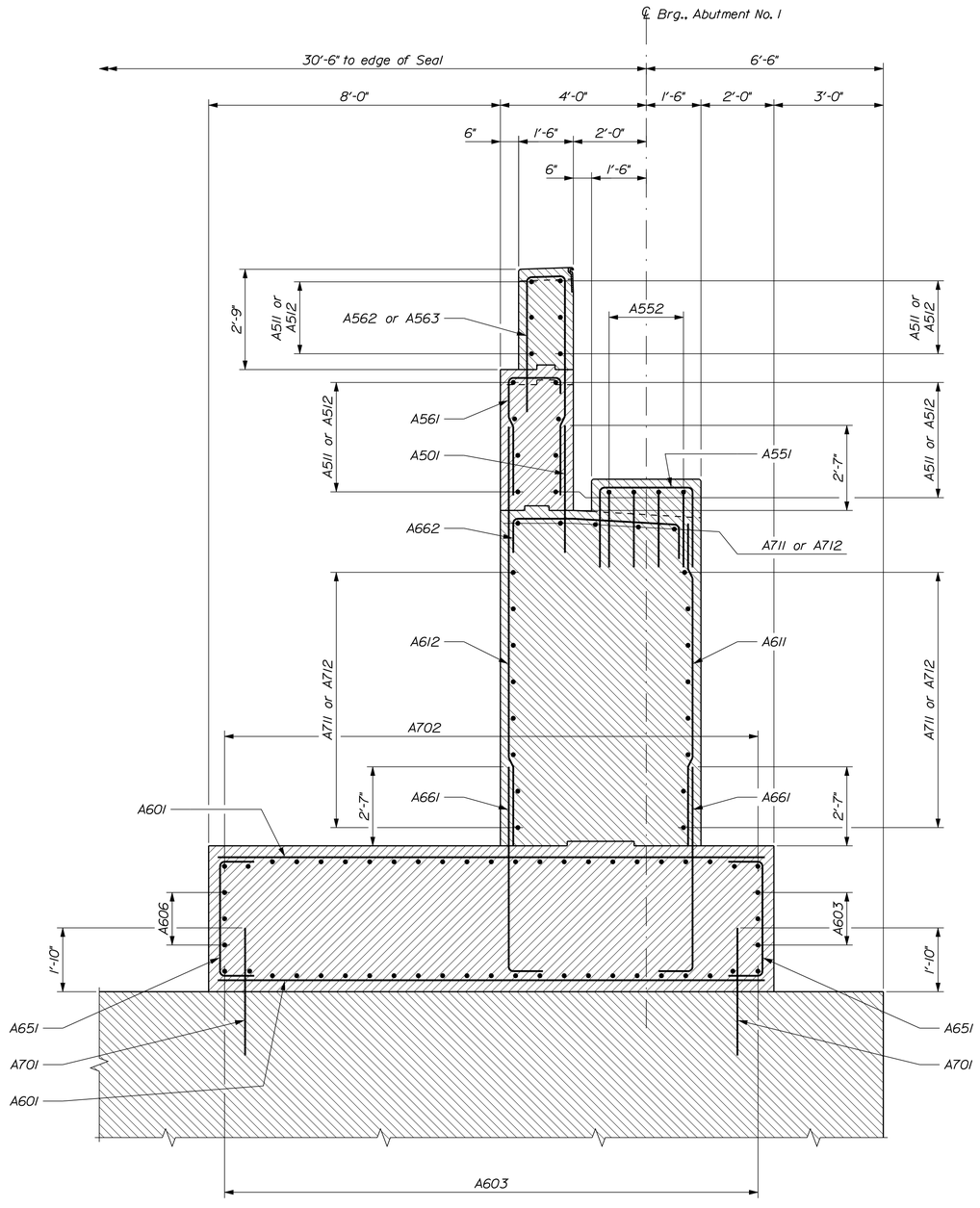

ABUTMENT NO. 1 BREASTWALL SECTION

Section between Wingwall Footings & through concrete pedestal

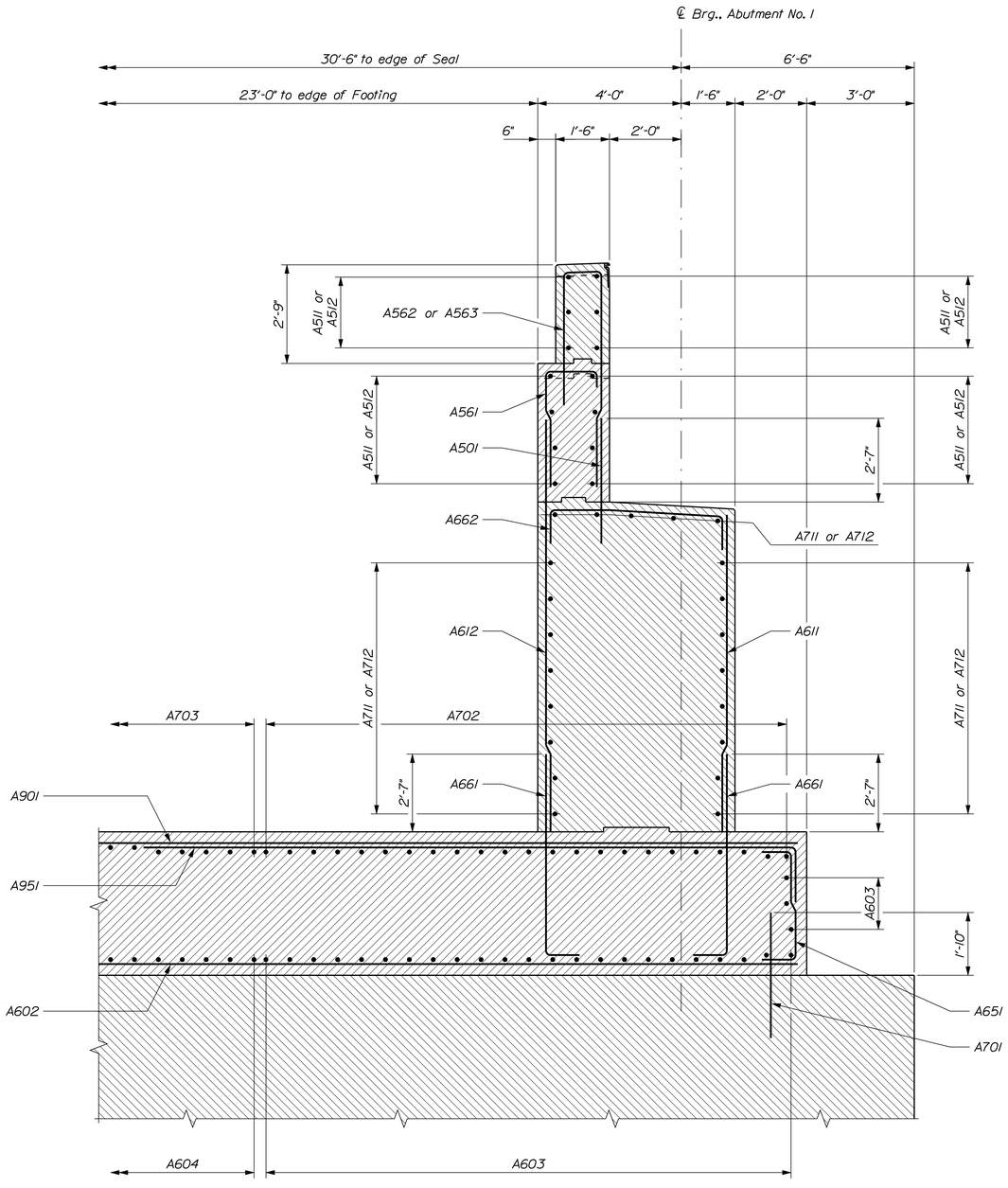

ABUTMENT NO. 1 BREASTWALL SECTION

Section through Wingwall Footings & between concrete pedestals

STATE OF MAINE
DEPARTMENT OF TRANSPORTATION

BH-1823(300)X

WIN 18233.00

BRIDGE NO. 3412

BRIDGE PLANS

			DATE
PROJ. MANAGER	J. Kittredge	BY	
DESIGN-DETAILED	R. Noous	D. Damren	July 2014
CHECKED-REVIEWED	E. Caswell	-----	Sept. 2014
DESIGN2-DETAILED2	-----	-----	-----
DESIGN3-DETAILED3	-----	-----	-----
REVISIONS 1	-----	-----	-----
REVISIONS 2	-----	-----	-----
REVISIONS 3	-----	-----	-----
REVISIONS 4	-----	-----	-----
FIELD CHANGES	-----	-----	-----

SIGNATURE

P.E. NUMBER

DATE

SOMESVILLE BRIDGE
SACO RIVER
SACO & BIDDEFORD — YORK COUNTY

ABUTMENT NO. 1 SECTIONS

SHEET NUMBER

22

OF 53

Filename: ...\022_AbutmenI_No. 1 Sections.dgn Division: BRIDGE Username: dona.damren Date:2/10/2015

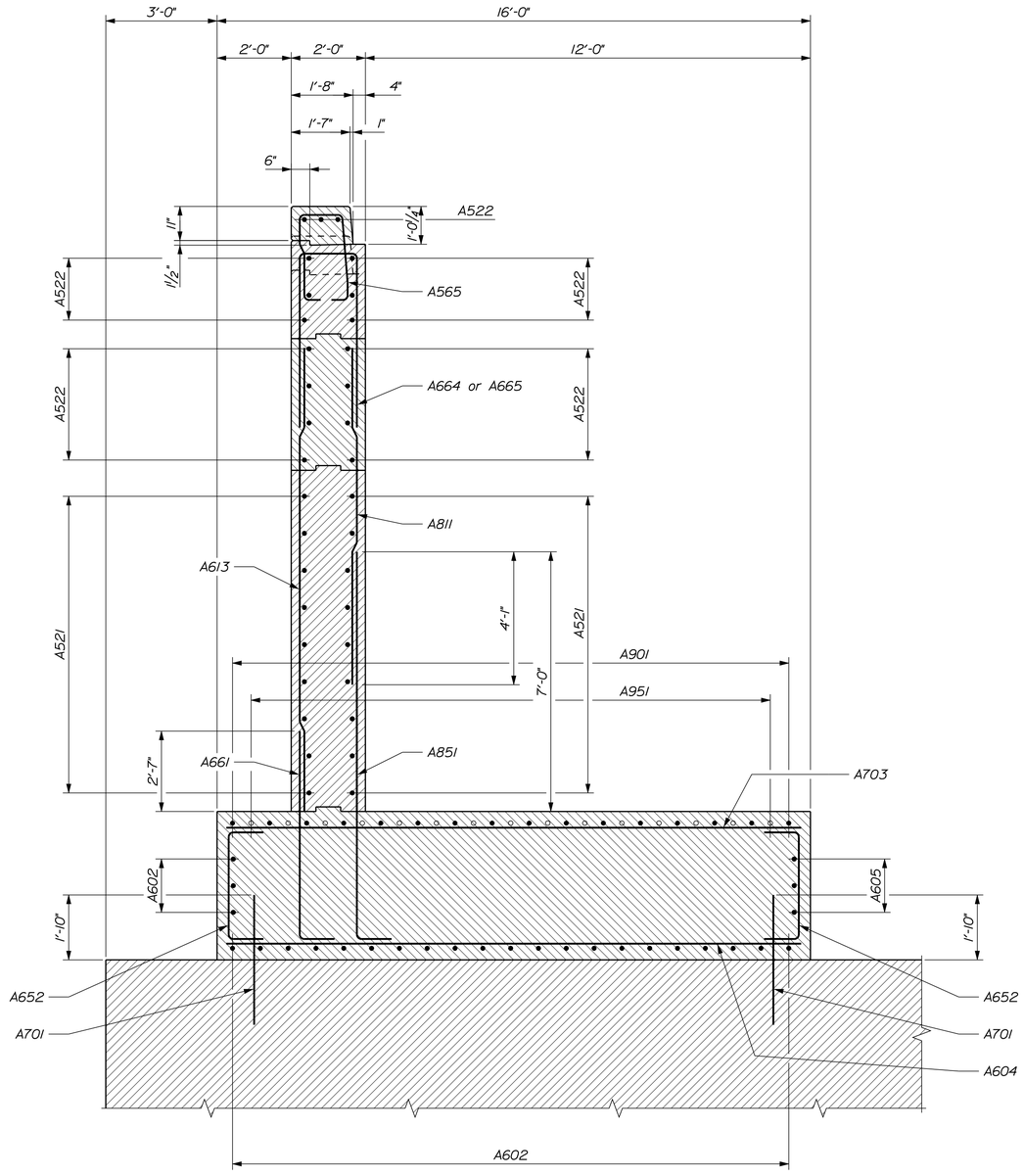

ABUTMENT NO. 1 DOWNSTREAM WINGWALL SECTION

Curb side ~ Looking Upstation

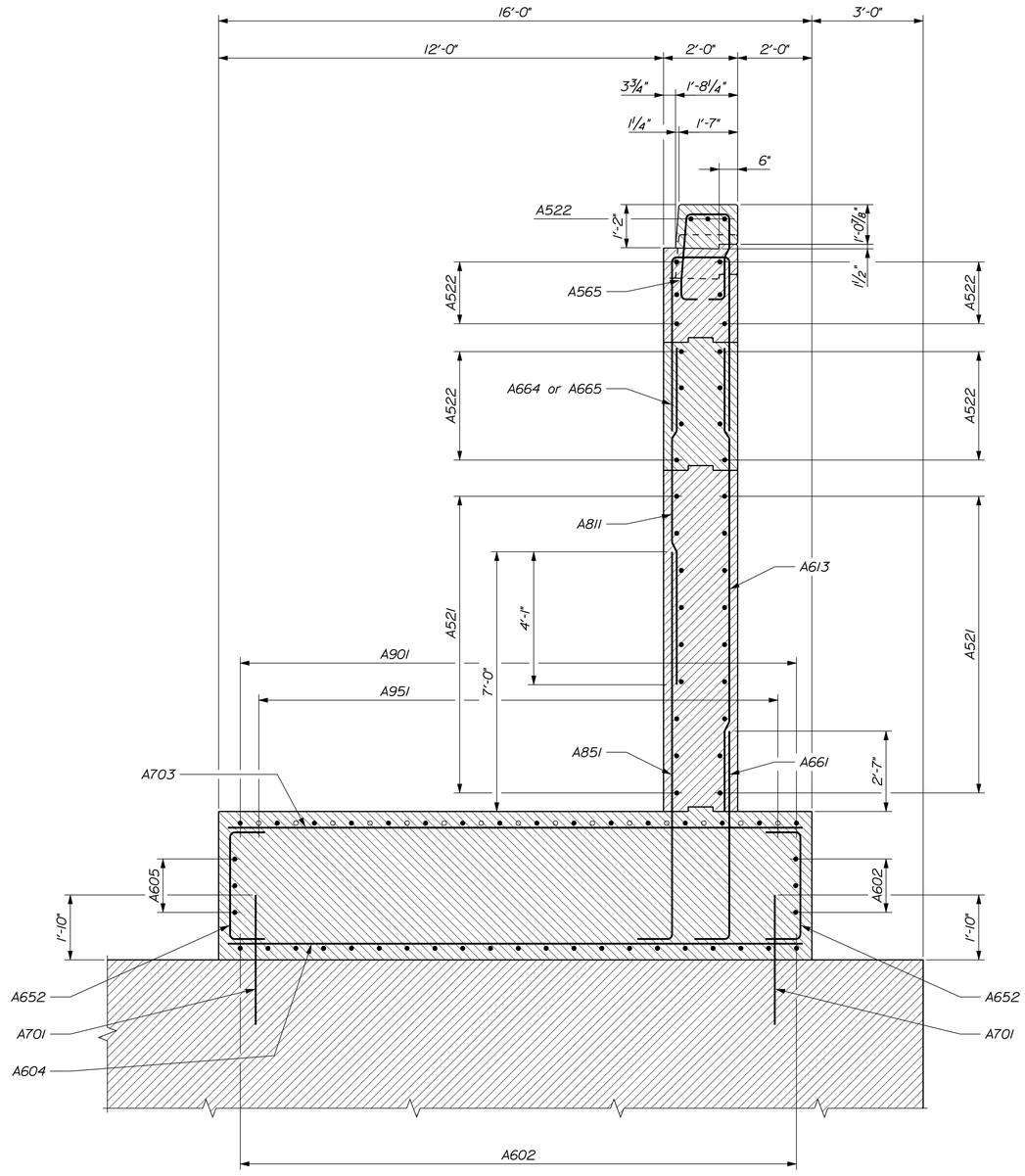

ABUTMENT NO. 1 UPSTREAM WINGWALL SECTION

Sidewalk side ~ Looking Upstation

STATE OF MAINE
DEPARTMENT OF TRANSPORTATION

BH-1823(300)X

BRIDGE NO. 3412 | **WIN 18233.00** | BRIDGE PLANS

PROJ. MANAGER	J. Kittredge		
DESIGN-DETAILED	R. Noous	July 2014	SIGNATURE
CHECKED-REVIEWED	E. Caswell	Sept. 2014	
DESIGN2-DETAILED2	-----	-----	P.E. NUMBER
DESIGN3-DETAILED3	-----	-----	
REVISIONS 1	-----	-----	DATE
REVISIONS 2	-----	-----	
REVISIONS 3	-----	-----	
REVISIONS 4	-----	-----	
FIELD CHANGES	-----	-----	

SOMESVILLE BRIDGE
SACO RIVER
SACO & BIDDEFORD YORK COUNTY

ABUT. NO. 1 WINGWALL SECTIONS

SHEET NUMBER

23

OF 53

Filename: ...\023_Abutment_No. 1 Wingwall Sections.dgn Division: BRIDGE Username: dana.damren Date:2/10/2015

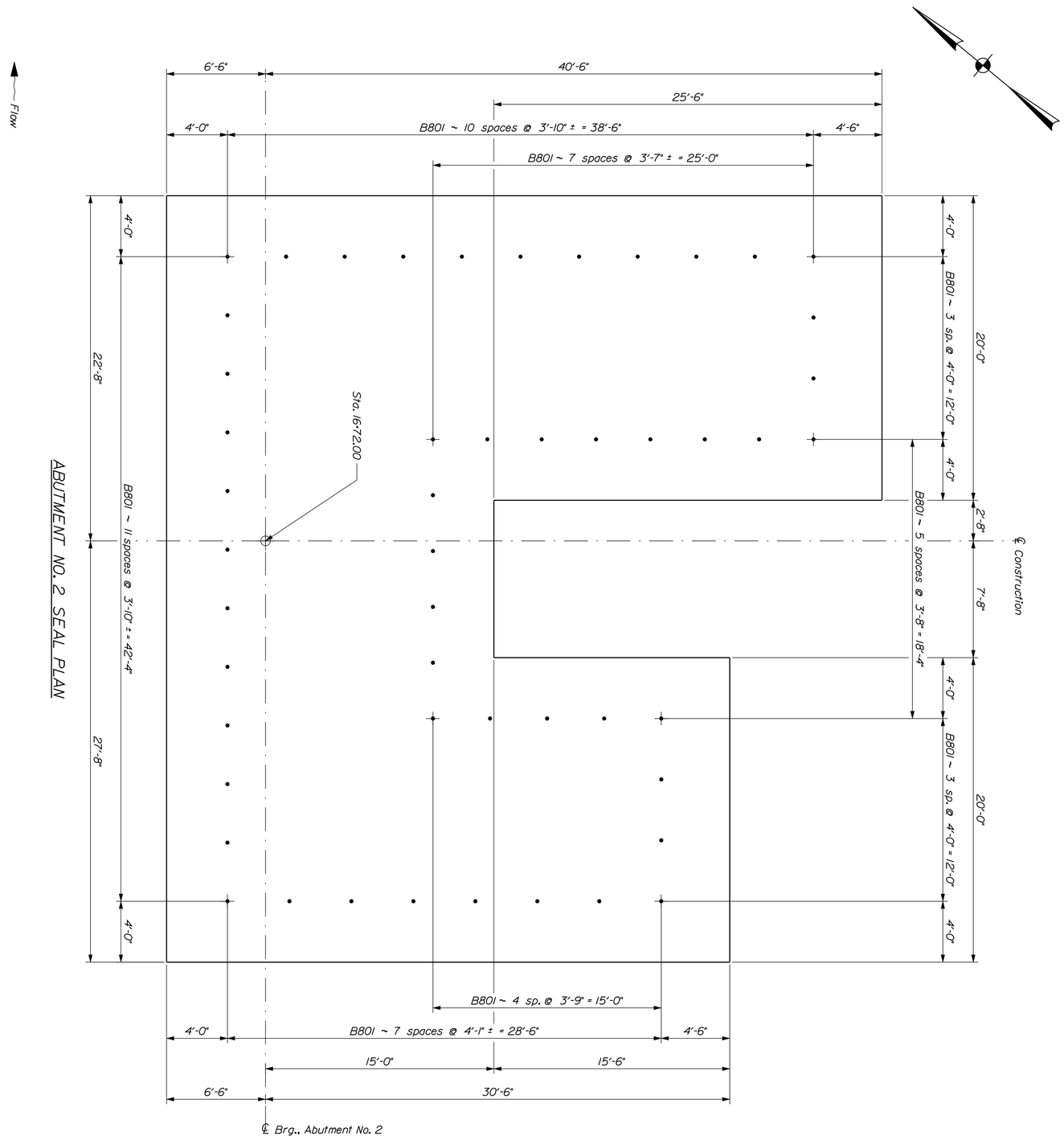

ABUTMENT NO. 2 SEAL PLAN

SHEET NUMBER 24 OF 53

SOMESVILLE BRIDGE
SACO RIVER
SACO & BIDDEFORD YORK COUNTY

ABUTMENT NO. 2 SEAL PLAN

		BY	DATE
PROJ. MANAGER	J. Kittredge		
DESIGN-DETAILED	R. Noous	D. Damren	July 2014
CHECKED-REVIEWED	E. Caswell	_____	Sept. 2014
DESIGN2-DETAILED2	_____	_____	_____
DESIGN3-DETAILED3	_____	_____	_____
REVISIONS 1	_____		_____
REVISIONS 2	_____		_____
REVISIONS 3	_____		_____
REVISIONS 4	_____		_____
FIELD CHANGES	_____		_____

SIGNATURE

P.E. NUMBER

DATE

STATE OF MAINE
DEPARTMENT OF TRANSPORTATION

BH-1823(300)X

BRIDGE NO. 3412 WIN 18233.00 BRIDGE PLANS

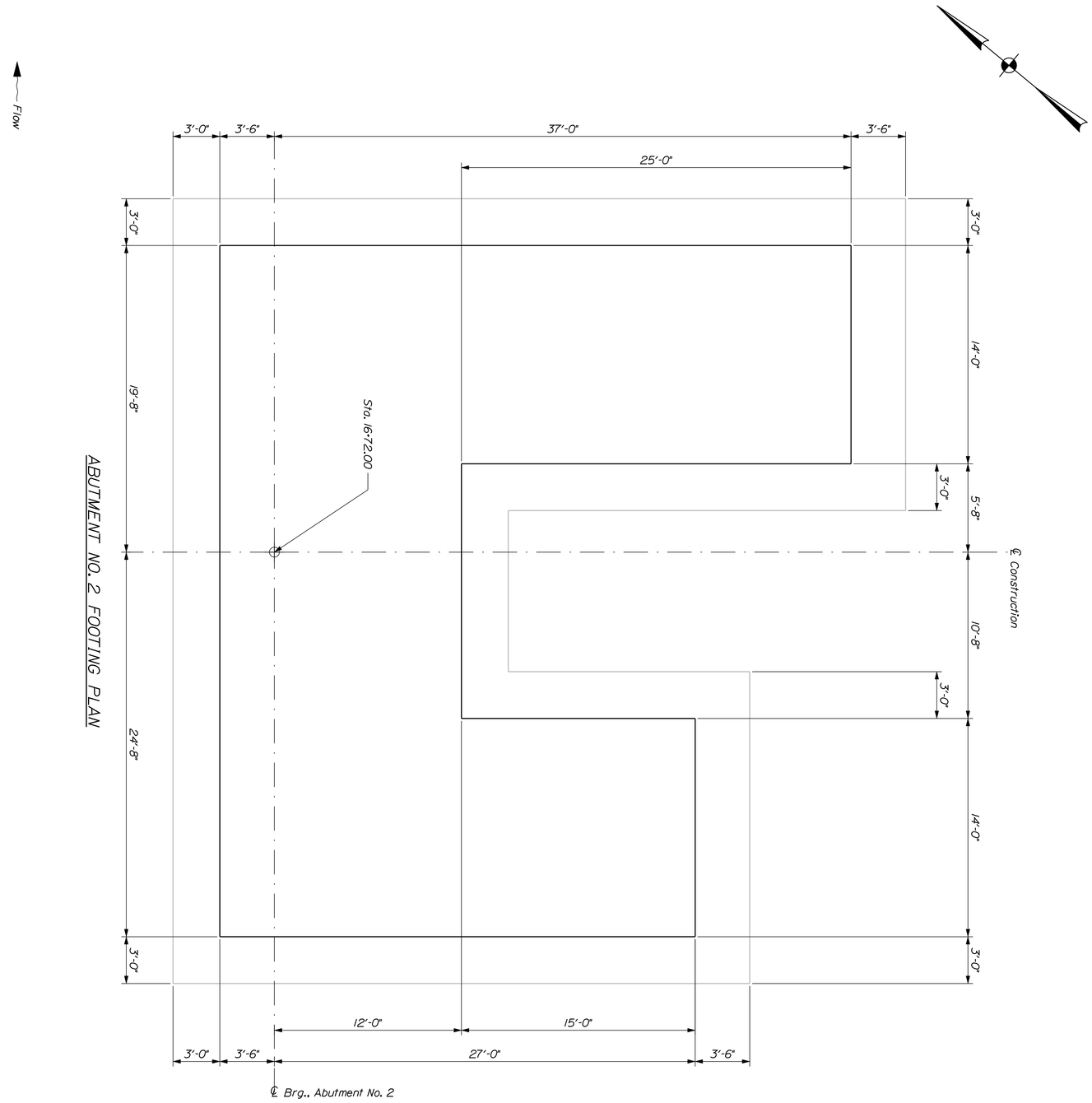

ABUTMENT NO. 2 FOOTING PLAN

SHEET NUMBER 25 OF 53

SOMESVILLE BRIDGE
SACO RIVER
SACO & BIDDEFORD YORK COUNTY

ABUT. NO. 2 FOOTING PLAN

		BY	DATE
PROJ. MANAGER	J. Kittredge		
DESIGN-DETAILED	R. Naous	D. Damren	July 2014
CHECKED-REVIEWED	E. Caswell	_____	Sept. 2014
DESIGN2-DETAILED2	_____	_____	_____
DESIGN3-DETAILED3	_____	_____	_____
REVISIONS 1	_____		_____
REVISIONS 2	_____		_____
REVISIONS 3	_____		_____
REVISIONS 4	_____		_____
FIELD CHANGES	_____		_____

SIGNATURE

P.E. NUMBER

DATE

STATE OF MAINE
DEPARTMENT OF TRANSPORTATION

BH-1823(300)X

BRIDGE NO. 3412 WIN 18233.00 BRIDGE PLANS

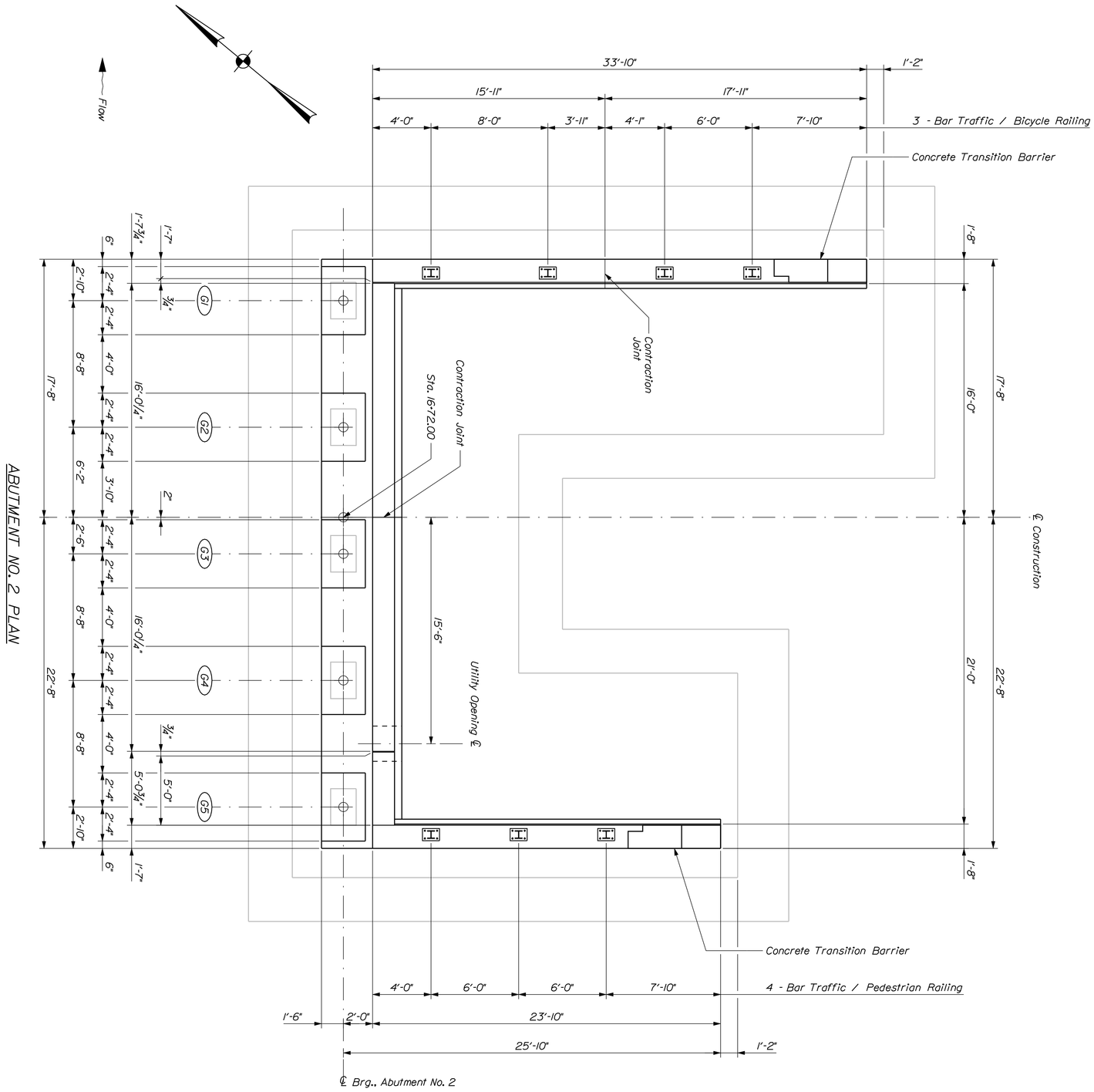

ABUTMENT NO. 2 PLAN

SHEET NUMBER 26 OF 53

SOMESVILLE BRIDGE
SACO RIVER
SACO & BIDDEFORD YORK COUNTY

ABUTMENT NO. 2 PLAN

		BY	DATE
PROJ. MANAGER	J. Kittredge		
DESIGN-DETAILED	R. Naous	D. Damren	July 2014
CHECKED-REVIEWED	E. Caswell	_____	Sept. 2014
DESIGN2-DETAILED2	_____	_____	_____
DESIGN3-DETAILED3	_____	_____	_____
REVISIONS 1	_____		_____
REVISIONS 2	_____		_____
REVISIONS 3	_____		_____
REVISIONS 4	_____		_____
FIELD CHANGES	_____		_____

SIGNATURE

P.E. NUMBER

DATE

STATE OF MAINE
DEPARTMENT OF TRANSPORTATION

BH-1823(300)X

BRIDGE NO. 3412 WIN 18233.00 BRIDGE PLANS

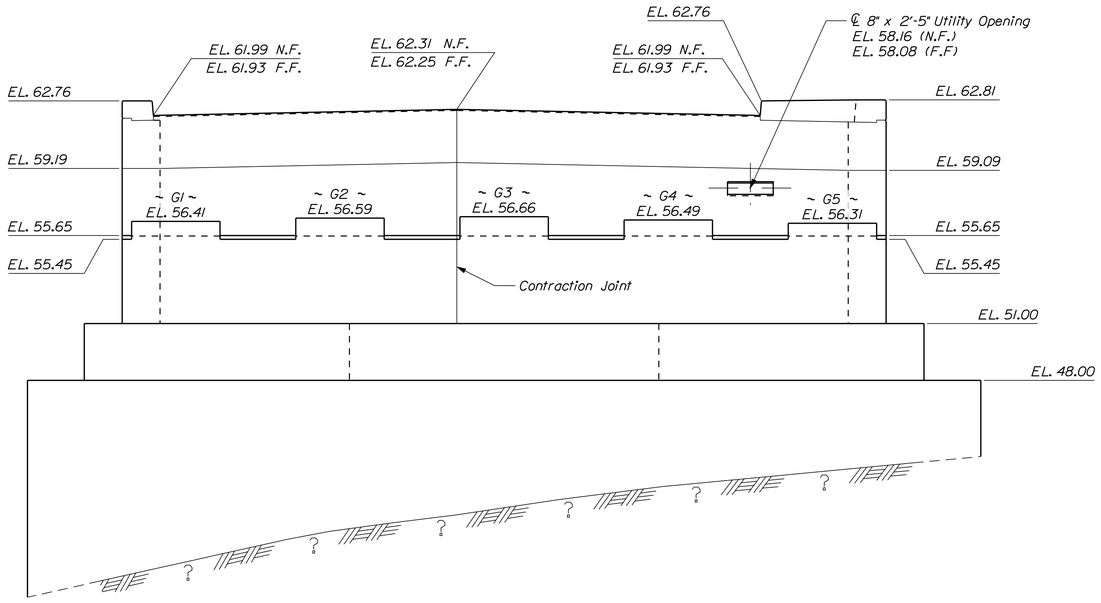

ABUTMENT NO. 2 ELEVATION

LEGEND

N.F. = Near Face
F.F. = Far Face

Filename: ...\027_Abutment_No. 2 Elevation.dgn Division: BRIDGE Username: dana.damren Date:2/3/2015

STATE OF MAINE
DEPARTMENT OF TRANSPORTATION

BH-1823(300)X

WIN 18233.00

BRIDGE NO. 3412

BRIDGE PLANS

		BY	DATE
PROJ. MANAGER	J. Kittredge		
DESIGN-DETAILED	R. Noous	D. Damren	July 2014
CHECKED-REVIEWED	E. Caswell	-----	Sept. 2014
DESIGN2-DETAILED2	-----	-----	-----
DESIGN3-DETAILED3	-----	-----	-----
REVISIONS 1	-----	-----	-----
REVISIONS 2	-----	-----	-----
REVISIONS 3	-----	-----	-----
REVISIONS 4	-----	-----	-----
FIELD CHANGES	-----	-----	-----

SIGNATURE

P.E. NUMBER

DATE

SOMESVILLE BRIDGE
SACO RIVER
SACO & BIDDEFORD YORK COUNTY

ABUTMENT NO. 2 ELEVATION

SHEET NUMBER

27

OF 53

Filename: ...\028_Abutment_No. 2 Wingwall Elevations.dgn Division: BRIDGE Username: dana.damren Date:2/10/2015

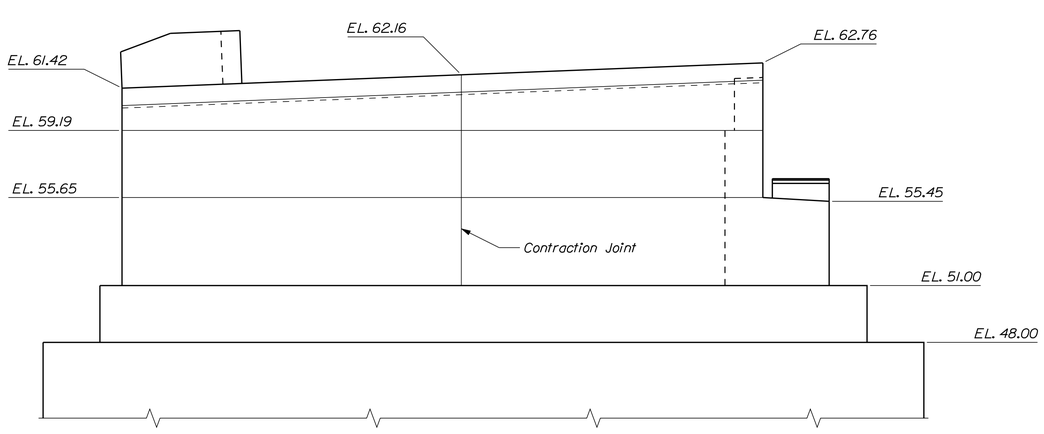

ABUTMENT NO. 2 DOWNSTREAM WINGWALL ELEVATION

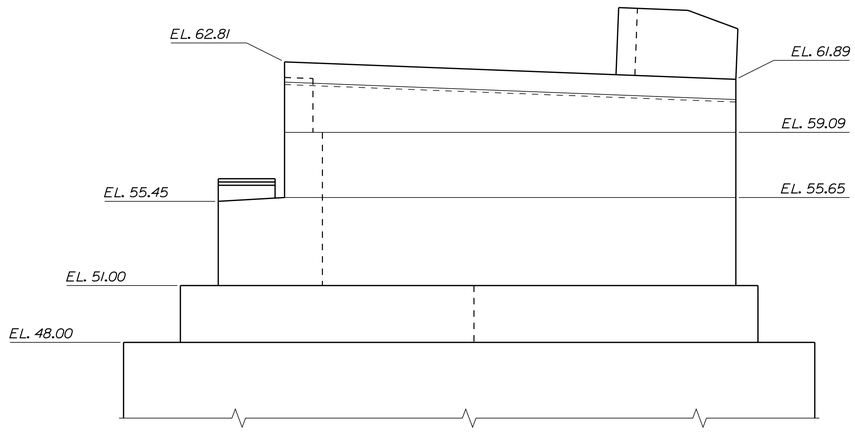

ABUTMENT NO. 2 UPSTREAM WINGWALL ELEVATION

STATE OF MAINE
DEPARTMENT OF TRANSPORTATION

BH-1823(300)X

WIN 18233.00

BRIDGE NO. 3412 — BRIDGE PLANS

PROJ. MANAGER	J. Kittredge		
DESIGN-DETAILED	R. Noous	BY	DATE
CHECKED-REVIEWED	E. Caswell	D. Damren	July 2014
DESIGN2-DETAILED2	-----	-----	Sept. 2014
DESIGN3-DETAILED3	-----	-----	-----
REVISIONS 1	-----	-----	-----
REVISIONS 2	-----	-----	-----
REVISIONS 3	-----	-----	-----
REVISIONS 4	-----	-----	-----
FIELD CHANGES	-----	-----	-----

SIGNATURE

P.E. NUMBER

DATE

SOMESVILLE BRIDGE
SACO RIVER
SACO & BIDDEFORD — YORK COUNTY

ABUT. NO. 2 WINGWALL ELEVS.

SHEET NUMBER

28

OF 53

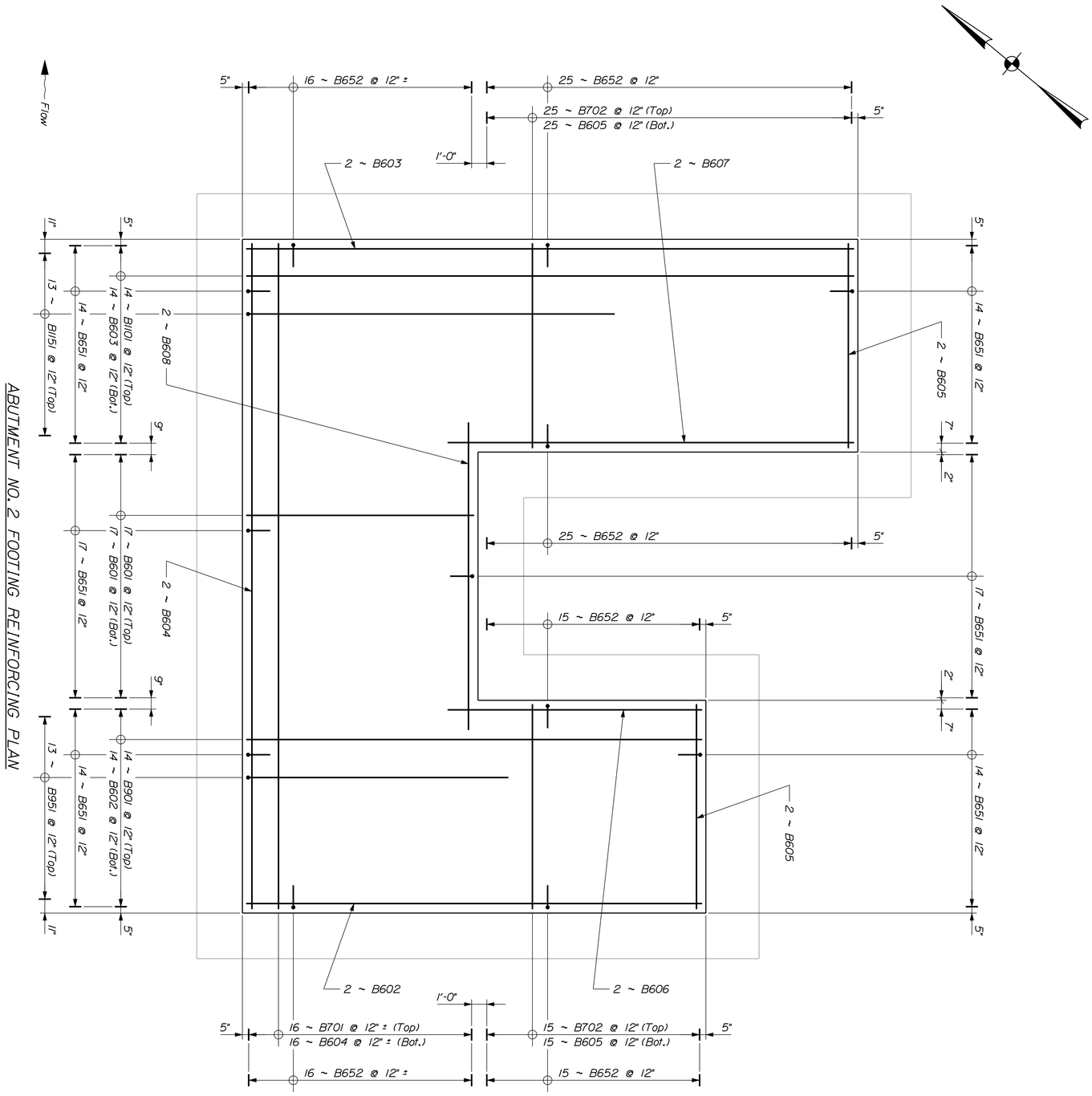

ABUTMENT NO. 2 FOOTING REINFORCING PLAN

SHEET NUMBER 29 OF 53

SOMESVILLE BRIDGE
SACO RIVER
SACO & BIDDEFORD YORK COUNTY

ABUT. NO. 2 FTG. REINF. PLAN

		BY	DATE
PROJ. MANAGER	J. Kittredge		
DESIGN-DETAILED	R. Naous	D. Damren	July 2014
CHECKED-REVIEWED	E. Caswell	_____	Sept. 2014
DESIGN2-DETAILED2	_____	_____	_____
DESIGN3-DETAILED3	_____	_____	_____
REVISIONS 1	_____		_____
REVISIONS 2	_____		_____
REVISIONS 3	_____		_____
REVISIONS 4	_____		_____
FIELD CHANGES	_____		_____

SIGNATURE

P.E. NUMBER

DATE

STATE OF MAINE
DEPARTMENT OF TRANSPORTATION

BH-1823(300)X

BRIDGE NO. 3412 WIN 18233.00 BRIDGE PLANS

Filename: ...\030_Abutment_No. 2 Reinforcing Elevation.dgn Username: dana.damren Date:2/10/2015

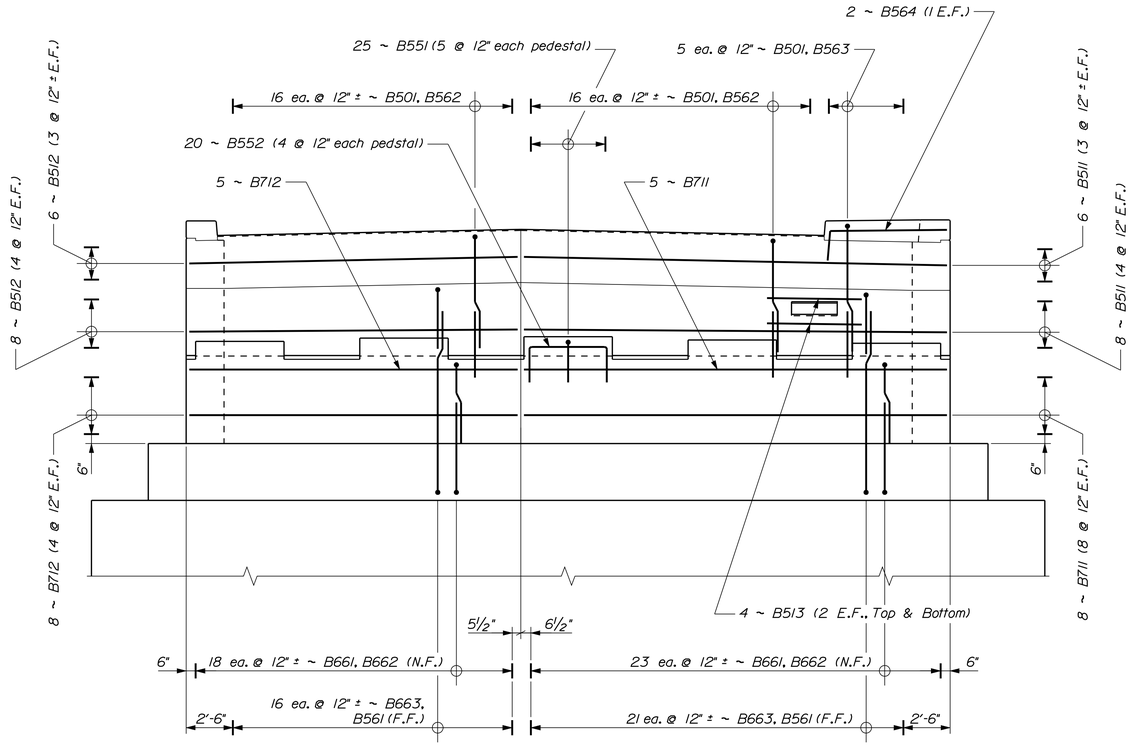

ABUTMENT NO. 2 REINFORCING ELEVATION

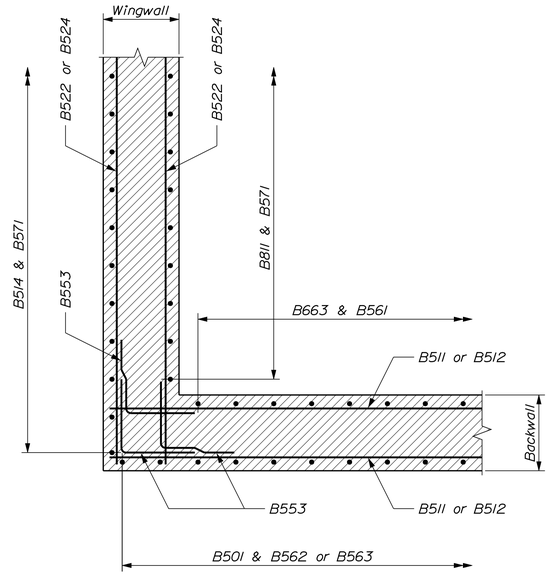

REINFORCING PLAN AT ABUTMENT CORNER
Horizontal Section through Backwall
Downstream corner shown; Upstream corner similar

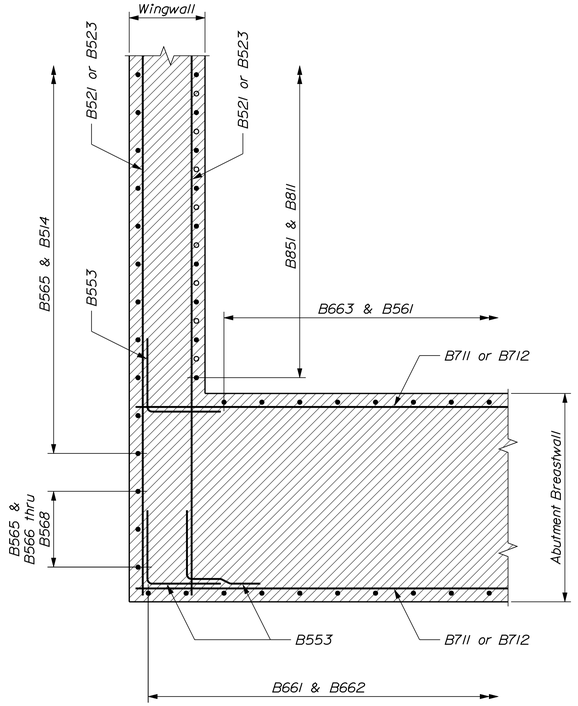

REINFORCING PLAN AT ABUTMENT CORNER
Horizontal Section through Breastwall
Downstream corner shown; Upstream corner similar

LEGEND

N.F. = Near Face
F.F. = Far Face
E.F. = Each Face

STATE OF MAINE
DEPARTMENT OF TRANSPORTATION

BH-1823(300)X

WIN 18233.00

BRIDGE NO. 3412

BRIDGE PLANS

	BY	DATE
PROJ. MANAGER	J. Kittredge	
DESIGN-DETAILED	R. Noous	July 2014
CHECKED-REVIEWED	E. Coswell	Sept. 2014
DESIGN2-DETAILED2	-----	-----
DESIGN3-DETAILED3	-----	-----
REVISIONS 1	-----	-----
REVISIONS 2	-----	-----
REVISIONS 3	-----	-----
REVISIONS 4	-----	-----
FIELD CHANGES	-----	-----

SIGNATURE

P.E. NUMBER

DATE

SOMESVILLE BRIDGE
SACO RIVER
SACO & BIDDEFORD YORK COUNTY

ABUT. NO. 2 REINF. ELEVATION

SHEET NUMBER

30

OF 53

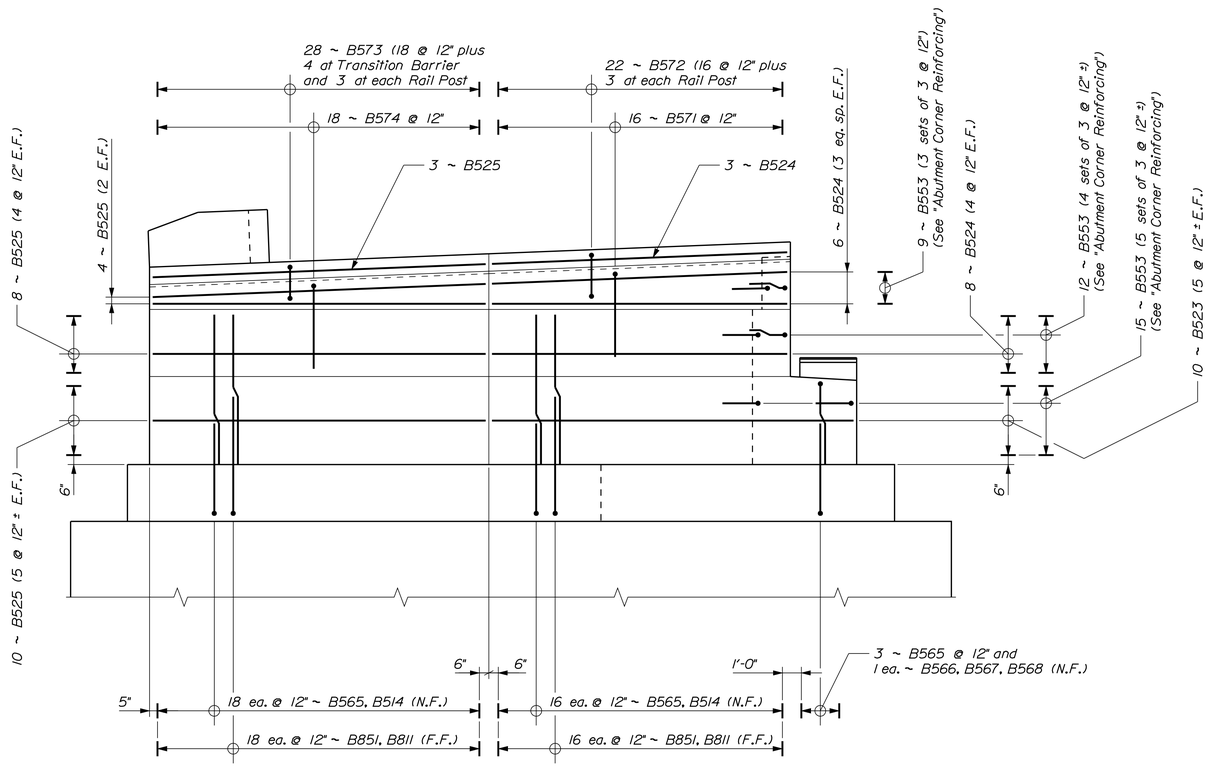

ABUTMENT NO. 2 DOWNSTREAM WINGWALL REINFORCING ELEVATION

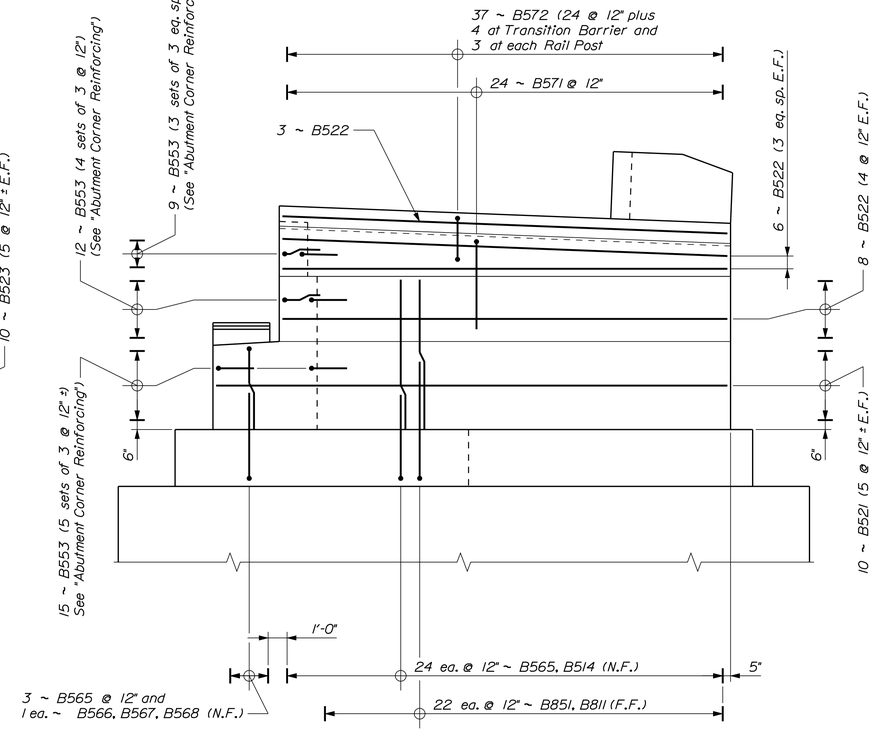

ABUTMENT NO. 2 UPSTREAM WINGWALL REINFORCING ELEVATION

STATE OF MAINE
DEPARTMENT OF TRANSPORTATION

BH-1823(300)X

BRIDGE NO. 3412 | WIN 18233.00 | BRIDGE PLANS

		BY	DATE
PROJ. MANAGER	J. Kittredge		
DESIGN-DETAILED	R. Naous	D. Damren	July 2014
CHECKED-REVIEWED	E. Caswell		Sept. 2014
DESIGN2-DETAILED2			
DESIGN3-DETAILED3			
REVISIONS 1			
REVISIONS 2			
REVISIONS 3			
REVISIONS 4			
FIELD CHANGES			

SIGNATURE

P.E. NUMBER

DATE

SOMESVILLE BRIDGE
SACO RIVER
SACO & BIDDEFORD YORK COUNTY

ABUT. NO. 2 WINGWALL REINF.

SHEET NUMBER
31
OF 53

Filename: ...\031_Abutment_No. 2 Wingwall Reinforcing Elevation.dgn Username: dana.damren Date:2/10/2015

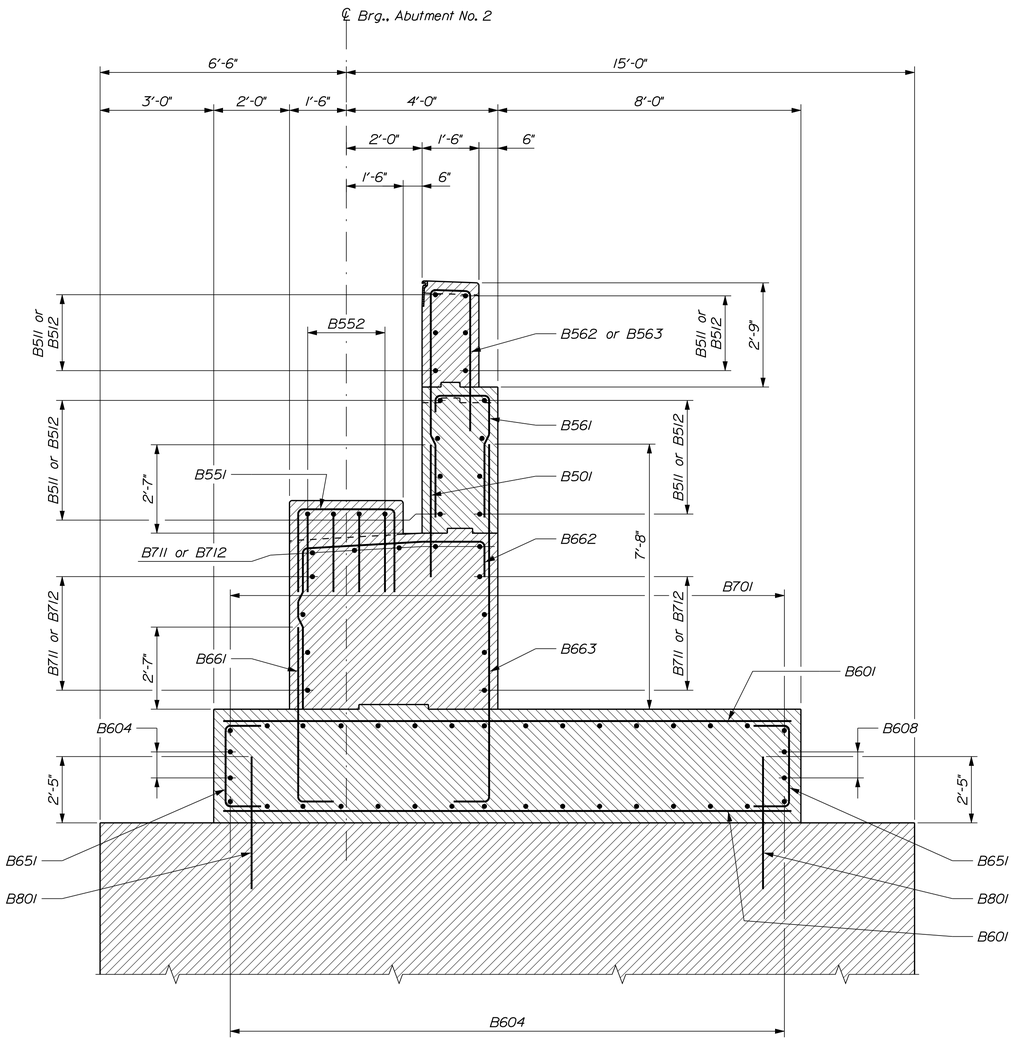

ABUTMENT NO. 2 BREASTWALL SECTION

Section between Wingwall Footings & through concrete pedestal

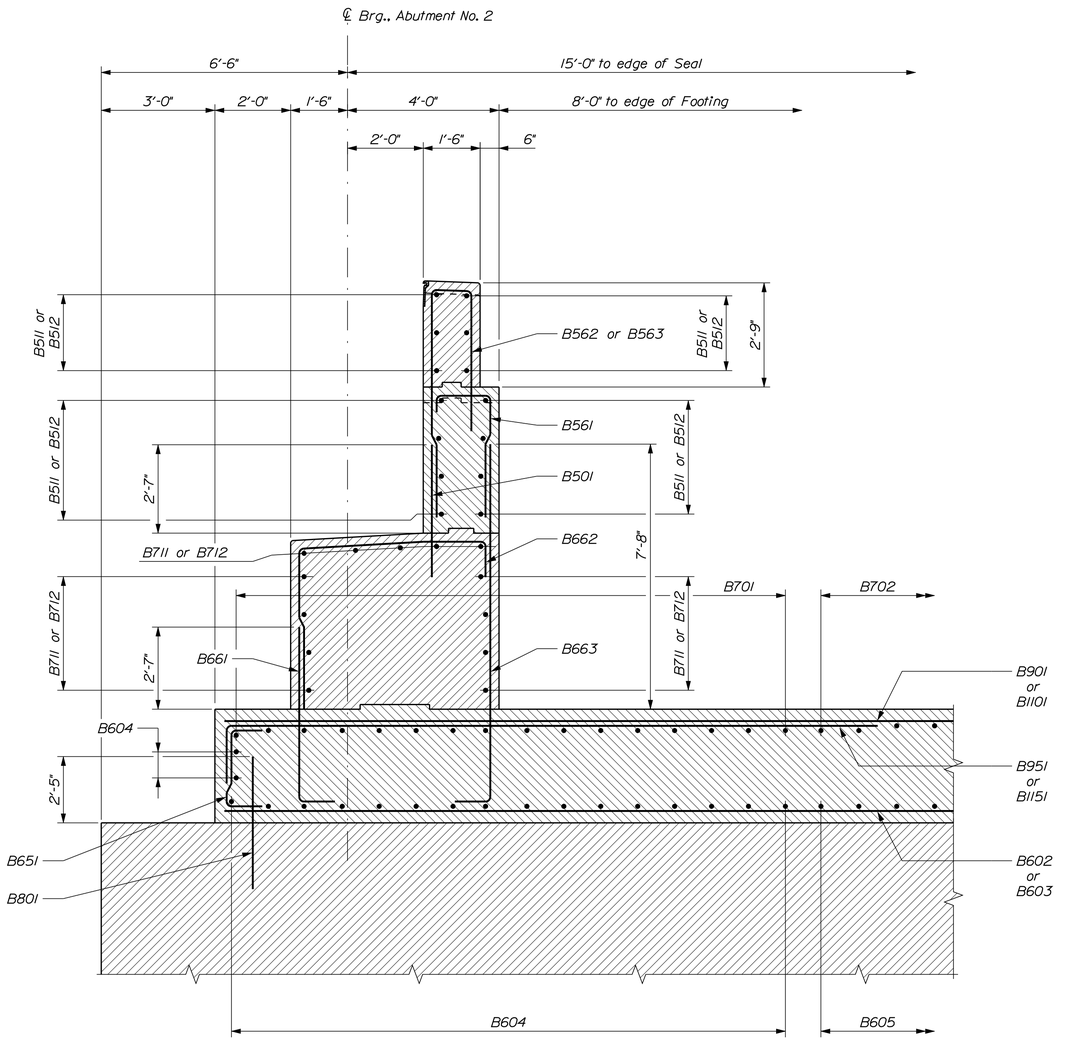

ABUTMENT NO. 2 BREASTWALL SECTION

Section through Wingwall Footings & between concrete pedestals

STATE OF MAINE
DEPARTMENT OF TRANSPORTATION

BH-1823(300)X

WIN 18233.00
BRIDGE NO. 3412

BRIDGE PLANS

	BY	DATE
PROJ. MANAGER	J. Kilty-edge	
DESIGN-DETAILED	D. Damren	July 2014
CHECKED-REVIEWED	R. Noous	Sept. 2014
DESIGN2-DETAILED2	E. Caswell	-----
DESIGN3-DETAILED3	-----	-----
REVISIONS 1	-----	-----
REVISIONS 2	-----	-----
REVISIONS 3	-----	-----
REVISIONS 4	-----	-----
FIELD CHANGES	-----	-----

SIGNATURE

P.E. NUMBER

DATE

SOMESVILLE BRIDGE
SACO RIVER
SACO & BIDDEFORD — YORK COUNTY

ABUTMENT NO. 2 SECTIONS

SHEET NUMBER

32

OF 53

Filename: ...\032_Abutment_No. 2 Sections.dgn Division: BRIDGE Username: donq.damren Date:2/10/2015

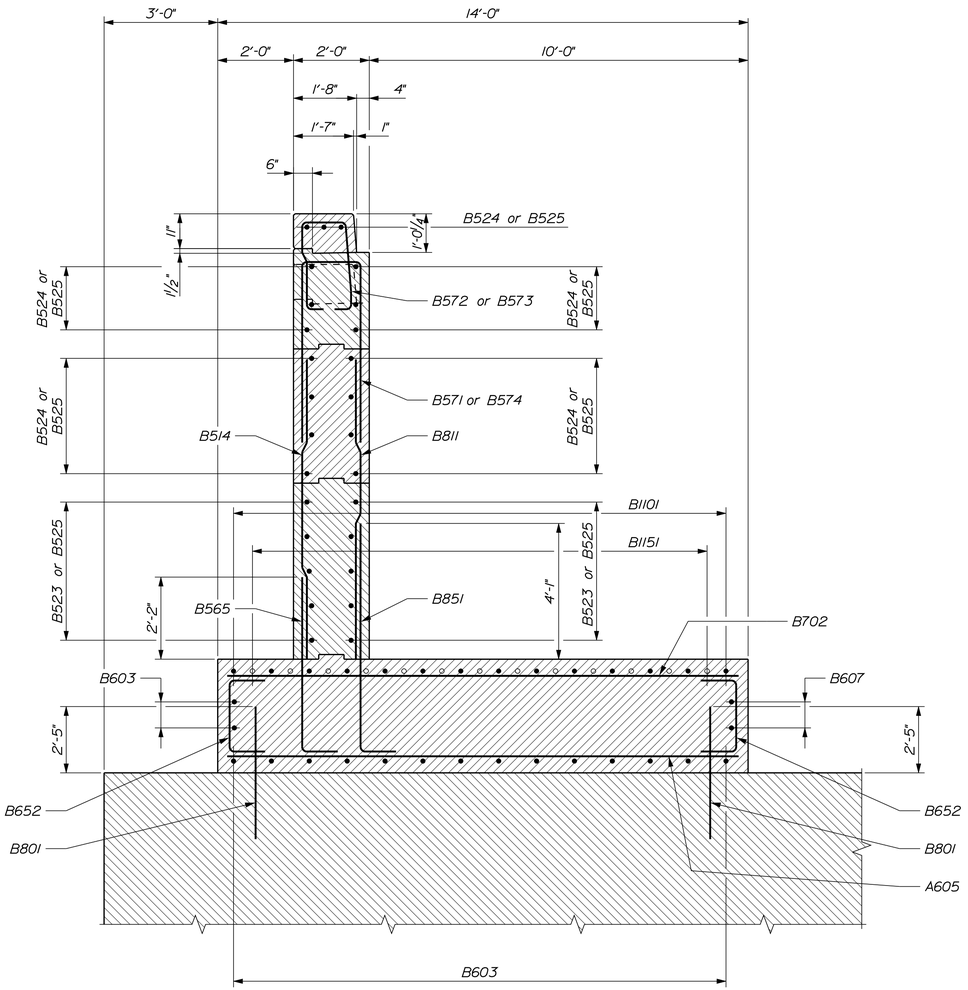

ABUTMENT NO. 2 DOWNSTREAM WINGWALL SECTION

Curb side ~ Looking Upstation

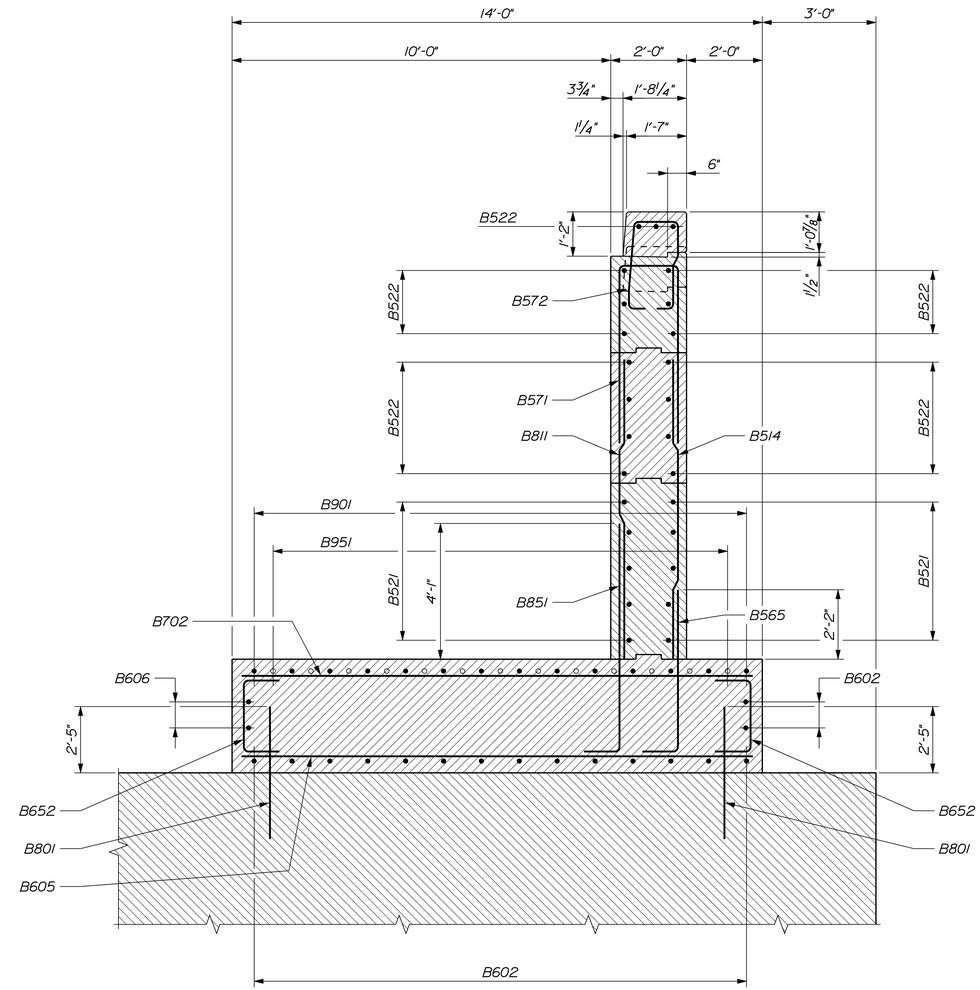

ABUTMENT NO. 2 UPSTREAM WINGWALL SECTION

Sidewalk side ~ Looking Upstation

STATE OF MAINE
DEPARTMENT OF TRANSPORTATION

BH-1823(300)X

BRIDGE NO. 3412 | WIN 18233.00 | BRIDGE PLANS

		BY	DATE
PROJ. MANAGER	J. Kilfredge		
DESIGN-DETAILED	R. Noous	D. Damren	July 2014
CHECKED-REVIEWED	E. Caswell	-----	Sept. 2014
DESIGN2-DETAILED2	-----	-----	-----
DESIGN3-DETAILED3	-----	-----	-----
REVISIONS 1	-----	-----	-----
REVISIONS 2	-----	-----	-----
REVISIONS 3	-----	-----	-----
REVISIONS 4	-----	-----	-----
FIELD CHANGES	-----	-----	-----

SIGNATURE

P.E. NUMBER

DATE

SOMESVILLE BRIDGE
SACO RIVER
SACO & BIDDEFORD — YORK COUNTY

ABUT. NO. 2 WINGWALL SECTIONS

SHEET NUMBER

33

OF 53

Filename: ...\033_Abutment_No. 2 Wingwall Sections.dgn Division: BRIDGE Username: donald.damren Date:2/10/2015

Filename: ...\BRIDGE\MSTA\034_Pier_Plan.dgn Division: BRIDGE Username: dana.damren Date:2/3/2015

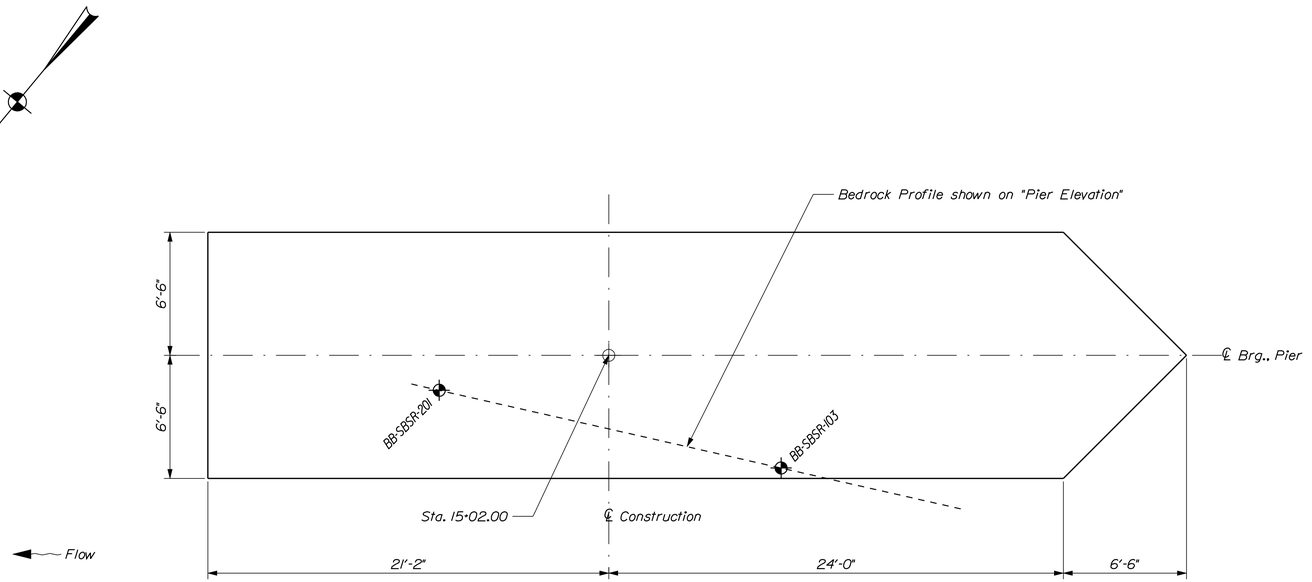

PIER SEAL PLAN

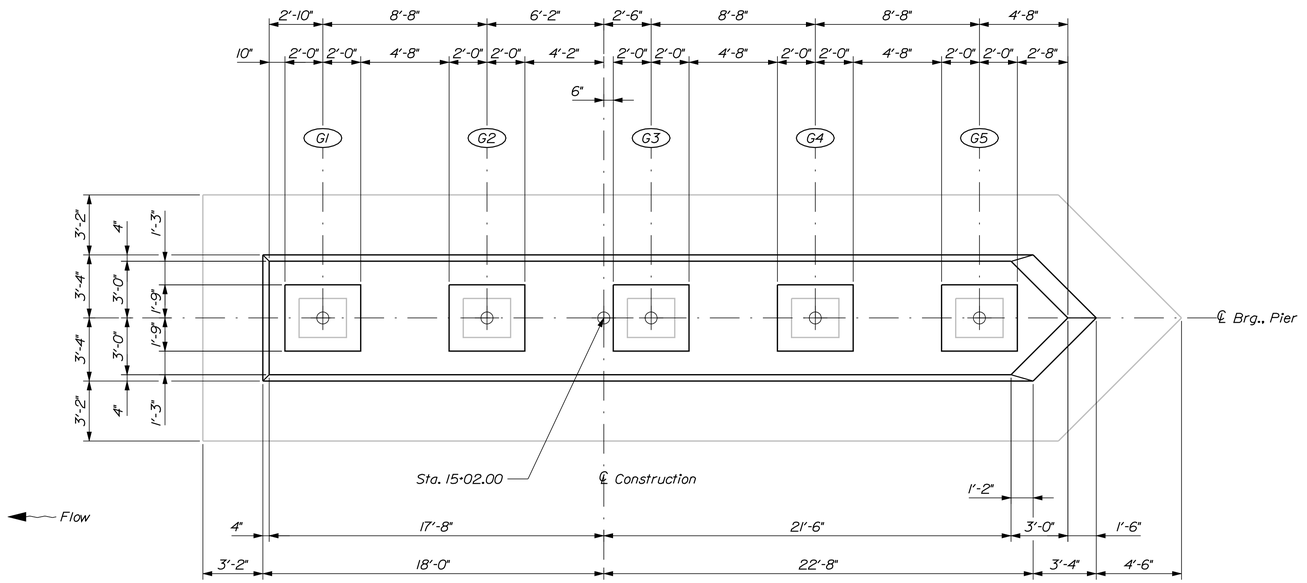

PIER PLAN

PIER DESIGN CRITERIA

1. Critical AASHTO Load Combination - Strength 1.

2. Buoyancy: Water level assumed at EL. 51.0.

3. Stream flow: Velocity of 10.0 fps skewed at 0° to longitudinal centerline of pier.

4. Wind: 100 mph.

5. Ice: Thickness 1.5 feet, pressure 14.4 ksf at EL. 55.2, 30% of nose force applied transverse to pier.

SEAL COFFERDAM NOTES

1. When sheet piling is used for seal cofferdams, appropriate rolled corners shall be used, and the inside face of the sheet piling shall be at or outside of the seal concrete dimensions shown.

2. The seal concrete placement dimensions shown represent the minimum seal size necessary to meet design requirements and are not based on the use of any particular sheet pile section.

3. The horizontal pay limit for seal concrete will be to the dimensions shown on the plans. No additional payment will be made for concrete placed outside these limits.

4. The depth of the seal is set for a water elevation of 51.0. If the water elevation at the time of construction is higher, the depth of the seal shall be adjusted.

5. The method of placing dowels in the seal concrete shall be approved by the Resident.

PIER NOTES

1. The maximum factored applied footing pressure is 11 ksf.

2. Reinforcing steel shall have a minimum concrete cover of 3 inches unless otherwise noted.

3. Bridge pedestal elevations shown are based on bearing heights given in the Disc Bearing Design Table. The actual pedestal elevations shall be adjusted to accommodate the bearings supplied by the Contractor. Adjustments to the pedestal elevations shall be made, if necessary, according to the provisions on the Disc Bearings Sheet.

4. Pier Seal shall be Class "A" concrete.

5. Bar lengths given on the Reinforcing Steel Schedule for bars P801-A and P801-B are estimates of the longest bar length required for each side of the pier. Payment will be based on the actual bar lengths used as determined in the field.

STATE OF MAINE
DEPARTMENT OF TRANSPORTATION

BH-1823(300)X

WIN 18233.00

BRIDGE NO. 3412

BRIDGE PLANS

			DATE
PROJ. MANAGER	J. Kittredge		
DESIGN-DETAILED	R. Noous	D. Damren	July 2014
CHECKED-REVIEWED	E. Coswell	-----	Sept. 2014
DESIGN2-DETAILED2	-----	-----	-----
DESIGN3-DETAILED3	-----	-----	-----
REVISIONS 1	-----	-----	-----
REVISIONS 2	-----	-----	-----
REVISIONS 3	-----	-----	-----
REVISIONS 4	-----	-----	-----
FIELD CHANGES	-----	-----	-----

SIGNATURE

P.E. NUMBER

DATE

SOMESVILLE BRIDGE
SACO RIVER
SACO & BIDDEFORD YORK COUNTY

PIER PLAN

SHEET NUMBER

34

OF 53

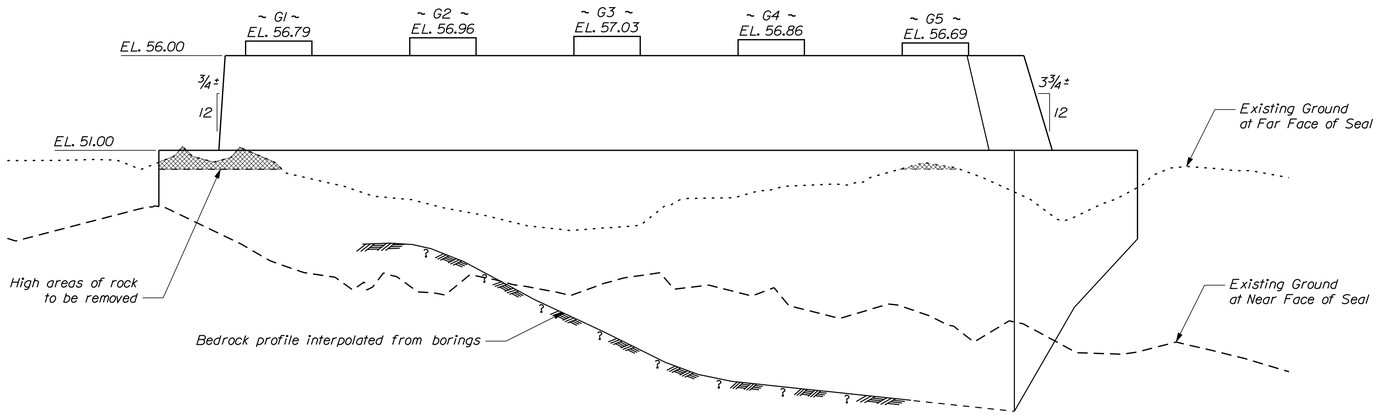

PIER ELEVATION

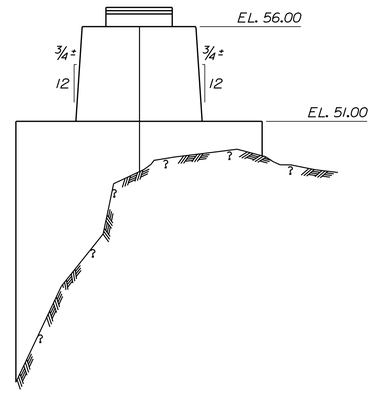

PIER UPSTREAM END ELEVATION

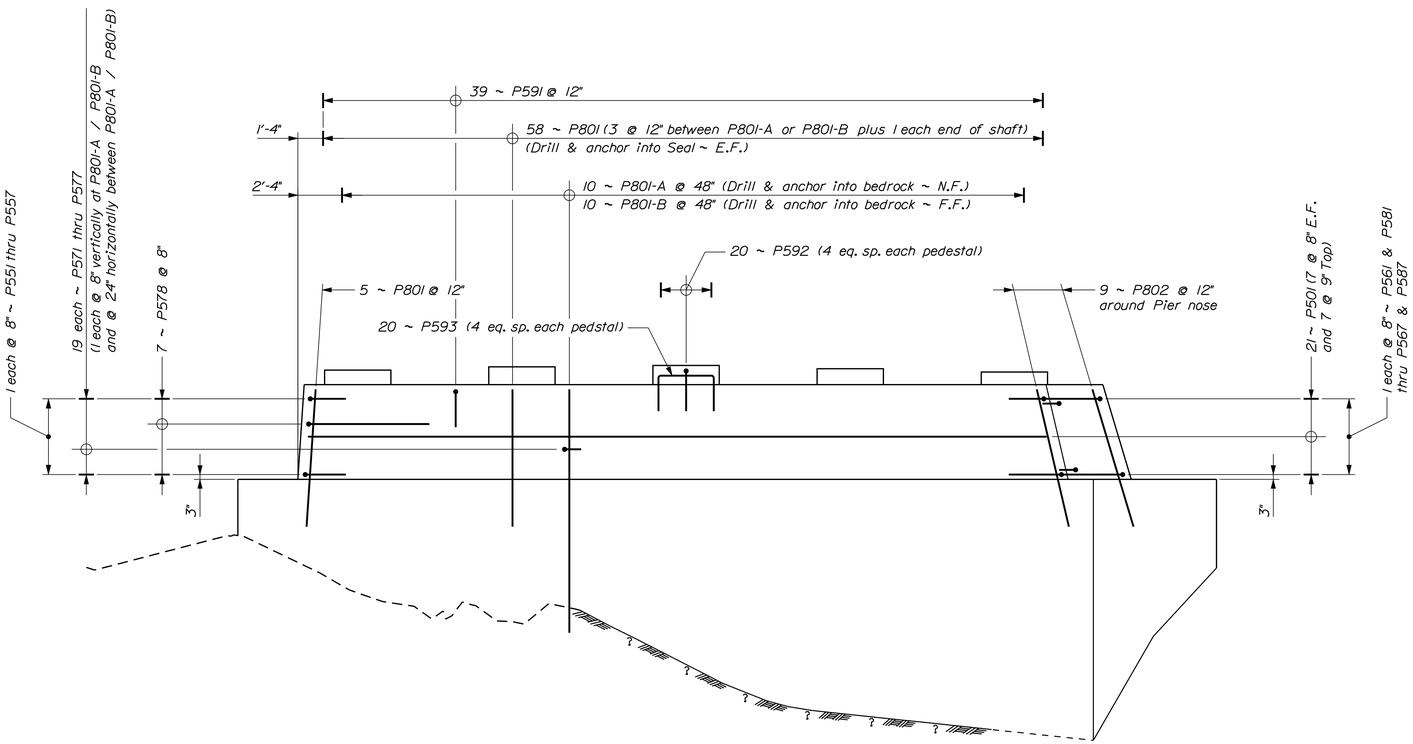

PIER REINFORCING ELEVATION

LEGEND

N.F. = Near Face
F.F. = Far Face
E.F. = Each Face

STATE OF MAINE
DEPARTMENT OF TRANSPORTATION

BH-1823(300)X

WIN 18233.00

BRIDGE NO. 3412

BRIDGE PLANS

		BY	DATE
PROJ. MANAGER	J. Kilfredge		
DESIGN-DETAILED	R. Noous	D. Damren	July 2014
CHECKED-REVIEWED	E. Caswell	-----	Sept. 2014
DESIGN2-DETAILED2	-----	-----	-----
DESIGN3-DETAILED3	-----	-----	-----
REVISIONS 1	-----	-----	-----
REVISIONS 2	-----	-----	-----
REVISIONS 3	-----	-----	-----
REVISIONS 4	-----	-----	-----
FIELD CHANGES	-----	-----	-----

SIGNATURE

P.E. NUMBER

DATE

SOMESVILLE BRIDGE
SACO RIVER
SACO & BIDDEFORD YORK COUNTY

PIER ELEVATIONS

SHEET NUMBER

35

OF 53

Filename: ...\MSTA\035_Pier_Elevation.dgn Division: BRIDGE Username: dona.damren Date:2/3/2015

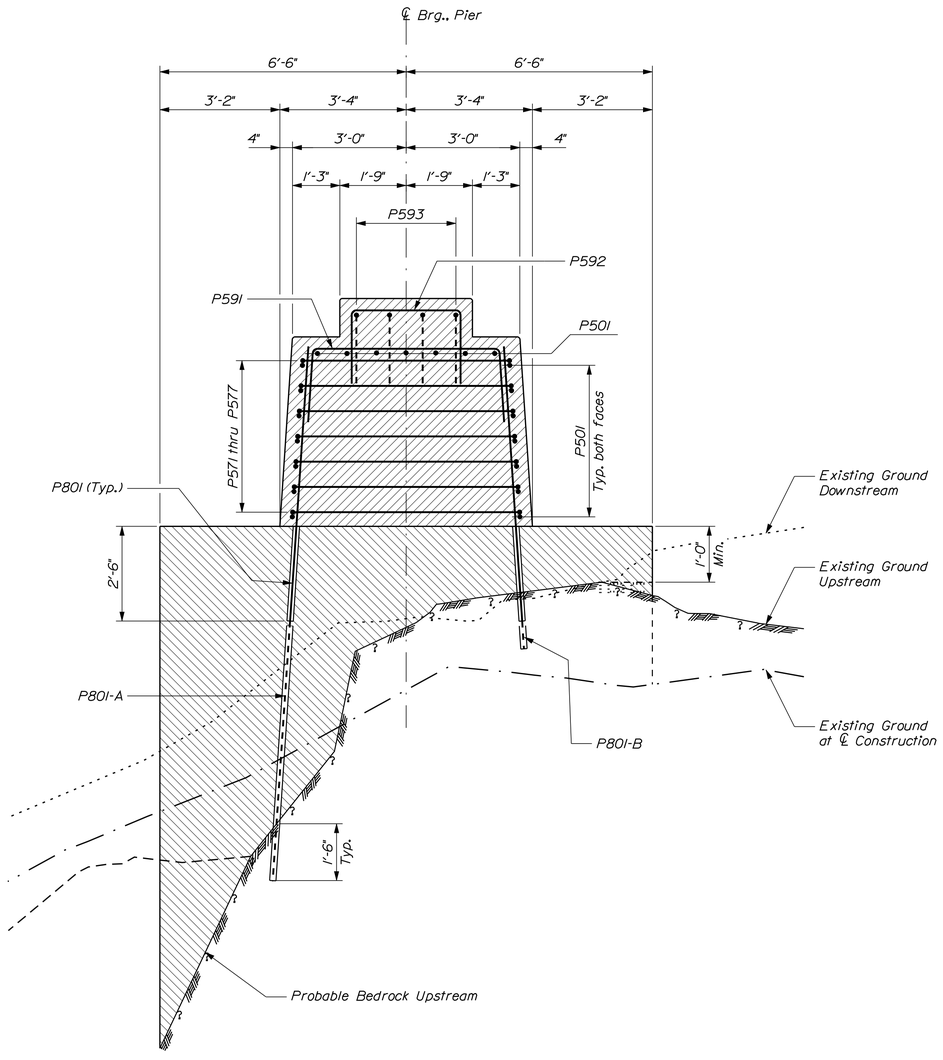

PIER SECTION

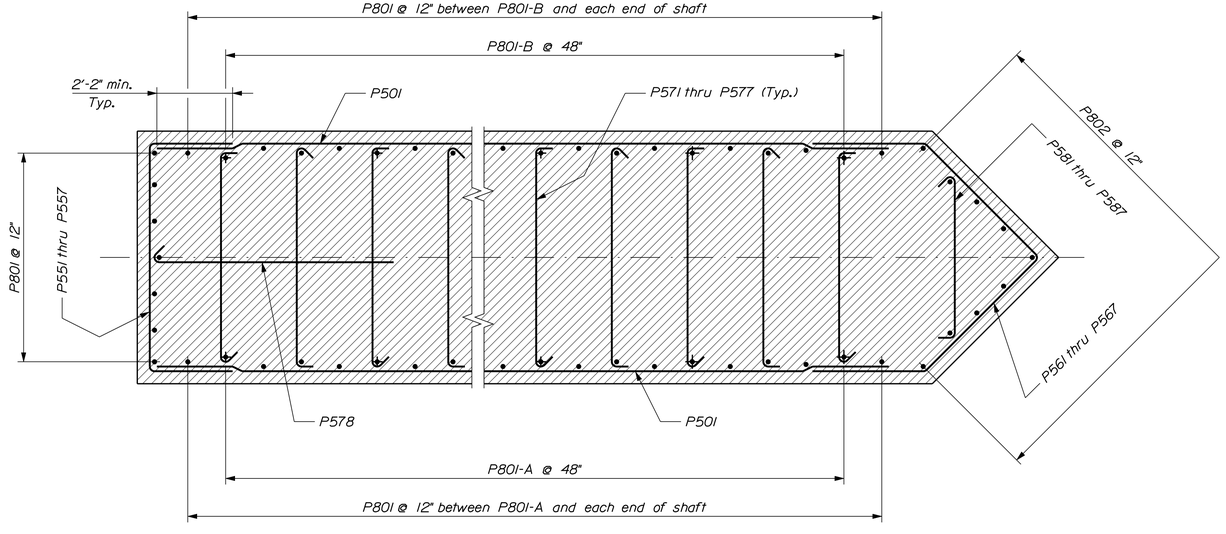

HORIZONTAL PIER SECTION

STATE OF MAINE
DEPARTMENT OF TRANSPORTATION

BH-1823(300)X

WIN 18233.00

BRIDGE NO. 3412

BRIDGE PLANS

			DATE
PROJ. MANAGER	J. Kittredge	BY	
DESIGN-DETAILED	R. Noous	D. Damren	July 2014
CHECKED-REVIEWED	E. Caswell	------	Sept. 2014
DESIGN2-DETAILED2	------	------	------
DESIGN3-DETAILED3	------	------	------
REVISIONS 1	------	------	------
REVISIONS 2	------	------	------
REVISIONS 3	------	------	------
REVISIONS 4	------	------	------
FIELD CHANGES	------	------	------

SIGNATURE

P.E. NUMBER

DATE

SOMESVILLE BRIDGE
SACO RIVER
SACO & BIDDEFORD YORK COUNTY

PIER SECTIONS

SHEET NUMBER

36

OF 53

Username: dona.damren Date:2/10/2015
Division: BRIDGE
Filename: ...\msto\036_Pier_Sections.dgn

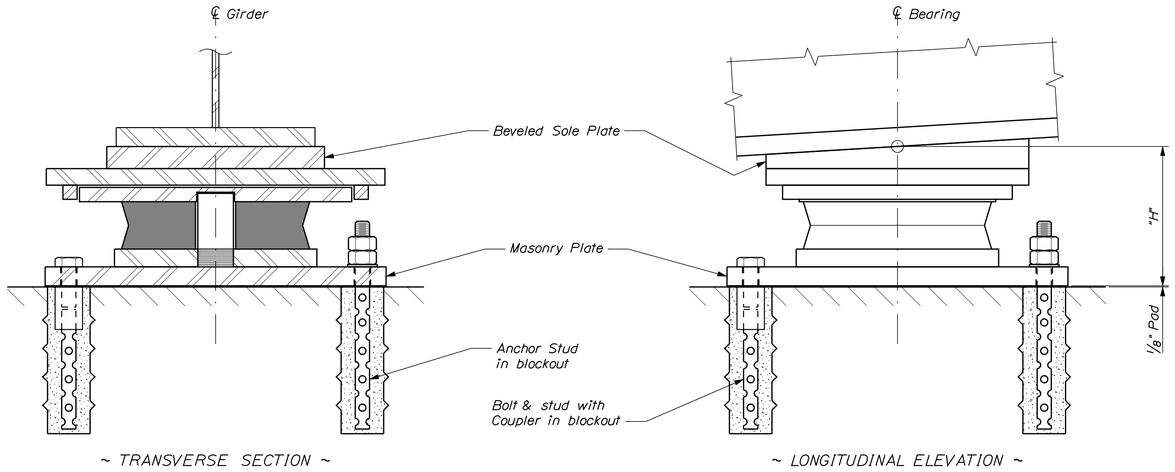

EXPANSION BEARING

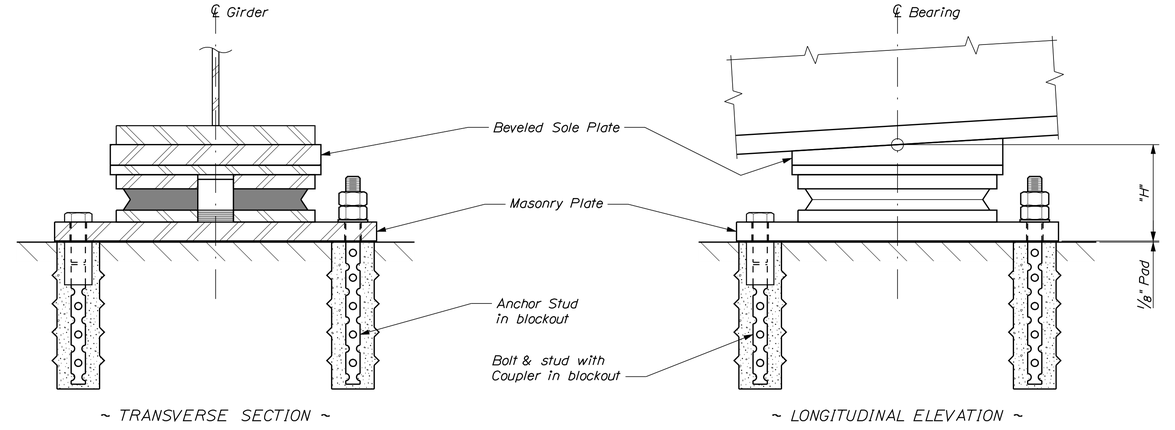

FIXED BEARING

DISC BEARING NOTES

1. The actual dimension "H" shall be the responsibility of the Contractor. Dimensions and sizes of plates not shown are dependent on design loads, capacity and the manufacturer of the bearings. The shop drawings, prepared by the manufacturer, shall provide all pertinent bearing information. The final bearing pedestal elevations shall be determined by the Contractor and submitted with the shop drawings for approval prior to construction of the substructure units.

2. Masonry plates shall be placed on 1/8" thick preformed pads in accordance with the specifications.

3. All steel, unless otherwise specified, shall meet the requirements of ASTM A709/A709M, Grade 50W.

4. Bearing anchorage shall be either Anchor Stud with double nuts and washers in blockout, or Bolt & Stud with Coupler in blockout, at the Contractor's option.

5. Anchorage spacing shall be coordinated with the bearing manufacturer.

6. Anchor bolts shall meet the requirements of ASTM A325, Type 1.

7. Anchor rods shall meet the requirements of ASTM F1554, Grade 105 and shall be swedged on the embedded portion of the rod.

8. Heavy hex nuts for anchor rods shall meet the requirements of ASTM A563, Grade D or DH.

9. Anchor bolts, rods, washers, nuts and shear pins shall be galvanized to ASTM A153 or ASTM B695, Class 50, Type 1. Payment for galvanizing will be considered incidental to the disc bearing pay items.

10. For abutment bearings, all steel located below the polyether urethane disc shall be coated in accordance with Standard Specifications, Section 506, Protective Coating - Steel (Thermal Spray Coating). All remaining steel shall be coated in accordance with Standard Specifications, Section 506, Protective Coating - Steel (Zinc Rich Coating System). Payment for Coatings for Disc Bearings will be considered incidental to Item 523.5551, Pot or Disc Bearings, Fixed, or Item 523.5552, Pot or Disc Bearings, Expansion as applicable.

11. For pier bearings, all steel located below the polyether urethane disc shall be coated in accordance with Standard Specifications, Section 506, Protective Coating - Steel (Thermal Spray Coating). All remaining steel shall remain uncoated. Payment for Coatings for Disc Bearings will be considered incidental to Item 523.5551, Pot or Disc Bearings, Fixed, or Item 523.5552, Pot or Disc Bearings, Expansion as applicable.

12. The abbreviation "PTFE" indicates polytetrafluoroethylene.

13. All PTFE, including guide and restraint surfaces, shall be unfilled.

14. PTFE minimum bearing pressure shall be 3 ksi under total service loading.

15. Average compressive stresses on the disc shall be computed using the minimum plan area of the unstressed disc, excluding the area of any holes.

16. The design temperature range shall be 125 °F (-20 °F to 105 °F).

17. Design of the sole plates and masonry plates is the responsibility of the Bearing Manufacturer. Payment shall be included under Item. 523.5551, Pot or Disc Bearings, Fixed or Item 523.5552, Pot or Disc Bearings, Expansion as applicable.

18. Sole plate shall be beveled according to the grade defined at each substructure location in the Disc Bearing Design Table.

19. Strength Limit State rotations shown in the Disc Bearing Design Table do not include an allowance for uncertainties of 0.005 radians, as defined in AASHTO LRFD Bridge Design Specifications, 6th Edition 2012.

20. Bearings shall be designed with a thermal load factor of 1.0.

21. Longitudinal horizontal forces do not include friction forces at expansion bearings.

22. All bearings shall be marked prior to shipping. The marks shall include the bearing location on the bridge, and a direction arrow that points upstation. All marks shall be permanent and shall be visible after the bearing is installed.

23. Bearing installation shall be in strict conformance with the Standard Specifications and the manufacturer's recommendations.

24. In the Disc Bearing Setting Corrections Table, a negative dimension indicates a direction away from the nearer expansion joint. A positive dimension indicates a direction toward the nearer expansion joint.

25. Temperatures shown in the Disc Bearing Setting Corrections Table are those of the steel girders and not necessarily the ambient air temperature.

26. Pier No. 1 bearings shall be welded to the girder prior to welding of any other bearings. Bearing stiffeners at Pier No. 1 shall be within 1/2 inch of the centerline of bearing at the time of welding.

DISC BEARING DESIGN TABLE

Location	Bearing Type	Design Loads Per Bearing (kips)										Dim. "H" (in.) (Note No. 1)	Design Rotation (Note No. 19)				Total Long. Movement (in.)	Sole Plate Bevel
		Vertical				Horizontal							Strength		Service			
		Strength	Extreme Event	Service		Strength		Extreme Event		Service								
		Total Load	Total Load	Dead Load	Total Load	Longitudinal (Note No. 21)	Transverse	Longitudinal (Note No. 21)	Transverse	Longitudinal (Note No. 21)	Transverse		Rotation (radians)	Coincident Total Load (kips)	Rotation (radians)	Coincident Total Load (kips)		
Abut. No. 1	Uni - directional	370	203	104	221	--	8	--	39	--	4	7"	0.0334	139	0.0192	125	1.66	3.25%
Pier	Fixed	1034	703	413	668	15	15	211	141	11	7	7 1/4"	0.0172	212	0.0040	451	--	-0.16%
Abut. No. 2	Uni - directional	370	203	104	221	--	8	--	39	--	4	7"	0.0334	139	0.0192	125	1.66	-3.58%

DISC BEARING SETTING CORRECTIONS TABLE

	15 °F	30 °F	45 °F	60 °F	75 °F	90 °F
Abut. No. 1	- 3/8"	- 1/4"	0"	1/4"	3/8"	5/8"
Pier	--	--	--	--	--	--
Abut. No. 2	- 3/8"	- 1/4"	0"	1/4"	3/8"	5/8"

STATE OF MAINE
DEPARTMENT OF TRANSPORTATION

BH-1823(300)X

WIN 18233.00

BRIDGE NO. 3412

BRIDGE PLANS

	BY	DATE
PROJ. MANAGER	J. Kittredge	
DESIGN-DETAILED	G. Gustafson	Sep. 2014
CHECKED-REVIEWED	E. Caswell	------
DESIGN2-DETAILED2	------	------
DESIGN3-DETAILED3	------	------
REVISIONS 1	------	------
REVISIONS 2	------	------
REVISIONS 3	------	------
REVISIONS 4	------	------
FIELD CHANGES	------	------
SIGNATURE	D. Domren	Sep. 2014
P.E. NUMBER	------	------
DATE	------	------

SOMESVILLE BRIDGE
SACO RIVER
SACO & BIDDEFORD YORK COUNTY

DISC BEARINGS

SHEET NUMBER

37

OF 53

Filename: ...\BRIDGE\MSTA\037_Bearings.dgn Division: BRIDGE Username: dona.domren Date:2/3/2015

Username: dana.damren Date:2/3/2015
Division: BRIDGE
Filename: ...\MSTA\038_Framing_Plan.dgn

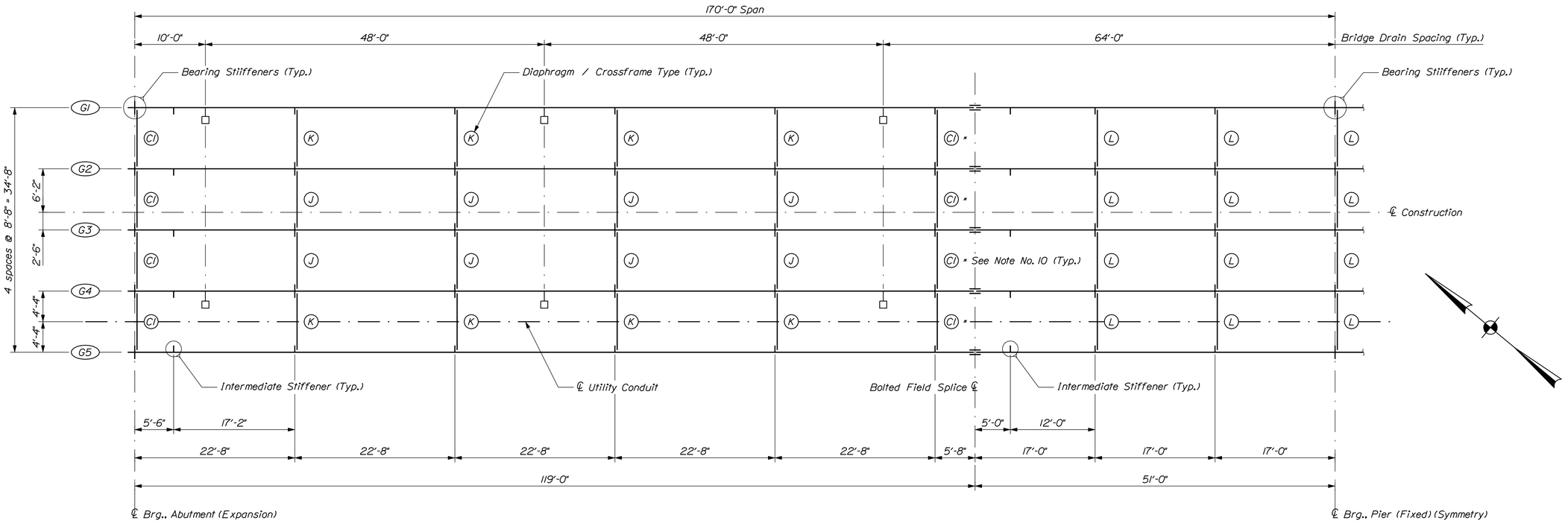

HALF FRAMING PLAN
Dimensions are horizontal

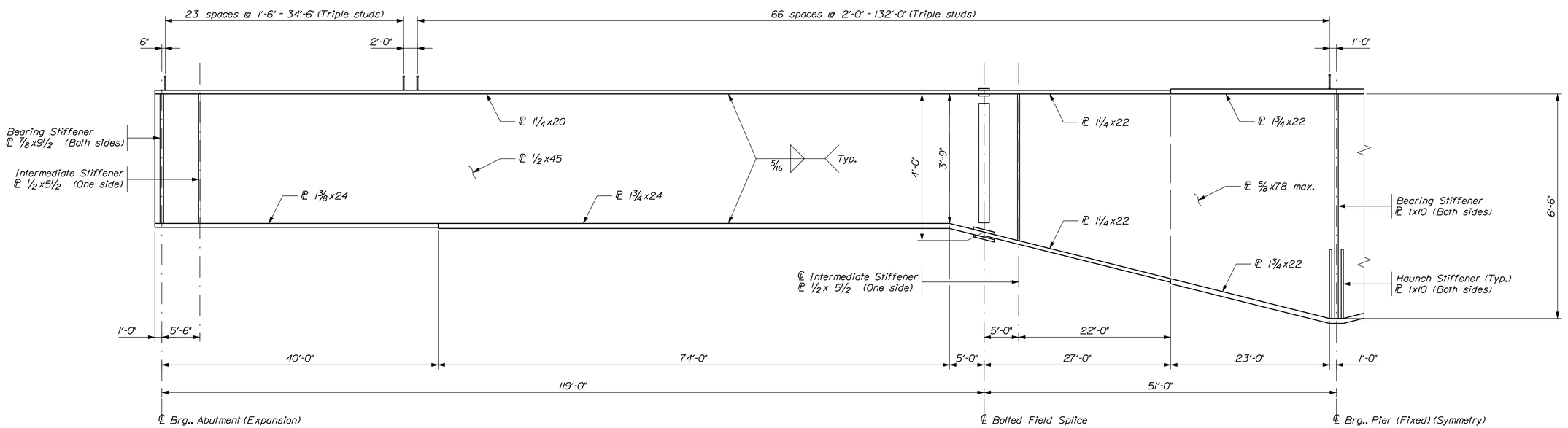

HALF GIRDER ELEVATION
546 studs per girder x 5 girders = 2730 studs

STATE OF MAINE
DEPARTMENT OF TRANSPORTATION

BH-1823(300)X

WIN 18233.00

BRIDGE NO. 3412

BRIDGE PLANS

			DATE
PROJ. MANAGER	J. Kittredge	BY	
DESIGN-DETAILED	G. Gustafson	D. Damren	July 2014
CHECKED-REVIEWED	E. Caswell	-----	Sept. 2014
DESIGN2-DETAILED2	-----	-----	-----
DESIGN3-DETAILED3	-----	-----	-----
REVISIONS 1	-----	-----	-----
REVISIONS 2	-----	-----	-----
REVISIONS 3	-----	-----	-----
REVISIONS 4	-----	-----	-----
FIELD CHANGES	-----	-----	-----

SIGNATURE

P.E. NUMBER

DATE

SOMESVILLE BRIDGE
SACO RIVER
SACO & BIDDEFORD YORK COUNTY

FRAMING PLAN & GIRDER ELEVATION

SHEET NUMBER

38

OF 53

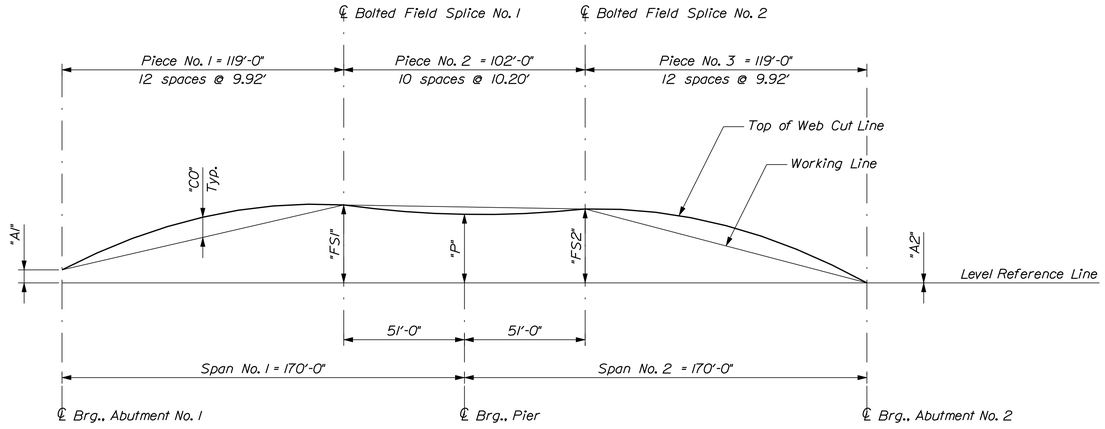

CAMBER DIAGRAM

TABLE OF CAMBER DIMENSIONS (Feet)						
Girder	"A1"	"FS1"	"P"	"FS2"	"A2"	Girder
G1, G5	0.55	3.26	3.17	3.09	0.00	G1, G5
G2, G3, G4	0.55	3.29	3.17	3.12	0.00	G2, G3, G4

TABLE OF CAMBER ORDINATES "CO" (Inches)													
		Piece No. 1											
Girder	℄ A1	9.92'	19.83'	29.75'	39.68'	49.58'	59.50'	69.42'	79.33'	89.25'	99.17'	109.08'	FS1	Girder
G1, G5	0	2 3/4	5 3/16	7 1/8	8 1/2	9 3/8	9 5/8	9 1/4	8 3/8	6 15/16	5	2 5/8	0	G1, G5
G2, G3, G4	0	2 15/16	5 1/2	7 9/16	9 1/16	9 15/16	10 1/4	9 7/8	8 7/8	7 5/16	5 1/4	2 13/16	0	G2, G3, G4
		Piece No. 2											
Girder		FS1	10.20'	20.40'	30.60'	40.80'	℄ P	61.20'	71.40'	81.60'	91.80'	FS2		Girder
G1, G5		0	1/16	1/16	1/16	0	0	0	1/16	1/16	1/16	0		G1, G5
G2, G3, G4		0	- 1/16	- 1/8	- 1/4	- 5/16	- 3/8	- 5/16	- 1/4	- 1/8	- 1/16	0		G2, G3, G4
		Piece No. 3											
Girder	FS2	9.92'	19.83'	29.75'	39.68'	49.58'	59.50'	69.42'	79.33'	89.25'	99.17'	109.08'	℄ A2	Girder
G1, G5	0	2 5/8	5	6 15/16	8 3/8	9 1/4	9 5/8	9 3/8	8 1/2	7 1/8	5 3/16	2 3/4	0	G1, G5
G2, G3, G4	0	2 13/16	5 1/4	7 5/16	8 7/8	9 7/8	10 1/4	9 15/16	9 1/16	7 9/16	5 1/2	2 15/16	0	G2, G3, G4

STRUCTURAL STEEL NOTES

1. Camber ordinates, as shown, are computed to compensate for all dead load deflections and for the curvature of the finished grade profile.

2. No transverse butt weld splices will be allowed in the flange plates or web plates within 10 feet or 10 percent of the span length (whichever is greater) from the points of maximum negative moment or maximum positive moment. Butt weld splices in flanges shall be not less than 3 feet from transverse butt welds in the web plates and no transverse web or flange butt welds shall be located within 3 feet of other transverse welds (e.g. connection plates to web welds) on either flange or web. No transverse butt weld splices will be allowed in areas of stress reversal.

3. Sections of flange plates or web plates between transverse shop splices or between a transverse shop splice and a field splice shall be not less than 20 feet in length unless otherwise shown on the plans.

4. One longitudinal butt weld splice will be allowed in the web of the haunched sections of the girders. Feathered edges between the longitudinal welds and the bottom flanges will not be allowed.

5. Bearing stiffeners shall be plumb after erection and dead loading of the structure. Intermediate web stiffeners may be either plumb or normal to the top flange.

6. Crossframe or diaphragm connection plates may be either plumb or normal to the top flange.

7. Connection plates for diaphragms and crossframes shall have a minimum thickness of 1/2 inch.

8. Filler plates may be steel conforming to the requirements of ASTM A 709, Grade 36.

9. Bolted field splice connections shall be made using 7/8-in. ASTM A 325 H.S. bolts. Hole size shall be 15/16 inch diameter. Bolt threads shall be excluded from the shear plane of the field splice connections.

10. At locations marked with an asterisk (*), the designated Type "C1" diaphragms shall be changed to Type "J" (interior) or Type "K" (exterior) crossframes based on the Contractor's proposed deck placement sequence. No extra compensation will be allowed for any diaphragms so substituted, and any additional costs will be considered incidental to Contract items.

11. The "Drip Bar" detail shall be used adjacent to each abutment as shown on all girders.

12. Girder ends and end cross frames shall be coated to a distance of 10 feet from the centerline of bearing in accordance with Standard Specifications Section 506, Shop Applied Protective Coating - Steel (Zinc Rich Coating System).

13. After placement of the superstructure concrete, the abutments and piers shall be thoroughly cleaned of all stains by a method approved by the Resident. Payment will be considered incidental to Contract items.

14. Structural Steel was designed with a vertical construction load of 50 lb/sf and a lateral construction wind velocity of 50 mph.

15. All web, flange, and field splice plates in tension or stress reversal areas shall be impact tested in accordance with AASHTO M 270 (2014 ed.), Table 9, Zone 2.

STRUCTURAL STEEL MATERIALS

Top & Bottom Flanges at Pier Piece ..... ASTM A 709, Grade HPS 70W
Splice Plates (except Filler Plates) ..... ASTM A 709, Grade HPS 70W
All Other Material (unless noted) ..... ASTM A 709, Grade 50W
High Strength Bolts ..... ASTM A 325, Type 3

STATE OF MAINE
DEPARTMENT OF TRANSPORTATION

BH-1823(300)X

WIN 18233.00

BRIDGE NO. 3412

BRIDGE PLANS

	BY	DATE
PROJ. MANAGER	J. Kittredge	
DESIGN-DETAILED	G. Gustafson	July 2014
CHECKED-REVIEWED	E. Caswell	Sept. 2014
DESIGN2-DETAILED2	-----	-----
DESIGN3-DETAILED3	-----	-----
REVISIONS 1	-----	-----
REVISIONS 2	-----	-----
REVISIONS 3	-----	-----
REVISIONS 4	-----	-----
FIELD CHANGES	-----	-----

SIGNATURE

P.E. NUMBER

DATE

SOMESVILLE BRIDGE
SACO RIVER
SACO & BIDDEFORD YORK COUNTY

CAMBER DIAGRAM & STR. STEEL NOTES

SHEET NUMBER

39

OF 53

Filename: ...\MSTA\039_Camber Diagram.dgn Username: dana.damren Division: BRIDGE Date:2/3/2015

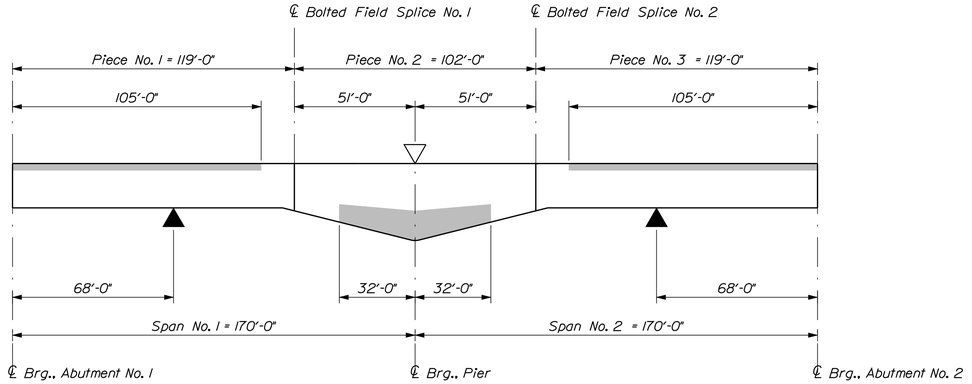

GIRDER STRESS DIAGRAM

▽ Maximum Negative Moment ▲ Maximum Positive Moment

Shaded areas are always in compression.
Other areas are in tension or have stress reversal.

BOTTOM OF SLAB ELEVATIONS

		Span No. 1																	Span No. 2															
Girder	℄ A1	10'	20'	30'	40'	50'	60'	70'	80'	90'	100'	110'	120'	130'	140'	150'	160'	℄ P	10'	20'	30'	40'	50'	60'	70'	80'	90'	100'	110'	120'	130'	140'	150'	160'	℄ A2	Girder
G1	61.72	62.15	62.55	62.92	63.24	63.52	63.76	63.96	64.11	64.23	64.30	64.35	64.38	64.38	64.38	64.37	64.36	64.35	64.33	64.31	64.28	64.25	64.21	64.16	64.08	63.97	63.82	63.64	63.41	63.14	62.82	62.47	62.07	61.63	61.17	G1
G2	61.89	62.34	62.75	63.13	63.46	63.75	64.00	64.19	64.34	64.45	64.52	64.56	64.57	64.57	64.56	64.55	64.54	64.52	64.50	64.49	64.47	64.44	64.41	64.37	64.30	64.19	64.05	63.87	63.64	63.37	63.05	62.68	62.27	61.82	61.35	G2
G3	61.97	62.41	62.82	63.20	63.54	63.83	64.07	64.26	64.42	64.53	64.60	64.63	64.65	64.65	64.64	64.62	64.61	64.59	64.58	64.56	64.54	64.52	64.49	64.44	64.37	64.27	64.13	63.94	63.72	63.44	63.12	62.75	62.34	61.90	61.42	G3
G4	61.79	62.24	62.65	63.03	63.36	63.65	63.90	64.09	64.24	64.35	64.42	64.46	64.47	64.47	64.46	64.45	64.44	64.42	64.40	64.39	64.37	64.34	64.31	64.27	64.20	64.09	63.95	63.77	63.54	63.27	62.95	62.58	62.17	61.72	61.25	G4
G5	61.62	62.05	62.45	62.82	63.14	63.42	63.66	63.86	64.01	64.13	64.20	64.25	64.28	64.28	64.28	64.27	64.26	64.25	64.23	64.21	64.18	64.15	64.11	64.06	63.98	63.87	63.72	63.54	63.31	63.04	62.72	62.37	61.97	61.53	61.07	G5

TABLE OF DEFLECTIONS ~ INTERIOR GIRDERS (Inches)

		Span No. 1																	Span No. 2															
	℄ A1	10'	20'	30'	40'	50'	60'	70'	80'	90'	100'	110'	120'	130'	140'	150'	160'	℄ P	10'	20'	30'	40'	50'	60'	70'	80'	90'	100'	110'	120'	130'	140'	150'	160'	℄ A2
Steel Dead Load	0.00	0.38	0.75	1.06	1.30	1.46	1.55	1.56	1.48	1.34	1.15	0.92	0.68	0.45	0.26	0.12	0.03	0.00	0.03	0.12	0.26	0.45	0.68	0.92	1.15	1.34	1.48	1.56	1.55	1.46	1.30	1.06	0.75	0.38	0.00
Fluid Dead Load	0.00	1.13	2.16	3.05	3.75	4.22	4.46	4.46	4.26	3.85	3.29	2.62	1.93	1.27	0.73	0.33	0.09	0.00	0.09	0.33	0.73	1.27	1.93	2.62	3.29	3.85	4.26	4.46	4.46	4.22	3.75	3.05	2.16	1.13	0.00
Superimposed Dead Load	0.00	0.23	0.44	0.63	0.77	0.87	0.92	0.92	0.89	0.81	0.70	0.56	0.42	0.28	0.16	0.08	0.02	0.00	0.02	0.08	0.16	0.28	0.42	0.56	0.70	0.81	0.89	0.92	0.92	0.87	0.77	0.63	0.44	0.23	0.00
Wearing Surface & Utility D.L.	0.00	0.20	0.38	0.54	0.67	0.75	0.80	0.80	0.77	0.70	0.60	0.49	0.36	0.24	0.14	0.07	0.02	0.00	0.02	0.07	0.14	0.24	0.36	0.49	0.60	0.70	0.77	0.80	0.80	0.75	0.67	0.54	0.38	0.20	0.00

TABLE OF DEFLECTIONS ~ EXTERIOR GIRDERS (Inches)

		Span No. 1																	Span No. 2															
	℄ A1	10'	20'	30'	40'	50'	60'	70'	80'	90'	100'	110'	120'	130'	140'	150'	160'	℄ P	10'	20'	30'	40'	50'	60'	70'	80'	90'	100'	110'	120'	130'	140'	150'	160'	℄ A2
Steel Dead Load	0.00	0.37	0.72	1.02	1.26	1.42	1.50	1.51	1.44	1.30	1.12	0.89	0.66	0.43	0.25	0.11	0.03	0.00	0.03	0.11	0.25	0.43	0.66	0.89	1.12	1.30	1.44	1.51	1.50	1.42	1.26	1.02	0.72	0.37	0.00
Fluid Dead Load	0.00	0.94	1.81	2.56	3.13	3.53	3.73	3.74	3.56	3.22	2.75	2.20	1.61	1.07	0.61	0.28	0.07	0.00	0.07	0.28	0.61	1.07	1.61	2.20	2.75	3.22	3.56	3.74	3.73	3.53	3.13	2.56	1.81	0.94	0.00
Superimposed Dead Load	0.00	0.23	0.44	0.63	0.77	0.87	0.92	0.92	0.89	0.81	0.70	0.56	0.42	0.28	0.16	0.08	0.02	0.00	0.02	0.08	0.16	0.28	0.42	0.56	0.70	0.81	0.89	0.92	0.92	0.87	0.77	0.63	0.44	0.23	0.00
Wearing Surface & Utility D.L.	0.00	0.20	0.38	0.54	0.67	0.75	0.80	0.80	0.77	0.70	0.60	0.49	0.36	0.24	0.14	0.07	0.02	0.00	0.02	0.07	0.14	0.24	0.36	0.49	0.60	0.70	0.77	0.80	0.80	0.75	0.67	0.54	0.38	0.20	0.00

Filename: ...\040_Girder Stress Diagram & BOS.dgn Division: BRIDGE User:dana.damren Date:2/3/2015

STATE OF MAINE
DEPARTMENT OF TRANSPORTATION

BH-1823(300)X

WIN 18233.00

BRIDGE NO. 3412

BRIDGE PLANS

PROJ. MANAGER	J. Kitteredge	BY	DATE
DESIGN-DETAILED	G. Gustafson	D. Damren	July 2014
CHECKED-REVIEWED	E. Caswell	------	Sept. 2014
DESIGN2-DETAILED2	------	------	------
DESIGN3-DETAILED3	------	------	------
REVISIONS 1	------	------	------
REVISIONS 2	------	------	------
REVISIONS 3	------	------	------
REVISIONS 4	------	------	------
FIELD CHANGES	------	------	------

SIGNATURE

P.E. NUMBER

DATE

SOMESVILLE BRIDGE
SACO RIVER
SACO & BIDDEFORD YORK COUNTY

GIRDER STRESS & BOS ELEV'S

SHEET NUMBER

40

OF 53

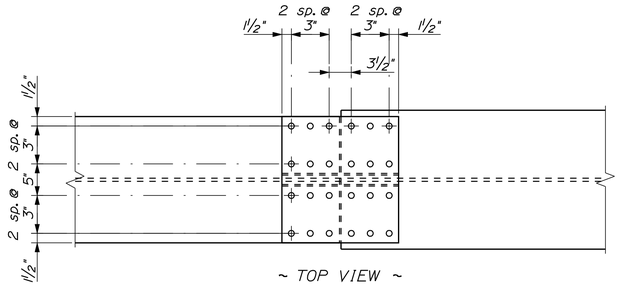

~ TOP VIEW ~

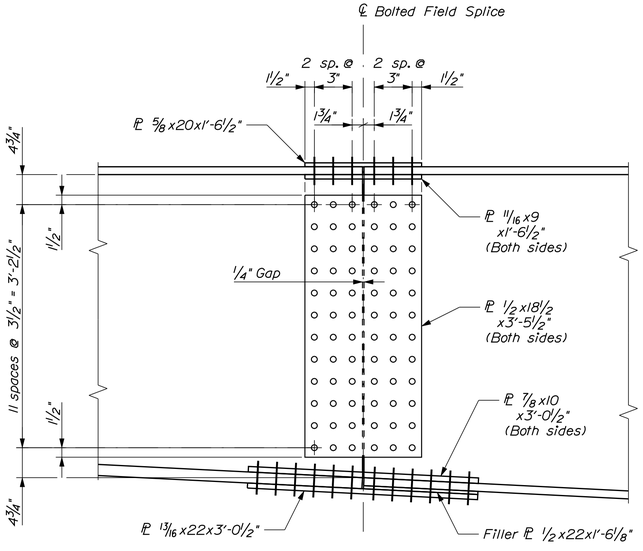

~ ELEVATION ~

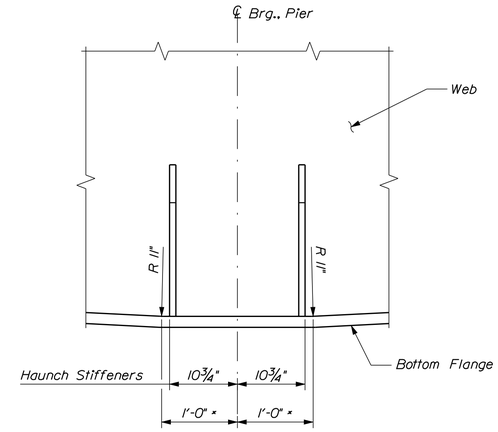

HAUNCH DETAIL

* Intersection of top surfaces of flange

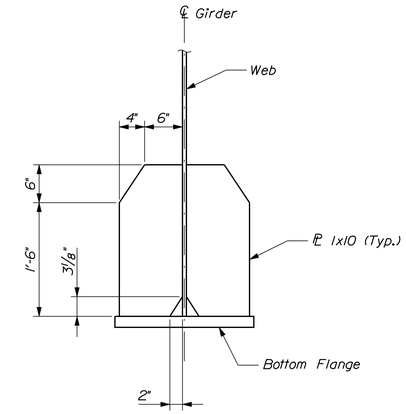

HAUNCH STIFFENER DETAIL

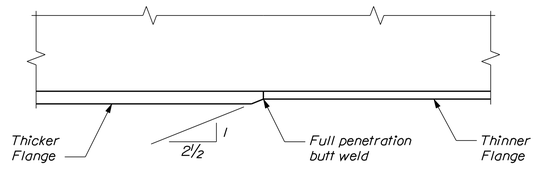

FLANGE TRANSITION DETAIL

Typical Top & Bottom Flange

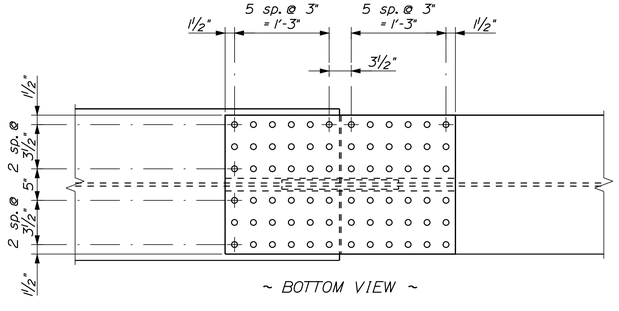

~ BOTTOM VIEW ~

BOLTED FIELD SPLICE

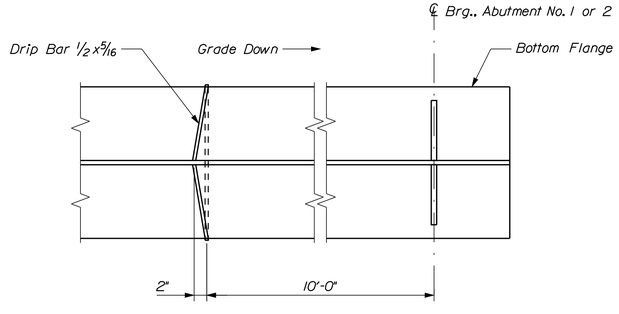

DRIP BAR PLAN

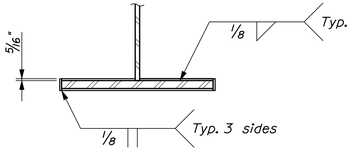

DRIP BAR SECTION

STATE OF MAINE
DEPARTMENT OF TRANSPORTATION

BH-1823(300)X

WIN 18233.00

BRIDGE NO. 3412

BRIDGE PLANS

	BY	DATE	SIGNATURE
PROJ. MANAGER	J. Kittredge		
DESIGN-DETAILED	G. Gustafson	July 2014	
CHECKED-REVIEWED	D. Domren	Sept. 2014	
DESIGN2-DETAILED2	E. Caswell	-----	P.E. NUMBER
DESIGN3-DETAILED3	-----	-----	-----
REVISIONS 1	-----	-----	DATE
REVISIONS 2	-----	-----	-----
REVISIONS 3	-----	-----	-----
REVISIONS 4	-----	-----	-----
FIELD CHANGES	-----	-----	-----

SOMESVILLE BRIDGE
SACO RIVER
SACO & BIDDEFORD YORK COUNTY

STRUCTURAL STEEL DETAILS

SHEET NUMBER

41

OF 53

Filename: ...\041_Structural Steel Details.dgn Division: BRIDGE Username: dona.domren Date:2/3/2015

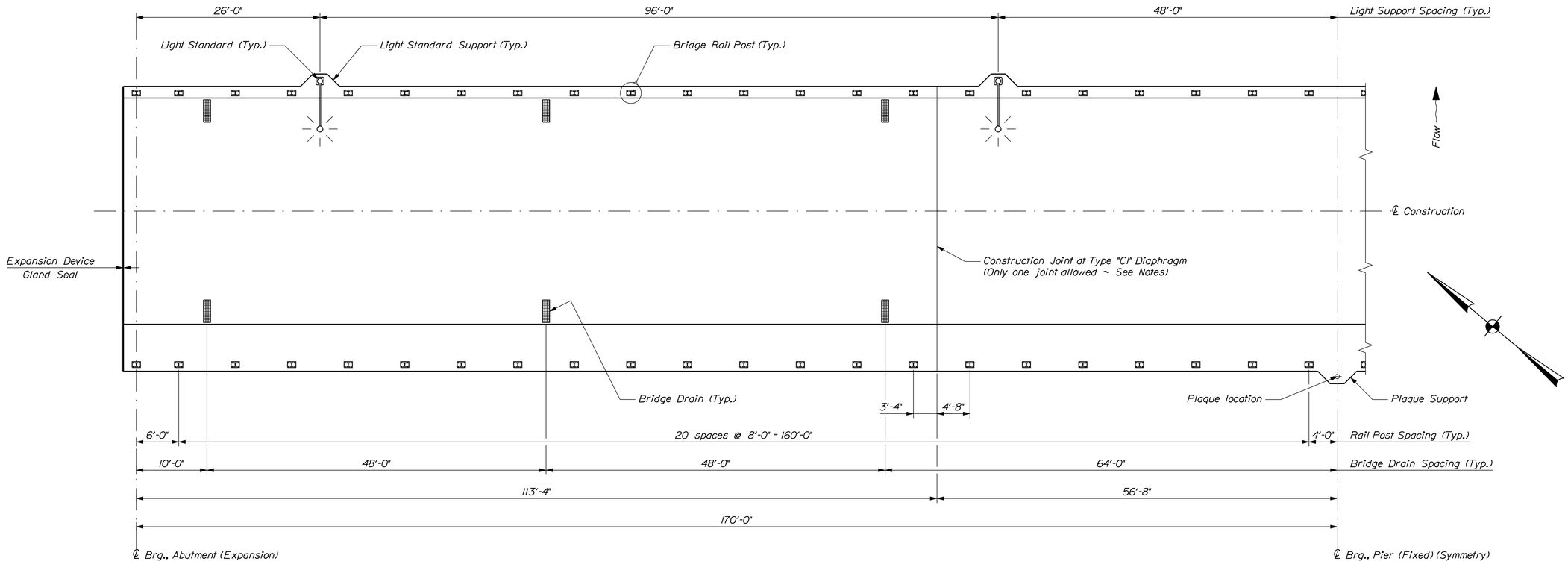

HALF SUPERSTRUCTURE PLAN

Dimensions are horizontal

SUPERSTRUCTURE NOTES

1. The theoretical blocking used for design of the structure is 3¾ inch at the centerline of bearing of the abutments and pier. Refer to Standard Detail 502(02) for blocking details.

2. Reinforcing steel shall have a minimum concrete cover of 2 inches unless otherwise noted.

3. Form a one inch V-groove on the fascias at the horizontal joint between the curb and slab.

4. The superstructure slab concrete shall not be placed in one continuous operation. The initial placement shall begin at an abutment and shall terminate at the designated slab construction joint in the same span. The successive placement shall proceed from the end of the previous placement and shall terminate at the opposite abutment. No additional construction joints will be allowed. Concrete in each placement shall be kept plastic until the entire placement has been completed. A minimum of 5 days shall elapse between successive partial placements. The superstructure slab concrete placement sequence shall be approved by the Resident.

5. At the Contractor's option, Precast Deck Panels may be used in place of the full depth cast-in-place deck slab, in accordance with Special Provisions Section 502, Structural Concrete - Precast Deck Panels, and in accordance with the Standard Details. If this option is selected, the superstructure slab concrete may be placed in one continuous operation.

6. Payment for reinforcing steel fabricated, delivered, and placed in the cast-in-place portion of the structural concrete slab will be considered incidental to the appropriate Standard Specifications Section 502 pay item.

7. The Precast Deck Panel option shall include 27 additional longitudinal #5 reinforcing bar runs added to the top mat and extending 83 feet either side of the centerline of the pier. These bars shall be in addition to the Main Longitudinal Bar Runs and Negative Moment Longitudinal Bar Runs in the Slab Reinforcing Table. All longitudinal top mat reinforcing bars shall be equally spaced.

8. The bump-out at Sta. 15+02, 22'-8" right is for a city-owned plaque. The Contractor shall install Standard Detail 507(09), Rail Post Anchorage in the plaque bump-out in accordance with the Standard Details and as directed by the Resident. Installation of the plaque anchorage including all labor, materials, and related incidentals will be included under Item No. 502.49, Structural Concrete Curbs and Sidewalk. No separate payment will be made. Installation of the city-owned plaque is not included in the Work. The Contractor shall provide the upper heavy hex nuts and washers to the Resident.

9. Expansion joint block-out deck concrete shall be Class "LP".

STATE OF MAINE
DEPARTMENT OF TRANSPORTATION

BH-1823(300)X

WIN 18233.00

BRIDGE NO. 3412

BRIDGE PLANS

PROJ. MANAGER	J. Kittredge			
DESIGN-DETAILED	G. Gustafson	D. Domren	July 2014	SIGNATURE
CHECKED-REVIEWED	E. Caswell	-----	Sept. 2014	
DESIGN2-DETAILED2	-----	-----	-----	P.E. NUMBER
DESIGN3-DETAILED3	-----	-----	-----	
REVISIONS 1	-----	-----	-----	DATE
REVISIONS 2	-----	-----	-----	
REVISIONS 3	-----	-----	-----	
REVISIONS 4	-----	-----	-----	
FIELD CHANGES	-----	-----	-----	

SOMESVILLE BRIDGE
SACO RIVER
SACO & BIDDEFORD YORK COUNTY

SUPERSTRUCTURE

SHEET NUMBER

42

OF 53

Username: Garrett.A.Gustafson Date:2/6/2015

Division: BRIDGE

Filename: ...\MSTA\042_Superstructure.dgn

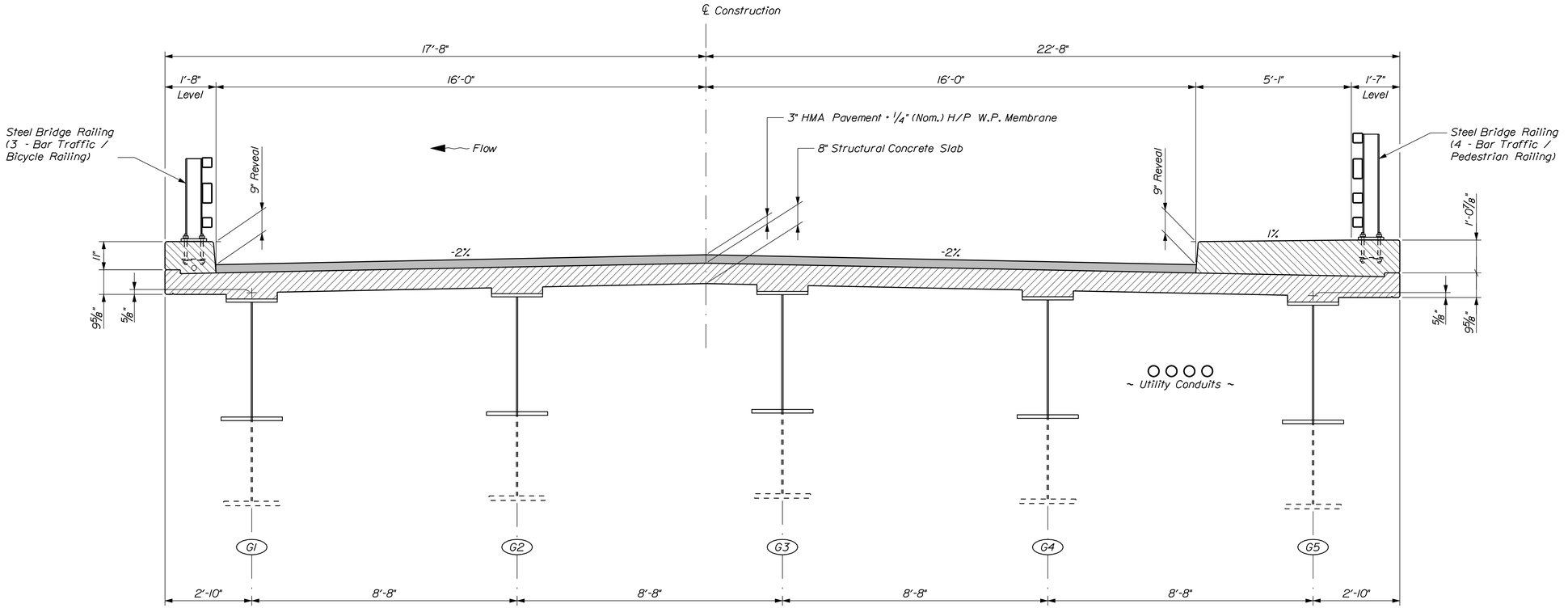

TRANSVERSE SECTION

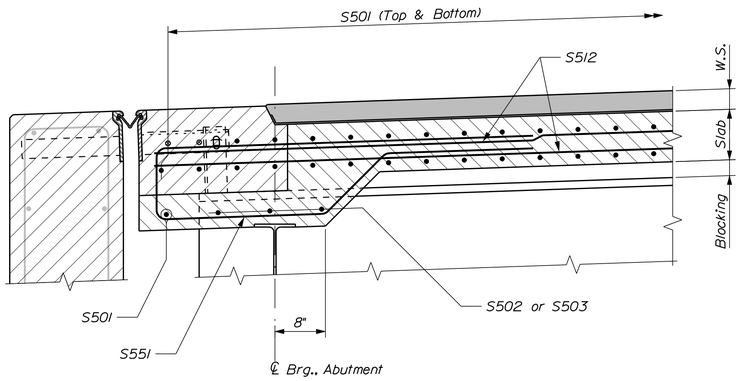

LONGITUDINAL SECTION AT ABUTMENTS

* Cut bar to clear obstructions

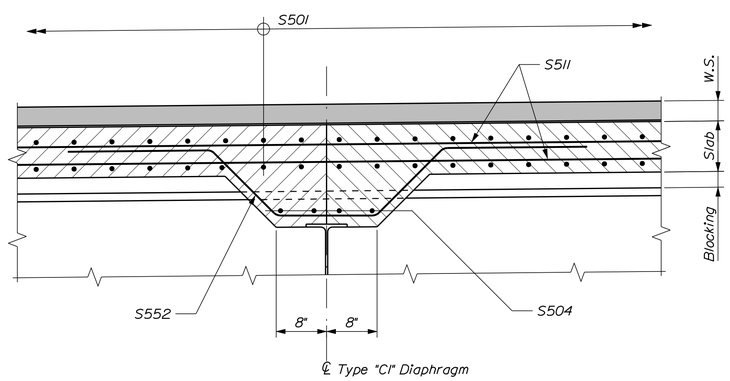

LONGITUDINAL SECTION AT CONSTRUCTION JOINT

STATE OF MAINE
DEPARTMENT OF TRANSPORTATION

BH-1823(300)X

WIN 18233.00

BRIDGE NO. 3412

BRIDGE PLANS

PROJ. MANAGER	J. Kittredge		
DESIGN-DETAILED	G. Gustafson	D. Domren	July 2014
CHECKED-REVIEWED	E. Caswell	------	Sept. 2014
DESIGN2-DETAILED2	------	------	------
DESIGN3-DETAILED3	------	------	------
REVISIONS 1	------	------	------
REVISIONS 2	------	------	------
REVISIONS 3	------	------	------
REVISIONS 4	------	------	------
FIELD CHANGES	------	------	------

SIGNATURE

P.E. NUMBER

DATE

SOMESVILLE BRIDGE
SACO RIVER
SACO & BIDDEFORD YORK COUNTY

TRANSVERSE SECTION

SHEET NUMBER

43

OF 53

Filename: ...\043_Superstructure_Sections.dgn Division: BRIDGE Username: dona.domren Date:2/3/2015

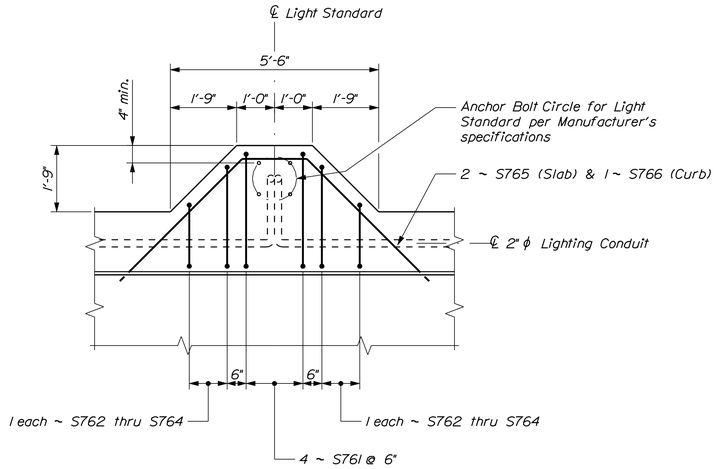

LIGHT STANDARD SUPPORT PLAN

Plaque Support similar on sidewalk side

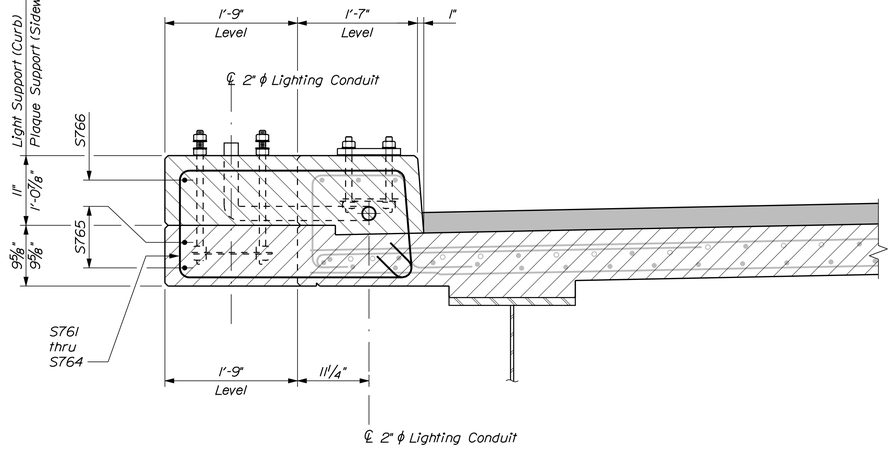

LIGHT STANDARD SUPPORT SECTION

Plaque Support similar on sidewalk side

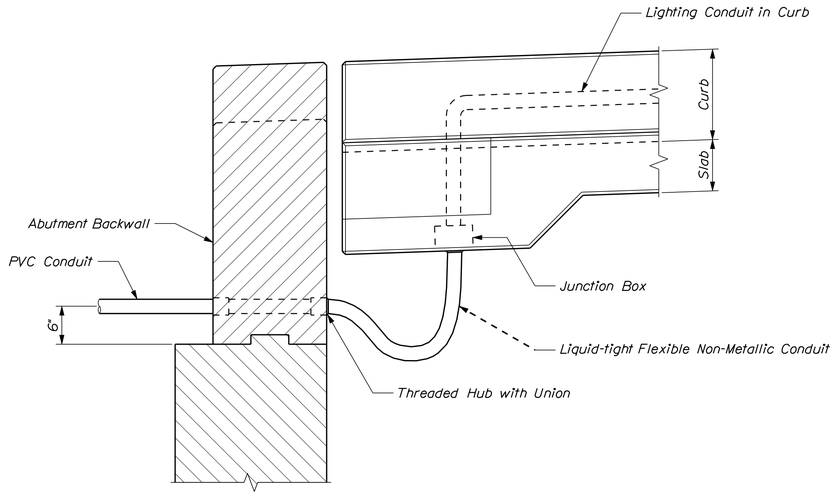

LIGHTING CONDUIT EXPANSION DETAIL

STATE OF MAINE
DEPARTMENT OF TRANSPORTATION

BH-1823(300)X

WIN 18233.00

BRIDGE NO. 3412

BRIDGE PLANS

	BY	DATE
PROJ. MANAGER	J. Kittredge	
DESIGN-DETAILED	G. Gustafson	July 2014
CHECKED-REVIEWED	E. Caswell	Sept. 2014
DESIGN2-DETAILED2	-----	-----
DESIGN3-DETAILED3	-----	-----
REVISIONS 1	-----	-----
REVISIONS 2	-----	-----
REVISIONS 3	-----	-----
REVISIONS 4	-----	-----
FIELD CHANGES	-----	-----

SIGNATURE

P.E. NUMBER

DATE

SOMESVILLE BRIDGE
SACO RIVER
SACO & BIDDEFORD YORK COUNTY

SUPERSTRUCTURE DETAILS

SHEET NUMBER

44

OF 53

Filename: ...\044_Superstructure_Details.dgn Division: BRIDGE Username: dana.damren Date:2/3/2015

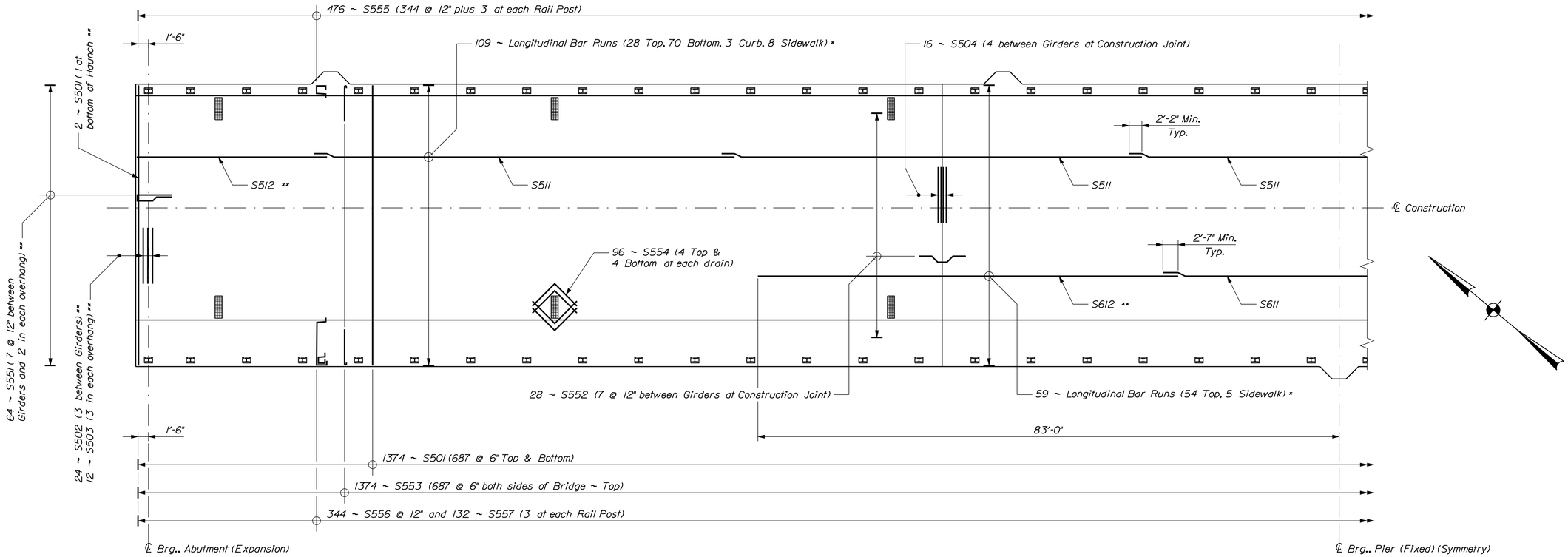

HALF SUPERSTRUCTURE REINFORCING PLAN

* See "Half Upstream / Downstream Transverse Reinforcing Section" and "Slab Reinforcing Table"
** Typical both ends of Bridge

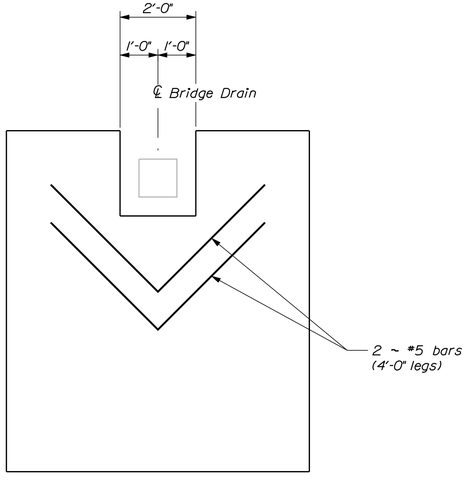

TYPICAL PRECAST DECK PANEL PLAN

Showing Bridge Drain Blockout

SLAB REINFORCING TABLE

Main Longitudinal Bar Runs				
Location	No. Runs	Bars	Qty. S511	Qty. S512
Slab	98	5 ~ S511, 2 ~ S512	490	196
Curb	3	5 ~ S511, 2 ~ S512	15	6
Sidewalk	8	5 ~ S511, 2 ~ S512	40	16
Total Bars			545	218
Negative Moment Longitudinal Bar Runs				
Location	No. Runs	Bars	Qty. S611	Qty. S612
Slab	54	1 ~ S611, 2 ~ S612	54	108
Sidewalk	5	1 ~ S611, 2 ~ S612	5	10
Total Bars			59	118

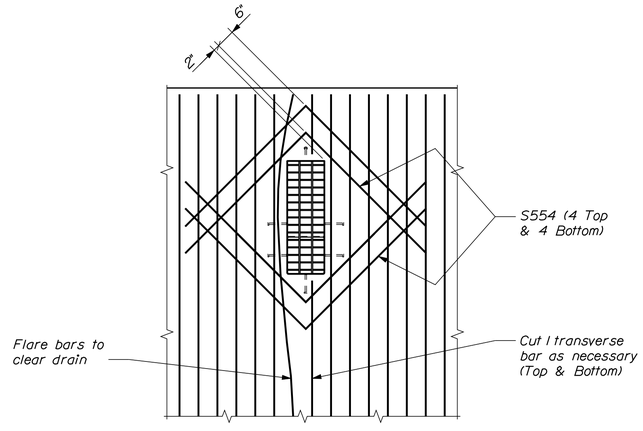

SLAB REINFORCING PLAN AT BRIDGE DRAIN

STATE OF MAINE
DEPARTMENT OF TRANSPORTATION

BH-1823(300)X

WIN 18233.00

BRIDGE NO. 3412

BRIDGE PLANS

PROJ. MANAGER	J. Kittredge		
DESIGN-DETAILED	G. Gustafson	D. Domren	July 2014
CHECKED-REVIEWED	E. Caswell	------	Sept. 2014
DESIGN2-DETAILED2	------	------	------
DESIGN3-DETAILED3	------	------	------
REVISIONS 1	------	------	------
REVISIONS 2	------	------	------
REVISIONS 3	------	------	------
REVISIONS 4	------	------	------
FIELD CHANGES	------	------	------

SIGNATURE

P.E. NUMBER

DATE

SOMESVILLE BRIDGE
SACO RIVER
SACO & BIDDEFORD YORK COUNTY

SUPERSTR. REINFORCING PLAN

SHEET NUMBER

45

OF 53

Username: dona.domren Date:2/10/2015
Filename: ...\045_Superstructure_Reinforcing Plan.dgn Division: BRIDGE

Filename: ...\046_Superstructure_Reinforcing Sections.dgn Division: BRIDGE Username: dona.domren Date:2/3/2015

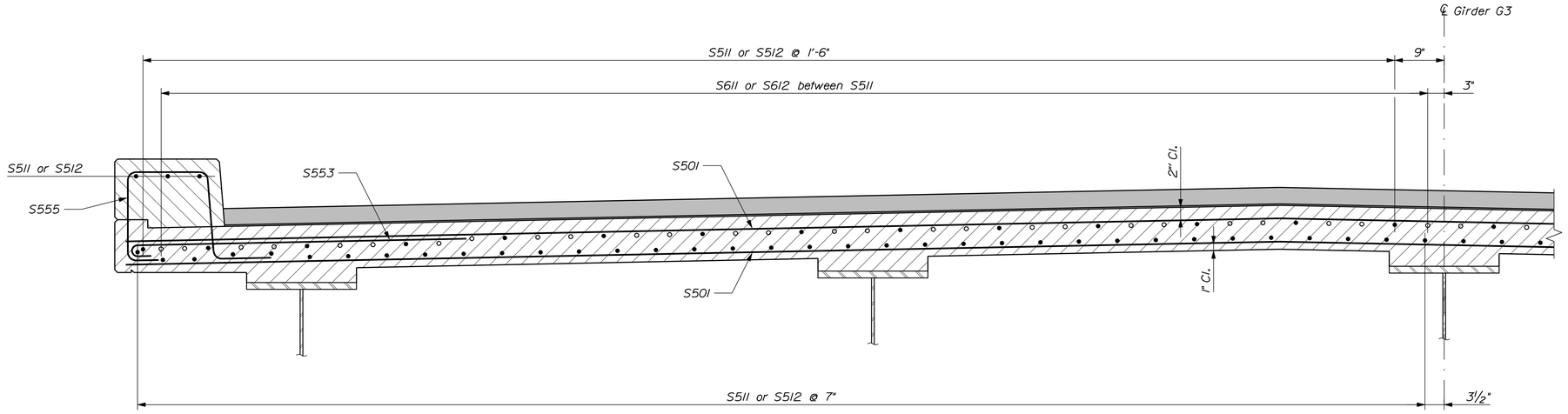

HALF DOWNSTREAM TRANSVERSE REINFORCING SECTION

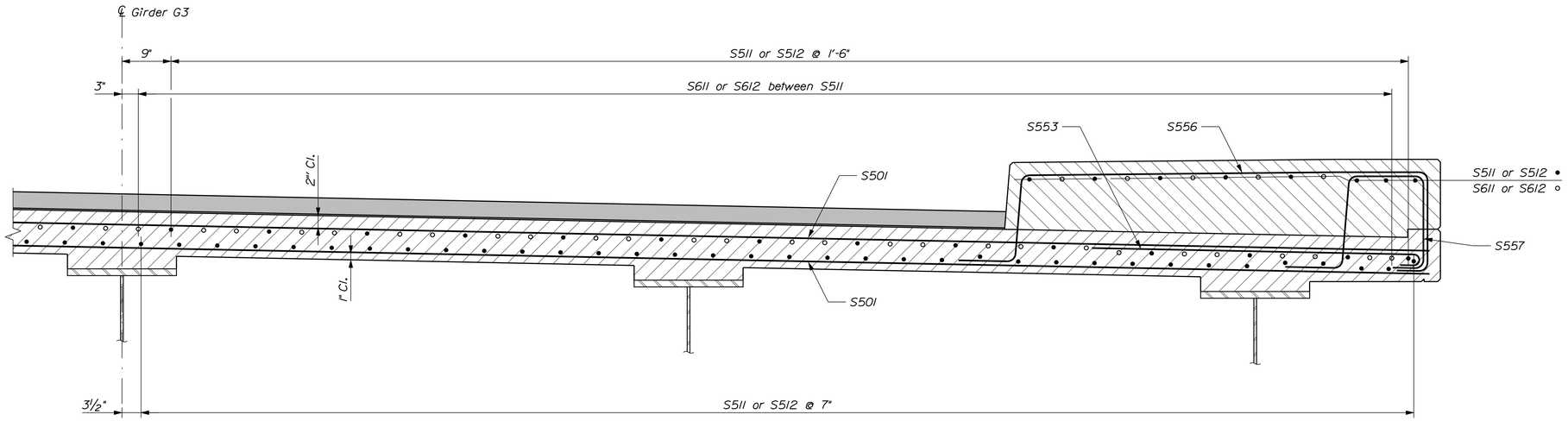

HALF UPSTREAM TRANSVERSE REINFORCING SECTION

STATE OF MAINE
DEPARTMENT OF TRANSPORTATION

BH-1823(300)X

WIN 18233.00

BRIDGE NO. 3412

BRIDGE PLANS

			DATE
PROJ. MANAGER	J. Kittredge	BY	
DESIGN-DETAILED	G. Gustafson	D. Domren	July 2014
CHECKED-REVIEWED	E. Caswell	-----	Sept. 2014
DESIGN2-DETAILED2	-----	-----	-----
DESIGN3-DETAILED3	-----	-----	-----
REVISIONS 1	-----	-----	-----
REVISIONS 2	-----	-----	-----
REVISIONS 3	-----	-----	-----
REVISIONS 4	-----	-----	-----
FIELD CHANGES	-----	-----	-----

SIGNATURE

P.E. NUMBER

DATE

SOMESVILLE BRIDGE
SACO RIVER
SACO & BIDDEFORD YORK COUNTY

TRANSVERSE REINF. SECTIONS

SHEET NUMBER

46

OF 53

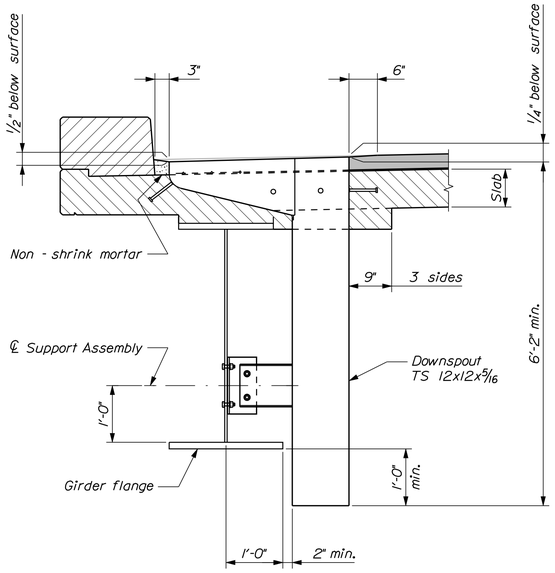

CURB SIDE BRIDGE DRAIN ELEVATION

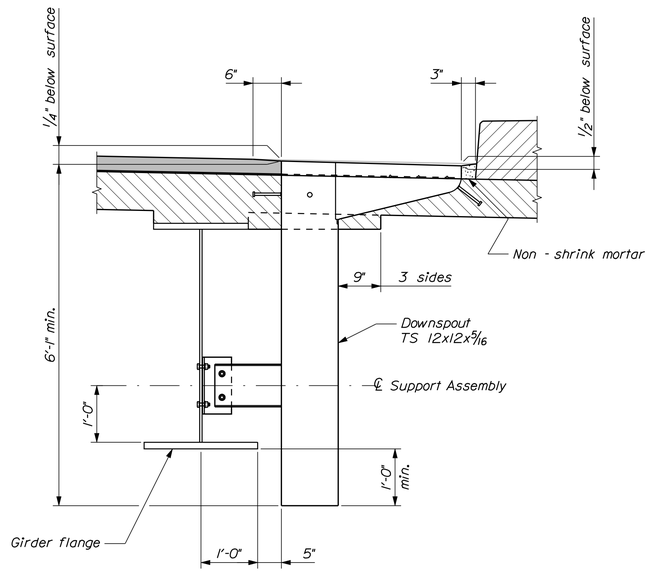

SIDEWALK SIDE BRIDGE DRAIN ELEVATION

BRIDGE DRAIN NOTES

1. All plates shall be ¼ inch thick.

2. The grating shall be a commercial heavy - duty grating with 1½" x 5/16" bearing bars spaced at 2⅜ inches and ⅜" ϕ cross bars spaced at 4 inches. The grating shall be centered in the drain top.

3. Drains, including C 9x13.4, shall be blast cleaned to the requirements of SSPC-SP6/NACE 3 and galvanized in accordance with ASTM A 123.

4. For structural steel beams / girders, the WT 6x13 and associated bolts shall meet the material and protective coating requirements of the structural steel.

5. Shear connectors welded to the top flange of steel beams / girders may require adjustment to clear the bridge drains.

6. Payment for bridge drains will be as specified under Subsection 502.19 of the Standard Specifications.

MATERIALS

Downspout . . . . . ASTM A 500, Grade B.
Shapes & plates . . . . . AASHTO M 270M/M 270, Grade 50
Bolts . . . . . ASTM A 307, Grade A

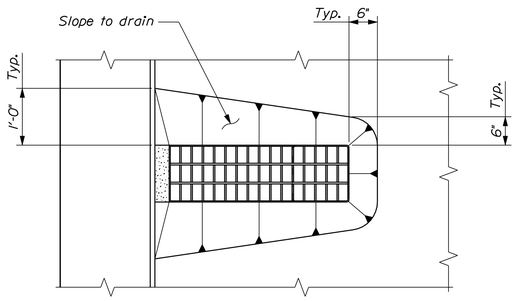

BRIDGE DRAIN PLAN

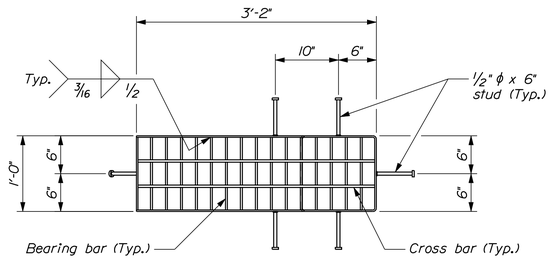

~ DRAIN TOP VIEW ~

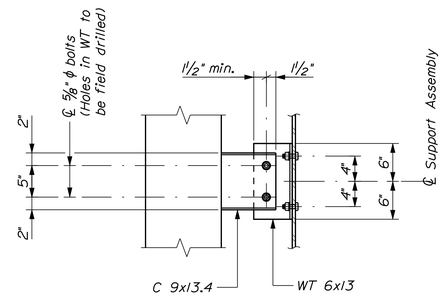

~ SUPPORT ASSEMBLY DETAIL~

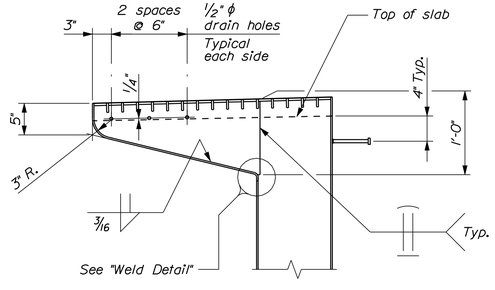

~ DRAIN SECTION ~

BRIDGE DRAIN

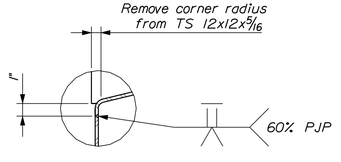

WELD DETAIL

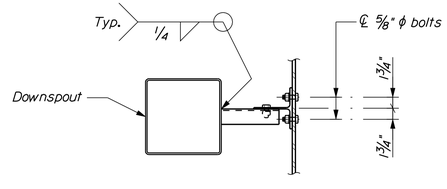

~ SUPPORT ASSEMBLY TOP VIEW ~

SUPPORT ASSEMBLY

STATE OF MAINE
DEPARTMENT OF TRANSPORTATION

BH-1823(300)X

WIN 18233.00

BRIDGE NO. 3412

BRIDGE PLANS

		DATE
PROJ. MANAGER	J. Kittredge	
DESIGN-DETAILED	D. Domren	July 2014
CHECKED-REVIEWED	G. Gustafson	Dec. 2014
DESIGN2-DETAILED2	------	------
DESIGN3-DETAILED3	------	------
REVISIONS 1	------	------
REVISIONS 2	------	------
REVISIONS 3	------	------
REVISIONS 4	------	------
FIELD CHANGES	------	------

BY: D. Domren
SIGNATURE: ------
P.E. NUMBER: ------
DATE: ------

SOMESVILLE BRIDGE
SACO RIVER
SACO & BIDDEFORD
YORK COUNTY

BRIDGE DRAINS

SHEET NUMBER
47
OF 53

Username: Garrett.A.Gustafson Date:2/9/2015
Division: BRIDGE
Filename: ...\mst0\047_Bridge_Drains.dgn

STRAIGHT BARS

MARK	QTY.	LENGTH	LOCATION
			ABUTMENT NO. 1
A501	37	3'-10"	Vertical - Backwall
A511	14	22'-4"	Horizontal - Backwall
A512	14	17'-4"	Horizontal - Backwall
A513	4	5'-0"	Horizontal - Utility Opening
A521	36	27'-0"	Horizontal - Wingwall
A522	34	23'-6"	Horizontal - Wingwall
A601	30	15'-0"	Footing
A602	48	30'-0"	Footing
A603	26	43'-10"	Footing
A604	52	15'-6"	Footing
A605	6	16'-9"	Footing
A606	3	16'-3"	Footing
A611	47	8'-10"	Vertical - Breastwall
A612	37	12'-3"	Vertical - Breastwall
A613	48	12'-6"	Vertical - Wingwall
A701	45	3'-8"	Seal Dowels
A702	23	43'-10"	Footing
A703	46	15'-6"	Footing
A711	21	22'-4"	Horizontal - Breastwall
A712	21	17'-4"	Horizontal - Breastwall
A811	44	9'-7"	Vertical - Wingwall
A901	32	30-0"	Footing
			APPROACH SLABS
AS501	32	30'-8"	Transverse
AS601	62	15'-0"	Longitudinal

MARK	QTY.	LENGTH	LOCATION
			ABUTMENT NO. 2
B501	37	3'-10"	Vertical - Backwall
B511	14	22'-4"	Horizontal - Backwall
B512	14	17'-4"	Horizontal - Backwall
B513	4	5'-0"	Horizontal - Utility Opening
B514	58	7'-11"	Vertical - Wingwall
B521	10	27'-0"	Horizontal - U.S. Wingwall
B522	17	23'-6"	Horizontal - U.S. Wingwall
B523	10	19'-1"	Horizontal - D.S. Wingwall
B524	17	15'-7"	Horizontal - D.S. Wingwall
B525	25	17'-7"	Horizontal - D.S. Wingwall
B601	34	15'-0"	Footing
B602	16	30'-0"	Footing
B603	16	40'-0"	Footing
B604	18	43'-10"	Footing
B605	44	13'-6"	Footing
B606	2	16'-9"	Footing
B607	2	26'-9"	Footing
B608	2	20'-3"	Footing
B701	16	43'-10"	Footing
B702	40	13'-6"	Footing
B711	13	22'-4"	Horizontal - Breastwall
B712	13	17'-4"	Horizontal - Breastwall
B801	50	4'-10"	Seal Dowels
B901	14	30-0"	Footing
B1101	14	40-0"	Footing

BENT BARS

MARK	QTY.	LENGTH	TYPE	A	B	C	D	E	F	G	H	O	R	LOCATION
								ABUTMENT NO. 1						
A551	25	7'-2"	S	0	2'-3"	2'-8"	2'-3"	--	--	0	--	--	--	Bridge Seat Pedestal
A552	20	8'-10"	S	0	2'-3"	4'-4"	2'-3"	--	--	0	--	--	--	Bridge Seat Pedestal
A553	96	4'-0"	L	2'-0"	2'-0"	--	--	--	--	--	--	--	--	Horizontal - Corners
A561	37	5'-5"	S	0	3'-3"	1'-8"	0'-6"	--	--	0	--	--	--	Vertical - Backwall
A562	32	11'-0"	S	0	3'-9"	1'-2"	6'-1"	--	--	0	--	--	--	Vertical - Backwall
A563	5	12'-9"	S	0	4'-10"	1'-2"	6'-9"	--	--	0	--	--	--	Vertical - Backwall (Sidewalk)
A564	2	8'-0"	SW	6'-3"	1'-9"	--	--	--	--	--	0'-2"	--	--	Horizontal - Backwall (Sidewalk)
A565	74	7'-1"	WC	0'-6"	2'-5"	1'-3"	2'-5"	--	--	0'-6"	--	1'-5"	--	Vertical - Wingwalls
A651	90	5'-6"	S	0	1'-0"	3'-6"	1'-0"	--	--	0	--	--	--	Footing
A652	94	5'-4"	S	0	1'-0"	3'-4"	1'-0"	--	--	0	--	--	--	Footing
A661	132	7'-3"	L	6'-3"	1'-0"	--	--	--	--	--	--	--	--	Vertical - Breastwall & Wingwalls
A662	41	7'-2"	BS	1'-0"	1'-10"	3'-4"	1'-0"	--	--	--	0'-2"	5'-2"	--	Horizontal - Bridge Seat
A663	6	5'-2"	L	2'-10"	2'-10"	--	--	--	--	--	--	--	--	Vertical - Br. Seat / Wingwalls
A664	24	11'-4"	S	0	4'-10"	1'-8"	4'-10"	--	--	0	--	--	--	Vertical - Wingwalls
A665	24	12'-8"	S	0	5'-3"	1'-8"	5'-3"	--	--	0	--	--	--	Vertical - Wingwalls
A851	86	12'-0"	L	10'-8"	1'-4"	--	--	--	--	--	--	--	--	Vertical - Wingwalls
A951	30	19'-10"	L	18'-3"	1'-7"	--	--	--	--	--	--	--	--	Footing
								ABUTMENT NO. 2						
B551	25	7'-2"	S	0	2'-3"	2'-8"	2'-3"	--	--	0	--	--	--	Bridge Seat Pedestal
B552	20	8'-10"	S	0	2'-3"	4'-4"	2'-3"	--	--	0	--	--	--	Bridge Seat Pedestal
B553	72	4'-0"	L	2'-0"	2'-0"	--	--	--	--	--	--	--	--	Horizontal - Corners
B561	37	5'-5"	S	0	3'-3"	1'-8"	0'-6"	--	--	0	--	--	--	Vertical - Backwall
B562	32	11'-0"	S	0	3'-9"	1'-2"	6'-1"	--	--	0	--	--	--	Vertical - Backwall
B563	5	12'-9"	S	0	4'-10"	1'-2"	6'-9"	--	--	0	--	--	--	Vertical - Backwall (Sidewalk)
B564	2	8'-0"	SW	6'-3"	1'-9"	--	--	--	--	--	0'-2"	--	--	Horizontal - Backwall (Sidewalk)
B565	64	5'-8"	L	4'-10"	0'-10"	--	--	--	--	--	--	--	--	Vertical - Breastwall & Wingwalls
B566	2	5'-2"	L	4'-4"	0'-10"	--	--	--	--	--	--	--	--	Vertical - Breastwall & Wingwalls
B567	2	5'-3"	L	4'-5"	0'-10"	--	--	--	--	--	--	--	--	Vertical - Breastwall & Wingwalls
B568	2	5'-4"	L	4'-6"	0'-10"	--	--	--	--	--	--	--	--	Vertical - Breastwall & Wingwalls
B571	40	11'-2"	S	0	4'-9"	1'-8"	4'-9"	--	--	0	--	--	--	Vertical - Wingwalls
B572	59	7'-1"	WC	0'-6"	2'-5"	1'-3"	2'-5"	--	--	0'-6"	--	1'-5"	--	Vertical - Wingwalls
B573	28	5'-11"	WC	0'-6"	1'-10"	1'-3"	1'-10"	--	--	0'-6"	--	1'-4"	--	Vertical - D.S. Wingwall
B574	18	10'-2"	S	0	4'-3"	1'-8"	4'-3"	--	--	0	--	--	--	Vertical - D.S. Wingwall
B651	90	4'-6"	S	0	1'-0"	2'-6"	1'-0"	--	--	0	--	--	--	Footing
B652	112	4'-4"	S	0	1'-0"	2'-4"	1'-0"	--	--	0	--	--	--	Footing
B661	41	6'-3"	L	5'-3"	1'-0"	--	--	--	--	--	--	--	--	Vertical - Breastwall
B662	41	10'-5"	BS	1'-0"	1'-10"	3'-4"	4'-3"	--	--	--	0'-2"	5'-2"	--	Vert. - Breastwall / Bridge Seat
B663	37	11'-4"	L	10'-4"	1'-0"	--	--	--	--	--	--	--	--	Vertical - Breastwall
B851	56	8'-1"	L	6'-9"	1'-4"	--	--	--	--	--	--	--	--	Vertical - Wingwalls
B951	13	18'-10"	L	17'-3"	1'-7"	--	--	--	--	--	--	--	--	Footing
B1151	13	26'-3"	L	24'-3"	2'-0"	--	--	--	--	--	--	--	--	Footing

TYPE - BENDING DIAGRAMS

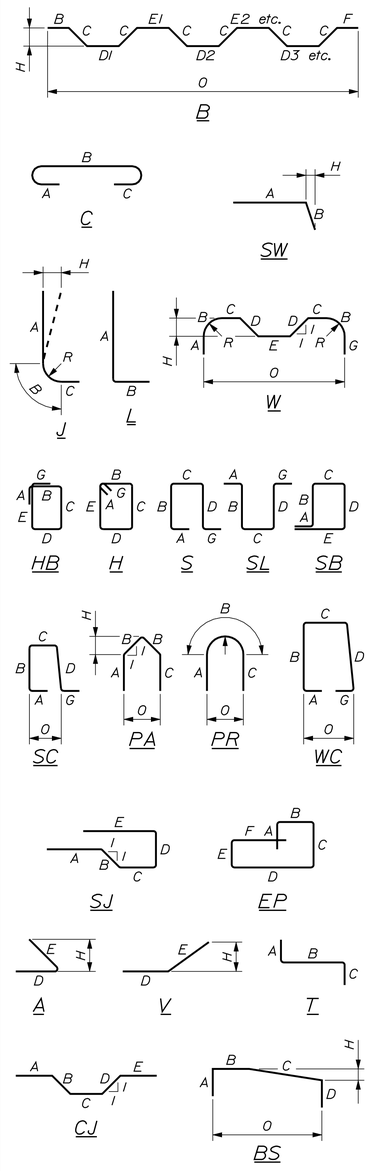

All dimensions are out-to-out of bar.

Bending details and hooks shall conform to the recommendations of the current revision of ACI Standard 315 and ACI Standard 318.

Reinforcing Bar: ASTM A 615/A 615M, Grade 60

GENERAL NOTES

1. The first two digits following the letter(s) of the mark indicate the size of the bar:

   Mark "A502" = bar size #5
   Mark "P805" = bar size #8
   Mark "S650" = bar size #6

2. Each crank bar, Type B, may be replaced by two (2) straight bars (one top and one bottom) of the same bar size as the crank bar. Payment in either case will be based on crank bars as scheduled on the plans.

STATE OF MAINE
DEPARTMENT OF TRANSPORTATION

BH-1823(300)X

WIN 18233.00

BRIDGE NO. 3412

BRIDGE PLANS

	BY	DATE	SIGNATURE
PROJ. MANAGER	J. Kitteredge		
DESIGN-DETAILED	R. Noous	Sept. 2014	
CHECKED-REVIEWED	D. Gustafson	Feb. 2015	
DESIGN2-DETAILED2	-----	-----	P.E. NUMBER
DESIGN3-DETAILED3	-----	-----	
REVISIONS 1	-----	-----	DATE
REVISIONS 2	-----	-----	
REVISIONS 3	-----	-----	
REVISIONS 4	-----	-----	
FIELD CHANGES	-----	-----	

SOMESVILLE BRIDGE
SACO RIVER YORK COUNTY
SACO & BIDDEFORD

REINFORCING STEEL SCHEDULE

SHEET NUMBER

48

OF 53

Filename: ...\00\BRIDGE\MSTA\048_Rebar.dgn Division: BRIDGE Username: dana.damren Date:2/10/2015

Filename: ...\00\bridge\mslo\049_Rebar.dgn Division: BRIDGE Username: dana.damren Date:2/10/2015

STRAIGHT BARS

MARK	QTY.	LENGTH	LOCATION	MARK	QTY.	LENGTH	LOCATION
			PIER				SUPERSTRUCTURE
P501	21	39'-0"	Horizontal	S501	1376	40'-0"	Transverse
				S502	24	8'-0"	Transverse - End of Slab
				S503	12	2'-4"	Transverse - End of Slab
P801	63	7'-3"	Vertical	S504	16	8'-0"	Transverse - Construction Joint
P801-A	10	16'-0"	Vertical				
P801-B	10	11'-0"	Vertical	S511	545	60'-0"	Longitudinal
P802	9	7'-6"	Vertical - Nose	S512	218	28'-0"	Longitudinal
				S611	59	51'-2"	Longitudinal - Over Pier
				S612	118	60'-0"	Longitudinal - Over Pier

BENT BARS

MARK	QTY.	LENGTH	TYPE	A	B	C	D	E	F	G	H	O	R	LOCATION
								PIER						
P551	1	11'-3"	S	0	2'-7"	6'-1"	2'-7"	--	--	0	--	--	--	Horizontal - Downstream End
P552	1	11'-1"	S	0	2'-6½"	6'-0"	2'-6½"	--	--	0	--	--	--	Horizontal - Downstream End
P553	1	10'-11"	S	0	2'-6"	5-11"	2'-6"	--	--	0	--	--	--	Horizontal - Downstream End
P554	1	10'-9"	S	0	2'-5½"	5'-10"	2'-5½"	--	--	0	--	--	--	Horizontal - Downstream End
P555	1	10'-7"	S	0	2'-5"	5'-9"	2'-5"	--	--	0	--	--	--	Horizontal - Downstream End
P556	1	10'-5"	S	0	2'-4½"	5'-8"	2'-4½"	--	--	0	--	--	--	Horizontal - Downstream End
P557	1	10'-3"	S	0	2'-4"	5'-7"	2'-4"	--	--	0	--	--	--	Horizontal - Downstream End
P561	1	15'-6"	PA	3'-5"	4'-4"	3'-5"	--	--	--	--	--	6'-1"	--	Horizontal - Upstream End
P562	1	15'-1"	PA	3'-3"	4'-3½"	3'-3"	--	--	--	--	--	6'-0"	--	Horizontal - Upstream End
P563	1	14'-5"	PA	3'-0"	4'-2½"	3'-0"	--	--	--	--	--	5-11"	--	Horizontal - Upstream End
P564	1	14'-0"	PA	2'-10"	4'-2"	2'-10"	--	--	--	--	--	5'-10"	--	Horizontal - Upstream End
P565	1	13'-5"	PA	2'-7"	4'-1½"	2'-7"	--	--	--	--	--	5'-9"	--	Horizontal - Upstream End
P566	1	12'-11"	PA	2'-5"	4'-0½"	2'-5"	--	--	--	--	--	5'-8"	--	Horizontal - Upstream End
P567	1	12'-4"	PA	2'-2"	4'-0"	2'-2"	--	--	--	--	--	5'-7"	--	Horizontal - Upstream End
P571	19	7'-1"	PT	0'-6"	6'-1"	0'-6"	--	--	--	--	--	--	--	Horizontal - Ties
P572	19	7'-0"	PT	0'-6"	6'-0"	0'-6"	--	--	--	--	--	--	--	Horizontal - Ties
P573	19	6-11"	PT	0'-6"	5-11"	0'-6"	--	--	--	--	--	--	--	Horizontal - Ties
P574	19	6'-10"	PT	0'-6"	5'-10"	0'-6"	--	--	--	--	--	--	--	Horizontal - Ties
P575	19	6'-9"	PT	0'-6"	5'-9"	0'-6"	--	--	--	--	--	--	--	Horizontal - Ties
P576	19	6'-8"	PT	0'-6"	5'-8"	0'-6"	--	--	--	--	--	--	--	Horizontal - Ties
P577	19	6'-7"	PT	0'-6"	5'-7"	0'-6"	--	--	--	--	--	--	--	Horizontal - Ties
P578	7	7'-0"	PT	0'-6"	6'-6"	0	--	--	--	--	--	--	--	Horizontal - Ties
P581	1	5'-10"	PT	0'-6"	4'-10"	0'-6"	--	--	--	--	--	--	--	Horizontal - Ties
P582	1	5'-9"	PT	0'-6"	4'-9"	0'-6"	--	--	--	--	--	--	--	Horizontal - Ties
P583	1	5'-8"	PT	0'-6"	4'-8"	0'-6"	--	--	--	--	--	--	--	Horizontal - Ties
P584	1	5'-7"	PT	0'-6"	4'-7"	0'-6"	--	--	--	--	--	--	--	Horizontal - Ties
P585	1	5'-6"	PT	0'-6"	4'-6"	0'-6"	--	--	--	--	--	--	--	Horizontal - Ties
P586	1	5'-5"	PT	0'-6"	4'-5"	0'-6"	--	--	--	--	--	--	--	Horizontal - Ties
P587	1	5'-4"	PT	0'-6"	4'-4"	0'-6"	--	--	--	--	--	--	--	Horizontal - Ties
P591	39	9'-5"	P	2'-0"	5'-5"	2'-0"	--	--	--	--	--	5'-8"	--	Vertical - Top of Shaft
P592	20	7'-4"	S	0	2'-2"	3'-0"	2'-2"	--	--	0	--	--	--	Vertical - Pedestals
P593	20	7'-10"	S	0	2'-2"	3'-6"	2'-2"	--	--	0	--	--	--	Vertical - Pedestals
								SUPERSTRUCTURE						
S551	64	11'-3"	SJ	2'-0"	1'-0"	2'-3"	1'-0"	5'-0"	--	--	--	--	--	Longitudinal - End of Slab
S552	28	7'-8"	CJ	1'-10"	1'-4"	1'-4"	1'-4"	1'-10"	--	--	--	--	--	Longitudinal - Construction Joint
S553	1374	5'-9"	C	0'-7"	5'-2"	0	--	--	--	--	--	--	--	Transverse - Slab Overhangs
S554	96	9'-0"	L	4'-6"	4'-6"	--	--	--	--	--	--	--	--	At Bridge Drains
S555	476	5'-5"	SC	0'-6"	1'-5"	1'-3"	1'-5"	--	--	0'-10"	--	1'-4½"	--	Curb
S556	344	10'-7"	SC	0'-6"	1'-7"	6'-3"	1'-5"	--	--	0'-10"	--	6'-4½"	--	Sidewalk
S557	132	5'-9"	SC	0'-6"	1'-7"	1'-3"	1'-7"	--	--	0'-10"	--	1'-4½"	--	Sidewalk at Rail Posts
S761	20	10'-6"	HM	0'-9"	3'-1"	1'-5"	3'-0"	1'-6"	--	0'-9"	--	--	--	Light Standard Support
S762	10	9'-10"	HM	0'-9"	2'-9"	1'-5"	2'-8"	1'-6"	--	0'-9"	--	--	--	Light Standard Support
S763	10	8'-10"	HM	0'-9"	2'-3"	1'-5"	2'-2"	1'-6"	--	0'-9"	--	--	--	Light Standard Support
S764	10	7'-10"	HM	0'-9"	1'-9"	1'-5"	1'-8"	1'-6"	--	0'-9"	--	--	--	Light Standard Support
S765	10	11'-1"	CJ	0	4'-8"	1'-9"	4'-8"	0	--	--	--	--	--	Light Standard Support
S766	5	10'-1"	CJ	0	4'-2"	1'-9"	4'-2"	0	--	--	--	--	--	Light Standard Support

TYPE - BENDING DIAGRAMS

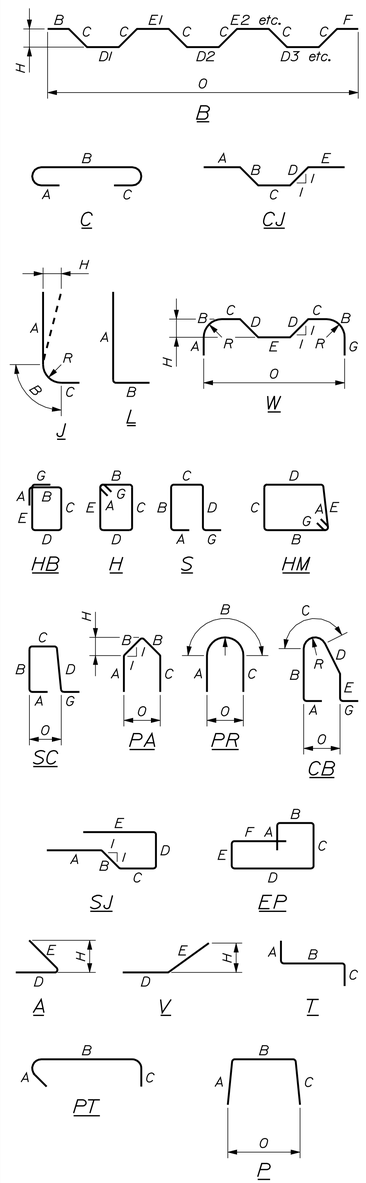

All dimensions are out-to-out of bar.

Bending details and hooks shall conform to the recommendations of the current revision of ACI Standard 315 and ACI Standard 318.

Reinforcing Bar: ASTM A 615/A 615M, Grade 60

GENERAL NOTES

1. The first two digits following the letter(s) of the mark indicate the size of the bar:

   Mark "A502" = bar size #5
   Mark "P805" = bar size #8
   Mark "S650" = bar size #6

2. Each crank bar, Type B, may be replaced by two (2) straight bars (one top and one bottom) of the same bar size as the crank bar. Payment in either case will be based on crank bars as scheduled on the plans.

STATE OF MAINE
DEPARTMENT OF TRANSPORTATION

BH-1823(300)X

WIN 18233.00

BRIDGE PLANS

BRIDGE NO. 3412

	BY	DATE
PROJ. MANAGER	J. Kittredge	
DESIGN-DETAILED	Team South	Sept. 2014
CHECKED-REVIEWED	D. Damren	
DESIGN2-DETAILED2		
DESIGN3-DETAILED3		
REVISIONS 1		
REVISIONS 2		
REVISIONS 3		
REVISIONS 4		
FIELD CHANGES		

SIGNATURE

P.E. NUMBER

DATE

SOMESVILLE BRIDGE
SACO RIVER YORK COUNTY
SACO & BIDDEFORD

REINFORCING STEEL SCHEDULE

SHEET NUMBER

49

OF 53

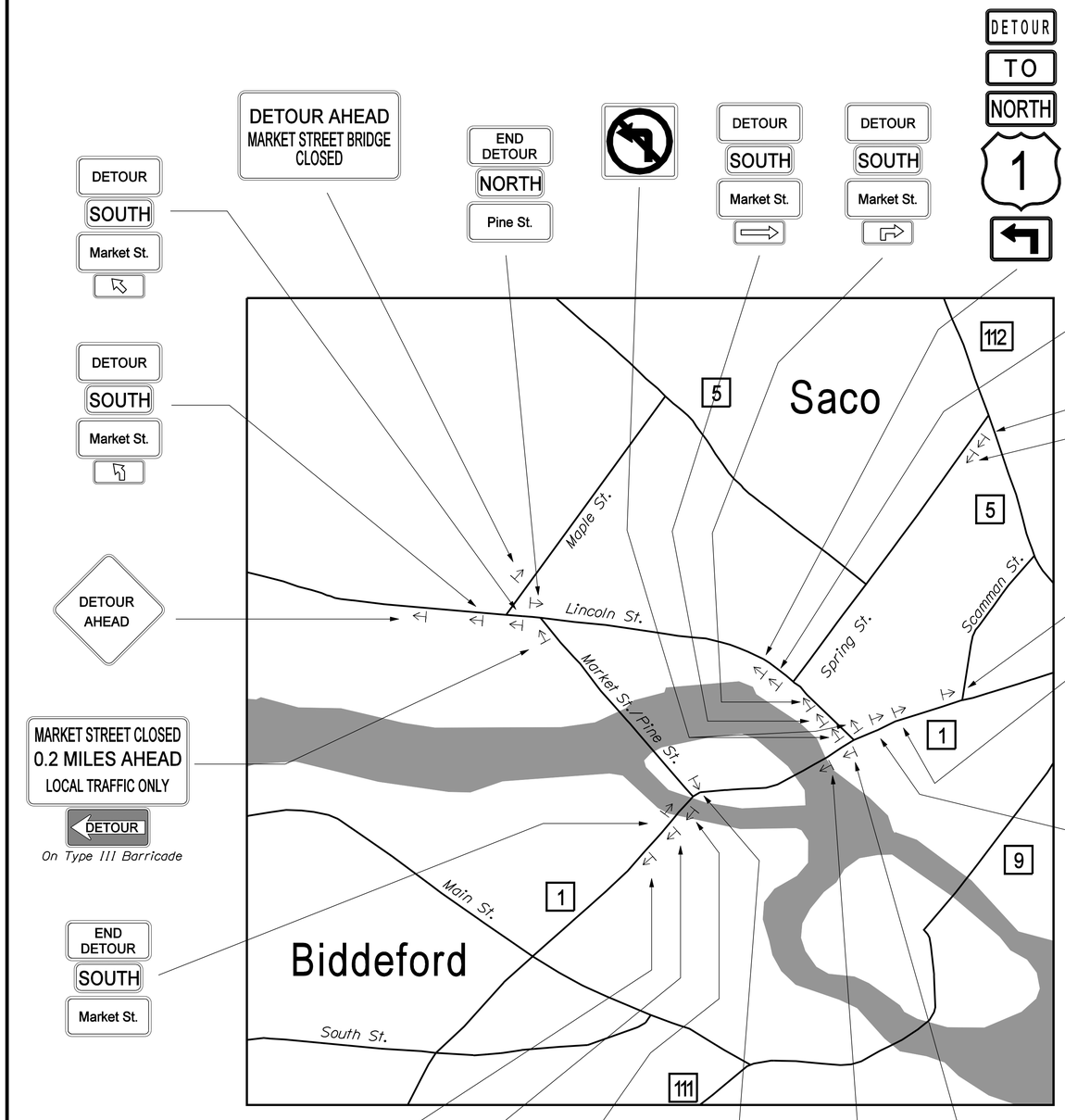

ROAD CLOSED XX MILES AHEAD LOCAL TRAFFIC ONLY	60" x 30" B&W	ROAD CLOSED	48" x 30" B&W	ROAD CLOSED XX FT.	48" x 48" B&O
Pine St.	24" x 12" B&W	DETOUR	24" x 12" B&O		21" x 15" B&W
	24" x 24" B&W (w/ red circle)	NORTH	24" x 12" B&W	DETOUR	48" x 18" B&O
		END DETOUR	24" x 18" B&O	1	24" x 24" B&W

DETOUR NOTES

1. All modifications to traffic control devices shall be in accordance with the Manual on Uniform Traffic Control Devices.

2. Install 30 feet Temporary Concrete Barrier at each end of project (60 feet total) Payment shall be made under Item No. 526.301, Temporary Concrete Barrier.

3. Cover or remove all conflicting route signs.

4. Any and all changes and adjustments to traffic signal(s) timing, lane lengths, configurations, and striping, shall be included in the traffic control plan submitted, designed and stamped by a Professional Engineer licensed in the State of Maine, and shall be approved by the Resident prior to implementation.

5. White pavement markings shall be painted on the Lincoln Street approach to Elm Street. These markings, in order, shall be a Right Turn Lane-Use Arrow, the word "ONLY", and a Right Turn Lane-Use Arrow. Upon removal of the detour, these Right Turn Lane-Use Arrows shall be changed to Left and Right Turn Lane-Use Arrows. Payment will be made under Item No. 627.75, White or Yellow Pavement & Curb Marking.

6. The left turn lane on Elm Street toward Lincoln Street shall be lengthened by 75 feet to 175 feet. Payment will be made under Item No. 627.733, 4" White or Yellow Painted Pavement Marking Line. Removal of conflicting left turn lane lines will be paid for under Item No. 627.77, Removing Existing Pavement Marking.

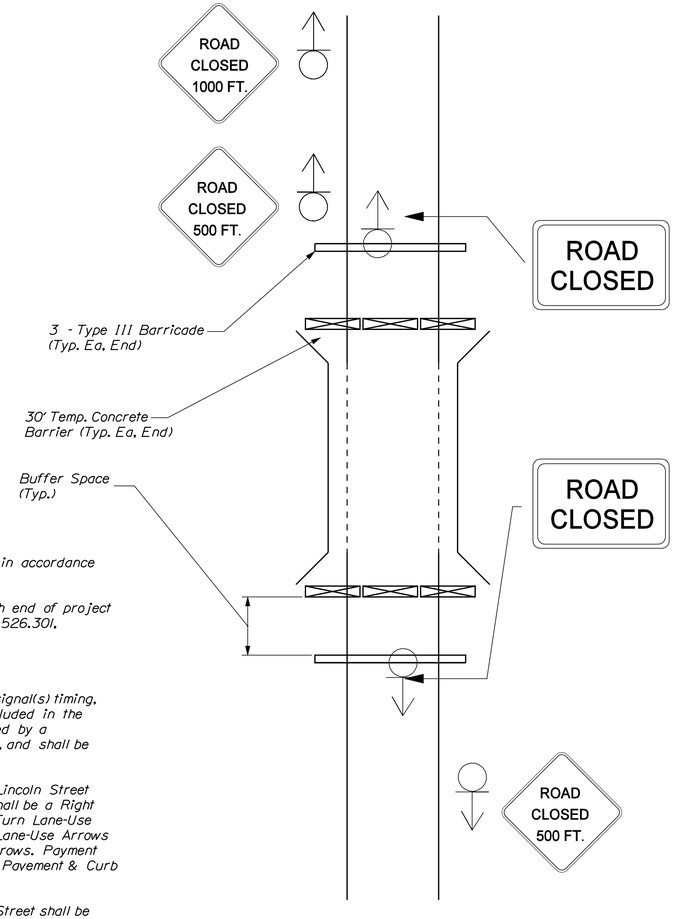

SIGNAGE AT PROJECT LOCATION

STATE OF MAINE
DEPARTMENT OF TRANSPORTATION

BH-1823(300)X

WIN 18233.00

BRIDGE NO. 3412

BRIDGE PLANS

	BY	DATE
PROJ. MANAGER	J. Kitteredge	
DESIGN-DETAILED	C. Gustafson	Dec. 2014
CHECKED-REVIEWED	B. Nichols	
DESIGN2-DETAILED2		
DESIGN3-DETAILED3		
REVISIONS 1		
REVISIONS 2		
REVISIONS 3		
REVISIONS 4		
FIELD CHANGES		

SIGNATURE

P.E. NUMBER

DATE

SOMESVILLE BRIDGE
SACO RIVER
SACO & BIDDEFORD YORK COUNTY

DETOUR PLAN

SHEET NUMBER

50

OF 53

Filename: ...\MSTA\050_Detour Plan.dgn Division: BRIDGE Username: dona.damren Date:2/9/2015

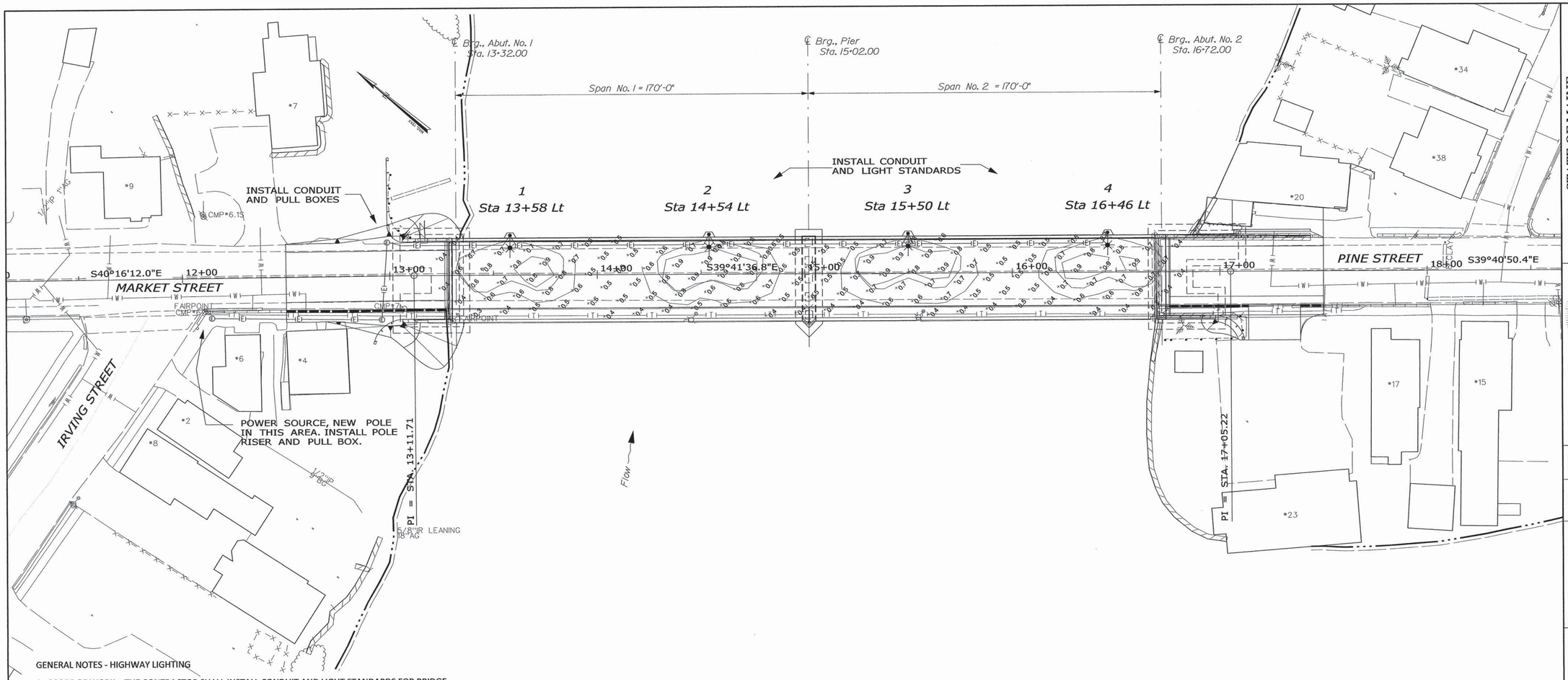

GENERAL NOTES - HIGHWAY LIGHTING

1. SCOPE OF WORK : THE CONTRACTOR SHALL INSTALL CONDUIT AND LIGHT STANDARDS FOR BRIDGE LIGHTING AS SHOWN ON THIS PLAN. INSTALL CONDUIT, STANDARDS, PULL BOXES (ITEM 626.11 PRECAST CONCRETE JUNCTION BOX) AND RELATED HARDWARE. CENTRAL MANE POWER CO. WILL FURNISH ANDINSTALL WIRE AND LIGHTING FIXTURES.
2. ALL MATERIALS AND WORKMANSHIP SHALL CONFORM TO APPLICABLE PROVISIONS OF THE MAINE DEPARTMENT OF TRANSPORTATION STANDARD SPECIFICATIONS AND STANDARD DETAILS, NATIONAL ELECTRICAL CODE AND ANY REQUIREMENTS OF THE POWER COMPANY.
3. THE CONTRACTOR SHOULD VISIT THE SITE PRIOR TO BIDDING TO ENSURE AWARENESS OF SITE CONDITIONS THAT COULD AFFECT THE BID.
4. INSTALL 35 FOOT POLES. POLES MAY BE EITHER ALUMINUM OR GALVANIZED STEEL.
5. THE POLE SPACING WAS BASED ON USING AMERICAN ELECTRIC LIGHTING ROADWAY LIGHTING LUMINAIRES, CATALOG NUMBER:
   115 07S R2 DG; 4 TYPE 2 HIGH PRESSURE SODIUM FIXTURES
6. CONDUIT SHALL BE 2" MINIMUM, PVC SCHEDULE 80. MINIMUM BURIAL DEPTH FOR CONDUIT SHALL BE 36".
7. PAYMENT UNDER ITEM ~~634.21~~ 634.210, CONVENTIONAL LIGHT STANDARD, WILL INCLUDE BUT NOT BE LIMITED TO NEW POLES, TRANSFORMER BASES AND BREAKAWAY DEVICES.
8. ATTACHMENT OF LIGHT STANDARDS TO THE BRIDGE DECK AND CONDUIT IN THE BRIDGE DECK IS SHOWN ELSEWHERE IN THESE PLANS.
9. POWER SOURCE WILL BE THE NEW POLE LOCATED NEAR IRVING STREET. A RIGID METALLIC CONDUIT SWEEP SHALL BE INSTALLED AT THE UTILITY POLE, INCLUDING A 10' LENGTH OF RIGID METALLIC CONDUIT ABOVE THE SWEEP ON THE POLE. CONDUIT ABOVE THE METALLIC CONDUIT CAN BE SCHEDULE 40 PVC.
10. POWER SOURCE WILL BE THE NEW POLE LOCATED NEAR IRVING STREET. A RIGID METALLIC CONDUIT SWEEP SHALL BE INSTALLED AT THE UTILITY POLE, INCLUDING A 10' LENGTH OF RIGID METALLIC CONDUIT ABOVE THE SWEEP ON THE POLE. CONDUIT ABOVE THE METALLIC CONDUIT CAN BE SCHEDULE 40 PVC.

STATISTICS

Description	Symbol	Avg	Max	Min	Max/Min	Avg/Min
Bridge	+	0.6 fc	0.9 fc	0.3 fc	3.0:1	2.0:1

LUMINAIRE SCHEDULE

Symbol	Qty	Catalog Number	Description	Lamp	File	Lumens	LLF	Watts
✶	4	115 07S R2 DG	115 SERIES 70W HPS TYPE 2 SHORT CUTOFF	ONE 70-WATT CLEAR ED--23.5 HIGH PRESSURE SODIUM, TILTED 5-DEGREES ABOVE HORIZONTAL POSITION.	115_07S_R2_DG.ies	6400	0.81	70

SCALE
25 0 25 50
SCALE OF FEET

LEGEND FOR LIGHTING

- LIGHTING CONDUIT
- PULL BOX
- 35 FOOT LIGHT POLE AND LUMINAIRE
- DIRECTION OF LUMINAIRE

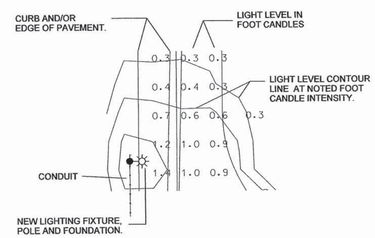

KEY TO PLAN

STATE OF MAINE
DEPARTMENT OF TRANSPORTATION

BH - 1823(300)X

WIN 18233.00 BRIDGE PLANS

BRIDGE NO. 3412

STATE OF MAINE ALBERT L. GRIFFEY No. 4226 LICENSED PROFESSIONAL ENGINEER

ALBERT L. GRIFFEY
SIGNATURE
4226
P.E. NUMBER
12/23/2014
DATE

	BY	DATE
PROJ. MANAGER	J. KITTREDGE	
DESIGN-DETAILED	RAL	Oct. 2014
CHECKED-REVIEWED	ALG	12/2014
DESIGN2-DETAILED2		
DESIGN3-DETAILED3		
REVISIONS 1		
REVISIONS 2		
REVISIONS 3		
REVISIONS 4		
FIELD CHANGES		

SOMESVILLE BRIDGE
SACO RIVER
SACO & BIDDEFORD YORK COUNTY

LIGHTING PLANS

SHEET NUMBER
51
OF 53

Filename: ...\MSTA\Lighting\Light Plan.dgn Division: HIGHWAY Username: common Date:1/7/2015

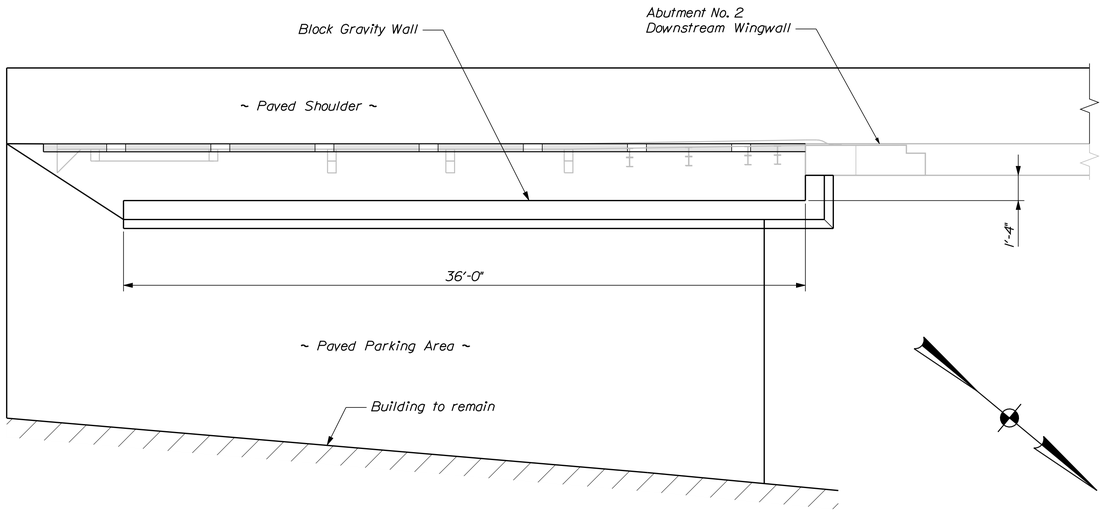

PARKING AREA & BLOCK GRAVITY WALL PLAN

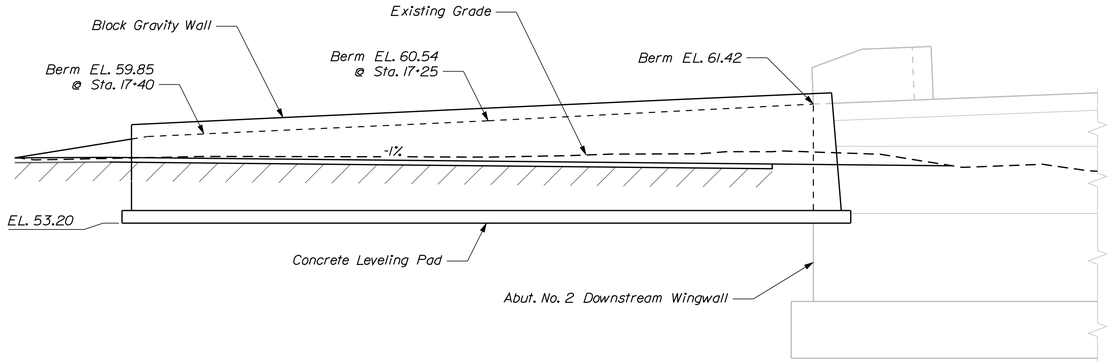

BLOCK GRAVITY WALL ELEVATION

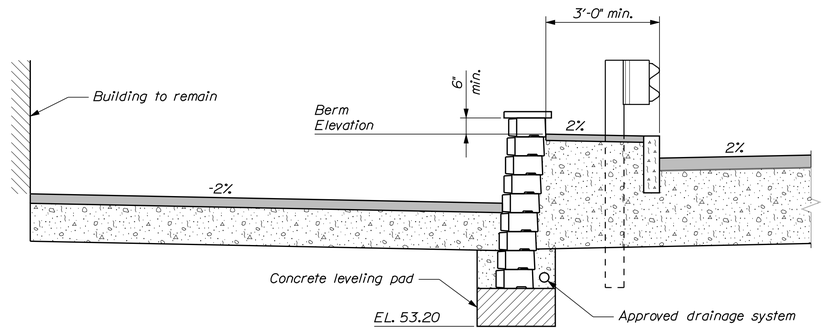

TYPICAL PARKING AREA & BLOCK GRAVITY WALL SECTION

BLOCK GRAVITY WALL NOTES

1. The Contractor shall provide a Precast Concrete Block Gravity Wall in accordance with Standard Specifications Section 672 or a Precast Aggregate-Filled Concrete Block Gravity Wall in accordance with Standard Specifications Section 681. Plan details are shown for estimating purposes only.

2. The wall system shall be on the MaineDOT Qualified Products List (QPL) of Proprietary Retaining Wall Systems and be manufactured by a licensed manufacturer of the selected product.

3. The wall shall be designed in accordance with Standard Specifications Section 672 or Standard Specifications Section 681, as applicable, and AASHTO LRFD Bridge Design Specifications, 7th Edition, 2014. Live load surcharge shall be included in the wall design.

4. Backfill and foundation soil parameters for use in the submitted design shall be in accordance with Standard Specifications Section 672 or Standard Specifications Section 681, as applicable.

5. Guardrail posts shall not be driven or drilled through the geosynthetic reinforcement. Loss of geosynthetic reinforcement area due to guardrail posts shall be considered in the wall design.

6. For the strength limit state the applied factored bearing pressure for the wall shall not exceed the factored bearing resistance of 4.7 ksf. For the service limit state the applied factored bearing pressure for the wall shall not exceed the factored bearing resistance of 6 ksf.

7. All blocks at the ends of the wall(s) must be finished on three sides: the front, the top and the exposed end. Blocks with exposed surfaces at the ends and top of the wall must be manufactured for this purpose and must be finished to match the face of the blocks.

8. Install a drainage system behind the retaining wall in accordance with Standard Specifications Section 672 or Standard Specifications Section 681, as applicable, and the manufacturer's recommendations. Wall drainage shall be sloped to drain into the Abutment No. 2 French drain.

9. A minimum embedment depth of 5.0 feet for frost protection is required in the design and construction of the wall.

STATE OF MAINE
DEPARTMENT OF TRANSPORTATION

BH-1823(300)X

WIN 18233.00

BRIDGE NO. 3412

BRIDGE PLANS

PROJ. MANAGER	J. Kittredge	BY	DATE
DESIGN-DETAILED	G. Gustafson	-----	-----
CHECKED-REVIEWED	-----	-----	-----
DESIGN2-DETAILED2	-----	-----	-----
DESIGN3-DETAILED3	-----	-----	-----
REVISIONS 1	-----	-----	-----
REVISIONS 2	-----	-----	-----
REVISIONS 3	-----	-----	-----
REVISIONS 4	-----	-----	-----
FIELD CHANGES	-----	-----	-----

SIGNATURE

P.E. NUMBER

DATE

SOMESVILLE BRIDGE
SACO RIVER
SACO & BIDDEFORD — YORK COUNTY

BLOCK GRAVITY WALL

SHEET NUMBER

52

OF 53

Filename: ...\052_Block Gravity Wall.dgn Division: BRIDGE Username: dana.damren Date:2/3/2015

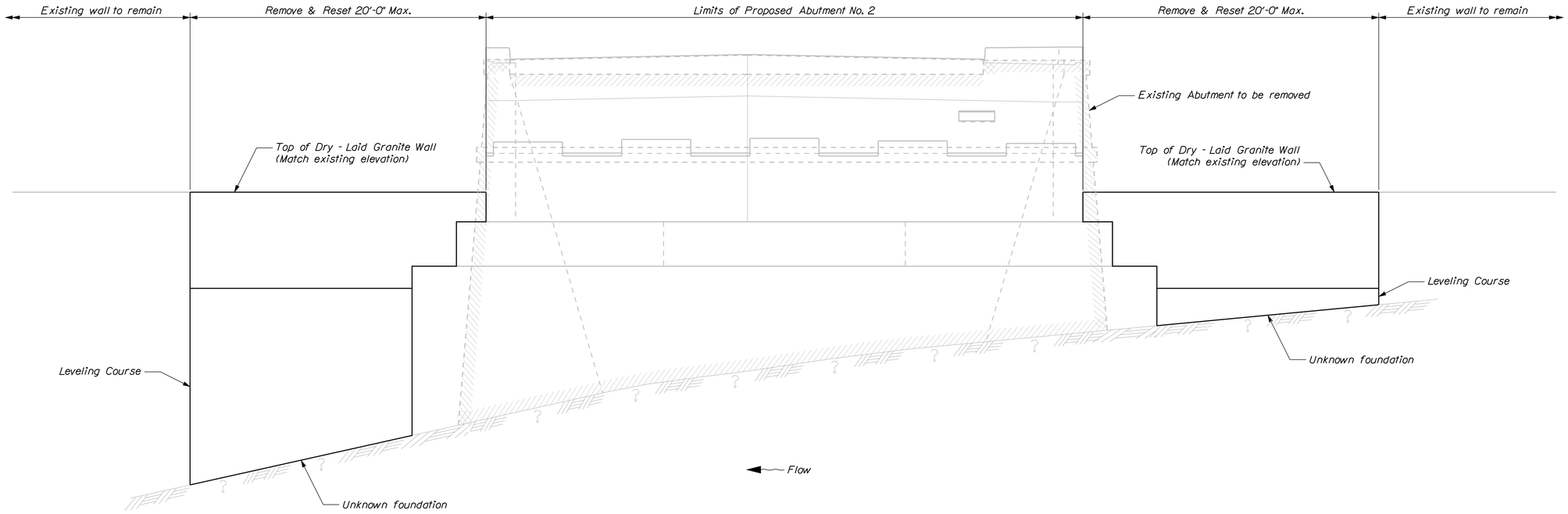

DRY - LAID GRANITE WALL ELEVATION

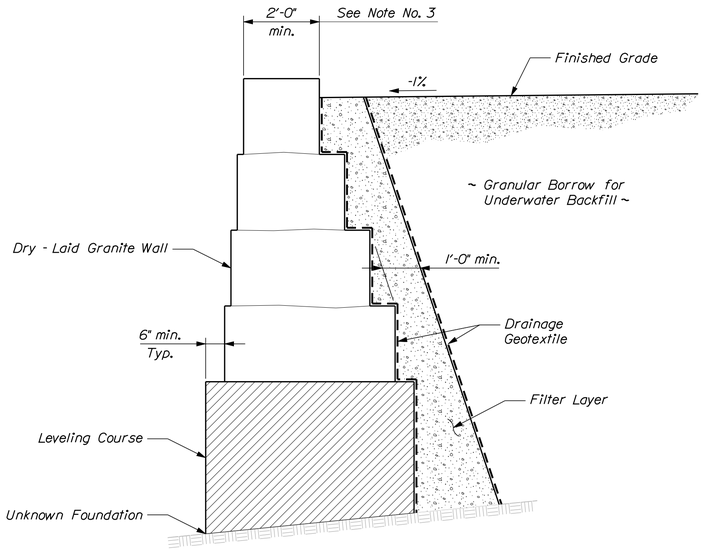

DRY - LAID GRANITE WALL SECTION

Block courses are shown for schematic purposes and are not intended to convey actual conditions

DRY - LAID GRANITE WALL NOTES

1. Reconstruction of the dry-laid granite walls shall be completed in accordance with requirements of Special Provision Section 525, Dry - Laid Granite Wall Reconstruction.

2. For portions of the proposed wall constructed directly on bedrock, the bedrock shall be cleaned of all weathered rock, fractured rock, and soil. Where the bedrock surface slope exceeds 4H:1V, the bedrock surface shall be benched in level steps or made completely level.

3. The top width of the reconstructed wall shall match the top width of the existing wall to remain, minimum 24 inches.

4. The front face of the reconstructed wall shall match the batter of the existing wall to remain front face.

5. Seal concrete, if necessary, shall be placed to a maximum EL. 46.5.

6. The interface of the Leveling Course and the Dry - Laid Granite Wall is assumed at EL. 46.5 for estimating purposes.

STATE OF MAINE
DEPARTMENT OF TRANSPORTATION

BH-1823(300)X

WIN 18233.00

BRIDGE NO. 3412

BRIDGE PLANS

PROJ. MANAGER	J. Kittredge		
DESIGN-DETAILED	G. Gustafson	BY	D. Domren
CHECKED-REVIEWED	-----	DATE	Jan. 2015
DESIGN2-DETAILED2	-----	SIGNATURE	-----
DESIGN3-DETAILED3	-----	P.E. NUMBER	-----
REVISIONS 1	-----	DATE	-----
REVISIONS 2	-----		-----
REVISIONS 3	-----		-----
REVISIONS 4	-----		-----
FIELD CHANGES	-----		-----

SOMESVILLE BRIDGE
SACO RIVER
SACO & BIDDEFORD YORK COUNTY

DRY - LAID GRANITE WALL

SHEET NUMBER

52A

OF 53

Filename: ...\052A_Dry - Laid Granite Wall.dgn Division: BRIDGE Username: Garrett.A.Gustafson Date:2/9/2015

Filename: ...\00\ROW\MSTA\053_RWPLAN1.dgn Username: dona.damren Date:2/3/2015

HORIZONTAL DATUM - US STATE PLAN NAD83 (1996)
ZONE - MAINE 2000 WEST ZONE
VERTICAL DATUM - NAVD88
COMBINED SCALE FACTOR - 0.9999776

GRID
MAINE 2000 WEST ZONE

PLAN SHOWING LAND BELONGING TO
SACO-LOWELL SHOPS, SACO-MAINE
BY LIBBY & DOW ENGINEERS
PLAN DATE - JANUARY 27, 1948
Y.C.R.D. PLAN BOOK 14, PAGE 32
RECORDING DATE - SEPTEMBER 8, 1948

SEE SEWER EASEMENT
GRANTED TO CITY OF SACO
Y.C.R.D. BOOK 1911, PAGE 553
DATED JUNE 16, 1971

SEE SEWER EASEMENT
GRANTED TO CITY OF SACO
Y.C.R.D. BOOK 1911, PAGE 554
DATED JUNE 16, 1971

RIGHT OF WAY REFERENCES
1) MARKET STREET AND PINE STREET
A) YORK COUNTY COMMISSIONERS RECORDS
VOLUME 20, PAGE 406 (MAY 5, 1858)
3 RODS (49.5') WIDE
B) YORK COUNTY COMMISSIONERS RECORDS
VOLUME 21, PAGE 181 (FEBRUARY 1, 1861)
AFFIRMS Y.C.C.R. VOLUME 20, PAGE 406
C) MAINE STATE HIGHWAY COMMISSION
RIGHT OF WAY MAP - PINE STREET & MARKET STREET
BIDDEFORD - SACO, YORK COUNTY
SOMESVILLE BRIDGE OVER SACO RIVER BRIDGE NO. 3412
S.H.C. FILE NO. S-16-343, DATED - MARCH 1971
Y.C.R.D. PLAN BOOK 68, PAGE 12
D) STATE OF MAINE - DEPARTMENT OF TRANSPORTATION
RIGHT OF WAY MAP - MARKET STREET & PINE STREET
BIDDEFORD-SACO, YORK COUNTY
STATE PROJECT NO. BR-5774(00)X, PIN 005774.00
D.O.T. FILE NO. 16-350, DATED - FEBRUARY 1995
Y.C.R.D. PLAN BOOK 220, PAGE 30
NOTE: MARKET AND PINE STREETS WERE MISLABELLED ON THIS PLAN
2) IRVING STREET
SACO CITY RECORDS
VOLUME 8, PAGE 484 (SEPTEMBER 16, 1868)
50 FEET WIDE
3) MAPLE STREET
BIDDEFORD CITY RECORDS
BOOK 1, PAGE 3 (FEBRUARY 14, 1853)
40 FEET WIDE
AS-BUILT PLANS
1) STATE OF MAINE - STATE HIGHWAY COMMISSION
PLAN AND PROFILE - SOMESVILLE BRIDGE OVER SACO RIVER
BIDDEFORD-SACO, YORK COUNTY
U.S.W.P.F.R. PROJECT NO. 4
DATED - JUNE 19, 1936
REEL 9, PLAN 23:167-168
CONTROL INFORMATION
1) HORIZONTAL DATUM - US STATE PLANE NAD83(1996)
ZONE - MAINE 2000 WEST ZONE
VERTICAL DATUM - NAVD 88
COMBINED SCALE FACTOR - 0.9999776
TAX MAP INFORMATION
1) CITY OF BIDDEFORD TAX MAP 40
2) CITY OF SACO TAX MAP 51

EXISTING RIGHT OF WAY TIE:
STATION 12+50.49', 1.79' LEFT EQUALS
STATION 6+00 ON R/W REF. 1 D

PLAN OF THE LOTTING OF THE WESTERLY
END OF SPRING'S ISLAND, BIDDEFORD
DATED - MAY 16, 1845
BY T. JORDAN, JR.
Y.C.R.D. PLAN BOOK 1, PAGE 20
RECORDING DATE - JANUARY 14, 1851

NOTE: RIGHTS TAKEN TO RAZE AND REMOVE THAT PORTION OF THE GARAGE THAT LIES OUTSIDE OF THE BOUNDARIES OF STATE AID HIGHWAY NO. 18 AT STA. 17+04± LT.

RALPH WILLIAM "BILL" TANGUAY
ITEM NO. (2)
SLOPE EASE. = 224± S.F. (1)
TOTAL AREA = 0.26± S.F. (PER CITY)

ROYCE C. MOORE
DEBRA J. CHANDLER

BREWSTER PORCELLA
ITEM NO. (3)
GARAGE = (1)
CONST. & MAINT. EASEMENT = 371± S.F. (1)
TEMP. CONST. RIGHTS = 318± S.F. (2)
TOTAL AREA = 0.09± AC. (PER CITY)

WILLIAM E. CLARK, JR.
KATHERINE E. CLARK

ROLAND DEMERS

BRUCE AUDIE
KAREN AUDIE
PARCEL NO. (1)
LAND TAKEN = 850± S.F. (PRESC. EASE.)
UPLAND TAKEN = 3,374± S.F.
SUBMERGED LAND TAKEN = 22,117± S.F.
TOTAL LAND TAKEN = 26,341± S.F. (ENTIRE LOT)
BUILDINGS = (1)
(PART I)

ROGER H. BERNIER
JEANNE R. ROY
ROBERT D. BERNIER
LINDA A. GIROUX
SHARON L. KELLEY
RACHEL D. BERNIER (LIFE ESTATE)

JERRY L. WALKER
ITEM NO. (5)
TEMP. CONST. RIGHTS = 82± S.F.
TOTAL AREA = 0.07± AC. (PER CITY)

K & M REALTY, LLC
PARCEL NO. (4)
LAND TAKEN = 555± S.F. (PRESC. EASE.)
UPLAND TAKEN = 247± S.F.
SUBMERGED LAND TAKEN = 2,444± S.F.
TOTAL LAND TAKEN = 3,246± S.F.
CONST. & MAINT. EASEMENT = 489± S.F. (1)
TEMP. CONST. RIGHTS = 217± S.F (1).
TOTAL UPLAND AREA = 0.26± AC. (PER CITY)
REM. UPLAND AREA = 0.25± AC.

NOTE: AREAS PER CITY ASSESSING RECORDS ASSUMED TO BE UPLAND ONLY

GERARD H. LAPIERRE
JANICE E. LAPIERRE

EASEMENTS BENEFITTING PARCEL NO. (1):
-9.5' WIDE RIGHT OF WAY, Y.C.R.D. BOOK 11492, PAGE 210 (DATED 3/25/2002)
-WATER MAIN EASEMENT, Y.C.R.D. BOOK 4429, PAGE 281 (DATED 8/20/1987)
EASEMENTS ENCUMBERING PARCEL NO. (1):
-SEWER EASEMENT, Y.C.R.D. BOOK 1969, PAGE 790, (DATED 10/24/1972)
-RIGHT TO MAINTAIN WALK & PIPES, Y.C.R.D. BOOK 11492, PAGE 210 (DATED 3/25/2002)

9.5' WIDE RIGHT OF WAY IN COMMON SEE:
Y.C.R.D. BOOK 11492, PAGE 210 (DATED 3/25/2002)
Y.C.R.D. BOOK 14246, PAGE 988 (DATED 10/5/2004)
Y.C.R.D. BOOK 1905, PAGE 294 (DATED 5/19/1971)

SEWER EASEMENT DEEDS
GRANTED TO THE CITY OF SACO:
Y.C.R.D. BOOK 1969, PAGE 790 (DATED 10/24/1972)
Y.C.R.D. BOOK 1969, PAGE 787 (DATED 10/24/1972)
Y.C.R.D. BOOK 1969, PAGE 788 (DATED 10/9/1972)

FOR RIGHT TO MAINTAIN WALK & PIPES SEE:
Y.C.R.D. BOOK 11492, PAGE 210 (DATED 3/25/2002)
Y.C.R.D. BOOK 1905, PAGE 294 (DATED 5/19/1971)

FOR TERMS & CONDITIONS OF WATER MAIN EASEMENT:
Y.C.R.D. BOOK 4429, PAGE 281 (DATED 8/20/1987)

MAP OF HOUSE LOTS IN SACO & BIDDEFORD
OWNED AND FOR SALE BY
A.H. BOYD - D.E. SOMES - J. BALDWIN - L. BARNES - W.P. NEWELL
SURVEYED & DRAWN BY E. P. MORGAN
Y.C.R.D. PLAN BOOK 1, PAGE 74
RECORDING DATE - OCTOBER 25, 1858

PARTIAL COPY OF SEWER PLAN
SHOWING SEWER LINE LOCATED
BETWEEN IRVING STREET AND SACO RIVER
(ON FILE WITH CITY OF SACO ENGINEER'S OFFICE)

SEWER EASEMENT NOTE:
20' WIDE CITY SEWER EASEMENT LOCATION PLOTTED BY HOLDING THE SEWER MANHOLE AS THE CENTER OF EASEMENT. PLOTTED EASEMENT LOCATION APPEARS TO CONFILICT WITH THE REFERENCED SEWER EASEMENT DEEDS AND SEWER PLAN.

NOTE: PRESCRIPTIVE EASEMENT FOR HIGHWAY PURPOSES WITHIN LIMITS OF WROUGHT PORTION (L.O.W.P.)

STATE OF MAINE
REGISTRY OF DEEDS
COUNTY _____
RECEIVED _____, _____
at _____h_____m_____M and recorded in
Plan Book _____, Page _____
Attest: _____
REGISTER

BRIDGE NO. 3412 WIN 18233.00

SOMESVILLE BRIDGE
OVER
SACO RIVER

SYMBOLS
(WELL) ○WELL
GRADING LIMIT LINE
CONSTRUCTION LIMIT LINE
PROPERTY LINE P.L.
EXISTING RIGHT OF WAY
NEW RIGHT OF WAY
NEW ROW WITHIN EXIST. ROW
CONTROL OF ACCESS
IP or ● IP/P (IRON PIPE or PIN FOUND)
ST. (SEPTIC TANK)
(ROW MONUMENT)
(TRAVERSE POINT)
LIMITS OF "RIGHT-TO-PORTION (L.O.W.P.)
WATER LINE
GAS LINE
ELECTRIC LINE
TELEPHONE LINE
SEWER LINE

ITEM	TECH	CHECKED
BASE MAP	N.T.A.	C.W.K.
EXIST. R/W	N.T.A.	
PROP. LINES	N.T.A.	R.M.C.
AREAS	N.T.A.	

STATE OF MAINE
DEPARTMENT OF TRANSPORTATION
16 STATE HOUSE STATION - AUGUSTA, ME 04333-0016
SACO-BIDDEFORD
RIGHT OF WAY MAP

REVISIONS

NO.	DATE	DESCRIPTION	BY

PLAN NO.	FILED IN PLAN BOOK GRANTOR	PAGE INSTRUMENT	COUNTY RECORD DATE	BOOK	PAGE
1	PART I	COND.	1/27/14	16768	537
	PART II	COND.	10/7/14	16902	932

DAVID BERNHARDT
COMMISSIONER
JOYCE NOEL TAYLOR
CHIEF ENGINEER
DATE

STATE OF MAINE
CHRISTOPHER W. KNIGHT 2257
PROFESSIONAL LAND SURVEYOR

To the best of my knowledge and belief the Highway Right of Way lines depicted hereon are based upon a survey conforming to the Standards of Practice promulgated by the Maine Board of Licensure for Professional Land Surveyors 02-360 CMR, Chapter 90; Exceptions: (1) No separate survey report, (2) Monumentation only as shown on plan. See sheet X of this plan set for coordinates. (3) Other boundary lines, including lines between abutters are approximate and for general reference purposes only.

STATE AID HIGHWAY NO. 18
MARKET STREET / PINE STREET
SACO-BIDDEFORD YORK COUNTY
FEDERAL AID PROJECT NO. BH-1823(300)X PART I, II

NOVEMBER 2013 | RIGHT-OF-WAY MAP | D.O.T. FILE NO. 16-495
SCALE 1" = 25' | SHEET 1 OF 1

SHEET NUMBER
53
OF 53

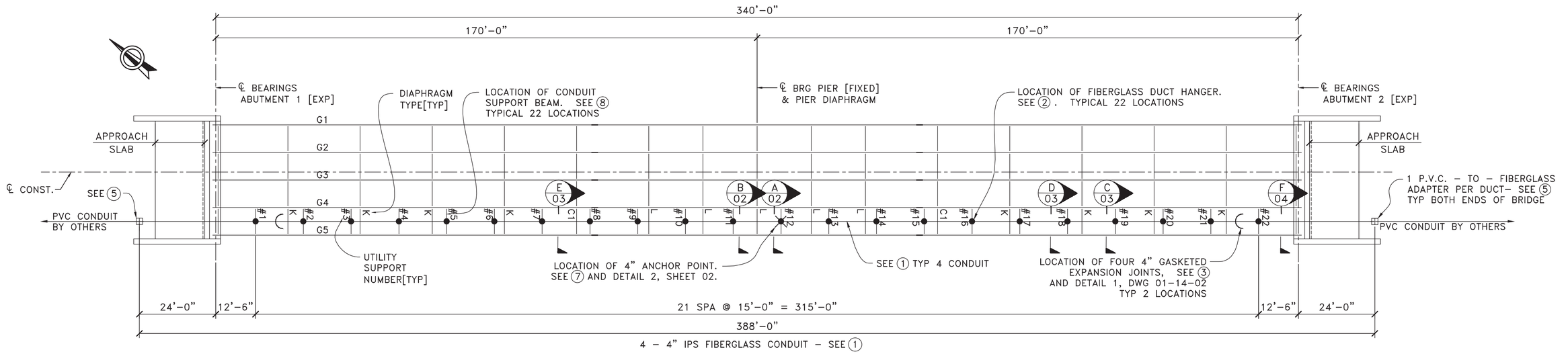

LOCATION PLAN

$\frac{1}{16}$"=1'–0"

GENERAL NOTES

1) ALL ITEMS WITH PART NUMBERS ARE AMERICAN U–TEL, INC. STANDARD ITEMS SUPPLIED BY:
AMERICAN U–TEL, INC.
9760 SMITH ROAD
WILLOUGHBY, OHIO 44094
UNLESS OTHERWISE NOTED.
2) THESE DRAWINGS ARE BASED ON AVAILABLE PRELIMINARY BRIDGE DESIGN DRAWINGS. CONTRACTOR SHALL VERIFY ALL DIMENSIONS BEFORE FABRICATION AND INSTALLATION OF CONDUITS AND SUPPORTS.
3) SUBGRADE CONDUIT INSTALLATION BY OTHERS.
4) FIBERGLASS DUCT SUPPORTS ARE DESIGNED FOR A MAXIMUM CABLE LOAD OF 8.0 LBS PER FT PER DUCT. THE TOTAL TELEPHONE AND CONDUIT LOAD AT A SUPPORT IS 600 LBS MAXIMUM.
5) 4" STRAIGHT COUPLINGS SHALL BE INSTALLED AS REQUIRED.
6) THE CONTRACTOR IS REQUIRED TO COMPLY WITH ALL NATIONALLY ACCEPTED SAFETY PRACTICES, OSHA AND ANY OTHER SAFETY REQUIREMENTS IMPOSED BY THE OWNER, AGENCY OR ANY OTHER PARTIES WHICH MAY HAVE JURISDICTION OVER SAFETY.
7) DESIGN OF 4" DUCT BASED ON AMERICAN U–TEL PART NO. [12370] FIBERGLASS CONDUIT WITH THE FOLLOWING CHARACTERISTICS LISTED IN A THRU D:
A)4" FIBERGLASS DUCTS ARE TO HAVE THREADED JOINTS WITH 3000 LBS PULL OUT STRENGTH UNBONDED.
B)4" DIA. FIBERGLASS DUCTS ARE TO HAVE ULTIMATE TENSILE STRENGTH OF 10,500 PSI PER ASTM D–2105.
C)4" IPS:4.5" O.D. x 4.36" I.D. x 30 FT LENGTH
D)CAPABLE OF MAIN/INTERIOR HANGER SUPPORT SPANS OF UP TO 21.2 FT. FOR 3 LBS. PER FT. CABLE, 17.2 FT. FOR 8 LBS. PER FT. CABLE, AND 25.5 FT. FOR 1 LBS. PER FT. CABLE BASED ON NOT EXCEEDING 5/8" MIDSPAN DEFLECTION.
8) DURING INSTALLATION, THE DUCT EXPANSION JOINTS MUST BE SET TO THE PROPER LENGTH ACCORDING TO THE AMBIENT TEMPERATURE. REFER TO THE EXPANSION JOINT MANUFACTURER'S INSTRUCTIONS.
9) ALL CONNECTION BETWEEN DUCT SECTIONS, GASKETED EXPANSION JOINTS, SPLIT ANCHOR RINGS, ADAPTERS AND COUPLINGS ARE TO BE BONDED. REFER TO MANUFACTURER'S INSTRUCTIONS FOR BONDING PROCEDURES.
10) CAP THE ENDS OF THE DUCTS IF THE UNDERGROUND PORTION OF THE WORK IS NOT DONE AT THE SAME TIME AS THE BRIDGE PORTION.
11) ALL ATTACHMENT RODS, SPACER RODS, NUTS, LOCK AND FLAT WASHERS IN ITEM 2 TO BE ZINC PLATED.
12) THIS DESIGN IS FOR THE EXPRESS PURPOSE FOR USE ON THE SOMESVILLE BRIDGE OVER THE SACO RIVER IN SACO/BIDDEFORD, MAINE AND IS NOT TO BE USED ELSEWHERE.
13) ALL CONDUIT SUPPORT ANGLES (ITEM 8 AN 9) TO BE ASTM A36, MIN Fy=36 KSI, GALVANIZED. ALL HIGH STRENGTH BOLTS (ITEM 10) TO BE ASTM A325 WITH NUTS AND HARDENED FLAT WASHERS, GALVANIZED. STEEL PIPE SLEEVES (ITEM 11) TO BE ASTM A53, GALVANIZED.
14) ANGLES AND PIPE TO BE GALVANIZED PER ASTM A123. HIGH STRENGTH BOLTS AND HARDENED WASHERS TO BE GALVANIZED PER ASTM A153.
15) ALL $\frac{3}{4}$"ø HIGH STRENGTH BOLTS (ITEM 10) TO BE TIGHTENED PER A.I.S.C. "STRUCTURAL JOINTS USING ASTM A325 OR A490 BOLTS", SECTION 5 TO A MINIMUM FASTENER TENSION OF 28 KIPS. GALVANIZED SURFACES IN CONTACT AT CONNECTIONS SHALL BE HAND ROUGHENED PER SECTION 3(C).
16) REINFORCEMENT AROUND UTILITY OPENINGS AT EACH ABUTMENTS BY OTHERS.
17) CONDUIT SUPPORT SPACING CAN BE MODIFIED AS REQUIRED TO AVOID SCUPPER DRAIN PIPES, STIFFENERS, ETC., AS LONG AS THE CONDUIT SUPPORT SPACING DOES NOT EXCEED 17.0FT.
18) THESE DRAWINGS WERE DONE USING PRELIMINARY BRIDGE CONTRACT DRAWINGS. THE DESIGNER/CONTRACTOR TO VERIFY ALL DIMENSIONS PRIOR TO FABRICATION OF UTILITY SUPPORTS.

MATERIAL LIST

ITEM NO.	DESCRIPTION AND AMERICAN U–TEL[PART NO.]	QUANTITY
①	4" IPS – $4\frac{1}{2}$" O.D. FIBERGLASS DUCT WITH THREADED ENDS [12370]. SEE G.N. NO'S 7 & 9.	1560 FT
②	FIBERGLASS 4Wx1H STANDARD BASEMOUNT 4" DUCT HANGER. SEE G.N. NO. 11.	22
③	4" GASKETED EXPANSION JOINT [12352]. SEE G.N. NO'S 8 & 9.	8
④	4" STRAIGHT COUPLING [12348]. SEE G.N. NO'S 5 & 9.	20
⑤	4" PVC ADAPTER TO FIBERGLASS [12357]. SEE G.N. NO 9.	8
⑥	ADHESIVE KIT [12358].	15
⑦	4" SPLIT ANCHOR RINGS [12351]. SEE G.N. NO. 9 AND DETAIL 2, DWG. NO. 11.	8
⑧	GALVANIZED CONDUIT SUPPORT L6x4x$\frac{1}{2}$ x 8'–5$\frac{7}{16}$" LONG. SEE G.N. NO'S 13 & 14.	22
⑨	GALVANIZED CONDUIT SUPPORT L6x4x$\frac{1}{2}$ x 0'–6" LONG. SEE G.N. NO'S 13 & 14.	44
⑩	$\frac{3}{4}$" DIA. ASTM A325 FASTENER SET: $\frac{3}{4}$" DIA. x $2\frac{1}{2}$" LONG TYPE 1 BOLT. ONE HEX NUT AND TWO HARDENED FLAT WASHERS. ALL PARTS GALVANIZED. SEE G.N. NO. 13 TO 15.	176
⑪	5" DIA. ASTM A53, SCH. 40 STEEL PIPE, 2'–6" LONG, GALVANIZED. SEE G.N. NO. 13 AND 14.	8

LEGEND
① – DENOTES MATERIAL ITEM NUMBER
– DENOTES EXPANSION JOINT
– DENOTES HANGER AND CONDUIT SUPPORT LOCATION
– DENOTES ANCHOR POINT, HANGER AND CONDUIT SUPPORT LOCATION

JOB NO. 01–14

STATE OF MAINE
ANDREW J. ELD
10262
LICENSED PROFESSIONAL ENGINEER

PE NO. 10262

REV	COMMENTS	BY	DATE
1	FOR APPROVAL	AE	07/14/14
0	FOR APPROVAL	AE	07/07/14

SOMESVILLE BRIDGE OVER THE SACO RIVER
SACO/BIDDEFORD, MAINE

TELEPHONE CONDUIT SUPPORTS LOCATION PLAN

ANDREW J. ELD, P.E.

OWNER: FAIRPOINT

FURNISHED BY: AMERICAN U–TEL
9760 SMITH ROAD
WILLOUHGBY, OHIO 44094
(440)946–6027 FAX (440)946–7285

CHECKED BY: AE DATE: 07–06–14
DRAWN BY: WS DATE: 07–01–14
DRAWING NO: 01–14–01 SH. 1 OF 4

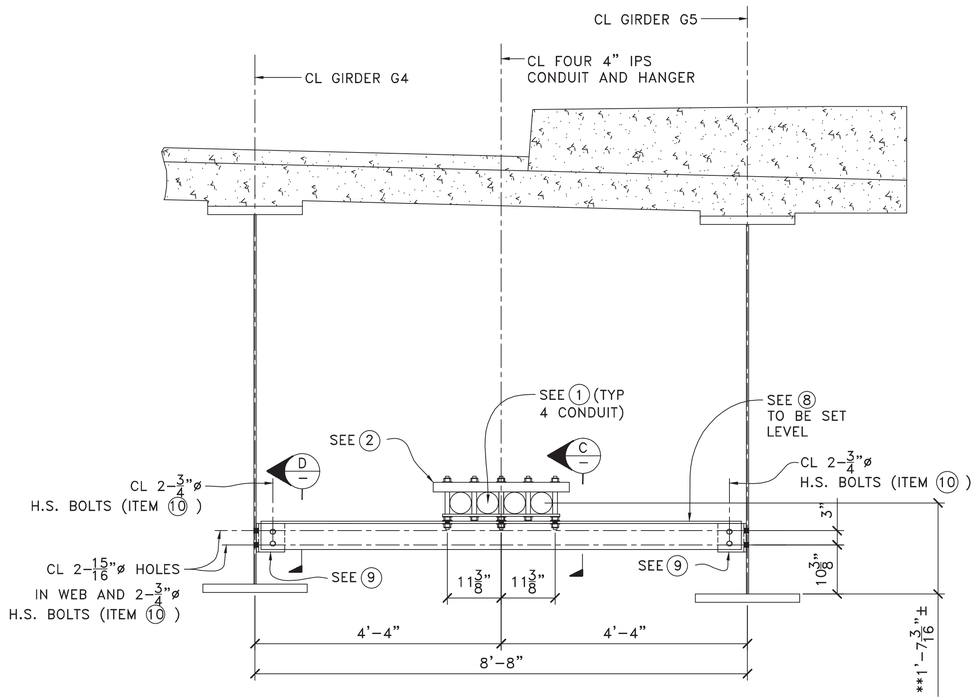

SECTION (A/01) HANGER SUPPORT AT UTILITY SUPPORT SHOWN.
3/4"=1'-0 UTILITY SUPPORT #9 TO #14.

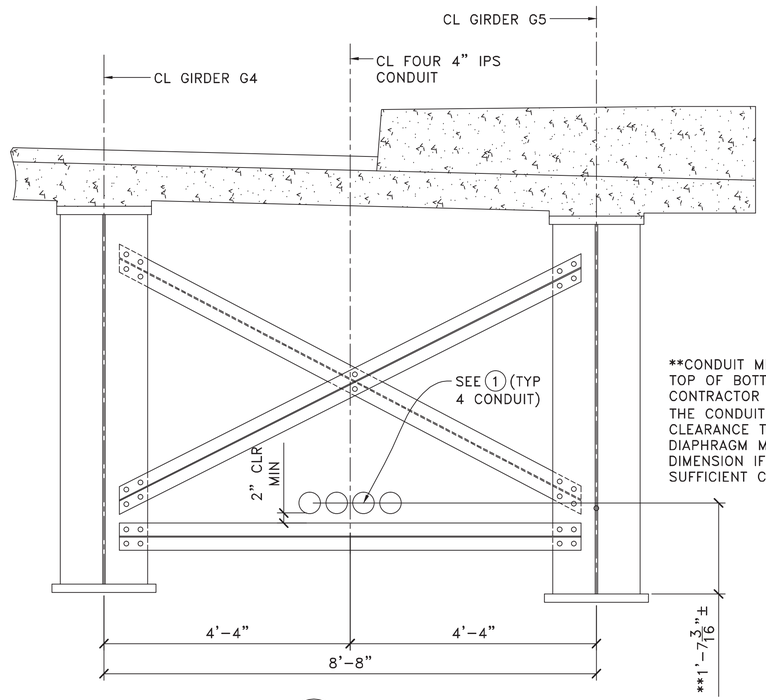

SECTION (B/01) CONDUIT AS IT GOES THROUGH A TYPE L
3/4"=1'-0 CROSSFRAME [TYP 5 LOCATIONS]

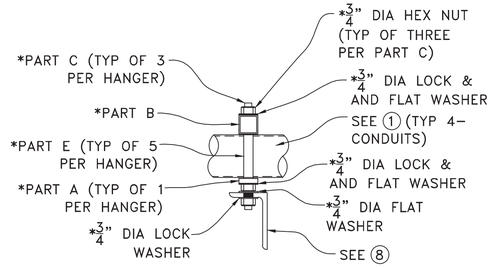

*INDICATES PARTS OF AMERICAN U-TEL HANGER PACKAGE FOR MATERIAL ITEM NO. (2) SEE G.N. #11

SECTION (C/03) 1 1/2"=1'-0

**CONDUIT MEASURED RELATIVE TO TOP OF BOTTOM FLANGE. CONTRACTOR TO MAKE SURE THAT THE CONDUIT HAS AT LEAST 2" CLEARANCE TO THE INTERMEDIATE DIAPHRAGM MEMBERS. ADJUST THIS DIMENSION IF REQUIRED TO PROVIDE SUFFICIENT CLEARNACE.

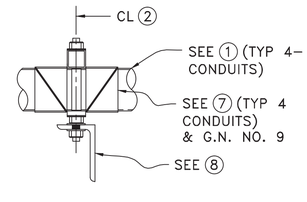

DETAIL (2/01) 1 1/2"=1'-0 ITEM (7)

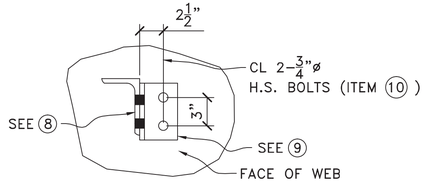

SECTION (D/03) 1 1/2"=1'-0

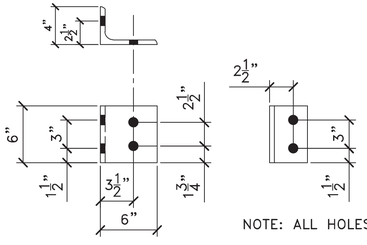

NOTE: ALL HOLES 13/16"ø

ITEM NO. 9 L6x4x1/2
1 1/2"=1'-0 4" LEG BOLTED TO GIRDER

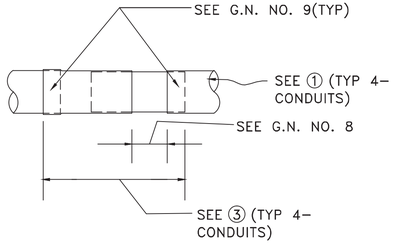

DETAIL (1/01) 1 1/2"=1'-0 ITEM (3)

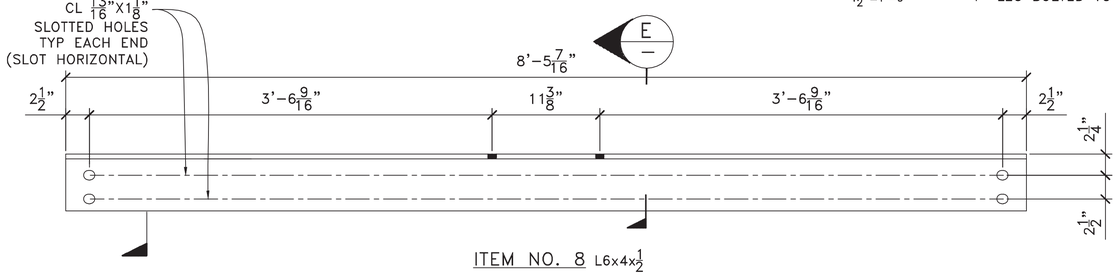

ITEM NO. 8 L6x4x1/2

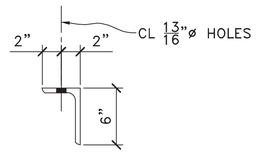

SECTION (E/—) 1 1/2"=1'-0

REV	COMMENTS	BY	DATE
1	FOR APPROVAL	AE	07/14/14
0	FOR APPROVAL	AE	07/07/14

JOB NO. 01-14

STATE OF MAINE ANDREW J. ELD 10262 LICENSED PROFESSIONAL ENGINEER

PE NO. 10262

SOMESVILLE BRIDGE OVER THE SACO RIVER
SACO/BIDDEFORD, MAINE

TELEPHONE CONDUIT SUPPORTS DETAILS 1

ANDREW J. ELD, P.E.

OWNER: FAIRPOINT

FURNISHED BY: AMERICAN U-TEL
9760 SMITH ROAD
WILLOUHGBY, OHIO 44094
(440)946-6027 FAX (440)946-7285

CHECKED BY: AE DATE: 07-06-14
DRAWN BY: WS DATE: 07-01-14
DRAWING NO: 01-14-02 SH. 2 OF 4

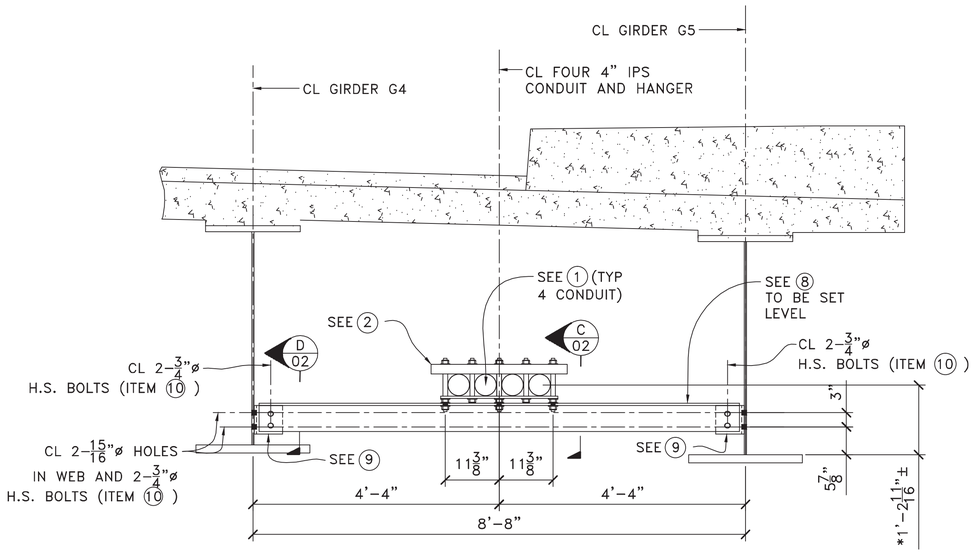

SECTION C 01 — 3/4"=1'-0
HANGER SUPPORT AT UTILITY SUPPORT SHOWN UTILITY SUPPORTS #1 TO #8 AND #15 TO #22.

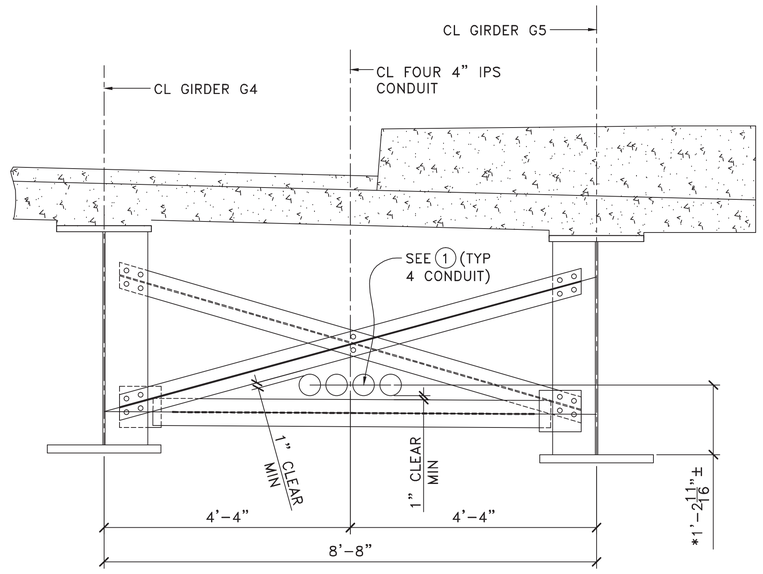

SECTION D 01 — 3/4"=1'-0
CONDUIT AS IT GOES THROUGH A TYPE K CROSSFRAME [TYP 8 LOCATIONS]

*CONDUIT MEASURED RELATIVE TO TOP OF BOTTOM FLANGE. CONTRACTOR TO MAKE SURE THAT THE CONDUIT HAS AT LEAST 2" CLEARANCE TO THE INTERMEDIATE DIAPHRAGM MEMBERS. ADJUST THIS DIMENSION IF REQUIRED TO PROVIDE SUFFICIENT CLEARNACE.

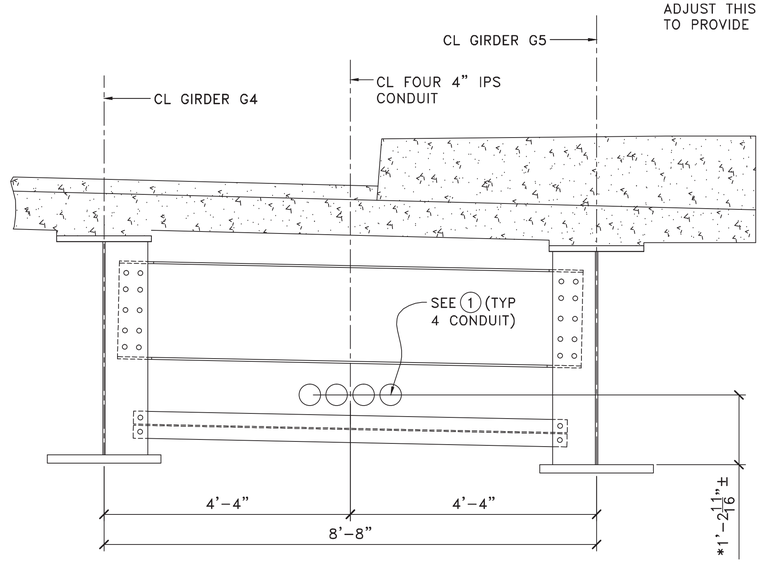

SECTION E 01 — 3/4"=1'-0
CONDUIT AS IT GOES THROUGH A TYPE C1 DIAPHRAGM [TYP 2 LOCATIONS]

REV	COMMENTS	BY	DATE
1	FOR APPROVAL	AE	07/14/14
0	FOR APPROVAL	AE	07/07/14

JOB NO. 01-14

STATE OF MAINE ANDREW J. ELD 10262 LICENSED PROFESSIONAL ENGINEER

PE NO. 10262

SOMESVILLE BRIDGE OVER THE SACO RIVER
SACO/BIDDEFORD, MAINE

TELEPHONE CONDUIT SUPPORTS DETAILS 2

ANDREW J. ELD, P.E.

OWNER: FAIRPOINT

FURNISHED BY: AMERICAN U-TEL
9760 SMITH ROAD
WILLOUHGBY, OHIO 44094
(440)946-6027 FAX (440)946-7285

CHECKED BY: AE DATE: 07-06-14
DRAWN BY: WS DATE: 07-01-14
DRAWING NO: 01-14-03 SH. 3 OF 4

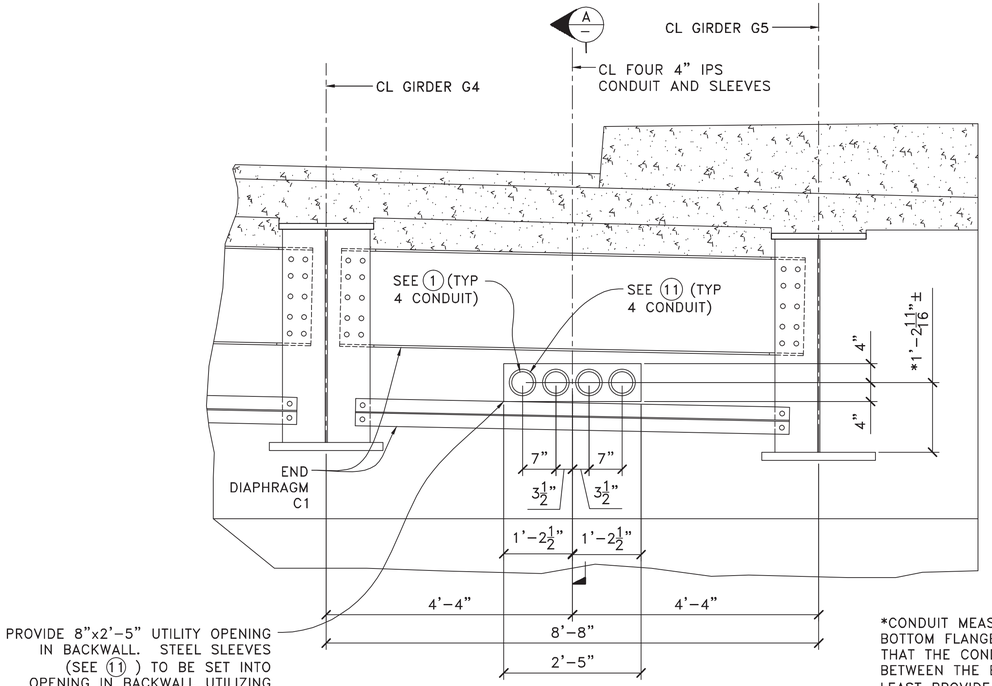

SECTION F / 01 — $\frac{3}{4}$"=1'-0

CONDUIT AS IT GOES THROUGH A TYPE C1 END DIAPHRAGM

PROVIDE 8"x2'-5" UTILITY OPENING IN BACKWALL. STEEL SLEEVES (SEE (11)) TO BE SET INTO OPENING IN BACKWALL UTILIZING TEMPLATE. PACK WITH NON-SHRINK GROUT. INSTALL SLEEVES PARALLEL TO GIRDERS AND AT SAME LONGITUDINAL SLOPE AS GIRDERS. THE UTILITY OPENING TO HAVE THE SIDES OF THE OPENING PARALLEL TO THE GIRDERS.
ALTERNATE: CAST SLEEVES INTO BACKWALL DURING BACKWALL CONSTRUCTION.

*CONDUIT MEASURED RELATIVE TO TOP OF BOTTOM FLANGE. CONTRACTOR TO MAKE SURE THAT THE CONDUIT IS APPROXIMATELY CENTERED BETWEEN THE END DIAPHRAGM MEMBERS OR AT LEAST PROVIDE A 1" CLEARANCE TO THE END DIAPHRAGM MEMBERS.

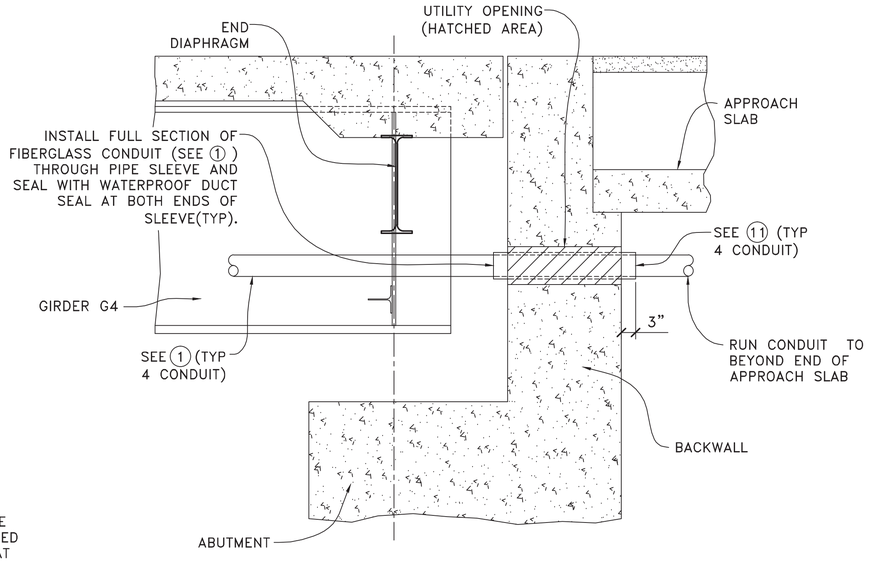

SECTION A / — — $\frac{3}{4}$"=1'-0

REV	COMMENTS	BY	DATE
1	FOR APPROVAL	AE	07/14/14
0	FOR APPROVAL	AE	07/07/14

JOB NO. 01-14

STATE OF MAINE
ANDREW J. ELD 10262
LICENSED PROFESSIONAL ENGINEER

PE NO. 10262

SOMESVILLE BRIDGE OVER THE
SACO RIVER
SACO/BIDDEFORD, MAINE

TELEPHONE CONDUIT SUPPORTS
DETAILS 3

ANDREW J. ELD, P.E.

OWNER: FAIRPOINT

FURNISHED BY: AMERICAN U-TEL
9760 SMITH ROAD
WILLOUHGBY, OHIO 44094
(440)946-6027 FAX (440)946-7285

CHECKED BY: AE DATE: 07-06-14
DRAWN BY: WS DATE: 07-01-14
DRAWING NO: 01-14-04 SH. 4 OF 4