STATE OF MAINE
DEPARTMENT OF TRANSPORTATION

SPECIFICATIONS

Design: Load and Resistance Factor Design per AASHTO LRFD Bridge Design Specifications, Seventh Edition 2014.

DESIGN LOADING

Live Load ..... HL - 93 Modified

TRAFFIC DATA

Current (2012) AADT	6570
Future (2032) AADT	7880
DHV - % of AADT	11%
Design Hour Volume	867
Heavy Trucks (% of AADT)	4%
Heavy Trucks (% of DHV)	3%
Directional Distribution (% of DHV)	59%
18 kip Equivalent P 2.0	113
18 kip Equivalent P 2.5	108
Design Speed (mph)	35

SCARBOROUGH
CUMBERLAND COUNTY
PINE POINT CROSSING
OVER
B&M RAILROAD
ROUTE 9
PROJECT NO. BH-1822(900)X
PROJECT LENGTH 0.208 mi.
BRIDGE NO. 5260

LIST OF DRAWINGS

Title Sheet	1
Estimated Quantities	2
Typical Approach Sections	3-4
Highway Approach Plans	5-7
Profiles	8-10
Stage Construction	11
Special Detour Plan & Profile	12
Boring Location Plan	13
Interpretive Subsurface Profile	14
Boring Logs	15-20
Sign Text Data	21
Highway Approach Cross - Sections	22-41
Abutment No. 1	42
Abutment No. 2	43
Abutment Details	44
MSE Wall and Steel Sheet Pile Wall Layout	45
MSE Wall and Steel Sheet Pile Wall Details	46
Pier Plan	47
Pier Details	48
NEXT-D Beam Span 1	49
NEXT-D Beam Span 2	50
Superstructure	51
Superstructure Details	52
Bridge Rail Snow Screen	53
Reinforcing Steel Schedule	54
Right of Way Map	55-57

MATERIALS

Concrete:	
Barriers, Curbs, Sidewalks & Transition Barriers	Class "LP"
Precast	Class "P"
All Other	Class "A"
Reinforcing Steel	
Plain	ASTM A 615/A 615M, Grade 60
Epoxy Coated	ASTM A 775/A 775M, Grade 60
Prestressing Strands	AASHTO 203 (ASTM A 416), Grade 270, Low Relaxation
Steel Sheet Piling	ASTM A328/A 328M
Steel Pipe Piles	ASTM A252, Grade 3
Steel H-Piles	ASTM A572, Grade 50

BASIC DESIGN STRESSES

Concrete	f 'c = 4,350 psi
Prestressed Concrete	f 'c = 6,500 psi
	f 'ci = 4,500 psi
Reinforcing Steel	f y = 60,000 psi
Prestressing Strand	F μ = 270,000 psi
Steel Sheet piles (Galvanized)	f y = 45,000 psi
Steel Pipe Piles	f y = 50,000 psi
Steel H-Piles	f y = 50,000 psi

UTILITIES

Central Maine Power Company	Fairpoint
Time Warner Cable	Scarborough Fire Department
Biddeford and Saco Water District	AT&T
Verizon Business	Scarborough Sanitary District

MAINTENANCE OF TRAFFIC

Maintain traffic on a temporary bridge while the proposed structure is constructed.

PROJECT LOCATION:	Pine Point Crossing (#5260) Over B&M Railroad, 2.6 Miles East Of Route 1. Lattitude: 43°32'45" Longitude: 70°21'04"
PROGRAM AREA:	Bridge Program
OUTLINE OF WORK:	Bridge replacement with raised vertical clearance, and reconstruction of 1,000 feet of Route 9.

WIN 018229.00

BH-1822(900)X

STATE OF MAINE
DEPARTMENT OF TRANSPORTATION
APPROVED
COMMISSIONER: DATE 7/31/15
CHIEF ENGINEER: 7-31-15

STATE OF MAINE PETER M. PERKINS No. 8251 LICENSED PROFESSIONAL ENGINEER

SIGNATURE 8251
P.E. NUMBER
7/16/2015
DATE

PROJECT INFORMATION

PROGRAM	BRIDGE
PROJECT MANAGER	A. LATHE
DESIGNER	
CONSULTANT	CHA
PROJECT RESIDENT	
CONTRACTOR	
PROJECT COMPLETION DATE	

SCARBOROUGH
PINE POINT CROSSING

TITLE SHEET

SHEET NUMBER
1
OF 57

Date:7/16/2015 Username: Division: HIGHWAY
Filename: V:\Projects\ANY\K3\24370\CADD_MSTN\Highway\001_Title.dgn

ESTIMATED QUANTITIES			
ITEM NO.	DESCRIPTION	QUANTITY	UNIT
201.23	REMOVING SINGLE TREE TOP ONLY	3	EA
202.19	REMOVING EXISTING BRIDGE	1	LS
202.203	PAVEMENT BUTT JOINTS	557	SY
203.20	COMMON EXCAVATION	7509	CY
203.24	COMMON BORROW	3174	CY
203.25	GRANULAR BORROW	172	CY
206.082	STRUCT EARTH EXCAVATION-MAJOR STRUCT. PLAN QUANTITY	90	CY
304.10	AGGR SUBB COURSE - GRAVEL	3593	CY
403.208	HOT MIX ASPHALT 12.5 MM HMA SURFACE	536	T
403.209	HOT MIX ASPHALT 9.5 MM (INCIDENTALS)	15	T
403.211	HOT MIX ASPHALT (SHIM)	20	T
403.213	HOT MIX ASPHALT 12.5 MM BASE	827	T
409.15	BITUMINOUS TACK COAT - APPLIED	130	GAL
461.131	TEMPORARY PAVEMENT	160	T
501.231	DYNAMIC LOADING TEST	5	EA
501.30	STEEL SHEET PILING	4354	SF
501.40	STEEL H-BEAM PILES 53 LBS/FT., DELIVERED	1169	LF
501.401	STEEL H-BEAM PILES 53 LBS./FT., IN PLACE	1169	LF
501.70	STEEL PIPE PILES DELIVERED	498	LF
501.701	STEEL PIPE PILES IN PLACE	498	LF
501.90	PILE TIPS - H BEAMS	14	EA
501.90	PILE TIPS - PIPE PILES	6	EA
501.91	PILE SPLICES - H BEAMS	28	EA
501.91	PILE SPLICES - PIPE PILES	18	EA
501.92	PILE DRIVING EQUIPMENT MOBILIZATION	1	LS
502.219	STRUCTURAL CONCRETE, ABUTMENTS AND RET WALLS (74CY)	1	LS
502.2352	STRUCTURAL CONCRETE, SHEET PILE CAP	14	CY
502.239	STRUCTURAL CONCRETE, PIERS (102CY)	1	LS
502.31	STRUCTURAL CONCRETE, APPROACH SLABS (27CY)	1	LS
502.49	STRUCTURAL CONCRETE, CURBS AND SIDEWALKS (17CY)	1	LS
502.492	STRUCTURAL CONCRETE CURB AND SIDEWALK, CLASS A	47	CY
503.12	REINFORCING STEEL, FAB AND DELIVERED	9405	LB
503.13	REINFORCING STEEL, PLACING	9405	LB
503.14	EPOXY COATED REINFORCING STEEL, FAB AND DELIVERED	28977	LB
503.15	EPOXY COATED REINFORCING STEEL, PLACING	28977	LB
506.9105	POLYUREA ELASTOMER COATING (126SY)	1	LS
507.0821	STEEL BRIDGE RAILING, 3 BAR (242LF)	1	LS
508.14	HIGH PERFORMANCE WATERPROOFING MEMBRANE (528SY)	1	LS
510.12	SPECIAL DETOUR-24' RDWY WIDTH, PED. TRAFFIC SEPERATED	1	LS
513.22	CRUSHED STONE SLOPE PROTECTION	2079	SY
514.06	CURING BOX FOR CONCRETE CYLINDER	1	EA
515.21	PROTECTIVE COATING FOR CONCRETE SURFACE (150SY)	1	LS
520.232	EXPANSION DEVICE - ASPHALTIC PLUG JOINT	72	LF
523.52	BEARING INSTALLATION	32	EA
523.5403	PLAIN ELASTOMERIC BEARINGS	32	EA
524.40	PROTECTIVE SHIELDING	1	LS
526.34	PERMANENT CONC TRANSITION BARRIER	4	EA
535.622	PRESTRESSED STRUCTURAL CONCRETE NEXT BEAM (214CY)	1	LS
603.179	18" CULV PIPE OPTION III	190	LF
604.092	CATCH BASIN TYPE BI-C	2	EA
604.15	MANHOLE	1	EA
604.245	CATCH BASIN TYPE F4-C	1	EA
606.1721	BRIDGE TRANSITION - TYPE 1	4	EA
606.231	GR TY 3C - 15 FOOT RADIUS AND LESS	25	LF
606.232	GR TY 3C - OVER 15' RADIUS	113	LF
606.234	GR TP 3C - SGL RAIL, 7' POSTS	1300	LF
606.265	TERM END- SGL RAIL- GALV STEEL	1	EA
606.353	REFLECTORIZED FLEXIBLE GUARDRAIL MARKERS	8	EA
606.47	SINGLE WOOD POST	1	EA
606.51	MULTIPLE MAILBOX SUPPORT	1	EA
606.78	LOW VOLUME GUARDRAIL ENDS - TYPE 3	2	EA
606.79	GUARDRAIL 350 FLARED TERMINAL	1	EA
607.16	CHAIN LINK FENCE 4'	146	LF
607.184	CHAIN LINK SNOW FENCE 3'	105	LF
609.31	CURB TYPE 3	365	LF
610.08	PLAIN RIPRAP	1098	CY
613.319	EROSION CONTROL BLANKET	1500	SY
615.0701	LOAM - PLAN QUANTITY	211	CY
618.13	SEEDING METHOD NUMBER 1	5	UN
618.1401	SEEDING METHOD NUMBER 2 - PLAN QUANTITY	26	UN
618.143	SPECIAL SEED MIX	12	UN
619.1201	MULCH - PLAN QUANTITY	30	UN
619.1401	EROSION CONTROL MIX	200	CY
620.54	STABILIZATION GEOTEXTILE	2219	SY
621.038	EVERGREEN TR (5'-6') GP B	12	EA
621.267	LG DECID TR (1.75"-2" CAL) GP A	24	EA
621.397	DWF EVERGREENS (18"-24") GP C	30	EA
621.531	DECIDUOUS SHRUBS (12"-18"CAL.) GROUP A	90	EA
621.54	DECID SHRUBS (18"-24") GP A	90	EA
621.546	DECID SHRUBS (2'-3') GP A	90	EA
627.733	4" WH OR YELL PAINT PVMT MARKING LINE - PLAN QUANTITY	3600	LF
627.76	TEMPORARY PVMT. MARK LINE, W OR YELLOW (2000LF)	1	LS
627.77	REMOVING PAVEMENT MARKINGS	300	SF
627.811	TEMP BI-DIRECTIONAL YELLOW DELINEATORS	50	EA
627.812	TEMP. BI-DIRECTIONAL WHITE DELINEATORS	50	EA
629.05	HAND LABOR, STRAIGHT TIME	50	HR
631.12	ALL-PURPOSE EXC (INC OPERATOR)	20	HR
631.172	TRUCK-LARGE (INC OPERATOR)	30	HR
631.32	CULVERT CLEANER (INC OPERATOR)	20	HR
639.18	FIELD OFFICE TYPE A	1	EA
645.106	DEMOUNT REG. WARN. CONF. & RTE MARKER SIGN	5	EA
645.116	REINST REG. WARN. CONF. & RTE MARKER SIGN	2	EA
645.271	REG WARN CONF RTE SIGNS TYPE 1	22	SF
652.312	TYPE III BARRICADE	4	EA
652.33	DRUM	25	EA
652.34	CONE	50	EA
652.35	CONSTRUCTION SIGNS	250	SF
652.361	MAINTENANCE OF TRAFFIC CONTROL DEVICES (630CD)	1	LS
652.38	FLAGGER	500	HR
653.20	1" POLYSTYRENE PLASTIC INSULATION	46	SY
653.24	4 7/32 POLY PLASTIC INSULATION	74	SY
653.25	5 7/32 POLY PLASTIC INSULATION	15	SY
656.75	TEMP SOIL EROSION & WATER POLLUTION CTRL	1	LS
659.10	MOBILIZATION	1	LS
660.21	ON-THE-JOB TRAINING (BID)	1000	HR
677.20	MECHANICALLY STABILIZED EARTH RETAINING WALL	6166	SF
812.162	ADJUSTING SEWER MANHOLE TO GRADE	7	EA

GENERAL CONSTRUCTION NOTES

1. For easements, construction limits and right of way lines, refer to Right of Way Map.

2. All utility facilities shall be adjusted by the respective utilities unless otherwise noted.

3. The clearing limits as shown on the plan are approximate. The exact limits will be established in the field by the Resident. Payment for all clearing regardless of quantity will be incidental to the contract items.

4. Existing guardrail shall be removed as shown in the Plans and will become the property of the Contractor. Payment for guardrail removal will be considered incidental to Contract items.

5. Do not excavate for Aggregate Subbase Course where existing material is suitable as determined by the Resident.

6. In areas where the Resident directs the Contractor not to excavate to the subgrade line as shown on the plans, payment for removing existing pavement, grubbing, shaping, ditching, and compacting the existing subbase and layers of new subbase 6 inches thick or less will be made under appropriate equipment rental lines.

7. Place a 24 inch wide strip of Temporary Erosion Control Blanket on side slopes along the top of the riprap and behind the wingwalls.

8. Loam shall be placed to a nominal depth of 4 inches in lawn areas and 2 inches in all other areas except in areas where a different finish material is detailed in the plans, or as directed by the Resident.

9. Erosion Control Mix may be substituted in those areas normally receiving loam and seed as directed by the Resident. Placement shall be in accordance with Standard Specifications Section 619, Mulch. Payment will be made under Item 619.1401, Erosion Control Mix.

10. Protective Coating for Concrete Surfaces shall be applied to the following areas:

- All exposed surfaces of concrete curbs and fascia down to the NEXT beam
- All exposed surfaces of Concrete Transition Barriers
- Top of abutment wings and to one foot below top of wings on the fill side
- Concrete coping on top of steel sheet pile wall

11. Project information referred to below may be accessed at the following MaineDOT web address: http://www.maine.gov/mdot/contractors/.

12. The project geotechnical report may be accessed at the MaineDOT web address: Geotechnical Preliminary Design Report, Pine Point Crossing Bridge, Scarborough, Maine, Soil Report No. 2012-28C, October 25,2012 and Final Geotechnical Engineering Report, Pine Point Crossing, Scarborough, Maine, MaineDOT Report No. 2015-__C, dated July 15, 2015

13. Geotechnical information furnished or referred to in this plan set is for the use of the Bidders and the Contractor. No assurance is given that the information or interpretations will be representative of actual subsurface conditions at the construction site. MaineDOT will not be responsible for the Bidders' or Contractor's interpretations of, or conclusions drawn from, the geotechnical information. The boring logs contained in the plan set present factual and interpretive subsurface information collected at discrete locations. Data provided may not be representative of the subsurface conditions between the boring locations.

14. Bidders and contractors shall obtain a copy of the existing bridge plans by contacting the Department. The plan are reproductions of the original drawings as prepared for the construction of the bridge as well as bridge rehabilitation projects. The existing plans are considered part of the contract documents for this proposed project. Existing plan may be accessed at the following web address: http://www.maine.gov/mdot/comprehensive-list-projects/project-information.php

15. Quantities included for pay items measured and paid for by Lump Sum are estimated quantities and are provided by MaineDOT for informational purposes only. Lump Sum pay items will be paid for at the Contract Bid amount, with no addition or reduction in payment to the Contractor if the actual final quantities are different from the MaineDOT provided estimated quantities, except as follows:

a. If a Lump Sum pay item is eliminated, the requirements of Standard Specifications Section 109.2, Elimination of Items, will take precedence.
b. If other Contract Documents specifically allow a change in payment for a Lump Sum pay item, those requirements will be followed.
c. If a design change results in changes to estimated quantities for Lump Sum pay items, price adjustments will be made in accordance with Standard Specifications Section 109.7, Equitable Adjustments to Compensation.

16. The Contractor shall submit a Bridge Demolition Plan to the Resident at least 10 business days prior to the start of demolition work. The plan shall outline the methods and equipment to be used to remove and dispose of all materials to be removed as dictated by the plans. No work related to the removal of the bridge shall be undertaken by the Contractor until MaineDOT has reviewed the Bridge Demolition Plan for appropriateness and completeness. Payment for all work necessary for developing, submitting and finalizing the Demolition Plan will be considered incidental to the bridge removal pay item.

17. The existing bridge indicated on the plans shall be removed and become property of the contractor. The steel portions of the existing bridge are coated with a lead-based paint system. The Contractor is responsible for the containment, proper management and disposal of all lead-contaminated hazardous waste generated by the process of demolishing the bridge called for in the plans. The Contractor is responsible for implementing appropriate OSHA mandated personal protection standards related to this process. Once the existing bridge is removed, the Contractor is solely responsible for the care, custody and control of the components of the existing bridge and any hazardous waste generated as a result of the storage, recycling or disposal of the bridge components, including lead-coated steel. The Contractor shall recycle or reuse the steel in accordance with the Maine Department of Environmental Protection's "Maine Hazardous Waste Management Regulations." Chapter 850. A copy of this regulation is available at MaineDOT's offices on Child Street in Augusta. Payment for all labor, materials, equipment and other costs required to remove, contain and dispose of any lead-coated steel will be considered incidental to the bridge removal item.

18. Existing signs shall be removed and replaced in the same locations as directed by the Resident, or specified in the plans.

19. Guardrail post as shown in the Standard Details shall be modified from the indicated length of 6 feet to a length of 7 feet, with an embedment of 4.5 feet. Payment will be considered incidental to guardrail pay items.

20. Installation of guardrail posts shall use hand excavation in areas where potential underground utility conflicts exist. The contractor shall coordinate with the applicable utilities to locate all underground utilities prior to installation of guardrail. MaineDOT standard detail 606 (20) shall be used to avoid utility conflicts and buried drainage structures. This work shall be subsidiary to the guardrail items. Potential conflicts exist at but are not limited to the following locations:
Station 12+40, 45'+/- right
Station 12+82, 35'+/- right
This work will not be paid for directly. Payment shall be considered incidental to the guardrail pay items

21. Guardrail end treatments shall be installed concurrently with the placement of each section of beam guardrail.

22. Holes created by guardrail removal will be filled and compacted with approved materials as directed by the resident. Payment to be considered incidental to the guardrail items.

23. Two reflectorized flexible G.R. Markers (item 606.353) will be installed at each guardrail end.

24. Areas of clearing shall have habitat restored as specified in the special provisions and as directed by the resident.

25. Temporary ramps shall be constructed with one foot of length for every 1/4" of transition depth on the leading and the trailing end. Materials, placement, maintenance, and removal shall be incidental to contract items.

26. Driveway fill side slopes shall be the same as the non-guardrail fill slopes unless otherwise noted on the plans.

27. All waste material not used on the project shall be disposed of off the project in acceptable waste areas reviewed by the resident. Grading, seeding and mulching of waste areas shall be considered incidental.

28. Existing inslopes steeper than 2:1 in proposed fill areas shall be benched as directed by the resident.

29. Residential paved entrances shall be constructed with: 2" hot mix asphalt and 12" aggregate subbase course gravel.

30. Any necessary cleaning of existing pavement prior to paving shall be incidental to the related paving items.

31. The following shall be incidental to the 603 item(s):
a. Any cutting of existing culverts and or connectors necessary to install new culvert replacements or extensions
b. Furnishing, placing, grading, and compacting of any new gravel and for temporary detours to maintain traffic during pipe installation (excavation is also incidental).
c. An 18" wide strip of non-woven geo-textile meeting the requirements of 620.58 shall be placed over all rcp joints
d. All pipe excavation including any cutting and removal of pavement
e. All work necessary to connect to existing pipes and drainage structures
f. Any necessary clearing of brush and non-pay trees within 10 feet of culvert ends
g. All ditching at pipe ends

32. No existing drainage shall be abandoned, removed or plugged without prior approval of the resident.

33. BI-c catch basins shall be shape 1 with haunched cone, as per standard detail 604(02), unless otherwise noted on the plans.

34. Existing abandoned water mains broken by the contractor during construction shall have the ends plugged with brick and mortar. Cost for all labor and material will be considered incidental to the contract and no direct payment will be made.

35. Backing up bituminous curb is incidental to the curb items. If directed, loam or dirty borrow will be paid for separately. In areas where new bituminous curb is designated to replace existing, the removal of the old bituminous curb shall be incidental to the new curb.

36. An existing timber walkway located at station 81+15, 20'+/- right shall be carefully removed by the Contractor and moved to the adjacent property owned by Joyce and Robert Domingue. This work will not be paid for directly. Payment shall be considered incidental to the related contract items

37. The contractor will be responsible for maintaining all existing mailboxes to ensure that the mail will be deliverable. This work shall be considered incidental to the contract.

38. Any damage to the slopes caused by the contractor's equipment, personnel, or operation shall be repaired to the satisfaction of the resident. All work, equipment, and materials required to make repairs shall be at the contractor's expense.

STATE OF MAINE
DEPARTMENT OF TRANSPORTATION

BH-1822(900)X

WIN 018229.00

BRIDGE NO. 5260

BRIDGE PLANS

PROJ. MANAGER	A. LATHE	BY	DATE
DESIGN-DETAILED	PAL	PAL	10/15/12
CHECKED-REVIEWED	PMP	PMP	10/15/12
DESIGN2-DETAILED2			
DESIGN3-DETAILED3			
REVISIONS 1			
REVISIONS 2			
REVISIONS 3			
REVISIONS 4			
FIELD CHANGES			

SIGNATURE

P.E. NUMBER

DATE

PINE POINT CROSSING
B&M RAILROAD
SCARBOROUGH CUMBERLAND COUNTY

ESTIMATED QUANTITIES

SHEET NUMBER
2
OF 57

Division: HIGHWAY
Username:
Filename: V:\Projects\ANY\K3\24370\CADD_MSTN\002_Notes-Quantities.dgn
Date:7/22/2015

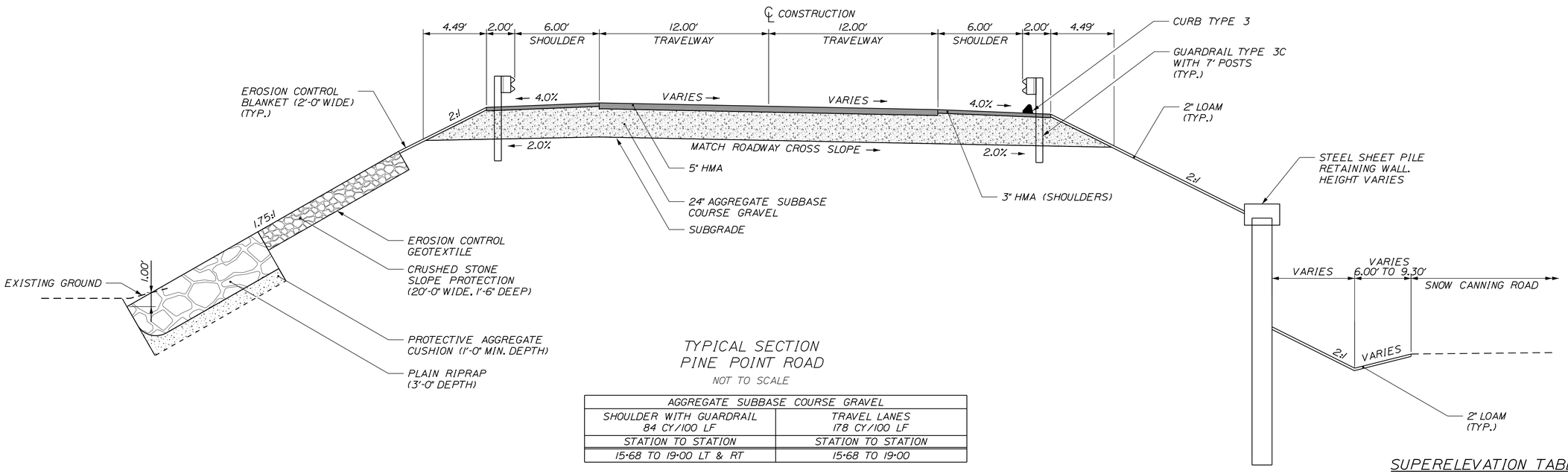

TYPICAL SECTION
PINE POINT ROAD
NOT TO SCALE

AGGREGATE SUBBASE COURSE GRAVEL	
SHOULDER WITH GUARDRAIL 84 CY/100 LF	TRAVEL LANES 178 CY/100 LF
STATION TO STATION	STATION TO STATION
15+68 TO 19+00 LT & RT	15+68 TO 19+00

SUPERELEVATED FULL CONSTRUCTION

SUPERELEVATION TABLE

LEFT SHLDR.	LEFT T.W.	STATION	RIGHT T.W.	RIGHT SHLDR.
		START		
MATCH	MATCH	9+50	MATCH	MATCH
-4.0%	-2.2%	10+00	2.2%	-4.0%
		TO		
-4.0%	-2.2%	11+00	2.2%	-4.0%
-4.0%	-1.4%	11+50	1.4%	-4.0%
-4.0%	-0.6%	12+00	0.6%	-4.0%
-4.0%	0.2%	12+50	-0.2%	-4.0%
-2.0%	1.0%	13+00	-1.0%	-4.0%
0.0%	1.8%	13+50	-1.8%	-4.0%
2.0%	2.6%	14+00	-2.6%	-4.0%
3.0%	3.0%	14+25	-3.0%	-3.0%
		TO		
3.0%	3.0%	15+75	-3.0%	-3.0%
2.0%	3.0%	16+00	-3.0%	-4.0%
0.0%	3.0%	16+50	-3.0%	-4.0%
-2.0%	3.0%	17+00	-3.0%	-4.0%
-4.0%	3.0%	17+50	-3.0%	-4.0%
		TO		
-4.0%	3.0%	19+00	-3.0%	-4.0%
MATCH	MATCH	19+50	MATCH	MATCH
		END		

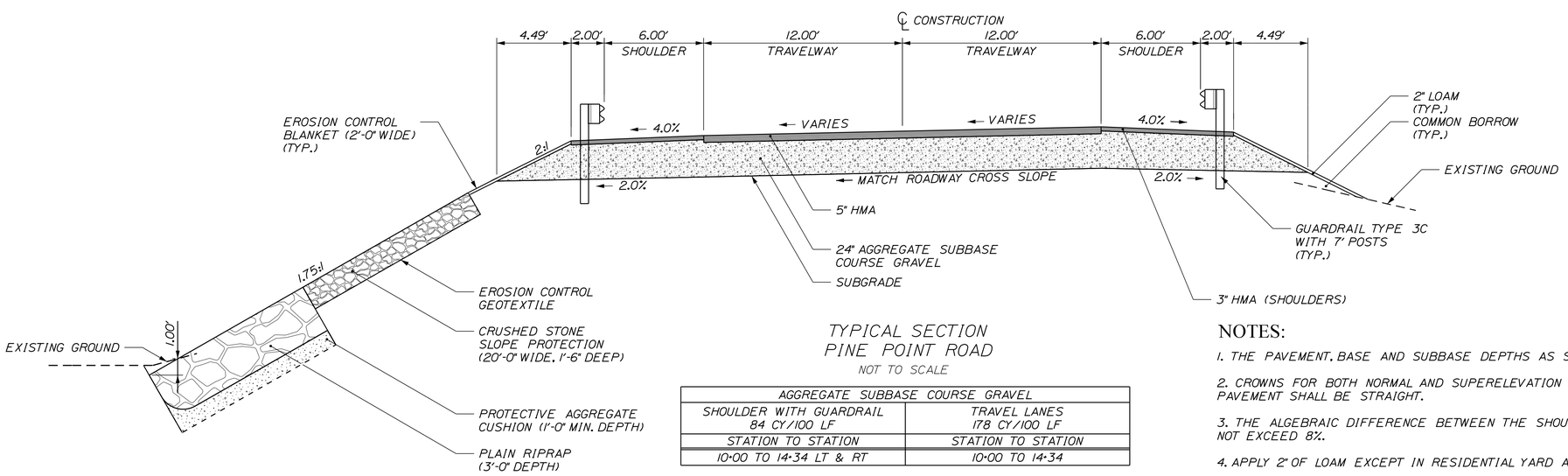

TYPICAL SECTION
PINE POINT ROAD
NOT TO SCALE

AGGREGATE SUBBASE COURSE GRAVEL	
SHOULDER WITH GUARDRAIL 84 CY/100 LF	TRAVEL LANES 178 CY/100 LF
STATION TO STATION	STATION TO STATION
10+00 TO 14+34 LT & RT	10+00 TO 14+34

SUPERELEVATED FULL CONSTRUCTION

NOTES:

1. THE PAVEMENT, BASE AND SUBBASE DEPTHS AS SHOWN ON THE PLANS ARE INTENDED TO BE NOMINAL.
2. CROWNS FOR BOTH NORMAL AND SUPERELEVATION SECTIONS FOR ALL COURSES OF SUBBASE AND PAVEMENT SHALL BE STRAIGHT.
3. THE ALGEBRAIC DIFFERENCE BETWEEN THE SHOULDER AND TRAVELWAY CROSS SLOPES "ROLLOVER" SHALL NOT EXCEED 8%.
4. APPLY 2" OF LOAM EXCEPT IN RESIDENTIAL YARD AREAS APPLY 4" OF LOAM.
5. THE STATIONING SHOWN UNDER EACH TYPICAL IS APPROXIMATE.
6. THE GRAVEL QUANTITY CALCULATION IS BASED ON A 2" LOAM DEPTH. THE ACTUAL DEPTH MAY VARY. SEE THE GENERAL NOTES.
7. FOR MATERIAL SPECIFICATIONS AND FURTHER CONSTRUCTION DETAILS FOR PLAIN RIPRAP SLOPE CONSTRUCTION SEE STANDARD DETAIL 610(02).

STATE OF MAINE
DEPARTMENT OF TRANSPORTATION

BH-1822(900)X

WIN 018229.00

BRIDGE NO. 5260

BRIDGE PLANS

	BY	DATE
PROJ. MANAGER	A. LATHE	
DESIGN-DETAILED	PAL	10/15/12
CHECKED-REVIEWED	PMP	10/15/12
DESIGN2-DETAILED2		
DESIGN3-DETAILED3		
REVISIONS 1		
REVISIONS 2		
REVISIONS 3		
REVISIONS 4		
FIELD CHANGES		

SIGNATURE

P.E. NUMBER

DATE

PINE POINT CROSSING
B&M RAILROAD
SCARBOROUGH CUMBERLAND COUNTY

HIGHWAY APPROACH
TYPICAL SECTIONS

SHEET NUMBER
3
OF 57

Division: HIGHWAY
Username:
Filename: V:\Projects\ANY\K3\24370\CADD_MSTN\Highway\003_Typical.dgn
Date: 7/22/2015

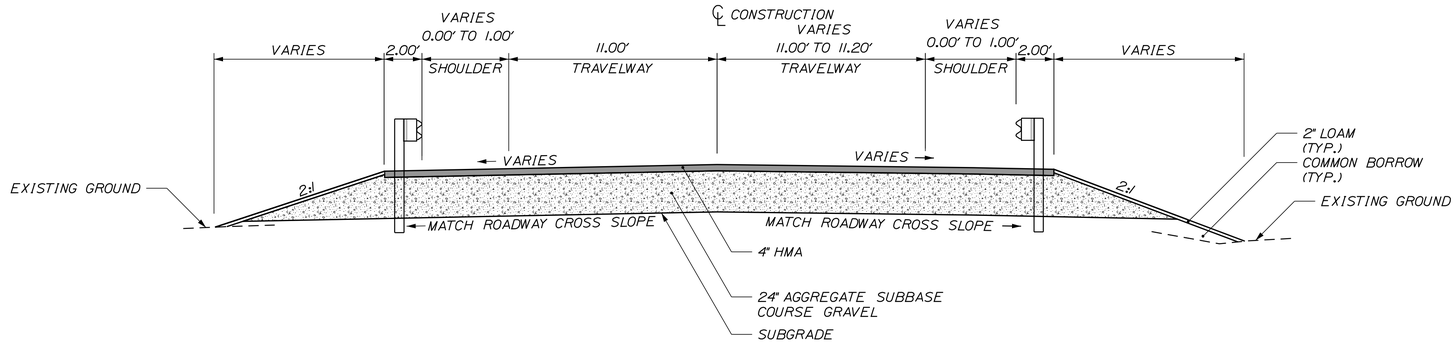

TYPICAL SECTION
HOLLY STREET
STA. 80+19.60 - STA. 82+00.00
NOT TO SCALE

AGGREGATE SUBBASE COURSE GRAVEL	
SHOULDER WITH GUARDRAIL 8 CY/100 LF FOR 1.0' WIDTH	TRAVEL LANES 163 CY/100 LF FOR 22.0' WIDTH
STATION TO STATION	STATION TO STATION
80+19.60 TO 82+00.00 LT & RT	80+19.60 TO 82+00.00

FULL CONSTRUCTION

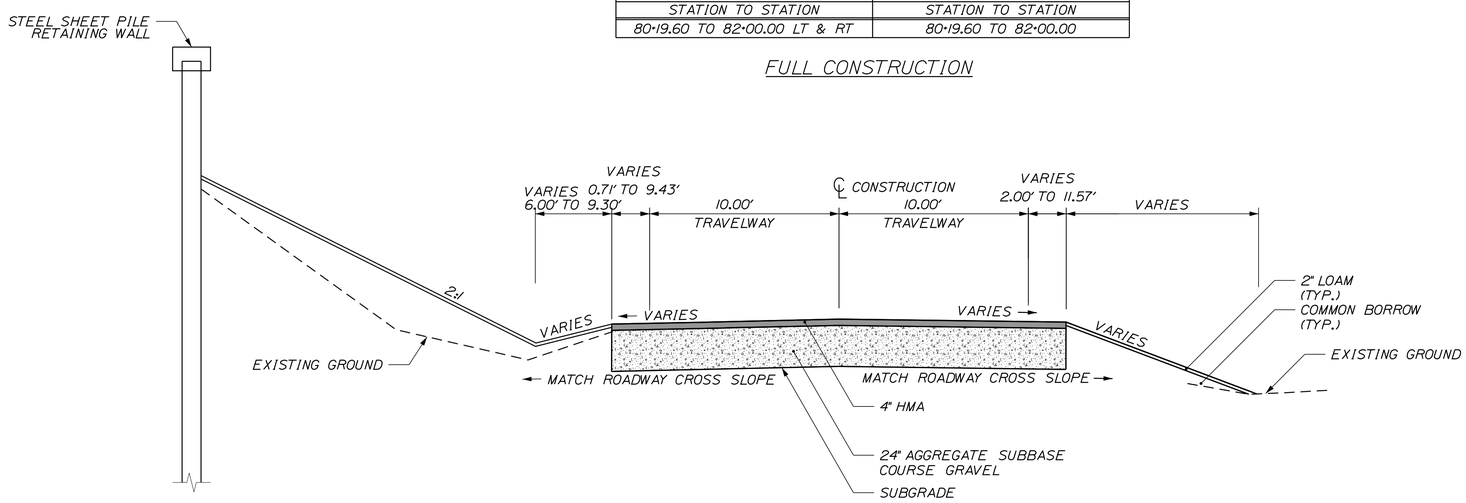

TYPICAL SECTION
SNOW CANNING ROAD
STA. 90+50.00 - STA. 93+10.64
NOT TO SCALE

AGGREGATE SUBBASE COURSE GRAVEL	
SHOULDER WITH GUARDRAIL 15 CY/100 LF FOR 2.0' WIDTH	TRAVEL LANES 148 CY/100 LF
STATION TO STATION	STATION TO STATION
90+50 TO 93+10.64 LT & RT	90+50 TO 93+10.64

FULL CONSTRUCTION

NOTES:

1. THE PAVEMENT, BASE AND SUBBASE DEPTHS AS SHOWN ON THE PLANS ARE INTENDED TO BE NOMINAL.
2. CROWNS FOR BOTH NORMAL AND SUPERELEVATION SECTIONS FOR ALL COURSES OF SUBBASE AND PAVEMENT SHALL BE STRAIGHT.
3. THE ALGEBRAIC DIFFERENCE BETWEEN THE SHOULDER AND TRAVELWAY CROSS SLOPES "ROLLOVER" SHALL NOT EXCEED 8%.
4. APPLY 2" OF LOAM EXCEPT IN RESIDENTIAL YARD AREAS APPLY 4" OF LOAM.
5. THE STATIONING SHOWN UNDER EACH TYPICAL IS APPROXIMATE.
6. THE GRAVEL QUANTITY CALCULATION IS BASED ON A 2" LOAM DEPTH. THE ACTUAL DEPTH MAY VARY. SEE THE GENERAL NOTES (NOT INCLUDED IN THIS SUBMISSION).
7. FOR MATERIAL SPECIFICATIONS AND FURTHER CONSTRUCTION DETAILS FOR PLAIN RIPRAP SLOPE CONSTRUCTION SEE STANDARD DETAIL 610(02).

STATE OF MAINE
DEPARTMENT OF TRANSPORTATION

BH-1822(900)X

WIN 018229.00

BRIDGE NO. 5260

BRIDGE PLANS

PROJ. MANAGER	A. LATHE		
DESIGN-DETAILED	PAL	BY	DATE
CHECKED-REVIEWED	PMP	PAL	10/15/12
DESIGN2-DETAILED2		PMP	10/15/12
DESIGN3-DETAILED3			
REVISIONS 1			
REVISIONS 2			
REVISIONS 3			
REVISIONS 4			
FIELD CHANGES			

SIGNATURE

P.E. NUMBER

DATE

PINE POINT CROSSING
B&M RAILROAD
SCARBOROUGH CUMBERLAND COUNTY

HIGHWAY APPROACH
TYPICAL SECTIONS

SHEET NUMBER

4

OF 57

Division: HIGHWAY
Username:

Filename: V:\Projects\ANY\K3\24370\CADD_MSTN\Highway\004_Typical.dgn
Date:7/22/2015

Division: HIGHWAY

Username:

Filename: V:\Projects\ANY\K3\24370\CADD_MSTN\Highway\005_Profile Alt A Plan-Profile_25 Scale.dgn

Date:7/22/2015

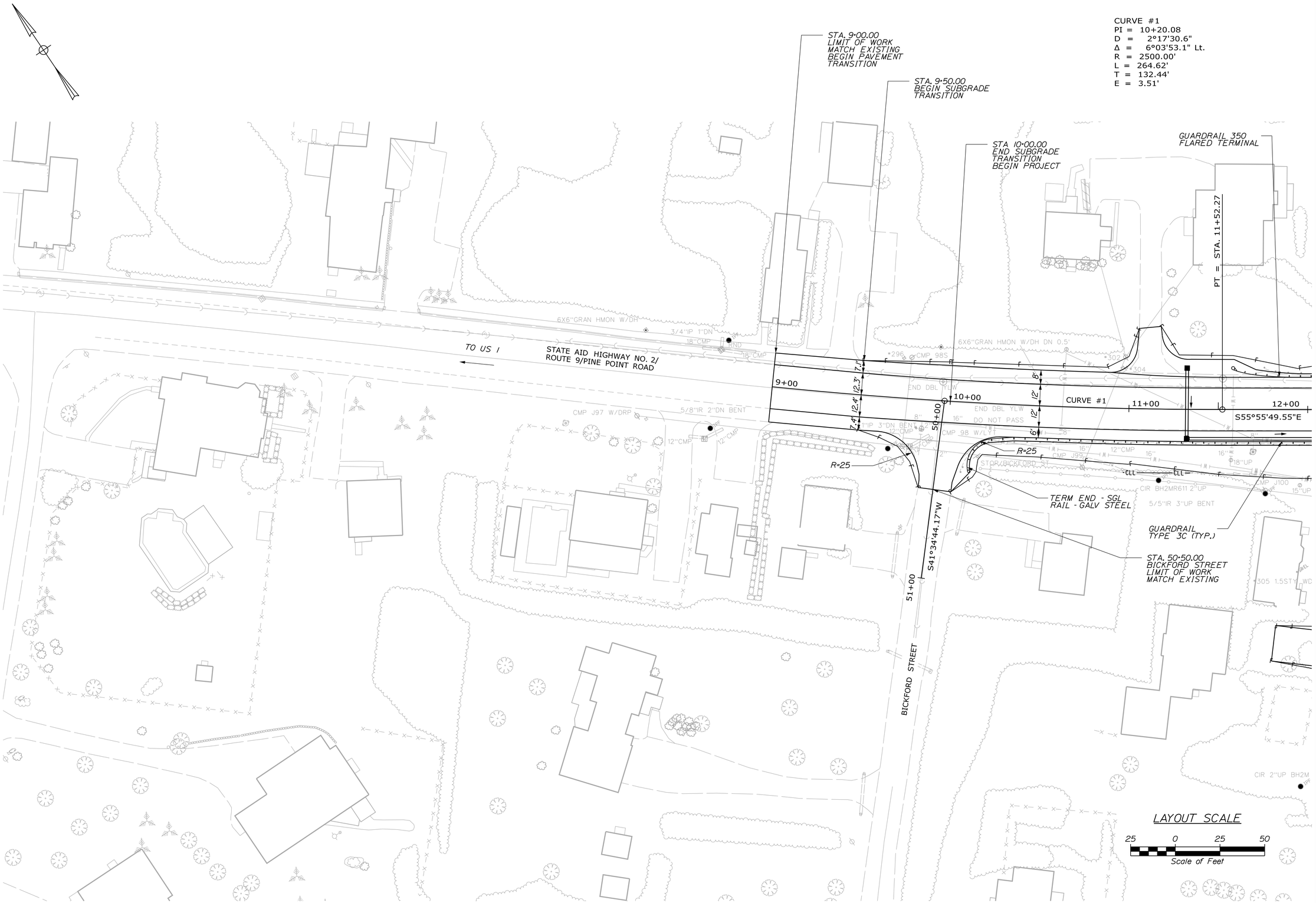

STATE OF MAINE
DEPARTMENT OF TRANSPORTATION

BH-1822(900)X

WIN 018229.00

BRIDGE NO. 5260

BRIDGE PLANS

	BY	DATE
PROJ. MANAGER	A. LATHE	
DESIGN-DETAILED	PAL	10/15/12
CHECKED-REVIEWED	PMP	10/15/12
DESIGN2-DETAILED2		
DESIGN3-DETAILED3		
REVISIONS 1		
REVISIONS 2		
REVISIONS 3		
REVISIONS 4		
FIELD CHANGES		

SIGNATURE

P.E. NUMBER

DATE

PINE POINT CROSSING
B&M RAILROAD
SCARBOROUGH CUMBERLAND COUNTY

HIGHWAY APPROACH PLAN

SHEET NUMBER

5

OF 57

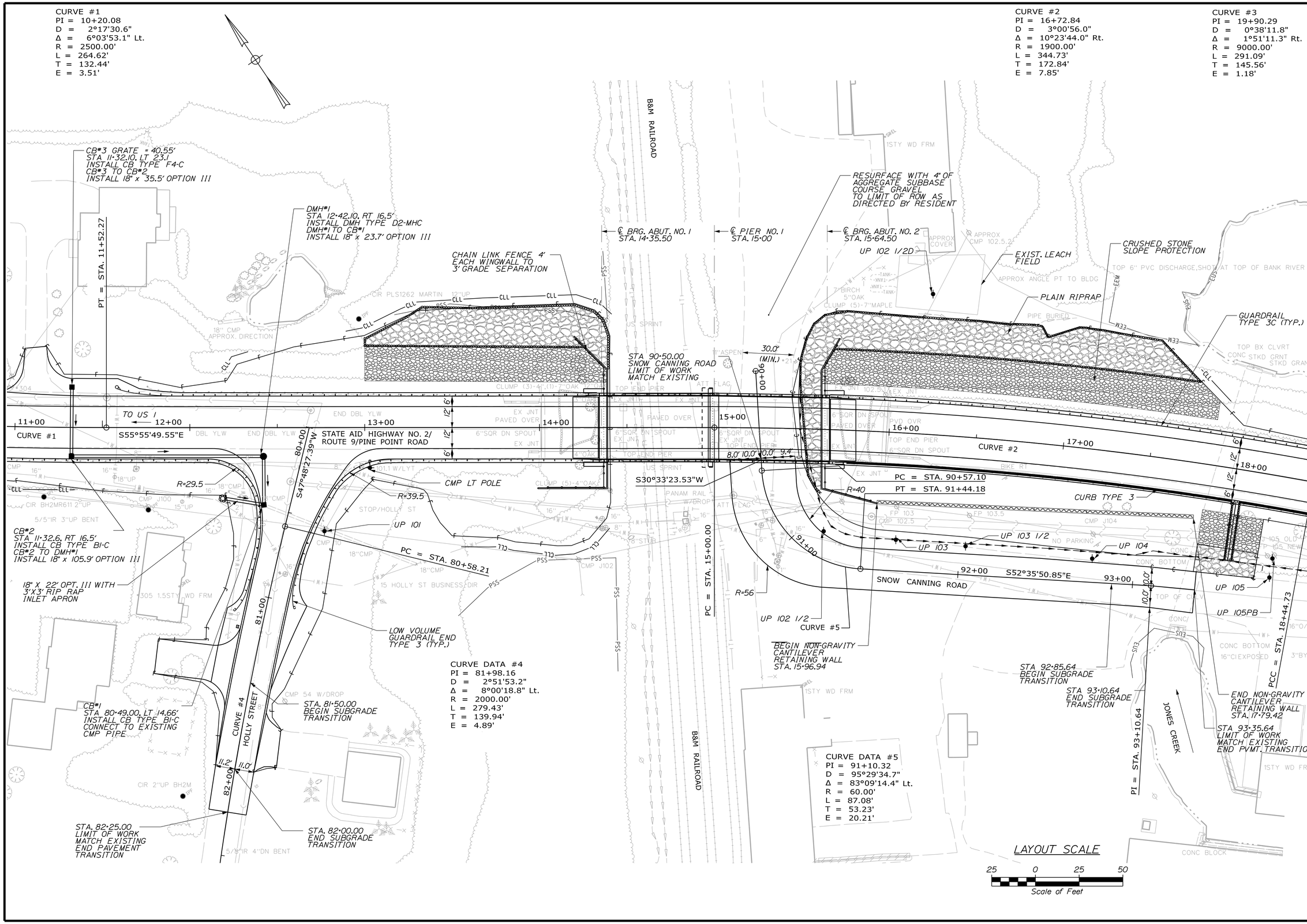

STATE OF MAINE
DEPARTMENT OF TRANSPORTATION

BH-1822(900)X

WIN 018229.00

BRIDGE NO. 5260

BRIDGE PLANS

	BY	DATE
A. LATHE	PAL	10/15/12
DESIGN-DETAILED	PAL	10/15/12
CHECKED-REVIEWED	PMP	
DESIGN2-DETAILED2		
DESIGN3-DETAILED3		
REVISIONS 1		
REVISIONS 2		
REVISIONS 3		
REVISIONS 4		
FIELD CHANGES		

PROJ. MANAGER

SIGNATURE

P.E. NUMBER

DATE

PINE POINT CROSSING
B&M RAILROAD
SCARBOROUGH CUMBERLAND COUNTY

HIGHWAY APPROACH PLAN

SHEET NUMBER

6

OF 57

Division: HIGHWAY

Username:

Filename: V:\Projects\ANY\K3\24370\CADD_MSTN\Highway\006_Profile Alt A Plan-Profile_25 Scale.dgn

Date:7/22/2015

Division: HIGHWAY

Username:

Filename: V:\Projects\ANY\K3\24370\CADD_MSTN\Highway\007_Profile Alt A Plan-Profile_25 Scale.dgn

Date:7/22/2015

CURVE #2
PI = 16+72.84
D = 3°00'56.0"
Δ = 10°23'44.0" Rt.
R = 1900.00'
L = 344.73'
T = 172.84'
E = 7.85'

CURVE #3
PI = 19+90.29
D = 0°38'11.8"
Δ = 1°51'11.3" Rt.
R = 9000.00'
L = 291.09'
T = 145.56'
E = 1.18'

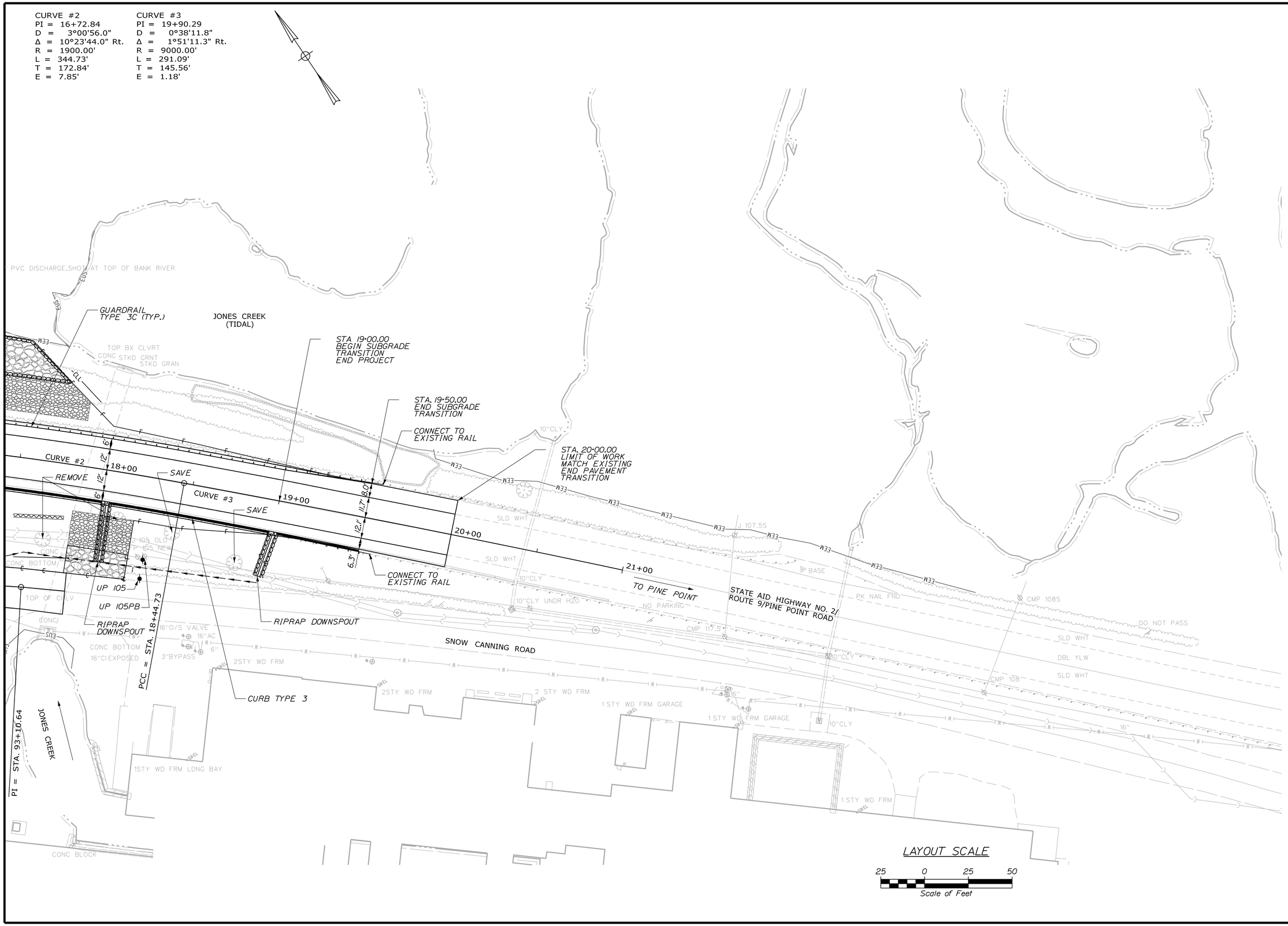

STATE OF MAINE
DEPARTMENT OF TRANSPORTATION

BH-1822(900)X

WIN 018229.00

BRIDGE NO. 5260

BRIDGE PLANS

PROJ. MANAGER	A. LATHE		
DESIGN-DETAILED	PAL	BY	DATE
CHECKED-REVIEWED	PMP	PAL	10/15/12
DESIGN2-DETAILED2		PMP	10/15/12
DESIGN3-DETAILED3			
REVISIONS 1			
REVISIONS 2			
REVISIONS 3			
REVISIONS 4			
FIELD CHANGES			

SIGNATURE

P.E. NUMBER

DATE

PINE POINT CROSSING
B&M RAILROAD
SCARBOROUGH CUMBERLAND COUNTY

HIGHWAY APPROACH PLAN

SHEET NUMBER

7

OF 57

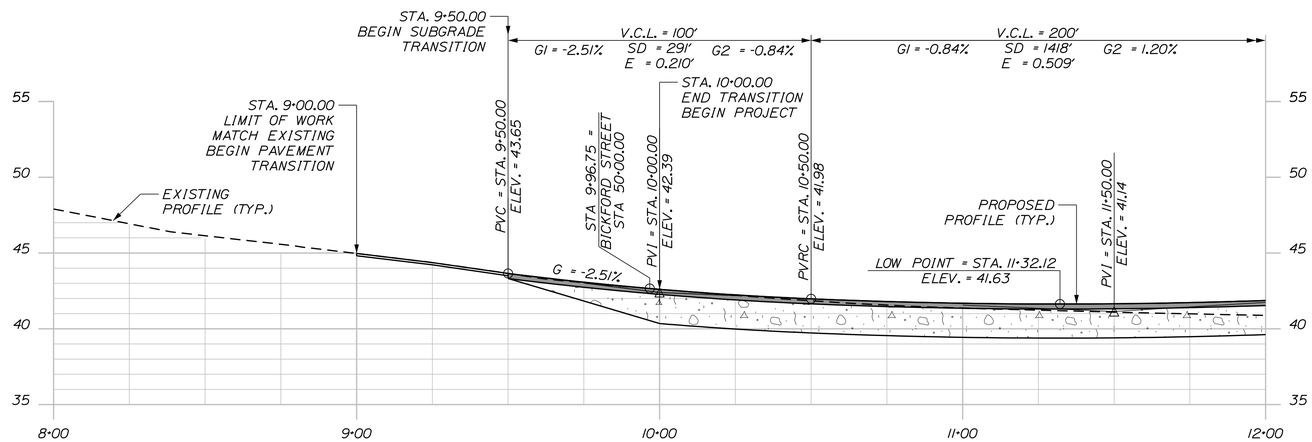

ROUTE 9 PINE POINT ROAD PROFILE

PROFILE

Horiz. 25 0 25 50

Vert. 5 0 5 10

Scale of Feet

Division: HIGHWAY

Username:

Filename: V:\Projects\ANY\K3\24370\CADD_MSTN\Highway\008_ML Profile.dgn

Date:7/22/2015

STATE OF MAINE
DEPARTMENT OF TRANSPORTATION

BH-1822(900)X

WIN 018229.00

BRIDGE NO. 5260

BRIDGE PLANS

PROJ. MANAGER	A. LATHE	BY	DATE
DESIGN-DETAILED	PAL	PAL	10/15/12
CHECKED-REVIEWED	PMP	PMP	10/15/12
DESIGN2-DETAILED2			
DESIGN3-DETAILED3			
REVISIONS 1			
REVISIONS 2			
REVISIONS 3			
REVISIONS 4			
FIELD CHANGES			

SIGNATURE

P.E. NUMBER

DATE

PINE POINT CROSSING
B&M RAILROAD
SCARBOROUGH CUMBERLAND COUNTY

PROFILE

SHEET NUMBER

8

OF 57

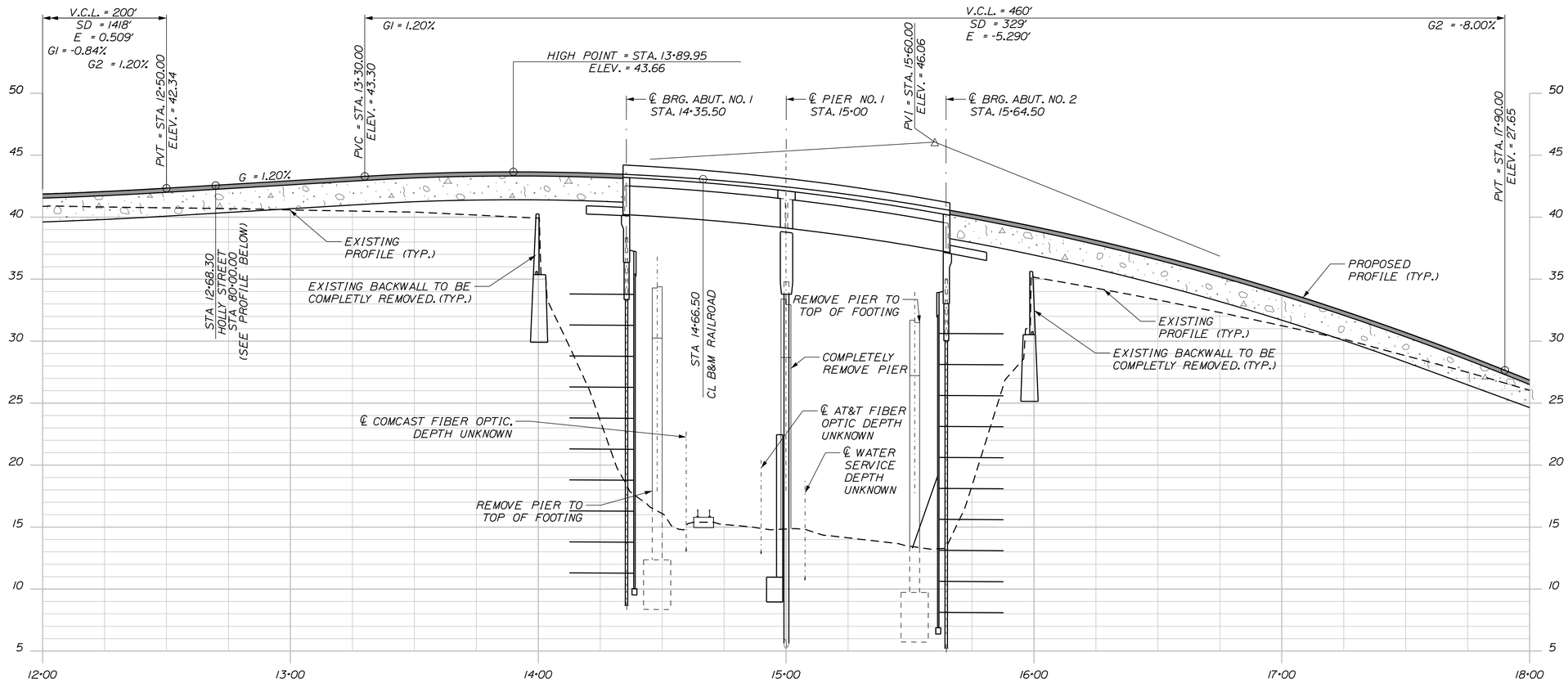

ROUTE 9 PINE POINT ROAD PROFILE

PROFILE

Horiz. 25 0 25 50

Vert. 5 0 5 10

Scale of Feet

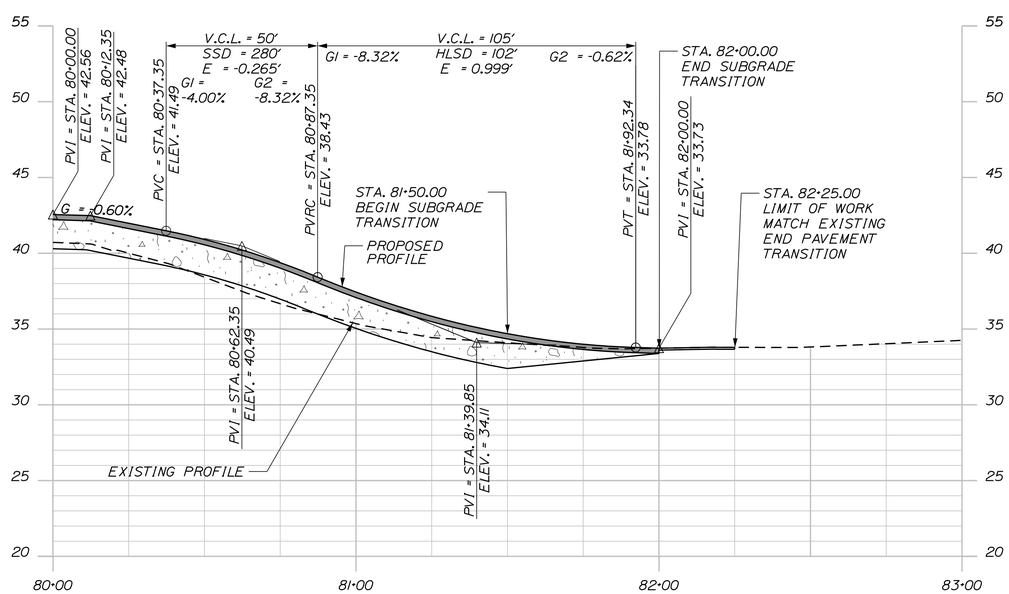

HOLLY STREET PROFILE

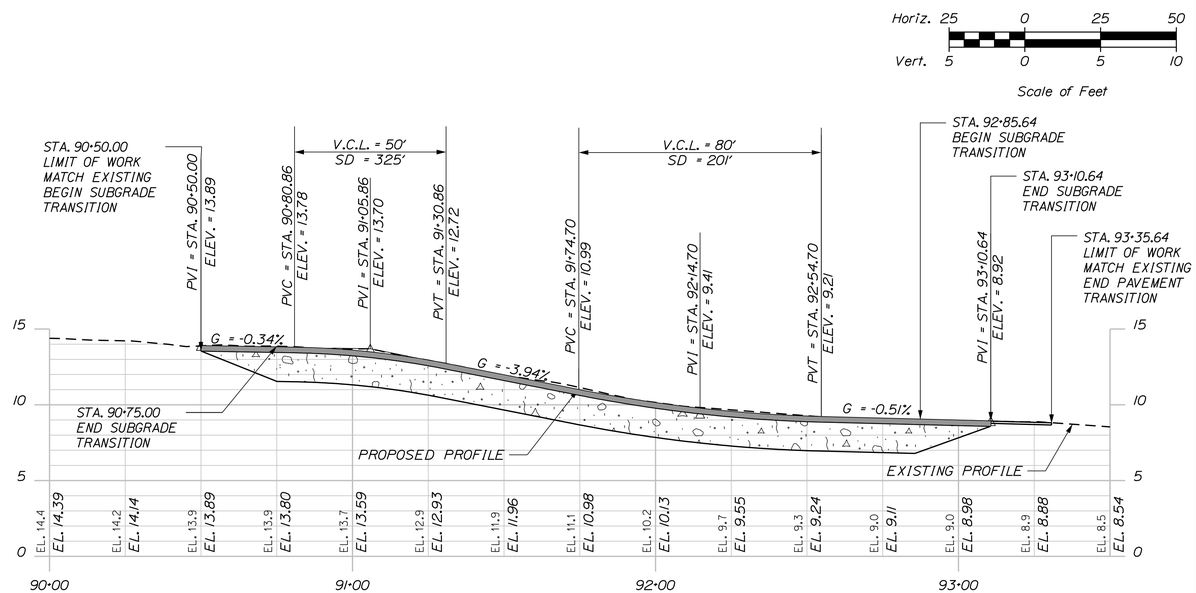

SNOW CANNING ROAD PROFILE

STATE OF MAINE
DEPARTMENT OF TRANSPORTATION

BH-1822(900)X

WIN 018229.00

BRIDGE NO. 5260

BRIDGE PLANS

PROJ. MANAGER	A. LATHE		
DESIGN-DETAILED	PAL	PAL	10/15/12
CHECKED-REVIEWED	PMP	PMP	10/15/12
DESIGN2-DETAILED2			
DESIGN3-DETAILED3			
REVISIONS 1			
REVISIONS 2			
REVISIONS 3			
REVISIONS 4			
FIELD CHANGES			

SIGNATURE

P.E. NUMBER

DATE

PINE POINT CROSSING
B&M RAILROAD
SCARBOROUGH CUMBERLAND COUNTY

PROFILES

SHEET NUMBER

9

OF 57

Division: HIGHWAY

Username:

Filename: V:\Projects\ANY\K3\24370\CADD_MSTN\Highway\009_ML Profile.dgn

Date:7/22/2015

Division: HIGHWAY

Username:

Filename: V:\Projects\ANY\K3\24370\CADD_MSTN\Highway\010_ML Profile.dgn

Date:7/22/2015

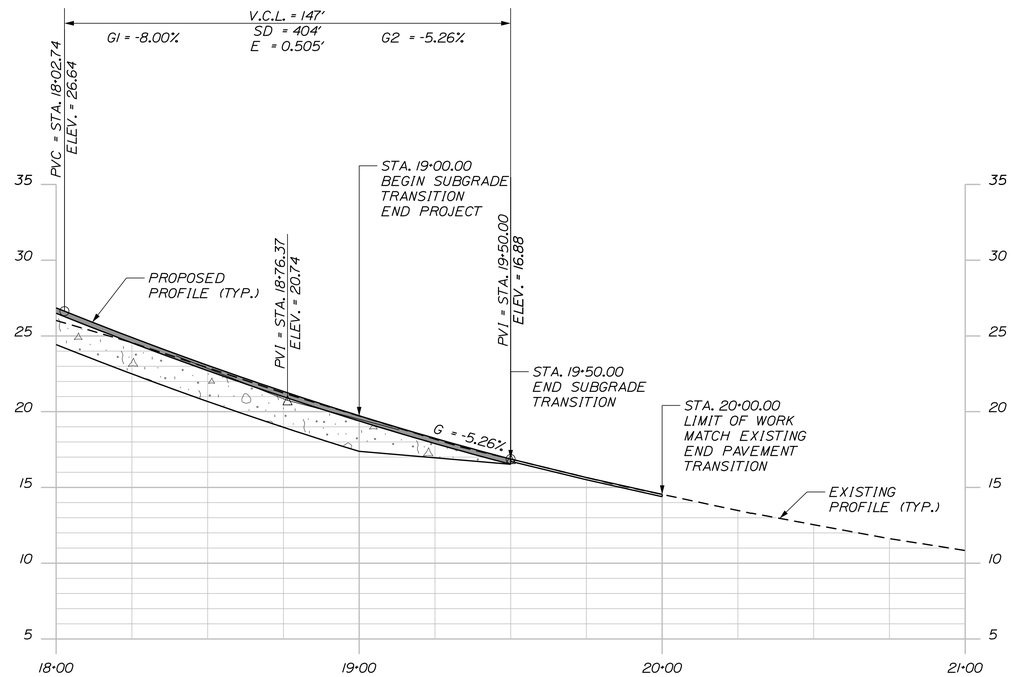

ROUTE 9 PINE POINT ROAD PROFILE

PROFILE

Horiz. 25 0 25 50

Vert. 5 0 5 10

Scale of Feet

STATE OF MAINE
DEPARTMENT OF TRANSPORTATION

BH-1822(900)X

WIN 018229.00

BRIDGE NO. 5260 BRIDGE PLANS

PROJ. MANAGER	A. LATHE		
DESIGN-DETAILED	PAL	PAL	10/15/12
CHECKED-REVIEWED	PMP	PMP	10/15/12
DESIGN2-DETAILED2			
DESIGN3-DETAILED3			
REVISIONS 1			
REVISIONS 2			
REVISIONS 3			
REVISIONS 4			
FIELD CHANGES			

SIGNATURE

P.E. NUMBER

DATE

PINE POINT CROSSING
B&M RAILROAD
SCARBOROUGH CUMBERLAND COUNTY

PROFILE

SHEET NUMBER

10

OF 57

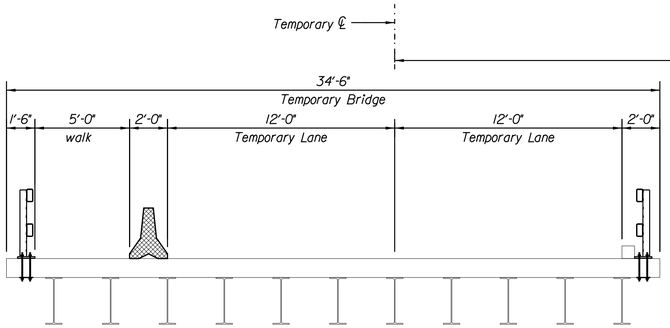

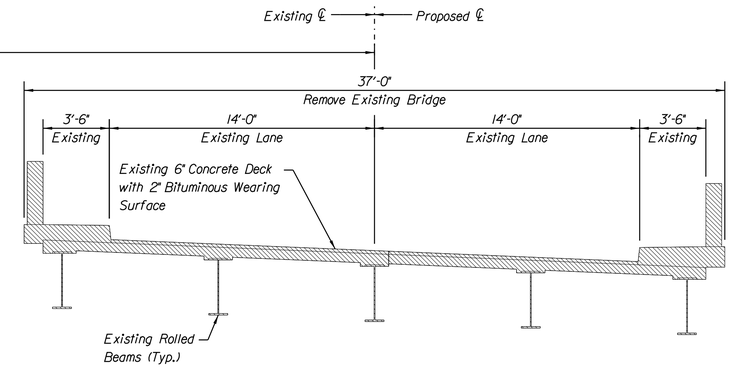

STAGE 1

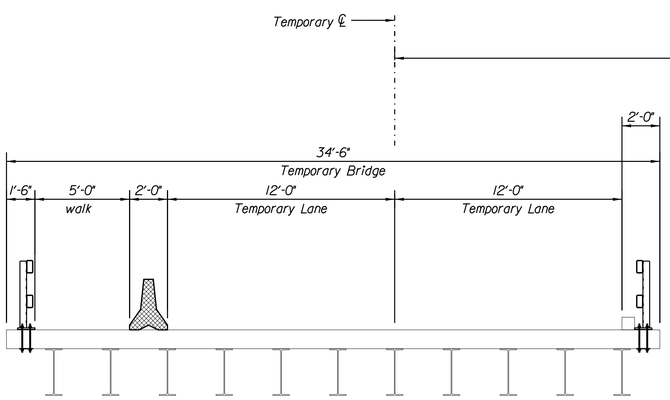

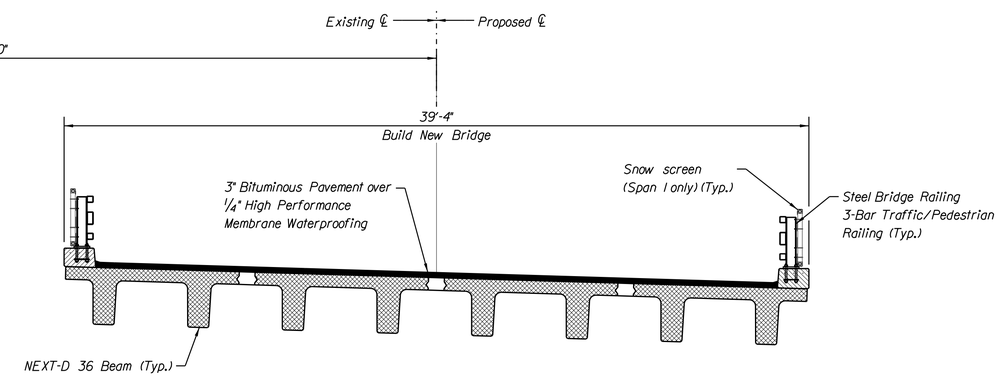

STAGE 2

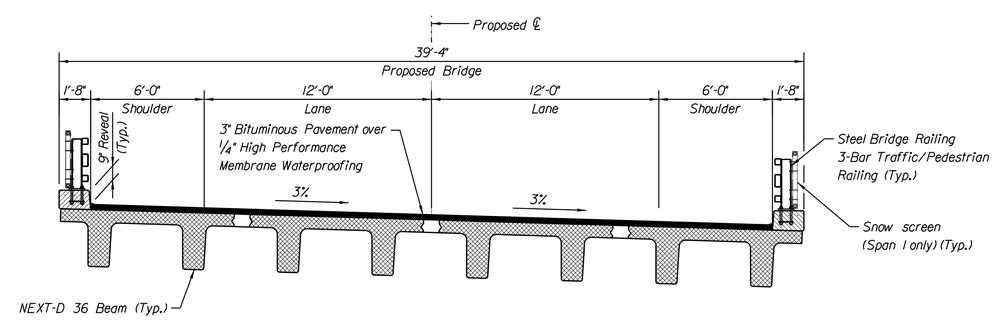

PROPOSED BRIDGE

STATE OF MAINE
DEPARTMENT OF TRANSPORTATION

BH-1822(900)X

WIN 018229.00

BRIDGE NO. 5260

BRIDGE PLANS

	BY	DATE
PROJ. MANAGER	A. LATHE	
DESIGN-DETAILED	PAL	10/15/12
CHECKED-REVIEWED	PMP	10/15/12
DESIGN2-DETAILED2		
DESIGN3-DETAILED3		
REVISIONS 1		
REVISIONS 2		
REVISIONS 3		
REVISIONS 4		
FIELD CHANGES		

SIGNATURE

P.E. NUMBER

DATE

PINE POINT CROSSING
B&M RAILROAD
SCARBOROUGH CUMBERLAND COUNTY

BRIDGE STAGE CONSTRUCTION

SHEET NUMBER

11

OF 57

Division: HIGHWAY
Username:

Filename: V:\Projects\ANY\K3\24370\CADD_MSTN\011_Section_NEXT_Beam_TempBridge.DGN
Date:7/22/2015

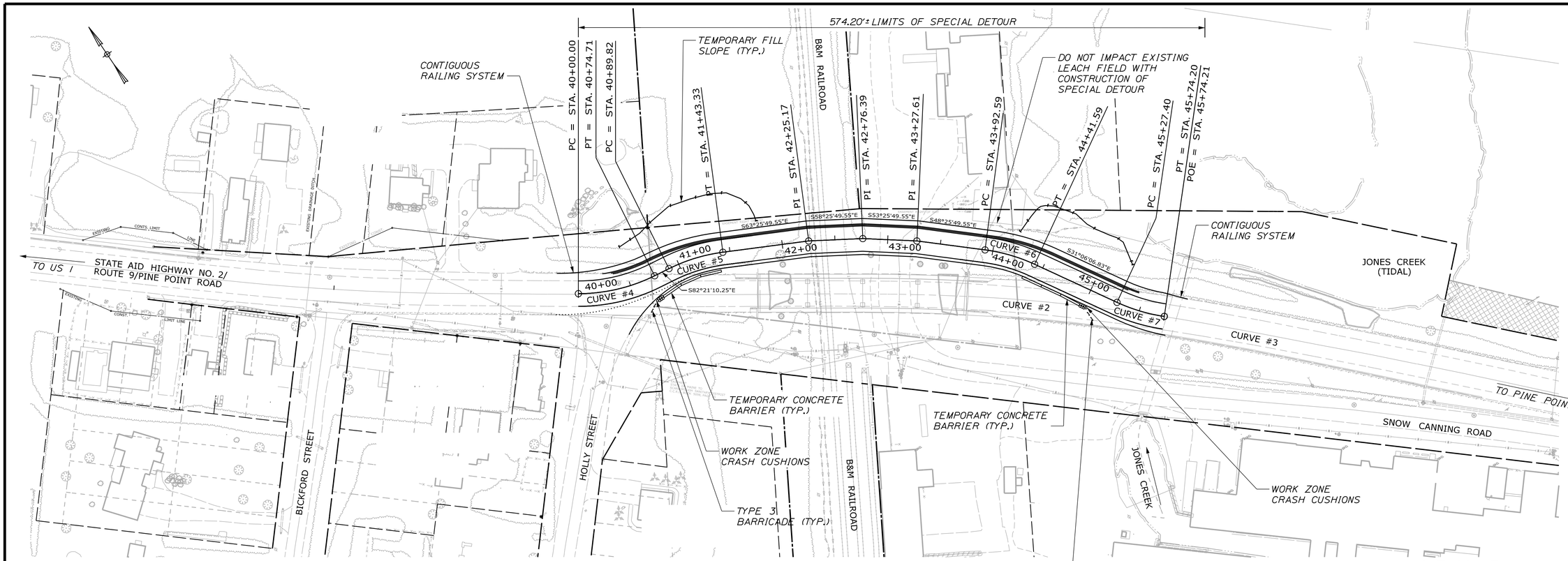

CURVE DATA #4
PI = 40+38.03
D = 35°22'04.0"
Δ = 26°25'20.7" Lt.
R = 162.00'
L = 74.71'
T = 38.03'
E = 4.40'
N = 259744.66
E = 990420.43

CURVE DATA #5
PI = 41+16.82
D = 35°22'04.0"
Δ = 18°55'20.7" Rt.
R = 162.00'
L = 53.50'
T = 27.00'
E = 2.23'
N = 259733.99
E = 990499.86

CURVE DATA #6
PI = 44+17.28
D = 35°22'04.0"
Δ = 17°19'42.7" Rt.
R = 162.00'
L = 49.00'
T = 24.69'
E = 1.87'
N = 259568.48
E = 990749.07

CURVE DATA #7
PI = 45+50.96
D = 35°22'04.0"
Δ = 16°33'07.9" Lt.
R = 162.00'
L = 46.80'
T = 23.56'
E = 1.70'
N = 259453.69
E = 990818.32

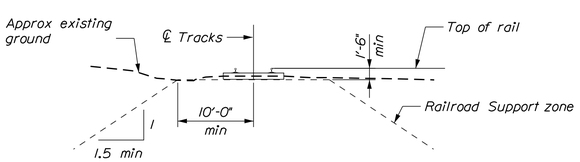

NOTE:

Any excavation below the railroad support zone requires an Engineered excavation support system desigened to support railroad loads. The support system shall be cut off at the railroad support zone and all support structure below the support zone shall remain in place. All costs for design, installation and removal are included in the related items.

RAILROAD SUPPORT ZONE

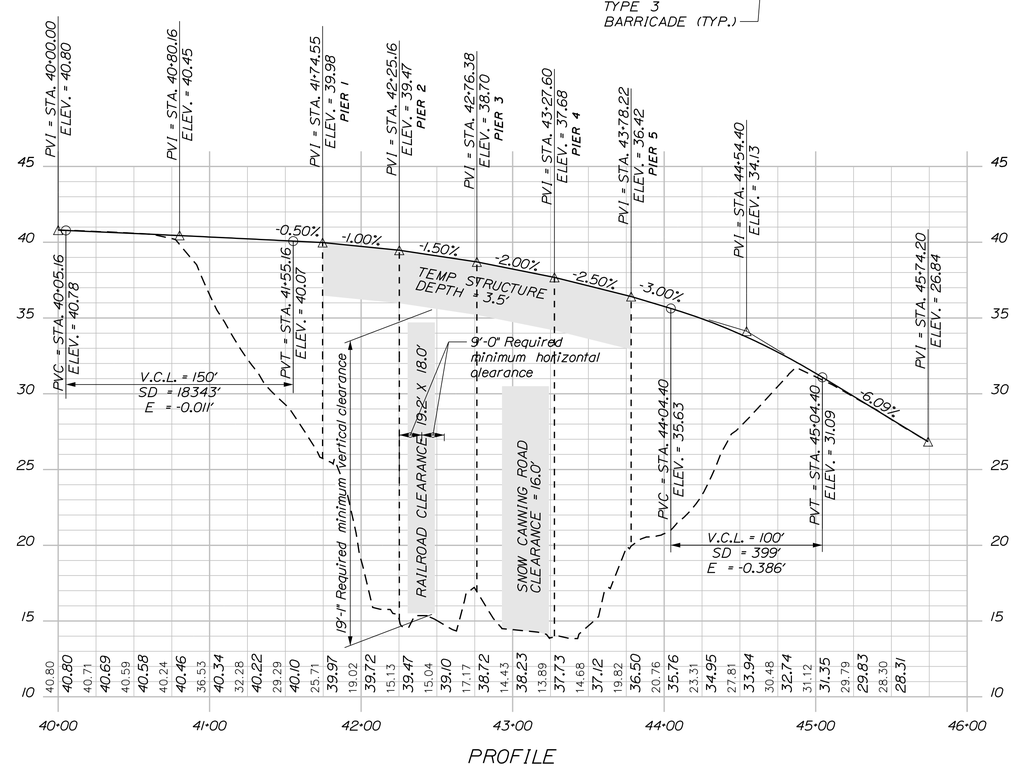

STATE OF MAINE
DEPARTMENT OF TRANSPORTATION

BH-1822(900)X

WIN 018229.00

BRIDGE NO. 5260 BRIDGE PLANS

	BY	DATE
PROJ. MANAGER	A. LATHE	
DESIGN-DETAILED	PAL	10/15/12
CHECKED-REVIEWED	PMP	10/15/12
DESIGN2-DETAILED2		
DESIGN3-DETAILED3		
REVISIONS 1		
REVISIONS 2		
REVISIONS 3		
REVISIONS 4		
FIELD CHANGES		

SIGNATURE

P.E. NUMBER

DATE

PINE POINT CROSSING
B&M RAILROAD
SCARBOROUGH CUMBERLAND COUNTY

SPECIAL DETOUR PLAN & PROFILE

SHEET NUMBER
12
OF 57

Division: HIGHWAY
Username:
Filename: V:\Projects\ANY\K3\24370\CADD_MSTN\Highway\012_DETOUR_Plan-Profile.dgn
Date: 7/22/2015

Division: HIGHWAY

Username:

Filename: V:\Projects\ANYK3\24370\CADD_MSTN\013_BoringPlan.dgn

Date:7/22/2015

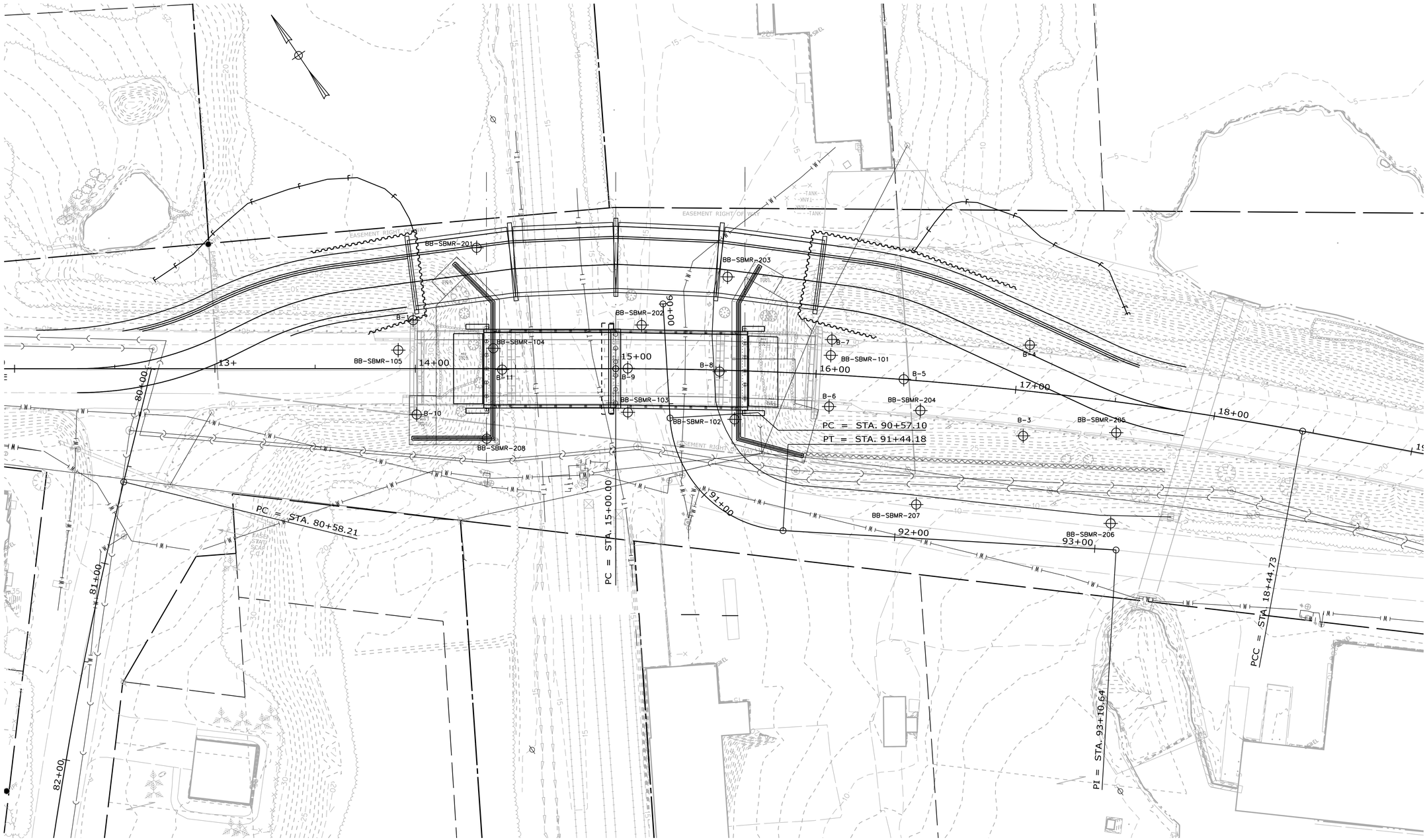

LEGEND	
B	BORING LOG FROM DECEMBER 1953
BB-SBMR-101 - BB-SBMR-105	BORING LOG FROM AUGUST 10-13, 2012
BB-SBMR-201 - BB-SBMR-208	BORING LOG FROM DECEMBER 22-23 AND APRIL 2015

PLAN

25 0 25 50

Scale of Feet

STATE OF MAINE
DEPARTMENT OF TRANSPORTATION

BH-1822(900)X

WIN 018229.00

BRIDGE NO. 5260

BRIDGE PLANS

		BY	DATE
PROJ. MANAGER	A. LATHE		
DESIGN-DETAILED	PAL	PAL	10/15/12
CHECKED-REVIEWED	PMP	PMP	10/15/12
DESIGN2-DETAILED2			
DESIGN3-DETAILED3			
REVISIONS 1			
REVISIONS 2			
REVISIONS 3			
REVISIONS 4			
FIELD CHANGES			

SIGNATURE

P.E. NUMBER

DATE

PINE POINT CROSSING
B&M RAILROAD
SCARBOROUGH CUMBERLAND COUNTY

BORING LOCATION PLAN

SHEET NUMBER

13

OF 57

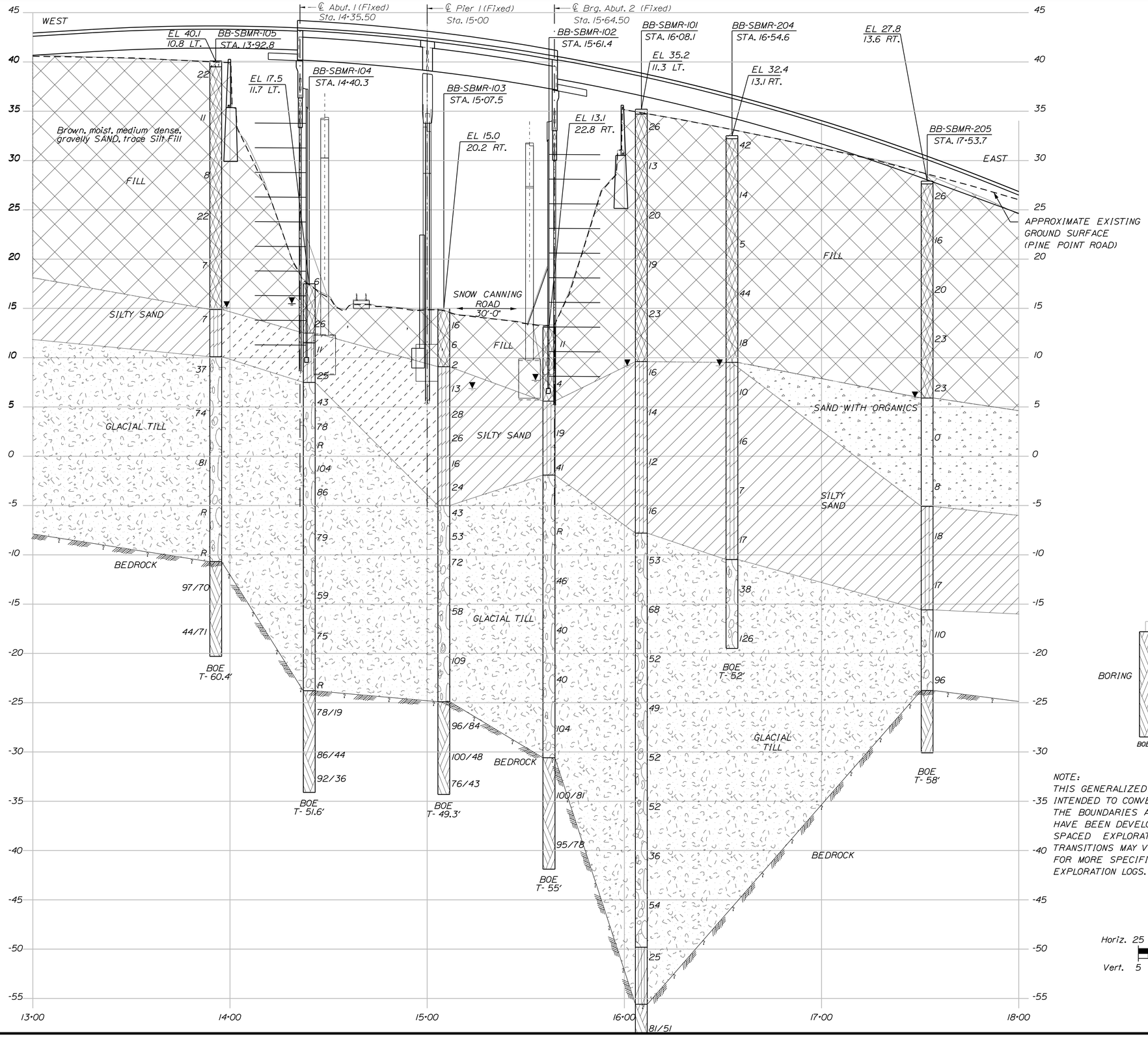

LEGEND

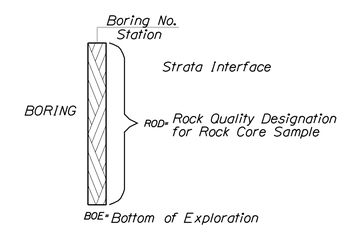

NOTE:
THIS GENERALIZED INTERPRETIVE SOIL PROFILE IS INTENDED TO CONVEY TRENDS IN SUBSURFACE CONDITIONS. THE BOUNDARIES ARE APPROXIMATE AND IDEALIZED, AND HAVE BEEN DEVELOPED BY INTERPRETATIONS OF WIDELY SPACED EXPLORATIONS AND SAMPLES. ACTUAL SOIL TRANSITIONS MAY VARY AND ARE PROBABLY MORE ERRATIC. FOR MORE SPECIFIC INFORMATION REFER TO THE EXPLORATION LOGS.

PROFILE

Horiz. 25 0 25 50
Vert. 5 0 5 10
Scale of Feet

STATE OF MAINE
DEPARTMENT OF TRANSPORTATION

BH-1822(900)X

WIN 018229.00

BRIDGE NO. 5260

BRIDGE PLANS

		BY	DATE
PROJ. MANAGER	A. LATHE		
DESIGN-DETAILED	PAL	PAL	10/15/12
CHECKED-REVIEWED	PMP	PMP	10/15/12
DESIGN2-DETAILED2			
DESIGN3-DETAILED3			
REVISIONS 1			
REVISIONS 2			
REVISIONS 3			
REVISIONS 4			
FIELD CHANGES			

SIGNATURE

P.E. NUMBER

DATE

PINE POINT CROSSING
B&M RAILROAD
SCARBOROUGH CUMBERLAND COUNTY

INTERPRETIVE SUBSURFACE PROFILE

SHEET NUMBER
14
OF 57

Division: HIGHWAY
Username:
Filename: V:\Projects\ANY\K3\24370\CADD_MSTN\014_Subsurface_Pro.dgn
Date:7/22/2015

Division: HIGHWAY

Username:

Filename: V:\Projects\ANY\K3\24370\CADD_MSTN\015_boringLog_1.dgn

Date:7/22/2015

Maine Department of Transportation

Soil/Rock Exploration Log
US CUSTOMARY UNITS

Project: Pine Point Road over B&M Railroad
Location: Scarborough, Maine
Boring No.: BB-SBMR-101
PIN: 18229.00

Driller:	Northern Test Boring	**Elevation (ft.)**	35.2	**Auger ID/OD:**	2-1/4" / 5"
Operator:	Mike Nadeau / Adam Woodbrey	**Datum:**	NAVD 88	**Sampler:**	1-3/8" Split-Spoon
Logged By:	J. Mailloux (Nobis Engineering)	**Rig Type:**	ATV / Diedrich D50	**Hammer Wt./Fall:**	140# / 30"
Date Start/Finish:	Sep 10, 2012 / Sep 10, 2012	**Drilling Method:**	HSA / Drive & Wash	**Core Barrel:**	NQ-2"
Boring Location:	See Boring Location Plan	**Casing ID/OD:**	4" / 4.5"	**Water Level*:**	26.0' bgs
Hammer Efficiency Factor: 0.719		**Hammer Type:**	Automatic☒ Hydraulic☐ Rope & Cathead☐		

Definitions:
D = Split Spoon Sample
MD = Unsuccessful Split Spoon Sample attempt
U = Thin Wall Tube Sample
MU = Unsuccessful Thin Wall Tube Sample attempt
V = Insitu Vane Shear Test, PP = Pocket Penetrometer
MV = Unsuccessful Insitu Vane Shear Test attempt
R = Rock Core Sample
SSA = Solid Stem Auger
HSA = Hollow Stem Auger
RC = Roller Cone
WOH = weight of 140lb. hammer
WOR/C = weight of rods or casing
WO1P = Weight of one person
S_u = Insitu Field Vane Shear Strength (psf)
T_v = Pocket Torvane Shear Strength (psf)
q_p = Unconfined Compressive Strength (ksf)
N-uncorrected = Raw field SPT N value
Hammer Efficiency Factor = Annual Calibration Value
N_{60} = SPT N-uncorrected corrected for hammer efficiency
N_{60} = (Hammer Efficiency Factor/60%)*N-uncorrected
$S_u(lab)$ = Lab Vane Shear Strength (psf)
WC = water content, percent
LL = Liquid Limit
PL = Plastic Limit
PI = Plasticity Index
G = Grain Size Analysis
C = Consolidation Test

Depth (ft.)	Sample No.	Pen./Rec. (in.)	Sample Depth (ft.)	Blows (/6 in.) Shear Strength (psf) or RQD (%)	N-uncorrected	N_{60}	Casing Blows	Elevation (ft.)	Visual Description and Remarks	Laboratory Testing Results/ AASHTO and Unified Class.
0	1D	24/12	0.50 - 2.50	8/10/12/8	22	26		34.70	7" ASPHALT (0.50)	
									1D: Brown, moist, medium dense, gravelly SAND, trace Silt. (Fill).	
5	2D	24/17	5.00 - 7.00	5/5/6/6	11	13			2D: Brown, moist, medium dense, SAND, little Silt, little Gravel. (Fill).	WC=7.2% Fines Content:13%
10	3D	24/19	10.00 - 12.00	7/9/8/7	17	20			3D-A: (0-7") Brown, moist, medium dense, SAND, little fine Gravel, trace Silt. (Fill). 3D-B: (7-19") Gray/Brown, moist, medium dense, SAND, some Gravel, trace Silt, trace brick pieces. (Fill).	WC=6% Fines Content:9%
15	4D	24/14	15.00 - 17.00	5/6/10/10	16	19			4D: Gray, dry, medium dense, sandy GRAVEL, trace Silt. (Fractured Rock Fill).	
20	5D	24/14	20.00 - 22.00	12/10/9/7	19	23			5D: Gray/Brown, moist, medium dense, gravelly SAND, trace Silt. (Fractured Rock Fill).	
25	6D	24/17	25.00 - 27.00	12/9/4/3	13	16	104	9.53	6D-A: (0-8") Gray, moist, medium dense, gravelly SAND, trace Silt. (Fill). (25.67) 6D-B: (8-11") Orange, wet, medium dense, fine to medium SAND, some Silt, trace Clay. Rolled to 1/8". (Original Ground Surface). 6D-C: (11-17") Gray, wet, medium dense, fine SAND, some Silt, trace fine Gravel, trace Clay. (Silty Sand).	pH=5.6
							112			
							161			
							125			
							120			
30	7D	24/14	30.00 - 32.00	5/6/6/5	12	14			7D: Gray, wet, medium dense, SAND, some Silt, little Gravel, little Clay. (Silty Sand).	
35	8D	24/13	35.00 - 37.00	6/6/4/7	10	12			8D: Gray, wet, medium dense, SAND, some Silt, little Gravel, trace Clay. Rolled to 1/8". (Silty Sand).	WC=10% Fines Content:36% LL=14 PL=11 PI=3
40	9D	24/14	40.00 - 42.00	5/5/8/8	13	16			9D: Gray, wet, medium dense, SAND, some Silt, little Clay, trace fine Gravel. Rolled to 1/16". (Silty Sand).	
								-7.80	(43.00) Increased roller bit resistance at 43.0' bgs.	
45	10D	24/22	45.00 - 47.00	15/23/21/26	44	53			10D: Gray, wet, dense, SAND, some Silt, little Gravel, trace Clay. (Till).	WC=8.3% Fines Content:40%
50	11D	24/15	50.00 - 52.00	12/30/27/42	57	68			11D: Gray, wet, very dense, SAND, little Silt, little fine Gravel. (Till).	
55	12D	24/20	55.00 - 57.00	18/22/21/23	43	52			12D: Gray, wet, dense, SAND, little Silt, trace fine Gravel, trace Clay. (Glacial Till).	
60										

Remarks:

Augered top 25 feet to GW, then switched to Drive & Wash.
Drilled open hole starting at 30 feet below ground surface.
Approximately 15 gallons water lost during coring.
Borehole repaired by filling with auger cuttings, letting sit overnight to settle, then placing cold patch.

Stratification lines represent approximate boundaries between soil types; transitions may be gradual.

* Water level readings have been made at times and under conditions stated. Groundwater fluctuations may occur due to conditions other than those present at the time measurements were made.

Boring No.: BB-SBMR-101

Maine Department of Transportation

Soil/Rock Exploration Log
US CUSTOMARY UNITS

Project: Pine Point Road over B&M Railroad
Location: Scarborough, Maine
Boring No.: BB-SBMR-101
PIN: 18229.00

Driller:	Northern Test Boring	**Elevation (ft.)**	35.2	**Auger ID/OD:**	2-1/4" / 5"
Operator:	Mike Nadeau / Adam Woodbrey	**Datum:**	NAVD 88	**Sampler:**	1-3/8" Split-Spoon
Logged By:	J. Mailloux (Nobis Engineering)	**Rig Type:**	ATV / Diedrich D50	**Hammer Wt./Fall:**	140# / 30"
Date Start/Finish:	Sep 10, 2012 / Sep 10, 2012	**Drilling Method:**	HSA / Drive & Wash	**Core Barrel:**	NQ-2"
Boring Location:	See Boring Location Plan	**Casing ID/OD:**	4" / 4.5"	**Water Level*:**	26.0' bgs
Hammer Efficiency Factor: 0.719		**Hammer Type:**	Automatic☒ Hydraulic☐ Rope & Cathead☐		

Definitions:
D = Split Spoon Sample
MD = Unsuccessful Split Spoon Sample attempt
U = Thin Wall Tube Sample
MU = Unsuccessful Thin Wall Tube Sample attempt
V = Insitu Vane Shear Test, PP = Pocket Penetrometer
MV = Unsuccessful Insitu Vane Shear Test attempt
R = Rock Core Sample
SSA = Solid Stem Auger
HSA = Hollow Stem Auger
RC = Roller Cone
WOH = weight of 140lb. hammer
WOR/C = weight of rods or casing
WO1P = Weight of one person
S_u = Insitu Field Vane Shear Strength (psf)
T_v = Pocket Torvane Shear Strength (psf)
q_p = Unconfined Compressive Strength (ksf)
N-uncorrected = Raw field SPT N value
Hammer Efficiency Factor = Annual Calibration Value
N_{60} = SPT N-uncorrected corrected for hammer efficiency
N_{60} = (Hammer Efficiency Factor/60%)*N-uncorrected
$S_u(lab)$ = Lab Vane Shear Strength (psf)
WC = water content, percent
LL = Liquid Limit
PL = Plastic Limit
PI = Plasticity Index
G = Grain Size Analysis
C = Consolidation Test

Depth (ft.)	Sample No.	Pen./Rec. (in.)	Sample Depth (ft.)	Blows (/6 in.) Shear Strength (psf) or RQD (%)	N-uncorrected	N_{60}	Casing Blows	Elevation (ft.)	Visual Description and Remarks	Laboratory Testing Results/ AASHTO and Unified Class.
60	13D	24/16	60.00 - 62.00	14/20/21/23	41	49			13D: Gray, wet, dense, SAND, some Silt, little Gravel. (Till).	
65	14D	24/11	65.00 - 67.00	15/17/26/20	43	52			14D: Gray, wet, dense, SAND, some Silt, little Gravel, little Clay. (Till).	WC=10% Fines Content:53% Clay Content:22% LL=18 PL=10 PI=8
70	15D	24/21	70.00 - 72.00	14/19/24/32	43	52			15D: Gray, wet, dense, SAND, some Silt, little Clay, trace fine Gravel (Till).	
75	16D	24/15	75.00 - 77.00	11/12/18/26	30	36			16D: Gray, wet, dense, SAND, some Silt, little Clay, trace fine Gravel (Till).	
80	17D	20/5.4	80.00 - 81.71	16/19/26/50-2.5"	45	54			17D: Gray, wet, dense, SAND, some Silt, little Clay, with coarse Gravel stuck in spoon. (Till).	
85	18D	24/9	85.00 - 87.00	10/11/10/17	21	25		-49.80	(85.00) 18D: Gray, wet, very stiff, CLAY, some Silt, little fine to medium Sand.	
90	19D	9.5/9.5	90.00 - 90.79	9/50-3.5"				-55.60	Increased drilling resistance at 89.5 feet. 19D: Gray, wet, dense, SILT, some Clay, some Sand, trace fine Gravel.	
	R1	54/44	91.00 - 95.50	RQD=51%					(90.80) Split-Spoon and Roller Bit refusal at 90.8' bgs. Advanced roller bit to 91' bgs. Bedrock: Black, fine grained, metamorphic, hard, fresh to slightly weathered, PHYLLITE, with moderately dipping, closely spaced, tight to healed joints.	
95	R2	60/57.5	95.50 - 100.50	RQD=70%					R1: Rock Mass Quality: Fair Core Times (min:sec) 91.0'-92.0' 4:40 92.0'-93.0' 4:30 93.0'-94.0' 8:20 94.0'-95.0' 4:40 95.0'-95.5' 4:30 81% Recovery R2: Rock Mass Quality: Fair Core Times (min:sec) 95.5'-96.0' 1:30 96.0'-97.0' 3:00 97.0'-98.0' 3:00 98.0'-99.0' 3:00 99.0'-100.0' 3:00 100.0'-100.5' 1:30 96% Recovery	
100								-65.30	(100.50) **Bottom of Exploration at 100.50 feet below ground surface.**	
105										
110										
115										
120										

Remarks:

Augered top 25 feet to GW, then switched to Drive & Wash.
Drilled open hole starting at 30 feet below ground surface.
Approximately 15 gallons water lost during coring.
Borehole repaired by filling with auger cuttings, letting sit overnight to settle, then placing cold patch.

Stratification lines represent approximate boundaries between soil types; transitions may be gradual.

* Water level readings have been made at times and under conditions stated. Groundwater fluctuations may occur due to conditions other than those present at the time measurements were made.

Boring No.: BB-SBMR-101

Maine Department of Transportation

Soil/Rock Exploration Log
US CUSTOMARY UNITS

Project: Pine Point Road over B&M Railroad
Location: Scarborough, Maine
Boring No.: BB-SBMR-102
PIN: 18229.00

Driller:	Northern Test Boring	**Elevation (ft.)**	13.1	**Auger ID/OD:**	2-1/4" / 5"
Operator:	Mike Nadeau / Adam Woodbrey	**Datum:**	NAVD 88	**Sampler:**	1-3/8" Split-Spoon
Logged By:	J. Mailloux (Nobis Engineering)	**Rig Type:**	ATV / Diedrich D50	**Hammer Wt./Fall:**	140# / 30"
Date Start/Finish:	Sep 11, 2012 / Sep 12, 2012	**Drilling Method:**	HSA / Drive & Wash	**Core Barrel:**	NQ-2"
Boring Location:	See Boring Location Plan	**Casing ID/OD:**	4" / 4.5"	**Water Level*:**	5.4' bgs
Hammer Efficiency Factor: 0.719		**Hammer Type:**	Automatic☒ Hydraulic☐ Rope & Cathead☐		

Definitions:
D = Split Spoon Sample
MD = Unsuccessful Split Spoon Sample attempt
U = Thin Wall Tube Sample
MU = Unsuccessful Thin Wall Tube Sample attempt
V = Insitu Vane Shear Test, PP = Pocket Penetrometer
MV = Unsuccessful Insitu Vane Shear Test attempt
R = Rock Core Sample
SSA = Solid Stem Auger
HSA = Hollow Stem Auger
RC = Roller Cone
WOH = weight of 140lb. hammer
WOR/C = weight of rods or casing
WO1P = Weight of one person
S_u = Insitu Field Vane Shear Strength (psf)
T_v = Pocket Torvane Shear Strength (psf)
q_p = Unconfined Compressive Strength (ksf)
N-uncorrected = Raw field SPT N value
Hammer Efficiency Factor = Annual Calibration Value
N_{60} = SPT N-uncorrected corrected for hammer efficiency
N_{60} = (Hammer Efficiency Factor/60%)*N-uncorrected
$S_u(lab)$ = Lab Vane Shear Strength (psf)
WC = water content, percent
LL = Liquid Limit
PL = Plastic Limit
PI = Plasticity Index
G = Grain Size Analysis
C = Consolidation Test

Depth (ft.)	Sample No.	Pen./Rec. (in.)	Sample Depth (ft.)	Blows (/6 in.) Shear Strength (psf) or RQD (%)	N-uncorrected	N_{60}	Casing Blows	Elevation (ft.)	Visual Description and Remarks	Laboratory Testing Results/ AASHTO and Unified Class.
0	1D	24/7	0.00 - 2.00	4/5/4/5	9	11			1D: Brown, moist, loose, SAND, some Silt, trace fine Gravel, trace Organics, with piece of plastic. (Topsoil Fill).	
5	2D	24/5	5.00 - 7.00	2/1/2/2	3	4			2D: Brown, wet, loose, SAND, some Silt, little fine Gravel, trace Organics (roots). (Fill).	
								5.60	(7.50)	
10	3D	24/19	10.00 - 12.00	3/6/10/9	16	19	25		3D: Gray/Black, wet, medium dense, SAND, some Silt, little fine Gravel, trace Clay. Rolled to 1/8". Slight unidentifiable odor and black staining, no sheen. (Silty Sand).	WC=10% Fines Content:37% LL=14 PL=11 PI=3 pH=5.6
							28			
							30			
							31			
							34			
15	4D	24/13	15.00 - 17.00	7/14/20/14	34	41		-1.90	(15.00) 4D: Gray, wet, dense, SAND, some Silt, little Gravel, little Clay. (Till).	
20	5D	7/6	20.00 - 20.58	12/50-1"					5D: Gray, wet, very dense, SAND, some Silt, trace fine Gravel, trace Clay. (Till). Possible rock at tip. Not retrieved. Possible cobble at 20.6 feet.	
25	6D	24/6	25.00 - 27.00	28/19/19/20	38	46			6D: Gray, wet, dense, SAND, little Silt, little fine Gravel. (Till).	
30	7D	24/18	30.00 - 32.00	15/17/16/16	33	40			7D: Gray, wet, dense, SAND, little Silt, trace fine Gravel. (Till).	
35	8D	24/16	35.00 - 37.00	11/14/19/22	33	40			8D: Gray, wet, dense, SAND, little Silt, little fine Gravel, trace Clay. (Till).	
40	9D	24/0	40.00 - 42.00	29/38/49/60	87	104			9D: No Recovery High blows possibly due to pushing stone.	
								-30.60	(43.70) Encountered possible bedrock at 43.7' bgs. Driller advanced auger to 45.0' bgs to verify. Bedrock: Black/Gray, fine grained, metamorphic, hard, fresh to very slightly weathered, PHYLLITE, with low to moderately dipping, closely to moderately closely spaced, tight joints.	
45	R1	60/60	45.00 - 50.00	RQD=81%					R1: Rock Mass Quality: Good Core Times (min:sec) 45'-46' 2:40 46'-47' 2:55 47'-48' 2:35 48'-49' 3:00 49'-50' 3:10 100% Recovery R2: Rock Mass Quality: Good Core Times (min:sec) 50'-51' 4:50 51'-52' 4:00 52'-53' 2:25 53'-54' 2:10 54'-55' 1:35 95% Recovery	
50	R2	60/57	50.00 - 55.00	RQD=78%						
55								-41.90	(55.00) **Bottom of Exploration at 55.00 feet below ground surface.**	
60										

Remarks:

Switched from HSA to casing at 10 feet. Cased to 15 feet then started open hole.
Approximately 15 gallons water lost during 10 feet of coring.
Borehole was filled with auger cuttings.

Stratification lines represent approximate boundaries between soil types; transitions may be gradual.

* Water level readings have been made at times and under conditions stated. Groundwater fluctuations may occur due to conditions other than those present at the time measurements were made.

Boring No.: BB-SBMR-102

STATE OF MAINE
DEPARTMENT OF TRANSPORTATION

BH-1822(900)X

WIN 018229.00

BRIDGE PLANS

BRIDGE NO. 5260

		BY	DATE
PROJ. MANAGER	A. LATHE		
DESIGN-DETAILED	PAL	PAL	10/5/12
CHECKED-REVIEWED	PMP	PMP	10/5/12
DESIGN2-DETAILED2			
DESIGN3-DETAILED3			
REVISIONS 1			
REVISIONS 2			
REVISIONS 3			
REVISIONS 4			
FIELD CHANGES			

SIGNATURE

P.E. NUMBER

DATE

PINE POINT CROSSING
B&M RAILROAD
SCARBOROUGH CUMBERLAND COUNTY

BORING LOG 1 OF 6

SHEET NUMBER

15

OF 57

Division: HIGHWAY

Username:

Filename: V:\Projects\ANYK3\24370\CADD_MSTN\016_boring1og 2.dgn

Date:7/22/2015

Maine Department of Transportation

Soil/Rock Exploration Log
US CUSTOMARY UNITS

Project: Pine Point Road over B&M Railroad
Location: Scarborough, Maine
Boring No.: BB-SBMR-103
PIN: 18229.00

Driller:	Northern Test Boring	**Elevation (ft.)**	15.0	**Auger ID/OD:**	2-1/4" / 5"
Operator:	Mike Nadeau / Adam Woodbrey	**Datum:**	NAVD 88	**Sampler:**	1-3/8" Split-Spoon
Logged By:	J. Mailloux (Nobis Engineering)	**Rig Type:**	ATV / Diedrich D50	**Hammer Wt./Fall:**	140# / 30"
Date Start/Finish:	Sep 13, 2012 / Sep 13, 2012	**Drilling Method:**	HSA / Drive & Wash	**Core Barrel:**	NQ-2"
Boring Location:	See Boring Location Plan	**Casing ID/OD:**	4" / 4.5"	**Water Level*:**	8.1' bgs
Hammer Efficiency Factor: 0.719		**Hammer Type:**	Automatic ☒ Hydraulic ☐ Rope & Cathead ☐		

Definitions:
D = Split Spoon Sample
MD = Unsuccessful Split Spoon Sample attempt
U = Thin Wall Tube Sample
MU = Unsuccessful Thin Wall Tube Sample attempt
V = Insitu Vane Shear Test, PP = Pocket Penetrometer
MV = Unsuccessful Insitu Vane Shear Test attempt
R = Rock Core Sample
SSA = Solid Stem Auger
HSA = Hollow Stem Auger
RC = Roller Cone
WOH = weight of 140lb. hammer
WOR/C = weight of rods or casing
WO1P = Weight of one person
S_u = Insitu Field Vane Shear Strength (psf)
T_v = Pocket Torvane Shear Strength (psf)
q_p = Unconfined Compressive Strength (ksf)
N-uncorrected = Raw field SPT N-value
Hammer Efficiency Factor = Annual Calibration Value
N_{60} = SPT N-uncorrected corrected for hammer efficiency
N_{60} = (Hammer Efficiency Factor/60%)*N-uncorrected
$S_{u(lab)}$ = Lab Vane Shear Strength (psf)
WC = water content, percent
LL = Liquid Limit
PL = Plastic Limit
PI = Plasticity Index
G = Grain Size Analysis
C = Consolidation Test

Sample Information

Depth (ft.)	Sample No.	Pen./Rec. (in.)	Sample Depth (ft.)	Blows (/6 in.) Shear Strength (psf) or RQD (%)	N-uncorrected	N_{60}	Casing Blows	Elevation (ft.)	Visual Description and Remarks	Laboratory Testing Results/ AASHTO and Unified Class.
0	1D	24/20	0.00 - 2.00	6/6/7/8	13	16			1D: Dark Brown, moist, medium dense, SAND, little Gravel, little Silt, trace coal ash. (Fill).	
	2D	24/13	2.00 - 4.00	5/3/2/2	5	6			2D: Brown, wet, loose, silty fine to medium SAND, trace fine Gravel. (Fill).	
5	3D	24/23	5.00 - 7.00	2/1/1/4	2	2		9.08	3D-A: (0-11") Gray/Brown, wet, very loose, silty SAND, trace fine Gravel. (Fill).	
									5.92	
	4D	24/24	7.00 - 9.00	5/6/5/6	11	13	36		3D-B: (11-23") Gray, wet, very loose, silty fine to medium SAND, trace fine Gravel. (Silty Sand) 4D: Gray, wet, loose, fine to medium SAND, some Silt, little Clay, trace fine Gravel. (Silty Sand).	Fines Content:42% Clay Content:14%
							41			
							45			
10	5D	24/17	10.00 - 12.00	5/12/11/9	23	28			5D: Gray, wet, medium dense, SAND, some Silt, trace fine Gravel, trace Clay. Rolled to 1/4". (Silty Sand).	
	6D	24/17	12.00 - 14.00	11/11/11/11	22	26			6D: Gray, wet, medium dense, SAND, some Silt, trace fine Gravel, trace Clay. Rolled to 1/8". (Silty Sand).	
15	7D	24/17	15.00 - 17.00	7/5/7/8	13	16			7D: Gray, wet, medium dense, SAND, some Silt, trace fine Gravel, trace Clay. Rolled to 1/4". (Silty Sand).	
	8D	24/20	17.00 - 19.00	13/9/11/14	20	24			8D: Gray, wet, medium dense, SAND, some Silt, little Clay, trace fine Gravel. Rolled to 1/16". (Silty Sand).	
								-5.00	20.00	
20	9D	24/22	20.00 - 22.00	12/17/19/20	36	43			9D: Gray, wet, dense, SAND, some silt, trace fine Gravel, trace Clay. (Till).	WC=8.4% Fines Content:39%
	10D	24/18	22.00 - 24.00	20/22/22/24	44	53			10D: Gray, wet, dense, SAND, some Silt, trace fine Gravel, trace Clay. (Till).	
25	11D	24/21	25.00 - 27.00	15/28/32/18	60	72			11D: Gray, wet, very dense, SAND, some Silt, trace fine Gravel, trace Clay. (Till).	
30	12D	24/23	30.00 - 32.00	22/24/24/26	48	58			12D: Gray, wet, dense, SAND, some Silt, trace fine Gravel, with 3" layer of SAND, trace Silt at 30.5' bgs (sample taken). (Till).	
35	13D	23/21	35.00 - 36.92	25/40/51/50-5"	91	109			13D: Gray, wet, very dense, SAND, some Silt, little Clay, trace Gravel. (Till).	
								-24.90	39.90	
40	R1	65/62.5	40.00 - 45.42	RQD=84%					Encountered possible bedrock at 39.9' bgs. Advanced Roller Bit to 40.0' bgs. Bedrock: Black/Gray, fine grained, metamorphic, hard, fresh to moderately weathered, PHYLLITE, with moderately dipping, closely to moderately closely spaced, tight to open joints, gray sandy silt infill at top joint. R1: Rock Mass Quality: Good Core Times (min:sec) 40'-41' 2:25 41'-42' 2:10 42'-43' 3:05 43'-44' 2:35 44'-45' 2:30 45'-45.4' 1:00 96% Recovery R2: Rock Mass Quality: Poor Core Times (min:sec) 45.4'-46.4' 2:10 46.4'-47.4' 2:50 100% Recovery R3: Rock Mass Quality: Poor Core Times (min:sec) 47.4'-48.4' 4:00 48.4'-49.3' 3:00 76% Recovery	
	R2	24/24	45.40 - 47.40	RQD=48%						
	R3	23/17.5	47.40 - 49.32	RQD=43%				-34.30	49.30	
50									**Bottom of Exploration at 49.30 feet below ground surface.**	
55										
60										

Remarks:

Augered to 5' bgs, then switched to casing. Pushed casing to 6.5' bgs. Drove Casing to 10' bgs then drilled open hole.
Possible cobbles 19-20' bgs.
Rock core stuck in barrel during R2 core at 24". At 49.3' bgs the tooth matrix sheaved off the bit and could no longer advance. Approximately 10 gallons of water lost during coring.
Borehole repaired by filling up with cuttings and mounding in case of settlement.

Stratification lines represent approximate boundaries between soil types; transitions may be gradual.

* Water level readings have been made at times and under conditions stated. Groundwater fluctuations may occur due to conditions other than those present at the time measurements were made.

Page 1 of 1
Boring No.: BB-SBMR-103

Maine Department of Transportation

Soil/Rock Exploration Log
US CUSTOMARY UNITS

Project: Pine Point Road over B&M Railroad
Location: Scarborough, Maine
Boring No.: BB-SBMR-104
PIN: 18229.00

Driller:	Northern Test Boring	**Elevation (ft.)**	17.5	**Auger ID/OD:**	N/A
Operator:	Mike Nadeau / Adam Woodbrey	**Datum:**	NAVD 88	**Sampler:**	1-3/8" Split-Spoon
Logged By:	J. Mailloux (Nobis Engineering)	**Rig Type:**	ATV / Diedrich D50	**Hammer Wt./Fall:**	140# / 30"
Date Start/Finish:	Sep 12, 2012 / Sep 12, 2012	**Drilling Method:**	Drive & Wash	**Core Barrel:**	NQ-2"
Boring Location:	See Boring Location Plan	**Casing ID/OD:**	4" / 4.5"	**Water Level*:**	2.0' bgs
Hammer Efficiency Factor: 0.719		**Hammer Type:**	Automatic ☒ Hydraulic ☐ Rope & Cathead ☐		

Definitions:
D = Split Spoon Sample
MD = Unsuccessful Split Spoon Sample attempt
U = Thin Wall Tube Sample
MU = Unsuccessful Thin Wall Tube Sample attempt
V = Insitu Vane Shear Test, PP = Pocket Penetrometer
MV = Unsuccessful Insitu Vane Shear Test attempt
R = Rock Core Sample
SSA = Solid Stem Auger
HSA = Hollow Stem Auger
RC = Roller Cone
WOH = weight of 140lb. hammer
WOR/C = weight of rods or casing
WO1P = Weight of one person
S_u = Insitu Field Vane Shear Strength (psf)
T_v = Pocket Torvane Shear Strength (psf)
q_p = Unconfined Compressive Strength (ksf)
N-uncorrected = Raw field SPT N-value
Hammer Efficiency Factor = Annual Calibration Value
N_{60} = SPT N-uncorrected corrected for hammer efficiency
N_{60} = (Hammer Efficiency Factor/60%)*N-uncorrected
$S_{u(lab)}$ = Lab Vane Shear Strength (psf)
WC = water content, percent
LL = Liquid Limit
PL = Plastic Limit
PI = Plasticity Index
G = Grain Size Analysis
C = Consolidation Test

Sample Information

Depth (ft.)	Sample No.	Pen./Rec. (in.)	Sample Depth (ft.)	Blows (/6 in.) Shear Strength (psf) or RQD (%)	N-uncorrected	N_{60}	Casing Blows	Elevation (ft.)	Visual Description and Remarks	Laboratory Testing Results/ AASHTO and Unified Class.
0	1D	24/11	0.00 - 2.00	5/2/3/4	5	6	16		1D: Brown, moist, loose, SAND, little Silt, little Gravel, trace Organics. (Fill).	
							31			
							31			
	2D	24/7	3.00 - 5.00	9/14/8/4	22	26	30		2D: Brown, moist, medium dense, SAND, some Gravel, little Silt. (Fill). Rock stuck in tip of spoon.	
5							31	12.50	5.00	
	3D	24/12	5.00 - 7.00	5/4/5/6	9	11	42	11.50	3D-A: (0-5") Brown, wet, loose, fine SAND, little Silt, trace Organics, with black organic seam at top.	pH=6.0
							71		6.00	
							83		3D-B (5-12") Gray, wet, loose, SAND, little Silt, trace fine Gravel. (Silty Sand).	
	4D	24/19	8.00 - 10.00	7/8/13/11	21	25			4D: Gray, wet, medium dense, fine SAND, some Silt, trace Clay, trace fine Gravel. Rolled to 1/4". (Silty Sand).	WC=10.1% Fines Content:37%
10									10.00	
	5D	24/18	10.00 - 12.00	14/18/18/21	36	43		7.50	5D: Gray, wet, dense, SAND, little Silt, little Gravel, trace Clay. (Till)	WC=8% LL=14 PL=10 PI=4
	6D	24/21	13.00 - 15.00	25/29/36/44	65	78			6D: Gray, wet, very dense, SAND, some Silt, little fine Gravel, trace Clay. (Till).	
15	7D	15/11	15.00 - 16.25	29/55/50-3"					7D: Gray, wet, very dense, SAND, some Silt, little Gravel, trace Clay. (Till). Refusal due to full spoon from wash spoils.	
	8D	24/21	18.00 - 20.00	30/42/45/60	87	104			8D: Gray, wet, very dense, fine SAND, some Silt, trace fine Gravel, trace Clay. (Till).	
20	9D	24/20	20.00 - 22.00	36/36/36/34	72	86			9D: Gray, wet, very dense, SAND, some Silt, little fine Gravel, trace Clay. (Till).	
25	10D	24/19	25.00 - 27.00	21/26/40/42	66	79			10D: Gray, wet, very dense, SAND, some Silt, little Gravel, trace Clay. (Till).	
30	11D	24/20	30.00 - 32.00	25/25/24/29	49	59			11D: Gray, wet, dense, SAND, some Silt, little Gravel, trace Clay. (Till).	
35	12D	24/21	35.00 - 37.00	17/29/34/64	63	75			12D: Gray, wet, very dense, SAND, some Silt, little fine Gravel, little Clay. (Till).	
									Possible cobble at 38.0' bgs.	
40	13D	15.5/14	40.00 - 41.29	18/24/50-3.5"					13D: Gray, wet, very dense, SAND, some Silt, little fine Gravel, trace Clay. (Till).	
								-23.80	41.30	
	R1	54/42	42.00 - 46.50	RQD=19%					Encountered bedrock at 41.3' bgs, advanced bit to 42.0' bgs to verify. Bedrock: Black/Gray, fine grained, metamorphic, hard to soft, moderately to highly weathered, PHYLLITE, with moderately to steeply dipping, very closely to closely spaced, open to healed joints. R1: Rock Mass Quality: Very Poor Core Times (min:sec) 42.0'-43.0' 2:50 43.0'-44.0' 1:50 44.0'-45.0' 1:30 45.0'-46.0' 1:30 46.0'-46.5' 1:00 78% Recovery Core sample from 2"-12" likely pulverized due to being stuck in core barrel. R2: Rock Mass Quality: Poor Core Times (min:sec) 46.5'-47.0' 1:10 47.0'-48.0' 1:05 48.0'-49.0' 2:30 49.0'-49.5' 0:35 86% Recovery Core sample stuck at 49.5' bgs. R3: Rock Mass Quality: Poor Core Times (min:sec) 49.5'-50.0' 1:25 50.0'-51.0' 4:30 51.0'-51.6' 2:20 92% Recovery Core sample stuck at 51.6' bgs. Coring terminated.	
45	R2	36/31	46.50 - 49.50	RQD=44%						
	R3	25/23	49.50 - 51.58	RQD=36%				-34.10	51.60	
50									**Bottom of Exploration at 51.60 feet below ground surface.**	
55										
60										

Remarks:

BB-SBMR-104 drilled through bridge deck to ground surface 22.0' below deck. Deck core obtained. 5" Asphalt, 6" Concrete Bridge Deck. Cased to 8.0' bgs then started drilling open hole.
At approximately 35.0' bgs driller noted loss of drilling water. Lost approximately 100 gallons. During coring of R1 and R2 lost approximately 300 gallons of water. During coring of R3 lost approximately 300 gallons of water.
Borehole repaired by filling with large stones. Bridge deck repaired by filling with high strength quick set concrete. Concrete left to cure one hour before allowing traffic.

Stratification lines represent approximate boundaries between soil types; transitions may be gradual.

* Water level readings have been made at times and under conditions stated. Groundwater fluctuations may occur due to conditions other than those present at the time measurements were made.

Page 1 of 1
Boring No.: BB-SBMR-104

Maine Department of Transportation

Soil/Rock Exploration Log
US CUSTOMARY UNITS

Project: Pine Point Road over B&M Railroad
Location: Scarborough, Maine
Boring No.: BB-SBMR-105
PIN: 18229.00

Driller:	Northern Test Boring	**Elevation (ft.)**	40.1	**Auger ID/OD:**	2-1/4" / 5"
Operator:	Mike Nadeau / Adam Woodbrey	**Datum:**	NAVD 88	**Sampler:**	1-3/8" Split-Spoon
Logged By:	J. Mailloux (Nobis Engineering)	**Rig Type:**	ATV / Diedrich D50	**Hammer Wt./Fall:**	140# / 30"
Date Start/Finish:	Sep 11, 2012 / Sep 11, 2012	**Drilling Method:**	HSA / Drive & Wash	**Core Barrel:**	NQ-2"
Boring Location:	See Boring Location Plan	**Casing ID/OD:**	4" / 4.5"	**Water Level*:**	25.0' bgs wet sample
Hammer Efficiency Factor: 0.719		**Hammer Type:**	Automatic ☒ Hydraulic ☐ Rope & Cathead ☐		

Definitions:
D = Split Spoon Sample
MD = Unsuccessful Split Spoon Sample attempt
U = Thin Wall Tube Sample
MU = Unsuccessful Thin Wall Tube Sample attempt
V = Insitu Vane Shear Test, PP = Pocket Penetrometer
MV = Unsuccessful Insitu Vane Shear Test attempt
R = Rock Core Sample
SSA = Solid Stem Auger
HSA = Hollow Stem Auger
RC = Roller Cone
WOH = weight of 140lb. hammer
WOR/C = weight of rods or casing
WO1P = Weight of one person
S_u = Insitu Field Vane Shear Strength (psf)
T_v = Pocket Torvane Shear Strength (psf)
q_p = Unconfined Compressive Strength (ksf)
N-uncorrected = Raw field SPT N-value
Hammer Efficiency Factor = Annual Calibration Value
N_{60} = SPT N-uncorrected corrected for hammer efficiency
N_{60} = (Hammer Efficiency Factor/60%)*N-uncorrected
$S_{u(lab)}$ = Lab Vane Shear Strength (psf)
WC = water content, percent
LL = Liquid Limit
PL = Plastic Limit
PI = Plasticity Index
G = Grain Size Analysis
C = Consolidation Test

Sample Information

Depth (ft.)	Sample No.	Pen./Rec. (in.)	Sample Depth (ft.)	Blows (/6 in.) Shear Strength (psf) or RQD (%)	N-uncorrected	N_{60}	Casing Blows	Elevation (ft.)	Visual Description and Remarks	Laboratory Testing Results/ AASHTO and Unified Class.
0								39.50	7.75" ASPHALT	
	1D	24/17	0.60 - 2.60	12/10/8/8	18	22			0.60 1D: Brown, moist, medium dense, SAND, some Gravel, trace Silt. (Fill).	
5	2D	24/16	5.00 - 7.00	5/5/4/3	9	11			2D: Brown, moist, loose, SAND, little fine Gravel, trace Silt. (Fill).	
10	3D	24/16	10.00 - 12.00	5/4/3/2	7	8			3D: Brown, moist, loose, SAND, little Gravel, trace Silt. (Fill).	WC=6.8% Fines Content:9%
15	4D	24/20	15.00 - 17.00	9/9/9/9	18	22			4D: Brown, moist, medium dense, SAND, little Gravel, little Silt. (Fill).	
20	5D	24/15	20.00 - 22.00	5/3/3/2	6	7			5D: Brown, moist, medium dense, SAND, little fine Gravel, little Silt. (Fill).	
							59			
							64			
							70			
							75			
25	6D	24/16	25.00 - 27.00	6/3/3/4	6	7	20	14.90	6D-A: (0-2") Brown, wet, loose, SAND, some fine Gravel, little Silt. (Fill).	pH=6.2
							40		25.20 6D-B: (2-16") Gray, wet, loose, fine to medium SAND, some Silt, trace fine Gravel, trace Organics (roots) with 1" Peat layer at top of spoon. (Silty Sand).	
							46			
							66			
							82	10.10	30.00	
30	7D	24/17	30.00 - 32.00	14/17/14/10	31	37			7D: Gray, wet, dense, SAND, some Silt, trace Gravel, trace Clay. (Till).	
35	8D	24/22	35.00 - 37.00	19/28/34/36	62	74			8D: Gray, wet, very dense, SAND, some Silt, little Gravel, little Clay. (Till).	WC=8.2% Fines Content:41%
40	9D	24/22	40.00 - 42.00	25/37/31/32	68	81			9D: Gray, wet, very dense, SAND, some Silt, little Gravel, little Clay. (Till).	
45	10D	16.5/15	45.00 - 46.38	32/54/50-4.5"					10D: Gray, wet, very dense, SAND, some Silt, trace fine Gravel. (Till).	
50	11D R1	1/0 60/58	50.00 - 50.08 50.80 - 55.80	50-1" RQD=70%				-10.70	11D: No Recovery Advanced roller bit from 50.0' bgs to 50.8' bgs into rock.	
									50.80 Bedrock: Black/Gray, fine grained, metamorphic, hard, fresh to very slightly weathered, PHYLLITE, with moderately dipping, closely spaced, tight joints. R1: Rock Mass Quality: Fair Core Times (min:sec) 50.8'-51.8' 4:30 51.8'-52.8' 4:30 52.8'-53.8' 5:00 53.8'-54.8' 5:00 54.8'-55.8' 5:00 97% Recovery R2: Rock Mass Quality: Poor Core Times (min:sec) 55.8'-56.8' 3:00 56.8'-57.8' 3:30 57.8'-58.8' 7:00	
55	R2	55/24	55.80 - 60.38	RQD=71%						
60										

Remarks:

Switched from HSA to Drive & Wash at 20.0' bgs.
Started drilling roller bit open hole at 30.0' bgs.
Approximately 15 gallons water lost during coring.
Borehole was repaired by filling with auger cuttings, letting sit overnight to settle, then placing cold patch.

Stratification lines represent approximate boundaries between soil types; transitions may be gradual.

* Water level readings have been made at times and under conditions stated. Groundwater fluctuations may occur due to conditions other than those present at the time measurements were made.

Page 1 of 2
Boring No.: BB-SBMR-105

STATE OF MAINE
DEPARTMENT OF TRANSPORTATION

BH-1822(900)X

WIN 018229.00

BRIDGE PLANS

BRIDGE NO. 5260

	BY	DATE
PROJ. MANAGER	A. LATHE	
DESIGN-DETAILED	PAL	10/15/12
CHECKED-REVIEWED	PMP	10/15/12
DESIGN2-DETAILED2		
DESIGN3-DETAILED3		
REVISIONS 1		
REVISIONS 2		
REVISIONS 3		
REVISIONS 4		
FIELD CHANGES		

SIGNATURE

P.E. NUMBER

DATE

PINE POINT CROSSING
B&M RAILROAD
SCARBOROUGH CUMBERLAND COUNTY

BORING LOG 2 OF 6

SHEET NUMBER

16

OF 57

Maine Department of Transportation
Soil/Rock Exploration Log
US CUSTOMARY UNITS

Project: Pine Point Road over B&M Railroad
Location: Scarborough, Maine
Boring No.: BB-SBMR-105
PIN: 18229.00

Driller:	Northern Test Boring	**Elevation (ft.)**	46.1	**Auger ID/OD:**	2-1/4" / 5"
Operator:	Mike Nadeau / Adam Woodbrey	**Datum:**	NAVD 88	**Sampler:**	1-3/8" Split-Spoon
Logged By:	J. Mailloux (Nobis Engineering)	**Rig Type:**	ATV / Diedrich D50	**Hammer Wt./Fall:**	140# / 30"
Date Start/Finish:	Sep 11, 2012 / Sep 11, 2012	**Drilling Method:**	HSA / Drive & Wash	**Core Barrel:**	NQ-2"
Boring Location:	See Boring Location Plan	**Casing ID/OD:**	4" / 4.5"	**Water Level*:**	25.0' bgs wet sample
Hammer Efficiency Factor:	0.719	**Hammer Type:**	Automatic☒ Hydraulic☐ Rope & Cathead☐		

Definitions:
D = Split Spoon Sample
MD = Unsuccessful Split Spoon Sample attempt
U = Thin Wall Tube Sample
MU = Unsuccessful Thin Wall Tube Sample attempt
V = Insitu Vane Shear Test, PP = Pocket Penetrometer
MV = Unsuccessful Insitu Vane Shear Test attempt
R = Rock Core Sample
SSA = Solid Stem Auger
HSA = Hollow Stem Auger
RC = Roller Cone
WOH = weight of 140lb. hammer
WOR/C = weight of rods or casing
WO1P = Weight of one person
S_u = Insitu Field Vane Shear Strength (psf)
T_v = Pocket Torvane Shear Strength (psf)
q_p = Unconfined Compressive Strength (ksf)
N-uncorrected = Raw field SPT N-value
Hammer Efficiency Factor = Annual Calibration Value
N_{60} = SPT N-uncorrected corrected for hammer efficiency
N_{60} = (Hammer Efficiency Factor/60%)*N-uncorrected
$S_{u(lab)}$ = Lab Vane Shear Strength (psf)
WC = water content, percent
LL = Liquid Limit
PL = Plastic Limit
PI = Plasticity Index
G = Grain Size Analysis
C = Consolidation Test

Depth (ft.)	Sample No.	Pen./Rec. (in.)	Sample Depth (ft.)	Blows (6 in.) Shear Strength (psf) or RQD (%)	N-uncorrected	N_{60}	Casing Blows	Elevation (ft.)	Graphic Log	Visual Description and Remarks	Laboratory Testing Results/ AASHTO and Unified Class.
60								-20.30		59.8'-60.4' 3.00 44% Recovery RQD and Recovery likely inaccurate. Core bound in barrel at 2.0' and driller forced coring equipment for remaining 2.6' likely pulverizing sample. Coring time increased at 2.0' and driller used higher pressure on the equipment to advance. -60.40- **Bottom of Exploration at 60.40 feet below ground surface.**	
65											
70											
75											
80											
85											
90											

Remarks:
Switched from HSA to Drive & Wash at 20.0' bgs.
Started drilling roller bit open hole at 30.0' bgs.
Approximately 15 gallons water lost during coring.
Borehole was repaired by filling with auger cuttings, letting sit overnight to settle, then placing cold patch.

Stratification lines represent approximate boundaries between soil types; transitions may be gradual.
* Water level readings have been made at times and under conditions stated. Groundwater fluctuations may occur due to conditions other than those present at the time measurements were made.

Page 2 of 2
Boring No.: BB-SBMR-105

Maine Department of Transportation
Soil/Rock Exploration Log
US CUSTOMARY UNITS

Project: Pine Point Road over B&M Railroad
Location: Scarborough, Maine
Boring No.: BB-SBMR-201
PIN: 18229.00

Driller:	New England Boring Contractors	**Elevation (ft.)**	15.9	**Auger ID/OD:**	N/A
Operator:	Donny Palmer / Gary Pinheiro	**Datum:**	NAVD 88	**Sampler:**	1-3/8" Split-Spoon
Logged By:	R. Clopper (Nobis Engineering)	**Rig Type:**	Rubber Tire / CME-550X	**Hammer Wt./Fall:**	140# / 30"
Date Start/Finish:	Apr 6, 2015 / Apr 6, 2015	**Drilling Method:**	Drive and Wash	**Core Barrel:**	n/a
Boring Location:	See Boring Location Plan	**Casing ID/OD:**	4" / 4.5"	**Water Level*:**	1.5' bgs
Hammer Efficiency Factor:	0.712	**Hammer Type:**	Automatic☒ Hydraulic☐ Rope & Cathead☐		

Definitions:
D = Split Spoon Sample
MD = Unsuccessful Split Spoon Sample attempt
U = Thin Wall Tube Sample
MU = Unsuccessful Thin Wall Tube Sample attempt
V = Insitu Vane Shear Test, PP = Pocket Penetrometer
MV = Unsuccessful Insitu Vane Shear Test attempt
R = Rock Core Sample
SSA = Solid Stem Auger
HSA = Hollow Stem Auger
RC = Roller Cone
WOH = weight of 140lb. hammer
WOR/C = weight of rods or casing
WO1P = Weight of one person
S_u = Insitu Field Vane Shear Strength (psf)
T_v = Pocket Torvane Shear Strength (psf)
q_p = Unconfined Compressive Strength (ksf)
N-uncorrected = Raw field SPT N-value
Hammer Efficiency Factor = Annual Calibration Value
N_{60} = SPT N-uncorrected corrected for hammer efficiency
N_{60} = (Hammer Efficiency Factor/60%)*N-uncorrected
$S_{u(lab)}$ = Lab Vane Shear Strength (psf)
WC = water content, percent
LL = Liquid Limit
PL = Plastic Limit
PI = Plasticity Index
G = Grain Size Analysis
C = Consolidation Test

Depth (ft.)	Sample No.	Pen./Rec. (in.)	Sample Depth (ft.)	Blows (6 in.) Shear Strength (psf) or RQD (%)	N-uncorrected	N_{60}	Casing Blows	Elevation (ft.)	Graphic Log	Visual Description and Remarks	Laboratory Testing Results/ AASHTO and Unified Class.
0	1D	24/10	0.00 - 2.00	1/1/4/6	5	6		15.70		1D-A: (2") Brown, moist, loose, wood fragments and root fibers, little Sand. (Top Soil). —0.20— 1D-B: (8") Tan/Black, moist, loose, fine to medium SAND, some fine Gravel, little Silt. —2.00—	pH = 4.2
	2D	24/16	2.00 - 4.00	5/2/1/1	3	4		13.90		2D: Gray, wet, very loose, fine SAND and Silt, little Clay, trace fine Gravel.	
5	3D	24/24	4.00 - 6.00	2/2/4/5	6	7				3D: Gray, wet, loose, fine SAND and Silt, little Clay, trace fine Gravel.	Gravel = 4.8% Sand = 58.0% Fines = 37.2% LL = 16 PL = 11 MC = 10%
								7.90		—8.00— Increased roller bit resistance at 8.0' bgs. 4D: Gray, wet, very dense, SAND, little Silt, trace fine Gravel. (Till).	
10	4D	24/15	8.00 - 10.00	21/27/26/20	53	63					
15	5D	24/17	13.00 - 15.00	11/14/18/14	32	38				5D: Gray, wet, dense, SAND, some Silt, trace fine Gravel, trace Clay. (Till).	
	6D	24/24	18.00 - 20.00	5/10/11/13	21	25				6D: Gray, wet, medium dense, SAND, some Silt, little Clay, trace fine Gravel. (Till).	Sample Non-Plastic MC = 9%
20	7D	24/24	23.00 - 25.00	8/6/8/7	14	17				7D: Gray, wet, medium dense, SAND, some Silt, little Clay, trace fine Gravel. (Till).	Gravel = 5.1% Sand = 60.5% Fines = 34.4% MC = 10.6%
25	8D	24/21	28.00 - 30.00	4/4/6/12	10	12				8D: Gray, wet, medium dense, SAND, some Silt, trace fine Gravel. (Till).	
30	9D	24/16	33.00 - 35.00	8/13/16/15	29	34				9D: Gray, wet, medium dense, SAND, some Silt, trace fine Gravel. (Till).	
35	10D	13/6	38.00 - 39.08	12/18/50/1"	78	93		-23.20		10D: Gray, wet, very dense, SAND, some Silt, trace fine Gravel. Rock fragment in spoon tip, possible bedrock interface. (Till). —39.10— **Bottom of Exploration at 39.10 feet below ground surface.**	
40											
45											

Remarks:
Borehole repaired by filling with cuttings.

Stratification lines represent approximate boundaries between soil types; transitions may be gradual.
* Water level readings have been made at times and under conditions stated. Groundwater fluctuations may occur due to conditions other than those present at the time measurements were made.

Page 1 of 1
Boring No.: BB-SBMR-201

Maine Department of Transportation
Soil/Rock Exploration Log
US CUSTOMARY UNITS

Project: Pine Point Road over B&M Railroad
Location: Scarborough, Maine
Boring No.: BB-SBMR-202
PIN: 18229.00

Driller:	New England Boring Contractors	**Elevation (ft.)**	14.5	**Auger ID/OD:**	N/A
Operator:	Bub Thompson / Donny Palmer	**Datum:**	NAVD 88	**Sampler:**	1-3/8" Split-Spoon
Logged By:	J. Stewart (Nobis Engineering)	**Rig Type:**	Rubber Tire / CME-550X	**Hammer Wt./Fall:**	140# / 30"
Date Start/Finish:	Apr 8, 2015 / Apr 9, 2015	**Drilling Method:**	Drive and Wash	**Core Barrel:**	n/a
Boring Location:	See Boring Location Plan	**Casing ID/OD:**	4" / 4.5"	**Water Level*:**	2.5' bgs
Hammer Efficiency Factor:	0.712	**Hammer Type:**	Automatic☒ Hydraulic☐ Rope & Cathead☐		

Definitions:
D = Split Spoon Sample
MD = Unsuccessful Split Spoon Sample attempt
U = Thin Wall Tube Sample
MU = Unsuccessful Thin Wall Tube Sample attempt
V = Insitu Vane Shear Test, PP = Pocket Penetrometer
MV = Unsuccessful Insitu Vane Shear Test attempt
R = Rock Core Sample
SSA = Solid Stem Auger
HSA = Hollow Stem Auger
RC = Roller Cone
WOH = weight of 140lb. hammer
WOR/C = weight of rods or casing
WO1P = Weight of one person
S_u = Insitu Field Vane Shear Strength (psf)
T_v = Pocket Torvane Shear Strength (psf)
q_p = Unconfined Compressive Strength (ksf)
N-uncorrected = Raw field SPT N-value
Hammer Efficiency Factor = Annual Calibration Value
N_{60} = SPT N-uncorrected corrected for hammer efficiency
N_{60} = (Hammer Efficiency Factor/60%)*N-uncorrected
$S_{u(lab)}$ = Lab Vane Shear Strength (psf)
WC = water content, percent
LL = Liquid Limit
PL = Plastic Limit
PI = Plasticity Index
G = Grain Size Analysis
C = Consolidation Test

Depth (ft.)	Sample No.	Pen./Rec. (in.)	Sample Depth (ft.)	Blows (6 in.) Shear Strength (psf) or RQD (%)	N-uncorrected	N_{60}	Casing Blows	Elevation (ft.)	Graphic Log	Visual Description and Remarks	Laboratory Testing Results/ AASHTO and Unified Class.
0	1D	24/16	0.00 - 2.00	7/12/21/10	33	39		12.50		1D: Dark brown, moist, dense, SAND, some Gravel, little Silt. (Fill). —2.00— 2D: Gray/tan, wet, medium dense, SAND, some Silt, trace fine Gravel.	pH = 8.0
	2D	24/10	2.00 - 4.00	6/4/6/5	10	12					
5	3D	24/16	4.00 - 6.00	5/3/2/4	5	6				3D: Gray, wet, loose, SAND and Silt, trace fine Gravel	Gravel = 6.2% Sand = 51.1% Fines = 42.7% LL = 16 PL = 11 MC = 11%
								5.50		—9.00— Increased roller bit resistance at 9.0' bgs. 4D: No recovery. Description from 3" spoon. Gray, wet, medium dense, fine SAND, some Silt, little Gravel. (Till).	
10	4D	24/0	10.00 - 12.00	13/11/16/20	27	32					
15	5D	24/19	15.00 - 17.00	13/30/35/35	65	77				5D: Gray, wet, very dense, SAND, some Silt, little Gravel. (Till).	
20	6D	24/21	20.00 - 22.00	12/14/18/16	32	38				6D: Gray, wet, dense, SAND, little Silt, little Gravel. (Till).	
25	7D	24/23	25.00 - 27.00	10/15/18/21	33	39				7D: Gray, wet, dense, SAND, some Silt, trace fine Gravel. (Till).	
30	8D	24/21	30.00 - 32.00	13/16/16/17	32	38				8D: Gray, wet, dense, SAND, some Silt, trace fine Gravel. (Till).	
35	9D	24/16	35.00 - 37.00	12/29/22/26	51	61				9D: Gray, wet, very dense, SAND, little Gravel, little Silt. (Till).	
40	10D	24/17	40.00 - 42.00	10/18/24/18	42	50				10D: Gray, wet, dense, SAND, little Gravel, little Silt. (Till).	
45	11D	24/5	45.00 - 47.00	19/41/47/54	88	104				11D: Gray, wet, very dense, SAND and Gravel, little Silt. Rock Fragment in spoon tip. (Till).	
50	12D	24/22	50.00 - 52.00	20/40/44/47	84	100				12D: Gray, wet, very dense, SAND, some Silt, trace fine Gravel. (Till).	
55	13D	24/24	55.00 - 57.00	5/8/10/11	18	21				13D: Gray, wet, medium dense, SAND, little Silt, little Clay, trace fine Gravel. (Till).	
60											

Remarks:
Borehole repaired by filling with cuttings.

Stratification lines represent approximate boundaries between soil types; transitions may be gradual.
* Water level readings have been made at times and under conditions stated. Groundwater fluctuations may occur due to conditions other than those present at the time measurements were made.

Page 1 of 2
Boring No.: BB-SBMR-202

STATE OF MAINE
DEPARTMENT OF TRANSPORTATION

BH-1822(900)X

WIN 018229.00

BRIDGE PLANS

BRIDGE NO. 5260

PROJ. MANAGER	A. LATHE	BY	DATE
DESIGN-DETAILED	PAL	PAL	10/15/12
CHECKED-REVIEWED	PMP	PMP	10/15/12
DESIGN2-DETAILED2			
DESIGN3-DETAILED3			
REVISIONS 1			
REVISIONS 2			
REVISIONS 3			
REVISIONS 4			
FIELD CHANGES			

SIGNATURE

P.E. NUMBER

DATE

PINE POINT CROSSING
B&M RAILROAD
SCARBOROUGH CUMBERLAND COUNTY

BORING LOG 3 OF 6

SHEET NUMBER
17
OF 57

Division: HIGHWAY
Username:
Filename: V:\Projects\ANY\K3\24370\CADD_MSTN\017_boringLog 3.dgn
Date:7/22/2015

Division: HIGHWAY

Username:

Filename: V:\Projects\ANY\K3\24370\CADD_MSTN\018_boringLog 4.dgn

Date:7/22/2015

Maine Department of Transportation

Soil/Rock Exploration Log
US CUSTOMARY UNITS

Project: Pine Point Road over B&M Railroad
Location: Scarborough, Maine

Boring No.: BB-SBMR-202
PIN: 18229.00

Driller:	New England Boring Contractors	**Elevation (ft.)**	14.5	**Auger ID/OD:**	N/A
Operator:	Bub Thompson / Donny Palmer	**Datum:**	NAVD 88	**Sampler:**	1-3/8" Split-Spoon
Logged By:	J. Stewart (Nobis Engineering)	**Rig Type:**	Rubber Tire / CME-550X	**Hammer Wt./Fall:**	140# / 30"
Date Start/Finish:	Apr 8, 2015 / Apr 9, 2015	**Drilling Method:**	Drive and Wash	**Core Barrel:**	n/a
Boring Location:	See Boring Location Plan	**Casing ID/OD:**	4" / 4.5"	**Water Level*:**	2.5' bgs
Hammer Efficiency Factor: 0.712		**Hammer Type:**	Automatic ☒ Hydraulic ☐ Rope & Cathead ☐		

Definitions:
D = Split Spoon Sample
MD = Unsuccessful Split Spoon Sample attempt
U = Thin Wall Tube Sample
MU = Unsuccessful Thin Wall Tube Sample attempt
V = Insitu Vane Shear Test, PP = Pocket Penetrometer
MV = Unsuccessful Insitu Vane Shear Test attempt
R = Rock Core Sample
SSA = Solid Stem Auger
HSA = Hollow Stem Auger
RC = Roller Cone
WOH = weight of 140lb. hammer
WORC = weight of rods or casing
WO1P = Weight of one person
S_u = Insitu Field Vane Shear Strength (psf)
T_v = Pocket Torvane Shear Strength (psf)
q_p = Unconfined Compressive Strength (ksf)
N-uncorrected = Raw field SPT N-value
Hammer Efficiency Factor = Annual Calibration Value
N_{60} = SPT N-uncorrected corrected for hammer efficiency
N_{60} = (Hammer Efficiency Factor/60%)*N-uncorrected
$S_{u(lab)}$ = Lab Vane Shear Strength (psf)
WC = water content, percent
LL = Liquid Limit
PL = Plastic Limit
PI = Plasticity Index
G = Grain Size Analysis
C = Consolidation Test

Sample Information

Depth (ft.)	Sample No.	Pen./Rec. (in.)	Sample Depth (ft.)	Blows (/6 in.) Shear Strength (psf) or RQD (%)	N-uncorrected	N_{60}	Casing Blows	Elevation (ft.)	Graphic Log	Visual Description and Remarks	Laboratory Testing Results/ AASHTO and Unified Class.
60	14D	8/7	60.00 - 60.67	13/75/2*	---			-46.20		14D: Gray, wet, very dense, SAND, some Silt, trace Clay, trace fine Gravel. (Till). 60.70	
										Encountered bedrock at 60.7' bgs, advanced bit to 64' bgs to verify.	
65	R1	60/56	64.00 - 69.00	RQD=87%						Bedrock: Black/Gray, fine grained, metamorphic, hard, fresh to slightly weathered, PHYLLITE. Rock Mass Quality: Good Core Times (min:sec) 64'-65' 6:20 65'-66' 10:30 66'-67' 5:50 67'-68' 7:45 68'-69' 8:05 93% Recovery	Density=174 pci U.C.S.=10,299 psi E=11,260 ksi Depth=67-68
70	R2	56/56	69.00 - 73.67	RQD=73%				-59.10		Bedrock: Black/Gray, fine grained, metamorphic, hard, fresh to slightly weathered, PHYLLITE. Rock Mass Quality: Fair Core Times (min:sec) 69'-70' 10:05 70'-71' 15:40 71'-72' 9:50 72'-73' 8:15 73'-73.67' 7:45 100% Recovery 73.60	
75										**Bottom of Exploration at 73.60 feet below ground surface.**	
80											
85											
90											
95											
100											
105											
110											
115											
120											

Remarks:
Borehole repaired by filling with cuttings.

Stratification lines represent approximate boundaries between soil types; transitions may be gradual.
* Water level readings have been made at times and under conditions stated. Groundwater fluctuations may occur due to conditions other than those present at the time measurements were made.

Page 2 of 2
Boring No.: BB-SBMR-202

Maine Department of Transportation

Soil/Rock Exploration Log
US CUSTOMARY UNITS

Project: Pine Point Road over B&M Railroad
Location: Scarborough, Maine

Boring No.: BB-SBMR-203
PIN: 18229.00

Driller:	New England Boring Contractors	**Elevation (ft.)**	13.7	**Auger ID/OD:**	N/A
Operator:	Bub Thompson / Donny Palmer	**Datum:**	NAVD 88	**Sampler:**	1-3/8" Split-Spoon
Logged By:	J. Stewart (Nobis Engineering)	**Rig Type:**	Rubber Tire / CME-550X	**Hammer Wt./Fall:**	140# / 30"
Date Start/Finish:	Apr 9, 2015 / Apr 10, 2015	**Drilling Method:**	Drive and Wash	**Core Barrel:**	n/a
Boring Location:	See Boring Location Plan	**Casing ID/OD:**	4" / 4.5"	**Water Level*:**	2.5' bgs
Hammer Efficiency Factor: 0.712		**Hammer Type:**	Automatic ☒ Hydraulic ☐ Rope & Cathead ☐		

Definitions:
D = Split Spoon Sample
MD = Unsuccessful Split Spoon Sample attempt
U = Thin Wall Tube Sample
MU = Unsuccessful Thin Wall Tube Sample attempt
V = Insitu Vane Shear Test, PP = Pocket Penetrometer
MV = Unsuccessful Insitu Vane Shear Test attempt
R = Rock Core Sample
SSA = Solid Stem Auger
HSA = Hollow Stem Auger
RC = Roller Cone
WOH = weight of 140lb. hammer
WORC = weight of rods or casing
WO1P = Weight of one person
S_u = Insitu Field Vane Shear Strength (psf)
T_v = Pocket Torvane Shear Strength (psf)
q_p = Unconfined Compressive Strength (ksf)
N-uncorrected = Raw field SPT N-value
Hammer Efficiency Factor = Annual Calibration Value
N_{60} = SPT N-uncorrected corrected for hammer efficiency
N_{60} = (Hammer Efficiency Factor/60%)*N-uncorrected
$S_{u(lab)}$ = Lab Vane Shear Strength (psf)
WC = water content, percent
LL = Liquid Limit
PL = Plastic Limit
PI = Plasticity Index
G = Grain Size Analysis
C = Consolidation Test

Sample Information

Depth (ft.)	Sample No.	Pen./Rec. (in.)	Sample Depth (ft.)	Blows (/6 in.) Shear Strength (psf) or RQD (%)	N-uncorrected	N_{60}	Casing Blows	Elevation (ft.)	Graphic Log	Visual Description and Remarks	Laboratory Testing Results/ AASHTO and Unified Class.
0	1D	24/20	0.00 - 2.00	5/9/3/5	12	14				1D: Dark brown, moist, medium dense, SAND, little Gravel, little Silt (Fill).	
	2D	24/16	2.00 - 4.00	7/12/10/6	22	26				2D: Brown, wet, medium dense, SAND, little Gravel, trace Silt. (Fill) 4.00	
5	3D	24/14	4.00 - 6.00	4/2/5/5	7	8		9.70		3D: Gray, wet, loose, SAND and Silt, trace Gravel.	Gravel = 4.0% Sand = 53.2% Fines = 42.8% MC = 11.9%
10	4D	24/16	10.00 - 12.00	5/6/10/11	16	19				4D: Gray, wet, medium dense, SAND, some Silt, trace Gravel.	
15	5D	24/20	15.00 - 17.00	15/25/24/19	49	58		-1.30		5D: Gray, wet, dense, SAND, little Silt, little Gravel. (Till). 15.00	
20	6D	24/17	20.00 - 22.00	37/38/52/46	90	107				6D: Gray, wet, very dense, SAND, little Silt, trace Gravel. (Till).	
25	7D	24/18	25.00 - 27.00	22/24/28/34	52	62				7D: Gray, wet, very dense, SAND, little Silt, trace Gravel. (Till).	
30	8D	24/20	30.00 - 32.00	14/19/20/21	39	46				8D: Gray, wet, dense, SAND, trace Silt, trace Gravel. (Till).	
35	9D	24/16	35.00 - 37.00	9/20/34/20	54	64				9D: Gray, wet, very dense, SAND, some Silt, trace Gravel. (Till).	
40	10D	24/20	40.00 - 42.00	8/15/30/29	45	53				10D: Gray, wet, dense, SAND and Silt, little Gravel. (Till).	
45	11D	24/24	45.00 - 47.00	14/19/20/24	39	46				11D: Gray, wet, dense, SAND, little Silt, trace Clay, trace Gravel. (Till).	Gravel = 7.2% Sand = 76.0% Fines = 16.8% LL = 20 PL = 12 MC = 10%
50	12D	24/0	50.00 - 52.00	16/20/28/35	48	57				12D: No recovery.	
55	13D	24/21	55.00 - 57.00	8/11/16/23	27	32				13D: Gray, wet, medium dense, SAND, some Silt, trace Clay, little Gravel. (Till).	
60											

Remarks:
Borehole repaired by filling with cuttings.

Stratification lines represent approximate boundaries between soil types; transitions may be gradual.
* Water level readings have been made at times and under conditions stated. Groundwater fluctuations may occur due to conditions other than those present at the time measurements were made.

Page 1 of 2
Boring No.: BB-SBMR-203

Maine Department of Transportation

Soil/Rock Exploration Log
US CUSTOMARY UNITS

Project: Pine Point Road over B&M Railroad
Location: Scarborough, Maine

Boring No.: BB-SBMR-203
PIN: 18229.00

Driller:	New England Boring Contractors	**Elevation (ft.)**	13.7	**Auger ID/OD:**	N/A
Operator:	Bub Thompson / Donny Palmer	**Datum:**	NAVD 88	**Sampler:**	1-3/8" Split-Spoon
Logged By:	J. Stewart (Nobis Engineering)	**Rig Type:**	Rubber Tire / CME-550X	**Hammer Wt./Fall:**	140# / 30"
Date Start/Finish:	Apr 9, 2015 / Apr 10, 2015	**Drilling Method:**	Drive and Wash	**Core Barrel:**	n/a
Boring Location:	See Boring Location Plan	**Casing ID/OD:**	4" / 4.5"	**Water Level*:**	2.5' bgs
Hammer Efficiency Factor: 0.712		**Hammer Type:**	Automatic ☒ Hydraulic ☐ Rope & Cathead ☐		

Definitions:
D = Split Spoon Sample
MD = Unsuccessful Split Spoon Sample attempt
U = Thin Wall Tube Sample
MU = Unsuccessful Thin Wall Tube Sample attempt
V = Insitu Vane Shear Test, PP = Pocket Penetrometer
MV = Unsuccessful Insitu Vane Shear Test attempt
R = Rock Core Sample
SSA = Solid Stem Auger
HSA = Hollow Stem Auger
RC = Roller Cone
WOH = weight of 140lb. hammer
WORC = weight of rods or casing
WO1P = Weight of one person
S_u = Insitu Field Vane Shear Strength (psf)
T_v = Pocket Torvane Shear Strength (psf)
q_p = Unconfined Compressive Strength (ksf)
N-uncorrected = Raw field SPT N-value
Hammer Efficiency Factor = Annual Calibration Value
N_{60} = SPT N-uncorrected corrected for hammer efficiency
N_{60} = (Hammer Efficiency Factor/60%)*N-uncorrected
$S_{u(lab)}$ = Lab Vane Shear Strength (psf)
WC = water content, percent
LL = Liquid Limit
PL = Plastic Limit
PI = Plasticity Index
G = Grain Size Analysis
C = Consolidation Test

Sample Information

Depth (ft.)	Sample No.	Pen./Rec. (in.)	Sample Depth (ft.)	Blows (/6 in.) Shear Strength (psf) or RQD (%)	N-uncorrected	N_{60}	Casing Blows	Elevation (ft.)	Graphic Log	Visual Description and Remarks	Laboratory Testing Results/ AASHTO and Unified Class.
60	14D	17/3	60.00 - 61.42	12/17/50/5*	---					14D: Gray, wet, very dense, SAND, some Silt, some Clay, little Gravel. (Till). Rock fragment in spoon tip, possible cobble.	
65	15D	24/24	65.00 - 67.00	12/15/20/24	35	42				15D: Gray, wet, dense, SAND, some Silt, some Clay, some Gravel. (Till).	
70								-64.30		Encountered bedrock at 78' bgs, advanced bit to 80' bgs to verify. 78.00	
75								-66.30		80.00	
80										**Bottom of Exploration at 80.00 feet below ground surface.**	
85											
90											
95											
100											
105											
110											
115											
120											

Remarks:
Borehole repaired by filling with cuttings.

Stratification lines represent approximate boundaries between soil types; transitions may be gradual.
* Water level readings have been made at times and under conditions stated. Groundwater fluctuations may occur due to conditions other than those present at the time measurements were made.

Page 2 of 2
Boring No.: BB-SBMR-203

STATE OF MAINE
DEPARTMENT OF TRANSPORTATION

BH-1822(900)X

WIN 018229.00

BRIDGE PLANS

BRIDGE NO. 5260

PROJ. MANAGER	A. LATHE	BY	DATE
DESIGN-DETAILED	PAL	PAL	10/15/12
CHECKED-REVIEWED	PMP	PMP	10/15/12
DESIGN2-DETAILED2			
DESIGN3-DETAILED3			
REVISIONS 1			
REVISIONS 2			
REVISIONS 3			
REVISIONS 4			
FIELD CHANGES			

SIGNATURE

P.E. NUMBER

DATE

PINE POINT CROSSING
B&M RAILROAD
SCARBOROUGH CUMBERLAND COUNTY

BORING LOG 4 OF 6

SHEET NUMBER
18
OF 57

Division: HIGHWAY

Username:

Filename: V:\Projects\ANY\K3\24370\CADD_MSTN\019_boringLog 5.dgn

Date:7/22/2015

Maine Department of Transportation

Soil/Rock Exploration Log
US CUSTOMARY UNITS

Project: Pine Point Road over B&M Railroad
Location: Scarborough, Maine
Boring No.: BB-SBMR-204
PIN: 18229.00

Driller:	Northern Test Boring	**Elevation (ft.)**	32.4	**Auger ID/OD:**	2-1/4" / 5"
Operator:	Mike Nadeau / Ty Whitworth	**Datum:**	NAVD 88	**Sampler:**	1-3/8" Split-Spoon
Logged By:	R. Clopper (Nobis Engineering)	**Rig Type:**	ATV / Diedrich D50	**Hammer Wt./Fall:**	140# / 30"
Date Start/Finish:	Dec 22, 2014 / Dec 22, 2014	**Drilling Method:**	HSA / Drive & Wash	**Core Barrel:**	n/a
Boring Location:	See Boring Location Plan	**Casing ID/OD:**	4" / 4.5"	**Water Level*:**	22.9' bgs
Hammer Efficiency Factor: 0.719		**Hammer Type:**	Automatic ☒ Hydraulic ☐ Rope & Cathead ☐		

Definitions:
D = Split Spoon Sample
MD = Unsuccessful Split Spoon Sample attempt
U = Thin Wall Tube Sample
MU = Unsuccessful Thin Wall Tube Sample attempt
V = Insitu Vane Shear Test, PP = Pocket Penetrometer
MV = Unsuccessful Insitu Vane Shear Test attempt
R = Rock Core Sample
SSA = Solid Stem Auger
HSA = Hollow Stem Auger
RC = Roller Cone
WOH = weight of 140lb. hammer
WORC = weight of rods or casing
WO1P = Weight of one person
S_u = Insitu Field Vane Shear Strength (psf)
T_v = Pocket Torvane Shear Strength (psf)
q_p = Unconfined Compressive Strength (ksf)
N-uncorrected = Raw field SPT N-value
Hammer Efficiency Factor = Annual Calibration Value
N_{60} = SPT N-uncorrected corrected for hammer efficiency
N_{60} = (Hammer Efficiency Factor/60%)*N-uncorrected
$S_{u(lab)}$ = Lab Vane Shear Strength (psf)
WC = water content, percent
LL = Liquid Limit
PL = Plastic Limit
PI = Plasticity Index
G = Grain Size Analysis
C = Consolidation Test

Sample Information

Depth (ft.)	Sample No.	Pen./Rec. (in.)	Sample Depth (ft.)	Blows (6 in.) Shear Strength (psf) or RQD (%)	N-uncorrected	N_{60}	Casing Blows	Elevation (ft.)	Visual Description and Remarks	Laboratory Testing Results/ AASHTO and Unified Class.
0	1D	24/7	0.50 - 2.50	16/19/16/12	35	42		31.90	6" ASPHALT 0.50 1D: Tan/brown, dry, dense, fine to coarse SAND, some Gravel, trace Silt. (Fill).	
5	2D	24/20	5.00 - 7.00	5/6/6/7	12	14			2D: Tan, dry, loose, fine to medium SAND, trace Gravel, trace Silt. (Fill).	
10	3D	24/15	10.00 - 12.00	2/2/2/2	4	5			3D: Tan, dry, very loose, fine to medium SAND, trace Gravel, trace Silt. (Fill).	
15	4D	24/16	15.00 - 17.00	7/24/17/12	41	49			4D-A: (7") Brown, dry, dense, fine to coarse SAND, little Gravel, trace Silt. (Fill). 4D-B: (7") Gray, dry, dense, GRAVEL, trace fine to coarse sand, trace Silt. (Fractured Rock Fill). 4D-C: (2") Brown, dry, dense, fine to coarse SAND, little Gravel, trace Silt, some asphalt fragments. (Fill).	
20	5D	24/20	20.00 - 22.00	7/7/8/6	15	18			5D: Tan, dry, medium dense, fine to medium SAND, little Silt, trace Gravel. (Fill). 23.00	Gravel = 6.8% Sand = 74.7% Fines = 18.5%
								9.40	Driller noted decrease in drilling resistance and color change at 23'. Possible strata change.	
25	6D	24/19	25.00 - 27.00	4/4/4/4	8	10			6D: Olive/gray with orange spots, wet, loose, fine to coarse SAND, some Silt, little Clay, trace Gravel.	Gravel = 3.7% Sand = 56.3% Fines = 40.0% MC = 11% LL = 15 PL = 11
30	7D	24/11	30.00 - 32.00	9/8/5/6	13	16			7D: Olive/gray , wet, medium dense, fine to coarse SAND, some Silt, little Gravel, little Clay.	
35	8D	24/16	35.00 - 37.00	4/2/4/6	6	7			8D: Olive/gray, wet, loose, fine to coarse SAND, some Silt, little Gravel, trace Clay. Increased roller bit resistance at 38.5' bgs.	
40	9D	24/14	40.00 - 42.00	6/6/8/8	14	17			9D: Olive/gray, wet, medium dense, fine to coarse SAND, some Silt, trace Gravel, trace Clay.	
								-10.60	43.00 Increased roller bit resistance at 43.0' bgs.	
45	10D	24/4	45.00 - 47.00	10/14/18/22	32	38			10D: Olive/gray, wet, dense, fine to coarse SAND, some Silt, little Gravel, trace Clay. (Till).	
50	11D	24/15	50.00 - 52.00	34/51/54/55	105	126			10D: Olive/gray, wet, very dense, fine to coarse SAND, some Silt, some Gravel, trace Clay. (Till).	
								-19.60	52.00 **Bottom of Exploration at 52.00 feet below ground surface.**	
60										

Remarks:
Augered top 23 feet to GW, then switched to Drive & Wash
Borehole repaired by filling with auger cuttings, letting sit overnight to settle, then placing cold patch.

Stratification lines represent approximate boundaries between soil types; transitions may be gradual.
* Water level readings have been made at times and under conditions stated. Groundwater fluctuations may occur due to conditions other than those present at the time measurements were made.

Page 1 of 1
Boring No.: BB-SBMR-204

Maine Department of Transportation

Soil/Rock Exploration Log
US CUSTOMARY UNITS

Project: Pine Point Road over B&M Railroad
Location: Scarborough, Maine
Boring No.: BB-SBMR-205
PIN: 18229.00

Driller:	Northern Test Boring	**Elevation (ft.)**	27.8	**Auger ID/OD:**	2-1/4" / 5"
Operator:	Mike Nadeau / Ty Whitworth	**Datum:**	NAVD 88	**Sampler:**	1-3/8" Split-Spoon
Logged By:	R. Clopper (Nobis Engineering)	**Rig Type:**	ATV / Diedrich D50	**Hammer Wt./Fall:**	140# / 30"
Date Start/Finish:	Dec 23, 2014 / Dec 22, 2014	**Drilling Method:**	HSA / Drive & Wash	**Core Barrel:**	n/a
Boring Location:	See Boring Location Plan	**Casing ID/OD:**	4" / 4.5"	**Water Level*:**	22.0' bgs
Hammer Efficiency Factor: 0.719		**Hammer Type:**	Automatic ☒ Hydraulic ☐ Rope & Cathead ☐		

Definitions:
D = Split Spoon Sample
MD = Unsuccessful Split Spoon Sample attempt
U = Thin Wall Tube Sample
MU = Unsuccessful Thin Wall Tube Sample attempt
V = Insitu Vane Shear Test, PP = Pocket Penetrometer
MV = Unsuccessful Insitu Vane Shear Test attempt
R = Rock Core Sample
SSA = Solid Stem Auger
HSA = Hollow Stem Auger
RC = Roller Cone
WOH = weight of 140lb. hammer
WORC = weight of rods or casing
WO1P = Weight of one person
S_u = Insitu Field Vane Shear Strength (psf)
T_v = Pocket Torvane Shear Strength (psf)
q_p = Unconfined Compressive Strength (ksf)
N-uncorrected = Raw field SPT N-value
Hammer Efficiency Factor = Annual Calibration Value
N_{60} = SPT N-uncorrected corrected for hammer efficiency
N_{60} = (Hammer Efficiency Factor/60%)*N-uncorrected
$S_{u(lab)}$ = Lab Vane Shear Strength (psf)
WC = water content, percent
LL = Liquid Limit
PL = Plastic Limit
PI = Plasticity Index
G = Grain Size Analysis
C = Consolidation Test

Sample Information

Depth (ft.)	Sample No.	Pen./Rec. (in.)	Sample Depth (ft.)	Blows (6 in.) Shear Strength (psf) or RQD (%)	N-uncorrected	N_{60}	Casing Blows	Elevation (ft.)	Visual Description and Remarks	Laboratory Testing Results/ AASHTO and Unified Class.
0	1D	24/14	0.50 - 2.50	10/11/11/10	22	26		27.30	6" ASPHALT 0.50 1D: Tan, dry, medium dense, fine to coarse Gravely SAND, trace Silt. (Fill).	
5	2D	24/7	5.00 - 7.00	8/4/9/7	13	16			2D: Gray/brown with orange spots, fine to coarse Gravely SAND, trace Silt. (Fill).	
10	3D	24/5	10.00 - 12.00	14/10/7/7	17	20			3D: Black/brown, dry, medium dense, Asphalt fragments and fine to coarse sand, some Gravel, trace silt. Fractured rock fragments in spoon tip. (Fill).	
15	4D	24/14	15.00 - 17.00	9/9/10/10	19	23			4D: Brown, dry, medium dense, fine to coarse SAND, little Gravel, trace Silt. Few Asphalt fragments. (Fill).	
20	5D	24/18	20.00 - 22.00	7/10/9/8	19	23			5D: Tan, moist, medium dense, fine to medium sand, trace gravel, trace silt. (Fill). 22.00	
								5.80		
25	6D	24/17	25.00 - 27.00	WOH/WOH/WOH/6	0	0			6D: Tan, wet, very loose, fine to medium sand, little silt.	Gravel = 0.6% Sand = 83.2% Fines = 16.2%
30	7D	24/11	30.00 - 32.00	4/3/4/7	7	8			Tan, wet, loose, fine to medium SAND, trace Silt, trace Gravel.	
35	8D	24/18	35.00 - 37.00	7/7/8/14	15	18			Change in cuttings color at 33.0' bgs. 8D: Olive/gray, wet, medium dense, fine to coarse SAND, some Silt, little Gravel, little Clay. Increased roller bit resistance at 38.0' bgs.	
40	9D	24/0	40.00 - 42.00	3/5/7/5	14	17			No recovery. Cuttings consistent with materials found in sample 8D.	
								-15.70	43.50 Increased roller bit resistance at 43.5' bgs.	
45	10D	24/17	45.00 - 47.00	43/52/40/38	92	110			10D: Olive/gray, wet, very dense, fine to coarse SAND, some Silt, trace Gravel, trace Clay. (Till).	Gravel = 4.5% Sand = 58.2% Fines = 37.3%
50	11D	20/14	50.00 - 51.67	39/46/34/100/2"	80	96			11D: Olive/gray, wet, very dense, fine to coarse SAND, some Silt, little Gravel, trace Clay. (Till).	
								-23.86	51.66 Encountered possible bedrock at 51.7' bgs. Advanced Roller Bit to 58.0' bgs.	
								-30.20	58.00 **Bottom of Exploration at 58.00 feet below ground surface.**	
60										

Remarks:
Augered top 22 feet to GW, then switched to Drive & Wash
Borehole repaired by filling with auger cuttings, letting sit overnight to settle, then placing cold patch.

Stratification lines represent approximate boundaries between soil types; transitions may be gradual.
* Water level readings have been made at times and under conditions stated. Groundwater fluctuations may occur due to conditions other than those present at the time measurements were made.

Page 1 of 1
Boring No.: BB-SBMR-205

Maine Department of Transportation

Soil/Rock Exploration Log
US CUSTOMARY UNITS

Project: Pine Point Road over B&M Railroad
Location: Scarborough, Maine
Boring No.: BB-SBMR-206
PIN: 18229.00

Driller:	Northern Test Boring	**Elevation (ft.)**	8.75	**Auger ID/OD:**	2-1/4" / 5"
Operator:	Mike Nadeau / Ty Whitworth	**Datum:**	NAVD 88	**Sampler:**	1-3/8" Split-Spoon
Logged By:	R. Clopper (Nobis Engineering)	**Rig Type:**	ATV / Diedrich D50	**Hammer Wt./Fall:**	140# / 30"
Date Start/Finish:	Dec 23, 20-4 / Dec 23, 2014	**Drilling Method:**	HSA / Drive & Wash	**Core Barrel:**	n/a
Boring Location:	See Boring Location Plan	**Casing ID/OD:**	4" / 4.5"	**Water Level*:**	3.5' bgs
Hammer Efficiency Factor: 0.719		**Hammer Type:**	Automatic ☒ Hydraulic ☐ Rope & Cathead ☐		

Definitions:
D = Split Spoon Sample
MD = Unsuccessful Split Spoon Sample attempt
U = Thin Wall Tube Sample
MU = Unsuccessful Thin Wall Tube Sample attempt
V = Insitu Vane Shear Test, PP = Pocket Penetrometer
MV = Unsuccessful Insitu Vane Shear Test attempt
R = Rock Core Sample
SSA = Solid Stem Auger
HSA = Hollow Stem Auger
RC = Roller Cone
WOH = weight of 140lb. hammer
WORC = weight of rods or casing
WO1P = Weight of one person
S_u = Insitu Field Vane Shear Strength (psf)
T_v = Pocket Torvane Shear Strength (psf)
q_p = Unconfined Compressive Strength (ksf)
N-uncorrected = Raw field SPT N-value
Hammer Efficiency Factor = Annual Calibration Value
N_{60} = SPT N-uncorrected corrected for hammer efficiency
N_{60} = (Hammer Efficiency Factor/60%)*N-uncorrected
$S_{u(lab)}$ = Lab Vane Shear Strength (psf)
WC = water content, percent
LL = Liquid Limit
PL = Plastic Limit
PI = Plasticity Index
G = Grain Size Analysis
C = Consolidation Test

Sample Information

Depth (ft.)	Sample No.	Pen./Rec. (in.)	Sample Depth (ft.)	Blows (6 in.) Shear Strength (psf) or RQD (%)	N-uncorrected	N_{60}	Casing Blows	Elevation (ft.)	Visual Description and Remarks	Laboratory Testing Results/ AASHTO and Unified Class.
0	1D	24/16	0.00 - 2.00	2/4/5/6	9	11			1D: Brown, moist, loose, fine to medium SAND, some Silt. Few root fibers. (Top Soil).	
								6.75	2.00	
5	2D	24/18	5.00 - 7.00	11/7/4/2	11	13			2D-A: (14") Brown, wet, medium dense, fine to medium SAND, some Silt, trace Organics. (Sand with Organics).	
								2.50	6.16 2D-B: (4") Black, wet, medium dense, fine to medium SAND, some Silt, some Organics. (Sand with Organics).	Ash = 76.5% Organics = 23.5% Sulfide = ND Chloride = 246 ppm pH = 5.1
10	3D	24/16	10.00 - 12.00	1/1/1/3	2	2			3D-A: (13") Black, wet, very loose, fine to medium SAND, some Silt, some Organics. (Sand with Organics).	
								-2.33	11.08 3D-B: (3") Brown, wet, very loose, fine to medium SAND, little Silt, trace Gravel.	
								-4.25	13.00 Change in cuttings color at 13.0' bgs.	
15	4D	24/18	15.00 - 17.00	7/8/8/12	16	19			4D: Olive/gray, wet, medium dense, fine to coarse SAND, some Silt, some Gravel, little Clay.	
20	5D	24/13	20.00 - 22.00	4/4/4/12	8	10			5D: Olive/gray, wet, loose, fine to medium SAND, some Silt, trace Clay, trace Gravel	Gravel = 9.5% Sand = 51.5% Fines = 39.0% MC = 9% Non-Plastic
25	6D	24/17	25.00 - 27.00	12/21/31/35	52	62			25.00 6D: Olive/gray, wet, very dense, fine to coarse SAND, little Gravel, little Silt, trace Clay. (Till).	
								-16.25		
								-19.55	28.30 Encountered possible bedrock at 28.3' bgs. Advanced Roller Bit to 32.0' bgs.	
								-23.25	32.00 **Bottom of Exploration at 32.00 feet below ground surface.**	
45										

Remarks:
Borehole repaired by filling with cuttings.

Stratification lines represent approximate boundaries between soil types; transitions may be gradual.
* Water level readings have been made at times and under conditions stated. Groundwater fluctuations may occur due to conditions other than those present at the time measurements were made.

Page 1 of 1
Boring No.: BB-SBMR-206

STATE OF MAINE
DEPARTMENT OF TRANSPORTATION

BH-1822(900)X

WIN 018229.00

BRIDGE PLANS

BRIDGE NO. 5260

	BY	DATE
PROJ. MANAGER	A. LATHE	
DESIGN-DETAILED	PAL	10/15/12
CHECKED-REVIEWED	PMP	10/15/12
DESIGN2-DETAILED2		
DESIGN3-DETAILED3		
REVISIONS 1		
REVISIONS 2		
REVISIONS 3		
REVISIONS 4		
FIELD CHANGES		

SIGNATURE

P.E. NUMBER

DATE

PINE POINT CROSSING
B&M RAILROAD
SCARBOROUGH CUMBERLAND COUNTY

BORING LOG 5 OF 6

SHEET NUMBER
19
OF 57

Division: HIGHWAY

Username:

Filename: V:\Projects\ANY\K3\24370\CADD_MSTN\020_boringLog 6.dgn

Date:7/22/2015

Maine Department of Transportation

Soil/Rock Exploration Log
US CUSTOMARY UNITS

Project: Pine Point Road over B&M Railroad
Location: Scarborough, Maine
Boring No.: BB-SBMR-207
PIN: 18229.00

Driller:	Northern Test Boring	**Elevation (ft.)**	10.25	**Auger ID/OD:**	2-1/4" / 5"
Operator:	Mike Nadeau / Ty Whitworth	**Datum:**	NAVD 88	**Sampler:**	1-3/8" Split-Spoon
Logged By:	R. Clopper (Nobis Engineering)	**Rig Type:**	ATV / Diedrich D50	**Hammer Wt./Fall:**	140# / 30"
Date Start/Finish:	Dec 23, 2014 / Dec 23, 2014	**Drilling Method:**	HSA / Drive & Wash	**Core Barrel:**	n/a
Boring Location:	See Boring Location Plan	**Casing ID/OD:**	4" / 4.5"	**Water Level*:**	7.5' bgs
Hammer Efficiency Factor:	0.719	**Hammer Type:**	Automatic ☒ Hydraulic ☐ Rope & Cathead ☐		

Definitions:
D = Split Spoon Sample
MD = Unsuccessful Split Spoon Sample attempt
U = Thin Wall Tube Sample
MU = Unsuccessful Thin Wall Tube Sample attempt
V = Insitu Vane Shear Test, PP = Pocket Penetrometer
MV = Unsuccessful Insitu Vane Shear Test attempt
R = Rock Core Sample
SSA = Solid Stem Auger
HSA = Hollow Stem Auger
RC = Roller Cone
WOH = weight of 140lb. hammer
WOR/C = weight of rods or casing
WO1P = Weight of one person
S_u = Insitu Field Vane Shear Strength (psf)
T_v = Pocket Torvane Shear Strength (psf)
q_p = Unconfined Compressive Strength (ksf)
N-uncorrected = Raw field SPT N-value
Hammer Efficiency Factor = Annual Calibration Value
N_{60} = SPT N-uncorrected corrected for hammer efficiency
N_{60} = (Hammer Efficiency Factor/60%)*N-uncorrected
$S_{u(lab)}$ = Lab Vane Shear Strength (psf)
WC = water content, percent
LL = Liquid Limit
PL = Plastic Limit
PI = Plasticity Index
G = Grain Size Analysis
C = Consolidation Test

Sample Information

Depth (ft.)	Sample No.	Pen./Rec. (in.)	Sample Depth (ft.)	Blows (/6 in.) Shear Strength (psf) or RQD (%)	N-uncorrected	N_{60}	Casing Blows	Elevation (ft.)	Visual Description and Remarks	Laboratory Testing Results/ AASHTO and Unified Class.
0	1D	24/16	0.00 - 2.00	5/10/6/7	16	19		9.75	1D-A: (6") Brown, moist, medium dense, fine to medium SAND, some Silt. Few root fibers. (Top Soil). 0.50 1D-B: (10") Brown, moist, medium dense, fine to coarse SAND, little Gravel, trace Silt. 2D: Olive/gray/tan, moist, medium dense, fine to coarse SAND, some Silt, little Gravel, little Clay.	
	2D	24/18	2.00 - 4.00	10/17/2/1	19	23				
5										
10	3D	24/18	10.00 - 12.00	3/5/7/6	12	14			3D: Olive/gray, wet, medium dense, fine to coarse SAND, some Silt, trace Gravel, trace Clay.	Gravel = 7.6% Sand = 58.1% Fines = 34.3%
15	4D	24/4	15.00 - 17.00	4/3/3/6	6	7			4D: Olive/gray, wet, loose, fine to coarse SAND, some Gravel, some Silt, trace Clay.	
20	5D	24/13	20.00 - 22.00	1/2/4/4	6	7			5D: Olive/gray, wet, loose, fine to medium SAND, some Silt, little Clay, trace Gravel.	
25	6D	24/13	25.00 - 27.00	24/33/43/31	76	91		-14.25	Increased roller bit resistance at 24.5' bgs. 24.50 6D: Olive/gray, wet, very dense, fine to coarse SAND and GRAVEL, some Silt, trace Clay. (Till).	Gravel = 36.6% Sand = 36.5% Fines = 26.9%
30	7D	24/14	30.00 - 32.00	18/17/11/13	28	34			7D: Olive/gray, wet, medium dense, fine to coarse SAND, some Silt, little Gravel, trace Clay. (Till).	
35								-23.75	Encountered possible bedrock at 34.0' bgs. Advanced Roller Bit to 38.0' bgs. 34.00	
40									**Bottom of Exploration at 38.00 feet below ground surface.**	
45										

Remarks:
Borehole repaired by filling with cuttings.

Stratification lines represent approximate boundaries between soil types; transitions may be gradual.

* Water level readings have been made at times and under conditions stated. Groundwater fluctuations may occur due to conditions other than those present at the time measurements were made.

Page 1 of 1
Boring No.: BB-SBMR-207

Maine Department of Transportation

Soil/Rock Exploration Log
US CUSTOMARY UNITS

Project: Pine Point Road over B&M Railroad
Location: Scarborough, Maine
Boring No.: BB-SBMR-208
PIN: 18229.00

Driller:	New England Boring Contractors	**Elevation (ft.)**	17.0	**Auger ID/OD:**	N/A
Operator:	Bub Thompson / Donny Palmer	**Datum:**	NAVD 88	**Sampler:**	1-3/8" Split-Spoon
Logged By:	R. Clopper (Nobis Engineering)	**Rig Type:**	Rubber Tire / CME-550X	**Hammer Wt./Fall:**	140# / 30"
Date Start/Finish:	Apr 7, 2015 / Apr 7, 2015	**Drilling Method:**	Drive and Wash	**Core Barrel:**	n/a
Boring Location:	See Boring Location Plan	**Casing ID/OD:**	4" / 4.5"	**Water Level*:**	4.0' bgs
Hammer Efficiency Factor:	0.712	**Hammer Type:**	Automatic ☒ Hydraulic ☐ Rope & Cathead ☐		

Definitions:
D = Split Spoon Sample
MD = Unsuccessful Split Spoon Sample attempt
U = Thin Wall Tube Sample
MU = Unsuccessful Thin Wall Tube Sample attempt
V = Insitu Vane Shear Test, PP = Pocket Penetrometer
MV = Unsuccessful Insitu Vane Shear Test attempt
R = Rock Core Sample
SSA = Solid Stem Auger
HSA = Hollow Stem Auger
RC = Roller Cone
WOH = weight of 140lb. hammer
WOR/C = weight of rods or casing
WO1P = Weight of one person
S_u = Insitu Field Vane Shear Strength (psf)
T_v = Pocket Torvane Shear Strength (psf)
q_p = Unconfined Compressive Strength (ksf)
N-uncorrected = Raw field SPT N-value
Hammer Efficiency Factor = Annual Calibration Value
N_{60} = SPT N-uncorrected corrected for hammer efficiency
N_{60} = (Hammer Efficiency Factor/60%)*N-uncorrected
$S_{u(lab)}$ = Lab Vane Shear Strength (psf)
WC = water content, percent
LL = Liquid Limit
PL = Plastic Limit
PI = Plasticity Index
G = Grain Size Analysis
C = Consolidation Test

Sample Information

Depth (ft.)	Sample No.	Pen./Rec. (in.)	Sample Depth (ft.)	Blows (/6 in.) Shear Strength (psf) or RQD (%)	N-uncorrected	N_{60}	Casing Blows	Elevation (ft.)	Visual Description and Remarks	Laboratory Testing Results/ AASHTO and Unified Class.
0	1D	24/15	0.00 - 2.00	1/2/5/4	7	8			1D: Tan/brown, moist, loose, SAND, little Silt, little Gravel, very few root fibers. (Fill).	
	2D	24/15	2.00 - 4.00	4/4/6/7	10	12			2D: Tan/brown, moist, medium dense, SAND, little Silt, trace Gravel. (Fill).	
5	3D	24/14	4.00 - 6.00	6/8/6/5	14	17		13.00	4.00 3D: Gray, wet, medium dense, SAND and Silt, trace Gravel.	Gravel = 3.4% Sand = 56.3% Fines = 40.3% MC = 11.5%
10	4D	24/15	9.00 - 11.00	18/19/15/18	34	40		8.00	9.00 Increased roller bit resistance at 9.0' bgs. 4D: Gray, wet, dense, SAND, some Silt, little Gravel. (Till).	
15	5D	24/19	14.00 - 16.00	18/31/49/39	80	95			5D: Gray, wet, very dense, SILT, some Sand, little Gravel. (Till).	Gravel = 16.7% Sand = 33.1% Fines = 50.2% MC = 9.3%
20	6D	24/18	19.00 - 21.00	16/30/33/30	63	75			6D: Gray, wet, very dense, SAND, some Silt, little Gravel. (Till).	LL = 20 PL = 14 MC = 14%
25	7D	24/18	24.00 - 26.00	25/30/33/42	63	75			7D: Gray, wet, very dense, SAND, some Silt, trace fine Gravel. (Till)	
30	8D	22/16	29.00 - 30.83	29/60/75/100/4"	135	160			8D: Gray, wet, very dense, SAND, some Silt, trace fine Gravel. (Till)	
35	9D	0/0	34.00 - 34.00	100/0"	100	119		-16.50	33.50 Encountered possible bedrock at 33.5' bgs. 9D: No recovery. Gray/black rock fragment in spoon tip. Advanced Roller Bit to 35.5' bgs.	
	R1	60/52	35.50 - 40.50	RQD=83%					Bedrock: Black/Gray, fine grained, metamorphic, hard, fresh to moderately weathered, PHYLLITE. Rock Mass Quality: Good Core Times (min:sec) 35.5'-36.5' 3:30 36.5'-37.5' 3:10 37.5'-38.5' 2:30 38.5'-39.5' 3:15 39.5'-40.5' 7:00 87% Recovery	
40	R2	60/56	40.50 - 45.50	RQD=77%						Density=169 pcf U.C.S.=13,282 psi Depth=42.5'-43.5
45								-28.50	Bedrock: Black/Gray, fine grained, metamorphic, hard, fresh to moderately weathered, PHYLLITE. Rock Mass Quality: Good Core Times (min:sec) 40.5'-41.5' 4:30 41.5'-42.5' 3:45 42.5'-43.5' 4:45 43.5'-44.5' 6:15 44.5'-45.5' 3:30 93% Recovery	
50									45.50 **Bottom of Exploration at 45.50 feet below ground surface.**	
55										
60										

Remarks:
Borehole repaired by filling with cuttings.

Stratification lines represent approximate boundaries between soil types; transitions may be gradual.

* Water leve readings have been made at times and under conditions stated. Groundwater fluctuations may occur due to conditions other than those present at the time measurements were made.

Page 1 of 1
Boring No.: BB-SBMR-208

STATE OF MAINE
DEPARTMENT OF TRANSPORTATION

BH-1822(900)X

WIN 018229.00

BRIDGE PLANS

BRIDGE NO. 5260

PROJ. MANAGER	A. LATHE	BY	DATE
DESIGN-DETAILED	PAL	PAL	10/15/12
CHECKED-REVIEWED	PMP	PMP	10/15/12
DESIGN2-DETAILED2			
DESIGN3-DETAILED3			
REVISIONS 1			
REVISIONS 2			
REVISIONS 3			
REVISIONS 4			
FIELD CHANGES			

SIGNATURE

P.E. NUMBER

DATE

PINE POINT CROSSING
B&M RAILROAD
SCARBOROUGH CUMBERLAND COUNTY

BORING LOG 6 OF 6

SHEET NUMBER
20
OF 57

NUMBER	SIZE OF SIGN		GRAPHIC	NUMBER OF SIGNS REQUIRED	COLOR		TOTAL AREA IN SQ. FT	TYPE	SUPPORT	REMARK	LOCATION	
	WIDTH (IN)	HEIGHT (IN)			BACKGROUND	LEGEND BORDER					STATION	OFFSET
-	-	-	BICKFORD ST	-	GREEN	WHITE	-	1	EXISTING ROUND POST	REMOVE OR RESET EXISTING SIGN IN SAME LOCATION	RT9 10+17	30.5' RT
-	-	-	DEAD END	-	GREEN	WHITE	-	1	EXISTING ROUND POST	REMOVE OR RESET EXISTING SIGN IN SAME LOCATION	RT9 10+17	30.5' RT
-	-	-	HOLLY ST	-	GREEN	WHITE	-	1	EXISTING ROUND POST	REMOVE OR RESET EXISTING SIGN IN SAME LOCATION	RT9 12+89	34.8' RT
-	-	-	PINE POINT BUS. CTR. HOLLY STREET	-	GREEN	WHITE	-	1	EXISTING ROUND POST	REMOVE OR RESET EXISTING SIGN IN SAME LOCATION	RT9 12+89	34.8' RT
R1-1	30	30	STOP	2	RED	WHITE	(2 AT 6.25 EACH) 12.5	1	EXISTING ROUND POST	REMOVE EXISTING SIGN AND REPLACE WITH NEW SIGN ON EXISTING POST WITH EXISTING STREET NAME SIGNS	RT9 10+17 RT9 12+89	30.5' RT 34.8' RT
R4-1	24	30	DO NOT PASS	1	WHITE	BLACK	5	1	U-CHANNEL POST	REMOVE EXISTING SIGN AND POST, AND REPLACE WITH NEW SIGN ON NEW POST	RT9 10+41	27.1' RT
D11-1	24	18	BIKE ROUTE	1	GREEN	WHITE	3	1	U-CHANNEL POST	REMOVE EXISTING SIGN AND POST, AND REPLACE WITH NEW SIGN ON NEW POST	RT9 12+68	21.8' RT
R7-13	12	18	NO PARKING THIS SIDE OF STREET	1	WHITE	RED	1.5	1	U-CHANNEL POST	REMOVE EXISTING SIGN AND POST, AND REPLACE WITH NEW SIGN ON NEW POST	SCR 92+79	20.8' LT

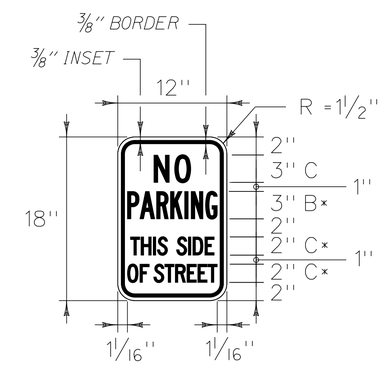

* 50% REDUCTION IN SPACING

COLOR: RED BORDER & TEXT (REFLECTORIZED)
WHITE BACKGROUND (REFLECTORIZED)

MATERIAL: FLAT SHEET ALUMINUM 0.060 INCH THICK

LOCATION: STA SCR 92+79, 20.8' LT

STATE OF MAINE
DEPARTMENT OF TRANSPORTATION

BH-1822(900)X

WIN 018229.00

BRIDGE NO. 5260

BRIDGE PLANS

		BY	DATE
PROJ. MANAGER	A. LATHE		
DESIGN-DETAILED	PAL	PAL	10/15/12
CHECKED-REVIEWED	PMP	PMP	10/15/12
DESIGN2-DETAILED2			
DESIGN3-DETAILED3			
REVISIONS 1			
REVISIONS 2			
REVISIONS 3			
REVISIONS 4			
FIELD CHANGES			

SIGNATURE

P.E. NUMBER

DATE

PINE POINT CROSSING
B&M RAILROAD
SCARBOROUGH CUMBERLAND COUNTY

SIGN TEXT DATA

SHEET NUMBER
21
OF 57

Division: HIGHWAY
Username:
Filename: V:\Projects\ANY\K3\24370\CADD_MSTN\Highway\021_SIGN_TEXT.dgn
Date:7/22/2015

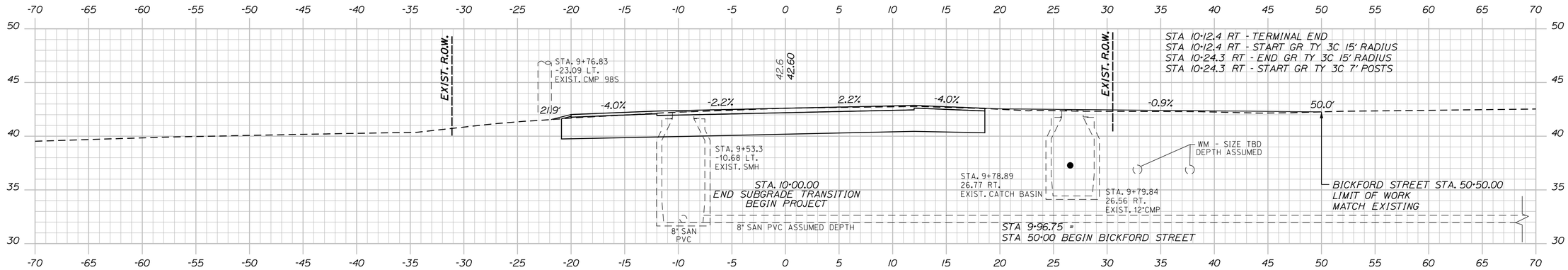

10+00.00 (BICKFORD ST. RT.)

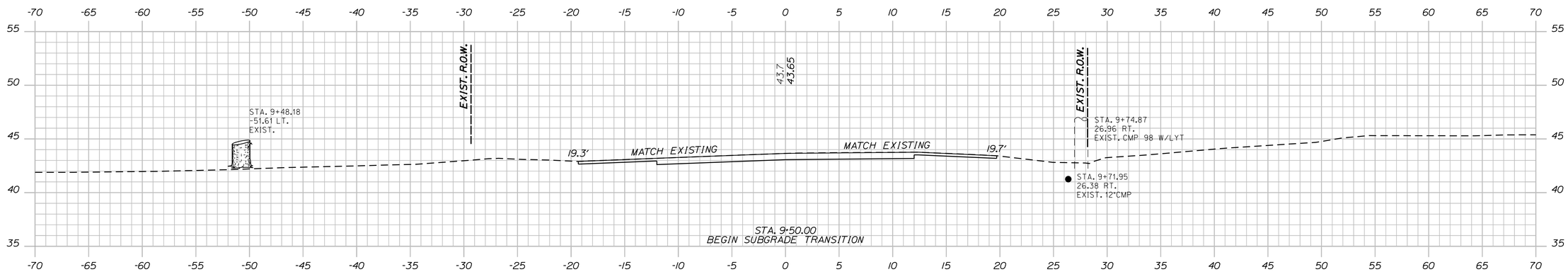

9+50.00

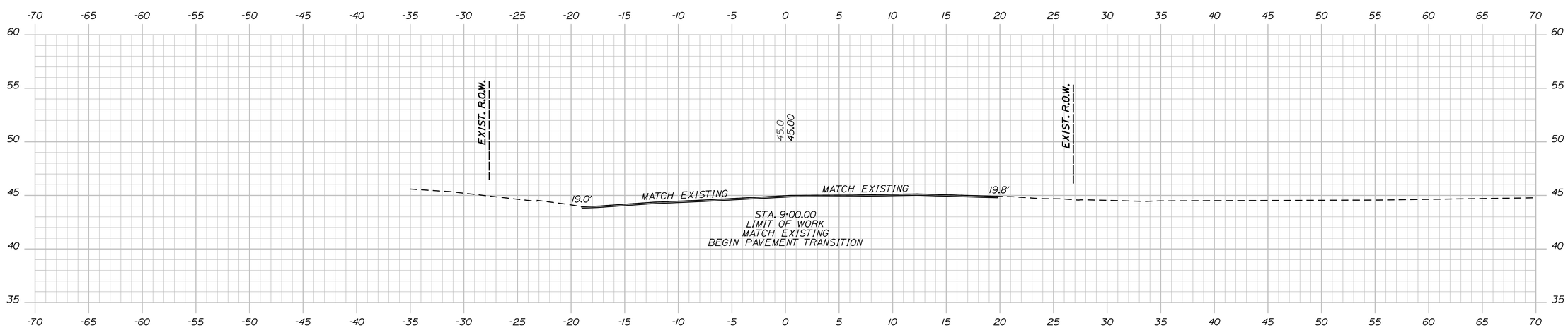

9+00.00

STATE OF MAINE
DEPARTMENT OF TRANSPORTATION

BH-1822(900)X

WIN 018229.00

BRIDGE NO. 5260

BRIDGE PLANS

PROJ. MANAGER	A. LATHE		
DESIGN-DETAILED	PAL	PAL	10/15/12
CHECKED-REVIEWED	PMP	PMP	10/15/12
DESIGN2-DETAILED2			
DESIGN3-DETAILED3			
REVISIONS 1			
REVISIONS 2			
REVISIONS 3			
REVISIONS 4			
FIELD CHANGES			

SIGNATURE

P.E. NUMBER

DATE

PINE POINT CROSSING
B&M RAILROAD
SCARBOROUGH CUMBERLAND COUNTY

CROSS SECTIONS

SHEET NUMBER

22

OF 57

Division: HIGHWAY
Username:
Filename: V:\Projects\ANYK3\24370\CADD_MSTN\Highway\022_XS1.dgn
Date:7/22/2015

RTE 9 Sta. 9+00.00 to Sta. 10+00.00

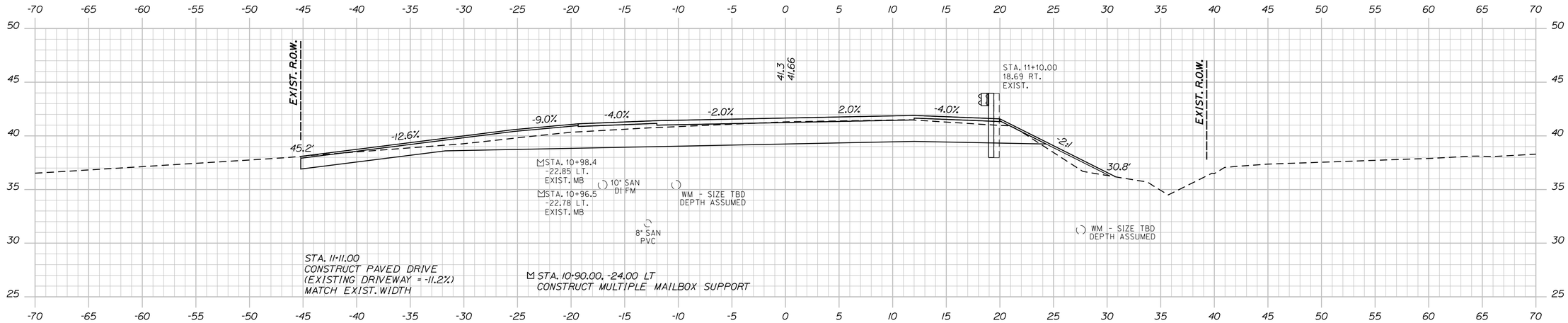

11+10.00 (DRIVE LT.)

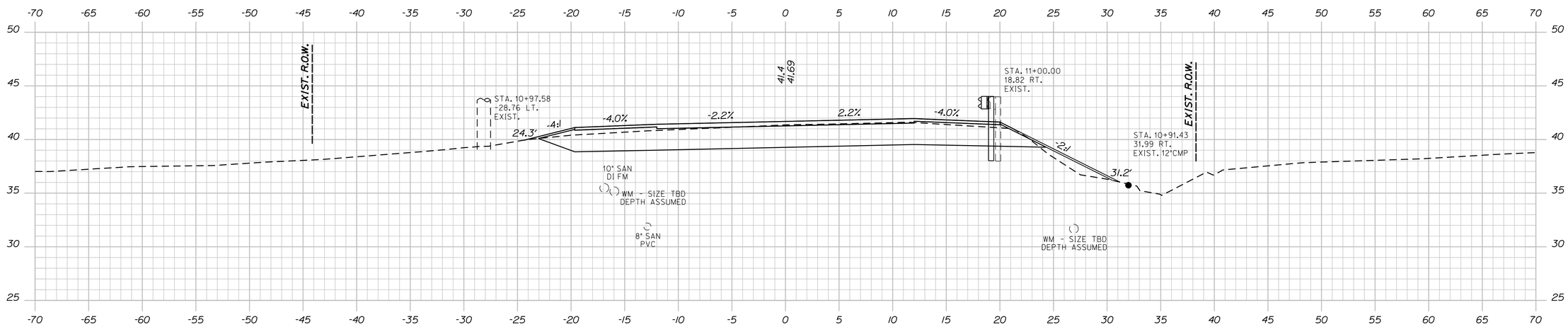

11+00.00

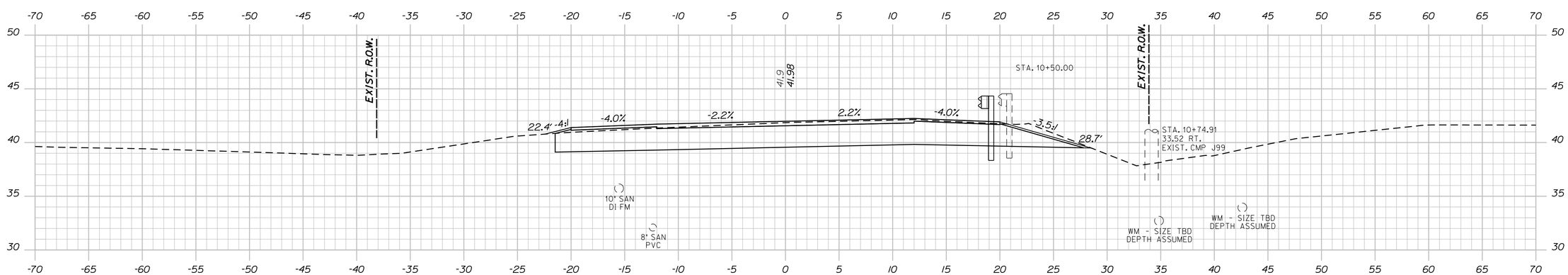

10+50.00

STATE OF MAINE
DEPARTMENT OF TRANSPORTATION

BH-1822(900)X

WIN 018229.00

BRIDGE NO. 5260

BRIDGE PLANS

PROJ. MANAGER	A. LATHE	BY	DATE
DESIGN-DETAILED	PAL	PAL	10/15/12
CHECKED-REVIEWED	PMP	PMP	10/15/12
DESIGN2-DETAILED2			
DESIGN3-DETAILED3			
REVISIONS 1			
REVISIONS 2			
REVISIONS 3			
REVISIONS 4			
FIELD CHANGES			

SIGNATURE

P.E. NUMBER

DATE

PINE POINT CROSSING
B&M RAILROAD
SCARBOROUGH CUMBERLAND COUNTY

CROSS SECTIONS

SHEET NUMBER

23

OF 57

RTE 9 Sta. 10+50.00 to Sta. 11+10.00

Division: HIGHWAY
Username:
Filename: V:\Projects\ANY\K3\24370\CADD_MSTN\Highway\023_XS2.dgn
Date:7/22/2015

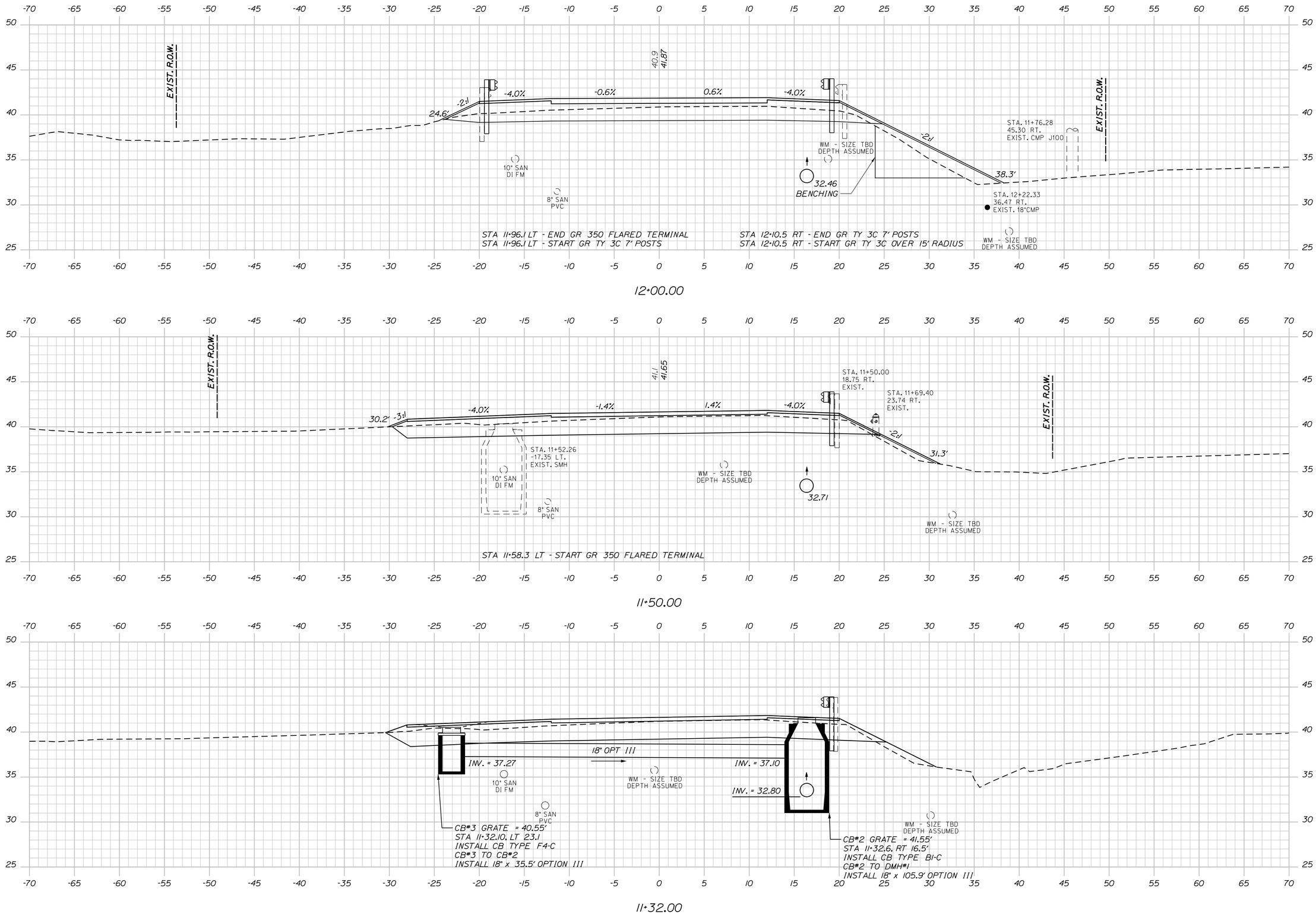

Division: HIGHWAY

Username:

Filename: V:\Projects\ANY\K3\24370\CADD_MSTN\Highway\024_XS3.dgn

Date: 7/22/2015

STATE OF MAINE
DEPARTMENT OF TRANSPORTATION

BH-1822(900)X

WIN 018229.00

BRIDGE NO. 5260

BRIDGE PLANS

	BY	DATE
PROJ. MANAGER	A. LATHE	
DESIGN-DETAILED	PAL	10/15/12
CHECKED-REVIEWED	PMP	10/15/12
DESIGN2-DETAILED2		
DESIGN3-DETAILED3		
REVISIONS 1		
REVISIONS 2		
REVISIONS 3		
REVISIONS 4		
FIELD CHANGES		

SIGNATURE

P.E. NUMBER

DATE

PINE POINT CROSSING
B&M RAILROAD
SCARBOROUGH CUMBERLAND COUNTY

CROSS SECTION

SHEET NUMBER

24

OF 57

RTE 9 Sta. 11+50.00 to Sta. 12+00.00

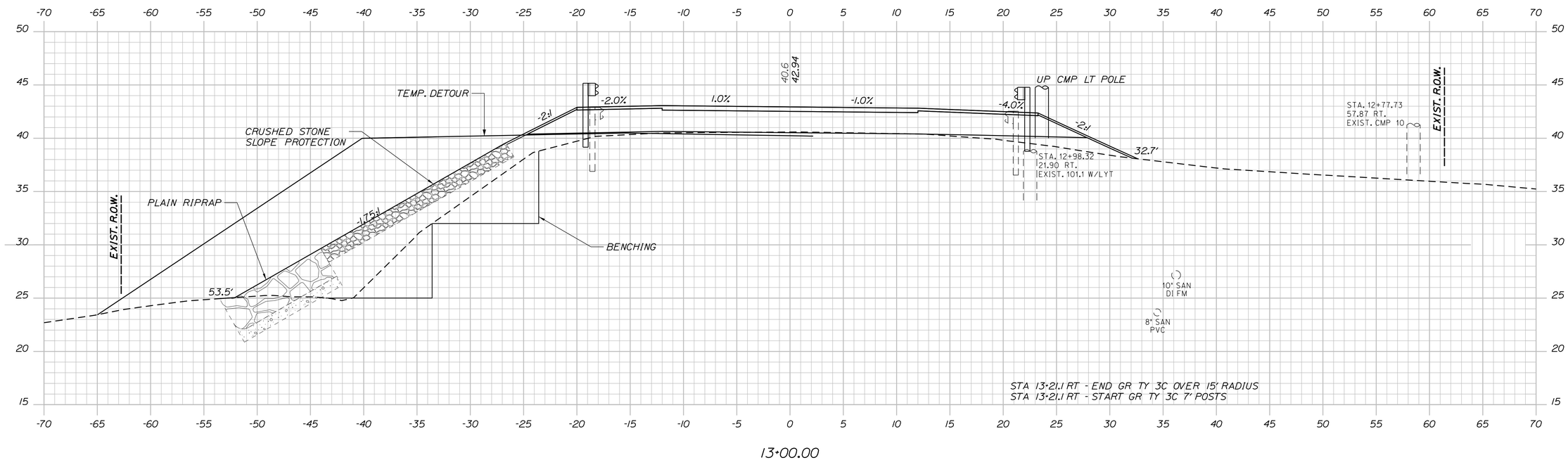

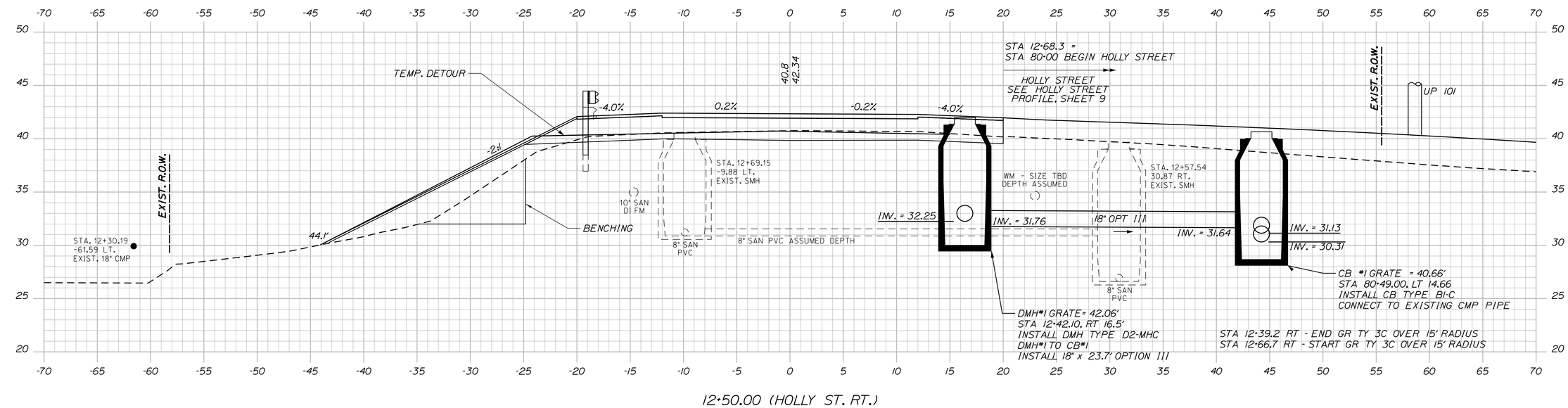

STATE OF MAINE
DEPARTMENT OF TRANSPORTATION

BH-1822(900)X

WIN 018229.00

BRIDGE NO. 5260

BRIDGE PLANS

		BY	DATE
PROJ. MANAGER	A. LATHE		
DESIGN-DETAILED	PAL	PAL	10/15/12
CHECKED-REVIEWED	PMP	PMP	10/15/12
DESIGN2-DETAILED2			
DESIGN3-DETAILED3			
REVISIONS 1			
REVISIONS 2			
REVISIONS 3			
REVISIONS 4			
FIELD CHANGES			

SIGNATURE

P.E. NUMBER

DATE

PINE POINT CROSSING
B&M RAILROAD
SCARBOROUGH CUMBERLAND COUNTY

CROSS SECTIONS

SHEET NUMBER
25
OF 57

RTE 9 Sta. 12+50.00 to Sta. 13+00.00

Division: HIGHWAY
Username:
Filename: V:\Projects\ANY\K3\24370\CADD_MSTN\Highway\025_XS4.dgn
Date:7/22/2015

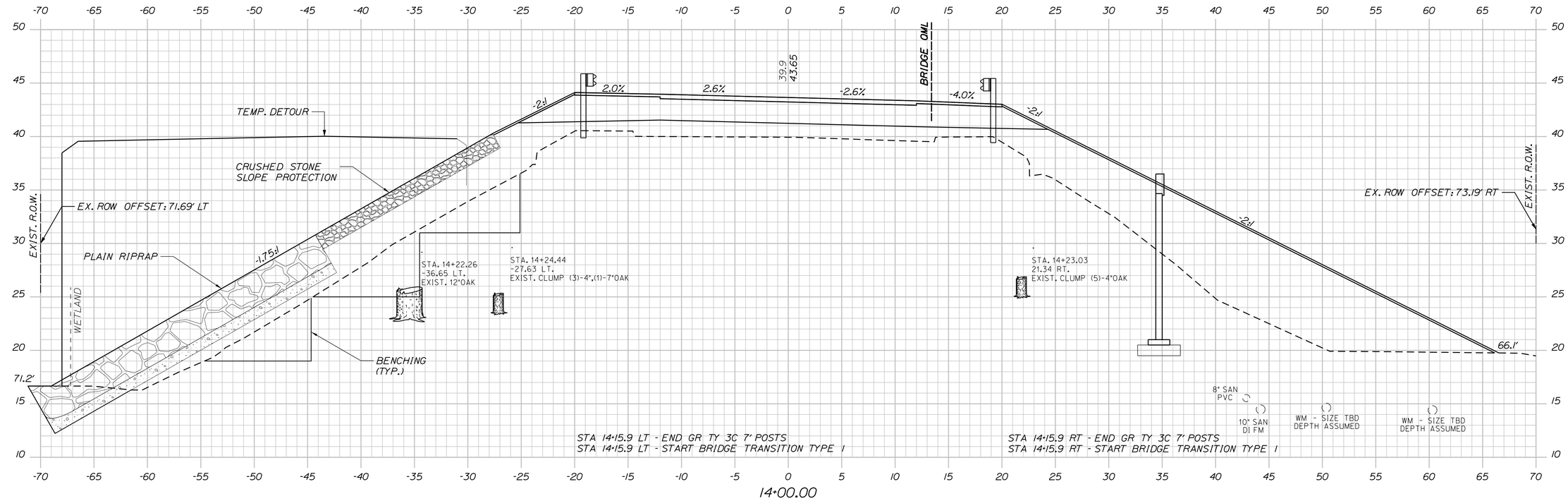

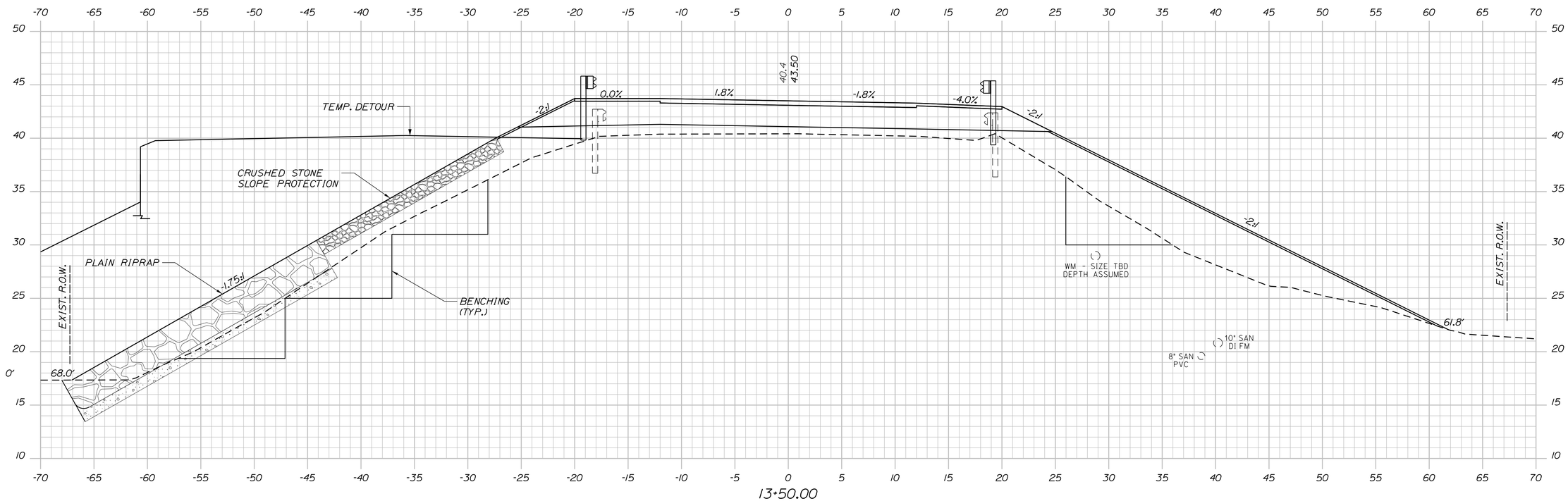

STATE OF MAINE
DEPARTMENT OF TRANSPORTATION

BH-1822(900)X

WIN 018229.00

BRIDGE NO. 5260

BRIDGE PLANS

PROJ. MANAGER	A. LATHE		
DESIGN-DETAILED	PAL	PAL	10/15/12
CHECKED-REVIEWED	PMP	PMP	10/15/12
DESIGN2-DETAILED2			
DESIGN3-DETAILED3			
REVISIONS 1			
REVISIONS 2			
REVISIONS 3			
REVISIONS 4			
FIELD CHANGES			

SIGNATURE

P.E. NUMBER

DATE

PINE POINT CROSSING
B&M RAILROAD
SCARBOROUGH CUMBERLAND COUNTY

CROSS SECTIONS

SHEET NUMBER
26
OF 57

RTE 9 Sta. 13+50.00 to Sta. 14+00.00

Division: HIGHWAY
Username:
Filename: V:\Projects\ANY\K3\24370\CADD_MSTN\Highway\026_XS5.dgn
Date:7/22/2015

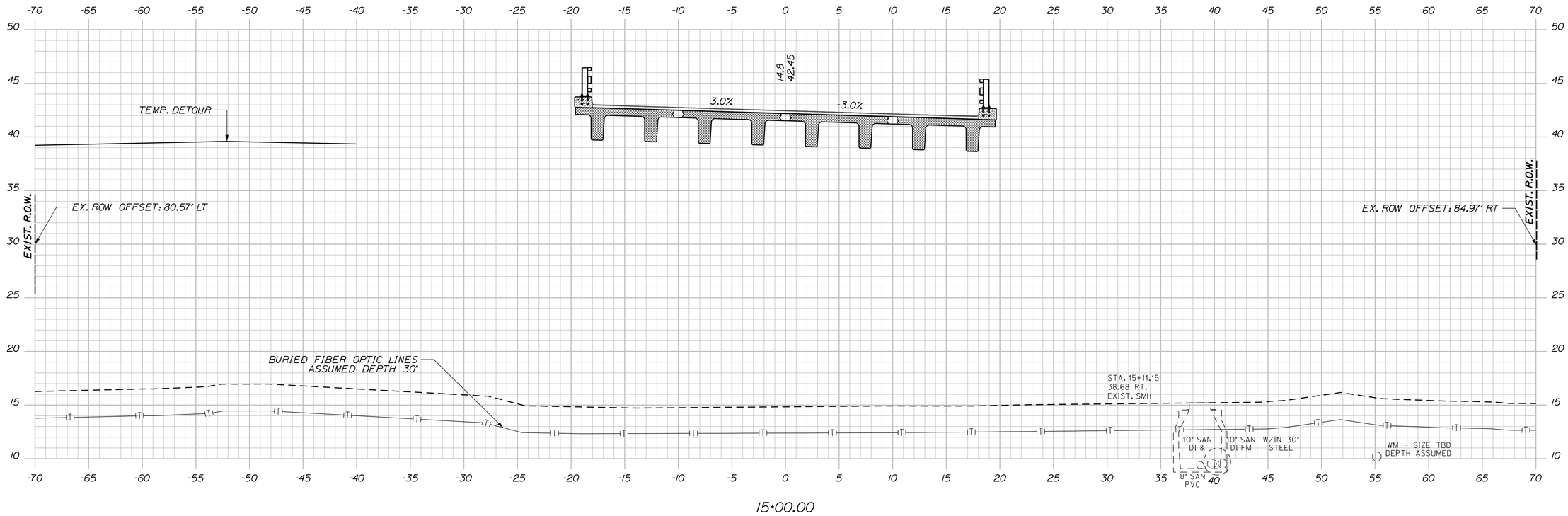

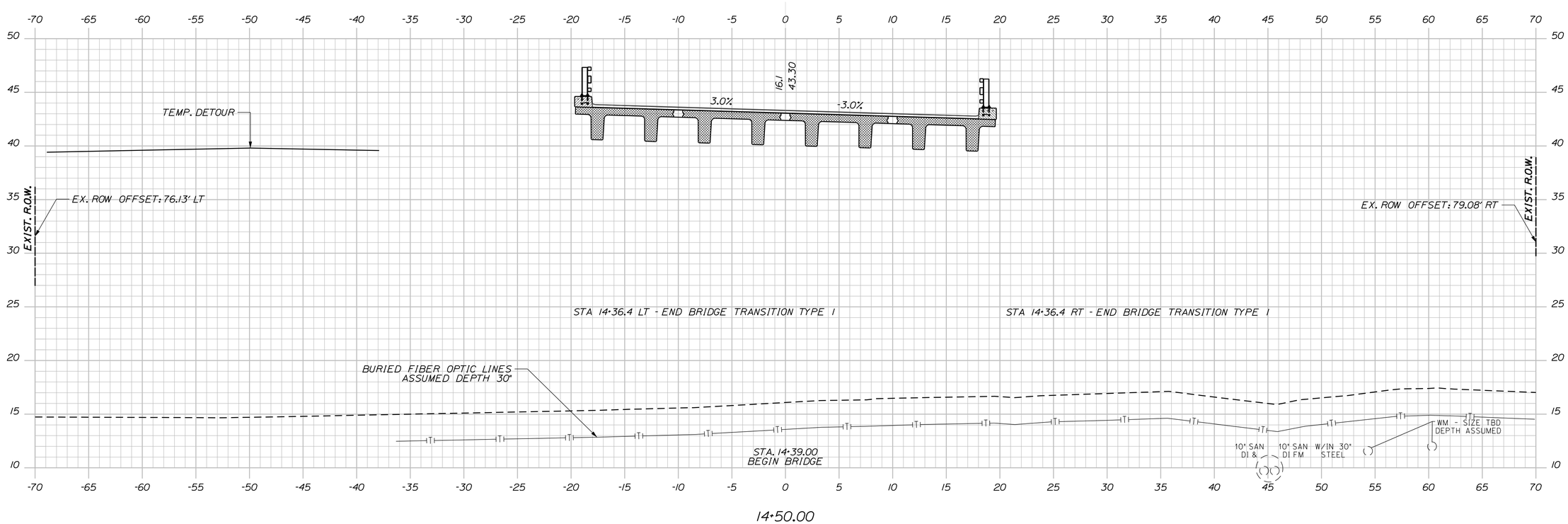

Division: HIGHWAY
Username:
Filename: V:\Projects\ANY\K3\24370\CADD_MSTN\Highway\027_XS6.dgn
Date:7/22/2015

STATE OF MAINE
DEPARTMENT OF TRANSPORTATION

BH-1822(900)X

WIN 018229.00

BRIDGE NO. 5260

BRIDGE PLANS

	BY	DATE
PROJ. MANAGER	A. LATHE	
DESIGN-DETAILED	PAL	10/15/12
CHECKED-REVIEWED	PMP	10/15/12
DESIGN2-DETAILED2		
DESIGN3-DETAILED3		
REVISIONS 1		
REVISIONS 2		
REVISIONS 3		
REVISIONS 4		
FIELD CHANGES		

SIGNATURE

P.E. NUMBER

DATE

PINE POINT CROSSING
B&M RAILROAD
SCARBOROUGH CUMBERLAND COUNTY

CROSS SECTIONS

SHEET NUMBER
27
OF 57

RTE 9 Sta. 14+50.00 to Sta. 15+00.00

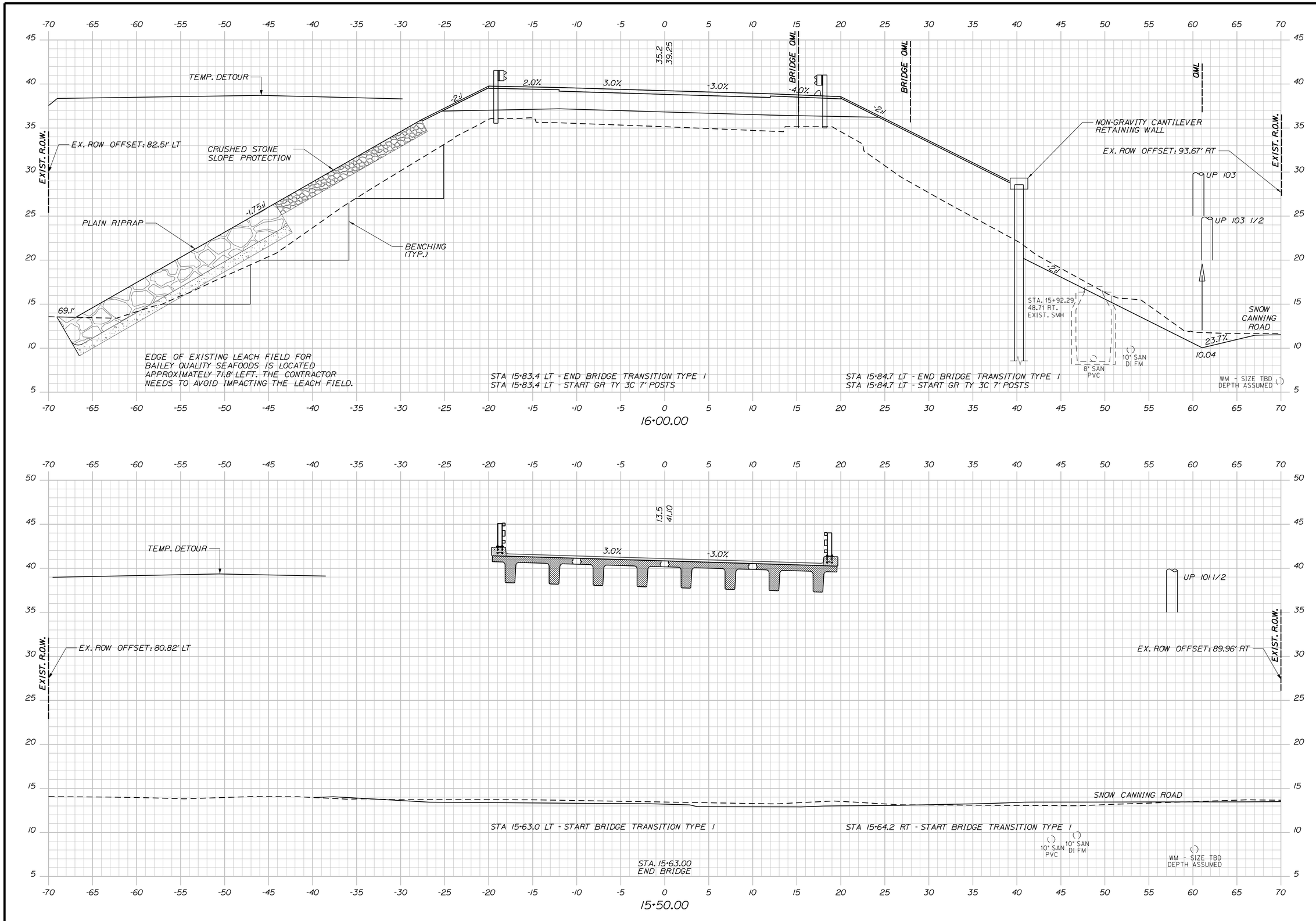

STATE OF MAINE
DEPARTMENT OF TRANSPORTATION

BH-1822(900)X

WIN 018229.00

BRIDGE NO. 5260

BRIDGE PLANS

PROJ. MANAGER	A. LATHE	BY	DATE
DESIGN-DETAILED	PAL	PAL	10/15/12
CHECKED-REVIEWED	PMP	PMP	10/15/12
DESIGN2-DETAILED2			
DESIGN3-DETAILED3			
REVISIONS 1			
REVISIONS 2			
REVISIONS 3			
REVISIONS 4			
FIELD CHANGES			

SIGNATURE

P.E. NUMBER

DATE

PINE POINT CROSSING
B&M RAILROAD
SCARBOROUGH CUMBERLAND COUNTY

CROSS SECTIONS

SHEET NUMBER

28

OF 57

Division: HIGHWAY

Username:

Filename: V:\Projects\ANY\K3\24370\CADD_MSTN\Highway\028_XS7.dgn

Date:7/22/2015

RTE 9 Sta. 15+50.00 to Sta. 16+00.00

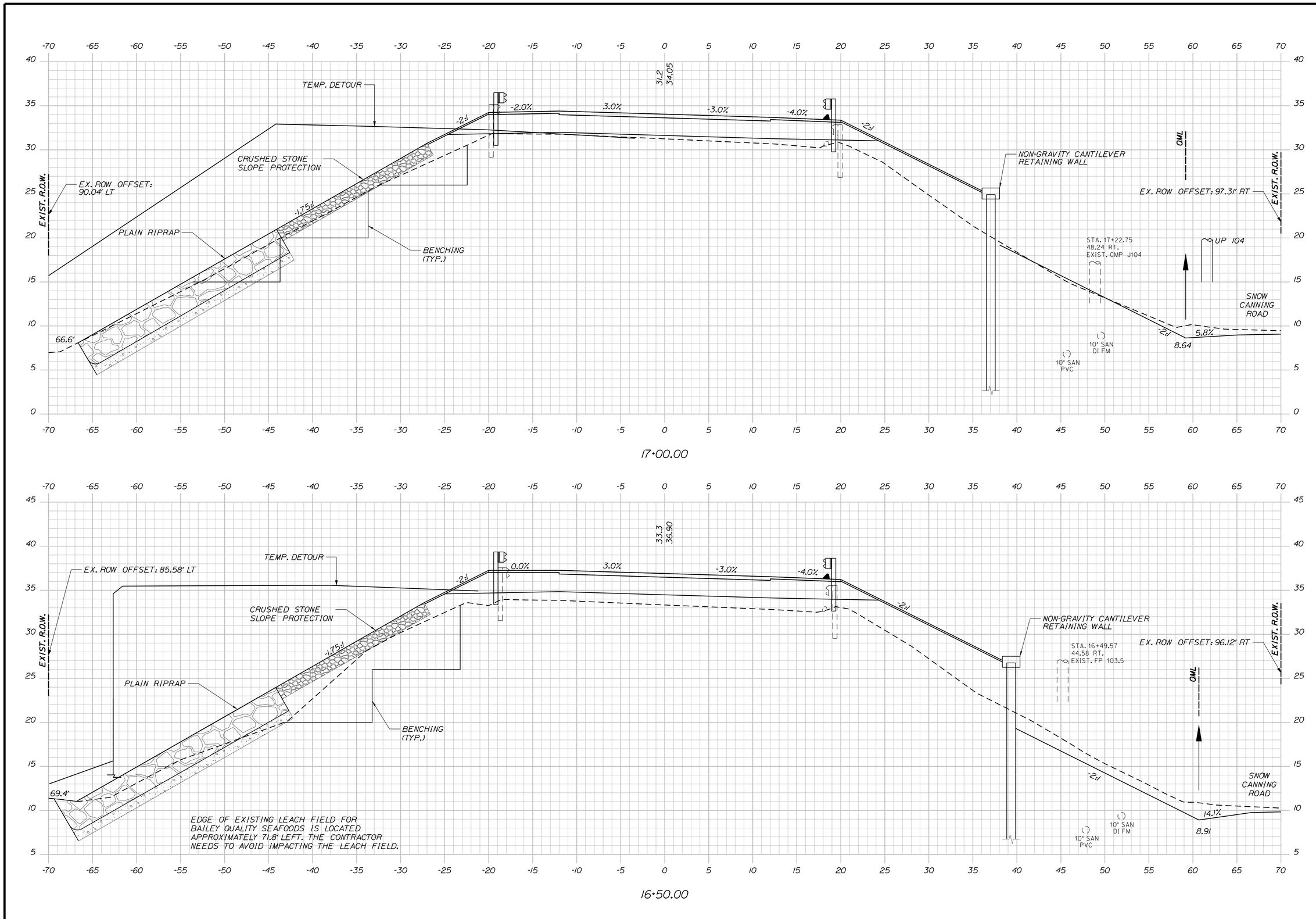

STATE OF MAINE
DEPARTMENT OF TRANSPORTATION

BH-1822(900)X

WIN 018229.00

BRIDGE NO. 5260

BRIDGE PLANS

PROJ. MANAGER	A. LATHE		
DESIGN-DETAILED	PAL	BY	DATE
CHECKED-REVIEWED	PMP	PAL	10/15/12
DESIGN2-DETAILED2		PMP	10/15/12
DESIGN3-DETAILED3			
REVISIONS 1			
REVISIONS 2			
REVISIONS 3			
REVISIONS 4			
FIELD CHANGES			

SIGNATURE

P.E. NUMBER

DATE

PINE POINT CROSSING
B&M RAILROAD
SCARBOROUGH CUMBERLAND COUNTY

CROSS SECTIONS

SHEET NUMBER

29

OF 57

RTE 9 Sta. 16+50.00 to Sta. 17+00.00

Division: HIGHWAY
Username:
Filename: V:\Projects\ANY\K3\24370\CADD_MSTN\Highway\029_XS8.dgn
Date:7/22/2015

Division: HIGHWAY

Username:

Filename: V:\Projects\ANY\K3\24370\CADD_MSTN\Highway\030_XS9.dgn

Date:7/22/2015

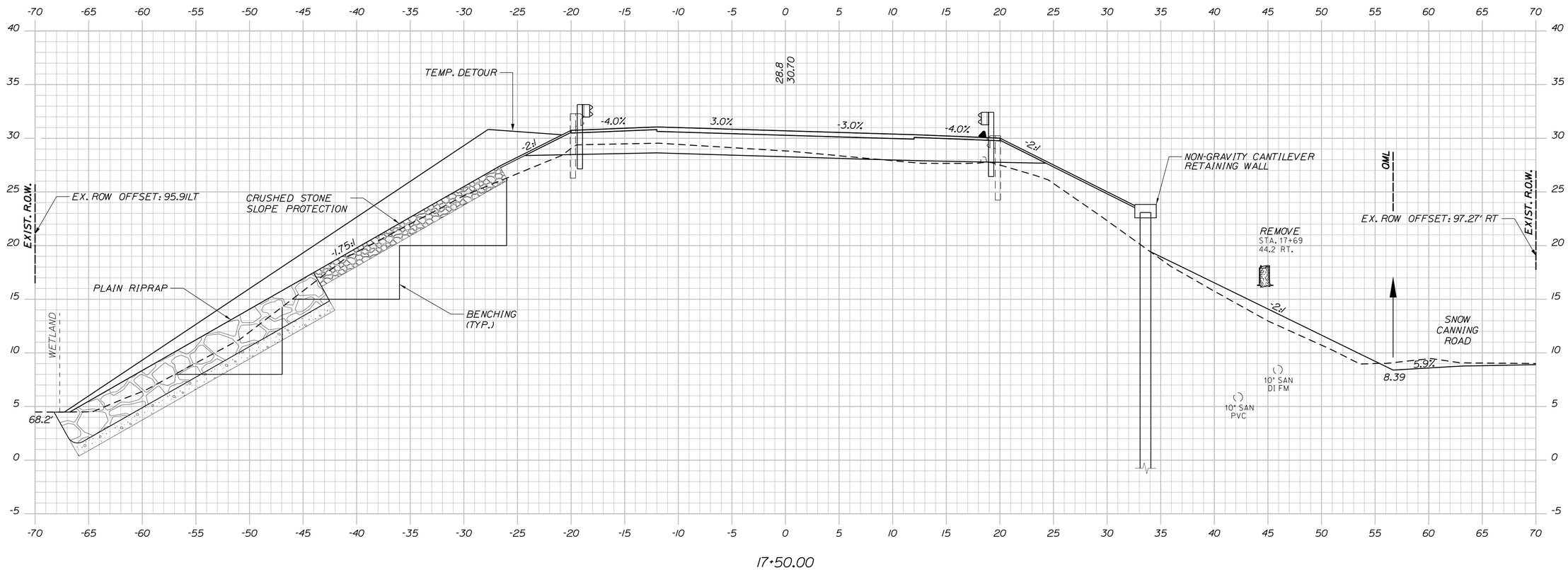

STATE OF MAINE
DEPARTMENT OF TRANSPORTATION

BH-1822(900)X

WIN 018229.00

BRIDGE NO. 5260

BRIDGE PLANS

PROJ. MANAGER	A. LATHE		
DESIGN-DETAILED	PAL	PAL	10/15/12
CHECKED-REVIEWED	PMP	PMP	10/15/12
DESIGN2-DETAILED2			
DESIGN3-DETAILED3			
REVISIONS 1			
REVISIONS 2			
REVISIONS 3			
REVISIONS 4			
FIELD CHANGES			

SIGNATURE

P.E. NUMBER

DATE

PINE POINT CROSSING
B&M RAILROAD
SCARBOROUGH CUMBERLAND COUNTY

CROSS SECTIONS

SHEET NUMBER

30

OF 57

RTE 9 Sta. 17+50.00 to Sta. 17+50.00

Filename: V:\Projects\ANY\K3\24370\CADD_MSTN\Highway\031_XS10.dgn

Division: HIGHWAY

Date:7/22/2015

Username:

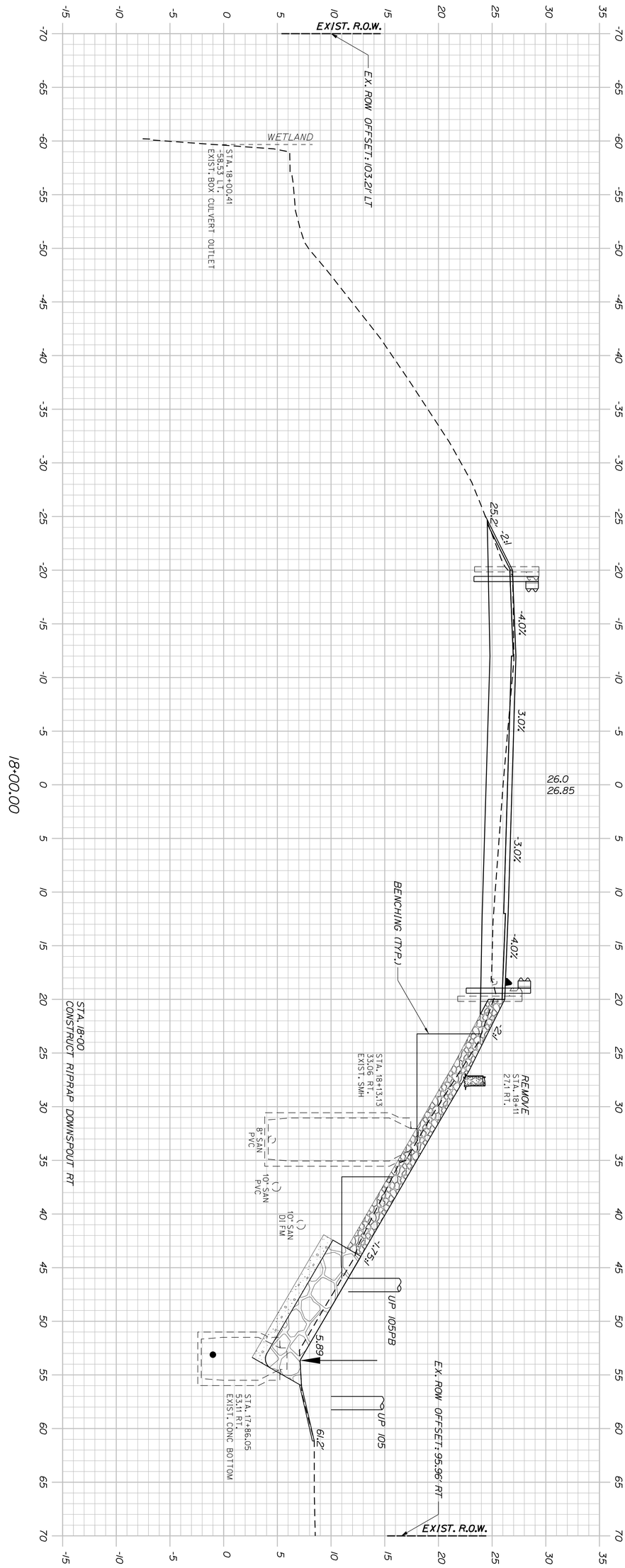

RTE 9 Sta. 18+00.00 to Sta. 18+00.00

SHEET NUMBER 31 OF 57

PINE POINT CROSSING
B&M RAILROAD
SCARBOROUGH CUMBERLAND COUNTY

CROSS SECTONS

PROJ. MANAGER	A. LATHE	BY	DATE
DESIGN-DETAILED	PAL	PAL	10/15/12
CHECKED-REVIEWED	PMP	PMP	10/15/12
DESIGN2-DETAILED2			
DESIGN3-DETAILED3			
REVISIONS 1			
REVISIONS 2			
REVISIONS 3			
REVISIONS 4			
FIELD CHANGES			

SIGNATURE

P.E. NUMBER

DATE

STATE OF MAINE
DEPARTMENT OF TRANSPORTATION

BH-1822(900)X

BRIDGE NO. 5260 WIN 018229.00 BRIDGE PLANS

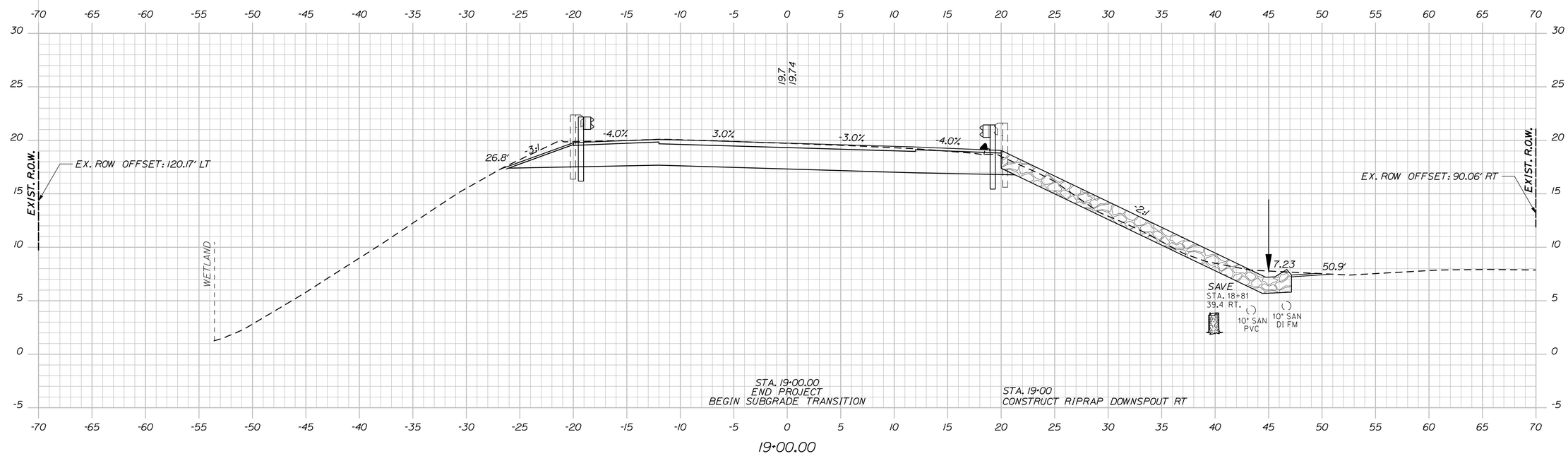

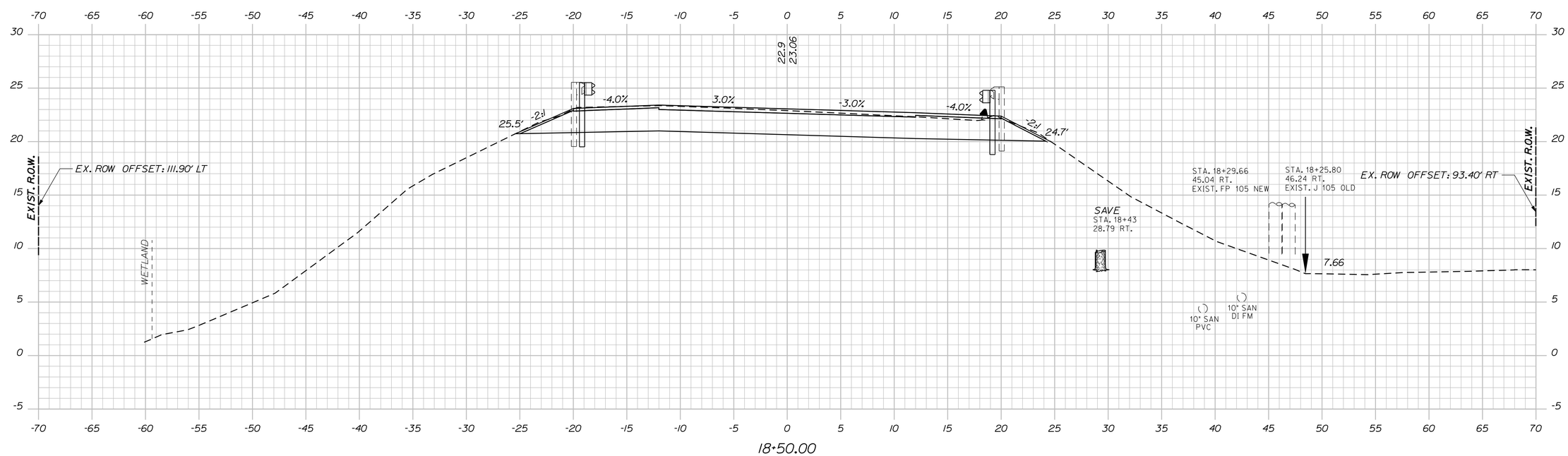

Division: HIGHWAY

Username:

Filename: V:\Projects\ANY\K3\24370\CADD_MSTN\Highway\032_XS11.dgn

Date:7/22/2015

STATE OF MAINE
DEPARTMENT OF TRANSPORTATION

BH-1822(900)X

WIN 018229.00

BRIDGE NO. 5260

BRIDGE PLANS

		BY	DATE
PROJ. MANAGER	A. LATHE		
DESIGN-DETAILED	PAL	PAL	10/15/12
CHECKED-REVIEWED	PMP	PMP	10/15/12
DESIGN2-DETAILED2			
DESIGN3-DETAILED3			
REVISIONS 1			
REVISIONS 2			
REVISIONS 3			
REVISIONS 4			
FIELD CHANGES			

SIGNATURE

P.E. NUMBER

DATE

PINE POINT CROSSING
B&M RAILROAD
SCARBOROUGH CUMBERLAND COUNTY

CROSS SECTIONS

SHEET NUMBER

32

OF 57

RTE 9 Sta. 18+50.00 to Sta. 19+00.00

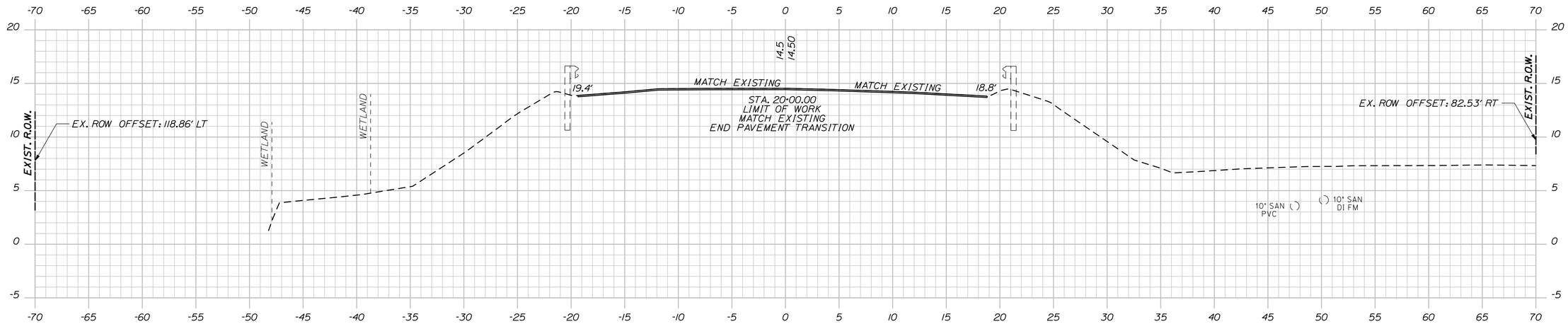

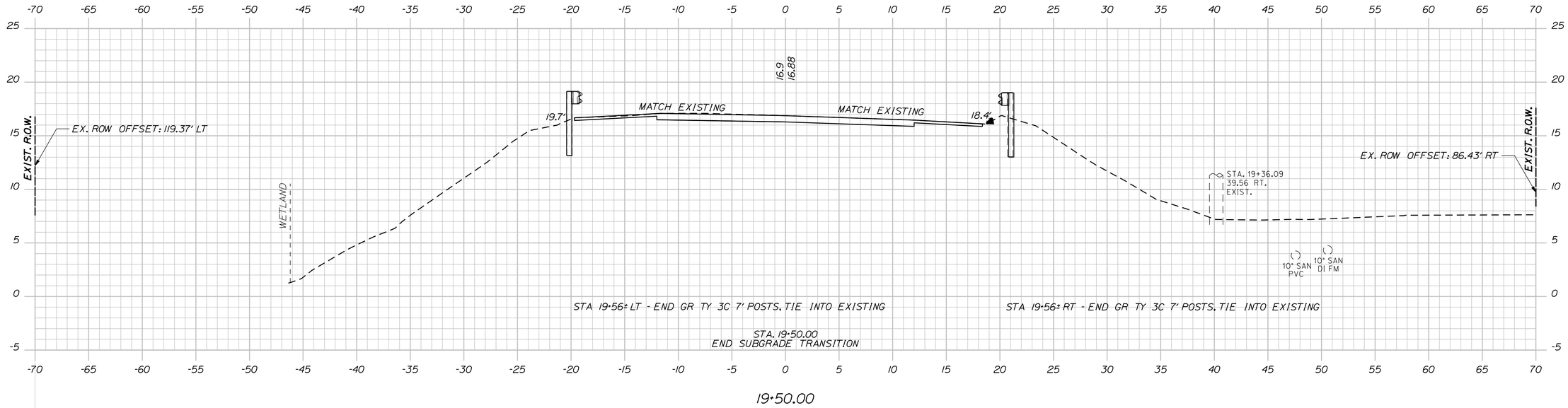

Division: HIGHWAY
Username:
Filename: V:\Projects\ANY\K3\24370\CADD_MSTN\Highway\033_XS12.dgn
Date: 7/22/2015

STATE OF MAINE
DEPARTMENT OF TRANSPORTATION

BH-1822(900)X

WIN 018229.00

BRIDGE NO. 5260

BRIDGE PLANS

PROJ. MANAGER	A. LATHE	BY	DATE
DESIGN-DETAILED	PAL	PAL	10/15/12
CHECKED-REVIEWED	PMP	PMP	10/15/12
DESIGN2-DETAILED2			
DESIGN3-DETAILED3			
REVISIONS 1			
REVISIONS 2			
REVISIONS 3			
REVISIONS 4			
FIELD CHANGES			

SIGNATURE

P.E. NUMBER

DATE

PINE POINT CROSSING
B&M RAILROAD
SCARBOROUGH CUMBERLAND COUNTY

CROSS SECTIONS

SHEET NUMBER
33
OF 57

RTE 9 Sta. 19+50.00 to Sta. 20+00.00

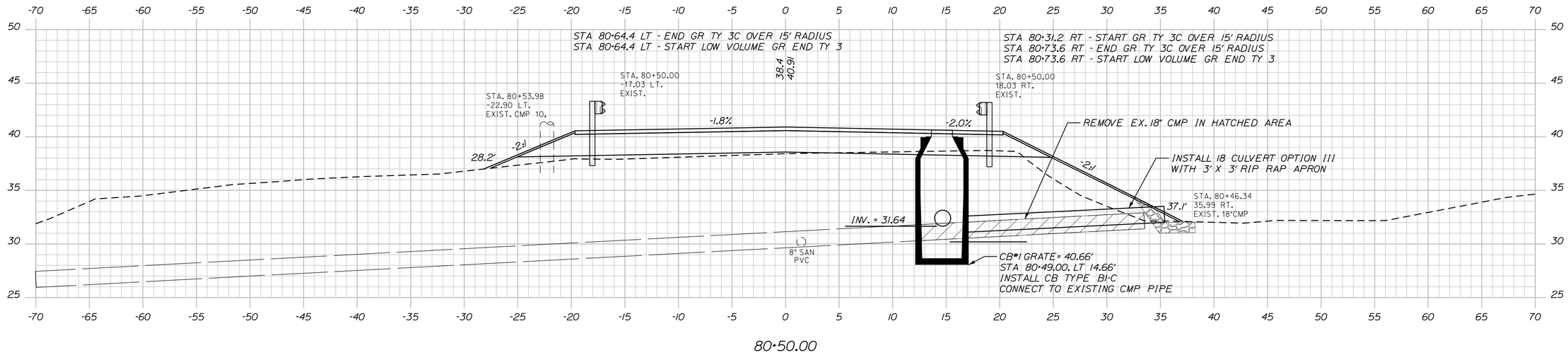

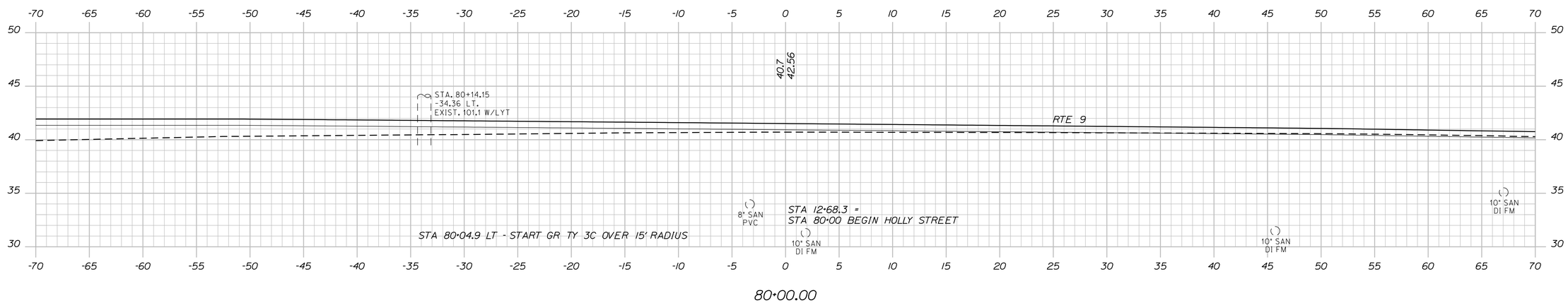

STATE OF MAINE
DEPARTMENT OF TRANSPORTATION

BH-1822(900)X

WIN 018229.00

HIGHWAY PLANS

	A. LATHE	BY	DATE
PROJ. MANAGER			
DESIGN-DETAILED	PAL	PAL	10/15/12
CHECKED-REVIEWED	PMP		10/15/12
DESIGN2-DETAILED2			
DESIGN3-DETAILED3			
REVISIONS 1			
REVISIONS 2			
REVISIONS 3			
REVISIONS 4			
FIELD CHANGES			

SIGNATURE

P.E. NUMBER

DATE

PINE POINT CROSSING
B&M RAILROAD
SCARBOROUGH CUMBERLAND COUNTY

CROSS SECTIONS

SHEET NUMBER

34

OF 57

HOLLY STREET Sta. 80+00.00 to Sta. 80+50.00

Division: HIGHWAY
Username:

Filename: V:\Projects\ANY\K3\24370\CADD_MSTN\Highway\034_XS_80+00.dgn
Date: 7/22/2015

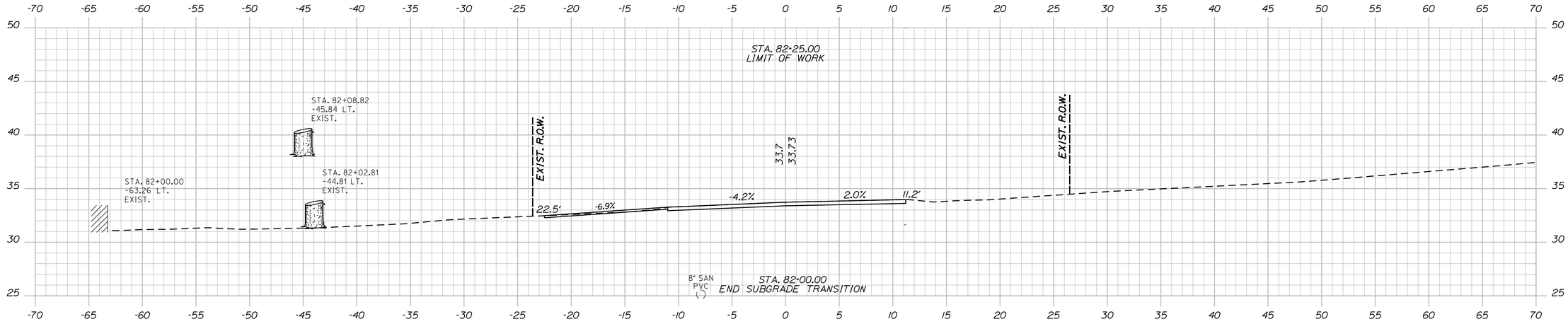

CONSTRUCT PAVED DRIVE

82+00.00

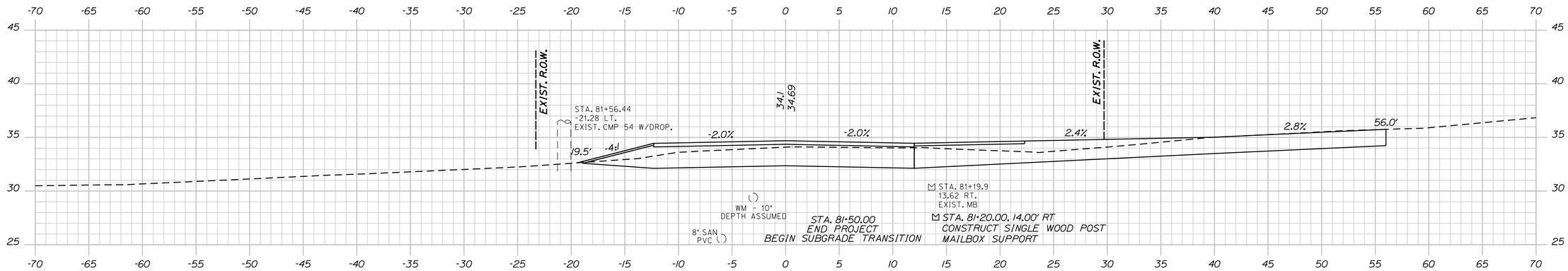

81+50.00

CONSTRUCT GRAVEL DRIVE WITH 10' PAVED APRON

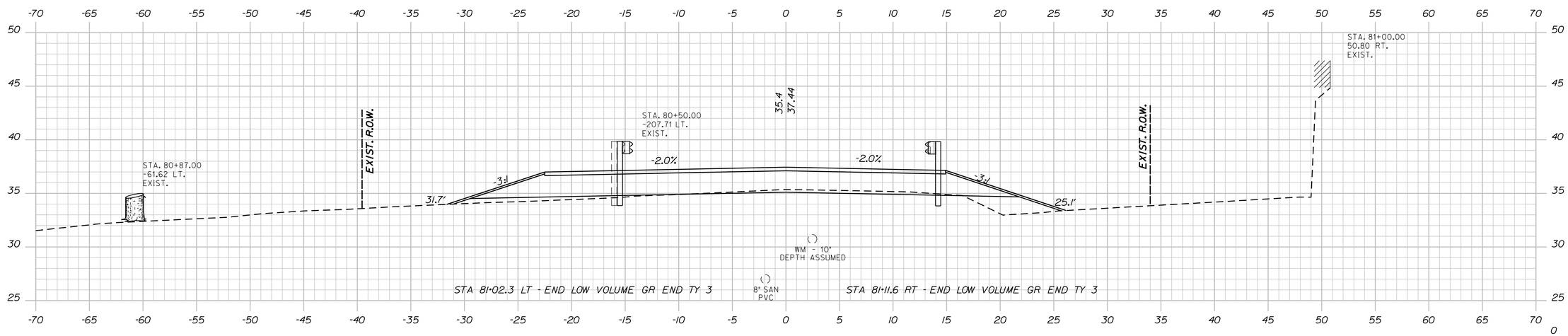

81+00.00

STATE OF MAINE
DEPARTMENT OF TRANSPORTATION

BH-1822(900)X

WIN
018229.00

HIGHWAY PLANS

PROJ. MANAGER	A. LATHE	BY	DATE
DESIGN-DETAILED	PAL	PAL	10/15/12
CHECKED-REVIEWED	PMP		10/15/12
DESIGN2-DETAILED2			
DESIGN3-DETAILED3			
REVISIONS 1			
REVISIONS 2			
REVISIONS 3			
REVISIONS 4			
FIELD CHANGES			

SIGNATURE

P.E. NUMBER

DATE

PINE POINT CROSSING
B&M RAILROAD
SCARBOROUGH CUMBERLAND COUNTY

CROSS SECTIONS

SHEET NUMBER
35
OF 57

Division: HIGHWAY
Username:
Filename: V:\Projects\ANY\K3\24370\CADD_MSTN\Highway\035_XS_81+00.dgn
Date: 7/22/2015

HOLLY STREET Sta. 81+00.00 to Sta. 82+00.00

Division: HIGHWAY
Username:

Filename: V:\Projects\ANY\K3\24370\CADD_MSTN\Highway\036_XS_82+00.dgn
Date: 7/22/2015

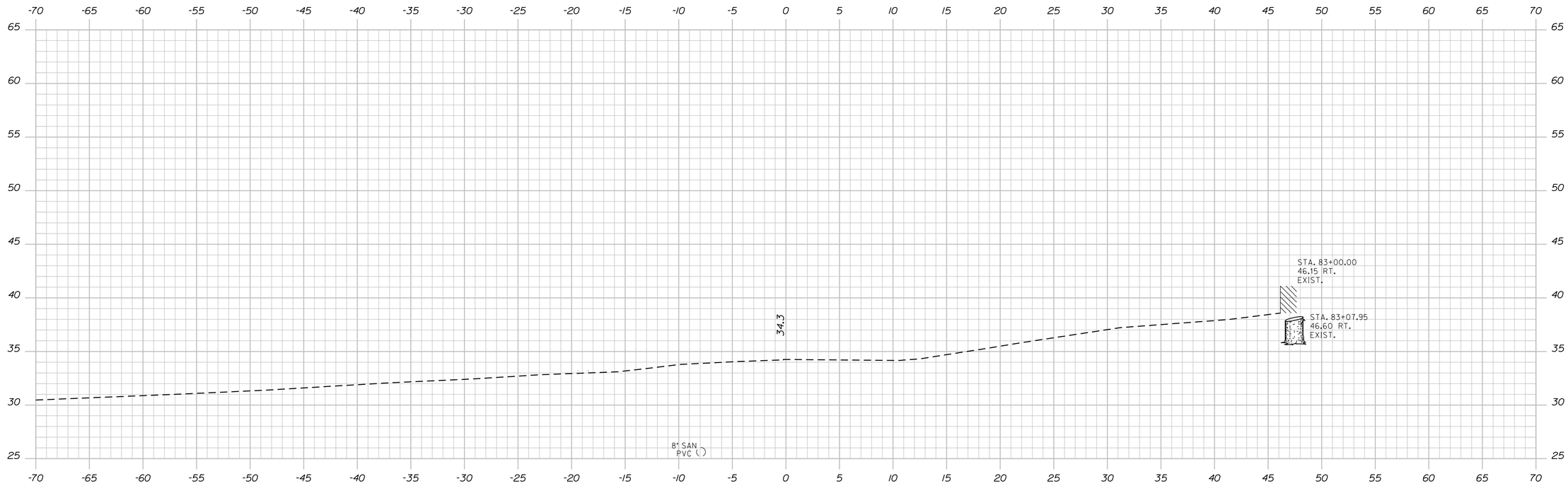

83+00.00

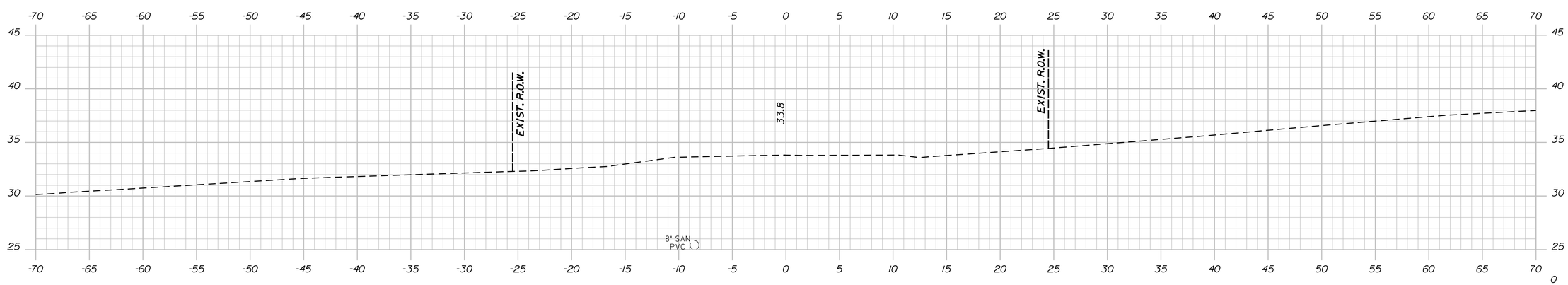

82+50.00

STATE OF MAINE
DEPARTMENT OF TRANSPORTATION

BH-1822(900)X

WIN 018229.00

HIGHWAY PLANS

PROJ. MANAGER		A. LATHE	BY
DESIGN-DETAILED	PAL	PAL	PAL
CHECKED-REVIEWED	PMP		
DESIGN2-DETAILED2			
DESIGN3-DETAILED3			
REVISIONS 1			
REVISIONS 2			
REVISIONS 3			
REVISIONS 4			
FIELD CHANGES			

	DATE
	10/15/12
	10/15/12

SIGNATURE

P.E. NUMBER

DATE

PINE POINT CROSSING
B&M RAILROAD
SCARBOROUGH CUMBERLAND COUNTY

CROSS SECTIONS

SHEET NUMBER

36

OF 57

HOLLY STREET Sta. 82+50.00 to Sta. 83+00.00

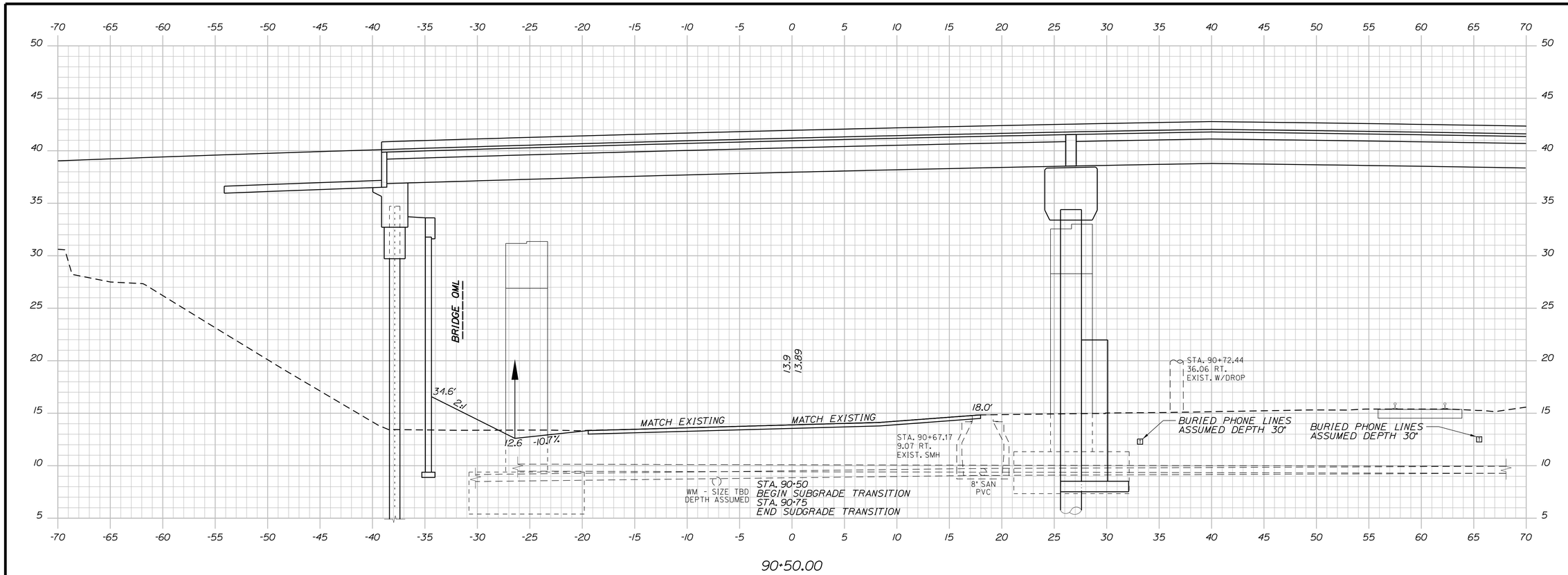

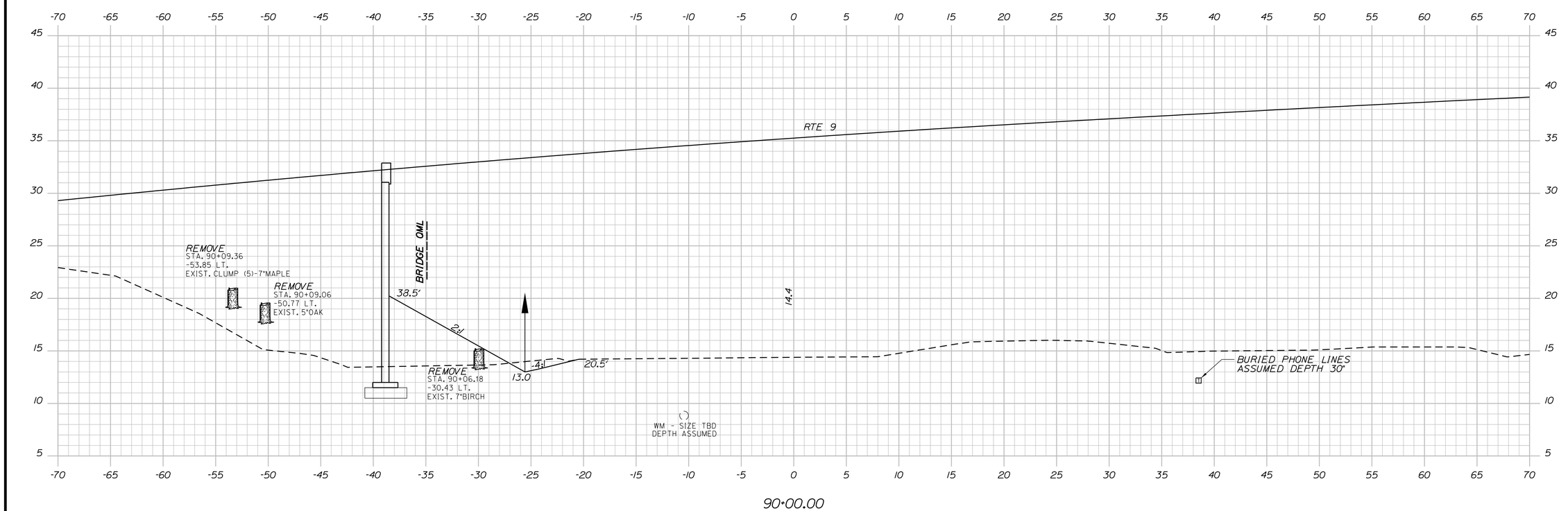

STATE OF MAINE
DEPARTMENT OF TRANSPORTATION

BH-1822(900)X

WIN
018229.00

HIGHWAY PLANS

PROJ. MANAGER	A. LATHE	BY	DATE
DESIGN-DETAILED	PAL	PAL	10/15/12
CHECKED-REVIEWED	PMP		10/15/12
DESIGN2-DETAILED2			
DESIGN3-DETAILED3			
REVISIONS 1			
REVISIONS 2			
REVISIONS 3			
REVISIONS 4			
FIELD CHANGES			

SIGNATURE

P.E. NUMBER

DATE

PINE POINT CROSSING
B&M RAILROAD
SCARBOROUGH CUMBERLAND COUNTY

CROSS SECTIONS

SHEET NUMBER
37
OF 57

SNOW CANNING ROAD Sta. 90+00.00 to Sta. 90+50.00

Division: HIGHWAY
Username:

Filename: V:\Projects\ANY\K3\24370\CADD_MSTN\Highway\037_XS_90+00.dgn
Date: 7/22/2015

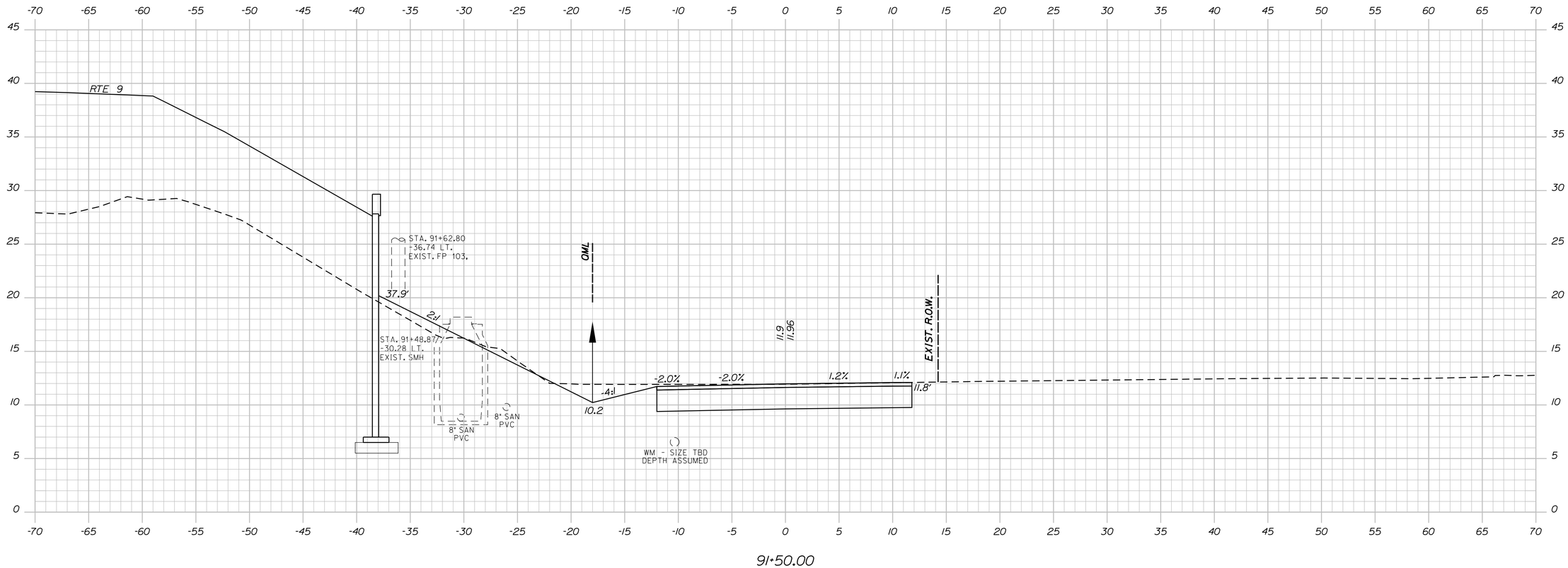

91+50.00

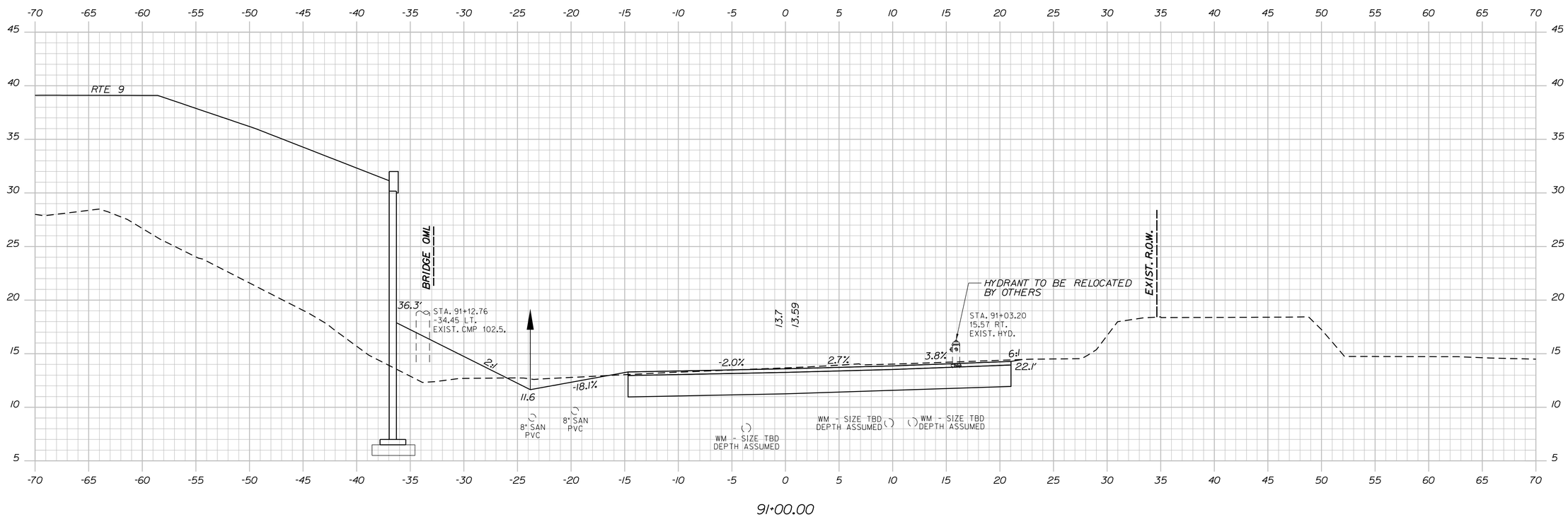

91+00.00

STATE OF MAINE
DEPARTMENT OF TRANSPORTATION

BH-1822(900)X

WIN
018229.00

HIGHWAY PLANS

PROJ. MANAGER		BY	DATE
DESIGN-DETAILED	PAL	PAL	10/15/12
CHECKED-REVIEWED	PMP		10/15/12
DESIGN2-DETAILED2			
DESIGN3-DETAILED3			
REVISIONS 1			
REVISIONS 2			
REVISIONS 3			
REVISIONS 4			
FIELD CHANGES			

A. LATHE

SIGNATURE

P.E. NUMBER

DATE

PINE POINT CROSSING
B&M RAILROAD
SCARBOROUGH CUMBERLAND COUNTY

CROSS SECTIONS

SHEET NUMBER
38
OF 57

SNOW CANNING ROAD Sta. 91+00.00 to Sta. 91+50.00

Division: HIGHWAY
Username:

Filename: V:\Projects\ANY\K3\24370\CADD_MSTN\Highway\038_XS_91+00.dgn
Date: 7/22/2015

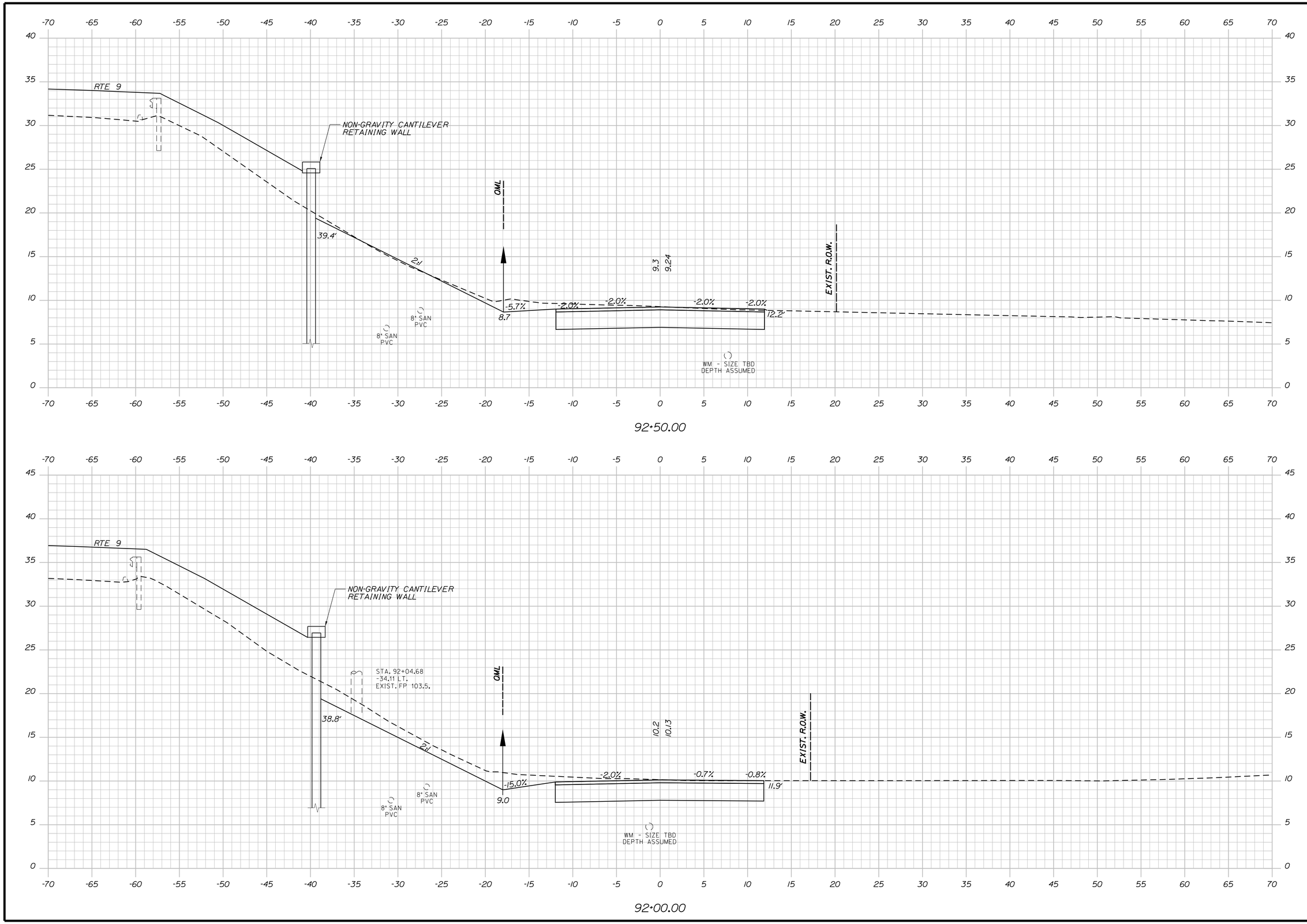

STATE OF MAINE
DEPARTMENT OF TRANSPORTATION

BH-1822(900)X

WIN 018229.00

HIGHWAY PLANS

PROJ. MANAGER	A. LATHE	BY	DATE
DESIGN-DETAILED	PAL	PAL	10/15/12
CHECKED-REVIEWED	PMP		10/15/12
DESIGN2-DETAILED2			
DESIGN3-DETAILED3			
REVISIONS 1			
REVISIONS 2			
REVISIONS 3			
REVISIONS 4			
FIELD CHANGES			

SIGNATURE

P.E. NUMBER

DATE

PINE POINT CROSSING
B&M RAILROAD
SCARBOROUGH CUMBERLAND COUNTY

CROSS SECTIONS

SHEET NUMBER

39

OF 57

Division: HIGHWAY
Username:

Filename: V:\Projects\ANY\K3\24370\CADD_MSTN\Highway\039_XS_92+00.dgn
Date: 7/22/2015

SNOW CANNING ROAD Sta. 92+00.00 to Sta. 92+50.00

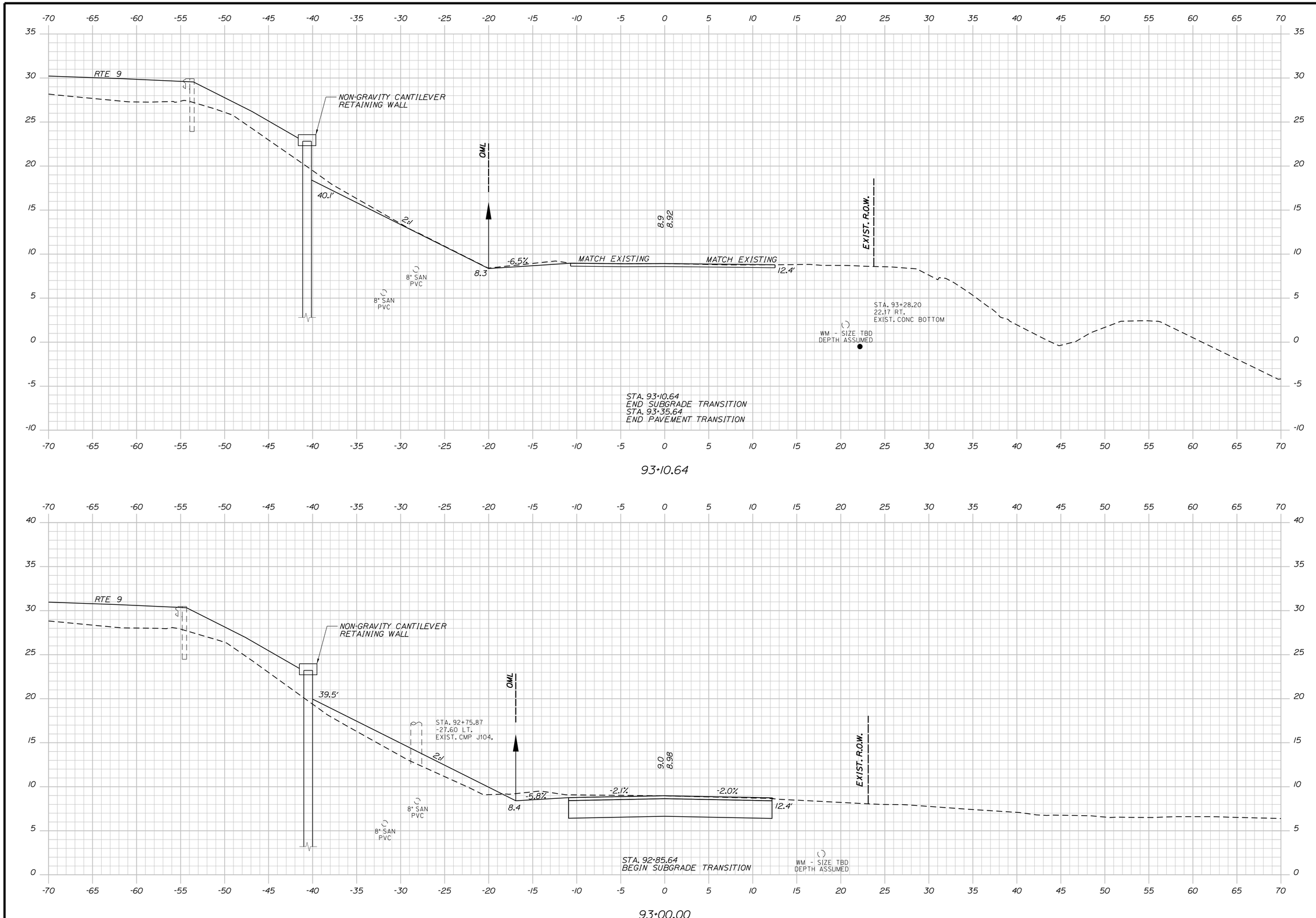

STATE OF MAINE
DEPARTMENT OF TRANSPORTATION

BH-1822(900)X

WIN 018229.00

HIGHWAY PLANS

PROJ. MANAGER			
DESIGN-DETAILED	PAL	PAL	10/15/12
CHECKED-REVIEWED	PMP		10/15/12
DESIGN2-DETAILED2			
DESIGN3-DETAILED3			
REVISIONS 1			
REVISIONS 2			
REVISIONS 3			
REVISIONS 4			
FIELD CHANGES			

SIGNATURE

P.E. NUMBER

DATE

PINE POINT CROSSING
B&M RAILROAD
SCARBOROUGH CUMBERLAND COUNTY

CROSS SECTIONS

SHEET NUMBER

40

OF 57

SNOW CANNING ROAD Sta. 93+00.00 to Sta. 93+10.64

Division: HIGHWAY
Username:

Filename: V:\Projects\ANY\K3\24370\CADD_MSTN\Highway\040_XS_93+00.dgn
Date: 7/22/2015

Filename: V:\Projects\ANY\K3\24370\CADD_MSTN\Highway\041_XS_93+50.dgn
Date: 7/22/2015
Division: HIGHWAY
Username:

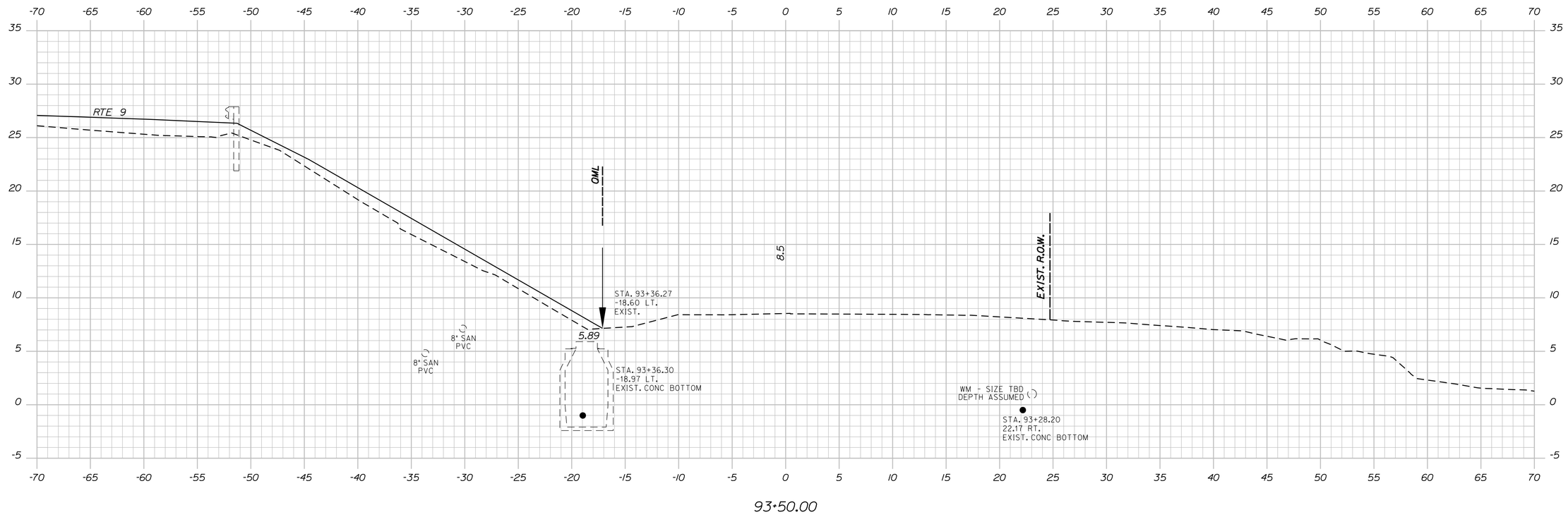

PROJ. MANAGER	A. LATHE	BY	DATE
DESIGN-DETAILED	PAL	PAL	10/15/12
CHECKED-REVIEWED	PMP		10/15/12
DESIGN2-DETAILED2			
DESIGN3-DETAILED3			
REVISIONS 1			
REVISIONS 2			
REVISIONS 3			
REVISIONS 4			
FIELD CHANGES			

SIGNATURE

P.E. NUMBER

DATE

STATE OF MAINE
DEPARTMENT OF TRANSPORTATION

BH-1822(900)X

WIN 018229.00

HIGHWAY PLANS

PINE POINT CROSSING
B&M RAILROAD
SCARBOROUGH CUMBERLAND COUNTY

CROSS SECTIONS

SHEET NUMBER
41
OF 57

SNOW CANNING ROAD Sta. 93+50.00 to Sta. 93+50.00

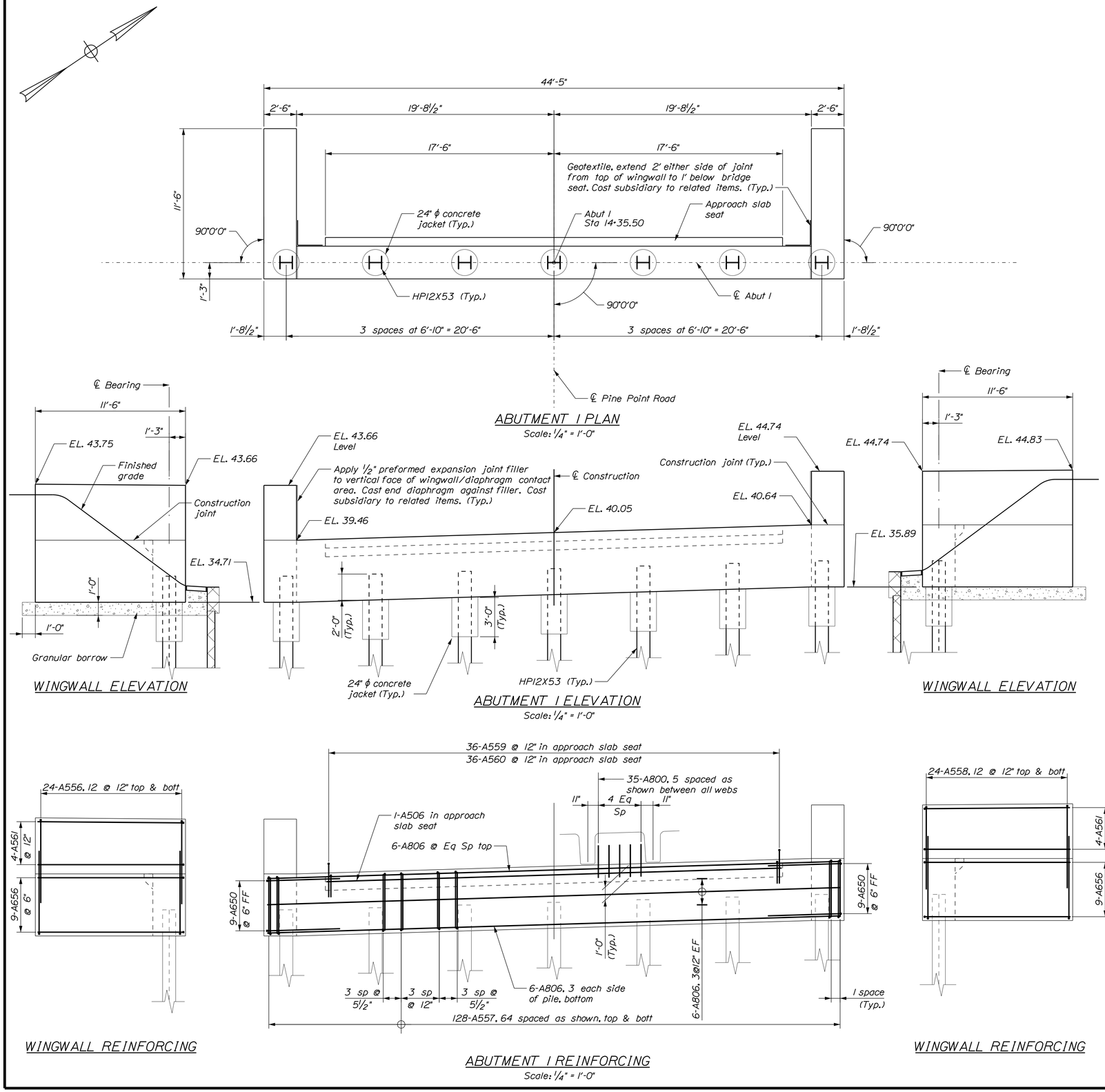

ABUTMENT NOTES

1. Structural Earth Excavation, Abutments and Retaining Walls, required more than 12 inches below the bottom of the structure, will be paid for in accordance with Standard Specifications Section 206, Structural Excavation.

2. Reinforcing steel shall have a minimum concrete cover of 2½ inches in the walls unless otherwise noted.

3. Cover joints where waterstops are not required in accordance with Standard Details Section 502.

4. Abutments, wingwalls and their footings shall be backfilled with Granular Borrow. Pay limits will be the structural excavation limits in cut areas and a vertical plane located 10 feet behind the walls in fill areas.

5. Payment for the concrete jacket around the top of the H-piles will not be paid for directly, but shall be considered incidental to Pay Item No. 502.219 Structural concrete Abutments and Retaining Walls. Fill concrete may be used for the concrete jackets.

ABUTMENT PILE NOTES

1. The maximum factored pile load is 269.3 kips (including 104.3 kips allowed for factored downdrag).

2. H-pile material shall be ASTM A 572, Grade 50.

3. Estimate of piles required:

Abutment No. 1:	7 HP12x53 @ 67 feet max
Abutment No. 2:	7 HP12x53 @ 100 feet max

4. All piles shall be equipped with a pile tip in accordance with Standard Specifications Section 501.10, Prefabricated Pile Tips.

5. Piles shall be driven to bedrock in accordance with Standard Specification Section 501.

6. Piles shall not be out of position shown by more than 2 inches in any direction.

7. The Contractor shall perform and submit two (2) wave equation analyses for piles at each Abutment No. 1 and Abutment No. 2 for review and acceptance by the Resident. The maximum allowable driving stress is 0.90 times Fy. The submitted analyses shall include the proposed stopping criteria based on the wave equation analysis and the proposed driving system. The stopping criteria shall include the blows per inch and the number of 1" intervals at which pile installation may be terminated. The cost of performing the wave equation analysis will be considered incidental to Item No. 501.92, Pile Driving Equipment Mobilization.

8. The Contractor shall perform two (2) dynamic load tests with signal matching and 48-hour (minimum) restrike at each Abutment No. 1 and Abutment No. 2 to confirm the nominal resistance of the piles. The required nominal resistance for the piles is the maximum factored axial pile load divided by a resistance factor equal to 0.65 per LRFD Specifications. The dynamic pile load tests shall be performed on the first production piles driven, or as directed by the Resident. Piles will not be cut to the cut-off elevation until the restrike dynamic tests are completed and CAPWAP analyses submitted to the Resident in the case that restrike test results necessitate a revised driving criteria.

STATE OF MAINE
DEPARTMENT OF TRANSPORTATION

BH-1822(900)X

WIN 018229.00

BRIDGE NO. 5260

BRIDGE PLANS

PROJ. MANAGER	A. LATHE	BY	DATE
DESIGN-DETAILED	PAL	PAL	10/15/12
CHECKED-REVIEWED	PMP	PMP	10/15/12
DESIGN2-DETAILED2			
DESIGN3-DETAILED3			
REVISIONS 1			
REVISIONS 2			
REVISIONS 3			
REVISIONS 4			
FIELD CHANGES			

SIGNATURE

P.E. NUMBER

DATE

PINE POINT CROSSING
B&M RAILROAD
SCARBOROUGH CUMBERLAND COUNTY

ABUTMENT No. 1

SHEET NUMBER
42
OF 57

Division: HIGHWAY
Username:
Filename: V:\Projects\ANY\K3\24370\CADD_MSTN\042_Abut-1.dgn
Date:7/22/2015

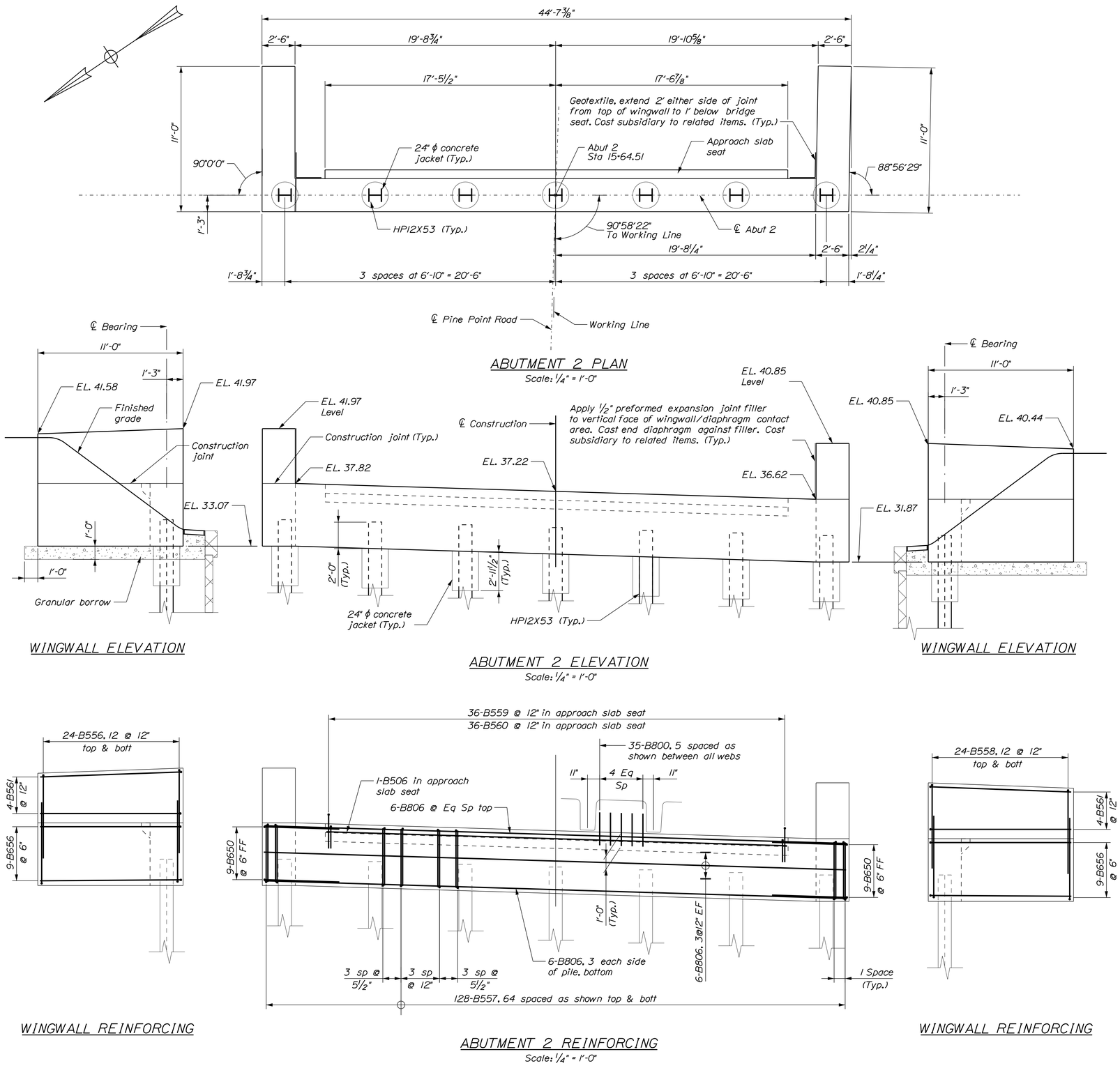

Division: HIGHWAY

Username:

Filename: V:\Projects\ANY\K3\24370\CADD_MSTN\043_Abut-2.dgn

Date: 7/22/2015

STATE OF MAINE
DEPARTMENT OF TRANSPORTATION

BH-1822(900)X

WIN 018229.00

BRIDGE NO. 5260

BRIDGE PLANS

	BY	DATE
PROJ. MANAGER	A. LATHE	
DESIGN-DETAILED	PAL	10/15/12
CHECKED-REVIEWED	PMP	10/15/12
DESIGN2-DETAILED2		
DESIGN3-DETAILED3		
REVISIONS 1		
REVISIONS 2		
REVISIONS 3		
REVISIONS 4		
FIELD CHANGES		

SIGNATURE

P.E. NUMBER

DATE

PINE POINT CROSSING
B&M RAILROAD
SCARBOROUGH CUMBERLAND COUNTY

ABUTMENT No. 2

SHEET NUMBER

43

OF 57

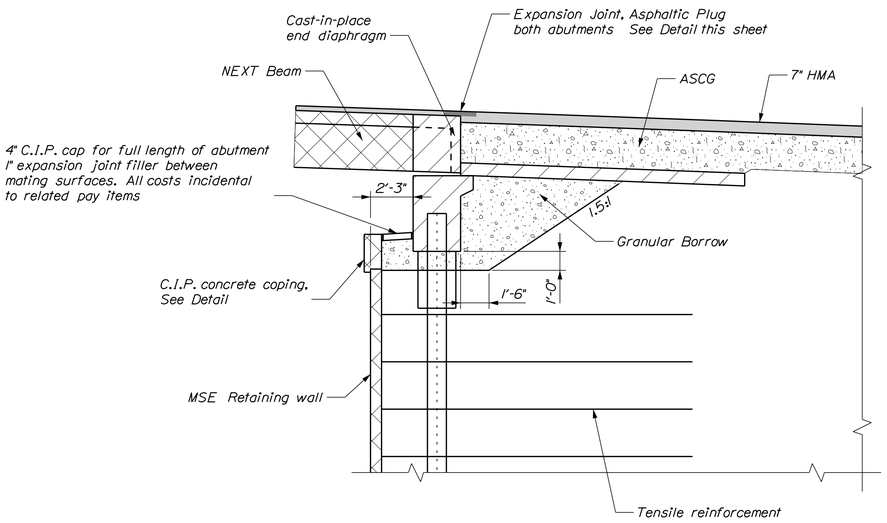

TYPICAL ABUTMENT SECTION

Scale: 1/4" = 1'-0"

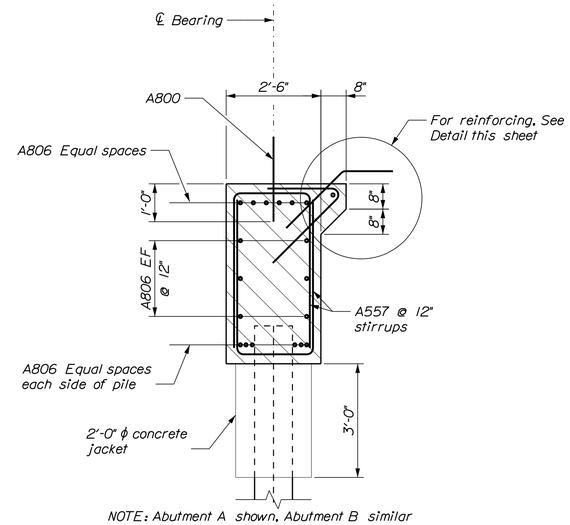

NOTE: Abutment A shown. Abutment B similar

ABUTMENT REINFORCING SECTION

Scale: 1/2" = 1'-0"

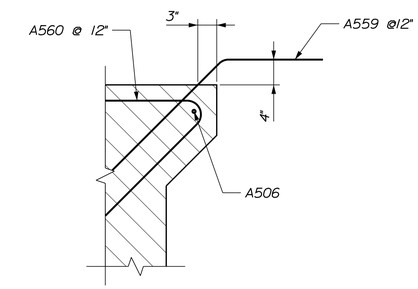

NOTE: Abutment A shown. Abutment B similar

APPROACH SLAB SHELF REINFORCING

Scale: 1" = 1'-0"

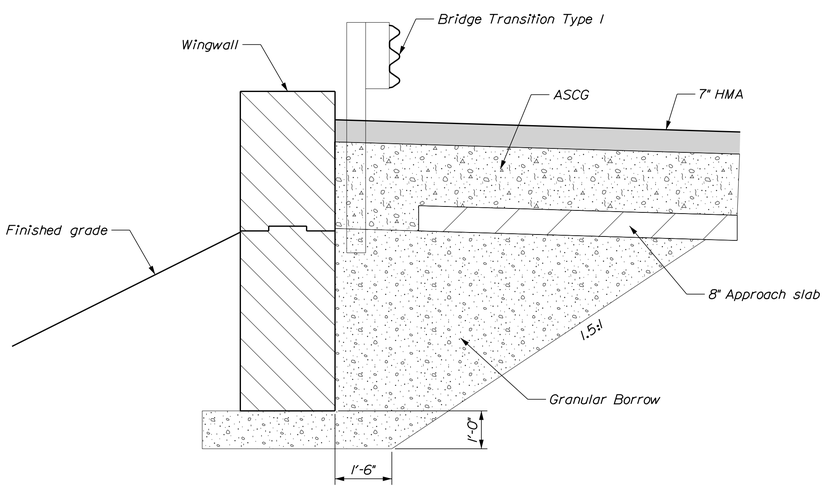

TYPICAL WINGWALL SECTION

Scale: 1/2" = 1'-0"

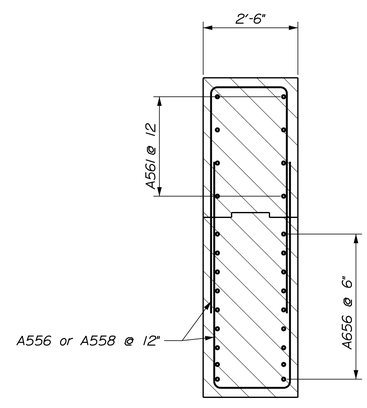

NOTE: Abutment A shown. Abutment B similar

WINGWALL REINFORCING SECTION

Scale: 1/2" = 1'-0"

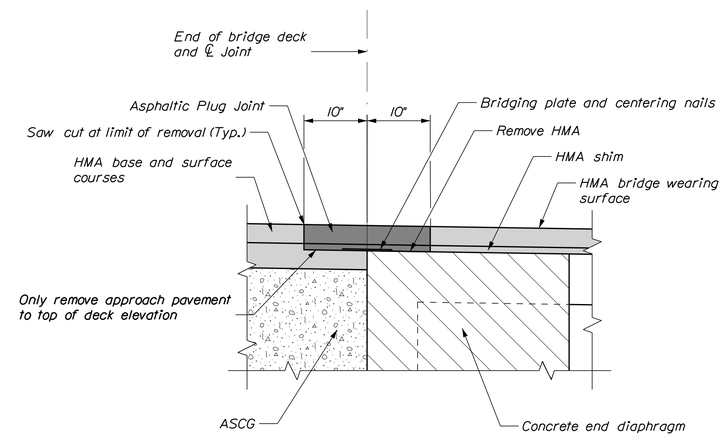

EXPANSION JOINT DETAIL

Scale: 1" = 1'-0"

STATE OF MAINE
DEPARTMENT OF TRANSPORTATION

BH-1822(900)X

WIN 018229.00

BRIDGE NO. 5260

BRIDGE PLANS

PROJ. MANAGER	A. LATHE		
DESIGN-DETAILED	PAL	BY	DATE
CHECKED-REVIEWED	PMP	PAL	10/15/12
DESIGN2-DETAILED2		PMP	10/15/12
DESIGN3-DETAILED3			
REVISIONS 1			
REVISIONS 2			
REVISIONS 3			
REVISIONS 4			
FIELD CHANGES			

SIGNATURE

P.E. NUMBER

DATE

PINE POINT CROSSING
B&M RAILROAD
SCARBOROUGH CUMBERLAND COUNTY

ABUTMENT DETAILS

SHEET NUMBER

44

OF 57

Division: HIGHWAY

Username:

Filename: V:\Projects\ANY\K3\24370\CADD_MSTN\044_Abut Sections.dgn

Date:7/22/2015

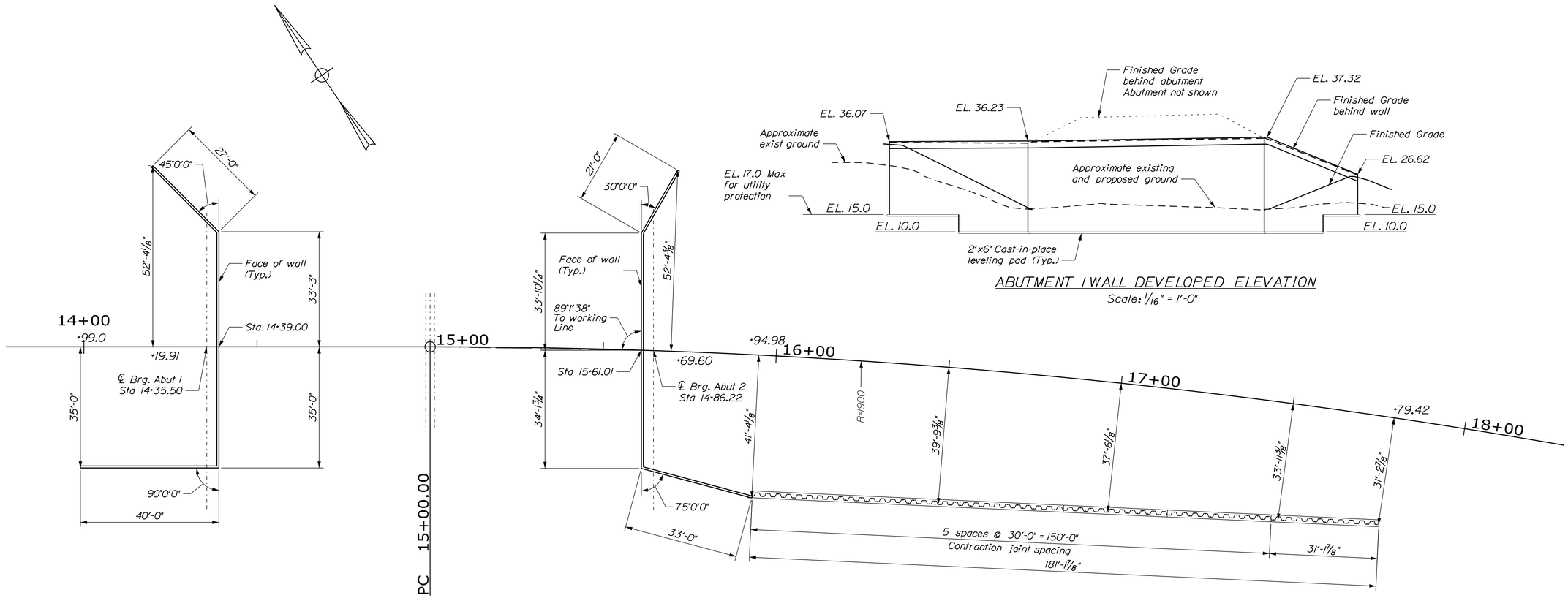

MSE WALL LAYOUT

Scale: 1/16" = 1'-0"

ABUTMENT 1 WALL DEVELOPED ELEVATION

Scale: 1/16" = 1'-0"

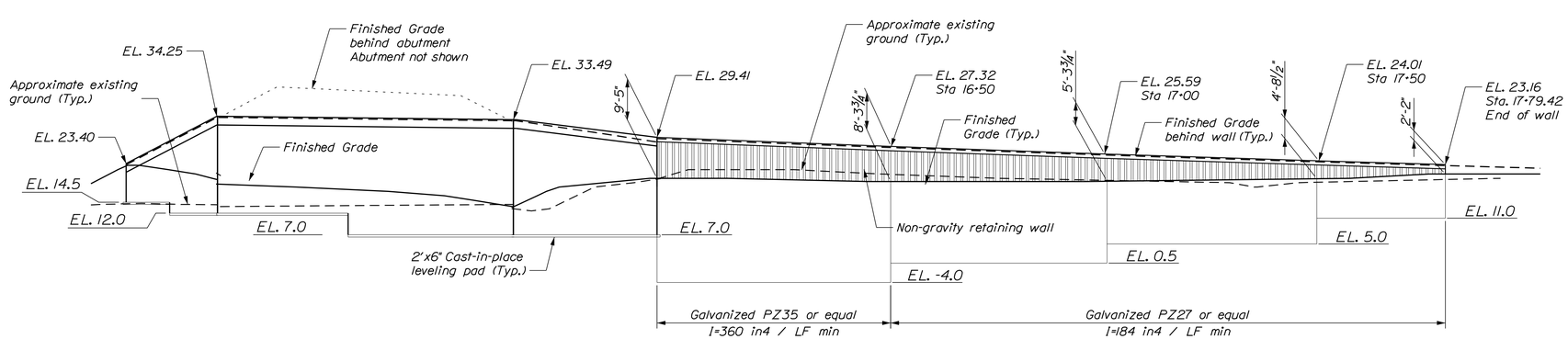

ABUTMENT 2 DEVELOPED WALL ELEVATION

Scale: 1/16" = 1'-0"

Division: HIGHWAY
Username:
Filename: V:\Projects\ANY\K3\24370\CADD_MSTN\045_MSE Layout.dgn
Date:7/22/2015

STATE OF MAINE
DEPARTMENT OF TRANSPORTATION

BH-1822(900)X

WIN 018229.00

BRIDGE NO. 5260

BRIDGE PLANS

		BY	DATE
PROJ. MANAGER	A. LATHE		
DESIGN-DETAILED	PAL	PAL	10/15/12
CHECKED-REVIEWED	PMP	PMP	10/15/12
DESIGN2-DETAILED2			
DESIGN3-DETAILED3			
REVISIONS 1			
REVISIONS 2			
REVISIONS 3			
REVISIONS 4			
FIELD CHANGES			

SIGNATURE

P.E. NUMBER

DATE

PINE POINT CROSSING
B&M RAILROAD
SCARBOROUGH CUMBERLAND COUNTY

MSE WALL AND STEEL SHEET PILE WALL LAYOUT

SHEET NUMBER

45

OF 57

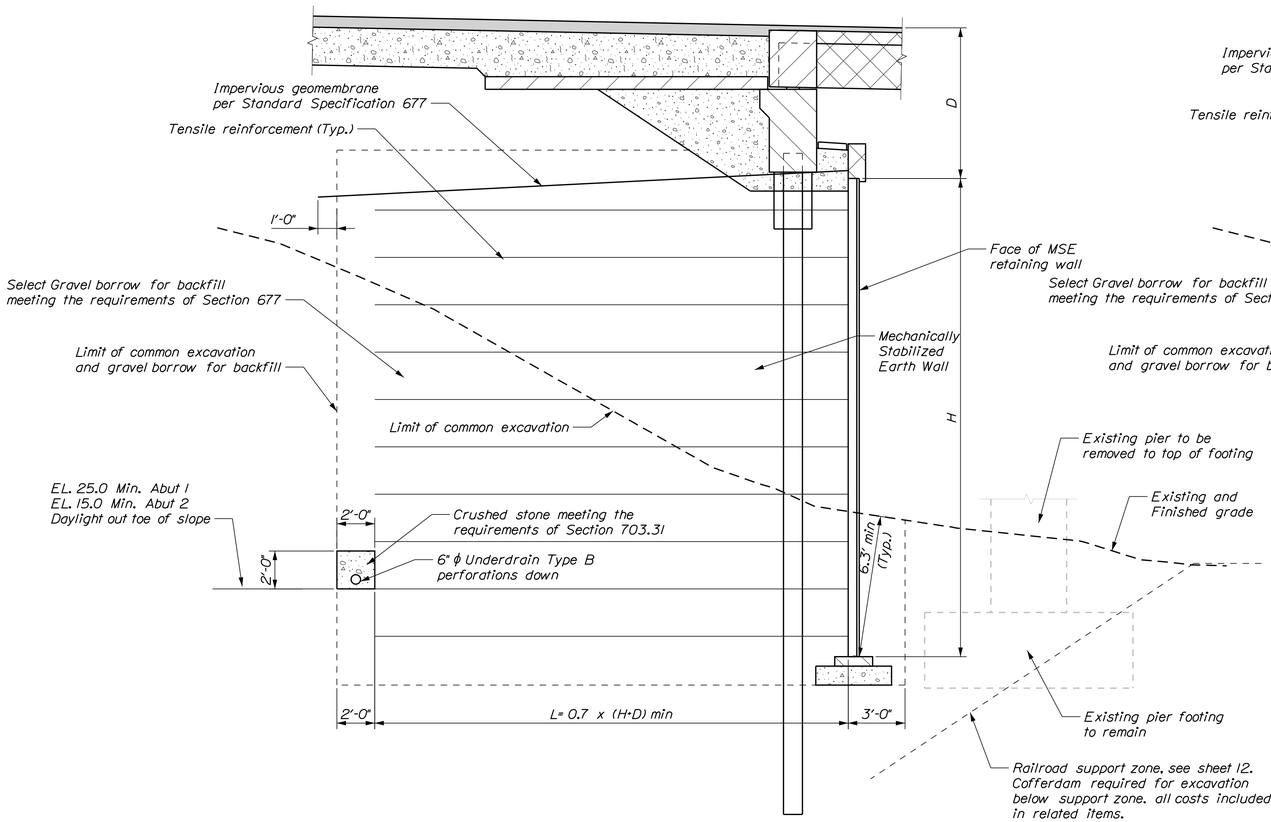

MSE WALL AT ABUTMENT

Scale: 1/4" = 1'-0"

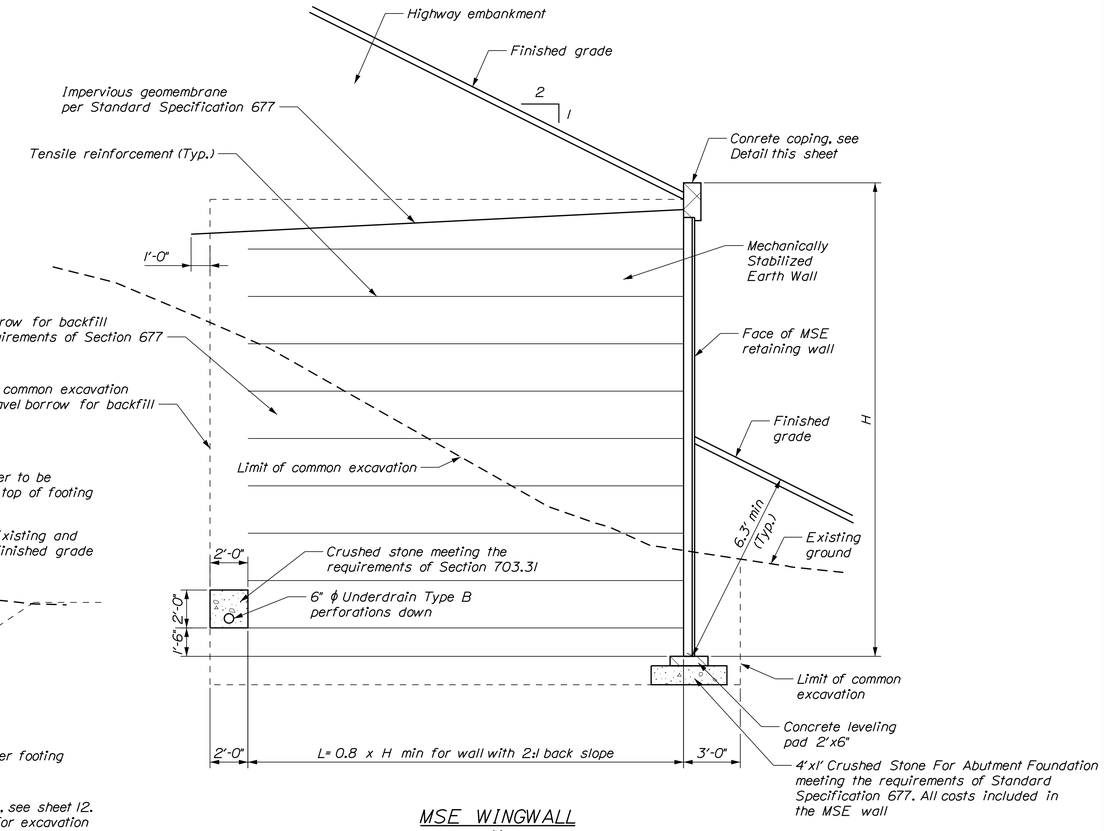

MSE WINGWALL

Scale: 1/4" = 1'-0"

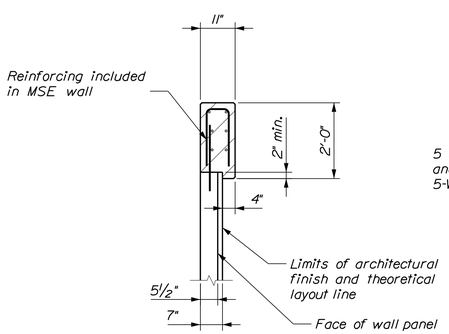

MSE COPING DETAIL

Scale: 1/2" = 1'-0"

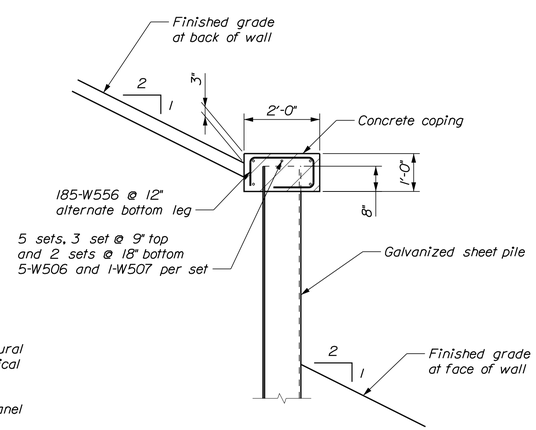

CANTILEVER WALL DETAIL

Scale: 1/2" = 1'-0"

MSE WALL NOTES:

1. The Contractor shall provide a mechanically stabilized earth (MSE) retaining wall in accordance with Standard Specification 677, Mechanically Stabilized Earth Retaining Wall.

2. For MSE wall elevations, see sheet 45

3. The abutment piles shall be driven prior to constructing the MSE wall backfill.

4. The bearing resistance for the reinforced soil volume and leveling pads founded on 12 inches of crushed stone shall be evaluated at the strength limit state using factored loads and a factored bearing resistance of 5.0 KSF using an effective footing width of 12 feet and a Resistance Factor of 0.65. The bearing resistance shall be evaluated at the service limit state using a factored bearing resistance of 1.7 KSF to limit settlement to 1 inch. The service limit state settlement will occur during construction of the MSE wall fill.

5. Provide impervious waterproofing membrane over the reinforced soil zone in accordance with Standard Specification 677 and as shown on the plans.

6. Topsoil, granular fill, and organic soils shall be removed entirely from the approach embankment area behind the MSE wall and within the reinforced soil zone as directed by the Resident. Unsuitable foundation material removed below the bottom of the MSE wall gravel borrow pay limit shall be replaced with granular borrow meeting the requirements of subsection 703.19, material for underwater backfill. Excavation of unsuitable foundation material shall be paid under item 203.20 - Common Excavation. Payment for placement of granular borrow below the bottom pay limit of the MSE wall gravel borrow fill shall be incidental to item 677.20.

7. All embankment material, except as otherwise shown, placed below the bottom pay limit elevation of the MSE wall shall be granular borrow meeting the requirements of subsection 703.19, material for underwater backfill.

8. The 6" diameter underdrain, Type B, shall be constructed as shown on the plans. Payment for the underdrain, outlets and crushed stone shall be incidental to the MSE wall items.

MSE WALL NOTES (CONTINUED):

9. The soil reinforcement and concrete facing panels shall be placed to avoid and be designed to accommodate the piles supporting the integral abutments. The specific methods for field installation shall be developed and presented on the shop drawings. Cutting of soil reinforcement shall not be permitted. The Contractor shall submit samples of the finish to the Resident for approval prior to casting.

10. The Contractor may use a combination of precast and/or cast-in-place concrete coping. Coping joints shall line up vertically with the top MSE wall panel joints. The shop drawings for the MSE wall shall convey what type of coping will be used, where it will be used, and where the joints are located.

11. Subgrades for the footings should be dewatered, as needed, so that construction is performed in the dry.

12. Excavations for footing subgrades are anticipated to consist of silty soils that will be sensitive to disturbance when wet and excavation should be conducted in a manner that limits disturbance. Soil subgrades should be kept dry and proof - compacted or, as directed by the geotechnical engineer should be immediately covered with a minimum of 12-inches of Gravel Borrow to protect the subgrade from disturbance.

13. The subgrades of MSE wall should be proof-compacted using a minimum of 4 passes of a vibratory plate or drum compactor with a minimum of 12,000 pounds of centrifugal force. Unsuitable soils, if encountered, and loose or soft zones observed during compaction should be excavated to firm and stable ground and replaced with compacted Structural Fill. We recommend that a geotechnical engineer observe the subgrade conditions and compaction of the existing fill soil prior to backfilling.

STATE OF MAINE
DEPARTMENT OF TRANSPORTATION

BH-1822(900)X

WIN 018229.00

BRIDGE NO. 5260

BRIDGE PLANS

		BY	DATE
PROJ. MANAGER	A. LATHE		
DESIGN-DETAILED	PAL	PAL	10/15/12
CHECKED-REVIEWED	PMP	PMP	10/15/12
DESIGN2-DETAILED2			
DESIGN3-DETAILED3			
REVISIONS 1			
REVISIONS 2			
REVISIONS 3			
REVISIONS 4			
FIELD CHANGES			

SIGNATURE

P.E. NUMBER

DATE

PINE POINT CROSSING
B&M RAILROAD
SCARBOROUGH CUMBERLAND COUNTY

MSE WALL AND STEEL SHEET PILE WALL DETAILS

SHEET NUMBER

46

OF 57

Division: HIGHWAY
Username:
Filename: V:\Projects\ANY\K3\24370\CADD_MSTN\046_MSE Details.dgn
Date: 7/22/2015

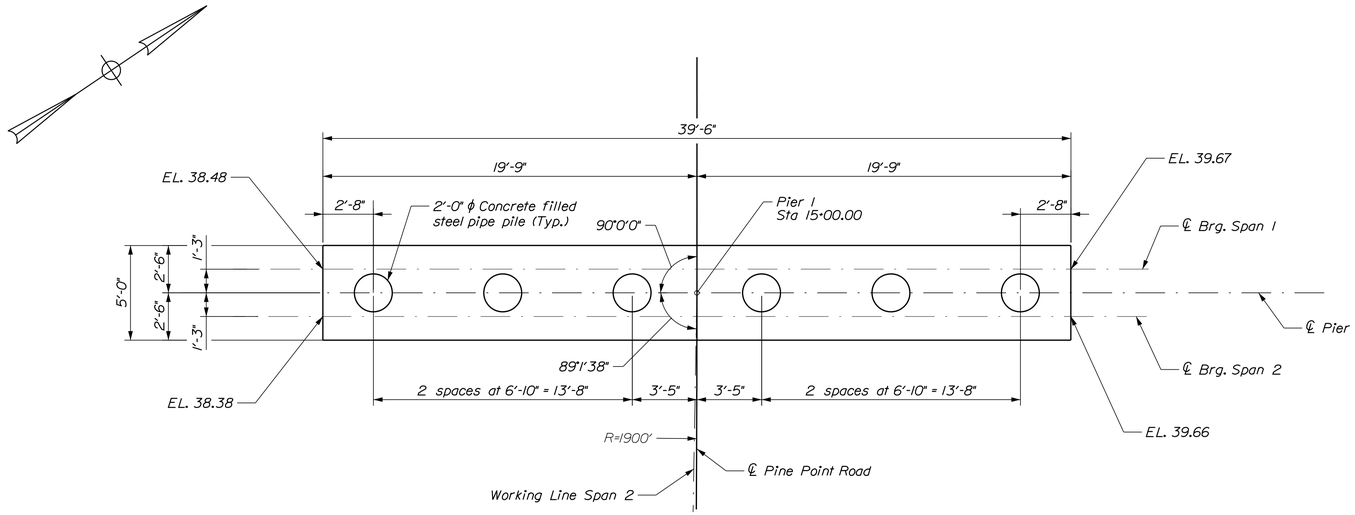

PIER PLAN

Scale: 1/4" = 1'-0"

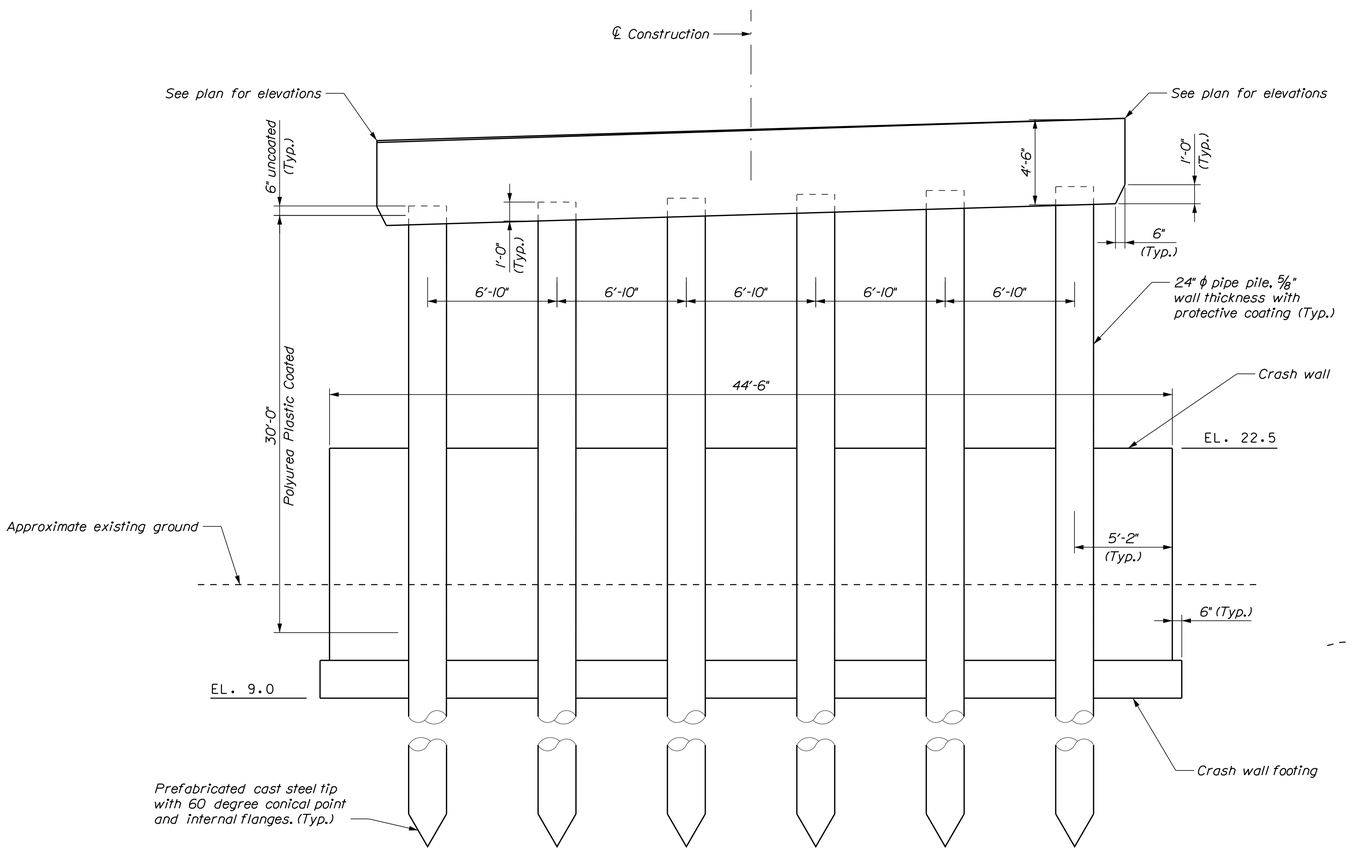

PIER ELEVATION

Scale: 1/4" = 1'-0"

PIER NOTES

1. Reinforcing steel in the pier shall have a minimum concrete cover of 2 1/2 inches unless otherwise noted and shall be epoxy coated.

2. Reinforcing in the crash wall shall have a minimum concrete cover of 3 inches in the footing and 2 1/2 inches in the stem and shall be uncoated.

PIER PILE NOTES

1. The maximum factored pile load is 322 kips (including 0.0 kips allowed for downdrag).

2. Pipe pile material shall be ASTM A 252, Grade 3.

3. Estimate of piles required:

Pier No. 1: Piles 1-6 ~ 2'-0" ϕ x 5/8" thick x 83' long max

4. Piles shall be driven closed ended and fitted with a 60 degree conical tip conforming to the strength requirements of ASTM A146, Grade 90-60

5. Piles shall not be out of position shown by more than 2 inches in any direction.

6. Pipe piles shall be driven to bedrock in accordance with Section 501 of the standard specifications.

7. It is anticipated the Contractor may encounter obstructions during pile driving operations. Clearing of obstructions shall be as specified in Section 501 of the standard specifications. The method of clearing obstructions shall be approved by the Resident. The cost of clearing obstructions will be considered incidental to related contract items.

8. The Contractor shall perform and submit a wave equation analysis for review and acceptance by the Resident. The maximum allowable driving stress is 0.90 times Fy. The submittal analyses shall include the proposed stopping criteria based on the wave equation analysis and the proposed driving system. The stopping criteria shall include the blows per inch and the number of 1-in. intervals at which pile installation may be terminated. The cost of performing the wave equation analysis will be considered incidental to Item No. 501.92, Pile Driving Equipment Mobilization.

9. The Contractor shall perform one (1) dynamic pile load tests with signal matching and 48-hour (minimum) restrike at the pier to confirm the nominal resistance of the piles. The required nominal resistance for the piles is the maximum factored axial pile load divided by a resistance factor equal to 0.65 per LRFD Specifications. The dynamic pile load test and restrike shall be performed on the first production pile driven, or as directed by the Resident. Piles will not be cut to the cut-off elevation until the restrike dynamic test is performed and CAPWAP analyses submitted to the Resident in the case that restrike test results necessitate a revised driving criteria.

10. Pipe piles shall be filled with Class "A" concrete. Placement of the concrete and reinforcing steel placed inside the pipe piles shall be considered incidental to item 501.701, Steel Pipe Pile In Place.

12. The Contractor shall take care to prevent damage to the pile coating during driving activities. All driving frames shall be lined to help prevent damage to the pile coating. Driving frame liners shall be approved by the resident.

13. Pile surfaces to be coated shall be prepared in accordance with special provision 506.

PIER DESIGN CRITERIA

1. Critical AASHTO Group Loading - Strength I for axial and Extreme Event II for lateral loads

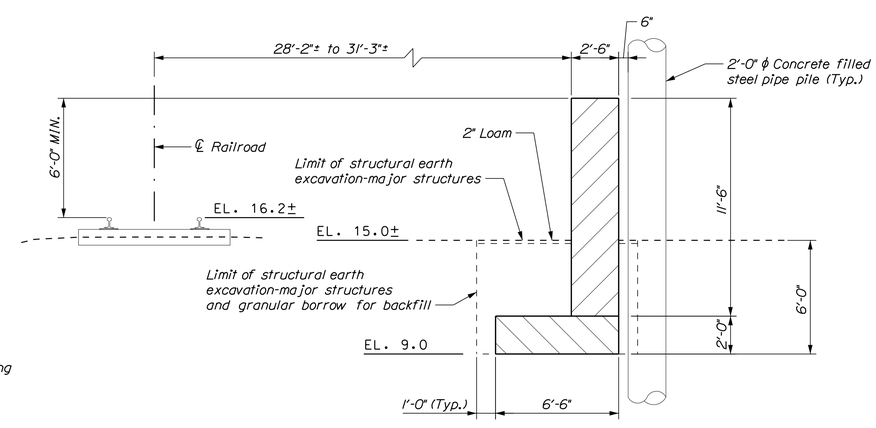

PIER CRASH WALL SECTION

Scale: 1/4" = 1'-0"

STATE OF MAINE
DEPARTMENT OF TRANSPORTATION

BH-1822(900)X

WIN 018229.00

BRIDGE NO. 5260

BRIDGE PLANS

		BY	DATE
PROJ. MANAGER	A. LATHE		
DESIGN-DETAILED	PAL	PAL	10/15/12
CHECKED-REVIEWED	PMP	PMP	10/15/12
DESIGN2-DETAILED2			
DESIGN3-DETAILED3			
REVISIONS 1			
REVISIONS 2			
REVISIONS 3			
REVISIONS 4			
FIELD CHANGES			

SIGNATURE

P.E. NUMBER

DATE

PINE POINT CROSSING
B&M RAILROAD
SCARBOROUGH CUMBERLAND COUNTY

PIER PLAN

SHEET NUMBER

47

OF 57

Division: HIGHWAY

Username:

Filename: V:\Projects\ANY\K3\24370\CADD_MSTN\047_Pier-1.dgn

Date:7/22/2015

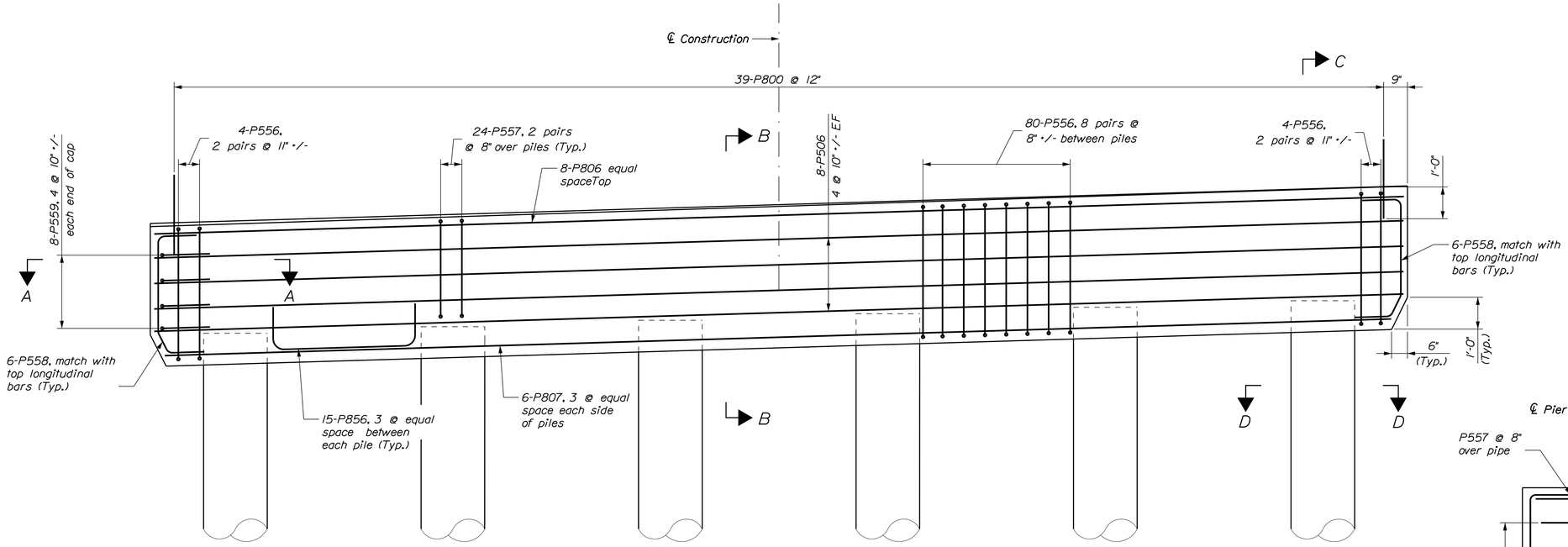

PIER REINFORCING

Scale: 1/2" = 1'-0"

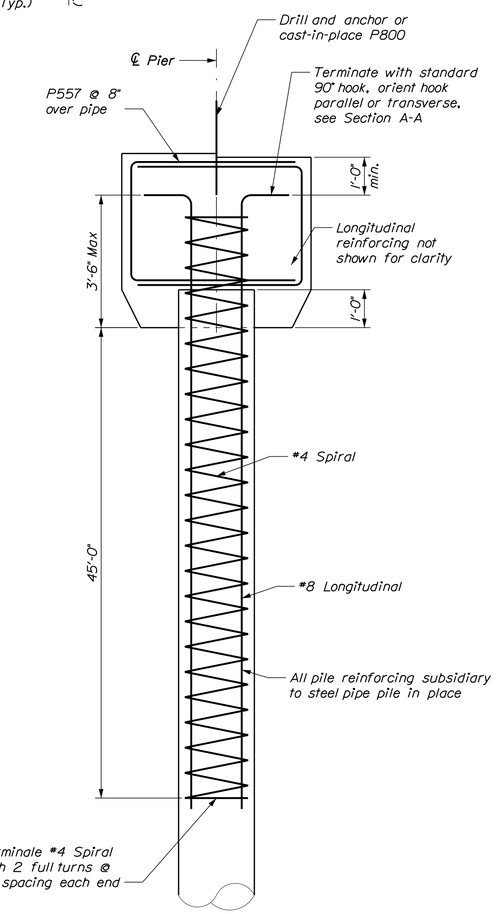

SECTION C-C

Scale: 1/2" = 1'-0"

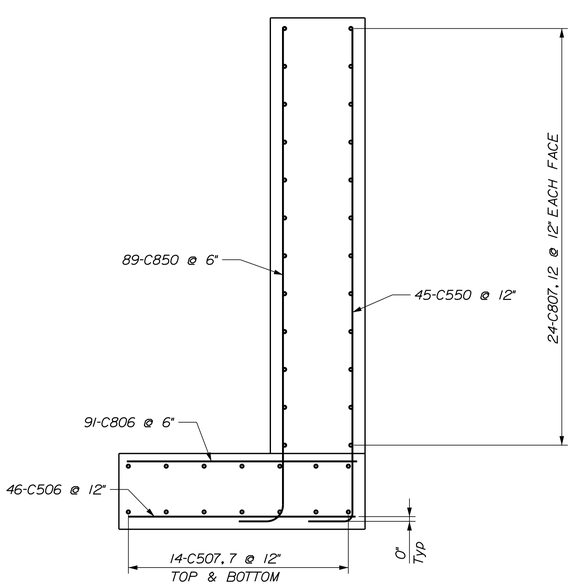

PIER CRASH WALL SECTION

Scale: 1/2" = 1'-0"

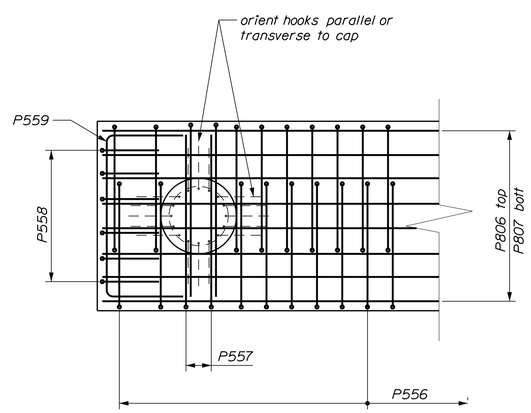

SECTION A-A

Scale: 1/2" = 1'-0"

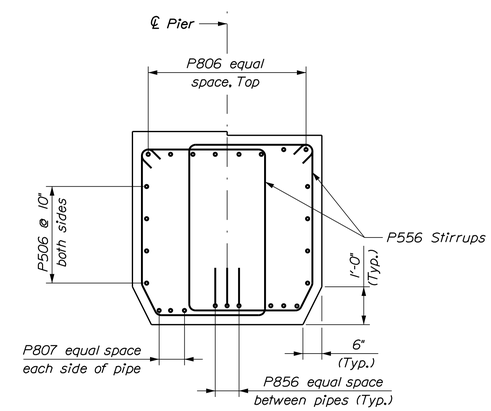

SECTION B-B

Scale: 1/2" = 1'-0"

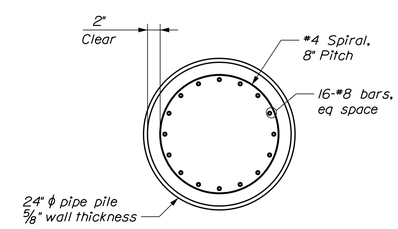

SECTION D-D

Scale: 1" = 1'-0"

STATE OF MAINE
DEPARTMENT OF TRANSPORTATION

BH-1822(900)X

WIN 018229.00

BRIDGE NO. 5260

BRIDGE PLANS

		BY	DATE
PROJ. MANAGER	A. LATHE		
DESIGN-DETAILED	PAL	PAL	10/15/12
CHECKED-REVIEWED	PMP	PMP	10/15/12
DESIGN2-DETAILED2			
DESIGN3-DETAILED3			
REVISIONS 1			
REVISIONS 2			
REVISIONS 3			
REVISIONS 4			
FIELD CHANGES			

SIGNATURE

P.E. NUMBER

DATE

PINE POINT CROSSING
B&M RAILROAD
SCARBOROUGH CUMBERLAND COUNTY

PIER DETAILS

SHEET NUMBER

48

OF 57

Division: HIGHWAY

Username:

Filename: V:\Projects\ANY\K3\24370\CADD_MSTN\048_Pier Reinforcing.dgn

Date: 7/22/2015

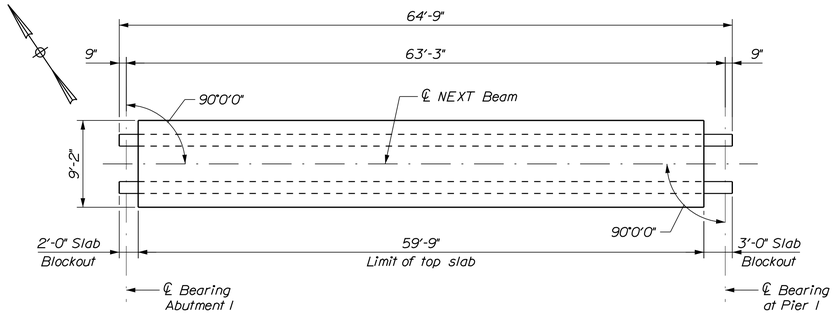

SPAN 1 - NEXT BEAM PLAN

Scale: 1/8" = 1'-0"

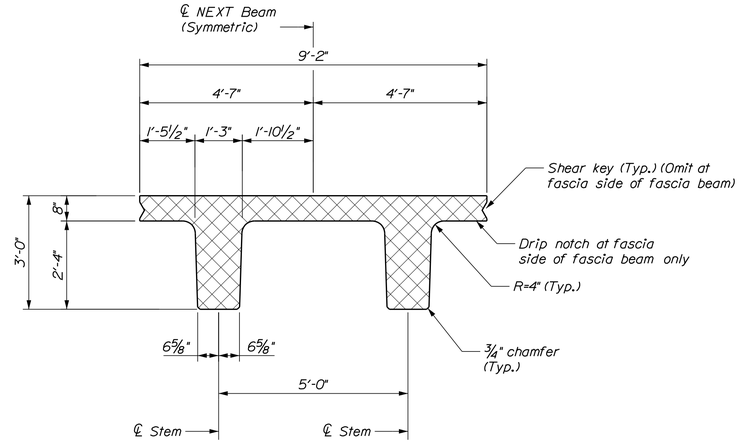

NEXT BEAM SECTION

Scale: 1/2" = 1'-0"

PRECAST CONCRETE SUPERSTRUCTURE NOTES

1. Prestressing strands shall be 0.6-in. diameter.
2. The tensioning force for fully tensioned strands is 44 kips per strand.
3. The tensioning force for nominally tensioned strands is 5 kips per strand.
4. Reinforcing steel shall have a minimum concrete cover of 2 inches unless otherwise noted.
5. The top surface of the flange of the prestressed beams shall be finished to a float finish
6. The drilling of holes in the prestressed beams and the use of power actuated tools on the beams will not be permitted.
7. Neoprene pads shall be either polychloroprene or natural polyisoprene of 50+/- 5 Shore A durometer hardness, and shall conform to the requirements of Division 2, Section 18.2 of AASHTO Standard Specifications for Highway Bridges.

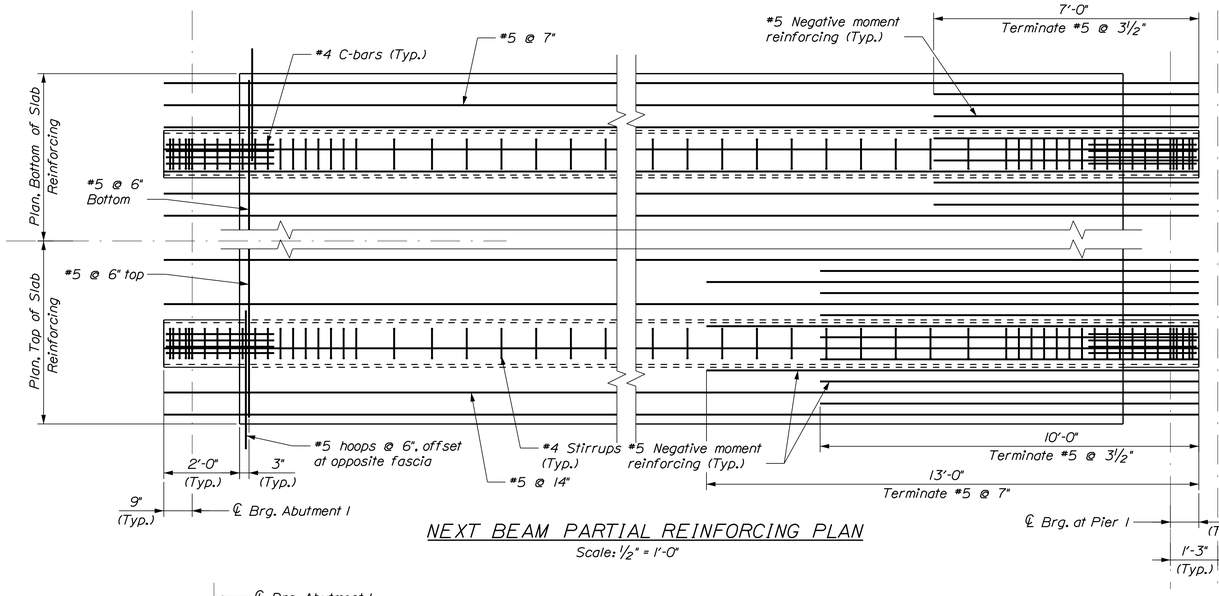

NEXT BEAM PARTIAL REINFORCING PLAN

Scale: 1/2" = 1'-0"

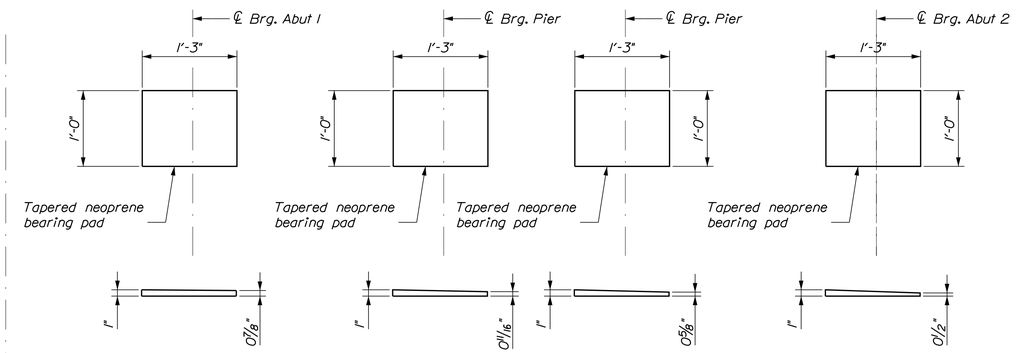

BEARING PAD DETAILS

Scale: 1" = 1'-0"

PRESTRESSING LEGEND:

- ◇ Nominally tensioned strand
- + Fully tensioned strand
- ○ Fully tensioned strand Debond 8 feet
- ⊕ Fully tensioned strand Debond 4 feet

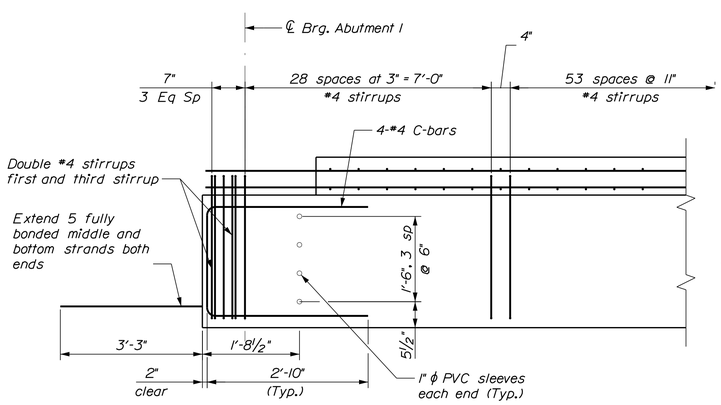

NEXT BEAM PARTIAL REINFORCING ELEVATION

Scale: 3/4" = 1'-0"

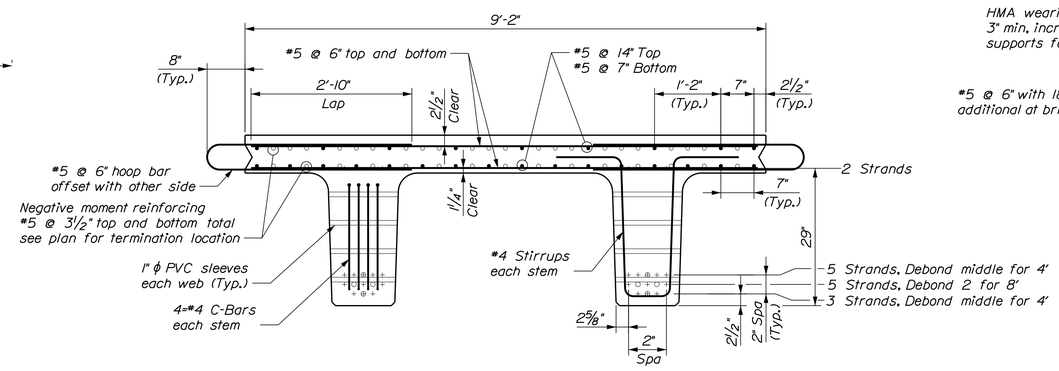

NEXT BEAM REINFORCING SECTION

Scale: 3/4" = 1'-0"

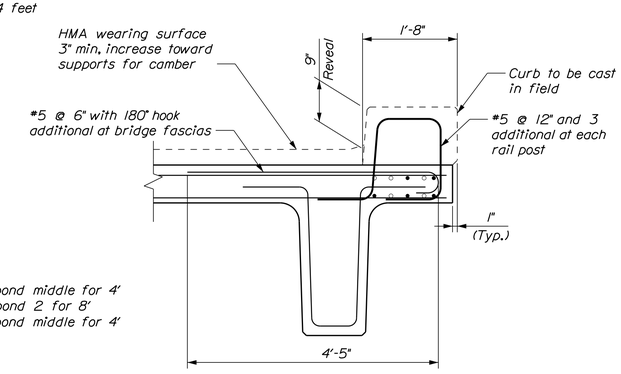

NEXT BEAM FASCIA REINFORCING

Scale: 3/4" = 1'-0"

STATE OF MAINE
DEPARTMENT OF TRANSPORTATION

BH-1822(900)X

WIN 018229.00

BRIDGE NO. 5260

BRIDGE PLANS

		BY	DATE
PROJ. MANAGER	A. LATHE		
DESIGN-DETAILED	PAL	PAL	10/15/12
CHECKED-REVIEWED	PMP	PMP	10/15/12
DESIGN2-DETAILED2			
DESIGN3-DETAILED3			
REVISIONS 1			
REVISIONS 2			
REVISIONS 3			
REVISIONS 4			
FIELD CHANGES			

SIGNATURE

P.E. NUMBER

DATE

PINE POINT CROSSING
B&M RAILROAD
SCARBOROUGH CUMBERLAND COUNTY

NEXT-D BEAM SPAN 1

SHEET NUMBER

49

OF 57

Division: HIGHWAY
Username:
Filename: V:\Projects\ANY\K3\24370\CADD_MSTN\049_NEXTBeam1.dgn
Date: 7/22/2015

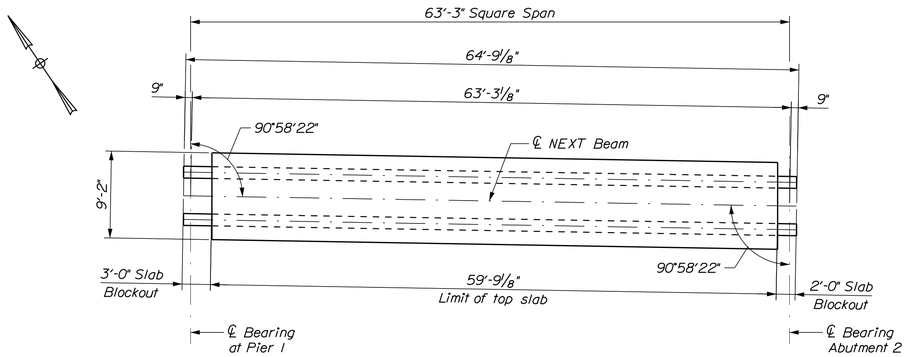

SPAN 2 - NEXT BEAM PLAN

Scale: 1/8" = 1'-0"

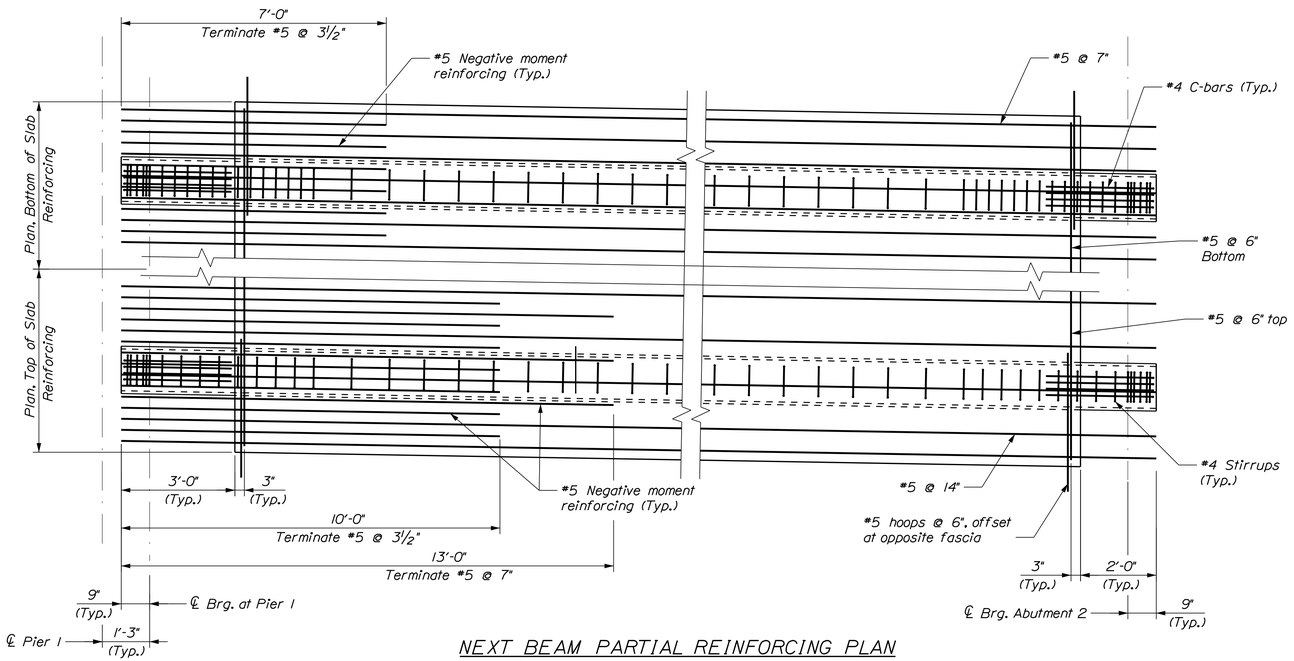

NEXT BEAM PARTIAL REINFORCING PLAN

Scale: 1/2" = 1'-0"

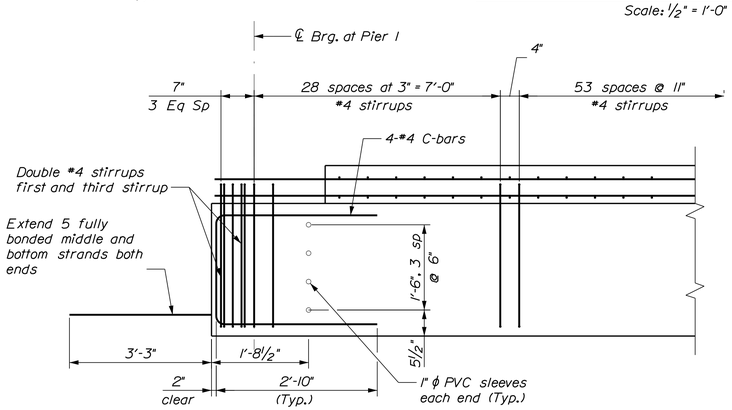

NEXT BEAM PARTIAL REINFORCING ELEVATION

Scale: 1/2" = 1'-0"

NOTES:

1. For Precast Concrete Superstructure Notes see sheet 49.
2. For typical dimensions of beam not shown see sheet 49.

STATE OF MAINE
DEPARTMENT OF TRANSPORTATION

BH-1822(900)X

WIN 018229.00

BRIDGE NO. 5260

BRIDGE PLANS

		BY	DATE
PROJ. MANAGER	A. LATHE		
DESIGN-DETAILED	PAL	PAL	10/15/12
CHECKED-REVIEWED	PMP	PMP	10/15/12
DESIGN2-DETAILED2			
DESIGN3-DETAILED3			
REVISIONS 1			
REVISIONS 2			
REVISIONS 3			
REVISIONS 4			
FIELD CHANGES			

SIGNATURE

P.E. NUMBER

DATE

PINE POINT CROSSING
B&M RAILROAD
SCARBOROUGH CUMBERLAND COUNTY

NEXT-D BEAM SPAN 2

SHEET NUMBER

50

OF 57

Division: HIGHWAY
Username:
Filename: V:\Projects\ANY\K3\24370\CADD_MSTN\050_NEXTBeam2.dgn
Date:7/22/2015

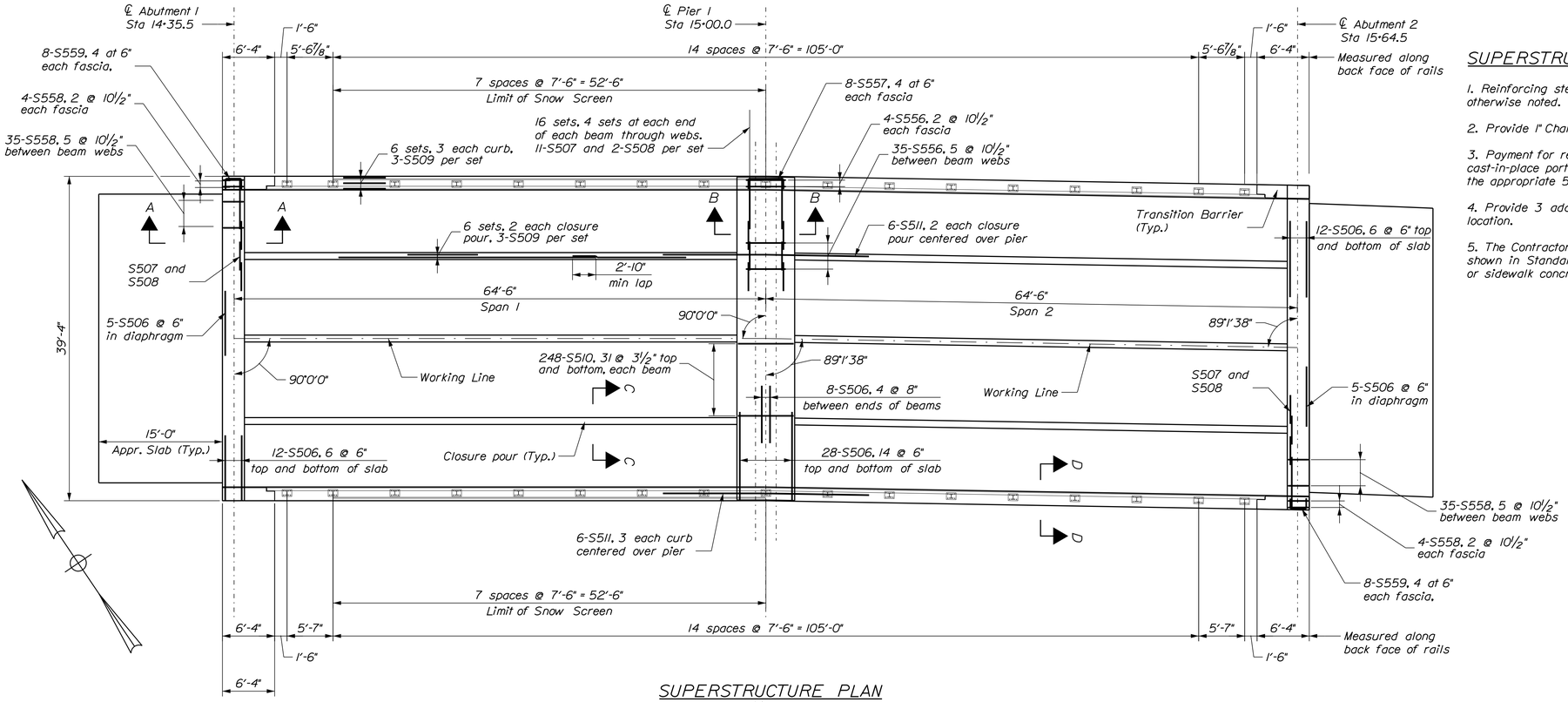

SUPERSTRUCTURE PLAN

Scale: 1/8" = 1'-0"

SUPERSTRUCTURE NOTES

1. Reinforcing steel shall have a minimum concrete cover of 2 inches unless otherwise noted.

2. Provide 1" Chamfer on all corners

3. Payment for reinforcing steel fabricated, delivered, and placed in the cast-in-place portion of the structural concrete slab will be paid for under the appropriate 503 pay items.

4. Provide 3 additional stirrups in the curbs at each Transition Barrier location.

5. The Contractor shall install Transition Barrier vertical closed stirrups, as shown in Standard Details Section 526, prior to the placement of the curb or sidewalk concrete.

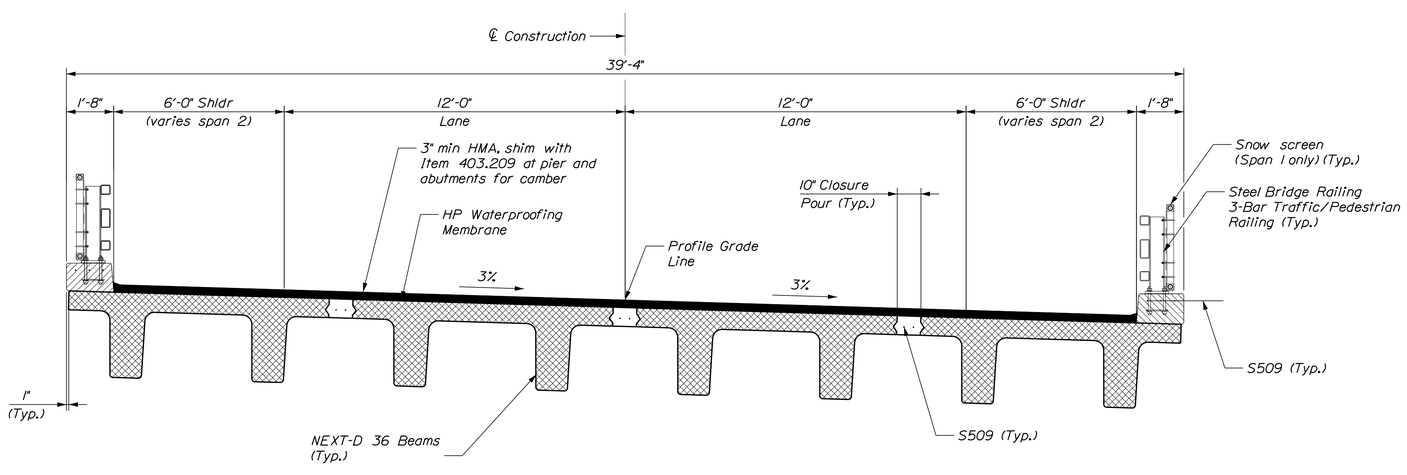

TRANSVERSE SECTION

Scale: 3/8" = 1'-0"

STATE OF MAINE
DEPARTMENT OF TRANSPORTATION

BH-1822(900)X

WIN 018229.00

BRIDGE NO. 5260

BRIDGE PLANS

PROJ. MANAGER	A. LATHE		
DESIGN-DETAILED	PAL	PAL	10/15/12
CHECKED-REVIEWED	PMP	PMP	10/15/12
DESIGN2-DETAILED2			
DESIGN3-DETAILED3			
REVISIONS 1			
REVISIONS 2			
REVISIONS 3			
REVISIONS 4			
FIELD CHANGES			

P.E. NUMBER

SIGNATURE

DATE

PINE POINT CROSSING
B&M RAILROAD
SCARBOROUGH CUMBERLAND COUNTY

SUPERSTRUCTURE

SHEET NUMBER

51

OF 57

Division: HIGHWAY

Username:

Filename: V:\Projects\ANY\K3\24370\CADD_MSTN\051_SuperstructurePlan.dgn

Date:7/22/2015

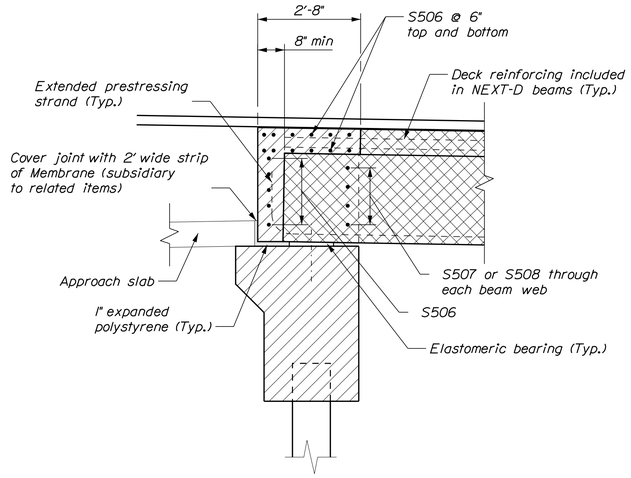

SECTION A-A (THROUGH WEB)
Scale: 1/2" = 1'-0"

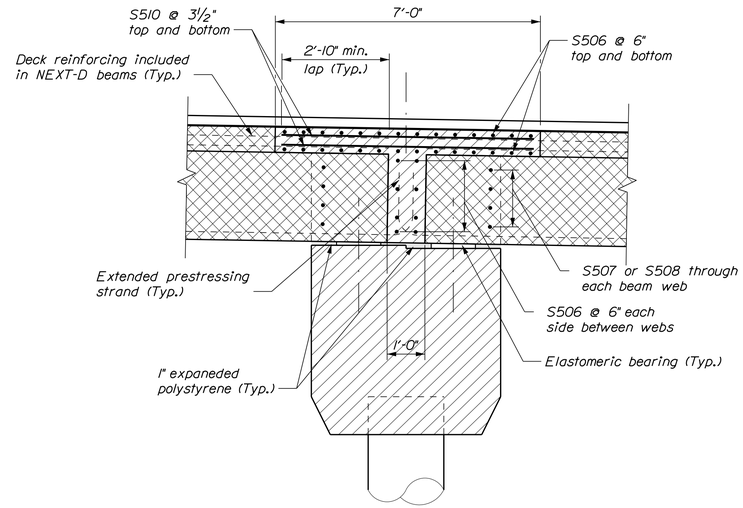

SECTION B-B (THROUGH WEB)
Scale: 1/2" = 1'-0"

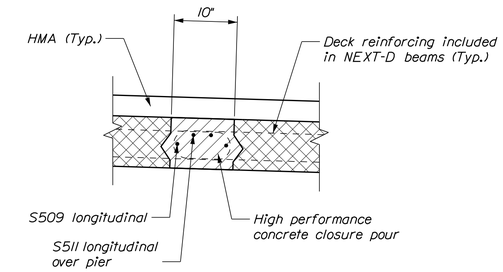

SECTION C-C
Scale: 1" = 1'-0"

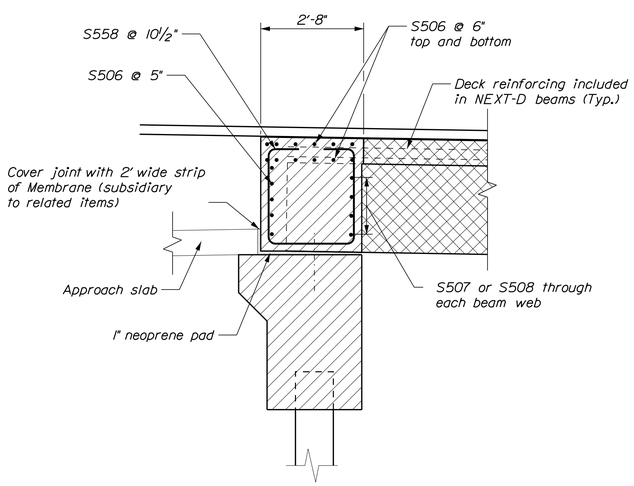

SECTION A-A (THROUGH DIAPHRAGM)
Scale: 1/2" = 1'-0"

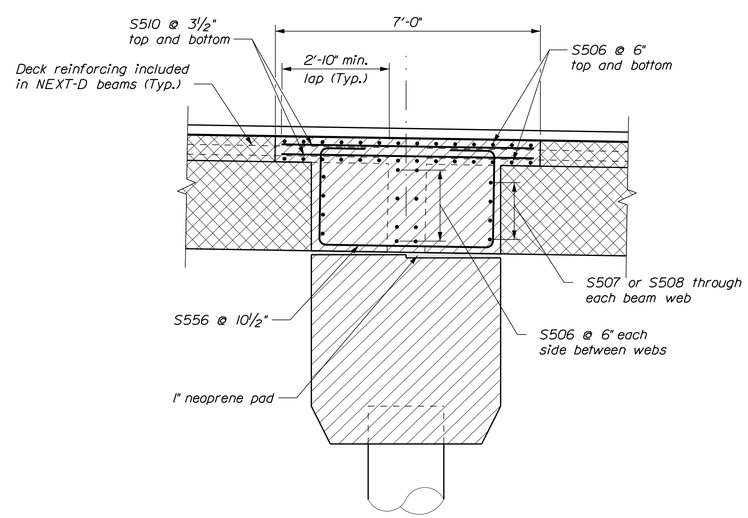

SECTION B-B (THRUOGH DIAPHRAGM)
Scale: 1/2" = 1'-0"

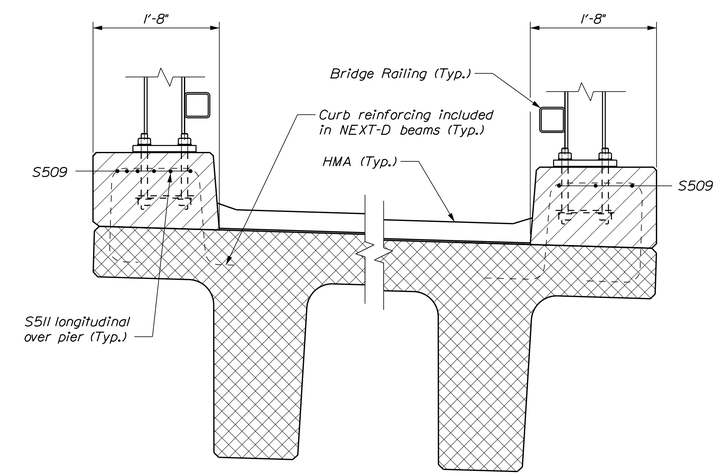

SECTION D-D
Scale: 1" = 1'-0"

STATE OF MAINE
DEPARTMENT OF TRANSPORTATION

BH-1822(900)X

WIN 018229.00

BRIDGE NO. 5260

BRIDGE PLANS

	BY	DATE
PROJ. MANAGER	A. LATHE	
DESIGN-DETAILED	PAL	10/15/12
CHECKED-REVIEWED	PMP	10/15/12
DESIGN2-DETAILED2		
DESIGN3-DETAILED3		
REVISIONS 1		
REVISIONS 2		
REVISIONS 3		
REVISIONS 4		
FIELD CHANGES		

SIGNATURE

P.E. NUMBER

DATE

PINE POINT CROSSING
B&M RAILROAD
SCARBOROUGH CUMBERLAND COUNTY

SUPERSTRUCUTRE DETAILS

SHEET NUMBER
52
OF 57

Division: HIGHWAY
Username:
Filename: V:\Projects\ANY\K3\24370\CADD_MSTN\052_SuperstructureDetails.dgn
Date:7/22/2015

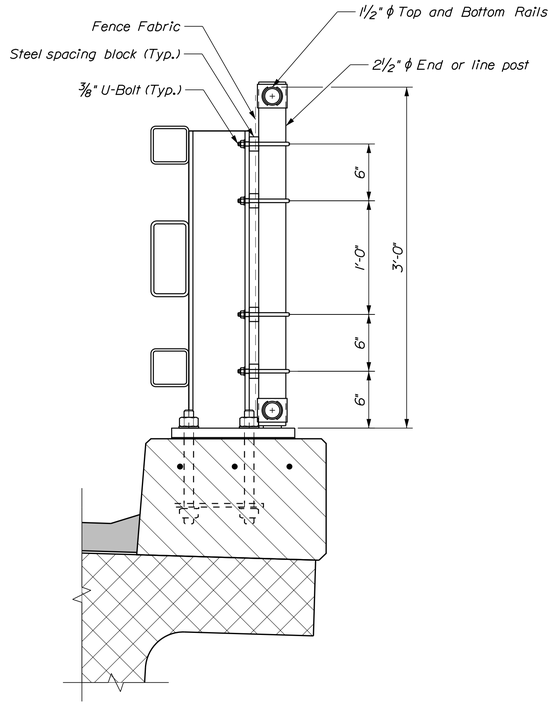

RAIL SECTION
SCALE 1 1/2" = 1'-0"

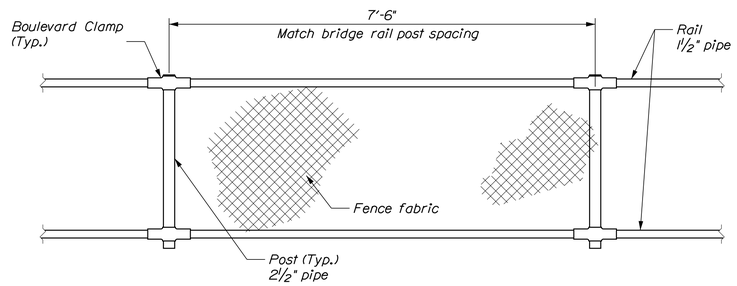

ELEVATION SNOW SCREENING
SCALE 1 1/2" = 1'-0"

1. POST AND RAIL PIPE SHALL BE HOT-DIP GALVANIZED STEEL .ALL PIPE SHALL BE SCHEDULE 40. STANDARD WEIGHT. NOMINAL PIPE SIZES ARE SHOWN IN THE DRAWINGS.

2. TENSION BARS, BAR BANDS, BOULEVARD AND END RAIL CLAMPS SHALL BE STEEL OR ALUMINUM ALLOY CONFORMING TO AASHTO M 181 (ASTM F 626). STEEL COMPONENTS SHALL BE HOT-DIP GALVANIZED IN ACCORDANCE WITH AASHTO M 111 (ASTM A 123) OR AASHTO M 232 (ASTM A 153) AS APPLICABLE.

3. ALL BOLTS AND NUTS SHALL BE STEEL CONFORMING TO ASTM A 307 AND ASTM A 563 GRADE A RESPECTIVELY. WASHERS SHALL BE HARDENED STEEL COMMERCIAL TYPE A PLAIN AND SHALL MEET THE DIMENSIONAL REQUIREMENTS OF ANSI B18.22. ALL BOLTS, NUTS AND WASHERS SHALL BE HOT-DIP GALVANIZED IN ACCORDANCE WITH AASHTO M 111 (ASTM A 123) OR AASHTO M 232 (ASTM A 153) AS APPLICABLE.

4. RAIL SPLICES SHALL BE PROVIDED AT BRIDGE RAIL SPLICES AS DIRECTED BY THE CONTRACT ADMINISTRATOR.

5. RAIL MAY BE FIELD CUT (SAWN) TO FIT POST SPACING. GALVANIZED RAIL. CUT OR DRILLED AS ALLOWED. SHALL BE TOUCHED-UP IN ACCORDANCE WITH 563.3.2.2.3.

6. ALL COSTS FOR FENCE FABRIC, POSTS, RAILS AND APPURTENANCES INCLUDING MODIFICATIONS TO THE BRIDGE RAILING BASE PLATE SHALL BE INCLUDED IN ITEM 607.184.

7. SEE BRIDGE RAIL STANDARDS FOR ADDITIONAL DETAILS.

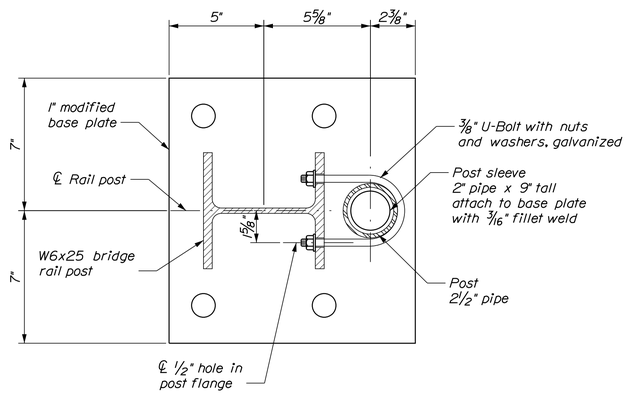

POST PLAN
SCALE 3" = 1'-0"

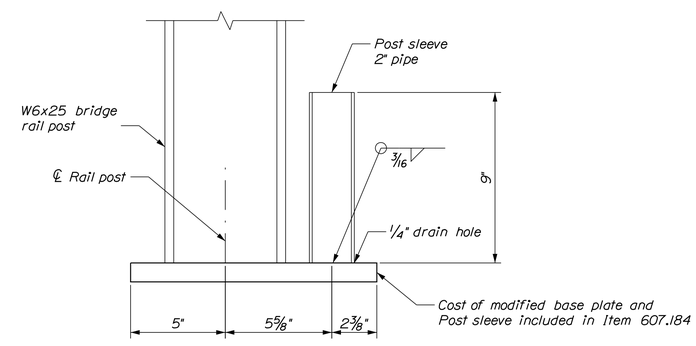

BASE PLATE ELEVATION
SCALE 3" = 1'-0"

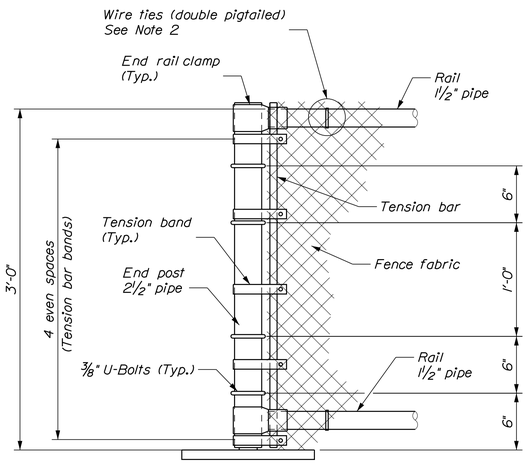

END POST DETAIL
SCALE 1 1/2" = 1'-0"

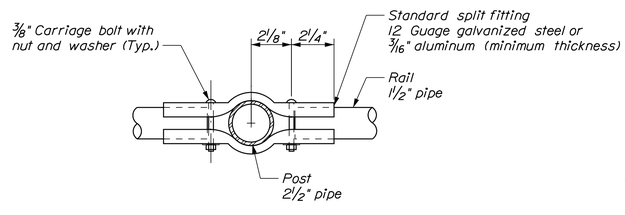

BOULEVARD CLAMP DETAIL
SCALE 3" = 1'-0"

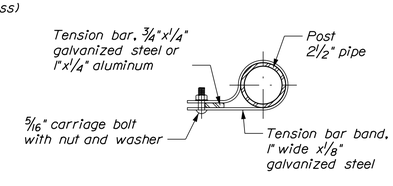

TENSION BAND DETAIL
SCALE 3" = 1'-0"

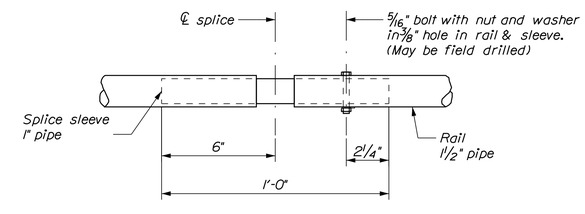

RAIL SPLICE DETAIL
SCALE 3" = 1'-0"

STATE OF MAINE
DEPARTMENT OF TRANSPORTATION

BH-1822(900)X

WIN 018229.00

BRIDGE NO. 5260

BRIDGE PLANS

PROJ. MANAGER	A. LATHE		
DESIGN-DETAILED	PAL	BY	DATE
CHECKED-REVIEWED	PMP	PMP	10/15/12
DESIGN2-DETAILED2			
DESIGN3-DETAILED3			
REVISIONS 1			
REVISIONS 2			
REVISIONS 3			
REVISIONS 4			
FIELD CHANGES			

SIGNATURE

P.E. NUMBER

DATE

PINE POINT CROSSING
B&M RAILROAD
SCARBOROUGH CUMBERLAND COUNTY

BRIDGE RAIL SNOW SCREEN

SHEET NUMBER
53
OF 57

Division: HIGHWAY
Username:
Filename: V:\Projects\ANY\K3\24370\CADD_MSTN\053_BR-SnowScreen.dgn
Date:7/22/2015

Division: HIGHWAY
Username:
Filename: V:\Projects\ANY\K3\24370\CADD_MSTN\054_Rebar.dgn
Date:7/22/2015

STRAIGHT BARS								BENT BARS														
MARK	QTY.	LENGTH	LOCATION	MARK	QTY.	LENGTH	LOCATION	MARK	QTY.	LENGTH	TYPE	A	B	C	D	E	F	G	H	O	R	LOCATION
ABUTMENT No. 1 (EPOXY COATED)																						
A506	1	34'-6"	Appr slab seat longitudinal					A556	24	14'-9"	S	0	6'-4"	2'-1"	6'-4"			0				Wings vertical
								A557	128	10'-7"	S	0	4'-3"	2'-1"	4'-3"			0				Bridge seat vertical
A800	35	2'-6"	Bridge seat dowel					A558	24	14'-7"	S	0	6'-3"	2'-1"	6'-3"			0				Wings vertical
A806	18	44'-0"	Bridge seat horizontal					A559	36	5'-0"	V				2'-0"	3'-0"			2'-1½"			Approach slab dowel
								A560	36	5'-0"	A				2'-4"	2'-8"			2'-1"			Approach slab seat
								A561	8	23'-11¾"	S	0	11'-0"	1'-11¾"	11'-0"			0				Wing horizontal
								A650	18	7'-0"	C	1'-0"	6'-0"	0								Abut-wing hook
								A656	18	23'-11¾"	S	0	11'-0"	1'-11¾"	11'-0"			0				Wing horizontal
ABUTMENT No. 2 (EPOXY COATED)																						
B506	1	34'-7"	Appr slab seat longitudinal					B556	24	14'-7"	S	0	6'-3"	2'-1"	6'-3"			0				Wings vertical
								B557	128	10'-7"	S	0	4'-3"	2'-1"	4'-3"			0				Bridge seat vertical
B800	35	2'-6"	Bridge seat dowel					B558	24	14'-9"	S	0	6'-4"	2'-1"	6'-4"			0				Wings vertical
B806	18	44'-0"	Bridge seat horizontal					B559	36	5'-0"	V				2'-0"	3'-0"			2'-1½"			Approach slab dowel
								B560	36	5'-0"	A				2'-4"	2'-8"			2'-1"			Approach slab seat
								B561	8	22'-11¾"	S	0	10'-6"	1'-11¾"	10'-6"			0				Wing horizontal
								B650	18	7'-0"	C	1'-0"	6'-0"	0								Abut-wing hook
								B656	18	22'-11¾"	S	0	10'-6"	1'-11¾"	10'-6"			0				Wing horizontal
PIER (EPOXY COATED)																						
P506	8	39'-0"	Cap horizontal sides					P556	88	14'-9¼"	H(1)	5½"	3'-0"	4'-1"	2'-7"	3'-3"	1¼"	5½"	5"	10"		Cap vertical
								P557	24	12'-2"	S	0	4'-7"	3'-0"	4'-7"			0				Cap vertical over piles
P800	39	2'-6"	Cap dowel					P558	12	6'-7⅜"	SJ(1)	1'-1"	10⅜"	3'-2"	1'-6"	0						Cap ends vertical
P806	8	39'-0"	Cap horizontal top					P559	8	7'-5½"	S	0	1'-6"	4'-5½"	1'-6"			0				Cap ends horizontal
P807	6	38'-3"	Cap horizontal bottom																			
								P856	15	7'-6"	S	0	1'-6"	4'-6"	1'-6"			0				Cap horiz bottom between piles
APPROACH SLABS (EPOXY COATED)																						
AS506	32	34'-6"	Transverse																			
AS606	140	14'-6"	Longitudinal																			
CRASH WALL																						
C506	46	6'-0"	Footing bottom transverse					C550	45	14'-0"	L	13'-0"	1'-0"									Wall vertical toe face
C507	14	45'-0"	Footing longitudinal																			
								C850	89	14'-10"	L	13'-0"	1'-10"									Wall vertical heel face
C806	91	6'-0"	Footing top transverse																			
C807	24	44'-0"	Wall Longitudinal																			
SUPERSTRUCTURE (EPOXY COATED)																						
S506	70	38'-8"	Transverse					S556	39	11'-7"	EP	0	1'-0"	2'-6"	4'-7"	2'-6"	1'-0"					
S507	176	3'-9"	Through beam webs					S557	8	6'-11½"	S	0	1'-3"	4'-5½"	1'-3"			0				
S508	32	6'-4"	Through fascia beam webs					S558	78	8'-7"	EP	0	8"	2'-6"	2'-3"	2'-6"	8"					
S509	36	45'-9"	Longitudinal whole span					S559	16	4'-7½"	S	0	1'-3"	2'-1½"	1'-3"			0				
S510	248	6'-8"	Longitudinal pier closure pour																			
S511	12	25'-0"	Longitudinal over pier curbs																			
MARK	QTY.	LENGTH	LOCATION	MARK	QTY.	LENGTH	LOCATION	MARK	QTY.	LENGTH	TYPE	A	B	C	D	E	F	G	H	O	R	LOCATION

TYPE - BENDING DIAGRAMS

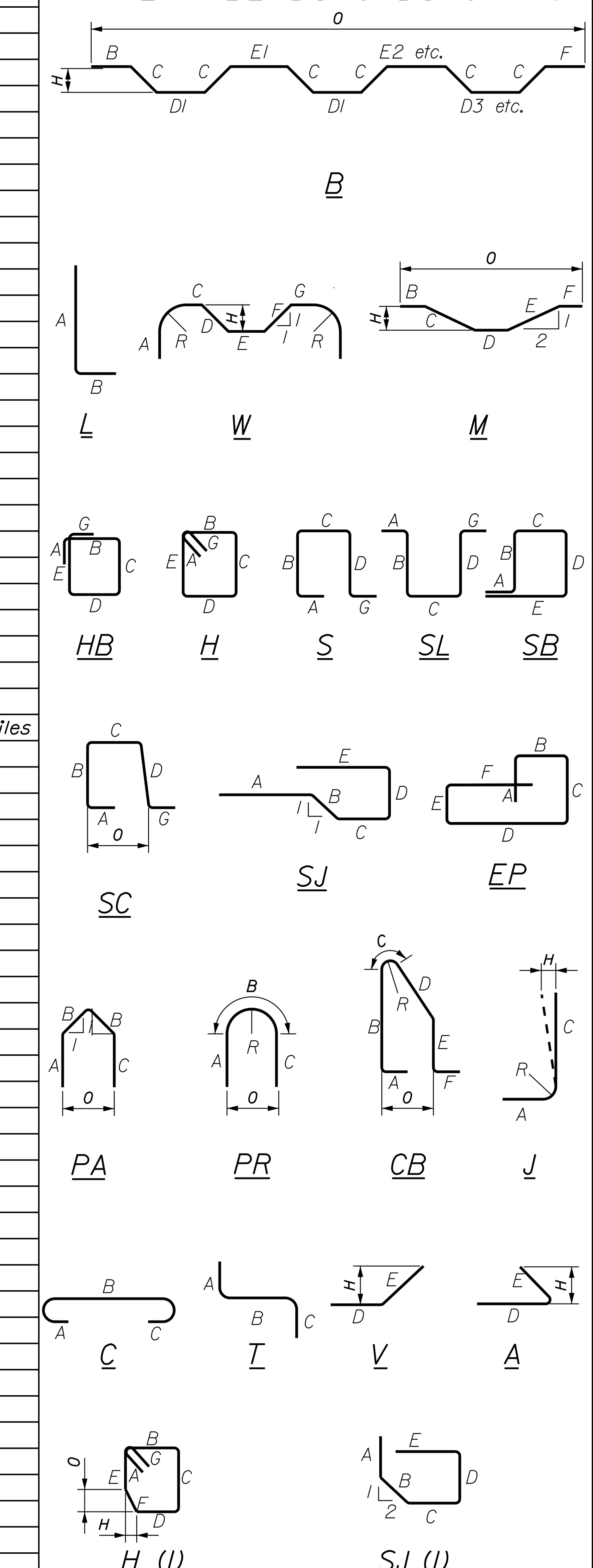

All dimensions are out-to-out of bar.

Bending details and hooks shall conform to the recommendations of the current revision of ACI Standard 315 and ACI Standard 318.

Reinforcing Bar: ASTM A615/A615M, Grade 60

GENERAL NOTES

1. The first two digits following the letter(s) of the mark indicate the size of the bar:

   Mark "A502" = bar size #5
   Mark "P805" = bar size #8
   Mark "S650" = bar size #6

2. Each crank bar, Type B, may be replaced by two (2) straight bars (one top and one bottom) of the same bar size as the crank bar. Payment in either case shall be based on crank bars as scheduled on the plans.

STATE OF MAINE
DEPARTMENT OF TRANSPORTATION

BH-1822(900)X

WIN 018229.00

BRIDGE PLANS

BRIDGE NO. 5260

	BY	DATE
PROJ. MANAGER	A. LATHE	
DESIGN-DETAILED	PAL	PAL	10/15/12
CHECKED-REVIEWED	PMP	PMP	10/15/12
DESIGN2-DETAILED2		
DESIGN3-DETAILED3		
REVISIONS 1		
REVISIONS 2		
REVISIONS 3		
REVISIONS 4		
FIELD CHANGES		

SIGNATURE

P.E. NUMBER

DATE

PINE POINT CROSSING
B&M RAILROAD
SCARBOROUGH CUMBERLAND COUNTY

EXISTING RIGHT OF WAY
1) ROUTE 9/PINE POINT ROAD
A) MAINE STATE HIGHWAY COMMISSION - RIGHT OF WAY MAP
STATE AID HIGHWAY "2"
SCARBOROUGH, CUMBERLAND COUNTY
PINE POINT CROSSING PROJECT SG 0112(1)
DATED - MARCH 1954
S.H.C. FILE NO. 3-81
C.C.R.D. PLAN BOOK 53, PAGE 4 & 6
B) MAINE STATE HIGHWAY COMMISSION - RIGHT OF WAY MAP
STATE AID HIGHWAY NO. 2
SCARBORO, CUMBERLAND COUNTY
FEDERAL AID PROJECT NO. S-0112(2)
DATED - APRIL 1954
S.H.C. FILE NO. 3-83
C.C.R.D. PLAN BOOK 48, PAGE 30 & 34
2) HOLLY STREET/BICKFORD STREET
A) PLAN OF OCEAN-VIEW
SCARBORO, ME
THE A. H. CHAPMAN CO.
BY E. N. SHEFFIELD,
DATED MAY 1924
C.C.R.D. PLAN BOOK 15, PAGE 63
3) SNOW CANNING ROAD
A) TOWN OF SCARBOROUGH
BOOK 6, PAGE 36
MARCH 28, 1872 3 RODS WIDE (49.5')

AS-BUILT PLANS
1) STATE OF MAINE - STATE HIGHWAY COMMISSION
PLAN AND PROFILE
SCARBORO, CUMBERLAND COUNTY
MAINE FEDERAL AID SECONDARY PROJECT NO. S-0112(2)
E-PLAN ARCHIVE PLOT SET ID NO. 2591
2) STATE OF MAINE - STATE HIGHWAY COMMISSION
PINE POINT CROSSING OVER THE TRACKS OF BOSTON AND MAINE RAILROAD
IN THE TOWN OF SCARBORO, CUMBERLAND COUNTY
FEDERAL AID SECONDARY PROJECT NO. SG-0112(1)
BRIDGE AS-BUILT FILE REEL 22, PLANS 60:59-69

TAX MAP INFORMATION
1) TOWN OF SCARBOROUGH
TAX MAPS U24, R87 & R88
2) ASSESSMENT PLAN - SCARBOROUGH, MAINE
CORRECTED TO APRIL 1, 1965
BY H.I. & E.C. JORDAN SURVEYORS
DATED - APRIL 1, 1958
SHEETS NOS. R-11 & U-3

PLAN OF LAND
OWNED BY PAULINE P. STERLING
BY H. I. & E. C. JORDAN CIVIL ENGINEERS
DATED - JUNE 1947
CUMBERLAND COUNTY REGISTRY OF DEEDS
PLAN BOOK 34, PAGE 45

STANDARD BOUNDARY SURVEY
PLAN OF PROPERTY
PINE POINT ROAD
SCARBOROUGH, MAINE
MADE FOR SARA SALISBURY
BY STEPHEN J. MARTIN PLS
DATED OCTOBER 2008
JOB # 200618

STATE OF MAINE
REGISTRY OF DEEDS
COUNTY _____
RECEIVED _____, _____
at ____h____m____M and recorded in
Plan Book _____, Page _____
Attest: _____
REGISTER

CONTROL INFORMATION
HORIZONTAL DATUM - US STATE PLANE NAD83(1996)
ZONE - MAINE 2000 WEST ZONE
VERTICAL DATUM - NAVD 88
COMBINED SCALE FACTOR - 0.9999791

RIGHT-OF-WAY AND TRACK MAP
BOSTON & MAINE R.R.
OPERATED BY THE BOSTON AND MAINE R.R.
STATION 5582+00 TO STATION 5634+80
DATED JUNE 30, 1914
VAL PLAN 2, MAP 105

CURVE DATA
PI = 10+20.08
D = 2°17'31"
Δ = 6°03'53" Lt.
R = 2,500.00'
L = 264.62'
T = 132.44'
E = 3.51'

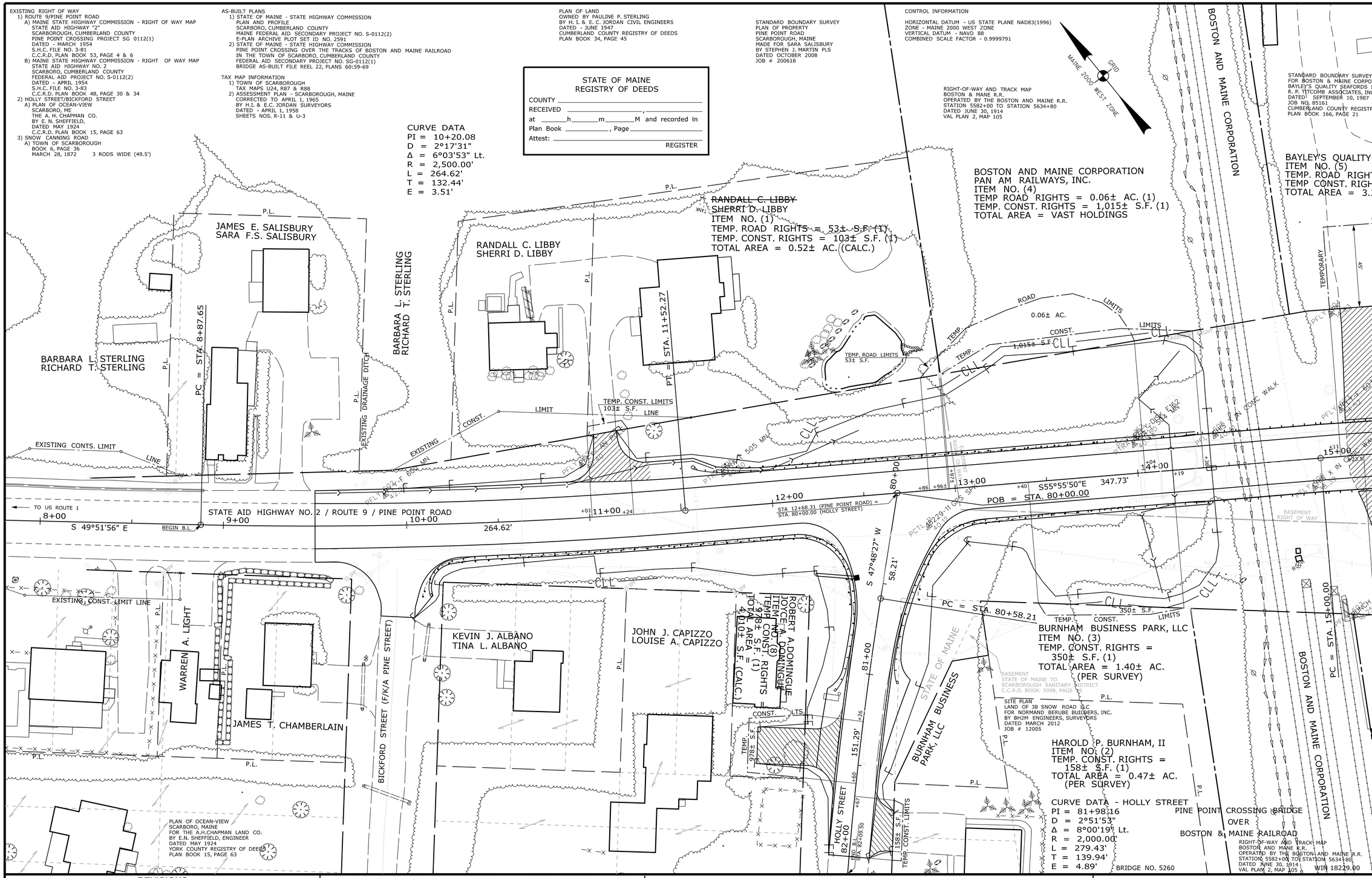

SYMBOLS
- IP or ● IP/F (IRON PIPE or PIN FOUND)
- ST. (SEPTIC TANK)
- (ROW MONUMENT)
- (TRAVERSE POINT)
- WELL
- GRADING LIMIT LINE
- CONSTRUCTION LIMIT LINE
- PROPERTY LIMIT LINE
- LIMITS OF TEMPORARY PORTION (LOTP)
- EXISTING RIGHT OF WAY
- NEW RIGHT OF WAY
- NEW ROW WITHIN EXIST. ROW
- CONTROL OF ACCESS
- WATER LINE
- GAS LINE
- ELECTRIC LINE
- TELEPHONE LINE
- SEWER LINE

ITEM	TECH	CHECKED
BASE MAP		C.W.K.
EXIST. R/W	G.L.L.	
PROP. LINES	G.L.L.	
AREAS	G.L.L.	

STATE OF MAINE
DEPARTMENT OF TRANSPORTATION
16 STATE HOUSE STATION - AUGUSTA, ME 04333-0016

SCARBOROUGH
RIGHT OF WAY MAP

REVISIONS

NO.	DATE	DESCRIPTION	BY

PLAN FILED IN PLAN BOOK PAGE COUNTY RECORD

NO.	GRANTOR	INSTRUMENT	DATE	BOOK	PAGE
		COND.	6/23/15	32369	139

DAVID BERNHARDT
COMMISSIONER
JOYVE NOEL TAYLOR
CHIEF ENGINEER
DATE

To the best of my knowledge and belief the Highway Right of Way lines depicted hereon are based upon a survey conforming to the Standards of Practice promulgated by the Maine Board of Licensure for Professional Land Surveyors 02-360 CMR, Chapter 90; Exceptions: (1) No separate survey report, (2) Monumentation only as shown on plan. See sheet X of this plan set for coordinates. (3) Other boundary lines, including lines between abutters are approximate and for general reference purposes only.

STATE AID HIGHWAY NO. 2
ROUTE 9 / PINE POINT ROAD
SCARBOROUGH CUMBERLAND COUNTY
FEDERAL AID PROJECT NO. BH-1822(900)X

APRIL 2015	RIGHT-OF-WAY MAP	D.O.T. FILE NO. 3-602
SCALE 1" = 25'	SHEET 1 OF 2	

SHEET NUMBER
55
OF 57

Filename: ...\00\ROW\MSTA\055_RWPLAN1.dgn Division: BRIDGE Username: David.Sullivan Date:8/5/2015

Filename: ...\00\ROW\MSTA\056_RWPLAN2.dgn Division: BRIDGE Username: David.Sullivan Date:8/5/2015

STATE OF MAINE
REGISTRY OF DEEDS
COUNTY _____
RECEIVED _____, _____
at _____h_____m_____M and recorded in
Plan Book _____, Page _____
Attest: _____
REGISTER

PLAN OF PROPERTY
FOR MAINE DEPARTMENT OF INLAND FISHERIES AND GAME
GAME DIVISION
BY H. I. & E. C. JORDAN, SURVEYORS
DATED DECEMBER 6, 1971
PLAN FILE NO. 1036
CUMBERLAND COUNTY REGISTRY OF DEEDS
PLAN BOOK 93, PAGE 49 & 50

CONTROL INFORMATION

HORIZONTAL DATUM - US STATE PLANE NAD83(1996)
ZONE - MAINE 2000 WEST ZONE
VERTICAL DATUM - NAVD 88
COMBINED SCALE FACTOR - 0.9999791

MAINE 2000 WEST ZONE
GRID

STANDARD BOUNDARY SURVEY
FOR BOSTON & MAINE CORPORATION TO
BAYLEY'S QUALITY SEAFOODS INC.
R. P. TITCOMB ASSOCIATES, INC.
DATED SEPTEMBER 10, 1987
JOB NO. 85161
CUMBERLAND COUNTY REGISTRY OF DEEDS
PLAN BOOK 166, PAGE 21

ROBERT A. CUMMINGS
SUZANNE P. CUMMINGS
ITEM NO. (7)
TEMP ROAD RIGHTS = 430± S.F. (1)
TOTAL AREA = 1.4± AC. (PER TOWN)

STATE OF MAINE

STATE OF MAINE

BAYLEY'S QUALITY SEAFOODS, INC.
ITEM NO. (5)
TEMP. ROAD RIGHTS = 55± S.F. (1)
TEMP CONST. RIGHTS = 0.07± AC. (1)
TOTAL AREA = 3.31± AC. (PER SURVEY)

CONSTRUCTION
0.07± AC.
TEMPORARY
LIMITS
45'
APPROXIMATE SEPTIC TANK
55± S.F.
TEMP.
ROAD
430± S.F.
LIMITS
APPROXIMATE LEACH FIELD
EASEMENT RIGHT OF WAY
CLL
P.L.
JONES CREEK
CONC. WALK
PFL Y=603 SPK
PFL Y=600 SPK
PFL Y=601 MH
STATE OF MAINE TO F.H. SNOW S.H.C. DEED 4/30/58
15+00
16+00
17+00
18+00
19+00
20+00
21+00
344.73'
291.09'
STATE AID HIGHWAY NO. 2 / ROUTE 9 / PINE POINT ROAD
PFL Y=596 X IN CONC. WALK
CONC. LOADING DOCK
STEEL EDGE OF CONC. LOADING DOCK
FLANGE BOLT
GPS SPK
END B.L.
S 43°40'55" E
TO OLD ORCHARD BEACH
SNOW CANNING ROAD
621± S.F.
TEMP. CONST. LIMITS
MURIEL P. PELLETIER
ITEM NO. (6)
TEMP. CONST. RIGHTS = 621± S.F. (1)
TOTAL AREA = 1.08± AC. (CALC.)
PC = STA. 15+00.00
PCC = STA. 18+44.73
PT = STA. 21+35.82
BOSTON AND MAINE CORPORATION

CURVE DATA
PI = 16+72.84
D = 3°00'56"
Δ = 10°23'44" Rt.
R = 1,900.00'
L = 344.73'
T = 172.84'
E = 7.85'

CURVE DATA
PI = 19+90.29
D = 0°38'12"
Δ = 1°51'11" Rt.
R = 9,000.00'
L = 291.09'
T = 145.56'
E = 1.18'

J. D. H. S. ENTERPRISES

PLAN OF PROPERTY IN
SCARBOROUGH, MAINE
MADE FOR
J.D.H.S. ENTERPRISES
BY H.I. & E.C. JORDAN, SURVEYORS
JOB # 945
DATED OCTOBER 10, 1974
CUMBERLAND COUNTY REGISTRY OF DEEDS
PLAN BOOK 195, PAGE 36

RIGHT-OF-WAY AND TRACK MAP
BOSTON AND MAINE R.R.
OPERATED BY THE BOSTON AND MAINE R.R.
STATION 5582+00 TO STATION 5634+80
DATED JUNE 30, 1914
VAL. PLAN 2, MAP 105

PINE POINT CROSSING BRIDGE
OVER
BOSTON & MAINE RAILROAD
BRIDGE NO. 5260 WIN 18229.00

SYMBOLS
- IP or ● IPF (IRON PIPE or PIN FOUND)
- S.T. (SEPTIC TANK)
- (ROW MONUMENT)
- (TRAVERSE POINT)
- (WELL)
- GROUNDING UNIT LINE
- CONSTRUCTION LIMIT LINE
- PROPERTY LINE
- LIMITS OF VARIOUS RIGHT TO PORTION (L.O.V.R.P.)
- EXISTING RIGHT OF WAY
- NEW RIGHT OF WAY
- NEW ROW WITHIN EXIST. ROW
- CONTROL OF ACCESS
- WATER LINE
- GAS LINE
- ELECTRIC LINE
- TELEPHONE LINE
- SEWER LINE

ITEM	TECH	CHECKED
BASE MAP		
EXIST. R/W	G.L.L.	C.W.K.
PROP. LINES	G.L.L.	
AREAS	G.L.L.	

STATE OF MAINE
DEPARTMENT OF TRANSPORTATION
16 STATE HOUSE STATION - AUGUSTA, ME 04333-0016
SCARBOROUGH
RIGHT OF WAY MAP

REVISIONS			
NO.	DATE	DESCRIPTION	BY

PLAN FILED IN PLAN BOOK PAGE COUNTY RECORD					
NO.	GRANTOR	INSTRUMENT	DATE	BOOK	PAGE
		COND.	6/23/15	32369	139

DAVID BERNHARDT
COMMISSIONER
JOYVE NOEL TAYLOR
CHIEF ENGINEER
DATE

To the best of my knowledge and belief the Highway Right of Way lines depicted hereon are based upon a survey conforming to the Standards of Practice promulgated by the Maine Board of Licensure for Professional Land Surveyors 02-360 CMR, Chapter 90; Exceptions: (1) No separate survey report, (2) Monumentation only as shown on plan. See sheet X of this plan set for coordinates. (3) Other boundary lines, including lines between abutters are approximate and for general reference purposes only.

STATE AID HIGHWAY NO. 2
ROUTE 9 / PINE POINT ROAD
SCARBOROUGH CUMBERLAND COUNTY
FEDERAL AID PROJECT NO. BH-1822(900)X

APRIL 2015	RIGHT-OF-WAY MAP	D.O.T. FILE NO. 3-602
SCALE 1" = 25'	SHEET 2 OF 2	

SHEET NUMBER
56
OF 57