STATE OF MAINE
DEPARTMENT OF TRANSPORTATION

BANGOR MAINTENANCE LOT
CARIBOU MAINTENANCE LOT
DIXFIELD MAINTENANCE LOT
FAIRFIELD MAINTENANCE LOT
SCARBOROUGH MAINTENANCE LOT
STANDBY GENERATORS

LIST OF DRAWINGS

TITLE SHEET ____ 1
LEGEND SHEET ____ 2
BANGOR PLANS AND DETAILS ____ 3
CARIBOU PLANS AND DETAILS ____ 4
DIXFIELD PLANS AND DETAILS ____ 5
FAIRFIELD PLANS AND DETAILS ____ 6
SCARBOROUGH PLANS AND DETAILS ____ 7

BANGOR
PENOBSCOT COUNTY

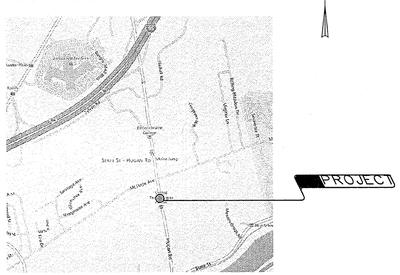

LOCATION MAP
219 HOGAN RD, BANGOR

CARIBOU
AROOSTOOK COUNTY

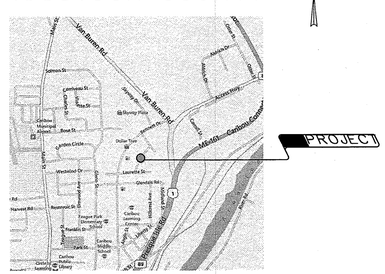

LOCATION MAP
EVERGREEN PKWY, CARIBOU

DIXFIELD
OXFORD COUNTY

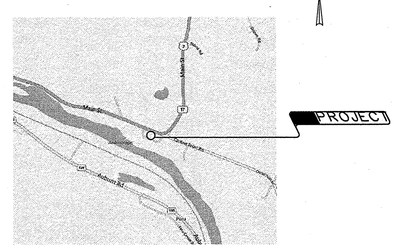

LOCATION MAP
US ROUTE 2, DIXFIELD

FAIRFIELD
SOMERSET COUNTY

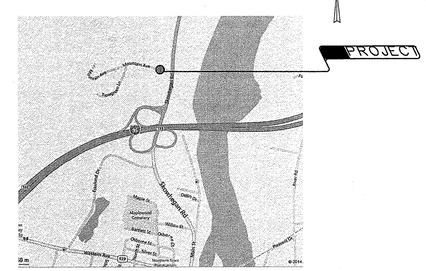

LOCATION MAP
10 MOUNTAIN AVE, FAIRFIELD

SCARBOROUGH
CUMBERLAND COUNTY

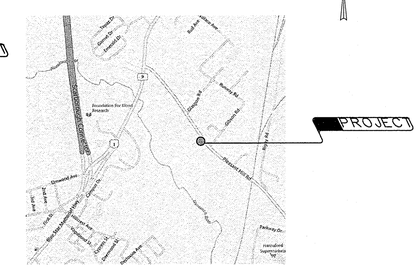

LOCATION MAP
61 PLEASANT HILL RD, SCARBOROUGH

SMRT
ARCHITECTURE
ENGINEERING
PLANNING
INTERIOR DESIGN
COMMISSIONING
144 Fore Street/P.O. Box 618
Portland, Maine 04104
tel. (207) 772-3846
fax. (207) 772-1070
www.smrtinc.com

STATE OF MAINE
DEPARTMENT OF TRANSPORTATION

	DATE
APPROVED	
COMMISSIONER:	5/1/14
CHIEF ENGINEER:	5-1-14

STATE OF MAINE
WILLIAM R. HEIL
No. 7880
LICENSED
PROFESSIONAL ENGINEER

SIGNATURE	7880
P.E. NUMBER	4/11/14
DATE	4-11-14

PROJECT INFORMATION

PROGRAM	FLEET SERVICES
PROJECT MANAGER	DAVID MEALEY
DESIGNER	WILLIAM HEIL
CONSULTANT	SMRT, INC.
PROJECT RESIDENT	
CONTRACTOR	
PROJECT COMPLETION DATE	

MDOT STANDBY GENERATOR

COVER SHEET

SHEET NUMBER
1
OF 7

Filename: $file$ COVER-12138 Division: $wkgroup$ Username: $user$ Date:$date$

ONE LINE DIAGRAM

- MOLDED CASE CIRCUIT BREAKER
- ST – SHUNT TRIP
  GF – GROUND FAULT
  EO – ELECTRICALLY OPERATED
- DISCONNECT, ISOLATION OR SAFETY SWITCH
- FUSED CUTOUT
- POWER TRANSFORMER
  OA – LIQUID TYPE SELF COOLED
  AA – DRY TYPE SELF COOLED
  FA – FAN COOLED
  CONNECTION
- CURRENT TRANSFORMER
  600/5 — RATIO
  3 — NUMBER REQUIRED
- GENERATOR
- TRANSFER SWITCH
  ATS – AUTOMATIC
  MTS – MANUAL
- METER
  W – WATTMETER
  WH – WATT HOURMETER
  KWH – KILOWATT HOUR
- KEY INTERLOCK
- FUSE
- GROUND
- GROUND ROD

ABBREVIATIONS

A,AMP	AMPERE
AFF	ABOVE FINISHED FLOOR
AFG	ABOVE FINISHED GRADE
AHJ	AUTHORITY HAVING JURISDICTION
AIC	AMPERE INTERRUPTING CAPACITY
ATS	AUTOMATIC TRANSFER SWITCH
AWG	AMERICAN WIRE GAUGE
BFG	BELOW FINISHED GRADE
BOS	BOTTOM OF STEEL
C	CONDUIT, CONDUCTOR
CB	CIRCUIT BREAKER
CT	CURRENT TRANSFORMER
CU	COPPER
DB	DIRECT BURIED
DISC	DISCONNECT
DN	DOWN
EMT	ELECTRICAL METALLIC TUBING
FBO	FURNISHED BY OTHERS
FU	FUSE
FWE	FURNISHED WITH EQUIPMENT
GEN	GENERATOR
GFCI	GROUND FAULT CIRCUIT BREAKER
GND	GROUND
HTR	HEATER
IG	ISOLATED GROUND
IMC	INTERMEDIATE METAL CONDUIT
K	KILO
KCMIL	THOUSAND CIRCULAR MILS
KV	KILOVOLT
KVA	KILOVOLT–AMPERE
KVAR	KILOVOLT–AMPERE REACTIVE
KW	KILOWATT
KWH	KILOWATT–HOUR

ABBREVIATIONS

LTG	LIGHTING
MC	METAL CLAD
MCB	MAIN CIRCUIT BREAKER
MDOT	MAINE DEPARTMENT OF TRANSPORTATION
MFR	MANUFACTURER
MLO	MAIN LUG ONLY
MTD	MOUNTED
MTS	MANUAL TRANSFER SWITCH
NEC	NATIONAL ELECTRICAL CODE
NEUT	NEUTRAL
NTS	NOT TO SCALE
PF	POWER FACTOR
PH	PHASE
PVC	POLYVINYL CHLORIDE
RGS	RIGID STEEL CONDUIT
RSC	RIGID STEEL CONDUIT
SN	SOLID NEUTRAL
SWBD	SWITCHBOARD
SWGR	SWITCHGEAR
TRANSF	TRANSFORMER
UNK	UNKNOWN
V	VOLT
VA	VOLT–AMPERE
VAR	VOLT–AMPERE REACTIVE
WM	WATT METER
WP	WEATHER PROOF
XFMR	TRANSFORMER

LINE TYPES

- EXISTING
- NEW
- DEMOLITION

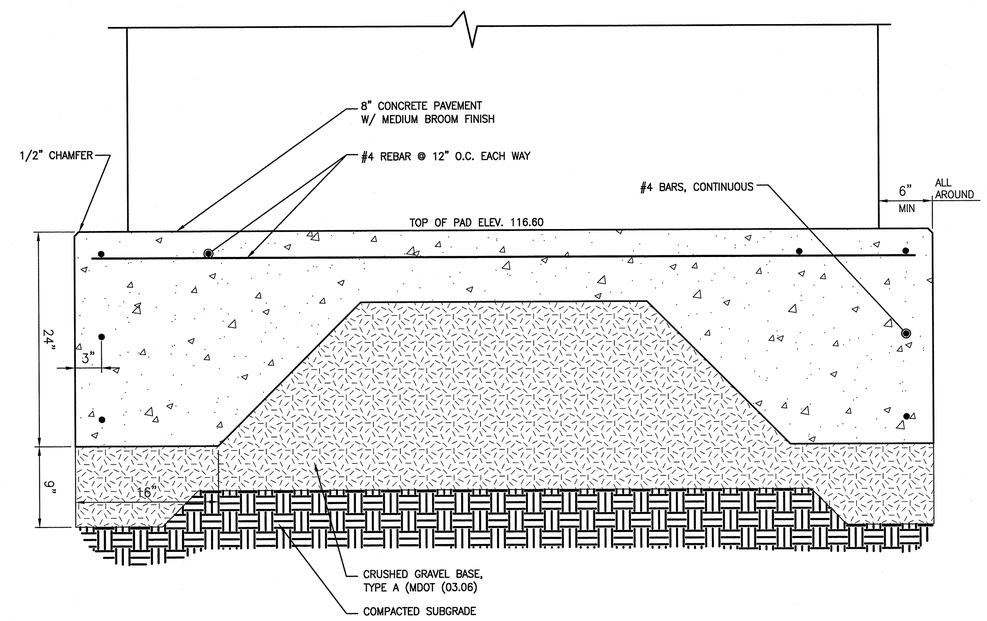

GENERATOR PAD

SCALE: 1 1/2"=1'-0"

SMRT
ARCHITECTURE
ENGINEERING
PLANNING
INTERIOR DESIGN
COMMISSIONING
144 Fore Street/P.O. Box 618
Portland, Maine 04104
tel. (207) 772–3846
fax. (207) 772–1070
www.smrtinc.com

STATE OF MAINE
DEPARTMENT OF TRANSPORTATION

APPROVED | DATE
COMMISSIONER:
CHIEF ENGINEER:

STATE OF MAINE
WILLIAM R. HEIL
No. 7880
LICENSED
PROFESSIONAL ENGINEER

SIGNATURE
P.E. NUMBER 7880
DATE 4-11-14

PROJECT INFORMATION

PROGRAM	FLEET SERVICES
PROJECT MANAGER	DAVID MEALEY
DESIGNER	WILLIAM HEIL
CONSULTANT	SMRT, INC.
PROJECT RESIDENT	
CONTRACTOR	
PROJECT COMPLETION DATE	

MDOT STANDBY GENERATOR

ELECTRICAL
LEGEND SHEET

SHEET NUMBER
2
OF 7

Filename: $file$ LEGEND-12138 Division: $wkgroup$ Username: $user$ Date:$date$

GENERAL NOTE:

1. SEE E-001 FOR ELECTRICAL LEGEND SHEET.

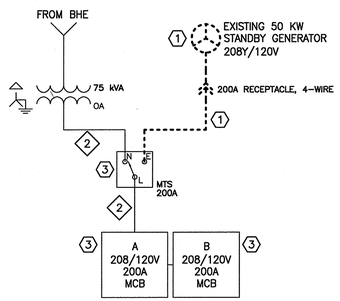

3/1 EXISTING CONDITION ONE-LINE
SCALE: NONE

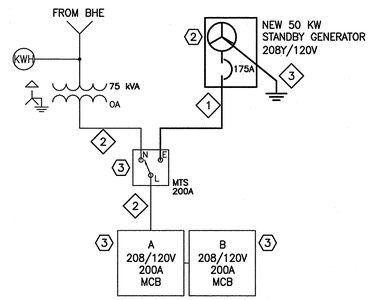

3/1 NEW WORK ONE-LINE
SCALE: NONE

KEYED NOTES:

1. REMOVE EXISTING 50kW GENERATOR AND TRAILER. REMOVE RECEPTACLE AND CONDUCTORS BACK TO EXISTING MANUAL TRANSFER SWITCH.
2. NEW GENERATOR TO BE INSTALLED ON NEW PAD. PROVIDE NEW CONDUIT AND CABLE FOR CONNECTION TO EXISTING MANUAL TRANSFER SWITCH.
3. EXISTING TO REMAIN.

CABLE SCHEDULE:

1. COPPER 4#2/0 AWG & #4 AWG GND IN 2"C
2. EXISTING TO REMAIN.
3. COPPER 2#4 AWG BARE

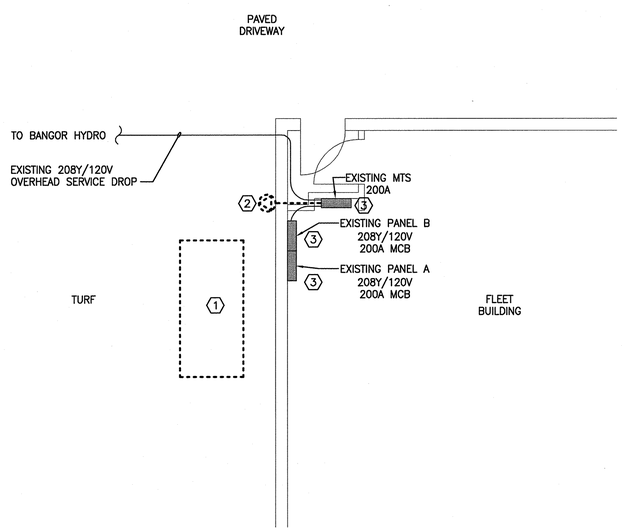

1/– DEMOLITION WORK PART-PLAN
SCALE: 1/4"=1'-0"

KEYED NOTES:

1. REMOVE EXISTING 50 kW TRAILER MOUNTED GENERATOR.
2. REMOVE EXISTING 200A RECEPTACLE AND CONDUCTORS BACK TO THE EXISTING MANUAL TRANSFER SWITCH. CONDUIT REMAINS FOR RE-USE.
3. EXISTING TO REMAIN.

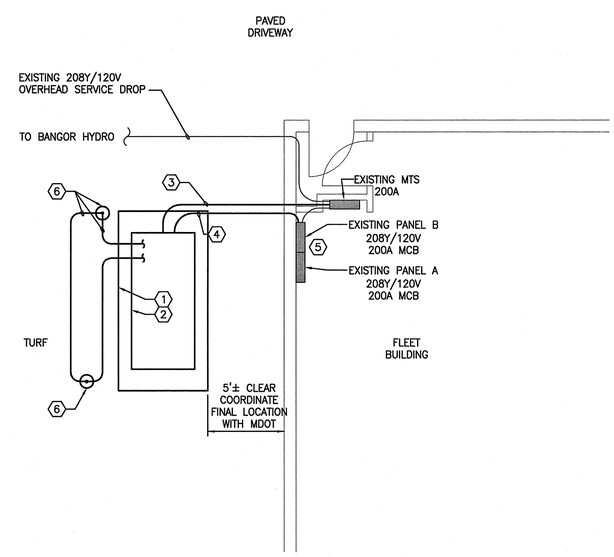

2/– NEW WORK PART-PLAN
SCALE: 1/4"=1'-0"

KEYED NOTES:

1. PROVIDE CONCRETE PAD (SEE DETAIL 1 ON SHEET 2) FOR USE WITH GENERATOR.
2. PROVIDE 50 kW, 208Y/120V NATURAL GAS STANDBY GENERATOR WITH 175A BREAKER. PROVIDE WITH WEATHER PROOF ENCLOSURE AND 24 HOUR SKID BELLY TANK.
3. PROVIDE FEEDER UNDERGROUND FROM GENERATOR TO EXISTING MANUAL TRANSFER SWITCH.
4. PROVIDE 4#12 AWG & #12 AWG GND IN 3/4"C UNDERGROUND FROM GENERATOR TO PANEL "B" FOR BATTERY CHARGER AND ENGINE BLOCK HEATER BRANCH CIRCUITS.
5. PROVIDE BRANCH BREAKER IN PANELS A OR B TO ACCOMMODATE BATTERY CHARGER AND BLOCK HEATER CIRCUITS.
6. 8'x1/2" COPPER GROUND ROD AND #4 BARE GROUND CONDUCTORS.

PROJECT NORTH
MAG NORTH

SMRT
ARCHITECTURE
ENGINEERING
PLANNING
INTERIOR DESIGN
COMMISSIONING
144 Fore Street/P.O. Box 618
Portland, Maine 04104
tel. (207) 772-3846
fax. (207) 772-1070
www.smrtinc.com

STATE OF MAINE
DEPARTMENT OF TRANSPORTATION

APPROVED
DATE
COMMISSIONER:
CHIEF ENGINEER:

STATE OF MAINE
WILLIAM R. HEIL
No. 7880
LICENSED PROFESSIONAL ENGINEER

SIGNATURE 7880
P.E. NUMBER 7880
DATE 4-11-14

PROJECT INFORMATION	
PROGRAM	FLEET SERVICES
PROJECT MANAGER	DAVID MEALEY
DESIGNER	WILLIAM HEIL
CONSULTANT	SMRT, INC.
PROJECT RESIDENT	
CONTRACTOR	
PROJECT COMPLETION DATE	

MDOT STANDBY GENERATOR

BANGOR
PLANS AND DETAILS

SHEET NUMBER
3
OF 7

Filename: $file$ BANGOR-12138 Division: $wkgroup$ Username: $user$ Date:$date$

GENERAL NOTE:

1. SEE E-001 FOR ELECTRICAL LEGEND SHEET.

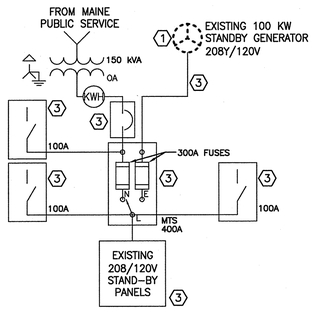

3 EXISTING CONDITION ONE-LINE
SCALE: NONE

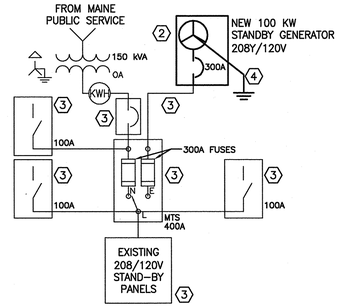

4 NEW WORK ONE-LINE
SCALE: NONE

KEYED NOTES:

1. REMOVE EXISTING 100kW GENERATOR. CONDUIT AND CABLES TO REMAIN FOR REUSE WITH NEW GENERATOR.
2. NEW GENERATOR TO BE INSTALLED ON EXISTING PAD. UTILIZE EXISTING CONDUIT AND CABLE FOR CONNECTION TO EXISTING MANUAL TRANSFER SWITCH.
3. EXISTING TO REMAIN.
4. COPPER 1#1/0 AWG BARE

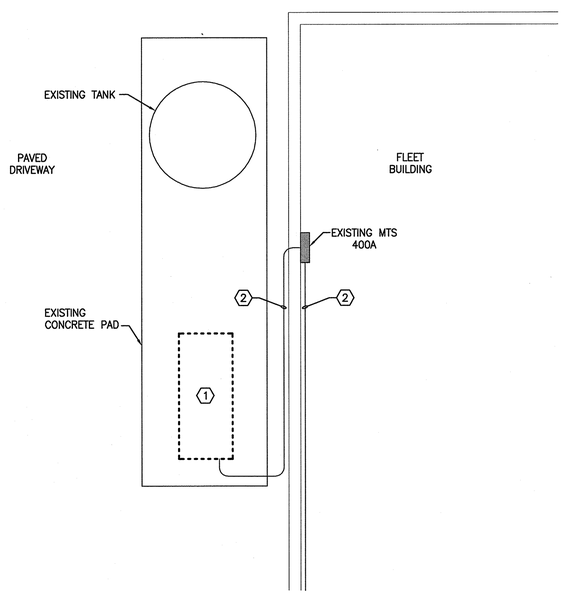

1 DEMOLITION WORK PART-PLAN
SCALE: 1/4"=1'-0"

KEYED NOTES:

1. REMOVE EXISTING 100kW GENERATOR.
2. EXISTING CONDUIT AND CONDUCTORS TO REMAIN FOR REUSE UNDER NEW WORK.

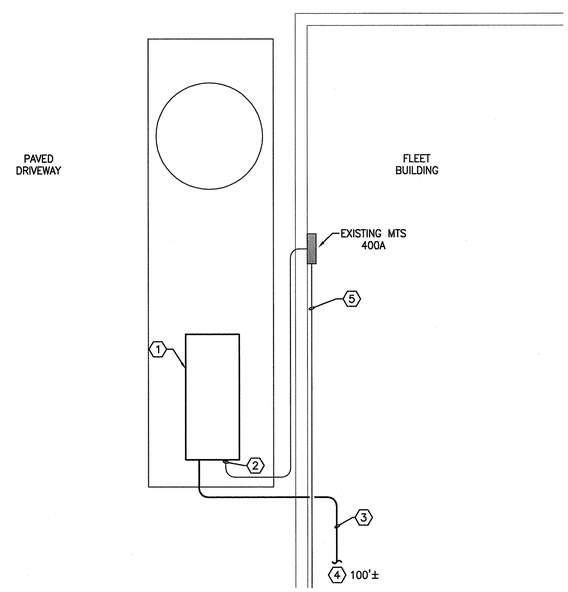

2 NEW WORK PART-PLAN
SCALE: 1/4"=1'-0"

KEYED NOTES:

1. PROVIDE 100 kW, 208Y/120V DIESEL STANDBY GENERATOR WITH 300A BREAKER. PROVIDE WITH WEATHER PROOF ENCLOSURE AND 24 HOUR SKID BELLY TANK. MOUNT GENERATOR TO EXISTING CONCRETE PAD.
2. CONNECT EXISTING STANDBY POWER CONDUCTORS TO GENERATOR 300A BREAKER.
3. PROVIDE 4#12 AWG & #12 AWG GND COPPER IN 3/4"C FOR BATTERY CHARGER AND ENGINE BLOCK HEATER BRANCH CIRCUITS.
4. PROVIDE BRANCH BREAKERS IN NEAREST AVAILABLE PANEL TO ACCOMMODATE GENERATOR BATTERY CHARGER AND BLOCK HEATER CIRCUITS.
5. EXISTING CONDUIT & CONDUCTORS REMAIN.

PROJECT NORTH
MAG NORTH

SMRT
ARCHITECTURE
ENGINEERING
PLANNING
INTERIOR DESIGN
COMMISSIONING
144 Fore Street/P.O. Box 618
Portland, Maine 04104
tel. (207) 772-3846
fax. (207) 772-1070
www.smrtinc.com

STATE OF MAINE
DEPARTMENT OF TRANSPORTATION

APPROVED	DATE
COMMISSIONER:	
CHIEF ENGINEER:	

STATE OF MAINE
WILLIAM R. HEIL
No. 7880
LICENSED PROFESSIONAL ENGINEER

SIGNATURE
P.E. NUMBER 7880
DATE 4-11-14

PROJECT INFORMATION	
PROGRAM	FLEET SERVICES
PROJECT MANAGER	DAVID MEALEY
DESIGNER	WILLIAM HEIL
CONSULTANT	SMRT, INC.
PROJECT RESIDENT	
CONTRACTOR	
PROJECT COMPLETION DATE	

MDOT STANDBY GENERATOR

CARIBOU
PLANS AND DETAILS

SHEET NUMBER
4
OF 7

Filename: $file$ CARIBOU-12138 Division: $wkgroup$ Username: $user$ Date:$date$

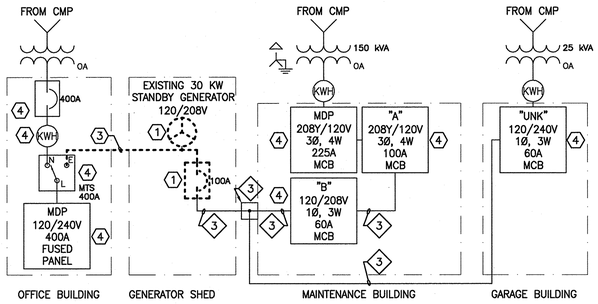

EXISTING CONDITION ONE-LINE

7 SCALE: NONE

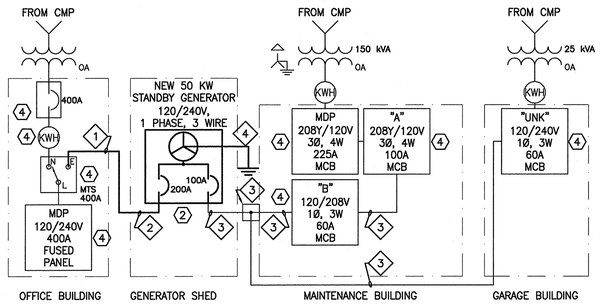

NEW WORK ONE-LINE

8 SCALE: NONE

KEYED NOTES:

1. REMOVE EXISTING 30kW GENERATOR AND BREAKER.
2. NEW GENERATOR TO BE INSTALLED ON EXISTING PAD, IN EXISTING SHED. GENERATOR TO BE PROVIDED WITH 200 AMP AND 100 AMP BREAKERS.
3. REMOVE EXISTING CONDUCTORS. CONDUIT TO REMAIN.
4. EXISTING TO REMAIN.

CABLE SCHEDULE:

1. COPPER 3#3/0 AWG & #4 AWG GND IN EXISTING CONDUIT
2. 3#3/0 AWG & #4 AWG GND, 2"C.
3. EXISTING TO REMAIN.
4. COPPER 1#2 AWG BARE

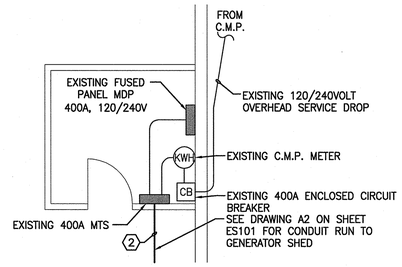

OFFICE BUILDING NEW WORK PART-PLAN

6 SCALE: 1/4"=1'-0"

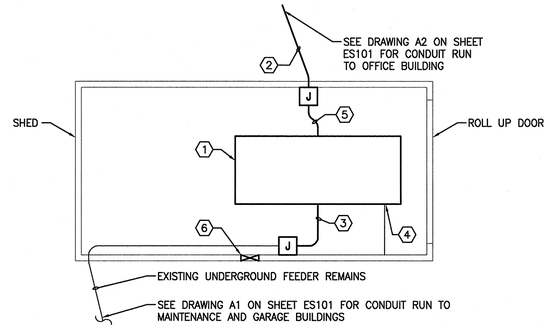

GENERATOR SHED AREA NEW WORK PART-PLAN

5 SCALE: 1/4"=1'-0"

GENERAL NOTE:

1. SEE E-001 FOR ELECTRICAL LEGEND SHEET.

KEYED NOTES:

1. PROVIDE 50 kW, 120/240V SINGLE PHASE STANDBY DIESEL GENERATOR WITH ONE 200A BREAKER AND ONE 100A BREAKER. PROVIDE WITH 24 HOUR SKID BELLY TANK. PLACE GENERATOR ON EXISTING CONCRETE PAD WITHIN EXISTING "SHED". ROUTE EXHAUST THRU EXISTING THIMBLE. PROVIDE NEW THIMBLE IF NECESSARY.
2. PROVIDE FEEDER IN EXISTING CONDUIT FROM THE THE GENERATOR SHED TO THE OFFICE BUILDING EXISTING 400A MANUAL TRANSFER SWITCH.
3. PROVIDE FEEDER FROM GENERATOR 100A BREAKER TO JUNCTION BOX. SPLICE NEW CONDUCTORS TO EXISTING CONDUCTORS SERVING MAINTENANCE AND GARAGE BUILDINGS.
4. CONNECT EXISTING BATTERY CHARGER AND ENGINE BLOCK HEATER CIRCUITS TO NEW GENERATOR.
5. PROVIDE FEEDER AND CONDUIT FROM THE 200 AMP BREAKER IN THE GENERATOR. TRANSITION CONDUCTORS INTO EXISTING CONDUIT. SEE NOTE 2 THIS DRAWING.
6. PROVIDE EXHAUST THIMBLE TO REPLACE EXISTING.

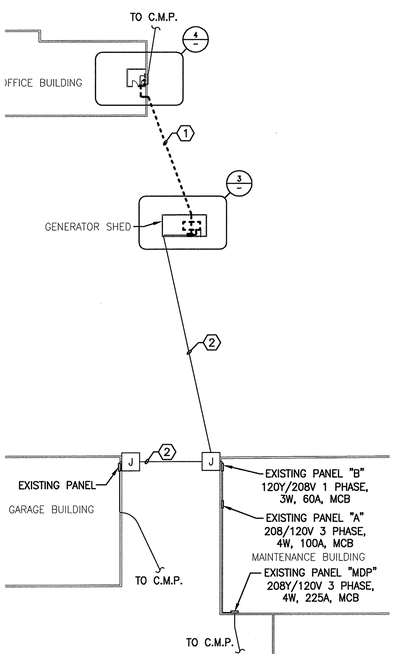

DEMOLITION WORK PART-PLAN

1 SCALE: 1/32"=1'-0"

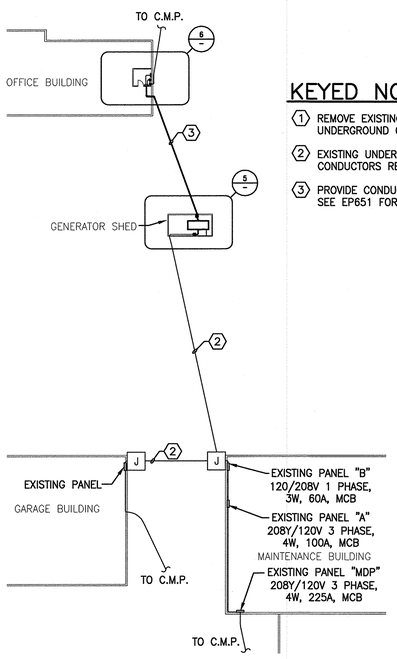

NEW WORK PART-PLAN

2 SCALE: 1/32"=1'-0"

KEYED NOTES:

1. REMOVE EXISTING CONDUCTORS. UNDERGROUND CONDUIT REMAINS FOR REUSE.
2. EXISTING UNDERGROUND CONDUIT AND CONDUCTORS REMAIN.
3. PROVIDE CONDUCTORS IN EXISTING CONDUIT. SEE EP651 FOR SIZES.

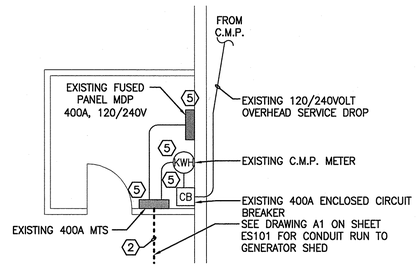

OFFICE BUILDING DEMOLITION WORK PART-PLAN

4 SCALE: 1/4"=1'-0"

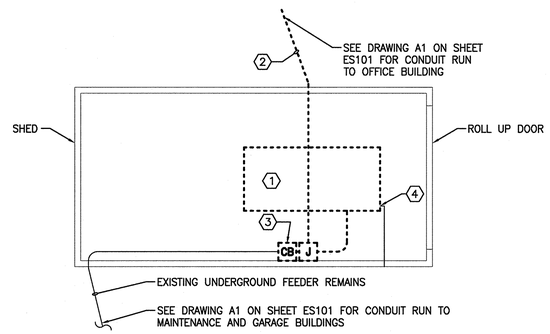

GENERATOR SHED AREA DEMOLITION WORK PART-PLAN

3 SCALE: 1/4"=1'-0"

KEYED NOTES:

1. REMOVE EXISTING 30kW GENERATOR.
2. REMOVE EXISTING CONDUCTORS BETWEEN SHED JUNCTION BOX AND OFFICE BUILDING MTS. SAVE CONDUIT FOR REUSE UNDER NEW WORK.
3. REMOVE EXISTING 100A 2-POLE CIRCUIT BREAKER.
4. DISCONNECT CIRCUIT FOR GENERATOR BATTERY CHARGER AND ENGINE BLOCK HEATER. SAVE CIRCUIT FOR RECONNECTION UNDER NEW WORK.
5. EXISTING TO REMAIN.

PROJECT NORTH
MAG NORTH

SMRT
ARCHITECTURE
ENGINEERING
PLANNING
INTERIOR DESIGN
COMMISSIONING
144 Fore Street/P.O. Box 618
Portland, Maine 04104
tel. (207) 772-3946
fax. (207) 772-1070
www.smrtinc.com

STATE OF MAINE
DEPARTMENT OF TRANSPORTATION

APPROVED	DATE
COMMISSIONER:	
CHIEF ENGINEER:	

STATE OF MAINE
WILLIAM R. HEIL
No. 7880
LICENSED PROFESSIONAL ENGINEER

SIGNATURE	
P.E. NUMBER	7880
DATE	4-11-14

PROJECT INFORMATION	
PROGRAM	FLEET SERVICES
PROJECT MANAGER	DAVID MEALEY
DESIGNER	WILLIAM HEIL
CONSULTANT	SMRT, INC.
PROJECT RESIDENT	
CONTRACTOR	
PROJECT COMPLETION DATE	

MDOT STANDBY GENERATOR

DIXFIELD
PLANS AND DETAILS

SHEET NUMBER
5
OF 7

Filename: $file$ DIXFIELD-12138 Division: $wkgroup$ Username: $user$ Date: $date$

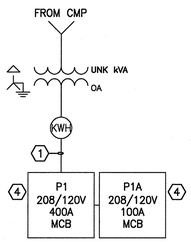

3 EXISTING CONDITION ONE-LINE
SCALE: NONE

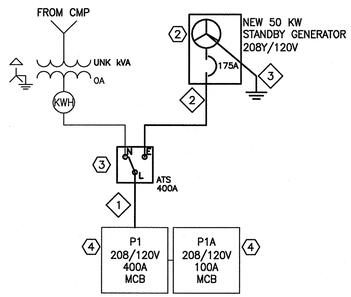

4 NEW WORK ONE-LINE
SCALE: NONE

GENERAL NOTE:

1. SEE E-001 FOR ELECTRICAL LEGEND SHEET.

KEYED NOTES:

1. REMOVE SERVICE CONDUIT FROM WITHIN BUILDING. SERVICE CONDUCTORS REMAIN.
2. NEW GENERATOR TO BE INSTALLED ON NEW CONCRETE PAD.
3. NEW AUTOMATIC TRANSFER SWITCH TO BE LOCATED IN EXISTING ELECTRICAL ROOM.
4. EXISTING TO REMAIN.

CABLE SCHEDULE:

1. 2 SETS OF ALUMINUM 4#250 kcmil & #1/0 AWG GND IN 4"C
2. ALUMINUM 4#4/0 AWG & #2 AWG GND IN 2-1/2"C
2. COPPER 2#4 BARE

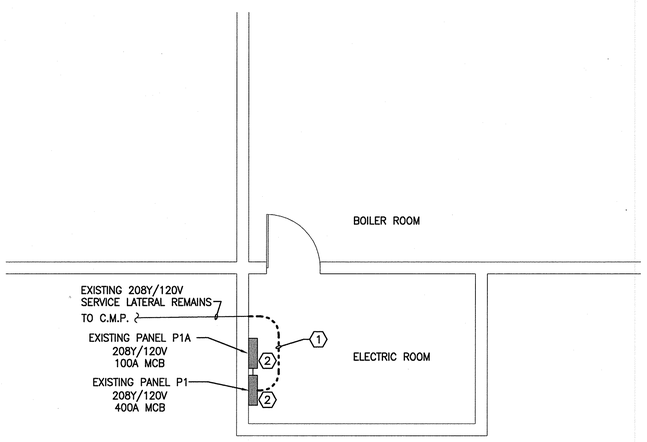

1 DEMOLITION WORK PART-PLAN
SCALE: 1/4"=1'-0"

KEYED NOTES:

1. REMOVE EXISTING CONDUIT FROM BUILDING ENTRY TO PANEL P1. CONDUCTORS REMAIN FOR REUSE UNDER NEW WORK.
2. EXISTING TO REMAIN.

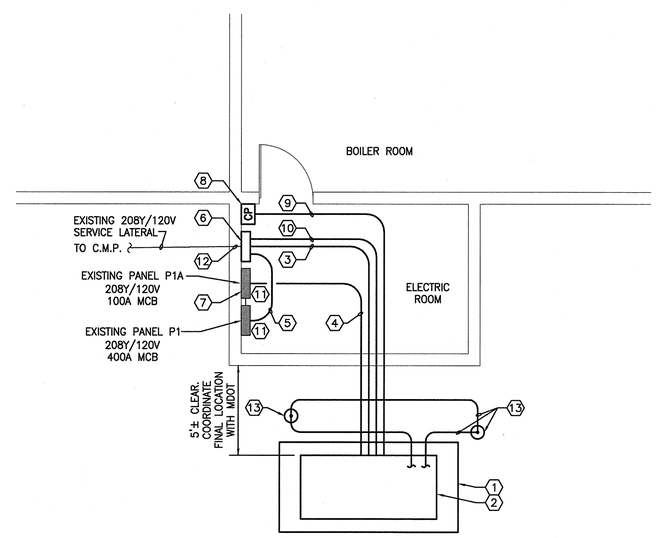

2 NEW WORK PART-PLAN
SCALE: 1/4"=1'-0"

KEYED NOTES:

1. PROVIDE CONCRETE PAD (SEE DETAIL 1 ON SHEET 2) FOR USE WITH GENERATOR.
2. PROVIDE 50 kW, 208Y/120V STANDBY DIESEL GENERATOR WITH 175A BREAKER. PROVIDE WEATHER PROOF ENCLOSURE AND 24 HOUR SKID BELLY TANK.
3. PROVIDE FEEDER UNDERGROUND FROM GENERATOR TO NEW AUTOMATIC TRANSFER SWITCH.
4. PROVIDE 4#12 AWG & #12 AWG GND COPPER IN 3/4"C UNDERGROUND FROM GENERATOR TO PANEL P1A FOR BATTERY CHARGER AND ENGINE BLOCK HEATER BRANCH CIRCUITS.
5. PROVIDE FEEDER FROM NEW AUTOMATIC TRANSFER SWITCH TO EXISTING PANEL P1.
6. PROVIDE 400A AUTOMATIC TRANSFER SWITCH. NEW ATS TO INCLUDE AUTOMATIC EXERCISER.
7. PROVIDE BRANCH BREAKER IN PANEL P1A TO ACCOMMODATE GENERATOR BATTERY CHARGER AND BLOCK HEATER.
8. PROVIDE GENERATOR REMOTE NOTIFICATION PANEL.
9. PROVIDE 1"C AND CONDUCTORS (AS REQUIRED BY MANUFACTURER)FROM NEW GENERATOR REMOTE NOTIFICATION PANEL TO GENERATOR.
10. PROVIDE 1" CONDUIT AND CONDUCTORS BETWEEN AUTOMATIC TRANSFER SWITCH AND GENERATOR FOR START/STOP CONTROLS.
11. EXISTING TO REMAIN.
12. CONNECT EXISTING SERVICE ENTRANCE CONDUCTORS SAVED UNDER DEMO WORK INTO NEW AUTOMATIC TRANSFER SWITCH.
13. 8'x1/2" COPPER GROUND ROD AND #4 BARE GROUND CONDUCTORS.

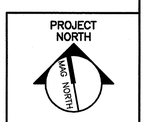

SMRT
ARCHITECTURE
ENGINEERING
PLANNING
INTERIOR DESIGN
COMMISSIONING
144 Fore Street/P.O. Box 618
Portland, Maine 04104
tel. (207) 772-3846
fax. (207) 772-1070
www.smrtinc.com

STATE OF MAINE
DEPARTMENT OF TRANSPORTATION

APPROVED	DATE
COMMISSIONER:	
CHIEF ENGINEER:	

STATE OF MAINE
WILLIAM R. HEIL
No. 7880
LICENSED
PROFESSIONAL ENGINEER

SIGNATURE
P.E. NUMBER 7880
DATE 4-11-14

PROJECT INFORMATION	
PROGRAM	FLEET SERVICES
PROJECT MANAGER	DAVID MEALEY
DESIGNER	WILLIAM HEIL
CONSULTANT	SMRT, INC.
PROJECT RESIDENT	
CONTRACTOR	
PROJECT COMPLETION DATE	

MDOT STANDBY GENERATOR

FAIRFIELD
PLANS AND DETAILS

SHEET NUMBER
6
OF 7

Filename: $file$ FAIRFIELD-12138 Division: $wkgroup$ Username: $user$ Date:$date$

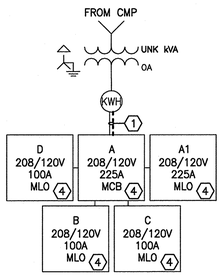

3 EXISTING CONDITION ONE-LINE

SCALE: NONE

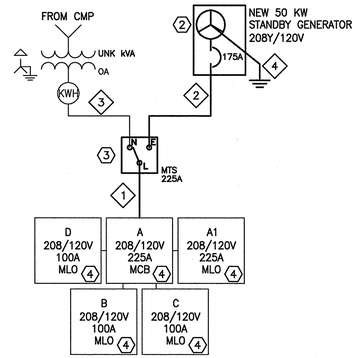

4 NEW WORK ONE-LINE

SCALE: NONE

GENERAL NOTE:

1. SEE E-001 FOR ELECTRICAL LEGEND SHEET.

KEYED NOTES:

1. REMOVE SERVICE CONDUCT BETWEEN METER AND PANEL A. SERVICE CONDUCTORS REMAIN.
2. NEW GENERATOR TO BE INSTALLED ON NEW CONCRETE PAD.
3. NEW MANUAL TRANSFER SWITCH TO BE LOCATED IN "NEW ADDITION".
4. EXISTING TO REMAIN.

CABLE SCHEDULE:

1. 4#4/0 AWG & #2 AWG GND IN 2-1/2"C
2. 4#2/0 AWG & #4 AWG GND IN 2"C
3. EXISTING CONDUCTORS IN NEW CONDUIT
4. COPPER 2#4 AWG BARE

KEYED NOTES:

1. REMOVE EXISTING CONDUIT FROM METER TO PANEL "A". CONDUCTORS REMAIN FOR REUSE UNDER NEW WORK.
2. EXISTING TO REMAIN.

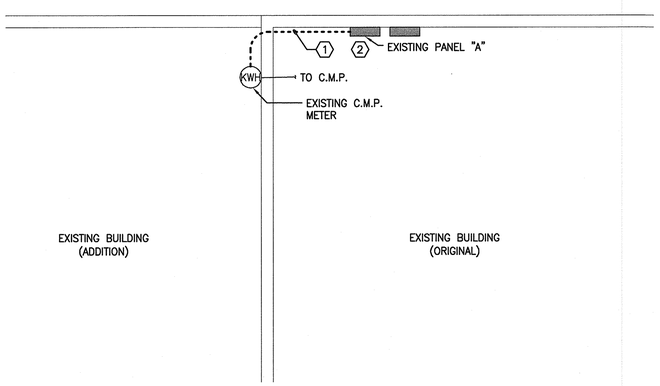

1 DEMOLITION WORK PART-PLAN

SCALE: 1/4"=1'-0"

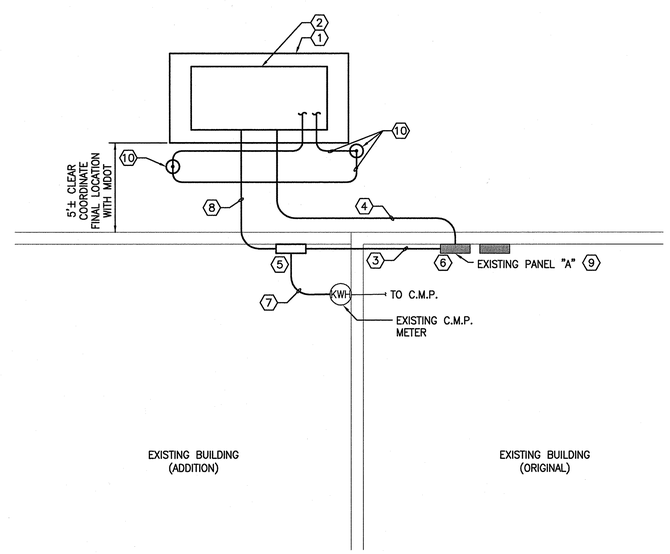

2 NEW WORK PART-PLAN

SCALE: 1/4"=1'-0"

KEYED NOTES:

1. PROVIDE NEW CONCRETE PAD (SEE DETAIL 1 ON SHEET 2) FOR USE WITH GENERATOR.
2. PROVIDE 50 kW, 208Y/120V STANDBY DIESEL GENERATOR WITH 175A BREAKER. PROVIDE WEATHER PROOF ENCLOSURE AND 24 HOUR SKID BELLY TANK.
3. PROVIDE FEEDER FROM NEW MANUAL TRANSFER SWITCH TO PANEL "A".
4. PROVIDE 4#12 AWG & # 12 AWG GND COPPER IN 3/4"C UNDERGROUND FROM GENERATOR TO PANEL A FOR BATTERY CHARGER AND ENGINE BLOCK HEATER BRANCH CIRCUITS.
5. PROVIDE 200A MANUAL TRANSFER SWITCH.
6. PROVIDE BRANCH BREAKERS IN PANEL A TO ACCOMMODATE GENERATOR BATTERY CHARGER AND BLOCK HEATER.
7. INSTALL EXISTING CONDUCTORS IN NEW 2"C FROM C.M.P. METER TO NEW MANUAL TRANSFER SWITCH. CONNECT CONDUCTORS TO NEW MANUAL TRANSFER SWITCH.
8. PROVIDE UNDERGROUND FEEDER FROM GENERATOR TO MANUAL TRANSFER SWITCH.
9. EXISTING TO REMAIN.
10. 8'x1/2" COPPER GROUND ROD AND #4 BARE GROUND CONDUCTORS.

PROJECT NORTH
MAG. NORTH

SMRT
ARCHITECTURE
ENGINEERING
PLANNING
INTERIOR DESIGN
COMMISSIONING
144 Fore Street/P.O. Box 618
Portland, Maine 04104
tel. (207) 772-3846
fax. (207) 772-1070
www.smrtinc.com

STATE OF MAINE
DEPARTMENT OF TRANSPORTATION

APPROVED

	DATE
COMMISSIONER:	
CHIEF ENGINEER:	

STATE OF MAINE
WILLIAM R. HEIL
No. 7880
LICENSED
PROFESSIONAL ENGINEER

SIGNATURE 7880
P.E. NUMBER 7880
DATE 4-11-14

PROJECT INFORMATION	
PROGRAM	FLEET SERVICES
PROJECT MANAGER	DAVID MEALEY
DESIGNER	WILLIAM HEIL
CONSULTANT	SMRT, INC.
PROJECT RESIDENT	
CONTRACTOR	
PROJECT COMPLETION DATE	

MDOT STANDBY GENERATOR

SCARBOROUGH
PLANS AND DETAILS

SHEET NUMBER
7
OF 7

Filename: $file$ SCARBOROUGH-12138 Division: $wkgroup$ Username: $user$ Date:$date$