RUMFORD

WIN 18518.00

Materials

PRECAST STRUCTURAL CONCRETE BEAM AND SUPPORT WALL

2014

MAINTENANCE & OPERATIONS

STATE PROJECT

BIDDING INSTRUCTIONS

1. Complete the bid forms with pen and ink.

2. The following are to be completed and returned with the bid:

    a. A copy of the Notice to Contractors
    b. the completed Acknowledgement of Bid Amendments form
    c. the completed Schedule of Items in Appendix A
    d. two (2) copies of the completed and signed Contract to Purchase Supplies, Materials and/or Equipment for a Specific Project form
    e. The completed Contractor Information Sheet
    f. Any other certifications or Bid requirements listed in the Bid Documents as due by Bid opening

3. For security and other reasons, all Bid Packages which are mailed or delivered, shall be provided in double (one envelope inside the other) envelopes. The *Inner Envelope* shall have the following information provided on it:

    Bid Enclosed - Do Not Open
    Title:
    Town:
    Date of Bid Opening:
    Name of Contractor with mailing address and telephone number:

    In Addition to the usual address information, the *Outer Envelope* should have written or typed on it:

    Double Envelope: Bid Enclosed
    Title:
    Town:
    Date of Bid Opening:
    Name of Contractor:

    Hand-carried Bids may be in one envelope, and should be marked with the following information:

    Bid Enclosed: Do Not Open
    Title:
    Town:
    Name of Contractor:

4. If a paper Bid is to be hand carried, deliver directly to the Reception Desk using the "Public Entrance" which is located on the Capitol Street side of the DOT Headquarters Building in Augusta. If a paper Bid is to be sent express, "FedEx First Overnight" delivery is suggested as the package is delivered directly to the DOT Headquarters Building, Mailroom, in Augusta located at 24 Child Street in Augusta. Other means, such as U.S. Postal's Service Express Mail has proven not to be reliable. If a paper bid is to be mailed, the mailing address is Maine Department of Transportation, 16 State House Station, Augusta, ME 04333-0016.

5. If you need further information regarding Bid preparation, call the DOT Contracts Section at (207) 624-3410. For complete bidding requirements, refer to Section 102 of the Maine Department of Transportation, Standard Specification, Revision of December 2002.

January 19, 2012
Supersedes September 09, 2011

NOTICE

The Maine Department of Transportation is attempting to improve the way Bid Amendments/Addendums are handled, and allow for an electronic downloading of bid packages from our website, while continuing to maintain an optional planholders list.

Prospective bidders, subcontractors or suppliers who wish to download a copy of the bid package and receive a courtesy notification of project specific bid amendments, must provide an email address to Diane Barnes or David Venner at the MDOT Contracts mailbox at: MDOT.contracts@maine.gov. Each bid package will require a separate request.

Additionally, interested parties will be responsible for reviewing and retrieving the Bid Amendments from our web site, and acknowledging receipt and incorporating those Bid Amendments in their bids using the Acknowledgement of Bid Amendment Form.

The downloading of bid packages from the MDOT website is not the same as providing an electronic bid to the Department. Electronic bids must be submitted via http://www.BIDX.com. For information on electronic bidding contact Patrick Corum at patrick.corum@maine.gov , Rebecca Snowden at rebecca.snowden@maine.gov or Diane Barnes at diane.barnes@maine.gov.

NOTICE

Bidders:

Please use the attached “Request for Information” form when faxing questions and comments concerning specific Contracts that have been Advertised for Bid. Include additional numbered pages as required. Questions are to be faxed to the number listed in the Notice to Contractors. This is the only allowable mechanism for answering Project specific questions. Maine DOT will not be bound to any answers to Project specific questions received during the Bidding phase through other processes.

State of Maine
Department of Transportation

REQUEST FOR INFORMATION

Date _____ Time _____

Information Requested: **PIN:** _____ **Town(s):** _____

_____

_____

_____

_____

_____

_____

_____

_____

_____

_____

_____

_____

Request by: _____ **Phone: (_____)**_____
Bid Date: _____ **Fax: (_____)**_____

Complete top portion of form and transmit to the number listed in the Notice to Contractors

RFI No: _____ **RFI received:** _____

Response:_____

_____

_____

_____

_____

_____

_____

_____

_____

_____

_____

Response By:_____ Date: _____

Vendor Registration

Prospective Bidders must register as a vendor with the Department of Administrative & Financial Services if the vendor is awarded a contract. Vendors will not be able to receive payment without first being registered. Vendors/Contractors will find information and register through the following link –
http://www.maine.gov/purchases/vendorinfo/vss.htm .

CONTRACTOR INFORMATION

Contractor Name: _____

Mailing Address: _____

Vendor Customer Number: _____

Contact Information (Primary Contact): _____

Phone: _____ **Cell Phone:** _____

Fax: _____

Email: _____

Mailing Address (if different from above): _____

_____

The company has the following organizational structure:

☐ **Sole Proprietorship** ☐ **Limited Liability Company**

☐ **Partnership** ☐ **Joint Venture**

☐ **Corporation** ☐ **Other:** _____

_____ _____

(Date) **(Signature)**

_____

(Name and Title Printed)

STATE OF MAINE DEPARTMENT OF TRANSPORTATION
NOTICE TO CONTRACTORS

Sealed Bids addressed to the Maine Department of Transportation, Augusta, Maine 04333 and endorsed on the wrapper "Bids for **Precast Concrete Beam and Support Wall** delivered to the town of **RUMFORD**" will be received from contractors at the Reception Desk, Maine DOT Building, Capitol Street, Augusta, Maine, until 11:00 o'clock A.M. (prevailing time) on April 16, 2014 and at that time and place publicly opened and read. Bids will be accepted from all bidders. The lowest responsive bidder must demonstrate successful completion of projects of similar size and scope to be considered for the award of this contract.

Description: WIN 18518.00

Location: In Oxford County, project is located on Route 232, 2.20 miles south of the intersection of Route 2 and Route 232.

Outline of Work: Supply and deliver Precast Structural Concrete Beam and Support Wall.

For general information regarding Bidding and Contracting procedures, contact George Macdougall at (207)624-3410. Our webpage at http://www.maine.gov/mdot/contractors/ contains a copy of the schedule of items, Plan Holders List, written portions of bid amendments (not drawings), and bid results. For Project-specific information fax all questions to **Douglas Coombs** at (207)624-3431. Questions received after 12:00 noon of Friday prior to bid date will not be answered. Bidders shall not contact any other Departmental staff for clarification of Contract provisions, and the Department will not be responsible for any interpretations so obtained. TTY users call Maine Relay 711.

Plans, specifications and bid forms are available at http://www.maine.gov/mdot/contractors/ and may be seen at the Maine DOT Building in Augusta, Maine and at the Department of Transportation's Regional Office in Dixfield. They may be purchased from the Department between the hours of 8:00 a.m. to 4:30 p.m. by cash, credit card (Visa/Mastercard) or check payable to Treasurer, State of Maine sent to Maine Department of Transportation, Attn.: Mailroom, 16 State House Station, Augusta, Maine 04333-0016. They also may be purchased by telephone at (207) 624-3536 between the hours of 8:00 a.m. to 4:30 p.m. Bid Book $10 ($13 by mail), all non-refundable.

There will be no bid bonds, performance bonds or payment bond required.

Each Bid must be made upon blank forms provided by the Department.

This Contract is subject to all applicable State Laws.

All work shall be governed by "State of Maine, Department of Transportation, Standard Specifications, Revision of December 2002", price $10 [$13 by mail], and Standard Details, Revision of December 2002, price $20 [$25 by mail]. They also may be purchased by telephone at (207) 624-3536 between the hours of 8:00 a.m. to 4:30 p.m. Standard Detail updates can be found at http://www.maine.gov/mdot/contractors/publications/ .

The right is hereby reserved to the Maine DOT to reject any or all bids.

Augusta, Maine
April 2, 2014

Joyce Noel Taylor

JOYCE NOEL TAYLOR P. E.
CHIEF ENGINEER

STATE OF MAINE
Joyce
Noel Taylor
6997
LICENSED
PROFESSIONAL ENGINEER

Rumford
WIN 18518.0000
April 14, 2011
Supersedes August 3, 2004

SPECIAL PROVISION 102.7.3
ACKNOWLEDGMENT OF BID AMENDMENTS

With this form, the Bidder acknowledges its responsibility to check for all Amendments to the Bid Package. For each Project under Advertisement, Amendments are located at http://www.maine.gov/mdot/contractors/ . It is the responsibility of the Bidder to determine if there are Amendments to the Project, to download them, to incorporate them into their Bid Package, and to reference the Amendment number and the date on the form below. The Maine DOT will not post Bid Amendments any later than noon the day before Bid opening without individually notifying all the planholders.

Amendment Number	Date

The Contractor, for itself, its successors and assigns, hereby acknowledges that it has received all of the above referenced Amendments to the Bid Package.

CONTRACTOR

_____
Date

_____
Signature of authorized representative

_____
(Name and Title Printed)

MAINE DEPARTMENT OF TRANSPORTATION

CONTRACT TO PURCHASE SUPPLIES, MATERIALS AND/OR EQUIPMENT FOR A SPECIFIC PROJECT

This Agreement (the "Contract") is entered into between the Maine Department of Transportation ("Department" or "MaineDOT") with its principal office located at Child Street, Augusta, Maine, and a mailing address of 16 State House Station, Augusta, Maine 04333-0016, and _____ ("Contractor"), a corporation or other legal entity organized under the laws of the State of _____ with its principal place of business located at _____, and a mailing address of_____ and a telephone number as follows: _____.

The Vendor Customer Number of the Contractor is _____.

MaineDOT, pursuant to 23 M.R.S.A. §52, requested bids for the sale and delivery of the Materials, Supplies, and Equipment (the "Materials") described in attached Appendix A. The offer submitted by Contractor (the "Bid Price") is accepted by MaineDOT as the successful bid. The terms and conditions of the purchase of the Materials are set forth below:

A. Deliverables.

The Contractor agrees to provide the Materials known as **PRECAST STRUCTURAL CONCRETE BEAM AND SUPPORT WALL** more specifically described in Appendix A for use in MaineDOT Project WIN 018518.00 Rumford (the "Project").

B. Time.

This Contract becomes effective on the date last signed below. The Contractor agrees to deliver the Materials on or before the week of **May 14, 2014** as defined in Appendix A and Special Provision 534. This Contract expires on December 31, 2014**.**

C. Bid Price.

The Bid Price(s) offered by Contractor and accepted by MaineDOT are as provided in Appendix A. These Bid Prices will serve as a basis for the Contract amount set forth in section F below.

D. Contract Documents.

The Contract consists of this Agreement and the following attachments which are hereby incorporated into the Contract as part of its terms and conditions:

Appendix A--Description of Materials, Supplies, Equipment and Bid Price
Appendix B--Special Provisions for Purchase of Project Materials

By agreement, this Contract may be amended, modified, or supplemented by written agreement signed by both parties.

E. Certifications.

By signing below, the Contractor hereby certifies that to the best of the Contractor's knowledge and belief:

1. All of the statements, representations, covenants, and/or certifications required or set forth in Appendix B are accurate as of the date of this Contract.

2. The Contractor certifies that it has not been debarred, suspended, declared ineligible or voluntarily excluded from contracts by the Federal Government or any state agency within the last 3 years.

3. The Contractor knows of no legal, contractual, or financial impediment to entering into this Contract.

4. The person signing below is legally authorized by the Contractor to sign this Contract on behalf of the Contractor and to legally bind the Contractor to the terms of the Contract.

MAINE DEPARTMENT OF TRANSPORTATION

CONTRACT TO PURCHASE SUPPLIES, MATERIALS AND/OR EQUIPMENT FOR A SPECIFIC PROJECT

IN WITNESS WHEREOF, the Contractor, for itself, its successors and assigns, hereby execute two duplicate originals of this Contract and thereby binds itself to all covenants, terms, and obligations contained in the Contract Documents.

Dated: _____

CONTRACTOR

_____

_____
(Name and Title Printed)

F. Award.

By signing below, an authorized representative of MaineDOT hereby accepts Contractor's offer and awards this Contract to Contractor in the amount of $_____ under the terms and conditions set forth above.

Dated: _____

MAINE DEPARTMENT OF TRANSPORTATION

_____

Bradford P. Foley
Program Manager
Highway Program

MAINE DEPARTMENT OF TRANSPORTATION

CONTRACT TO PURCHASE SUPPLIES, MATERIALS AND/OR EQUIPMENT FOR A SPECIFIC PROJECT

This Agreement (the "Contract") is entered into between the Maine Department of Transportation ("Department" or "MaineDOT") with its principal office located at Child Street, Augusta, Maine, and a mailing address of 16 State House Station, Augusta, Maine 04333-0016, and _____ ("Contractor"), a corporation or other legal entity organized under the laws of the State of _____ with its principal place of business located at _____, and a mailing address of_____ and a telephone number as follows: _____.

The Vendor Customer Number of the Contractor is _____.

MaineDOT, pursuant to 23 M.R.S.A. §52, requested bids for the sale and delivery of the Materials, Supplies, and Equipment (the "Materials") described in attached Appendix A. The offer submitted by Contractor (the "Bid Price") is accepted by MaineDOT as the successful bid. The terms and conditions of the purchase of the Materials are set forth below:

A. Deliverables.

The Contractor agrees to provide the Materials known as **PRECAST STRUCTURAL CONCRETE BEAM AND SUPPORT WALL** more specifically described in Appendix A for use in MaineDOT Project WIN 018518.00 Rumford (the "Project").

B. Time.

This Contract becomes effective on the date last signed below. The Contractor agrees to deliver the Materials on or before the week of **May 14, 2014** as defined in Appendix A and Special Provision 534. This Contract expires on December 31, 2014**.**

C. Bid Price.

The Bid Price(s) offered by Contractor and accepted by MaineDOT are as provided in Appendix A. These Bid Prices will serve as a basis for the Contract amount set forth in section F below.

D. Contract Documents.

The Contract consists of this Agreement and the following attachments which are hereby incorporated into the Contract as part of its terms and conditions:

Appendix A--Description of Materials, Supplies, Equipment and Bid Price
Appendix B--Special Provisions for Purchase of Project Materials

By agreement, this Contract may be amended, modified, or supplemented by written agreement signed by both parties.

E. Certifications.

By signing below, the Contractor hereby certifies that to the best of the Contractor's knowledge and belief:

1. All of the statements, representations, covenants, and/or certifications required or set forth in Appendix B are accurate as of the date of this Contract.

2. The Contractor certifies that it has not been debarred, suspended, declared ineligible or voluntarily excluded from contracts by the Federal Government or any state agency within the last 3 years.

3. The Contractor knows of no legal, contractual, or financial impediment to entering into this Contract.

4. The person signing below is legally authorized by the Contractor to sign this Contract on behalf of the Contractor and to legally bind the Contractor to the terms of the Contract.

MAINE DEPARTMENT OF TRANSPORTATION

CONTRACT TO PURCHASE SUPPLIES, MATERIALS AND/OR EQUIPMENT FOR A SPECIFIC PROJECT

IN WITNESS WHEREOF, the Contractor, for itself, its successors and assigns, hereby execute two duplicate originals of this Contract and thereby binds itself to all covenants, terms, and obligations contained in the Contract Documents.

Dated: _____

CONTRACTOR

_____

_____
(Name and Title Printed)

F. Award.

By signing below, an authorized representative of MaineDOT hereby accepts Contractor's offer and awards this Contract to Contractor in the amount of $_____ under the terms and conditions set forth above.

Dated: _____

MAINE DEPARTMENT OF TRANSPORTATION

_____

Bradford P. Foley
Program Manager
Highway Program

MAINE DEPARTMENT OF TRANSPORTATION

CONTRACT TO PURCHASE SUPPLIES, MATERIALS AND/OR EQUIPMENT FOR A SPECIFIC PROJECT

This Agreement (the "Contract") is entered into between the Maine Department of Transportation ("Department" or "MaineDOT") with its principal office located at Child Street, Augusta, Maine, and a mailing address of 16 State House Station, Augusta, Maine 04333-0016, and **CONTRACTOR ABC INC** ("Contractor"), a corporation or other legal entity organized under the laws of the State of **MAINE** with its principal place of business located at **ABC STREET, ABC, Maine 00000**, and a mailing address of **ABC STREET, ABC, MAINE** and a telephone number as follows: **207-999-9999**.

The Vendor Customer Number of the Contractor is **VC9999999999**.

MaineDOT, pursuant to 23 M.R.S.A. §52, requested bids for the sale and delivery of the Materials, Supplies, and Equipment (the "Materials") described in attached Appendix A. The offer submitted by Contractor (the "Bid Price") is accepted by MaineDOT as the successful bid. The terms and conditions of the purchase of the Materials are set forth below:

A. Deliverables.

The Contractor agrees to provide the Materials known as **SOMETHING,** more specifically described in Appendix A for use in MaineDOT Project No. **99999.00 SOME TOWN.** (the "Project").

B. Time.

This Contract becomes effective on the date last signed below. The Contractor agrees to deliver the Materials on or before **SOME DAY, 20XX**. This Contract expires on **DECEMBER 31, 20XX**.

C. Bid Price.

The Bid Price(s) offered by Contractor and accepted by MaineDOT are as provided in Appendix A. These Bid Prices will serve as a basis for the Contract amount set forth in section F below

D. Contract Documents.

The Contract consists of this Agreement and the following attachments which are hereby incorporated into the Contract as part of its terms and conditions:

Appendix A--Description of Materials, Supplies, Equipment and Bid Price
Appendix B--Special Provisions for Purchase of Project Materials

SAMPLE

MAINE DEPARTMENT OF TRANSPORTATION

CONTRACT TO PURCHASE SUPPLIES, MATERIALS AND/OR EQUIPMENT FOR A SPECIFIC PROJECT

By agreement, this Contract may be amended, modified, or supplemented by written agreement signed by both parties.

E. Certifications.

By signing below, the Contractor hereby certifies that to the best of the Contractor's knowledge and belief:

1. All of the statements, representations, covenants, and/or certifications required or set forth in Appendix B are accurate as of the date of this Contract.

2. The Contractor certifies that it has not been debarred, suspended, declared ineligible or voluntarily excluded from contracts by the Federal Government or any state agency within the last 3 years.

3. The Contractor knows of no legal, contractual, or financial impediment to entering into this Contract.

4. The person signing below is legally authorized by the Contractor to sign this Contract on behalf of the Contractor and to legally bind the Contractor to the terms of the Contract.

IN WITNESS WHEREOF, the Contractor, for itself, its successors and assigns, hereby execute two duplicate originals of this Contract and thereby binds itself to all covenants, terms, and obligations contained in the Contract Documents.

Dated: **(Date Here)**_____

CONTRACTOR

(Sign Here)

_____

(Print Name Here)

_____

(Name and Title Printed)

F. Award.

By signing below, an authorized representative of MaineDOT hereby accepts Contractor's offer and awards this Contract to Contractor in the amount of $_____ under the terms and conditions set forth above.

SAMPLE

MAINE DEPARTMENT OF TRANSPORTATION

CONTRACT TO PURCHASE SUPPLIES, MATERIALS AND/OR EQUIPMENT FOR A SPECIFIC PROJECT

Dated: _____

MAINE DEPARTMENT OF TRANSPORTATION

_____

_____

(Name and Title Printed)

SAMPLE

APPENDIX A
Description of Materials, Supplies, Equipment and Bid Price

Contractor _____

SCHEDULE OF ITEMS

Item Description	Approx. Quantity and Units	Unit Price	Bid Amount
534.71 Precast Concrete Beam and Wall – Fabrication and Delivery	**1 LS**	**$**	**$**
TOTAL			**$**

Description The Contractor shall furnish and deliver the materials listed in the Schedule of Items in this Appendix in accordance with the contract documents. The structure must meet the requirements of this Contract, the Plans, the State of Maine, Department of Transportation, Standard Specifications, Revision of December 2002 including, but not limited to Section 712.061 – Structural Precast Units and Standard Details Revision of December 2002 as updated through advertisement, Supplemental Specifications, and Special Provisions including, but not limited to Special Provision, Section 534, (Precast Structural Concrete Beam and Support Wall) (Precast Concrete Beam and Wall Fabrication and Delivery.

Delivery The materials shall be ready for delivery on or before May 14, 2014. The actual delivery date of the materials shall be determined by the project schedule and coordinated with the Department and is expected to be between May 12 and May 16. The Contractor shall deliver the materials to the project site on Route 232 in the Town of Rumford, Maine.

The Contractor shall notify MaineDOT, Bill Emery, State Construction Superintendent of Region 3 , cell phone 207- 592-2959 a minimum of 48 hours prior to delivery. Alternative contacts are: Douglas Coombs. Project Manager @ (207)215-4051. The Contractor shall deliver the materials only during the following times: Monday through Friday, 7:00 AM through 3:30 PM except for they may not deliver on holidays, or government closure days. The Department will off-load the materials at the delivery site.

Contract Administrator The contract administrator for this contract will be:

Name:	Bill Emery
Title:	State Construction Superintendent
Address:	Maine Department of Transportation P.O. Box 817, Dixfield, Maine 04224

Invoices and Payments The Contractor shall submit an itemized bill to the Department for materials following delivery for approval and payment. At a minimum, invoices shall include the following information:

Contractor name, address & Contract Number
Invoice Date & Number
Dates of Delivery
Total amount due at the Prices contained in the Contractor's Bid

The Department will make payments based upon approved complete and correct invoices for accepted materials, invoiced at bid prices. No such payment will be made if, in the judgment of the Department, the Work is not in accordance with the provisions of the Contract. Payments to the Contractor shall be full compensation for furnishing all labor, equipment, materials, services, and incidentals used to supply the materials under the Contract in a complete and acceptable manner, and for all risk, loss, damage, or expense of any kind arising from the nature or prosecution of the Work. The Department may withhold payments claimed by the Contractor on account of incomplete or incorrect invoices or materials that are defective or not in conformance with the contract.

Material Quality Materials and manufactured products shall be new unless otherwise specified, free from defect, and in conformity with the contract. If there is no applicable standard set forth in this Contract for a particular item, then the item shall be in accordance with industry standards prevailing at the time of bid. The Department has the authority to inspect all Materials and every detail of the Work. The Department may reject the finished product if any of the components do not comply with the specifications. The Department may reject materials not con-forming to the Specifications at any time.

STATE OF MAINE
DEPARTMENT OF TRANSPORTATION

PLAN LEGEND

Town, County, State	Centerline-Existing
Property Lines	Centerline-Proposed
R/W Lines-Existing	Travelway-Existing
R/W Lines-Proposed	Travelway-Proposed
Culvert-Existing	Railroad
Culvert Proposed	Catch Basins ▫ Existing ■ Proposed
Curbing Existing / Proposed	Manholes ○ Existing ● Proposed
Type 1	Proposed Underdrain
Type 3	Proposed Ditch
Type 5	Existing Ditch
Outline of Bodies of Water	Utility Poles ◊ Existing ♦ Proposed
Ledge	Fire Hydrants ⊕ Existing ⊕ Proposed
Buildings	Existing Water Line
Trees Conifer / Deciduous	Existing San. Sewer
Tree Line	Existing San. Sewer Manhole
Clearing Limit Line	Guardrail-Existing
	Guardrail-Proposed
	Guardrail-Cable, Other

RUMFORD
OXFORD COUNTY
ROUTE 232

STATE PROJECT NO. 18518.00

INDEX OF SHEETS

Description	Sheet No.
Title Sheet	1
Plan, Elevation, and Notes	2
Structural Details	3

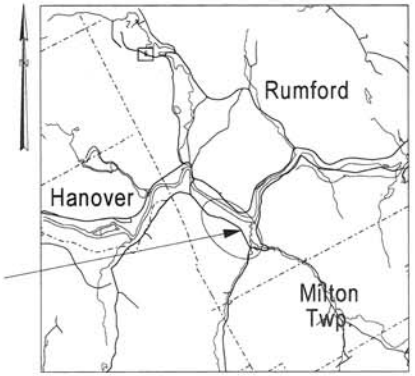

LOCATION MAP

PROJECT LOCATION:	Located 2.2 mi. South of ME Route 2
PROGRAM AREA:	Highway Program
SCOPE OF WORK:	Strut Repairs, Adding Guardrail

WIN 18518.00

PLANS PREPARED BY: CMA ENGINEERS, INC.

STATE OF MAINE DEPARTMENT OF TRANSPORTATION

APPROVED

COMMISSIONER: 3/27/14 DATE

CHIEF ENGINEER: 3-28-14

STATE OF MAINE JASON L. DALLAIRE No. 10023 PROFESSIONAL ENGINEER

PROJECT INFORMATION

	HIGHWAY		
PROJECT MANAGER	D. COMBES	SIGNATURE	
DESIGNER	J. DALLAIRE	10023	P.E. NUMBER
CONSULTANT	CMA ENGINEERS	3/27/14	DATE
PROJECT #/SOLNT			
CONTRACTOR			
PROJECT COMPLETION DATE			

RUMFORD POINT
ROUTE 232

TITLE SHEET

SHEET NUMBER 1 OF 3

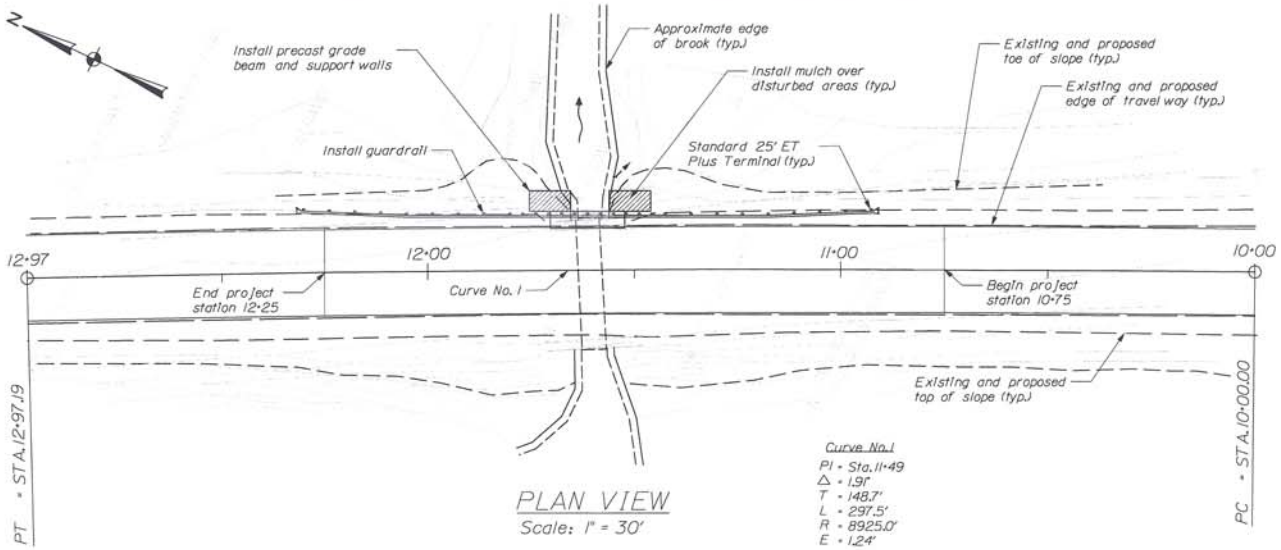

Curve No. 1
PI = Sta. 11+49
Δ = 1.91°
T = 148.7'
L = 297.5'
R = 8925.0'
E = 1.24'

PLAN VIEW
Scale: 1" = 30'

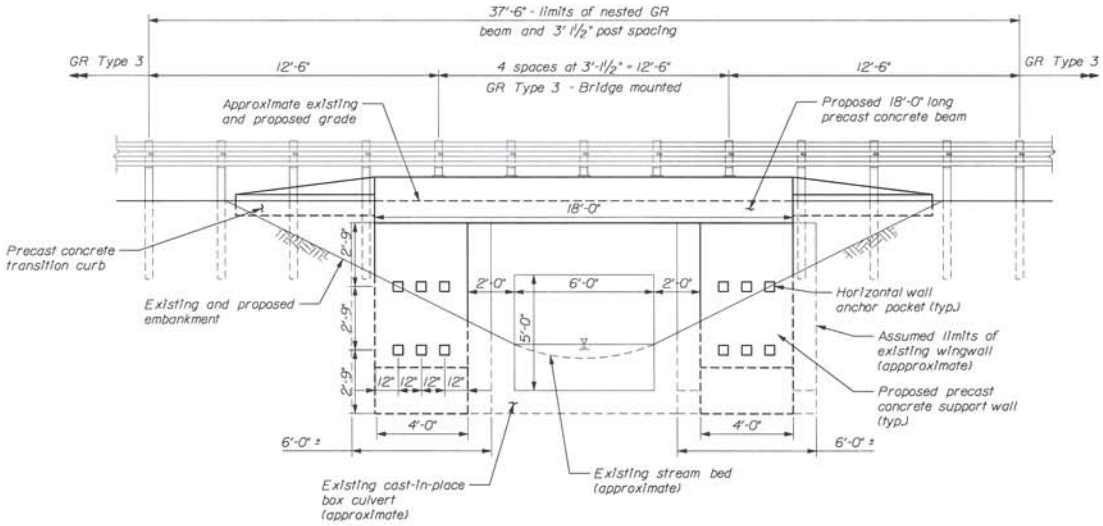

SECTION VIEW
Scale: 3/16" = 1'-0"

GENERAL CONSTRUCTION NOTES

1. The pavement, base, and subbase depths as shown on these plans are intended to be nominal.

2. No utility relocations are anticipated. As needed, utility facilities shall be adjusted by the respective utilities unless otherwise noted.

3. Work is to be completed within the existing right-of-way of Route 232.

4. During construction, a single lane will remain open to traffic. Alternating one-way detour shall be implemented in accordance with MaineDOT construction traffic control standard 625(15).

5. All embankment material, except as otherwise shown, placed below water level shall be granular borrow meeting the requirements of subsection 703.19, material for underwater backfill.

6. Place loam 2 inches thick on disturbed slopes. Bark mulch may be substituted in those areas normally receiving loam and seed as directed by the resident. Placement shall be in accordance with section 619 mulch.

7. In areas where the resident directs the contractor not to excavate to the subgrade line shown on the plans, payment for removing existing pavement, grubbing, shaping, ditching, and compacting the existing subbase and layers of new subbase 6 inches or less thick will be made under appropriate equipment rental items.

8. Two guardrail delineator posts shall be installed at each leading guardrail end and one at each trailing guardrail end.

9. Modified eccentric loader terminals shall be installed concurrently with the placement of each section of beam guardrail.

10. Protective coating for concrete surfaces shall be applied to the following areas:
all exposed surfaces of concrete curbs and precast beams,
all exposed surfaces of concrete transition,
concrete wearing surfaces,
top of walls and to one foot below the top of the walls on the back side.

SPECIFICATIONS

Design: Load and Resistance Factor Design per AASHTO LRFD Bridge Design Specifications, Fifth Edition, with 2010 Interim revisions.

DESIGN LOADING

Live Load ..... HL - 93

MATERIALS

Concrete:
Beams, support walls, curbs ..... Class "P"
All Other ..... Class "A"

Reinforcing Steel ..... ASTM A615 Grade 60

BASIC DESIGN STRESSES

Concrete
Class P ..... f'c = 5,500 psi
Class A ..... f'c = 4,000 psi

Reinforcing Steel ..... f y = 60 ksi

UTILITIES

Overhead utilities at west side
No relocation required

TRAFFIC DATA

Current (2011) AADT = 1470

MAINTENANCE OF TRAFFIC

Alternating one-way traffic during construction.

WIN 18518.00

STATE OF MAINE
DEPARTMENT OF TRANSPORTATION
APPROVED
DATE
COMMISSIONER:

STATE OF MAINE JASON GALLANT No. 10063 PROFESSIONAL ENGINEER

PROJECT INFORMATION			
PROGRAM	HIGHWAY	SIGNATURE	
PROJECT MANAGER	D. COOMBS	10603	
DESIGNER	J. GALLANT	P.E. NUMBER	
CONSULTANT	CMA ENGINEERS	3/17/14	
PROJECT RESIDENT		DATE	
CONTRACTOR			

RUMFORD POINT
ROUTE 232

PLAN, ELEV., AND NOTES

SHEET NUMBER
2
OF 3

PRECAST CONCRETE NOTES

1. Construction, handling, and assembly of the precast units shall be in accordance with the special provisions section 534, precast structural concrete, and with the manufacturer's specifications as applicable.

2. The drilling of holes in the prestressed beams and the use of power actuated tools on the beams will not be permitted.

3. Reinforcing steel shall have 2 inches minimum cover unless otherwise noted.

4. Walls and their footings shall be backfilled with granular borrow. Pay limits will be the structural excavation limits in the cut areas and a vertical plane located 1 foot behind the footings in the fill areas.

GROUTING NOTES

1. The form work and its supports, over the full width of the strut shall remain in place for 48 hours after placement of grout.

2. Grout for keyways, pockets, and anchoring shall be in accordance with the Departments qualified products list.

3. Injection adhesive anchor shall be Powers AC 100 Gold, Hilti HIT-HY150 or approved equal.

4. Nuts shall be installed "snug tight" and re-checked after all nuts are tightened.

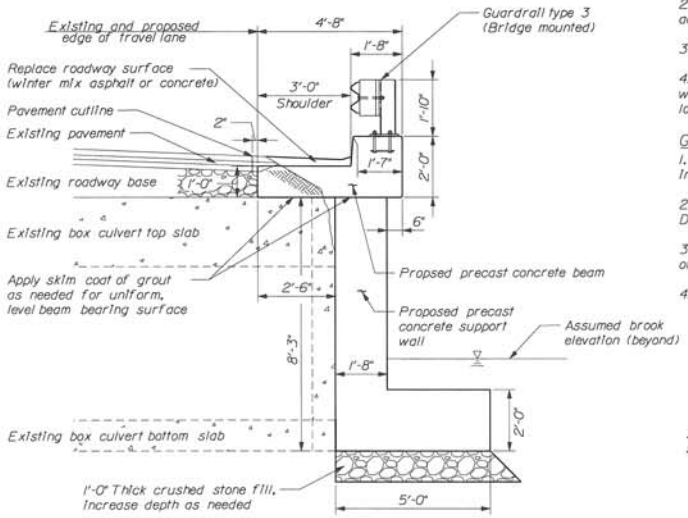

TYPICAL SECTION

Scale: 1/4" = 1'-0"

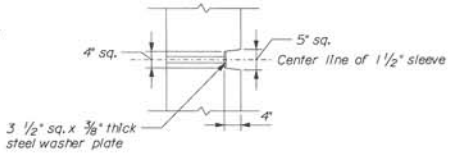

GROUT POCKET DETAIL

Not to scale

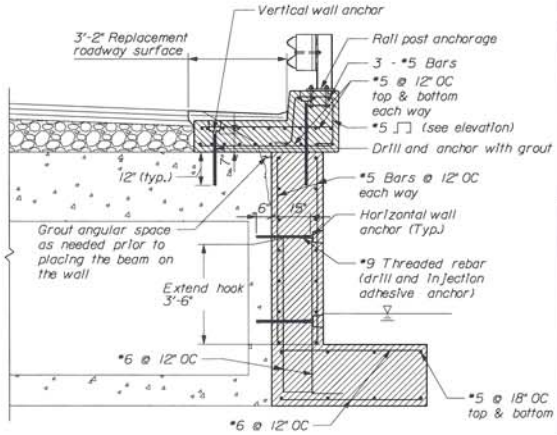

REINFORCEMENT LAYOUT

Scale: 1/4" = 1'-0"

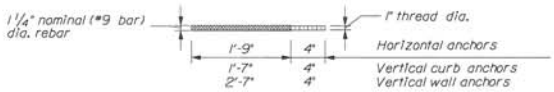

Note: Constant 1" dia. 150 ksi threaded bar may be substituted for 1 1/4" dia. threaded rebar

THREADED ANCHOR BOLTS

Not to scale

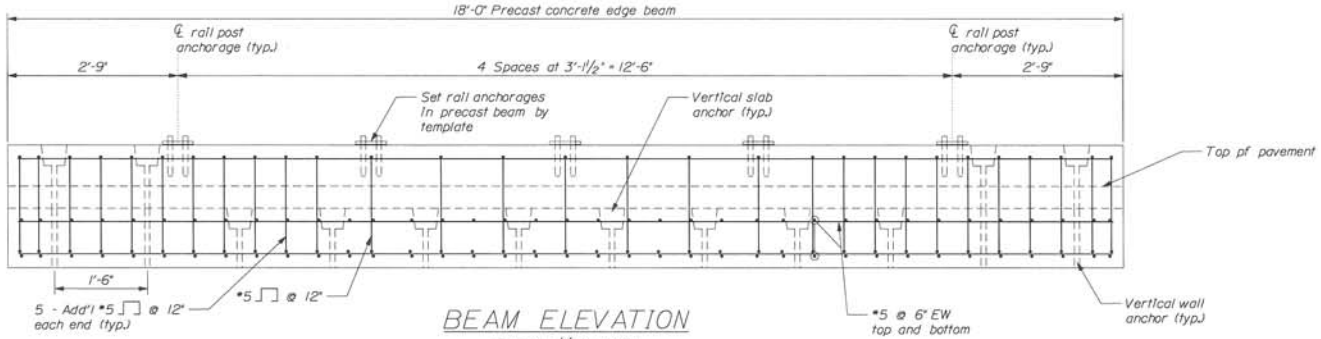

BEAM ELEVATION

Scale: 1/2" = 1'-0"

STATE OF MAINE
DEPARTMENT OF TRANSPORTATION

APPROVED | DATE
COMMISSIONER:
CHIEF ENGINEER:

STATE OF MAINE — JASON GALLANT No. 10063 — PROFESSIONAL ENGINEER

PROJECT INFORMATION			
PROGRAM	HIGHWAY	SIGNATURE	
PROJECT MANAGER	D. COOMBS	10063	
DESIGNER	J. GALLANT	P.E. NUMBER	
CONSULTANT	CMA ENGINEERS	3/17/14	
PROJECT RESIDENT		DATE	
CONTRACTOR			
PROJECT COMPLETION DATE			

RUMFORD POINT
ROUTE 232

STRUCTURAL DETAILS

WIN 18518.00

SHEET NUMBER
3
OF 3

SPECIAL PROVISION
SECTION 534
PRECAST STRUCTURAL CONCRETE
(Precast Structural Concrete Beam and Support Wall)
(Precast Concrete Beam and Wall Fabrication and Delivery)

534.1 Description. This work shall consists of designing, detailing, fabricating, storing and delivering the precast concrete beam and associated walls and appurtenances in accordance with the contract documents. The precast concrete elements shall be paid for and supplied to the Contractor by the Maine Department of Transportation.

534.2 Materials. Structural precast elements shall meet the requirements of the following Subsection except as noted otherwise in this specification:

Structural Precast Concrete Units	712.061

New concrete mix designs and mix designs not previously approved by the Fabrication Engineer, including Self-Consolidating Concrete (SCC) mixes, shall be qualified by trial batches prepared in accordance with AASHTO T 126 (ASTM C 192). The test results shall demonstrate that the concrete meets the requirements of the Plans and this Specification. If accelerated curing is to be used in production, the test specimens shall be similarly cured.

Grout and concrete patching material shall be one of the products listed on the Department's list of prequalified materials, unless otherwise approved by the Department.

534.3 Drawings. Prepare shop detail, erection and other necessary Working Drawings in accordance with Section 100 of the Standard Specifications. The Department will review and approve the drawings in accordance with the applicable requirements of Section 100 of the Standard Specifications. Changes and revisions to the approved Working Drawings shall require further approval by the Fabrication Engineer.

Concrete mix designs shall be part of the Working Drawing submittal. Include aggregate specific gravity, absorption, percent fracture, fineness modulus and gradation as part of the mix design. Provide the mix design calculations demonstrating how the batch weights, water-cement ratio and admixture dosage rate were determined.

534.4 Design Requirements. The manufacturer shall submit the following items for review by the Fabrication Engineer in accordance with Subsection 105.07 –Working Drawings prior to production:

A) The name and location of the manufacturer.
B) Method of manufacture and material certificates.
C) Description of method of handling, storing, transporting, and erecting the members.
D) Shop Drawings with the following minimum details:
   1) Fully dimensioned views showing the geometry of the members, including all projections, recesses, notches, openings, block outs, and keyways.
   2) Details and bending schedules of reinforcing steel including the size, spacing, and location. Reinforcing provided under lifting devices shall be shown in detail.
   3) Details and locations of all items to be embedded.
   4) Total mass (weight) of each member.

534.5 Facilities for Inspection. Provide a private office at the fabrication plant for the Department's inspection personnel, or Quality Assurance Inspectors (QAI's). The office shall be in close proximity to the Work. The office shall be climate controlled to maintain the temperature between 68° F and 75° F and have the exit(s) closed by a door(s) equipped with a lock and 2 keys which shall be furnished to the QAI's.

The QAI's office shall meet the following minimum requirements:

Description	Quantity
QAI's office (minimum ft^2)	100
Drafting Table Surface (ft^2)	35
Drafting stools-each	1
Office Desk	1
Ergonomic Swivel Chairs	1
Folding Chairs	2
Cordless telephone	1
Answering machine	1
High-speed internet connection (ports)	1
Fluorescent Lighting of 100 ft-candles minimum for all work areas	2
110 Volt 60 Cycle Electric Wall Outlets	3
Wall Closet	1
Plan Rack	1
Waste Basket with trash bags	1
Two-drawer file cabinet (locking)	1
Broom	1
Dustpan	1
Cleaning Materials	1
Water Cooler	1

The manufacturer will be responsible for disposing of trash and supplying commercially bottled water for the water cooler.

The QAI will have the option to reject any furniture or supplies provided to the QAI's office, based on general poor condition.

Provide parking space for the QAI(s) in close proximity to the entrance to the QAI's office. Maintain the pathway between the parking area and the QAI's office so that it is free of obstacles, debris, snow and ice.

The facilities and all furnishings shall remain the property of the manufacturer upon completion of the Work. Payment for the facilities, heating, lighting, telephone installation, internet connection, basic monthly telephone and internet charges and all furnishings shall be incidental to the Contract.

Failure to comply with the above requirements will be considered denial of access to the Work for the purpose of inspection. The Department will reject all Work done when access for inspection is denied.

534.6 Notice of Beginning Work. Give the Department a minimum of two weeks' notice for in-state work and three week's notice for out-of-state work prior to beginning production. If the production schedule changes, notify the Fabrication Engineer no less than 3 working days prior to the initial start-up date. Any Work done without the QAI present will be rejected. Advise the Fabrication Engineer of the production schedule and any changes to it. If Work is suspended on a project, the Fabrication Engineer will require 72 hours notice prior to the resumption of Work.

534.7 Quality Control. Quality Control (QC) is the responsibility of the manufacturer.

Provide a copy of the Quality System Manual (QSM) to the Fabrication Engineer if requested.

Inspect all aspects of the Work in accordance with the manufacturer's QSM. Reject materials and workmanship that do not meet Contract requirements.

Record measurements and test results on the appropriate forms from APPENDIX E of Precast/Prestressed Concrete Institute Manual for Quality Control for Plants and Production of Structural Precast Concrete Products MNL 116 or an equivalent form prepared by the user. Provide copies of measurements and test results to the QAI as follows:

Type of Report	When Provided to QAI*
Aggregate gradations-fine aggregate and coarse aggregate	Prior to beginning work and at least once a week thereafter
Material certifications / stressing calculations / calibration certifications	Prior to beginning work (anticipate adequate time for review by QAI)
Pre-pour inspection report	Prior to the concrete placement
Concrete Batch Slips	The morning of the next work day
Results of concrete testing	The morning of the next work day
Concrete temperature records	Provide with compressive testing (for release)
Non-conformance reports/repair procedures	Within 24 hours of discovery
Results of compressive testing (for design strength)	Prior to stopping curing / Prior to final acceptance
Post-pour inspection report	Prior to final acceptance

* The manufacturer and QAI may, by mutual agreement, modify any part of the schedule; however, failure to provide the documentation when required by the Fabrication Engineer will result in the product being deemed unacceptable. The Manufacturer may perform testing in addition to the minimum required. The results of all testing shall be made available to the Department.

534.8 Quality Assurance. Quality Assurance (QA) is the prerogative of the Department.

The QAI will witness or review documentation, workmanship, testing and assure the Work is being performed in accordance with the QSM.

The QAI has the authority to reject materials and products that do not meet the Contract requirements including Work rejected due to denial of access or the lack of adequate notice of the beginning of production. The acceptance of material or workmanship by the QAI will not prevent subsequent rejection, if the Work is unacceptable.

534.9 Rejections. Correct or replace rejected material and/or workmanship. Generate a non-conformance report (NCR); provide a copy to the QAI and forward a copy to the Fabrication Engineer for determination of corrective action.

In the event that an item fabricated under this Specification does not meet the Contract requirements but is deemed suitable for use by the Department, said item may be accepted in accordance with Section 100 of the Standard Specifications (see 106.8).

534.10 Forms and Casting Beds. Construct forms to conform to the Working Drawings. The forms shall be well constructed, carefully aligned and sufficiently tight to prevent leakage of mortar. Reject forms that do not maintain the Plan dimensions. Inspect the bulkheads after each cast and repair or replace worn or damaged pieces.

Seal wooden forms to prevent absorption of water. Apply and cure the sealer in accordance with the manufacturer's product data sheet.

Remove all paint, adherent material, foreign matter and debris prior to placing concrete.

Apply a non-staining bond-breaking compound to the forms in accordance with the manufacturer's product data sheet. Solvent clean reinforcing steel and welded steel wire fabric contaminated with the bond-breaking compound.

534.11 Reinforcing Steel. Fabricate, package, handle, store, place, splice and repair reinforcing steel in accordance with Section 503 of the Standard Specifications.

Accurately locate and securely anchor the reinforcing steel to prevent displacement during concrete placement. Install and secure all reinforcing steel prior to beginning the concrete placement.

The concrete cover shown on the approved Working Drawings shall be the minimum allowable cover. Use sufficient bar supports and spacers to maintain the minimum concrete cover. The bar supports and spacers shall be made of a dielectric material or other material approved by the Fabrication Engineer.

534.12 Voids and Inserts. Voids shall be non-absorbent. The out-to-out dimensions of the voids shall be within 2% of Plan dimensions. Repair damaged voids in a manner acceptable to the Fabrication Engineer. Store, handle and place voids in a manner that prevents damage.

Accurately locate and securely anchor, securely cap and vent the voids in the form. Any portion of a void that is displaced beyond the allowable dimensional tolerances shall be cause for rejection of the slab or beam.

Open the void drains immediately upon removing the product from the form.

Recess inserts, ties or other steel items a minimum of 1 inch from the surface unless noted otherwise on the Plans. Any recess shall be filled with a product from the Department’s Qualified Products List. The QAI is not responsible for verifying the location of inserts or other hardware installed for the convenience of the manufacturer.

534.13 Concrete Placement. Do not batch or place concrete until all the form(s) for any continuous placement have been inspected and accepted by the QCI and the QAI concurs.

Test concrete in accordance with the following Standards:

AASHTO T23 (ASTM C 31) Practice for Making and Curing Concrete Test Specimens in Field
AASHTO T 22 (ASTM C 39) Test Method for Compressive Strength of Cylindrical Concrete Specimens
AASHTO T119 (ASTM C 143) Test Method for Slump of Hydraulic Cement Concrete
AASHTO T141 (ASTM C 172) Practice for Sampling Freshly Mixed Concrete AASHTO T152 (ASTM C 231) Test Method for Air Content of Freshly Mixed Concrete by the Pressure Method
ASTM C 1064-Test Method for Temperature of Freshly mixed Portland Cement Concrete
ASTM C 1611/C 1611M-05-Standard Test Method for Slump Flow of Self-Consolidating Concrete

Test the first two loads of concrete for temperature, air entrainment and slump, or spread for SCC. If the first load is unacceptable, test the second load as the first. Continue this process until two consecutive loads are acceptable. After two consecutive cylinders are acceptable, the frequency of testing shall be at the discretion of the QAI.

Test the concrete for temperature, air entrainment and slump, or spread for SCC, if there is a change in the dosage rate of any admixture, a change of three inches or more in slump or a change of more than 5° F in mix temperature.

Test every load of 1 cubic yard, or less, from a stationary mixer or 2 cubic yards, or less, from a transit mixer for temperature, air entrainment and slump, or spread for SCC, prior to placing the concrete in the forms.

Perform all testing in the presence of the QAI. The QAI will designate the loads to be tested. Make cylinders used to determine stripping strength during the last 1/3 of the placement.

Place the concrete as nearly as possible to its final location. Control the depth of each lift in order to minimize entrapped air voids. The maximum depth of an unconsolidated lift shall be 18 inches. Vibrate the concrete with internal or internal and external vibrators. Do not use external vibrators alone. Insert internal vibrators vertically and penetrate the lower layer of concrete by at least 4 inches. Insert the vibrators in the concrete to assure that the radii of action of the vibrators overlap. Hold the vibrators in position from 5 to 15 seconds. Do not use vibrators to move concrete horizontally. Each lift of concrete shall have sufficient plasticity to be consolidated with subsequent lifts.

Do not re-temper the concrete with water after discharging has begun. The Manufacturer may add HRWR to the concrete after batching if that practice conforms to the manufacturer's product data sheet. Discard concrete that becomes unworkable.

Do not use water or water-based products to aid in finishing fresh concrete.

After the concrete has been placed and finished and before the forms are covered, remove all concrete from projecting reinforcing steel

534.14 Process Control Test Cylinders. Make concrete test cylinders for each day's casting. Cylinders tested to determine stripping strength and early design strength shall be field cured in accordance with AASHTO T23 (ASTM C 31). 28 day cylinders shall be standard cured. Record unit identification, entrained air content, water-cement ratio, slump and temperature of the sampled concrete at the time of cylinder casting. Once a week, make four cylinders for use by the Department. They shall be standard cured in accordance with AASHTO T23 (ASTM C 31).

If the manufacturer fails to make enough cylinders to demonstrate that the product meets the Contract requirements, the product will be considered unacceptable.

The compressive strength of the concrete will be determined by averaging the compressive strength of two test cylinders made from the same sample. For the purpose of determining design strength, the average of two cylinders shall meet or exceed the design strength, and, neither cylinder shall have a compressive strength less than 90% of design strength.

Perform compressive testing to determine transfer and design strength in the presence of the QAI. Cylinder tests not witnessed by the QAI will not be acceptable.

534.15 Manufacture of Precast Units.

The cover of concrete over the outside circumferential reinforcement shall be 2 inches minimum. The concrete cover over the inside reinforcement shall be 1 ½ inches minimum. The clear distance of the end of circumferential wires shall not be less than 1 inch or more than 2 inches from the end of the sections. Reinforcement shall be single or multiple layers of welded wire fabric or a single layer of deformed billet steel bars.

Welded steel wire fabric shall meet the space requirements and contain sufficient longitudinal wires extending through the section to maintain the shape and position of the reinforcement. Longitudinal distribution reinforcement may be welded steel wire fabric or deformed steel bars which meet the spacing requirements. The ends of the longitudinal distribution reinforcement shall be not more than 3 inches from the ends of the sections.

The internal dimensions shall not vary by more than 1 percent from the design dimensions or 38 mm [1 1/2 inch], whichever is less. The haunch dimensions shall not vary by more than 19 mm [3/4 inch] from the design dimension. The dimension of the legs shall not vary by more than 6 mm [1/4 inch] from the dimension shown on the approved shop drawings.

Do not use more than three layers of reinforcing to form a single mat. If reinforcing steel is cut to install lifting devices install additional reinforcing adjacent to the cut steel.

The inside circumferential reinforcing steel for the haunch radii or fillet shall be bent to match the radii or fillets of the forms.

Tension splices in the reinforcement will not be permitted. For splices other than tension splices, the overlap shall be a minimum of 12 inches for welded steel wire fabric or deformed steel bars. The spacing center to center of the circumferential wires in a wire fabric sheet shall be not less than 2 inches or more than 4 inches.

The members shall be free of fractures. The ends of the members shall be normal to the walls and centerline of the section, within the limits of variation provided, except where beveled ends are specified. The surfaces of the members shall be a smooth steel form or troweled surface finish, unless a form liner is specified. The ends and interior of the assembled structure shall make a continuous line of members with a smooth interior surface.

Defects which may cause rejection of precast units include the following:

1) Any discontinuity (crack or rock pocket etc.) of the concrete which could allow moisture to reach the reinforcing steel.
2) Rock pockets or honeycomb over 6 square inches in area or over 1 inch deep.
3) Edge or corner breakage exceeding 12 inches in length or 1 inch in depth.
4) Extensive fine hair cracks or checks.
5) Any other defect that clearly and substantially impacts the quality, durability, or maintainability of the structure as measured by accepted industry standards.

The manufacturer of the members shall sequentially number and shop fit each adjacent member to ensure that they fit together in the field. This fit up shall be witnessed by the QA inspector. Any non-fitting members shall be corrected or replaced at no cost to the Department.

Documentation. The producer of the structural precast units shall keep accurate records of aggregate gradations, concrete batching, testing, curing, and inspection activities to verify that forms, reinforcing and unit dimensions conform to these requirements. Copies of reports shall be furnished to the Resident when requested.

534.16 Tolerances. Dimensional tolerances shall be in conformance with the applicable reference specification or the established industry standards for the product being produced. The internal dimensions shall not vary by more than 1 percent from the design dimensions or 1 ½ inches, whichever is less with the exception of the cross diagonal dimension which shall not vary by more than ½ inch from the design dimension. The haunch dimensions shall not vary by more than ¾ inch from the design dimension. The dimension of the legs shall not vary by more than ¼ inch from the dimension shown on the approved shop drawings.

The slab and wall thickness shall not be less than the design thickness by more than ¼ inch. A thickness greater than the design thickness shall not be cause for rejection.

Variations in laying lengths of two opposite surfaces shall not be more than Ys inch in any section, except where beveled ends for laying of curves are specified.

The under-run in length of any section shall not be more than ½ in.

534.17 Finishing Concrete. Products shall meet ordinary finish requirements per subsection 502.14. Fascia members shall receive a rubbed finish per subsection 502.14. The manufacturer may use alternative methods of achieving an acceptable finish on fascia members if approved by the Fabrication Engineer.

Marking. The date of manufacture, the production lot number, and the type of unit shall be clearly and indelibly scribed on a rear, unexposed portion of each unit.

543.18 Repairing Defects Exposed surfaces shall be of uniform appearance; only minor repairs to remove and blend fins, patch minor spalls and to repair small, entrapped air pockets shall be permitted. Units that are cracked or require surface repairs larger than 2 in^2 or an accumulated repair area greater than 10% of the surface being repaired may be rejected.

Repair honeycombing, ragged or irregular edges and other cosmetic defects using a patching material from the MaineDOT Qualified Products List. The repair, including preparation of the repair area, mixing and application and curing of the patching material, shall be in accordance with the manufacturer's product data sheet. Corners not exposed in the final product may be ground smooth with no further repair necessary if the depth of the defect does not exceed 1/2 inch. Remove form ties and other hardware to a depth of not less than 1 inch from the face of the concrete and patch the holes using a patching material from the MaineDOT Qualified Products List.

Repair structural defects only with the approval of the Fabrication Engineer. Submit a non-conformance report (NCR) to the Fabrication Engineer with a proposed repair procedure. Do not perform structural repairs without an approved NCR. Structural defects include, but are not be limited to, exposed reinforcing steel or strand, cracks in bearing areas, through cracks and cracks 0.013 inch in width that extend more than 12 inches in length in any direction. Give the QAI adequate notice prior to beginning structural repairs.

534.19 Handling, Storage and Transportation Handle, store and transport members in a manner as to eliminate the danger of chipping, cracks, fracture, and excessive bending stresses. Any units found damaged upon delivery, or damaged after delivery, shall be subject to rejection.

Do not place precast members in an upright position until a compressive strength of at least 30 MPA (4350 psi) is attained. Precast products a may be handled and moved, but do not transport products until the 28 day design strength has been attained

Support stored precast/prestressed products above the ground on dunnage in a manner to prevent twisting or distortion. Protect the products from discoloration and damage.

Do not ship precast members until sufficient strength has been attained to withstand shipping, handling and erection stresses without cracking, deformation, or spalling. A minimum strength of 30MPA (4350 psi) shall be attained prior to shipping in all cases.

Set precast members on ½ inch neoprene pads during shipment to prevent damage to the section legs. The Contractor shall repair any damage to precast members resulting from shipping or handling by saw cutting a minimum of ½ inch deep around the perimeter of the damaged area and placing a polymer-modified cementitious patching material.

534.20 Delivery of Precast Units
The manufacturer shall not ship precast members until sufficient strength has been attained to withstand shipping, handling and erection stresses without cracking, deformation, or spalling (but in no case less than 30 MPa [4350 psi].

The manufacturer shall set precast members on 12 mm [1/2 inch] neoprene pads during shipment to prevent damage to the section legs. The manufacturer shall repair any damage to precast members resulting from shipping or handling by saw cutting a minimum of 12 mm [1/2 inch] deep around the perimeter of the damaged area and placing a polymer-modified cementitious patching material.

The manufacturer shall deliver the precast units to the project site on a weekday (Monday to Friday) in coordination with the Department The materials shall be ready for delivery on or before **May 14, 2014**. The actual delivery date of the materials shall be determined by the project schedule and coordinated with the Department and is expected to be between May 12 and May 16. The precast units shall be delivered to the project site by the manufacturer.

Rumford, Route 232 Strut, WIN 18518.00,

GPS coordinates: 44^0 28’ 50.08” N - 7 0 ^{0} 38’ 44.21” W

The Department shall be responsible for unloading the precast units at or near the project site. Any incidental materials needed to temporarily store the precast units at the project site shall be provided by the Department.

534.21 Method of Measurement. The Department will measure Precast Structural Concrete Beam and Walls for payment per Lump Sum each, complete and delivered and accepted.

534.22 Basis of Payment. The Department will pay for the accepted quantity of Precast Concrete Beam and Walls fabricated and delivered at the Contract Lump Sum price, such payment being full compensation for all labor, equipment, materials, professional services, and incidentals for the design, detailing, fabrication, storage and delivery of the precast concrete elements and accessories to the project site. Jointing tape, geotextile, flexible joint sealant, cementitious anchoring materials, grout, cast-in-place concrete fill, grout fill for anchorage of precast wings and/or other appurtenances shall be supplied by the Contractor, who installs the precast concrete box culvert. Pay adjustments for quality level will not be made for precast concrete.

Payment will be made under:

Pay Item	Pay Unit
534.71 Precast Concrete Beam and Wall –Fabrication and Delivery	Lump Sum

Appendix B

Maine Department of Transportation
Special Provisions for the Purchase of
Supplies, Materials or Equipment for a Specific Project
Pursuant to 23 MRSA § 52

1) **WARRANTY.** Contractor warrants:

   a) That all articles and services to be supplied by it under this contract are fit and sufficient for the purpose intended;
   b) That all articles and services covered by this contract will conform to the specifications, drawing samples, symbols or other description specified by the Department;
   c) That such articles are merchantable, good quality and free from defects whether patent or latent in material and workmanship;
   d) That all workmanship, materials and articles to be provided are of the best grade and quality; and,
   e) That it has good and clear title to all articles to be supplied by it and the same are free and clear from all liens, encumbrances and security interest.

   Neither the final certificate of payment nor any provision herein, nor partial nor entire use of the articles provided shall constitute an acceptance of work not done in accordance with this Contract or relieve the Contractor from liability in respect of any warranties or responsibility for faulty material or workmanship. The Contractor shall remedy any defects in the materials and articles delivered pursuant to this Contract and pay any damages resulting from such defects which shall appear within 1 year from the date of final acceptance of the materials and articles provided hereunder. The Department shall give written notice of observed defects with reasonable promptness.

2) **TAXES.** Contractor agrees that, unless otherwise indicated in this Contract, the prices herein do not include federal, state or local sales, or use the tax from which an exemption is available for purposes of this order. Contractor agrees to accept and use tax exemption certificates when supplied by the Department as applicable. In case it shall ever be determined that any tax included in the prices herein was not required to be paid by Contractor, Contractor agrees to notify the Department and to make prompt application for the refund thereof, to take all proper steps to procure the same and when received to pay the same to the Department.

3) **PACKING & SHIPMENT.** Deliveries shall be made as specified without charge for boxing, shipping or storage, unless otherwise specified. Articles shall be suitably packed to secure lowest transportation cost and to conform with the requirements of common carriers and any applicable specifications. Order numbers and symbols must be plainly marked on all invoices, packages, bills of lading and shipping orders. Bill of lading should accompany each invoice. Count or weight shall be final and conclusive on shipments not accompanied by packing lists. Shipping terms F.O.B. destination.

4) **DELIVERY.** Delivery should be strictly in accordance with delivery schedule. Articles fabricated beyond the Department's releases are at Contractor's risk. Contractor shall not make material commitments or production arrangements in excess of the amount or in advance of the time necessary to meet delivery schedule. Unless otherwise specified herein, or receipt of written approval, no deliveries shall be made in advance of the Department's delivery schedule. Neither party shall be liable for excess costs of deliveries or defaults due to causes beyond its control and without its fault or negligence, provided, however, that when the Contractor has reason to believe that the deliveries will not be made as scheduled, written notice setting forth the cause of the anticipated delay will be given immediately to the Department. If the Contractor's delay or default is caused by the delay or default of a subcontractor, such delay or default shall be excusable only if it arose out of causes beyond the control of both Contractor and subcontractor and without fault of negligence or either of them and the articles or services to be furnished were not obtainable from other sources in sufficient time to permit Contractor to meet the required delivery schedule.

5) **REMEDY.** If Contractor's deliveries fail to meet such schedule, the Department, without limiting its other remedies, may direct expedited shipping, and the difference between the expedited routing and the order routing costs shall be paid by the Contractor.

6) **INSPECTION.** All articles and work will be subject to final inspection and approval after delivery, notwithstanding prior payment, it being expressly agreed that payment will not constitute final acceptance. The Department at its option may either reject any article or work not in conformity with the requirements and terms of this order, or re-work the same at Contractor's expense. The Department may reject an entire shipment of similar articles if a sample inspection discloses that ten (10%) percent of the articles inspected are defective. This may be waived if the Contractor agrees to reimburse the Department for the cost of a complete inspection of the articles included in such shipment. Rejected material will be returned at Contractor's risk and expense at the full invoice price plus applicable transportation charges, if any. No replacement of defective articles of work shall be made unless specified by the Department.

7) **BENEFITS AND DEDUCTIONS.** If the Contractor is an individual, the Contractor understands and agrees that he/she is an independent contractor for whom no Federal or State Income Tax will be deducted by the Department, and for whom no retirement benefits, survivor benefit insurance, group life insurance, vacation and sick leave, and similar benefits available to State employees will accrue. The Contractor further

understands that annual information returns, as required by the Internal Revenue Code or State of Maine Income Tax Law, will be filed by the State Controller with the Internal Revenue Service and the State of Maine Bureau of Revenue Services, copies of which will be furnished to the Contractor for his/her Income Tax records.

8) **INDEPENDENT CAPACITY.** In the performance of this Contract, the parties hereto agree that the Contractor, and any agents and employees of the Contractor shall act in the capacity of an independent contractor and not as officers or employees or agents of the State.

9) **DEPARTMENT'S REPRESENTATIVE.** The Contract Administrator shall be the Department's representative during the period of this Contract. He/she has authority to curtail services if necessary to ensure proper execution. He/she shall certify to the Department when payments under the Contract are due and the amounts to be paid. He/she shall make decisions on all claims of the Contractor.

10) **CHANGES IN THE WORK.** The Department may make changes to its order, the Contract Amount will be amended accordingly, these changes will not invalidate this Contract. In no event shall Contractor fail or refuse to continue the performance of its obligations under this Contract because of the inability of the parties to agree on an adjustment or adjustments. Any monetary adjustment or any substantive change in the articles or materials shall be in the form of an amendment, signed by both parties and approved by the MaineDOT. Said amendment must be effective prior to delivery of the articles or materials.

11) **SUBLETTING, ASSIGNMENT OR TRANSFER.** The Contractor shall not sublet, sell, transfer, assign or otherwise dispose of this Contract or any portion thereof, or of its right, title or interest therein, without written request to and written consent of the Contract Administrator. No subcontracts or transfer of Contract shall in any case release the Contractor of its liability under this Contract.

12) **PERSONNEL.** The Contractor warrants that it has not employed or contracted with any company or person, other than for assistance with the normal study and preparation of a proposal, to solicit or secure this Contract and that it has not paid, or agreed to pay, any company or person, other than a bona fide employee working solely for the Contractor, any fee, commission, percentage, brokerage fee, gifts, or any other consideration, contingent upon, or resulting from the award for making this Contract. For breach or violation of this warranty, the Department shall have the right to annul this Contract without liability or, in its discretion to otherwise recover the full amount of such fee, commission, percentage, brokerage fee, gift, or contingent fee.

Maine Department of Transportation
Special Provisions for the Purchase of
Supplies, Materials or Equipment for a Specific Project
Pursuant to 23 MRSA § 52

13) **STATE EMPLOYEES NOT TO BENEFIT.** No individual employed by the State at the time this Contract is executed or any time thereafter shall be admitted to any share or part of this Contract or to any benefit that might arise therefrom directly or indirectly that would constitute a violation of 5 MRSA § 18 or 17 MRSA § 3104. No other individual employed by the State at the time this Contract is executed or any time thereafter shall be admitted to any share or part of this Contract or to any benefit that might arise therefrom directly or indirectly due to his employment by or financial interest in the Contractor or any affiliate of the Contractor. The Contractor shall cause the foregoing provisions to be inserted in any subcontract for any work covered by this Contract so that such provisions shall be binding upon each subcontractor, provided that the foregoing provisions shall not apply to contracts or subcontracts for standard commercial supplies or raw materials.

14) **MATERIAL SAFETY DATA SHEETS.** All manufacturers, importers, suppliers, or distributors of hazardous chemicals doing business in this State must provide a copy of the current material safety data sheet for any hazardous chemical to their direct purchasers of that chemical.

15) **ACCESS TO RECORDS.** The Contractor shall maintain all books, documents, payrolls, papers, accounting records and other evidence pertaining to this Contract and make such materials available at its offices at all reasonable times during the period of this Contract and for such subsequent period as specified under Maine Uniform Accounting and Auditing Practices for Community Agencies (MAAP) rules. The Contractor shall allow inspection of pertinent documents by the Department or any authorized representative of the State of Maine or Federal Government, and shall furnish copies thereof, if requested.

16) **TERMINATION.** The performance of work under the Contract may be terminated by the Department in whole, or in part, whenever the Contract Administrator determines that such termination is in the best interest of the Department including but not limited to the following circumstances:
   (a) The Contractor fails to make delivery of articles, or to perform services within the time or time specified herein, or
   (b) The Contractor fails to make delivery of articles, or specified materials, or
   (c) If Contractor defaults under any other term or condition of this contract, or
   (d) If Contractor fails to make progress as to endanger the performance of this contract in accordance with its terms; or,
   (e) If Contractor is adjudged bankrupt, or if it makes a general assignment for the benefit of its creditors or if a receiver is appointed on account of its insolvency.

In the event that the Division terminates this agreement in whole or in part pursuant to this paragraph, the Division may procure (articles and services similar to those so terminated) upon such terms and in such manner as deemed appropriate by the Department, and Contractor shall be liable to the Department for any excess cost incurred.

17) **GOVERNMENTAL REQUIREMENTS**. The Contractor warrants and represents that it will comply with all governmental ordinances, laws and regulations.

18) **GOVERNING LAW.** This Contract is pursuant to 23 M.R.S.A. §52, and shall be governed in all respects by the laws, statutes, and regulations of the United States of America and of the State of Maine. Any legal proceeding against the State regarding this Contract shall be brought in State of Maine administrative or judicial forums. The Contractor consents to personal jurisdiction in the State of Maine.

19) **STATE HELD HARMLESS.** The Contractor agrees to indemnify, defend and save harmless the State, its officers, agents and employees from any and all claims, costs, expenses, injuries, liabilities, losses and damages of every kind and description (hereinafter in this paragraph referred to as "claims") resulting from or arising out of the performance of this Contract by the Contractor, its employees, agents, or subcontractors. This indemnification includes all legal costs and other expenses of defense against any asserted claims to which this indemnification applies. This indemnification does not extend to a claim that results solely and directly from (i) the Department's negligence or unlawful act, or (ii) action by the Contractor taken in reasonable reliance upon an instruction or direction given by an authorized person acting on behalf of the Department in accordance with this Contract.

20) **NOTICE OF CLAIMS**. The Contractor shall give the Department Contract Administrator immediate notice in writing of any legal action or suit filed related in any way to the Contract or which may affect the performance of duties under the Contract, and prompt notice of any claim made against the Contractor by any subcontractor which may result in litigation related in any way to the Contract or which may affect the performance of duties under the Contract.

21) **NON-APPROPRIATION.** Notwithstanding any other provision of this Contract, if the State does not receive sufficient funds to fund this Contract and other obligations of the State, if funds are de-appropriated, or if the State does not receive legal authority to expend funds from the Maine State Legislature or Maine courts, then the State is not obligated to make payment under this Contract.

Maine Department of Transportation
Special Provisions for the Purchase of
Supplies, Materials or Equipment for a Specific Project
Pursuant to 23 MRSA § 52

22) **SEVERABILITY.** The invalidity or unenforceability of any particular provision or part thereof of this Contract shall not affect the remainder of said provision or any other provisions, and this Contract shall be construed in all respects as if such invalid or unenforceable provision or part thereof had been omitted.

23) **FORCE MAJEURE.** The Department may, at its discretion, excuse the performance of an obligation by a party under this Contract in the event that performance of that obligation by that party is prevented by an act of God, act of war, riot, fire, explosion, flood or other catastrophe, sabotage, severe shortage of fuel, power or raw materials, change in law, court order, national defense requirement, or strike or labor dispute, provided that any such event and the delay caused thereby is beyond the control of, and could not reasonably be avoided by, that party. The Department may, at its discretion, extend the time period for performance of the obligation excused under this section by the period of the excused delay together with a reasonable period to reinstate compliance with the terms of this Contract.

24) **DEBARMENT, SUSPENSION, INELIGIBILITY, OR EXCLUSION.** By signing the Contract, the Contractor certifies that it has not been debarred, suspended, declared ineligible or voluntarily excluded from contracts by the Federal Government or any state agency within the last 3 years.

25) **SET-OFF RIGHTS.** The State shall have all of its common law, equitable and statutory rights of set-off. These rights shall include, but not be limited to, the State's option to withhold for the purposes of set-off any monies due to the Contractor under this Contract up to any amounts due and owing to the State with regard to this Contract, any other Contract, any other Contract with any State department or agency, including any Contract for a term commencing prior to the term of this Contract, plus any amounts due and owing to the State for any other reason including, without limitation, tax delinquencies, fee delinquencies or monetary penalties relative thereto. The State shall exercise its set-off rights in accordance with normal State practices including, in cases of set-off pursuant to an audit, the finalization of such audit by the State agency, its representatives, or the State Controller.

SUPPLEMENTAL SPECIFICATION

(Corrections, Additions, & Revisions to Standard Specifications - Revision of December 2002)

SECTION 101
CONTRACT INTERPRETATION

101.2 Definitions

Closeout Documentation Replace the sentence "A letter stating the amount….. DBE goals." with "DBE Goal Attainment Verification Form"

Add "Environmental Information Hazardous waste assessments, dredge material test results, boring logs, geophysical studies, and other records and reports of the environmental conditions. For a related provision, see Section 104.3.14 - Interpretation and Interpolation."

Add "Fabrication Engineer The Department's representative responsible for Quality Assurance of pre-fabricated products that are produced off-site."

Geotechnical Information Replace with the following: "Boring logs, soil reports, geotechnical design reports, ground penetrating radar evaluations, seismic refraction studies, and other records of subsurface conditions. For a related provision, see Section 104.3.14 - Interpretation and Interpolation."

SECTION 102
DELIVERY OF BIDS

102.7.1 Location and Time Add the following sentence "As a minimum, the Bidder will submit a Bid Package consisting of the Notice to Contractors, the completed Acknowledgement of Bid Amendments form, the completed Schedule of Items, 2 copies of the completed Agreement, Offer, & Award form, a Bid Bond or Bid Guarantee, and any other Certifications or Bid Requirements listed in the Bid Book."

102.11.1 Non-curable Bid Defects Replace E. with "E. The unit price and bid amount is not provided or a lump sum price is not provided or is illegible as determined by the Department."

SECTION 103
AWARD AND CONTRACTING

103.3.1 Notice and Information Gathering Change the first paragraph to read as follows: "After Bid Opening and as a condition for Award of a Contract, the Department may require an Apparent Successful Bidder to demonstrate to the Department's satisfaction that the Bidder is responsible and qualified to perform the Work."

SECTION 104
GENERAL RIGHTS AND RESPONSIBILITIES

104.3.14 Interpretation and Interpolation In the first sentence, change "…and Geotechnical Information." to "…Environmental Information, and Geotechnical Information."

SECTION 105
GENERAL SCOPE OF WORK

Delete the entire Section 105.6 and replace with the following:

105.6.1 Department Provided Services The Department will provide the Contractor with the description and coordinates of vertical and horizontal control points, set by the Department, within the Project Limits, for full construction Projects and other Projects where survey control is necessary. For Projects of 1,500 feet in length, or less: The Department will provide three points. For Projects between 1,500 and 5,000 feet in length: The Department will provide one set of two points at each end of the Project. For Projects in excess of 5,000 feet in length, the Department will provide one set of two points at each end of the Project, plus one additional set of two points for each mile of Project length. For non-full construction Projects and other Projects where survey control is not necessary, the Department will not set any control points and, therefore, will not provide description and coordinates of any control points. Upon request of the Contractor, the Department will provide the Department's survey data management software and Survey Manual to the Contractor, or its survey Subcontractor, for the exclusive use on the Department's Projects.

105.6.2 Contractor Provided Services Utilizing the survey information and points provided by the Department, described in Subsection 105.6.1, Department Provided Services, the Contractor shall provide all additional survey layout necessary to complete the Work. This may include, but not be limited to, reestablishing all points provided by the Department, establishing additional control points, running axis lines, providing layout and maintenance of all other lines, grades, or points, and survey quality control to ensure conformance with the Contract. The Contractor is also responsible for providing construction centerline, or close reference points, for all Utility Facilities relocations and adjustments as necessary to complete the Work. When the Work is to connect with existing Structures, the Contractor shall verify all dimensions before proceeding with the Work. The Contractor shall employ or retain competent engineering and/or surveying personnel to fulfill these responsibilities.

The Contractor must notify the Department of any errors or inconsistencies regarding the data and layout provided by the Department as provided by Section 104.3.3 - Duty to Notify Department If Ambiguities Discovered.

105.6.2.1 Survey Quality Control The Contractor is responsible for all construction survey quality control. Construction survey quality control is generally defined as, first, performing initial field survey layout of the Work and, second, performing an independent check of the initial layout using independent survey data to assure the accuracy of the initial layout; additional iterations of checks may be required if significant discrepancies are discovered in this process. Construction survey layout quality control also requires written documentation of the layout process such that the process can be followed and repeated, if necessary, by an independent survey crew.

105.6.3 Survey Quality Assurance It is the Department's prerogative to perform construction survey quality assurance. Construction survey quality assurance may, or may not, be performed by the Department. Construction survey quality assurance is generally defined as an independent check of the construction survey quality control. The construction survey

quality assurance process may involve physically checking the Contractor's construction survey layout using independent survey data, or may simply involve reviewing the construction survey quality control written documentation. If the Department elects to physically check the Contractor's survey layout, the Contractor's designated surveyor may be required to be present. The Department will provide a minimum notice of 48 hours to the Contractor, whenever possible, if the Contractor's designated surveyor's presence is required. Any errors discovered through the quality assurance process shall be corrected by the Contractor, at no additional cost to the Department.

105.6.4 Boundary Markers The Contractor shall preserve and protect from damage all monuments or other points that mark the boundaries of the Right-of-Way or abutting parcels that are outside the area that must be disturbed to perform the Work. The Contractor indemnifies and holds harmless the Department from all claims to reestablish the former location of all such monuments or points including claims arising from 14 MRSA § 7554-A. For a related provision, see Section 104.3.11 - Responsibility for Property of Others.

SECTION 106
QUALITY

106.4.3 Testing Change the first sentence in paragraph three from "…maintain records of all inspections and tests." to "…maintain original documentation of all inspections, tests, and calculations used to generate reports."

106.6 Acceptance Add the following to paragraph 1 of A: "This includes Sections 401 - Hot Mix Asphalt, 402 - Pavement Smoothness, and 502 - Structural Concrete - Method A - Air Content."

Add the following to the beginning of paragraph 3 of A: "For pay factors based on Quality Level Analysis, and"

106.7.1 Standard Deviation Method Add the following to F: "Note: In cases where the mean of the values is equal to either the USL or the LSL, then the PWL will be 50 regardless of the computed value of s."

Add the following to H: "Method C Hot Mix Asphalt: PF = [55 + (Quality Level *0.5)] * 0.01"

SECTION 107
TIME

107.3.1 General Add the following: "If a Holiday occurs on a Sunday, the following Monday shall be considered a Holiday. Sunday or Holiday work must be approved by the Department, except that the Contractor may work on Martin Luther King Day, President's Day, Patriot's Day, the Friday after Thanksgiving, and Columbus Day without the Department's approval."

107.7.2 Schedule of Liquidated Damages Replace the table of Liquidated Damages as follows:

From More Than	Up to and Including	Amount of Liquidated Damages per Calendar Day
$0	$100,000	$225

$100,000	$250,000	$350
$250,000	$500,000	$475
$500,000	$1,000,000	$675
$1,000,000	$2,000,000	$900
$2,000,000	$4,000,000	$1,000
$4,000,000	and more	$2,100

SECTION 108
PAYMENT

Remove Section 108.4 and replace with the following:

"108.4 Payment for Materials Obtained and Stored Acting upon a request from the Contractor and accompanied by bills or receipted bills, the Department will pay for all or part of the value of acceptable, non-perishable Materials that are to be incorporated in the Work, including Materials that are to be incorporated into the Work, not delivered on the Work site, and stored at places acceptable to the Department. Examples of such Materials include steel piles, stone masonry, curbing, timber and lumber, metal Culverts, stone and sand, gravel, and other Materials. The Department will not make payment on living or perishable Materials until acceptably planted in their final locations.

If payment for Materials is made to the Contractor based on bills, only, then the Contractor must provide receipted bills to the Department for these Materials within 14 days of the date the Contractor receives payment for the Materials. Failure of the Contractor to provide receipted bills for these Materials within 14 days of the dated the Contractor receives payment will result in the paid amount being withheld from the subsequent progress payment, or payments, until such time the receipted bills are received by the Department.

Materials paid for by the Department are the property of the Department, but the risk of loss shall remain with the Contractor. Payment for Materials does not constitute Acceptance of the Material. If Materials for which the Department has paid are later found to be unacceptable, then the Department may withhold amounts reflecting such unacceptable Materials from payments otherwise due the Contractor.

In the event of Default, the Department may use or cause to be used all paid-for Materials in any manner that is in the best interest of the Department."

SECTION 109
CHANGES

109.1.1 Changes Permitted Add the following to the end of the paragraph: "There will be no adjustment to Contract Time due to an increase or decrease in quantities, compared to those estimated, except as addressed through Contract Modification(s)."

109.1.2 Substantial Changes to Major Items Add the following to the end of the paragraph: "Contract Time adjustments may be made for substantial changes to Major Items when the change affects the Critical Path, as determined by the Department"

109.4.4 Investigation / Adjustment Third sentence, delete the words "subsections (A) - (E)"

109.5.1 Definitions - Types of Delays

B. Compensable Delay Replace (1) with the following; "a weather related Uncontrollable Event of such an unusually severe nature that a Federal Emergency Disaster is declared. The Contractor will only be entitled to an Equitable Adjustment if the Project falls within the geographic boundaries prescribed under the disaster declaration."

109.7.2 Basis of Payment Replace with the following: "Adjustments will be established by mutual Agreement based upon Unit or Lump Sum Prices. These agreed Unit or Lump Sum prices will be full compensation and no additions or mark-ups are allowed. If Agreement cannot be reached, the Contractor shall accept payment on a Force Account basis as provided in Section 109.7.5 - Force Account Work, as full and complete compensation for all Work relating to the Equitable Adjustment."

109.7.3 Compensable Items Delete this Section entirely.

109.7.4 Non-Compensable Items Replace with the following: "The Contractor is not entitled to compensation or reimbursement for any of the following items:

A. Total profit or home office overhead in excess of 15%,
B. ……."

109.7.5 Force Account Work

C. Equipment
Paragraph 2, delete sentence 1 which starts; "Equipment leased…."

Paragraph 6, change sentence 2 from "The Contractor may furnish…" to read "If requested by the Department, the Contractor will produce cost data to assist the Department in the establishment of such rental rate, including all records that are relevant to the Actual Costs including rental Receipts, acquisition costs, financing documents, lease Agreements, and maintenance and operational cost records."
Add the following paragraph; "Equipment leased by the Contractor for Force Account Work and actually used on the Project will be paid for at the actual invoice amount plus 10% markup for administrative costs."

Add the following section;

"F. Subcontractor Work When accomplishing Force Account Work that utilizes Subcontractors, the Contractor will be allowed a maximum markup of 5% for profit and overhead on the Subcontractor's portion of the Force Account Work. If the Department does not accept the Subcontractor quote, then the Subcontractor work will be subject to the Force Account provisions with a 5% markup for profit & overhead.."

SECTION 110
INDEMNIFICATION, BONDING, AND INSURANCE

Delete the entire Section 110.2.3 and replace with the following:

110.2.3 Bonding for Landscape Establishment Period The Contractor shall provide a signed, valid, and enforceable Performance, Warranty, or Maintenance Bond complying with the Contract, to the Department at Final Acceptance.

The bond shall be in the full amount for all Pay Items for work pursuant to Sec 621, Landscape, payable to the "Treasurer - State of Maine," and on the Department's forms, on exact copies thereof, or on forms that do not contain any significant variations from the Department's forms as solely determined by the Department.

The Contractor shall pay all premiums and take all other actions necessary to keep said bond in effect for the duration of the Landscape Establishment Period described in Special Provision 621.0036 - Establishment Period. If the Surety becomes financially insolvent, ceases to be licensed or approved to do business in the State of Maine, or stops operating in the United States, the Contractor shall file new bonds complying with this Section within 10 Days of the date the Contractor is notified or becomes aware of such change.

All Bonds shall be procured from a company organized and operating in the United States, licensed or approved to do business in the State of Maine by the State of Maine Department of Business Regulation, Bureau of Insurance, and listed on the latest Federal Department of the Treasury listing for "Companies Holding Certificates of Authority as Acceptable Sureties on Federal Bonds and as Acceptable Reinsuring Companies."

By issuing a bond, the Surety agrees to be bound by all terms of the Contract, including those related to payment, time for performance, quality, warranties, and the Department's self-help remedy provided in Section 112.1 - Default to the same extent as if all terms of the Contract are contained in the bond(s).

Regarding claims related to any obligations covered by the bond, the Surety shall provide, within 60 Days of Receipt of written notice thereof, full payment of the entire claim or written notice of all bases upon which it is denying or contesting payment. Failure of the Surety to provide such notice within the 60-day period constitutes the Surety's waiver of any right to deny or contest payment and the Surety's acknowledgment that the claim is valid and undisputed.

110 - Indemnification, Bonding and Insurance
Add the following to the end of Section 110, Indemnification, Bonding and Insurance:

Nothing in these Standard Specifications constitutes a waiver of any defense, immunity or limitation of liability that may be available to the Department, or its officers, agents or employees under the Maine Tort Claims Act (Title 14 M.R.S.A. 8101 et seq.), and shall not constitute a waiver of other privileges or immunities that may be available to the Department.

SECTION 202
REMOVING STRUCTURES AND OBSTRUCTIONS

202.02 Removing Buildings Make the following change to the last sentence in the final paragraph, change "…Code of Maine Regulations 401." to "…Department of Environmental

Protection Maine Solid Waste Management Rules, 06-096 CMR Ch. 401, Landfill Siting, Design and Operation."

SECTION 203
EXCAVATION AND EMBANKMENT

203.01 Description Under b. Rock Excavation; add the following sentence: "The use of perchlorate is not allowed in blasting operations."

Delete the entire Section 203.041 and replace with the following:
"203.041 Salvage of Existing Hot Mix Asphalt Pavement All existing hot mix asphalt pavement designated to be removed under this contract must be salvaged for utilization. Existing hot mix asphalt pavement material shall not be deposited in any waste area or be placed below subgrade in any embankment.

Methods of utilization may be any of the following:

1. Used as a replacement for untreated aggregate surface course on entrances provided the material contains no particles greater than 50 mm [2 in] in any dimension. Payment will be made under Pay Item 411.09, Untreated Aggregate Surface Course or 411.10, Untreated Aggregate Surface Course, Truck Measure. Material shall be placed, shaped, compacted and stabilized as directed by the Resident.

2. Used as the top 3" of gravel. Recycled Asphalt Pavement (RAP) shall be process to 1½" minus and blending will not be allowed. When this method is utilized, a surcharge will not be required

3. Stockpiled at commercial or approved sites for commercial or MaineDOT use.

4. Other approved methods proposed by the Contractor, and approved by the Resident which will assure proper use of the existing hot mix asphalt pavement.

The cost of salvaging hot mix asphalt material will be included for payment under the applicable pay item, with no additional allowances made, which will be full compensation for removing, temporarily stockpiling, and rehandling, if necessary, and utilizing the material in entrances or other approved uses, or stockpiling at an approved site as described above. The material will also be measured and paid for under the applicable Pay Item if it is reused for aggregate in entrances, or other approved uses."

SECTION 502
STRUCTURAL CONCRETE

502.05 Composition and Proportioning; TABLE #1; NOTE #2; third sentence; Change "…alcohol based saline sealer…" to "alcohol based silane sealer…". Add NOTE #6 to Class S Concrete.

502.0502 Quality Assurance Method A - Rejection by Resident Change the first sentence to read: "For an individual sublot with test results failing to meet the criteria in Table #1, or if the calculated pay factor for Air Content is less than 0.80……"

502.0503 Quality Assurance Method B - Rejection by Resident Change the first sentence to read: "For material represented by a verification test with test results failing to meet the criteria in Table #1, the Department will……"

502.0505 Resolution of Disputed Acceptance Test Results Combine the second and third sentence to read: "Circumstances may arise, however, where the Department may ……"
502.10 Forms and False work
D. Removal of Forms and False work 1., First paragraph; first, second, and third sentence; replace "forms" with "forms and false work"

502.11 Placing Concrete
G. Concrete Wearing Surface and Structural Slabs on Precast Superstructures Last paragraph; third sentence; replace "The temperature of the concrete shall not exceed 24° C [75° F} at the time of placement." with "The temperature of the concrete shall not exceed 24° C [75° F} at the time the concrete is placed in its final position."

502.15 Curing Concrete First paragraph; replace the first sentence with the following; "All concrete surfaces shall be kept wet with clean, fresh water for a curing period of at least 7 days after concrete placing, with the exception of vertical surfaces as provided for in Section 502.10 (D) - Removal of Forms and False work."

Second paragraph; delete the first two sentences.
Third paragraph; delete the entire paragraph which starts "When the ambient temperature…."
Fourth paragraph; delete "approved" to now read "…continuously wet for the entire curing period…"

Fifth paragraph; second sentence; change "…as soon as it is possible to do so without damaging the concrete surface." to "…as soon as possible."

Seventh paragraph; first sentence; change "…until the end of the curing period." to "…until the end of the curing period, except as provided for in Section 502.10(D) - Removal of Forms and False work."

502.19 Basis of Payment First paragraph, second sentence; add "pier nose armor" to the list of items included in the contract price for concrete.

SECTION 503
REINFORCING STEEL

503.06 Placing and Fastening Change the second paragraph, first sentence from: "All tack welding shall be done in accordance with Section 504, Structural Steel." to "All tack welding shall be done in accordance with AWS D1.4 Structural Welding Code - Reinforcing Steel."

SECTION 504
STRUCTURAL STEEL

504.09 Facilities for Inspection Add the follow as the last paragraph: "Failure to comply with the above requirements will be consider to be a denial to allow access to work by the Contractor. The Department will reject any work done when access for inspection is denied."

504.18 Plates for Fabricated Members Change the second paragraph, first sentence from: "…ASTM A 898/A 898 M…" to "…ASTM A 898/A 898 M or ASTM A 435/A 435 M as applicable and…"

504.31 Shop Assembly Add the following as the last sentence: "The minimum assembly length shall include bearing centerlines of at least two substructure units."

504.64 Non Destructive Testing-Ancillary Bridge Products and Support Structures Change the third paragraph, first sentence from "One hundred percent…" to "Twenty five percent…"

SECTION 535
PRECAST, PRESTRESSED CONCRETE SUPERSTRUCTURE

535.02 Materials Change "Steel Strand for Concrete Reinforcement" to "Steel Strand." Add the following to the beginning of the third paragraph; "Concrete shall be Class P conforming to the requirements in this section. 28 day compressive strength shall be as stated on the plans. Coarse aggregate…."

535.05 Inspection Facilities Add the follow as the last paragraph: "If the above requirements are not met, the Contractor shall be considered to be in violation of Standard Specification 104.2.5 – Right to Inspect Work. All work occurring during a violation of this specification will be rejected."

535.26 Lateral Post-Tensioning Replace the first paragraph; "A final tension…" with "Overstressing strands for setting losses cannot be accomplished for chuck to chuck lengths of 7.6 m [25 ft] and less. In such instances, refer to the Plans for all materials and methods. Otherwise, post-tensioning shall be in accordance with PCI standards and shall provide the anchorage force noted in the Plans. The applied jacking force shall be no less than 100% of the design jacking force."

SECTION 603
PIPE CULVERTS AND STORM DRAINS

603.0311 Corrugated Polyethylene Pipe for Option III Replace the Minimum Mandrel Diameter Table with the following:

Nominal Size US Customary (in)	Minimum Mandrel Diameter (in)	Nominal Size Metric (mm)	Minimum Mandrel Diameter (mm)
12	11.23	300	280.73
15	14.04	375	350.91
18	16.84	450	421.09
24	22.46	600	561.45
30	28.07	750	701.81

36	33.69	900	842.18
42	39.30	1050	982.54
48	44.92	1200	1122.90

SECTION 604
MANHOLES, INLETS, AND CATCH BASINS

604.02 Materials Add the following:

"Tops and Traps	712.07
Corrugated Metal Units	712.08
Catch Basin and Manhole Steps	712.09"

SECTION 605
UNDERDRAINS

605.05 Underdrain Outlets Make the following change:

In the first paragraph, second sentence, delete the words "metal pipe".

SECTION 606
GUARDRAIL

606.02 Materials Delete the entire paragraph which reads "The sole patented supplier of multiple mailbox…." and replace with "Acceptable multiple mailbox assemblies shall be listed on the Department's Approved Products List and shall be NCHRP 350 tested and approved." Delete the entire paragraph which reads "Retroreflective beam guardrail delineators…." and replace with "Reflectorized sheeting for Guardrail Delineators shall meet the requirements of Section 719.01 - Reflective Sheeting. Delineators shall be fabricated from high-impact, ultraviolet and weather resistant thermoplastic.

606.09 Basis of Payment First paragraph; delete the second and third sentence in their entirety and replace with "Butterfly-type guardrail reflectorized delineators shall be mounted on all W-beam guardrail at an interval of every 10 posts [62.5 ft] on tangents sections and every 5 posts [31.25 ft] on curved sections as directed by the Resident. On divided highways, the delineators shall be yellow on the left hand side and silver/white on the right hand side. On two-way roadways, the delineators shall be silver/white on the right hand side. All delineators shall have retroreflective sheeting applied to only the traffic facing side. Reflectorized guardrail delineators will not be paid for directly, but will be considered incidental to the guardrail items."

SECTION 609
CURB

609.04 Bituminous Curb f., Delete the requirement "Color Natural (White)"

SECTION 610

STONE FILL, RIPRAP, STONE BLANKET, AND STONE DITCH PROTECTION

Add the following paragraph to Section 610.02:
"Materials shall meet the requirements of the following Sections of Special Provision 703:

Stone Fill	703.25
Plain and Hand Laid Riprap	703.26
Stone Blanket	703.27
Heavy Riprap	703.28
Definitions	703.32"

Add the following paragraph to Section 610.032.a.
"Stone fill and stone blanket shall be placed on the slope in a well-knit, compact and uniform layer. The surface stones shall be chinked with smaller stone from the same source."

Add the following paragraph to Section 610.032.b:
"Riprap shall be placed on the slope in a well-knit, compact and uniform layer. The surface stones shall be chinked with smaller stone from the same source."

Add the following to Section 610.032: "Section 610.032.d. The grading of riprap, stone fill, stone blanket and stone ditch protection shall be determined by the Resident by visual inspection of the load before it is dumped into place, or, if ordered by the Resident, by dumping individual loads on a flat surface and sorting and measuring the individual rocks contained in the load. A separate, reference pile of stone with the required gradation will be placed by the Contractor at a convenient location where the Resident can see and judge by eye the suitability of the rock being placed during the duration of the project. The Resident reserves the right to reject stone at the job site or stockpile, and in place. Stone rejected at the job site or in place shall be removed from the site at no additional cost to the Department."

SECTION 615
LOAM

615.02 Materials Make the following change:

Organic Content	Percent by Volume
Humus	"5% - 10%", as determined by Ignition Test

SECTION 618
SEEDING

618.01 Description Change the first sentence to read as follows: "This work shall consist of furnishing and applying seed ….." Also remove ",and cellulose fiber mulch" from 618.01(a).
618.03 Rates of Application In 618.03(a), remove the last sentence and replace with the following: "These rates shall apply to Seeding Method 2, 3, and Crown Vetch."

In 618.03(c) "1.8 kg [4 lb]/unit." to "1.95 kg [4 lb]/unit."

618.09 Construction Method In 618.09(a) 1, sentence two, replace "100 mm [4 in]" with "25 mm [1 in] (Method 1 areas) and 50 mm [2 in] (Method 2 areas)"

618.15 Temporary Seeding Change the Pay Unit from Unit to Kg [lb].

SECTION 620
GEOTEXTILES

620.03 Placement Section (c)

Title: Replace "Non-woven" in title with "Erosion Control".
First Paragraph: Replace first word "Non-woven" with "Woven monofilament".
Second Paragraph: Replace second word "Non-woven" with "Erosion Control".

620.07 Shipment, Storage, Protection and Repair of Fabric Section (a)

Replace the second sentence with the following: "Damaged geotextiles, as identified by the Resident, shall be repaired immediately."

620.09 Basis of Payment

Pay Item 620.58: Replace "Non-woven" with "Erosion Control"
Pay Item 620.59: Replace "Non-woven" with "Erosion Control"

SECTION 621
LANDSCAPING

621.0036 Establishment Period In paragraph 4 and 5, change "time of Final Acceptance" to "end of the period of establishment". In Paragraph 7, change "Final Acceptance date" to ""end of the period of establishment" and change "date of Final Acceptance" to "end of the period of establishment".

SECTION 626
HIGHWAY SIGNING

626.034 Concrete Foundations Add to the following to the end of the second paragraph: "Pre-cast and cast-in-place foundations shall be warranteed against leaning and corrosion for two years after the project is completed. If the lean is greater than 2 degrees from normal or the foundation is spalling within the first two years, the Contractor shall replace the foundation at no extra cost."

SECTION 627
PAVEMENT MARKINGS

627.10 Basis of Payment Add to the following to the end of the third paragraph: "If allowed by Special Provision, the Contractor may utilize Temporary Bi-Directional Yellow and White(As required) Delineators as temporary pavement marking lines and paid for at the contract lump sum price. Such payment will include as many applications as required and removal."

SECTION 637
DUST CONTROL

637.06 Basis of Payment Add the following after the second sentence of the third paragraph: "Failure by the Contractor to follow Standard Specification or Special Provision - Section 637 and/or the Contractor's own Soil Erosion and Pollution Control Plan concerning Dust Control and/or the Contractor's own Traffic Control Plan concerning Dust Control and/or visible evidence of excessive dust problems, as determined by the Resident, will result in a reduction in payment, computed by reducing the Lump Sum Total by 5% per occurrence per day. The Department's Resident or any other representative of the Department reserves the right to suspend the work at any time and request a meeting to discuss violations and remedies. The Department shall not be held responsible for any delay in the work due to any suspension under this item. Additional penalties may also be assessed in accordance with Special Provision 652 - Work Zone Traffic Control and Standard Specification 656 - Temporary Soil Erosion and Water Pollution Control."

SECTION 639
ENGINEERING FACILITIES

639.04 Field Offices Change the forth to last paragraph from: "The Contractor shall provide a fully functional desktop copier…" to "….desktop copier/scanner…"

Description Change "Floor Area" to "Floor Area (Outside Dimension)". Change Type B floor area from "15 (160)" to "20 (217)".

639.09 Telephone Paragraph 1 is amended as follows:
"The contractor shall provide **two** telephone lines and two telephones,…."

Add- "In addition the contractor will supply one computer broadband connection, modem lease and router. The router shall have wireless access and be 802.11n or 802.11g capable and wireless. The type of connection supplied will be contingent upon the availability of services (i.e. DSL or Cable Broadband). It shall be the contractor's option to provide dynamic or static IP addresses through the service. **The selected service will have a minimum downstream connection of 1.5 Mbps and 384 Kbps upstream.** The contractor shall be responsible for the installation charges and all reinstallation charges following suspended periods. Monthly service and maintenance charges shall be billed by the Internet Service Provider (ISP) directly to the contractor."

SECTION 652
MAINTENANCE OF TRAFFIC

652.2.3 Flashing Arrow Board Delete the existing 5 paragraphs and replace with the following: Flashing Arrow Panels (FAP) must be of a type that has been submitted to AASHTO's National Transportation Product Evaluation Program (NTPEP) for evaluation and placed on the Maine Department of Transportations' Approved Products List of Portable Changeable Message Signs & Flashing Arrow Panels.

FAP units shall meet requirements of the current Manual on Uniform Traffic Control Devices

(MUTCD) for Type "C" panels as described in Section 6F.56 - Temporary Traffic Control Devices. An FAP shall have matrix of a minimum of 15 low-glare, sealed beam, Par 46 elements capable of either flashing or sequential displays as well as the various operating modes as described in the MUTCD, Chapter 6-F. If an FAP consisting of a bulb matrix is used, each element should be recess-mounted or equipped with an upper hood of not less than 180 degrees. The color presented by the elements shall be yellow.

FAP elements shall be capable of at least a 50 percent dimming from full brilliance. Full brilliance should be used for daytime operation and the dimmed mode shall be used for nighttime operation. FAP shall be at least 2.4 M x 1.2 M [96" x 48"] and finished in non-reflective black. The FAP shall be interpretable for a distance not less than 1.6 km [1 mile].

Operating modes shall include, flashing arrow, sequential arrow, sequential chevron, flashing double arrow, and flashing caution. In the three arrow signals, the second light from the arrow point shall not operate.

The minimum element on-time shall be 50 percent for the flashing mode, with equal intervals of 25 percent for each sequential phase. The flashing rate shall be not less than 25 nor more than 40 flashes per minute. All on-board circuitry shall be solid state.

Primary power source shall be 12 volt solar with a battery back-up to provide continuous operation when failure of the primary power source occurs, up to 30 days with fully charged batteries. Batteries must be capable of being charged from an onboard 110 volt AC power source and the unit shall be equipped with a cable for this purpose.

Controller and battery compartments shall be enclosed in lockable, weather-tight boxes.
The FAP shall be mounted on a pneumatic-tired trailer or other suitable support for hauling to various locations, as directed. The minimum mounting height of an arrow panel should be 2.1 M [7 feet] from the roadway to the bottom of the panel.

The face of the trailer shall be delineated on a permanent basis by affixing retro-reflective material, known as conspicuity material, in a continuous line as seen by oncoming drivers.

A portable changeable message sign may be used to simulate an arrow panel display."

652.2.4 Other Devices Delete the last paragraph and add the following:
"652.2.5 Portable Changeable Message Sign Trailer mounted Portable Changeable Message Signs (PCMS) must be of a type that has been submitted to AASHTO's National Transportation Product Evaluation Program (NTPEP) for evaluation and placed on the Maine Department of Transportations' Approved Products List of Portable Changeable Message Signs & Flashing Arrow Panels. The PCMS unit shall meet or exceed the current specifications of the Manual on Uniform Traffic Control Devices (MUTCD), 6F.55.

The front face of the sign should be covered with a low-glare protective material. The color of the LED elements shall be amber on a black background. The PCMS should be visible from a distance of 0.8 km [0.5 mile] day and night and have a minimum 15º viewing angle. Characters must be legible from a distance of at least 200 M [650 feet].

The message panel should have adjustable display rates (minimum of 3 seconds per phase), so that the entire message can be read at least twice at the posted speed, the off-peak 85th-percentile speed prior to work starting, or the anticipated operating speed. Each message shall consist of either one or two phases. A phase shall consist of up to eight characters per line. The unit must be capable of displaying at least three lines of text with eight characters per line. Each character shall be 457 mm [18”] high. Each character module shall use at least a five wide and seven high pixel matrix. The text of the messages shall not scroll or travel horizontally or vertically across the face of the sign.

Units shall automatically adjust their brightness under varying light conditions to maintain legibility.

The control system shall include a display screen upon which messages can be reviewed before being displayed on the message sign. The control system shall be capable of maintaining memory when power is unavailable. Message must be changeable with either a notebook computer or an on-board keypad. The controller shall have the capability to store a minimum of 200 user-defined and 200 pre-programmed messages. Controller and battery compartments shall be enclosed in lockable, weather-tight boxes.

PCMS units shall have the capability of being made programmable by means of wireless communications. PCMS units shall also be fully capable of having an on-board radar system installed if required for a particular application.

PCMS’ primary power source shall be solar with a battery back-up to provide continuous operation when failure of the primary power source occurs. Batteries must be capable of being charged from a 110 volt AC power source. The unit must also be capable of being operated solely from a 110 volt AC power source and be equipped with a cable for this purpose.

The PCMS shall be mounted on a trailer in such a way that the bottom of the message sign panel shall be a minimum of 2.1 M [7 ft] above the roadway in urban areas and 1.5 M [5 ft] above the roadway in rural areas when it is in the operating mode. PCMS trailers should be of a heavy duty type with a 51 mm [2”] ball hitch and a minimum of four leveling jacks (at each corner). The sign shall be capable of being rotated 360° relative to the trailer. The face of the trailer shall be delineated on a permanent basis by affixing retro-reflective material, known as conspicuity material, in a continuous line as seen by oncoming drivers.”

652.3.3 Submittal of Traffic Control Plan In item e. change “A list of all certified flaggers…” to “A list of all the Contractor’s certified flaggers…”

Change a. in the list of requirements to: “a. The name, telephone number, and other contact numbers (cellular phone, pager, if any) of the Contractor's Traffic Control Supervisor (the person with overall responsibility for following the TCP), who has received Work Zone Traffic Control Training commensurate with the level of responsibility shown in the requirements of the Contract, and who is empowered to immediately resolve any work zone traffic control deficiencies or issues. Provide documentation that the Traffic Control Supervisor has completed a Work Zone Traffic Control Training Course (AGC, ATSSA, or other industry-recognized training), and a Supervisory refresher training every 5 years thereafter. Submit the course name, training entity, and date of training.

Traffic Control Training Course curriculum must be based on the standards and guidelines of the MUTCD and must include, at a minimum, the following:

1. Parts of Temporary Traffic Control Zone
2. Appropriate use and spacing of signs
3. Use and spacing of channelizing devices
4. Flagging basics
5. Typical examples and applications

The Traffic Control Supervisor, or designee directly overseeing physical installation, adjustment, and dismantling of work zone traffic control, will ensure all personnel performing those activities are trained to execute the work in a safe and proper manner, in accordance with their level of decision-making and responsibility."

Add the follow to the list of requirements: "k. The plan for unexpected nighttime work along with a list of emergency nighttime equipment available on-site."

In the last paragraph add the following as the second sentence: "The Department will review and provide comments to the Contractor within 14 days of receipt of the TCP." Add the following as the last sentence: "The creation and modification of the TCP will be considered incidental to the related 652 items."

652.3.5 Installation of Traffic Control Devices In the first paragraph, first sentence; change "Signs shall be erected…" to "Portable signs shall be erected.." In the third sentence; change "Signs must be erected so that the sign face…" to "Post-mounted signs must also be erected so that the sign face…"

652.4 Flaggers Replace the first paragraph with the following; "The Contractor shall furnish flaggers as required by the TCP or as otherwise specified by the Resident. All flaggers must have successfully completed a flagger test approved by the Department and administered by a Department-approved Flagger-Certifier who is employing that flagger. All flaggers must carry an official certification card with them while flagging that has been issued by their employer. Flaggers shall wear safety apparel meeting ANSI 107-2004 Class 2 risk exposure that clearly identifies the wearer as a person, and is visible at a minimum distance of 300 m [1000 ft], and shall wear a hardhat with 360° retro-reflectivity. For nighttime conditions, Class 3 apparel, meeting ANSI 107-2004, shall be worn along with a hardhat with 360° retro-reflectivity. Retro-reflective or flashing SLOW/STOP paddles shall be used, and the flagger station shall be illuminated to assure visibility in accordance with 652.6.2."

Second paragraph, first sentence; change "…have sufficient distance to stop before entering the workspace." to "…have sufficient distance to stop at the intended stopping point." Third sentence; change "At a spot obstruction…" to "At a spot obstruction with adequate sight distance,…"

Fourth paragraph, delete and replace with "Flaggers shall be provided as a minimum, a 10 minute break, every 2 hours and a 30 minute or longer lunch period away from the work station. Flaggers may only receive 1 unpaid break per day; all other breaks must be paid. Sufficient certified flaggers shall be available onsite to provide for continuous flagging operations during break periods. If the flaggers are receiving the appropriate breaks, breaker flagger(s) shall be paid starting 2 hours after the work begins and ending 2 hours before the work ends. A maximum of 1 breaker per 6 flaggers will be paid. (1 breaker flagger for 2 to 6 flaggers, 2 breaker flaggers for 7 to 12 flaggers, etc)"

Add the following:
"652.5.1 Rumble Strip Crossing When lane shifts or lane closures require traffic to cross a permanent longitudinal rumble strip for 7 calendar days or less, the Contractor shall install warning signs that read "RUMBLE STRIP CROSSING" with a supplemental Motorcycle Plaque, (W8-15P).

When lane shifts or lane closures require traffic to cross a permanent longitudinal rumble strip for more than 7 calendar days, the Contractor shall pave in the rumble strips in the area that traffic will cross, unless otherwise directed by the Resident. Rumble strips shall be replaced prior to the end of the project, when it is no longer necessary to cross them."

652.6 Nightwork Delete this section entirely and replace with the following:
"652.6.1 Daylight Work Times Unless otherwise described in the Contract, the Contractor is allowed to commence work and end work daily according to the Sunrise/Sunset Table at: http://www.sunrisesunset.com/usa/Maine.asp . If the Project town is not listed, the closest town on the list will be used as agreed at the Preconstruction Meeting. Any work conducted before sunrise or after sunset will be considered Night Work.

652.6.2 Night Work When Night Work occurs (either scheduled or unscheduled), the Contractor shall provide and maintain lighting on all equipment and at all work stations.

The lighting facilities shall be capable of providing light of sufficient intensity to permit good workmanship, safety and proper inspection at all times. The lighting shall be cut off and arranged on stanchions at a height that will provide perimeter lighting for each piece of equipment and will not interfere with traffic, including commercial vehicles, approaching the work site from either direction.

The Contractor shall have available portable floodlights for special areas.

The Contractor shall utilize padding, shielding or other insulation of mechanical and electrical equipment, if necessary, to minimize noise, and shall provide sufficient fuel, spare lamps, generators, etc. to maintain lighting of the work site.

The Contractor shall submit, as a subset of the Traffic Control Plan, a lighting plan at the Preconstruction Conference, showing the type and location of lights to be used for night work. The Resident may require modifications be made to the lighting set up in actual field conditions.

Prior to beginning any Night Work, the Contractor shall furnish a light meter for the Residents use that is capable of measuring the range of light levels from 5 to 20 foot-candles.

Horizontal illumination, for activities on the ground, shall be measured with the photometer parallel to the road surface. For purposes of roadway lighting, the photometer is placed on the pavement. Vertical illumination, for overhead activities, shall be measured with the photometer perpendicular to the road surface. Measurements shall be taken at the height and location of the overhead activity.

Night Work lighting requirements:

Mobile Operations: For mobile-type operations, each piece of equipment (paver, roller, milling machine, etc) will carry indirect (i.e. balloon type) lights capable of producing at least 10 foot-candles of lighting around the work area of the equipment.

Fixed Operations: For fixed-type operations (flaggers, curb, bridge, pipes, etc.), direct (i.e. tower) lighting will be utilized capable of illuminating the work area with at least 10 foot-candles of light.

Hybrid Operations: For hybrid-type operations (guardrail, sweeping, Inslope excavation, etc.), either direct or indirect lighting may be utilized. The chosen lights must be capable of producing at least 10 foot-candles of light around the work area of the equipment
Inspection Operations: Areas required to be inspected by the Department will require a minimum of 5 foot-candles of lighting. This may be accomplished through direct or indirect means.

All workers shall wear safety apparel labeled as meeting the ANSI 107-2004 standard performance for Class 3 risk exposure.

The Contractor shall apply 2- inch wide retro-reflective tape, with alternating red and white segments, to outline the front back and sides of construction vehicles and equipment, to define their shape and size to the extent practicable. Pickup trucks and personal vehicles are exempt from this requirement. The Contractor shall furnish approved signs reading "Construction Vehicle - Keep Back" to be used on trucks hauling to the project when such signs are deemed necessary by the Resident. The signs shall be a minimum of 30 inches by 60 inches, Black and Orange, ASTM D 4956 - Type VII, Type VIII, or Type IX (prismatic).

All vehicles used on the project, including pickup trucks and personal vehicles, shall be equipped with amber flashing lights, visible from both front and rear, or by means of single, approved type, revolving, flashing or strobe lights mounted so as to be visible 360º. The vehicle flashing system shall be in continuous operation while the vehicle is on any part of the project.

The Resident or any other representative of the Department reserves the right to suspend the work at any time and request a meeting to discuss violations and remedies. The Department shall not be held responsible for any delay in the work due to any suspension under this item. Failure to follow the approved Lighting Plan will result in a Traffic Control violation.

Payment for lighting, vehicle mounted signs and other costs accrued because of night work will not be made directly but will be considered incidental to the related contract items."

652.8.2 Other Items Replace the first paragraph with the following: "The accepted quantities of flagger hours will be paid for at the contract unit price per hour for each flagging station occupied excluding lunch breaks, and for each approved breaker flagger. Overtime hours, as reported on the certified payrolls, will be paid an additional 30% of the bid price for 652.38. The computation and additional payment for overtime hours will occur during the project

close-out process and will be paid as additional hours of 652.38 to the nearest ¼ hour. The contract unit price shall be full compensation for hiring, transporting, equipping, supervising, and the payment of flaggers and all overhead and incidentals necessary to complete the work."

Replace the last paragraph with the following: "There will be no payment made under any 652 pay items after the expiration of the adjusted total contract time."

SECTION 653
POLYSTYRENE PLASTIC INSULATION

653.05 Placing Backfill In the second sentence; change "…shall be not less than 150 mm [6 in] loose measure." to "…shall be not less than 250 mm [10 in] loose measure." In the third sentence; change "…crawler type bulldozer of not more than 390 kg/m^2 [80 lb/ft^2] ground contact pressure…" to "…crawler type bulldozer of not more than 4875 kg/m^2 [2000 lb/ft^2] ground contact pressure…"

653.06 Compaction In the last sentence; change "…not more than 390 kg/m^2 [80 lb/ft^2] ground contact…" to "…not more than 4875 kg/m^2 [2000 lb/ft^2] ground contact…"

SECTION 656
TEMPORARY SOIL EROSION AND WATER POLLUTION CONTROL

656.5.1 If Pay Item 656.75 Provided Replace the second paragraph with the following: "Failure by the Contractor to follow Standard Specification or Special Provision - Section 656 and/or the Contractor's own Soil Erosion and Water Pollution Control Plan (SEWPCP) will result in a violation letter and a reduction in payment as shown in the schedule below. The Department's Resident or any other representative of The Department reserves the right to suspend the work at any time and request a meeting to discuss violations and remedies. The Department shall not be held responsible for any delay in the work due to any suspension under this item.

ORIGINAL CONTRACT AMOUNT

From More Than	**Up to and Including**	**Amount of Penalty Damages per Violation 1st**	**2nd**	**3rd & Subsequent**
$0	$1,000,000	$250	$500	$1,250
$1,000,000	$2,000,000	$500	$1,000	$2,500
$2,000,000	$4,000,000	$1,000	$2,000	$5,000
$4,000,000	and more	$2,000	$4,000	$10,000"

SECTION 701
STRUCTURAL CONCRETE RELATED MATERIALS

701.10 Fly Ash - Chemical Requirements Change all references from "ASTM C311" to "ASTM C114".

SECTION 703
AGGREGATES

703.05 Aggregate for Sand Leveling Change the percent passing the 9.5 mm [3/8 in] sieve from “85 – 10” to “85 – 100”

703.06 Aggregate for Base and Subbase Delete the first paragraph: “The material shall have…” and replace with “The material shall have a minimum degradation value of 15 as determined by Washington State DOT Test Method T113, Method of Test for Determination of Degradation Value (January 2009 version), except that the reported degradation value will be the result of testing a single specimen from that portion of a sample that passes the 12.5 mm [½ in] sieve and is retained on the 2.00 mm [No. 10] sieve, minus any reclaimed asphalt pavement used."

703.07 Aggregates for HMA Pavements Delete the forth paragraph: “The composite blend shall have…” and replace with “The composite blend, minus any reclaimed asphalt pavement used, shall have a Micro-Deval value of 18.0 or less as determined by AASHTO T 327. In the event the material exceeds the Micro Deval limit, a Washington Degradation test shall be performed. The material shall be acceptable if it has a value of 30 or more as determined by Washington State DOT Test Method T 113, Method of Test for Determination of Degradation Value (January 2009 version) except that the reported degradation value will be the result of testing a single composite specimen from that portion of the sample that passes the 12.5mm [1/2 inch] sieve and is retained on the 2.00mm [No 10] sieve, minus any reclaimed asphalt pavement used."

703.09 HMA Mixture Composition The coarse and fine aggregate shall meet the requirements of Section 703.07. The several aggregate fractions for mixtures shall be sized, graded, and combined in such proportions that the resulting composite blends will meet the grading requirements of the following table.

AGGREGATE GRADATION CONTROL POINTS

SIEVE SIZE	Nominal Maximum Aggregate Size---Control Points (Percent Passing)				
	TYPE 25 mm	TYPE 19 mm	TYPE 12.5 mm	TYPE 9.5 mm	TYPE 4.75 mm
	PERCENT BY WEIGHT PASSING - COMBINED AGGREGATE				
37.5 mm	100				
25 mm	90-100	100			
19 mm	-90	90-100	100		
12.5 mm		-90	90-100	100	100
9.5 mm		-	-90	90-100	95-100
4.75 mm		-	-	-90	80-100
2.36 mm	19-45	23-49	28-58	32-67	40 - 80
1.18 mm		-	-	-	-
600 µm		-	-	-	-
300 µm		-	-	-	-
75 µm	1-7	2-8	2-10	2-10	2-10

Gradation Classification---- The combined aggregate gradation shall be classified as coarse-graded when it passes below the Primary Control Sieve (PCS) control point as defined in the following table. All other gradations shall be classified as fine-graded.

GRADATION CLASSIFICATION

PCS Control Point for Mixture Nominal Maximum Aggregate Size (% passing)				
Nominal Maximum Aggregate Size	TYPE 25 mm	TYPE 19 mm	TYPE 12.5 mm	TYPE 9.5 mm
Primary Control Sieve	4.75 mm	4.75 mm	2.36 mm	2.36 mm
PCS Control Point (% passing)	40	47	39	47

If a Grading "D" mixture is allowed per Special Provision Section 403, it shall meet the following gradation and the aggregate requirements of Section 703.07.

Sieve Designation	Percentage by Weight Passing Square Mesh Sieves
½ inch	100
⅜ inch	93-100
No. 4	60-80
No. 8	46-65
No. 16	25-55
No. 30	16-40
No. 50	10-30
No. 100	6-22
No. 200	3.0-8.0

703.18 Common Borrow Replace the first paragraph with the following: "Common borrow shall consist of earth, suitable for embankment construction. It shall be free from frozen material, perishable rubbish, peat, and other unsuitable material including material currently or previously contaminated by chemical, radiological, or biological agents unless the material is from a DOT project and authorized by DEP for use."

703.22 Underdrain Backfill Material Change the first paragraph from "…for Underdrain Type B…" to "…for Underdrain Type B and C…"

Replace subsections 703.25 through 703.28 with the following:
"703.25 Stone Fill Stones for stone fill shall consist of hard, sound, durable rock that will not disintegrate by exposure to water or weather. Stone for stone fill shall be angular and rough. Rounded, subrounded, or long thin stones will not be allowed. Stone for stone fill may be obtained from quarries or by screening oversized rock from earth borrow pits. The maximum allowable length to thickness ratio will be 3:1. The minimum stone size (10 lbs) shall have an average dimension of 5 inches. The maximum stone size (500 lbs) shall have a maximum dimension of approximately 36 inches. Larger stones may be used if approved by the Resident. Fifty percent of the stones by volume shall have an average dimension of 12 inches (200 lbs).

703.26 Plain and Hand Laid Riprap Stone for riprap shall consist of hard, sound durable rock that will not disintegrate by exposure to water or weather. Stone for riprap shall be angular and rough. Rounded, subrounded or long thin stones will not be allowed. The maximum

allowable length to width ratio will be 3:1. Stone for riprap may be obtained from quarries or by screening oversized rock from earth borrow pits. The minimum stone size (10 lbs) shall have an average dimension of 5 inches. The maximum stone size (200 lbs) shall have an average dimension of approximately 12 inches. Larger stones may be used if approved by the Resident. Fifty percent of the stones by volume shall have an average dimension greater than 9 inches (50 lbs).

703.27 Stone Blanket Stones for stone blanket shall consist of sound durable rock that will not disintegrate by exposure to water or weather. Stone for stone blanket shall be angular and rough. Rounded or subrounded stones will not be allowed. Stones may be obtained from quarries or by screening oversized rock from earth borrow pits. The minimum stone size (300 lbs) shall have minimum dimension of 14 inches, and the maximum stone size (3000 lbs) shall have a maximum dimension of approximately 66 inches. Fifty percent of the stones by volume shall have average dimension greater than 24 inches (1000 lbs).

703.28 Heavy Riprap Stone for heavy riprap shall consist of hard, sound, durable rock that will not disintegrate by exposure to water or weather. Stone for heavy riprap shall be angular and rough. Rounded, subrounded, or thin, flat stones will not be allowed. The maximum allowable length to width ratio will be 3:1. Stone for heavy riprap may be obtained from quarries or by screening oversized rock from earth borrow pits. The minimum stone size (500 lbs) shall have minimum dimension of 15 inches, and at least fifty percent of the stones by volume shall have an average dimension greater than 24 inches (1000 lbs)."

Add the following paragraph:
"703.32 Definitions (ASTM D 2488, Table 1).
Angular: Particles have sharp edges and relatively plane sides with unpolished surfaces
Subrounded: Particles have nearly plane sides but have well-rounded corners and edges
Rounded: Particles have smoothly curved sides and no edges"

SECTION 706
NON-METALLIC PIPE

706.06 Corrugated Polyethylene Pipe for Underdrain, Option I and Option III Culvert Pipe Change the first sentence from "…300 mm diameters to 900 mm" to "…300 mm diameters to 1200 mm" Delete, in its' entirety, the last sentence which begins "This pipe and resins…" and replace with the following; "Manufacturers of corrugated polyethylene pipe must participate in, and maintain compliance with, AASHTO's National Transportation Product Evaluation Program (www.ntpep.org) which audits producers of plastic pipe. A certificate of compliance must be provided with each shipment."

SECTION 708
PAINTS AND PERSERVATIVES

708.03 Pavement Marking Paint Change the first sentence from "…AASHTO M248" to "…the Maine DOT Maintenance Fast-Dry Water-Based Traffic Paint on file at the Traffic Section in Augusta". Delete, in its' entirety, the last sentence.

SECTION 709
REINFORCING STEEL AND WELDED STEEL WIRE FABIC

709.03 Steel Strand Change the second paragraph from "…shall be 12mm [½ inch] AASHTO M203M/M203 (ASTM A416/A416M)…" to "…shall be 15.24 mm [0.600 inch] diameter AASHTO M203 (ASTM A416)…"

SECTION 710
FENCE AND GUARDRAIL

710.03 Chain Link Fabric Add the following sentence: "Chain Link fabric for PVC coated shall conform to the requirements of AASHTO M181, Type IV-Class B."

710.04 Metal Beam Rail Replace with the following: "Galvanized steel rail elements shall conform to the requirements of AASHTO M 180, Class A, Type II.

When corrosion resistant steel is specified, rail shall conform to AASHTO M 180, Class A, Type IV. Beams of corrosion resistant steel shall not be painted or galvanized. They shall be so handled and stored that the traffic face of these beams, used in a continuous run of guardrail, shall not show a distinctive color differential.

When metal beam rail is to be installed on a curve having a radius of curvature of 150 ft. or less, the beam sections shall be fabricated on an arc to the required radius and permanently stamped or embossed with the designated radius.

The engineer may take one piece of guardrail, a backup plate, and end or buffer section from each 200 pieces in a lot, or from each lot if less than 200 pieces are included therein for determination of compliance with specification requirements. If one piece fails to conform to the requirements of this specification, two other pieces shall be tested. If either of these pieces fails to conform to the requirements of this specification, the lot of material represented by these samples shall be rejected. A lot shall be considered that quantity of material offered for inspection at one time that bears the same heat and coating identification."

710.07 Guardrail Posts Section b. change "…AASHTO M183/M183M…" to "…AASHTO M 270M/M 270 Grade 250 (36)…"

SECTION 712
MISCELLANEOUS HIGHWAY MATERIALS

712.04 Stone Curbing and Edging Delete the existing and replace with the following: "Stone for curbing and edging shall be approved granite from acceptable sources. The stone shall be hard and durable, predominantly gray in color, free from seams that would be likely to impair its structural integrity, and of a smooth splitting character. Natural grain size and color variations characteristic of the source deposit will be permitted. Such natural variations may include bands or clusters of mineral crystallization provided they do not impair the structural integrity of the curb stone. The Contractor shall submit for approval the name of the quarry that is the proposed source of the granite for curb materials along with full scale color photos of the granite. Such submission shall be made sufficiently in advance of ordering so that the Resident may have an opportunity to judge the stone, both as to quality and appearance. Samples of curbing shall be submitted for approval only when requested by the Resident. The dimensions, shape, and other details shall be as shown on the plans."

712.06 Precast Concrete Units In the first paragraph, change "…ASTM C478M…" to "…AASHTO M199…" Delete the second paragraph and replace with the following; "Approved structural fibers may be used as a replacement of 6 x 6 #10 gauge welded wire fabric when used at an approved dosage rate for the construction of manhole and catch basin units. The material used shall be one of the products listed on the Maine Department of Transportation's Approved Product List of Structural Fiber Reinforcement." Delete the fifth paragraph and replace with the following; "The concrete mix design shall be approved by the Department. Concrete shall contain 6% air content, plus or minus 1½% tolerance when tested according to AASHTO T152. All concrete shall develop a minimum compressive strength of 28 MPa [4000 psi] in 28 days when tested according to AASHTO T22. The absorption of a specimen, when tested according to AASHTO T280, Test Method "A", shall not exceed nine percent of the dry mass."

Add the following:
"712.07 Tops, and Traps These metal units shall conform to the plan dimensions and to the following specification requirements for the designated materials.

Gray iron or ductile iron castings shall conform to the requirements of AASHTO M306 unless otherwise designated."

712.08 Corrugated Metal Units The units shall conform to plan dimensions and the metal to AASHTO M36/M36M. Bituminous coating, when specified, shall conform to AASHTO M190 Type A.

712.09 Catch Basin and Manhole Steps Steps for catch basins and for manholes shall conform to ASTM C478M [ASTM C478], Section 13 for either of the following material:

(a) Aluminum steps-ASTM B221M, [ASTM B211] Alloy 6061-T6 or 6005-T5.

(b) Reinforced plastic steps Steel reinforcing bar with injection molded plastic coating copolymer polypropylene. Polypropylene shall conform to ASTM D 4101.

712.23 Flashing Lights Flashing Lights shall be power operated or battery operated as specified.

(a) Power operated flashing lights shall consist of housing, adapters, lamps, sockets, reflectors, lens, hoods and other necessary equipment designed to give clearly visible signal indications within an angle of at least 45 degrees and from 3 to 90 m [10 to 300 ft] under all light and atmospheric conditions.

Two circuit flasher controllers with a two-circuit filter capable of providing alternate flashing operations at the rate of not less than 50 nor more than 60 flashes per minute shall be provided.

The lamps shall be 650 lumens, 120 volt traffic signal lamps with sockets constructed to properly focus and hold the lamp firmly in position.
The housing shall have a rotatable sun visor not less than 175 mm [7 in] in length designed to shield the lens.

Reflectors shall be of such design that light from a properly focused lamp will reflect the light rays parallel. Reflectors shall have a maximum diameter at the point of contact with the lens of approximately 200 mm [8 in].

The lens shall consist of a round one-piece convex amber material which, when mounted, shall have a visible diameter of approximately 200 mm [8 in]. They shall distribute light and not diffuse it. The distribution of the light shall be asymmetrical in a downward direction. The light distribution of the lens shall not be uniform, but shall consist of a small high intensity portion with narrow distribution for long distance throw and a larger low intensity portion with wide distribution for short distance throw. Lenses shall be marked to indicate the top and bottom of the lens.

(b) Battery operated flashing lights shall be self- illuminated by an electric lamp behind the lens. These lights shall also be externally illuminated by reflex-reflective elements built into the lens to enable it to be seen by reflex-reflection of the light from the headlights of oncoming traffic. The batteries must be entirely enclosed in a case. A locking device must secure the case. The light shall have a flash rate of not less than 50 nor more than 60 flashes per minute from minus 30 °C [minus 20 °F] to plus 65 °C [plus 150 °F]. The light shall have an on time of not less than 10 percent of the flash cycle. The light beam projected upon a surface perpendicular to the axis of the light beam shall produce a lighted rectangular projection whose minimum horizontal dimension shall be 5 degrees each side of the horizontal axis. The effective intensity shall not have an initial value greater than 15.0 candelas or drop below 4.0 candelas during the first 336 hours of continuous flashing. The illuminated lens shall appear to be uniformly bright over its entire illuminated surface when viewed from any point within an angle of 9 degrees each side of the vertical axis and 5 degrees each side of the horizontal axis. The lens shall not be less than 175 mm [7 in] in diameter including a reflex-reflector ring of 13 mm [½ in] minimum width around the periphery. The lens shall be yellow in color and have a minimum relative luminous transmittance of 0.440 with a luminance of 2854° Kelvin. The lens shall be one-piece construction. The lens material shall be plastic and meet the luminous transmission requirements of this specification. The case containing the batteries and circuitry shall be constructed of a material capable of withstanding abuse equal to or greater than 1.21 mm thick steel [No. 18 U.S. Standard Gage Steel]. The housing and the lens frame, if of metal shall be properly cleaned, degreased and pretreated to promote adhesion. It shall be given one or more coats of enamel which, when dry shall completely obscure the metal. The enamel coating shall be of such quality that when the coated case is struck a light blow with a sharp tool, the paint will not chip or crack and if scratched with a knife will not powder. The case shall be so constructed and closed as to exclude moisture that would affect the proper operation of light. The case shall have a weep hole to allow the escape of moisture from condensation. Photoelectric controls, if provided, shall keep the light operating whenever the ambient light falls below 215 lx [20 foot candles]. Each light shall be plainly marked as to the manufacturer's name and model number.

If required by the Resident, certification as to conformance to these specifications shall be furnished based on results of tests made by an independent testing laboratory. All lights are subject to random inspection and testing. All necessary random samples shall

be provided to the Resident upon request without cost to the Department. All such samples shall be returned to the Contractor upon completion of the tests.

712.32 Copper Tubing Copper tubing and fittings shall conform to the requirements of ASTM B88M Type A [ASTM B88, Type K] or better.

712.33 Non-metallic Pipe, Flexible Non-metallic pipe and pipe fittings shall be acceptable flexible pipe manufactured from virgin polyethylene polymer suitable for transmitting liquids intended for human or animal consumption.

712.34 Non-metallic Pipe, Rigid Non-metallic pipe shall be Schedule 40 polyvinylchloride (PVC) that meets the requirement of ASTM D1785. Fittings shall be of the same material.

712.341 Metallic Pipe Metallic pipe shall be ANSI, Standard B36.10, Schedule 40 steel pipe conforming to the requirements of ASTM A53 Types E or S, Grade B. End plates shall be steel conforming to ASTM A36/A36M.

Both the sleeve and end plates shall be hot dip galvanized. Pipe sleeve splices shall be welded splices with full penetration weld before galvanizing.

712.35 Epoxy Resin Epoxy resin for grouting or sealing shall consist of a mineral filled thixotropic, flexible epoxy resin having a pot life of approximately one hour at 10°C [50°F]. The grout shall be an approved product suitable for cementing steel dowels into the preformed holes of curb inlets and adjacent curbing. The sealant shall be an approved product, light gray in color and suitable for coating the surface.

712.36 Bituminous Curb The asphalt cement for bituminous curb shall be of the grade required for the wearing course, or shall be Viscosity Grade AC-20 meeting the current requirements of Subsection 702.01 Asphalt Cement. The aggregate shall conform to the requirements of Subsection 703.07. The coarse aggregate portion retained on the 2.36 mm [No. 8] sieve may be either crushed rock or crushed gravel.

The mineral constituents of the bituminous mixture shall be sized and graded and combined in a composite blend that will produce a stable durable curbing with an acceptable texture.

Bituminous material for curb shall meet the requirements of Section 403 - Hot Bituminous Pavement.

712.37 Precast Concrete Slab Portland cement concrete for precast slabs shall meet the requirements of Section 502 - Structural Concrete, Class A.

The slabs shall be precast to the dimension shown on the plans and cross section and in accordance with the Standard Detail plans for Concrete Sidewalk Slab. The surface shall be finished with a float finish in accordance with Subsection 502.14(c). Lift devices of sufficient strength to hold the slab while suspended from cables shall be cast into the top or back of the slab.

712.38 Stone Slab Stone slabs shall be of granite from an acceptable source, hard, durable, predominantly gray in color, free from seams which impair the structural integrity and be of smooth splitting character. Natural color variations characteristic of the deposit will be permitted. Exposed surfaces shall be free from drill holes or indications of drill holes. The granite slabs in any one section of backslope must be all the same finish.

The granite slabs shall be scabble dressed or sawed to an approximately true plane having no projections or depressions over 13 mm [½ in] under a 600 mm [2 ft] straightedge or over 25 mm [1 in] under a 1200 mm [4 ft] straightedge. The arris at the intersection of the top surface and exposed front face shall be pitched so that the arris line is uniform throughout the length of the installed slabs. The sides shall be square to the exposed face unless the slabs are to be set on a radius or other special condition which requires that the joints be cut to fit, but in any case shall be so finished that when the stones are placed side by side no space more than 20 mm [3/4 in] shall show in the joint for the full exposed height.

Liftpin holes in all sides will be allowed except on the exposed face.

SECTION 717
ROADSIDE IMPROVEMENT MATERIAL

717.03 C. Method #3 - Roadside Mixture #3 Change the seed proportions to the following:

Crown Vetch	25%
Perennial Lupine	25%
Red Clover	12.5%
Annual Rye	37.5%

717.05 Mulch Binder Change the third sentence to read as follows:

"Paper fiber mulch may be used as a binder at the rate of 2.3 kg/unit [5 lb/unit]."

SECTION 720
STRUCTURAL SUPPORTS FOR HIGHWAY SIGNS, LUMINAIRES, AND TRAFFIC SIGNALS

720.08 U-Channel Posts Change the first sentence from "…, U-Channel posts…" to "…, Rib Back U-Channel posts…"

SECTION 722
GEOTEXTILES

722.01 Stabilization/Reinforcement Geotextile Add the following to note #3; "The strengths specified in the columns labeled"<50%" and "≥ 50%" refer to the elongation at which the geotextile material was tested. For example; if a fabric is tested at 15% elongation then it must meet or exceed the minimum strength shown in the "<50%" column. Submittals must include the percent elongation at which the material was tested."

722.02 Drainage Geotextile Add the following to note #3; "The strengths specified in the columns labeled"<50%" and "≥ 50%" refer to the elongation at which the geotextile material was tested. For example; if a fabric is tested at 15% elongation then it must meet or exceed the minimum strength shown in the "<50%" column. Submittals must include the percent elongation at which the material was tested."

722.01 Erosion Control Geotextile Add the following note to Elongation in the Mechanical Property Table; "The strengths specified in the columns labeled"<50%" and "≥ 50%" refer to the elongation at which the geotextile material was tested. For example; if a fabric is tested at 15% elongation then it must meet or exceed the minimum strength shown in the "<50%" column. Submittals must include the percent elongation at which the material was tested."