LEGEND

EXISTING	DESCRIPTION
	APPROX. RIGHT-OF-WAY
	EDGE OF PAVEMENT
	CONCRETE LAUNCH PLANKS
	STEEL FLOATS
102	CONTOUR (2' INT.)
100	CONTOUR (10' INT.)
P-1	PROBE LOCATION
	PILE
	IRF
	SURVEY CONTROL POINT
	EXPOSED BEDROCK
	UTILITY POLE
	GUY WIRE
	RIPRAP

NOTE:
THIS EXISTING CONDITIONS PLAN HAS BEEN DEVELOPED FROM THE PROPOSED SITE PLAN DATED 5/19/2000 BY PINE TREE ENGINEERING AND NOT A RECORD DRAWING. THE CONTRACTOR IS RESPONSIBLE TO PERFORM DUE DILIGENCE PRIOR TO ESTIMATING AND CONSTRUCTION TO ENSURE SMOOTH TRANSITIONS BETWEEN PROPOSED IMPROVEMENTS AND EXISTING CONDITIONS.

F.E.M.A. FLOOD INSURANCE RATE MAP #11 FOR THE TOWN OF HARRINGTON, MAINE (COMMUNITY NUMBER 230314B) DATED SEPT. 27, 1985, HAS THE SUBJECT PROPERTY DESIGNATED IN ZONE "A". ZONE "A" ARE AREAS OF 100-YEAR FLOOD WHERE THE BASE FLOOD ELEVATIONS AND FLOOD HAZARD FACTORS ARE NOT DETERMINED.

TEMPORARY BENCHMARK

TBM 178-4-1 — DOUBLE HEADED NAIL SET ONE FOOT ABOVE GRADE IN THE CEDAR FENCE POST AT THE TOP OF BANK NEAR THE SOUTHWEST PROPERTY PIN.
ELEVATION = 123.61' (VERTICAL DATUM MLLW = 100.0)

VERTICAL DATUM IS MLLW = 100.0 AS CALCULATED FROM NOAA TIDE CHARTS AND BASED UPON THE LOW WATER LINE OBSERVED AT 9:08 AM ON 4/06/99.

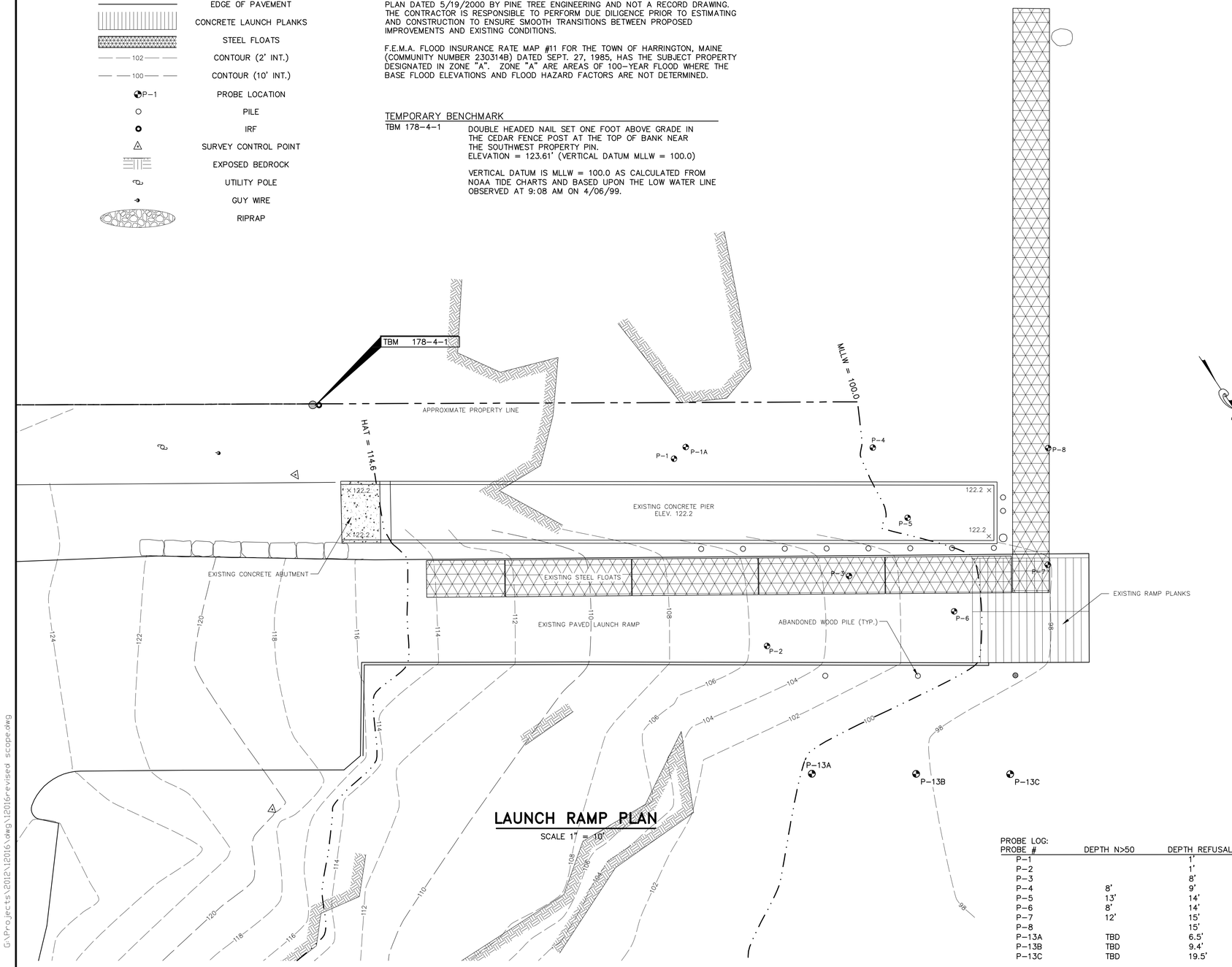

LAUNCH RAMP PLAN

SCALE 1" = 10'

PROBE LOG:

PROBE #	DEPTH N>50	DEPTH REFUSAL
P-1		1'
P-2		1'
P-3		8'
P-4	8'	9'
P-5	13'	14'
P-6	8'	14'
P-7	12'	15'
P-8		15'
P-13A	TBD	6.5'
P-13B	TBD	9.4'
P-13C	TBD	19.5'

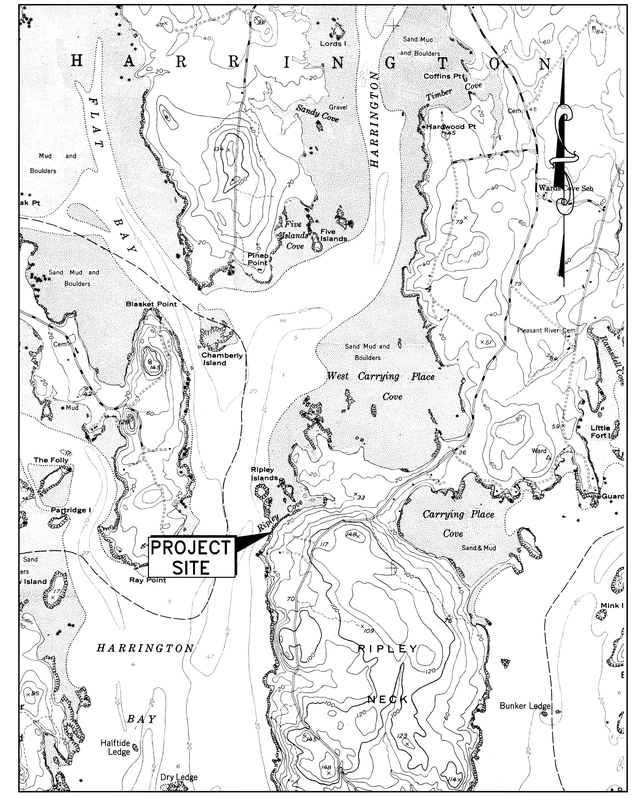

AREA MAP

SCALE: 1"=2,000'±

DRAWING INDEX

1 EXISTING CONDITIONS PLAN
2 PLAN AND PROFILE
3 LAUNCH AREA DETAIL
4 ABUTMENT DETAIL

GRAPHIC SCALE
10 0 5 10 20 40
(IN FEET)

REV	DATE	STATUS	BY	CHKD	APPD
0	5/29/2013	ISSUED FOR BIDDING	JRP	SCD	JCD

STATE OF MAINE — Jonathan C. DeWick No. 9431 — LICENSED PROFESSIONAL ENGINEER

DESIGNED BY:	SCD
DRAWN BY:	JCD
CHECKED BY:	SCD
APPROVED BY:	JCD
DATE:	5/29/2013

Pine Tree Engineering
53 Front Street
Bath, Maine 04530
Tel: (207) 443-1508
Fax: (207) 442-7029
Civil/Environmental Engineering • Surveying

CLIENT
TOWN OF HARRINGTON
114 EAST MAIN STREET
HARRINGTON, ME 04643

PROJECT
TOWN LANDING EXPANSION
MDOT WIN 018391.10

TITLE
EXISTING CONDITIONS PLAN

SCALE 1"=10'
PROJECT NO. 12016
DRAWING NO. 12016revised scope.dwg
SHT. 1 of 4
REV. 0

G:\Projects\2012\12016\dwg\12016revised scope.dwg
5/1/2014 12:17 PM

LEGEND

EXISTING	DESCRIPTION	PROPOSED
	APPROX. RIGHT-OF-WAY	
	EDGE OF PAVEMENT	
	CONCRETE LAUNCH PLANKS	
	STEEL FLOATS	
102	CONTOUR (2' INT.)	102
100	CONTOUR (10' INT.)	100
P-1	PROBE LOCATION	
	PILE	
	IRF	
6" PINE	EVERGREEN TREE	
	SURVEY CONTROL POINT	
	EXPOSED BEDROCK	
	UTILITY POLE	
	GUY WIRE	
	RIPRAP	

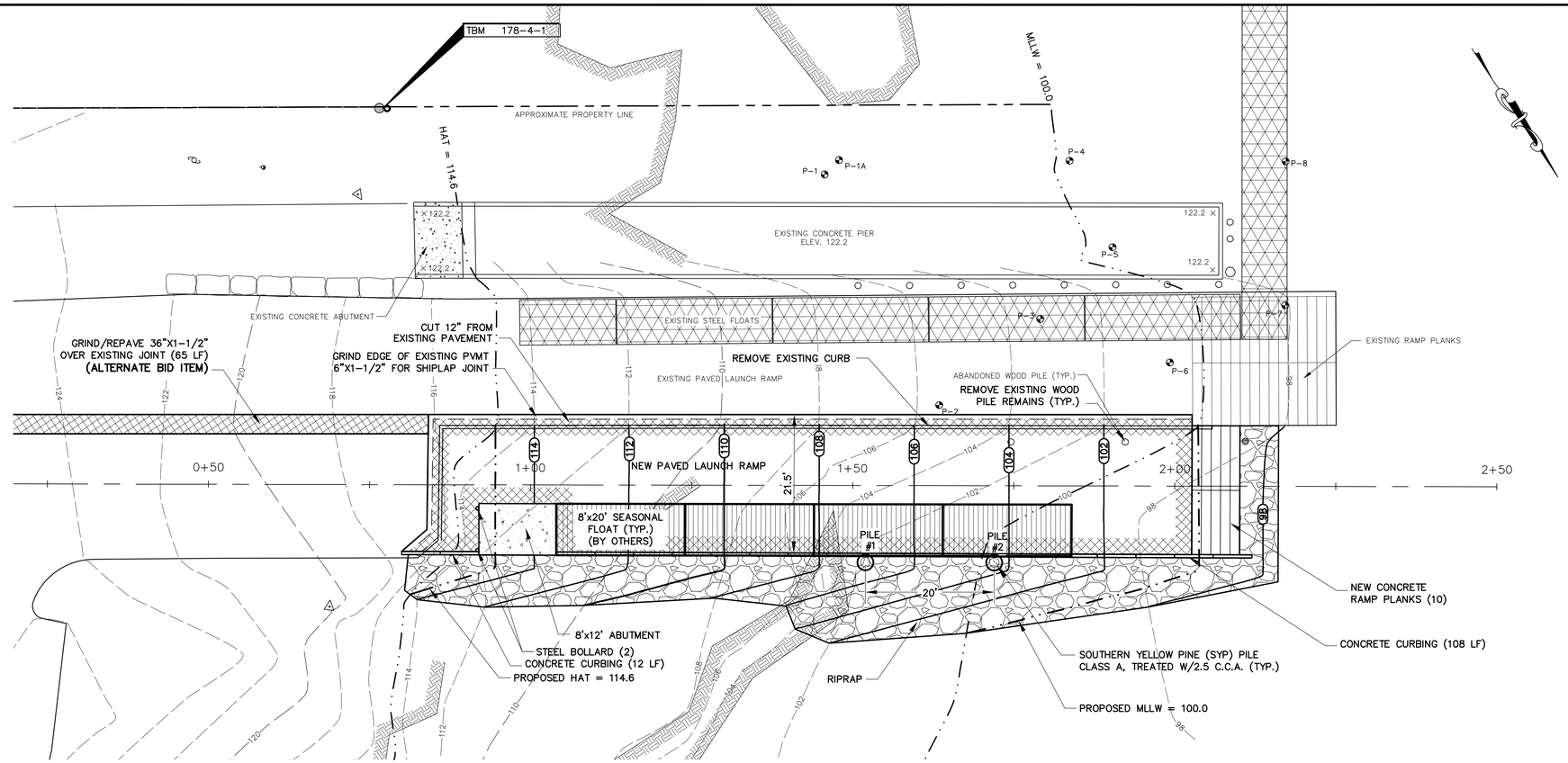

LAUNCH RAMP PLAN

SCALE 1" = 10'

NOTE:
THIS EXISTING CONDITIONS PLAN HAS BEEN DEVELOPED FROM THE PROPOSED SITE PLAN DATED 5/19/2000 BY PINE TREE ENGINEERING AND NOT A RECORD DRAWING. THE CONTRACTOR IS RESPONSIBLE TO PERFORM DUE DILIGENCE PRIOR TO ESTIMATING AND CONSTRUCTION TO ENSURE SMOOTH TRANSITIONS BETWEEN PROPOSED IMPROVEMENTS AND EXISTING CONDITIONS.

F.E.M.A. FLOOD INSURANCE RATE MAP #11 FOR THE TOWN OF HARRINGTON, MAINE (COMMUNITY NUMBER 230314B) DATED SEPT. 27, 1985, HAS THE SUBJECT PROPERTY DESIGNATED IN ZONE "A". ZONE "A" ARE AREAS OF 100-YEAR FLOOD WHERE THE BASE FLOOD ELEVATIONS AND FLOOD HAZARD FACTORS ARE NOT DETERMINED.

TEMPORARY BENCHMARK

TBM 178-4-1 — DOUBLE HEADED NAIL SET ONE FOOT ABOVE GRADE IN THE CEDAR FENCE POST AT THE TOP OF BANK NEAR THE SOUTHWEST PROPERTY PIN. ELEVATION = 123.61' (VERTICAL DATUM MLLW = 100.0)

VERTICAL DATUM IS MLLW = 100.0 AS CALCULATED FROM NOAA TIDE CHARTS AND BASED UPON THE LOW WATER LINE OBSERVED AT 9:08 AM ON 4/06/99.

PROBE LOG:

P-13A DEPTH RANGE	P-13A BLOW COUNTS	P-13B DEPTH RANGE	P-13B BLOW COUNTS	P-13C DEPTH RANGE	P-13C BLOW COUNTS
0-1'	1	0-1'	0(R)	0-1'	0(R)
1-2'	1	1-2'	0(R)	1-2'	0(H)
2-3'	1	2-3'	1	2-3'	4
3-4'	7	3-4'	1	3-4'	6
4-5'	18	4-5'	1	4-5'	0(H)
5-6'	25	5-6'	3	5-6'	0(H)
6-6.5'	50/0.5'	6-7'	1	6-7'	1
		7-8'	22	7-8'	1
		8-9'	56	8-9'	2
		9-9.4'	50/0.4'	9-10'	0(H)
				10-11'	23
				11-12'	58
				12-13'	77
				13-14'	90
				14-15'	81
				15-16'	77
				16-17'	108
				17-18'	96
				18-19'	57
				19-19.5	100/0.5'

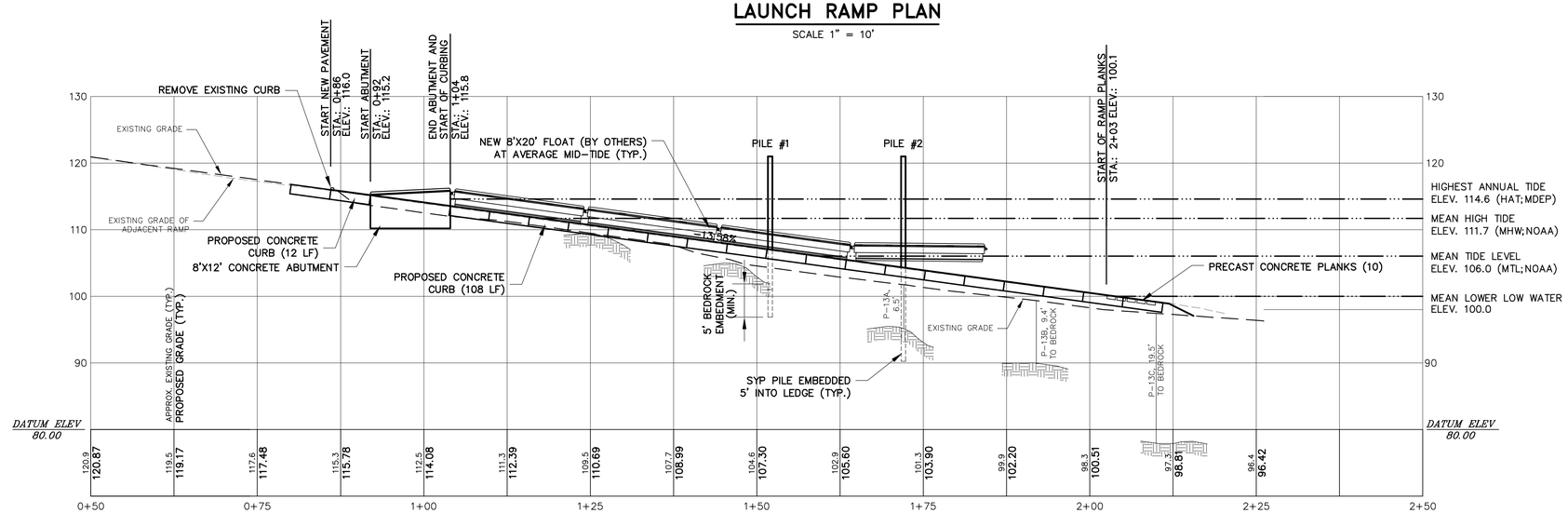

LAUNCH RAMP PROFILE

SCALE 1"=10'

GRAPHIC SCALE

10 0 5 10 20 40

(IN FEET)

REV	DATE	STATUS	BY	CHKD	APPD
1	5/01/2014	2 TIMBER PILES, SHORTENED RAMP	JCD	RLP	JCD
0	5/29/2013	ISSUED FOR BIDDING	JRP	SCD	JCD

STATE OF MAINE
Jonathan C. DeWick
No. 9433
LICENSED
PROFESSIONAL ENGINEER

DESIGNED BY:	SCD
DRAWN BY:	JCD
CHECKED BY:	SCD
APPROVED BY:	JCD
DATE:	5/29/2013

Pine Tree Engineering
53 Front Street
Bath, Maine 04530
Tel: (207) 443-1508
Fax: (207) 442-7029
Civil/Environmental Engineering • Surveying

CLIENT
TOWN OF HARRINGTON
114 EAST MAIN STREET
HARRINGTON, ME 04643

PROJECT
TOWN LANDING EXPANSION
MDOT WIN 018391.10

TITLE
PLAN AND PROFILE

SCALE 1"=10'
PROJECT NO. 12016
DRAWING NO. 12016revised scope.dwg
SHT. 2 of 4
REV. 1

G:\Projects\2012\12016\dwg\12016revised scope.dwg
5/1/2014 12:15 PM

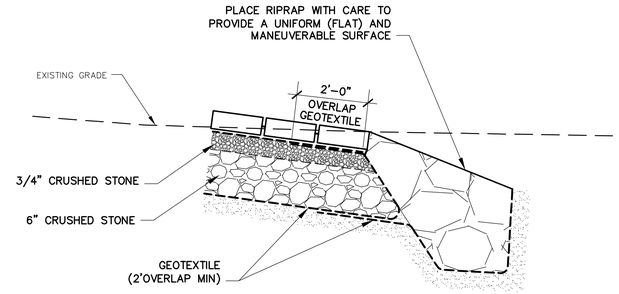

TYPICAL RAMP END SECTION

SCALE: 1" = 2'-0"

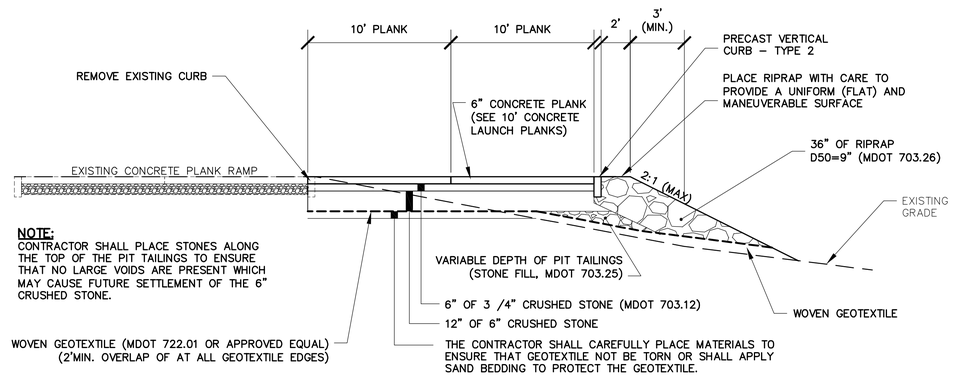

TYP. CONCRETE RAMP SECTION

SCALE: 1" = 5'-0"

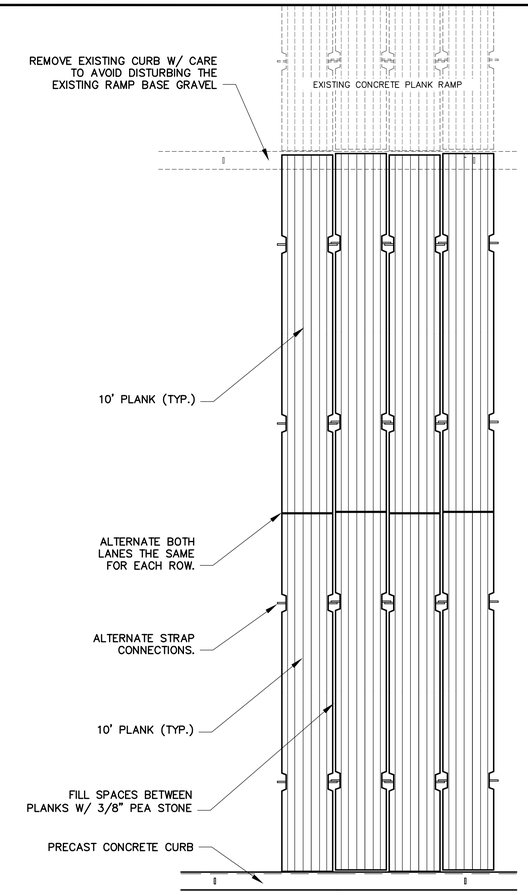

LAUNCH PLANK INSTALLATION DETAIL

SCALE: 1/2" = 1'-0"

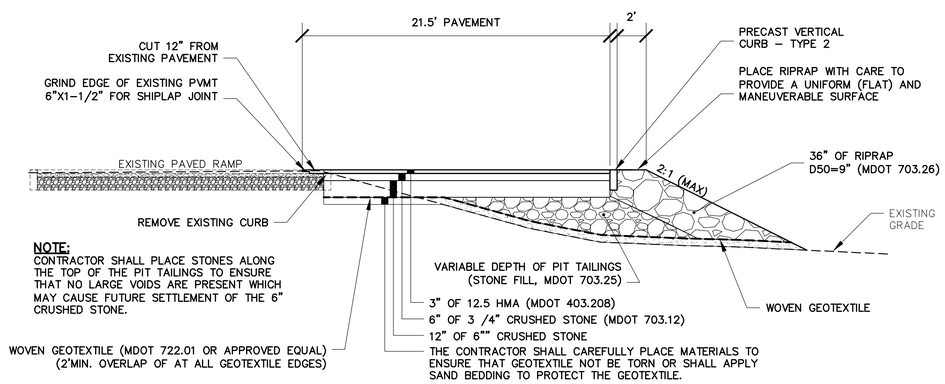

TYPICAL PAVED RAMP SECTION

SCALE: 1" = 5'-0"

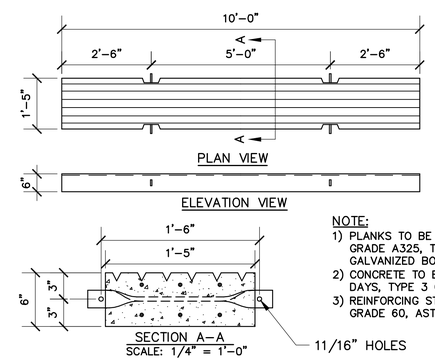

NOTE:
1) PLANKS TO BE CONNECTED USING 1/2" GRADE A325, TYPE I, HOT DIPPED GALVANIZED BOLTS AND NUTS.
2) CONCRETE TO BE 5,000PSI @ 28 DAYS, TYPE 3 CEMENT.
3) REINFORCING STEEL TO BE 6-#4 GRADE 60, ASTM A-615.

10' CONCRETE LAUNCH PLANKS

SCALE: 1/2" = 1'-0"

REV	DATE	STATUS	BY	CHKD	APPD
1	5/01/2014	REMOVED STEEL PILE DETAIL	JCD	RLP	JCD
0	5/29/2013	ISSUED FOR BIDDING	JRP	SCD	JCD

STATE OF MAINE — Jonathan C. DeWick No. 9431 — LICENSED PROFESSIONAL ENGINEER

DESIGNED BY:	SCD
DRAWN BY:	JCD
CHECKED BY:	SCD
APPROVED BY:	JCD
DATE:	5/29/2013

Pine Tree Engineering
53 Front Street
Bath, Maine 04530
Tel: (207) 443-1508
Fax: (207) 442-7029
Civil/Environmental Engineering • Surveying

CLIENT
TOWN OF HARRINGTON
114 EAST MAIN STREET
HARRINGTON, ME 04643

PROJECT
TOWN LANDING EXPANSION
MDOT WIN 018391.10

TITLE
LAUNCH AREA DETAIL

SCALE 1"=10'
PROJECT NO. 12016
DRAWING NO. 12016-det.dwg
SHT. 3 of 4
REV. 1

G:\Projects\2012\12016\dwg\12016-det.dwg
5/1/2014 12:18 PM

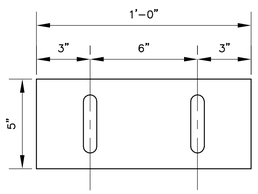

FRONT

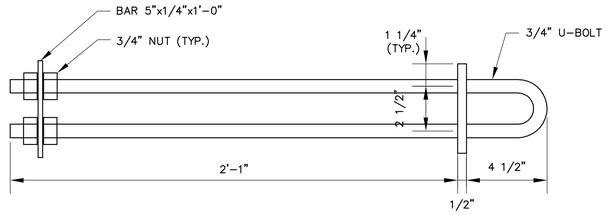

SIDE

NOTE:
ALL U-BOLT ASSEMBLY STEEL SHALL BE HOT DIPPED GALVANIZED OR APPROVED EQUAL.

U-BOLT ASSEMBLY DETAIL

SCALE: 1/2"=1'-0"

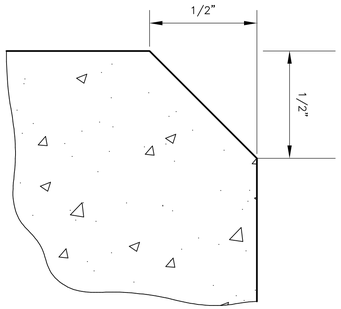

NOTE:
TYPICAL ALL CORNERS

CHAMFER DETAIL

SCALE: N.T.S.

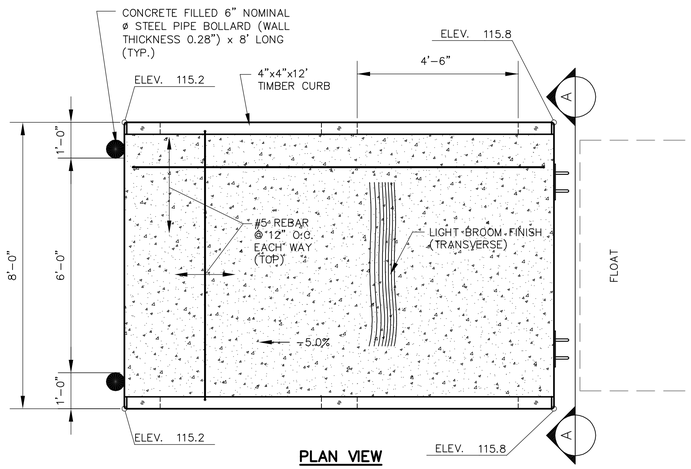

PLAN VIEW

ABUTMENT NOTES:

1. CHAMFER ALL CORNERS OF CONCRETE ABUTMENT 1/2".
2. FINISH TOP EDGES (HORIZONTAL CORNERS) OF CONCRETE WITH EDGING TOOL.
3. USE INDUSTRY APPROVED S.Y.P PRESSURE TREATED TIMBER FOR CURB AND BLOCKS.
4. COUNTERSINK HOLES 1" DEEP AT TOP OF TIMBER CURB FOR ANCHOR BOLTS AND FILL WITH MINWAX HIGH PERFORMANCE WOOD FILLER.
5. REINFORCING STEEL PROPERTIES AND INSTALLATION SHALL CONFORM TO THE FOLLOWING CRITERIA:
   - REINFORCING STEEL SHALL BE ASTM A 615, GRADE 60, DEFORMED, AND EPOXY COATED.
   - PLACE REINFORCING STEEL 3" CLEAR OF CONCRETE SURFACES.
   - REINFORCING STEEL SHALL BE SIZED AND SPACED AS SHOWN ON THE PLANS.
   - EPOXY COATING SHALL MEET THE REQUIREMENTS OF ASTM A 775, EPOXY-COATED REINFORCING STEEL BARS.
   - THE FILM THICKNESS AFTER CURING SHALL BE BETWEEN 8 AND 12 MILS. INCLUSIVE. THE PATCHING MATERIAL, COMPATIBLE WITH THE COATING MATERIAL AND INERT IN CONCRETE, SHALL BE SUPPLIED FOR BOTH SHOP AND FIELD PATCHING OF THE COATED REINFORCING STEEL.
   - ALL DAMAGED COATING AREAS THAT RESULT FROM FIELD BENDING OR CUTTING SHALL BE REPAIRED IN ACCORDANCE WITH THE PATCHING REQUIREMENTS.
   - TIE WIRE FOR EPOXY-COATED REINFORCING STEEL SHALL BE SOFT ANNEALED WIRE THAT HAS BEEN NYLON, EPOXY OR PLASTIC COATED.
6. PROVIDE CONCRETE MEETING THE FOLLOWING QUALITIES:
   - MDOT CLASS LP
   - LOW PERMEABILITY 5,000 PSI COMPRESSIVE STRENGTH AT 28 DAYS
   - 7% ± 1% TOLERANCE AIR CONTENT ATTAINED WITH AN AIR ENTRAINING AGENT (ASTM C 260).
7. HAND RAILS ARE NOT REQUIRED SINCE THE ABUTMENT IS NORMALLY LESS THAN 30" ABOVE GRADE AND OTHERWISE CONSIDERED PART OF A "LOADING DOCK" (SEE INTERNATIONAL BUILDING CODE – I.B.C. 1013.2).

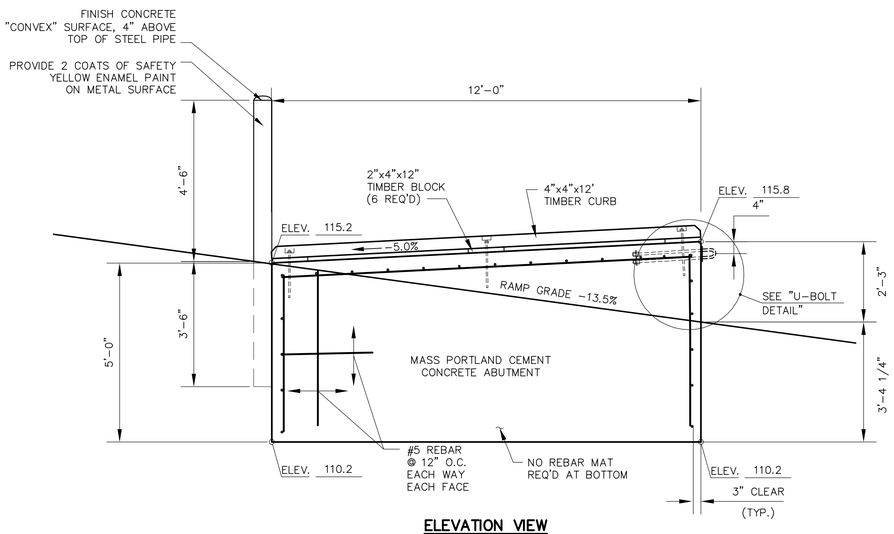

ELEVATION VIEW

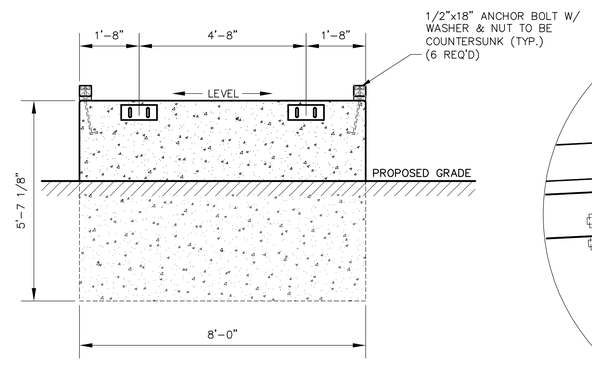

END VIEW A

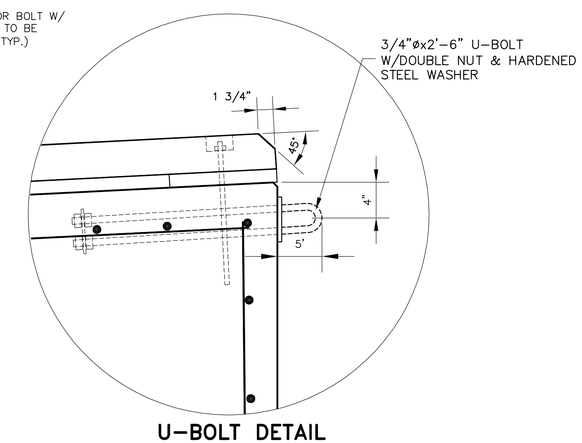

U-BOLT DETAIL

SCALE: N.T.S.

8' WIDE CONCRETE ABUTMENT

SCALE: 1/2" = 1'-0"

REV	DATE	STATUS	BY	CHKD	APPD
1	5/01/2014	FOR ME BOATING FACILITIES DIV. FLOATS	JCD	RLP	JCD
0	5/29/2013	ISSUED FOR BIDDING	JRP	SCD	JCD

STATE OF MAINE — Jonathan C. DeWick No. 9431 — LICENSED PROFESSIONAL ENGINEER

DESIGNED BY:	JCD
DRAWN BY:	JCD
CHECKED BY:	SCD
APPROVED BY:	JCD
DATE:	5/29/2013

Pine Tree Engineering
53 Front Street
Bath, Maine 04530
Tel: (207) 443-1508
Fax: (207) 442-7029
Civil/Environmental Engineering • Surveying

CLIENT
TOWN OF HARRINGTON
114 EAST MAIN STREET
HARRINGTON, ME 04643

PROJECT
TOWN LANDING EXPANSION
MDOT WIN 018391.10

TITLE
ABUTMENT DETAIL

SCALE: AS SHOWN
PROJECT NO. 12016
DRAWING NO. 12016-det.dwg
SHT. 4 of 4
REV. 1

G:\Projects\2012\12016\dwg\12016-det.dwg
5/1/2014 12:17 PM