STATE OF MAINE
DEPARTMENT OF TRANSPORTATION

CITY OF PORTLAND
CUMBERLAND COUNTY

PORTLAND INTERNATIONAL MARINE TERMINAL

EXISTING LAYDOWN AND CONNECTING CORRIDOR CONNECTION

WIN: 022809.20

INDEX OF SHEETS

SHEET	NO.	TITLE
GENERAL		
G01	1	TITLE SHEET
G02	2	GENERAL NOTES
G03	3	GENERAL NOTES AND LEGEND
SITE PLANS		
C01-C03	4-6	EXISTING CONDITIONS PLANS
C04	7	BORING LOGS
C05	8	SHEET LAYOUT PLAN
C06-C08	9-11	SITE LAYOUT PLANS
C09	12	SITE GRADING AND DRAINAGE PLAN
C10	13	SITE UTILITY PLAN
C11	14	EROSION AND SEDIMENTATION NOTES
C12	15	EROSION AND SEDIMENTATION DETAILS
C13-C15	16-18	SITE DETAILS
C16-C17	19-20	FENCING DETAILS
C18-C19	21-22	FENCING, HYDRANT, LIGHT POLE AND BOLLARD GEOMETRICS
C20	23	WATER SYSTEM DETAILS
C21-C22	24-25	LANDSCAPING PLANS
C23	26	LANDSCAPING DETAILS AND NOTES
ELECTRICAL PLANS		
E01-E02	27-28	ELECTRICAL PLANS
E03	29	ELECTRICAL DETAILS
STRUCTURAL PLANS		
S01-S03	30-32	CONCRETE LOADING SLAB DETAILS
S04-S05	33-34	STRUCTURAL DETAILS
HIGHWAY PLANS		
H01-H03	35-37	COMMERCIAL STREET TYPICAL SECTIONS
H04-H06	38-40	COMMERCIAL STREET PLANS
H07-H24	41-58	COMMERCIAL STREET CROSS SECTIONS
H25-H26	59-60	BEACH STREET CROSS SECTIONS
H27-H28	61-62	COMMERCIAL STREET GEOMETRIC AND CURBING PLANS
H29-H33	63-67	COMMERCIAL STREET SIGNING PLANS
H34-H35	68-69	COMMERCIAL STREET SIGNAL PLANS
H36	70	COMMERCIAL STREET SIGN SUMMARY
TRACK PLANS		
R01-R02	71-72	TRACK TYPICAL SECTIONS
R03-R06	73-76	TRACK DETAILS
R07	77	TRACK GEOMETRY
R08-R10	78-80	TRACK PLANS AND PROFILES
R11	81	LOADING TRACK PROFILE
R12-R39	82-109	TRACK CROSS SECTIONS
MARINE PLANS		
M01-M02	110-111	FENDER SYSTEM REPAIR DETAILS
BOUNDARY SURVEY PLANS		
-	112-116	BOUNDARY SURVEY PLANS

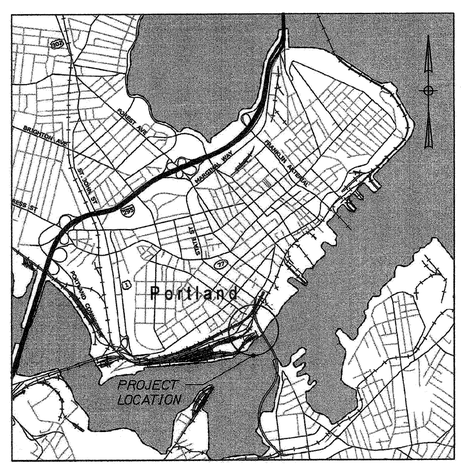

LOCATION MAP

1/2 0 1/2 1

Scale in Miles

THE PROFESSIONAL ENGINEER WHOSE STAMP APPEARS ON THIS COVER SHEET BEARS RESPONSIBILITY FOR THE FOLLOWING SHEETS WITHIN THIS DRAWING SET:

GENERAL	G01-G03
SITE PLANS	C01-C03, C05-C20
STRUCTURAL PLANS	S01-S05
HIGHWAY PLANS	H01-H36
TRACK PLANS	R01-R39
MARINE PLANS	M01-M02

ADDITIONAL WORK APPEARS WITHIN THIS DRAWING SET AND IS THE RESPONSIBILITY OF THE FOLLOWING ORGANIZATIONS, WHOSE STAMP APPEARS ON THOSE INDIVIDUAL SHEETS:

SITE PLAN	C04	GEOTECHNICAL BORING LOGS	SCHONEWALD ENGINEERING ASSOC., INC.
SITE PLANS	C21-C23	LANDSCAPE DESIGN	CARROLL ASSOCIATES LANDSCAPE ARCHITECTS
ELECTRICAL PLANS	E01-E03	ELECTRICAL DESIGN	BARTLETT DESIGN, INC.
BOUNDARY PLANS	-	BOUNDARY SURVEY	OWEN HASKELL, INC.

HNTB

STATE OF MAINE
DEPARTMENT OF TRANSPORTATION

APPROVED

		DATE
COMMISSIONER:		7/11/14
CHIEF ENGINEER:		7-10-14

STATE OF MAINE ROLAND A. LAVALLEE No. 6452 PROFESSIONAL ENGINEER

SIGNATURE	
P.E. NUMBER	6452
DATE	6/26/14

PROJECT INFORMATION

PROGRAM	MULTIMODAL
PROJECT MANAGER	JOEL C. KITTREDGE
DESIGNER	CRAIG R. MORIN, P.E.
CONSULTANT	HNTB CORPORATION
PROJECT RESIDENT	
CONTRACTOR	
PROJECT COMPLETION DATE	

WIN 022809.20

PORTLAND INTERNATIONAL MARINE TERMINAL
EXISTING LAYDOWN AND CONNECTING CORRIDOR CONNECTION
PORTLAND CUMBERLAND COUNTY

TITLE SHEET

SHEET NUMBER

G1

Filename: 001_Title.dgn Division: Username: Date:6/25/2014

GENERAL NOTES:

1. THESE DRAWINGS FORM PART OF THE CONTRACT DOCUMENTS. REFER TO THE SPECIFICATIONS FOR ADDITIONAL REQUIREMENTS.

2. ELEVATIONS AND SOUNDINGS ARE IN FEET BASED ON PROJECT DATUM, NGVD29.

3. CONTRACTOR SHALL MAINTAIN ADEQUATE SURVEY CONTROL AT ALL TIMES TO ESTABLISH AND MAINTAIN ALL LINES AND ELEVATIONS.

4. ALL DIMENSIONS, ELEVATIONS & CONDITIONS SHALL BE VERIFIED IN THE FIELD BY THE CONTRACTOR. ANY DISCREPANCIES SHALL BE BROUGHT TO THE ATTENTION OF THE RESIDENT BEFORE ORDERING MATERIALS AND PROCEEDING WITH THE AFFECTED PART OF THE WORK.

5. ALL NORTH ARROWS SHOWN ARE GRID NORTH BASED ON NAD83 MAINE WEST. VERTICAL DATUM IS NGVD 1929.

6. THE UTILITIES INVOLVED IN THIS CONTRACT ARE AS FOLLOWS:
   PORTLAND WATER DISTRICT
   CITY OF PORTLAND, PUBLIC SERVICES ENGINEERING DEPT.
   CENTRAL MAINE POWER CO.
   FAIRPOINT COMMUNICATIONS
   TIME WARNER CABLE
   UNITIL

7. ALL UTILITY FACILITIES SHALL BE ADJUSTED BY THE RESPECTIVE UTILITIES UNLESS OTHERWISE NOTED.

8. THE EXACT SIZE & LOCATION OF ALL EXISTING UTILITIES SHALL BE FIELD VERIFIED BY THE CONTRACTOR, SEE SECTION 104. CARE SHALL BE TAKEN TO PROTECT ANY UTILITIES PRESENT AND ALL CONSTRUCTION SHALL BE COORDINATED WITH THE RESIDENT.

9. EXISTING FEATURES WERE SURVEYED BY OWEN HASKELL, INC. BETWEEN OCTOBER 2010 AND NOVEMBER 2010 WITH REVISIONS IN JANUARY 2014, AND CAN ONLY BE CONSIDERED AS INDICATING THE CONDITIONS EXISTING AT THAT TIME.

10. ALL APPLICABLE FEDERAL, STATE AND MUNICIPAL REGULATIONS AND PERMITS SHALL BE FOLLOWED, INCLUDING THE FEDERAL DEPARTMENT OF LABOR, SAFETY, AND HEALTH, U.S. ARMY CORPS OF ENGINEERS, AND STATE/LOCAL WETLANDS CONTROL.

11. THE CONTRACTOR MAY BE CHARGED ANY ADDITIONAL COST OF REINSPECTION OR RETEST WHEN PRIOR REJECTION MAKES REINSPECTION OR RETEST NECESSARY.

12. THE CONTRACTOR SHALL MAINTAIN DUST CONTROL AT ALL TIMES DURING THE PROJECT. PERIODIC SWEEPING OF PAVEMENT SURFACES WITHIN THE CONSTRUCTION AREA AND ON COMMERCIAL STREET MAY BE REQUIRED DURING CONSTRUCTION AS DIRECTED BY THE RESIDENT AND REQUIRED BY MAINEDOT EROSION CONTROL SPECIFICATIONS.

13. ALL WORK ADJACENT TO OR WITHIN THE FORE RIVER REQUIRES ALL PERSONNEL TO WEAR NECESSARY FLOATATION EQUIPMENT AND/OR HARNESSES. THE CONTRACTOR SHALL PROVIDE A WORK SAFETY PLAN TO THE RESIDENT FOR APPROVAL PRIOR TO WORK.

14. WHERE DRILLING AND ANCHORING OF REINFORCING STEEL IS SPECIFIED, THE CONTRACTOR SHALL USE A MATERIAL LISTED ON THE MAINE DEPARTMENT OF TRANSPORTATION PRE-QUALIFIED LIST OF CHEMICAL ANCHORING MATERIALS. THE DEPTH OF THE EMBEDMENT SHALL BE SUFFICIENT TO DEVELOP 125% OF THE YIELD STRENGTH OF THE BAR, BUT SHALL BE NO LESS THAN THE MINIMUM DEPTH OF EMBEDMENT SPECIFIED. WHERE MINIMUM DEPTHS HAVE NOT BEEN SPECIFIED, BAR LENGTHS HAVE BEEN DEVELOPED BASED ON AN ASSUMED EMBEDMENT DEPTH OF 9" FOR #5 BARS, AND 11" FOR #6 BARS. THE CONTRACTOR SHALL VERIFY THE REQUIRED DEPTH OF EMBEDMENT AND ADJUST THE REQUIRED BAR LENGTHS AS NECESSARY.

15. DRAWING PLAN VIEWS WITH SCALES ARE INTENDED FOR FULL SIZE 22X34-INCH DRAWINGS.

16. NO SEPARATE PAYMENT FOR SUPERINTENDENT OR FOREMAN SHALL BE MADE FOR THE SUPERVISION OF EQUIPMENT BEING PAID FOR UNDER THE EQUIPMENT RENTAL ITEMS.

17. EXISTING AND PROPOSED RIGHT OF WAY INFORMATION IS SHOWN ON THE PLANS.

18. "UNDETERMINED LOCATIONS" SHALL BE DETERMINED BY THE RESIDENT.

19. THE CONTRACTOR SHALL PROVIDE AND MAINTAIN SAFE AND CLEAN VEHICULAR AND PEDESTRIAN ACCESS TO THE CANAL LANDING BOAT YARD FOR THE DURATION OF THE PROJECT. ALL PROVISIONS, INCLUDING SIGNAGE, FENCING, AND MAINTENANCE SHALL BE INCIDENTAL TO 652.36 MAINTENANCE OF TRAFFIC CONTROL DEVICE. VEHICULAR ACCESS SHALL ACCOMODATE A WB-67 AT ALL TIMES.

20. RESEARCH PERFORMED BY THE MAINE DEPARTMENT OF TRANPORTATION'S ENVIRONMENTAL OFFICE (MAINEDOT'S-ENV) SUGGESTED THAT THE SUBSURFACE ENVIRONMENT AT THE PORTLAND INTERNATIONAL MARINE TERMINAL HAD BEEN ADVERSELY AFFECTED BY PAST ACTIVITIES. SUBSEQUENT ON-SITE WORK BY MAINEDOT-ENV CONFIRMED THE REPORTED CONCERNS. HOWEVER, THE ENVIRONMENTAL ISSUES WERE NOTED TO BE LARGELY AT DEPTH; IT APPEARS THAT THE MOST RECENT WORK PROPOSED FOR THE SITE WILL NOT ENCOUNTER THE IDENTIFIED ENVIRONMENTAL CONCERNS. IN LIGHT OF THE AVAILABLE ENVIRONMENTAL DATA, THE CONTRACOTR SHALL REMAIN ALERT FOR EVIDENCE OF CONTAMINATION. IF THE CONTRACTOR ENCOUNTERS EVIDENCE OF SOIL OR GROUNDWATER CONTAMINATION, THE CONTRACTOR SHALL SECURE THE EXCAVATION, STOP WORK IN THE CONTAMINATED AREA AND IMMEDIATELY NOTIFY THE RESIDENT. THE RESIDENT SHALL CONTACT THE HYDROGEOLOGIST IN MAINEDOT'S ENVIRONMENTAL OFFICE AT 207-624-3100 AND THE MAINE DEPARTMENT OF ENVIRONMENTAL PROTECTION AT 800-482-0777. WORK MAY ONLY CONTINUE WITH AUTHORIZATION FROM THE RESIDENT.

EARTHWORK NOTES:

1. CLEARING LIMITS SHALL BE 10 FEET BEYOND AND PARALLEL TO THE CONSTRUCTION SLOPE LINES OR AS SHOWN ON THE PLANS UNLESS OTHERWISE AUTHORIZED BY THE RESIDENT.

2. CLEARING HAS BEEN ESTIMATED FOR THE PROJECT. THE ACTUAL LINES FOR CLEARING AND THINNING SHALL BE ESTABLISHED IN THE FIELD BY THE CONTRACTOR AND APPROVED BY THE RESIDENT.

3. ALL DITCH ELEVATIONS SHOWN ON THE CROSS SECTIONS ARE FOR THE FINISH DITCH FLOW LINE.

4. IF FOUNDATION MATERIAL IS REQUIRED UNDER CULVERTS, IT SHALL MEET THE REQUIREMENTS FOR GRANULAR BORROW - UNDERWATER BACKFILL AND SHALL BE PAID FOR AS GRANULAR BORROW.

5. GRANULAR BORROW SHALL BE USED TO BACKFILL MUCK EXCAVATION OR IN LOW WET AREAS TO 1 FT. ABOVE WATER LEVEL OR OLD GROUND AND SHALL MEET REQUIREMENTS FOR GRANULAR BORROW UNDERWATER BACKFILL.

6. EXISTING INSLOPES STEEPER THAN 2:1 IN PROPOSED FILL AREAS SHALL BE BENCHED AS DIRECTED BY THE RESIDENT.

7. GRUBBING IN FILL AREAS HAS BEEN SHOWN ON THE CROSS SECTIONS. THESE LIMITS ARE APPROXIMATE AND HAVE BEEN USED FOR ESTIMATING PURPOSES ONLY. ACTUAL GRUBBING LIMITS MAY VARY BASED ON FIELD CONDITIONS AS DIRECTED BY THE RESIDENT. ESTIMATED GRUBBING DEPTHS ARE 6 INCHES IN FIELD AREAS AND 12 INCHES IN WOODED AREAS.

8. LOAM HAS BEEN ESTIMATED FOR 100% OF THE DISTURBED SLOPE AREA UNLESS OTHERWISE NOTED ON THE PLANS. ACTUAL PLACEMENT OF THE LOAM USED SHALL BE AS DESIGNATED BY THE RESIDENT.

9. EXCAVATIONS ACCOMPLISHED AS PART OF THIS PROJECT SHALL BE CONSTRUCTED IN ACCORDANCE WITH SUBPART P OF 29 CFR PART 1926.650-.652 (CONSTRUCTION STANDARD FOR EXCAVATIONS).

10. ESTIMATED QUANTITIES FOR REQUIRED STRUCTURAL EARTH EXCAVATION, DRAINAGE, AND MINOR STRUCTURES ARE INFORMATIONAL ONLY AND REPRESENT THE APPROXIMATE MINIMUM QUANTITY REQUIRED TO INSTALL DRAINAGE STRUCTURES. ADDITIONAL EXCAVATION FOR THE CONTRACTOR'S CONVENIENCE OR TO COMPLY WITH BACKSLOPING REQUIREMENTS WILL NOT BE PAID FOR DIRECTLY, BUT WILL BE CONSIDERED INCIDENTAL TO THE RELATED DRAINAGE ITEMS.

11. EARTHWORK SUMMARY CALCULATIONS ASSUME NO LOAM SALVAGE, HOWEVER, IN ACCORDANCE WITH THE GENERAL CONDITIONS, DATED FEBRUARY 1, 2001, SECTION 104.3.13, THE DEPARTMENT WILL APPROVE THE CONTRACTOR TO PROCESS SUITABLE EXCAVATED MATERIAL AS SHOWN ON THE PLANS FOR REUSE AS LOAM ON THE PROJECT. PAYMENT SHALL BE MADE UNDER COMMON EXCAVATION AND LOAM. NO ADDITIONAL PAYMENT WILL BE MADE FOR PROCESSING OR HANDLING OF THE MATERIAL. AS THIS WOULD BE A REDUCTION IN THE WASTE, THE CONTRACTOR WILL NOT BE REQUIRED TO REPLACE THE EXCAVATED MATERIAL SALVAGED FOR LOAM. THE CONTRACTOR MAY ELECT TO SALVAGE LOAM IN FILL BEYOND THE GRUBBING LIMITS SHOWN ON THE PLANS. EXCAVATION FOR SUCH SALVAGING LOAM IN FILL SHALL NOT BE PAID FOR. THE CONTRACTOR SHALL REPLACE SUCH EXCAVATED MATERIAL WITH OTHER APPROVED MATERIAL AND PROPERLY COMPACT IT AT NO COST TO THE DEPARTMENT.

12. ALL WASTE MATERIAL NOT USED ON THE PROJECT SHALL BE DISPOSED OF IN ACCEPTABLE WASTE AREAS AND REVIEWED BY THE RESIDENT. GRADING, SEEDING AND MULCHING OF WASTE AREAS SHALL BE CONSIDERED INCIDENTAL.

13. THE REUSE OF COMMON EXCAVATION AS BORROW MAY HAVE LIMITATIONS. RESIDENT TO APPROVE USE OF SUITABLE SOILS FOR USE AS BORROW.

EROSION CONTROL NOTES:

1. REQUIRED DITCH PROTECTION SHOWN ON THE PLANS IS FOR ESTIMATING PURPOSES ONLY. ACTUAL TYPE AND LOCATION FOR EROSION CONTROL BLANKET AND RIPRAP SHALL BE DETERMINED IN THE FIELD BY THE RESIDENT.

2. TEMPORARY EROSION CONTROL MEASURES SHALL BE MAINTAINED AS SPECIFIED IN THE SOIL EROSION AND WATER POLLUTION CONTROL PLAN. PAYMENT WILL BE MADE UNDER ITEM 656.75.

3. ALL WORK SHALL BE DONE IN ACCORDANCE WITH THE MAINE DEPARTMENT OF TRANSPORTATION'S BEST MANAGEMENT PRACTICES FOR EROSION CONTROL & SEDIMENT CONTROL, FEBRUARY, 2008.

4. PROPOSED LOCATIONS FOR EROSION AND SEDIMENTATION CONTROL DEVICES HAVE BEEN DEVELOPED. THE CONTRACTOR SHALL REVIEW AND MODIFY THE LOCATIONS OF THESE DEVICES AS NEEDS WARRANT. THE CONTRACTOR SHALL DEVELOP AND IMPLEMENT EROSION AND SEDIMENTATION CONTROL DEVICES IN ACCORDANCE WITH MAINE DEPARTMENT OF ENVIRONMENTAL BEST MANAGEMENT PRACTICES. PAYMENT FOR DEVELOPING, INSTALLING, AND MAINTAINING EROSION AND SEDIMENTATION CONTROL DEVICES SHALL BE PAID UNDER ITEM 656.75 "TEMPORARY SOIL EROSION AND WATER POLLUTION CONTROL".

5. CONTRACTOR SHALL PROVIDE STABILIZED CONSTRUCTION ENTRANCE IN ACCORDANCE WITH DETAIL. LOCATION SHALL BE COORDINATED WITH RESIDENT

DRAINAGE NOTES:

1. EXISTING CULVERTS TO REMAIN SHALL BE CLEANED AS DIRECTED BY THE RESIDENT. PAYMENT SHALL BE MADE UNDER ITEM 631.32 CULVERT CLEANER (INCLUDING OPERATORS).

2. NO EXISTING DRAINAGE SHALL BE ABANDONED, REMOVED OR PLUGGED WITHOUT PRIOR APPROVAL OF THE RESIDENT.

3. INLETS AND OUTLETS OF ALL CULVERTS SHALL BE RIPRAPPED IN ACCORDANCE WITH STANDARD DETAILS UNLESS OTHERWISE NOTED ON THE PLANS OR DIRECTED BY THE RESIDENT.

4. THE CULVERT SIZES SHOWN ON THE PLANS AND CROSS SECTIONS ARE FOR SMOOTH LINED PIPES.

5. A 3 FOOT X 3 FOOT SQUARE RIPRAP PAD SHALL BE CONSTRUCTED AT U.D. OUTLETS.

6. THE FOLLOWING SHALL BE INCIDENTAL TO THE 603 ITEM(S):

   ANY CUTTING OF EXISTING CULVERTS AND OR CONNECTORS NECESSARY TO INSTALL NEW CULVERT REPLACEMENTS OR EXTENSIONS.

   ALL PIPE EXCAVATION INCLUDING ANY CUTTING AND REMOVAL OF PAVEMENT.

   ALL DITCHING AT PIPE ENDS.

   FURNISHING, PLACING, GRADING, AND COMPACTING OF ANY NEW GRAVEL AND/OR FILL MATERIAL INCLUDING GRANULAR BORROW USED UNDER PIPES (EXCAVATION IS ALSO INCIDENTAL).

   GRANULAR BORROW UNDER THE PIPE SHALL MEET THE REQUIREMENTS FOR UNDERWATER BACKFILL.

   ALL WORK NECESSARY TO CONNECT TO EXISTING PIPES AND DRAINAGE STRUCTURES.

   FLOW LINES MAY BE CHANGED BY 1.5 FEET.

   ANY NECESSARY CLEARING OF BRUSH AND NON-PAY TREES AT CULVERT ENDS.

7. CONTRACTOR SHALL VERIFY CSO INVERTS AT ALL PROPOSED TIE-IN LOCATIONS.

8. UNDERDRAIN CONNECTION TO EXISTING DRAINAGE STRUCTURES SHALL BE INCIDENTAL TO THE 605 ITEM(S).

SEEDING NOTES:

1. SEEDING METHOD NO.1 AND 2 SEEDING SHALL BE UTILIZED ON THE PROJECT.

2. MULCH SHALL BE APPLIED IN ALL AREAS SEEDED.

3. LOAM SHALL BE PLACED TO A DEPTH OF 6" IN ALL AREAS OR AS DIRECTED BY THE RESIDENT.

CONSTRUCTION NOTES:

1. IT IS THE CONTRACTOR'S SOLE RESPONSIBILITY TO DETERMINE ERECTION PROCEDURES AND SEQUENCE TO INSURE THE SAFETY OF THE FACILITIES AND THEIR COMPONENTS DURING CONSTRUCTION UNLESS OTHERWISE DIRECTED BY THE RESIDENT. THIS INCLUDES THE ADDITION OF NECESSARY SHORING, SHEETING, TEMPORARY BRACING, GUYS OR TIEDOWNS. SUCH MATERIAL SHALL REMAIN THE PROPERTY OF THE CONTRACTOR AFTER COMPLETION OF THE PROJECT.

2. METHODS OF DEMOLITION, CONSTRUCTION AND ERECTION ARE THE CONTRACTOR'S RESPONSIBILITY UNLESS OTHERWISE SPECIFIED. IT IS THE CONTRACTOR'S RESPONSIBILITY TO PROVIDE AND MAINTAIN ENVIRONMENTAL CONTROLS AS REQUIRED BY FEDERAL, STATE AND MUNICIPAL REGULATIONS AND PERMITS. ENVIRONMENTAL CONTROLS SHALL INCLUDE BUT NOT BE LIMITED TO NOISE, TURBIDITY, LIQUIDS AND DUST.

3. THE CONTRACTOR SHALL BE RESPONSIBLE FOR ANY DAMAGE DONE TO STRUCTURES AND VESSELS OR INJURIES TO THE PUBLIC DURING THE CONSTRUCTION PHASE. THE CONTRACTOR SHALL FURNISH AND INSTALL TEMPORARY FACILITIES FOR THE PROTECTION OF THE WORK, WORKERS AND PUBLIC SAFETY.

4. COMMERCIAL PAVED ENTRANCES SHALL BE CONSTRUCTED WITH: 3" HOT MIX ASPHALT AND 11" AGGREGATE BASE COURSE CRUSHED.

5. THE CONTRACTOR'S CONSTRUCTION SEQUENCE SHALL CONSIDER THE PROPOSED POROUS CRUSHED STONE SURFACE IN THE CHASSIS STORAGE YARD. CONSTRUCTION OF THE CRUSHED STONE SURFACE SHOULD OCCUR LAST OR BE PROTECTED FOR THE DURATION OF THE PROJECT TO PROTECT FROM SEDIMENTS. IF DURING CONSTRUCTION OF THE PROJECT, SEDIMENTS AND GRANULAR MATERIALS CLOGG THE VOIDS WITHIN THE STONE, THE CONTRACTOR WILL REPLACE THE CRUSHED STONE SURFACE PER THE TYPICAL SECTION.

6. EXISTING MANHOLES, CATCH BASINS, FRAMES AND COVERS TO BE REMOVED SHALL BE SALVAGED BY THE CONTRACTOR AND SHALL REMAIN THE PROPERTY OF THE CITY OF PORTLAND.

STATE OF MAINE
DEPARTMENT OF TRANSPORTATION

PROJECT NUMBER 022809.20

WIN 022809.20

PROJ. MANAGER	J. KITTREDGE	BY	DATE
DESIGN-DETAILED	CRM	MPC	06/14
CHECKED-REVIEWED	-	-	06/14
DESIGN2-DETAILED2	-	-	-
DESIGN3-DETAILED3	-	-	-
REVISIONS 1	-	-	-
REVISIONS 2	-	-	-
REVISIONS 3	-	-	-
REVISIONS 4	-	-	-
FIELD CHANGES	-	-	-

SIGNATURE

P.E. NUMBER

DATE

PORTLAND INTERNATIONAL MARINE TERMINAL
EXISTING LAYDOWN AND CONNECTING CORRIDOR CONNECTION
PORTLAND CUMBERLAND COUNTY

GENERAL NOTES

SHEET NUMBER

G2

Date:7/11/2014
Username:
Division:
Filename: 002_GenNotes.dgn

TRACK NOTES:

1. ANY DAMAGE TO THE EXISTING TRACKS, ROADS, SLOPES OR DRAINAGE PIPES CAUSED BY THE CONTRACTOR'S EQUIPMENT, PERSONNEL OR OPERATION SHALL BE REPAIRED TO THE SATISFACTION OF THE RESIDENT. ALL WORK, EQUIPMENT AND MATERIALS REQUIRED TO MAKE REPAIRS SHALL BE AT THE CONTRACTOR'S EXPENSE.

2. STABILIZATION GEOTEXTILE MAY BE REQUIRED IN LOW WET AREAS TO IMPROVE RAIL EMBANKMENT STABILITY. SPECIFIC LOCATIONS ARE NOT SHOWN ON THE PLANS. COORDINATE WITH RESIDENT AND GEOTECHNICAL ENGINEER.

3. THE CONTRACTOR SHALL COORDINATE AND SCHEDULE WORK ITEMS (WHICH MAY NECESSITATE THE CLOSURE OF THE EXISTING TRACK) WITH PAN AM RAILWAYS AND NGL SUPPLY LLC. IN ORDER TO MINIMIZE ANY DISRUPTION TO RAIL TRAFFIC AND OPERATIONS. ALL WORK ITEMS IMPACTING RAIL TRAFFIC AND OPERATIONS SHALL BE PERFORMED WITHIN ALLOWABLE WORK WINDOWS. A DETAILED SCHEDULE OF WORK TASKS SHALL BE SUBMITTED TO THE RESIDENT A MINIMUM OF THREE WEEKS PRIOR TO THE COMMENCEMENT OF CONSTRUCTION.

4. THE CONTRACTOR SHALL REMOVE ALL TOPSOIL, ORGANIC MATTER AND DEBRIS ENCOUNTERED WITHIN THE FOOTPRINT OF THE EMBANKMENT. THE CONTRACTOR SHALL PROOF ROLL SUBGRADE CONSISTING OF GRANULAR SOILS USING A SELF-PROPELLED VIBRATORY ROLLER OR HEAVY HAND-GUIDED VIBRATORY COMPACTOR, UNTIL FIRM AS DETERMINED BY THE GEOTECHNICAL ENGINEER. ANY SOFT POCKETS REVEALED BY PROOF ROLLING SHALL BE REMOVED AND REPLACED WITH GRANULAR BORROW TO THE SATISFACTION OF THE GEOTECHINCAL ENGINEER AT NO ADDITIONAL COST TO THE OWNER. WET OR SATURATED SUBGRADES OR SUBGRADES CONSISTING OF SILT/CLAY SOILS SHALL NOT BE PROOFROLLED. REFER TO SECTION 203 AND GEOTECHNICAL RECOMMENDATIONS. ALL EXCAVATIONS AND BACKFILLING SHALL BE PERFORMED IN-THE-DRY. DEWATERING, IF REQUIRED, SHALL BE CONDUCTED BY THE CONTRACTOR AT NO ADDITIONAL COST TO THE OWNER AS NEEDED TO ENSURE THAT THE SUBGRADE IS DRY AND STABLE PRIOR TO FILL PLACEMENT, AND THAT LIFTS OF ENGINEERED FILL ARE PLACED AND COMPACTED IN-THE-DRY.

5. CONTRACTOR SHALL PROVIDE A BALLASTED WALKWAY AT PROPOSED TURNOUTS. SEE TRACK DETAILS SHEET.

6. THE CONTRACTOR SHALL VERIFY ALL HORIZONTAL STATIONS AND OFFSETS AND ALL VERTICAL ELEVATIONS OF PROPOSED WORK PRIOR TO THE START OF CONSTRUCTION.

7. RAILROAD CIRCULAR CURVES AND SPIRALS ARE DEFINED BY THE CHORD DEFINITION OF CURVATURE AND SPECIFIED BY THEIR DEGREE OF CURVATURE.

8. EXISTING RAILROAD TRACKS, TIES, SWITCHES AND HARDWARE WITHIN THE PROJECT RIGHT OF WAY SHALL BE REMOVED UNLESS OTHERWISE NOTED. TRACK OUTSIDE OF THE PROJECT RIGHT OF WAY SHALL REMAIN IN PLACE. SEE SECTION 104 OF SPECIAL PROVISIONS FOR TRACK REMOVALS. BALLAST AND SUBBALLAST SHALL REMAIN. RAKE BALLAST SMOOTH. REMOVE TO PROPERTY LINE IN FULL SECTIONS IF POSSIBLE. FOR SEGMENTS THAT EXTEND LESS THAN 4' BEYOND PROPERTY LINE, COORDINATE WITH ADJACENT PROPERTY OWNER TO MAINTAIN FULL TRACK LENGTH IF POSSIBLE.

9. ALL PROPOSED DRAINAGE PIPES ADJACENT TO RAILROAD TRACKS INCLUDING REINFORCED CONCRETE PIPES, UNDERDRAIN AND UNDERDRAIN OUTLETS SHALL MEET COOPER E80 LOADING REQUIREMENTS. CONTRACTOR SHALL PROVIDE THE RESIDENT WITH DOCUMENTATION THAT MATERIAL MEETS LOADING REQUIREMENTS.

10. RAILROAD VAL PLANS AND PROPERTY DOCUMENTS CAN BE MADE AVAILABLE UPON REQUEST TO MAINE DOT.

UTILITY NOTES:

1. THE LOCATION OF THE EXISTING UTILITIES AND DRAINAGE SHOWN ON THE PLANS AND CROSS SECTIONS WERE COMPILED FROM FIELD SURVEY AND VARIOUS OTHER SOURCES. LOCATIONS ARE APPROXIMATE AND NOT GUARANTEED TO BE ACCURATE NOR IS IT GUARANTEED THAT ALL UTILITIES ARE SHOWN. NO SEPARATE OR ADDITIONAL COMPENSATION WILL BE ALLOWED TO THE CONTRACTOR DUE TO ANY VARIANCE BETWEEN THE DATA SHOWN ON THE PLANS AND THE ACTUAL FIELD CONDITIONS ENCOUNTERED.

2. UTILITY SLEEVES FOR NEW YARD, LLC WILL BE PERFORMED BY OTHERS. OONTRACTOR SHALL COORDINATE ITS WORK WITHIN THE CORRIDOR WITH NEW YARD, LLC. CONTRACTOR AS NECESSARY.

3. VIDEO INSPECTION OF CSO #027, 028, AND 029 HAS BEEN CONDUCTED BY THE CITY AND WILL BE POSTED ON THE MAINE DOT'S WEBSITE AND MADE AVAILABLE TO THE CONTRACTOR FOR BIDDING PURPOSES.

4. EXCAVATION AND INSTALLATION IN THE VICINITY OF 115KV LINE WILL REQUIRE CONTRACTOR TO RE-INSTALL 16" THERMAL SAND, AS SPECIFIED BY CMP CO. PAYMENT SHALL BE INCIDENTAL TO CONTRACT.

5. UTILITIES REMOVED FROM SERVICE MUST BE RECONNECTED AND OPERATIONAL WITHIN A TIMEFRAME ACCEPTED BY THE OWNER. CCTV AND SECURITY SYSTEMS MUST REMAIN ONLINE AT ALL TIMES. SCHEDULING OF ALL WORK SHALL BE COORDINATED WITH CENTRAL MAINE POWER CO., THE OWNER AND THE RESIDENT.

GEOTECHNICAL NOTES:

1. THE GEOTECHNICAL REPORT SHALL BECOME PART OF THE CONTRACT DOCUMENTS.

FIRE SAFETY COMPLIANCE NOTES:

1. CODE REQUIREMENTS ASSOCIATED WITH THE SITE ACCESS THAT THE PORTLAND IMT INTENDS TO COMPLY WITH INCLUDE:

   A. THE SITE IS TO BE "GATED", THEREFORE A KNOX BOX (OR EQUIVALENT) IS REQUIRED TO SUPPORT FD ACCESS.
   B. ALL ACCESS ROADS MUST BE COMPLIANT WITH NFPA 1 (NATIONAL FIRE CODE) AND MUNICIPAL ORDINANCES.

2. WORK SHOWN HEREIN RELATED TO THE FIRE FIGHTING WATER SUPPLY SYSTEM HAS BEEN PREPARED WITH GUIDANCE FROM FIRE RISK MANAGEMENT, INC. TO ENSURE SPECIFIED WORK IS IN CONFORMANCE WITH STATE AND LOCAL CODES AND ADHERES TO THE RECOGNIZED STANDARDS FOR COMMERCIAL CONSTRUCTION.

CODES

1. AASHTO, "LRFD BRIDGE SPECIFICATIONS", 5TH EDITION, 2010 W/ INTERIMS.
2. IBC, 2009 EDITION
3. AISC, "STEEL CONSTRUCTION MANUAL", 9TH EDITION
4. AWS, D1.1, "STRUCTURAL WELDING CODE - STEEL", CURRENT EDITION
5. AWS, D1.2, "STRUCTURAL WELDING CODE - ALUMINUM", CURRENT EDITION
6. AWS, D1.5, "BRIDGE WELDING CODE", CURRENT EDITION
7. ACI, 318-02, "BUILDING CODE REQUIREMENTS FOR STRUCTURAL CONCRETE"
8. ASCE 7-05 MINIMUM DESIGN LOADS FOR BUILDINGS AND OTHER STRUCTURES.
9. NFPA 1 AND NFPA 307; NATIONAL FIRE PROTECTION CODES.

CONSTRUCTION SEQUENCE NOTES:

1. IT IS THE CONTRACTOR'S RESPONSIBILITY TO REVIEW THE TERMINAL'S SECURITY PLAN AND ENSURE THAT THE FACILITY'S OPERATIONS AND SITE SECURITY ARE NOT COMPROMISED AT ANY TIME DURING THE PROJECT.

DEMOLITION NOTES:

1. TO THE MAXIMUM EXTENT PRACTICABLE, ALL CONSTRUCTION DEBRIS, INCLUDING ANY LIQUIDS OR SLURRIES THAT ARE PRODUCED AS PART OF THE DEMOLITION, SHALL BE CAPTURED AND DISPOSED OF PROPERLY. THE CONTRACTOR SHALL COMPLY WITH APPLICABLE PERMIT CONDITIONS AND ENVIRONMENTAL REGULATIONS LISTED IN THE SPECIFICATIONS.

2. THE EXISTING SECURITY SYSTEM AND CLOSED CIRCUIT TELEVISION SYSTEM SHALL REMAIN FULLY FUNCTIONAL DURING ALL PHASES OF CONSTRUCTION. WORK SHALL BE COORDINATED WITH GALAXY INTEGRATED TECHNOLOGIES AND THE RESIDENT.

3. MATERIALS SCHEDULED FOR REMOVAL AND DISPOSAL THAT MAY HAVE SALVAGEABLE VALUE TO THE CONTRACTOR INCLUDE THE FOLLOWING:
-FENCES, POSTS, AND GATES;
-RAILROAD CROSS TIES
-RAILROAD TRACKS
-RAILROAD TURNOUTS

SECURITY NOTES:

1. THE PORTLAND INTERNATIONAL MARINE TERMINAL IS IN COMPLIANCE WITH MTSA 33 CFR PART 105. SPECIFIC DESIGN DETAILS AND CONSTRUCTION SEQUENCING ARE PROVIDED TO ENSURE COMPLIANCE IS MAINTAINED THROUGHOUT THE PROJECT. CONTRACTOR MAY PROPOSE VARIATIONS TO THE CONSTRUCTION PHASES SHOWN HEREIN UPON COMMENCEMENT OF CONSTRUCTION ACTIVITIES BUT SHALL NOT ASSUME THAT PROPOSED VARIATIONS WILL BE AUTHORIZED. ALL ACTIVITIES SHALL BE COORDINATED WITH THE PORT OPERATOR.

2. THE CONTRACTOR, ITS EMPLOYEES, AND SUBCONTRACTORS SHALL OBTAIN TWIC CARDS FOR THE DURATION OF THE PROJECT TO PERFORM WORK WHICH OCCURS WITHIN THE RESTRICTED AREAS OF TERMINAL. SEE SECTION 104 OF THE SPECIAL PROVISIONS.

TIDAL DATA:	NGVD29	MLLW
TOP OF PIER DECK (ALONG EDGE OF DECK)	15.32	19.84
FIRST FLOOR ELEVATION (FFE), OFFICE BUILDING	13.77	18.29
100 Yr flood recurrence flood wave zone (BFE) (V Zone)	12.00	16.52
100 Yr recurrence flood zone (still water)	10.00	14.52
Highest observed water level (02/07/78)	9.61	14.13
Mean Higher High Water (MHHW)	5.39	9.91
Mean High Water (MHW)	4.95	9.47
Notional Geodetic Vertical Datum (NGVD) 1929	0.00	4.52
Mean Low Water (MLW)	-4.18	0.34
Mean Lower Low Water (MLLW)	-4.52	0.00
Lowest observed water level (11/30/55)	-7.97	-3.45

NOAA TIDAL STATION ID: 8418150, PORTLAND, CASCO BAY, MAINE
EPOCH: 1983-2001, UNITS: FEET

ABBREVIATIONS:

BLDG	BUILDING
CIP	CAST-IN-PLACE
CLR	CLEAR
CMP	CORRUGATED METAL PIPE
CY	CUBIC YARD
DIA	DIAMETER
EA	EACH
EF	EACH FACE
EL	ELEVATION IN FEET
EW	EACH WAY
EXP. JT.	EXPANSION JOINT
FFE	FIRST FLOOR ELEVATION
FS	FAR SIDE
HDG	HOT DIPPED GALVANIZED
HSS	HOLLOW STRUCTURAL SECTIONS
ID	INSIDE DIAMETER
IMT	INTERNATIONAL MARINE TERMINAL
K (KIP)	1000 POUNDS
LBS	POUNDS
LF	LINEAR FEET
MAX	MAXIMUM
MIL	.001 INCHES
MIN.	MINIMUM
NS	NEAR SIDE
NTS	NOT TO SCALE
OC	ON CENTER
PSF	POUNDS PER SQUARE FOOT
R	RADIUS
REF	REFERENCE
REQ'D	REQUIRED
SF	SQUARE FEET
SS	STAINLESS STEEL
STD	STANDARD
SWL	SAFE WORKING LOAD
TBM	TEMPORARY BENCHMARK
TEMP	TEMPORARY
TYP	TYPICAL
UON	UNLESS OTHERWISE NOTED

PLAN LEGEND

TOWN, COUNTY, STATE
PROPERTY LINES
R/W LINES - EXISTING
R/W LINES - PROPOSED
BUILDINGS

TRAVELWAY - EXISTING
TRAVELWAY - PROPOSED
CULVERT - EXISTING
CULVERT - PROPOSED
DITCH LINE - EXISTING
DITCH LINE - PROPOSED
UNDERDRAIN - PROPOSED
EXISTING UTILITIES - WATER
EXISTING UTILITIES - SEWER
EXISTING UTILITIES - TELEPHONE
EXISTING UTILITIES - GAS
EXISTING UTILITIES - ELECTRIC

PROPOSED CLEARING LIMIT
PROPOSED SLOPELINE
PROPOSED SILT FENCE
CURBING - EXISTING
CURBING - PROPOSED
PAVEMENT SAWCUT
PALISADE FENCE
PROPOSED RIPRAP

PROPOSED GAS LINE
PROPOSED ELECTRICAL LINE
PROPOSED WATER LINE

OUTLINE OF BODIES OF WATER

CATCH BASINS	EXISTING	PROPOSED
MANHOLES	EXISTING	PROPOSED
UTILITY POLES	EXISTING	PROPOSED
FIRE HYDRANTS	EXISTING	PROPOSED
TREES	HARDWOOD	SOFTWOOD
BORINGS		
WOODS		
SHRUBS		

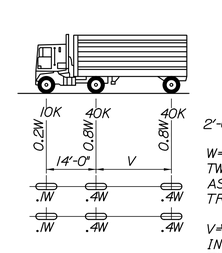

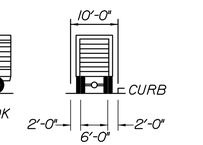

W=COMBINED WEIGHT ON THE FIRST TWO AXLES WHICH IS THE SAME AS FOR THE CORRESPONDING H TRUCK.

V=VARIABLE SPACING: 14-TO 30-FT INCLUSIVE. SPACING TO BE USED IS THAT WHICH PRODUCED MAXIMUM STRESSES.

DESIGN: HS 25 TRUCK

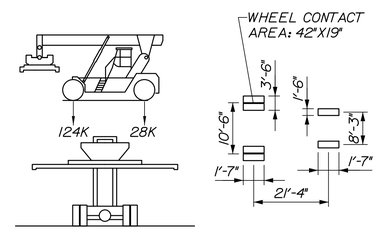

DESIGN: KALMAR LOADED RAIL STACKER

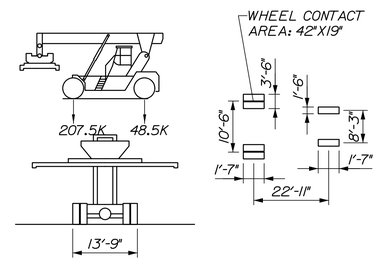

DESIGN: MI-JACK 50 RS LOADED RAIL STACKER

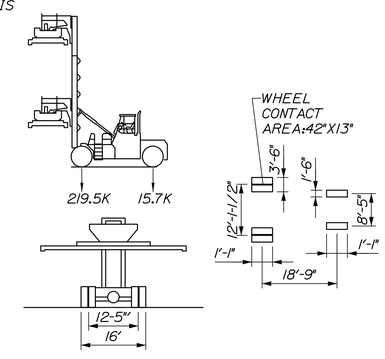

DESIGN: TAYLOR TEC-950L LOADED CONTAINER HANDLER

STATE OF MAINE
DEPARTMENT OF TRANSPORTATION

PROJECT NUMBER 022809.20

WIN 022809.20

	BY	DATE
PROJ. MANAGER	J. KITTREDGE	
DESIGN-DETAILED	CRM	06/14
CHECKED-REVIEWED	-	06/14
DESIGN2-DETAILED2	-	-
DESIGN3-DETAILED3	-	-
REVISIONS 1	-	-
REVISIONS 2	-	-
REVISIONS 3	-	-
REVISIONS 4	-	-
FIELD CHANGES	-	-

SIGNATURE
P.E. NUMBER
DATE

PORTLAND INTERNATIONAL MARINE TERMINAL
EXISTING LAYDOWN AND CONNECTING CORRIDOR CONNECTION
PORTLAND CUMBERLAND COUNTY

GENERAL NOTES

SHEET NUMBER
G3

Filename: 003_GenNotesAndLegend.dgn Division: Username: Date:7/11/2014

GENERAL NOTES

1. OWNER OF RECORD:
   PORTLAND TERMINAL COMPANY & MAINE CENTRAL RAILROAD COMPANY
   TAX MAP 59 BLOCK A LOTS 1, 3 & 11
   C.C.R.D. BOOK 7026 PAGE 187

2. BEARINGS ARE BASED ON STATE PLANE COORDINATES NAD 83 MAINE WEST.

3. THE FEDERAL CHANNEL LINE TAKEN FROM PLAN REFERENCE NO.7 USING COORDINATES IN THE DIGITAL FORMAT OF SAID PLAN.

4. VERTICAL DATUM IS NGVD 1929 BASED UPON MAINE DEPARTMENT OF TRANSPORTATION DISK L 5 (NGS) RESET 1997 FOUND SET IN CONCRETE BRIDGE ABUTMENT THAT SUPPORTS THE BEACH STREET ON RAMP WHERE IT CONNECTS TO THE CASCO BAY BRIDGE.

5. THE SEWER LINE SHOWN IS BASED ON THE LOCATION OF SEWER MANHOLES AND A PLAN TITLED "PORTLAND WATER DISTRICT PORTLAND, MAINE POLLUTION ABATEMENT FACILITIES CONTRACT NO. 3 LOWER FORE RIVER INTERCEPTOR SHEETS 23-28" BY CAMP DRESSER & MCKEE INC. DATED APRIL, 1963.

6. SEE BOUNDARY SURVEY FOR PROPERTY AND EASEMENT INFORMATION.

UTILITY NOTE

THE UNDERGROUND UTILITIES SHOWN HAVE BEEN LOCATED FROM FIELD SURVEY INFORMATION AND EXISITNG DRAWINGS. THE SURVEYOR MAKES NO GUARANTEES THAT THE UNDERGROUND UTILITIES SHOWN COMPRISE ALL SUCH UTILITIES IN THE AREA, EITHER IN SERVICE OR ABANDONED. THE SURVEY FURTHER DOES NOT WARRANT THAT THE UNDERGROUND UTILITIES SHOWN ARE IN THE EXACT LOCATION INDICATED ALTHOUGH HE DOES CERTIFY THAT THEY ARE LOCATED AS ACCURATELY AS POSSIBLE FROM THE INFORMATION AVAILABLE. THE SURVEYOR HAS NOT PHYSICALLY LOCATED THE UNDERGROUND UTILITIES. CALL 1-800-DIGSAFE AT LEAST THREE BUSINESS DAYS BEFORE PERFORMING ANY CONSTRUCTION. DUE TO OSHA CONFINED SPACE REQUIREMENTS, ALL INVERTS AND PIPE SIZES MUST BE VERIFIED PRIOR TO ANY CONSTRUCTION.

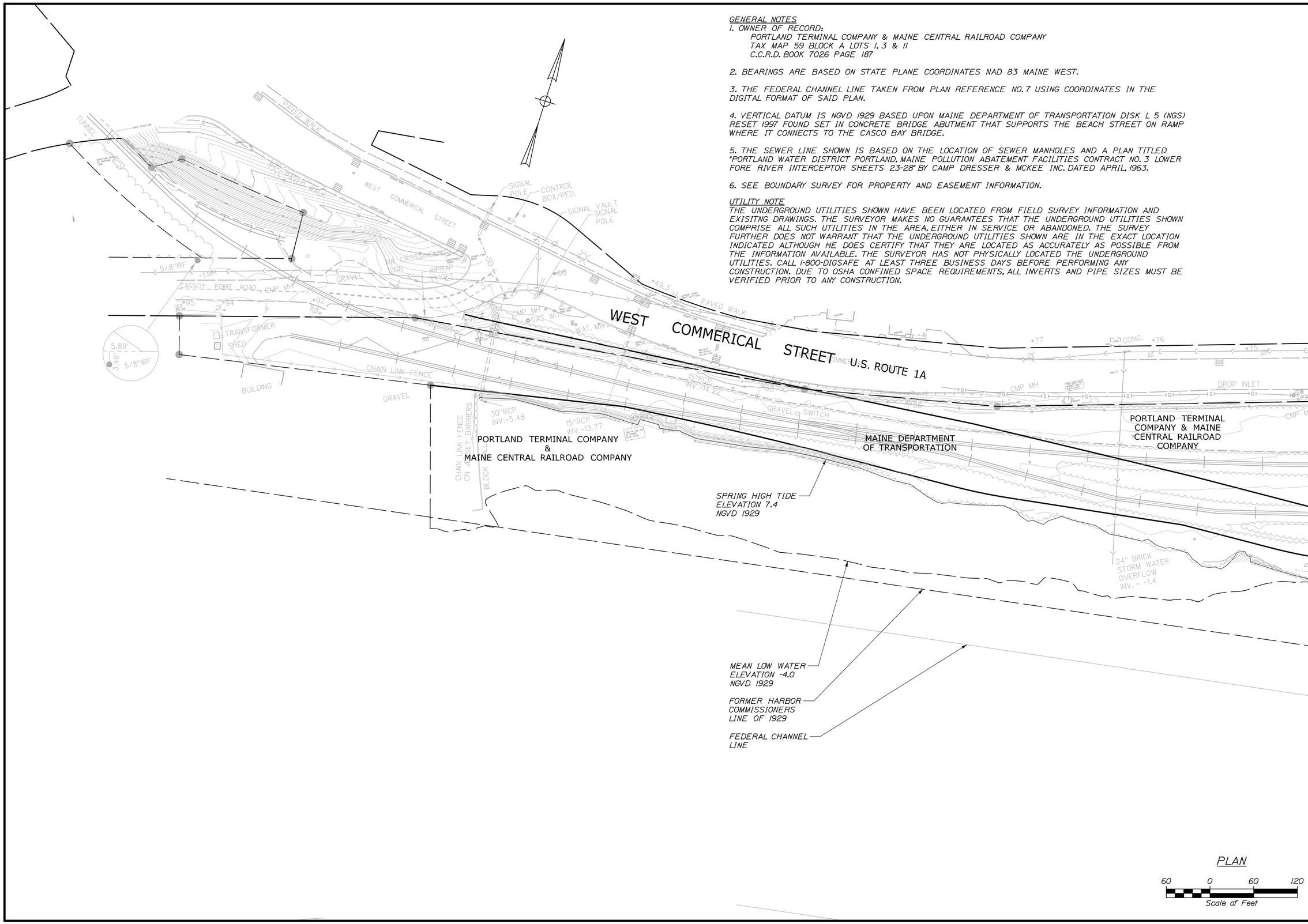

STATE OF MAINE
DEPARTMENT OF TRANSPORTATION

PROJECT NUMBER 022809.20

WIN 022809.20

		BY	DATE
PROJ. MANAGER	J. KITTREDGE		
DESIGN-DETAILED	HME	MPC	06/14
CHECKED-REVIEWED	-	CRM	06/14
DESIGN2-DETAILED2	-	-	-
DESIGN3-DETAILED3	-	-	-
REVISIONS 1	-	-	-
REVISIONS 2	-	-	-
REVISIONS 3	-	-	-
REVISIONS 4	-	-	-
FIELD CHANGES	-	-	-

SIGNATURE

P.E. NUMBER

DATE

PORTLAND INTERNATIONAL MARINE TERMINAL
EXISTING LAYDOWN AND CONNECTING CORRIDOR CONNECTION
PORTLAND CUMBERLAND COUNTY

EXISTING CONDITIONS PLAN

SHEET NUMBER

C01

Filename: 004_ExistSitePlan1.dgn Division: Username: Date:6/26/2014

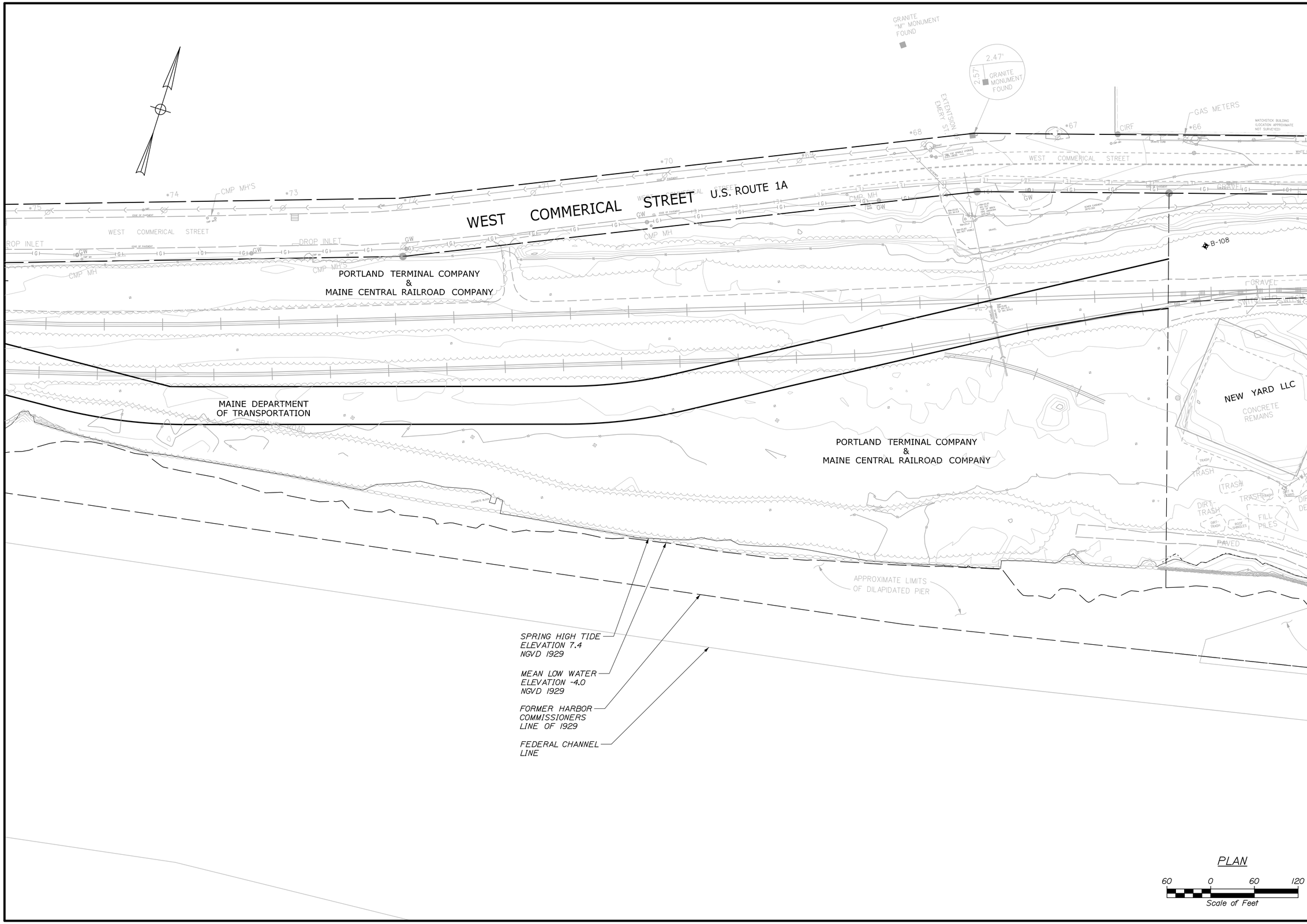

STATE OF MAINE
DEPARTMENT OF TRANSPORTATION

PROJECT NUMBER 022809.20

WIN 022809.20

		BY	DATE
PROJ. MANAGER	J. KITTREDGE		
DESIGN-DETAILED	HME	MPC	6/14
CHECKED-REVIEWED	-	CRM	6/14
DESIGN2-DETAILED2	-	-	-
DESIGN3-DETAILED3	-	-	-
REVISIONS 1	-	-	-
REVISIONS 2	-	-	-
REVISIONS 3	-	-	-
REVISIONS 4	-	-	-
FIELD CHANGES	-	-	-

SIGNATURE

P.E. NUMBER

DATE

PORTLAND INTERNATIONAL MARINE TERMINAL
EXISTING LAYDOWN AND CONNECTING CORRIDOR CONNECTION
PORTLAND CUMBERLAND COUNTY

EXISTING CONDITIONS PLAN

SHEET NUMBER

C02

Filename: 005_ExistSitePlan2.dgn Division: Username: Date:6/26/2014

Date:7/11/2014

Username:

Division:

Filename: 006_ExistSitePlan3.dgn

WEST COMMERICAL STREET

U.S. ROUTE 1A

BEACH ST.

CLARK ST.

NEW YARD LLC

CONCRETE REMAINS

OSTERMAN PROPANE, LLC
NGL-NE, LLC
LEASE AREA 2.19 AC

OSTERMAN PROPANE, LLC
NGL-NE, LLC
LEASE AREA 1.77 AC

B-101 B-102 B-103 B-104 B-105 B-106 B-107 B-108 B-109

EXISTING ACCESS FOR:
- MAINE DOT BRIDGE MAINTENANCE BUIDLING
- NEW YARD LLC

EXISTING ACCESS FOR:
NEW YARD LLC

VRAP

MEAN LOW WATER
ELEVATION -4.0
NGVD 1929

SPRING HIGH TIDE
ELEVATION 7.4
NGVD 1929

FORMER HARBOR COMMISSIONERS LINE OF 1929

FEDERAL CHANNEL LINE

NOTE:
BASE MAP PREPARED BY OWEN HASKELL, INC. OF FALMOUTH MAINE, REVISED 1-29-14.

PLAN

60 0 60 120

Scale of Feet

STATE OF MAINE
DEPARTMENT OF TRANSPORTATION

PROJECT NUMBER 022809.20

WIN 022809.20

		BY	DATE
PROJ. MANAGER	J. KITTREDGE		
DESIGN-DETAILED	HME	MPC	06/14
CHECKED-REVIEWED	-	CRM	06/14
DESIGN2-DETAILED2	-	-	-
DESIGN3-DETAILED3	-	-	-
REVISIONS 1	-	-	-
REVISIONS 2	-	-	-
REVISIONS 3	-	-	-
REVISIONS 4	-	-	-
FIELD CHANGES	-	-	-

SIGNATURE

P.E. NUMBER

DATE

PORTLAND INTERNATIONAL MARINE TERMINAL
EXISTING LAYDOWN AND CONNECTING CORRIDOR CONNECTION
PORTLAND CUMBERLAND COUNTY

EXISTING CONDITIONS PLAN

SHEET NUMBER

C03

Schonewald Engineering Associates, Inc.

PROJECT: Maine Department of Transportation Intl Marine Terminal Expansion
LOCATION: Portland, Maine

Boring No.: B-101
WIN: 22809.20

Driller:	Maine Test Borings	**Elevation (ft.)**	17.6	**Auger ID/OD:**	3"ID/6"OD (approx.)
Operator:	Porter/ Nason	**Datum:**	NGVD 1929	**Sampler:**	standard split-spoon
Logged By:	Schonewald	**Rig Type:**	Mobile B-47	**Hammer Wt./Fall:**	140 lbs / 30 inches (safety)
Date Start/Finish:	5/2/14; 0800 - 5/2/14; 0910	**Drilling Method:**	HSA	**Core Barrel:**	
Boring Location:	loading slab - see geoplan	**Casing ID/OD:**		**Water Level*:**	11.0 ft. (in augers)

Definitions:
D = Split Spoon Sample
MD = Unsuccessful Split Spoon Sample attempt
U = Thin Wall Tube Sample
MU = Unsuccessful Thin Wall Tube Sample attempt
V = Insitu Vane Shear Test
MV = Unsuccessful Insitu Vane Shear Test attempt

Definitions:
S_u = Insitu Field Vane Shear Strength (psf)
R = Rock Core Sample
RQD = Rock Quality Designation (%)
WOC = weight of casing
WOH = weight of 140lb. hammer
WOR = weight of rods

Definitions:
-- = not recorded
LL = Liquid Limit
PL = Plastic Limit
PI = Plasticity Index
WC = water content, percent
G = grain size analysis

Sample Information

Depth (ft.)	Sample No.	Pen./Rec. (in.)	Sample Depth (ft.)	Blows (/6 in.) Shear Strength (psf) qu/RQD (%)	N-value	Casing Blows	Elevation (ft.)	Graphic Log	Visual Description and Remarks	Lab. Testing Results
0									grass surface	
5	1D	24/20	5.5 - 7.5	4-6-3-3	9				1D: Moist, black-brown, f. SAND, some Silt, trace c. Sand; FILL. Changing at 6.7 ft to 1D-A: grayish-brown, moist, f. Sandy SILT.	1D-A SM A-4(0) 50% -#200
	2D	24/20	8.0 - 10.0	1-1/12"-3	1				2D: V. loose, moist, mixture of reddish-brown, Silty f. SAND, trace m-c Sand and gray, Clayey SILT, some f. Sand; APPEARS DISTURBED.	
10	3D	24/18	10.0 - 12.0	2-3-5-8	8				3D: Loose, moist, gray, f. Sandy SILT w/ pockets and seams of reddish-brown, Silty f. SAND.	
	4D	24/12	12.0 - 14.0	1-3-9-9	12				4D: M. dense, wet, gray, slightly mottled, alternating layers of SILT, some f. Sand and f. SAND, trace to little Silt.	
15						3.6			14.0 — **Bottom of Exploration at 14.0 feet below ground surface.** No refusal encountered.	

Remarks:

Stratification lines represent approximate boundaries between soil types; transitions may be gradual.
* Water level readings have been made at times and under conditions stated. Groundwater fluctuations may occur due to conditions other than those present at the time measurements were made.

Page 1 of 1
Boring No.: B-101

Schonewald Engineering Associates, Inc.

PROJECT: Maine Department of Transportation Intl Marine Terminal Expansion
LOCATION: Portland, Maine

Boring No.: B-102
WIN: 22809.20

Driller:	Maine Test Borings	**Elevation (ft.)**	16.0	**Auger ID/OD:**	3"ID/6"OD (approx.)
Operator:	Porter/ Nason	**Datum:**	NGVD 1929	**Sampler:**	standard split-spoon
Logged By:	Schonewald	**Rig Type:**	Mobile B-47	**Hammer Wt./Fall:**	140 lbs / 30 inches (safety)
Date Start/Finish:	5/2/14; 0925 - 5/2/14; 1200	**Drilling Method:**	HSA	**Core Barrel:**	
Boring Location:	intersection - see geoplan	**Casing ID/OD:**		**Water Level*:**	8 ft. (in augers)

Definitions:
D = Split Spoon Sample
MD = Unsuccessful Split Spoon Sample attempt
U = Thin Wall Tube Sample
MU = Unsuccessful Thin Wall Tube Sample attempt
V = Insitu Vane Shear Test
MV = Unsuccessful Insitu Vane Shear Test attempt

Definitions:
S_u = Insitu Field Vane Shear Strength (psf)
R = Rock Core Sample
RQD = Rock Quality Designation (%)
WOC = weight of casing
WOH = weight of 140lb. hammer
WOR = weight of rods

Definitions:
-- = not recorded
LL = Liquid Limit
PL = Plastic Limit
PI = Plasticity Index
WC = water content, percent
G = grain size analysis

Sample Information

Depth (ft.)	Sample No.	Pen./Rec. (in.)	Sample Depth (ft.)	Blows (/6 in.) Shear Strength (psf) qu/RQD (%)	N-value	Casing Blows	Elevation (ft.)	Graphic Log	Visual Description and Remarks	Lab. Testing Results
0									4" asphalt pavement	
5	1D	24/19	5.0 - 7.0	7-10-9-8	19				1D: M. dense, damp, gray, f. SAND, trace Silt, trace m. Sand.	
10	2D	24/22	10.0 - 12.0	6-10-11-16	21				2D: M. dense, wet, brownish-gray, slightly mottled, f. SAND, trace Silt.	
									Few gravelly layers from approximately 13 to 14 feet.	
15	3D	24/15	15.0 - 17.0	11-8-13-13	21				3D: M. dense, wet, grayish-brown, f. SAND, trace to little Silt. Running sands encountered.	
							-2.5		18.5	
20	4D	24/24	20.0 - 22.0	1/12"-2-3	2				4D: Soft, wet, dark gray, Silty CLAY, trace f. Sand.	
							-8.5		24.5	
25	5D	24/20	25.0 - 27.0	1-2-3-12	5				Driller notes sand layers within silt-clay. 5D: M. stiff, wet, dark gray, Silty CLAY w/ multiple partings of f. Sand and one 2-inch seam f. Sand at 26.4 ft.	
							-10.6		26.6 — Possible change at 26.6 ft. to organic f. Sandy SILT.	
							-13.2		29.2	
30	6D	20/13	30.5 - 32.2	11-18-23-50/4"	41				Drilling behavior suggests gravel seams. 6D: Dense, wet brown, f-m SAND, trace Silt, trace c. Sand; changing at 31.7 ft to brown, f-c Sandy GRAVEL, trace Silt.	
							-16.2		32.2 — **Bottom of Exploration at 32.2 feet below ground surface.** Split-spoon refusal.	

Remarks:

Stratification lines represent approximate boundaries between soil types; transitions may be gradual.
* Water level readings have been made at times and under conditions stated. Groundwater fluctuations may occur due to conditions other than those present at the time measurements were made.

Page 2 of 2
Boring No.: B-102

Schonewald Engineering Associates, Inc.

PROJECT: Maine Department of Transportation Intl Marine Terminal Expansion
LOCATION: Portland, Maine

Boring No.: B-103
WIN: 22809.20

Driller:	Maine Test Borings	**Elevation (ft.)**	11.6	**Auger ID/OD:**	3-1/2"OD (approx.)
Operator:	Porter/ Nason	**Datum:**	NGVD 1929	**Sampler:**	standard split-spoon
Logged By:	Schonewald	**Rig Type:**	Mobile B-47	**Hammer Wt./Fall:**	140 lbs / 30 inches (safety)
Date Start/Finish:	5/2/14; 1230 - 5/2/14; 1250	**Drilling Method:**	SSA	**Core Barrel:**	
Boring Location:	storage pad - see geoplan	**Casing ID/OD:**		**Water Level*:**	none observed

Definitions:
D = Split Spoon Sample
MD = Unsuccessful Split Spoon Sample attempt
U = Thin Wall Tube Sample
MU = Unsuccessful Thin Wall Tube Sample attempt
V = Insitu Vane Shear Test
MV = Unsuccessful Insitu Vane Shear Test attempt

Definitions:
S_u = Insitu Field Vane Shear Strength (psf)
R = Rock Core Sample
RQD = Rock Quality Designation (%)
WOC = weight of casing
WOH = weight of 140lb. hammer
WOR = weight of rods

Definitions:
-- = not recorded
LL = Liquid Limit
PL = Plastic Limit
PI = Plasticity Index
WC = water content, percent
G = grain size analysis

Sample Information

Depth (ft.)	Sample No.	Pen./Rec. (in.)	Sample Depth (ft.)	Blows (/6 in.) Shear Strength (psf) qu/RQD (%)	N-value	Casing Blows	Elevation (ft.)	Graphic Log	Visual Description and Remarks	Lab. Testing Results
0									gravel surface	
5	1D	24/11	1.0 - 3.0	12-14-16-15	30				1D: Dense, damp, dark reddish-brown, f-m SAND, little to some Silt, trace to little Gravel, trace c. Sand; URBAN FILL.	1D SM A-1-b 13% -#200
	2D	24/15	3.0 - 5.0	9-11-9-7	20				2D: M. dense, damp, reddish-brown f-m SAND, trace to little Silt, trace c. Sand, trace Gravel; URBAN FILL.	
	3D	24/14	5.0 - 7.0	5-4-5-4	9				3D: Loose, damp, reddish-brown f-m SAND, trace to little Silt, trace c. Sand, trace Gravel; URBAN FILL. Tip of spoon wet.	
						4.6			7.0 — **Bottom of Exploration at 7.0 feet below ground surface.** No refusal encountered.	

Remarks:
Distinct layering observed in split-spoon samples; descriptions are of composited samples.

Stratification lines represent approximate boundaries between soil types; transitions may be gradual.
* Water level readings have been made at times and under conditions stated. Groundwater fluctuations may occur due to conditions other than those present at the time measurements were made.

Page 1 of 1
Boring No.: B-103

Schonewald Engineering Associates, Inc.

PROJECT: Maine Department of Transportation Intl Marine Terminal Expansion
LOCATION: Portland, Maine

Boring No.: B-104
WIN: 22809.20

Driller:	Maine Test Borings	**Elevation (ft.)**	10.6	**Auger ID/OD:**	3-1/2"OD (approx.)
Operator:	Porter/ Nason	**Datum:**	NGVD 1929	**Sampler:**	standard split-spoon
Logged By:	Schonewald	**Rig Type:**	Mobile B-47	**Hammer Wt./Fall:**	140 lbs / 30 inches (safety)
Date Start/Finish:	5/2/14; 1255 - 5/2/14; 1315	**Drilling Method:**	SSA	**Core Barrel:**	
Boring Location:	storage pad - see geoplan	**Casing ID/OD:**		**Water Level*:**	none observed

Definitions:
D = Split Spoon Sample
MD = Unsuccessful Split Spoon Sample attempt
U = Thin Wall Tube Sample
MU = Unsuccessful Thin Wall Tube Sample attempt
V = Insitu Vane Shear Test
MV = Unsuccessful Insitu Vane Shear Test attempt

Definitions:
S_u = Insitu Field Vane Shear Strength (psf)
R = Rock Core Sample
RQD = Rock Quality Designation (%)
WOC = weight of casing
WOH = weight of 140lb. hammer
WOR = weight of rods

Definitions:
-- = not recorded
LL = Liquid Limit
PL = Plastic Limit
PI = Plasticity Index
WC = water content, percent
G = grain size analysis

Sample Information

Depth (ft.)	Sample No.	Pen./Rec. (in.)	Sample Depth (ft.)	Blows (/6 in.) Shear Strength (psf) qu/RQD (%)	N-value	Casing Blows	Elevation (ft.)	Graphic Log	Visual Description and Remarks	Lab. Testing Results
0									gravel surface	
5	1D	24/18	1.0 - 3.0	9-17-12-14	29				1D: M. dense, damp, dark reddish-brown, f-m SAND, little to some Silt, little Gravel, trace c. Sand; URBAN FILL (w/ ash and coal).	1D SM A-1-b 18% -#200
	2D	24/13	3.0 - 5.0	6-8-10-14	18				2D: M. dense, damp, brown, f-m SAND, trace to little Silt, trace c. Sand, trace Gravel; URBAN FILL (w/ ash and coal).	
	3D	24/14	5.0 - 7.0	9-8-5-3	13				3D: M. dense, damp, brown, f-m SAND, trace to little Silt, trace c. Sand, trace Gravel; URBAN FILL (w/ ash and coal).	
						3.6			7.0 — **Bottom of Exploration at 7.0 feet below ground surface.** No refusal encountered.	

Remarks:
Distinct layering observed in split-spoon samples; descriptions are of composited samples.

Stratification lines represent approximate boundaries between soil types; transitions may be gradual.
* Water level readings have been made at times and under conditions stated. Groundwater fluctuations may occur due to conditions other than those present at the time measurements were made.

Page 1 of 1
Boring No.: B-104

Schonewald Engineering Associates, Inc.

PROJECT: Maine Department of Transportation Intl Marine Terminal Expansion
LOCATION: Portland, Maine

Boring No.: B-105
WIN: 22809.20

Driller:	Maine Test Borings	**Elevation (ft.)**	11.5	**Auger ID/OD:**	3-1/2"OD (approx.)
Operator:	Porter/ Nason	**Datum:**	NGVD 1929	**Sampler:**	standard split-spoon
Logged By:	Schonewald	**Rig Type:**	Mobile B-47	**Hammer Wt./Fall:**	140 lbs / 30 inches (safety)
Date Start/Finish:	5/2/14; 1320 - 5/2/14; 1340	**Drilling Method:**	SSA	**Core Barrel:**	
Boring Location:	storage pad - see geoplan	**Casing ID/OD:**		**Water Level*:**	none observed

Definitions:
D = Split Spoon Sample
MD = Unsuccessful Split Spoon Sample attempt
U = Thin Wall Tube Sample
MU = Unsuccessful Thin Wall Tube Sample attempt
V = Insitu Vane Shear Test
MV = Unsuccessful Insitu Vane Shear Test attempt

Definitions:
S_u = Insitu Field Vane Shear Strength (psf)
R = Rock Core Sample
RQD = Rock Quality Designation (%)
WOC = weight of casing
WOH = weight of 140lb. hammer
WOR = weight of rods

Definitions:
-- = not recorded
LL = Liquid Limit
PL = Plastic Limit
PI = Plasticity Index
WC = water content, percent
G = grain size analysis

Sample Information

Depth (ft.)	Sample No.	Pen./Rec. (in.)	Sample Depth (ft.)	Blows (/6 in.) Shear Strength (psf) qu/RQD (%)	N-value	Casing Blows	Elevation (ft.)	Graphic Log	Visual Description and Remarks	Lab. Testing Results
0									gravel surface	
5	1D	24/24	1.0 - 3.0	18-31-23-25	54				1D: V. dense, moist, dark brown w/ light gray, f-m Sandy GRAVEL, little Silt, trace c. Sand; gravel includes pieces of concrete and brick; URBAN FILL.	1D SM A-1-b 17% -#200
	2D	24/0	3.0 - 5.0	18-15-15-17	30				2D: No recovery	
	3D	24/22	5.0 - 7.0	7-5-4-7	9				3D: Loose, moist, black-tan-reddish brown, f-m SAND, trace to little Silt; URBAN FILL (w/ ash and coal).	
						4.5			7.0 — **Bottom of Exploration at 7.0 feet below ground surface.** No refusal encountered.	

Remarks:
Distinct layering observed in split-spoon samples; descriptions are of composited samples.

Stratification lines represent approximate boundaries between soil types; transitions may be gradual.
* Water level readings have been made at times and under conditions stated. Groundwater fluctuations may occur due to conditions other than those present at the time measurements were made.

Page 1 of 1
Boring No.: B-105

Schonewald Engineering Associates, Inc.

PROJECT: Maine Department of Transportation Intl Marine Terminal Expansion
LOCATION: Portland, Maine

Boring No.: B-106
WIN: 22809.20

Driller:	Maine Test Borings	**Elevation (ft.)**	11.2	**Auger ID/OD:**	3-1/2"OD (approx.)
Operator:	Porter/ Nason	**Datum:**	NGVD 1929	**Sampler:**	standard split-spoon
Logged By:	Schonewald	**Rig Type:**	Mobile B-47	**Hammer Wt./Fall:**	140 lbs / 30 inches (safety)
Date Start/Finish:	5/2/14; 1350 - 5/2/14; 1415	**Drilling Method:**	SSA	**Core Barrel:**	
Boring Location:	storage pad - see geoplan	**Casing ID/OD:**		**Water Level*:**	none observed

Definitions:
D = Split Spoon Sample
MD = Unsuccessful Split Spoon Sample attempt
U = Thin Wall Tube Sample
MU = Unsuccessful Thin Wall Tube Sample attempt
V = Insitu Vane Shear Test
MV = Unsuccessful Insitu Vane Shear Test attempt

Definitions:
S_u = Insitu Field Vane Shear Strength (psf)
R = Rock Core Sample
RQD = Rock Quality Designation (%)
WOC = weight of casing
WOH = weight of 140lb. hammer
WOR = weight of rods

Definitions:
-- = not recorded
LL = Liquid Limit
PL = Plastic Limit
PI = Plasticity Index
WC = water content, percent
G = grain size analysis

Sample Information

Depth (ft.)	Sample No.	Pen./Rec. (in.)	Sample Depth (ft.)	Blows (/6 in.) Shear Strength (psf) qu/RQD (%)	N-value	Casing Blows	Elevation (ft.)	Graphic Log	Visual Description and Remarks	Lab. Testing Results
0									gravel surface	
5	1D	24/15	1.0 - 3.0	7-8-6-7	14				1D: M. dense, damp, black, coal (Gravelly f-c SAND, trace Silt); URBAN FILL.	
	2D	16/8	3.0 - 4.3	4-4-50/4"					2D: Damp, tan-reddish brown-black, f-c SAND, some Silt, trace Gravel; URBAN FILL (w/ ash and coal).	2D SM A-2-4(0) 22% -#200
						6.7			4.5 — **Bottom of Exploration at 4.5 feet below ground surface.** Auger refusal on wood.	

Remarks:
Distinct layering observed in split-spoon samples; descriptions are of composited samples.

Stratification lines represent approximate boundaries between soil types; transitions may be gradual.
* Water level readings have been made at times and under conditions stated. Groundwater fluctuations may occur due to conditions other than those present at the time measurements were made.

Page 1 of 1
Boring No.: B-106

Schonewald Engineering Associates, Inc.

PROJECT: Maine Department of Transportation Intl Marine Terminal Expansion
LOCATION: Portland, Maine

Boring No.: B-107
WIN: 22809.20

Driller:	Maine Test Borings	**Elevation (ft.)**	9.7	**Auger ID/OD:**	3-1/2"OD (approx.)
Operator:	Porter/ Nason	**Datum:**	NGVD 1929	**Sampler:**	standard split-spoon
Logged By:	Schonewald	**Rig Type:**	Mobile B-47	**Hammer Wt./Fall:**	140 lbs / 30 inches (safety)
Date Start/Finish:	5/2/14; 1420 - 5/2/14; 1435	**Drilling Method:**	SSA	**Core Barrel:**	
Boring Location:	storage pad - see geoplan	**Casing ID/OD:**		**Water Level*:**	4 ft (open hole)

Definitions:
D = Split Spoon Sample
MD = Unsuccessful Split Spoon Sample attempt
U = Thin Wall Tube Sample
MU = Unsuccessful Thin Wall Tube Sample attempt
V = Insitu Vane Shear Test
MV = Unsuccessful Insitu Vane Shear Test attempt

Definitions:
S_u = Insitu Field Vane Shear Strength (psf)
R = Rock Core Sample
RQD = Rock Quality Designation (%)
WOC = weight of casing
WOH = weight of 140lb. hammer
WOR = weight of rods

Definitions:
-- = not recorded
LL = Liquid Limit
PL = Plastic Limit
PI = Plasticity Index
WC = water content, percent
G = grain size analysis

Sample Information

Depth (ft.)	Sample No.	Pen./Rec. (in.)	Sample Depth (ft.)	Blows (/6 in.) Shear Strength (psf) qu/RQD (%)	N-value	Casing Blows	Elevation (ft.)	Graphic Log	Visual Description and Remarks	Lab. Testing Results
0									gravel surface	
5	1D	24/19	1.0 - 3.0	5-6-3-4	9				1D: [COMPOSITE SAMPLE] Loose, dry, black-reddish brown, f-m SAND, little to some Silt, trace to little Gravel, trace c. Sand; URBAN FILL (w/ coal and ash).	1D SW-SM A-1-b 11% -#200
	2D	24/22	3.0 - 5.0	1-1-1-1	2				2D: V. loose, wet, brown, f-c SAND, trace Silt; FILL.	
						4.7			5.0 — **Bottom of Exploration at 5.0 feet below ground surface.** No refusal encountered.	

Remarks:

Stratification lines represent approximate boundaries between soil types; transitions may be gradual.
* Water level readings have been made at times and under conditions stated. Groundwater fluctuations may occur due to conditions other than those present at the time measurements were made.

Page 1 of 1
Boring No.: B-107

Schonewald Engineering Associates, Inc.

PROJECT: Maine Department of Transportation Intl Marine Terminal Expansion
LOCATION: Portland, Maine

Boring No.: B-108
WIN: 22809.20

Driller:	Maine Test Borings	**Elevation (ft.)**	13.6	**Auger ID/OD:**	3-1/2"OD (approx.)
Operator:	Porter/ Nason	**Datum:**	NGVD 1929	**Sampler:**	standard split-spoon
Logged By:	Schonewald	**Rig Type:**	Mobile B-47	**Hammer Wt./Fall:**	140 lbs / 30 inches (safety)
Date Start/Finish:	5/2/14; 1450 - 5/2/14; 1505	**Drilling Method:**	SSA	**Core Barrel:**	
Boring Location:	loading slab - see geoplan	**Casing ID/OD:**		**Water Level*:**	none observed

Definitions:
D = Split Spoon Sample
MD = Unsuccessful Split Spoon Sample attempt
U = Thin Wall Tube Sample
MU = Unsuccessful Thin Wall Tube Sample attempt
V = Insitu Vane Shear Test
MV = Unsuccessful Insitu Vane Shear Test attempt

Definitions:
S_u = Insitu Field Vane Shear Strength (psf)
R = Rock Core Sample
RQD = Rock Quality Designation (%)
WOC = weight of casing
WOH = weight of 140lb. hammer
WOR = weight of rods

Definitions:
-- = not recorded
LL = Liquid Limit
PL = Plastic Limit
PI = Plasticity Index
WC = water content, percent
G = grain size analysis

Sample Information

Depth (ft.)	Sample No.	Pen./Rec. (in.)	Sample Depth (ft.)	Blows (/6 in.) Shear Strength (psf) qu/RQD (%)	N-value	Casing Blows	Elevation (ft.)	Graphic Log	Visual Description and Remarks	Lab. Testing Results
0									gravel surface	
5	1D	24/21	1.0 - 3.0	6-6-8-5	12				1D: Damp, dark brown, f. SAND, little Silt; FILL; changing at 1.9 ft. to 1D-A: brownish gray, mottled, f. Sandy SILT, trace m-c Sand; FILL.	
	2D	24/20	3.0 - 5.0	2-2-3-4	5				2D: Loose, damp, olive gray, mottled, f. Sandy SILT.	2D ML A-4(0) 56% -#200
	3D	24/20	5.0 - 7.0	1-3-2-4	5				3D: Loose, damp, brownish gray, mottled, f. Sandy SILT, w/ one 2-inch seam f-m SAND, trace to little Silt.	
						6.6			7.0 — **Bottom of Exploration at 7.0 feet below ground surface.** No refusal encountered.	

Remarks:

Stratification lines represent approximate boundaries between soil types; transitions may be gradual.
* Water level readings have been made at times and under conditions stated. Groundwater fluctuations may occur due to conditions other than those present at the time measurements were made.

Page 1 of 1
Boring No.: B-108

Schonewald Engineering Associates, Inc.

PROJECT: Maine Department of Transportation Intl Marine Terminal Expansion
LOCATION: Portland, Maine

Boring No.: B-109
WIN: 22809.20

Driller:	Maine Test Borings	**Elevation (ft.)**	12.7	**Auger ID/OD:**	3-1/2"OD (approx.)
Operator:	Porter/ Nason	**Datum:**	NGVD 1929	**Sampler:**	standard split-spoon
Logged By:	Schonewald	**Rig Type:**	Mobile B-47	**Hammer Wt./Fall:**	140 lbs / 30 inches (safety)
Date Start/Finish:	5/2/14; 1510 - 5/2/14; 1530	**Drilling Method:**	SSA	**Core Barrel:**	
Boring Location:	loading slab - see geoplan	**Casing ID/OD:**		**Water Level*:**	3.2 ft (open hole)

Definitions:
D = Split Spoon Sample
MD = Unsuccessful Split Spoon Sample attempt
U = Thin Wall Tube Sample
MU = Unsuccessful Thin Wall Tube Sample attempt
V = Insitu Vane Shear Test
MV = Unsuccessful Insitu Vane Shear Test attempt

Definitions:
S_u = Insitu Field Vane Shear Strength (psf)
R = Rock Core Sample
RQD = Rock Quality Designation (%)
WOC = weight of casing
WOH = weight of 140lb. hammer
WOR = weight of rods

Definitions:
-- = not recorded
LL = Liquid Limit
PL = Plastic Limit
PI = Plasticity Index
WC = water content, percent
G = grain size analysis

Sample Information

Depth (ft.)	Sample No.	Pen./Rec. (in.)	Sample Depth (ft.)	Blows (/6 in.) Shear Strength (psf) qu/RQD (%)	N-value	Casing Blows	Elevation (ft.)	Graphic Log	Visual Description and Remarks	Lab. Testing Results
0									gravel surface	
5	1D	24/19	3.0 - 5.0	6-5-3-2	8				1D: [COMPOSITE SAMPLE] Loose, damp, reddish brown, f-c SAND, little to some Silt, trace Gravel; FILL. Gray Silty CLAY in tip of spoon.	1D SW-SM A-1-b 9% -#200
	2D	24/15	5.0 - 7.0	3-5-12-22	17				Wet, gray, Silty CLAY, changing at 6.0 ft to 2D: grayish-brown, wet, Gravelly f-c SAND, trace to little Silt.	
						5.7			7.0 — **Bottom of Exploration at 7.0 feet below ground surface.** No refusal encountered.	

Remarks:

Stratification lines represent approximate boundaries between soil types; transitions may be gradual.
* Water level readings have been made at times and under conditions stated. Groundwater fluctuations may occur due to conditions other than those present at the time measurements were made.

Page 1 of 1
Boring No.: B-109

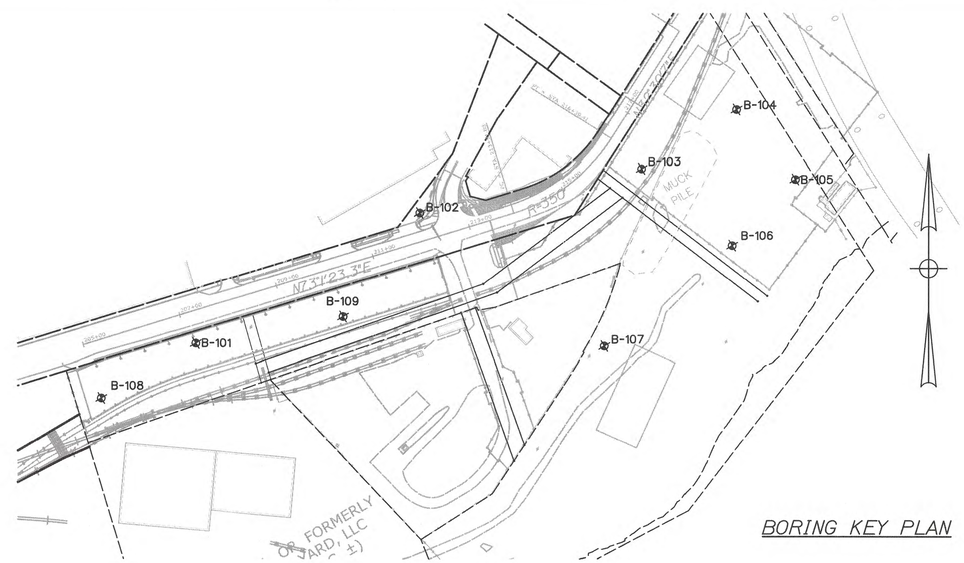

BORING KEY PLAN

STATE OF MAINE
DEPARTMENT OF TRANSPORTATION

PROJECT NUMBER 022809.20

WIN 022809.20

STATE OF MAINE — ISABEL V. SCHONEWALD No. 7528 — LICENSED PROFESSIONAL ENGINEER

	BY	DATE
PROJ. MANAGER	J. KITTREDGE	
DESIGN-DETAILED	MPC	6/14
CHECKED-REVIEWED	TJS	
DESIGN2-DETAILED2	CRM	
DESIGN3-DETAILED3		
REVISIONS 1		
REVISIONS 2		
REVISIONS 3		
REVISIONS 4		
FIELD CHANGES		

SIGNATURE
7328
P.E. NUMBER
6/27/14
DATE

PORTLAND INTERNATIONAL MARINE TERMINAL
EXISTING LAYDOWN AND CONNECTING CORRIDOR CONNECTION
PORTLAND CUMBERLAND COUNTY

BORING LOGS

SHEET NUMBER
C04

Date:6/26/2014
Username:
Division:
Filename: 007_BoringLogs.dgn

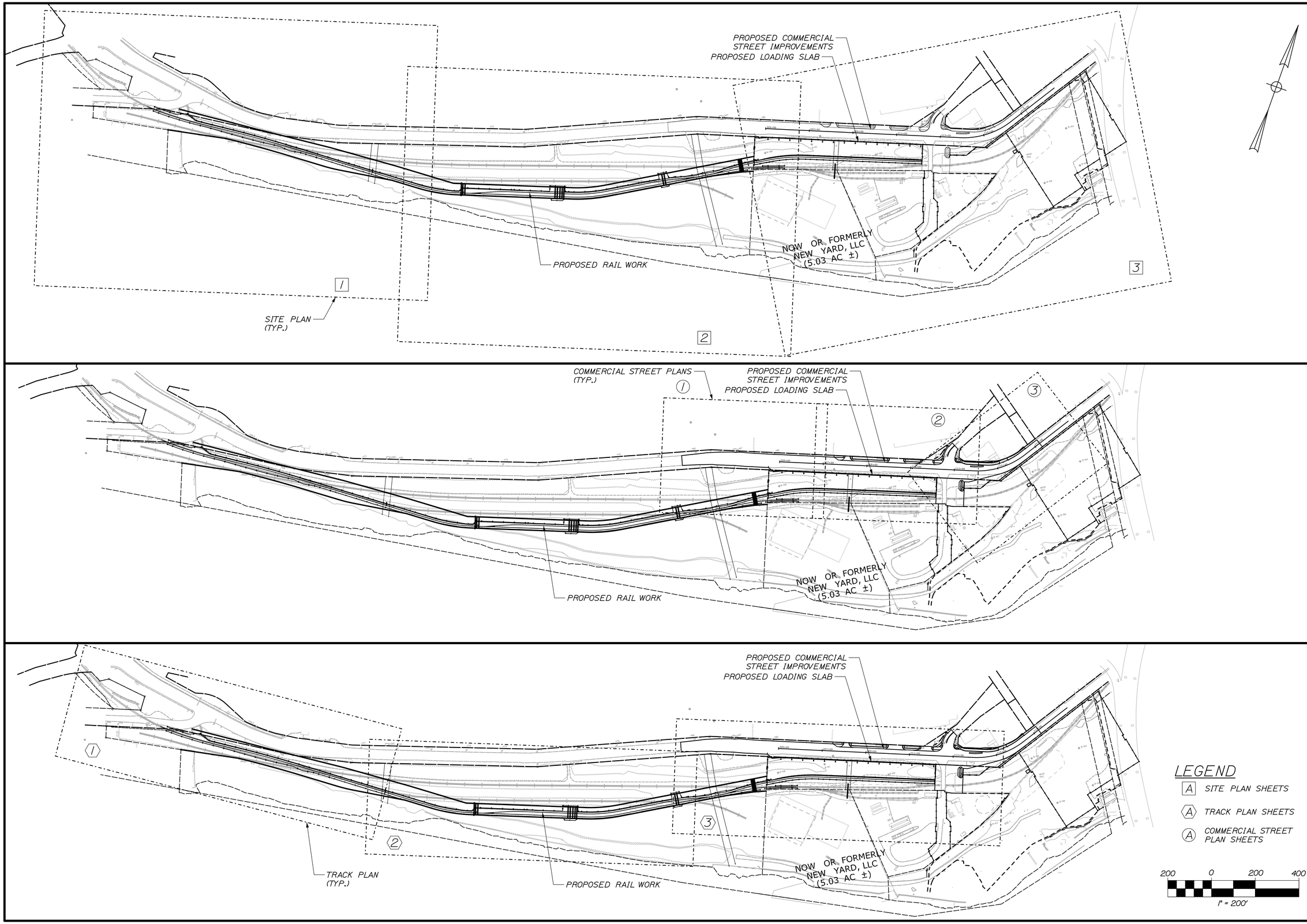

STATE OF MAINE
DEPARTMENT OF TRANSPORTATION

PROJECT NUMBER 022809.20

WIN 022809.20

SIGNATURE

P.E. NUMBER

DATE

		BY	DATE
PROJ. MANAGER	J. KITTREDGE		
DESIGN-DETAILED	CRM	MPC	06/14
CHECKED-REVIEWED	-	-	06/14
DESIGN2-DETAILED2	-	-	-
DESIGN3-DETAILED3	-	-	-
REVISIONS 1	-	-	-
REVISIONS 2	-	-	-
REVISIONS 3	-	-	-
REVISIONS 4	-	-	-
FIELD CHANGES	-	-	-

PORTLAND INTERNATIONAL MARINE TERMINAL
EXISTING LAYDOWN AND CONNECTING CORRIDOR CONNECTION
PORTLAND CUMBERLAND COUNTY

SHEET LAYOUT PLAN

SHEET NUMBER

C05

Filename: 008_LayoutPlan.dgn Division: Username: Date:6/26/2014

Filename: 009_SitePlan1.dgn Division: Username: Date:6/26/2014

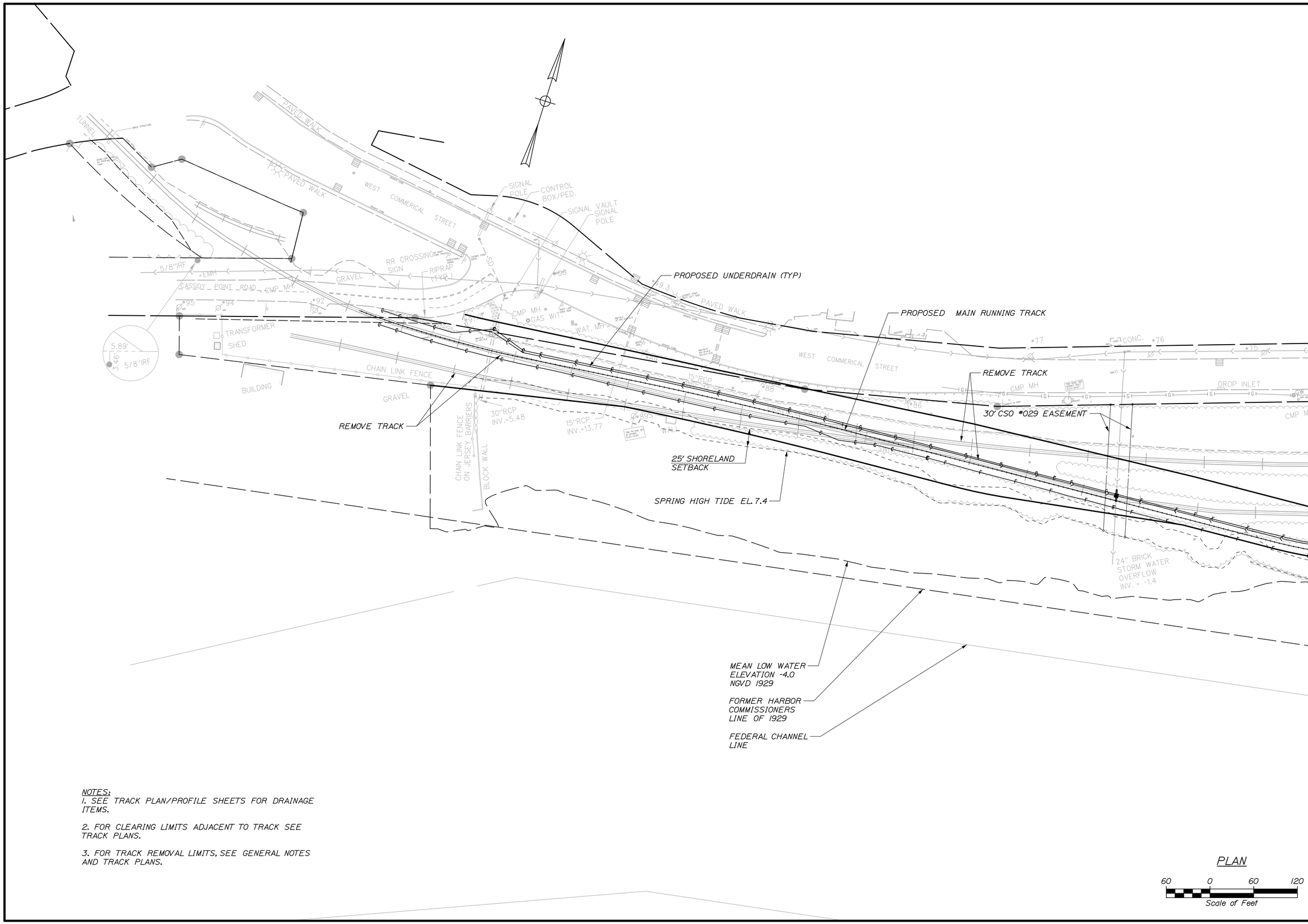

NOTES:
1. SEE TRACK PLAN/PROFILE SHEETS FOR DRAINAGE ITEMS.

2. FOR CLEARING LIMITS ADJACENT TO TRACK SEE TRACK PLANS.

3. FOR TRACK REMOVAL LIMITS, SEE GENERAL NOTES AND TRACK PLANS.

STATE OF MAINE
DEPARTMENT OF TRANSPORTATION

PROJECT NUMBER 022809.20

WIN 022809.20

		BY	DATE
PROJ. MANAGER	J. KITTREDGE		
DESIGN-DETAILED	HME	MPC	06/14
CHECKED-REVIEWED	-	CRM	06/14
DESIGN2-DETAILED2	-	-	-
DESIGN3-DETAILED3	-	-	-
REVISIONS 1	-	-	-
REVISIONS 2	-	-	-
REVISIONS 3	-	-	-
REVISIONS 4	-	-	-
FIELD CHANGES	-	-	-

SIGNATURE

P.E. NUMBER

DATE

PORTLAND INTERNATIONAL MARINE TERMINAL
EXISTING LAYDOWN AND CONNECTING CORRIDOR CONNECTION
PORTLAND CUMBERLAND COUNTY

SITE PLAN

SHEET NUMBER

C06

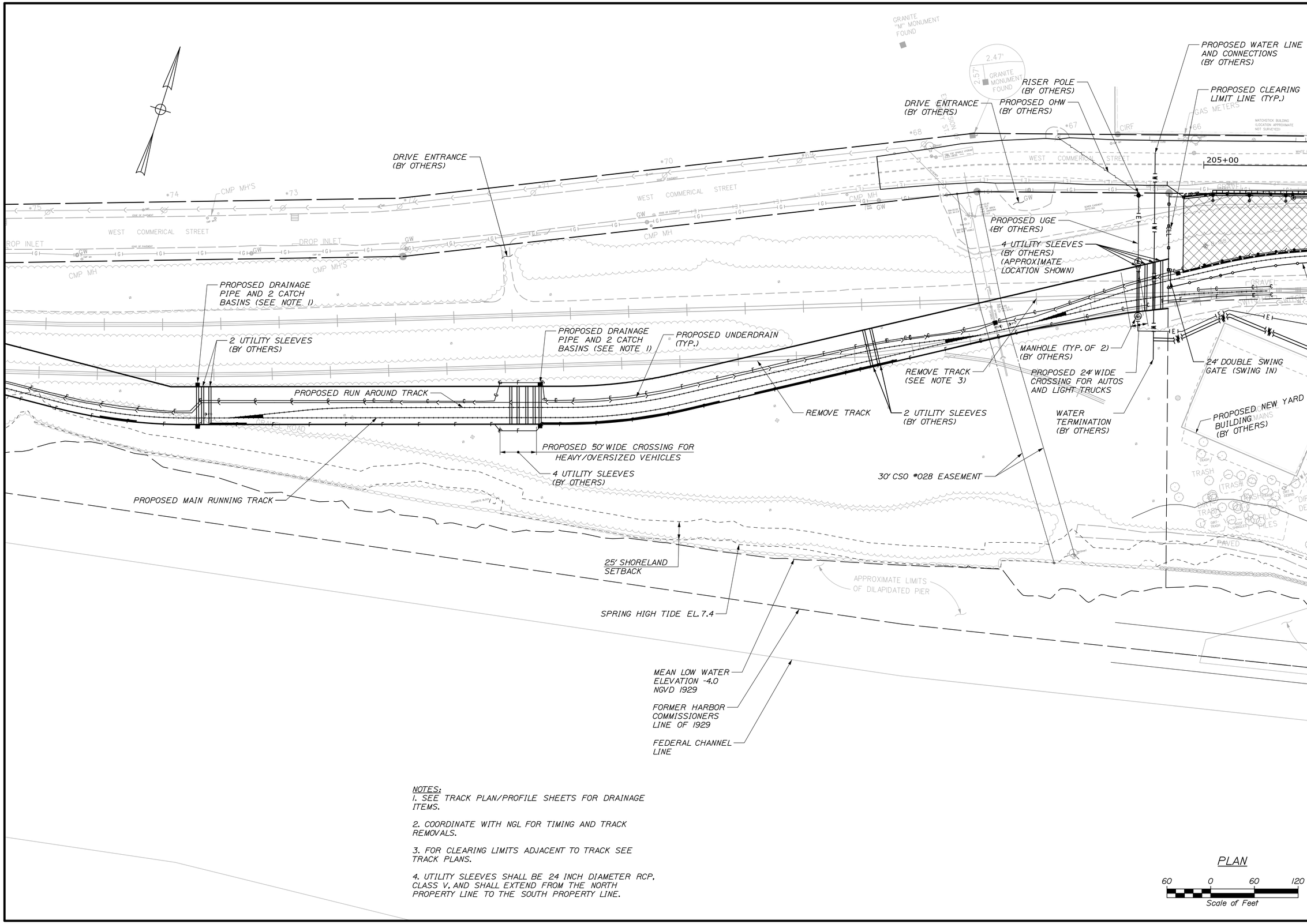

NOTES:
1. SEE TRACK PLAN/PROFILE SHEETS FOR DRAINAGE ITEMS.

2. COORDINATE WITH NGL FOR TIMING AND TRACK REMOVALS.

3. FOR CLEARING LIMITS ADJACENT TO TRACK SEE TRACK PLANS.

4. UTILITY SLEEVES SHALL BE 24 INCH DIAMETER RCP, CLASS V, AND SHALL EXTEND FROM THE NORTH PROPERTY LINE TO THE SOUTH PROPERTY LINE.

STATE OF MAINE
DEPARTMENT OF TRANSPORTATION

PROJECT NUMBER 022809.20

WIN 022809.20

	BY	DATE
PROJ. MANAGER	J. KITTREDGE	
DESIGN-DETAILED	MPC	06/14
CHECKED-REVIEWED	CRM	06/14
DESIGN2-DETAILED2	-	-
DESIGN3-DETAILED3	-	-
REVISIONS 1	-	-
REVISIONS 2	-	-
REVISIONS 3	-	-
REVISIONS 4	-	-
FIELD CHANGES	-	-

SIGNATURE

P.E. NUMBER

DATE

PORTLAND INTERNATIONAL MARINE TERMINAL
EXISTING LAYDOWN AND CONNECTING CORRIDOR CONNECTION
PORTLAND CUMBERLAND COUNTY

SITE PLAN

SHEET NUMBER

C07

Date:7/11/2014 Username: Division: Filename: 010_SitePlan2.dgn

CONSTRUCTION BASELINE COORDINATES

	NORTHING	EASTING
STA. 205+00.00	295911.7266	2926733.1119
PC STA. 213+91.88	296172.1435	2927586.1293
PT STA. 216+39.41	296318.8266	2927779.1151
POE STA. 218+90.84	296530.8706	2927914.2121

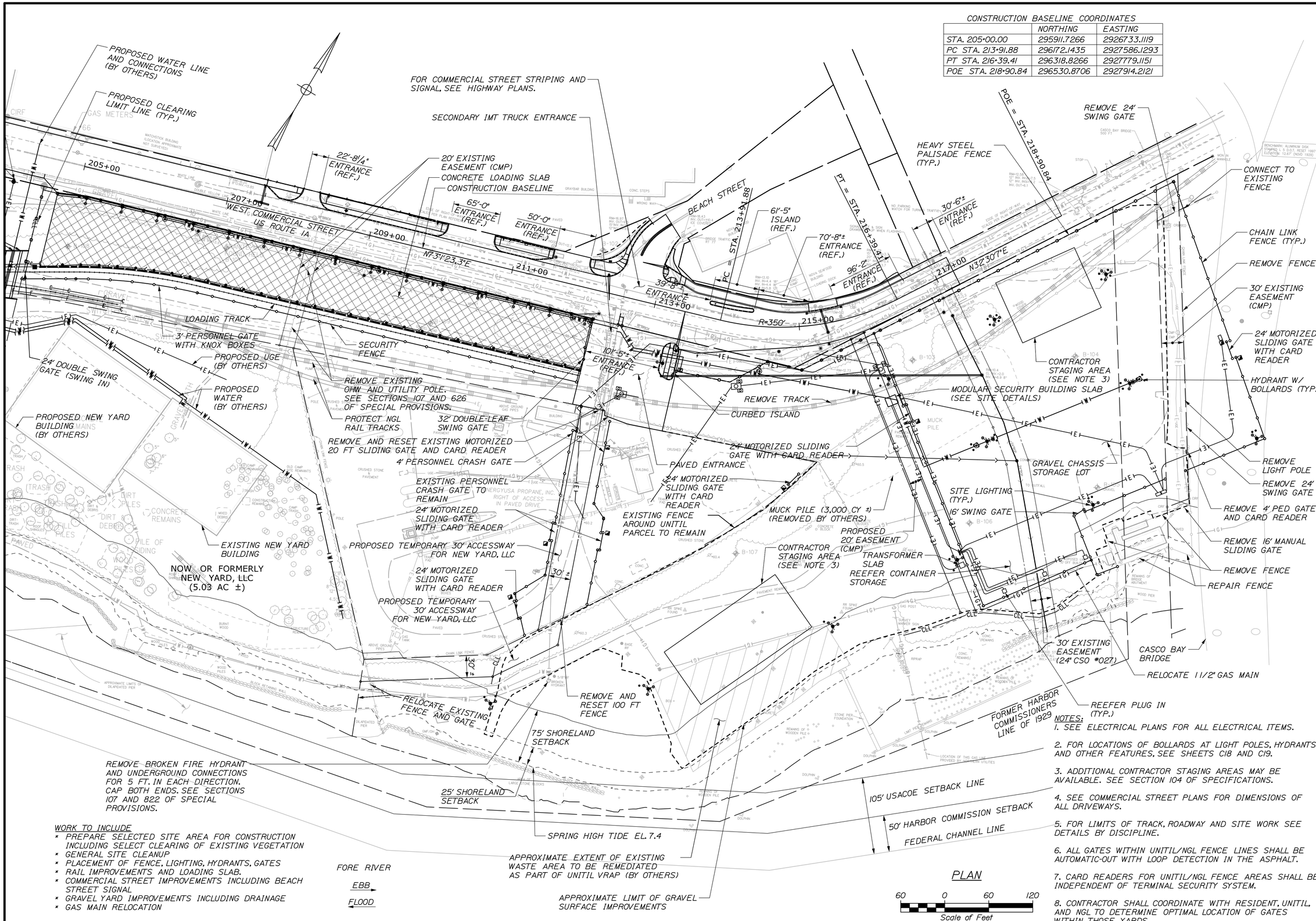

WORK TO INCLUDE

- PREPARE SELECTED SITE AREA FOR CONSTRUCTION INCLUDING SELECT CLEARING OF EXISTING VEGETATION
- GENERAL SITE CLEANUP
- PLACEMENT OF FENCE, LIGHTING, HYDRANTS, GATES
- RAIL IMPROVEMENTS AND LOADING SLAB.
- COMMERCIAL STREET IMPROVEMENTS INCLUDING BEACH STREET SIGNAL
- GRAVEL YARD IMPROVEMENTS INCLUDING DRAINAGE
- GAS MAIN RELOCATION

NOTES:

1. SEE ELECTRICAL PLANS FOR ALL ELECTRICAL ITEMS.
2. FOR LOCATIONS OF BOLLARDS AT LIGHT POLES, HYDRANTS, AND OTHER FEATURES, SEE SHEETS C18 AND C19.
3. ADDITIONAL CONTRACTOR STAGING AREAS MAY BE AVAILABLE. SEE SECTION 104 OF SPECIFICATIONS.
4. SEE COMMERCIAL STREET PLANS FOR DIMENSIONS OF ALL DRIVEWAYS.
5. FOR LIMITS OF TRACK, ROADWAY AND SITE WORK SEE DETAILS BY DISCIPLINE.
6. ALL GATES WITHIN UNITIL/NGL FENCE LINES SHALL BE AUTOMATIC-OUT WITH LOOP DETECTION IN THE ASPHALT.
7. CARD READERS FOR UNITIL/NGL FENCE AREAS SHALL BE INDEPENDENT OF TERMINAL SECURITY SYSTEM.
8. CONTRACTOR SHALL COORDINATE WITH RESIDENT, UNITIL, AND NGL TO DETERMINE OPTIMAL LOCATION OF GATES WITHIN THOSE YARDS.

STATE OF MAINE
DEPARTMENT OF TRANSPORTATION

PROJECT NUMBER 022809.20

WIN 022809.20

	BY	DATE
PROJ. MANAGER	J. KITTREDGE	
DESIGN-DETAILED	HME	06/14
CHECKED-REVIEWED	MPC	06/14
DESIGN2-DETAILED2	CRM	06/14
DESIGN3-DETAILED3		
REVISIONS 1		
REVISIONS 2		
REVISIONS 3		
REVISIONS 4		
FIELD CHANGES		

SIGNATURE

P.E. NUMBER

DATE

PORTLAND INTERNATIONAL MARINE TERMINAL
EXISTING LAYDOWN AND CONNECTING CORRIDOR CONNECTION
PORTLAND CUMBERLAND COUNTY

SITE PLAN

SHEET NUMBER

C08

Filename: 011_SitePlan3.dgn Division: Username: Date:7/11/2014

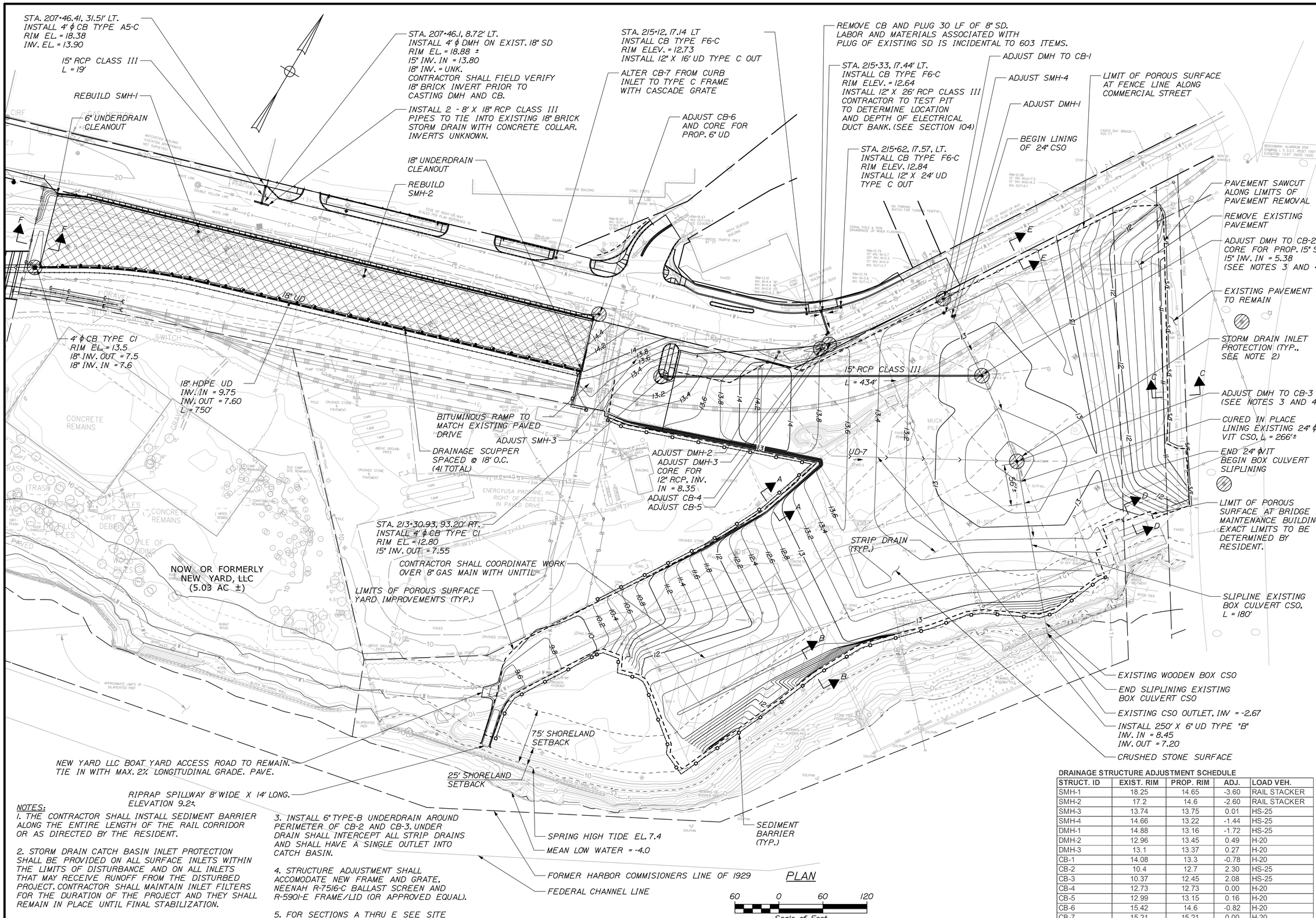

NOTES:

1. THE CONTRACTOR SHALL INSTALL SEDIMENT BARRIER ALONG THE ENTIRE LENGTH OF THE RAIL CORRIDOR OR AS DIRECTED BY THE RESIDENT.

2. STORM DRAIN CATCH BASIN INLET PROTECTION SHALL BE PROVIDED ON ALL SURFACE INLETS WITHIN THE LIMITS OF DISTURBANCE AND ON ALL INLETS THAT MAY RECEIVE RUNOFF FROM THE DISTURBED PROJECT. CONTRACTOR SHALL MAINTAIN INLET FILTERS FOR THE DURATION OF THE PROJECT AND THEY SHALL REMAIN IN PLACE UNTIL FINAL STABILIZATION.

3. INSTALL 6" TYPE-B UNDERDRAIN AROUND PERIMETER OF CB-2 AND CB-3. UNDER DRAIN SHALL INTERCEPT ALL STRIP DRAINS AND SHALL HAVE A SINGLE OUTLET INTO CATCH BASIN.

4. STRUCTURE ADJUSTMENT SHALL ACCOMODATE NEW FRAME AND GRATE, NEENAH R-7516-C BALLAST SCREEN AND R-5901-E FRAME/LID (OR APPROVED EQUAL).

5. FOR SECTIONS A THRU E SEE SITE DETAILS SHEET 5.

DRAINAGE STRUCTURE ADJUSTMENT SCHEDULE

STRUCT. ID	EXIST. RIM	PROP. RIM	ADJ.	LOAD VEH.
SMH-1	18.25	14.65	-3.60	RAIL STACKER
SMH-2	17.2	14.6	-2.60	RAIL STACKER
SMH-3	13.74	13.75	0.01	HS-25
SMH-4	14.66	13.22	-1.44	HS-25
DMH-1	14.88	13.16	-1.72	HS-25
DMH-2	12.96	13.45	0.49	H-20
DMH-3	13.1	13.37	0.27	H-20
CB-1	14.08	13.3	-0.78	H-20
CB-2	10.4	12.7	2.30	HS-25
CB-3	10.37	12.45	2.08	HS-25
CB-4	12.73	12.73	0.00	H-20
CB-5	12.99	13.15	0.16	H-20
CB-6	15.42	14.6	-0.82	H-20
CB-7	15.21	15.21	0.00	H-20

STATE OF MAINE
DEPARTMENT OF TRANSPORTATION

PROJECT NUMBER 022809.20

WIN 022809.20

	BY	DATE
PROJ. MANAGER	J. KITTREDGE	
DESIGN-DETAILED	MPC	06/14
CHECKED-REVIEWED	CRM	06/14
DESIGN2-DETAILED2	-	-
DESIGN3-DETAILED3	-	-
REVISIONS 1	-	-
REVISIONS 2	-	-
REVISIONS 3	-	-
REVISIONS 4	-	-
FIELD CHANGES	-	-

SIGNATURE

P.E. NUMBER

DATE

PORTLAND INTERNATIONAL MARINE TERMINAL
EXISTING LAYDOWN AND CONNECTING CORRIDOR CONNECTION
PORTLAND CUMBERLAND COUNTY

SITE GRADING AND DRAINAGE PLAN

SHEET NUMBER

C09

Filename: 012_SiteGradingPlan3.dgn Division: Username: Date:7/11/2014

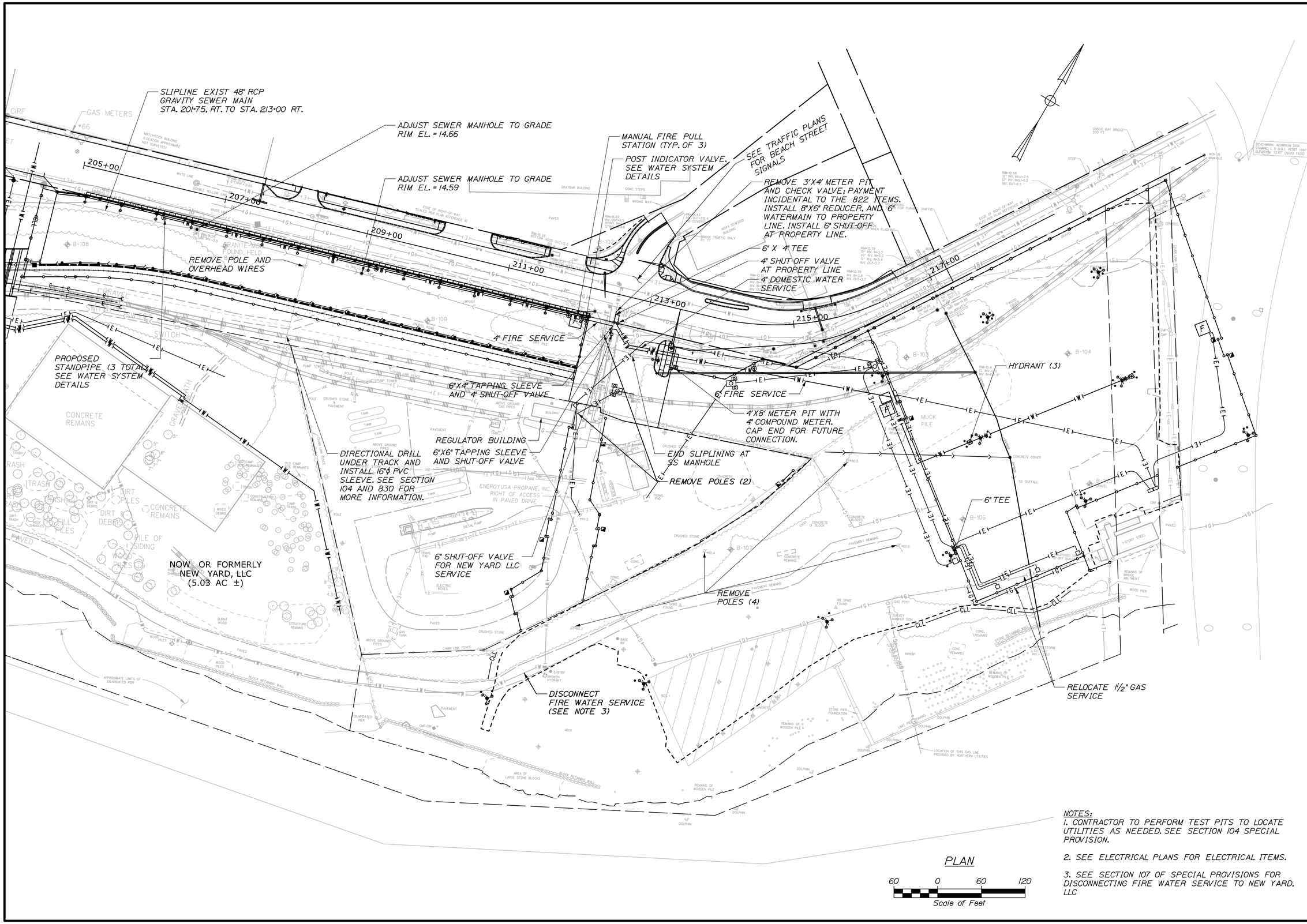

NOTES:

1. CONTRACTOR TO PERFORM TEST PITS TO LOCATE UTILITIES AS NEEDED. SEE SECTION 104 SPECIAL PROVISION.

2. SEE ELECTRICAL PLANS FOR ELECTRICAL ITEMS.

3. SEE SECTION 107 OF SPECIAL PROVISIONS FOR DISCONNECTING FIRE WATER SERVICE TO NEW YARD, LLC

STATE OF MAINE
DEPARTMENT OF TRANSPORTATION

PROJECT NUMBER 022809.20

WIN 022809.20

		BY	DATE
PROJ. MANAGER	J. KITTREDGE		
DESIGN-DETAILED	HME	MPC	06/14
CHECKED-REVIEWED	_	CRM	06/14
DESIGN2-DETAILED2	-	-	-
DESIGN3-DETAILED3	-	-	-
REVISIONS 1	-	-	-
REVISIONS 2	-	-	-
REVISIONS 3	-	-	-
REVISIONS 4	-	-	-
FIELD CHANGES	-	-	-

SIGNATURE

P.E. NUMBER

DATE

PORTLAND INTERNATIONAL MARINE TERMINAL
EXISTING LAYDOWN AND CONNECTING CORRIDOR CONNECTION
PORTLAND CUMBERLAND COUNTY

SITE UTILITY PLAN

SHEET NUMBER

C10

Filename: 013_SiteUtilityPlan3.dgn Division: Username: Date:7/11/2014

EROSION CONTROL NOTES:

1. THE ANTICIPATED EROSION CONTROL DEVICES ARE SHOWN ON THE PLANS. THE CONTRACTOR SHALL PROPOSE ACTUAL TYPE AND LOCATION OF DEVICES FOR APPROVAL BE THE RESIDENT. ADDITIONAL MEASURES MAY BE PROPOSED BY THE CONTRACTOR DUE TO SITE OR WEATHER CONDITIONS. THE RESIDENT MAY DIRECT THE CONTRACTOR TO IMPLEMENT ADDITIONAL MEASURES.

2. EROSION AND SEDIMENTATION CONTROL MEASURES SHALL BE PROVIDED IN ACCORDANCE WITH THE LATEST "MAINE EROSION AND SEDIMENT CONTROL BMPS" BY THE BUREAU OF LAND AND WATER QUALITY, MAINE DEPARTMENT OF ENVIRONMENTAL PROTECTION.

3. THE CONTRACTOR SHALL ONLY DISTURB THE AREAS OF THE PROPOSED CONSTRUCTION AND GRADING. ANY DISTURBANCE OUTSIDE THESE LIMITS MUST BE APPROVED BY THE ENGINEER.

4. THE CONTRACTOR SHALL INSTALL ALL EROSION AND SEDIMENTATION CONTROL MEASURES IN ACCORDANCE WITH THE EROSION CONTROL PLAN. THE CONTRACTOR SHALL BE RESPONSIBLE FOR EMPLOYING EROSION CONTROL METHODS BEYOND THE CONTROLS SHOWN ON THE PLANS IN ORDER TO MEET THE ABOVE-REFERENCED DEP EROSION CONTROL STANDARDS.

5. ALL EROSION CONTROL MEASURES SHALL BE INSTALLED PRIOR TO ANY SITE EXCAVATION OR RE-GRADING. ALL DISTURBED AREAS ON SITE NOT COVERED BY BUILDINGS OR DESIGNATED PARKING AREAS, DRIVEWAYS, OR SIDEWALKS SHALL BE STABILIZED WITH LOAM AND SEED OR OTHER METHODS AS REQUIRED/DESCRIBED IN THE MAINE DEP BMP STANDARDS.

6. PERMANENT SEEDING OR STABILIZATION SHALL BE PERFORMED IMMEDIATELY AFTER FINAL GRADING IS COMPLETED OR TEMPORARY MEASURES SHALL BE APPLIED SUCH AS MULCHING OR SEEDING UNTIL PERMANENT MEASURES ARE IN PLACE.

7. WITHIN 7 CALENDAR DAYS FOLLOWING THE COMPLETION OF ANY SOIL DISTURBANCE, AND PRIOR TO ANY STORM EVENT, MULCH MUST BE SPREAD ON ANY EXPOSED SOILS.

8. THE CONTRACTOR SHALL STABILIZE ANY SOIL STOCKPILES WHICH WILL REMAIN UNUSED FOR MORE THAN 7 DAYS, OR PRIOR TO A STORM EVENT.

9. ALL EROSION CONTROL DEVICES MUST BE CHECKED WEEKLY AND AFTER EACH SIGNIFICANT RAINFALL TO MINIMIZE PONDING, DAMAGE, DETERIORATION OR UNDERMINING. ANY PROBLEMS SHALL BE REPAIRED IMMEDIATELY. TRAPPED SEDIMENT SHALL BE REMOVED WHEN IT HAS ACCUMULATED TO NO MORE THAN HALF THE ORIGINAL HEIGHT OF ANY BARRIER OR AS OTHERWISE SHOWN ON THE PLANS.

10. ALL TRAFFIC INTO AND OUT OF THE SITE SHALL BE OVER A STABILIZED CONSTRUCTION ENTRANCE.

11. LINEAR UTILITY CONSTRUCTION SHALL BE SEEDED AND MULCHED WITHIN 7 DAYS AFTER BACKFILL AND NO MORE THAN 500 FEET SHALL BE OPEN AT ANY ONE TIME. WHERE CONSISTENT WITH JOB SAFETY REQUIREMENTS, ALL EXCAVATED MATERIALS SHALL BE PLACED ON THE UPHILL SIDES OF ALL TRENCHES. ALL TEMPORARY EARTH BERMS SHALL BE SEEDED AND MULCHED WITH TEMPORARY VEGETATION WITHIN 7 DAYS AFTER GRADING.

12. SEDIMENT BARRIERS MUST BE MAINTAINED UNTIL DISTURBED AREAS ARE PERMANENTLY STABILIZED.

13. EROSION CONTROL DEVICES (EROSION CONTROL BLANKET, SEDIMENT BARRIER, STABILIZED CONSTRUCTION ENTRANCE) SHALL BE REMOVED WITHIN 30 DAYS OF FINAL STABILIZATION.

14. SEEDED AREAS SHALL BE FERTILIZED AND RESEEDED AS NECESSARY TO ENSURE VEGETATION IS ESTABLISHED.

15. 4" LOAM HAS BEEN ESTIMATED FOR 100% OF THE DISTURBED SLOPE AREA UNLESS OTHERWISE SPECIFIED ON THE PLANS. ACTUAL PLACEMENT OF THE LOAM SHALL BE AS DESIGNATED BY THE RESIDENT.

SEEDING NOTES:

1. ALL SEEDING SHALL BE IN ACCORDANCE WITH SECTION 618.

2. ALL FINAL SEEDING SHALL BE COMPLETED WITHIN SEVEN (7) DAYS FOLLOWING FINAL GRADING.

3. ALL AREAS SHALL BE MULCHED IMMEDIATELY AFTER SEEDING. THE CONTRACTOR SHALL MONITOR THE MULCH PERFORMANCE AND, IF MULCHING PROVES TO BE INEFFECTIVE, THEN NETTING AND MATTING SHALL BE USED IN ITS PLACE.

4. SEEDING SHALL BE PERFORMED BETWEEN APRIL 15TH AND OCTOBER 1ST (WITHOUT DORMANT SEEDING).

5. ALL SEEDING SHALL BE METHOD NUMBER 1.

Filename: 014_ErosSediNotes.dgn Division: Username: Date:6/26/2014

STATE OF MAINE
DEPARTMENT OF TRANSPORTATION

PROJECT NUMBER 022809.20

WIN 022809.20

		BY	DATE
PROJ. MANAGER	J. KITTREDGE		
DESIGN-DETAILED	HME	MPC	06/14
CHECKED-REVIEWED	"	CRM	06/14
DESIGN2-DETAILED2	"	"	"
DESIGN3-DETAILED3	"	"	"
REVISIONS 1	"	"	"
REVISIONS 2	"	"	"
REVISIONS 3	"	"	"
REVISIONS 4	"	"	"
FIELD CHANGES	"	"	"

SIGNATURE

P.E. NUMBER

DATE

PORTLAND INTERNATIONAL MARINE TERMINAL
EXISTING LAYDOWN AND CONNECTING CORRIDOR CONNECTION
PORTLAND CUMBERLAND COUNTY

EROSION AND SEDIMENTATION CONTROL NOTES

SHEET NUMBER

C11

NOTES:

1. THE STABILIZED CONSTRUCTION ENTRANCE SHALL BE LOCATED WHERE TRAFFIC WILL ENTER OR LEAVE THE CONSTRUCTION SITE ONTO A PUBLIC STREET.

2. FILTER FABRIC OR COMPACTED CRUSHER RUN STONE SHALL BE USED AS A BASE FOR THE CONSTRUCTION ENTRANCE.

3. THE ENTRANCE SHALL BE MAINTAINED IN A CONDITION WHICH WILL PREVENT TRACKING OR FLOWING OF SEDIMENT ONTO PUBLIC STREETS OR EXISTING PAVEMENT. THIS MAY REQUIRE PERIODIC TOP DRESSING WITH ADDITIONAL STONE AS CONDITIONS WARRANT AND REPAIR OR CLEANOUT OF ANY MEASURES USED TO TRAP SEDIMENT.

4. ANY SEDIMENT SPILLED, DROPPED, WASHED, OR TRACKED ONTO PUBLIC STREETS MUST BE REMOVED IMMEDIATELY.

5. ADDITIONAL EROSION CONTROL MEASURES SHALL BE INSTALLED IN ORDER TO TRAP AND STABILIZE ANY SEDIMENT THAT RUNS OFF OF THE STABILIZED CONSTRUCTION ENTRANCE.

6. WHEN APPROPRIATE, WHEELS MUST BE CLEANED TO REMOVE SEDIMENT PRIOR TO ENTERING A PUBLIC STREET.

7. WHEN WASHING IS REQUIRED, IT SHALL BE DONE IN AN AREA STABILIZED WITH CRUSHED STONE WHICH DRAINS INTO AN APPROVED SEDIMENT TRAP OR SEDIMENT BASIN.

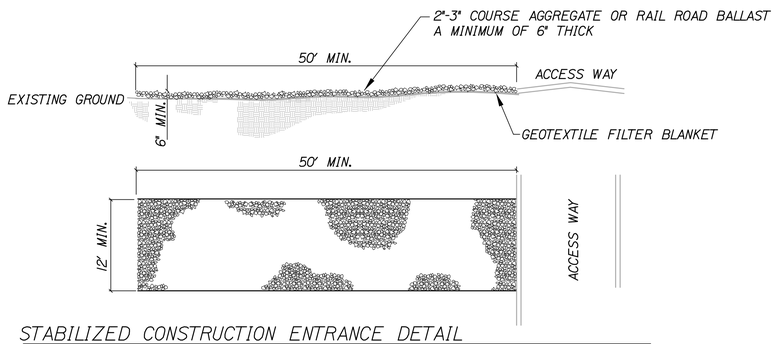

STABILIZED CONSTRUCTION ENTRANCE DETAIL
NOT TO SCALE

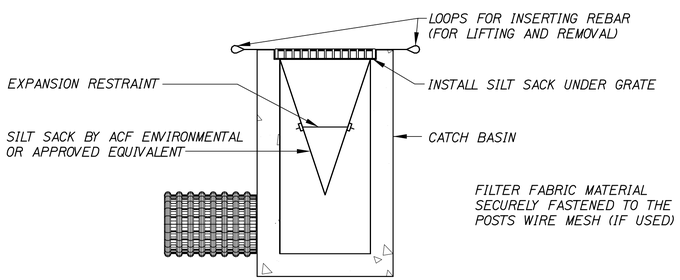

NOTES:

1. INSTALL SILTSACK PER MANUFACTUREER'S RECOMENDATIONS.
2. SILTSACKS SHALL BE CHECKED FOR SEDIMENT LEVEL AND OVERALL CONDITION IMMEDIATELY AFTER EVERY RAIN EVENT AND AT LEAST EVERY DAY DURING PROLONGED RAINFALL..
3. SEDIMENT SHALL BE REMOVED WHEN THE SEDIMENT HAS ACCUMULATED TO 1/2 THE DESIGN DEPTH OF THE SILTSACK. REMOVED SEDIMENT SHALL BE DISPOSITED IN A SUITABLE AREA AND IN SUCH A MANNER THAT WILL NOT ERODE.
4. SEDIMENT SHALL ONLY BE REMOVED BY REMOVING THE SILTSACKS FROM THE CATCH BASINS ACCORDING TO MANUFACTUREER RECOMENDATIONS.
6. CARE SHALL BE TAKEN TO AVOID SPILLING SEDIMENT WHILE REMOVING THE SILTSACK.
7. ANY DAMAGED SILTSACK SHALL BE REPLACED WITH A NEW SILTSACK.

INLET PROTECTION - SILTSACK
NOT TO SCALE

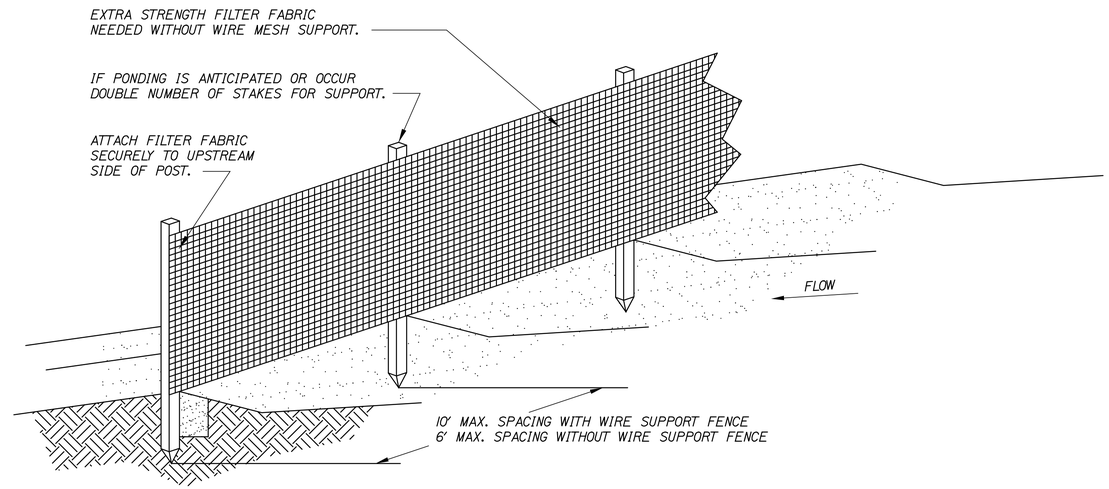

NOTE:

PRE-FABRICATED SILT FENCE IS ACCEPTABLE IF INSTALLED PER MANUFACTURER.

NOTES:

1. SILT FENCE SHALL BE PLACED ON SLOPE CONTOURS TO MAXIMIZE PONDING EFFICIENCY.

2. INSPECT AND REPAIR FENCE AFTER EACH STORM EVENT AND REMOVE SEDIMENT WHEN NECESSARY. 9" MAXIMUM RECOMMENDED STORAGE HEIGHT.

3. REMOVED SEDIMENT SHALL BE DEPOSITED TO AN AREA THAT WILL NOT CONTRIBUTE SEDIMENT OFF-SITE AND CAN BE PERMANENTLY STABILIZED.

4. DO NOT PLACE SILT FENCE IN STREAMS OR CONCENTRATED FLOW CONDITIONS.

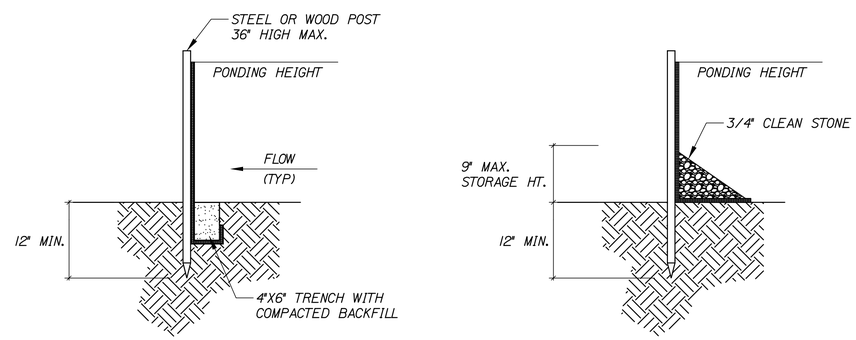

TRENCH DETAIL

LEDGE, FROZEN GROUND, HEAVY ROOTS INSTALLATION WITHOUT TRENCHING

SILT FENCE DETAIL
NOT TO SCALE

STATE OF MAINE
DEPARTMENT OF TRANSPORTATION

PROJECT NUMBER 022809.20

WIN
022809.20

		BY	DATE
PROJ. MANAGER	J. KITTREDGE		
DESIGN-DETAILED	HME	MPC	06/14
CHECKED-REVIEWED	-	CRM	06/14
DESIGN2-DETAILED2	-	-	-
DESIGN3-DETAILED3	-	-	-
REVISIONS 1	-		-
REVISIONS 2	-		-
REVISIONS 3	-		-
REVISIONS 4	-		-
FIELD CHANGES	-		-

SIGNATURE

P.E. NUMBER

DATE

PORTLAND INTERNATIONAL MARINE TERMINAL
EXISTING LAYDOWN AND CONNECTING CORRIDOR CONNECTION
PORTLAND CUMBERLAND COUNTY

EROSION AND SEDIMENTATION CONTROL DETAILS

SHEET NUMBER
C12

Date:6/26/2014
Username:
Division:
Filename: 015_ErosSedDets.dgn

NOTE:
TYPE D AGGREGRATE SUBBASE SHALL HAVE BETWEEN 4% AND 7% FINES (PERCENT PASSING #200 SIEVE) TO ACT AS A FILTER LAYER.

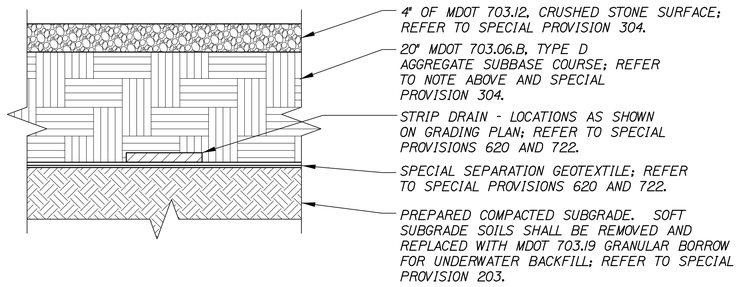

CHASSIS STORAGE YARD POROUS SURFACE DETAIL
NOT TO SCALE

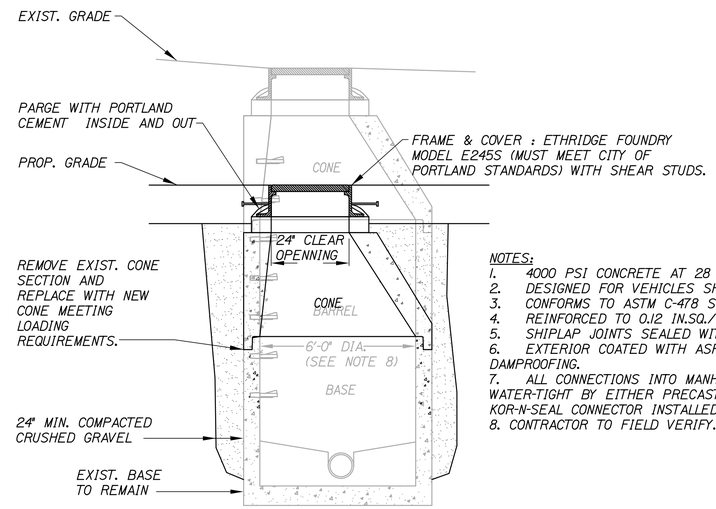

NOTES:
1. 4000 PSI CONCRETE AT 28 DAYS.
2. DESIGNED FOR VEHICLES SHOWN ON SHEET G3.
3. CONFORMS TO ASTM C-478 SPECIFICATIONS.
4. REINFORCED TO 0.12 IN.SQ./L.F.
5. SHIPLAP JOINTS SEALED WITH BUTYL RUBBER.
6. EXTERIOR COATED WITH ASPHALTIC PROTECTIVE DAMPROOFING.
7. ALL CONNECTIONS INTO MANHOLE SHALL BE WATER-TIGHT BY EITHER PRECAST FLEXIBLE BOOT OR KOR-N-SEAL CONNECTOR INSTALLED IN CORED HOLE.
8. CONTRACTOR TO FIELD VERIFY.

ADJUST LOADING SLAB MANHOLE (SMH) TO GRADE
NOT TO SCALE

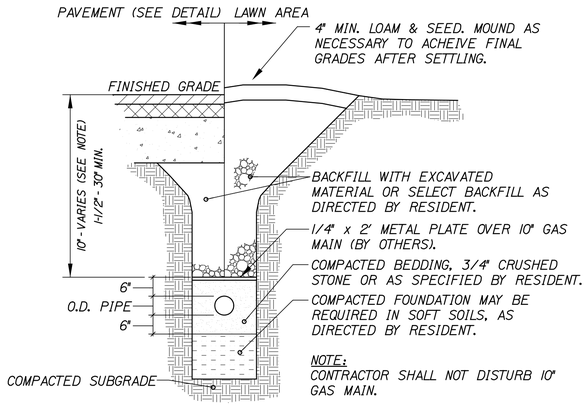

NOTE:
CONTRACTOR SHALL NOT DISTURB 10" GAS MAIN.

GAS TRENCH SECTION
NOT TO SCALE

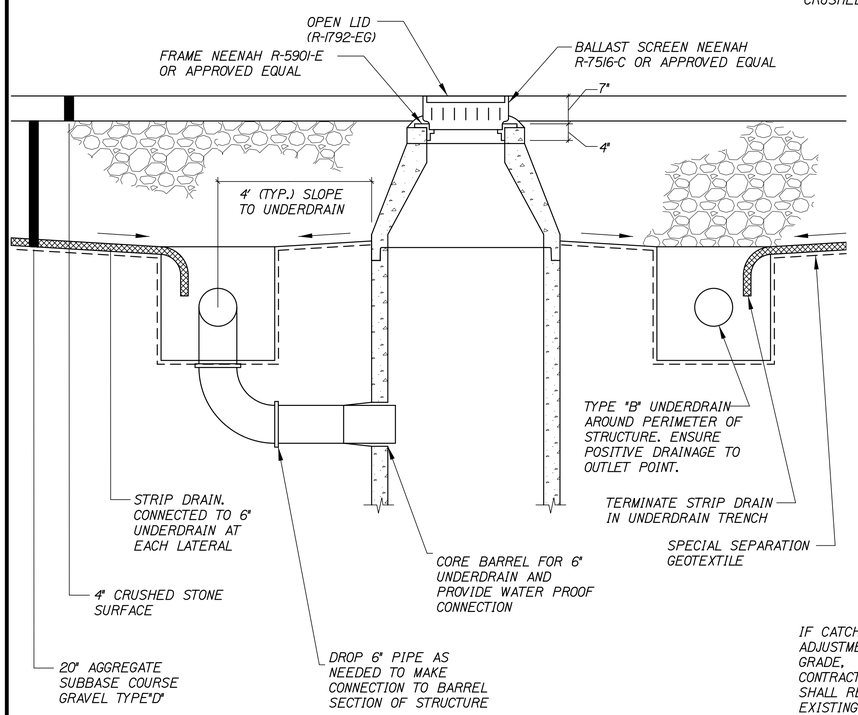

STRIP DRAIN CONNECTION TO CB2 AND CB3 DETAIL
NOT TO SCALE

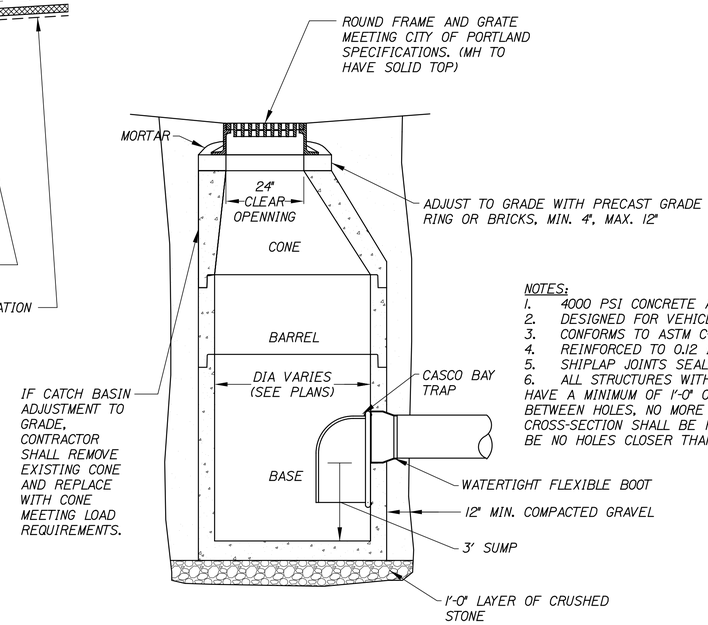

NOTES:
1. 4000 PSI CONCRETE AT 28 DAYS.
2. DESIGNED FOR VEHICLES SHOWN ON SHEET G3.
3. CONFORMS TO ASTM C-478 SPECIFICATIONS.
4. REINFORCED TO 0.12 IN.SQ./L.F.
5. SHIPLAP JOINTS SEALED WITH BUTYL RUBBER.
6. ALL STRUCTURES WITH MULTIPLE PIPES SHALL HAVE A MINIMUM OF 1'-0" OF OUTSIDE SURFACE BETWEEN HOLES, NO MORE THAN 75% OF A HORIZONTAL CROSS-SECTION SHALL BE HOLES, AND THERE SHALL BE NO HOLES CLOSER THAN 3" FROM JOINTS.

CATCH BASIN (CB)
NOT TO SCALE

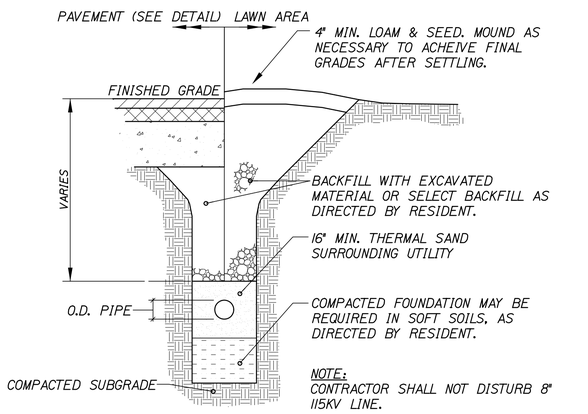

NOTE:
CONTRACTOR SHALL NOT DISTURB 8" 115KV LINE.

115KV ELECTRICAL TRENCH SECTION
NOT TO SCALE

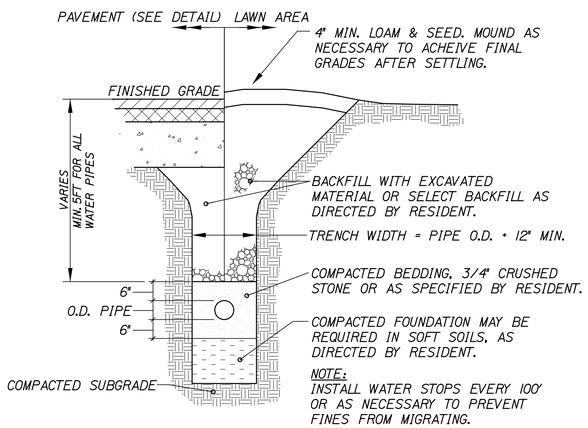

NOTE:
INSTALL WATER STOPS EVERY 100' OR AS NECESSARY TO PREVENT FINES FROM MIGRATING.

UTILITY TRENCH SECTION
NOT TO SCALE

STATE OF MAINE
DEPARTMENT OF TRANSPORTATION

PROJECT NUMBER 022809.20

WIN 022809.20

		BY	DATE
PROJ. MANAGER	J. KITTREDGE		
DESIGN-DETAILED	HME	MPC	06/14
CHECKED-REVIEWED		CRM	06/14
DESIGN2-DETAILED2			
DESIGN3-DETAILED3			
REVISIONS 1			
REVISIONS 2			
REVISIONS 3			
REVISIONS 4			
FIELD CHANGES			

SIGNATURE

P.E. NUMBER

DATE

PORTLAND INTERNATIONAL MARINE TERMINAL
EXISTING LAYDOWN AND CONNECTING CORRIDOR CONNECTION
PORTLAND CUMBERLAND COUNTY

SITE DETAILS

SHEET NUMBER
C13

Date:6/26/2014
Username:
Division:
Filename: 016_SiteDets.dgn

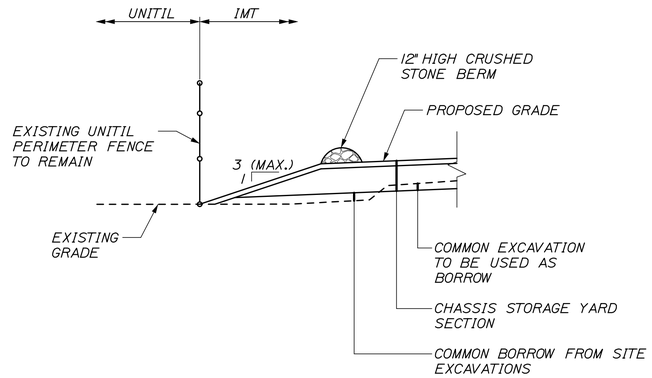

SECTION A-A
NTS

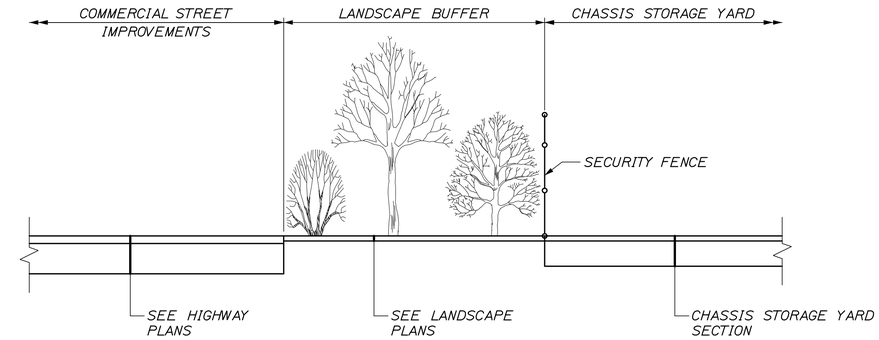

SECTION E-E
NTS

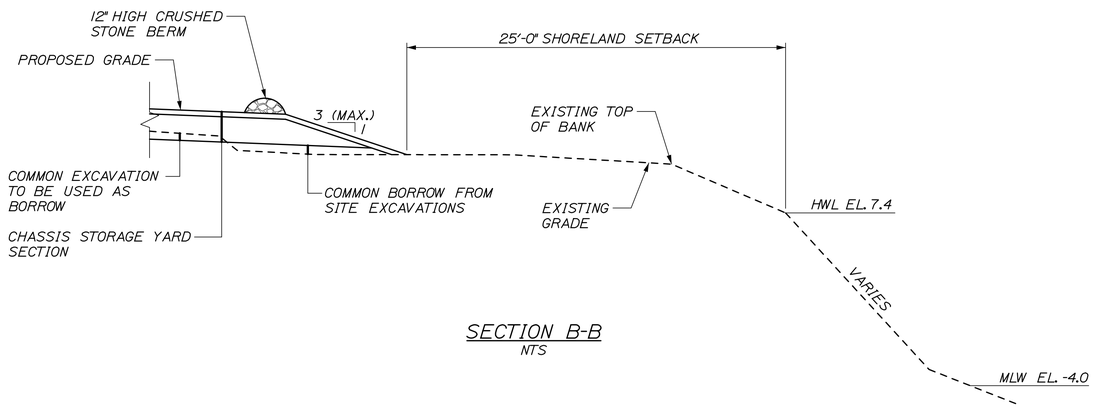

SECTION B-B
NTS

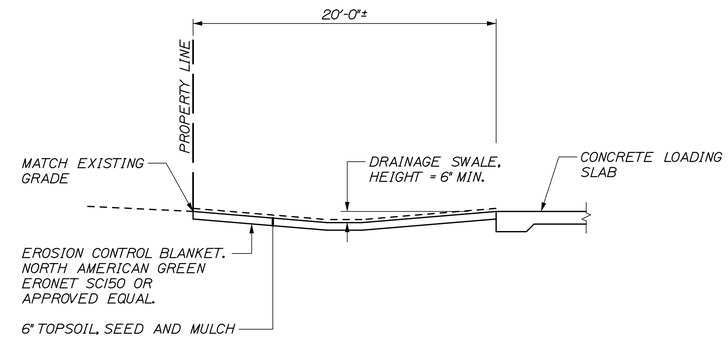

SECTION F-F
NTS

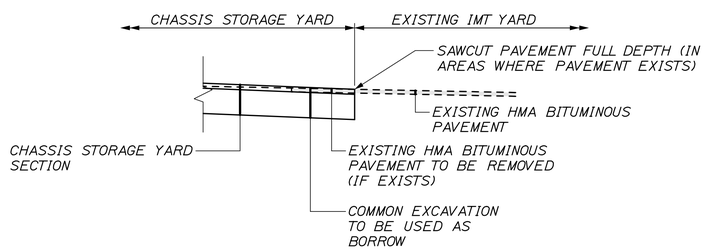

SECTION C-C
NTS

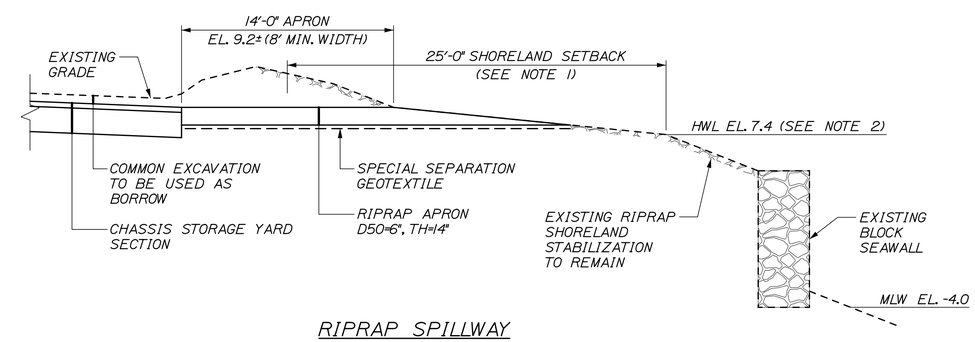

RIPRAP SPILLWAY
NTS

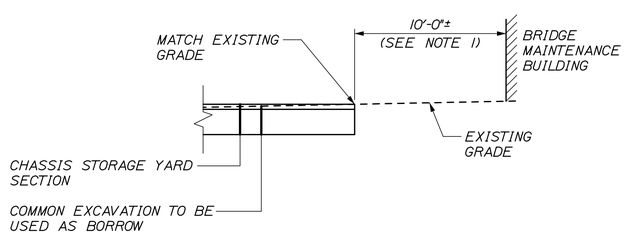

SECTION D-D
NTS

NOTES:
1. RESIDENT TO DETERMINE EXACT MATCH LIMITS BASED ON EXISTING FIELD CONDITIONS.

NOTES:
1. CONTRACTOR TO MINIMIZE LAND DISTURBANCE WITHIN 25' SHORELAND SETBACK. ALL EROSION CONTROL MEASURES MUST BE IN PLACE AND APPROVED BY RESIDENT PRIOR TO COMMENCING WITH CONSTRUCTION.

2. CONTRACTOR SHALL NOT DISTURB GROUND BELOW HWL EL. 7.4.

STATE OF MAINE
DEPARTMENT OF TRANSPORTATION

PROJECT NUMBER 022809.20

WIN 022809.20

		BY	DATE
PROJ. MANAGER	J. KITTREDGE		
DESIGN-DETAILED	HME	MPC	06/14
CHECKED-REVIEWED	-	CRM	06/14
DESIGN2-DETAILED2	-	-	-
DESIGN3-DETAILED3	-	-	-
REVISIONS 1	-	-	-
REVISIONS 2	-	-	-
REVISIONS 3	-	-	-
REVISIONS 4	-	-	-
FIELD CHANGES	-	-	-

SIGNATURE

P.E. NUMBER

DATE

PORTLAND INTERNATIONAL MARINE TERMINAL
EXISTING LAYDOWN AND CONNECTING CORRIDOR CONNECTION
PORTLAND CUMBERLAND COUNTY

SITE DETAILS

SHEET NUMBER

C14

Filename: 017_SiteDetls2.dgn Division: Username: Date:6/26/2014

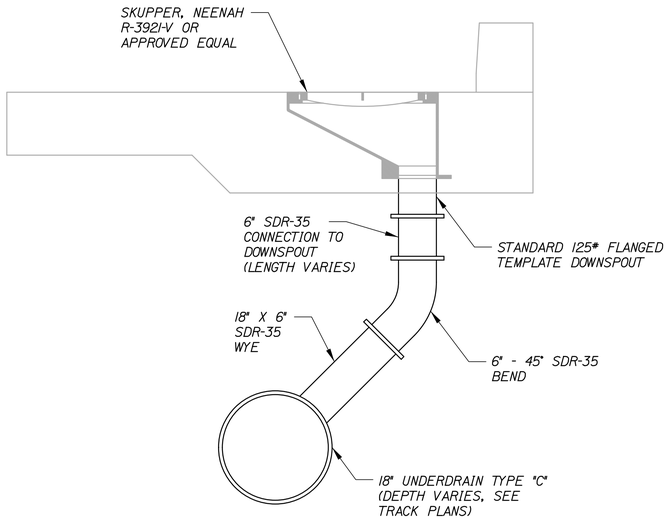

SCUPPER CONNECTION DETAIL
NOT TO SCALE

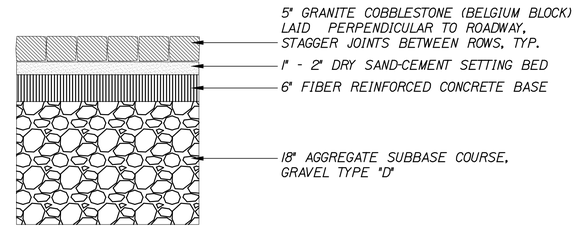

NOTES:

1. DRY SAND-CEMENT SHALL BE SIX (6) PARTS OF WASHED MORTAR SAND TO ONE (1) PART PORTLAND CEMENT.

2. DRY SAND-CEMENT SHALL BE PLACED AND SWEPT INTO THE JOINTS TO WITHIN ¼" TO ½" OF PAVER SURFACE.

3. ALL SURPLUS SHALL BE SWEPT FROM COBBLESTONE SURFACE.

4. A FINAL APPLICATION OF SAND ONLY SHALL BE SPREAD ON THE COBBLESTONE SURFACE.

COBBLESTONE PAVING IN ROAD
NOT TO SCALE

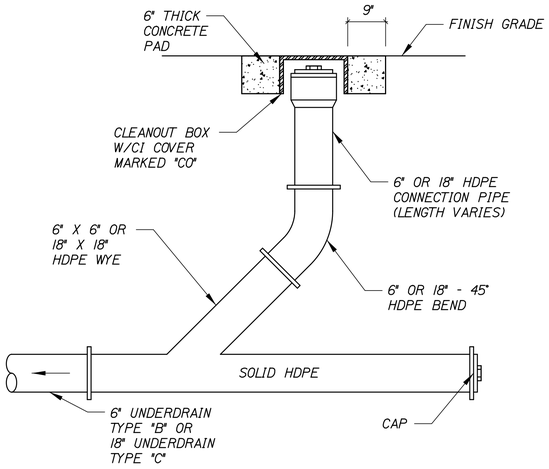

NOTES:

1. CAP END ONLY AT THE BEGINNING OF PIPE RUN.

2. PAYMENT FOR UNDERDRAIN CLEANOUT MATERIAL, LABOR AND EQUIPMENT SHALL BE CONSIDERED INCIDENTAL TO 605 ITEMS. NO SEPERATE PAYMENT WILL BE MADE. COORDINATE WORK WITH RESIDENT.

6" OR 18" UNDERDRAIN CLEANOUT W/ CAP DETAIL
NOT TO SCALE

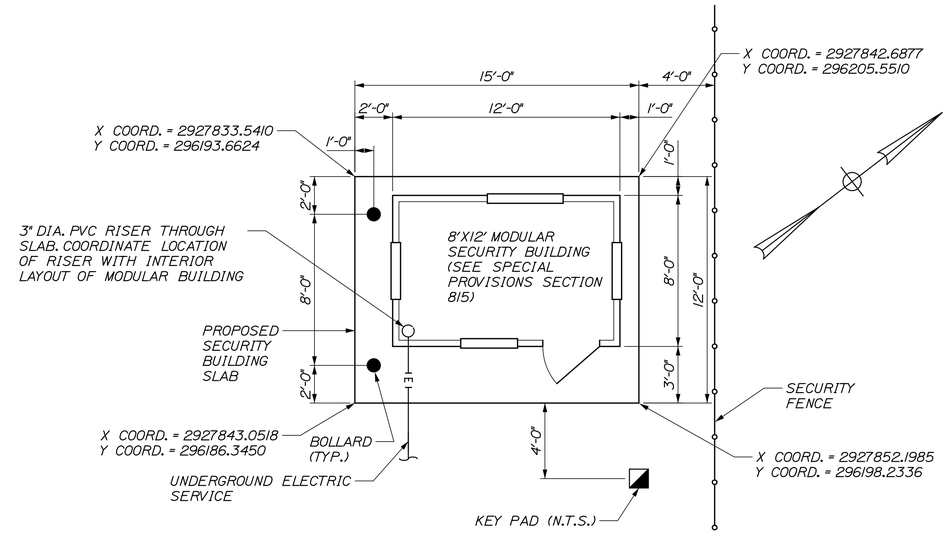

NOTE: SEE STRUCTURAL DETAILS SHEET FOR SLAB CONSTRUCTION.

SECURITY BUILDING SLAB DETAIL
¼" = 1'-0"

STATE OF MAINE
DEPARTMENT OF TRANSPORTATION

PROJECT NUMBER 022809.20

WIN
022809.20

PROJ. MANAGER	J. KITTREDGE	BY	DATE
DESIGN-DETAILED	HME	MPC	06/14
CHECKED-REVIEWED	-	CRM	06/14
DESIGN2-DETAILED2	-	-	-
DESIGN3-DETAILED3	-	-	-
REVISIONS 1	-	-	-
REVISIONS 2	-	-	-
REVISIONS 3	-	-	-
REVISIONS 4	-	-	-
FIELD CHANGES	-	-	-

SIGNATURE

P.E. NUMBER

DATE

PORTLAND INTERNATIONAL MARINE TERMINAL
EXISTING LAYDOWN AND CONNECTING CORRIDOR CONNECTION
PORTLAND CUMBERLAND COUNTY

SITE DETAILS

SHEET NUMBER
C15

Filename: 018_SiteDets3.dgn Division: Username: Date:6/26/2014

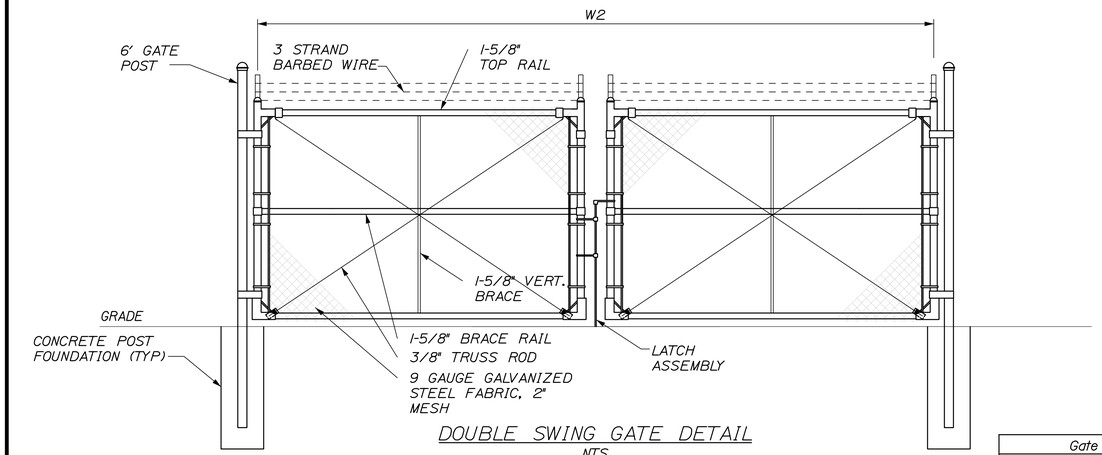

DOUBLE SWING GATE DETAIL
NTS

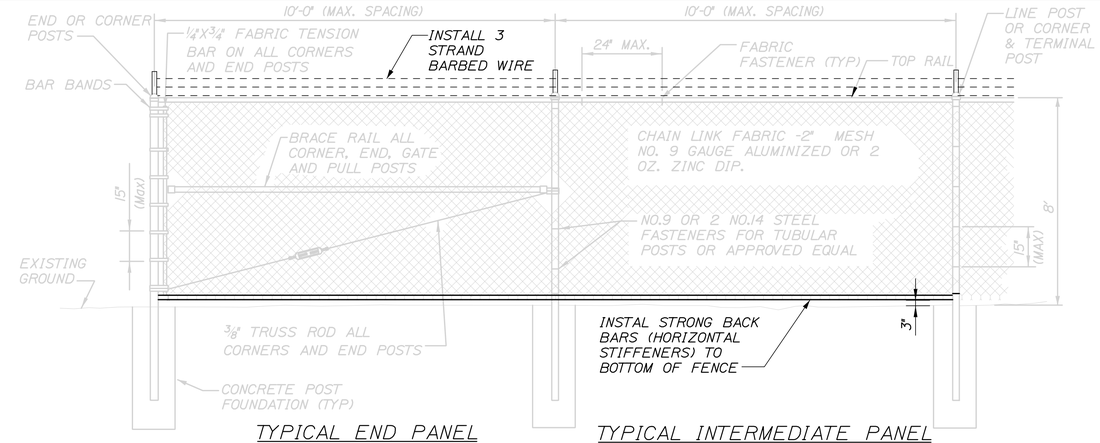

TYPICAL END PANEL TYPICAL INTERMEDIATE PANEL

FENCE REPAIR DETAIL
NTS

Gate Width		Gate Post
W1	W2	O.D.
to 6'	to 12'	3 "
6' to 12'	12' to 24'	4 "
12' to 18'	24' to 36'	6 "

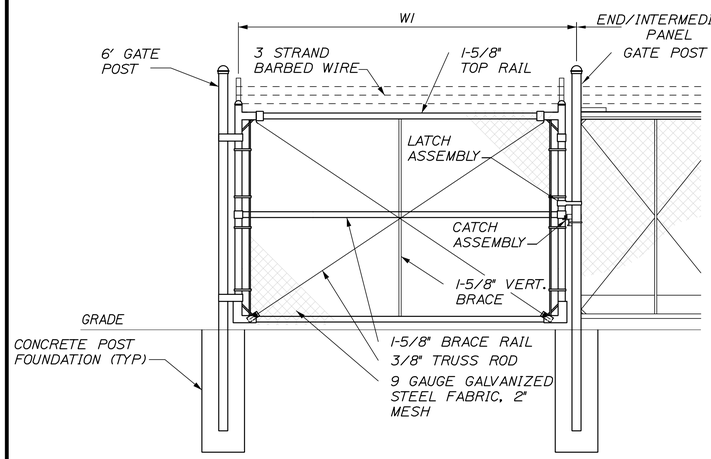

SINGLE SWING GATE DETAIL
NTS

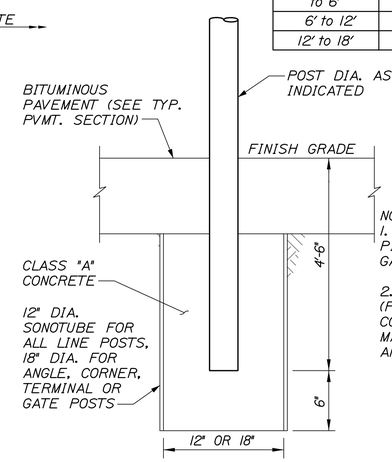

NOTES:
1. ALL POSTS ARE NOMINAL PIPE SIZE, SCHEDULE 40, GALVANIZED STEEL.

2. PATCH ALL PAVEMENT (FOLLOWING CURING OF CONCRETE BASES) TO MATCH EXISTING MATERIAL AND THICKNESS

FENCE/GATE POST DETAIL
NTS

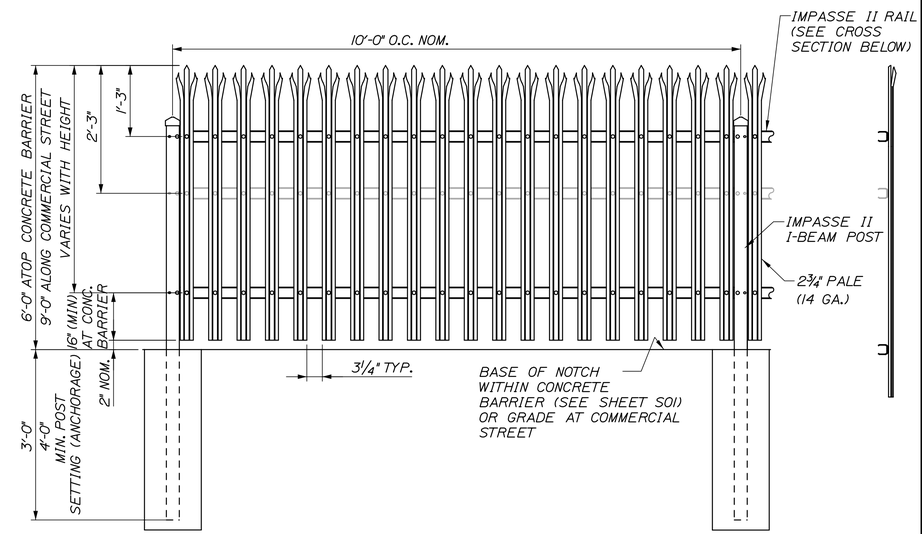

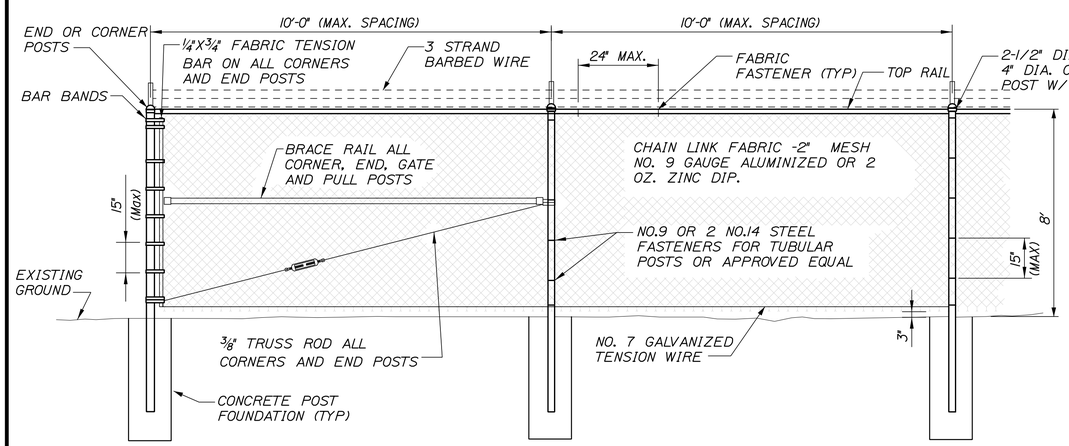

TYPICAL TYPE I END PANEL TYPICAL INTERMEDIATE PANEL

TYPICAL CHAIN LINK FENCE
NTS

NOTES:
1. TYPE I BRACING WILL BE USED AT CORNER AND END POSTS.

2. CONCRETE FOR POST FOUNDATIONS SHALL BE CLASS "A".

3. ALL POSTS SHALL BE SET IN CONCRETE.

4. CHAIN LINK FENCE SHALL BE INSTALLED WITH BARBS DOWN.

5. ALL COMPONENTS OF CHAIN LINK FENCE SHALL BE HDG STEEL IN ACCORDANCE WITH AASHTO M181.

6. FASTEN STEEL FABRIC FROM EXISTING FENCE TO NEW POST WHERE REQUIRED.

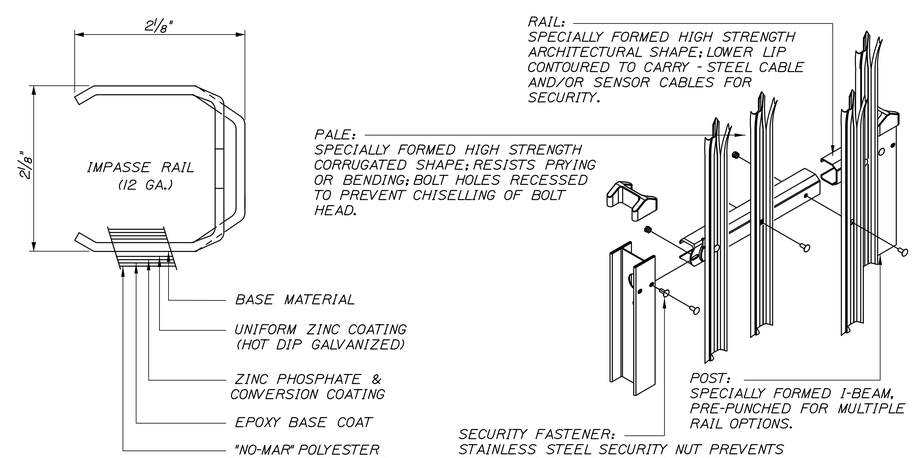

HEAVY STEEL PALISADE FENCE DETAIL
NTS

STATE OF MAINE
DEPARTMENT OF TRANSPORTATION

PROJECT NUMBER 022809.20

WIN 022809.20

		BY	DATE
PROJ. MANAGER	J. KITTREDGE		
DESIGN-DETAILED	HME	MPC	06/14
CHECKED-REVIEWED		CRM	06/14
DESIGN2-DETAILED2			
DESIGN3-DETAILED3			
REVISIONS 1			
REVISIONS 2			
REVISIONS 3			
REVISIONS 4			
FIELD CHANGES			

SIGNATURE	
P.E. NUMBER	
DATE	

PORTLAND INTERNATIONAL MARINE TERMINAL
EXISTING LAYDOWN AND CONNECTING CORRIDOR CONNECTION
PORTLAND CUMBERLAND COUNTY

FENCING DETAILS

SHEET NUMBER
C16

Date:7/11/2014
Username:
Division:
Filename: 019_FencingDets1.dgn

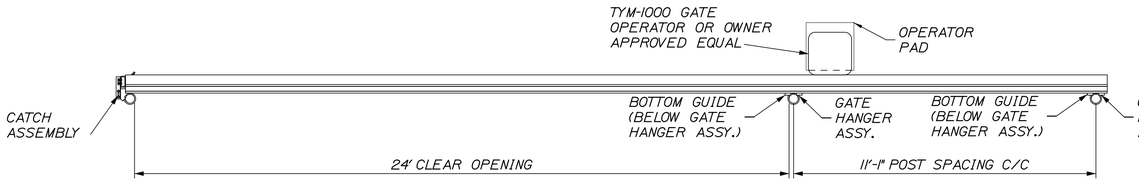

PLAN

NOTE:
THE MAXIMUM ALLOWABLE GAP BETWEEN THE CORNER OF THE OFFICE BUILDING AND CHAIN LINK FENCING AND GATE SHALL NOT EXCEED 3-INCHES

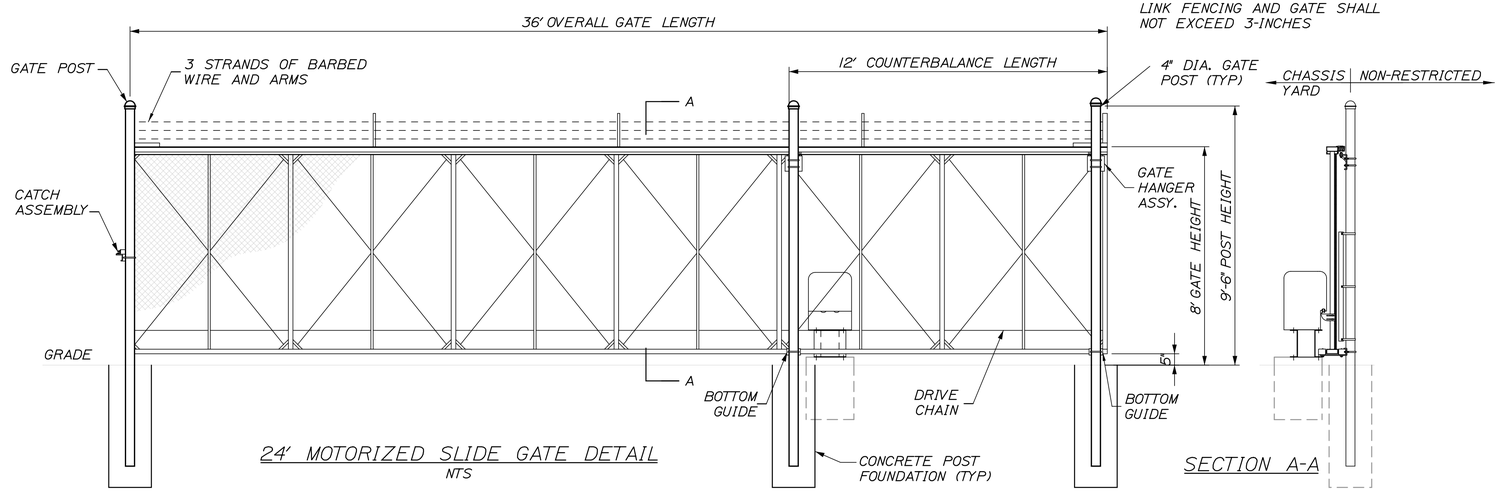

24' MOTORIZED SLIDE GATE DETAIL

NTS

SECTION A-A

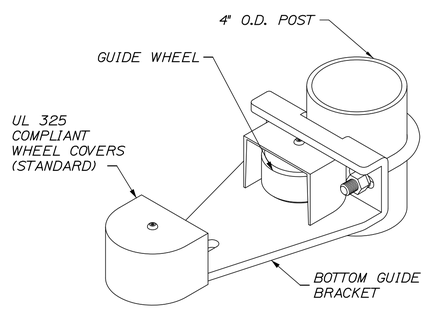

BOTTOM GUIDE DETAIL

NTS

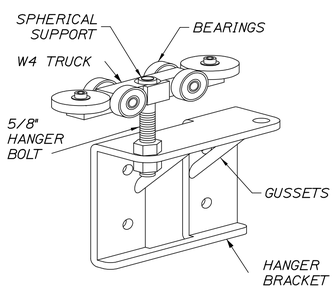

GATE HANGER ASSEMBLY DETAIL

NTS

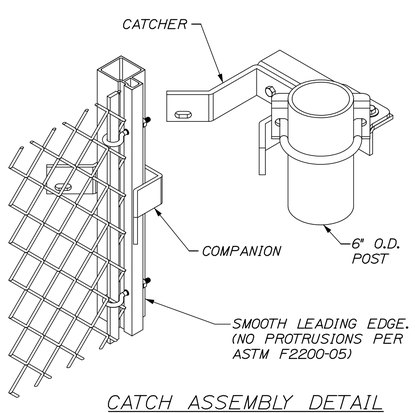

CATCH ASSEMBLY DETAIL

NTS

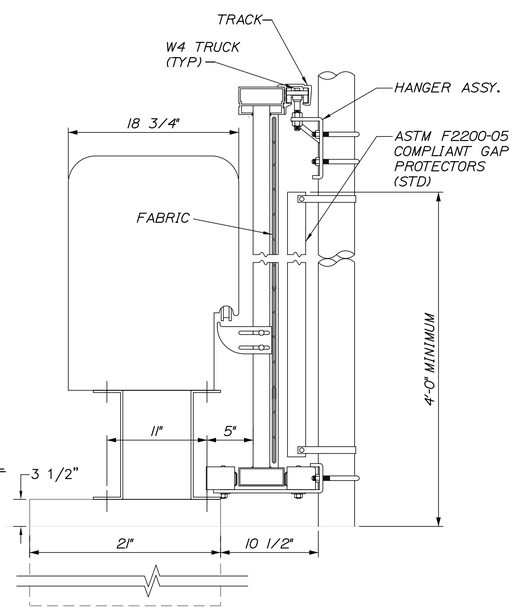

ENLARGED SECTION

NTS

STATE OF MAINE
DEPARTMENT OF TRANSPORTATION

PROJECT NUMBER 022809.20

WIN 022809.20

		BY	DATE
PROJ. MANAGER	J. KITTREDGE		
DESIGN-DETAILED	HME	MPC	06/14
CHECKED-REVIEWED	-	CRM	06/14
DESIGN2-DETAILED2	-	-	-
DESIGN3-DETAILED3	-	-	-
REVISIONS 1	-	-	-
REVISIONS 2	-	-	-
REVISIONS 3	-	-	-
REVISIONS 4	-	-	-
FIELD CHANGES	-	-	-

SIGNATURE

P.E. NUMBER

DATE

PORTLAND INTERNATIONAL MARINE TERMINAL
EXISTING LAYDOWN AND CONNECTING CORRIDOR CONNECTION
PORTLAND CUMBERLAND COUNTY

FENCING DETAILS

SHEET NUMBER

C17

Filename: 020_FencingDets2.dgn Division: Username: Date:6/26/2014

Filename: 021_SiteGeometricsPlan3.dgn Division: Username: Date:6/26/2014

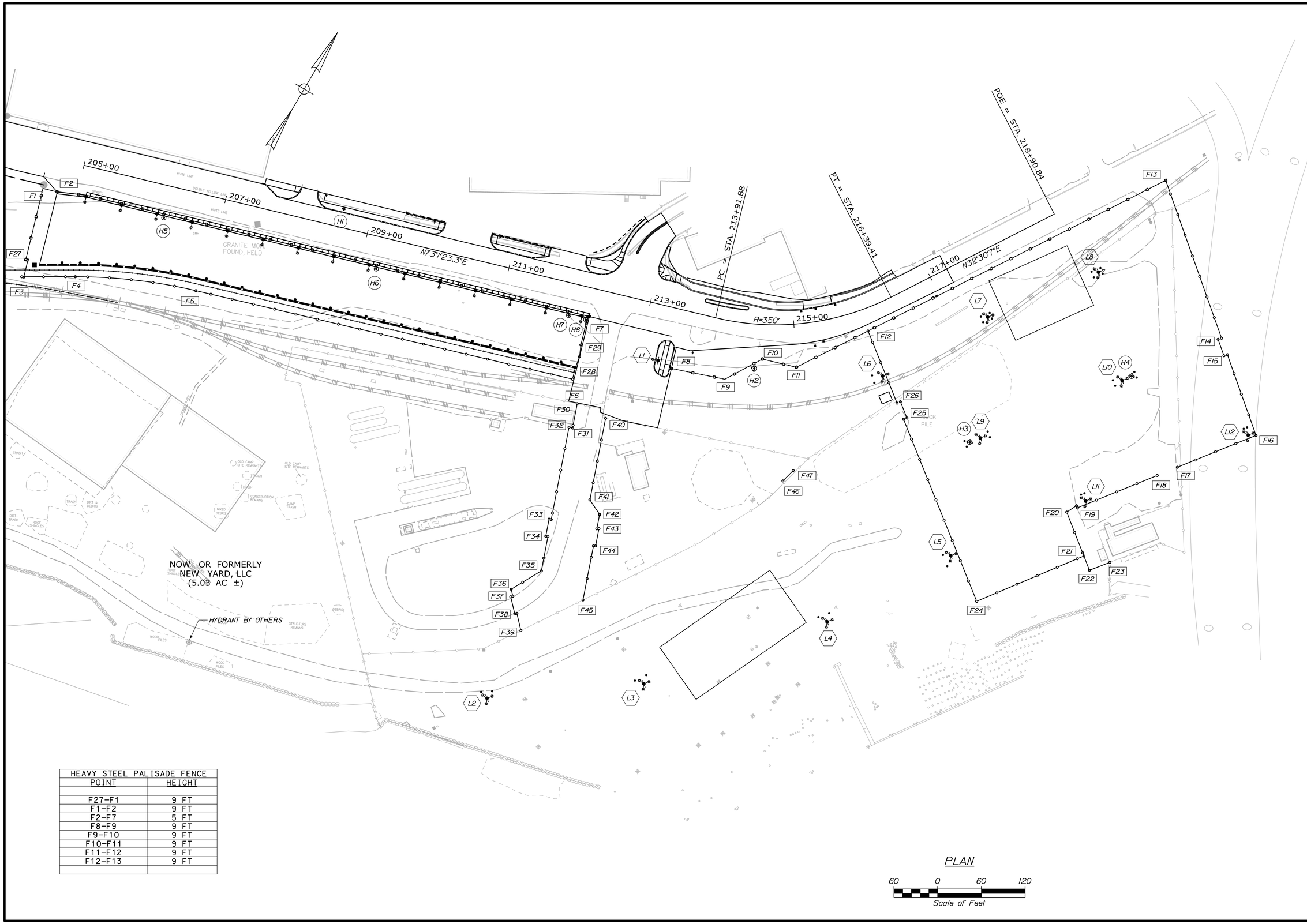

HEAVY STEEL PALISADE FENCE	
POINT	HEIGHT
F27-F1	9 FT
F1-F2	9 FT
F2-F7	5 FT
F8-F9	9 FT
F9-F10	9 FT
F10-F11	9 FT
F11-F12	9 FT
F12-F13	9 FT

STATE OF MAINE
DEPARTMENT OF TRANSPORTATION

PROJECT NUMBER 022809.20

WIN 022809.20

		BY	DATE
PROJ. MANAGER	J. KITTREDGE		
DESIGN-DETAILED	HME	MPC	06/14
CHECKED-REVIEWED	-	CRM	06/14
DESIGN2-DETAILED2	-	-	-
DESIGN3-DETAILED3	-	-	-
REVISIONS 1	-	-	-
REVISIONS 2	-	-	-
REVISIONS 3	-	-	-
REVISIONS 4	-	-	-
FIELD CHANGES	-	-	-

SIGNATURE

P.E. NUMBER

DATE

PORTLAND INTERNATIONAL MARINE TERMINAL
EXISTING LAYDOWN AND CONNECTING CORRIDOR CONNECTION
PORTLAND CUMBERLAND COUNTY

FENCING, HYDRANT, LIGHT POLE AND BOLLARD GEOMETRICS

SHEET NUMBER

C18

CONTROL POINTS FOR HYDRANTS AND STANDPIPES		
POINT NAME	X-COORD	Y-COORD
H1	2927070.7667	296041.4173
H2	2927667.2933	296139.0143
H3	2927978.0098	296208.7739
H4	2928113.9390	296386.8187
H5	2926863.4717	295907.1856
H6	2927150.3985	295994.7812
H7	2927410.1228	296074.0722
H8	2927433.2823	296081.1425

CONTROL POINTS FOR LIGHT POLES		
POINT NAME	X-COORD	Y-COORD
L1	2927547.8871	296081.2012
L2	2927581.4457	295562.6557
L3	2927756.6473	295689.1445
L4	2927929.9867	295890.3967
L5	2928033.5635	296059.2716
L6	2927824.5708	296220.0639
L7	2927907.8021	296362.3416
L8	2928007.3216	296492.6886
L9	2927981.6685	296213.5293
L10	2928110.2803	296382.0633
L11	2928151.6398	296213.1808
L12	2928297.8860	296404.6100

CONTROL POINTS FOR FENCING		
POINT NAME	X-COORD	Y-COORD
F1 **	2926700.7522	295855.7263
F2* **	2926719.8806	295861.5660
F3	2926737.2248	295736.4983
F4	2926800.6334	295773.9439
F5	2926952.8639	295841.5791
F6	2927459.8466	295999.6931
F7* **	2927434.3952	296083.7913
F8 **	2927569.2748	296081.2575
F9 **	2927639.9698	296105.8768
F10 **	2927670.1835	296155.8653
F11 **	2927716.0918	296169.8806
F12 **	2927775.5428	296262.8313
F13 **	2928022.2229	296648.5117
F14	2928198.4824	296500.8716
F15	2928216.8996	296485.4449
F16	2928307.0163	296409.9604
F17	2928236.2852	296317.5164
F18	2928218.1366	296293.6281
F19	2928146.5349	296199.9106
F20	2928136.8213	296187.1966
F21	2928187.6782	296147.2749
F22	2928204.1892	296134.3140
F23	2928222.8384	296157.8128
F24	2928092.5737	296018.9179
F25	2927879.1604	296183.1112
F26	2927860.1386	296197.7460
F27 **	2926730.1506	295759.4321
F28	2927455.1441	296015.2312
F29	2927445.8749	296045.8593
F30	2927482.5154	295973.9212
F31	2927493.9152	295942.0047
F32	2927489.2065	295940.3229
F33	2927532.5857	295818.8722
F34	2927540.6584	295796.2706
F35	2927556.7395	295751.2476
F36	2927533.9051	295708.5097
F37	2927540.8212	295701.2869
F38	2927557.4198	295683.9524
F39	2927574.1768	295666.4524
F40	2927526.2229	295976.4161
F41	2927564.5677	295869.0604
F42	2927586.2133	295858.5755
F43	2927592.9617	295839.5738
F44	2927600.9288	295817.1403
F45	2927626.2673	295745.7929
F46	2927782.4363	296025.4201
F47	2927787.3212	296044.8143

* SEE STRUCTURAL SLAB FOR EXACT LOCATION
** HEAVY STEEL PALISADE FENCE RUNS CONTINOUSLY FROM F27-F1, F1-F2-F7, F8-F13. ALL OTHER SHALL BE CHAIN LINK FENCE.

CONTROL POINTS FOR BOLLARDS		
POINT LOCATION	X-COORD	Y-COORD
BOLLARDS AT L2	2927577.2808	295563.4644
	2927582.2544	295566.8205
BOLLARDS AT L3	2927752.4164	295688.8292
	2927756.3321	295693.3754
BOLLARDS AT L4	2927925.7558	295890.0814
	2927929.6714	295894.6276
BOLLARDS AT L5	2928034.1119	296055.0645
	2928029.3565	296058.7232
BOLLARDS AT L6	2927825.1191	296215.8569
	2927820.3637	296219.5156
BOLLARDS AT L7	2927908.3661	296358.1366
	2927912.0071	296362.9055
	2927907.2382	296366.5466
	2927903.5971	296361.7777
BOLLARDS AT L8	2928007.8856	296488.4836
	2928011.5266	296493.2525
	2928006.7577	296496.8936
	2928003.1166	296492.1247
BOLLARDS AT L9	2927978.5582	296204.5668
	2927982.2169	296209.3223
	2927985.8756	296214.0777
	2927981.1201	296217.7364
	2927977.4615	296212.9809
	2927973.8028	296208.2255
BOLLARDS AT L10	2928110.8287	296377.8562
	2928114.4874	296382.6117
	2928118.1460	296387.3671
	2928113.3906	296391.0258
	2928109.7319	296386.2703
	2928106.0733	296381.5149
BOLLARDS AT L11	2928147.4346	296212.6182
	2928151.0772	296217.3860
BOLLARDS AT L12	2928293.6808	296404.0474
	2928297.3235	296408.8151
BOLLARDS AT H6	2926862.2317	295906.1100
	2926865.1010	295906.9860
BOLLARDS AT H7	2927149.1586	295993.7057
	2927152.0278	295994.5816
BOLLARDS AT H8	2927408.8828	296072.9966
	2927411.7521	296073.8726
BOLLARDS AT H9	2927432.0423	296080.0670
	2927434.9116	296080.9429
ELECTRICAL	2928106.5515	296051.2208
PEDESTAL	2928142.1076	296099.2088
BOLLARDS	2928177.8041	296147.3863
SECURITY BLDG	2927836.3457	296194.0280
BOLLARDS	2927842.6862	296189.1497

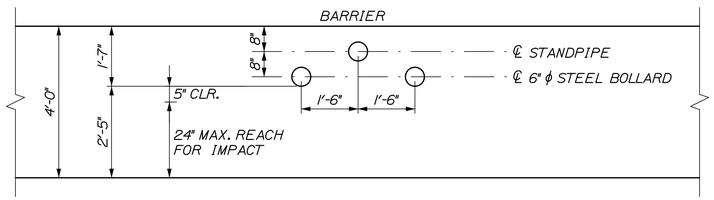

STANDPIPE

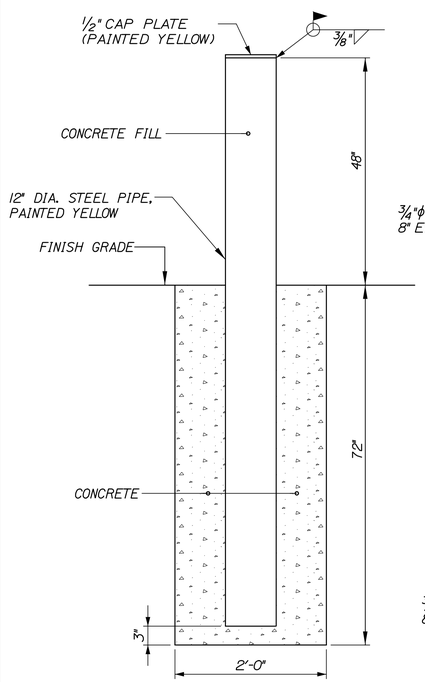

NOTES:
1. CONTRACTOR SHALL PROVIDE 12" DIA. STEEL BOLLARDS, PAY ITEM 841.4713

2. CONTRACTOR TO REUSE EXISTING OWNER SUPPLIED 12" DIA. BOLLARDS, PAY ITEM 841.4714

12" STEEL BOLLARD DETAIL
NOT TO SCALE

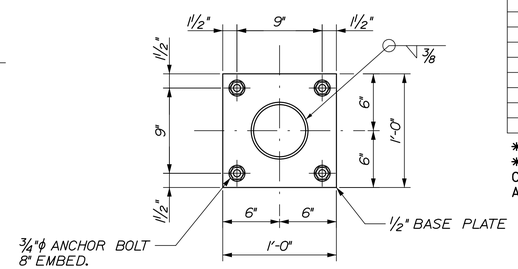

SECTION A-A
1" = 1'-0"

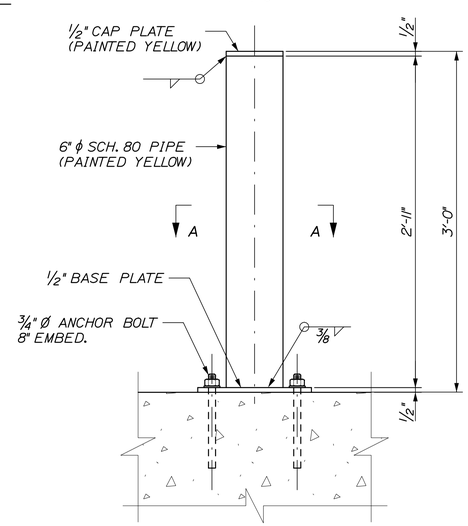

6" STEEL BOLLARD, PAD MOUNTED
1" = 1'-0"

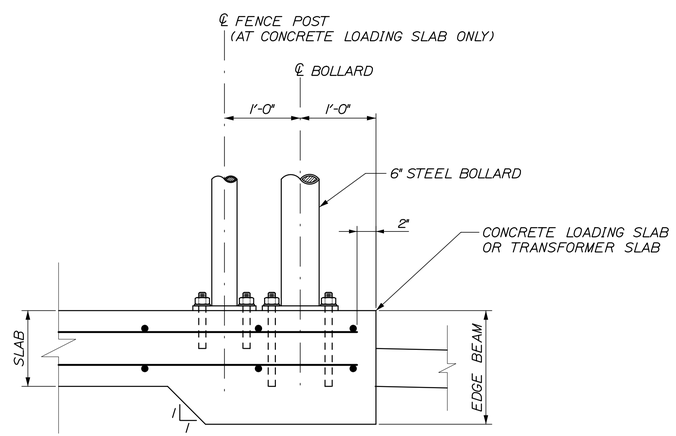

NOTE:
CONTRACTOR SHALL PROVIDE 6" DIA. STEEL BOLLARDS. PAY ITEM 841.4712

EDGE BEAM DETAIL
1" = 1'-0"

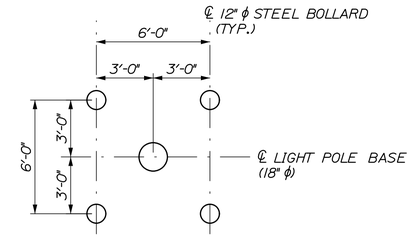

LIGHT POLE BASE WITH 4 BOLLARDS
AT LIGHTS L7 AND L8

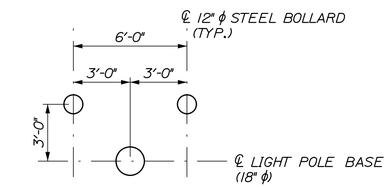

LIGHT POLE BASE WITH 2 BOLLARDS
AT LIGHTS L2, L3, L4, L5, L6, L11 AND L12

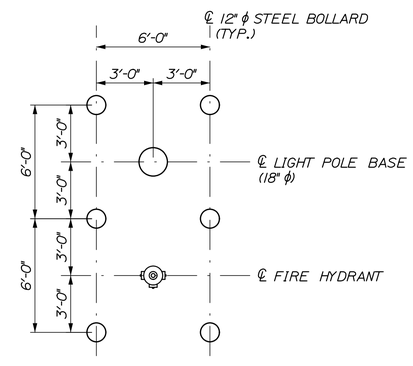

LIGHT POLE BASE WITH FIRE HYDRANTS
AT LIGHTS L9 AND L10

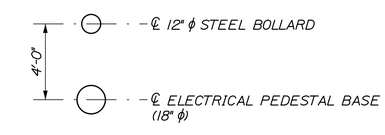

ELECTRICAL PEDESTAL BASE (REEFERS)

STATE OF MAINE
DEPARTMENT OF TRANSPORTATION

PROJECT NUMBER 022809.20

WIN 022809.20

		BY	DATE
PROJ. MANAGER	J. KITTREDGE		
DESIGN-DETAILED	CRM	MPC	06/14
CHECKED-REVIEWED	-	-	06\14
DESIGN2-DETAILED2	-	-	-
DESIGN3-DETAILED3	-	-	-
REVISIONS 1	-	-	-
REVISIONS 2	-	-	-
REVISIONS 3	-	-	-
REVISIONS 4	-	-	-
FIELD CHANGES	-	-	-

SIGNATURE

P.E. NUMBER

DATE

PORTLAND INTERNATIONAL MARINE TERMINAL
EXISTING LAYDOWN AND CONNECTING CORRIDOR CONNECTION
PORTLAND CUMBERLAND COUNTY

FENCING, HYDRANT, LIGHT POLE AND BOLLARD GEOMETRICS

SHEET NUMBER
C19

Filename: 022_SiteGeometricsTable.dgn Division: Username: Date:7/11/2014

(HORIZONTAL) BEARING AREA OF THRUST BLOCKS IN SQUARE FEET									(VERTICAL) VOLUME OF THRUST BLOCK IN CUBIC YARDS			
FITTING SIZE	TEE, WYE, DEAD END AND HYDRANT	STRADDLE BLOCK	90D BEND PLUGGED CROSS	TEE PLUGGED ON RUN		45D BEND	22-1/2D BEND	11-1/4D BEND	90D BEND	45D BEND	22-1/2D BEND	11-1/4D BEND
				A-1	A-2							
4	1.0	1.6	1.4	1.9	1.4	1.0	---	---	---	---	---	---
6	2.1	3.7	3.0	4.3	3.0	1.6	1.0	---	1.3	---	---	---
8	3.8	6.5	5.3	7.6	5.4	2.9	1.5	1.0	2.3	1.1	---	---
10	5.9	10.2	8.4	11.8	8.4	4.6	2.4	1.2	3.7	1.8	---	---
12	8.5	14.7	12.0	17.0	12.0	6.6	3.4	1.7	5.5	2.8	1.2	---
14	11.5	---	16.3	23.0	16.3	8.9	4.6	2.3	7.6	3.9	1.7	---
16	15.0	26.1	21.3	30.0	21.3	11.6	6.0	3.0	9.9	5.1	2.3	0.9
18	19.0	---	27.0	38.0	27.0	14.6	7.6	3.8	---	---	---	---
20	23.5	40.8	33.3	47.0	33.3	18.1	9.4	4.7	---	---	---	---
24	34.0	58.8	48.0	68.0	48.0	26.2	13.6	6.8	---	---	---	---

FIRE HYDRANT NOTES:
1. ABOVE BEARING AREAS BASED ON TEST PRESSURE OF 150 PSI AND AN ALLOWABLE SOIL BEARING STRESS OF 2000 POUNDS PER SQUARE FOOT. TO COMPUTE BEARING AREAS FOR DIFFERENT TEST PRESSURES AND SOIL BEARING STRESSES, USE THE FOLLOWING EQUATION:
   BEARING AREA = (TEST PRESSURE / 150) x (2000 / SOIL BEARING STRESS) x (TABLE VALUE)

2. ABOVE VOLUMES BASED ON TEST PRESSURE OF 150 PSI AND THE WEIGHT OF CONCRETE = 4050 POUNDS PER CUBIC YARD. TO COMPUTE FOR DIFFERENT TEST PRESSURES, USE THE FOLLOWING EQUATION:
   VOLUME = (TEST PRESSURE / 150) x (TABLE VALUE)

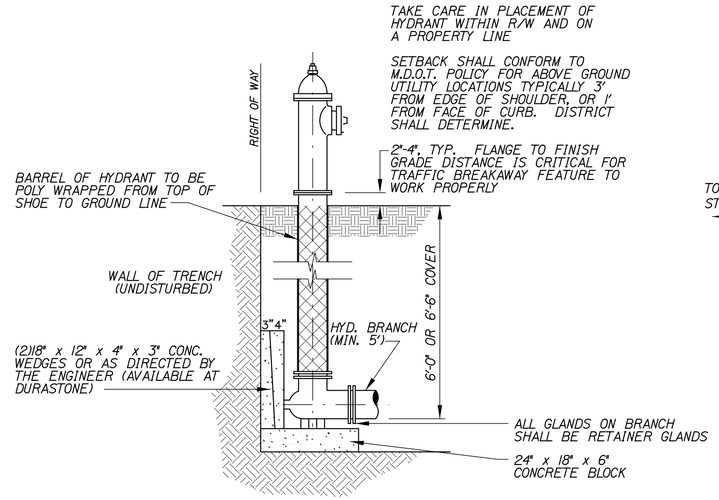

FIRE HYDRANT
NOT TO SCALE

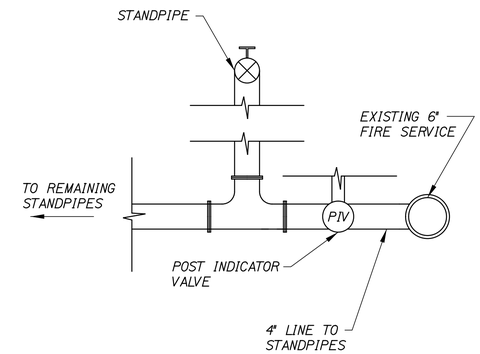

STANDPIPE CONNECTION TO MAIN
NOT TO SCALE

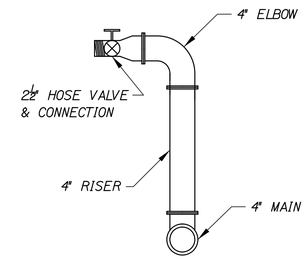

STANDPIPE DETAIL
NOT TO SCALE

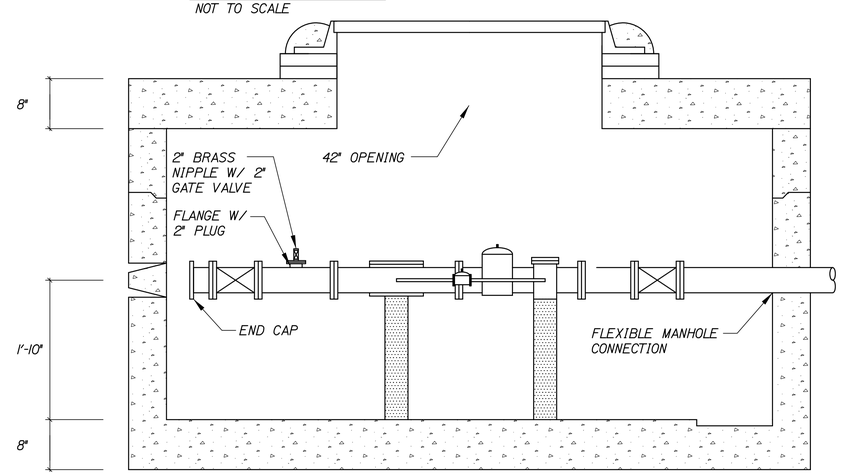

SECTION

GENERAL NOTES:
1. WATER UTILITY DETAILS SHALL COMPLY WITH THE CITY OF PORTLAND, PORTLAND WATER DISTRICT AND NFPA 1 REQUIREMENTS. SEE SPECIAL PROVISIONS FOR MORE DETAILS.

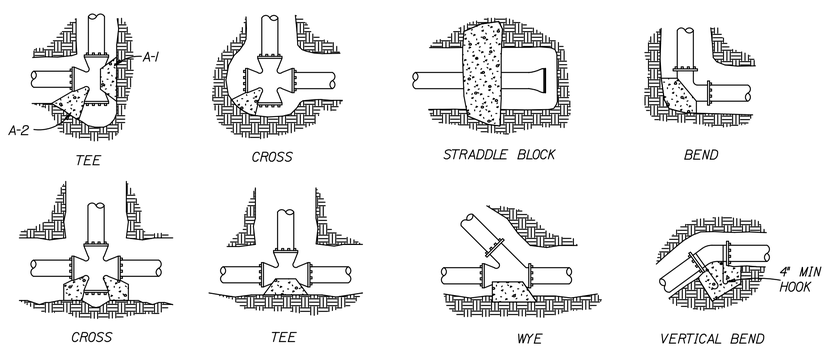

RODS FOR VERTICAL BENDS		
FITTING SIZE	ROD SIZE	EMBEDMENT
12" AND LESS	#6	30"
14"-16"	#8	36"

THRUST BLOCKING NOTES:
1. CONCRETE BLOCKING TO BE POURED AGAINST UNDISTURBED EARTH.
2. ALL CONCRETE TO BE CLASS 2400 MINIMUM.
3. INSTALL ISOLATION MATERIAL BETWEEN PIPE AND/OR FITTINGS BEFORE POURING CONCRETE BLOCKING.
4. CONCRETE SHALL BE KEPT CLEAR OF ALL JOINTS AND ACCESSORIES.
5. TIE RODS SHALL BE DEFORMED GALVANIZED COLD ROLLED STEEL, 40000 PSI TENSILE STRENGTH.

THRUST BLOCKING
NOT TO SCALE

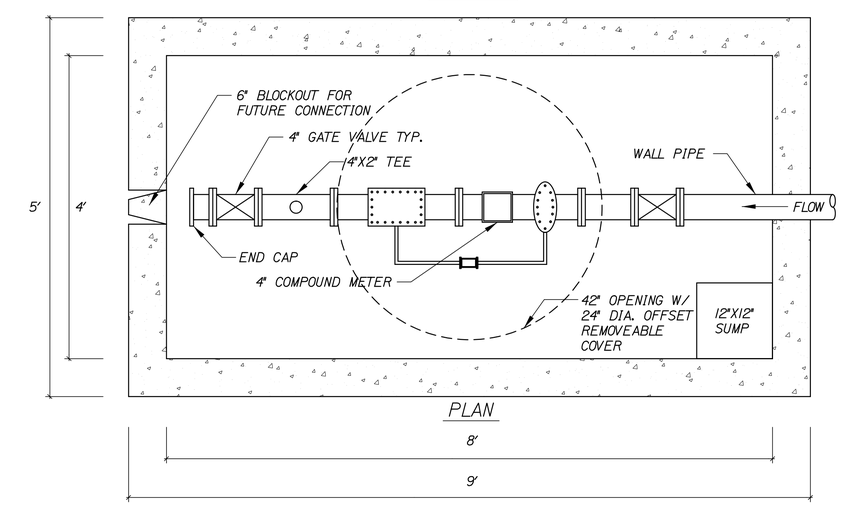

PLAN

METER PIT DETAIL
NOT TO SCALE

METER PIT NOTES:

1. SUBMITTAL REQUIRED.
2. ALL JOINTS TO BE RESTRAINED.
3. COVER LOADING.
   A. TRAFFIC - H20
4. STRUCTURAL DESIGN OF THE VAULT TO MEET H20 LOADING.
5. ALL PIPING THROUGH PIT SHALL BE DUCTILE IRON.
6. CAP END FOR FUTURE CONNECTION.
7. COMPONENTS (NEENAH OR APPROVED EQUAL)
   A. FRAME: 1740-2001
   B. LID: 1741-0001
   C. CENTER LID: 1090-0011
   -TYPE C W/ PERMAGRIP TEXTURE AND OPEN PICKHOLES.
8. PROVIDE ADEQUATE SPACE BETWEEN END CAP AND INSIDE WALL TO ALLOW FOR FUTURE CONNECTION.

STATE OF MAINE
DEPARTMENT OF TRANSPORTATION
PROJECT NUMBER 022809.20
WIN 022809.20

		BY	DATE
PROJ. MANAGER	J. KITTREDGE		
DESIGN-DETAILED	TIME	MPC	06/14
CHECKED-REVIEWED	-	CRM	06/14
DESIGN2-DETAILED2	-	-	-
DESIGN3-DETAILED3	-	-	-
REVISIONS 1	-	-	-
REVISIONS 2	-	-	-
REVISIONS 3	-	-	-
REVISIONS 4	-	-	-
FIELD CHANGES	-	-	-

SIGNATURE
P.E. NUMBER
DATE

PORTLAND INTERNATIONAL MARINE TERMINAL
EXISTING LAYDOWN AND CONNECTING CORRIDOR CONNECTION
PORTLAND CUMBERLAND COUNTY

WATER SYSTEM DETAILS

SHEET NUMBER
C20

Filename: 023_WaterSystemDets.dgn Division: Username: Date:6/26/2014

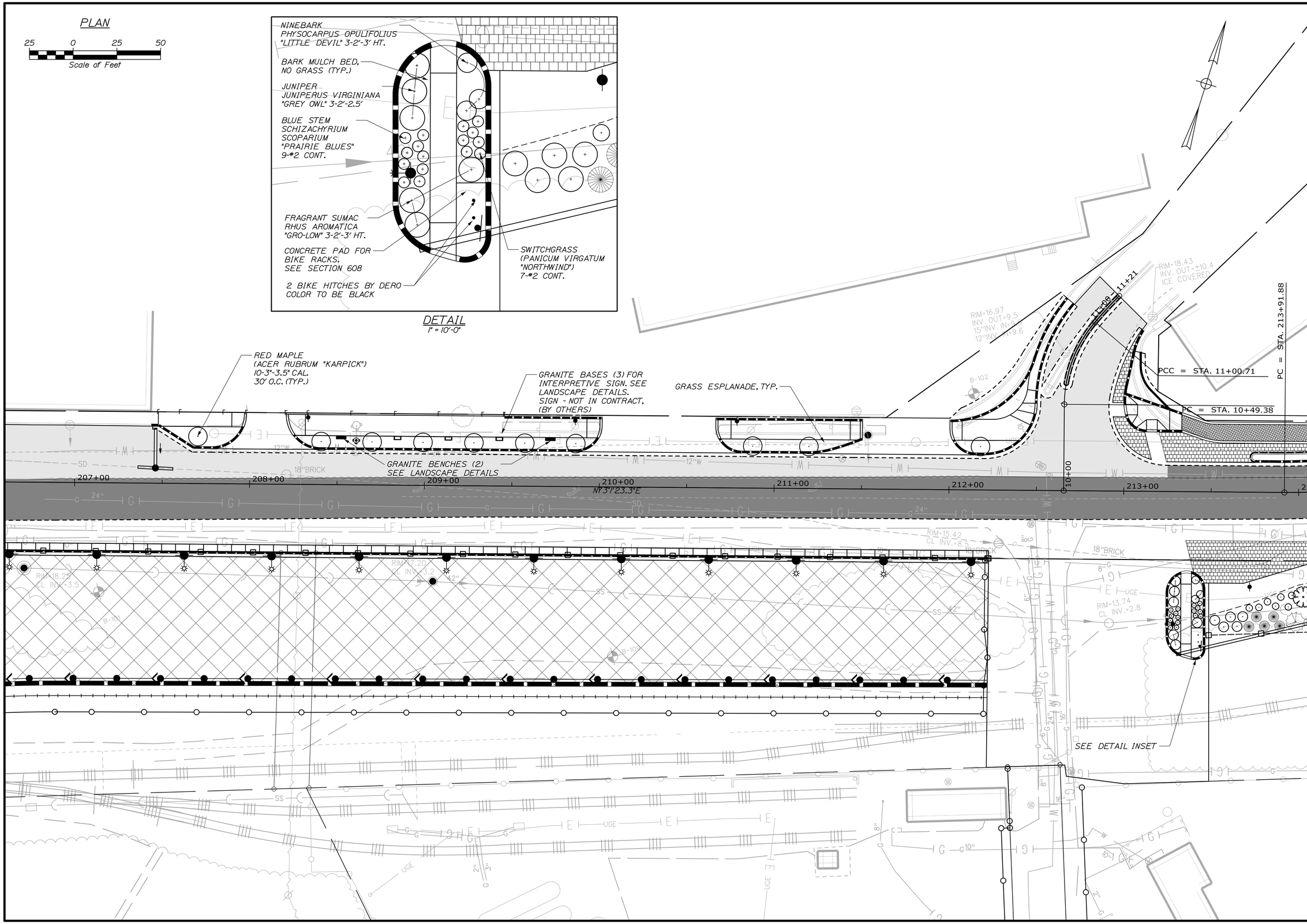

STATE OF MAINE
DEPARTMENT OF TRANSPORTATION

PROJECT NUMBER 022809.20

WIN
022809.20

		BY	DATE
PROJ. MANAGER	J. KITTREDGE		
DESIGN-DETAILED	PC	MPC	06/14
CHECKED-REVIEWED	-	CRM	06/14
DESIGN2-DETAILED2	-	-	-
DESIGN3-DETAILED3	-	-	-
REVISIONS 1	-	-	-
REVISIONS 2	-	-	-
REVISIONS 3	-	-	-
REVISIONS 4	-	-	-
FIELD CHANGES	-	-	-

SIGNATURE

P.E. NUMBER

DATE

PORTLAND INTERNATIONAL MARINE TERMINAL
EXISTING LAYDOWN AND CONNECTING CORRIDOR CONNECTION
PORTLAND CUMBERLAND COUNTY

LANDSCAPING PLAN

SHEET NUMBER

C21

Date:7/11/2014

Username:

Division:

Filename: 024_Landscape1.dgn

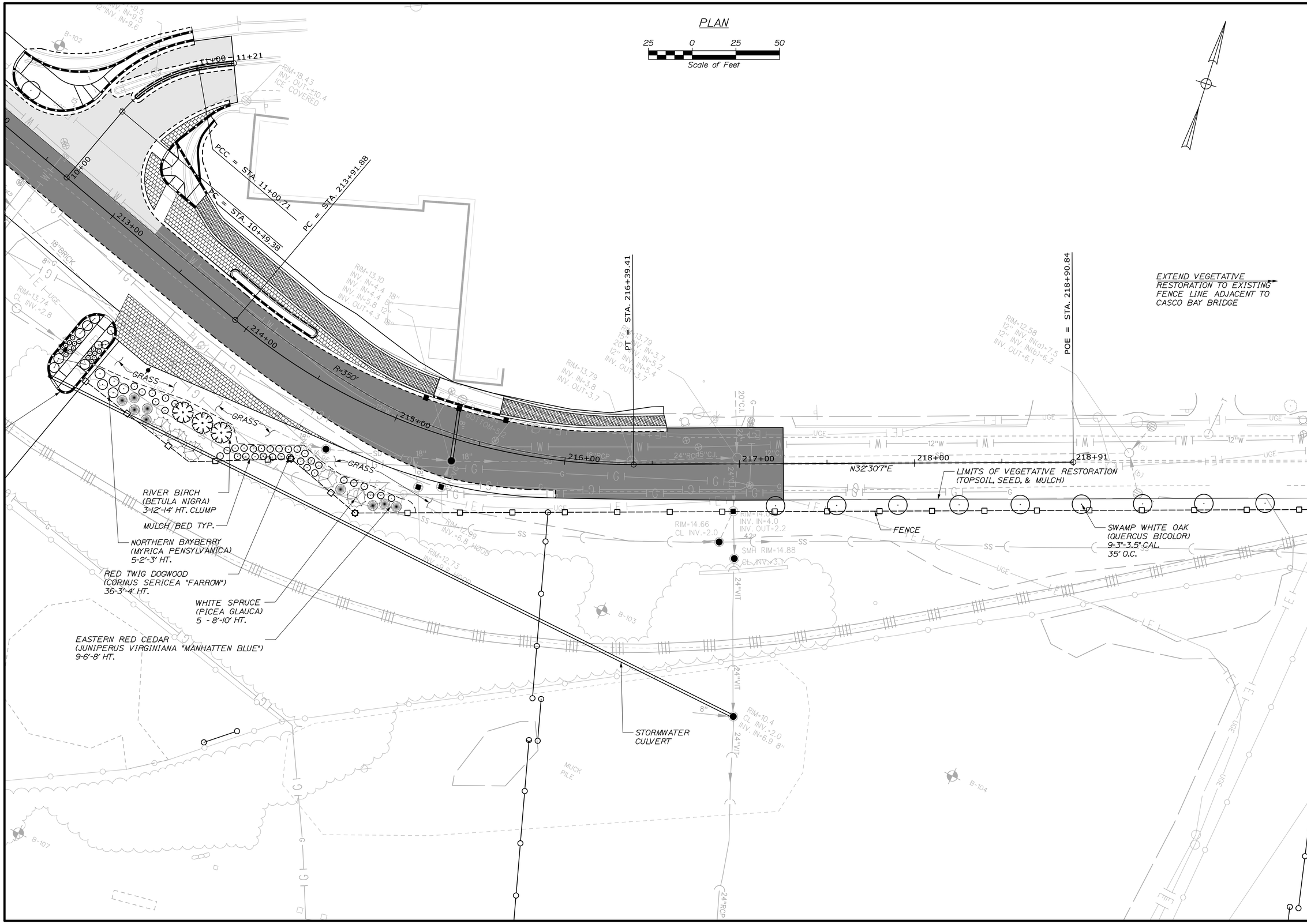

STATE OF MAINE
DEPARTMENT OF TRANSPORTATION

PROJECT NUMBER 022809.20

WIN 022809.20

LANDSCAPE ARCHITECT PATRICK J. CARROLL NO. 127 STATE OF MAINE

PROJ. MANAGER	J. KITTREDGE	BY	DATE
DESIGN-DETAILED	PC	MPC	06/14
CHECKED-REVIEWED	-	CRM	06/14
DESIGN2-DETAILED2	-	-	-
DESIGN3-DETAILED3	-	-	-
REVISIONS 1	-	-	-
REVISIONS 2	-	-	-
REVISIONS 3	-	-	-
REVISIONS 4	-	-	-
FIELD CHANGES	-	-	-

SIGNATURE

P.E. NUMBER

DATE

PORTLAND INTERNATIONAL MARINE TERMINAL
EXISTING LAYDOWN AND CONNECTING CORRIDOR CONNECTION
PORTLAND CUMBERLAND COUNTY

LANDSCAPING PLAN

SHEET NUMBER

C22

Date:6/26/2014

Username:

Division:

Filename: 025_Landscape2.dgn

NOTES: REMOVE ALL LABELS, TAGS AND OTHER FOREIGN MATERIAL FROM LIMBS.

TREES UNDER 8' DO NOT REQUIRE STAKING.

PLANT SO THAT TRUNK FLARE IS VISIBLE AND ABOVE FINISHED GRADE.

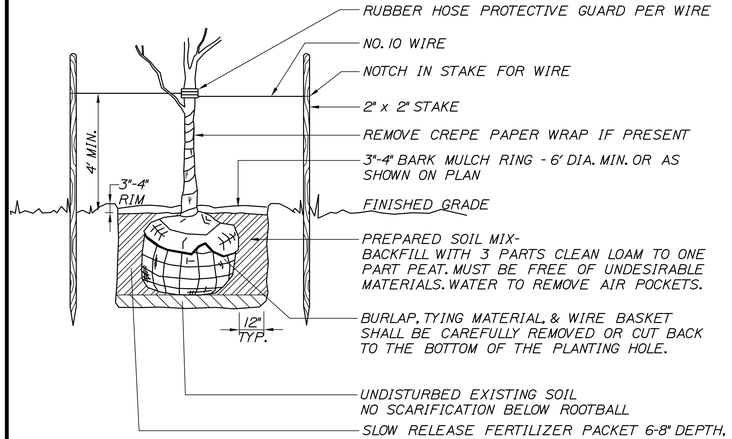

SECTION VIEW

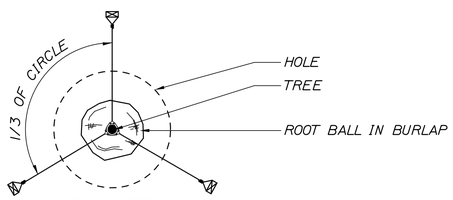

PLAN VIEW

TREE PLANTING DETAIL

NOT TO SCALE

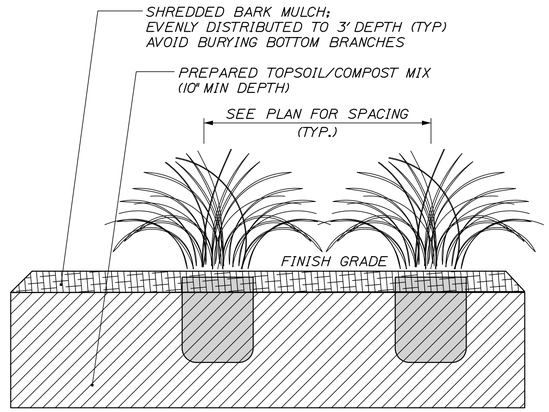

PLANTING PROCEDURE:
EXCAVATE PLANT HOLE TO WIDTH TWICE THE SIZE OF POT (TYP.)
CENTER PLANT SQUARELY IN HOLE; PERPENDICULAR TO GRADE
BACKFILL BOTTOM 2/3 OF PLANT W/ COMBINATION OF EXCAVATED SOIL AND SOIL/FERTILIZER AMMENDMENT; (CONSULT SPECIFICATIONS FOR SOIL ADMIXTURE CONTENT)
COMPACT BACKFILL AROUND PLANT TO PREVENT SHIFTING/SETTLING; WATER PLANT THOROUGHLY; CONTINUE BACKFILLING PLANT TO FINISH GRADE;

PERENNIAL PLANTING DETAIL

NOT TO SCALE

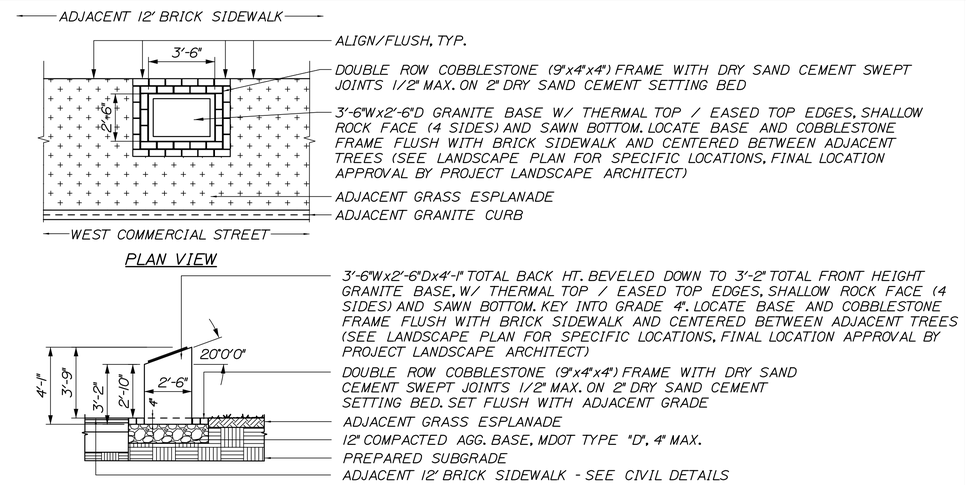

PLAN VIEW

SECTION VIEW

GRANITE BASE FOR SIGN DETAIL

NOT TO SCALE

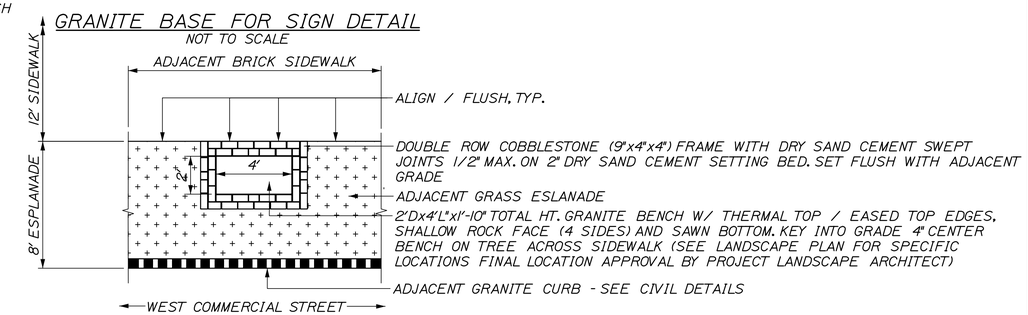

PLAN VIEW

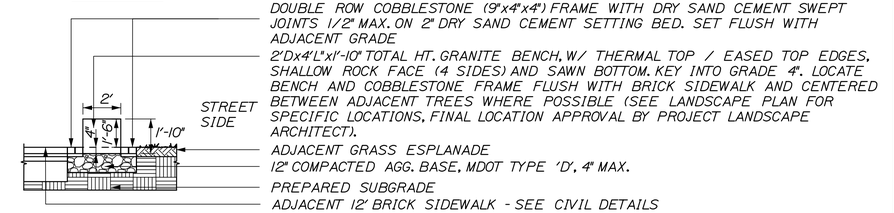

SECTION VIEW

GRANITE BENCH DETAIL

NOT TO SCALE

NOTES: SCARIFY ROOTBALL USING A SHARP BLADE EVERY SIX INCHES AROUND THE CIRCUMFERENCE AND TO A DEPTH OF TWO INCHES.

REMOVE ALL LABELS, TAGS AND OTHER FOREIGN MATERIAL FROM LIMBS.

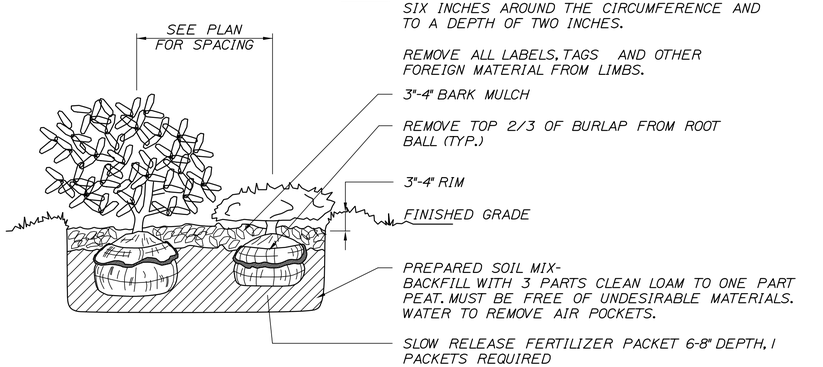

SHRUB PLANTING DETAIL

NOT TO SCALE

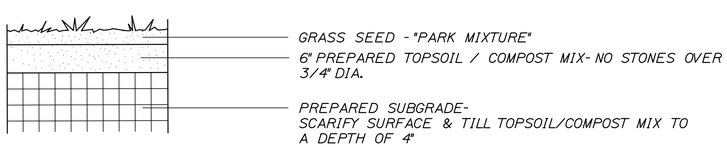

LAWN PLANTING DETAIL

NOT TO SCALE

PLANTING NOTES

1. CONTRACTOR SHALL BEGIN MAINTENANCE IMMEDIATELY AFTER PLANTING AND SHALL CONTINUE UNTIL FINAL ACCEPTANCE. CONTRACTOR SHALL BE RESPONSIBLE FOR ALL MEANS AND METHODS OF WATERING AND MAINTENANCE.
2. CONTRACTOR SHALL SUPPLY PLANTS IN QUANTITIES SUFFICIENT TO COMPLETE WORK SHOWN ON THE PLAN. ANY DISCREPANCY BETWEEN THE QUANTITIES SHOWN IN THE PLANT SCHEDULE AND THOSE REQUIRED ON THE PLAN SHALL NOT ENTITLE THE CONTRACTOR TO ADDITIONAL RENUMERATION. ANY DISCREPANCIES SHALL BE CLARIFIED WITH THE LANDSCAPE ARCHITECT PRIOR TO ORDERING PLANT MATERIAL.
3. ALL MATERIALS SHALL CONFORM TO SPECIFICATIONS OF THE AMERICAN STANDARDS FOR NURSERY STOCK (LATEST EDITION) AS SET FORTH BY THE AMERICAN ASSOCIATION OF NURSERYMEN.
4. ALL PLANTS SHALL BEAR THE SAME RELATIONSHIP TO FINISH GRADE AS THE ORIGINAL GRADES BEFORE DIGGING.
5. THE LANDSCAPE CONTRACTOR SHALL GUARANTEE ALL PLANT MATERIALS FOR ONE (1) FULL YEAR FROM DATE OF SUBSTANTIAL COMPLETION.
6. ALL PLANT MATERIALS ARE SUBJECT TO THE APPROVAL OF THE LANDSCAPE ARCHITECT AT THE NURSERY AND AT THE SITE.
7. ALL PLANT BEDS SHALL MEET MINIMUM TOPSOIL REQUIREMENTS (SEE SPECIFICATIONS).
8. NO PLANT MATERIAL SHALL BE INSTALLED UNTIL GRUBBING, BED PREPARATION, AND FINISH GRADING HAS BEEN COMPLETED IN THE IMMEDIATE AREA.
9. ALL PLANTS BEDS AND TREE WELLS SHALL HAVE A MINIMUM OF 3" OF UNIFORMLY DISTRIBUTED, DARK, SHREDDED BARK MULCH.
10. CONTRACTOR SHALL SUBMIT SOIL SAMPLE AND TEST OF TOPSOIL TO LANDSCAPE ARCHITECT PRIOR TO INSTALLATION. SOIL ADMIXTURE SHALL BE ADDED TO EXISTING SOIL (BY CONTRACTOR) IF DEEMED NECESSARY BY SOIL TEST RESULTS.
11. ROUGH GRADING AND BED PREPARATION SHALL BE APPROVED BY LANDSCAPE ARCHITECT PRIOR TO PLANT INSTALLATION. CONTRACTOR SHALL NOTIFY LANDSCAPE ARCHITECT 48 HOURS PRIOR TO REQUIRED SITE VISIT.
12. ALL PLANTS SHALL BE BALLED AND WRAPPED OR CONTAINER GROWN AS SPECIFIED. ALL ROOT WRAPPING AND CONTAINER MATERIAL MADE OF SYNTHETICS OR PLASTICS SHALL BE REMOVED AT THE TIME OF PLANTING.
13. ALL BROAD LEAF EVERGREEN PLANTS SHALL BE SPRAYED WITH AN ANTI-DESSICANT AT THE BEGINNING OF THEIR FIRST WINTER.
14. ALL PLANTS SHALL BE INSTALLED AS PER DETAILS AND THE CONTRACT SPECIFICATIONS. THE LANDSCAPE CONTRACTOR SHALL REFER TO THE CONTRACT SPECIFICATIONS FOR ADDITIONAL REQUIREMENTS.
15. CONTRACTOR SHALL STAKE TREES IF DEEMED NECESSARY BY LANDSCAPE ARCHITECT.
16. THE LANDSCAPE CONTRACTOR SHALL PROVIDE LOAM FILL AS PER THE CONTRACT SPECIFICATIONS.
17. ALL PLANTS SHALL THEN BE WATERED BY THE CONTRACTOR, AS NECESSARY TO INSURE HEALTH UNTIL FINAL ACCEPTANCE.
18. THE LANDSCAPE CONTRACTOR SHALL REFER TO THE PLANT LIST AND PLANTING SPECIFICATIONS FOR SEASONAL REQUIREMENTS AND OTHER RESTRICTIONS RELATED TO THE TIME AND SEASON OF PLANTING.

STATE OF MAINE
DEPARTMENT OF TRANSPORTATION

PROJECT NUMBER 022809.20

WIN 022809.20

		BY	DATE
PROJ. MANAGER	J. KITTREDGE		
DESIGN-DETAILED	PC	MPC	06/14
CHECKED-REVIEWED	-	-	06/14
DESIGN2-DETAILED2	-	-	-
DESIGN3-DETAILED3	-	-	-
REVISIONS 1	-	-	-
REVISIONS 2	-	-	-
REVISIONS 3	-	-	-
REVISIONS 4	-	-	-
FIELD CHANGES	-	-	-

SIGNATURE

P.E. NUMBER

DATE

PORTLAND INTERNATIONAL MARINE TERMINAL
EXISTING LAYDOWN AND CONNECTING CORRIDOR CONNECTION
PORTLAND CUMBERLAND COUNTY

LANDSCAPING DETAILS AND NOTES

SHEET NUMBER

C23

Date:7/11/2014 Username: Division: Filename: 026_LandscapeDetails&Notes.dgn

ELECTRICAL SITE PLAN NOTES:

1. WHERE INDICATED, ARRANGE WITH THE CENTRAL MAINE POWER COMPANY TO REMOVE THE EXISTING UTILITY POLE AND ATTACHED UTILITY LINES.
2. NOT USED.
3. WHERE INDICATED, ARRANGE WITH THE CENTRAL MAINE POWER COMPANY TO PROVIDE A NEW 120/240V, 1PH, 3W 100A SERVICE TO BE EXTENDED UNDERGROUND TO A NEW TRAFFIC SIGNAL ENCLOSURE WITH SERVICE METER. SEE THE CIVIL DRAWINGS FOR DETAILS OF THE TRAFFIC SIGNAL ENCLOSURE.
4. WHERE INDICATED, PROVIDE A NEW 1-1/2" UNDERGROUND CONDUIT FOR A CENTRAL MAINE POWER COMPANY STREET LIGHTING CIRCUIT. ARRANGE WITH CMP TO MAKE THE CIRCUIT CONNECTION
5. WHERE INDICATED, ARRANGE WITH THE CENTRAL MAINE POWER COMPANY TO MODIFY THE EXISTING OVERHEAD UTILITY LINE TO ACCOMMODATE A NEW UNDERGROUND PRIMARY SERVICE CONDUIT RISER.
6. WHERE INDICATED, PROVIDE TWO 5-INCH CONDUITS FOR A NEW CENTRAL MAINE POWER COMPANY UNDERGROUND PRIMARY SERVICE. ENCASE CONDUITS WITHIN A 2-INCH CONCRETE ENVELOPE WHERE CROSSING PAVED ROADWAYS. INSTALL CONDUITS WITHIN LIMITS OF EASEMENT (SEE CIVIL SITE PLAN FOR EASEMENT LOCATION).
7. WHERE INDICATED, ARRANGE WITH THE CENTRAL MAINE POWER COMPANY TO RELOCATE AN EXISTING UTILITY POLE.
8. SEE SHEET E3 FOR DETAILS OF THE NEW ELECTRICAL EQUIPMENT RACK. SEE SHEET E2 FOR ELECTRICAL MANHOLE DETAIL.
9. WHERE INDICATED, PROVIDE A 1-1/2" CONDUIT RISER TO ACCOMMODATE THE NEW CMP STREET LIGHTING CIRCUIT. (SEE CIVIL UTILITY SITE PLAN FOR EASEMENT LOCATION).
10. NOT USED.
11. SEE CIVIL ENGINEERING UTILITY PLANS FOR EXISTING UNDERGROUND UTILITY LINES.
12. PROVIDE A 1-INCH CONDUIT FROM ALL CAMERAS AND CARD READERS TO THE CLOSEST NETWORK SWITCH. CARD READERS, CAMERAS, AND ASSOCIATED WIRING SHALL BE PROVIDED BY OTHERS.
13. WHERE INDICATED, EXISTING CMP ROADWAY LIGHT MOUNTED ON THE EXISTING UTILITY POLE TO REMAIN.
14. NOT USED.
15. PROVIDE 3#6, 1#8 GND., IN A 1-1/2" CONDUIT FOR ALL TYPE S1, S1A, S1B, AND S2 LIGHTING POLE CIRCUITS.
16. PROVIDE 2#6, 1#8 GND, IN A 1-1/2" CONDUIT FOR THE GATE OPERATOR CIRCUIT.
17. THE MINIMUM BURIAL DEPTH FOR UNDERGROUND CONDUITS SHALL BE 30 INCHES, EXCEPT FOR THE CONDUITS THAT SERVICE THE THREE TYPE S2 LIGHTING POLES ALONG THE WATERFRONT WHICH SHALL BE BURIED AT 18 INCHES TO AVOID CONFLICT WITH THE EXISTING VRAP.
18. NOT USED.
19. WHERE INDICATED, RELOCATE EXISTING KEYPAD. INSTALL RELOCATED KEYPAD ON FENCE. PROVIDE THE EXTENSION OF EXISTING CONTROL CONDUCTORS AS REQUIRED. ALSO PROVIDE 120 VOLT CIRCUIT RE-CONNECTION TO EXISTING SLIDING GATE BEING RELOCATED.
20. WHERE INDICATED, PROVIDE A WEATHERPROOF FIRE ALARM MANUAL PULL STATION. EXTEND FIRE ALARM CABLE IN A 1-1/2" CONDUIT UNDERGROUND BETWEEN PULL STATIONS, AND EXTENT TO THE EXISTING FIRE ALARM SYSTEM IN THE IMT RUBB BUILDING EAST OF THE CASCO BRIDGE. INSTALL FIRE ALARM PULL STATION ON A 2" RIGID GALVANIZED CONDUIT POST TO MOUNT THE PULL STATION AT 48" ABOVE GRADE. VERIFY EXACT LOCATION OF PULL STATION WITH OWNER PRIOR TO INSTALLATION.
21. WHERE INDICATED, PROVIDE A WEATHERPROOF BOX FOR OWNER'S NETWORK SWITCH. PROVIDE A 120 VAC CIRCUIT TO EACH BOX WITH 2 #6 CONDUCTORS PLUS A #8 GND IN A 1-1/2" CONDUIT. CIRCUIT TO PANEL P2 # 2.
22. VERIFY EXACT LOCATION OF FENCE GATES AND CARD READERS WITH OWNER PRIOR TO INSTALLATION.
23. WHERE INDICATED, WIRE CARD READERS TO EXISTING CARD READER SYSTEM AT UNITIL FACILITIES.
24. WHERE INDICATED, PROVIDE 2#8, 1#10 GND., IN A 1" CONDUIT FOR THE GATE OPERATOR CIRCUIT. WIRE GATE CIRCUIT TO EXISTING PANEL WITHIN UNITIL FACILITY.
25. WHERE INDICATED, ARRANGE WITH THE CENTRAL MAINE POWER COMPANY TO PROVIDE A NEW 120/240V, 1PH, 3W 60A SERVICE TO BE EXTENDED UNDERGROUND TO THE RELOCATED BRIDGE-UP BEACON WITH METER.
26. PROVIDE AN 8-INCH SQUARE, RECESSED WIRING BOX WITH A STAINLESS STEEL SCEW-COVER AT EACH TYPE S1 AND TYPE S1A LIGHT POLE. INSTALL BOXES FLUSH IN SIDE WALL OF CONCRETE BARRIES AS INDICATED ON SHEET S01. EXTEND A 1" CONDUIT FROM EACH BOX TO THE RESPECTIVE LIGHTING POLE BASE.
27. WHERE INDICATED, ARRANGE WITH THE CENTRAL MAINE POWER COMPANY TO PROVIDE A NEW UTILITY POLE.
28. WHERE INDICATED, ARRANGE WITH THE CENTRAL MAINE POWER COMPANY TO RELOCATE THE EXISTING STREET LIGHT FROM THE ADJACENT POLE BEING REMOVED TO THE NEW UTILITY POLE. PROVIDE A SECONDARY CONDUIT RISER AT THE NEW POLE TO RECEIVE A NEW UNDERGROUND 120/240 VOLT SERVICE. PROVIDE AN OVERHEAD SERVICE DROP TO THE ADJACENT EXISTING NGL BUILDING AND CONNECT TO THE EXISTING SERVICE WEATHERHEAD. ALSO PROVIDE A CABLE SERVICE RISER AND PROVIDE AN OVERHEAD CABLE SERVICE DROP TO THE EXISTING NGL BUILDING.
29. WHERE INDICATED, ARRANGE WITH THE CENTRAL MAINE POWER COMPANY TO PROVIDE A NEW 120/240 VOLT, SINGLE PHASE SERVICE AT THE EXISTING POLE MOUNTED TRANSFORMER.
30. WHERE INDICATED PROVIDE A 2-1/2" CONDUIT FOR ELECTRICAL SECONDARY SERVICE, A 2" CONDUIT FOR AND A 2" CONDUIT FOR TELEPHONE SERVICE, AND A 2" CONDUIT FOR CABLE SERVICE.
31. WHERE INDICATE, PROVIDE A 2" UNDERGROUND CONDUIT FOR TELEPHONE SERVICE TO THE EXISTING UNITIL FACILITY.

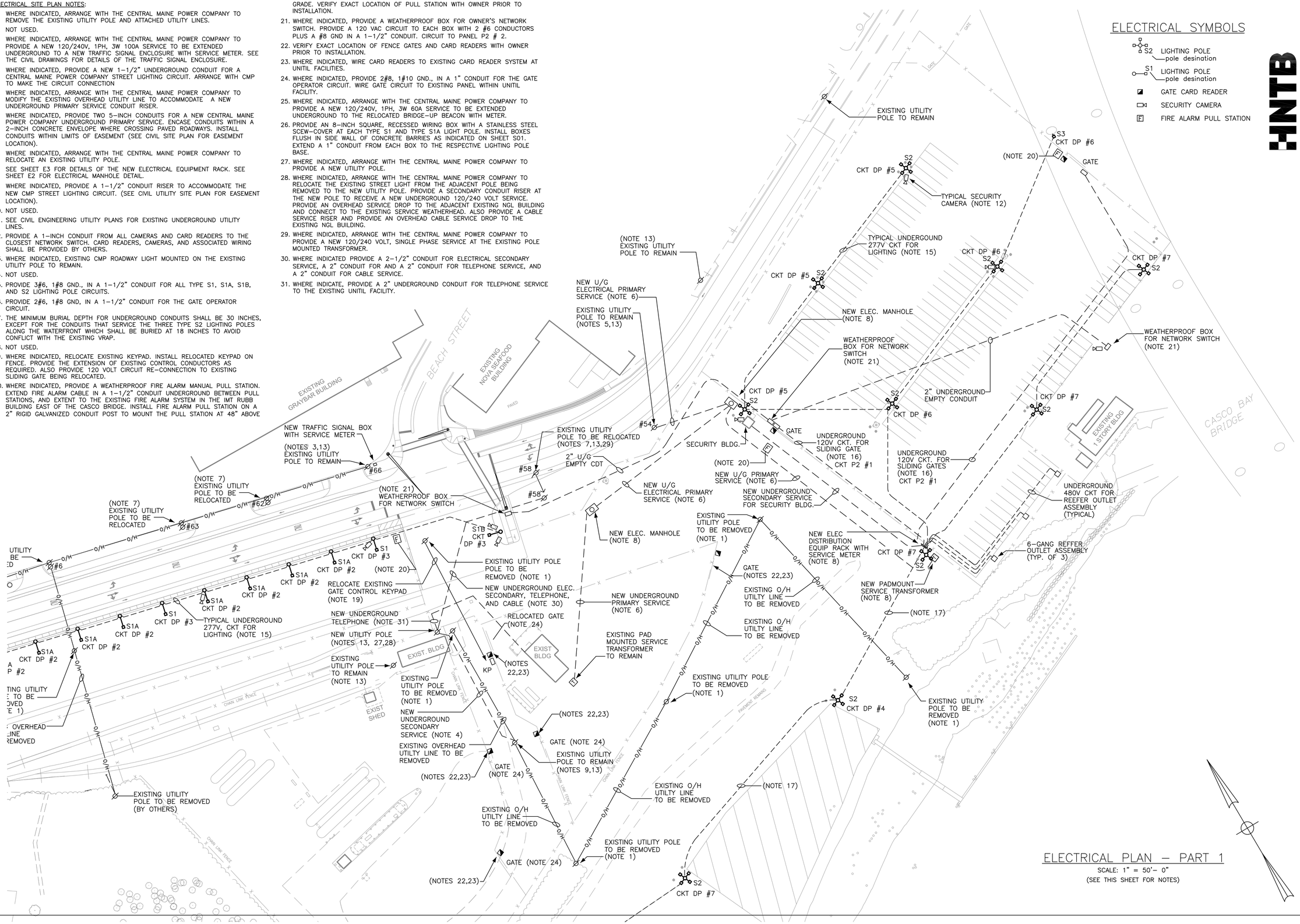

ELECTRICAL PLAN – PART 1

SCALE: 1" = 50'– 0"

(SEE THIS SHEET FOR NOTES)

HNTB

STATE OF MAINE
DEPARTMENT OF TRANSPORTATION

62506-DS-001

WIN
-

STATE OF MAINE LAWRENCE E. BARTLETT No. 7928 LICENSED PROFESSIONAL ENGINEER

PROJ. MANAGER	CRAIG R. MORIN		
DESIGN-DETAILED	LEB	BY	DATE
CHECKED-REVIEWED	LEB	LEB	07/11/14
DESIGN2-DETAILED2	-	-	-
DESIGN3-DETAILED3	-	-	-
REVISIONS 1	-	-	-
REVISIONS 2	-	-	-
REVISIONS 3	-	-	-
REVISIONS 4	-	-	-
FIELD CHANGES	-	-	-

Lawrence E. Bartlett 7/11/14

SIGNATURE
7928
P.E. NUMBER
02/26/14
DATE
06/26/14

PORTLAND INTERNATIONAL MARINE TERMINAL
EXISTING LAYDOWN AND CONNECTING CORRIDOR CONNECTION
PORTLAND CUMBERLAND COUNTY

ELECTRICAL PLAN - PART 1

SHEET NUMBER

E01

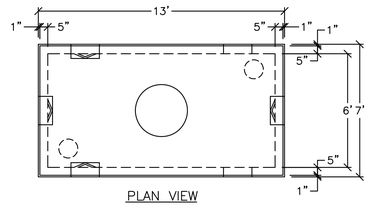

PLAN VIEW

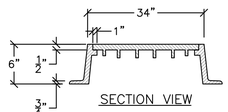

SECTION VIEW

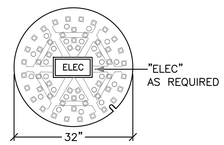

COVER

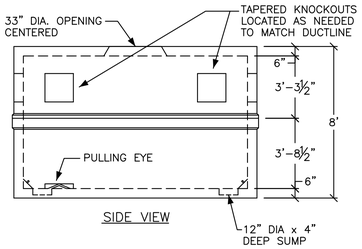

SIDE VIEW

ELECTRICAL MANHOLE

NOT TO SCALE

ELECTRICAL MANHOLE DETAIL NOTES:

1. VAULT SHALL BE DESIGNED TO WITHSTAND LOADING WITH 6" OF OVERBURDEN. THE DESIGN SHALL ALSO COMPLY WITH THE STRENGTH REQUIREMENTS OF NATIONAL ELECTRICAL SAFETY CODE SECTION 323A. PROVIDE SHOP DRAWINGS STAMPED BY A STATE OF MAINE REGISTERED PROFESSIONAL ENGINEER UPON REQUEST.
2. JOINTS SEALED WITH ASPHALT.
3. MOUNTINGS FOR CABLE RACKS, ETC. CAST IN WALL BY FURTHER PLANS OR FIELD LOCATED.
4. MANHOLE SHALL BE SET ON A SUITABLE GRAVEL BASE.
5. CABLES ARE TO BE RACKED ALONG ONE WALL ONLY.

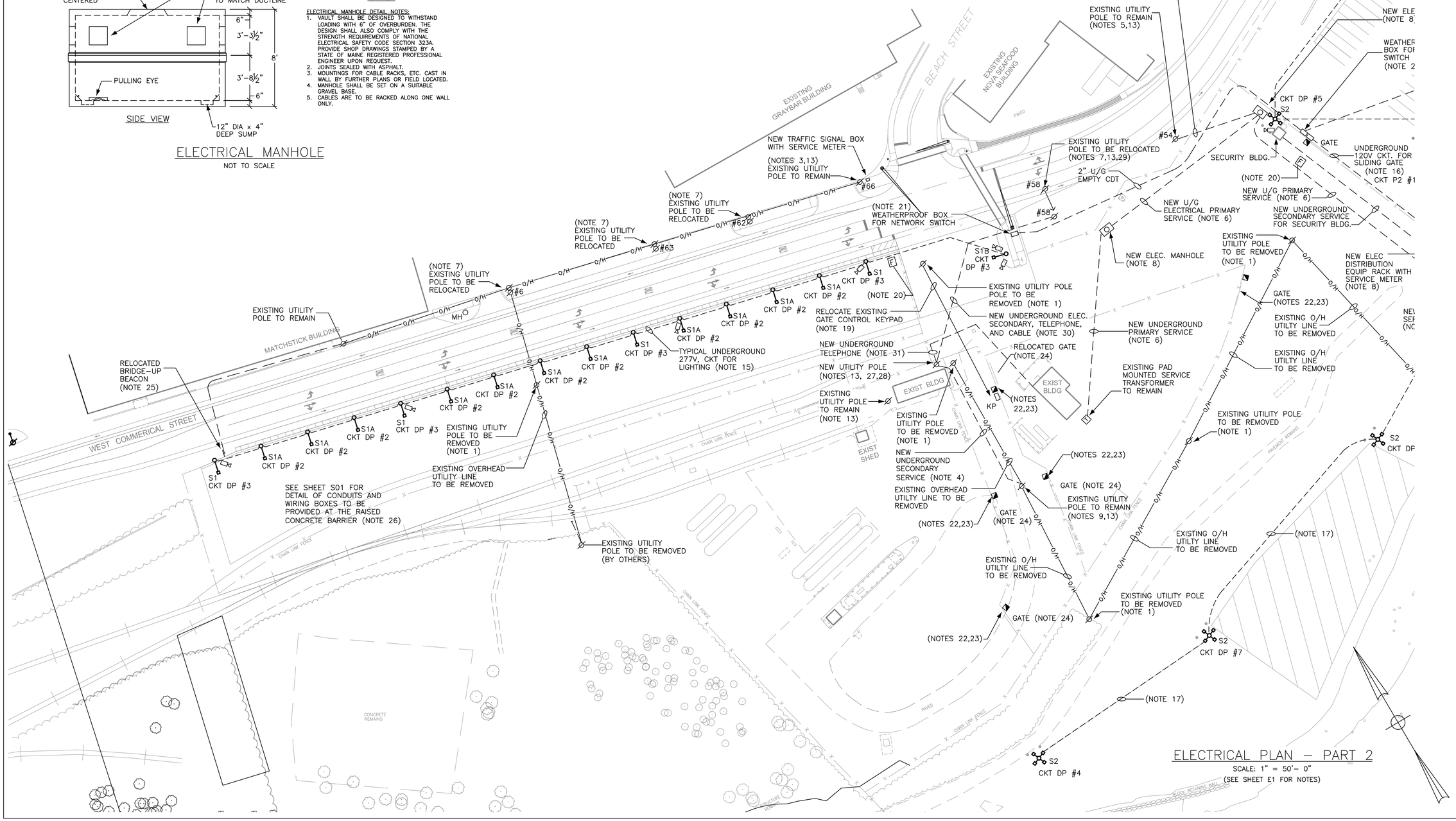

ELECTRICAL PLAN – PART 2

SCALE: 1" = 50'– 0"

(SEE SHEET E1 FOR NOTES)

HNTB

STATE OF MAINE
DEPARTMENT OF TRANSPORTATION

62506-DS-001

WIN
-

STATE OF MAINE
LAWRENCE E. BARTLETT
No. 7928
LICENSED
PROFESSIONAL ENGINEER

Lawrence E. Bartlett
7/11/14

		Lawrence E. Bartlett	DATE
		SIGNATURE	07/11/14
		7928	-
		P.E. NUMBER	-
		02/26/14	-
		DATE	-
		06/06/14	-

PROJ. MANAGER	CRAIG R. MORIN	
DESIGN–DETAILED	LEB	BY
CHECKED–REVIEWED	-	-
DESIGN2–DETAILED2	-	-
DESIGN3–DETAILED3	-	-
REVISIONS 1	-	-
REVISIONS 2	-	-
REVISIONS 3	-	-
REVISIONS 4	-	-
FIELD CHANGES	-	-

PORTLAND INTERNATIONAL MARINE TERMINAL
EXISTING LAYDOWN AND CONNECTING CORRIDOR CONNECTION
PORTLAND CUMBERLAND COUNTY

ELECTRICAL PLAN - PART 2

SHEET NUMBER

E02

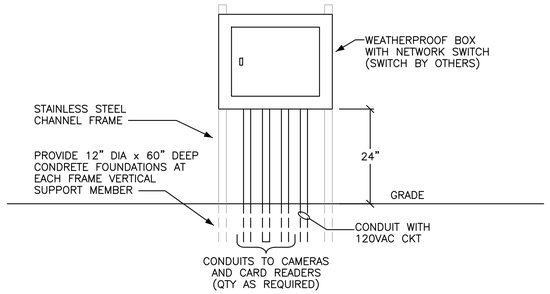

NETWORK SWITCH WEATHERPROOF BOX

NOT TO SCALE

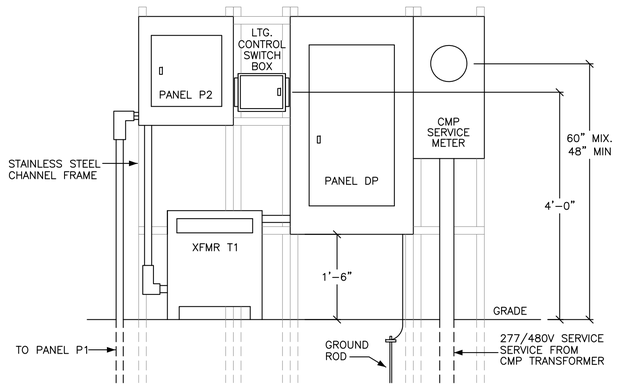

ELECTRICAL EQUIPMENT ELEVATION

NOT TO SCALE

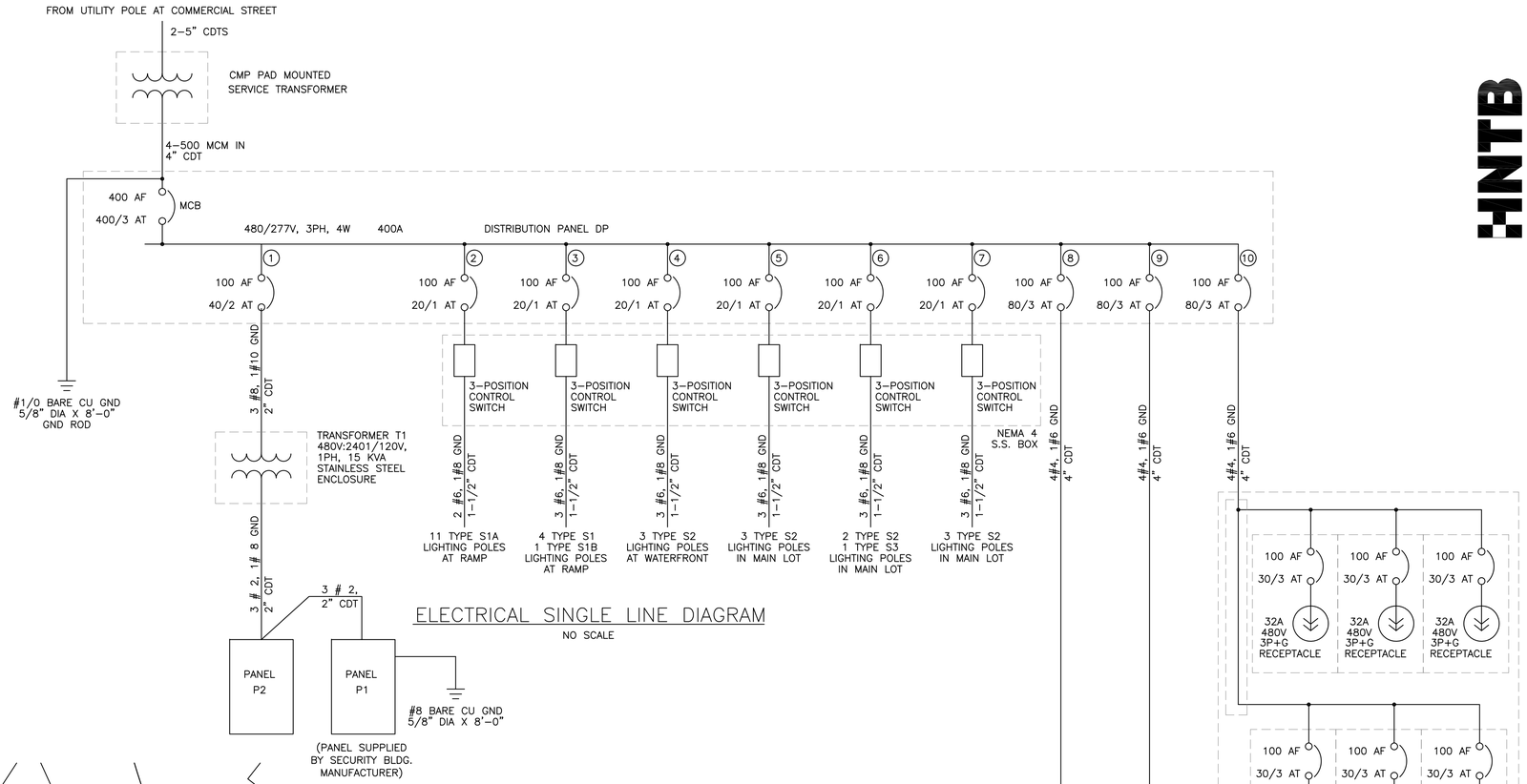

ELECTRICAL SINGLE LINE DIAGRAM

NO SCALE

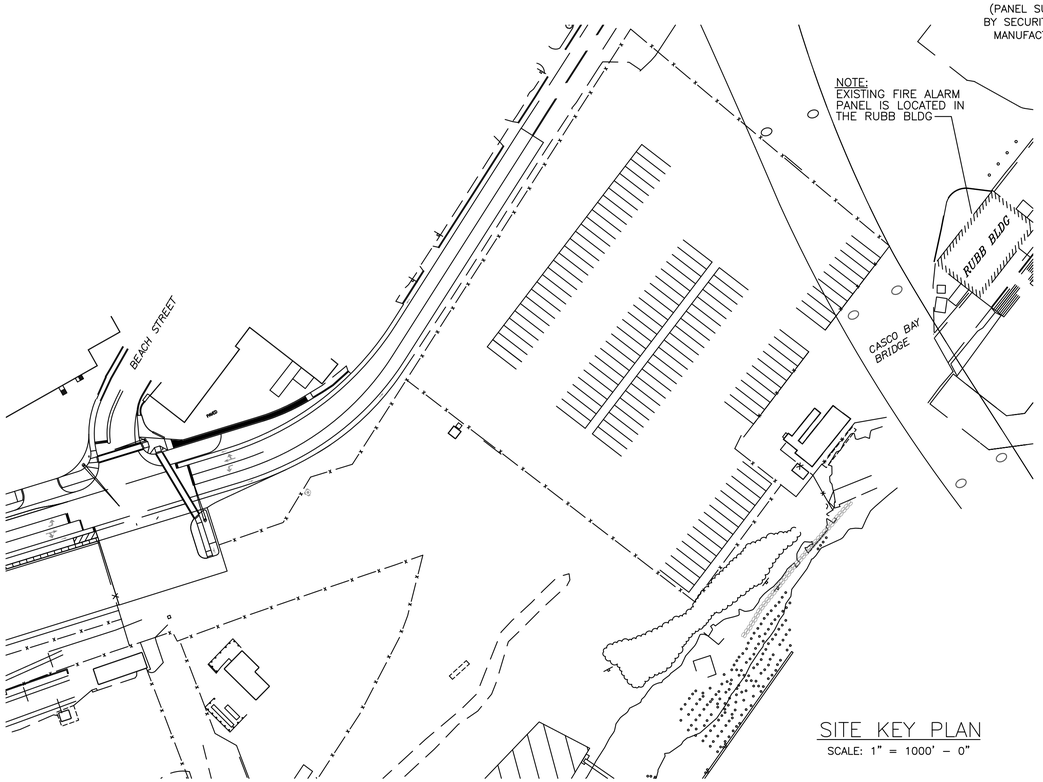

SITE KEY PLAN

SCALE: 1" = 1000' - 0"

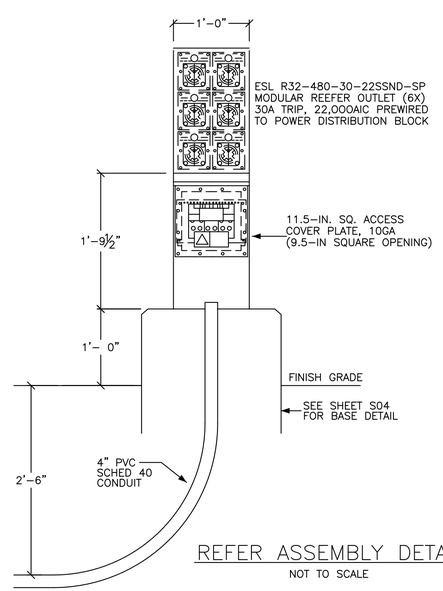

REFER ASSEMBLY DETAIL

NOT TO SCALE

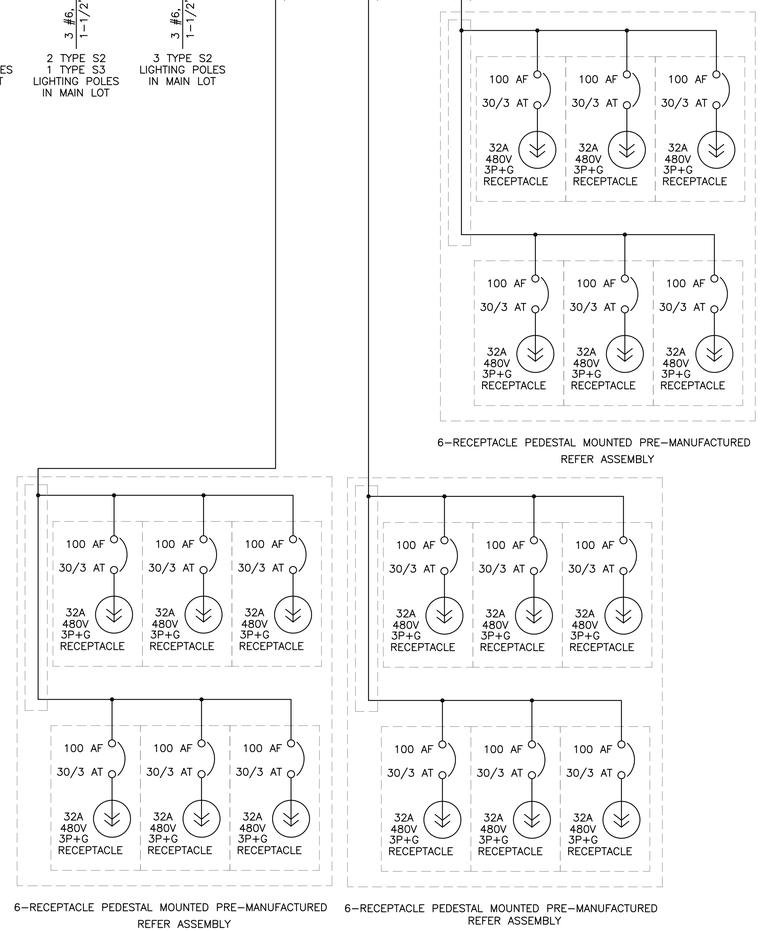

HNTB

STATE OF MAINE
DEPARTMENT OF TRANSPORTATION

62506-DS-001

WIN
-

STATE OF MAINE LAWRENCE E. BARTLETT No. 7928 PROFESSIONAL ENGINEER

Lawrence E. Bartlett 7/11/14

		BY	DATE
PROJ. MANAGER	CRAIG R. MORIN		
DESIGN-DETAILED	LEB	LEB	07/11/14
CHECKED-REVIEWED	-	-	-
DESIGN2-DETAILED2	-	-	-
DESIGN3-DETAILED3	-	-	-
REVISIONS 1			
REVISIONS 2	-	-	-
REVISIONS 3	-	-	-
REVISIONS 4	-	-	-
FIELD CHANGES	-	-	-

SIGNATURE	Lawrence E. Bartlett
P.E. NUMBER	7928
DATE	02/26/14
DATE	06/06/14

PORTLAND INTERNATIONAL MARINE TERMINAL
EXISTING LAYDOWN AND CONNECTING CORRIDOR CONNECTION
PORTLAND CUMBERLAND COUNTY

ELECTRICAL DETAILS

SHEET NUMBER

E03

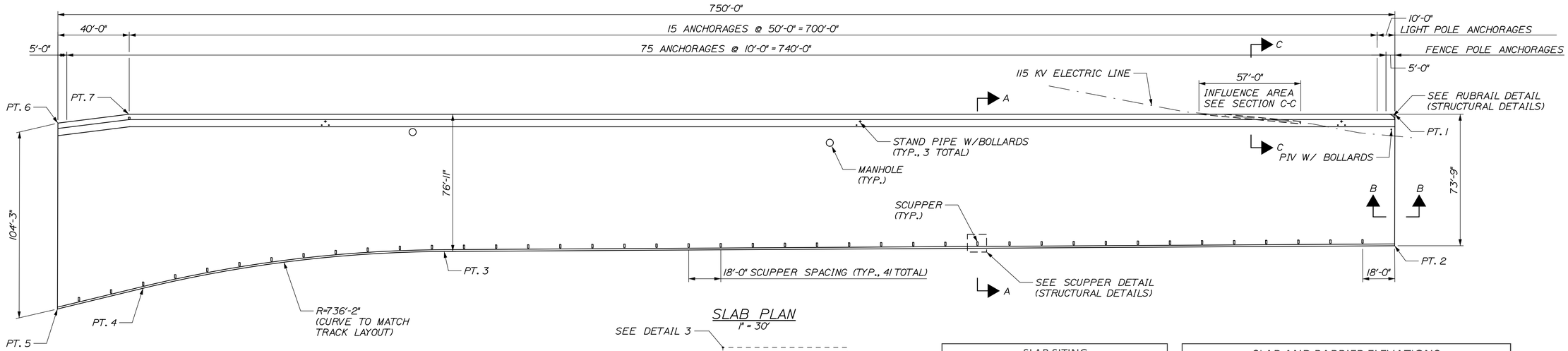

SLAB PLAN
1" = 30'

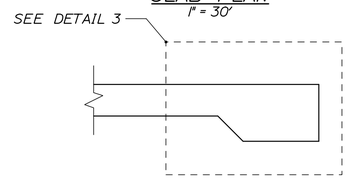

SECTION B-B
1/2" = 1'-0"

SECTION C-C
1/2" = 1'-0"

SLAB SITING		
POINT	NORTHING	EASTING
PT.1	296085.42	2927435.99
PT.2	296014.85	2927457.35
PT.3	295856.11	2926948.33
PT.4	295787.03	2926792.86
PT.5	295761.90	2926750.31
PT.6	295861.57	2926719.88
PT.7	295878.03	2926756.68

SLAB AND BARRIER ELEVATIONS			
STATION*	FRONT EDGE FEATURE	BACK EDGE FEATURE	BARRIER
204+73	19.64	15.02	23.64
205+00	19.85	14.99	23.85
205+25	20.00	14.94	24.00
205+50	19.80	14.89	23.80
205+75	19.61	14.84	23.61
206+00	19.39	14.80	23.39
206+25	19.18	14.78	23.18
206+50	19.06	14.76	23.06
206+75	18.96	14.75	22.96
207+00	18.83	14.74	22.83
207+25	18.70	14.74	22.70
207+50	18.63	14.74	22.63
207+75	18.51	14.74	22.51
208+00	18.36	14.74	22.36
208+25	18.19	14.74	22.19
208+50	17.99	14.73	21.99
208+75	17.82	14.73	21.82
209+00	17.65	14.73	21.65
209+25	17.49	14.73	21.49
209+50	17.26	14.73	21.26
209+75	17.05	14.73	21.05
210+00	16.90	14.73	20.90
210+25	16.77	14.72	20.77
210+50	16.65	14.72	20.65
210+75	16.48	14.72	20.48
211+00	16.29	14.72	20.29
211+25	16.11	14.72	20.11
211+50	15.90	14.72	19.90
211+75	15.66	14.71	19.66
212+00	15.43	14.71	19.43
212+23	15.24	14.71	19.24

* STATIONS REFERENCED FROM COMMERCIAL STREET BASELINE.

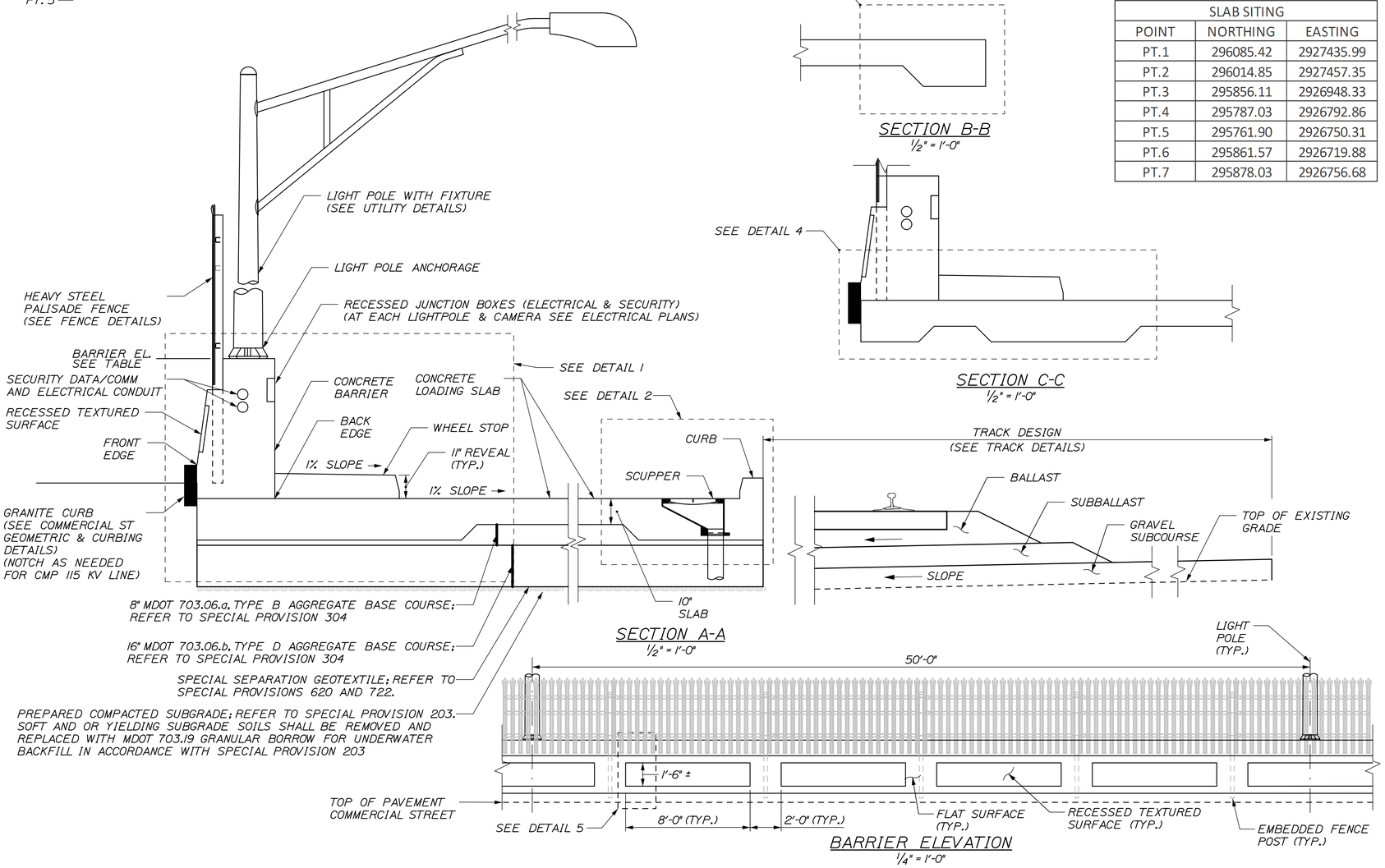

SECTION A-A
1/2" = 1'-0"

BARRIER ELEVATION
1/4" = 1'-0"

STATE OF MAINE
DEPARTMENT OF TRANSPORTATION

PROJECT NUMBER 022809.20

WIN
022809.20

		BY	DATE
PROJ. MANAGER	J. KITTREDGE		
DESIGN-DETAILED	KEB	MPC	06/14
CHECKED-REVIEWED	-	CRM	06/14
DESIGN2-DETAILED2	-	-	-
DESIGN3-DETAILED3	-	-	-
REVISIONS 1	-	-	-
REVISIONS 2	-	-	-
REVISIONS 3	-	-	-
REVISIONS 4	-	-	-
FIELD CHANGES	-	-	-

SIGNATURE

P.E. NUMBER

DATE

PORTLAND INTERNATIONAL MARINE TERMINAL
EXISTING LAYDOWN AND CONNECTING CORRIDOR CONNECTION
PORTLAND CUMBERLAND COUNTY

CONCRETE LOADING SLAB

SHEET NUMBER

S01

Filename: 030_Concrete Loading Slab.dgn Division: Username: Date:7/11/2014

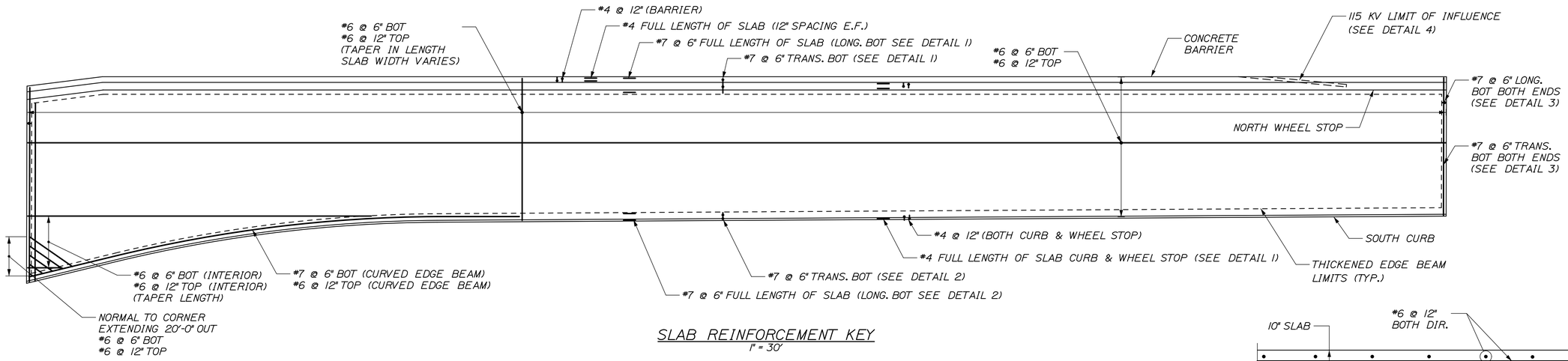

SLAB REINFORCEMENT KEY
1" = 30'

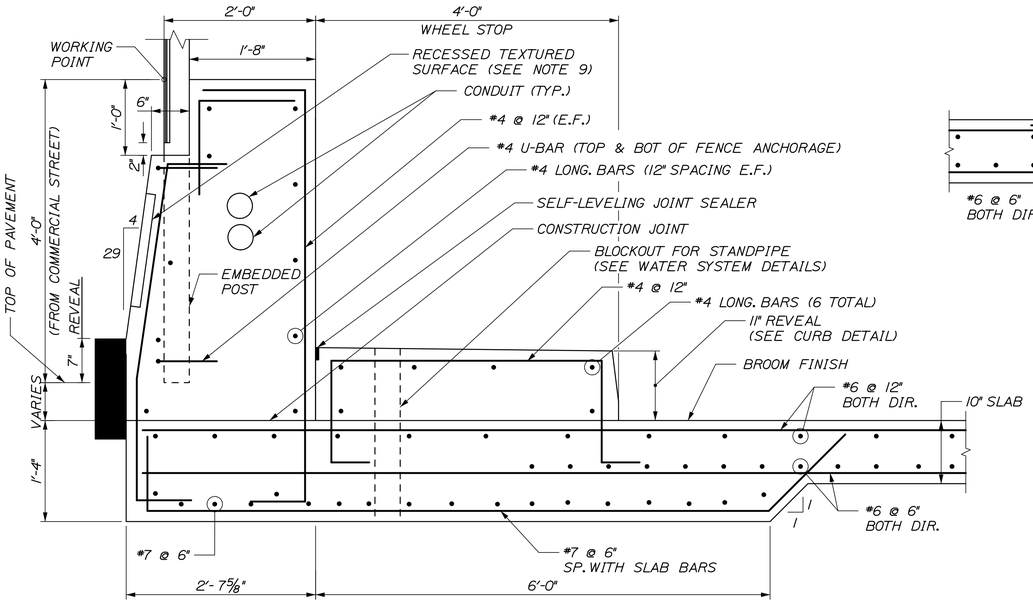

DETAIL 1
1" = 1'-0"

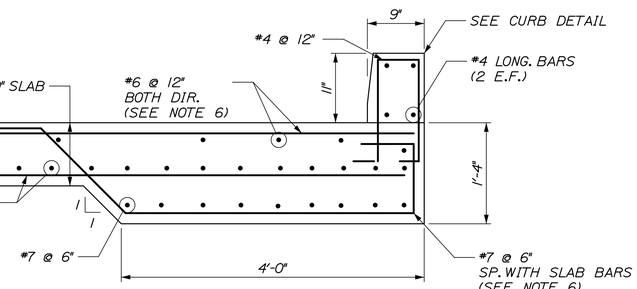

DETAIL 2
1" = 1'-0"

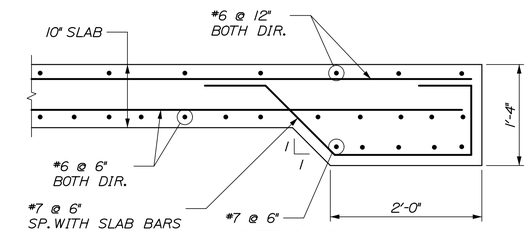

DETAIL 3
1" = 1'-0"

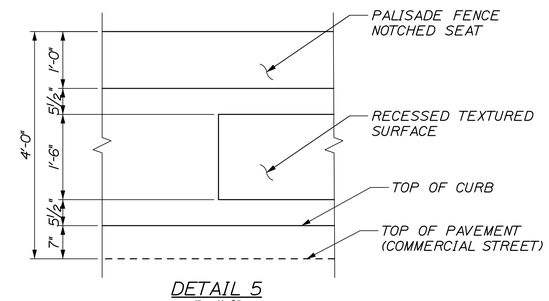

DETAIL 5
1" = 1'-0"

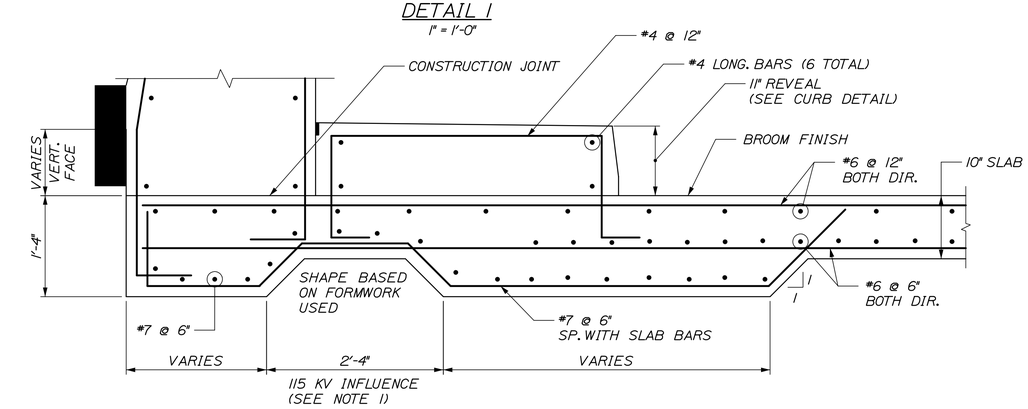

DETAIL 4
1" = 1'-0"

GENERAL NOTES:

1. 115 KV LIMIT OF INFLUENCE IS BASED ON TEST PITS. CONTRACTOR SHALL VERIFY LOCATION. IF LOCATION CHANGES THE RESIDENT AND THE ENGINEER SHOULD BE NOTIFIED. SEE SITE DETAILS FOR MORE INFORMATION.

2. SUBGRADE PREPARATION SHALL BE OBSERVED BY AND COMPLETED TO THE SATISFACTION OF THE GEOTECHNICAL ENGINEER.

CONCRETE NOTES:

1. CONCRETE BASIC DESIGN STRESSES SHALL BE:
   -CAST-IN-PLACE, (UON): CLASS "LP"

2. CONCRETE SHALL CONTAIN 5.0 GAL/CY OF CALCIUM CORROSION INHIBITOR ADMIXTURE.

3. CLEARANCES FOR REINFORCEMENT SHALL BE:
   CAST-IN-PLACE SLAB & BARRIER: 2" (UON)

4. WET CURING OF CONCRETE IS TO BEGIN WITHIN 30 MINUTES AFTER CONCRETE FINISHING, OR AS SOON AS POSSIBLE WITHOUT DAMAGING FINISHED SURFACE.

5. ALL FORMWORK FOR CONCRETE SHALL BE LEFT IN PLACE AND CONCRETE SURFACES SHALL BE COVERED AND KEPT MOIST FOR A PERIOD OF NOT LESS THAN TWO (2) FULL DAYS AFTER CONCRETE PLACEMENTS.

6. SAWCUT TOP 1 1/2" OF SLAB 25' X 25' GRID FOLLOWING CONCRETE PLACEMENT. CURBS SHALL BE SAWCUT EVERY 25' TO MATCH SLAB.

7. OPTIONAL TRANSVERSE CONSTRUCTION JOINTS MAY BE USED EVERY 100 FEET FOR BOTH BARRIER AND SLAB. JOINTS SHALL BE SEALED WITH JOINT SEALER SEE DETAIL.

8. DUMMY JOINTS WITHIN THE CONCRETE BARRIER SHALL BE PLACED ON ALL EXPOSED SURFACES OF BARRIER SPACED AT 12'-6" ON CENTER. SEE DETAIL.

9. TEXTURED SURFACE SHALL BE A RECESSED PANEL APPLIED TO THE VERTICAL EXPOSED FACE OF THE CONCRETE BARRIER. ALL OTHER FACES SHALL HAVE A SMOOTH FINISH. SEE SECTION 502 OF SPECIAL PROVISIONS FOR DETAILS.

REINFORCING STEEL NOTES:

1. ALL REINFORCING SHALL BE FULLY SUPPORTED ON NON-METALLIC APPROVED CHAIRS. REINFORCING SHALL NOT BE SUPPORTED ON TIMBER BLOCKS, BRICKS, CONCRETE BLOCKS, ETC.

2. CONTRACTOR SHALL SUBMIT DETAILED REINFORCING DRAWINGS INCLUDING BAR AND BENDING SCHEDULES TO THE ENGINEER FOR REVIEW AND APPROVAL PRIOR TO DELIVERY OF ANY REINFORCING STEEL.

3. REINFORCING BARS SHALL CONFORM TO ASTM A615, GRADE 60 AND SHALL BE EPOXY COATED.

4. SPLICE REINFORCEMENT AS INDICATED.

CLASS "B" SPLICES FOR EPOXY COATED REINFORCEMENT:

BAR SIZE	"OTHER" BARS 5000 PSI	"TOP" BARS* 5000 PSI
#4	2'-0"	2'-3"
#5	2'-6"	2'-10"
#6	3'-0"	3'-4"
#7	3'-5"	3'-11"
#8	4'-4"	4'-11"
#9	5'-6"	6'-2"

*A TOP BAR IS A HORIZONTAL BAR WHERE MORE THAN 12" OF CONCRETE IS CAST DIRECTLY BELOW THE BAR.

5. SPLICES SHALL BE LOCATED SUCH THAT NO MORE THAN 50 PERCENT OF THE REINFORCEMENT IS SPLICED AT ANY ONE LOCATION, UNLESS SHOWN OTHERWISE.

6. ALL HOOKS SHALL BE STANDARD ACI 90 OR 180 DEGREE END HOOKS, UNLESS SHOWN OTHERWISE.

7. AT SCUPPER AND MANHOLE LOCATIONS FLARE BARS TO CLEAR DRAIN. SEE DETAIL ON SHEET S3.

STATE OF MAINE
DEPARTMENT OF TRANSPORTATION

PROJECT NUMBER 022809.20

WIN 022809.20

	BY	DATE
PROJ. MANAGER	J. KITTREDGE	
DESIGN-DETAILED	KEB	MPC	06/14
CHECKED-REVIEWED	-	CRM	06/14
DESIGN2-DETAILED2	-	-	-
DESIGN3-DETAILED3	-	-	-
REVISIONS: 1	-	-	-
REVISIONS: 2	-	-	-
REVISIONS: 3	-	-	-
REVISIONS: 4	-	-	-
FIELD CHANGES	-	-	-

SIGNATURE
P.E. NUMBER
DATE

PORTLAND INTERNATIONAL MARINE TERMINAL
EXISTING LAYDOWN AND CONNECTING CORRIDOR CONNECTION
PORTLAND CUMBERLAND COUNTY

CONCRETE LOADING SLAB

SHEET NUMBER
S02

Filename: 031_Slab Reinforcing Details.dgn Division: Username: Date:7/11/2014

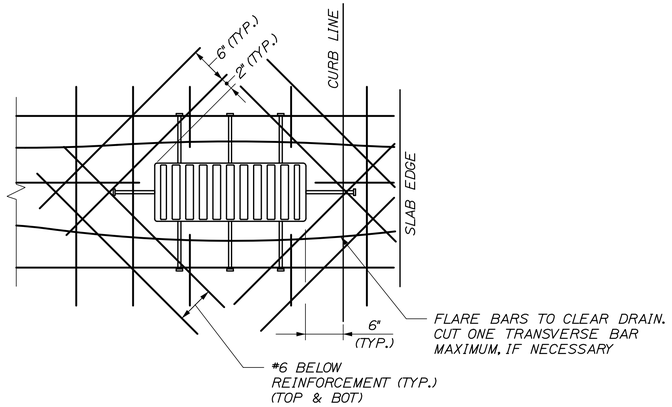

SLAB REINFORCEMENT AT SCUPPER
1" = 1'-0"

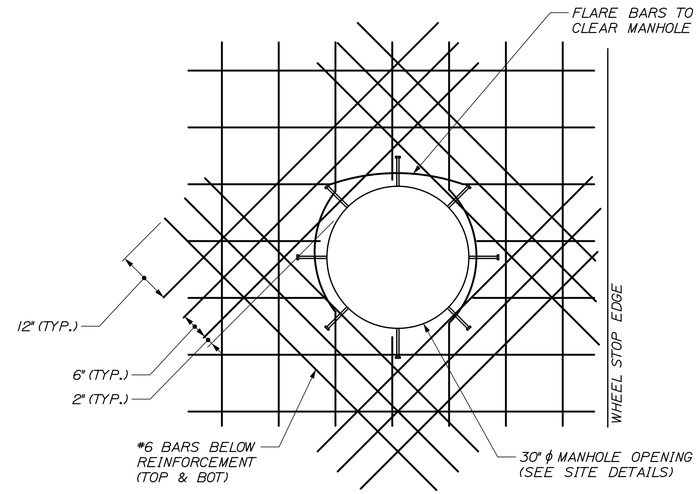

SLAB REINFORCEMENT AT MANHOLE
3/4" = 1'-0"

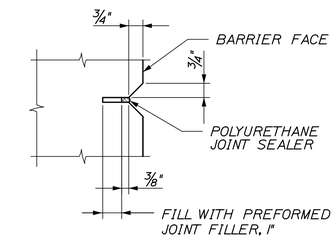

DUMMY JOINT DETAIL (PLAN VIEW)
3" = 1'-0"

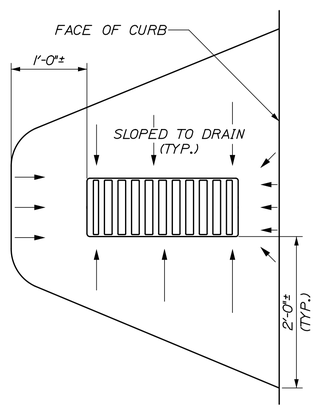

SLAB DEPRESSION AROUND SCUPPER
1" = 1'-0"

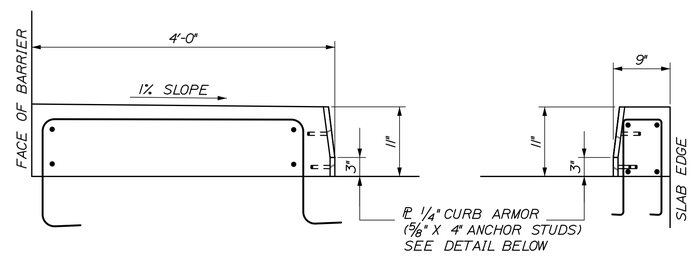

NORTH WHEEL STOP

SOUTH CURB

CURB DETAIL
1" = 1'-0"

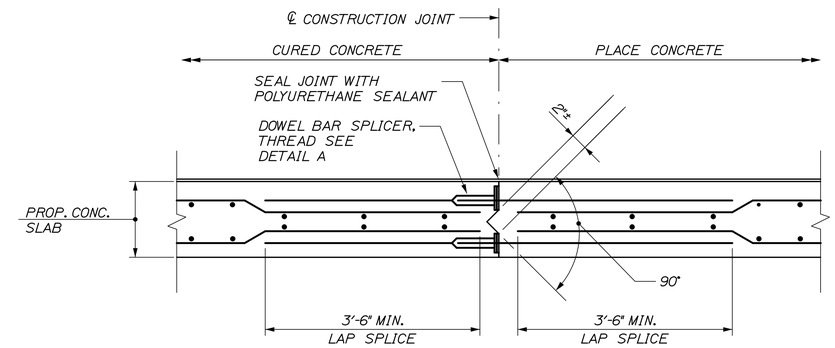

TRANSVERSE CONSTRUCTION JOINT DETAIL
NOT TO SCALE

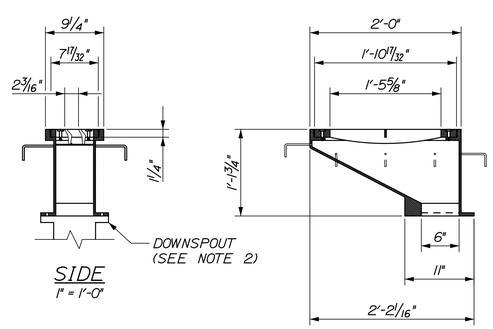

SIDE
1" = 1'-0"

ELEVATION
1" = 1'-0"

SCUPPER DETAIL

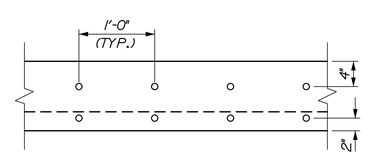

CURB ARMOR DETAIL
1" = 1'-0"

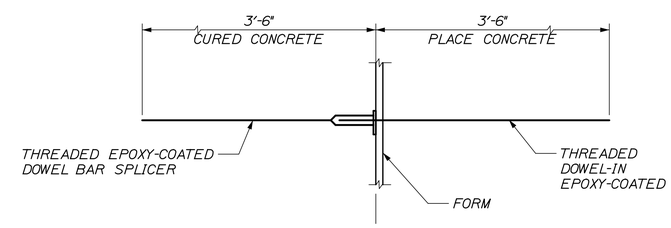

DETAIL A
NOT TO SCALE

SCUPPER NOTES:

1. SCUPPER SHALL BE HEAVY DUTY NEENAH R-3921-BI OR APPROVED EQUAL.

2. STANDARD 125# FLANGED TEMPLATE DOWNSPOUT TO SLAB UNDERDRAIN.

DUMMY JOINT NOTES

1. CONSTRUCTION OF DUMMY JOINTS, INCLUDING JOINT FILLER & SEALANT, SHALL BE INCIDENTAL TO SECTION 502.

2. CONCRETE SHALL BE PLACED SIMULTANEOUSLY ON BOTH SIDES OF THE JOINT. THE JOINTS SHALL REMAIN PLUMB AND STRAIGHT. A THIN STEEL PLATE MAY BE USED TO SUPPORT THE JOINT DURING CONCRETE PLACEMENT. THE PLATE SHALL BE CAREFULLY REMOVED WHILE THE CONCRETE IS PLASTIC.

3. PREFORMED JOINT FILLER SHALL CONFORM TO ASTM DESIGNATION D1752. TYPE 1 OR ASTM D5249. TYPE 2. PREFORMED JOINT FILLER SHALL BE A NON STAINING, NON BLEEDING TYPE. PRODUCTS SUCH AS CERAMAR MANUFACTURED BY W.R. MEADOWS OR AN APPROVED EQUAL WILL BE ACCEPTABLE. CORK IS NOT AN ACCEPTABLE FILLER MATERIAL.

STATE OF MAINE
DEPARTMENT OF TRANSPORTATION

PROJECT NUMBER 022809.20

WIN 022809.20

		BY	DATE
PROJ. MANAGER	J. KITTREDGE		
DESIGN-DETAILED	KEB	MPC	06/14
CHECKED-REVIEWED	-	CRM	06/14
DESIGN2-DETAILED2	-	-	-
DESIGN3-DETAILED3	-	-	-
REVISIONS 1	-	-	-
REVISIONS 2	-	-	-
REVISIONS 3	-	-	-
REVISIONS 4	-	-	-
FIELD CHANGES	-	-	-

SIGNATURE

P.E. NUMBER

DATE

PORTLAND INTERNATIONAL MARINE TERMINAL
EXISTING LAYDOWN AND CONNECTING CORRIDOR CONNECTION
PORTLAND CUMBERLAND COUNTY

CONCRETE LOADING SLAB

SHEET NUMBER
S03

Date:6/26/2014
Username:
Division:
Filename: 032_Slab Details.dgn

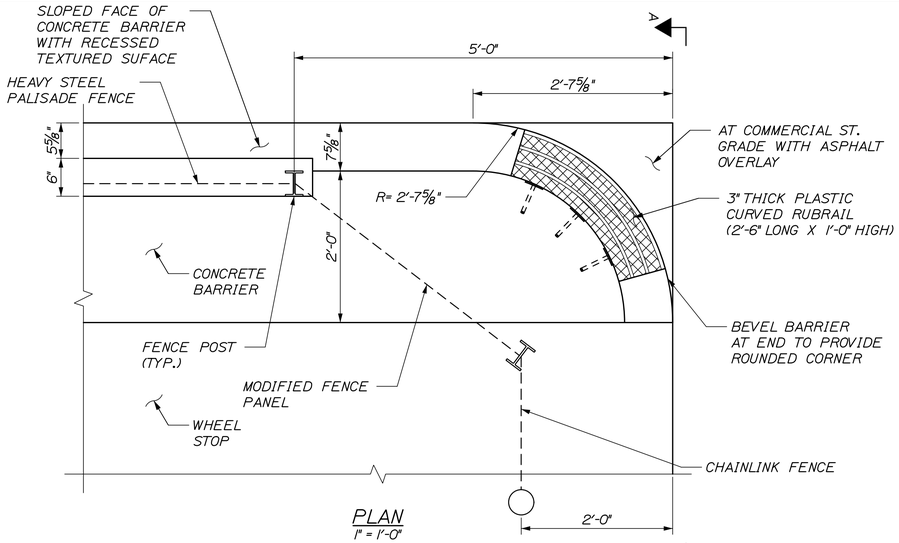

PLAN
1" = 1'-0"

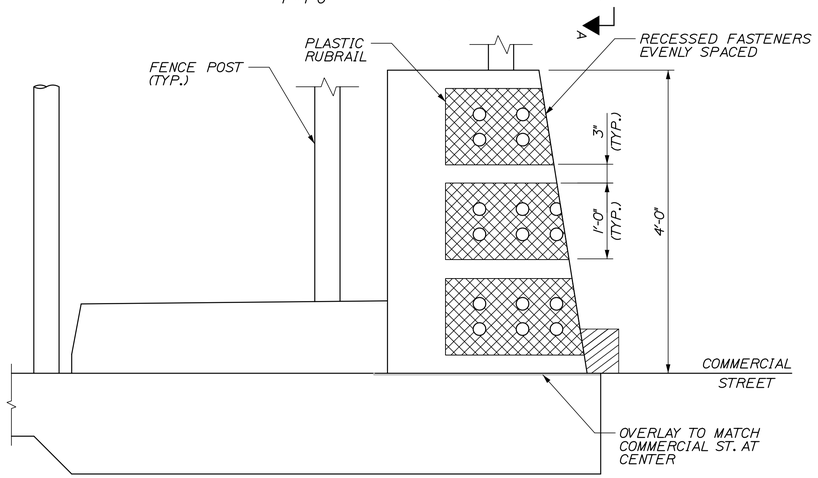

SECTION A-A
RUBRAIL DETAIL
1" = 1'-0"

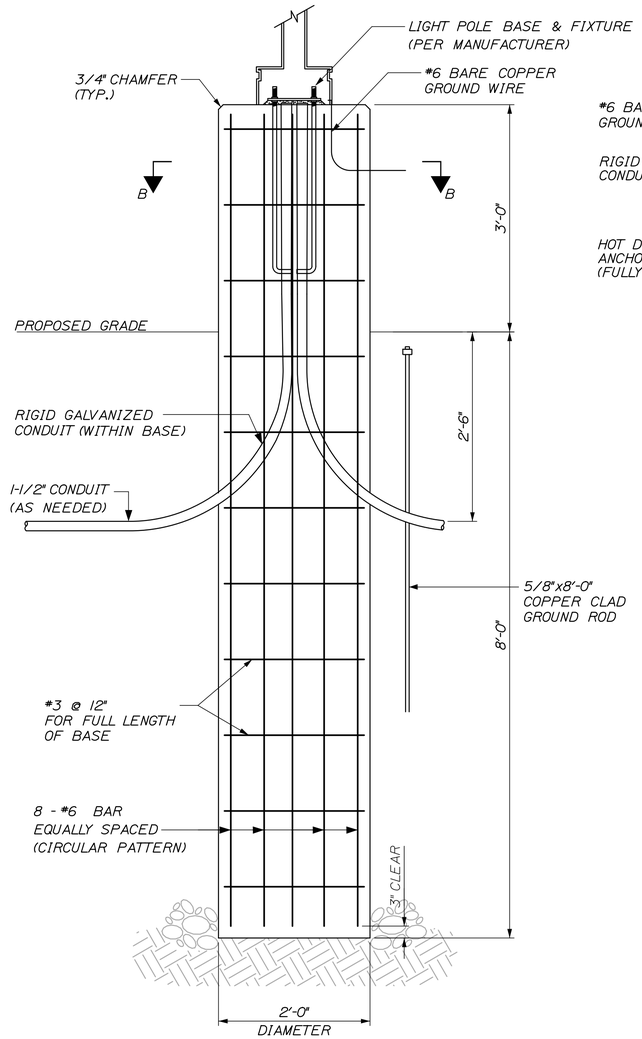

LIGHT POLE FOUNDATION
1" = 1'-0"

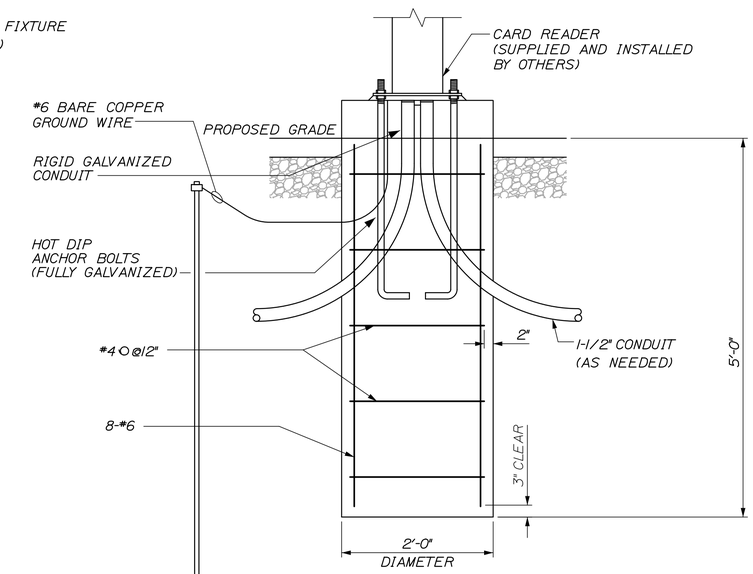

CARD READER FOUNDATION
1" = 1'-0"

LIGHT POLE AND FENCE LAYOUT
1" = 1'-0"

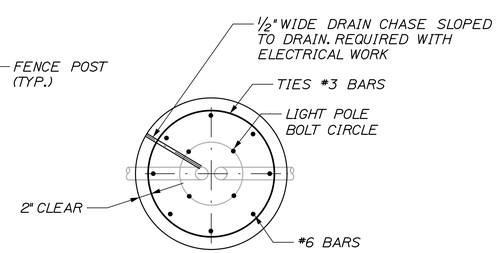

SECTION B-B
1" = 1'-0"

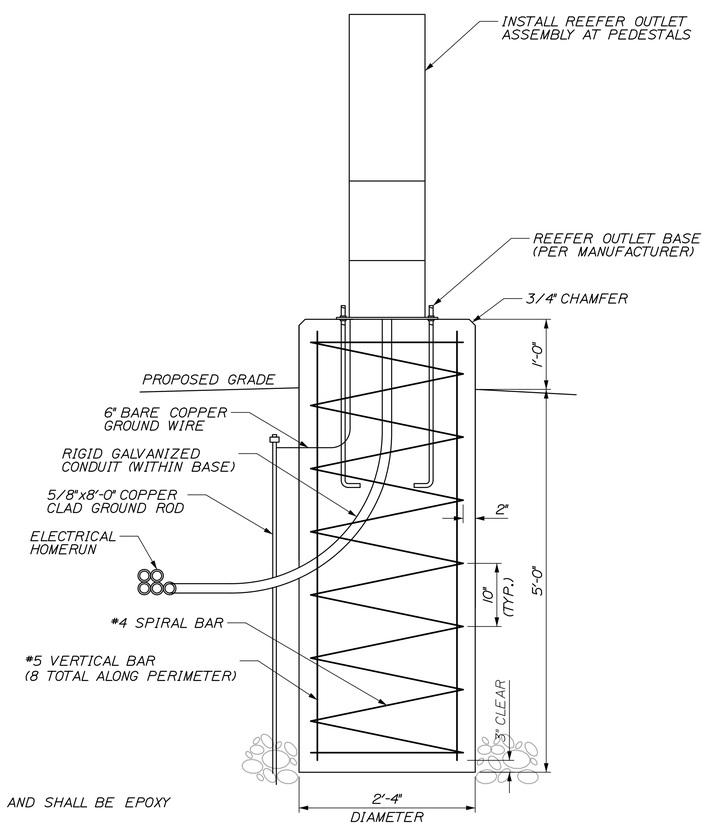

REEFER OUTLET PEDESTAL
1" = 1'-0"

FOUNDATION NOTES:

1. REINFORCEMENT SHALL CONFORM WITH ASTM A615, GRADE 60 AND SHALL BE EPOXY COATED.

2. FIXTURES MOUNTED TO THE FOUNDATIONS SHALL BE DESIGNED AND DETAILED BY MANUFACTURER.

3. FOR MAST ARM FOUNDATION DETAILS, SEE SECTION 626 OF THE SPECIAL PROVISIONS.

STATE OF MAINE
DEPARTMENT OF TRANSPORTATION

PROJECT NUMBER 022809.20

WIN 022809.20

		BY	DATE
PROJ. MANAGER	J. KITTREDGE		
DESIGN-DETAILED	KEB	MPC	06/14
CHECKED-REVIEWED	-	CRM	06/14
DESIGN2-DETAILED2	-	-	-
DESIGN3-DETAILED3	-	-	-
REVISIONS 1	-	-	-
REVISIONS 2	-	-	-
REVISIONS 3	-	-	-
REVISIONS 4	-	-	-
FIELD CHANGES	-	-	-

SIGNATURE

P.E. NUMBER

DATE

PORTLAND INTERNATIONAL MARINE TERMINAL
EXISTING LAYDOWN AND CONNECTING CORRIDOR CONNECTION
PORTLAND CUMBERLAND COUNTY

STRUCTURAL DETAILS

SHEET NUMBER

S04

Filename: 033_Slab Details.dgn Division: Username: Date:7/11/2014

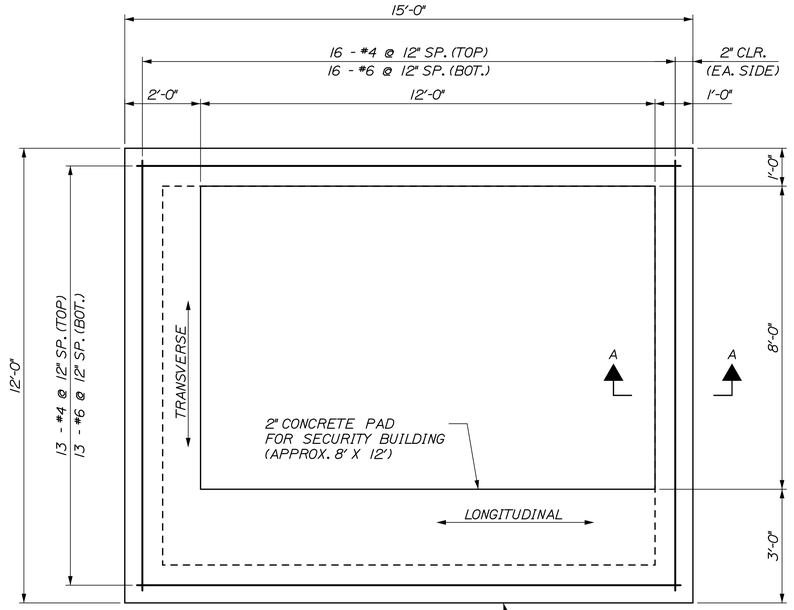

PLAN
1/2" = 1'-0"

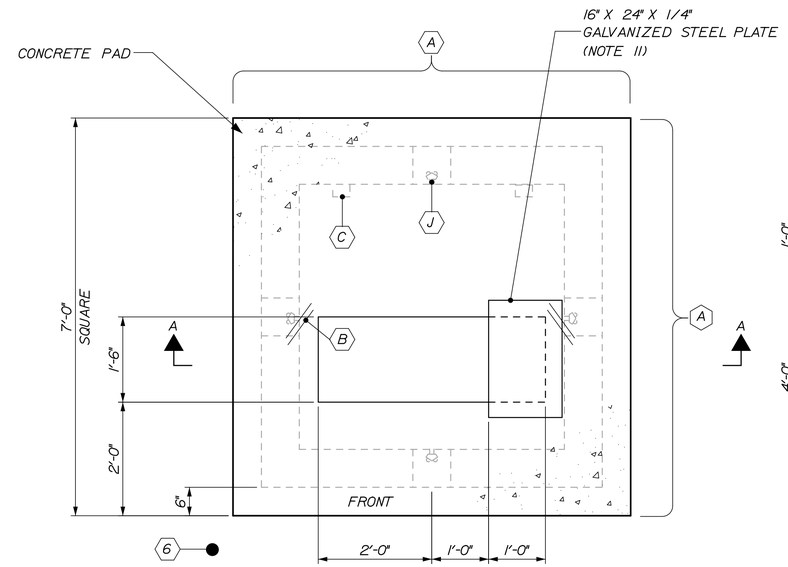

PLAN VIEW

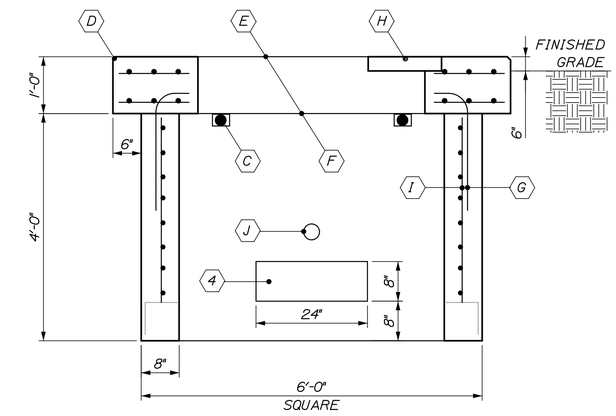

SECTION A-A

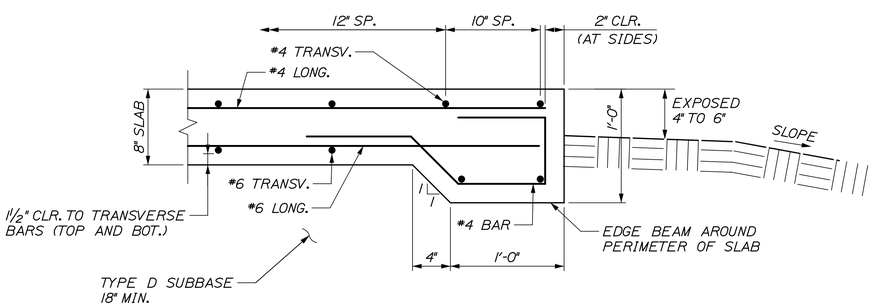

SECTION A-A
1 1/2" = 1'-0"

SECURITY BUILDING SLAB

NOTES:
1. ALL BARS EPOXY COATED.
2. TYPE D GRAVEL SUBBASE (18" MIN.)
3. CONTRACTOR TO COORDINATE BLOCKOUTS FOR UTILITIES.
4. MAINE DOT CLASS A CONCRETE.

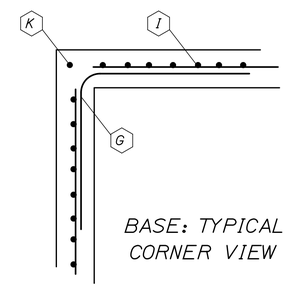

BASE: TYPICAL CORNER VIEW

TRANSFORMER PAD DETAIL NOTES:

1. "FRONT" DENOTES THE SIDE ON WHICH THE ACCESS DOORS ARE LOCATED. THE CONCRETE BASE SHALL BE SET ON A SUITABLE GRAVEL BASE AND LOCATED SO THE FRONT IS ACCESSIBLE BY TRUCK AND SUITABLY PROTECTED FROM PLOW AND TRAFFIC DAMAGE.
2. BEFORE INSTALLING OR REQUIRING ANY ACTIVE DRAINAGE STRUCTURE (EG. DRAIN PIPE) INTO THE FOUNDATION OR PAD, THE CONTRACTOR, CMP LINE SUPERVISOR, OR CMP DISTRIBUTION ENGINEER MUST CONTACT CENTRAL MAINE POWER COMPANY'S ENVIRONMENTAL SERVICES DEPARTMENT AT 623-3521 EXT 3479 TO REQUEST A SITE INSPECTION.
3. FINISH GRADE SHALL BE GRADED IN SUCH A MANNER TO ALLOW SURFACE WATER TO FLOW AWAY FROM THE PAD.
4. PROVIDE 8" X 24" CABLE HOLES (BOND OUTS) 8" UP THE WALL FROM THE BASE. LOCATE ONE CABLE HOLE PER WALL, MORE IF NECESSARY. LINE UP CABLE HOLES WITH TRENCH.
5. CONDUITS ENTERING CONCRETE STRUCTURES SHALL BE SET BACK FROM THE INSIDE WALL 1 TO 2 INCHES AND THE SPACE WITHIN THE KNOCKOUT SURROUNDING THE CONDUITS COMPLETELY FILLED WITH MORTAR TO PREVENT SOIL FROM ENTERING STRUCTURE. INSIDE THE STRUCTURE THE MORTAR SHALL BE FINISHED AND BEVELED FROM THE CONDUIT ENDS TO THE INSIDE WALL FACE TO COVER AND SMOOTH THE EDGES OF THE KNOCKOUTS.
6. A 3/4" X 8'-0" GALVANIZED GROUND ROD IS TO BE INSTALLED SIX INCHES IN FRONT OF THE FRONT CORNER OF THE FOUNDATION. THE TOP OF THE GROUND IS TO BE 6" BELOW FINAL GRADE.
7. A GROUND WIRE SHALL BE INSTALLED FROM THE GROUND ROD THROUGH THE CABLE HOLE AT THE BOTTOM OF THE PAD. 10 FEET OF GROUND WIRE SHALL BE PROVIDED SO THAT IT CAN BE INSTALLED THROUGH THE TWO GROUNDING LUGS AND CONNECTED TO THE NEUTRAL SPADE.
8. CONCRETE COMPRESSION STRENGTH SHALL BE 4000 PSI @ 28 DAYS. FOR CAST IN PLACE EARLY HIGH STRENGTH MAY BE USED WITH A MINIMUM OF SEVEN DAY CURE TIME.
9. REINFORCING STEEL TO HAVE: FY = 60 KSI.
10. FOR PRECAST UNITS: THE PRECAST SUPPLIER SHALL PROVIDE LIFTING LUGS IN THE SLAB (FOUNDATION) AND BASE; THE PRECAST SUPPLIER SHALL ASSEMBLE THE SLAB TO THE BASE PRIOR TO SHIPPING TO THE SITE TO ENSURE THAT THE SLAB AND THE BASE FIT PROPERLY (WITH NO ROCKING OF THE SLAB EVIDENT).
11. 1 16" X 24" X 1/4" GALVANIZED STEEL PLATE TO COVER A PORTION OF THE CABLE HOLE WHEN THE TRANSFORMER DOES NOT COMPLETELY COVER IT. CUT THE STEEL PLATE TO FIT IF NECESSARY.

A. 7-#5 REBAR EVENLY SPACED EACH WAY TOP TO BOTTOM
B. 2-#4 CORNER DIAGONAL REBAR 2'-0" LONG TOP AND BOTTOM
C. 4" X 4" X 1/2" ANGLE 6" LONG WITH 2-3/4" DIAMETER EXPANSION ANCHORS TYPICAL - 4 PLACES (TWO PIECE PRECAST ONLY)
D. CHAMFER TYPICAL
E. 2" CONCRETE COVER OVER TOP REBAR
F. 3" CONCRETE COVER OVER BOTTOM REBAR
G. #5 L-BAR @ 12" (CAST IN PLACE ONLY)
H. 16" X 24" X 1/4" GALVANIZED STEEL PLATE. MID #6000621790
I. #5 REBAR ON 12" CENTERS
J. PULLING EYE INSERT, FOR USE WITH 3/4" NATIONAL COURSE THREAD EYE-BOLT, (RICHMOND LCB-1 OR EQUIVALENT). LOCATED OPPOSITE EACH CABLE HOLE AND 2 FEET FROM THE BOTTOM.
K. ALL REBAR ENDS TO BE COVERED BY 1" OF CONCRETE MINIMUM.

THREE PHASE TRANSFORMER PAD DETAIL 7FT SQ.
NOT TO SCALE

STATE OF MAINE
DEPARTMENT OF TRANSPORTATION

PROJECT NUMBER 022809.20

WIN 022809.20

PROJ. MANAGER	J. KITTREDGE	BY	DATE
DESIGN-DETAILED	CRM	MPC	06/14
CHECKED-REVIEWED	-	-	06/14
DESIGN2-DETAILED2	-	-	-
DESIGN3-DETAILED3	-	-	-
REVISIONS 1	-	-	-
REVISIONS 2	-	-	-
REVISIONS 3	-	-	-
REVISIONS 4	-	-	-
FIELD CHANGES	-	-	-

SIGNATURE
P.E. NUMBER
DATE

PORTLAND INTERNATIONAL MARINE TERMINAL
EXISTING LAYDOWN AND CONNECTING CORRIDOR CONNECTION
PORTLAND CUMBERLAND COUNTY

STRUCTURAL DETAILS

SHEET NUMBER
S05

Filename: 034_StructuralDetls.dgn Division: Username: Date:6/26/2014

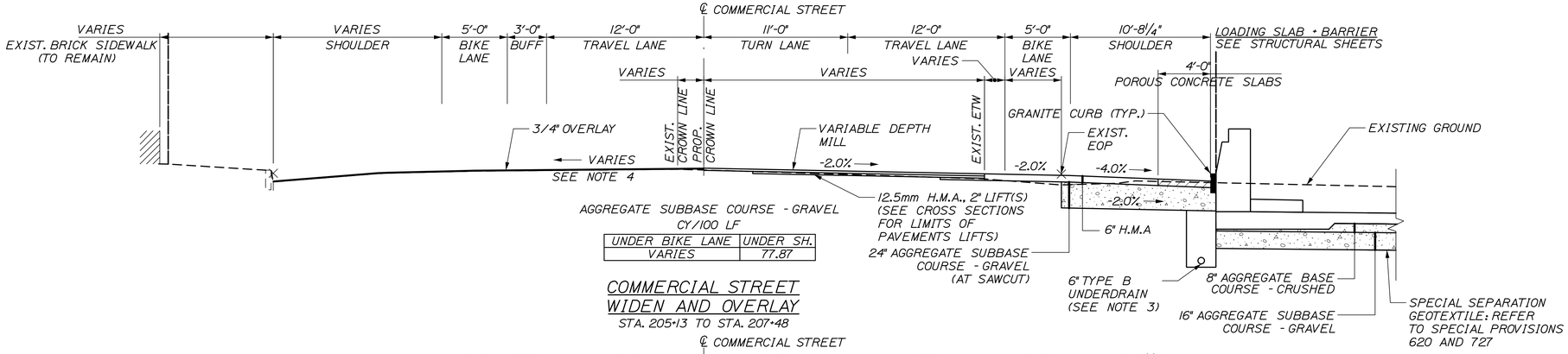

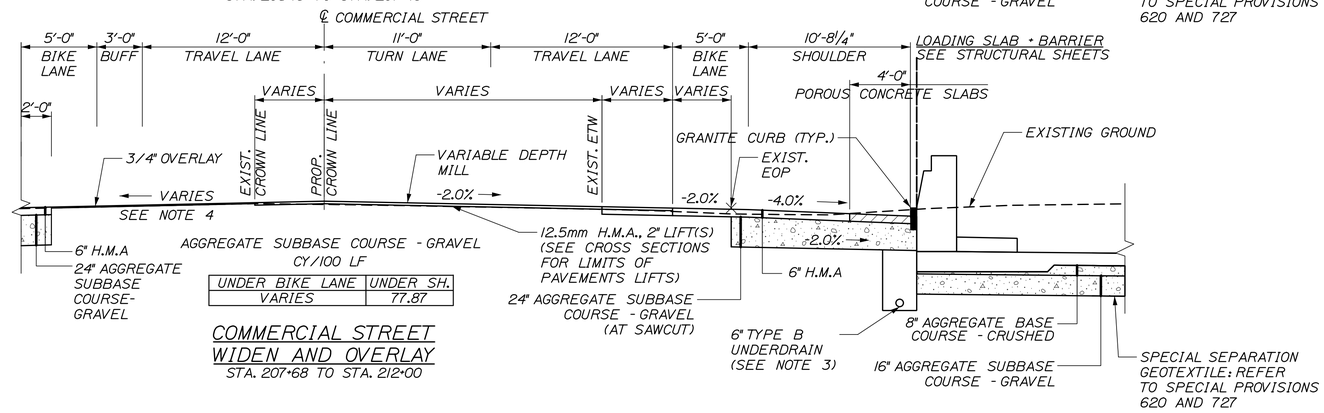

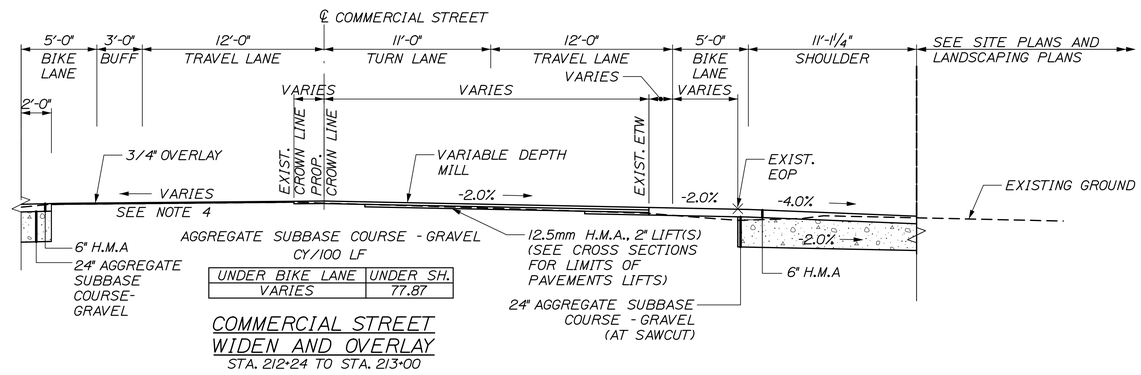

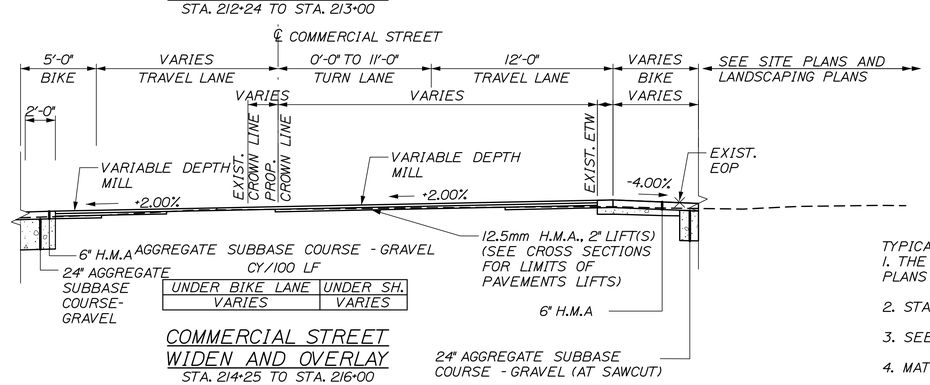

TYPICAL SECTION NOTES:

1. THE PAVEMENT, BASE AND SUBBASE DEPTHS AS SHOWN ON THE PLANS ARE INTENDED TO BE NOMINAL.
2. STATIONING SHOWN UNDER EACH TYPICAL IS APPROXIMATE.
3. SEE CROSS SECTIONS FOR ACTUAL UNDERDRAIN ELEVATIONS.
4. MATCH EXISTING TRAVELWAY SLOPE.
5. BRICK SIDEWALK TO BE CONSTRUCTED IN ACCORDANCE WITH CITY OF PORTLAND TECHNICAL STANDARD, FIGURE 1-10. EXECPT HMA SHALL BE 9.5 MM PAID UNDER 403.209

NOT TO SCALE

STATE OF MAINE
DEPARTMENT OF TRANSPORTATION

PROJECT NUMBER 022809.20

WIN 022809.20

		BY	DATE
PROJ. MANAGER	J. KITTREDGE		
DESIGN-DETAILED	RWH	TJW	06/14
CHECKED-REVIEWED	-	CRM	06/14
DESIGN2-DETAILED2	-	-	-
DESIGN3-DETAILED3	-	-	-
REVISIONS 1	-	-	-
REVISIONS 2	-	-	-
REVISIONS 3	-	-	-
REVISIONS 4	-	-	-
FIELD CHANGES	-	-	-

SIGNATURE

P.E. NUMBER

DATE

PORTLAND INTERNATIONAL MARINE TERMINAL
EXISTING LAYDOWN AND CONNECTING CORRIDOR CONNECTION
PORTLAND CUMBERLAND COUNTY

COMMERCIAL STREET
TYPICAL SECTIONS

SHEET NUMBER

H01

Filename: 035_Typ_Commercial.dgn Division: Username: Date:7/11/2014

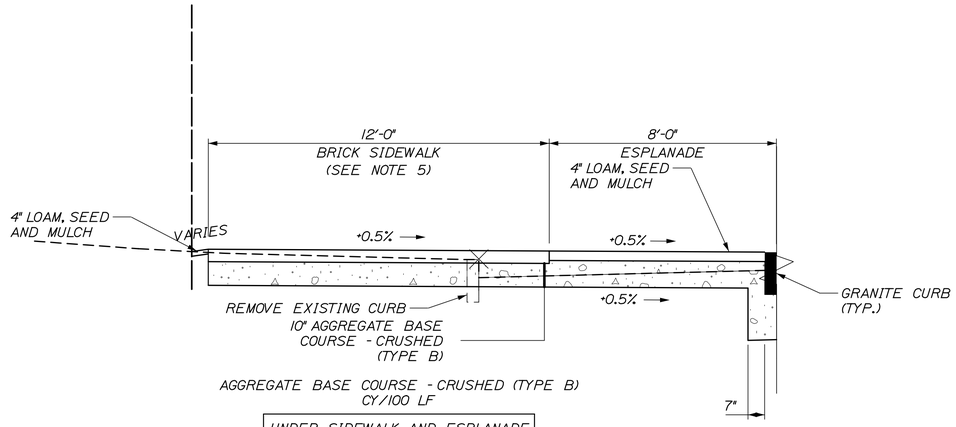

AGGREGATE BASE COURSE - CRUSHED (TYPE B)
CY/100 LF

UNDER SIDEWALK AND ESPLANADE
62.47

COMMERCIAL STREET SIDEWALK CONSTRUCTION

STA. 208+41 TO STA. 209+45

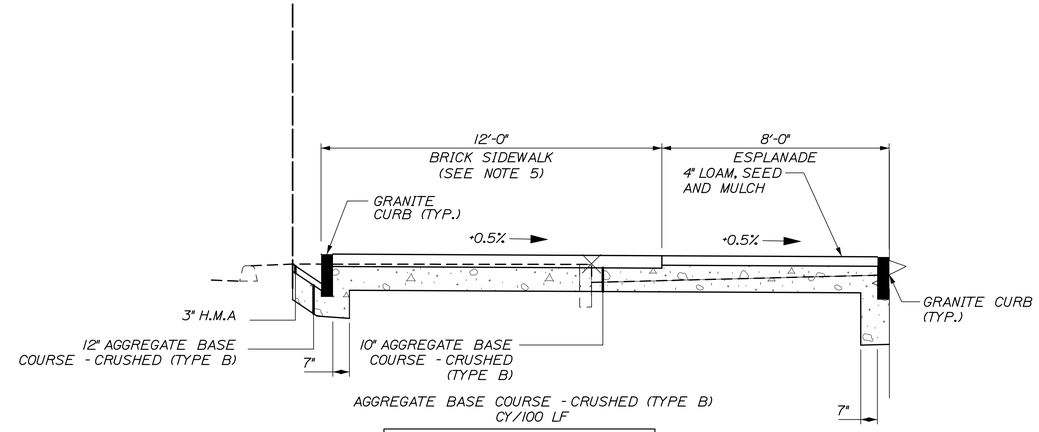

AGGREGATE BASE COURSE - CRUSHED (TYPE B)
CY/100 LF

UNDER SIDEWALK AND ESPLANADE
68.14

COMMERCIAL STREET SIDEWALK CONSTRUCTION

STA. 209+45 TO STA. 211+50

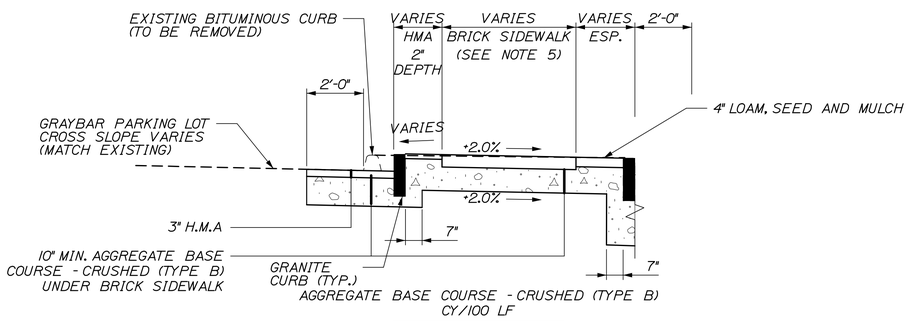

AGGREGATE BASE COURSE - CRUSHED (TYPE B)
CY/100 LF

UNDER SIDEWALK
VARIES

COMMERCIAL STREET SIDEWALK CONSTRUCTION

STA. 212+00 TO STA. 212+50, LT.

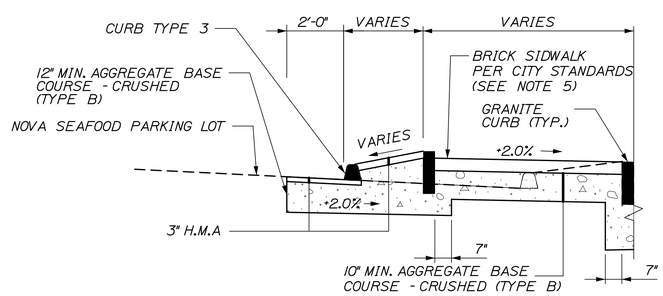

AGGREGATE BASE COURSE - CRUSHED (TYPE B)
CY/100 LF

UNDER SIDEWALK
VARIES

COMMERCIAL STREET SIDEWALK CONSTRUCTION

STA. 212+94 TO STA. 213+35, LT.

NOT TO SCALE

SUPERELEVATION (e)		
LEFT %	STATION	RIGHT %
MATCH EXISTING	204+50	MATCH EXISTING
MATCH EXISTING	204+75	-3.60
MATCH EXISTING	205+00	-2.80
MATCH EXISTING	205+25	-2.00
MATCH EXISTING	TO	
MATCH EXISTING	213+00	-2.00
MATCH EXISTING	213+25	-1.20
-2.00	213+50	-0.40
-2.00	213+75	+0.40
-2.00	214+00	+1.20
-2.00	214+25	+2.00
-2.00	TO	
-2.00	216+00	+2.00
-2.00	216+25	+1.20
-2.00	216+50	+0.40
-2.00	216+75	-0.40
-2.00	217+00	-1.20
MATCH EXISTING	217+25	MATCH EXISTING

TYPICAL SECTION NOTES:

1. THE PAVEMENT, BASE AND SUBBASE DEPTHS AS SHOWN ON THE PLANS ARE INTENDED TO BE NOMINAL.
2. STATIONING SHOWN UNDER EACH TYPICAL IS APPROXIMATE.
3. SEE CROSS SECTIONS FOR ACTUAL UNDERDRAIN ELEVATIONS.
4. MATCH EXISTING TRAVELWAY SLOPE.
5. BRICK SIDEWALK TO BE CONSTRUCTED IN ACCORDANCE WITH CITY OF PORTLAND TECHNICAL STANDARD, FIGURE 1-10, EXECPT HMA SHALL BE 9.5 MM PAID UNDER 403.209

STATE OF MAINE
DEPARTMENT OF TRANSPORTATION

PROJECT NUMBER 022809.20

WIN 022809.20

		BY	DATE
PROJ. MANAGER	J. KITTREDGE		
DESIGN-DETAILED	RWH	TJW	06/14
CHECKED-REVIEWED		CRM	06/14
DESIGN2-DETAILED2			
DESIGN3-DETAILED3			
REVISIONS 1			
REVISIONS 2			
REVISIONS 3			
REVISIONS 4			
FIELD CHANGES			

SIGNATURE

P.E. NUMBER

DATE

PORTLAND INTERNATIONAL MARINE TERMINAL
EXISTING LAYDOWN AND CONNECTING CORRIDOR CONNECTION
PORTLAND CUMBERLAND COUNTY

COMMERCIAL STREET
TYPICAL SECTIONS

SHEET NUMBER

H02

Filename: 036_Typ_Commercial.dgn Division: Username: Date:6/26/2014

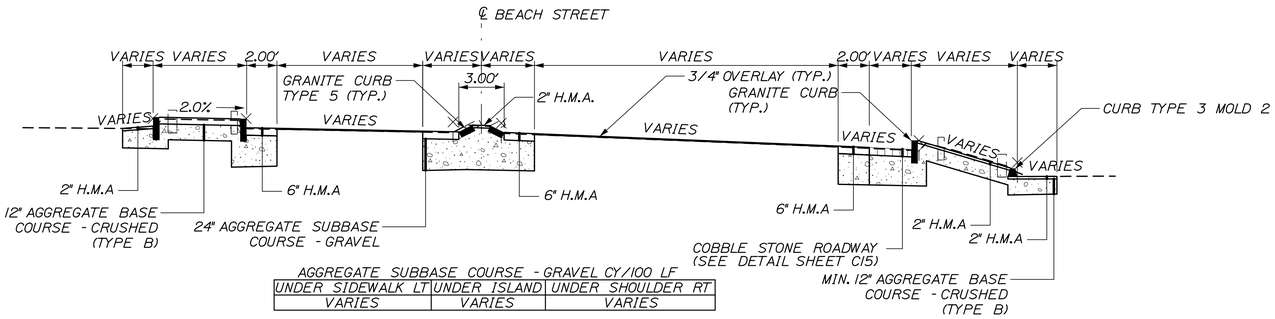

AGGREGATE SUBBASE COURSE - GRAVEL CY/100 LF

UNDER SIDEWALK LT	UNDER ISLAND	UNDER SHOULDER RT
VARIES	VARIES	VARIES

BEACH ST OVERLAY

STA. 10+60 TO STA. 11+21

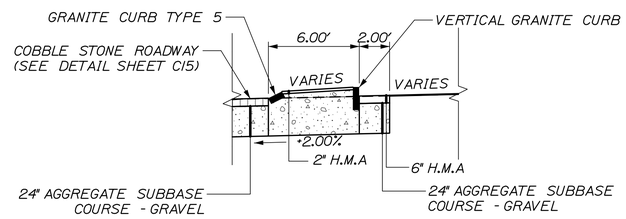

AGGREGATE SUBBASE COURSE - GRAVEL CY/100 LF

UNDER ISLAND
VARIES

COMMERCIAL STREET ISLAND

STA. 213+72 TO STA. 214+36

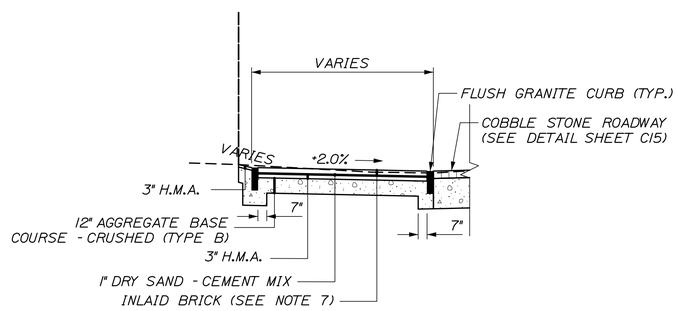

AGGREGATE BASE COURSE - CRUSHED CY/100 LF

UNDER SIDEWALK
VARIES

COMMERCIAL STREET INLAID BRICK SIDEWALK

STA. 213+33 TO STA. 215+16
STA. 215+58 TO STA. 216+58

NOT TO SCALE

TYPICAL SECTION NOTES:

1. THE PAVEMENT, BASE AND SUBBASE DEPTHS AS SHOWN ON THE PLANS ARE INTENDED TO BE NOMINAL.
2. STATIONING SHOWN UNDER EACH TYPICAL IS APPROXIMATE.
3. SEE CROSS SECTIONS FOR ACTUAL UNDERDRAIN ELEVATIONS.
4. MATCH EXISTING TRAVELWAY SLOPE.
5. BRICK SIDEWALK TO BE CONSTRUCTED IN ACCORDANCE WITH CITY OF PORTLAND TECHNICAL STANDARD, FIGURE 1-10. EXECPT HMA SHALL BE 19.0MM AND INCIDENTAL TO THE BRICK SIDEWALK PAY ITEM.
6. FOR LIMITS OF COBBLE STONE ROADWAY SEE GEOMETRIC AND CURBING PLAN
7. INLAID BRICK SHALL BE INSTALLED ON EDGE.

STATE OF MAINE
DEPARTMENT OF TRANSPORTATION

PROJECT NUMBER 022809.20

WIN 022809.20

		BY	DATE
PROJ. MANAGER	J. KITTREDGE		
DESIGN-DETAILED	RWH	TJW	06/14
CHECKED-REVIEWED	"	CRM	06/14
DESIGN2-DETAILED2	"	"	"
DESIGN3-DETAILED3	"	"	"
REVISIONS 1	"	"	"
REVISIONS 2	"	"	"
REVISIONS 3	"	"	"
REVISIONS 4	"	"	"
FIELD CHANGES	"	"	"

SIGNATURE

P.E. NUMBER

DATE

PORTLAND INTERNATIONAL MARINE TERMINAL
EXISTING LAYDOWN AND CONNECTING CORRIDOR CONNECTION
PORTLAND CUMBERLAND COUNTY

COMMERCIAL STREET
TYPICAL SECTIONS

SHEET NUMBER

H03

Filename: 037_Typ_Commercial.dgn Division: Username: Date:7/11/2014

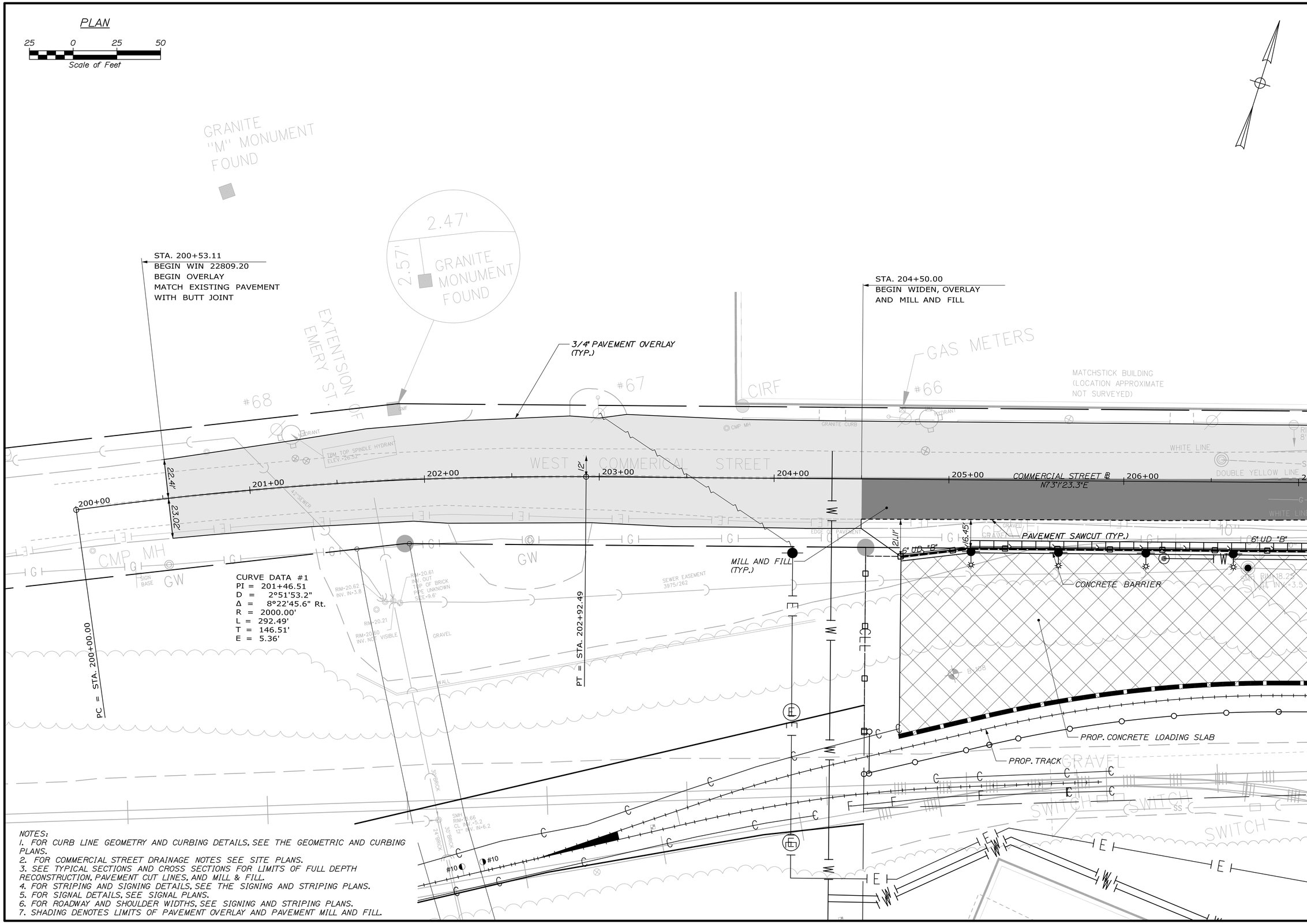

NOTES:
1. FOR CURB LINE GEOMETRY AND CURBING DETAILS, SEE THE GEOMETRIC AND CURBING PLANS.
2. FOR COMMERCIAL STREET DRAINAGE NOTES SEE SITE PLANS.
3. SEE TYPICAL SECTIONS AND CROSS SECTIONS FOR LIMITS OF FULL DEPTH RECONSTRUCTION, PAVEMENT CUT LINES, AND MILL & FILL.
4. FOR STRIPING AND SIGNING DETAILS, SEE THE SIGNING AND STRIPING PLANS.
5. FOR SIGNAL DETAILS, SEE SIGNAL PLANS.
6. FOR ROADWAY AND SHOULDER WIDTHS, SEE SIGNING AND STRIPING PLANS.
7. SHADING DENOTES LIMITS OF PAVEMENT OVERLAY AND PAVEMENT MILL AND FILL.

STATE OF MAINE
DEPARTMENT OF TRANSPORTATION

PROJECT NUMBER 022809.20

WIN 022809.20

	BY	DATE
PROJ. MANAGER	J. KITTREDGE	
DESIGN-DETAILED	RWH	06/14
CHECKED-REVIEWED	TJW	06/14
DESIGN2-DETAILED2	CRM	-
DESIGN3-DETAILED3	-	-
REVISIONS: 1	-	-
REVISIONS: 2	-	-
REVISIONS: 3	-	-
REVISIONS: 4	-	-
FIELD CHANGES	-	-

SIGNATURE

P.E. NUMBER

DATE

PORTLAND INTERNATIONAL MARINE TERMINAL
EXISTING LAYDOWN AND CONNECTING CORRIDOR CONNECTION
PORTLAND CUMBERLAND COUNTY

COMMERCIAL STREET
PLAN

SHEET NUMBER
H04

Filename: 038_Highway_001.dgn Division: Username: Date:7/11/2014

PLAN

25 0 25 50
Scale of Feet

DRIVEWAYS & ENTRANCES

STA.	DESCRIPTION	OPENING
208+09 LT	PAVED ENTRANCE	22'-8.25"
210+34 LT	PAVED ENTRANCE	65'
211+80 LT	PAVED ENTRANCE	50'
213+50 LT	PAVED ENTRANCE	39'-8"
214+75 LT	PAVED ENTRANCE	70'-8"
216+00 LT	PAVED ENTRANCE	96'-2"

REMOVING SINGLE TREE TOP ONLY - ITEM #201.23

STA.	OFFSET	DESCRIPTION	QUANTITY
209+21.51	39.87' LT	12" TREE	1 EA

REMOVING STUMP - ITEM #201.24

STA.	OFFSET	DESCRIPTION	QUANTITY
209+21.51	39.87' LT	12" TREE	1 EA

BRICK SIDEWALK WITH BITUMINOUS BASE - ITEM #608.15

STA.	TO STA.	WIDTH
207+47.5 LT	207+96.7 LT	8.26'
208+21.9 LT	210+00.2 LT	8.0'
210+67.7 LT	211+49.0 LT	8.0'
212+01.5 LT	11+00.7 LT	VARIES
213+00.9 LT	213+32.9 LT	VARIES
215+15.8 LT	215+57.6 LT	12.0'

BRICK DRIVEWAY WITH BITUMINOUS BASE - ITEM #608.16

STA.	TO STA.	WIDTH
213+32.9 LT	215+15.8 LT	12.0'
215+57.6 LT	216+58.3 LT	VARIES

CURB RAMP DETECTABLE WARNING FIELD - ITEM #608.26

STA.	LOCATION	AREA
207+95	LT	16 SF
208+22	LT	20 SF
210+00	LT	20 SF
210+68	LT	20 SF
211+50	LT	20 SF
212+00	LT	20 SF
212+48	LT	12 SF
213+00	LT	12 SF
213+16	LT	12 SF
213+36	RT	12 SF
213+36	RT	12 SF
215+17	LT	20 SF
215+57	LT	20 SF

CURVE DATA #1
PI = 10+76.14
D = 77°57'12.4"
Δ = 40°00'45.9" Rt.
R = 73.50'
L = 51.33'
T = 26.76'
E = 4.72'

CURVE DATA #2
PI = 11+10.87
D = 21°44'38.9"
Δ = 4°24'55.6" Rt.
R = 263.50'
L = 20.31'
T = 10.16'
E = 0.20'

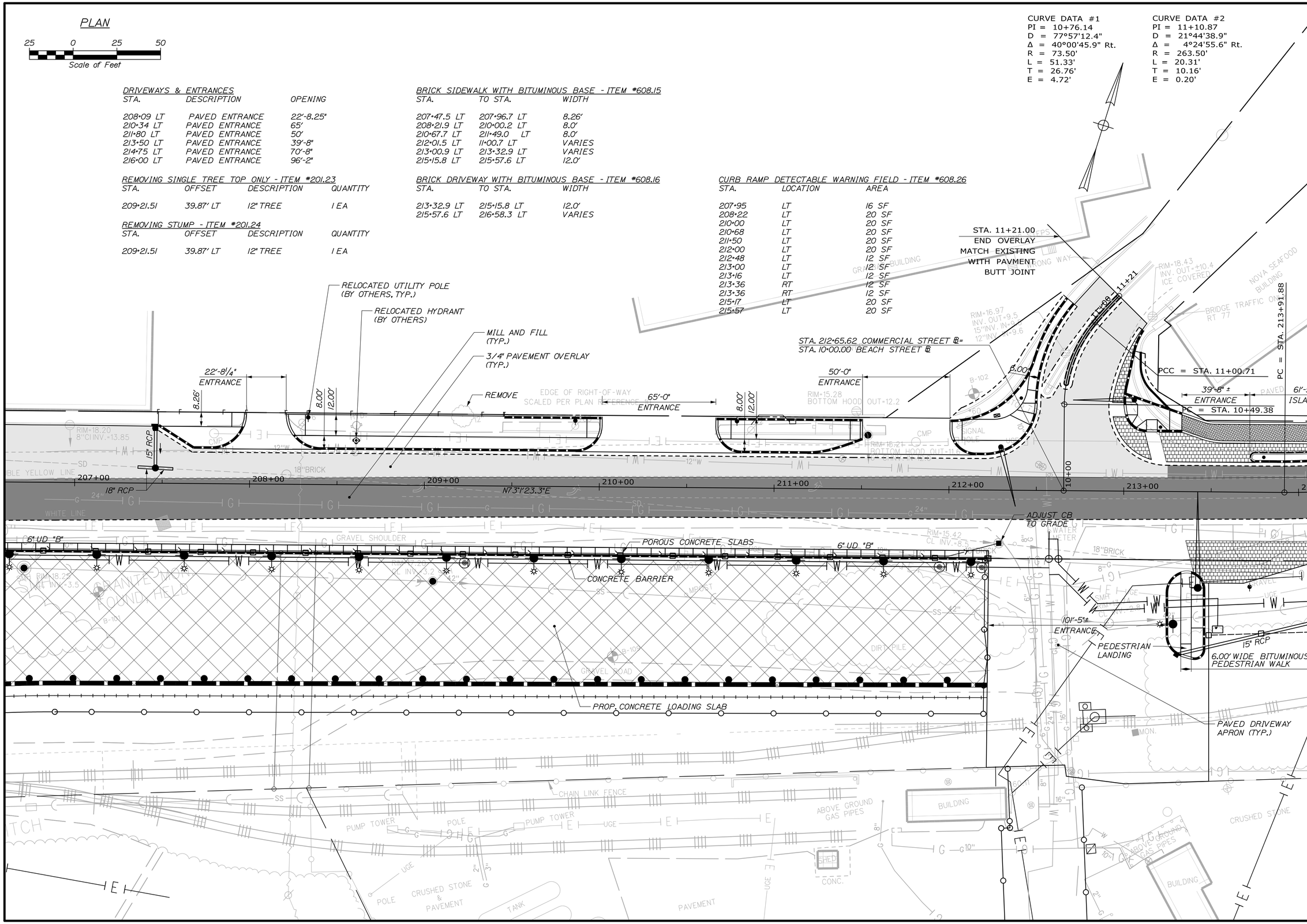

STATE OF MAINE
DEPARTMENT OF TRANSPORTATION

PROJECT NUMBER 022809.20

WIN 022809.20

	BY	DATE	SIGNATURE
PROJ. MANAGER	J. KITTREDGE		
DESIGN-DETAILED	RWH	06/14	
CHECKED-REVIEWED	TJW	06/14	
DESIGN2-DETAILED2	CRM	-	
DESIGN3-DETAILED3	-	-	
REVISIONS 1	-	-	
REVISIONS 2	-	-	
REVISIONS 3	-	-	
REVISIONS 4	-	-	
FIELD CHANGES	-	-	

P.E. NUMBER

PORTLAND INTERNATIONAL MARINE TERMINAL
EXISTING LAYDOWN AND CONNECTING CORRIDOR CONNECTION
PORTLAND CUMBERLAND COUNTY

COMMERCIAL STREET PLAN

SHEET NUMBER
H05

Date:7/11/2014
Username:
Division:
Filename: 039_Highway_002.dgn

CURVE DATA #2
PI = 215+21.08
D = 16°22'12.8"
Δ = 40°31'16.4" Lt.
R = 350.00'
L = 247.53'
T = 129.20'
E = 23.08'

PLAN

25 0 25 50
Scale of Feet

TEMPORARY CONSTRUCTION EASEMENT AREA (A=533 SF)
4" CONCRETE INFILL FOR ISLAND
INSTALL RETROREFLECTIVE HORIZONTAL DELINEATOR
INLAID BRICK SIDEWALK WITH GRANITE BORDER
TEMPORARY CONSTRUCTION EASEMENT AREA (A=102 SF)
INLAID BRICK SIDEWALK WITH GRANITE BORDER
STA. 217+25.00
END WIDEN, OVERLAY AND MILL AND FILL MATCH EXISTING WITH PAVEMENT BUTT JOINT
PT = STA. 216+39.41
POE = STA. 218+90.84
PCC = STA. 11+00.71
PC = STA. 213+91.88
= STA. 10+49.38
ADJUST CB TO GRADE
6'-5" ISLAND
39'-8" ± ENTRANCE
70'-8" ± ENTRANCE
96'-2" ENTRANCE
30'-6" ± ENTRANCE
10'-5" ± ENTRANCE
PEDESTRIAN LANDING
6.00' WIDE BITUMINOUS PEDESTRIAN WALK
15" RCP
PAVED DRIVEWAY APRON (TYP.)
EDGE OF RIGHT-OF-WAY SCALED PER PLAN REFERENCE 10
N32°30'7"E
NOVA SEAFOOD BUILDING
BRIDGE TRAFFIC ONLY
NO PARKING WATCH FOR TURNING
LOADING DOCK
CONCRETE
CRUSHED STONE
BUILDING
TRANS. PAD
WOOD COVER
GRAVEL
WALL
PAVEMENT REMAINS
MUCK PILE
CONCRETE BLOCK
RR SPIKE FOUND

STATE OF MAINE
DEPARTMENT OF TRANSPORTATION

PROJECT NUMBER 022809.20

WIN 022809.20

	BY	DATE
PROJ. MANAGER	J. KITTREDGE	
DESIGN-DETAILED	RWH	06/14
CHECKED-REVIEWED	TJW	06/14
DESIGN2-DETAILED2	CRM	06/14
DESIGN3-DETAILED3	-	-
REVISIONS 1	-	-
REVISIONS 2	-	-
REVISIONS 3	-	-
REVISIONS 4	-	-
FIELD CHANGES	-	-

SIGNATURE
P.E. NUMBER
DATE

PORTLAND INTERNATIONAL MARINE TERMINAL
EXISTING LAYDOWN AND CONNECTING CORRIDOR CONNECTION
PORTLAND CUMBERLAND COUNTY
COMMERCIAL STREET
PLAN

SHEET NUMBER
H06

Date:7/11/2014
Username:
Division:
Filename: 040_Highway_003.dgn

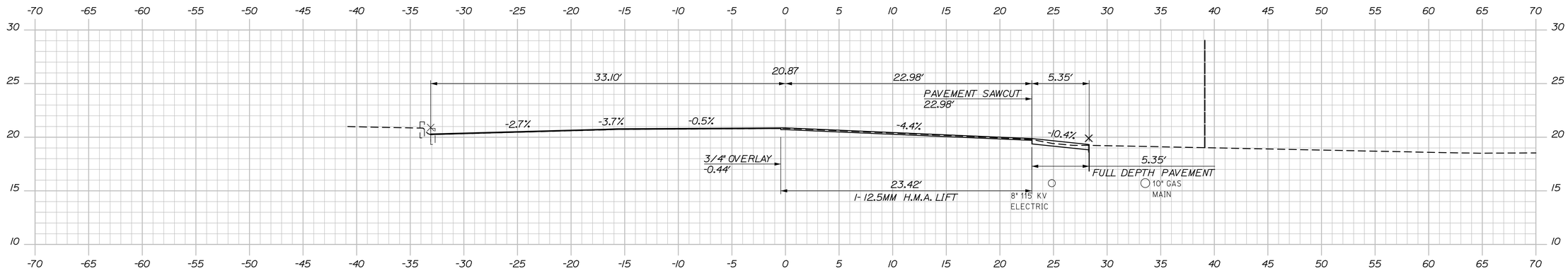

204+50.00

STA. 204+50.00
BEGIN PAVEMENT WIDENING, RT AND
CONTINUE PAVEMENT OVERLAY, LT

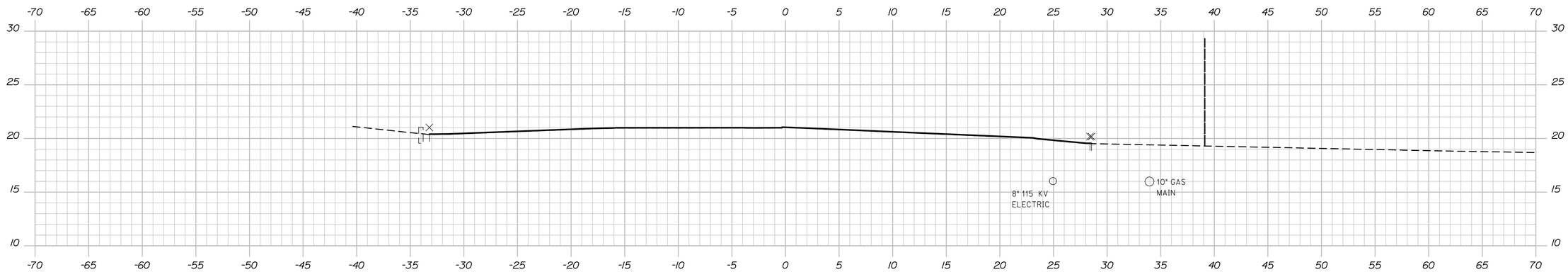

204+25.00

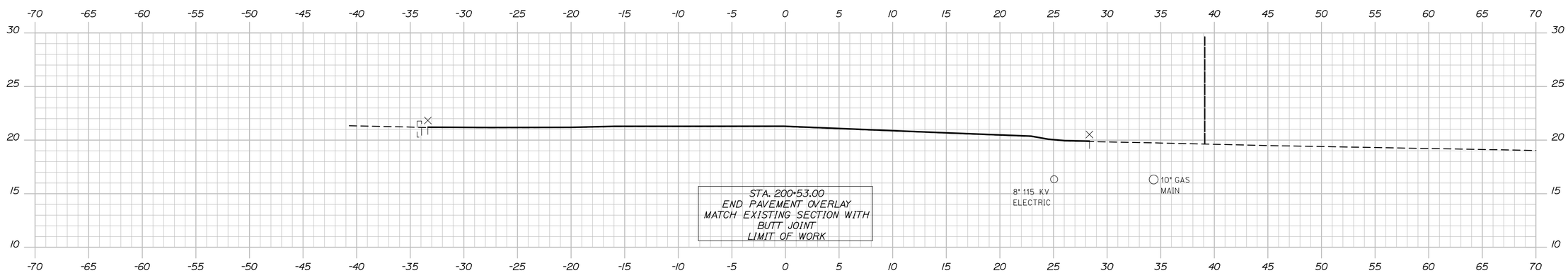

STA. 200+53.00
END PAVEMENT OVERLAY
MATCH EXISTING SECTION WITH
BUTT JOINT
LIMIT OF WORK

204+00.00

STATE OF MAINE
DEPARTMENT OF TRANSPORTATION

PROJECT NUMBER 022809.20

PIN
022809.20

		BY	DATE
PROJ. MANAGER	J. KITTREDGE		
DESIGN-DETAILED	RWH	TJW	06/14
CHECKED-REVIEWED	-	CRM	06/14
DESIGN2-DETAILED2	-	-	-
DESIGN3-DETAILED3	-	-	-
REVISIONS 1	-	-	-
REVISIONS 2	-	-	-
REVISIONS 3	-	-	-
REVISIONS 4	-	-	-
FIELD CHANGES	-	-	-

SIGNATURE

P.E. NUMBER

DATE

PORTLAND INTERNATIONAL MARINE TERMINAL
EXISTING LAYDOWN AND CONNECTING CORRIDOR CONNECTION
PORTLAND CUMBERLAND COUNTY

COMMERCIAL STREET
CROSS SECTIONS

SHEET NUMBER

H07

Sta. 204+00.00 to Sta. 204+50.00

Date:6/26/2014

Username:

Division:

Filename: Xsect.dgn

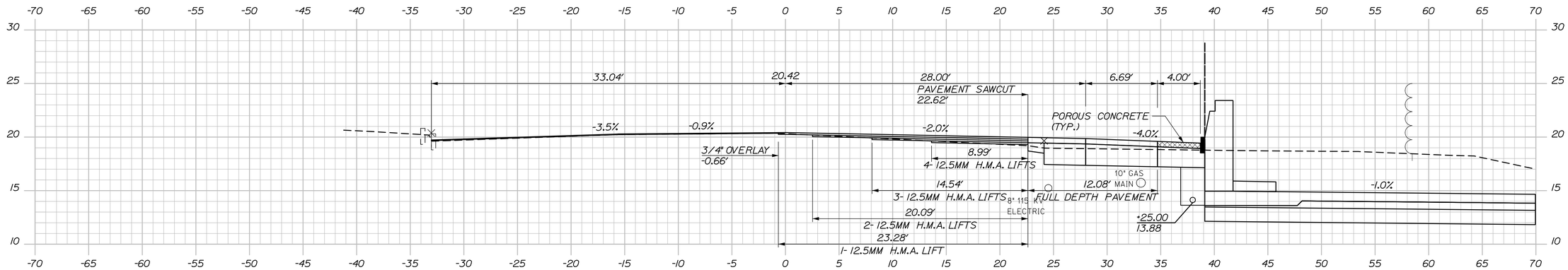

205+25.00

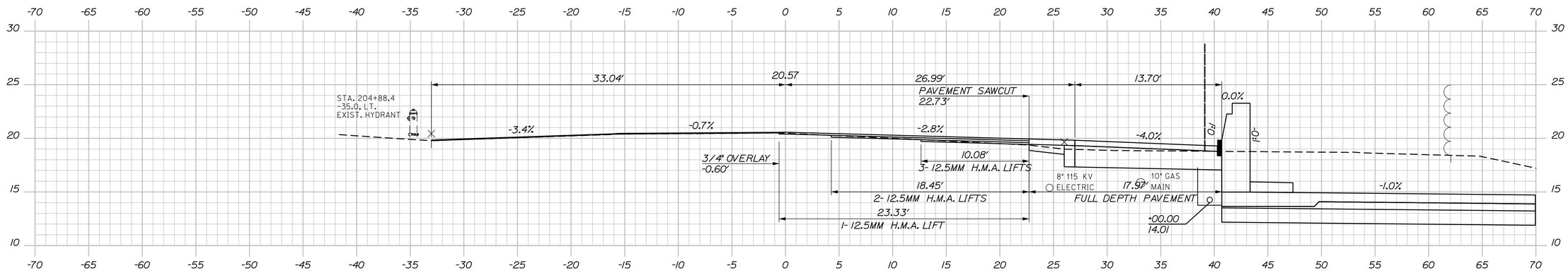

205+00.00

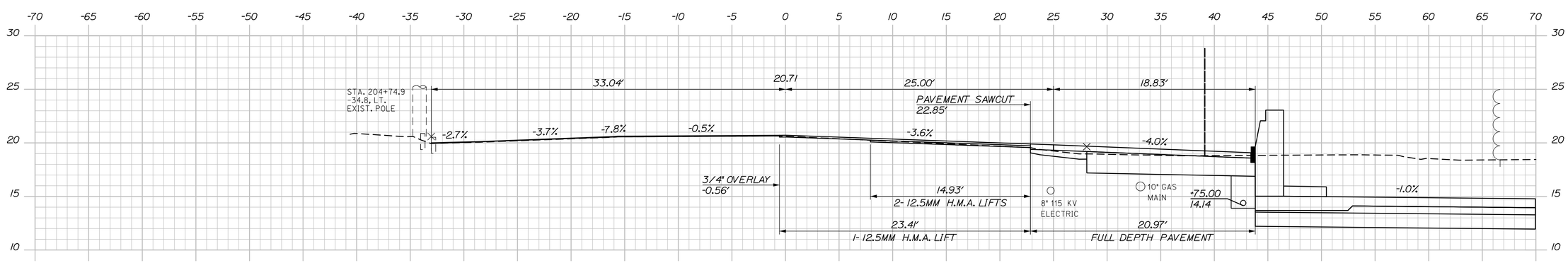

204+75.00

STATE OF MAINE
DEPARTMENT OF TRANSPORTATION

PROJECT NUMBER 022809.20

PIN 022809.20

		BY	DATE
PROJ. MANAGER	J. KITTREDGE		
DESIGN-DETAILED	RWH	TJW	06/14
CHECKED-REVIEWED	-	CRM	06/14
DESIGN2-DETAILED2	-	-	-
DESIGN3-DETAILED3	-	-	-
REVISIONS 1	-	-	-
REVISIONS 2	-	-	-
REVISIONS 3	-	-	-
REVISIONS 4	-	-	-
FIELD CHANGES	-	-	-

SIGNATURE

P.E. NUMBER

DATE

PORTLAND INTERNATIONAL MARINE TERMINAL
EXISTING LAYDOWN AND CONNECTING CORRIDOR CONNECTION
PORTLAND CUMBERLAND COUNTY

COMMERCIAL STREET
CROSS SECTIONS

SHEET NUMBER

H08

Sta. 204+75.00 to Sta. 205+25.00

Date:7/11/2014 Username: Division: Filename: Xsect.dgn

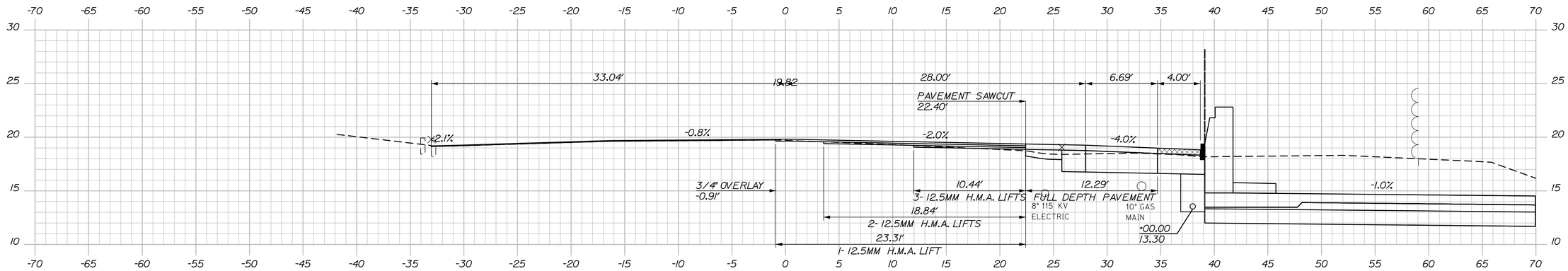

206+00.00

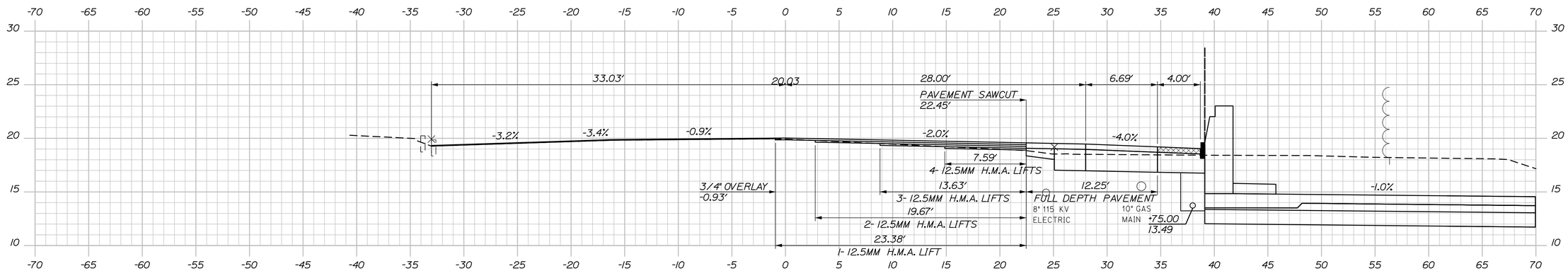

205+75.00

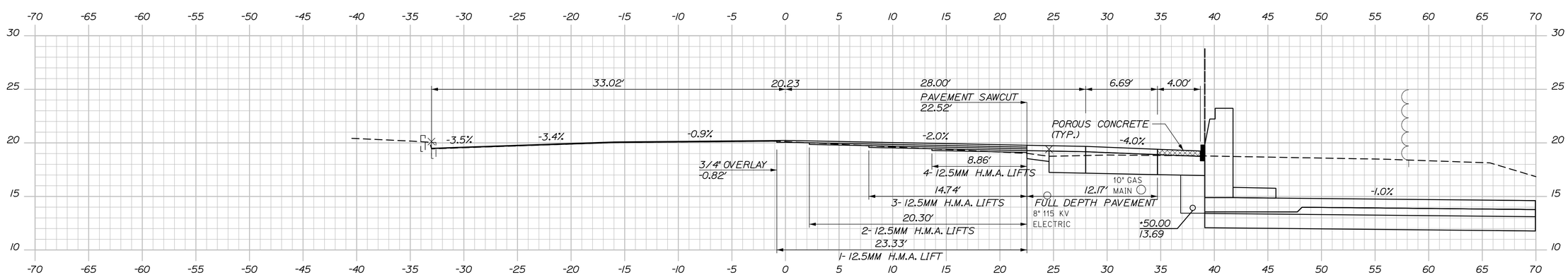

205+50.00

STATE OF MAINE
DEPARTMENT OF TRANSPORTATION

PROJECT NUMBER 022809.20

PIN
022809.20

		BY	DATE
PROJ. MANAGER	J. KITTREDGE		
DESIGN-DETAILED	RWH	TJW	06/14
CHECKED-REVIEWED		CRM	06/14
DESIGN2-DETAILED2			
DESIGN3-DETAILED3			
REVISIONS 1			
REVISIONS 2			
REVISIONS 3			
REVISIONS 4			
FIELD CHANGES			

SIGNATURE

P.E. NUMBER

DATE

PORTLAND INTERNATIONAL MARINE TERMINAL
EXISTING LAYDOWN AND CONNECTING CORRIDOR CONNECTION
PORTLAND CUMBERLAND COUNTY

COMMERCIAL STREET
CROSS SECTIONS

SHEET NUMBER

H09

Sta. 205+50.00 to Sta. 206+00.00

Date:7/11/2014

Username:

Division:

Filename: Xsect.dgn

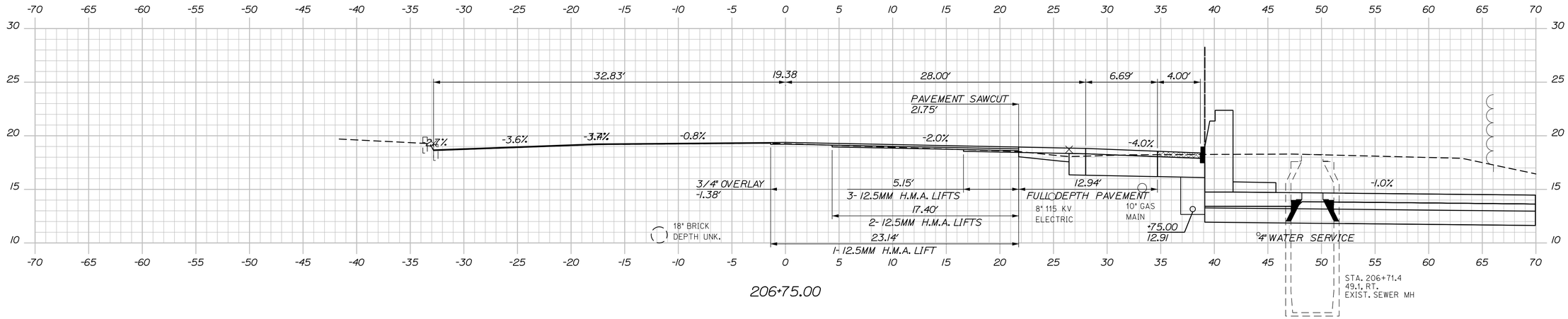

206+75.00

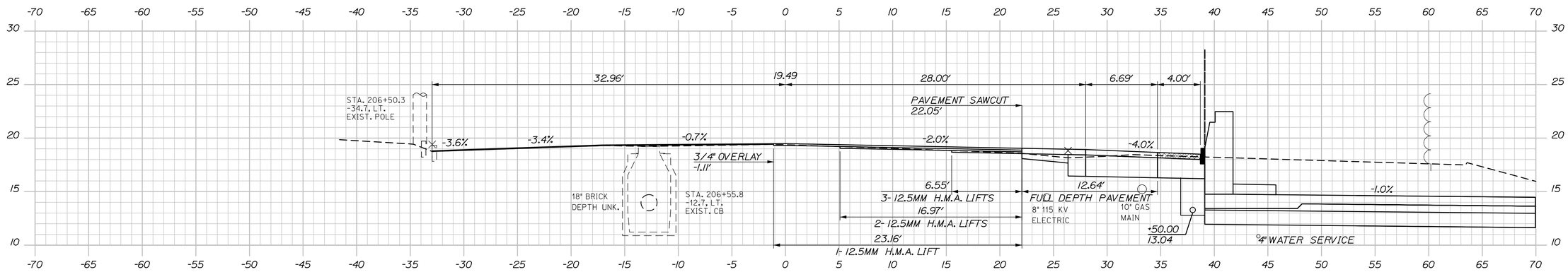

206+50.00

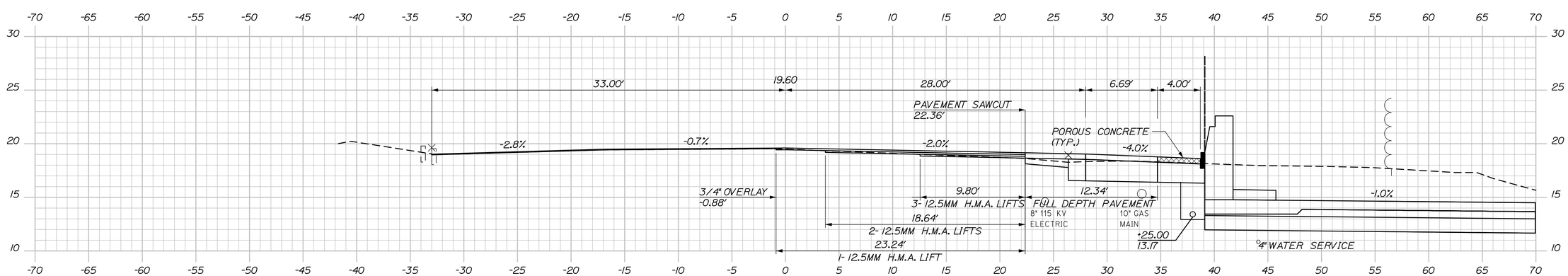

206+25.00

STATE OF MAINE
DEPARTMENT OF TRANSPORTATION

PROJECT NUMBER 022809.20

PIN
022809.20

		BY	DATE
PROJ. MANAGER	J. KITTREDGE		
DESIGN-DETAILED	RWH	TJW	06/14
CHECKED-REVIEWED		CRM	06/14
DESIGN2-DETAILED2			
DESIGN3-DETAILED3			
REVISIONS 1			
REVISIONS 2			
REVISIONS 3			
REVISIONS 4			
FIELD CHANGES			

SIGNATURE

P.E. NUMBER

DATE

PORTLAND INTERNATIONAL MARINE TERMINAL
EXISTING LAYDOWN AND CONNECTING CORRIDOR CONNECTION
PORTLAND CUMBERLAND COUNTY

COMMERCIAL STREET
CROSS SECTIONS

SHEET NUMBER
H10

Sta. 206+25.00 to Sta. 206+75.00

Date:7/11/2014
Username:
Division:
Filename: Xsect.dgn

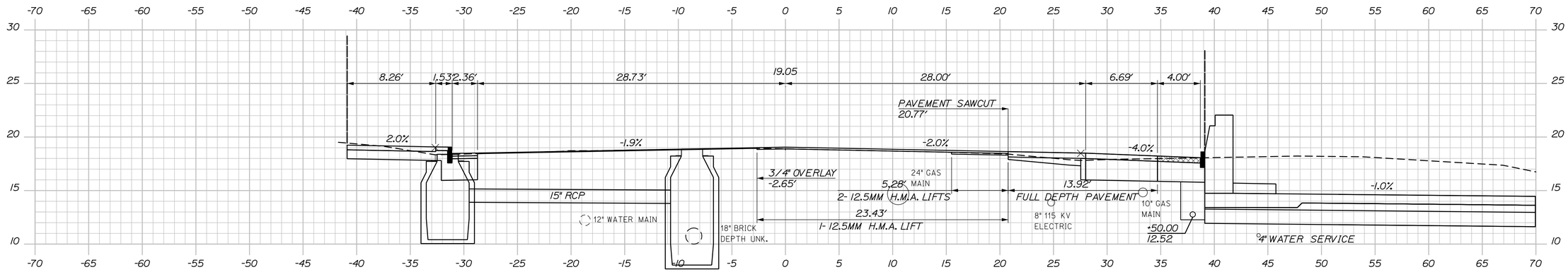

207+50.00

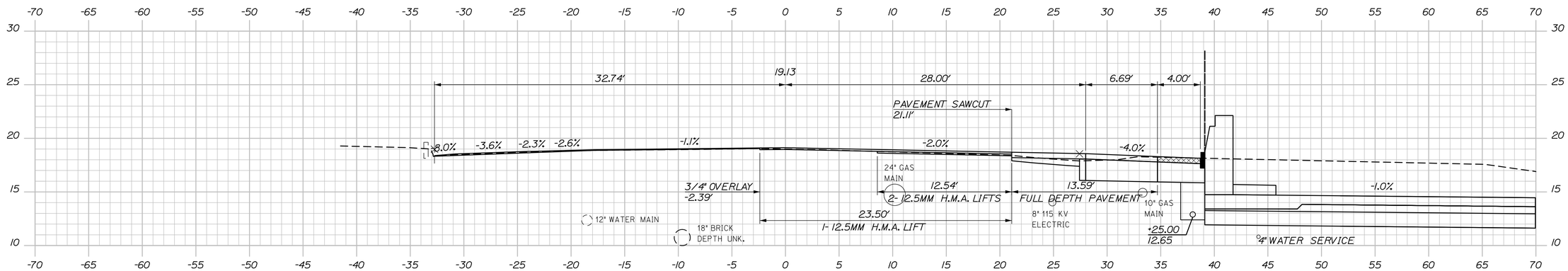

207+25.00

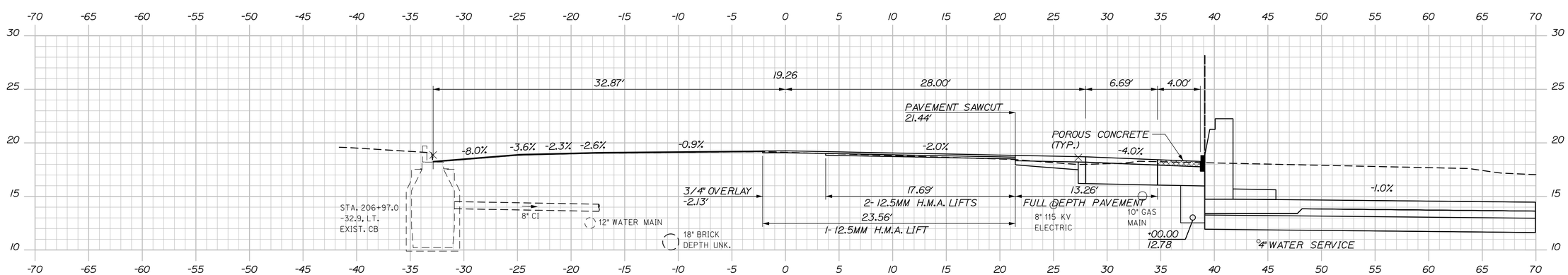

207+00.00

STATE OF MAINE
DEPARTMENT OF TRANSPORTATION

PROJECT NUMBER 022809.20

PIN
022809.20

PROJ. MANAGER	J. KITTREDGE		
DESIGN-DETAILED	RWH	TJW	06/14
CHECKED-REVIEWED	-	CRM	06/14
DESIGN2-DETAILED2	-	-	-
DESIGN3-DETAILED3	-	-	-
REVISIONS 1	-	-	-
REVISIONS 2	-	-	-
REVISIONS 3	-	-	-
REVISIONS 4	-	-	-
FIELD CHANGES	-	-	-

SIGNATURE

P.E. NUMBER

DATE

PORTLAND INTERNATIONAL MARINE TERMINAL
EXISTING LAYDOWN AND CONNECTING CORRIDOR CONNECTION
PORTLAND CUMBERLAND COUNTY

COMMERCIAL STREET
CROSS SECTIONS

SHEET NUMBER

H11

Sta. 207+00.00 to Sta. 207+50.00

Date:7/11/2014

Username:

Division:

Filename: Xsect.dgn

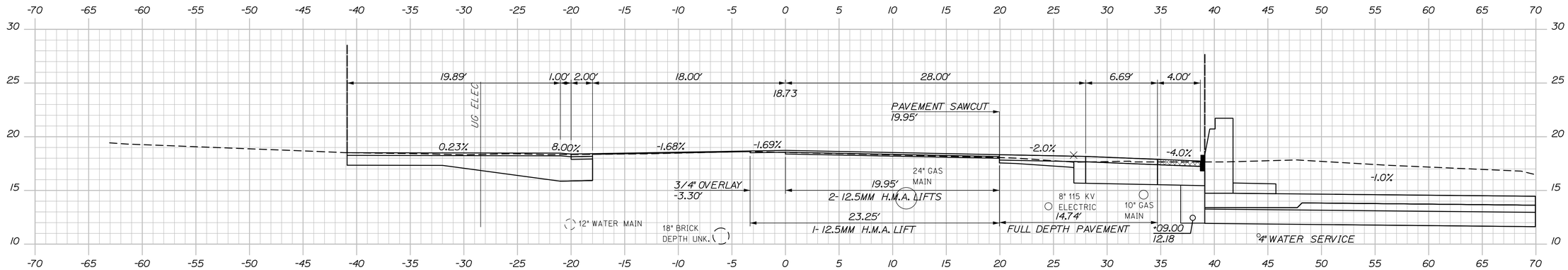

208+09.00

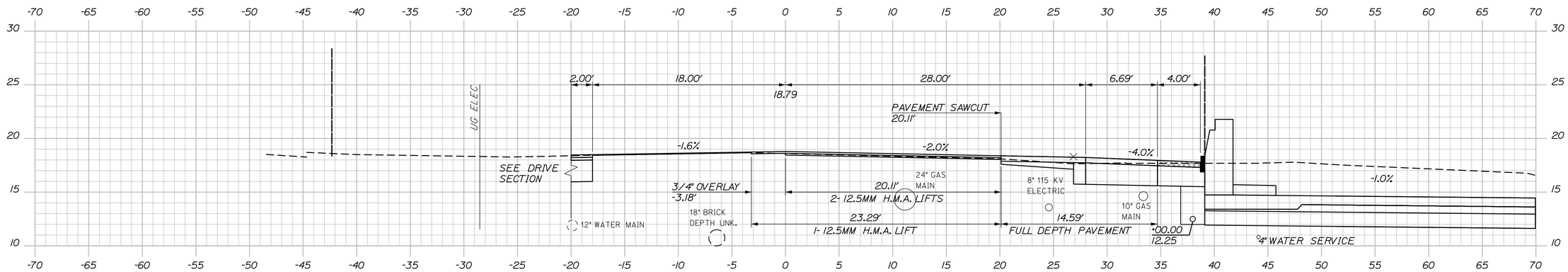

208+00.00

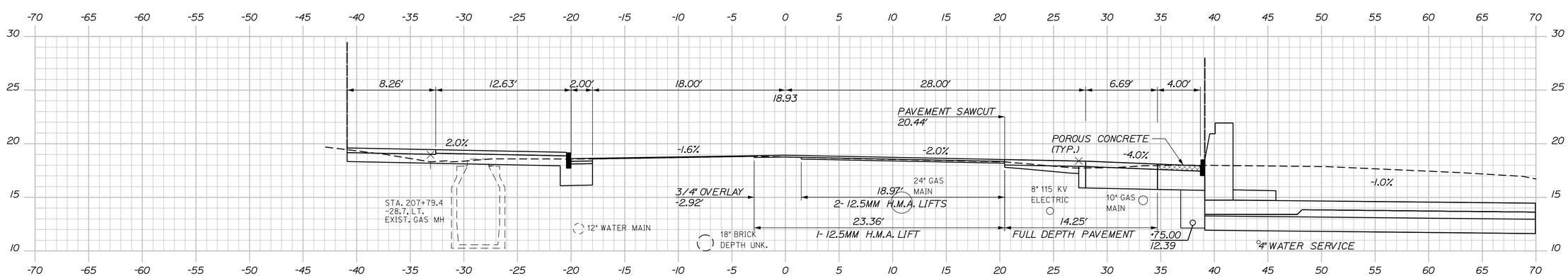

207+75.00

STATE OF MAINE
DEPARTMENT OF TRANSPORTATION

PROJECT NUMBER 022809.20

PIN 022809.20

PROJ. MANAGER	J. KITTREDGE		
DESIGN-DETAILED	RWH	TJW	06/14
CHECKED-REVIEWED	-	CRM	06/14
DESIGN2-DETAILED2	-	-	-
DESIGN3-DETAILED3	-	-	-
REVISIONS 1	-	-	-
REVISIONS 2	-	-	-
REVISIONS 3	-	-	-
REVISIONS 4	-	-	-
FIELD CHANGES	-	-	-

SIGNATURE

P.E. NUMBER

DATE

PORTLAND INTERNATIONAL MARINE TERMINAL
EXISTING LAYDOWN AND CONNECTING CORRIDOR CONNECTION

PORTLAND CUMBERLAND COUNTY

COMMERCIAL STREET
CROSS SECTIONS

SHEET NUMBER

H12

Sta. 207+75.00 to Sta. 208+09.00

Date:7/11/2014 Username: Division: Filename: Xsect.dgn

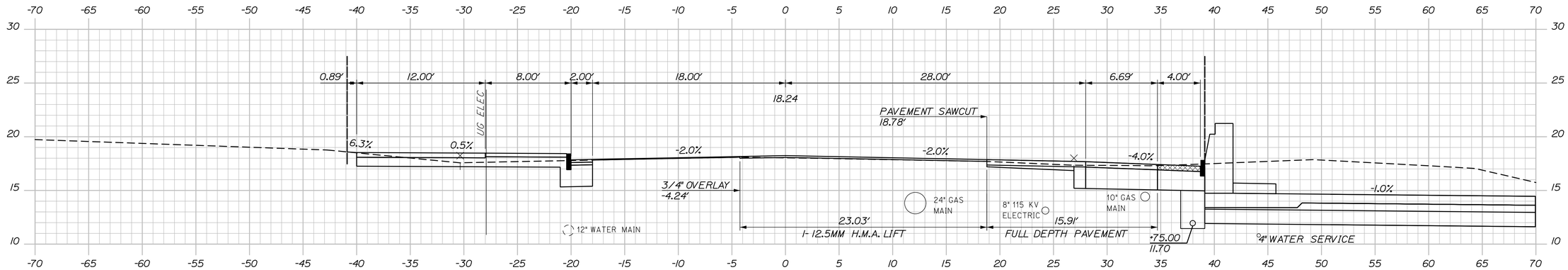

208+75.00

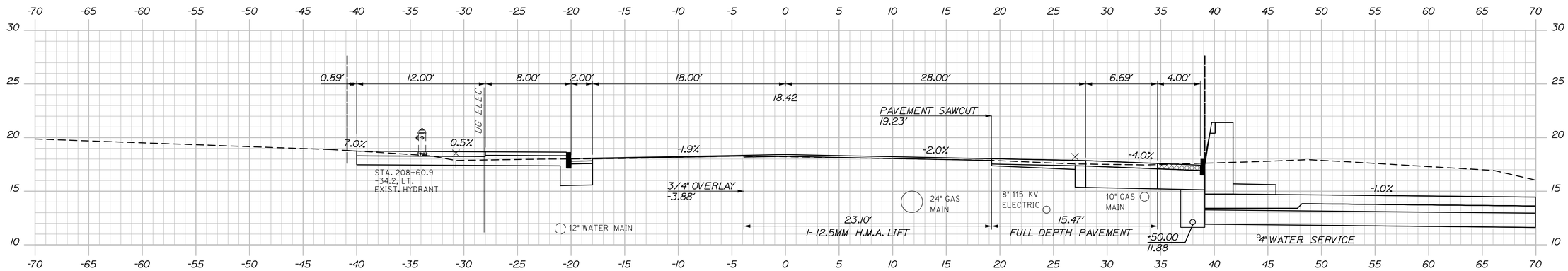

208+50.00

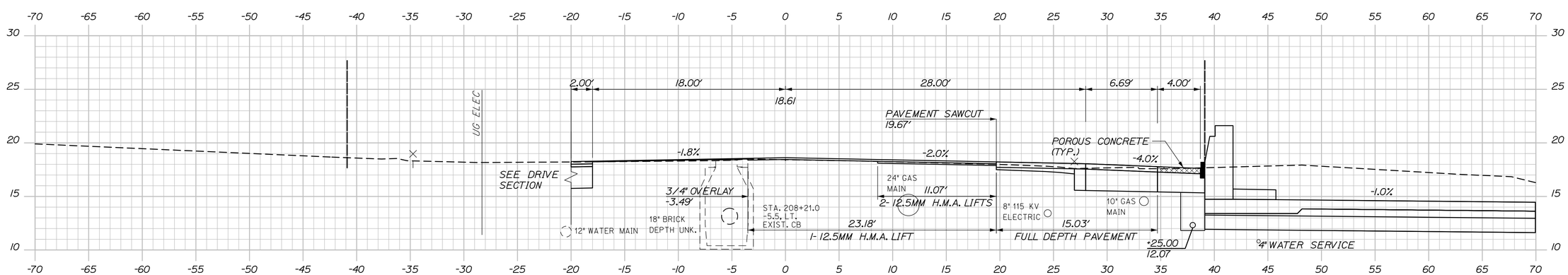

208+25.00

STATE OF MAINE
DEPARTMENT OF TRANSPORTATION

PROJECT NUMBER 022809.20

PIN
022809.20

PROJ. MANAGER	J. KITTREDGE		
DESIGN-DETAILED	RWH	TJW	06/14
CHECKED-REVIEWED	-	CRM	06/14
DESIGN2-DETAILED2	-	-	-
DESIGN3-DETAILED3	-	-	-
REVISIONS 1	-	-	-
REVISIONS 2	-	-	-
REVISIONS 3	-	-	-
REVISIONS 4	-	-	-
FIELD CHANGES	-	-	-

SIGNATURE

P.E. NUMBER

DATE

PORTLAND INTERNATIONAL MARINE TERMINAL
EXISTING LAYDOWN AND CONNECTING CORRIDOR CONNECTION

PORTLAND CUMBERLAND COUNTY

COMMERCIAL STREET
CROSS SECTIONS

SHEET NUMBER

H13

Sta. 208+25.00 to Sta. 208+75.00

Date:7/11/2014

Username:

Division:

Filename: Xsect.dgn

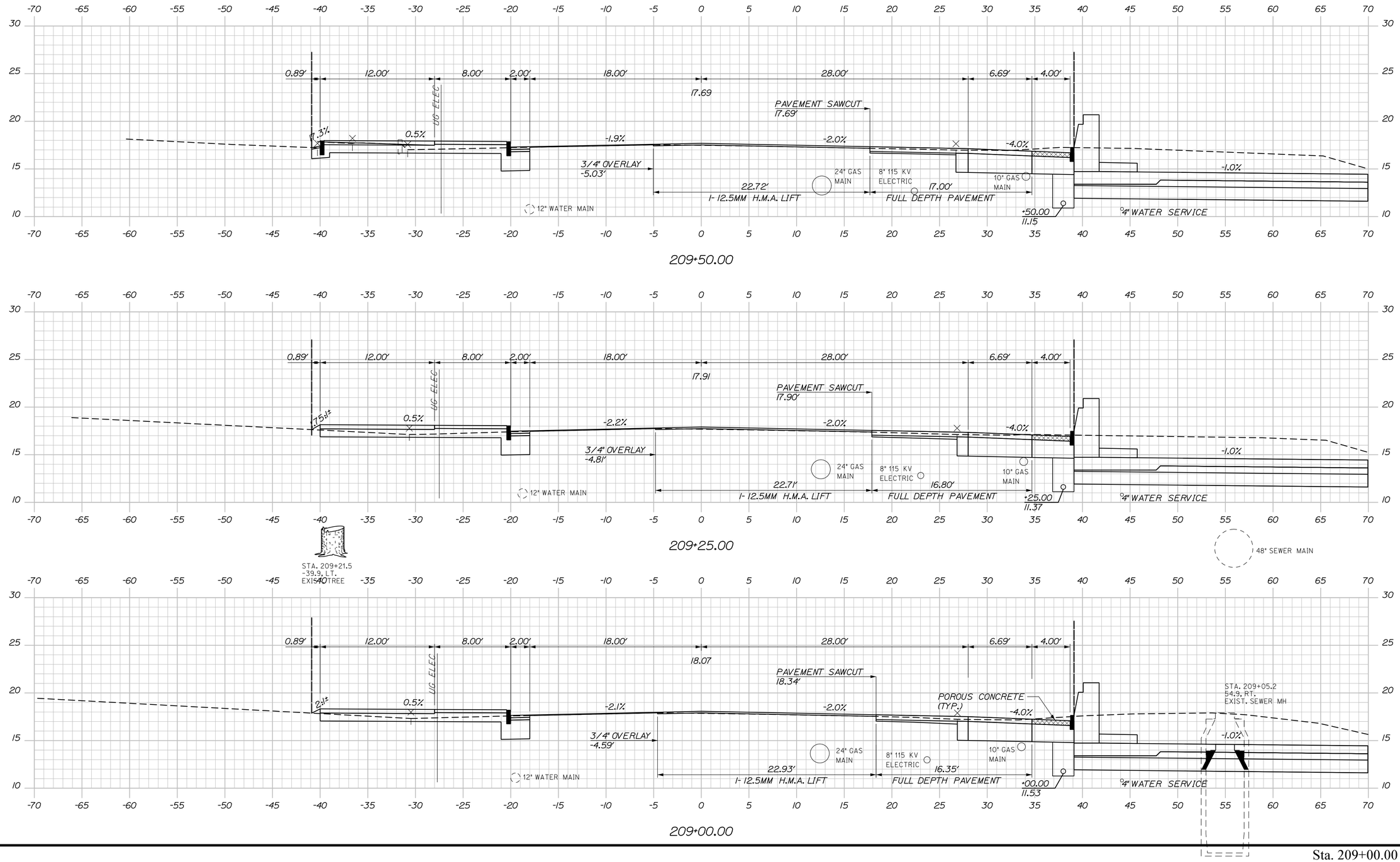

STATE OF MAINE
DEPARTMENT OF TRANSPORTATION

PROJECT NUMBER 022809.20

PIN 022809.20

PROJ. MANAGER	J. KITTREDGE		
DESIGN-DETAILED	RWH	TJW	06/14
CHECKED-REVIEWED	-	CRM	06/14
DESIGN2-DETAILED2	-	-	-
DESIGN3-DETAILED3	-	-	-
REVISIONS 1	-	-	-
REVISIONS 2	-	-	-
REVISIONS 3	-	-	-
REVISIONS 4	-	-	-
FIELD CHANGES	-	-	-

SIGNATURE

P.E. NUMBER

DATE

PORTLAND INTERNATIONAL MARINE TERMINAL
EXISTING LAYDOWN AND CONNECTING CORRIDOR CONNECTION

PORTLAND CUMBERLAND COUNTY

COMMERCIAL STREET CROSS SECTIONS

SHEET NUMBER

H14

48 OF 116

Sta. 209+00.00 to Sta. 209+50.00

Date:7/11/2014

Username:

Division:

Filename: Xsect.dgn

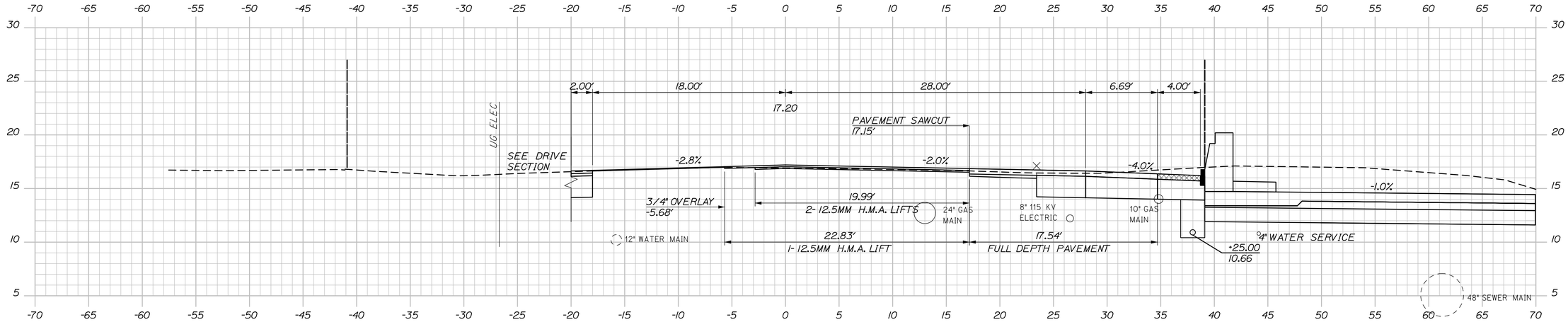

210+25.00

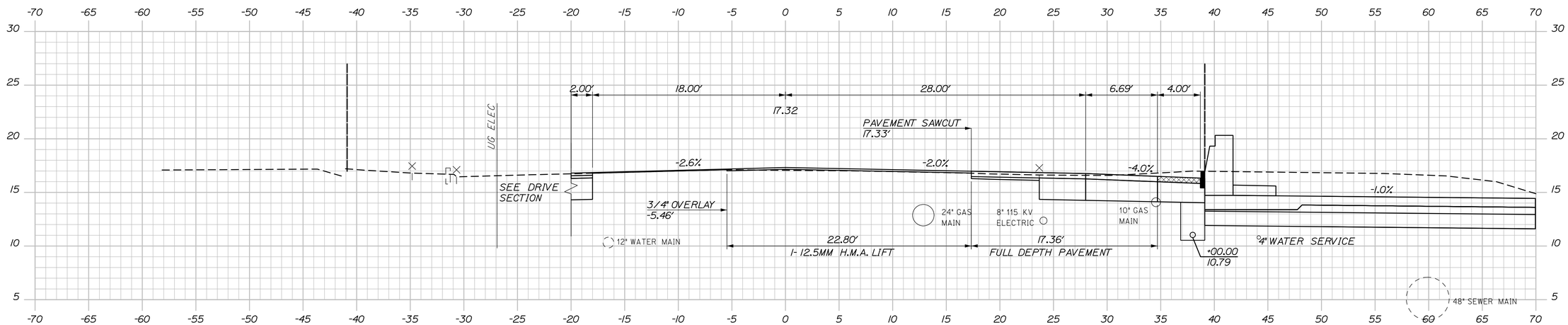

210+00.00

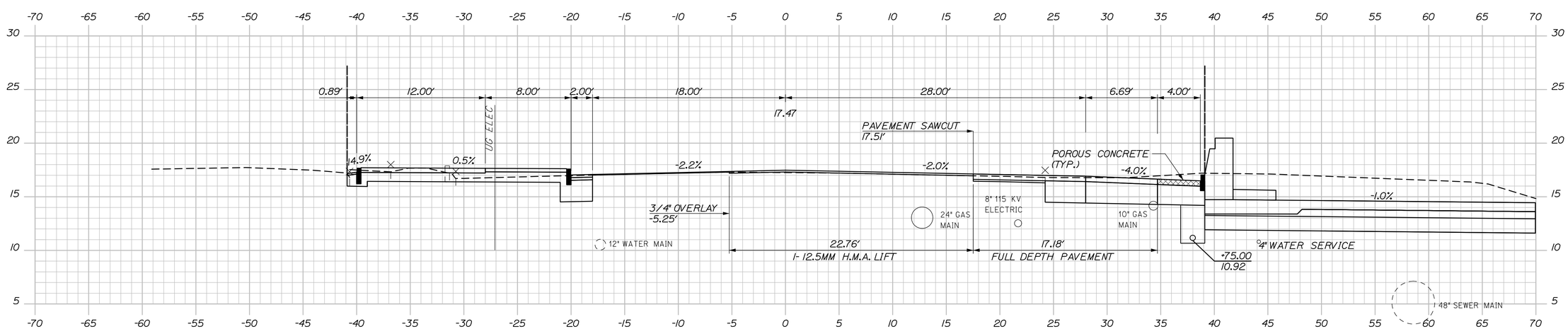

209+75.00

STATE OF MAINE
DEPARTMENT OF TRANSPORTATION

PROJECT NUMBER 022809.20

PIN 022809.20

PROJ. MANAGER	J. KITTREDGE		
DESIGN-DETAILED	RWH	T.J.W.	06/14
CHECKED-REVIEWED		CRM	06/14
DESIGN2-DETAILED2			
DESIGN3-DETAILED3			
REVISIONS 1			
REVISIONS 2			
REVISIONS 3			
REVISIONS 4			
FIELD CHANGES			

SIGNATURE

P.E. NUMBER

DATE

PORTLAND INTERNATIONAL MARINE TERMINAL
EXISTING LAYDOWN AND CONNECTING CORRIDOR CONNECTION
PORTLAND CUMBERLAND COUNTY

COMMERCIAL STREET
CROSS SECTIONS

SHEET NUMBER
H15

Sta. 209+75.00 to Sta. 210+25.00

Date:7/11/2014
Username:
Division:
Filename: Xsect.dgn

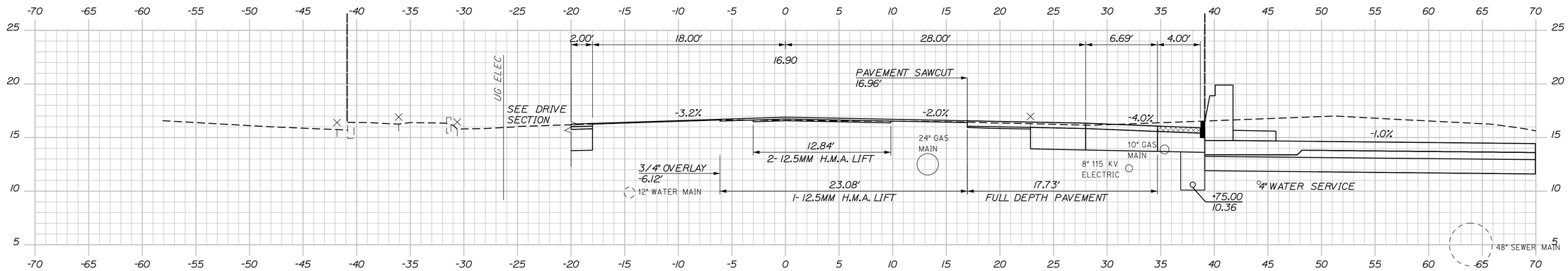

210+75.00

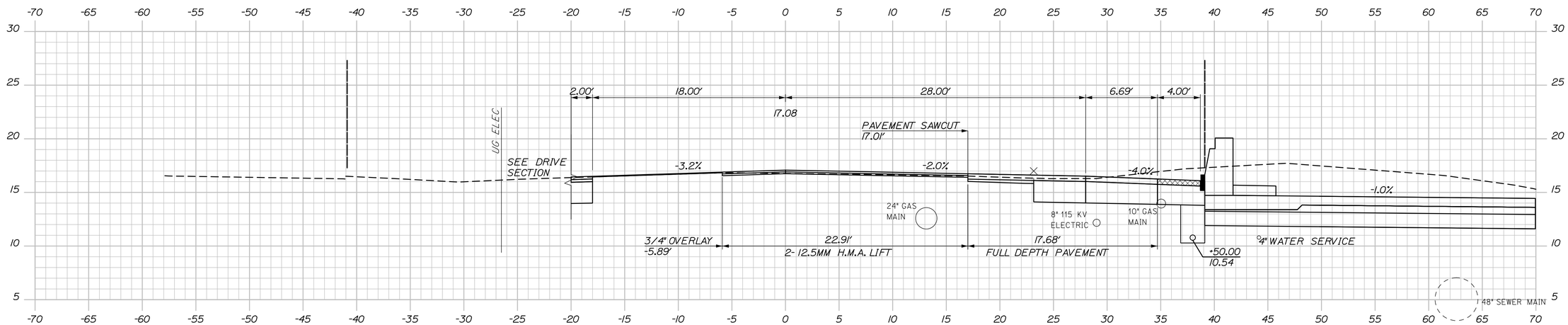

210+50.00

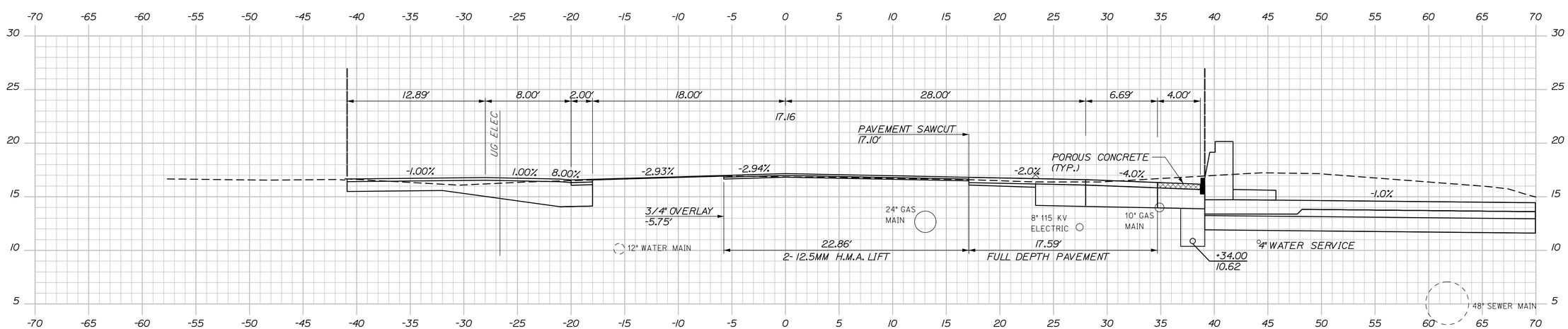

210+34.00

STATE OF MAINE
DEPARTMENT OF TRANSPORTATION

PROJECT NUMBER 022809.20

PIN 022809.20

PROJ. MANAGER	J. KITTREDGE	BY	DATE
DESIGN-DETAILED	RWH	TJW	06/14
CHECKED-REVIEWED	-	-	06/14
DESIGN2-DETAILED2	-	-	-
DESIGN3-DETAILED3	-	-	-
REVISIONS 1	-	-	-
REVISIONS 2	-	-	-
REVISIONS 3	-	-	-
REVISIONS 4	-	-	-
FIELD CHANGES	-	-	-

SIGNATURE

P.E. NUMBER

DATE

PORTLAND INTERNATIONAL MARINE TERMINAL
EXISTING LAYDOWN AND CONNECTING CORRIDOR CONNECTION
PORTLAND CUMBERLAND COUNTY

COMMERCIAL STREET CROSS SECTIONS

SHEET NUMBER

H16

Sta. 210+34.00 to Sta. 210+75.00

Date:7/11/2014

Username:

Division:

Filename: Xsect.dgn

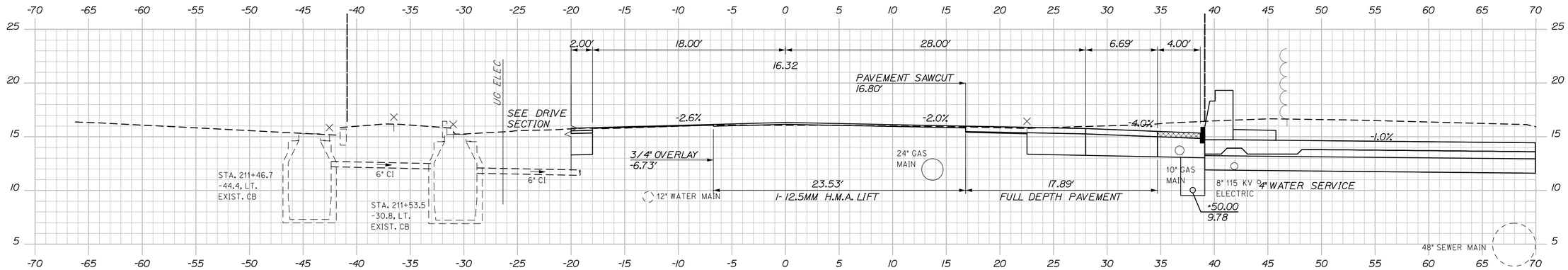

211+50.00

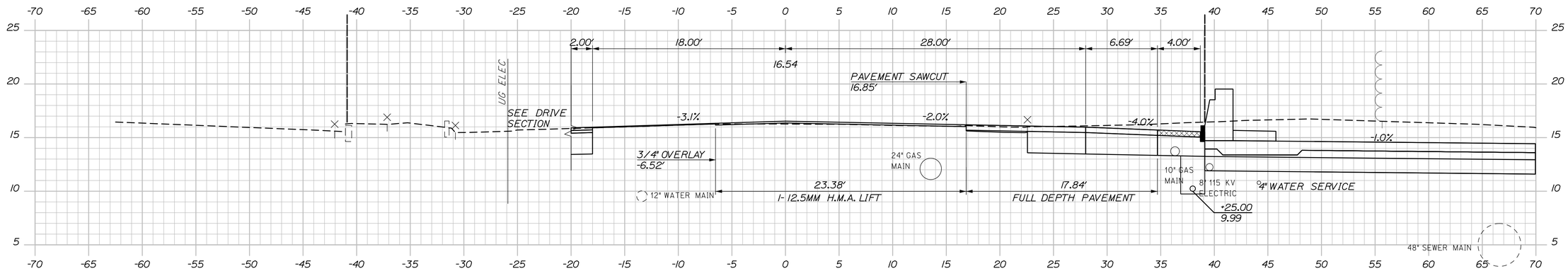

211+25.00

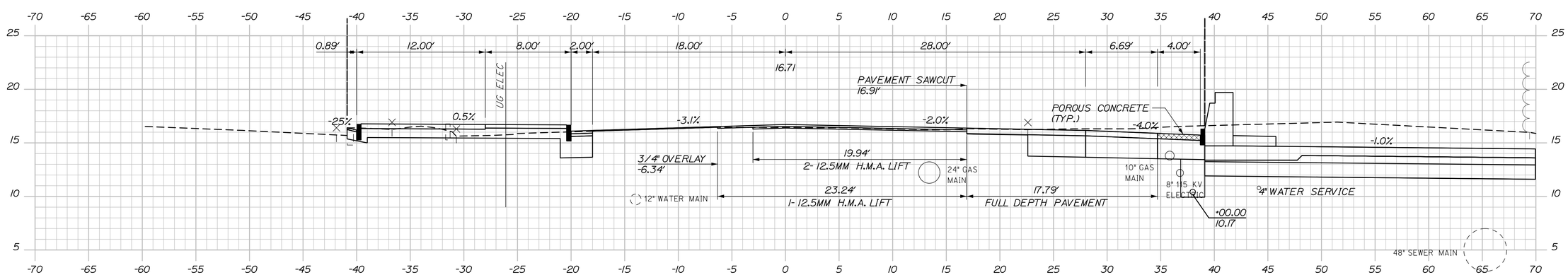

211+00.00

STATE OF MAINE
DEPARTMENT OF TRANSPORTATION

PROJECT NUMBER 022809.20

PIN 022809.20

	BY	DATE
PROJ. MANAGER	J. KITTREDGE	
DESIGN-DETAILED	RWH	T.J.W.	06/14
CHECKED-REVIEWED		C.R.M.	06/14
DESIGN2-DETAILED2			
DESIGN3-DETAILED3			
REVISIONS 1			
REVISIONS 2			
REVISIONS 3			
REVISIONS 4			
FIELD CHANGES			

SIGNATURE

P.E. NUMBER

DATE

PORTLAND INTERNATIONAL MARINE TERMINAL
EXISTING LAYDOWN AND CONNECTING CORRIDOR CONNECTION
PORTLAND CUMBERLAND COUNTY

COMMERCIAL STREET
CROSS SECTIONS

SHEET NUMBER
H17
51 OF 116

Sta. 211+00.00 to Sta. 211+50.00

Date:7/11/2014
Username:
Division:
Filename: Xsect.dgn

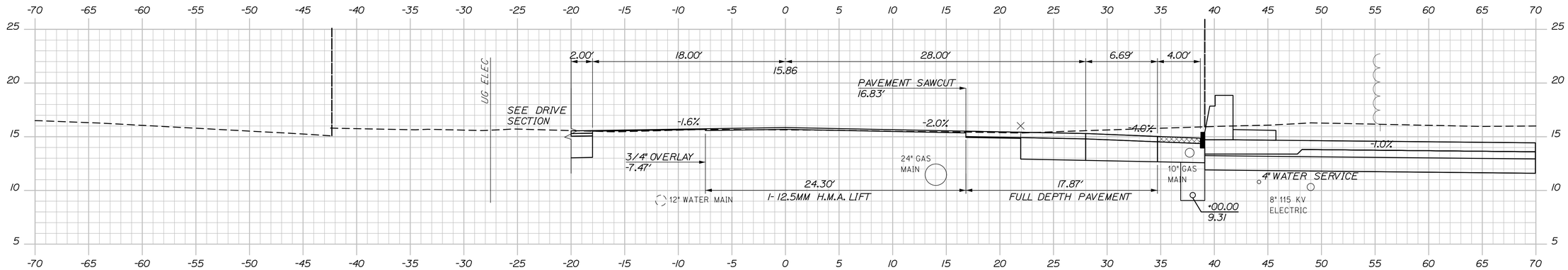

212+00.00

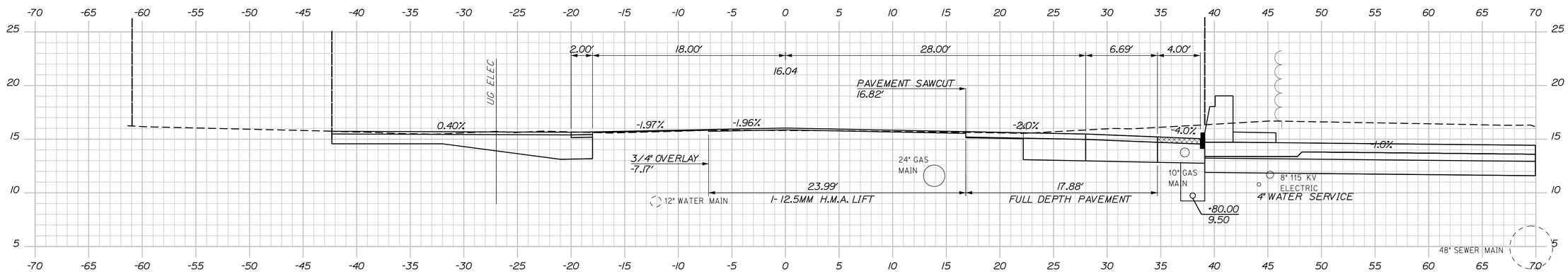

211+80.00

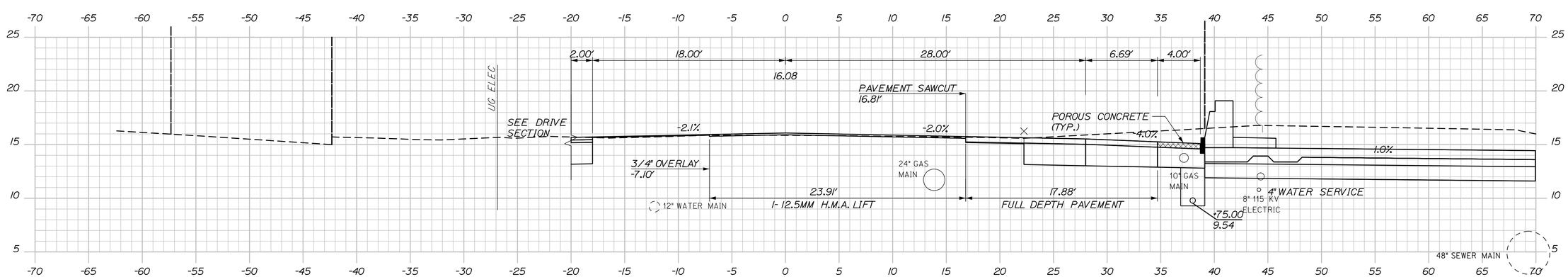

211+75.00

STATE OF MAINE
DEPARTMENT OF TRANSPORTATION

PROJECT NUMBER 022809.20

PIN 022809.20

		BY	DATE
PROJ. MANAGER	J. KITTREDGE		
DESIGN-DETAILED	RWH	TJW	06/14
CHECKED-REVIEWED		CRM	06/14
DESIGN2-DETAILED2			
DESIGN3-DETAILED3			
REVISIONS 1			
REVISIONS 2			
REVISIONS 3			
REVISIONS 4			
FIELD CHANGES			

SIGNATURE

P.E. NUMBER

DATE

PORTLAND INTERNATIONAL MARINE TERMINAL
EXISTING LAYDOWN AND CONNECTING CORRIDOR CONNECTION
PORTLAND CUMBERLAND COUNTY

COMMERCIAL STREET CROSS SECTIONS

SHEET NUMBER

H18

Sta. 211+75.00 to Sta. 212+00.00

Date:7/11/2014 Username: Division: Filename: Xsect.dgn

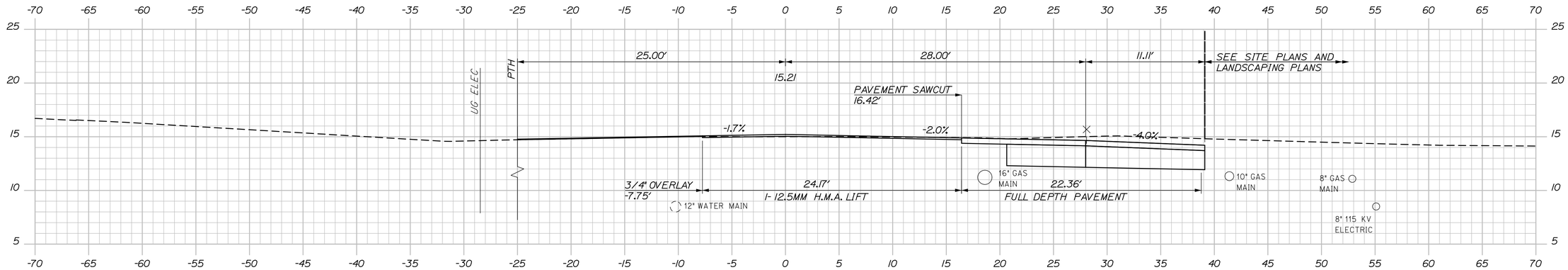

212+75.00

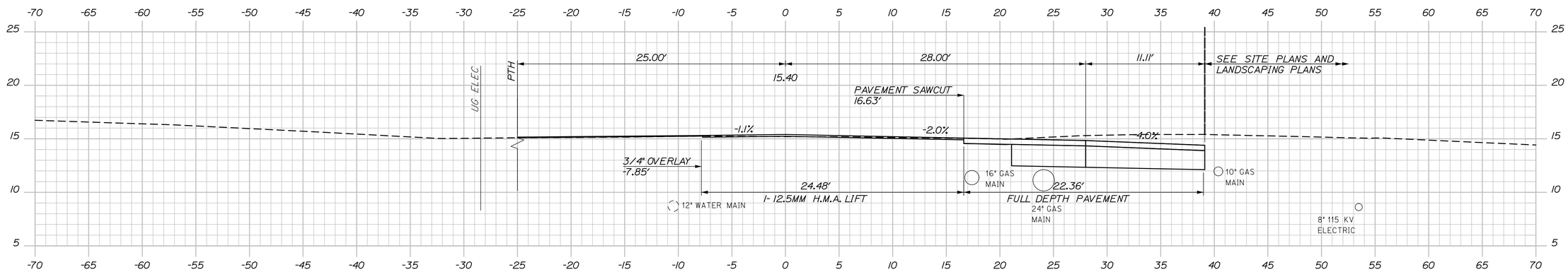

212+50.00

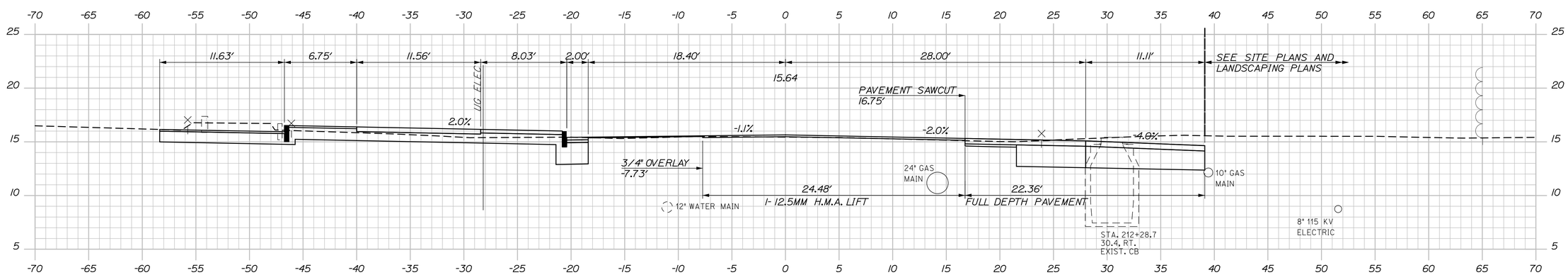

212+25.00

STATE OF MAINE
DEPARTMENT OF TRANSPORTATION

PROJECT NUMBER 022809.20

PIN 022809.20

		BY	DATE
PROJ. MANAGER	J. KITTREDGE		
DESIGN-DETAILED	RWH	TJW	06/14
CHECKED-REVIEWED	-	CRM	06/14
DESIGN2-DETAILED2	-	-	-
DESIGN3-DETAILED3	-	-	-
REVISIONS 1	-	-	-
REVISIONS 2	-	-	-
REVISIONS 3	-	-	-
REVISIONS 4	-	-	-
FIELD CHANGES	-	-	-

SIGNATURE

P.E. NUMBER

DATE

PORTLAND INTERNATIONAL MARINE TERMINAL
EXISTING LAYDOWN AND CONNECTING CORRIDOR CONNECTION
PORTLAND CUMBERLAND COUNTY

COMMERCIAL STREET CROSS SECTIONS

SHEET NUMBER

H19

53 OF 116

Sta. 212+25.00 to Sta. 212+75.00

Date:6/26/2014 Username: Division: Filename: Xsect.dgn

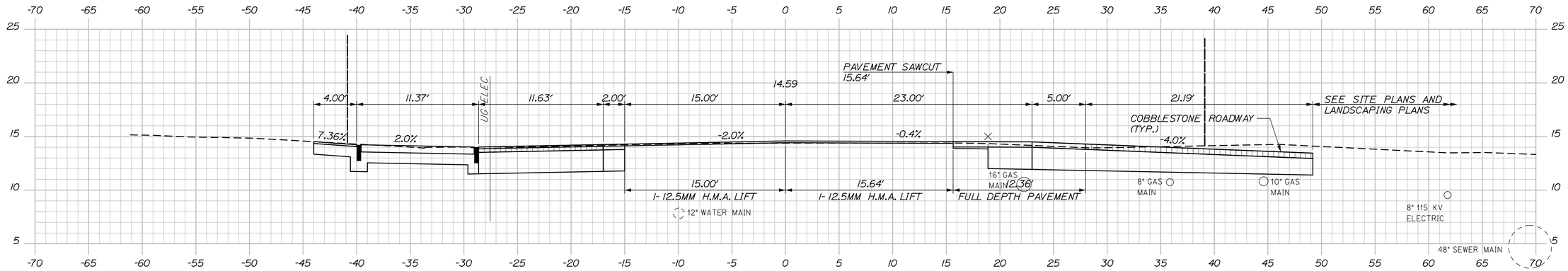

213+50.00

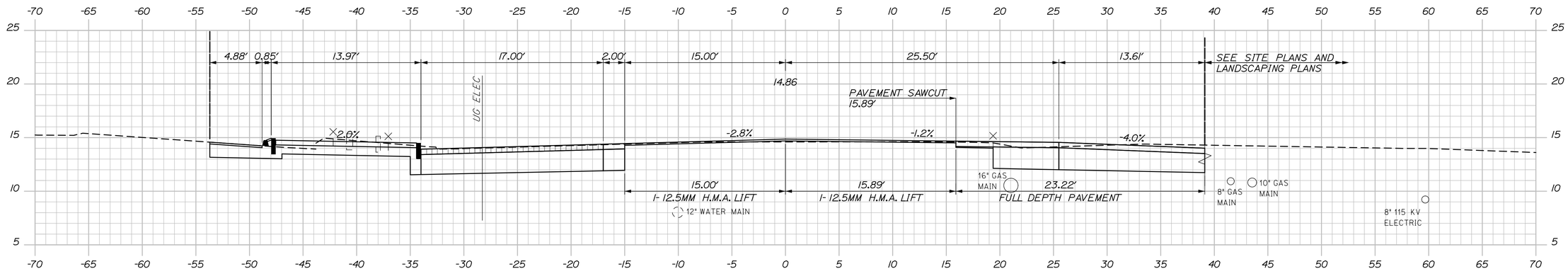

213+25.00

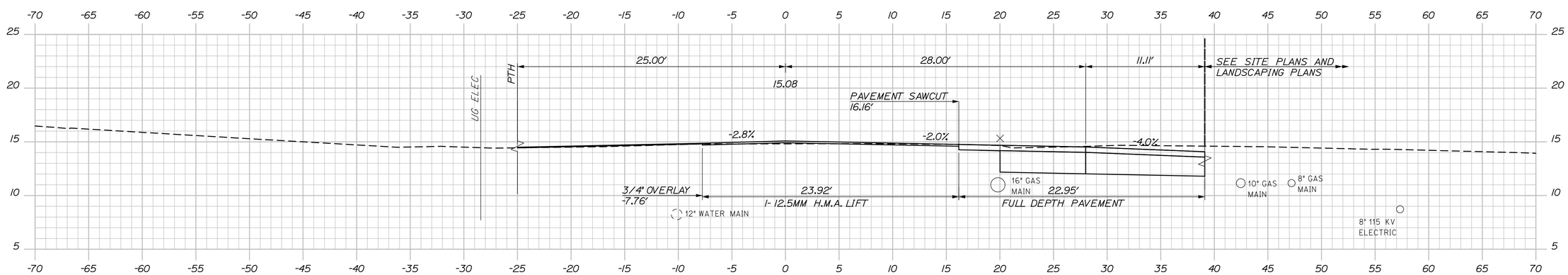

213+00.00

STATE OF MAINE
DEPARTMENT OF TRANSPORTATION

PROJECT NUMBER 022809.20

PIN
022809.20

PROJ. MANAGER	J. KITTREDGE		
DESIGN-DETAILED	RWH	TJW	06/14
CHECKED-REVIEWED	-	CRM	06/14
DESIGN2-DETAILED2	-	-	-
DESIGN3-DETAILED3	-	-	-
REVISIONS 1	-	-	-
REVISIONS 2	-	-	-
REVISIONS 3	-	-	-
REVISIONS 4	-	-	-
FIELD CHANGES	-	-	-

SIGNATURE

P.E. NUMBER

DATE

PORTLAND INTERNATIONAL MARINE TERMINAL
EXISTING LAYDOWN AND CONNECTING CORRIDOR CONNECTION
PORTLAND CUMBERLAND COUNTY

COMMERCIAL STREET
CROSS SECTIONS

SHEET NUMBER

H20

54 OF 116

Sta. 213+00.00 to Sta. 213+50.00

Date:6/26/2014
Username:
Division:
Filename: Xsect.dgn

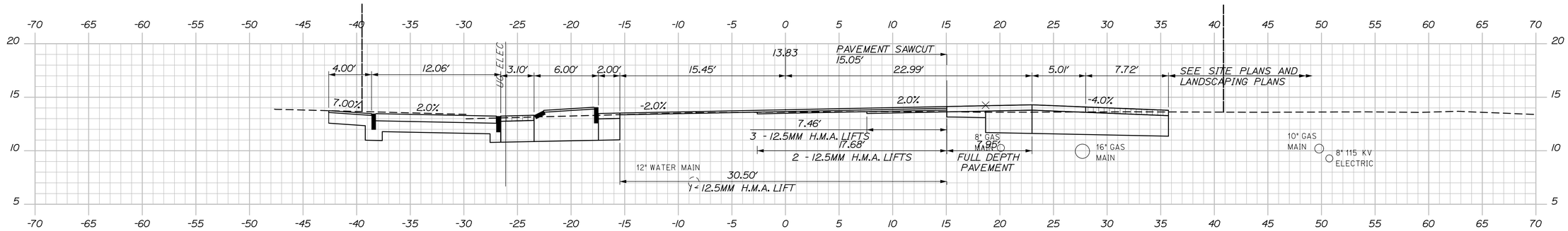

214+25.00

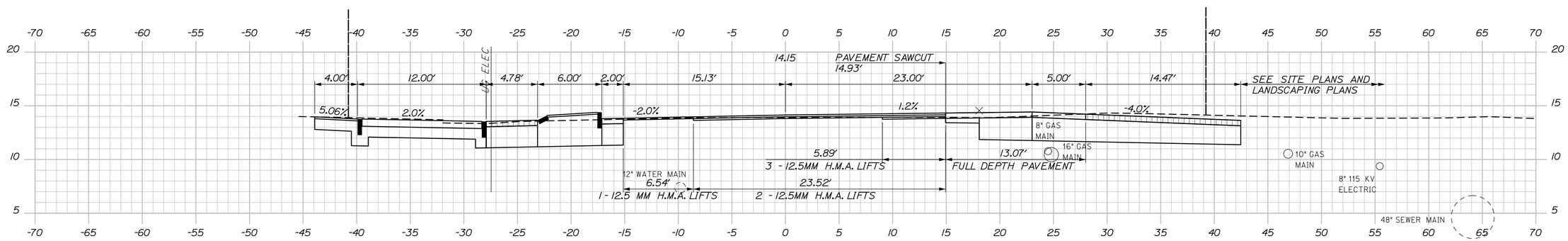

214+00.00

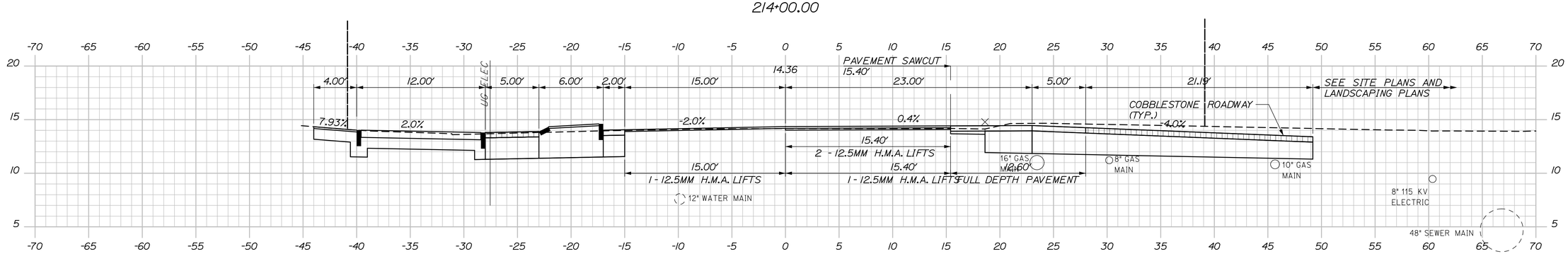

213+75.00

STATE OF MAINE
DEPARTMENT OF TRANSPORTATION

PROJECT NUMBER 022809.20

PIN 022809.20

PROJ. MANAGER	J. KITTREDGE		
DESIGN-DETAILED	RWH	TJW	06/14
CHECKED-REVIEWED	-	CRM	06/14
DESIGN2-DETAILED2	-	-	-
DESIGN3-DETAILED3	-	-	-
REVISIONS 1	-		-
REVISIONS 2	-		-
REVISIONS 3	-		-
REVISIONS 4	-		-
FIELD CHANGES	-		-

SIGNATURE

P.E. NUMBER

DATE

PORTLAND INTERNATIONAL MARINE TERMINAL
EXISTING LAYDOWN AND CONNECTING CORRIDOR CONNECTION
PORTLAND CUMBERLAND COUNTY

COMMERCIAL STREET CROSS SECTIONS

SHEET NUMBER

H21

Sta. 213+75.00 to Sta. 214+25.00

Date:6/26/2014
Username:
Division:
Filename: Xsect.dgn

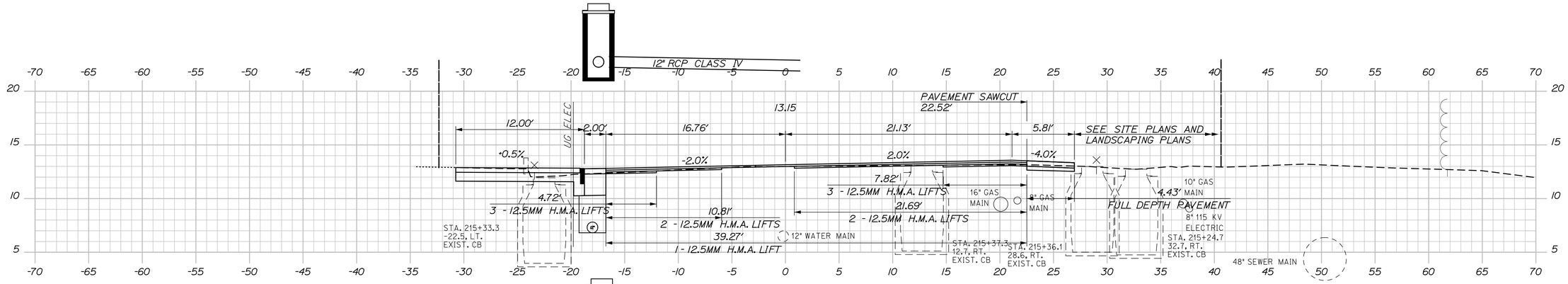

215+25.00

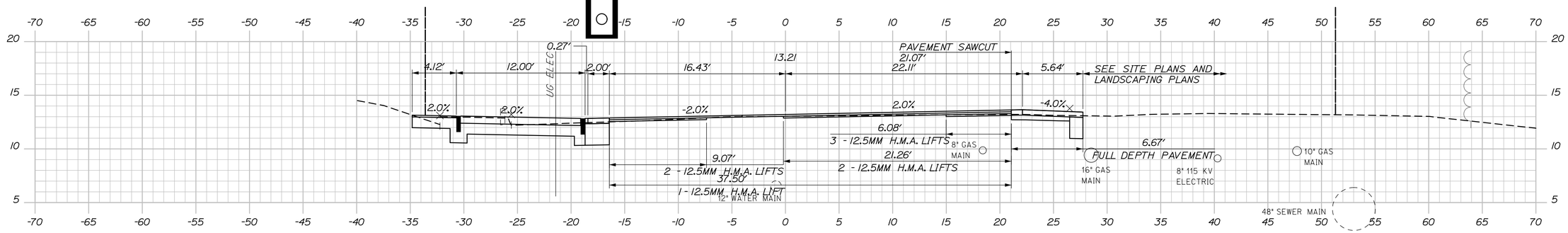

215+00.00

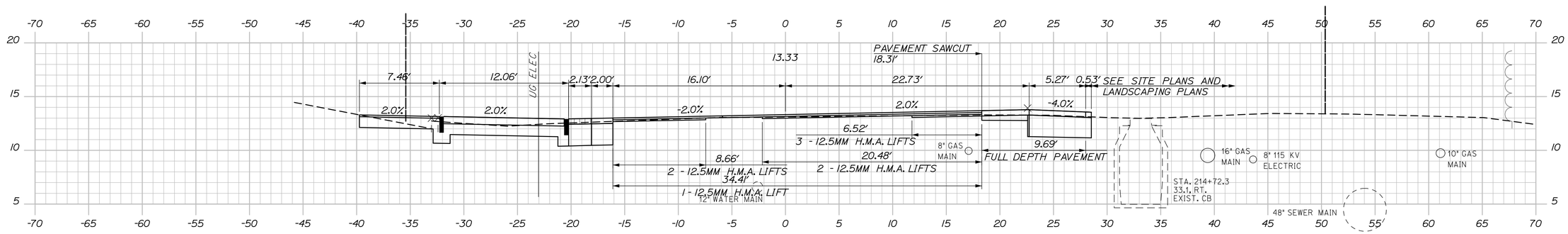

214+75.00

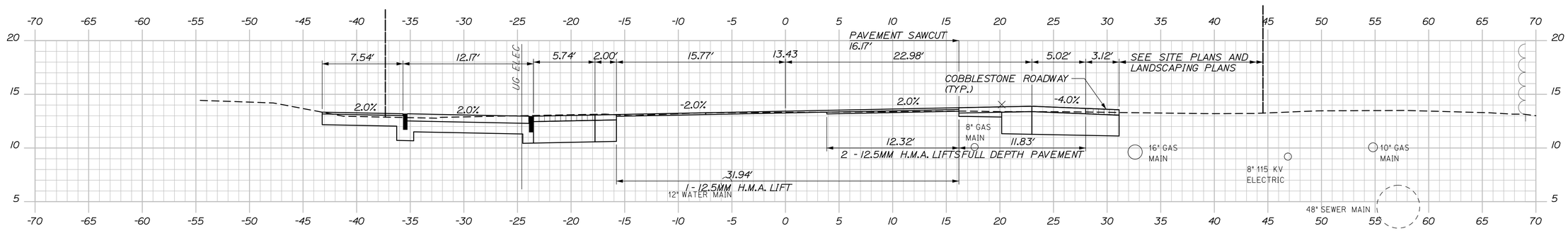

214+50.00

STATE OF MAINE
DEPARTMENT OF TRANSPORTATION

PROJECT NUMBER 022809.20

PIN
022809.20

		BY	DATE
PROJ. MANAGER	J. KITTREDGE		
DESIGN-DETAILED	RWH	TJW	06/14
CHECKED-REVIEWED		CRM	06/14
DESIGN2-DETAILED2	-	-	-
DESIGN3-DETAILED3	-	-	-
REVISIONS 1	-	-	-
REVISIONS 2	-	-	-
REVISIONS 3	-	-	-
REVISIONS 4	-	-	-
FIELD CHANGES	-	-	-

SIGNATURE

P.E. NUMBER

DATE

PORTLAND INTERNATIONAL MARINE TERMINAL
EXISTING LAYDOWN AND CONNECTING CORRIDOR CONNECTION
PORTLAND CUMBERLAND COUNTY

COMMERCIAL STREET CROSS SECTIONS

SHEET NUMBER

H22

Sta. 214+50.00 to Sta. 215+25.00

Date:6/26/2014

Username:

Division:

Filename: Xsect.dgn

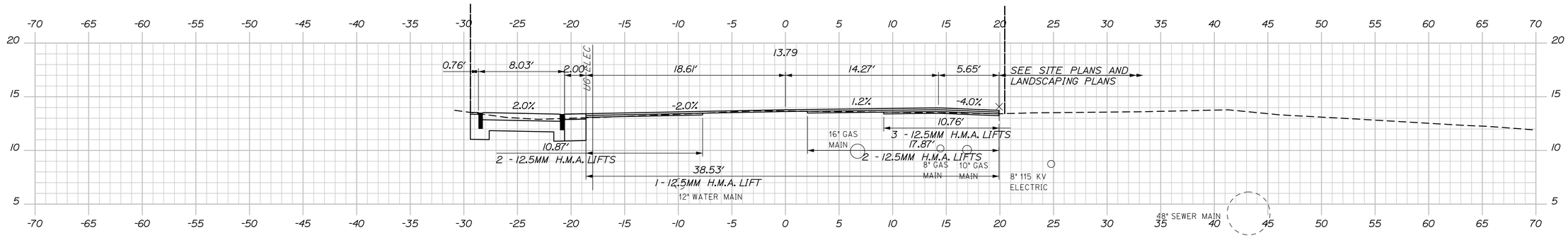

216+25.00

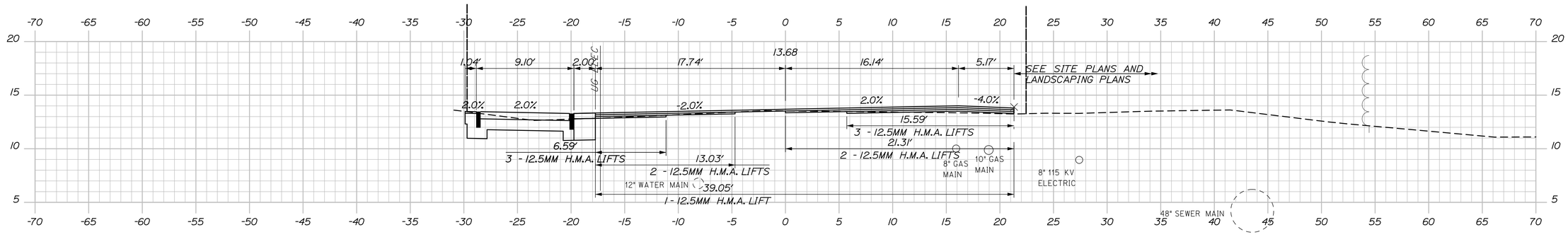

216+00.00

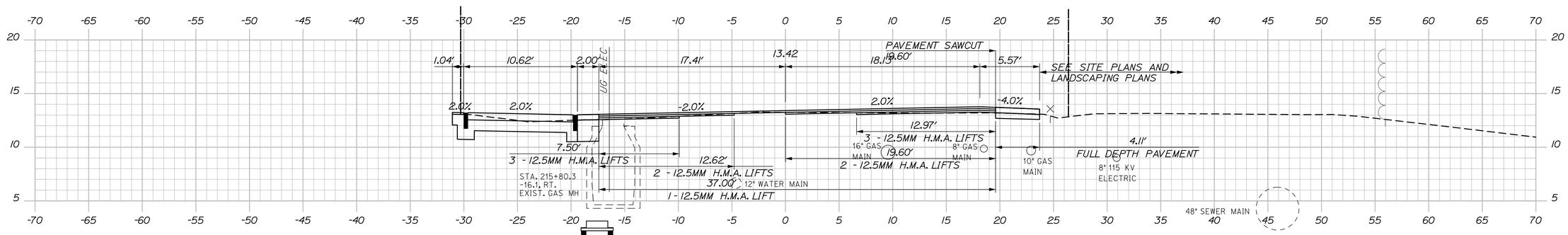

215+75.00

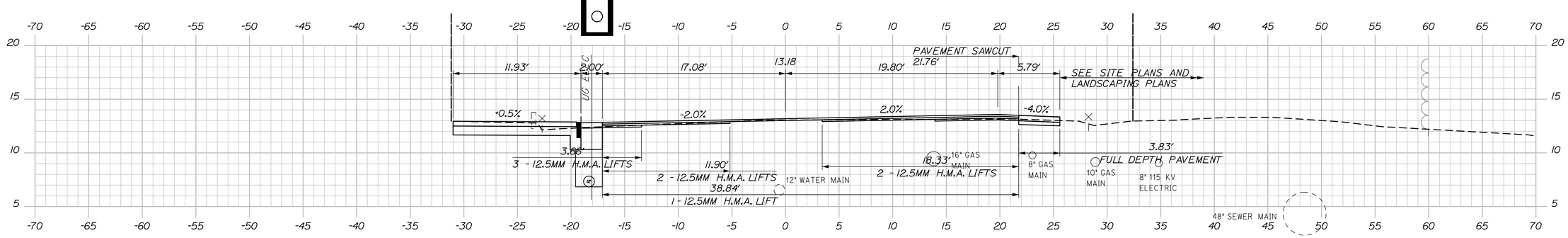

215+50.00

Sta. 215+50.00 to Sta. 216+25.00

STATE OF MAINE
DEPARTMENT OF TRANSPORTATION

PROJECT NUMBER 022809.20

PIN
022809.20

		BY	DATE
PROJ. MANAGER	J. KITTREDGE		
DESIGN-DETAILED	RWH	TJW	06/14
CHECKED-REVIEWED	-	CRM	06/14
DESIGN2-DETAILED2	-	-	-
DESIGN3-DETAILED3	-	-	-
REVISIONS 1	-	-	-
REVISIONS 2	-	-	-
REVISIONS 3	-	-	-
REVISIONS 4	-	-	-
FIELD CHANGES	-	-	-

SIGNATURE

P.E. NUMBER

DATE

PORTLAND INTERNATIONAL MARINE TERMINAL
EXISTING LAYDOWN AND CONNECTING CORRIDOR CONNECTION
PORTLAND CUMBERLAND COUNTY

COMMERCIAL STREET
CROSS SECTIONS

SHEET NUMBER
H23

Date:6/26/2014
Username:
Division:
Filename: Xsect.dgn

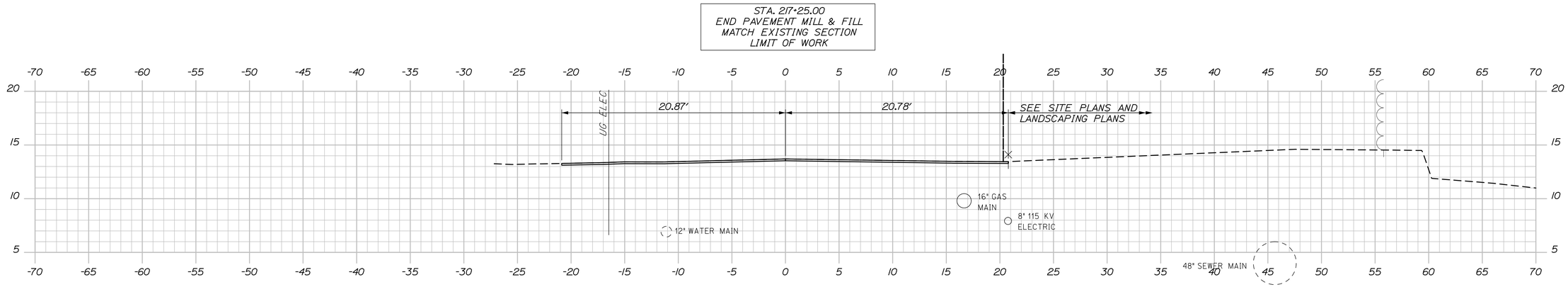

217+25.00

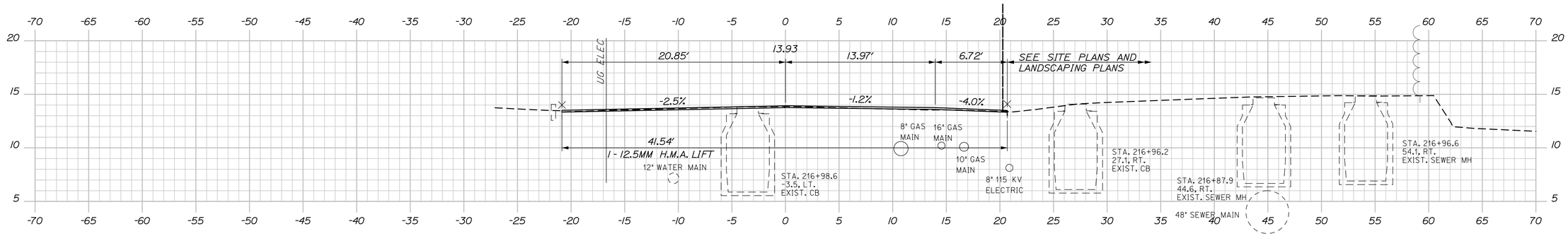

217+00.00

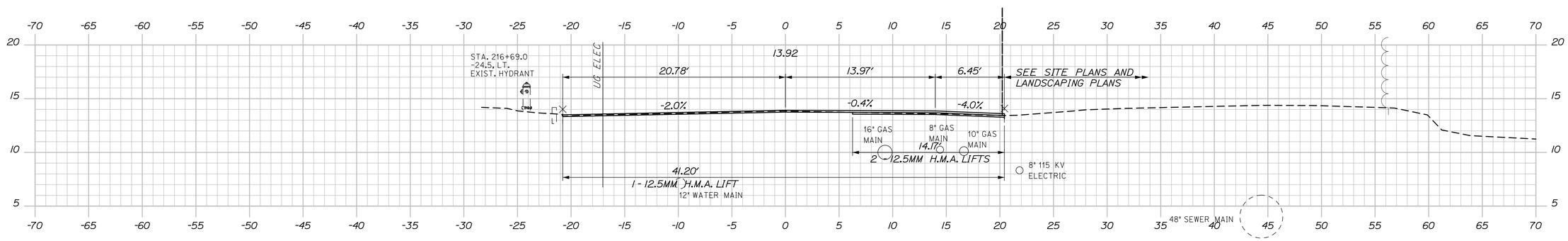

216+75.00

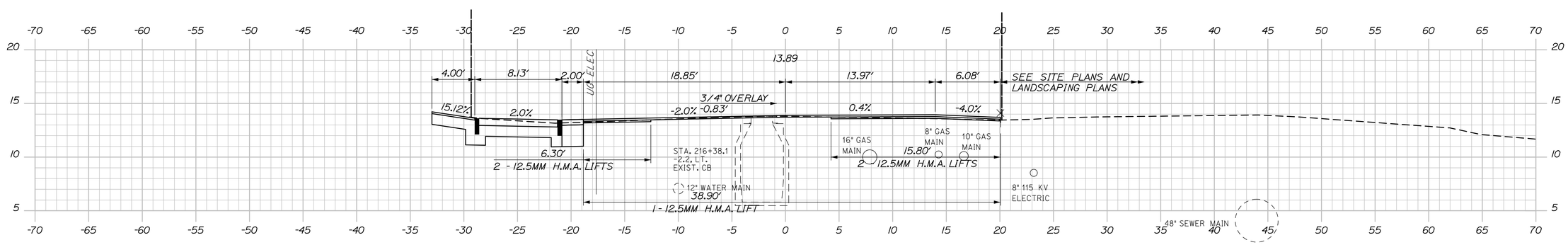

216+50.00

Sta. 216+50.00 to Sta. 217+25.00

STATE OF MAINE
DEPARTMENT OF TRANSPORTATION

PROJECT NUMBER 022809.20

PIN
022809.20

		BY	DATE
PROJ. MANAGER	J. KITTREDGE		
DESIGN-DETAILED	RWH	TJW	06/14
CHECKED-REVIEWED	-	CRM	06/14
DESIGN2-DETAILED2	-	-	-
DESIGN3-DETAILED3	-	-	-
REVISIONS 1	-	-	-
REVISIONS 2	-	-	-
REVISIONS 3	-	-	-
REVISIONS 4	-	-	-
FIELD CHANGES	-	-	-

SIGNATURE

P.E. NUMBER

DATE

PORTLAND INTERNATIONAL MARINE TERMINAL
EXISTING LAYDOWN AND CONNECTING CORRIDOR CONNECTION
PORTLAND CUMBERLAND COUNTY

COMMERCIAL STREET
CROSS SECTIONS

SHEET NUMBER
H24

Date:6/26/2014
Username:
Division:
Filename: Xsect.dgn

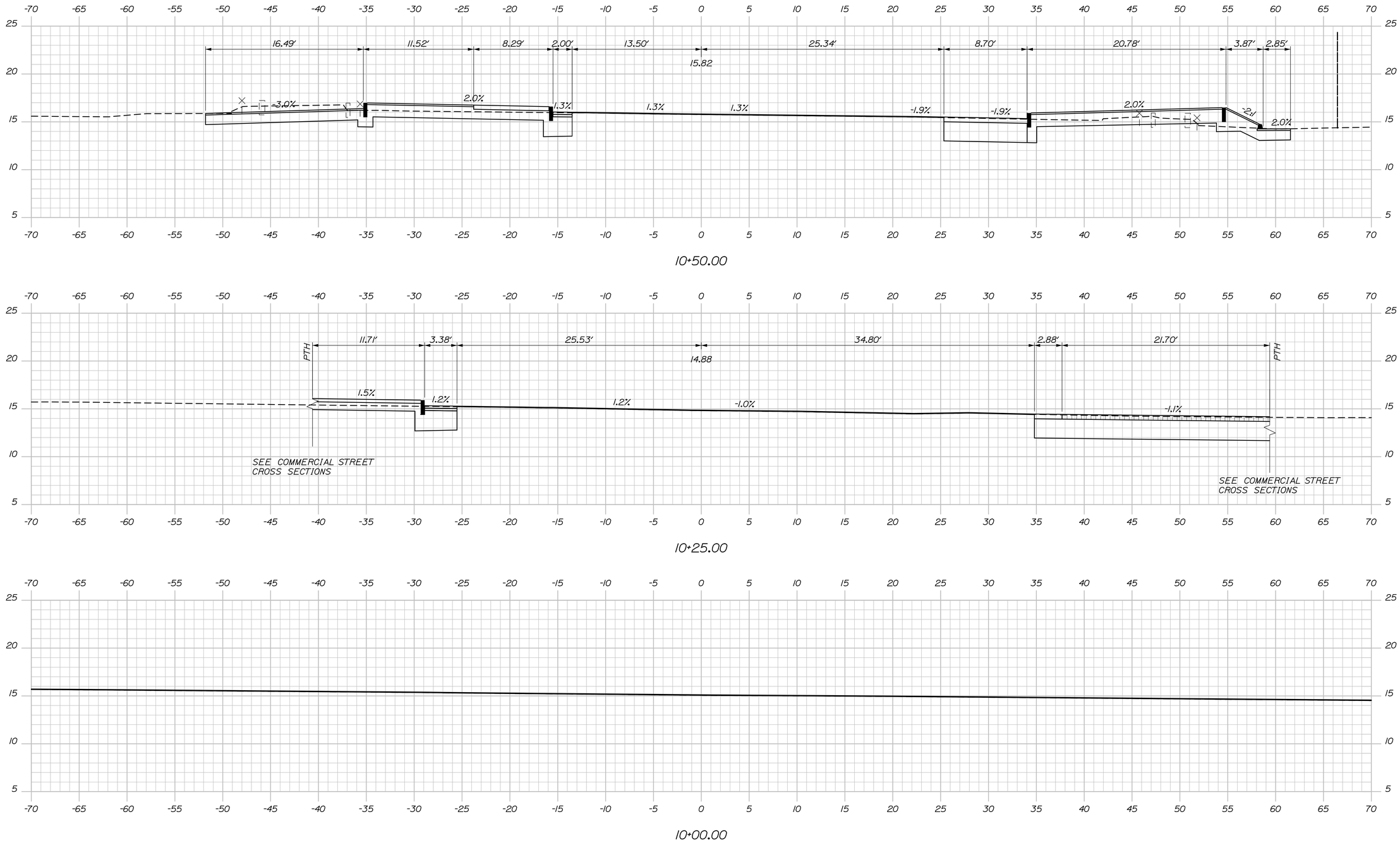

STATE OF MAINE
DEPARTMENT OF TRANSPORTATION

PROJECT NUMBER 022809.20

PIN
022809.20

PROJ. MANAGER	J. KITTREDGE		
DESIGN-DETAILED	RWH	TJW	06/14
CHECKED-REVIEWED	RWH	CRM	06/14
DESIGN2-DETAILED2	-	-	-
DESIGN3-DETAILED3	-	-	-
REVISIONS 1	-		-
REVISIONS 2	-		-
REVISIONS 3	-		-
REVISIONS 4	-		-
FIELD CHANGES	-		-

SIGNATURE

P.E. NUMBER

DATE

PORTLAND INTERNATIONAL MARINE TERMINAL
EXISTING LAYDOWN AND CONNECTING CORRIDOR CONNECTION

PORTLAND CUMBERLAND COUNTY

BEACH STREET
CROSS SECTIONS

SHEET NUMBER

H25

59 OF 116

Sta. 10+00.00 to Sta. 10+50.00

Date:6/26/2014

Username:

Division:

Filename: Xsect.dgn

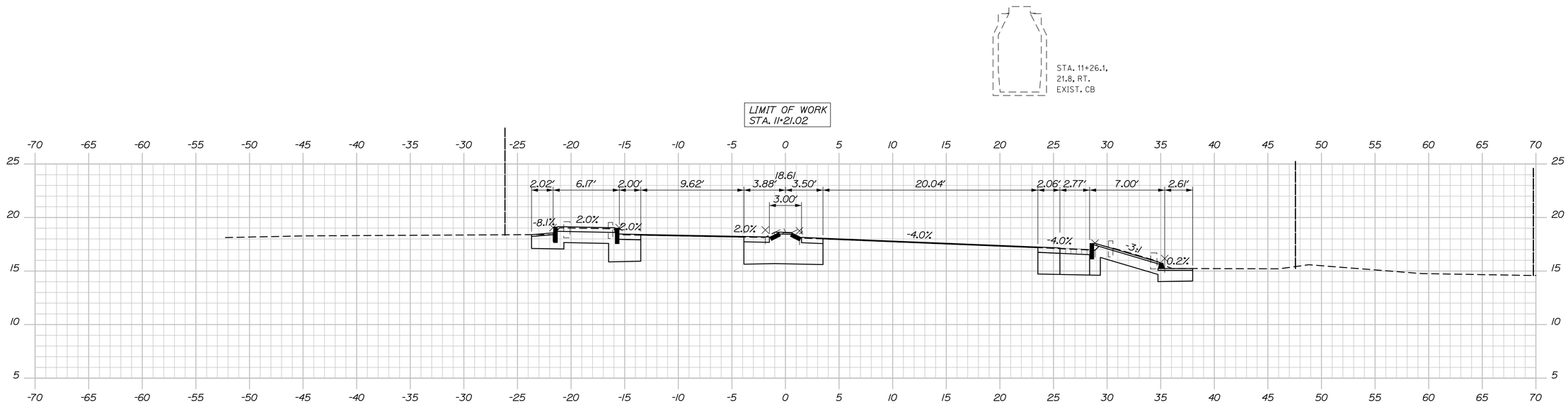

11+00.00

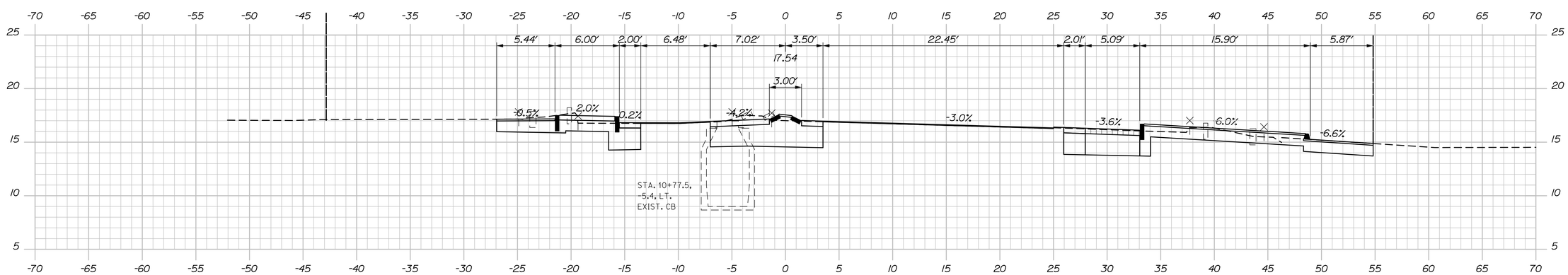

10+75.00

Sta. 10+75.00 to Sta. 11+21.02

STATE OF MAINE
DEPARTMENT OF TRANSPORTATION

PROJECT NUMBER 022809.20

PIN 022809.20

PROJ. MANAGER	J. KITTREDGE	BY	DATE
DESIGN-DETAILED	RWH	TJW	06/14
CHECKED-REVIEWED	RWH	CRM	06/14
DESIGN2-DETAILED2	-	-	-
DESIGN3-DETAILED3	-	-	-
REVISIONS 1	-	-	-
REVISIONS 2	-	-	-
REVISIONS 3	-	-	-
REVISIONS 4	-	-	-
FIELD CHANGES	-	-	-

SIGNATURE

P.E. NUMBER

DATE

PORTLAND INTERNATIONAL MARINE TERMINAL
EXISTING LAYDOWN AND CONNECTING CORRIDOR CONNECTION
PORTLAND CUMBERLAND COUNTY

BEACH STREET CROSS SECTIONS

SHEET NUMBER

H26

Date:6/26/2014
Username:
Division:
Filename: Xsect.dgn

CONTROL POINTS FOR CURBING				
POINT	STATION	OFFSET	X-COORD	Y-COORD
101	207+43.57	32.65' LT	2926956.5349	296014.0689
102	207+47.57	32.63' LT	2926960.3657	296015.2171
103	207+67.61	20' LT	2926983.2197	296008.9930
104	207+78.00	20' LT	2926993.1550	296012.0262
105	207+92.93	26.7' LT	2927005.4836	296022.7933
106	207+96.59	32.63' LT	2927007.2492	296029.5301
107	207+97.98	40.89' LT	2927006.1654	296037.8384
108	208+20.67	40' LT	2927028.1306	296043.6151
109	208+24.67	28' LT	2927035.4601	296033.3060
110	208+29.76	23.24' LT	2927041.7129	296030.2392
111	208+40.67	20' LT	2927053.0988	296030.3263
112	209+86.40	20' LT	2927192.4747	296072.8763
113	209+95.10	22.78' LT	2927199.9825	296078.0747
114	209+99.66	28' LT	2927202.8272	296084.4013
115	210+01.40	35' LT	2927202.4412	296091.6024
116	210+01.40	40' LT	2927200.9813	296096.3845
117	209+93.98	40' LT	2927193.8878	296094.2189
118	209+45.45	40' LT	2927147.4716	296080.0486
119	207+78.00	40' LT	2926987.3153	296031.1546
120	208+40.67	40' LT	2927047.2591	296049.4548
121	209+86.40	35' LT	2927188.0949	296087.2226
122	210+00.98	40' LT	2927200.5828	296096.2628

ITEM 609.11 VERTICAL CURB TYPE 1

POINT	LENGTH	RADIUS
102 TO 103	23.69'	-
103 TO 104	10.39'	-
111 TO 112	145.73'	-
115 TO 116	5.00'	-
117 TO 118	48.53'	-
201 TO 202	5.00'	-
205 TO 206	37.84'	-
207 TO 208	11.26'	150'
209 TO 210	12.00'	-
211 TO 212	69.05'	-
213 TO 214	5.00'	-
217 TO 218	4.84'	-
222 TO 223	54.69'	89'
224 TO 225	6.62'	-
225 TO 226	32.76'	95'
701 TO 702	40.33'	-
702 TO 703	707.84'	-

ITEM 609.12 VERTICAL CURB TYPE 1-CIRCULAR

POINT	LENGTH	RADIUS
104 TO 105	16.86'	20'
106 TO 107	8.44'	20'
108 TO 109	12.87'	20'
110 TO 111	11.55'	20'
112 TO 113	9.28'	15'
114 TO 115	7.28'	15'
202 TO 203	7.28'	15'
204 TO 205	8.97'	15'
206 TO 207	13.3'	50'
214 TO 215	6.93'	15'
216 TO 217	9.63'	15'
218 TO 219	33.70'	30'
220 TO 221	6.27'	30'
226 TO 227	56.58'	50'

CURVE DATA #1
PI = 10+76.14
D = 77°57'12.4"
Δ = 40°00'45.9" Rt.
R = 73.50'
L = 51.33'
T = 26.76'
E = 4.72'

CURVE DATA #2
PI = 11+10.87
D = 21°44'38.9"
Δ = 4°24'55.6" Rt.
R = 263.50'
L = 20.31'
T = 10.16'
E = 0.20'

ITEM 609.237 TERMINAL CURB TYPE 1, 7 FOOT

POINT	LENGTH	RADIUS
117 TO 122	7'	-
211 TO 239	7'	-
212 TO 238	7'	-
221 TO 222	7'	89'

ITEM 609.2371 TERMINAL CURB TYPE 1, 7 FOOT-CIRCULAR

POINT	LENGTH	RADIUS
105 TO 106	7'	20'
109 TO 110	7'	20'
113 TO 114	7'	15'
203 TO 204	7'	15'
215 TO 216	7'	15'
219 TO 220	7'	30'
227 TO 240	7'	50'

ITEM 609.26 CURB TRANSITION SECTION B TYPE 1

POINT	LENGTH	RADIUS
208 TO 209*	8.00'	150'

* CUT SECTION AS NECESSARY TO SERVE AS TERMINAL SECTION. CUTTING OF CURB CONSIDERED INCIDENTAL TO ITEM 609.26.

ITEM 609.34 CURB TYPE 5

POINT	LENGTH	RADIUS
231 TO 232	20.42'	265'
232 TO 233	40.00'	75'
234 TO 236	38.40'	72'
236 TO 237	20.19'	262'

ITEM 609.35 CURB TYPE 5-CIRCULAR

POINT	LENGTH	RADIUS
233 TO 234	4.71'	1.5'

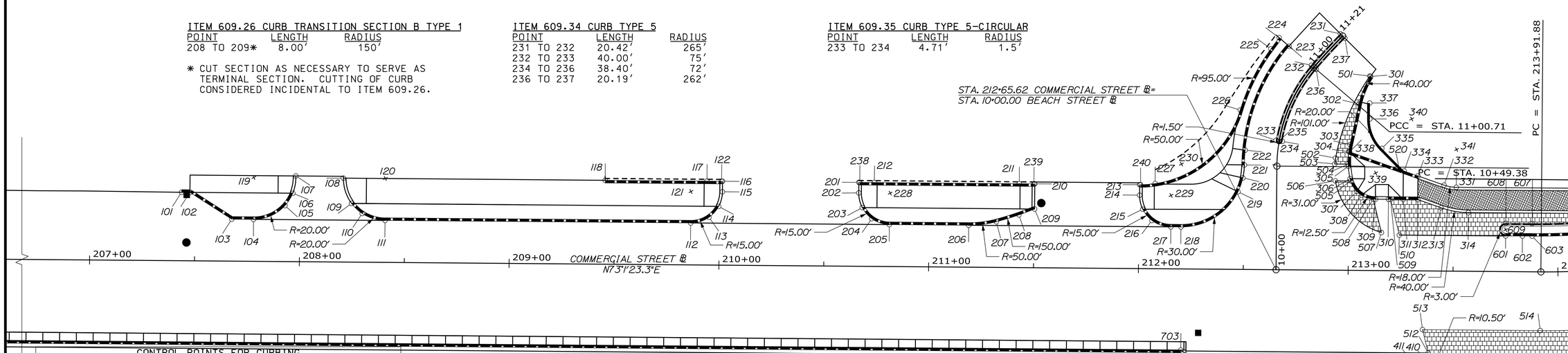

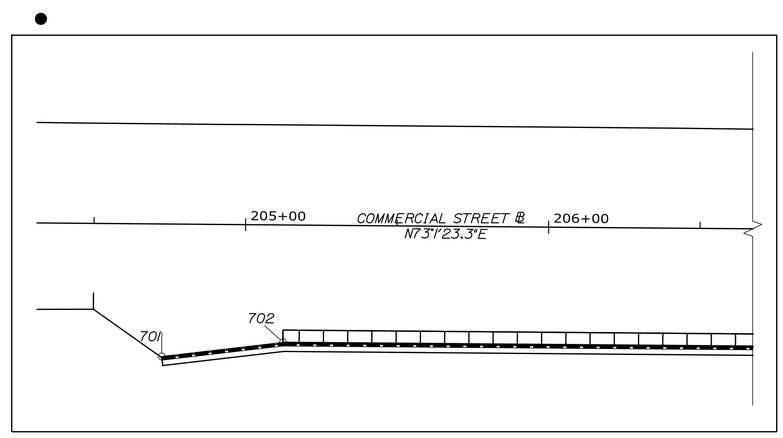

CONTROL POINTS FOR CURBING				
POINT	STATION	OFFSET	X-COORD	Y-COORD
201	210+66.40	40' LT	2927263.1488	296115.3636
202	210+66.40	35' LT	2927264.6087	296110.5814
203	210+68.13	28' LT	2927268.3106	296104.3926
204	210+72.70	22.78' LT	2927274.2037	296100.7336
205	210+81.09	20' LT	2927283.0414	296100.5253
206	211+18.93	20' LT	2927319.2282	296111.5727
207	211+32.07	21.76' LT	2927331.2859	296117.0925
208	211+42.82	25.12' LT	2927340.5799	296123.4488
209	211+50.28	28' LT	2927346.8792	296128.3788
210	211+50.28	40' LT	2927343.3753	296139.8558
211	211+42.86	40' LT	2927336.2819	296137.6903
212	210+73.82	40' LT	2927270.2422	296117.5291
213	212+00.28	40' LT	2927391.1947	296154.4559
214	212+00.28	35' LT	2927392.6550	296149.6726
215	212+01.85	28.31' LT	2927396.1144	296143.7337
216	212+06.30	22.98' LT	2927401.9210	296139.9389
217	212+15.28	20' LT	2927411.3811	296139.7060
218	212+20.12	20' LT	2927416.0119	296141.1197
219	10+37.02	18.45' LT	2927436.9098	296165.2920
220	10+43.62	16.18' LT	2927437.1513	296172.2720
221	10+49.76	15.5' LT	2927435.9902	296178.4226
222	10+55.54	15.5' LT	2927434.2468	296185.2002
223	11+00.71	15.5' LT	2927439.3427	296238.7926
224	11+00.71	21.73' LT	2927433.6089	296241.2307
225	10+95.59	21.5' LT	2927431.4469	296234.9686
226	10+70.25	21.5' LT	2927426.2531	296202.7909
227	212+07.66	40.60' LT	2927398.0761	296157.1843
228	210+81.40	35' LT	2927278.9550	296114.9612
229	212+15.28	35' LT	2927407.0013	296154.0524
230	212+20.12	50' LT	2927407.2523	296169.8124
231	11+21.02	1.5' LT	2927460.9336	296251.7815
232	11+00.71	1.5' LT	2927452.2264	296233.3143
233	10+61.51	1.5' LT	2927446.8912	296194.1488
234	10+61.51	1.5' RT	2927449.8654	296194.5415
235	10+61.51	0' RT	2927448.3783	296194.3451
236	11+00.71	1.5' RT	2927454.9871	296232.1403
237	11+21.02	1.5' RT	2927463.5958	296250.3985
238	210+66.82	40' LT	2927263.5473	296115.4852
239	211+49.86	40' LT	2927342.9768	296139.7342
240	212+00.70	40' LT	2927391.5918	296154.5820

CONTROL POINTS FOR CURBING				
POINT	STATION	OFFSET	X-COORD	Y-COORD
701	204+72.65	43.7' RT	2926719.7105	295861.9464
702	205+12.67	38.69' RT	2926756.5311	295878.4185
703	212+20.51	38.69' RT	2927433.5206	296085.0959

25 0 25 50

STATE OF MAINE
DEPARTMENT OF TRANSPORTATION

PROJECT NUMBER 022809.20

WIN 022809.20

	BY	DATE
PROJ. MANAGER		
DESIGN-DETAILED	J. KITTREDGE	06/14
CHECKED-REVIEWED	RWH	06/14
DESIGN2-DETAILED2	T.JW	-
DESIGN3-DETAILED3	CRM	-
REVISIONS 1	-	-
REVISIONS 2	-	-
REVISIONS 3	-	-
REVISIONS 4	-	-
FIELD CHANGES	-	-

SIGNATURE

P.E. NUMBER

DATE

PORTLAND INTERNATIONAL MARINE TERMINAL
EXISTING LAYDOWN AND CONNECTING CORRIDOR CONNECTION
PORTLAND CUMBERLAND COUNTY

COMMERCIAL STREET
GEOMETRIC AND CURBING PLAN

SHEET NUMBER
H27

Date:7/11/2014
Username:
Division:
Filename: 061_Geometric_002.dgn

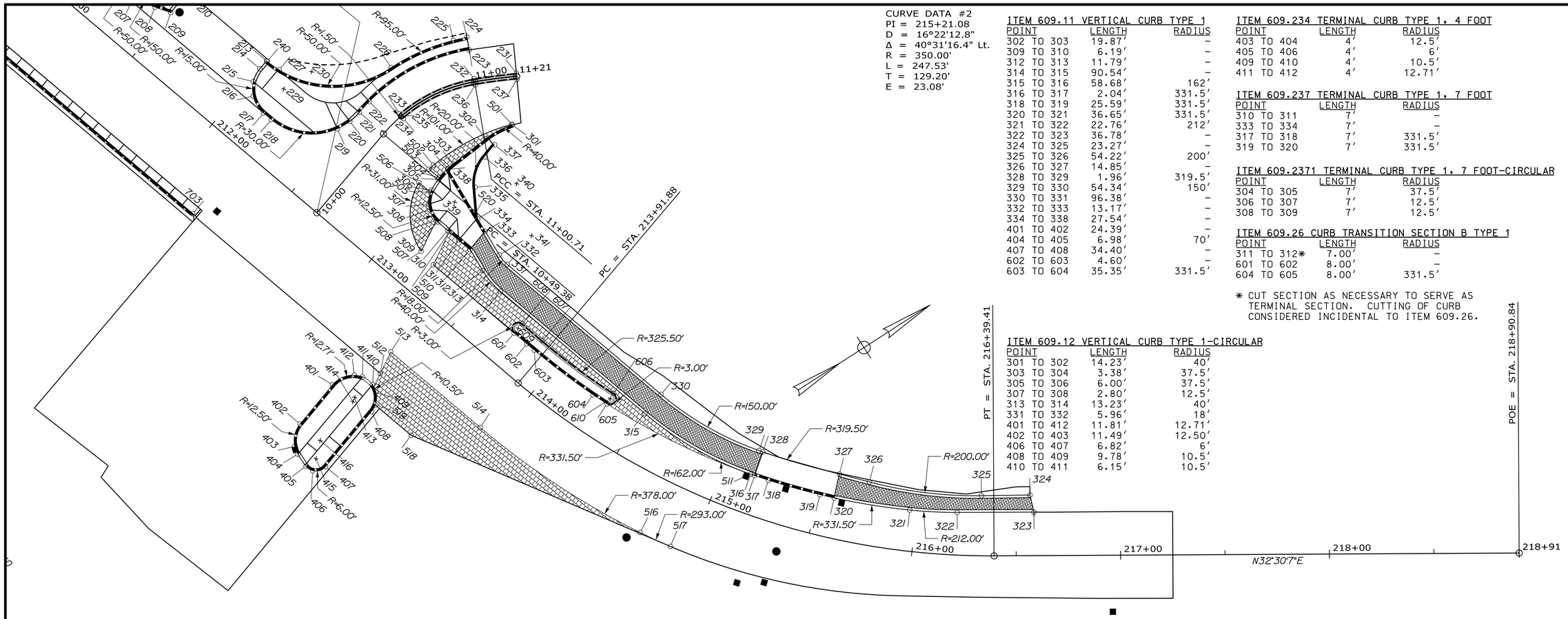

CURVE DATA #2
PI = 215+21.08
D = 16°22'12.8"
Δ = 40°31'16.4" Lt.
R = 350.00'
L = 247.53'
T = 129.20'
E = 23.08'

ITEM 609.11 VERTICAL CURB TYPE 1

POINT	LENGTH	RADIUS
302 TO 303	19.87′	–
309 TO 310	6.19′	–
312 TO 313	11.79′	–
314 TO 315	90.54′	–
315 TO 316	58.68′	162′
316 TO 317	2.04′	331.5′
318 TO 319	25.59′	331.5′
320 TO 321	36.65′	331.5′
321 TO 322	22.76′	212′
322 TO 323	36.78′	–
324 TO 325	23.27′	–
325 TO 326	54.22′	200′
326 TO 327	14.85′	–
328 TO 329	1.96′	319.5′
329 TO 330	54.34′	150′
330 TO 331	96.38′	–
332 TO 333	13.17′	–
334 TO 338	27.54′	–
401 TO 402	24.39′	–
404 TO 405	6.98′	70′
407 TO 408	34.40′	–
602 TO 603	4.60′	–
603 TO 604	35.35′	331.5′

ITEM 609.234 TERMINAL CURB TYPE 1, 4 FOOT

POINT	LENGTH	RADIUS
403 TO 404	4′	12.5′
405 TO 406	4′	6′
409 TO 410	4′	10.5′
411 TO 412	4′	12.71′

ITEM 609.237 TERMINAL CURB TYPE 1, 7 FOOT

POINT	LENGTH	RADIUS
310 TO 311	7′	–
333 TO 334	7′	–
317 TO 318	7′	331.5′
319 TO 320	7′	331.5′

ITEM 609.2371 TERMINAL CURB TYPE 1, 7 FOOT-CIRCULAR

POINT	LENGTH	RADIUS
304 TO 305	7′	37.5′
306 TO 307	7′	12.5′
308 TO 309	7′	12.5′

ITEM 609.26 CURB TRANSITION SECTION B TYPE 1

POINT	LENGTH	RADIUS
311 TO 312*	7.00′	–
601 TO 602	8.00′	–
604 TO 605	8.00′	331.5′

* CUT SECTION AS NECESSARY TO SERVE AS TERMINAL SECTION. CUTTING OF CURB CONSIDERED INCIDENTAL TO ITEM 609.26.

ITEM 609.12 VERTICAL CURB TYPE 1-CIRCULAR

POINT	LENGTH	RADIUS
301 TO 302	14.23′	40′
303 TO 304	3.38′	37.5′
305 TO 306	6.00′	37.5′
307 TO 308	2.80′	12.5′
313 TO 314	13.23′	40′
331 TO 332	5.96′	18′
401 TO 412	11.81′	12.71′
402 TO 403	11.49′	12.50′
406 TO 407	6.82′	6′
408 TO 409	9.78′	10.5′
410 TO 411	6.15′	10.5′

CONTROL POINTS FOR CURBING

POINT	STATION	OFFSET	X-COORD	Y-COORD
301	11+16.30	23′ RT	2927480.7276	296236.6488
302	11+01.54	27.74′ RT	2927479.4302	296222.5543
303	10+68.95	33.37′ RT	2927481.1381	296202.7605
304	10+62.76	33.57′ RT	2927481.5792	296199.4150
305	10+49.83	34.04′ RT	2927483.4397	296192.6773
306	10+43.69	34.92′ RT	2927486.0075	296187.2617
307	10+37.65	38.27′ RT	2927490.9769	296182.4618
308	213+06.08	35.91′ LT	2927493.5799	296181.4346
309	213+12.72	34′ LT	2927500.4879	296181.5472
310	213+18.91	34′ LT	2927506.4099	296183.3551
311	213+25.91	34′ LT	2927513.1048	296185.3990
312	213+32.91	34′ LT	2927519.7998	296187.4429
313	213+44.06	30.17′ LT	2927531.5856	296187.0357
314	213+57.06	28′ LT	2927544.6463	296188.7549
315	214+51.85	23.22′ LT	2927631.2380	296215.1904
316	215+13.81	18.61′ LT	2927683.0754	296242.0081
317	215+15.96	18.64′ LT	2927684.6824	296243.2594
318	215+23.35	18.73′ LT	2927690.1461	296247.6350
319	215+50.41	19.09′ LT	2927709.3089	296264.5922
320	215+57.81	19.18′ LT	2927714.3167	296269.4830
321	215+96.61	19.68′ LT	2927738.7800	296296.7424
322	216+20.73	20.43′ LT	2927752.0418	296315.2230
323	216+58.60	20.84′ LT	2927771.8489	296346.2085
324	216+56.75	29.03′ LT	2927763.9519	296349.0489
325	216+32.95	28.78′ LT	2927751.6102	296329.3190
326	215+73.88	30.1′ LT	2927717.0137	296287.7861
327	215+57.63	30.88′ LT	2927706.0550	296277.7656
328	215+15.78	30.64′ LT	2927677.2806	296252.7047
329	215+13.62	30.61′ LT	2927675.7318	296251.4987
330	214+54.12	35.03′ LT	2927627.7342	296226.6675
331	213+51.22	40′ LT	2927535.5565	296198.5267
332	213+45.37	40.98′ LT	2927529.6792	296197.7530
333	213+32.91	45.26′ LT	2927516.5133	296198.2079
334	213+26.29	47.53′ LT	2927509.5175	296198.4497
335	10+75.83	48.33′ RT	2927496.1248	296205.5655
336	10+97.87	36.26′ RT	2927486.4377	296217.2030
337	11+05.64	31.29′ RT	2927484.1429	296224.4678
338	10+62.65	33.99′ RT	2927481.9956	296199.4006
339	10+46.50	47.1′ RT	2927496.8381	296193.5025
340	11+15.07	51.17′ RT	2927505.5089	296223.2273
341	213+51.22	58′ LT	2927530.3008	296215.7423

CONTROL POINTS FOR CURBING

POINT	STATION	OFFSET	X-COORD	Y-COORD
401	213+24.53	58′ RT	2927538.6438	296097.0072
402	213+24.73	82.38′ RT	2927545.9547	296073.7438
403	213+29.73	92.28′ RT	2927553.6250	296065.7378
404	213+33.25	94.13′ RT	2927557.5383	296064.9961
405	213+39.96	96.01′ RT	2927564.5027	296065.1525
406	213+43.86	95.59′ RT	2927568.1105	296066.7017
407	213+47.29	90.11′ RT	2927569.7936	296072.9358
408	213+47.01	55.72′ RT	2927559.4813	296105.7494
409	213+42.71	47.33′ RT	2927552.9179	296112.5172
410	213+39.11	45.63′ RT	2927548.9835	296113.0904
411	213+33.06	45.89′ RT	2927543.2652	296111.0761
412	213+29.55	47.77′ RT	2927540.4583	296108.2495
413	213+36.51	55.81′ RT	2927549.4644	296102.6014
414	213+37.24	57.89′ RT	2927550.7691	296100.8177
415	213+41.29	90.16′ RT	2927564.0696	296071.1369
416	213+37.23	82.28′ RT	2927557.8797	296077.4914
501	11+16.23	22.62′ RT	2927480.3624	296236.7629
502	10+55.91	27.76′ RT	2927476.4886	296194.5448
503	10+51.37	27.56′ RT	2927476.9573	296191.7432
504	10+51.69	33.97′ RT	2927483.0971	296193.6176
505	10+42.62	35.22′ RT	2927486.6048	296186.3240
506	10+42.62	27.93′ RT	2927479.6364	296184.1966
507	213+15.70	18.15′ LT	2927507.9651	296167.2622
508	213+11.68	34.04′ LT	2927499.4799	296181.2848
509	213+19.93	34′ LT	2927507.3855	296183.6530
510	213+24.25	17′ LT	2927516.4764	296168.6538
511	215+13.81	18.61′ LT	2927683.0754	296242.0081
512	213+38.49	39.11′ RT	2927546.4825	296119.1463
513	213+35.67	28′ RT	2927540.5405	296128.9500
514	213+91.83	28′ RT	2927594.2530	296145.3478
516	214+76.80	27.99′ RT	2927677.9182	296182.4774
517	214+91.49	27.89′ RT	2927691.3044	296190.9845
518	213+68.85	52.19′ RT	2927579.3386	296115.4988
519	213+46.37	52.19′ RT	2927557.8389	296108.9352
520	213+24.08	48′ LT	2927507.2658	296198.2543

CONTROL POINTS FOR CURBING

POINT	STATION	OFFSET	X-COORD	Y-COORD
601	213+74.93	17′ LT	2927564.9540	296183.4534
602	213+82.93	17′ LT	2927572.6054	296185.7893
603	213+87.53	17′ LT	2927577.0008	296187.1312
604	214+24.48	17.44′ LT	2927610.1924	296199.2326
605	214+32.90	17.55′ LT	2927617.5132	296202.4579
606	214+32.81	23.55′ LT	2927615.0280	296207.9191
607	213+87.53	23′ LT	2927575.2489	296192.8697
608	213+74.93	23′ LT	2927563.2021	296189.1920
609	213+74.93	20′ LT	2927564.0780	296186.3227
610	214+32.85	20.55′ LT	2927616.2706	296205.1885

GRANITE PAVERS WITH CONCRETE BASE

POINT	AREA
501 TO 504	17.54 SY
505 TO 508	27.20 SY
509 TO 511	126.40 SY
512 TO 517	201.84 SY

ITEM 609.31 CURB TYPE 3

POINT	LENGTH	RADIUS
334 TO 335	15.17′	–
335 TO 336	16.15′	20′
336 TO 337	7.62′	–

ITEM 609.34 CURB TYPE 5

POINT	LENGTH	RADIUS
606 TO 607	42.56′	325.5′
607 TO 608	12.60′	–

ITEM 609.35 CURB TYPE 5-CIRCULAR

POINT	LENGTH	RADIUS
601 TO 608	9.42′	3′
605 TO 606	9.42′	3′

25 0 25 50

STATE OF MAINE
DEPARTMENT OF TRANSPORTATION

PROJECT NUMBER 022809.20

WIN 022809.20

		BY	DATE
PROJ. MANAGER	J. KITTREDGE		
DESIGN-DETAILED	RWH	TJW	06/14
CHECKED-REVIEWED	-	CRM	06/14
DESIGN2-DETAILED2	-	-	-
DESIGN3-DETAILED3	-	-	-
REVISIONS 1	-	-	-
REVISIONS 2	-	-	-
REVISIONS 3	-	-	-
REVISIONS 4	-	-	-
FIELD CHANGES	-	-	-

SIGNATURE

P.E. NUMBER

DATE

PORTLAND INTERNATIONAL MARINE TERMINAL
EXISTING LAYDOWN AND CONNECTING CORRIDOR CONNECTION
PORTLAND CUMBERLAND COUNTY

COMMERCIAL STREET
GEOMETRIC AND CURBING PLAN

SHEET NUMBER
H28

Date:7/11/2014
Username:
Division:
Filename: 062_Geometric_003.dgn

LEGEND

SWL	SOLID WHITE LINE (4")	STRAIGHT ARROW PAVEMENT MARKING
SYL	SOLID YELLOW LINE (4")	
DYL	DOUBLE YELLOW LINE (4")	LEFT ARROW PAVEMENT MARKING
BWL	BROKEN WHITE LINE (4")	
DL	4" DOTTED WHITE LINE (2' LINE & 6' GAP)	RIGHT ARROW PAVEMENT MARKING
CW	CROSS WALK STRIPE (12")	
SL	STOP LINE (24")	SHARED STRAIGHT & RIGHT/LEFT ARROW PAVEMENT MARKING
HSWL	HEAVY SOLID WHITE LINE (12")	
		"ONLY" PAVEMENT MARKING

NOTES:

1. ALL WORK TO CONFORM TO MAINE DEPARTMENT OF TRANSPORTATION STANDARD SPECIFICATIONS FOR HIGHWAYS AND BRIDGES AND STANDARD DETAILS
2. ALL PROPOSED WORK SHALL BE IN CONFORMANCE WITH THE "MANUAL ON UNIFORM TRAFFIC CONTROL DEVICES FOR STREETS AND HIGHWAYS", AND "STANDARD HIGHWAY SIGNS", U.S.D.O.T., F.H.W.A. LATEST EDITION.
3. PAYMENT FOR REMOVAL OF EXISTING SIGNS SHALL BE INCIDENTAL TO 645 ITEMS.
4. SIGNS INSTALLED ON ISLANDS SHALL BE INSTALLED ON 4 LB/FT U-CHANNEL POSTS AND BREAKAWAY DEVICE. THE BREAKAWAY DEVICE SHALL BE MARION STEEL LAP SPLICE U-CHANNEL BREAKAWAY SYSTEM, "THE RIB-BAK."
5. THE CONTRACTOR SHALL REMOVE ALL EXISTING PAVEMENT MARKINGS THAT CONFLICT WITH PROPOSED MARKINGS.
6. SEE SIGNAL PLANS FOR OVERHEAD LANE USE SIGNS.
7. REQUIRED ADJUSTMENT OF CURRENTLY DEFINED SPEED ZONE, TO BE COORDINATED WITH MAINE DOT SOUTHERN REGION OFFICE.
8. SIGNS MOUNTED ON BARRIER SHALL HAVE BOTTOM OF SIGN AT 13' ABOVE ROADWAY.
9. GROVING FOR PAVEMENT MARKINGS SHALL OCCUR IN THE FOLLOWING LOCATIONS:
   - -LONGITUDINAL LINES
   - -COLOR BIKE LANES
   - -SYMBOLS

PLAN

25 0 25 50

Scale of Feet

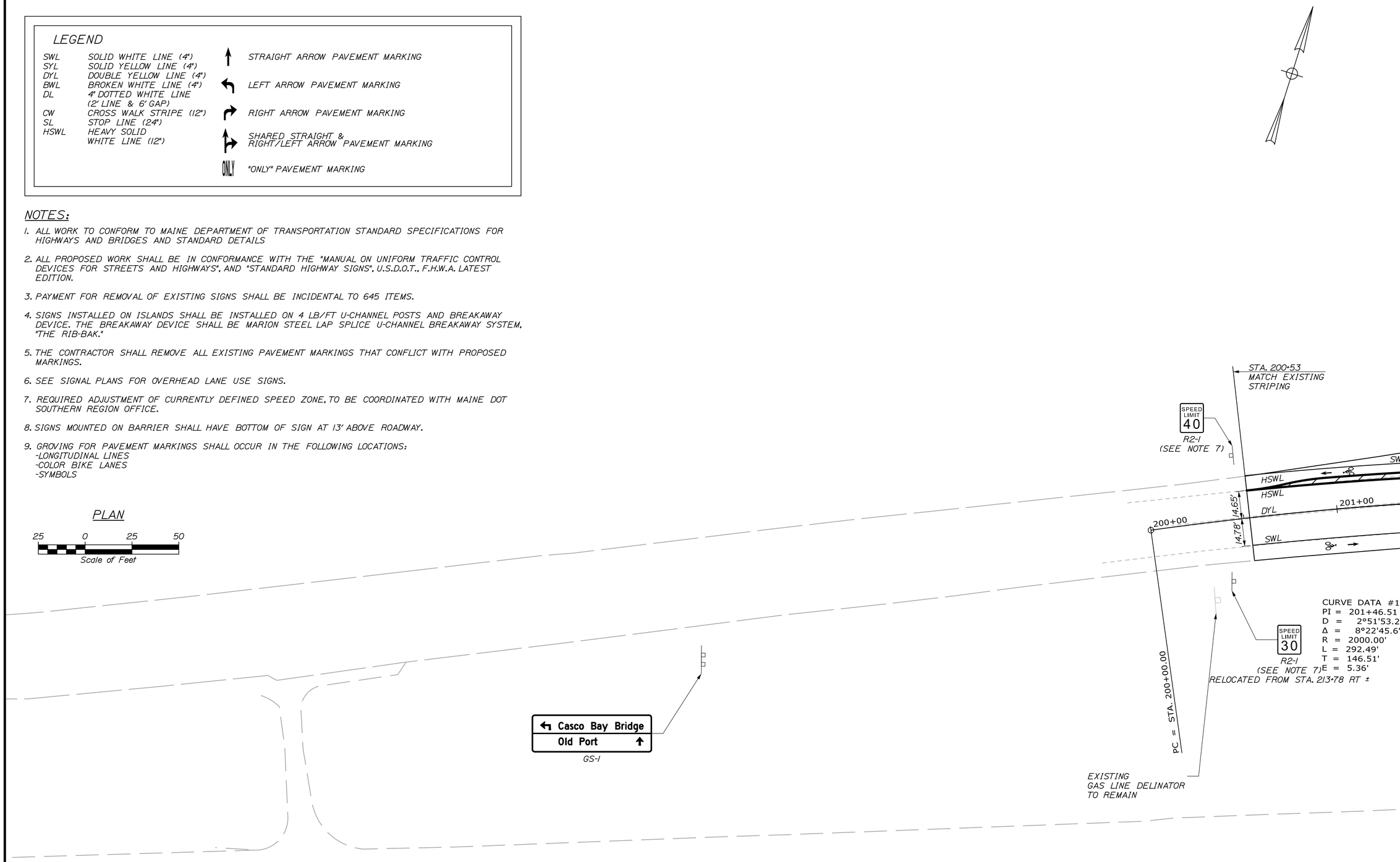

STATE OF MAINE
DEPARTMENT OF TRANSPORTATION

PROJECT NUMBER 022809.20

WIN 022809.20

	BY	DATE
PROJ. MANAGER	J. KITTREDGE	
DESIGN-DETAILED	CDH	CDH/RWH 06/14
CHECKED-REVIEWED	RBM	CRM 06/14
DESIGN2-DETAILED2	-	-
DESIGN3-DETAILED3	-	-
REVISIONS 1	-	-
REVISIONS 2	-	-
REVISIONS 3	-	-
REVISIONS 4	-	-
FIELD CHANGES	-	-

SIGNATURE

P.E. NUMBER

DATE

PORTLAND INTERNATIONAL MARINE TERMINAL
EXISTING LAYDOWN AND CONNECTING CORRIDOR CONNECTION
PORTLAND CUMBERLAND COUNTY

COMMERCIAL STREET
SIGNING & STRIPING PLANS

SHEET NUMBER

H29

Filename: 063_SSPlan1.dgn Division: Username: Date:6/26/2014

PLAN

25 0 25 50
Scale of Feet

GROOVING FOR PAVEMENT MARKING

STA.	TYPE	AREA
200+53 TO 212+04 LT	HSWL	1246.93 SF
200+53 TO 212+04 LT	HSWL	1246.93 SF
200+53 TO 207+68 LT	SWL	297.75 SF
200+53 TO 217+25 RT	SWL/DWL/SWL	637.92 SF
200+53 TO 211+98	DYL	1240.53 SF
204+50 TO 214+91 RT	SWL/DWL/SWL	388.02 SF
204+50 TO 211+98 RT	COLORED GLASS BIKE LANE	3870.26 SF
205+13 TO 211+98 RT	BWL/SWL	133.90 SF

PREFORMED PAVEMENT MARKING TAPE LINES, GROOVED INSTALLATION

STA.	TYPE	AREA
200+53 TO 212+04 LT	HSWL	1151.05 SF
200+53 TO 212+04 LT	HSWL	1151.05 SF
200+53 TO 207+68 LT	SWL	237.97 SF
200+53 TO 217+25 RT	SWL/DWL/SWL	509.82 SF
200+53 TO 211+98	DYL	762.66 SF
204+50 TO 214+91 RT	SWL/DWL/SWL	310.10 SF
205+13 TO 211+98 RT	BWL/SWL	106.00 SF

PREFORMED PAVEMENT MARKING TAPE LINES, HOT INLAY INSTALLATION

STA.	TYPE	AREA
200+53 TO 212+04 LT	HATCHING	157.15 SF
200+97 TO 205+12 LT	PAINTED ISLAND HATCHING	61.26 SF

PREFORMED PAVEMENT MARKING TAPE SYMBOLS, HOT INLAY INSTALLATION

STA.	TYPE	AREA
201+00 RT	BIKE LANE & ARROW	15.12 SF
203+70 RT	BIKE LANE & ARROW	15.12 SF
201+05 LT	BIKE LANE & ARROW	15.12 SF
203+91 LT	BIKE LANE & ARROW	15.12 SF
205+99 RT	STRAIGHT & RIGHT ARROW	28.96 SF
206+02 RT	LEFT ARROW	16.04 SF
206+77 RT	"ONLY"	21.96 SF

WHITE OR YELLOW PAVEMENT AND CURB MARKING

STA.	TYPE	AREA
205+98 RT	BIKE LANE & ARROW	15.12 SF

COLORED GLASS PAVEMENT MARKING SYSTEM, BIKE LANES

STA.	TO STA.	AREA
204+50 RT	211+98 RT	3870.26 SF

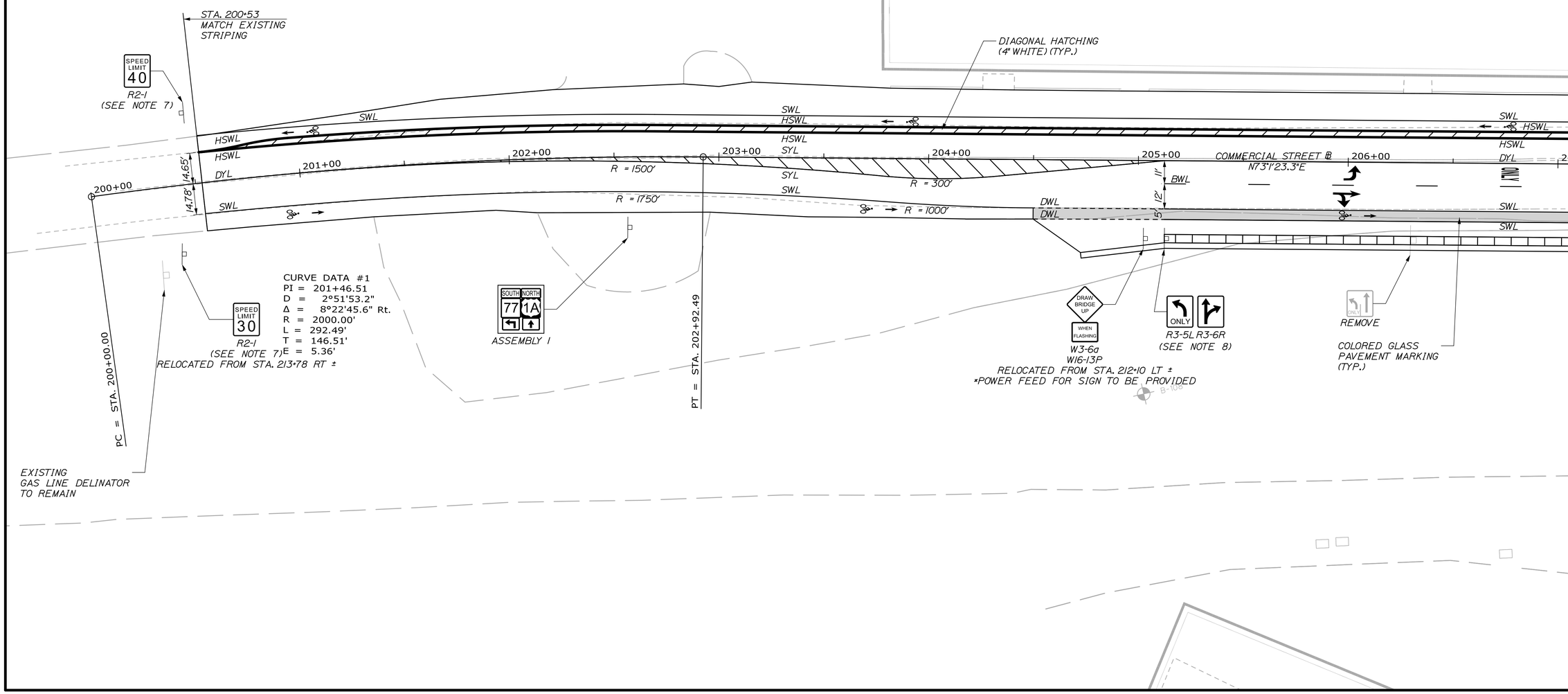

STATE OF MAINE
DEPARTMENT OF TRANSPORTATION

PROJECT NUMBER 022809.20

WIN 022809.20

	BY	DATE
PROJ. MANAGER	J. KITTREDGE	
DESIGN-DETAILED	CDH	CDH/RWH 06/14
CHECKED-REVIEWED	RBM	CRM 06/14
DESIGN2-DETAILED2	-	-
DESIGN3-DETAILED3	-	-
REVISIONS 1	-	-
REVISIONS 2	-	-
REVISIONS 3	-	-
REVISIONS 4	-	-
FIELD CHANGES	-	-

SIGNATURE
P.E. NUMBER
DATE

PORTLAND INTERNATIONAL MARINE TERMINAL
EXISTING LAYDOWN AND CONNECTING CORRIDOR CONNECTION
PORTLAND CUMBERLAND COUNTY

COMMERCIAL STREET
SIGNING & STRIPING PLANS

SHEET NUMBER
H30

Filename: 064_SSPlan2.dgn Division: Username: Date:6/26/2014

GROOVING FOR PAVEMENT MARKINGS

STA.	TYPE	AREA
210+81 TO 212+50 LT	COLORED GLASS BIKE LANE	768.99 SF
212+69 RT	DYL	51.36 SF
213+34 TO 214+91 RT	COLORED GLASS BIKE LANE	827.94 SF

PREFORMED PAVEMENT MARKING TAPE LINES, HOT INLAY INSTALLATION

STA.	TYPE	AREA
211+98 RT	STOP LINE	56.00 SF
210+24 TO 212+24 RT	HATCHING	88.36 SF
212+82 RT	STOP LINE	50.33 SF
213+21	CROSS WALK	82.64 SF
213+28	CROSS WALK	82.33 SF
213+58 LT	TRUCK STOP LINE	24.00 SF
213+81 LT	STOP LINE	56.00 SF
10+43	CROSS WALK	51.36 SF
10+50	CROSS WALK	49.51 SF
10+62 LT	STOP LINE	28.00 SF
YARD	STOP LINE	75.00 SF
YARD	CROSS WALK	72.23 SF
YARD	CROSS WALK	69.96 SF
YARD	HATCHING YARD ENTRANCE	254.62 SF
YARD	YARD HATCHING PERIMETER	48.56 SF
YARD	HATCHING YARD	4.00 SF

PREFORMED PAVEMENT MARKING TAPE SYMBOLS, HOT INLAY INSTALLATION

STA.	TYPE	AREA
207+42 RT	STRAIGHT & RIGHT ARROW	28.96 SF
207+48 RT	LEFT ARROW	16.04 SF
208+22 RT	"ONLY"	21.96 SF
208+86 RT	STRAIGHT & RIGHT ARROW	28.96 SF
208+91 RT	LEFT ARROW	16.04 SF
209+63 LT	BIKE LANE & ARROW	15.12 SF
209+67 RT	"ONLY"	21.96 SF
210+32 RT	STRAIGHT & RIGHT ARROW	28.96 SF
210+37 RT	LFET ARROW	16.04 SF
211+11 RT	"ONLY"	21.96 SF
211+75 RT	STRAIGHT & RIGHT ARROW	28.96 SF
211+80 RT	LEFT ARROW	16.04 SF
213+60 LT	"TRUCKS"	9.66 SF

WHITE OR YELLOW PAVEMENT AND CURB MARKING

STA.	TYPE	AREA
20743 RT	BIKE LANE & ARROW	15.12 SF
208+87 RT	BIKE LANE & ARROW	15.12 SF
210+32 RT	BIKE LANE & ARROW	15.12 SF
211+08 LT	BIKE LANE & ARROW	15.12 SF
211+76 RT	BIKE LANE & ARROW	15.12 SF
213+77 RT	BIKE LANE & ARROW	15.12 SF

COLORED GLASS PAVEMENT MARKING SYSTEM, BIKE LANES

STA.	TO STA.	AREA
210+81 LT	212+15 LT	768.99 SF
213+34 RT	214+19 RT	827.94 SF
213+83 LT	215+58 LT	835.77 SF

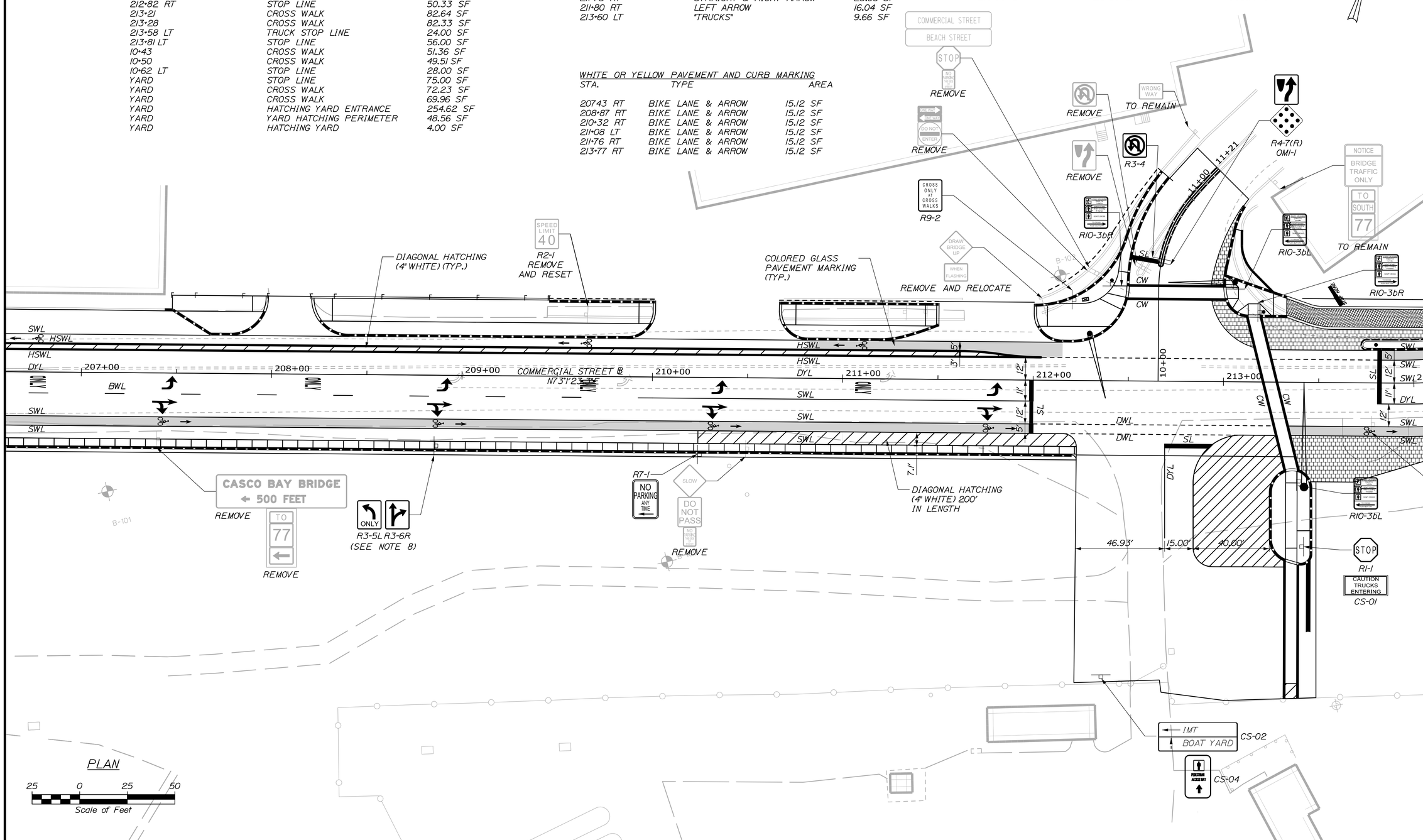

STATE OF MAINE
DEPARTMENT OF TRANSPORTATION

PROJECT NUMBER 022809.20

WIN 022809.20

	BY	DATE
PROJ. MANAGER	J. KITTREDGE	
DESIGN-DETAILED	CDH	CDH/RWH	06/14
CHECKED-REVIEWED	RBM	CRM	06/14
DESIGN2-DETAILED2	-	-	-
DESIGN3-DETAILED3	-	-	-
REVISIONS 1	-	-	-
REVISIONS 2	-	-	-
REVISIONS 3	-	-	-
REVISIONS 4	-	-	-
FIELD CHANGES	-	-	-

SIGNATURE

P.E. NUMBER

DATE

PORTLAND INTERNATIONAL MARINE TERMINAL
EXISTING LAYDOWN AND CONNECTING CORRIDOR CONNECTION
PORTLAND CUMBERLAND COUNTY

COMMERCIAL STREET
SIGNING & STRIPING PLANS

SHEET NUMBER
H31

Date:7/11/2014
Username:
Division:
Filename: 065_SSPlan3.dgn

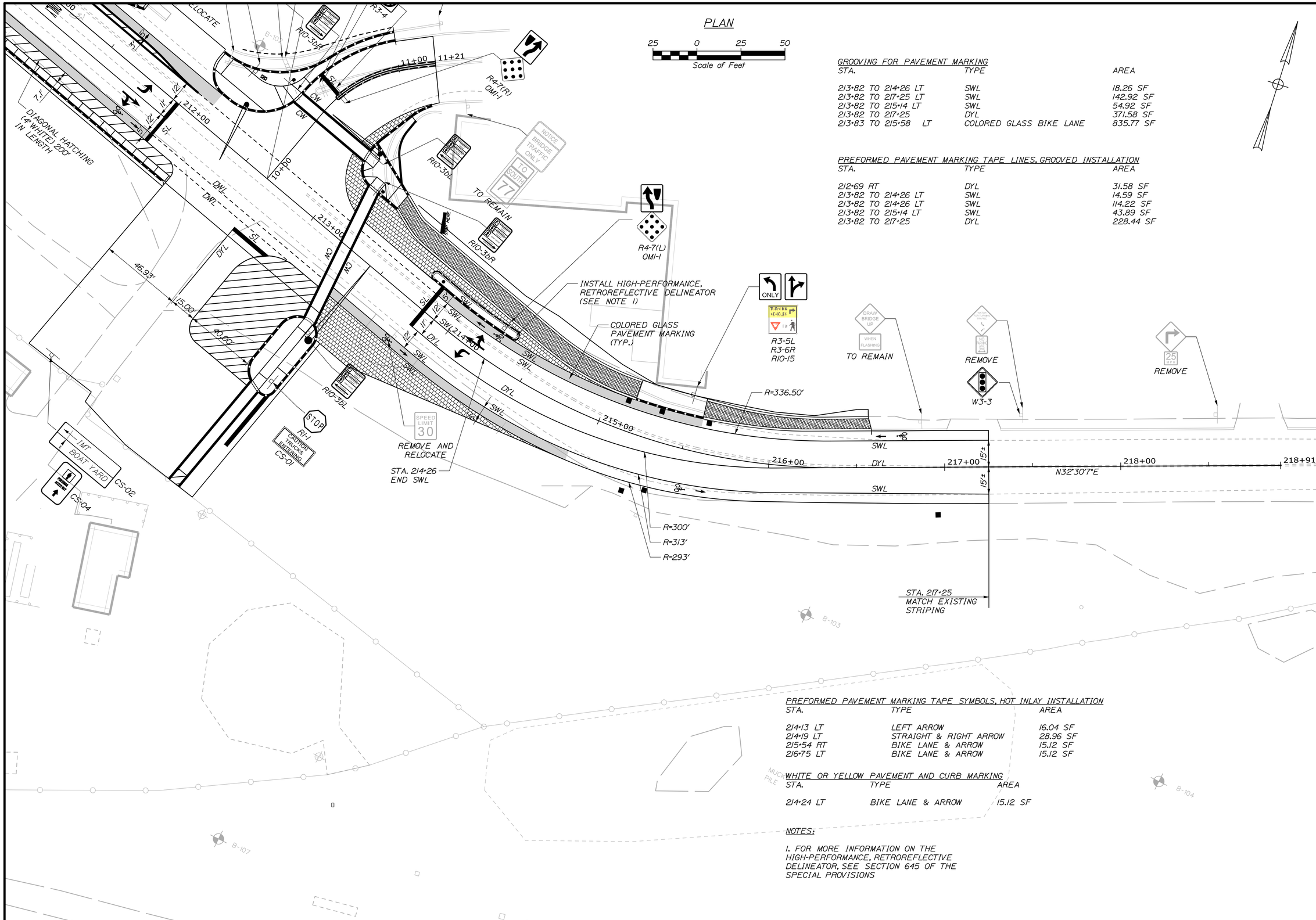

GROOVING FOR PAVEMENT MARKING

STA.	TYPE	AREA
213+82 TO 214+26 LT	SWL	18.26 SF
213+82 TO 217+25 LT	SWL	142.92 SF
213+82 TO 215+14 LT	SWL	54.92 SF
213+82 TO 217+25	DYL	371.58 SF
213+83 TO 215+58 LT	COLORED GLASS BIKE LANE	835.77 SF

PREFORMED PAVEMENT MARKING TAPE LINES, GROOVED INSTALLATION

STA.	TYPE	AREA
212+69 RT	DYL	31.58 SF
213+82 TO 214+26 LT	SWL	14.59 SF
213+82 TO 214+26 LT	SWL	114.22 SF
213+82 TO 215+14 LT	SWL	43.89 SF
213+82 TO 217+25	DYL	228.44 SF

PREFORMED PAVEMENT MARKING TAPE SYMBOLS, HOT INLAY INSTALLATION

STA.	TYPE	AREA
214+13 LT	LEFT ARROW	16.04 SF
214+19 LT	STRAIGHT & RIGHT ARROW	28.96 SF
215+54 RT	BIKE LANE & ARROW	15.12 SF
216+75 LT	BIKE LANE & ARROW	15.12 SF

WHITE OR YELLOW PAVEMENT AND CURB MARKING

STA.	TYPE	AREA
214+24 LT	BIKE LANE & ARROW	15.12 SF

NOTES:

1. FOR MORE INFORMATION ON THE HIGH-PERFORMANCE, RETROREFLECTIVE DELINEATOR, SEE SECTION 645 OF THE SPECIAL PROVISIONS

STATE OF MAINE
DEPARTMENT OF TRANSPORTATION

PROJECT NUMBER 022809.20

WIN 022809.20

	BY	DATE
PROJ. MANAGER	J. KITTREDGE	
DESIGN-DETAILED	CDH	CDH/RWH 06/14
CHECKED-REVIEWED	RBM	CRM 06/14
DESIGN2-DETAILED2	-	- -
DESIGN3-DETAILED3	-	- -
REVISIONS 1	-	- -
REVISIONS 2	-	- -
REVISIONS 3	-	- -
REVISIONS 4	-	- -
FIELD CHANGES	-	- -

SIGNATURE

P.E. NUMBER

DATE

PORTLAND INTERNATIONAL MARINE TERMINAL
EXISTING LAYDOWN AND CONNECTING CORRIDOR CONNECTION
PORTLAND CUMBERLAND COUNTY

COMMERCIAL STREET
SIGNING & STRIPING PLANS

SHEET NUMBER
H32

Date:7/11/2014
Username:
Division:
Filename: 066_SSPlan4.dgn

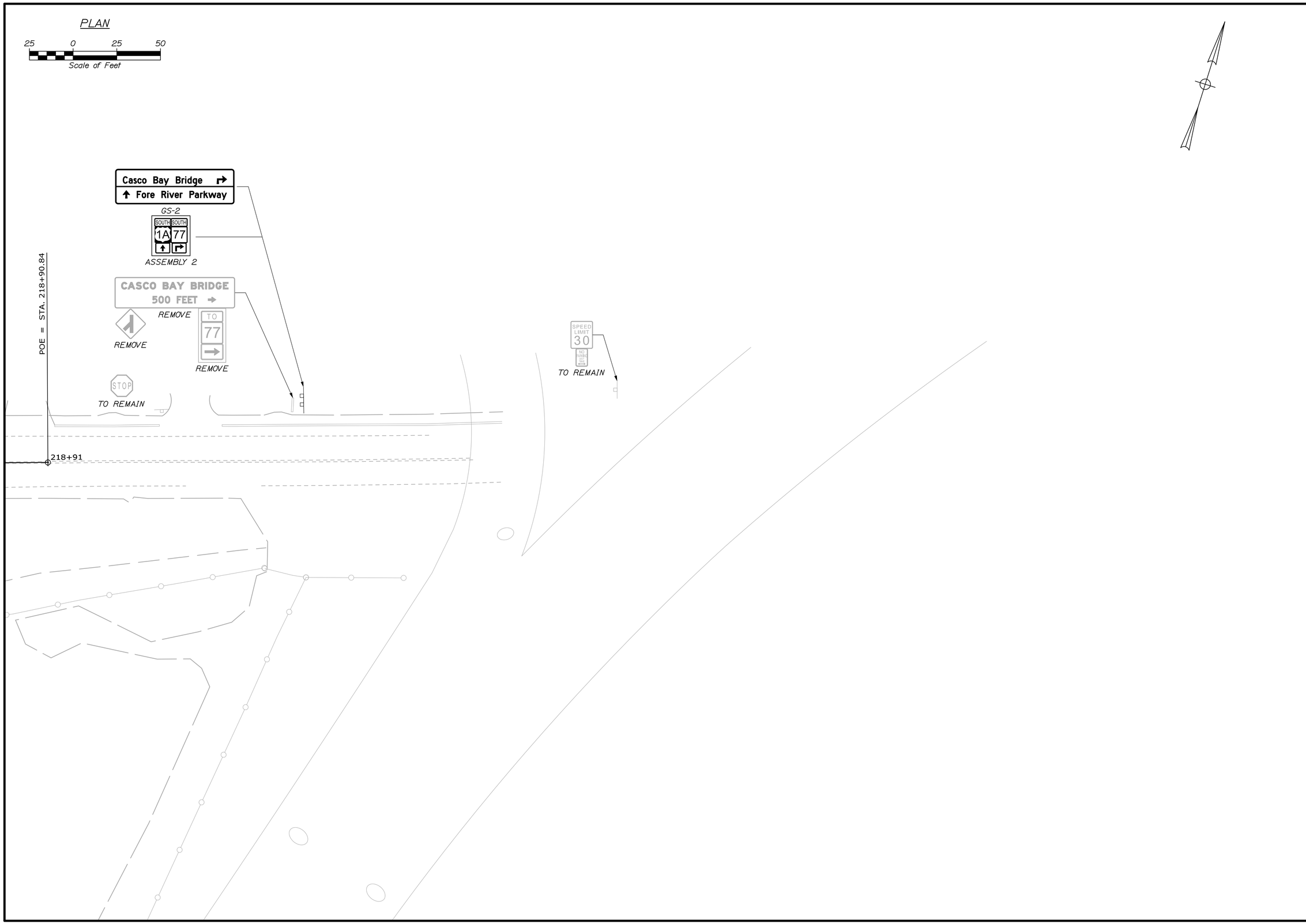

STATE OF MAINE
DEPARTMENT OF TRANSPORTATION

PROJECT NUMBER 022809.20

WIN 022809.20

PROJ. MANAGER	J. KITTREDGE	BY	DATE
DESIGN-DETAILED	CDH	CDH/RWH	06/14
CHECKED-REVIEWED	RBM	CRM	06/14
DESIGN2-DETAILED2	-	-	-
DESIGN3-DETAILED3	-	-	-
REVISIONS 1	-	-	-
REVISIONS 2	-	-	-
REVISIONS 3	-	-	-
REVISIONS 4	-	-	-
FIELD CHANGES	-	-	-

SIGNATURE

P.E. NUMBER

DATE

PORTLAND INTERNATIONAL MARINE TERMINAL
EXISTING LAYDOWN AND CONNECTING CORRIDOR CONNECTION
PORTLAND CUMBERLAND COUNTY

COMMERCIAL STREET
SIGNING & STRIPING PLANS

SHEET NUMBER
H33

Filename: 067_SSPlan5.dgn Division: Username: Date:6/26/2014

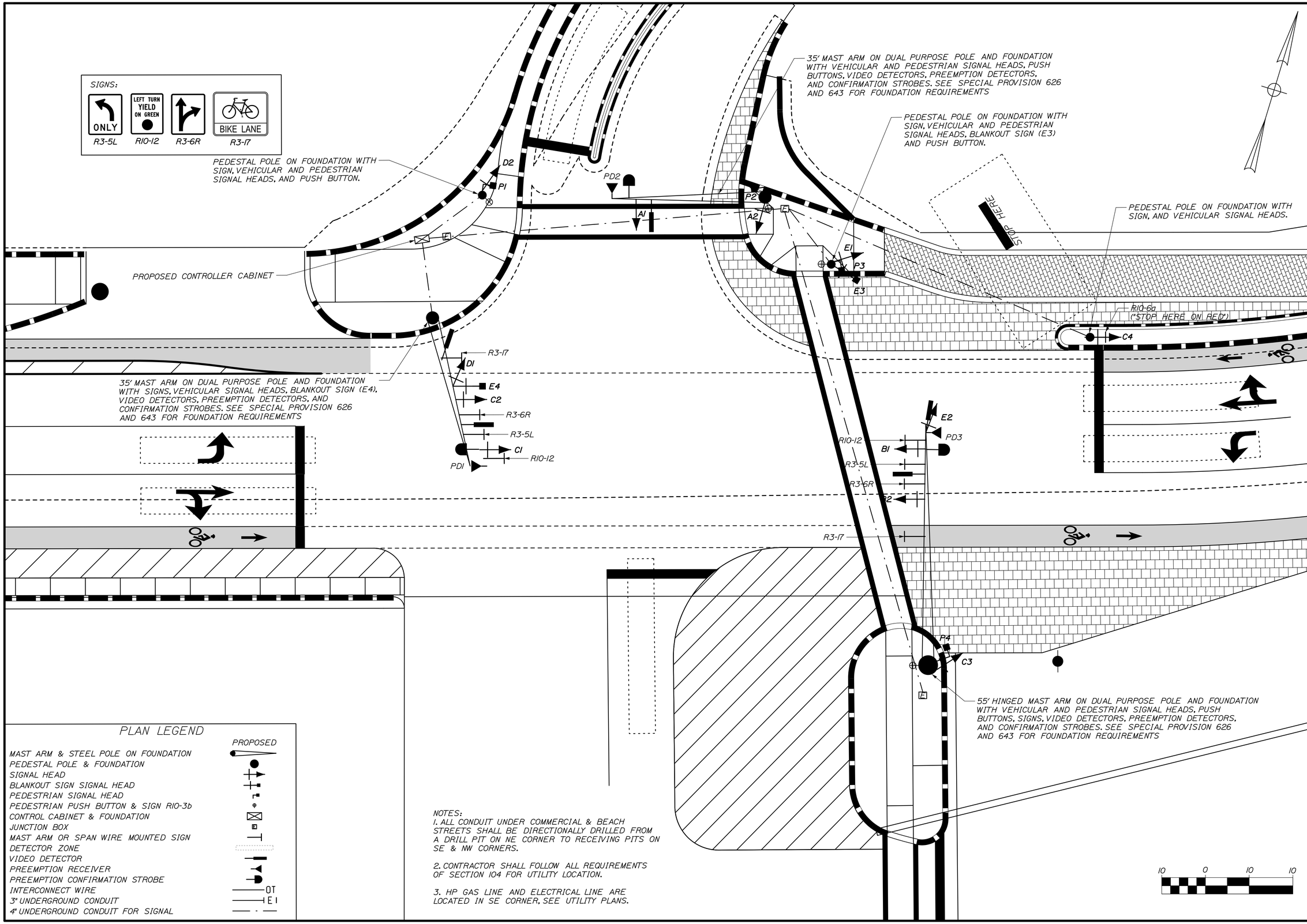

PLAN LEGEND

	PROPOSED
MAST ARM & STEEL POLE ON FOUNDATION	
PEDESTAL POLE & FOUNDATION	
SIGNAL HEAD	
BLANKOUT SIGN SIGNAL HEAD	
PEDESTRIAN SIGNAL HEAD	
PEDESTRIAN PUSH BUTTON & SIGN R10-3b	
CONTROL CABINET & FOUNDATION	
JUNCTION BOX	
MAST ARM OR SPAN WIRE MOUNTED SIGN	
DETECTOR ZONE	
VIDEO DETECTOR	
PREEMPTION RECEIVER	
PREEMPTION CONFIRMATION STROBE	
INTERCONNECT WIRE	OT
3" UNDERGROUND CONDUIT	E1
4" UNDERGROUND CONDUIT FOR SIGNAL	

NOTES:
1. ALL CONDUIT UNDER COMMERCIAL & BEACH STREETS SHALL BE DIRECTIONALLY DRILLED FROM A DRILL PIT ON NE CORNER TO RECEIVING PITS ON SE & NW CORNERS.

2. CONTRACTOR SHALL FOLLOW ALL REQUIREMENTS OF SECTION 104 FOR UTILITY LOCATION.

3. HP GAS LINE AND ELECTRICAL LINE ARE LOCATED IN SE CORNER, SEE UTILITY PLANS.

STATE OF MAINE
DEPARTMENT OF TRANSPORTATION

PROJECT NUMBER 022809.20

WIN 022809.20

		BY	DATE
PROJ. MANAGER	J. KITTREDGE		
DESIGN-DETAILED	CDH	CDH/RWH	06/14
CHECKED-REVIEWED	RBM	CRM	06/14
DESIGN2-DETAILED2	-	-	-
DESIGN3-DETAILED3	-	-	-
REVISIONS 1	-	-	-
REVISIONS 2	-	-	-
REVISIONS 3	-	-	-
REVISIONS 4	-	-	-
FIELD CHANGES	-	-	-

SIGNATURE

P.E. NUMBER

DATE

PORTLAND INTERNATIONAL MARINE TERMINAL
EXISTING LAYDOWN AND CONNECTING CORRIDOR CONNECTION
PORTLAND CUMBERLAND COUNTY

COMMERCIAL STREET SIGNAL PLAN

SHEET NUMBER

H34

Date:7/11/2014

Username:

Division:

Filename: 068_SignalPlan.dgn

PROPOSED TIMING & PHASING

NEMA PHASE IDENTIFICATION

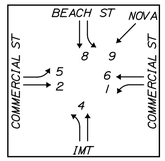

SIGNAL PHASING SEQUENCE

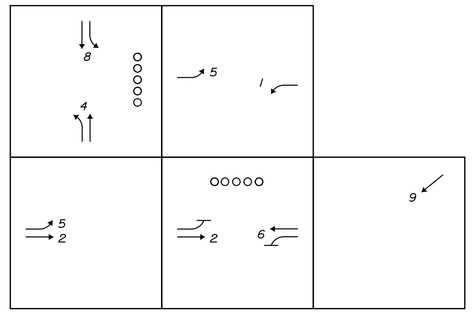

PROPOSED SIGNAL HEADS

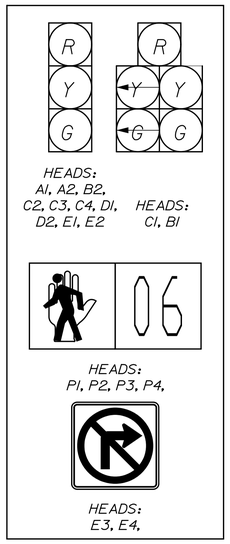

AM SIGNAL TIMING (CYCLE LENGTH 150.0 S)

	PHASE 1	PHASE 2	PHASE 3	PHASE 4	PHASE 5	PHASE 6	PHASE 7	PHASE 8	PHASE 9*
MINIMUM GREEN	4	4	-	4	4	4	-	4	4
VEHICLE EXTENSION	3	3	-	3	3	3	-	3	3
MAXIMUM GREEN	4	91	-	16	24	71	-	16	24
YELLOW	3	4	-	4	3	4	-	4	4
ALL RED	2	3	-	2	2	3	-	2	2
RECALL MODE	MIN	MAX	-	MIN	MAX	MIN	-	MIN	NONE
WALK	-	-	-	4	-	4	-	-	-
PED CLEAR	-	-	-	18	-	13	-	-	-

*A 60 SECOND DELAY IN ACTIVATION OF PHASE 9 SHALL BE PROGRAMMED INTO THE PHASE 9 TIMING - TO BE FIELD ADJUSTED.

PM SIGNAL TIMING (CYCLE LENGTH 150.0 S)

	PHASE 1	PHASE 2	PHASE 3	PHASE 4	PHASE 5	PHASE 6	PHASE 7	PHASE 8	PHASE 9*
MINIMUM GREEN	4	4	-	4	4	4	-	4	4
VEHICLE EXTENSION	3	3	-	3	3	3	-	3	3
MAXIMUM GREEN	5	91	-	16	12	84	-	16	24
YELLOW	3	4	-	4	3	4	-	4	4
ALL RED	2	3	-	2	2	3	-	2	2
RECALL MODE	MIN	MAX	-	MIN	MAX	MIN	-	MIN	NONE
WALK	-	-	-	4	-	4	-	-	-
PED CLEAR	-	-	-	18	-	13	-	-	-

*A 60 SECOND DELAY IN ACTIVATION OF PHASE 9 SHALL BE PROGRAMMED INTO THE PHASE 9 TIMING - TO BE FIELD ADJUSTED.

FREE SIGNAL TIMING (CYCLE LENGTH 100.0 S)

	PHASE 1	PHASE 2	PHASE 3	PHASE 4	PHASE 5	PHASE 6	PHASE 7	PHASE 8	PHASE 9*
MINIMUM GREEN	4	4	-	4	4	4	-	4	4
VEHICLE EXTENSION	3	3	-	3	3	3	-	3	3
MAXIMUM GREEN	4	41	-	16	7	38	-	16	24
YELLOW	3	4	-	4	3	4	-	4	4
ALL RED	2	3	-	2	2	3	-	2	2
RECALL MODE	MIN	MAX	-	MIN	MAX	MIN	-	MIN	NONE
WALK	-	-	-	4	-	4	-	-	-
PED CLEAR	-	-	-	18	-	13	-	-	-

*A 60 SECOND DELAY IN ACTIVATION OF PHASE 9 SHALL BE PROGRAMMED INTO THE PHASE 9 TIMING - TO BE FIELD ADJUSTED.

SIGNAL NOTES

1. CONDUITS INSTALLED ON UTILITY COMPANY OWNED POLES WILL BE INSTALLED BY THE RESPECTIVE UTILITY. THE CONDUIT WILL BE PROVIDED BY THE CONTRACTOR.
2. THE LOCATION OF ALL SIGNAL EQUIPMENT AND RELATED ITEMS SHALL BE IN CONFORMITY WITH 'AMERICANS WITH DISABILITIES ACT' (ADA) ACCESSIBILITY STANDARDS. USE OF SIDEWALKS AND PEDESTRIAN RAMPS SHALL NOT BE OBSTRUCTED.
3. TRAFFIC CONTROLLER CABINETS SHALL BE NAZTEC MODEL P44 TS2 TYPE 1 SERIES T ONLY. THE CABINET SHALL HAVE AN EXTENSION BASE AND BE MOUNTED ON A CONCRETE PAD FOUNDATION.
4. ALL NEW SIGNAL SECTIONS SHALL HAVE LED LENSES 12 INCHES IN DIAMETER WITH 5" BACK PLATES.
5. ALL SPLICES WILL BE MADE IN THE CABINETS MEETING MAINEDOT SPECIFICATIONS.
6. THE BOTTOM OF THE HOUSING OF NEW MAST ARM MOUNTED SIGNAL FACES SHALL BE AT LEAST 16 FEET BUT NOT MORE THAN 19 FEET ABOVE THE PAVEMENT GRADE AT THE CENTER OF THE ROADWAY.
7. TWO COPIES OF AS-BUILT PLANS, SIGNAL TIMING, AND CONTROLLER MANUALS SHALL BE LEFT IN THE CONTROLLER CABINET.
8. THE CONTRACTOR IS RESPONSIBLE FOR FINDING EXACT LOCATIONS OF UTILITIES PRIOR TO CONSTRUCTION. THE CONTRACTOR SHALL CONTACT DIG-SAFE AND APPROPRIATE AUTHORITIES PRIOR TO ANY SUBSURFACE ACTIVITIES.
9. TRAFFIC SIGNAL WORK SHALL BE COMPLETED IN A MANNER AND ORDER THAT WILL CAUSE THE MINIMUM DISRUPTION TO TRAFFIC.
10. THE RESIDENT, MAINE DOT, AND CITY SHALL HAVE THE RIGHT AND AUTHORITY TO DETERMINE THE ACCEPTABILITY OF WORK AND MATERIALS IN PROGRESS OR COMPLETED AND SHALL HAVE THE RIGHT TO REJECT ANY WORK OR MATERIALS WHICH DO NOT CONFORM, IN ITS SOLE OPINION, TO THE PLANS OR SPECIFICATIONS.
11. THE CONTRACTOR SHALL PROVIDE THE RESIDENT AND THE CITY OF PORTLAND WITH A SCHEDULE OF WORK FOR CONSTRUCTING THE TRAFFIC IMPROVEMENTS.
12. THE CONTRACTOR SHALL PREPARE A MATERIAL SCHEDULE BASED UPON HIS PLAN REVIEW. ALL SCHEDULES SHALL BE VERIFIED IN THE FIELD BY THE CONTRACTOR PRIOR TO ORDERING MATERIALS OR PERFORMING WORK.
13. THE CONTRACTOR SHALL BE RESPONSIBLE FOR SUBMITTING RED-LINE AS-BUILT DRAWINGS OF THE FINAL WORK TO THE RESIDENT. THOSE DRAWINGS SHALL BE A CLEAN SET OF PLANS SHOWING ALL CHANGES, MODIFICATIONS, AND ELEVATIONS TO THE BID PLANS.
14. ALL UNDERGROUND CONDUIT SHALL BE PVC SCHEDULE 80 CONDUIT WHEN PLACED UNDER PAVEMENT AND SCHEDULE 40 BEYOND PAVEMENT LIMITS.
15. AM TIMING SHALL BE FROM 7:00 - 9:00 AM; PM TIMING SHALL BE FROM 3:30 - 6:30 PM. FREE TIME OPERATION WILL BE FROM 9:00 AM - 3:30 PM AND 6:30 PM - 7:00 AM.
16. CONTRACTOR SHALL SET THE PROPOSED SIGNAL TO FLASHING MODE ONE WEEK PRIOR TO ACTIVATING THE PROPOSED SIGNAL TIMING AND PHASING. FLASHING MODE SHALL BEGIN DURING THE BEGINNING OF A WEEK.
17. THE THREE SECTION SIGNAL HEADS FOR NOVA SEAFOOD (E1 AND E2) SHALL BE EQUIPPED WITH GEOMETRICALLY PROGRAM LOUVERS TO LIMIT FIELD OF VIEW TO 15' ON EITHER SIDE OF CENTER OF THE STOP BAR FOR ALL SIGNAL INDICATORS. THE LOUVERS SHALL BE CONTAINED IN A FULLY ENCLOSED UNIVERSAL VISOR AND SHALL BE INSTALLED ON ALL SIGNAL INDICATORS.
18. THE CONTRACTOR SHALL MEET ALL UTILITY REQUIREMENTS FOR THE NEW SERVICE CONNECTION.
19. FOR POLE MOUNTED SIGNAL HEADS, THE BOTTOM OF THE HOUSING SHALL BE MOUNTED AT LEAST 8 FEET BUT NOT MORE THAN 19 FEET ABOVE THE SIDEWALK, OR ABOVE PAVMENT GRADE AT THE HIGH POINT OF THE ROAD.
20. ALL PEDESTRAIN POLES SHALL BE ONE-PIECE.
21. CONTRACTOR SHALL POVIDE AND INSTALL ALL JUNCTION BOXES, ALL JUNCTION BOXES SHALL BE INCIDENTAL TO ITEM 643.80.
22. THE CONTRACTOR SHALL REFER TO THE SPECIAL PROVISIONS FOR CITY OF PORTLAND SIGNAL REQUIREMENTS.
23. ALL POLE BASES, PULL BOXES, AND OTHER CONTROLLER CONDUITS SHALL BE SEALED TO PREVENT ACCESS BY RODENTS AND OTHER SMALL ANIMALS.

VIDEO DETECTION

1. VIDEO DETECTION SHALL CONSIST OF A THERMAL TRAFFIC SENSOR SYSTEM PER THE CITY OF PORTLAND AND MAINEDOT. FOR ADDITIONAL INFORMATION SEE SPECIAL PROVISIONS.
2. THE RESIDENT RESERVES THE RIGHT TO DIRECT THE CONTRACTOR TO FIELD ADJUST THE HEIGHT, EITHER LOWER OR HIGHER, OF THE VIDEO DETECTOR FOR LOCAL CONDITIONS IDENTIFIED DURING OR AFTER CONSTRUCTION. NO ADDITIONAL COSTS WILL BE ALLOWED FOR FIELD ADJUSTING THE VIDEO DETECTOR.

STATE OF MAINE
DEPARTMENT OF TRANSPORTATION

PROJECT NUMBER 022809.20

WIN 022809.20

		BY	DATE
PROJ. MANAGER	J. KITTREDGE		
DESIGN-DETAILED	RBM	RWH	06/14
CHECKED-REVIEWED	-	-	06/14
DESIGN2-DETAILED2	-	-	-
DESIGN3-DETAILED3	-	-	-
REVISIONS 1	ADDED PLAN		4/24/14
REVISIONS 2	Revised int. for Amend. 3		5/12/14
REVISIONS 3	-		-
REVISIONS 4	-		-
FIELD CHANGES	-		-

SIGNATURE

P.E. NUMBER

DATE

PORTLAND INTERNATIONAL MARINE TERMINAL
EXISTING LAYDOWN AND CONNECTING CORRIDOR CONNECTION
PORTLAND CUMBERLAND COUNTY

COMMERCIAL STREET
SIGNAL NOTES

SHEET NUMBER
H35

Date:6/26/2014
Username:
Division:
Filename: 069_SignalNotes.dgn

IDENTIFICATION NUMBER	SIZE OF SIGN WIDTH	SIZE OF SIGN HEIGHT	TEXT	TEXT DIMENSIONS (INCHES) LETTER HEIGHT	VERTICAL SPACING	ARROW RTE. MKR.	NUMBER OF SIGNS REQUIRED	COLOR BACK-GROUND	LEGEND BORDER	BORDER RADIUS	AREA IN SQUARE FEET	NOTES
OMI-1	18"	18"		TEXT DIMENSIONS SHALL CONFORM TO "2004 EDITION - STANDARD HIGHWAY SIGNS - 2012 SUPPLEMENT"			2	COLORS SHALL CONFORM TO "2004 EDITION - STANDARD HIGHWAY SIGNS - 2012 SUPPLEMENT"			2.25 (4.50)	
CS-01	24"	30"	CAUTION TRUCKS ENTERING				/				4.50 (4.50)	
R1-1	30"	30"	STOP				/				6.25 (6.25)	
R2-1 (30) R2-1 (40)	30"	36"	SPEED LIMIT XX				/ /				7.50 (7.50) 7.50 (7.50)	
R3-4	24"	24"					/				4.00 (4.00)	
R3-5L	30"	36"	ONLY				5				7.50 (37.50)	
R3-6R	30"	36"					5				7.50 (37.50)	
R4-7R	24"	30"					/				5.00 (5.00)	
R4-7L	24"	30"					/				5.00 (5.00)	
R7-1	12"	18"	NO PARKING ANY TIME				/				1.50 (1.50)	
R9-2	12"	18"	CROSS ONLY AT CROSS WALKS				/				1.50 (1.50)	
R10-3bL	9"	12"	START CROSSING Watch For Vehicles DON'T START - Finish Crossing If Started DON'T CROSS TO CROSS PUSH BUTTON				2				0.75 (1.50)	
R10-3bR	9"	12"	START CROSSING Watch For Vehicles DON'T START - Finish Crossing If Started DON'T CROSS TO CROSS PUSH BUTTON				2				0.75 (1.50)	
R10-6a	24"	30"	STOP HERE ON RED				/				5.00 (5.00)	

IDENTIFICATION NUMBER	SIZE OF SIGN WIDTH	SIZE OF SIGN HEIGHT	TEXT	TEXT DIMENSIONS (INCHES) LETTER HEIGHT	VERTICAL SPACING	ARROW RTE. MKR.	NUMBER OF SIGNS REQUIRED	COLOR BACK-GROUND	LEGEND BORDER	BORDER RADIUS	AREA IN SQUARE FEET	NOTES
R10-12	30"	36"	LEFT TURN YIELD ON GREEN	TEXT DIMENSIONS SHALL CONFORM TO "2004 EDITION - STANDARD HIGHWAY SIGNS - 2012 SUPPLEMENT"			2	COLORS SHALL CONFORM TO "2004 EDITION - STANDARD HIGHWAY SIGNS - 2012 SUPPLEMENT"			7.50 (15.00)	
R10-15	30"	30"	TURNING VEHICLES TO				/				6.25 (6.25)	
CS-04	18"	30"	PEDESTRIAN ACCESS WAY				/				3.75 (3.75)	
W3-3	30"	30"					/				6.25 (6.25)	
W3-6a	36"	36"	DRAW BRIDGE UP				/				9.00 (9.00)	
W16-13P	24"	18"	WHEN FLASHING				/				3.00 (3.00)	
GS-1	36"	108"	Casco Bay Bridge Old Port				/				27.00 (27.00)	
GS-2	36"	108"	Casco Bay Bridge Fore River Parkway				/				27.00 (27.00)	
CS-02	24"	48"	IMT BOAT YARD				/				8.00 (8.00)	
CS-05	30"	30"	ENTER INTERSECTION ON GREEN SIGNAL ONLY				/				6.25 (6.25)	SEE NOTE 1
MI-4	24"	24"	1A				2				4.00 (8.00)	
MI-5	24"	24"	77				2				4.00 (8.00)	
M3-1	24"	12"	NORTH				/				2.00 (2.00)	
M3-3	24"	12"	SOUTH				3				2.00 (6.00)	
R3-17	24"	18"	BIKE LANE				2				3.00 (6.00)	
M5-1(L)	15"	21"					/				2.19 (2.19)	
M5-1(R)	15"	21"					/				2.19 (2.19)	
M6-3	15"	21"					/				2.19 (2.19)	

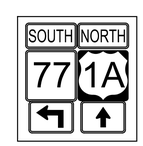

SIGN ASSEMBLY NO. 1
(1 REQUIRED)

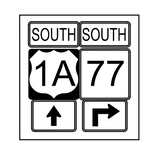

SIGN ASSEMBLY NO. 2
(1 REQUIRED)

NOTES:
1. LOCATION TO BE DETERMINED IN THE FIELD. COORDINATE WORK WITH RESIDENT.

STATE OF MAINE
DEPARTMENT OF TRANSPORTATION

PROJECT NUMBER 022809.20

WIN 022809.20

	BY	DATE
PROJ. MANAGER	J. KITTREDGE	
DESIGN-DETAILED	CDH	CDH/RWH 06/14
CHECKED-REVIEWED	RBM	CRM 06/14
DESIGN2-DETAILED2	-	-
DESIGN3-DETAILED3	-	-
REVISIONS 1	-	-
REVISIONS 2	-	-
REVISIONS 3	-	-
REVISIONS 4	-	-
FIELD CHANGES	-	-

SIGNATURE

P.E. NUMBER

DATE

PORTLAND INTERNATIONAL MARINE TERMINAL
EXISTING LAYDOWN AND CONNECTING CORRIDOR CONNECTION
PORTLAND CUMBERLAND COUNTY

SIGN SUMMARY

SHEET NUMBER
H36

Filename: 070_SignSummary.dgn Division: Username: Date:6/26/2014

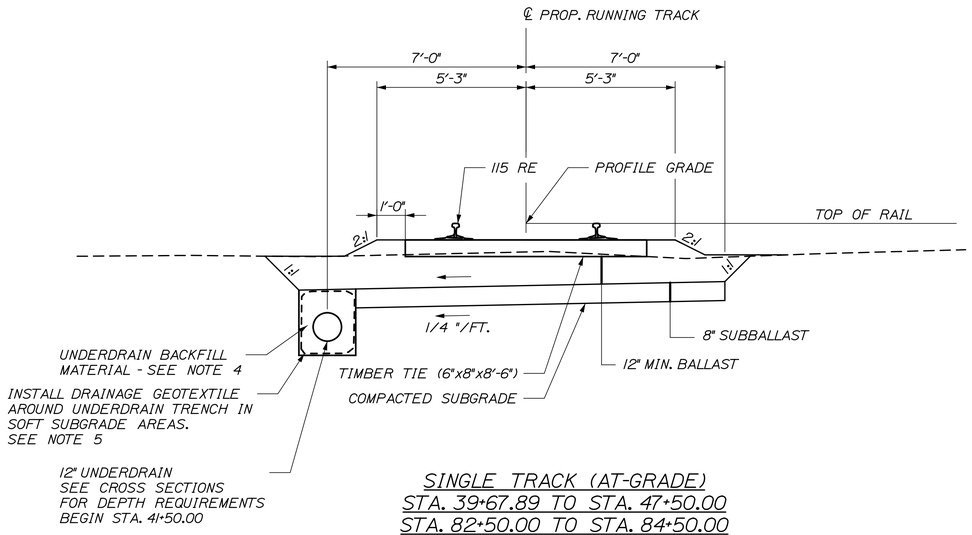

SINGLE TRACK (AT-GRADE)
STA. 39+67.89 TO STA. 47+50.00
STA. 82+50.00 TO STA. 84+50.00

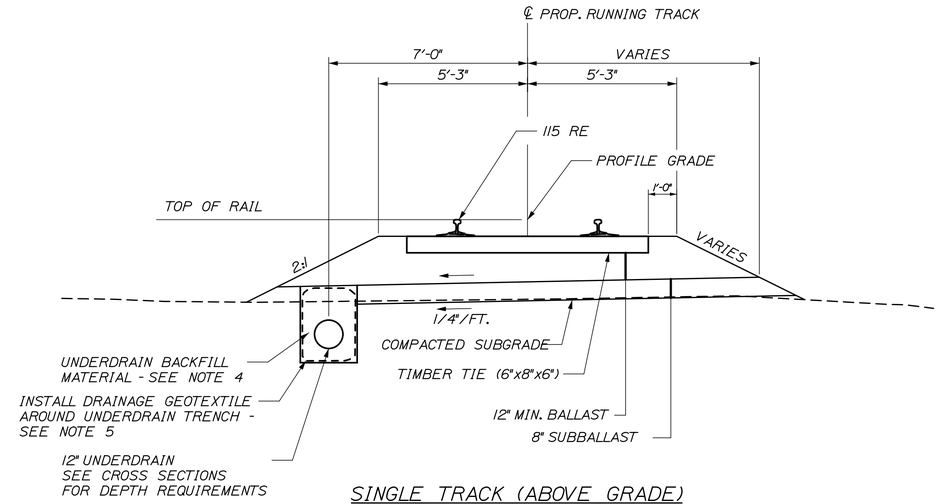

SINGLE TRACK (ABOVE GRADE)
STA. 47+50.00 TO STA. 54+69.00
STA. 65+74.80 TO STA. 65+86.97

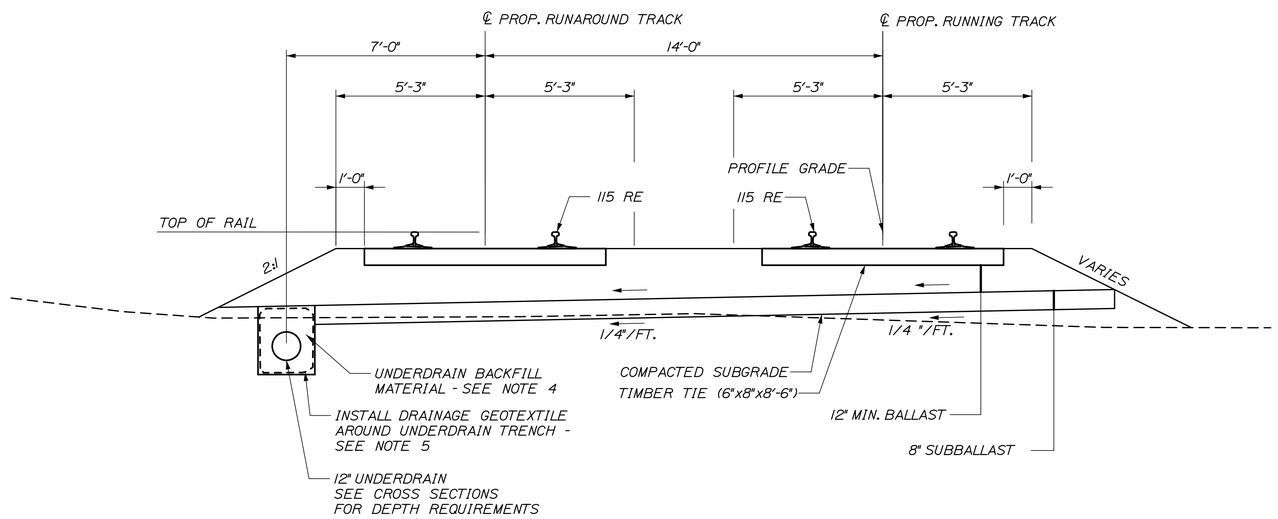

DOUBLE TRACK
STA. 55+85.08 TO STA. 64+58.72
STA. 81+16.08 TO STA. 82+00.00

TYPICAL SECTION NOTES:

1. SEE CROSS SECTIONS FOR ACTUAL UNDERDRAIN ELEVATIONS.

2. CROSS SLOPES FOR BALLAST AND SUBBALLAST SHALL BE UNIFORM.

3. SEE PLANS, CROSS SECTIONS AND SPECIAL DETAILS FOR TRANSITION REQUIREMENTS BETWEEN TYPICAL SECTIONS AND AT PROJECT LIMIT OF WORK.

4. UNDERDRAIN BACKFILL MATERIAL SHALL CONFORM TO MAINEDOT 703.22, TYPE C (STONE; CRUSHED OR UNCRUSHED).

5. PAYMENT FOR WORK, MATERIALS, AND EQUIPMENT ASSOCIATED WITH DRAINAGE GEOTEXTILE IN UNDERDRAIN TRENCH SHALL BE CONSIDERED INCIDENTAL TO THE 605 PAY ITEMS.

6. BALLAST SHALL BE MDOT 703.33. SUBBALLAST SHALL BE BASED ON SPECIAL PROVISION 648.

NOT TO SCALE

STATE OF MAINE
DEPARTMENT OF TRANSPORTATION

PROJECT NUMBER 022809.20

WIN 022809.20

		BY	DATE
PROJ. MANAGER	J. KITTREDGE		
DESIGN-DETAILED	EAH	MM	06/14
CHECKED-REVIEWED	-	-	06/14
DESIGN2-DETAILED2	-	-	-
DESIGN3-DETAILED3	-	-	-
REVISIONS 1	-	-	-
REVISIONS 2	-	-	-
REVISIONS 3	-	-	-
REVISIONS 4	-	-	-
FIELD CHANGES	-	-	-

SIGNATURE

P.E. NUMBER

DATE

PORTLAND INTERNATIONAL MARINE TERMINAL
EXISTING LAYDOWN AND CONNECTING CORRIDOR CONNECTION
PORTLAND CUMBERLAND COUNTY

TRACK
TYPICAL SECTIONS

SHEET NUMBER

R01

Date:6/26/2014
Username:
Division:
Filename: 071_typ_Track.dgn

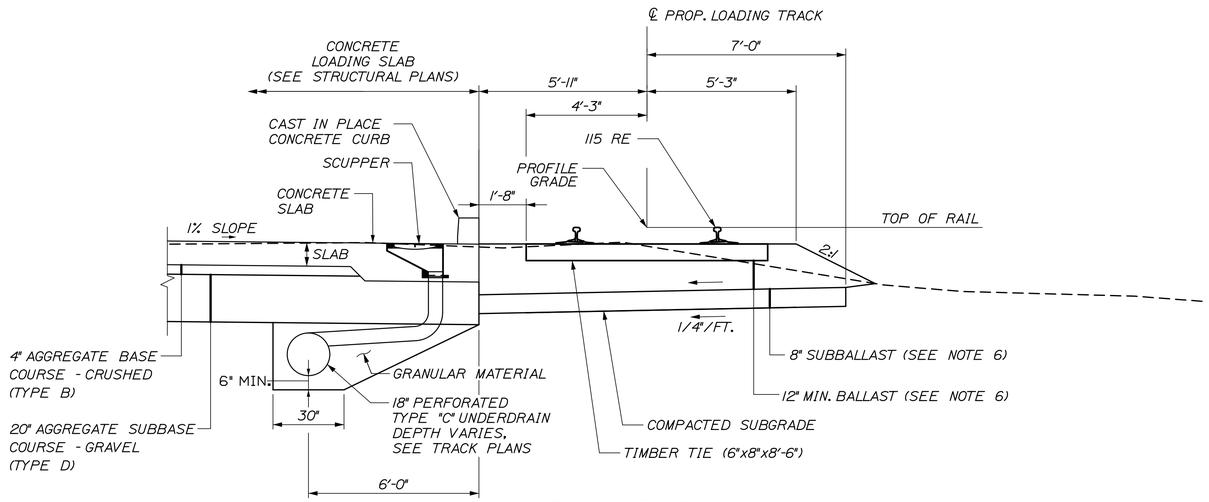

LOADING TRACK
STA. 82+50.00 TO STA. 90+00.00

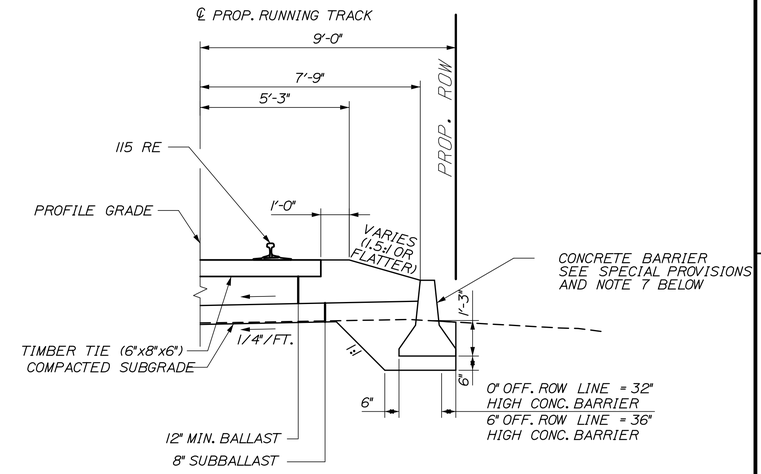

TRACK WITH RETAINING WALL
STA. 53+25 TO STA. 53+75
STA. 54+75 TO STA. 55+25
STA. 59+25 TO STA. 61+75
STA. 62+25 TO STA. 63+75

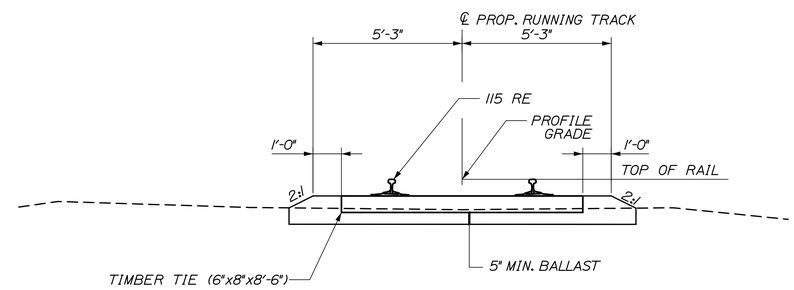

EXISTING TRACK CONNECTION
STA. 68+00.00 TO STA. 69+50.00

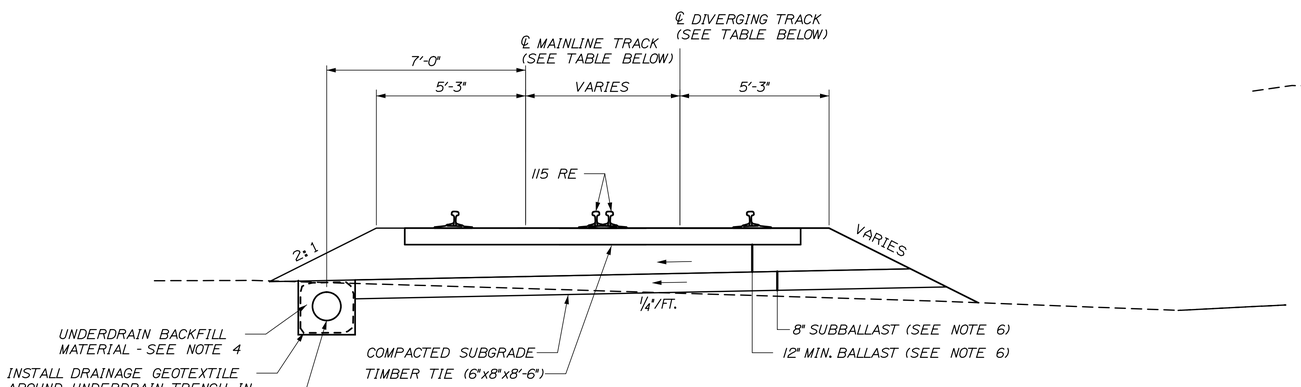

TURNOUT SECTION

STATION RANGE	MAINLINE TRACK	DIVERGING TRACK
STA. 54+69.00 TO STA. 55+85.08	RUNNING TRACK	RUNAROUND TRACK
STA. 64+58.72 TO STA. 65+74.80	RUNNING TRACK	RUNAROUND TRACK
STA. 65+86.97 TO STA. 68+00.00	RUNNING TRACK	LOADING TRACK

NOT TO SCALE

TYPICAL SECTION NOTES:

1. SEE CROSS SECTIONS FOR ACTUAL UNDERDRAIN ELEVATIONS.

2. CROSS SLOPES FOR BALLAST AND SUBBALLAST SHALL BE UNIFORM.

3. SEE PLANS, CROSS SECTIONS AND SPECIAL DETAILS FOR TRANSITION REQUIREMENTS BETWEEN TYPICAL SECTIONS AND AT PROJECT LIMIT OF WORK.

4. UNDERDRAIN BACKFILL MATERIAL SHALL CONFORM TO MAINEDOT 703.22, TYPE C (STONE; CRUSHED OR UNCRUSHED).

5. PAYMENT FOR WORK, MATERIALS, AND EQUIPMENT ASSOCIATED WITH DRAINAGE GEOTEXTILE IN UNDERDRAIN TRENCH SHALL BE CONSIDERED INCIDENTAL TO THE 605 PAY ITEMS.

6. BALLAST SHALL BE MDOT 703.33. SUBBALLAST SHALL BE BASED ON SPECIAL PROVISION 648.

7. IMPACTS ON ADJACENT PROPERTY (OUTSIDE OF PROJECT SITE ROW) WILL NOT BE PERMITTED.

STATE OF MAINE
DEPARTMENT OF TRANSPORTATION

PROJECT NUMBER 022809.20

WIN 022809.20

		BY	DATE
PROJ. MANAGER	J. KITTREDGE		
DESIGN-DETAILED	EAH	MM	06/14
CHECKED-REVIEWED	-	-	06/14
DESIGN2-DETAILED2	-	-	-
DESIGN3-DETAILED3	-	-	-
REVISIONS 1	-	-	-
REVISIONS 2	-	-	-
REVISIONS 3	-	-	-
REVISIONS 4	-	-	-
FIELD CHANGES	-	-	-

SIGNATURE

P.E. NUMBER

DATE

PORTLAND INTERNATIONAL MARINE TERMINAL
EXISTING LAYDOWN AND CONNECTING CORRIDOR CONNECTION
PORTLAND CUMBERLAND COUNTY

TRACK
TYPICAL SECTIONS

SHEET NUMBER
R02

Filename: 072_typ_Track.dgn Division: Username: Date:6/26/2014

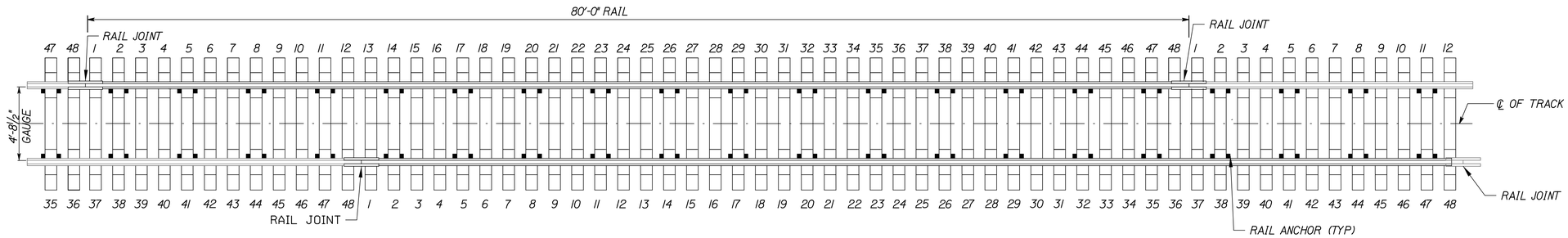

64 ANCHORS PER 80'-0" 115RE RAIL LENGTH

(N.T.S.)

NOTES:

1. BOX ANCHOR EVERY THIRD TIE, EXCEPT IN JOINT AREAS WHERE EVERY FOURTH TIE IS ACCEPTABLE.
2. RAIL JOINTS SHALL NOT BE PLACED IN GRADE CROSSINGS OR WITHIN LIMITS OF SWITCH POINTS OR GUARD RAILS.

SPIKING PATTERN "A"

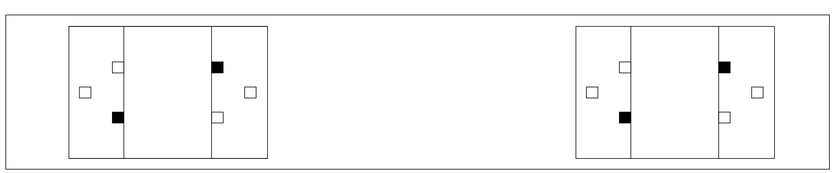

SPIKING PATTERN "B"

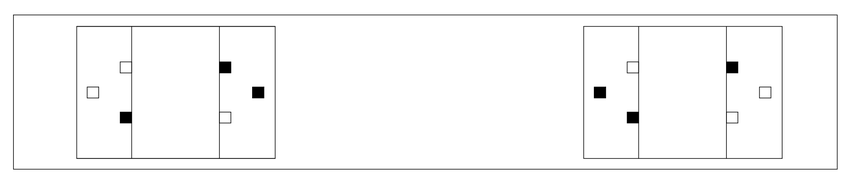

SPIKING PATTERN "C"

SPIKING PATTERNS

(N.T.S.)

NOTES:

1. B-6 PUNCHING SHOWN.
2. SPIKING PATTERN "A" TO BE USED FOR TANGENT TRACK AND CURVED TRACK UP TO 2°-00'-00"
3. SPIKING PATTERN "B" TO BE USED FOR CURVED TRACK 2°-00'-00" TO 6°-00'-00".
4. SPIKING PATTERN "C" TO BE USED FOR CURVED TRACK OF OVER 6°-00'-00".

STATE OF MAINE
DEPARTMENT OF TRANSPORTATION

PROJECT NUMBER 022809.20

WIN 022809.20

PROJ. MANAGER	J. KITTREDGE	BY	DATE
DESIGN-DETAILED	EAH	MM	06\14
CHECKED-REVIEWED	-	-	06\14
DESIGN2-DETAILED2	-	-	-
DESIGN3-DETAILED3	-	-	-
REVISIONS 1	-	-	-
REVISIONS 2	-	-	-
REVISIONS 3	-	-	-
REVISIONS 4	-	-	-
FIELD CHANGES	-	-	-

SIGNATURE

P.E. NUMBER

DATE

PORTLAND INTERNATIONAL MARINE TERMINAL
EXISTING LAYDOWN AND CONNECTING CORRIDOR CONNECTION
PORTLAND CUMBERLAND COUNTY

TRACK DETAILS

SHEET NUMBER

R03

Filename: 073_details.dgn Division: Username: Date:6/26/2014

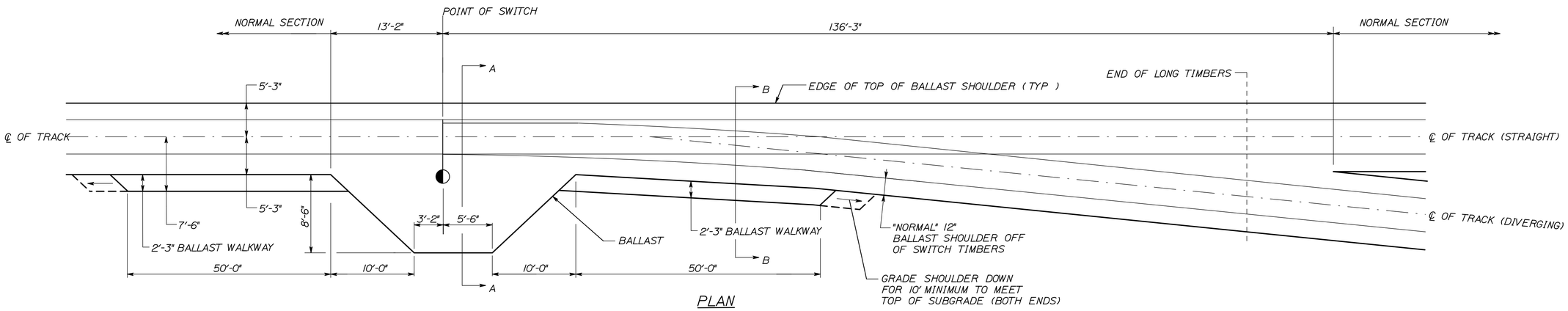

PLAN
(N.T.S.)

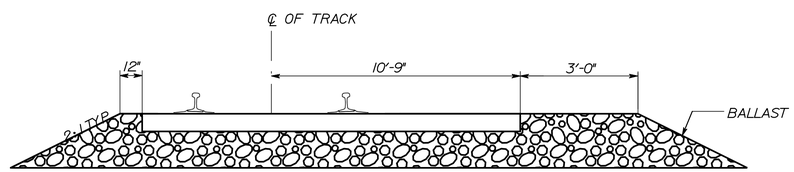

SECTION A-A
WALKWAY BALLAST AT HEAD BLOCKS
(N.T.S.)

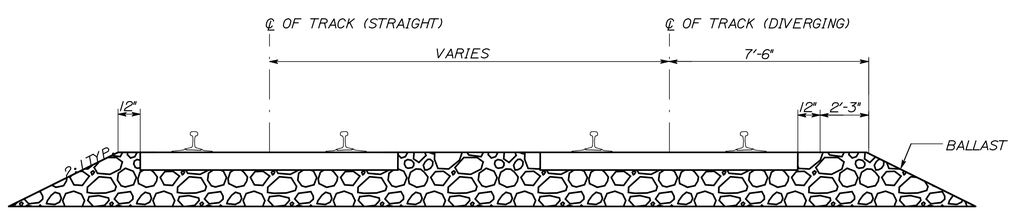

SECTION B-B
BALLAST AT TURNOUTS
(N.T.S.)

NOTE:
1. SEE CROSS SECTIONS FOR ACTUAL SUBGRADE SLOPES

STATE OF MAINE
DEPARTMENT OF TRANSPORTATION

PROJECT NUMBER 022809.20

WIN 022809.20

PROJ. MANAGER	J. KITTREDGE		
DESIGN-DETAILED	EAH	BY	DATE
CHECKED-REVIEWED	-	MM	06/14
DESIGN2-DETAILED2	-	-	06\14
DESIGN3-DETAILED3	-	-	-
REVISIONS 1	-	-	-
REVISIONS 2	-	-	-
REVISIONS 3	-	-	-
REVISIONS 4	-	-	-
FIELD CHANGES	-	-	-

SIGNATURE

P.E. NUMBER

DATE

PORTLAND INTERNATIONAL MARINE TERMINAL
EXISTING LAYDOWN AND CONNECTING CORRIDOR CONNECTION
PORTLAND CUMBERLAND COUNTY

TRACK DETAILS

SHEET NUMBER

R04

Filename: 074_details.dgn Division: Username: Date:6/26/2014

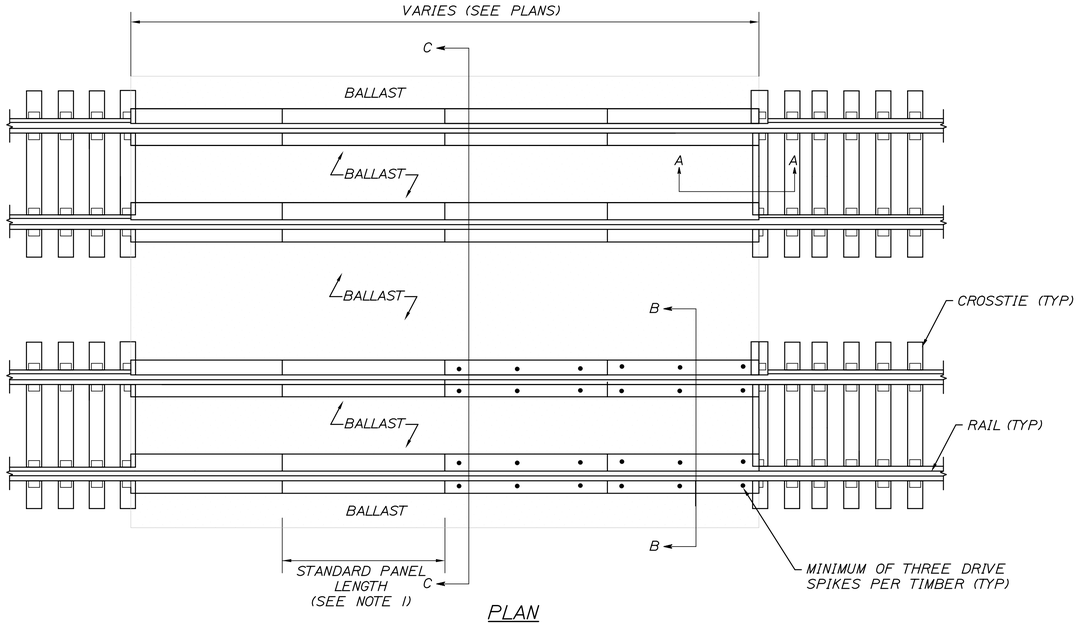

PLAN
N.T.S.

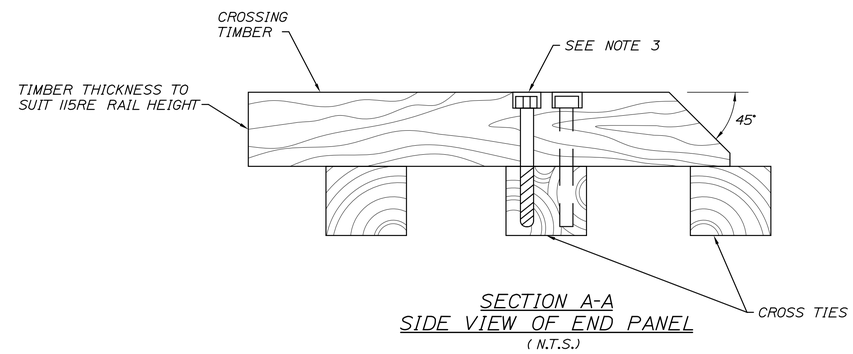

SECTION A-A
SIDE VIEW OF END PANEL
(N.T.S.)

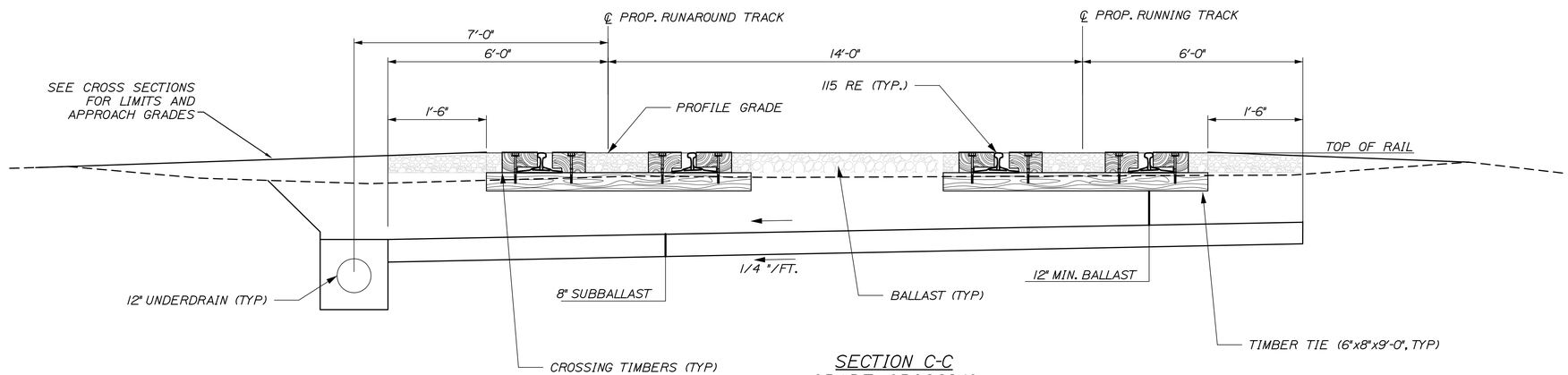

SECTION C-C
GRADE CROSSING
(N.T.S.)

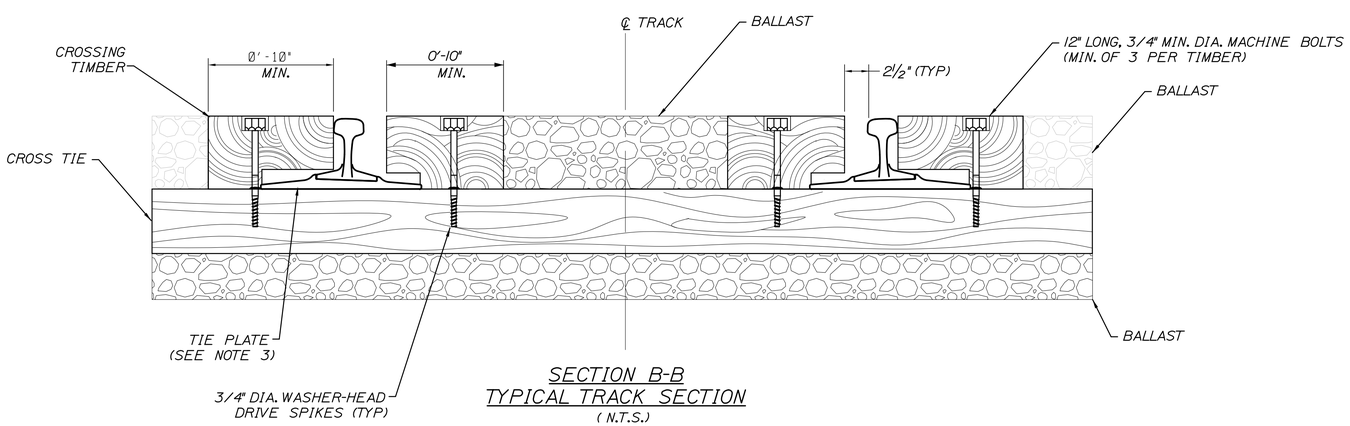

SECTION B-B
TYPICAL TRACK SECTION
(N.T.S.)

NOTES:

1. STANDARD TIMBER LENGTHS ARE 8'-0"
2. CROSSING TIMBERS TO BE BORED TO FIT 20" TIE SPACING.
3. CROSSING TIMBERS TO BE MANUFACTURED TO CLEAR TRACK FASTENING SYSTEM.
4. CROSSING TIMBERS SHALL BE TREATED WITH CREOSOTE PRESERVATIVE AS PER AREMA CHAPTER 30.
5. TIMBER SURFACE SHALL BE FLUSH WITH TOP OF RAIL.

STATE OF MAINE
DEPARTMENT OF TRANSPORTATION

PROJECT NUMBER 022809.20

WIN 022809.20

	BY	DATE
PROJ. MANAGER	J. KITTREDGE	
DESIGN-DETAILED	EAH	06/14
CHECKED-REVIEWED	-	06\14
DESIGN2-DETAILED2	-	-
DESIGN3-DETAILED3	-	-
REVISIONS 1	-	-
REVISIONS 2	-	-
REVISIONS 3	-	-
REVISIONS 4	-	-
FIELD CHANGES	-	-

SIGNATURE

P.E. NUMBER

DATE

PORTLAND INTERNATIONAL MARINE TERMINAL
EXISTING LAYDOWN AND CONNECTING CORRIDOR CONNECTION
PORTLAND CUMBERLAND COUNTY

TRACK DETAILS

SHEET NUMBER

R05

Filename: 075_timber crossing - rev1.dgn Division: Username: Date:6/26/2014

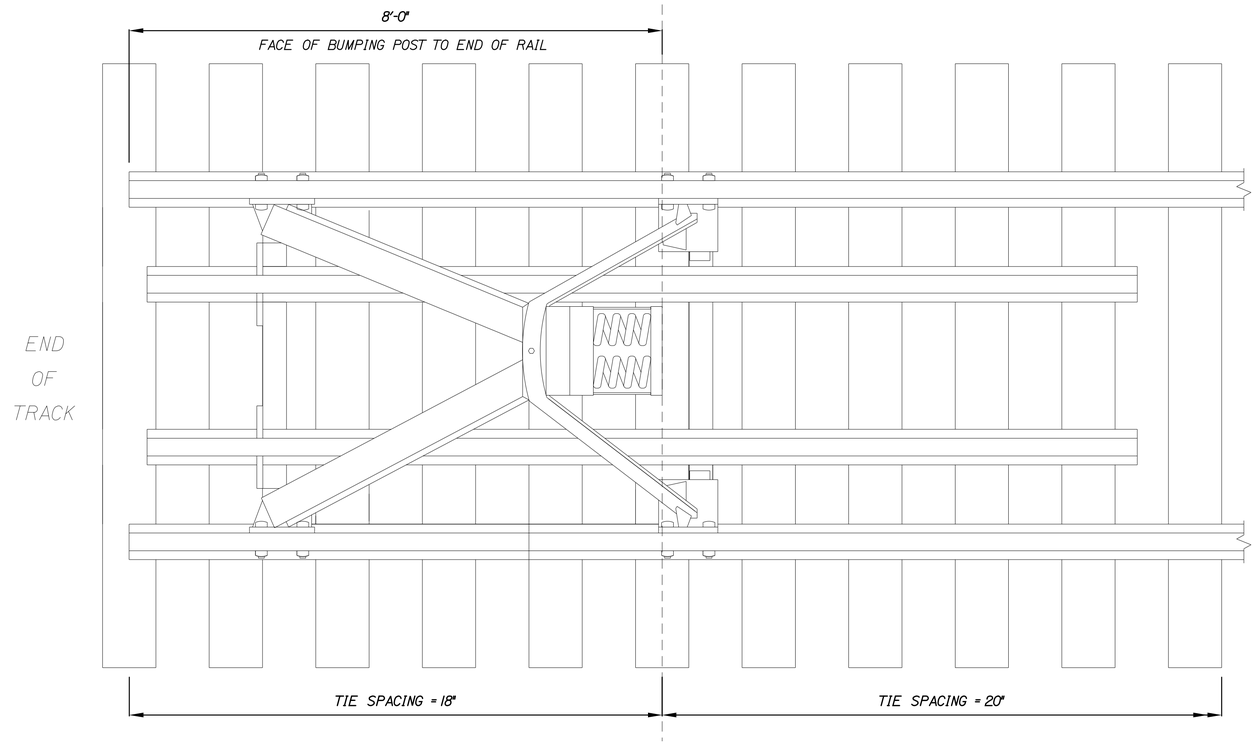

PLAN VIEW

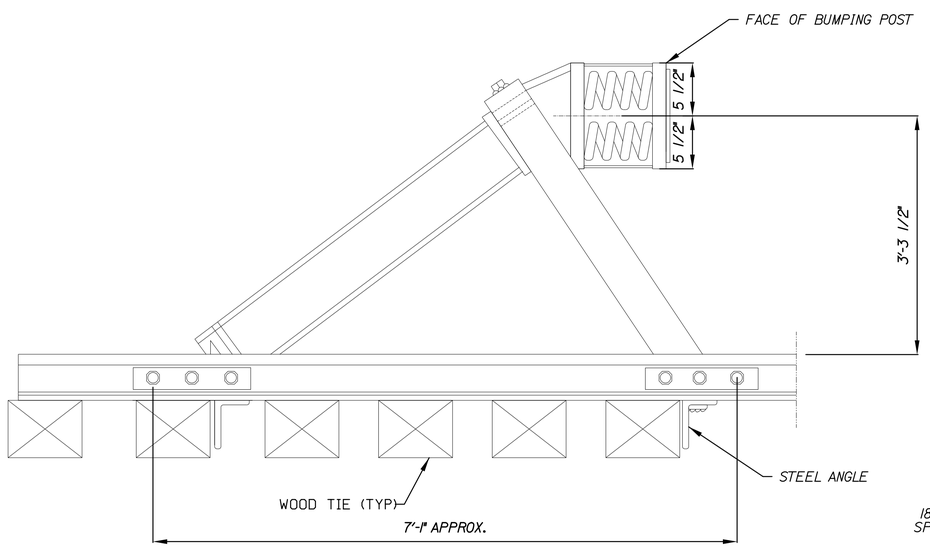

SIDE VIEW

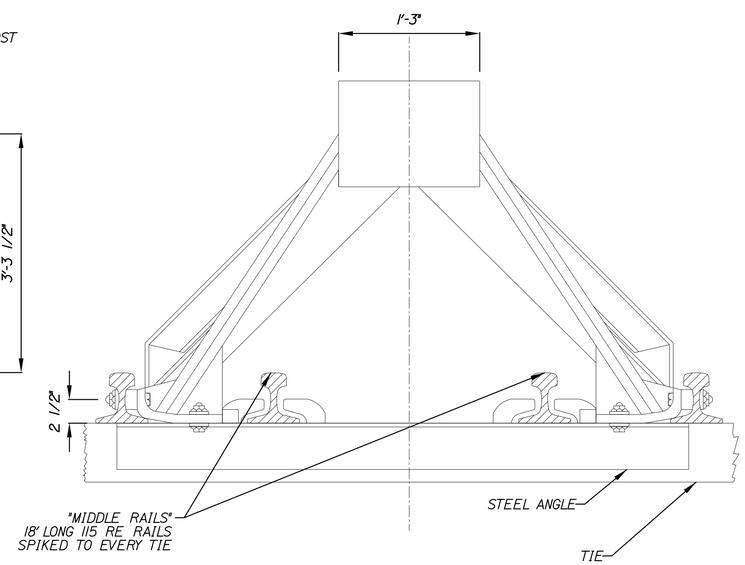

FRONT VIEW

BUMPING POST DETAIL
(N.T.S.)

STATE OF MAINE
DEPARTMENT OF TRANSPORTATION

PROJECT NUMBER 022809.20

WIN
022809.20

		BY	DATE
PROJ. MANAGER	J. KITTREDGE		
DESIGN-DETAILED	SMM	MM	06\14
CHECKED-REVIEWED	-	-	06\14
DESIGN2-DETAILED2	-	-	-
DESIGN3-DETAILED3	-	-	-
REVISIONS 1	-	-	-
REVISIONS 2	-	-	-
REVISIONS 3	-	-	-
REVISIONS 4	-	-	-
FIELD CHANGES	-	-	-

SIGNATURE

P.E. NUMBER

DATE

PORTLAND INTERNATIONAL MARINE TERMINAL
EXISTING LAYDOWN AND CONNECTING CORRIDOR CONNECTION
PORTLAND CUMBERLAND COUNTY

TRACK DETAILS

SHEET NUMBER

R06

Filename: 076_Bumping Post Detail.dgn Division: Username: Date:6/26/2014

TRACK GEOMETRY DATA RUNNING TRACK

ELEMENT	CURVE No.	POINT	STATION	BEARING	COORDINATES Northing	COORDINATES Easting	DATA			
CURVE	1A						MAINTAIN EXISTING HORIZONTAL ALIGNMENT			
							Dc= 7°38'19.17"		R= 750.6323'	
							CC:N 295805.4469		E 2924087.9071	
SPIRAL		CS	39+67.89		295056.6044	2924036.1015	θs = 3°21'26.92"	Ls= 60.0000'	LT= 33.6492'	ST= 26.3676'
							X= 59.9715'	Y= 1.5442'	P= 0.1067'	Xo= 16.0103'
		SC	40+27.89		295054.4323	2924096.0535				
CURVE	1B	SC	40+27.89		295054.4323	2924096.0535	Δc = 5°18'44.19"	Dc= 3°33'33.00"	R= 1610.0680'	Lc= 149.2562'
		PI			295041.4162	2924067.3993	V = 15 MPH	Ea = 0	Ee = 0.56"	Eu = 0.56"
		CS	41+77.15		295059.7863	2924245.1841	Tc= 74.6936'	Ec= 1.7316'	CC:N 296664.4120	E 2924112.9136
SPIRAL		CS	41+77.15		295059.7863	2924245.1841	θs = 1°04'03.28"	Ls= 60.0000'	LT= 40.0007'	ST= 20.0007'
							X= 59.9979'	Y= 0.3726'	P= 0.0932'	Xo= 29.9997'
		ST	42+37.15		295065.4578	2924304.9145				
TANGENT				N 84°13'12.50" E						
CURVE	2	PC	43+50.11		295076.8338	2924417.3027	Δc = 2°54'25.52"	Dc= 1°00'00.00"	R= 5729.6507'	Lc= 290.7088'
		PI			295091.4753	2924561.9511	V = 15 MPH	Ea = 0	Ee = 0.16"	Eu = 0.16"
		PT	46+40.82		295098.7619	2924707.1558	Tc= 145.3874'	Ec= 1.8443'	CC:N 289376.3117	E 2924994.3163
TANGENT				N 87°07'38.02" E						
CURVE	3	PC	52+61.57		295129.8730	2925327.1288	Δc = 14°37'53.51"	Dc= 8°00'00.00"	R= 716.7794'	Lc= 182.8941'
		PI			295134.4850	2925419.0351	V = 15 MPH	Ea = 0	Ee = 1.26"	Eu = 1.26"
		PT	54+44.47		295162.1631	2925506.7960	Tc= 92.0220'	Ec= 5.8829'	CC:N 295845.7516	E 2925291.2050
TANGENT				N 72°29'44.52" E						
TANGENT	1			N 72°29'44.52" E			NO. 10 LH TURNOUT			
		PS	54+69.00		295169.5413	2925530.1906				
				N 72°29'44.52" E						
				N 72°29'44.52" E						
		PITO	55+00.41		295178.9908	2925560.1525				
				N 72°29'44.52" E						
CURVE	4	PC	59+63.54		295318.2891	2926001.8347	Δc = 13°03'34.04"	Dc= 8°00'00.00"	R= 716.7794'	Lc= 163.2432'
		PI			295342.9659	2926080.0790	V = 15 MPH	Ea = 0	Ee = 1.26"	Eu = 1.26"
		PT	61+26.78		295384.6847	2926150.7237	Tc= 82.0434'	Ec= 4.6801'	CC:N 296001.8775	E 2925786.2436
TANGENT				N 59°26'10.47" E						
TANGENT	2			N 59°26'10.47" E			NO. 10 RH TURNOUT			
		PITO	65+43.38		295596.5242	2926509.4424				
				N 59°26'10.47" E						
				N 59°26'10.47" E						
		PS	65+74.80		295612.4995	2926536.4941				
				N 59°26'10.47" E						
TANGENT				N 59°26'10.47" E						
TANGENT	3			N 59°26'10.47" E			NO. 10 LH TURNOUT			
		PS	65+86.97		295618.6867	2926546.9712				
				N 59°26'10.47" E						
				N 59°26'10.47" E						
		PITO	66+18.38		295634.6619	2926574.0229				
				N 59°26'10.47" E						
TANGENT				N 59°26'10.47" E						
CURVE	5	PC	67+06.84		295679.6438	2926650.1930	Δc = 11°06'55.46"	Dc= 7°00'00.00"	R= 819.0204'	Lc= 158.7915'
		PI			295720.1686	2926718.8157	V = 15 MPH	Ea = 0	Ee = 1.10"	Eu = 1.10"
		PT	68+65.64		295746.7037	2926793.9637	Tc= 79.6953'	Ec= 3.8683'	CC:N 294974.4149	E 2927066.6623
TANGENT				N 70°33'05.93" E						
TANGENT		POL	69+50.00		295774.7935	2926873.5148	LIMIT OF WORK			

TRACK GEOMETRY DATA RUNAROUND TRACK

ELEMENT	CURVE No.	POINT	STATION	BEARING	COORDINATES Northing	COORDINATES Easting	DATA			
				N 72°29'44.52" E						
TANGENT	1	PS	20+00.00		295169.5413	2925530.1906	NO. 10 LH TURNOUT			
				N 72°29'44.52" E						
				N 66°46'15.52" E						
		PITO	20+31.42		295178.9908	2925560.1525				
				N 66°46'15.52" E						
CURVE	6	PC	21+30.82		295218.1956	2925651.4963	Δc = 5°43'29.00"	Dc= 7°00'00.00"	R= 819.0204'	Lc= 81.7817'
		PI			295234.3467	2925689.1271	V = 15 MPH	Ea = 0	Ee = 1.10"	Eu = 1.10"
		PT	22+12.60		295246.6636	2925728.1812	Tc= 40.9504'	Ec= 1.0231'	CC:N 294465.5685	E 2925974.5241
				N 72°29'44.52" E						
TANGENT		PT	22+12.60		295246.6636	2925728.1812				
				N 72°29'44.52" E						
CURVE	7	PC	24+95.13		295331.6408	2925997.6237	Δc = 13°03'34.04"	Dc= 8°09'34.66"	R= 702.7800'	Lc= 160.0497'
		PI			295355.8356	2926074.3399	V = 15 MPH	Ea = 0	Ee = 1.29"	Eu = 1.29"
		PT	26+55.17		295396.7396	2926143.6048	Tc= 80.4411'	Ec= 4.5887'	CC:N 296001.8781	E 2925786.2434
TANGENT				N 59°26'10.47" E						
CURVE	8	PC	28+91.17		295516.7433	2926346.8131	Δc = 5°43'29.00"	Dc= 7°00'00.00"	R= 819.0204'	Lc= 81.7817'
		PI			295537.5664	2926382.0740	V = 15 MPH	Ea = 0	Ee = 1.29"	Eu = 1.29"
		PT	29+72.95		295554.7685	2926419.2361	Tc= 40.9504'	Ec= 1.0231'	CC:N 294811.5144	E 2926763.2824
TANGENT				N 65°09'39.47" E						
				N 65°09'39.47" E						
TANGENT	2	PITO	30+72.36		295596.5242	2926509.4424	NO. 10 RH TURNOUT			
				N 65°09'39.47" E						
				N 59°26'10.47" E						
		PS	31+03.77		295612.4995	2926536.4941				
				N 59°26'10.47" E						

TRACK GEOMETRY DATA LOADING TRACK

ELEMENT	CURVE No.	POINT	STATION	BEARING	COORDINATES Northing	COORDINATES Easting	DATA			
				N 59°26'10.47" E						
TANGENT	3	PS	80+00.00		295618.6867	2926546.9712	NO. 10 LH TURNOUT			
				N 59°26'10.47" E						
				N 53°42'41.47" E						
		PITO	80+31.42		295634.6619	2926574.0229				
				N 53°42'41.47" E						
TANGENT				N 53°42'41.47" E						
CURVE	9	PC	81+35.93		295696.5185	2926658.2660	Δc = 5°43'29.00"	Dc= 8°00'00.00"	R= 716.7794'	Lc= 71.5590'
		PI			295717.7295	2926687.1534	V = 15 MPH	Ea = 0	Ee = 1.26"	Eu = 1.26"
		PT	82+07.49		295735.9532	2926718.0126	Tc= 35.8384'	Ec= 0.8954'	CC:N 295118.7605	E 2927082.4926
				N 59°26'10.47" E						
TANGENT		PT	82+07.49		295735.9532	2926718.0126				
				N 59°26'10.47" E						
CURVE	10	PC	82+98.27		295782.1155	2926796.1815	Δc = 13°14'32.96"	Dc= 7°51'07.70"	R= 730.2550'	Lc= 168.6481'
		PI			295825.2196	2926869.1720	V = 15 MPH	Ea = 0	Ee = 1.24"	Eu = 1.24"
		PT	84+66.92		295850.4575	2926950.0956	Tc= 84.7678'	Ec= 4.9034'	CC:N 295153.3193	E 2927167.5139
TANGENT				N 72°40'43.43" E						
		POL	90+00.00		296009.1712	2927459.0012	LIMIT OF WORK			

STATE OF MAINE
DEPARTMENT OF TRANSPORTATION

PROJECT NUMBER 022809.20

WIN 022809.20

	BY	DATE
PROJ. MANAGER	J. KITTREDGE	
DESIGN-DETAILED	EAH	06\14
CHECKED-REVIEWED	MM	06\14
DESIGN2-DETAILED2	"	"
DESIGN3-DETAILED3	"	"
REVISIONS 1	"	"
REVISIONS 2	"	"
REVISIONS 3	"	"
REVISIONS 4	"	"
FIELD CHANGES	"	"

SIGNATURE

P.E. NUMBER

DATE

PORTLAND INTERNATIONAL MARINE TERMINAL
EXISTING LAYDOWN AND CONNECTING CORRIDOR CONNECTION
PORTLAND CUMBERLAND COUNTY

TRACK ALIGNMENT DATA

SHEET NUMBER

R07

Date:6/26/2014
Username:
Division:
Filename: 077_PIMT-GeoTables.dgn

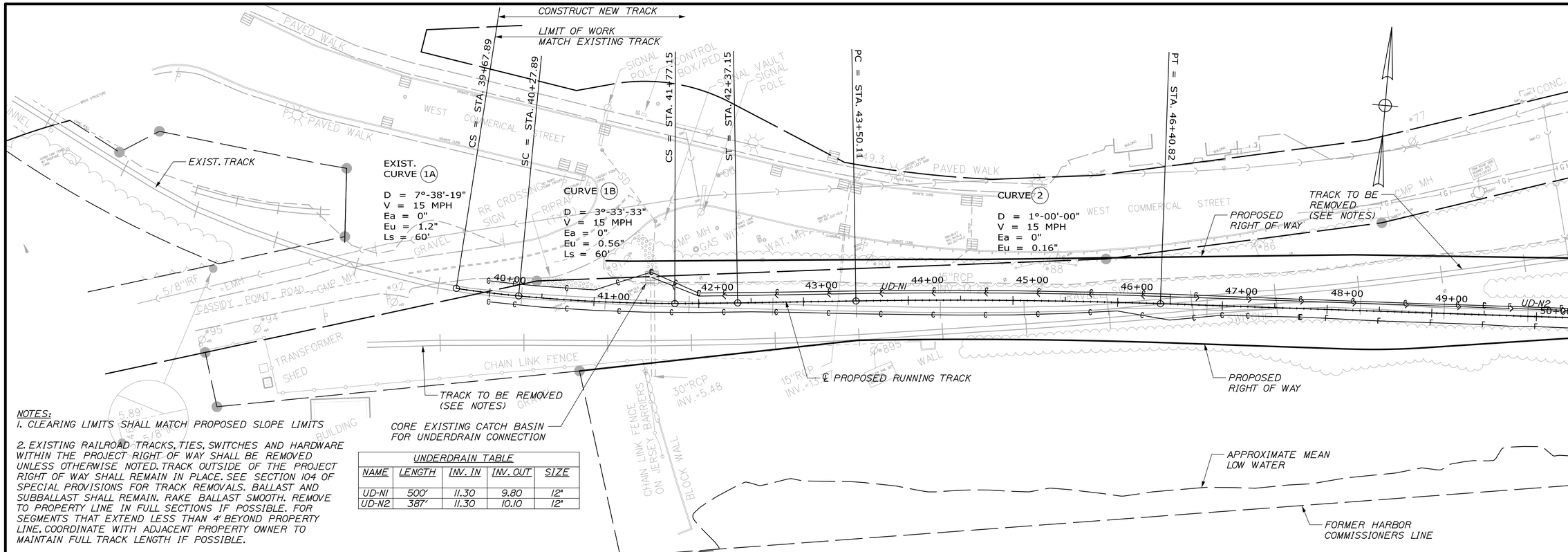

NOTES:

1. CLEARING LIMITS SHALL MATCH PROPOSED SLOPE LIMITS

2. EXISTING RAILROAD TRACKS, TIES, SWITCHES AND HARDWARE WITHIN THE PROJECT RIGHT OF WAY SHALL BE REMOVED UNLESS OTHERWISE NOTED. TRACK OUTSIDE OF THE PROJECT RIGHT OF WAY SHALL REMAIN IN PLACE. SEE SECTION 104 OF SPECIAL PROVISIONS FOR TRACK REMOVALS. BALLAST AND SUBBALLAST SHALL REMAIN. RAKE BALLAST SMOOTH. REMOVE TO PROPERTY LINE IN FULL SECTIONS IF POSSIBLE. FOR SEGMENTS THAT EXTEND LESS THAN 4' BEYOND PROPERTY LINE, COORDINATE WITH ADJACENT PROPERTY OWNER TO MAINTAIN FULL TRACK LENGTH IF POSSIBLE.

UNDERDRAIN TABLE

NAME	LENGTH	INV. IN	INV. OUT	SIZE
UD-N1	500'	11.30	9.80	12"
UD-N2	387'	11.30	10.10	12"

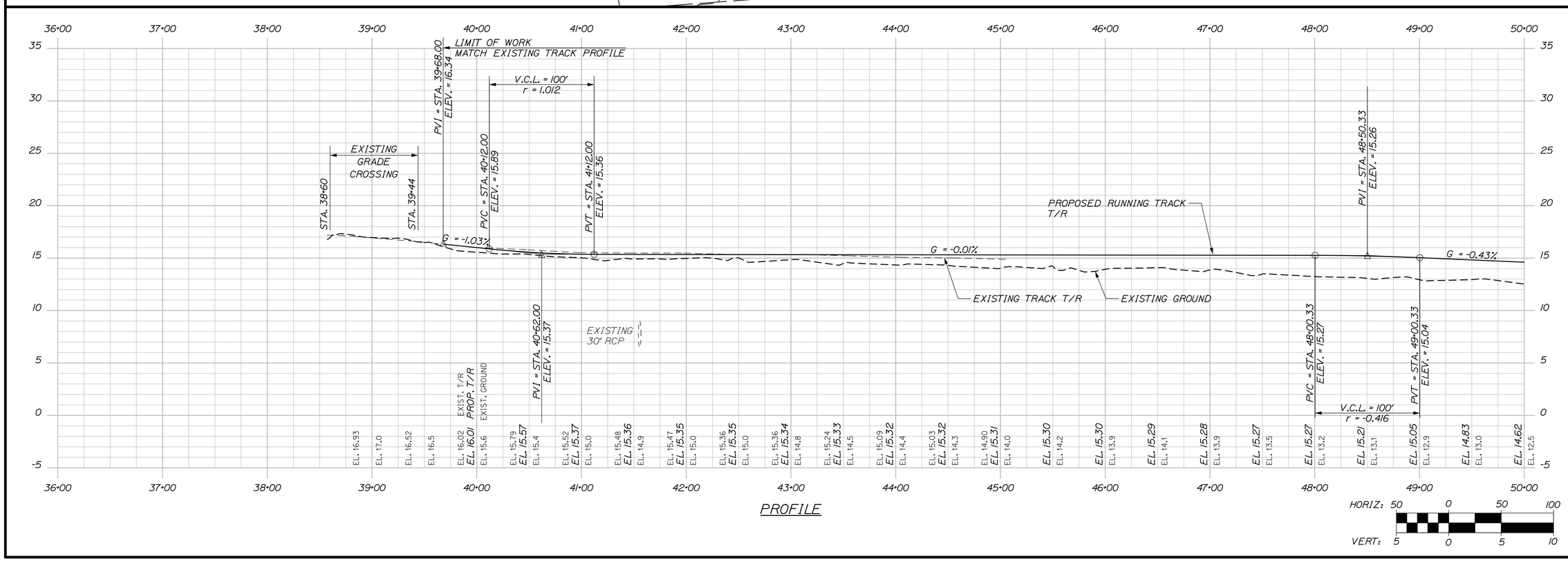

PROFILE

STATE OF MAINE
DEPARTMENT OF TRANSPORTATION

PROJECT NUMBER 022809.20

WIN 022809.20

		BY	DATE
PROJ. MANAGER	J. KITTREDGE		
DESIGN-DETAILED	RWH/WM	TJW	06\14
CHECKED-REVIEWED			06\14
DESIGN2-DETAILED2			
DESIGN3-DETAILED3			
REVISIONS 1			
REVISIONS 2			
REVISIONS 3			
REVISIONS 4			
FIELD CHANGES			

SIGNATURE

P.E. NUMBER

DATE

PORTLAND INTERNATIONAL MARINE TERMINAL
EXISTING LAYDOWN AND CONNECTING CORRIDOR CONNECTION
PORTLAND CUMBERLAND COUNTY

TRACK
PLAN/PROFILE

SHEET NUMBER

R08

Filename: 078_TrackPlan-Profile_001.dgn Division: Username: Date:6/26/2014

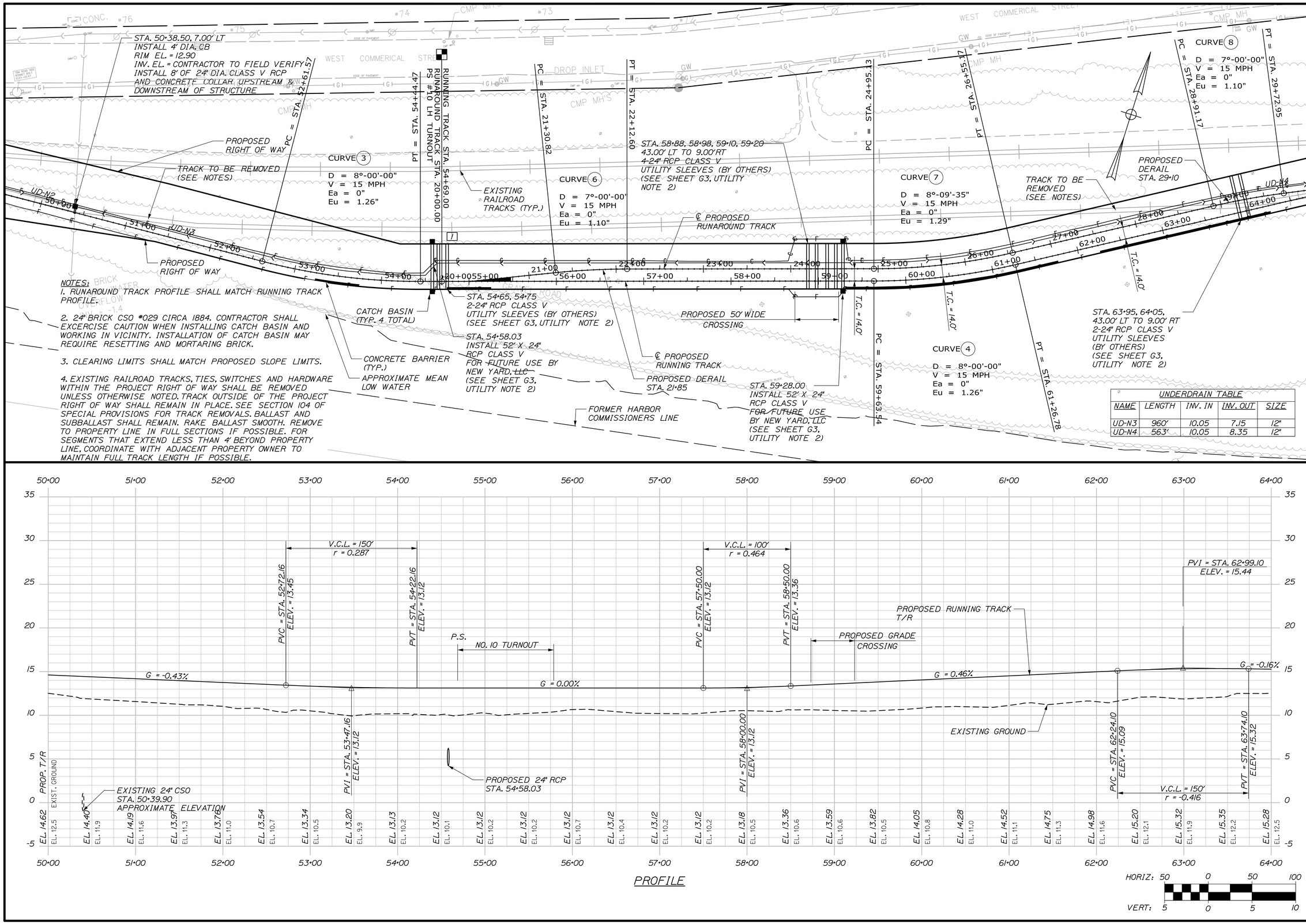

UNDERDRAIN TABLE

NAME	LENGTH	INV. IN	INV. OUT	SIZE
UD-N3	960'	10.05	7.15	12"
UD-N4	563'	10.05	8.35	12"

STATE OF MAINE
DEPARTMENT OF TRANSPORTATION

PROJECT NUMBER 022809.20

WIN 022809.20

		BY	DATE
PROJ. MANAGER	J. KITTREDGE		
DESIGN-DETAILED	RWH/WM	RWH	06\14
CHECKED-REVIEWED	-	-	06\14
DESIGN2-DETAILED2	-	-	-
DESIGN3-DETAILED3	-	-	-
REVISIONS 1	-	-	-
REVISIONS 2	-	-	-
REVISIONS 3	-	-	-
REVISIONS 4	-	-	-
FIELD CHANGES	-	-	-

SIGNATURE

P.E. NUMBER

DATE

PORTLAND INTERNATIONAL MARINE TERMINAL
EXISTING LAYDOWN AND CONNECTING CORRIDOR CONNECTION
PORTLAND CUMBERLAND COUNTY

TRACK PLAN/PROFILE

SHEET NUMBER

R09

Date:7/11/2014

Username:

Division:

Filename: 079_TrackPlan-Profile_002.dgn

UNDERDRAIN TABLE				
NAME	LENGTH	INV. IN	INV. OUT	SIZE
UD-N5	265'	7.5	6.7	18"
UD-N6	750'	9.75	7.6	18"

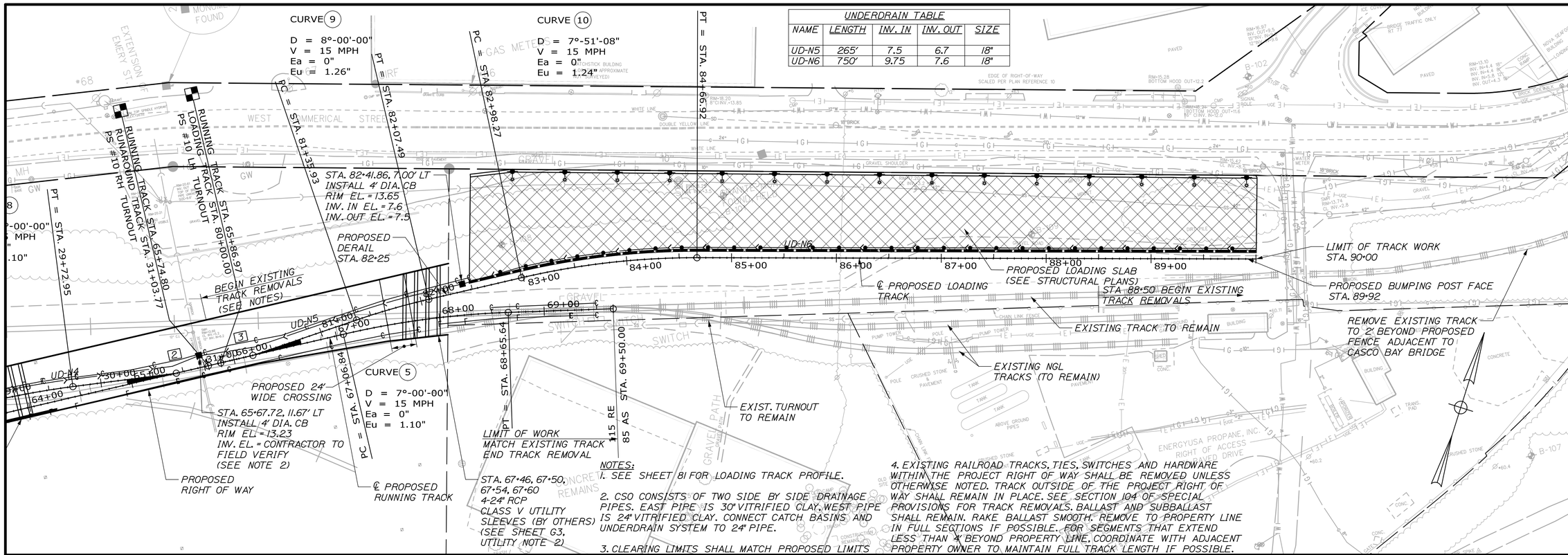

NOTES:

1. SEE SHEET 81 FOR LOADING TRACK PROFILE.
2. CSO CONSISTS OF TWO SIDE BY SIDE DRAINAGE PIPES. EAST PIPE IS 30" VITRIFIED CLAY. WEST PIPE IS 24" VITRIFIED CLAY. CONNECT CATCH BASINS AND UNDERDRAIN SYSTEM TO 24" PIPE.
3. CLEARING LIMITS SHALL MATCH PROPOSED LIMITS
4. EXISTING RAILROAD TRACKS, TIES, SWITCHES AND HARDWARE WITHIN THE PROJECT RIGHT OF WAY SHALL BE REMOVED UNLESS OTHERWISE NOTED. TRACK OUTSIDE OF THE PROJECT RIGHT OF WAY SHALL REMAIN IN PLACE. SEE SECTION 104 OF SPECIAL PROVISIONS FOR TRACK REMOVALS. BALLAST AND SUBBALLAST SHALL REMAIN. RAKE BALLAST SMOOTH. REMOVE TO PROPERTY LINE IN FULL SECTIONS IF POSSIBLE. FOR SEGMENTS THAT EXTEND LESS THAN 4' BEYOND PROPERTY LINE, COORDINATE WITH ADJACENT PROPERTY OWNER TO MAINTAIN FULL TRACK LENGTH IF POSSIBLE.

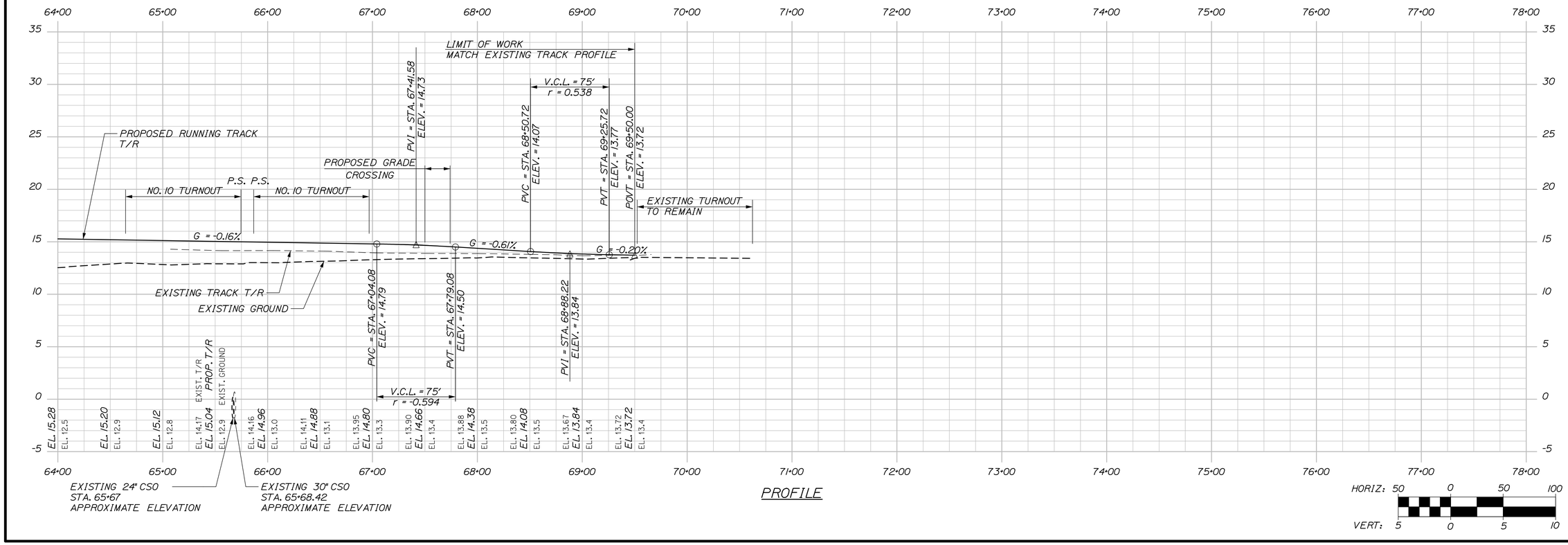

PROFILE

STATE OF MAINE
DEPARTMENT OF TRANSPORTATION

PROJECT NUMBER 022809.20

WIN 022809.20

	BY	DATE
PROJ. MANAGER	J. KITTREDGE	
DESIGN-DETAILED	RWH/WM	06\14
CHECKED-REVIEWED	TJW	06\14
DESIGN2-DETAILED2	-	-
DESIGN3-DETAILED3	-	-
REVISIONS 1	-	-
REVISIONS 2	-	-
REVISIONS 3	-	-
REVISIONS 4	-	-
FIELD CHANGES	-	-

SIGNATURE

P.E. NUMBER

DATE

PORTLAND INTERNATIONAL MARINE TERMINAL
EXISTING LAYDOWN AND CONNECTING CORRIDOR CONNECTION
PORTLAND CUMBERLAND COUNTY

TRACK PLAN/PROFILE

SHEET NUMBER

R10

Filename: 080_TrackPlan-Profile_003.dgn Division: Username: Date:7/11/2014

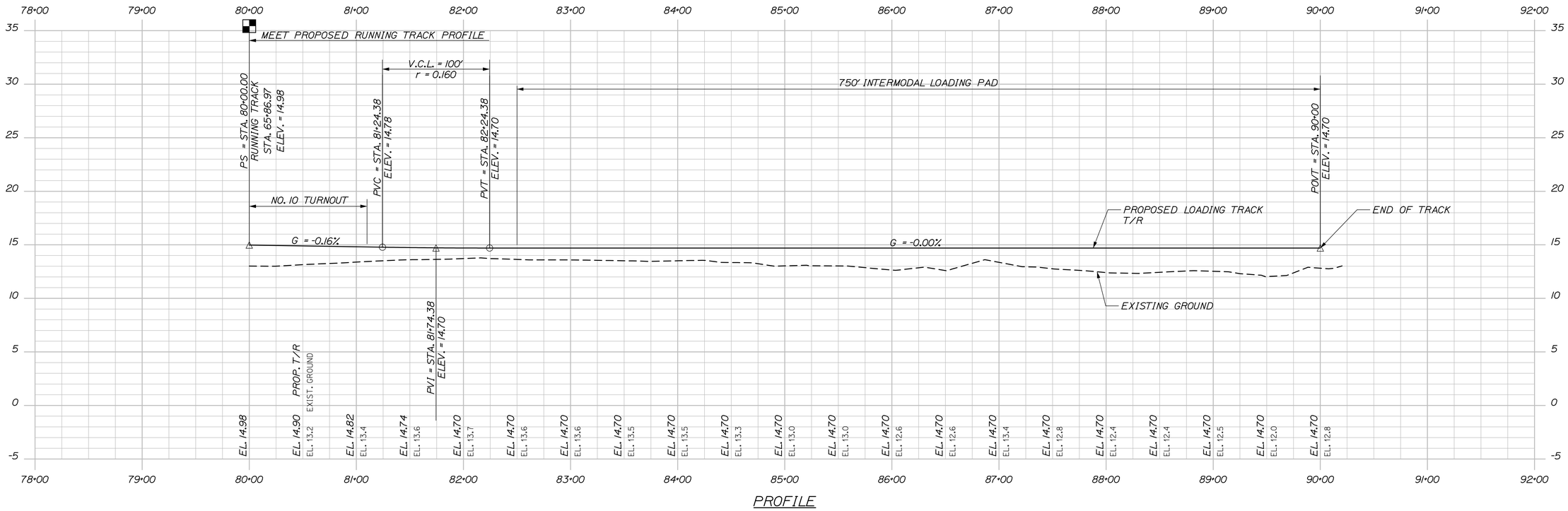

PROFILE

HORIZ: 50 0 50 100

VERT: 5 0 5 10

STATE OF MAINE
DEPARTMENT OF TRANSPORTATION

PROJECT NUMBER 022809.20

WIN 022809.20

		BY	DATE
PROJ. MANAGER	J. KITTREDGE		
DESIGN-DETAILED	RWH/MM	MPC	06\14
CHECKED-REVIEWED	-	-	06\14
DESIGN2-DETAILED2	-	-	-
DESIGN3-DETAILED3	-	-	-
REVISIONS 1	-	-	-
REVISIONS 2	-	-	-
REVISIONS 3	-	-	-
REVISIONS 4	-	-	-
FIELD CHANGES	-	-	-

SIGNATURE

P.E. NUMBER

DATE

PORTLAND INTERNATIONAL MARINE TERMINAL
EXISTING LAYDOWN AND CONNECTING CORRIDOR CONNECTION
PORTLAND CUMBERLAND COUNTY

LOADING TRACK PROFILE

SHEET NUMBER

R11

Filename: 081_TrackProfile_001.dgn Division: Username: Date:6/26/2014

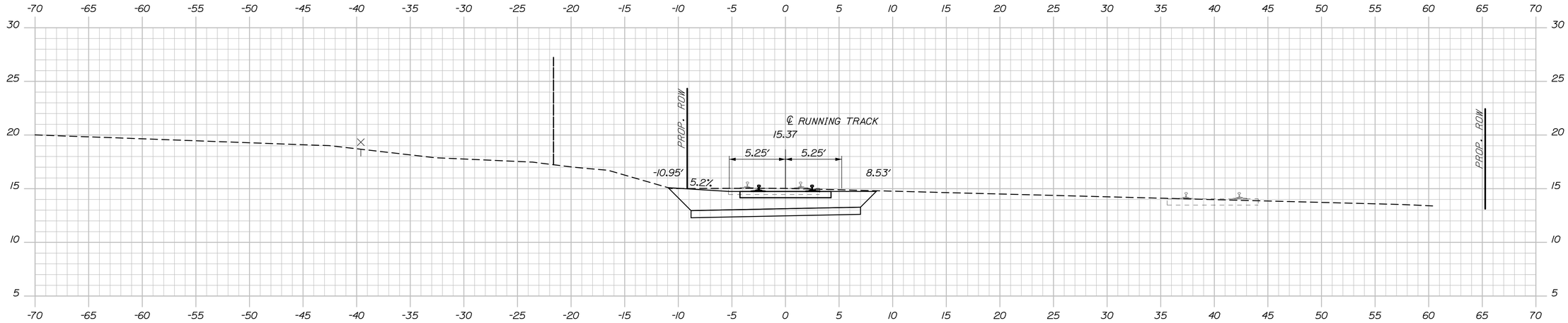

41+00.00

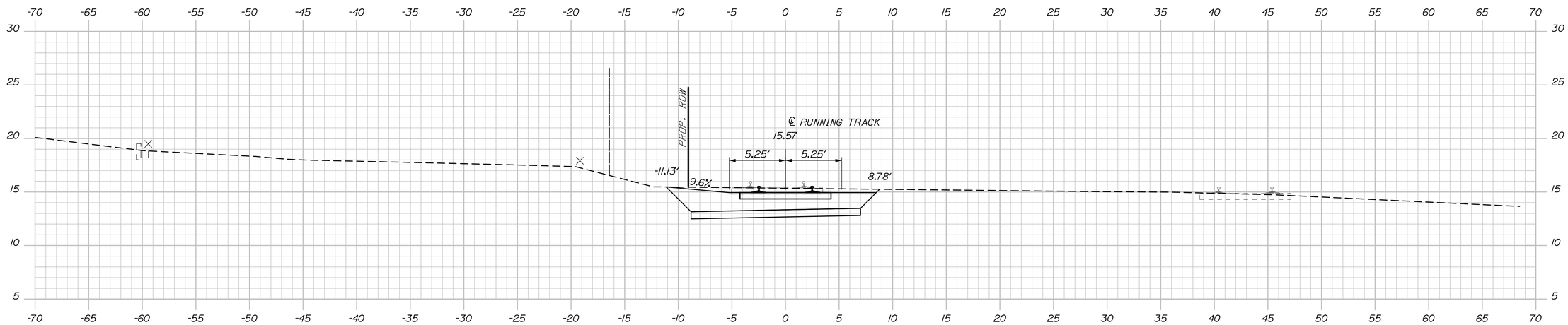

40+50.00

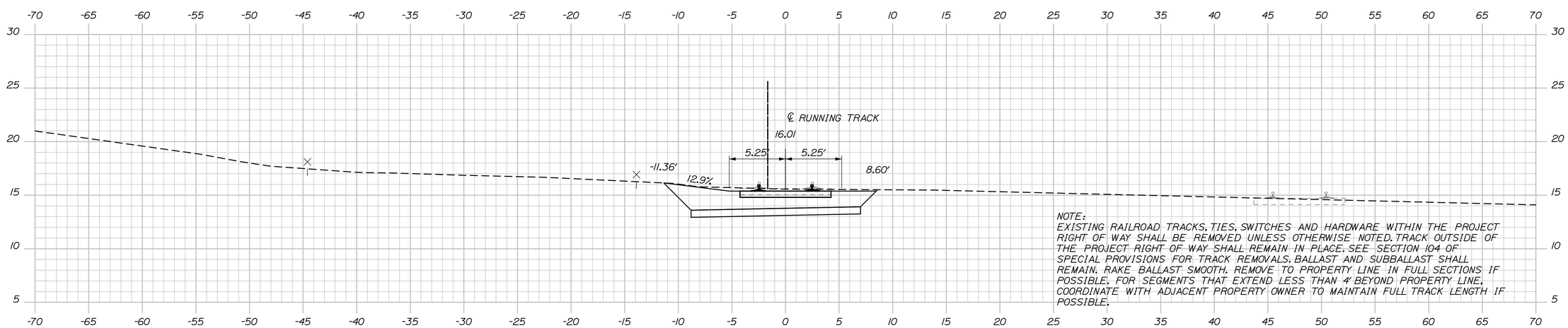

40+00.00

NOTE:
EXISTING RAILROAD TRACKS, TIES, SWITCHES AND HARDWARE WITHIN THE PROJECT RIGHT OF WAY SHALL BE REMOVED UNLESS OTHERWISE NOTED. TRACK OUTSIDE OF THE PROJECT RIGHT OF WAY SHALL REMAIN IN PLACE. SEE SECTION 104 OF SPECIAL PROVISIONS FOR TRACK REMOVALS. BALLAST AND SUBBALLAST SHALL REMAIN. RAKE BALLAST SMOOTH. REMOVE TO PROPERTY LINE IN FULL SECTIONS IF POSSIBLE. FOR SEGMENTS THAT EXTEND LESS THAN 4' BEYOND PROPERTY LINE, COORDINATE WITH ADJACENT PROPERTY OWNER TO MAINTAIN FULL TRACK LENGTH IF POSSIBLE.

STATE OF MAINE
DEPARTMENT OF TRANSPORTATION

PROJECT NUMBER 022809.20

PIN
022809.20

PROJ. MANAGER	J. KITTREDGE	BY	DATE
DESIGN-DETAILED	RWH/WM	TJW	06\14
CHECKED-REVIEWED	-	-	06\14
DESIGN2-DETAILED2	-	-	-
DESIGN3-DETAILED3	-	-	-
REVISIONS 1	-	-	-
REVISIONS 2	-	-	-
REVISIONS 3	-	-	-
REVISIONS 4	-	-	-
FIELD CHANGES	-	-	-

SIGNATURE

P.E. NUMBER

DATE

PORTLAND INTERNATIONAL MARINE TERMINAL
EXISTING LAYDOWN AND CONNECTING CORRIDOR CONNECTION
PORTLAND CUMBERLAND COUNTY

TRACK CROSS SECTIONS

SHEET NUMBER
R12

Sta. 40+00.00 to Sta. 41+00.00

Date:6/26/2014
Username:
Division:
Filename: Xsect_track.dgn

NOTE:
EXISTING RAILROAD TRACKS, TIES, SWITCHES AND HARDWARE WITHIN THE PROJECT RIGHT OF WAY SHALL BE REMOVED UNLESS OTHERWISE NOTED. TRACK OUTSIDE OF THE PROJECT RIGHT OF WAY SHALL REMAIN IN PLACE. SEE SECTION 104 OF SPECIAL PROVISIONS FOR TRACK REMOVALS. BALLAST AND SUBBALLAST SHALL REMAIN. RAKE BALLAST SMOOTH. REMOVE TO PROPERTY LINE IN FULL SECTIONS IF POSSIBLE. FOR SEGMENTS THAT EXTEND LESS THAN 4' BEYOND PROPERTY LINE, COORDINATE WITH ADJACENT PROPERTY OWNER TO MAINTAIN FULL TRACK LENGTH IF POSSIBLE.

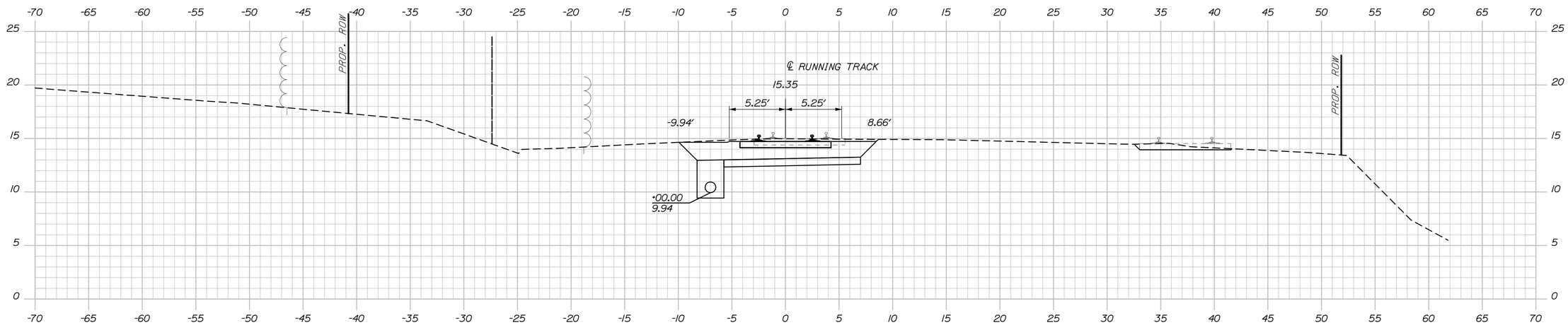

42+00.00

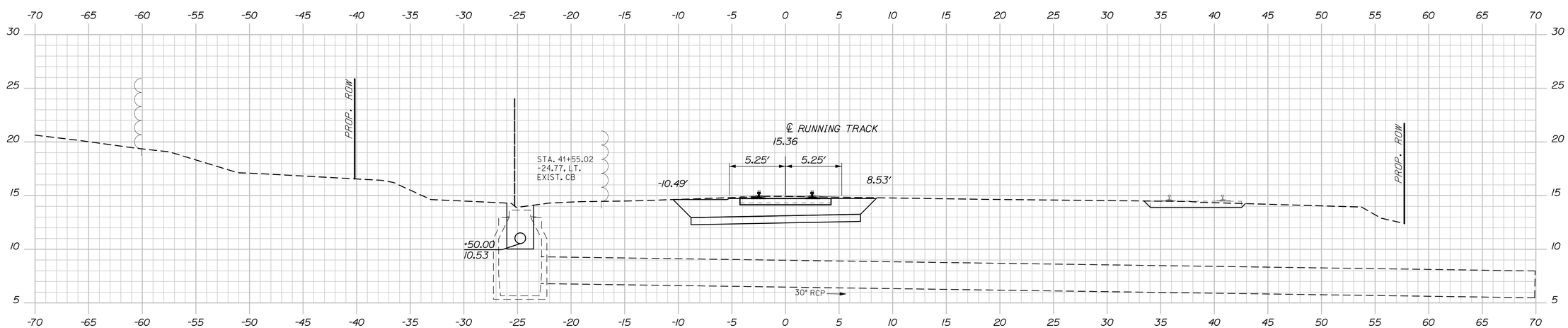

41+50.00

STATE OF MAINE
DEPARTMENT OF TRANSPORTATION

PROJECT NUMBER 022809.20

022809.20

		BY	DATE
PROJ. MANAGER	J. KITTREDGE		
DESIGN-DETAILED	RWH/MM	TJW	06\14
CHECKED-REVIEWED	-	-	06\14
DESIGN2-DETAILED2	-	-	-
DESIGN3-DETAILED3	-	-	-
REVISIONS 1	-	-	-
REVISIONS 2	-	-	-
REVISIONS 3	-	-	-
REVISIONS 4	-	-	-
FIELD CHANGES	-	-	-

SIGNATURE

P.E. NUMBER

DATE

PORTLAND INTERNATIONAL MARINE TERMINAL
EXISTING LAYDOWN AND CONNECTING CORRIDOR CONNECTION
PORTLAND CUMBERLAND COUNTY

TRACK CROSS SECTIONS

SHEET NUMBER

R13

83 OF 116

Sta. 41+50.00 to Sta. 42+00.00

Date:6/26/2014
Username:
Division:
Filename: Xsect_track.dgn

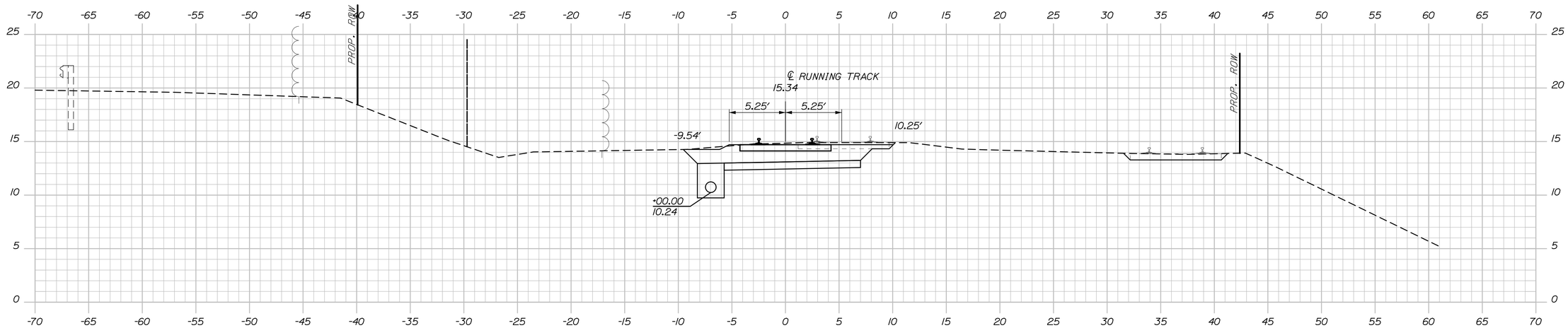

43+00.00

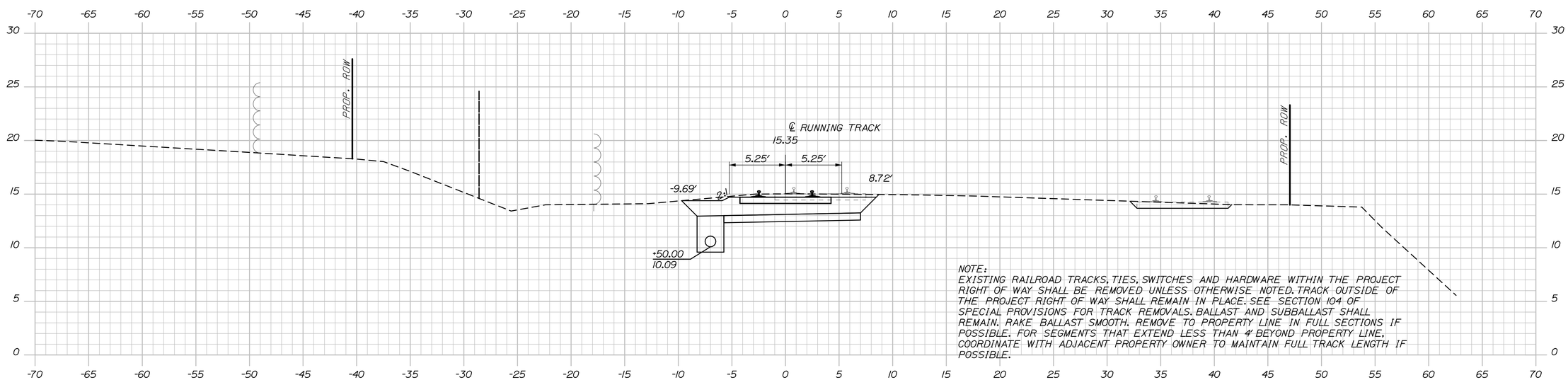

NOTE:
EXISTING RAILROAD TRACKS, TIES, SWITCHES AND HARDWARE WITHIN THE PROJECT RIGHT OF WAY SHALL BE REMOVED UNLESS OTHERWISE NOTED. TRACK OUTSIDE OF THE PROJECT RIGHT OF WAY SHALL REMAIN IN PLACE. SEE SECTION 104 OF SPECIAL PROVISIONS FOR TRACK REMOVALS. BALLAST AND SUBBALLAST SHALL REMAIN. RAKE BALLAST SMOOTH. REMOVE TO PROPERTY LINE IN FULL SECTIONS IF POSSIBLE. FOR SEGMENTS THAT EXTEND LESS THAN 4' BEYOND PROPERTY LINE, COORDINATE WITH ADJACENT PROPERTY OWNER TO MAINTAIN FULL TRACK LENGTH IF POSSIBLE.

42+50.00

STATE OF MAINE
DEPARTMENT OF TRANSPORTATION

PROJECT NUMBER 022809.20

022809.20

PROJ. MANAGER	J. KITTREDGE		
DESIGN-DETAILED	RWH/MM	TJW	06\14
CHECKED-REVIEWED	-	-	06\14
DESIGN2-DETAILED2	-	-	-
DESIGN3-DETAILED3	-	-	-
REVISIONS 1	-	-	-
REVISIONS 2	-	-	-
REVISIONS 3	-	-	-
REVISIONS 4	-	-	-
FIELD CHANGES	-	-	-

SIGNATURE

P.E. NUMBER

DATE

PORTLAND INTERNATIONAL MARINE TERMINAL
EXISTING LAYDOWN AND CONNECTING CORRIDOR CONNECTION
PORTLAND CUMBERLAND COUNTY

TRACK CROSS SECTIONS

SHEET NUMBER

R14

Sta. 42+50.00 to Sta. 43+00.00

Date:6/26/2014
Username:
Division:
Filename: Xsect_track.dgn

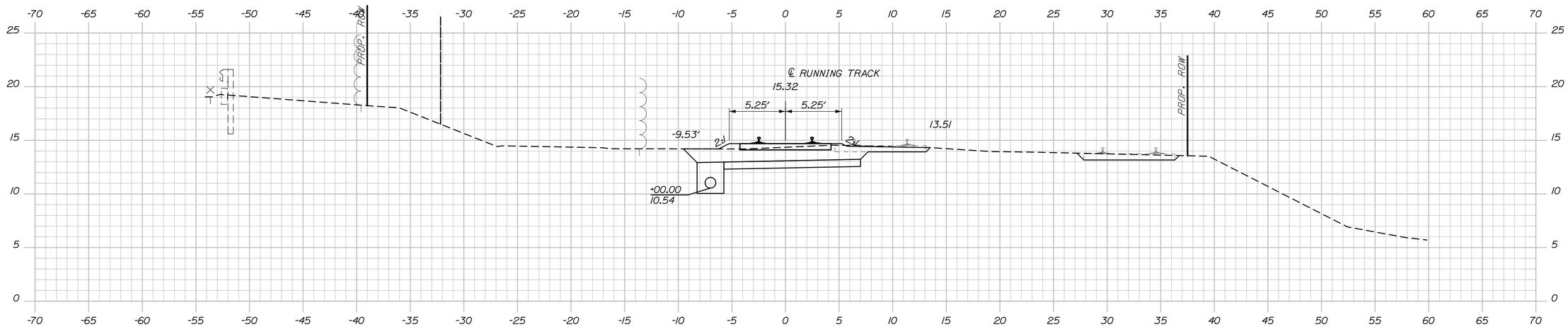

44+00.00

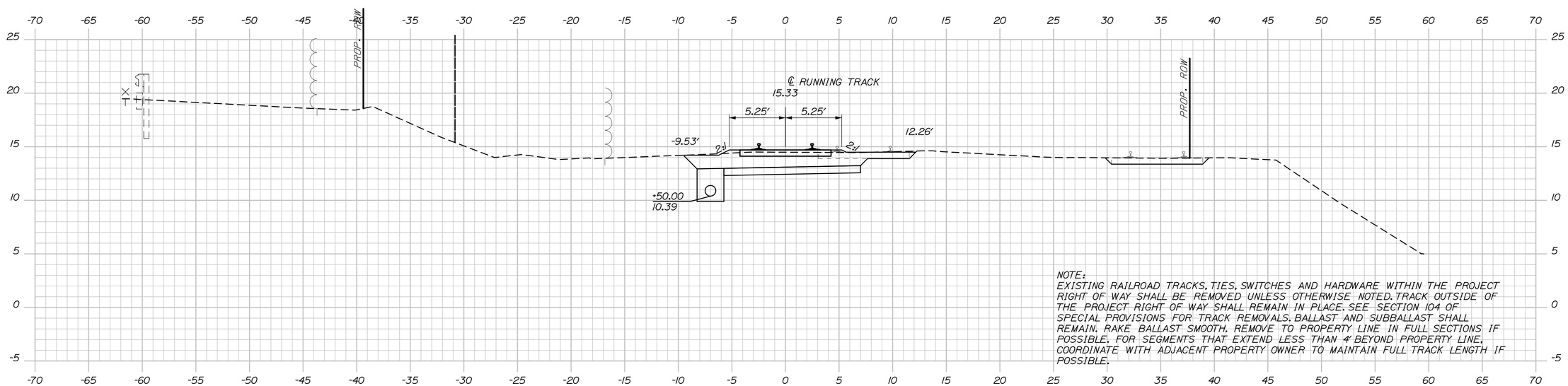

NOTE:
EXISTING RAILROAD TRACKS, TIES, SWITCHES AND HARDWARE WITHIN THE PROJECT RIGHT OF WAY SHALL BE REMOVED UNLESS OTHERWISE NOTED. TRACK OUTSIDE OF THE PROJECT RIGHT OF WAY SHALL REMAIN IN PLACE. SEE SECTION 104 OF SPECIAL PROVISIONS FOR TRACK REMOVALS. BALLAST AND SUBBALLAST SHALL REMAIN. RAKE BALLAST SMOOTH. REMOVE TO PROPERTY LINE IN FULL SECTIONS IF POSSIBLE. FOR SEGMENTS THAT EXTEND LESS THAN 4' BEYOND PROPERTY LINE, COORDINATE WITH ADJACENT PROPERTY OWNER TO MAINTAIN FULL TRACK LENGTH IF POSSIBLE.

43+50.00

STATE OF MAINE
DEPARTMENT OF TRANSPORTATION

PROJECT NUMBER 022809.20

022809.20

PROJ. MANAGER	J. KITTREDGE	BY	DATE
DESIGN-DETAILED	RWH/WM	TJW	06\14
CHECKED-REVIEWED	-	-	06\14
DESIGN2-DETAILED2	-	-	-
DESIGN3-DETAILED3	-	-	-
REVISIONS 1	-	-	-
REVISIONS 2	-	-	-
REVISIONS 3	-	-	-
REVISIONS 4	-	-	-
FIELD CHANGES	-	-	-

SIGNATURE

P.E. NUMBER

DATE

PORTLAND INTERNATIONAL MARINE TERMINAL
EXISTING LAYDOWN AND CONNECTING CORRIDOR CONNECTION
PORTLAND CUMBERLAND COUNTY

TRACK CROSS SECTIONS

SHEET NUMBER
R15
85 OF 116

Sta. 43+50.00 to Sta. 44+00.00

Date:6/26/2014
Username:
Division:
Filename: Xsect_track.dgn

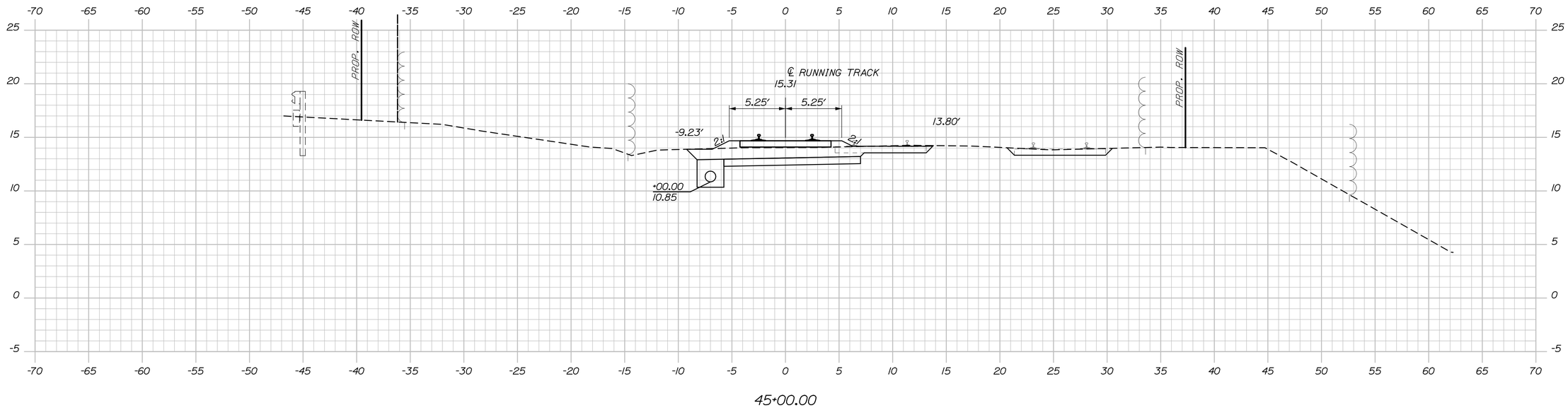

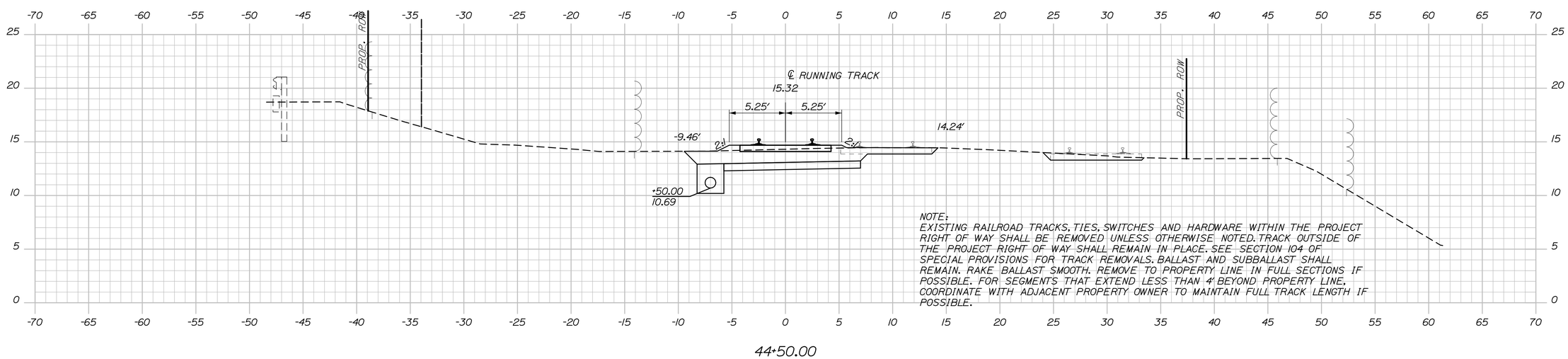

NOTE:
EXISTING RAILROAD TRACKS, TIES, SWITCHES AND HARDWARE WITHIN THE PROJECT RIGHT OF WAY SHALL BE REMOVED UNLESS OTHERWISE NOTED. TRACK OUTSIDE OF THE PROJECT RIGHT OF WAY SHALL REMAIN IN PLACE. SEE SECTION 104 OF SPECIAL PROVISIONS FOR TRACK REMOVALS. BALLAST AND SUBBALLAST SHALL REMAIN. RAKE BALLAST SMOOTH. REMOVE TO PROPERTY LINE IN FULL SECTIONS IF POSSIBLE. FOR SEGMENTS THAT EXTEND LESS THAN 4' BEYOND PROPERTY LINE, COORDINATE WITH ADJACENT PROPERTY OWNER TO MAINTAIN FULL TRACK LENGTH IF POSSIBLE.

STATE OF MAINE
DEPARTMENT OF TRANSPORTATION

PROJECT NUMBER 022809.20

022809.20

		BY	DATE
PROJ. MANAGER	J. KITTREDGE		
DESIGN-DETAILED	RWH/NM	TJW	06\14
CHECKED-REVIEWED	-	-	06\14
DESIGN2-DETAILED2	-	-	-
DESIGN3-DETAILED3	-	-	-
REVISIONS 1	-	-	-
REVISIONS 2	-	-	-
REVISIONS 3	-	-	-
REVISIONS 4	-	-	-
FIELD CHANGES	-	-	-

SIGNATURE

P.E. NUMBER

DATE

PORTLAND INTERNATIONAL MARINE TERMINAL
EXISTING LAYDOWN AND CONNECTING CORRIDOR CONNECTION
PORTLAND CUMBERLAND COUNTY

TRACK CROSS SECTIONS

SHEET NUMBER

R16

86 OF 116

Sta. 44+50.00 to Sta. 45+00.00

Date:6/26/2014

Username:

Division:

Filename: Xsect_track.dgn

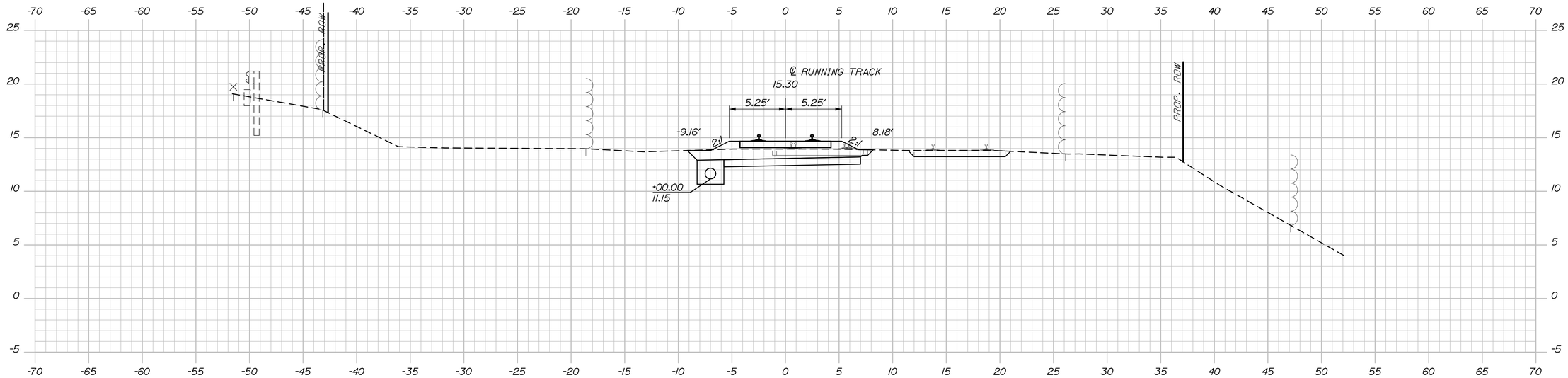

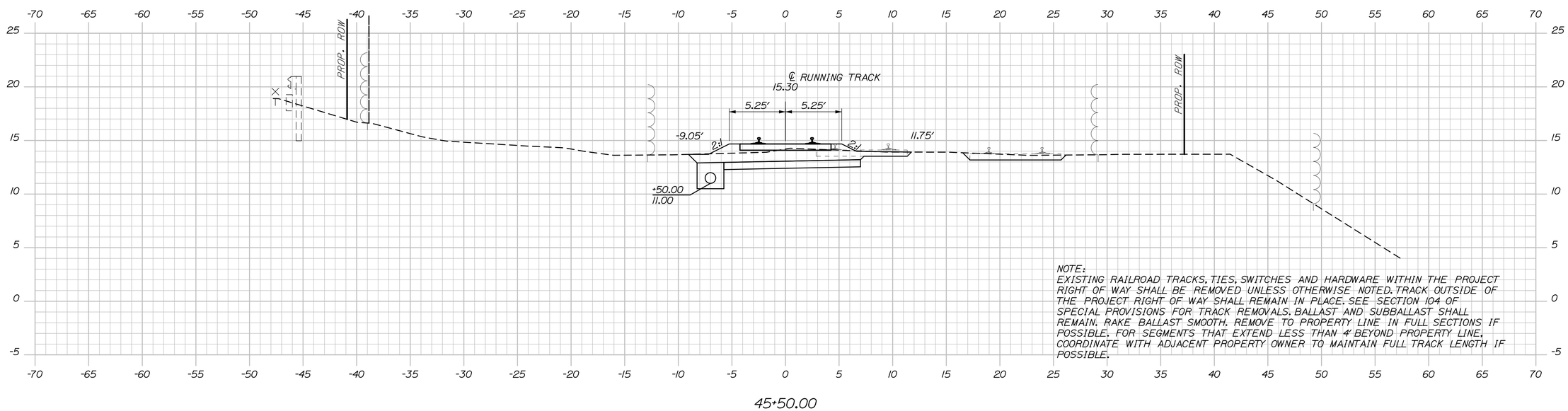

NOTE:
EXISTING RAILROAD TRACKS, TIES, SWITCHES AND HARDWARE WITHIN THE PROJECT RIGHT OF WAY SHALL BE REMOVED UNLESS OTHERWISE NOTED. TRACK OUTSIDE OF THE PROJECT RIGHT OF WAY SHALL REMAIN IN PLACE. SEE SECTION 104 OF SPECIAL PROVISIONS FOR TRACK REMOVALS. BALLAST AND SUBBALLAST SHALL REMAIN. RAKE BALLAST SMOOTH. REMOVE TO PROPERTY LINE IN FULL SECTIONS IF POSSIBLE. FOR SEGMENTS THAT EXTEND LESS THAN 4' BEYOND PROPERTY LINE, COORDINATE WITH ADJACENT PROPERTY OWNER TO MAINTAIN FULL TRACK LENGTH IF POSSIBLE.

STATE OF MAINE
DEPARTMENT OF TRANSPORTATION

PROJECT NUMBER 022809.20

022809.20

PROJ. MANAGER	J. KITTREDGE	BY	DATE
DESIGN-DETAILED	RWH/NM	TJW	06\14
CHECKED-REVIEWED	-	-	06\14
DESIGN2-DETAILED2	-	-	-
DESIGN3-DETAILED3	-	-	-
REVISIONS 1	-	-	-
REVISIONS 2	-	-	-
REVISIONS 3	-	-	-
REVISIONS 4	-	-	-
FIELD CHANGES	-	-	-

SIGNATURE

P.E. NUMBER

DATE

PORTLAND INTERNATIONAL MARINE TERMINAL
EXISTING LAYDOWN AND CONNECTING CORRIDOR CONNECTION
PORTLAND CUMBERLAND COUNTY

TRACK CROSS SECTIONS

SHEET NUMBER

R17

Sta. 45+50.00 to Sta. 46+00.00

Date:6/26/2014
Username:
Division:
Filename: Xsect_track.dgn

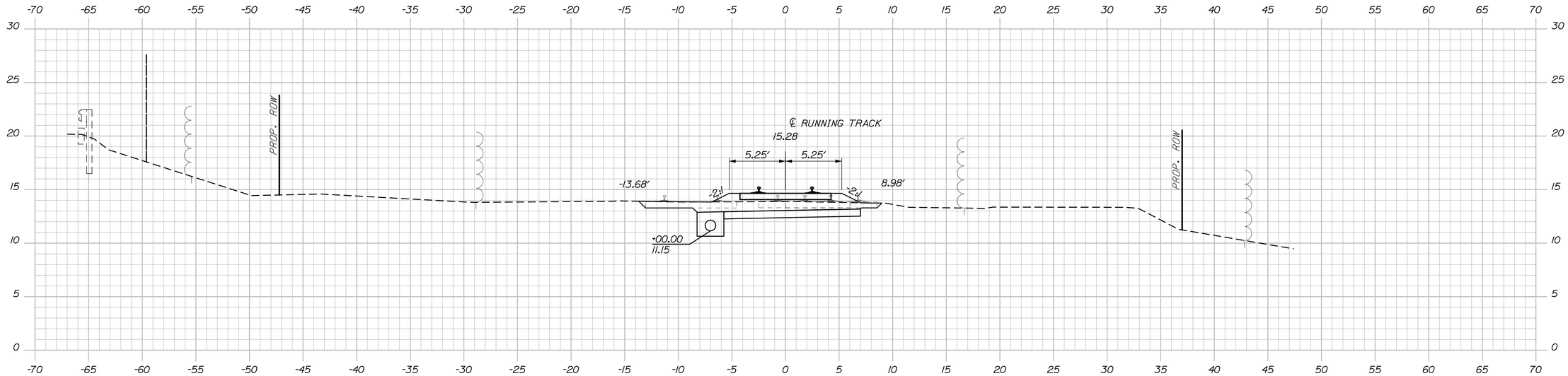

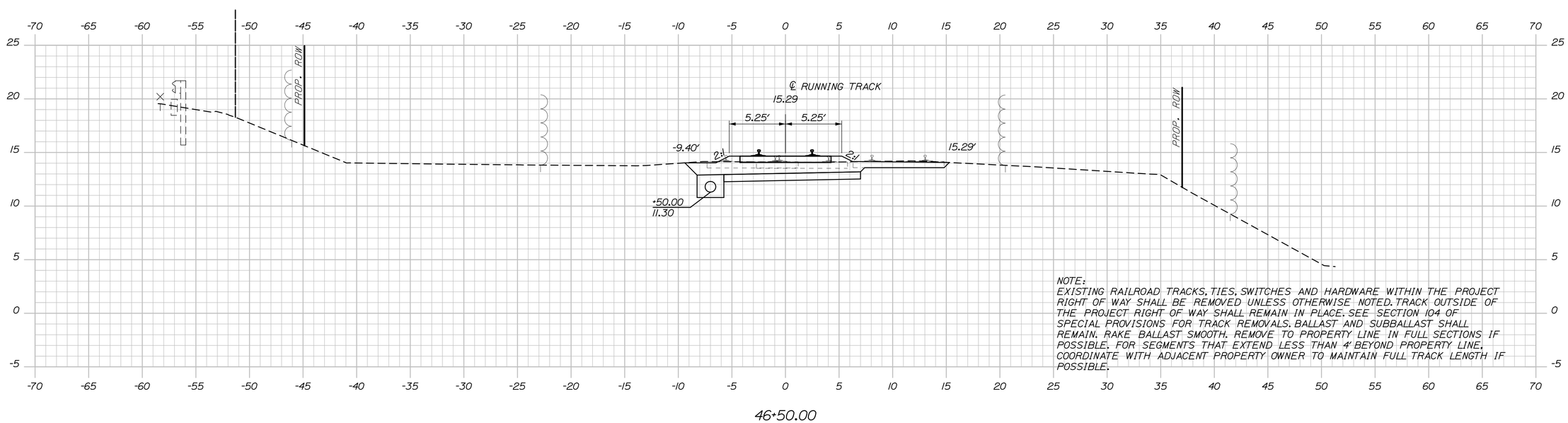

NOTE:
EXISTING RAILROAD TRACKS, TIES, SWITCHES AND HARDWARE WITHIN THE PROJECT RIGHT OF WAY SHALL BE REMOVED UNLESS OTHERWISE NOTED. TRACK OUTSIDE OF THE PROJECT RIGHT OF WAY SHALL REMAIN IN PLACE. SEE SECTION 104 OF SPECIAL PROVISIONS FOR TRACK REMOVALS. BALLAST AND SUBBALLAST SHALL REMAIN. RAKE BALLAST SMOOTH. REMOVE TO PROPERTY LINE IN FULL SECTIONS IF POSSIBLE. FOR SEGMENTS THAT EXTEND LESS THAN 4' BEYOND PROPERTY LINE, COORDINATE WITH ADJACENT PROPERTY OWNER TO MAINTAIN FULL TRACK LENGTH IF POSSIBLE.

STATE OF MAINE
DEPARTMENT OF TRANSPORTATION

PROJECT NUMBER 022809.20

022809.20

		BY	DATE
PROJ. MANAGER	J. KITTREDGE		
DESIGN-DETAILED	RWH/MM	TJW	06\14
CHECKED-REVIEWED	-	-	06\14
DESIGN2-DETAILED2	-	-	-
DESIGN3-DETAILED3	-	-	-
REVISIONS 1	-	-	-
REVISIONS 2	-	-	-
REVISIONS 3	-	-	-
REVISIONS 4	-	-	-
FIELD CHANGES	-	-	-

SIGNATURE

P.E. NUMBER

DATE

PORTLAND INTERNATIONAL MARINE TERMINAL
EXISTING LAYDOWN AND CONNECTING CORRIDOR CONNECTION
PORTLAND CUMBERLAND COUNTY

TRACK CROSS SECTIONS

SHEET NUMBER

R18

Sta. 46+50.00 to Sta. 47+00.00

Date:6/26/2014
Username:
Division:
Filename: Xsect_track.dgn

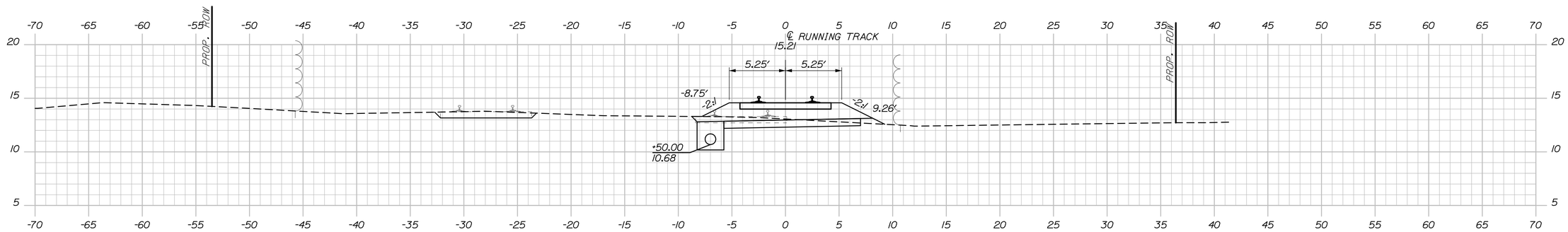

48+50.00

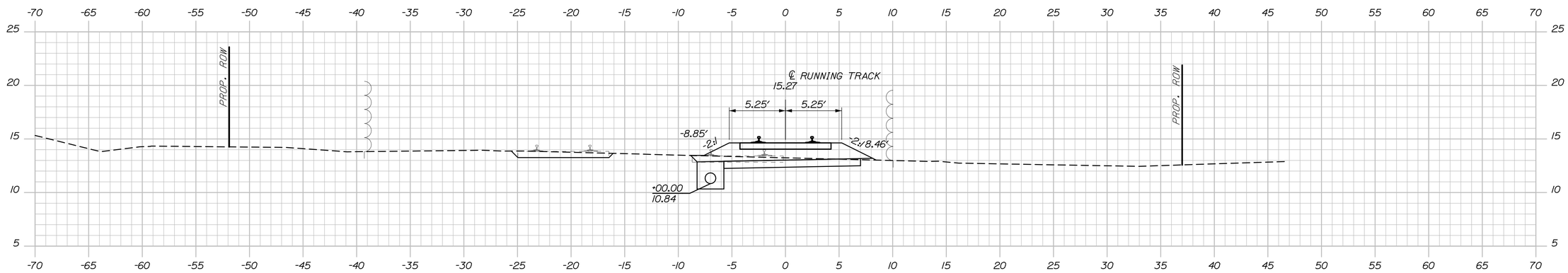

48+00.00

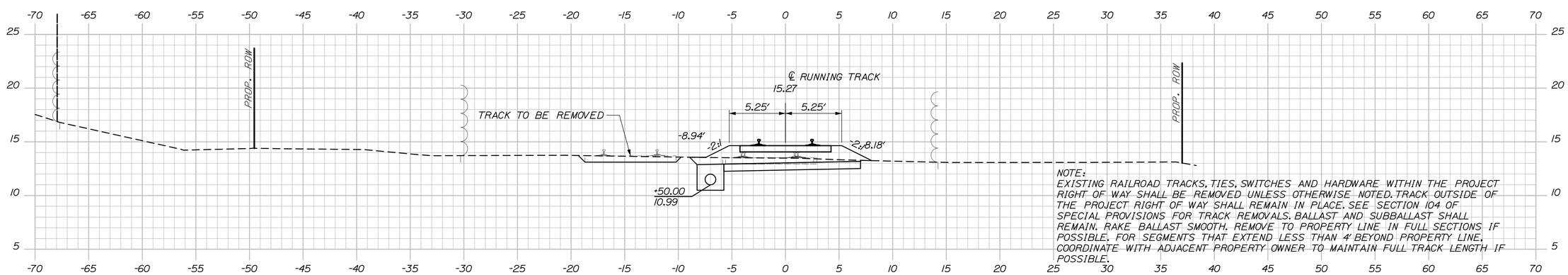

NOTE:
EXISTING RAILROAD TRACKS, TIES, SWITCHES AND HARDWARE WITHIN THE PROJECT RIGHT OF WAY SHALL BE REMOVED UNLESS OTHERWISE NOTED. TRACK OUTSIDE OF THE PROJECT RIGHT OF WAY SHALL REMAIN IN PLACE. SEE SECTION 104 OF SPECIAL PROVISIONS FOR TRACK REMOVALS. BALLAST AND SUBBALLAST SHALL REMAIN. RAKE BALLAST SMOOTH. REMOVE TO PROPERTY LINE IN FULL SECTIONS IF POSSIBLE. FOR SEGMENTS THAT EXTEND LESS THAN 4' BEYOND PROPERTY LINE, COORDINATE WITH ADJACENT PROPERTY OWNER TO MAINTAIN FULL TRACK LENGTH IF POSSIBLE.

47+50.00

STATE OF MAINE
DEPARTMENT OF TRANSPORTATION

PROJECT NUMBER 022809.20

PIN
022809.20

		BY	DATE
PROJ. MANAGER	J. KITTREDGE		
DESIGN-DETAILED	RWH/NM	TJW	06\14
CHECKED-REVIEWED	-	-	06\14
DESIGN2-DETAILED2	-	-	-
DESIGN3-DETAILED3	-	-	-
REVISIONS 1	-	-	-
REVISIONS 2	-	-	-
REVISIONS 3	-	-	-
REVISIONS 4	-	-	-
FIELD CHANGES	-	-	-

SIGNATURE

P.E. NUMBER

DATE

PORTLAND INTERNATIONAL MARINE TERMINAL
EXISTING LAYDOWN AND CONNECTING CORRIDOR CONNECTION
PORTLAND CUMBERLAND COUNTY

TRACK CROSS SECTIONS

SHEET NUMBER
R19

Sta. 47+50.00 to Sta. 48+50.00

Date:6/26/2014
Username:
Division:
Filename: Xsect_track.dgn

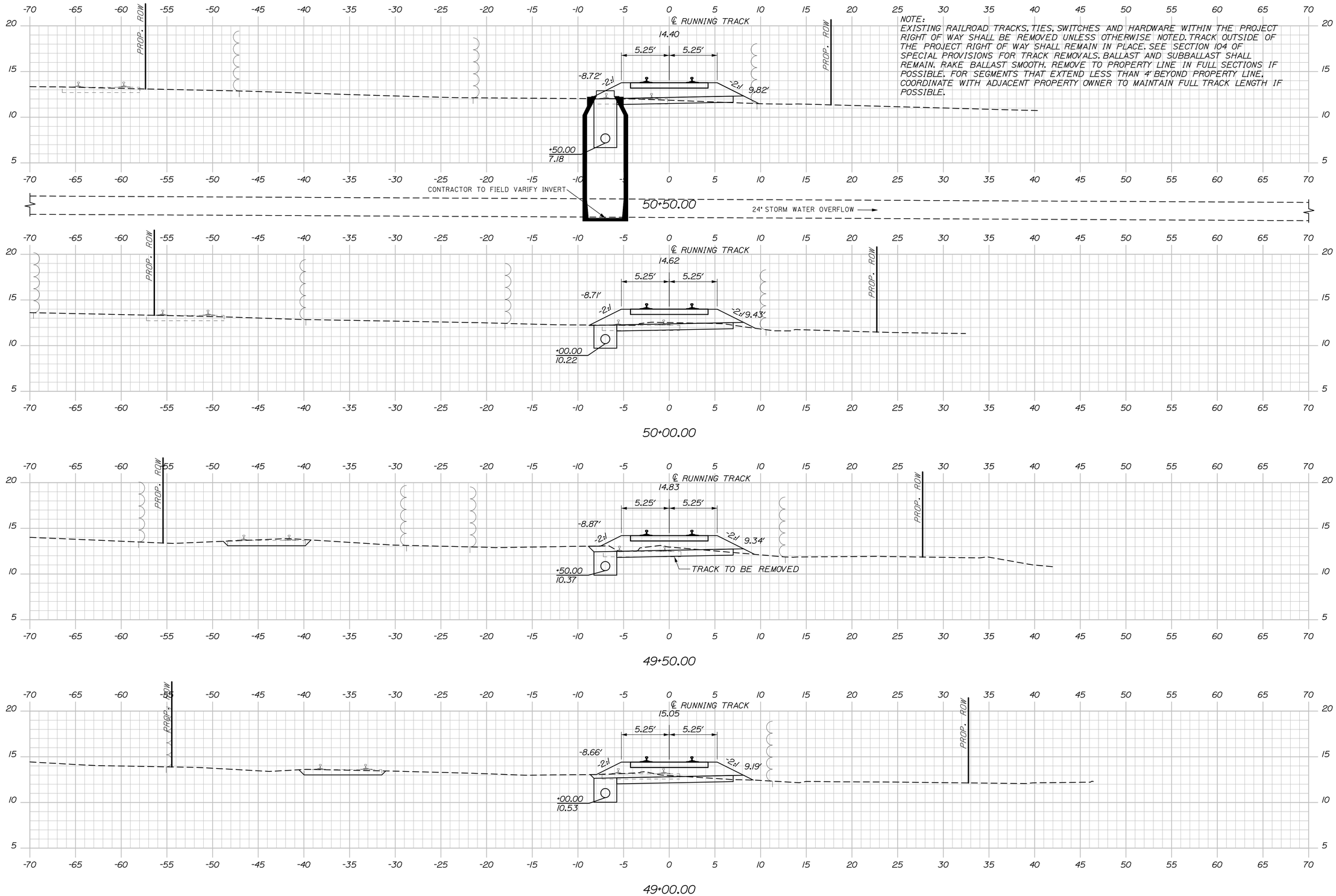

NOTE:
EXISTING RAILROAD TRACKS, TIES, SWITCHES AND HARDWARE WITHIN THE PROJECT RIGHT OF WAY SHALL BE REMOVED UNLESS OTHERWISE NOTED. TRACK OUTSIDE OF THE PROJECT RIGHT OF WAY SHALL REMAIN IN PLACE. SEE SECTION 104 OF SPECIAL PROVISIONS FOR TRACK REMOVALS. BALLAST AND SUBBALLAST SHALL REMAIN. RAKE BALLAST SMOOTH. REMOVE TO PROPERTY LINE IN FULL SECTIONS IF POSSIBLE. FOR SEGMENTS THAT EXTEND LESS THAN 4' BEYOND PROPERTY LINE, COORDINATE WITH ADJACENT PROPERTY OWNER TO MAINTAIN FULL TRACK LENGTH IF POSSIBLE.

STATE OF MAINE
DEPARTMENT OF TRANSPORTATION

PROJECT NUMBER 022809.20

PIN
022809.20

		BY	DATE
PROJ. MANAGER	J. KITTREDGE		
DESIGN-DETAILED	RWH/WM	TJW	06\14
CHECKED-REVIEWED	-	-	06\14
DESIGN2-DETAILED2	-	-	-
DESIGN3-DETAILED3	-	-	-
REVISIONS 1	-	-	-
REVISIONS 2	-	-	-
REVISIONS 3	-	-	-
REVISIONS 4	-	-	-
FIELD CHANGES	-	-	-

SIGNATURE

P.E. NUMBER

DATE

PORTLAND INTERNATIONAL MARINE TERMINAL
EXISTING LAYDOWN AND CONNECTING CORRIDOR CONNECTION
PORTLAND CUMBERLAND COUNTY

TRACK CROSS SECTIONS

SHEET NUMBER
R20
90 OF 116

Sta. 49+00.00 to Sta. 50+50.00

Date:6/26/2014
Username:
Division:
Filename: Xsect_track.dgn

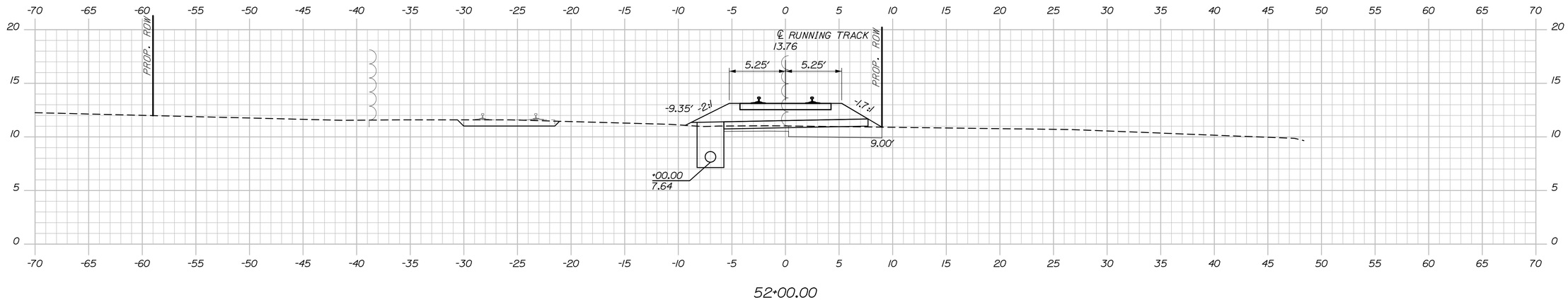

52+00.00

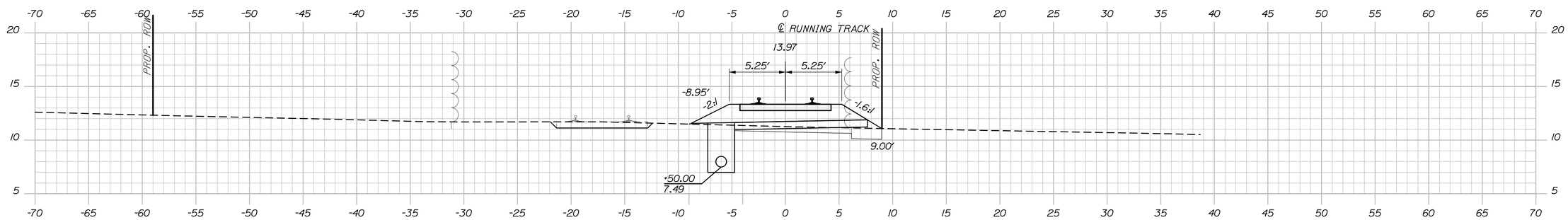

51+50.00

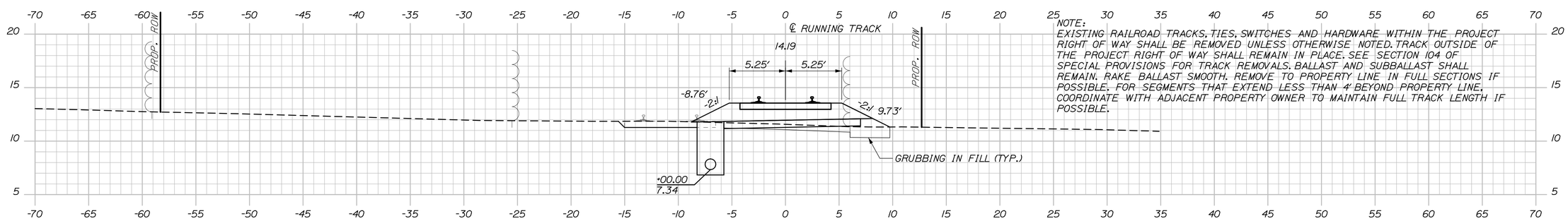

51+00.00

NOTE:
EXISTING RAILROAD TRACKS, TIES, SWITCHES AND HARDWARE WITHIN THE PROJECT RIGHT OF WAY SHALL BE REMOVED UNLESS OTHERWISE NOTED. TRACK OUTSIDE OF THE PROJECT RIGHT OF WAY SHALL REMAIN IN PLACE. SEE SECTION 104 OF SPECIAL PROVISIONS FOR TRACK REMOVALS. BALLAST AND SUBBALLAST SHALL REMAIN. RAKE BALLAST SMOOTH. REMOVE TO PROPERTY LINE IN FULL SECTIONS IF POSSIBLE. FOR SEGMENTS THAT EXTEND LESS THAN 4' BEYOND PROPERTY LINE, COORDINATE WITH ADJACENT PROPERTY OWNER TO MAINTAIN FULL TRACK LENGTH IF POSSIBLE.

STATE OF MAINE
DEPARTMENT OF TRANSPORTATION

PROJECT NUMBER 022809.20

PIN
022809.20

		BY	DATE
PROJ. MANAGER	J. KITTREDGE		
DESIGN-DETAILED	RWH/WM	TJW	06\14
CHECKED-REVIEWED	-	-	06\14
DESIGN2-DETAILED2	-	-	-
DESIGN3-DETAILED3	-	-	-
REVISIONS 1	-	-	-
REVISIONS 2	-	-	-
REVISIONS 3	-	-	-
REVISIONS 4	-	-	-
FIELD CHANGES	-	-	-

SIGNATURE

P.E. NUMBER

DATE

PORTLAND INTERNATIONAL MARINE TERMINAL
EXISTING LAYDOWN AND CONNECTING CORRIDOR CONNECTION
PORTLAND CUMBERLAND COUNTY

TRACK CROSS SECTIONS

SHEET NUMBER

R21

Sta. 51+00.00 to Sta. 52+00.00

Date:6/26/2014
Username:
Division:
Filename: Xsect_track.dgn

NOTE:
EXISTING RAILROAD TRACKS, TIES, SWITCHES AND HARDWARE WITHIN THE PROJECT RIGHT OF WAY SHALL BE REMOVED UNLESS OTHERWISE NOTED. TRACK OUTSIDE OF THE PROJECT RIGHT OF WAY SHALL REMAIN IN PLACE. SEE SECTION 104 OF SPECIAL PROVISIONS FOR TRACK REMOVALS. BALLAST AND SUBBALLAST SHALL REMAIN. RAKE BALLAST SMOOTH. REMOVE TO PROPERTY LINE IN FULL SECTIONS IF POSSIBLE. FOR SEGMENTS THAT EXTEND LESS THAN 4' BEYOND PROPERTY LINE, COORDINATE WITH ADJACENT PROPERTY OWNER TO MAINTAIN FULL TRACK LENGTH IF POSSIBLE.

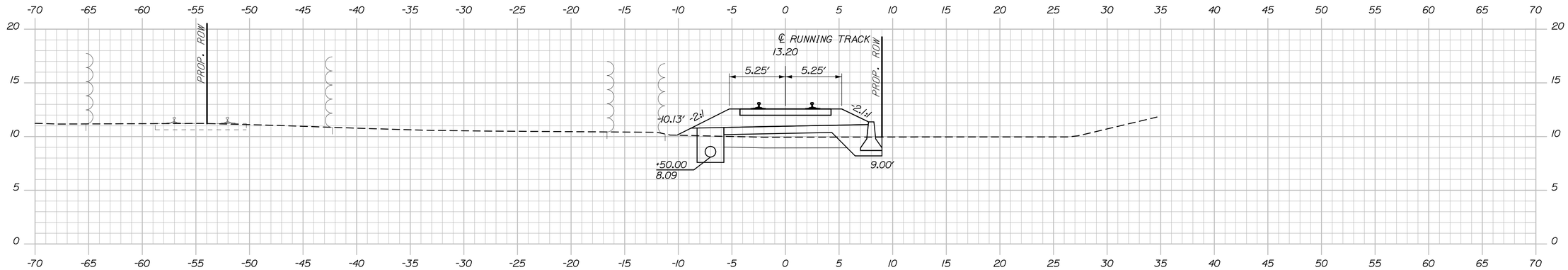

53+50.00

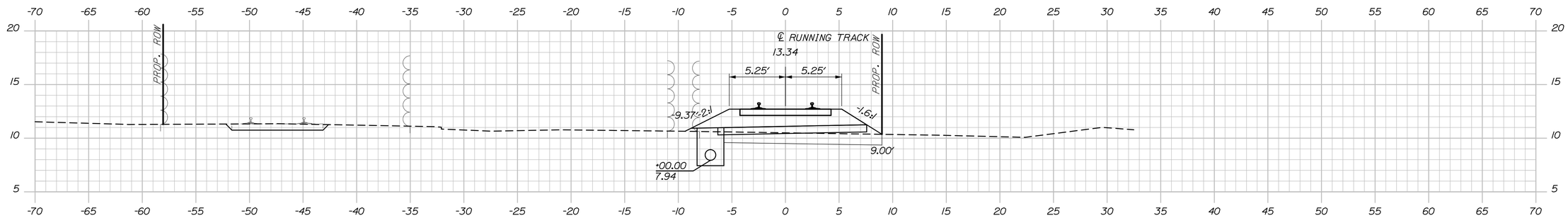

53+00.00

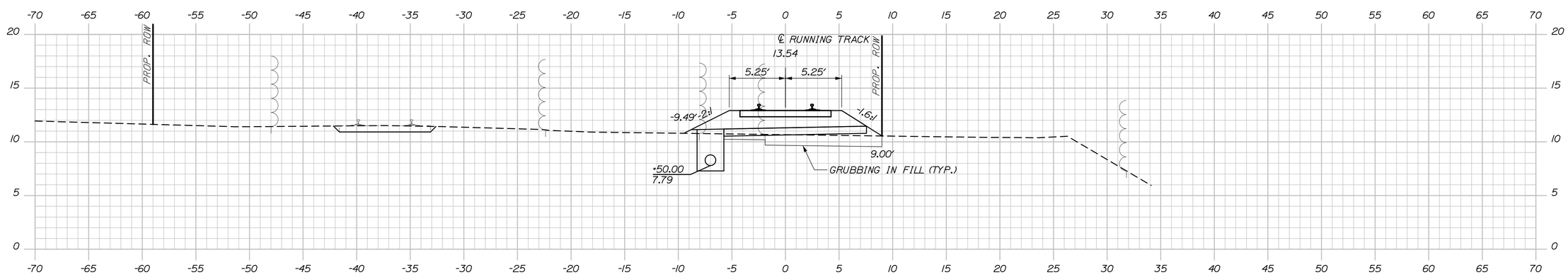

52+50.00

STATE OF MAINE
DEPARTMENT OF TRANSPORTATION

PROJECT NUMBER 022809.20

PIN
022809.20

		BY	DATE
PROJ. MANAGER	J. KITTREDGE		
DESIGN-DETAILED	RWH/MM	TJW	06\14
CHECKED-REVIEWED	-	-	06\14
DESIGN2-DETAILED2	-	-	-
DESIGN3-DETAILED3	-	-	-
REVISIONS 1	-	-	-
REVISIONS 2	-	-	-
REVISIONS 3	-	-	-
REVISIONS 4	-	-	-
FIELD CHANGES	-	-	-

SIGNATURE

P.E. NUMBER

DATE

PORTLAND INTERNATIONAL MARINE TERMINAL
EXISTING LAYDOWN AND CONNECTING CORRIDOR CONNECTION
PORTLAND CUMBERLAND COUNTY

TRACK CROSS SECTIONS

SHEET NUMBER
R22

Sta. 52+50.00 to Sta. 53+50.00

Date:6/26/2014
Username:
Division:
Filename: Xsect_track.dgn

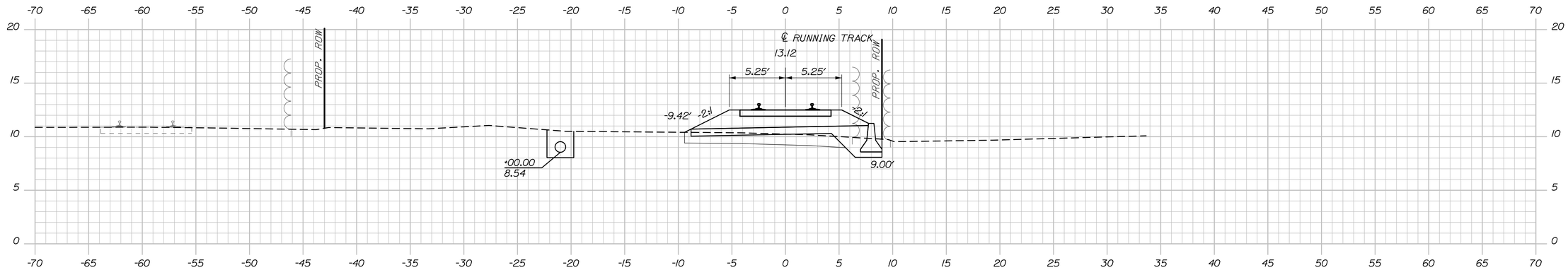

55+00.00

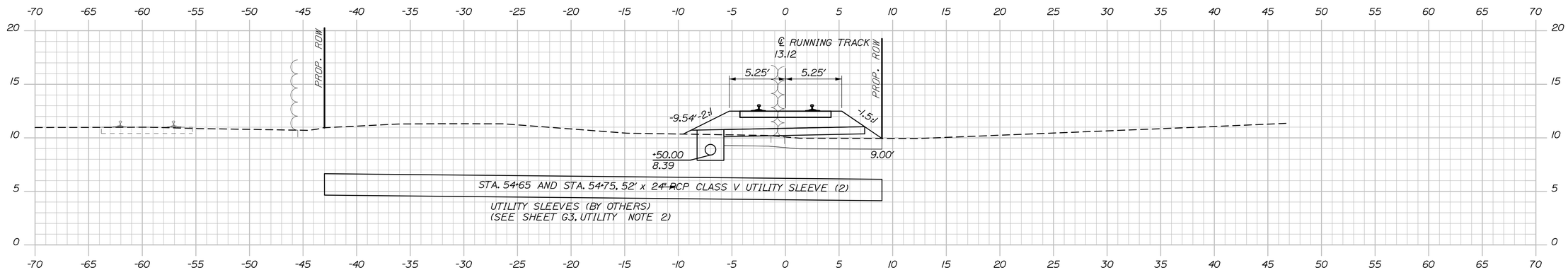

54+50.00

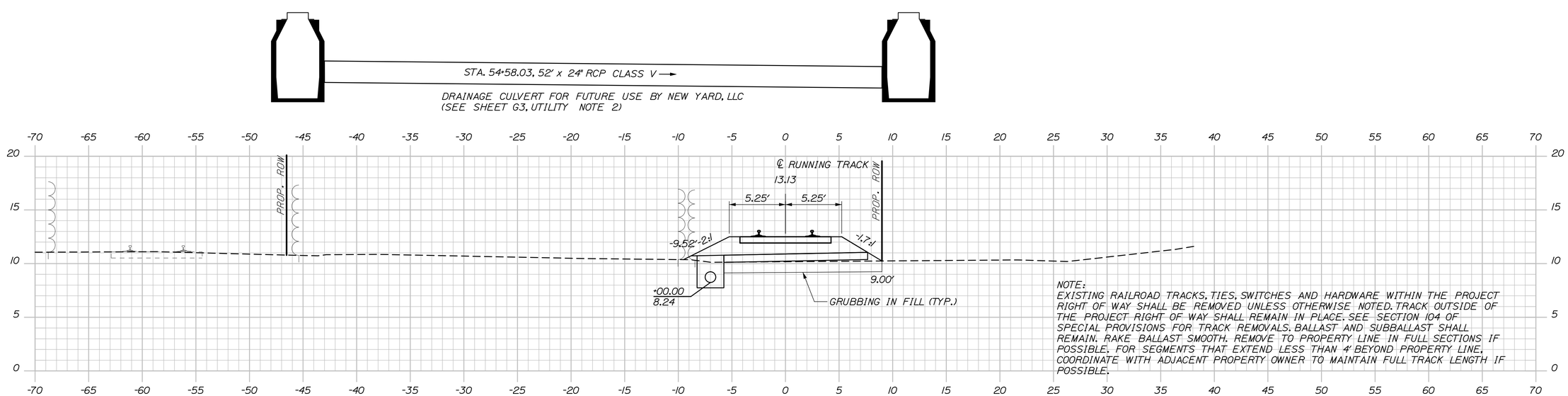

NOTE:
EXISTING RAILROAD TRACKS, TIES, SWITCHES AND HARDWARE WITHIN THE PROJECT RIGHT OF WAY SHALL BE REMOVED UNLESS OTHERWISE NOTED. TRACK OUTSIDE OF THE PROJECT RIGHT OF WAY SHALL REMAIN IN PLACE. SEE SECTION 104 OF SPECIAL PROVISIONS FOR TRACK REMOVALS. BALLAST AND SUBBALLAST SHALL REMAIN. RAKE BALLAST SMOOTH. REMOVE TO PROPERTY LINE IN FULL SECTIONS IF POSSIBLE. FOR SEGMENTS THAT EXTEND LESS THAN 4' BEYOND PROPERTY LINE, COORDINATE WITH ADJACENT PROPERTY OWNER TO MAINTAIN FULL TRACK LENGTH IF POSSIBLE.

54+00.00

Sta. 54+00.00 to Sta. 55+00.00

STATE OF MAINE
DEPARTMENT OF TRANSPORTATION

PROJECT NUMBER 022809.20

PIN
022809.20

		BY	DATE
PROJ. MANAGER	J. KITTREDGE		
DESIGN-DETAILED	RWH/MM	TJW	06\14
CHECKED-REVIEWED	-	-	06\14
DESIGN2-DETAILED2	-	-	-
DESIGN3-DETAILED3	-	-	-
REVISIONS 1	-	-	-
REVISIONS 2	-	-	-
REVISIONS 3	-	-	-
REVISIONS 4	-	-	-
FIELD CHANGES	-	-	-

SIGNATURE

P.E. NUMBER

DATE

PORTLAND INTERNATIONAL MARINE TERMINAL
EXISTING LAYDOWN AND CONNECTING CORRIDOR CONNECTION
PORTLAND CUMBERLAND COUNTY

TRACK CROSS SECTIONS

SHEET NUMBER
R23
93 OF 116

Filename: Xsect_track.dgn
Division:
Username:
Date:7/11/2014

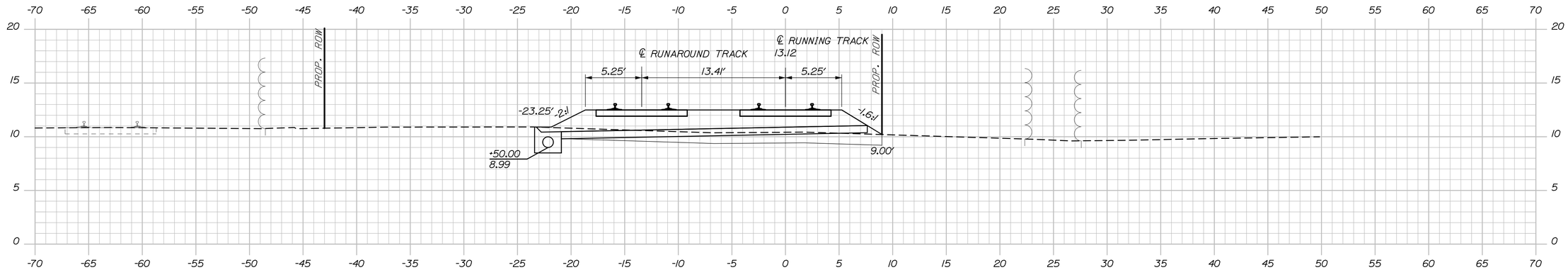

56+50.00

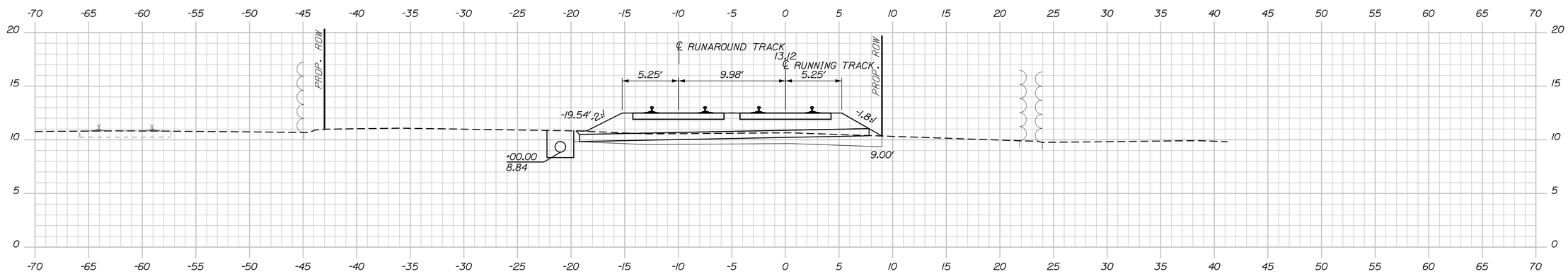

56+00.00

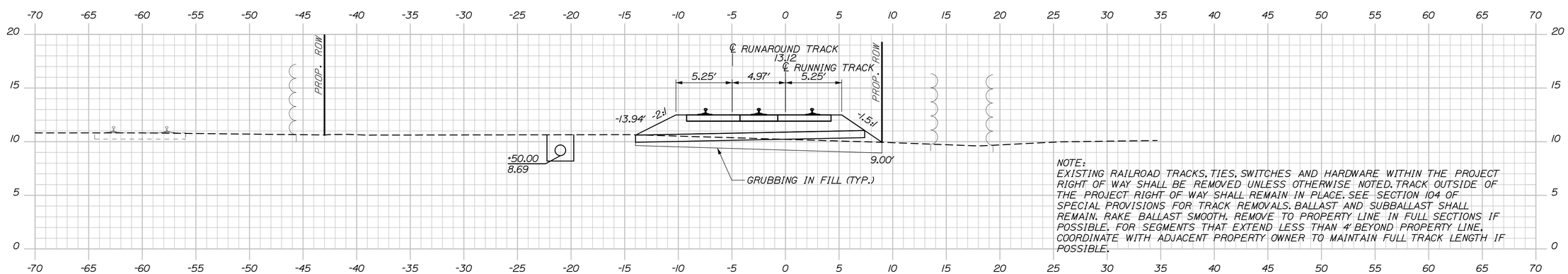

NOTE:
EXISTING RAILROAD TRACKS, TIES, SWITCHES AND HARDWARE WITHIN THE PROJECT RIGHT OF WAY SHALL BE REMOVED UNLESS OTHERWISE NOTED. TRACK OUTSIDE OF THE PROJECT RIGHT OF WAY SHALL REMAIN IN PLACE. SEE SECTION 104 OF SPECIAL PROVISIONS FOR TRACK REMOVALS. BALLAST AND SUBBALLAST SHALL REMAIN. RAKE BALLAST SMOOTH. REMOVE TO PROPERTY LINE IN FULL SECTIONS IF POSSIBLE. FOR SEGMENTS THAT EXTEND LESS THAN 4' BEYOND PROPERTY LINE, COORDINATE WITH ADJACENT PROPERTY OWNER TO MAINTAIN FULL TRACK LENGTH IF POSSIBLE.

55+50.00

STATE OF MAINE
DEPARTMENT OF TRANSPORTATION

PROJECT NUMBER 022809.20

PIN
022809.20

		BY	DATE
PROJ. MANAGER	J. KITTREDGE		
DESIGN-DETAILED	RWH/NM	TJW	06\14
CHECKED-REVIEWED	-	-	06\14
DESIGN2-DETAILED2	-	-	-
DESIGN3-DETAILED3	-	-	-
REVISIONS 1	-	-	-
REVISIONS 2	-	-	-
REVISIONS 3	-	-	-
REVISIONS 4	-	-	-
FIELD CHANGES	-	-	-

SIGNATURE

P.E. NUMBER

DATE

PORTLAND INTERNATIONAL MARINE TERMINAL
EXISTING LAYDOWN AND CONNECTING CORRIDOR CONNECTION
PORTLAND CUMBERLAND COUNTY

TRACK CROSS SECTIONS

SHEET NUMBER
R24
94 OF 116

Sta. 55+50.00 to Sta. 56+50.00

Date:6/26/2014
Username:
Division:
Filename: Xsect_track.dgn

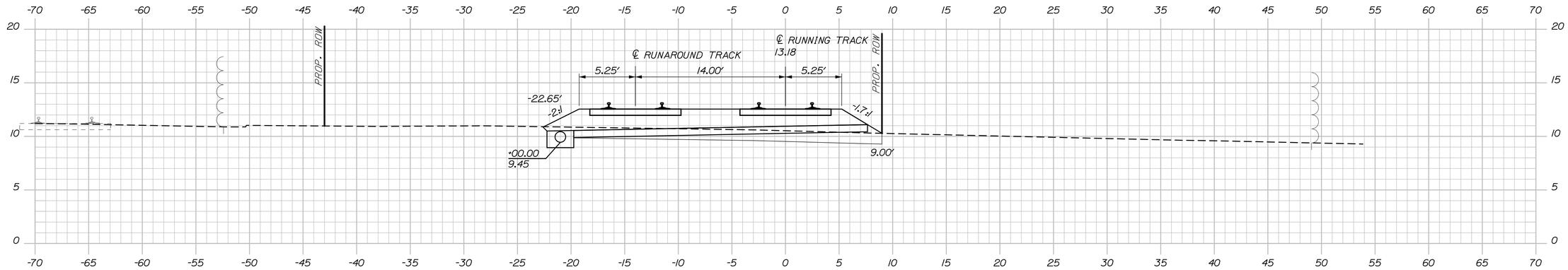

58+00.00

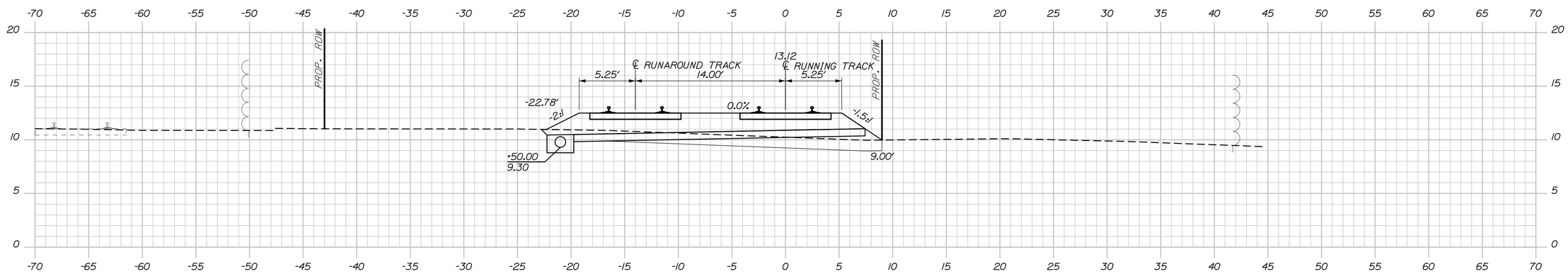

57+50.00

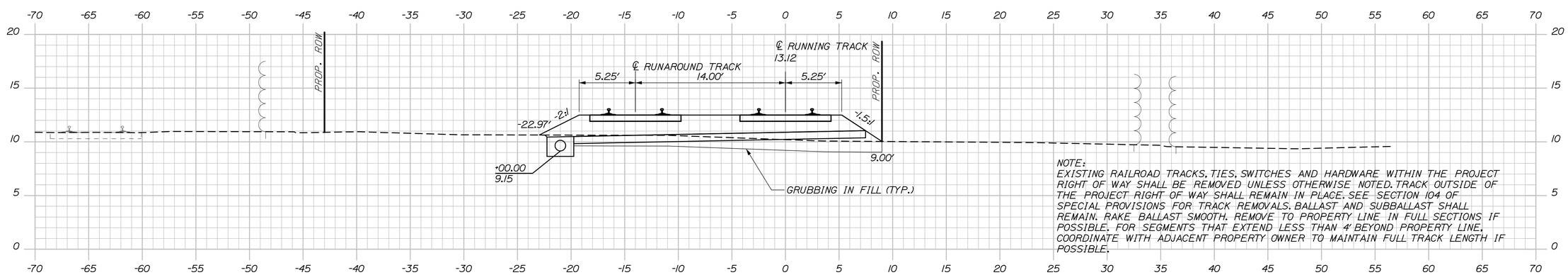

NOTE:
EXISTING RAILROAD TRACKS, TIES, SWITCHES AND HARDWARE WITHIN THE PROJECT RIGHT OF WAY SHALL BE REMOVED UNLESS OTHERWISE NOTED. TRACK OUTSIDE OF THE PROJECT RIGHT OF WAY SHALL REMAIN IN PLACE. SEE SECTION 104 OF SPECIAL PROVISIONS FOR TRACK REMOVALS. BALLAST AND SUBBALLAST SHALL REMAIN. RAKE BALLAST SMOOTH. REMOVE TO PROPERTY LINE IN FULL SECTIONS IF POSSIBLE. FOR SEGMENTS THAT EXTEND LESS THAN 4' BEYOND PROPERTY LINE, COORDINATE WITH ADJACENT PROPERTY OWNER TO MAINTAIN FULL TRACK LENGTH IF POSSIBLE.

57+00.00

STATE OF MAINE
DEPARTMENT OF TRANSPORTATION

PROJECT NUMBER 022809.20

PIN
022809.20

PROJ. MANAGER	J. KITTREDGE	BY	DATE
DESIGN-DETAILED	RWH/MM	TJW	06\14
CHECKED-REVIEWED	-	-	06\14
DESIGN2-DETAILED2	-	-	-
DESIGN3-DETAILED3	-	-	-
REVISIONS 1	-	-	-
REVISIONS 2	-	-	-
REVISIONS 3	-	-	-
REVISIONS 4	-	-	-
FIELD CHANGES	-	-	-

SIGNATURE

P.E. NUMBER

DATE

PORTLAND INTERNATIONAL MARINE TERMINAL
EXISTING LAYDOWN AND CONNECTING CORRIDOR CONNECTION
PORTLAND CUMBERLAND COUNTY

TRACK CROSS SECTIONS

SHEET NUMBER
R25

Sta. 57+00.00 to Sta. 58+00.00

Filename: Xsect_track.dgn Division: Username: Date:6/26/2014

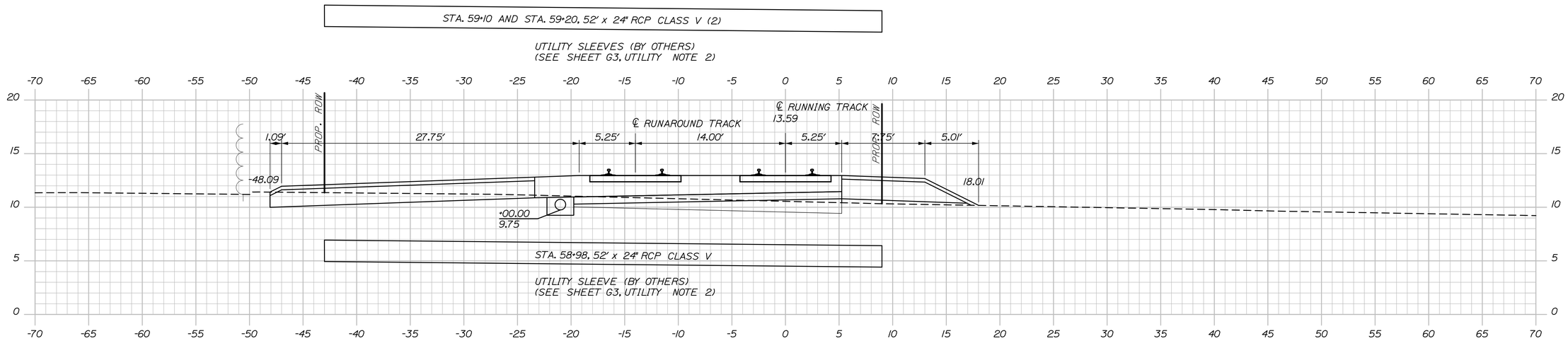

59+00.00

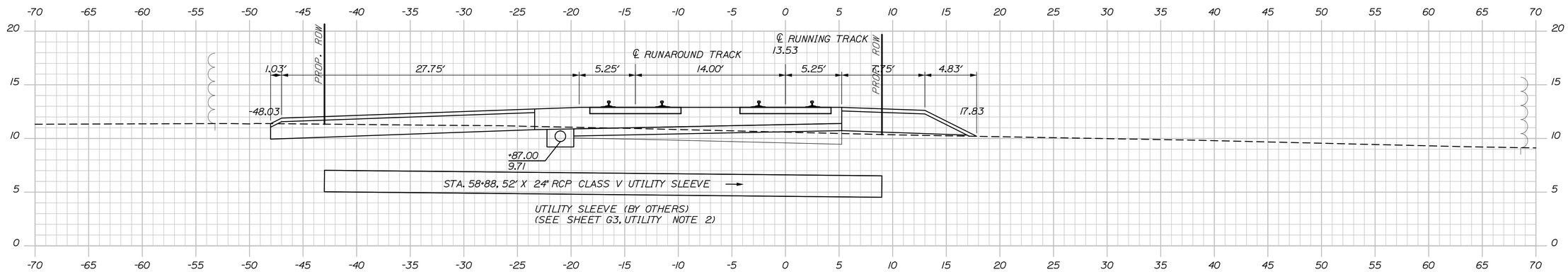

58+87.00

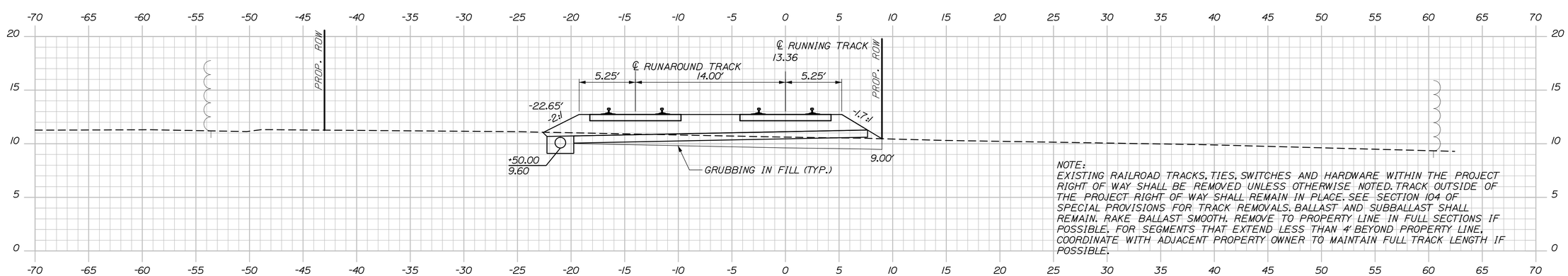

NOTE:
EXISTING RAILROAD TRACKS, TIES, SWITCHES AND HARDWARE WITHIN THE PROJECT RIGHT OF WAY SHALL BE REMOVED UNLESS OTHERWISE NOTED. TRACK OUTSIDE OF THE PROJECT RIGHT OF WAY SHALL REMAIN IN PLACE. SEE SECTION 104 OF SPECIAL PROVISIONS FOR TRACK REMOVALS. BALLAST AND SUBBALLAST SHALL REMAIN. RAKE BALLAST SMOOTH. REMOVE TO PROPERTY LINE IN FULL SECTIONS IF POSSIBLE. FOR SEGMENTS THAT EXTEND LESS THAN 4' BEYOND PROPERTY LINE, COORDINATE WITH ADJACENT PROPERTY OWNER TO MAINTAIN FULL TRACK LENGTH IF POSSIBLE.

58+50.00

STATE OF MAINE
DEPARTMENT OF TRANSPORTATION

PROJECT NUMBER 022809.20

PIN
022809.20

		BY	DATE
PROJ. MANAGER	J. KITTREDGE		
DESIGN-DETAILED	RWH/MM	TJW	06\14
CHECKED-REVIEWED	-	-	06\14
DESIGN2-DETAILED2	-	-	-
DESIGN3-DETAILED3	-	-	-
REVISIONS 1	-	-	-
REVISIONS 2	-	-	-
REVISIONS 3	-	-	-
REVISIONS 4	-	-	-
FIELD CHANGES	-	-	-

SIGNATURE

P.E. NUMBER

DATE

PORTLAND INTERNATIONAL MARINE TERMINAL
EXISTING LAYDOWN AND CONNECTING CORRIDOR CONNECTION
PORTLAND CUMBERLAND COUNTY

TRACK CROSS SECTIONS

SHEET NUMBER
R26
96 OF 116

Sta. 58+50.00 to Sta. 59+00.00

Date:7/11/2014
Username:
Division:
Filename: Xsect_track.dgn

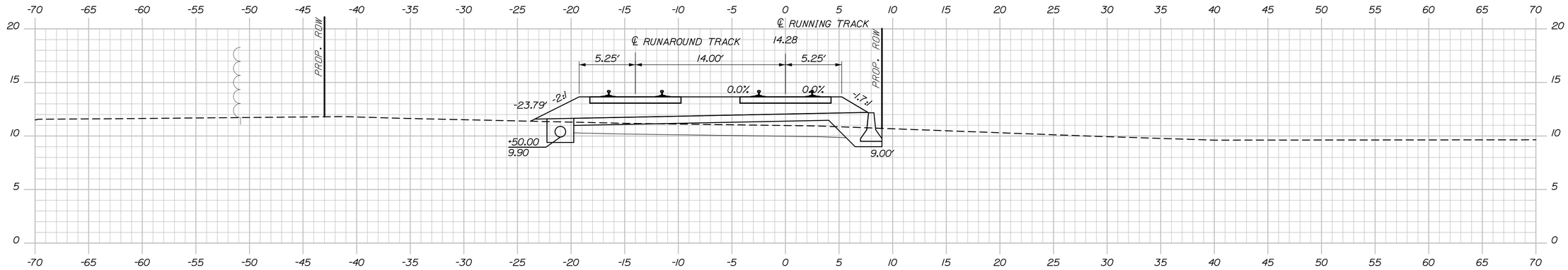

60+50.00

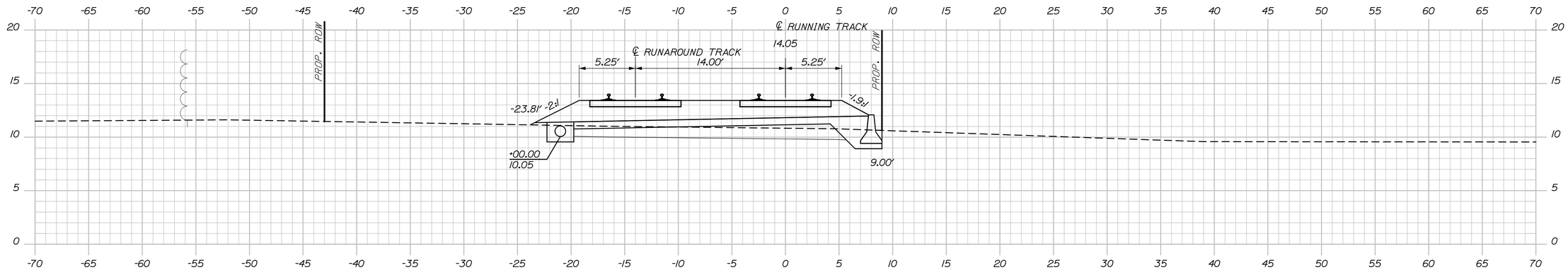

60+00.00

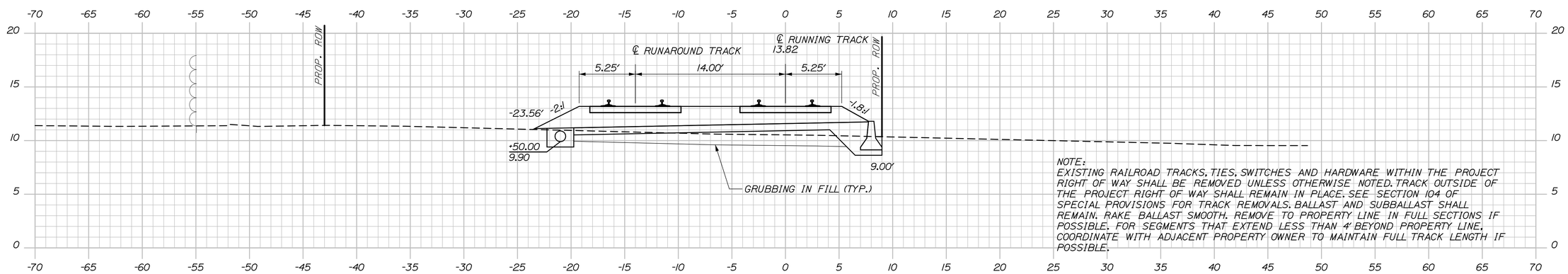

NOTE:
EXISTING RAILROAD TRACKS, TIES, SWITCHES AND HARDWARE WITHIN THE PROJECT RIGHT OF WAY SHALL BE REMOVED UNLESS OTHERWISE NOTED. TRACK OUTSIDE OF THE PROJECT RIGHT OF WAY SHALL REMAIN IN PLACE. SEE SECTION 104 OF SPECIAL PROVISIONS FOR TRACK REMOVALS. BALLAST AND SUBBALLAST SHALL REMAIN. RAKE BALLAST SMOOTH. REMOVE TO PROPERTY LINE IN FULL SECTIONS IF POSSIBLE. FOR SEGMENTS THAT EXTEND LESS THAN 4' BEYOND PROPERTY LINE, COORDINATE WITH ADJACENT PROPERTY OWNER TO MAINTAIN FULL TRACK LENGTH IF POSSIBLE.

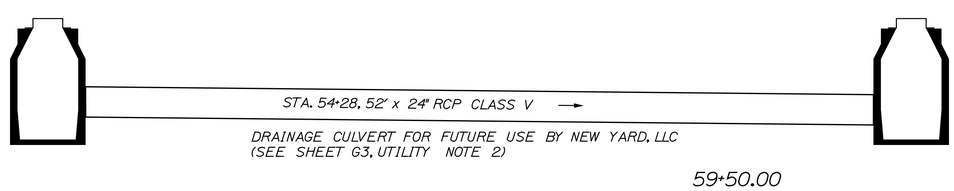

59+50.00

Sta. 59+50.00 to Sta. 60+50.00

STATE OF MAINE
DEPARTMENT OF TRANSPORTATION

PROJECT NUMBER 022809.20

PIN 022809.20

		BY	DATE
PROJ. MANAGER	J. KITTREDGE		
DESIGN-DETAILED	RWH/WM	TJW	06\14
CHECKED-REVIEWED	-	-	06\14
DESIGN2-DETAILED2	-	-	-
DESIGN3-DETAILED3	-	-	-
REVISIONS 1	-	-	-
REVISIONS 2	-	-	-
REVISIONS 3	-	-	-
REVISIONS 4	-	-	-
FIELD CHANGES	-	-	-

SIGNATURE

P.E. NUMBER

DATE

PORTLAND INTERNATIONAL MARINE TERMINAL
EXISTING LAYDOWN AND CONNECTING CORRIDOR CONNECTION
PORTLAND CUMBERLAND COUNTY

TRACK CROSS SECTIONS

SHEET NUMBER

R27

97 OF 116

Date:6/26/2014
Username:
Division:
Filename: Xsect_track.dgn

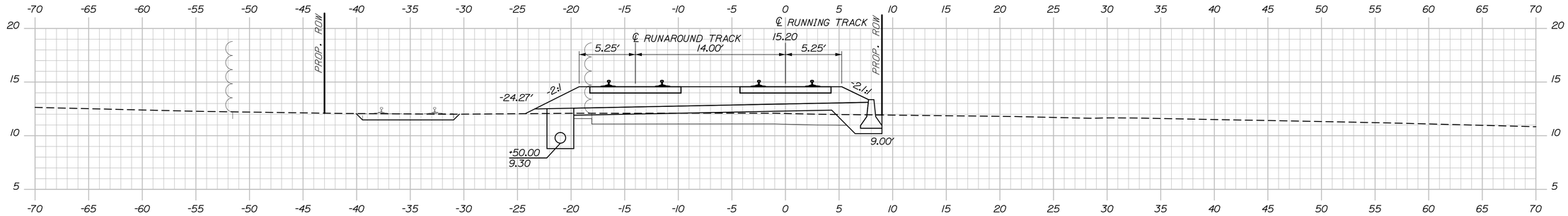

62+50.00

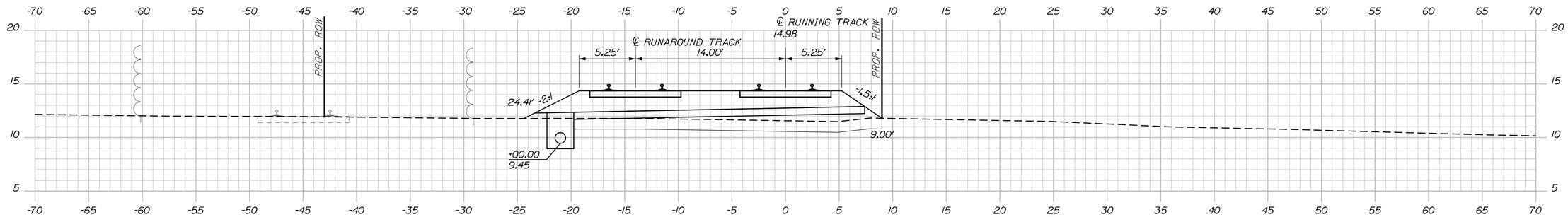

62+00.00

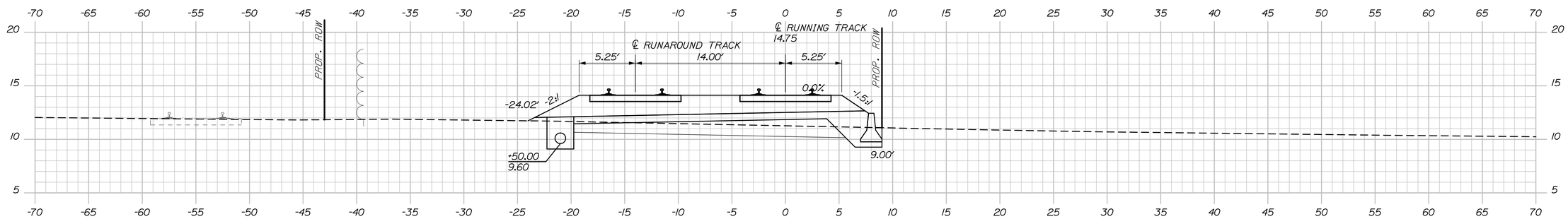

61+50.00

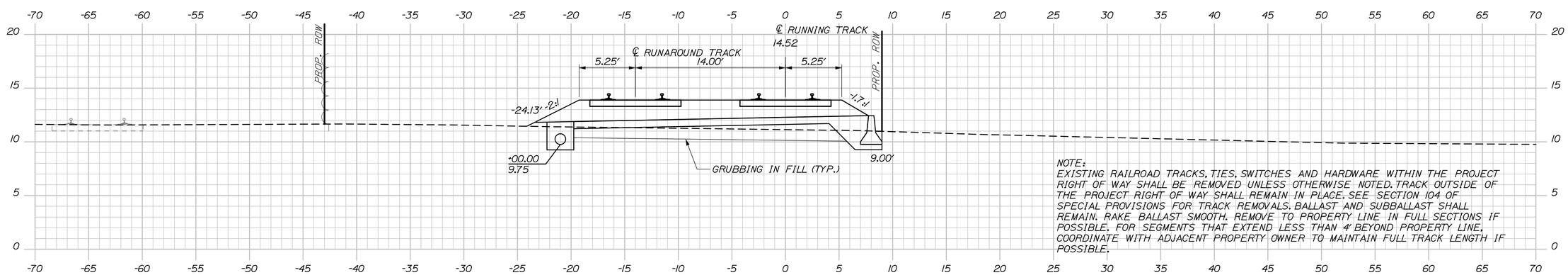

61+00.00

NOTE:
EXISTING RAILROAD TRACKS, TIES, SWITCHES AND HARDWARE WITHIN THE PROJECT RIGHT OF WAY SHALL BE REMOVED UNLESS OTHERWISE NOTED. TRACK OUTSIDE OF THE PROJECT RIGHT OF WAY SHALL REMAIN IN PLACE. SEE SECTION 104 OF SPECIAL PROVISIONS FOR TRACK REMOVALS. BALLAST AND SUBBALLAST SHALL REMAIN. RAKE BALLAST SMOOTH. REMOVE TO PROPERTY LINE IN FULL SECTIONS IF POSSIBLE. FOR SEGMENTS THAT EXTEND LESS THAN 4' BEYOND PROPERTY LINE, COORDINATE WITH ADJACENT PROPERTY OWNER TO MAINTAIN FULL TRACK LENGTH IF POSSIBLE.

STATE OF MAINE
DEPARTMENT OF TRANSPORTATION

PROJECT NUMBER 022809.20

PIN 022809.20

		BY	DATE
PROJ. MANAGER	J. KITTREDGE		
DESIGN-DETAILED	RWH/NM	TJW	06\14
CHECKED-REVIEWED	-	-	06\14
DESIGN2-DETAILED2	-	-	-
DESIGN3-DETAILED3	-	-	-
REVISIONS 1	-	-	-
REVISIONS 2	-	-	-
REVISIONS 3	-	-	-
REVISIONS 4	-	-	-
FIELD CHANGES	-	-	-

SIGNATURE

P.E. NUMBER

DATE

PORTLAND INTERNATIONAL MARINE TERMINAL
EXISTING LAYDOWN AND CONNECTING CORRIDOR CONNECTION
PORTLAND CUMBERLAND COUNTY

TRACK CROSS SECTIONS

SHEET NUMBER

R28

Sta. 61+00.00 to Sta. 62+50.00

Date:6/26/2014
Username:
Division:
Filename: Xsect_track.dgn

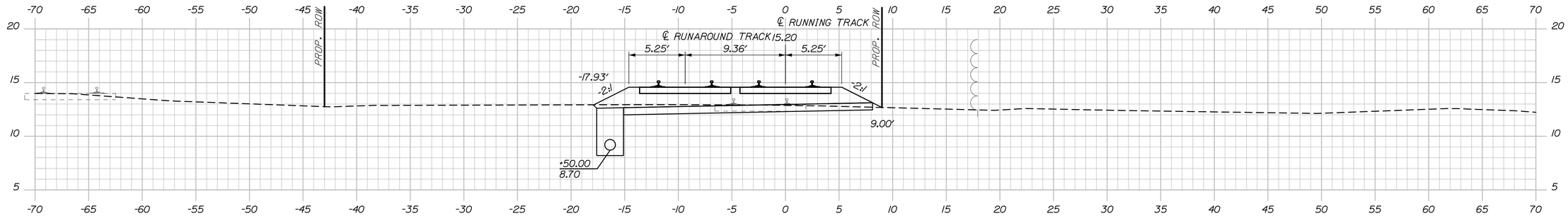

64+50.00

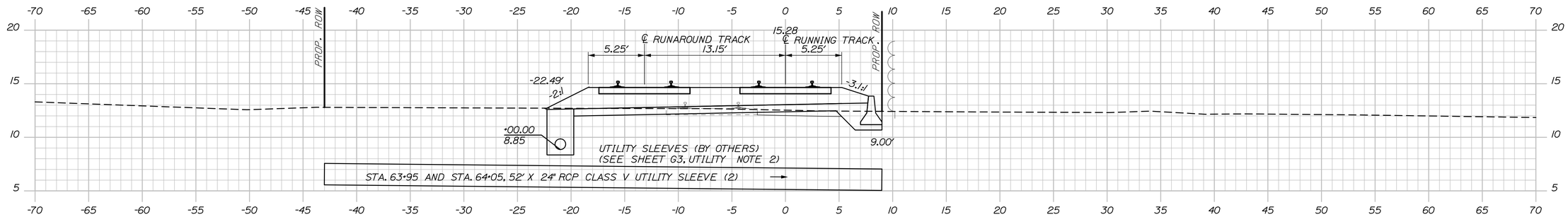

64+00.00

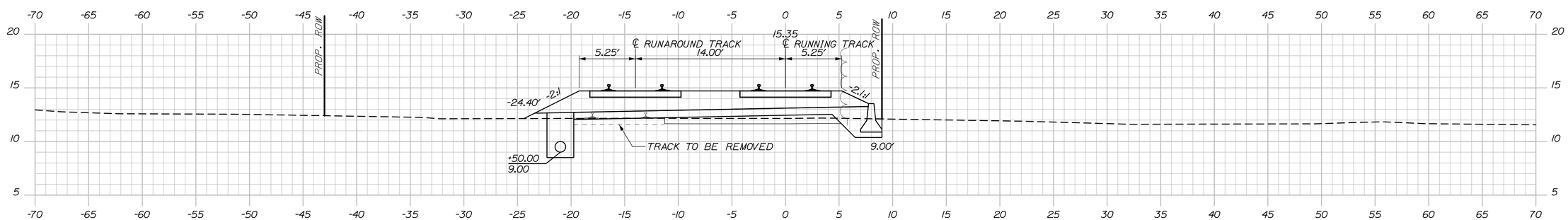

63+50.00

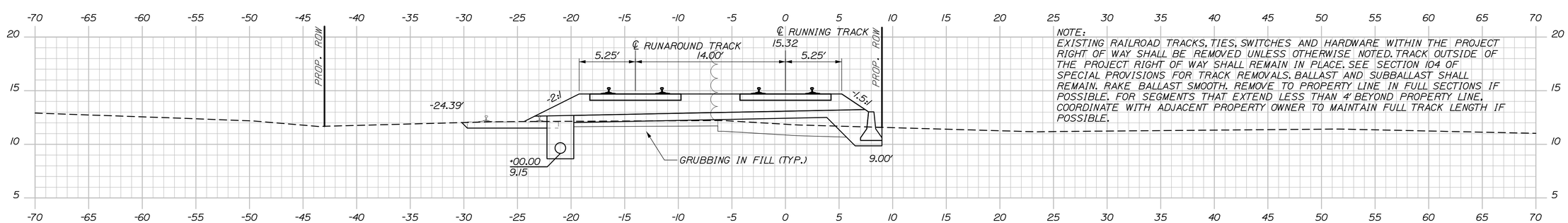

NOTE:
EXISTING RAILROAD TRACKS, TIES, SWITCHES AND HARDWARE WITHIN THE PROJECT RIGHT OF WAY SHALL BE REMOVED UNLESS OTHERWISE NOTED. TRACK OUTSIDE OF THE PROJECT RIGHT OF WAY SHALL REMAIN IN PLACE. SEE SECTION 104 OF SPECIAL PROVISIONS FOR TRACK REMOVALS. BALLAST AND SUBBALLAST SHALL REMAIN. RAKE BALLAST SMOOTH. REMOVE TO PROPERTY LINE IN FULL SECTIONS IF POSSIBLE. FOR SEGMENTS THAT EXTEND LESS THAN 4′ BEYOND PROPERTY LINE, COORDINATE WITH ADJACENT PROPERTY OWNER TO MAINTAIN FULL TRACK LENGTH IF POSSIBLE.

63+00.00

STATE OF MAINE
DEPARTMENT OF TRANSPORTATION

PROJECT NUMBER 022809.20

PIN
022809.20

		BY	DATE
PROJ. MANAGER	J. KITTREDGE		
DESIGN-DETAILED	RWH/WM	TJW	06\14
CHECKED-REVIEWED	-	-	06\14
DESIGN2-DETAILED2	-	-	-
DESIGN3-DETAILED3	-	-	-
REVISIONS 1	-	-	-
REVISIONS 2	-	-	-
REVISIONS 3	-	-	-
REVISIONS 4	-	-	-
FIELD CHANGES	-	-	-

SIGNATURE

P.E. NUMBER

DATE

PORTLAND INTERNATIONAL MARINE TERMINAL
EXISTING LAYDOWN AND CONNECTING CORRIDOR CONNECTION
PORTLAND CUMBERLAND COUNTY

TRACK CROSS SECTIONS

SHEET NUMBER
R29
99 OF 116

Sta. 63+00.00 to Sta. 64+50.00

Date:7/11/2014
Username:
Division:
Filename: Xsect_track.dgn

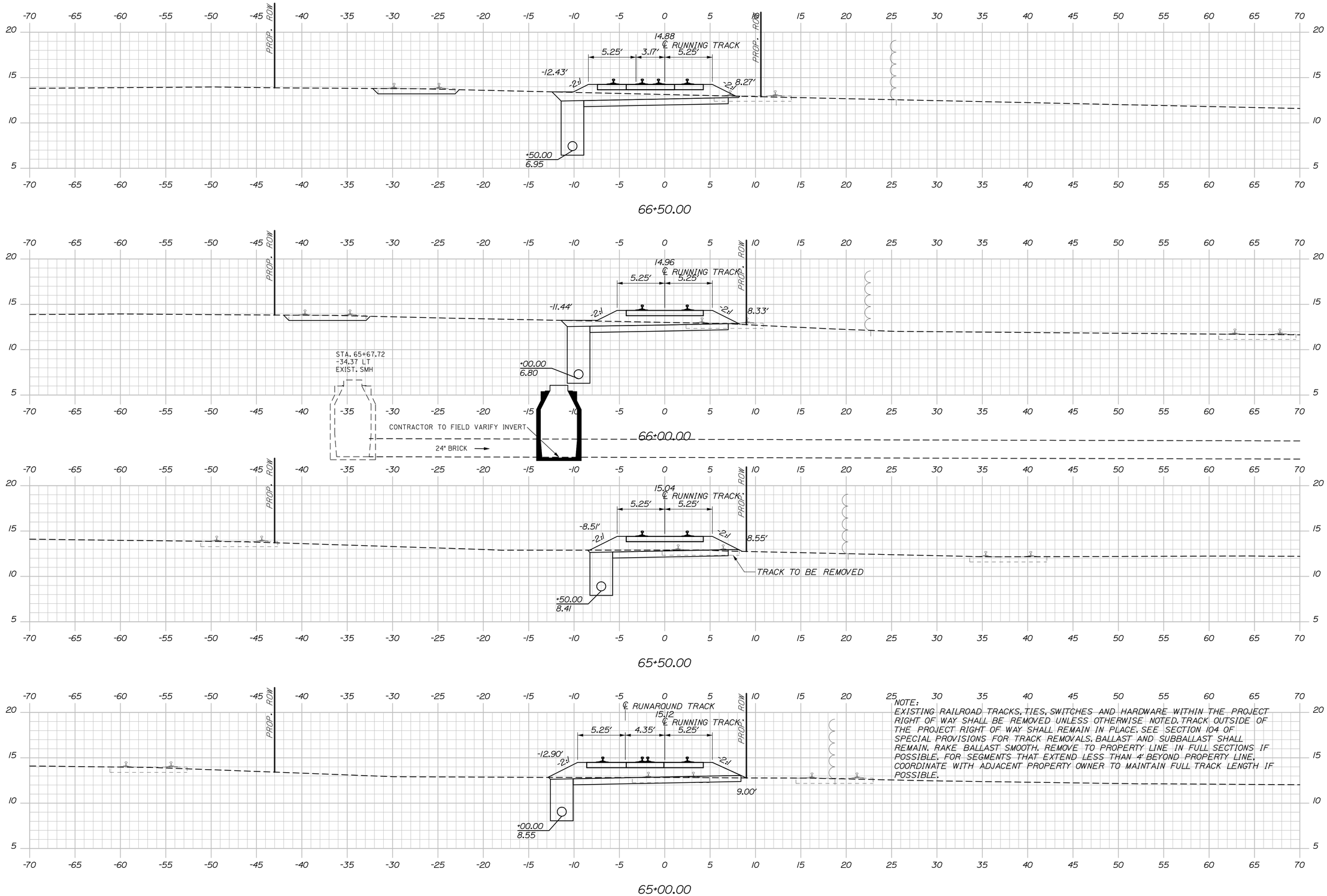

NOTE:
EXISTING RAILROAD TRACKS, TIES, SWITCHES AND HARDWARE WITHIN THE PROJECT RIGHT OF WAY SHALL BE REMOVED UNLESS OTHERWISE NOTED. TRACK OUTSIDE OF THE PROJECT RIGHT OF WAY SHALL REMAIN IN PLACE. SEE SECTION 104 OF SPECIAL PROVISIONS FOR TRACK REMOVALS. BALLAST AND SUBBALLAST SHALL REMAIN. RAKE BALLAST SMOOTH. REMOVE TO PROPERTY LINE IN FULL SECTIONS IF POSSIBLE. FOR SEGMENTS THAT EXTEND LESS THAN 4' BEYOND PROPERTY LINE, COORDINATE WITH ADJACENT PROPERTY OWNER TO MAINTAIN FULL TRACK LENGTH IF POSSIBLE.

STATE OF MAINE
DEPARTMENT OF TRANSPORTATION

PROJECT NUMBER 022809.20

PIN
022809.20

		BY	DATE
PROJ. MANAGER	J. KITTREDGE		
DESIGN-DETAILED	RWH/WM	TJW	06\14
CHECKED-REVIEWED	-	-	06\14
DESIGN2-DETAILED2	-	-	-
DESIGN3-DETAILED3	-	-	-
REVISIONS 1	-	-	-
REVISIONS 2	-	-	-
REVISIONS 3	-	-	-
REVISIONS 4	-	-	-
FIELD CHANGES	-	-	-

SIGNATURE

P.E. NUMBER

DATE

PORTLAND INTERNATIONAL MARINE TERMINAL
EXISTING LAYDOWN AND CONNECTING CORRIDOR CONNECTION
PORTLAND CUMBERLAND COUNTY

TRACK CROSS SECTIONS

SHEET NUMBER

R30

100 OF 116

Sta. 65+00.00 to Sta. 66+50.00

Date:6/26/2014
Username:
Division:
Filename: Xsect_track.dgn

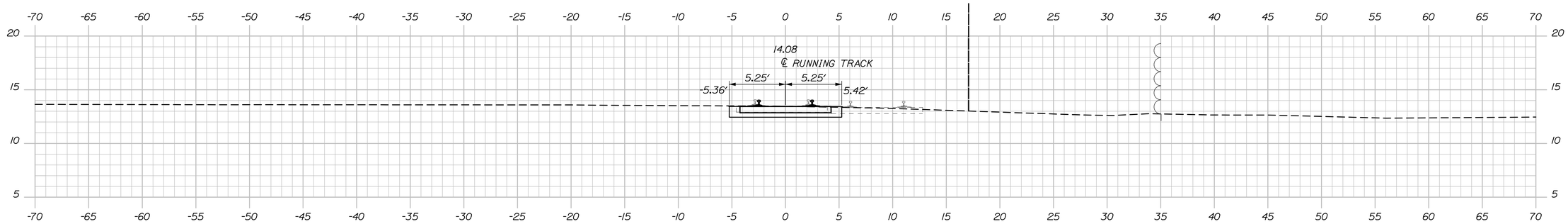

68+50.00

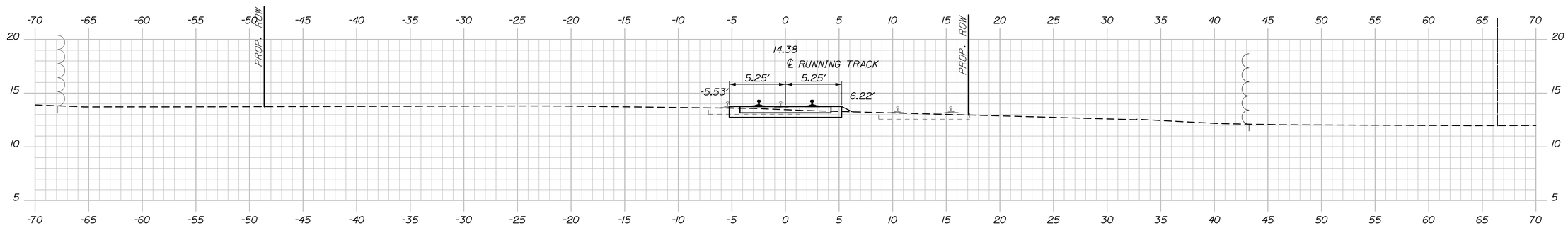

68+00.00

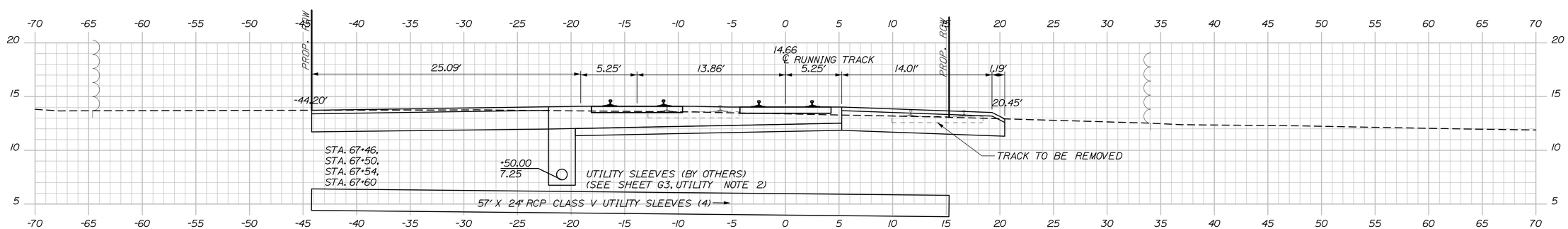

67+50.00

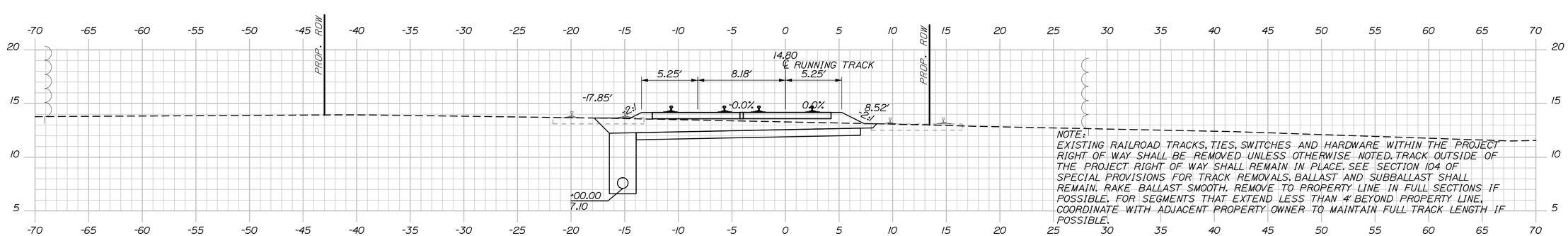

NOTE:
EXISTING RAILROAD TRACKS, TIES, SWITCHES AND HARDWARE WITHIN THE PROJECT RIGHT OF WAY SHALL BE REMOVED UNLESS OTHERWISE NOTED. TRACK OUTSIDE OF THE PROJECT RIGHT OF WAY SHALL REMAIN IN PLACE. SEE SECTION 104 OF SPECIAL PROVISIONS FOR TRACK REMOVALS. BALLAST AND SUBBALLAST SHALL REMAIN. RAKE BALLAST SMOOTH. REMOVE TO PROPERTY LINE IN FULL SECTIONS IF POSSIBLE. FOR SEGMENTS THAT EXTEND LESS THAN 4′ BEYOND PROPERTY LINE, COORDINATE WITH ADJACENT PROPERTY OWNER TO MAINTAIN FULL TRACK LENGTH IF POSSIBLE.

67+00.00

STATE OF MAINE
DEPARTMENT OF TRANSPORTATION

PROJECT NUMBER 022809.20

PIN
022809.20

		BY	DATE
PROJ. MANAGER	J. KITTREDGE		
DESIGN-DETAILED	RWH/WM	TJW	06\14
CHECKED-REVIEWED	-	-	06\14
DESIGN2-DETAILED2	-	-	-
DESIGN3-DETAILED3	-	-	-
REVISIONS 1	-	-	-
REVISIONS 2	-	-	-
REVISIONS 3	-	-	-
REVISIONS 4	-	-	-
FIELD CHANGES	-	-	-

SIGNATURE

P.E. NUMBER

DATE

PORTLAND INTERNATIONAL MARINE TERMINAL
EXISTING LAYDOWN AND CONNECTING CORRIDOR CONNECTION
PORTLAND CUMBERLAND COUNTY

TRACK CROSS SECTIONS

SHEET NUMBER
R31

Sta. 67+00.00 to Sta. 68+50.00

Date:7/11/2014
Username:
Division:
Filename: Xsect_track.dgn

NOTE:
EXISTING RAILROAD TRACKS, TIES, SWITCHES AND HARDWARE WITHIN THE PROJECT RIGHT OF WAY SHALL BE REMOVED UNLESS OTHERWISE NOTED. TRACK OUTSIDE OF THE PROJECT RIGHT OF WAY SHALL REMAIN IN PLACE. SEE SECTION 104 OF SPECIAL PROVISIONS FOR TRACK REMOVALS. BALLAST AND SUBBALLAST SHALL REMAIN. RAKE BALLAST SMOOTH. REMOVE TO PROPERTY LINE IN FULL SECTIONS IF POSSIBLE. FOR SEGMENTS THAT EXTEND LESS THAN 4' BEYOND PROPERTY LINE, COORDINATE WITH ADJACENT PROPERTY OWNER TO MAINTAIN FULL TRACK LENGTH IF POSSIBLE.

STA. 69+50
LIMIT OF WORK

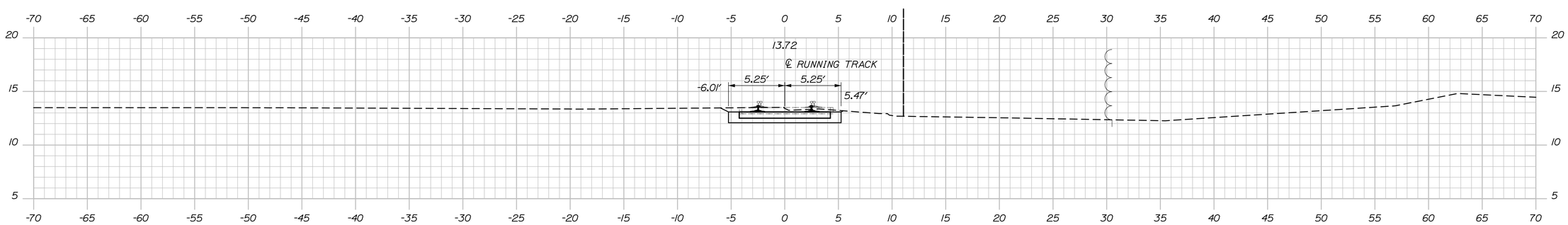

69+50.00

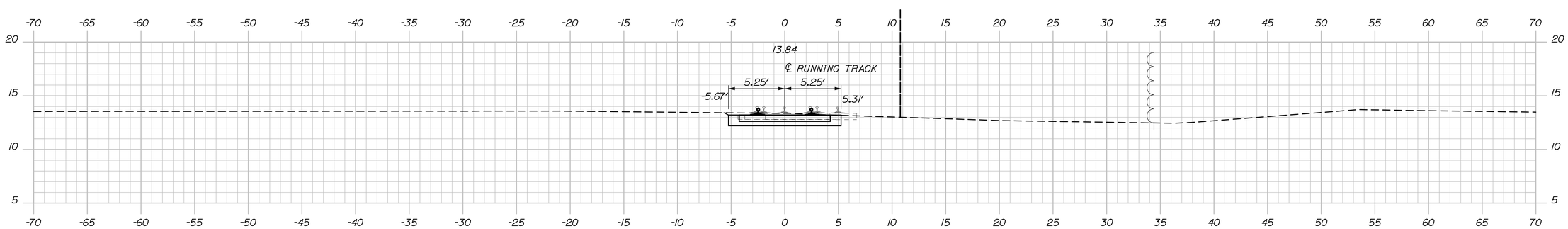

69+00.00

STATE OF MAINE
DEPARTMENT OF TRANSPORTATION

PROJECT NUMBER 022809.20

PIN
022809.20

PROJ. MANAGER	J. KITTREDGE	BY	DATE
DESIGN-DETAILED	RWH/WM	TJW	06\14
CHECKED-REVIEWED	-	-	06\14
DESIGN2-DETAILED2	-	-	-
DESIGN3-DETAILED3	-	-	-
REVISIONS 1	-	-	-
REVISIONS 2	-	-	-
REVISIONS 3	-	-	-
REVISIONS 4	-	-	-
FIELD CHANGES	-	-	-

SIGNATURE

P.E. NUMBER

DATE

PORTLAND INTERNATIONAL MARINE TERMINAL
EXISTING LAYDOWN AND CONNECTING CORRIDOR CONNECTION
PORTLAND CUMBERLAND COUNTY

TRACK CROSS SECTIONS

SHEET NUMBER
R32
102 OF 116

Sta. 69+00.00 to Sta. 69+50.00

Filename: Xsect_track.dgn Division: Username: Date:6/26/2014

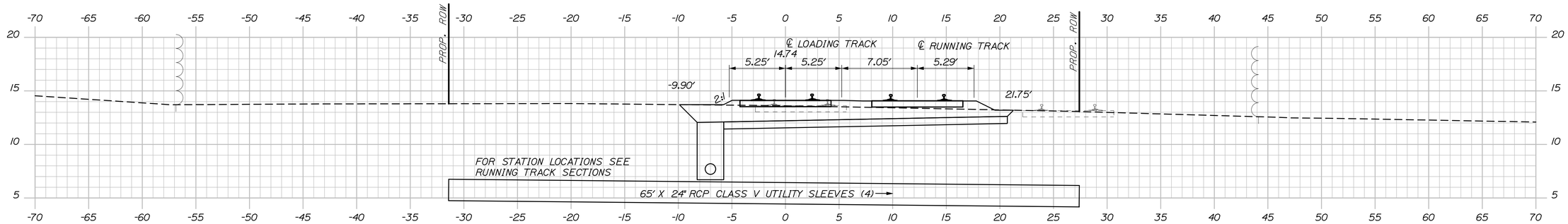

81+50.00

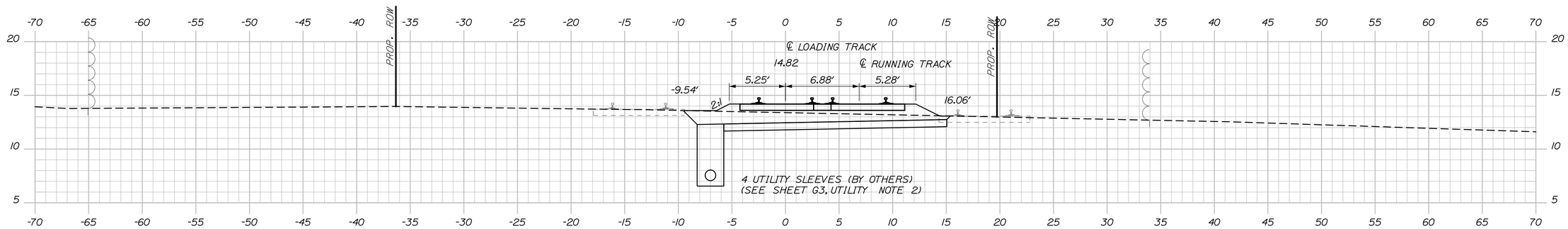

81+00.00

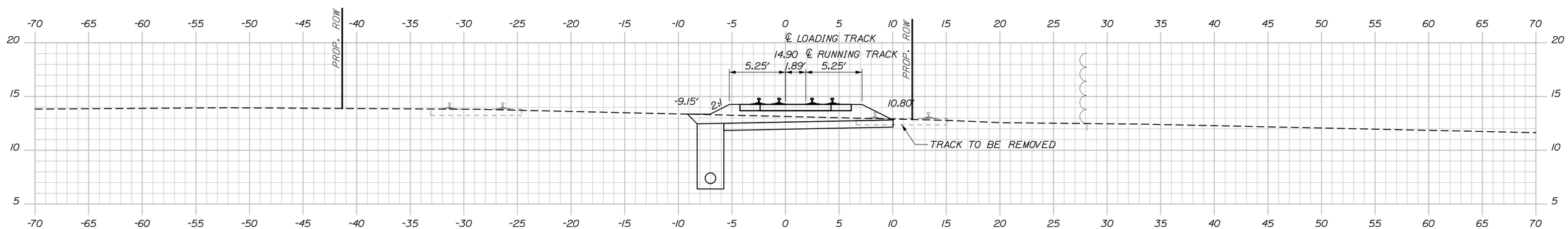

80+50.00

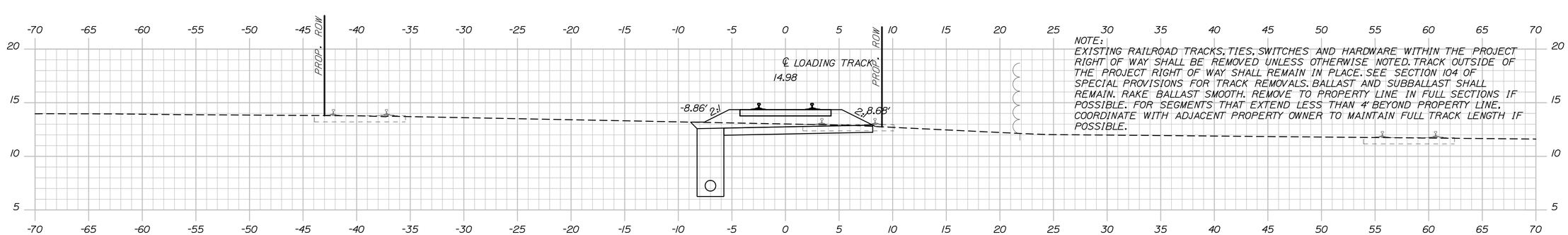

NOTE:
EXISTING RAILROAD TRACKS, TIES, SWITCHES AND HARDWARE WITHIN THE PROJECT RIGHT OF WAY SHALL BE REMOVED UNLESS OTHERWISE NOTED. TRACK OUTSIDE OF THE PROJECT RIGHT OF WAY SHALL REMAIN IN PLACE. SEE SECTION 104 OF SPECIAL PROVISIONS FOR TRACK REMOVALS. BALLAST AND SUBBALLAST SHALL REMAIN. RAKE BALLAST SMOOTH. REMOVE TO PROPERTY LINE IN FULL SECTIONS IF POSSIBLE. FOR SEGMENTS THAT EXTEND LESS THAN 4′ BEYOND PROPERTY LINE, COORDINATE WITH ADJACENT PROPERTY OWNER TO MAINTAIN FULL TRACK LENGTH IF POSSIBLE.

80+00.00

STATE OF MAINE
DEPARTMENT OF TRANSPORTATION

PROJECT NUMBER 022809.20

PIN
022809.20

		BY	DATE
PROJ. MANAGER	J. KITTREDGE		
DESIGN-DETAILED	RWH/WM	TJW	06\14
CHECKED-REVIEWED	-	-	06\14
DESIGN2-DETAILED2	-	-	-
DESIGN3-DETAILED3	-	-	-
REVISIONS 1	-	-	-
REVISIONS 2	-	-	-
REVISIONS 3	-	-	-
REVISIONS 4	-	-	-
FIELD CHANGES	-	-	-

SIGNATURE

P.E. NUMBER

DATE

PORTLAND INTERNATIONAL MARINE TERMINAL
EXISTING LAYDOWN AND CONNECTING CORRIDOR CONNECTION
PORTLAND CUMBERLAND COUNTY

TRACK CROSS SECTIONS

SHEET NUMBER
R33
103 OF 116

Sta. 80+00.00 to Sta. 81+50.00

Date:7/11/2014
Username:
Division:
Filename: Xsect_track.dgn

NOTE:
EXISTING RAILROAD TRACKS, TIES, SWITCHES AND HARDWARE WITHIN THE PROJECT RIGHT OF WAY SHALL BE REMOVED UNLESS OTHERWISE NOTED. TRACK OUTSIDE OF THE PROJECT RIGHT OF WAY SHALL REMAIN IN PLACE. SEE SECTION 104 OF SPECIAL PROVISIONS FOR TRACK REMOVALS. BALLAST AND SUBBALLAST SHALL REMAIN. RAKE BALLAST SMOOTH. REMOVE TO PROPERTY LINE IN FULL SECTIONS IF POSSIBLE. FOR SEGMENTS THAT EXTEND LESS THAN 4' BEYOND PROPERTY LINE, COORDINATE WITH ADJACENT PROPERTY OWNER TO MAINTAIN FULL TRACK LENGTH IF POSSIBLE.

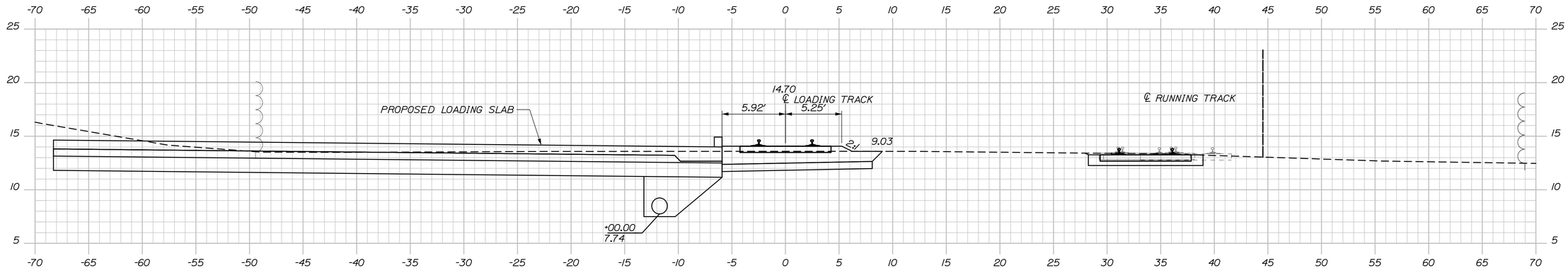

83+00.00

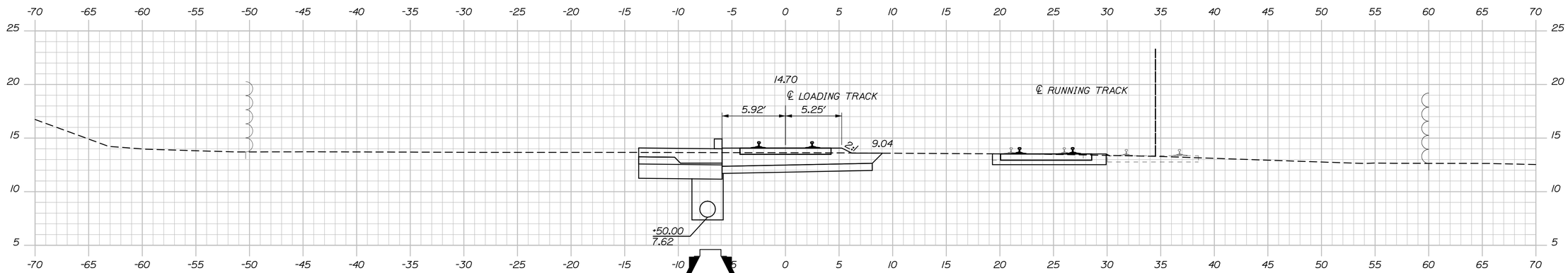

82+50.00

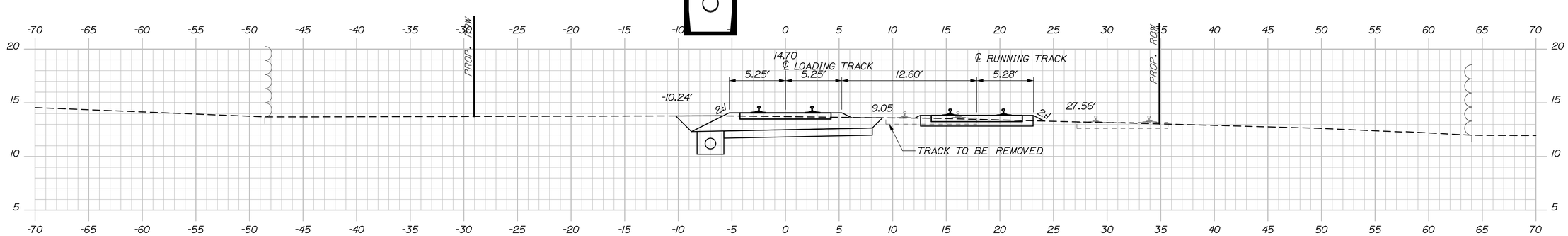

82+00.00

STATE OF MAINE
DEPARTMENT OF TRANSPORTATION

PROJECT NUMBER 022809.20

PIN
022809.20

		BY	DATE
PROJ. MANAGER	J. KITTREDGE		
DESIGN-DETAILED	RWH/NM	TJW	06\14
CHECKED-REVIEWED	-	-	06\14
DESIGN2-DETAILED2	-	-	-
DESIGN3-DETAILED3	-	-	-
REVISIONS 1	-	-	-
REVISIONS 2	-	-	-
REVISIONS 3	-	-	-
REVISIONS 4	-	-	-
FIELD CHANGES	-	-	-

SIGNATURE

P.E. NUMBER

DATE

PORTLAND INTERNATIONAL MARINE TERMINAL
EXISTING LAYDOWN AND CONNECTING CORRIDOR CONNECTION
PORTLAND CUMBERLAND COUNTY

TRACK CROSS SECTIONS

SHEET NUMBER

R34

104 OF 116

Sta. 82+00.00 to Sta. 83+00.00

Date:6/27/2014 Username: Division: Filename: Xsect_track.dgn

NOTE:
EXISTING RAILROAD TRACKS, TIES, SWITCHES AND HARDWARE WITHIN THE PROJECT RIGHT OF WAY SHALL BE REMOVED UNLESS OTHERWISE NOTED. TRACK OUTSIDE OF THE PROJECT RIGHT OF WAY SHALL REMAIN IN PLACE. SEE SECTION 104 OF SPECIAL PROVISIONS FOR TRACK REMOVALS. BALLAST AND SUBBALLAST SHALL REMAIN. RAKE BALLAST SMOOTH. REMOVE TO PROPERTY LINE IN FULL SECTIONS IF POSSIBLE. FOR SEGMENTS THAT EXTEND LESS THAN 4' BEYOND PROPERTY LINE, COORDINATE WITH ADJACENT PROPERTY OWNER TO MAINTAIN FULL TRACK LENGTH IF POSSIBLE.

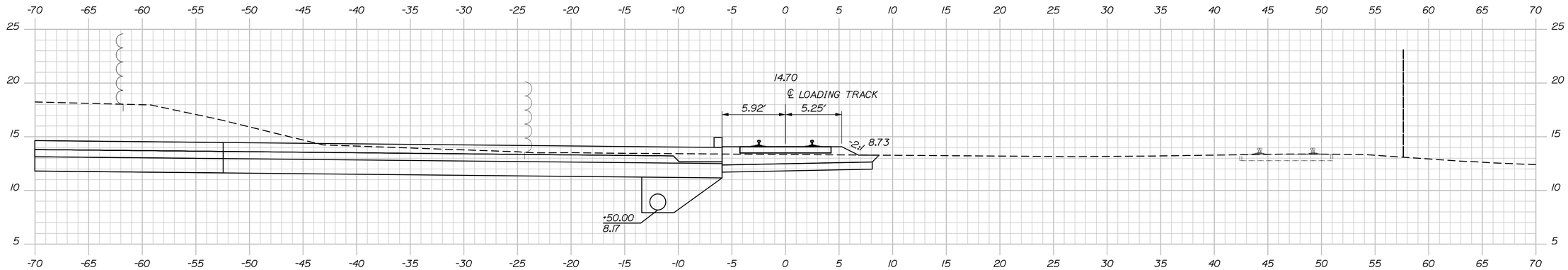

84+50.00

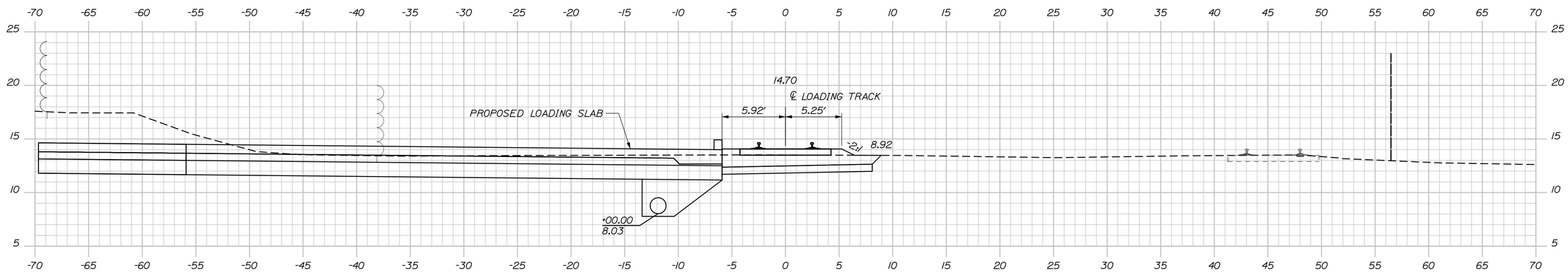

84+00.00

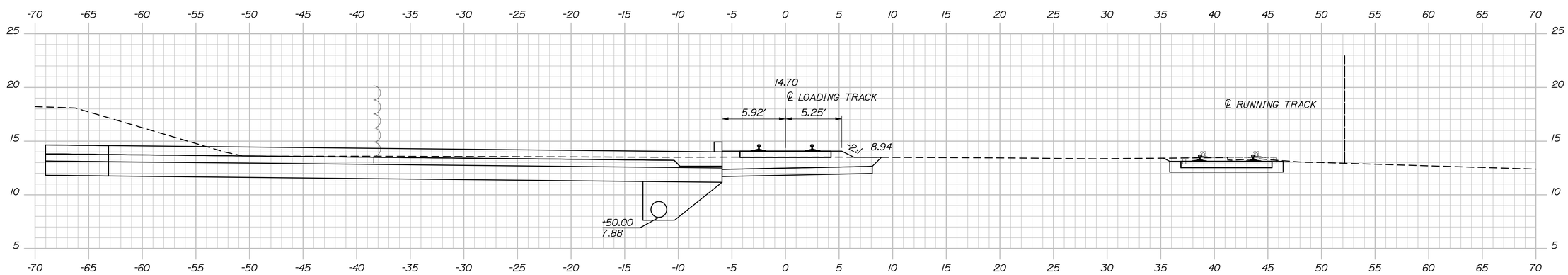

83+50.00

STATE OF MAINE
DEPARTMENT OF TRANSPORTATION

PROJECT NUMBER 022809.20

PIN
022809.20

PROJ. MANAGER	J. KITTREDGE	BY	DATE
DESIGN-DETAILED	RWH/NM	TJW	06\14
CHECKED-REVIEWED	-	-	06\14
DESIGN2-DETAILED2	-	-	-
DESIGN3-DETAILED3	-	-	-
REVISIONS 1	-	-	-
REVISIONS 2	-	-	-
REVISIONS 3	-	-	-
REVISIONS 4	-	-	-
FIELD CHANGES	-	-	-

SIGNATURE
P.E. NUMBER
DATE

PORTLAND INTERNATIONAL MARINE TERMINAL
EXISTING LAYDOWN AND CONNECTING CORRIDOR CONNECTION
PORTLAND CUMBERLAND COUNTY

TRACK CROSS SECTIONS

SHEET NUMBER
R35

105 OF 116

Sta. 83+50.00 to Sta. 84+50.00

Date:6/26/2014
Username:
Division:
Filename: Xsect_track.dgn

NOTE:
EXISTING RAILROAD TRACKS, TIES, SWITCHES AND HARDWARE WITHIN THE PROJECT RIGHT OF WAY SHALL BE REMOVED UNLESS OTHERWISE NOTED. TRACK OUTSIDE OF THE PROJECT RIGHT OF WAY SHALL REMAIN IN PLACE. SEE SECTION 104 OF SPECIAL PROVISIONS FOR TRACK REMOVALS. BALLAST AND SUBBALLAST SHALL REMAIN. RAKE BALLAST SMOOTH. REMOVE TO PROPERTY LINE IN FULL SECTIONS IF POSSIBLE. FOR SEGMENTS THAT EXTEND LESS THAN 4' BEYOND PROPERTY LINE, COORDINATE WITH ADJACENT PROPERTY OWNER TO MAINTAIN FULL TRACK LENGTH IF POSSIBLE.

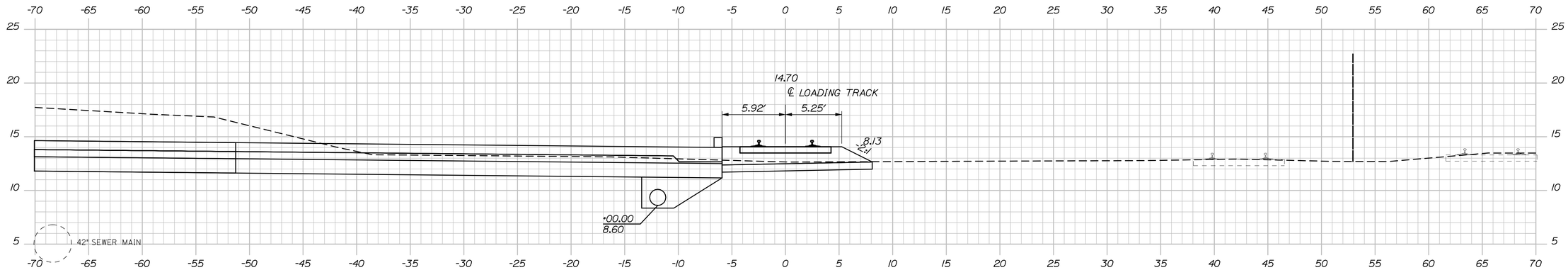

86+00.00

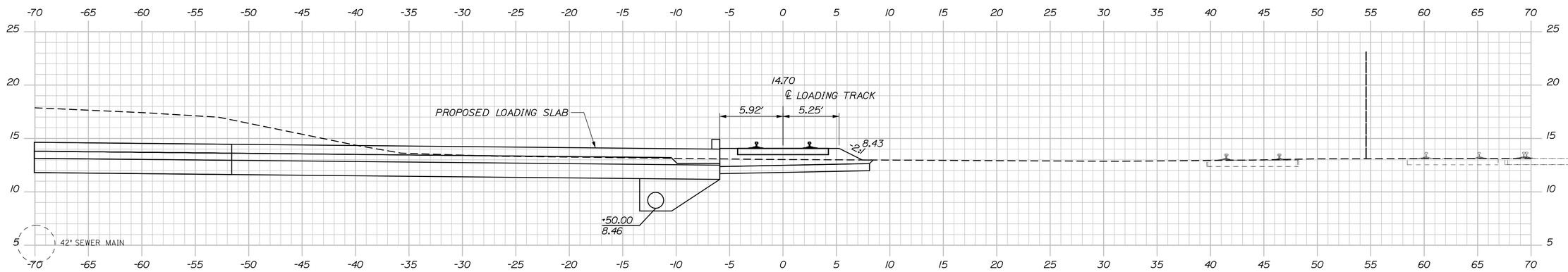

85+50.00

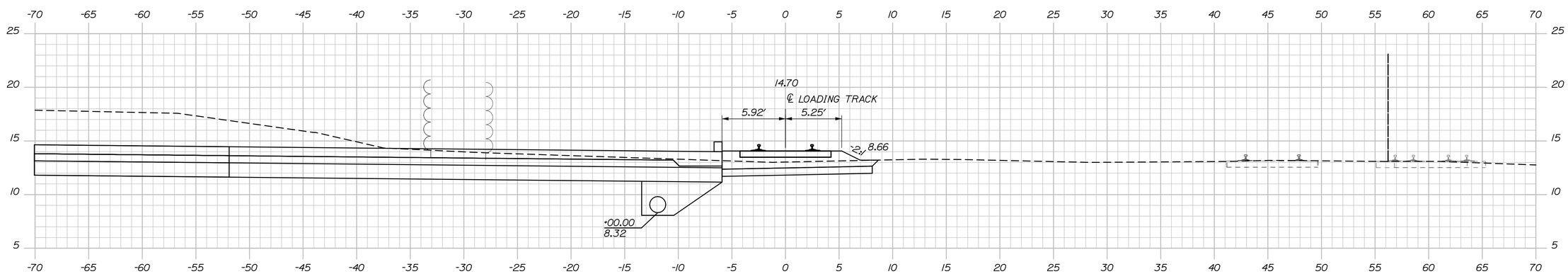

85+00.00

STATE OF MAINE
DEPARTMENT OF TRANSPORTATION

PROJECT NUMBER 022809.20

PIN
022809.20

	BY	DATE
PROJ. MANAGER	J. KITTREDGE	
DESIGN-DETAILED	RWH/NM	06\14
CHECKED-REVIEWED	-	06\14
DESIGN2-DETAILED2	-	-
DESIGN3-DETAILED3	-	-
REVISIONS 1	-	-
REVISIONS 2	-	-
REVISIONS 3	-	-
REVISIONS 4	-	-
FIELD CHANGES	-	-

SIGNATURE

P.E. NUMBER

DATE

PORTLAND INTERNATIONAL MARINE TERMINAL
EXISTING LAYDOWN AND CONNECTING CORRIDOR CONNECTION
PORTLAND CUMBERLAND COUNTY

TRACK CROSS SECTIONS

SHEET NUMBER

R36

Sta. 85+00.00 to Sta. 86+00.00

Date:6/26/2014
Username:
Division:
Filename: Xsect_track.dgn

NOTE:
EXISTING RAILROAD TRACKS, TIES, SWITCHES AND HARDWARE WITHIN THE PROJECT RIGHT OF WAY SHALL BE REMOVED UNLESS OTHERWISE NOTED. TRACK OUTSIDE OF THE PROJECT RIGHT OF WAY SHALL REMAIN IN PLACE. SEE SECTION 104 OF SPECIAL PROVISIONS FOR TRACK REMOVALS. BALLAST AND SUBBALLAST SHALL REMAIN. RAKE BALLAST SMOOTH. REMOVE TO PROPERTY LINE IN FULL SECTIONS IF POSSIBLE. FOR SEGMENTS THAT EXTEND LESS THAN 4' BEYOND PROPERTY LINE, COORDINATE WITH ADJACENT PROPERTY OWNER TO MAINTAIN FULL TRACK LENGTH IF POSSIBLE.

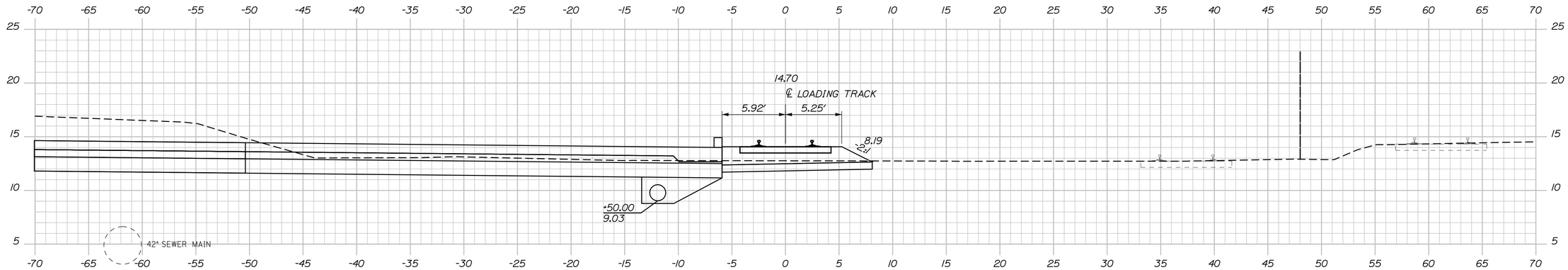

87+50.00

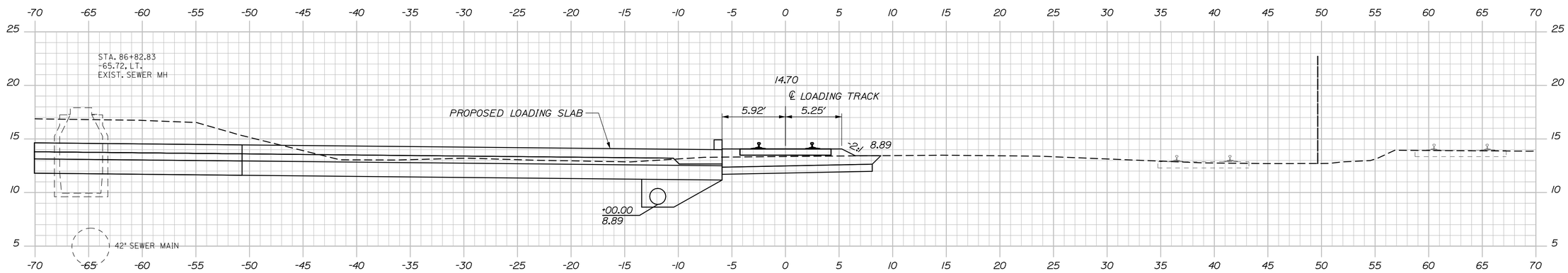

87+00.00

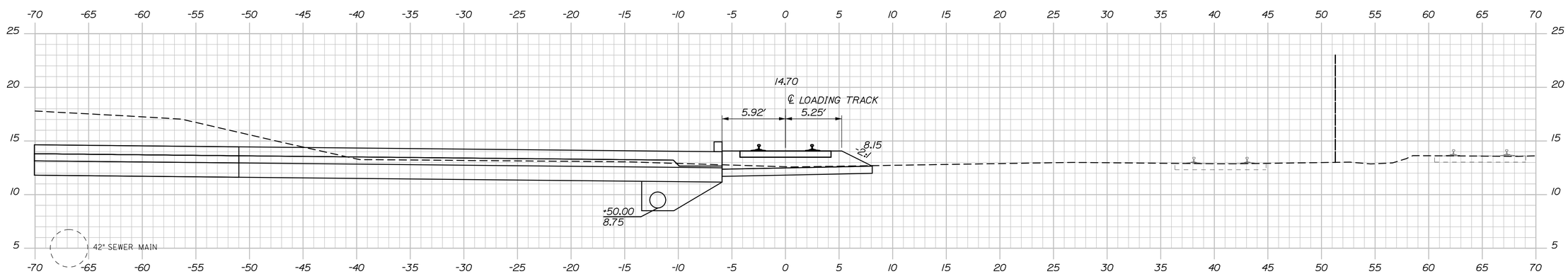

86+50.00

STATE OF MAINE
DEPARTMENT OF TRANSPORTATION

PROJECT NUMBER 022809.20

PIN
022809.20

		BY	DATE
PROJ. MANAGER	J. KITTREDGE		
DESIGN-DETAILED	RWH/NM	TJW	06\14
CHECKED-REVIEWED	-	-	06\14
DESIGN2-DETAILED2	-	-	-
DESIGN3-DETAILED3	-	-	-
REVISIONS 1	-	-	-
REVISIONS 2	-	-	-
REVISIONS 3	-	-	-
REVISIONS 4	-	-	-
FIELD CHANGES	-	-	-

SIGNATURE

P.E. NUMBER

DATE

PORTLAND INTERNATIONAL MARINE TERMINAL
EXISTING LAYDOWN AND CONNECTING CORRIDOR CONNECTION
PORTLAND CUMBERLAND COUNTY

TRACK CROSS SECTIONS

SHEET NUMBER

R37

107 OF 116

Sta. 86+50.00 to Sta. 87+50.00

Date:6/26/2014
Username:
Division:
Filename: Xsect_track.dgn

NOTE:
EXISTING RAILROAD TRACKS, TIES, SWITCHES AND HARDWARE WITHIN THE PROJECT RIGHT OF WAY SHALL BE REMOVED UNLESS OTHERWISE NOTED. TRACK OUTSIDE OF THE PROJECT RIGHT OF WAY SHALL REMAIN IN PLACE. SEE SECTION 104 OF SPECIAL PROVISIONS FOR TRACK REMOVALS. BALLAST AND SUBBALLAST SHALL REMAIN. RAKE BALLAST SMOOTH. REMOVE TO PROPERTY LINE IN FULL SECTIONS IF POSSIBLE. FOR SEGMENTS THAT EXTEND LESS THAN 4' BEYOND PROPERTY LINE, COORDINATE WITH ADJACENT PROPERTY OWNER TO MAINTAIN FULL TRACK LENGTH IF POSSIBLE.

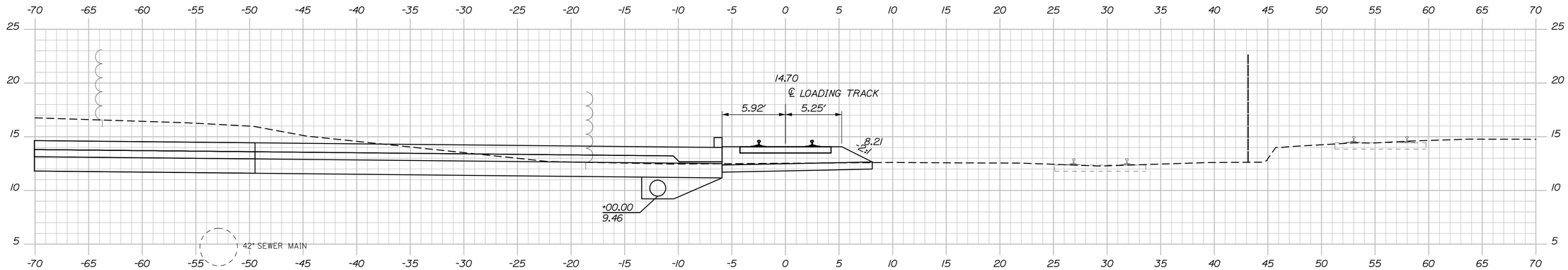

89+00.00

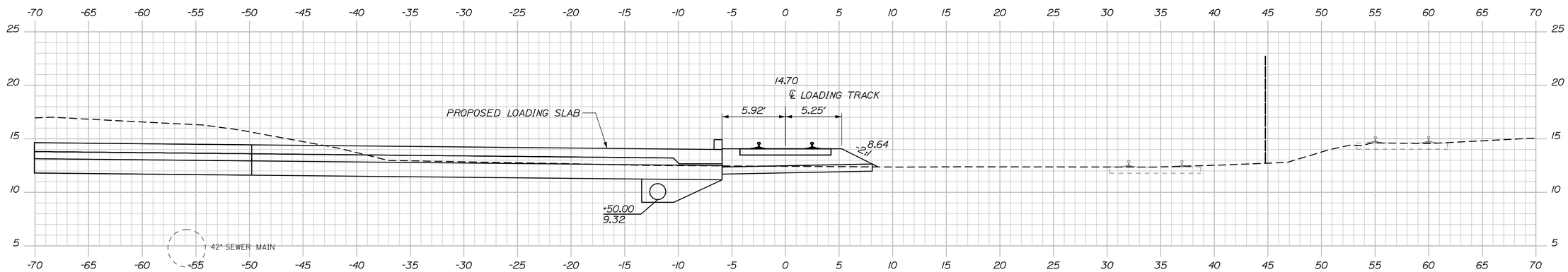

88+50.00

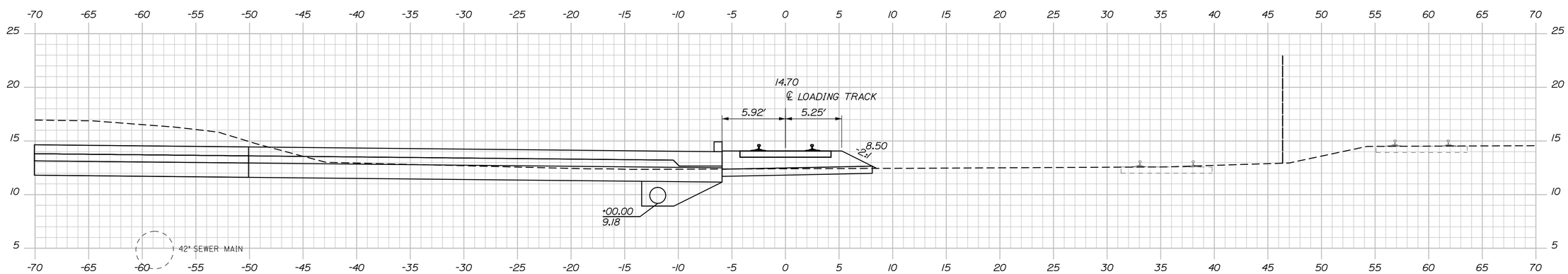

88+00.00

STATE OF MAINE
DEPARTMENT OF TRANSPORTATION

PROJECT NUMBER 022809.20

PIN
022809.20

		BY	DATE
PROJ. MANAGER	J. KITTREDGE		
DESIGN-DETAILED	RWH/WM	TJW	06\14
CHECKED-REVIEWED	-	-	06\14
DESIGN2-DETAILED2	-	-	-
DESIGN3-DETAILED3	-	-	-
REVISIONS 1	-	-	-
REVISIONS 2	-	-	-
REVISIONS 3	-	-	-
REVISIONS 4	-	-	-
FIELD CHANGES	-	-	-

SIGNATURE

P.E. NUMBER

DATE

PORTLAND INTERNATIONAL MARINE TERMINAL
EXISTING LAYDOWN AND CONNECTING CORRIDOR CONNECTION
PORTLAND CUMBERLAND COUNTY

TRACK CROSS SECTIONS

SHEET NUMBER

R38

108 OF 116

Sta. 88+00.00 to Sta. 89+00.00

Date:6/26/2014 Username: Division: Filename: Xsect_track.dgn

NOTE:
EXISTING RAILROAD TRACKS, TIES, SWITCHES AND HARDWARE WITHIN THE PROJECT RIGHT OF WAY SHALL BE REMOVED UNLESS OTHERWISE NOTED. TRACK OUTSIDE OF THE PROJECT RIGHT OF WAY SHALL REMAIN IN PLACE. SEE SECTION 104 OF SPECIAL PROVISIONS FOR TRACK REMOVALS. BALLAST AND SUBBALLAST SHALL REMAIN. RAKE BALLAST SMOOTH. REMOVE TO PROPERTY LINE IN FULL SECTIONS IF POSSIBLE. FOR SEGMENTS THAT EXTEND LESS THAN 4' BEYOND PROPERTY LINE, COORDINATE WITH ADJACENT PROPERTY OWNER TO MAINTAIN FULL TRACK LENGTH IF POSSIBLE.

STA. 90+20.35
LIMIT OF WORK

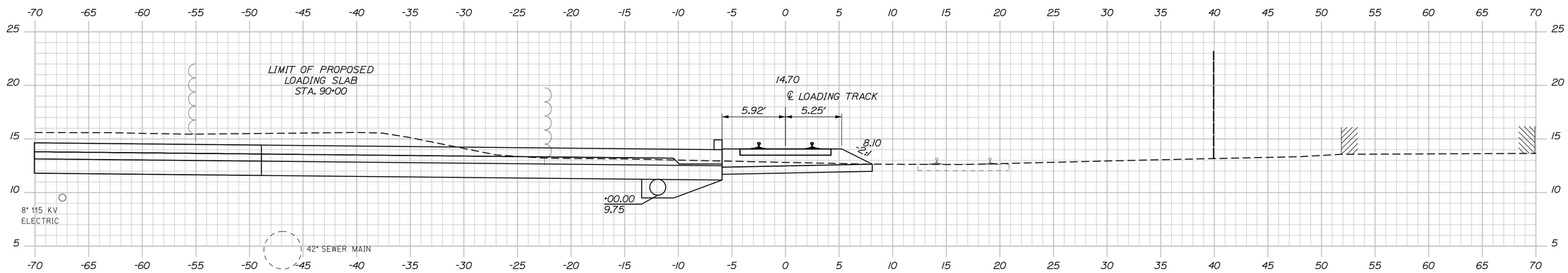

90+00.00

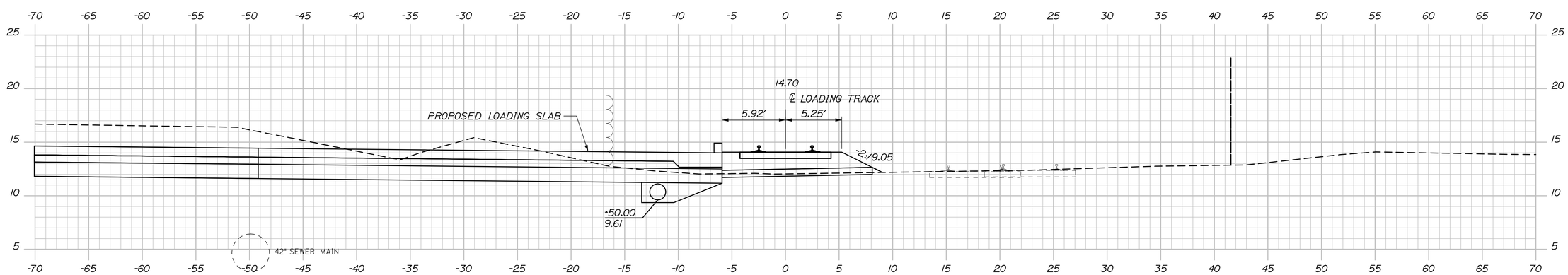

89+50.00

STATE OF MAINE
DEPARTMENT OF TRANSPORTATION

PROJECT NUMBER 022809.20

PIN
022809.20

		BY	DATE
PROJ. MANAGER	J. KITTREDGE		
DESIGN-DETAILED	RWH/NM	TJW	06\14
CHECKED-REVIEWED	-	-	06\14
DESIGN2-DETAILED2	-	-	-
DESIGN3-DETAILED3	-	-	-
REVISIONS 1	-	-	-
REVISIONS 2	-	-	-
REVISIONS 3	-	-	-
REVISIONS 4	-	-	-
FIELD CHANGES	-	-	-

SIGNATURE

P.E. NUMBER

DATE

PORTLAND INTERNATIONAL MARINE TERMINAL
EXISTING LAYDOWN AND CONNECTING CORRIDOR CONNECTION
PORTLAND CUMBERLAND COUNTY

TRACK CROSS SECTIONS

SHEET NUMBER
R39

Sta. 89+50.00 to Sta. 90+20.35

Filename: Xsect_track.dgn Division: Username: Date:6/26/2014

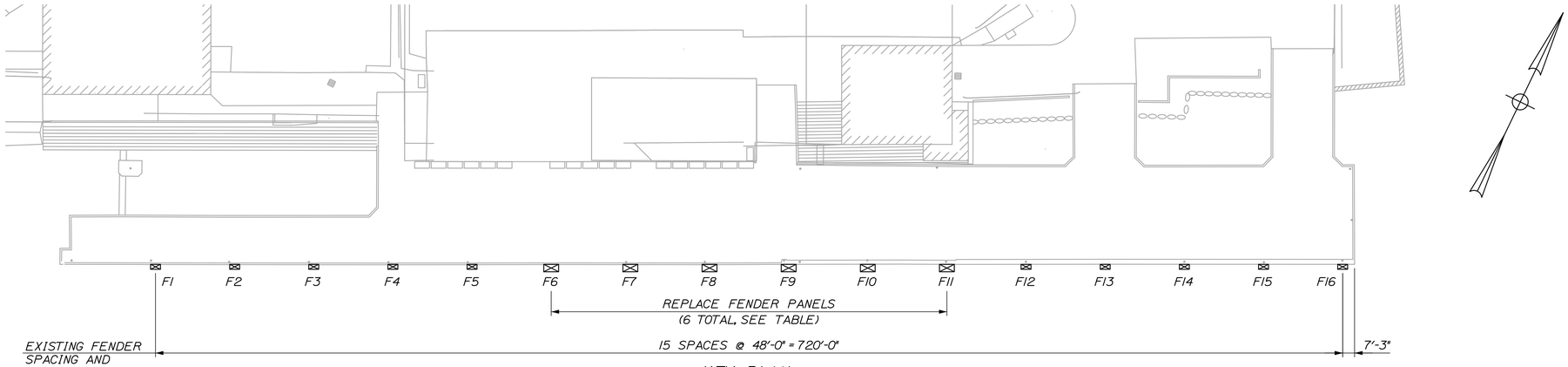

KEY PLAN
1" = 40'

STEEL BOX FENDER PANEL DESIGN CRITERIA
1. DESIGN VESSEL:
DW: 12,000 TONS
L: 460 FT.
W: 76 FT.

2. BERTHING:
V = 1 FT./SEC.
α = 6°

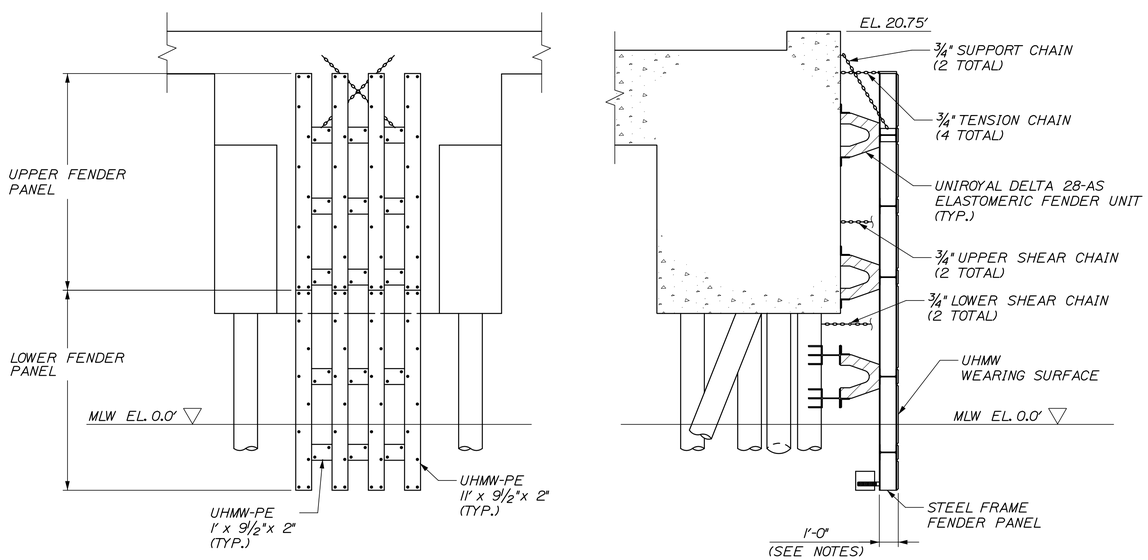

ELEVATION

SECTION

EXISTING FENDER ASSEMBLY
1/4" = 1'-0"

SUMMARY OF REPAIRS/MODIFICATIONS

FENDER PANEL	REMOVE STEEL FRAME FENDER PANEL	INSTALL STEEL BOX FENDER PANEL	REPLACE EXISTING UPPER & LOWER SHEAR CHAINS	INSTALL UHMW WEARING SURFACES ON LOWER FENDER PANEL	INSTALL UHMW WEARING SURFACES ON UPPER FENDER PANEL
F1			X	X	
F2			X	X	
F3			X	X	
F4			X	X	
F5			X	X	
F6	X	X	X		
F7	X	X	X		
F8	X	X	X		
F9	X	X	X		
F10	X	X	X		
F11	X	X	X		
F12			X	X	X
F13			X	X	X
F14			X	X	X
F15			X	X	X
F16			X	X	X

NOTES:
1. THE CLOSED-BOX STEEL FRONTAL PANEL SHALL BE DESIGNED BY A PROFESSIONAL ENGINEER LICENSED IN THE STATE OF MAINE TO THE VESSEL DESIGN CRITERIA OUTLINED IN SPECIAL PROVISION 504, FENDER SYSTEMS. THE FENDER PANEL DESIGN SHALL BE SUBMIT FOR REVIEW AND APPROVAL. THE MAXIMUM WEIGHT OF THE FENDER PANEL INCLUDING ALL HARDWARE, OFFSET MATERIALS, AND WEARING SURFACES SHALL BE 6,000 LBS.

2. THE EXISTING STEEL FENDER PANELS REMOVED AS PART OF THIS PROJECT SHALL HAVE THEIR UHMW WEARING SURFACES REMOVED FOR REINSTALLATION ON THE EXISTING FENDER PANELS TO REMAIN. CARE SHALL BE USED WHEN REMOVING THE WEARING SURFACES. THE CONTRACTOR IS RESPONSIBLE FOR PROVIDING NEW CONNECTION HARDWARE WHEN REINSTALLING ALL WEARING SURFACES.

3. THE CONTRACTOR IS RESPONSIBLE TO MEASURE ALL EXISTING FIELD DIMENSIONS ASSOCIATED WITH THE FENDER PANELS TO ENSURE PROPER CONNECTION AND FIT UP OF THE NEW PANELS. THREADED RODS ON THE PROPOSED FENDER PANELS SHALL ALIGN WITH THE HOLES ON THE EXISTING ARCH FENDERS. THE CONTRACTOR SHALL SALVAGE AND REINSTALL THE 3" PLATE ON THE BACKSIDE OF THE ARCH FENDERS.

4. WHEN REMOVING THE EXISTING FENDER PANELS, THE CONTRACTOR SHALL CAREFULLY DISCONNECT THE SUPPORT CHAINS AND THE TENSION CHAINS FROM THE EXISTING PANELS FOR REUSE ON THE PROPOSED FENDER PANELS.

5. THE MINIMUM THICKNESS OF THE PROPOSED CLOSED-BOX STEEL FENDER PANEL SHALL BE AS SHOWN, WHICH SHALL BE A COMBINATION OF THE CLOSED-BOX PANEL, THE UHMW WEARING SURFACE, AND ANY OFFSET MATERIAL/DEVICES INSTALLED BETWEEN THE EXISTING RUBBER ARCH FENDERS AND THE PROPOSED FENDER PANEL.

6. SALVAGED UHMW WEARING SURFACE PIECES SHALL BE INSTALLED ON EXISTING FENDER PANELS TO REMAIN. NEW WEARING SURFACE PIECES MAY REQUIRE FIELD DRILLING TO ACCOMMODATE MISALIGNMENTS IN THE STEEL FENDER PANELS. THE CONTRACTOR SHALL QUANTIFY THE NUMBER OF SALVAGED WEARING SURFACE PIECES AND THE NUMBER OF PIECES REQUIRED ON THE EXISTING STEEL FENDER PANELS, AND NOTIFY THE RESIDENT IF THE QUANTITY DIFFERS FROM PAY ITEMS 504.631 AND 504.632.

7. APPROXIMATELY THREE EXISTING STEEL FENDER PANELS CONTAIN BENT FRAME MEMBERS (HP10X42). THE BENT PORTIONS OF THE FRAME SHALL BE REMOVED BY FLAME CUTTING AT A BEVEL AND THE EDGES GROUND FLUSH. THE UHMW WEARING SURFACE SHALL BE MODIFIED TO ACCOMMODATE THE SHORTENED LENGTHS OF THE HP10X42.

STATE OF MAINE
DEPARTMENT OF TRANSPORTATION

PROJECT NUMBER 022809.20

WIN
022809.20

		BY	DATE
PROJ. MANAGER	J. KITTREDGE		
DESIGN-DETAILED	CRM	MPC	06/14
CHECKED-REVIEWED	-	-	06\14
DESIGN2-DETAILED2	-	-	-
DESIGN3-DETAILED3	-	-	-
REVISIONS 1	-	-	-
REVISIONS 2	-	-	-
REVISIONS 3	-	-	-
REVISIONS 4	-	-	-
FIELD CHANGES	-	-	-

SIGNATURE

P.E. NUMBER

DATE

PORTLAND INTERNATIONAL MARINE TERMINAL
EXISTING LAYDOWN AND CONNECTING CORRIDOR CONNECTION
PORTLAND CUMBERLAND COUNTY

FENDER SYSTEM REPAIRS

SHEET NUMBER
M01

Date:7/11/2014
Username:
Division:
Filename: 110_FenderRepairs.dgn

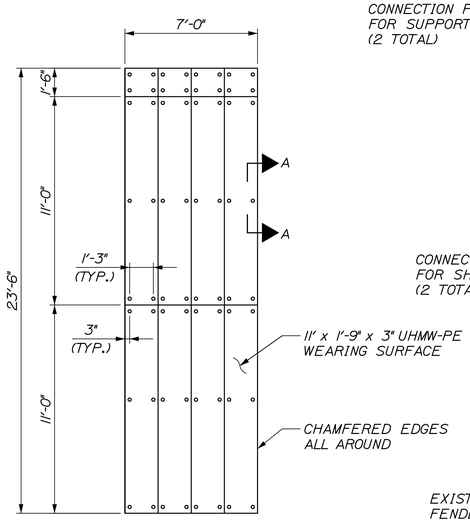

FRONT ELEVATION

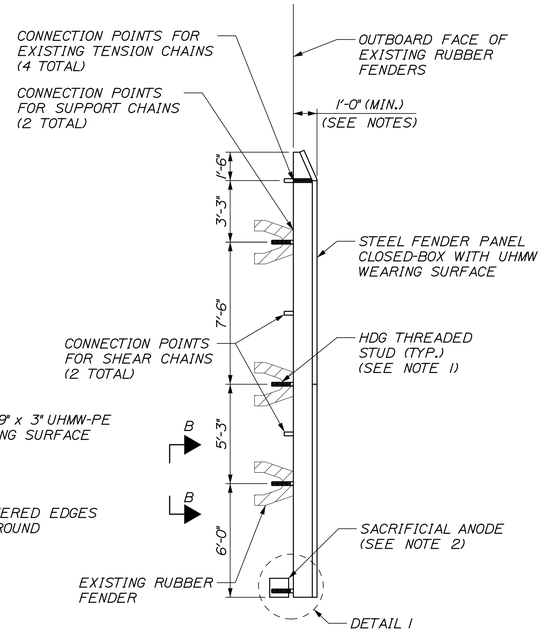

SIDE ELEVATION

STEEL FENDER PANEL
1/4" = 1'-0"

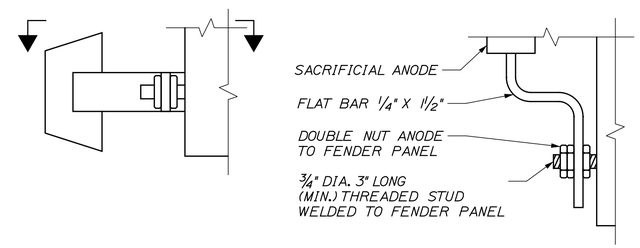

DETAIL 1
1" = 1'-0"

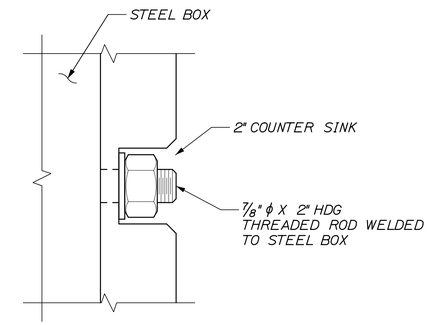

SECTION A-A
6" = 1'-0"

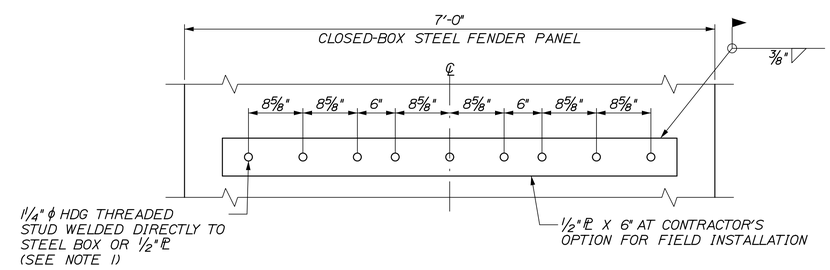

SECTION B-B
1" = 1'-0"

NOTES:

1. CONTRACTOR SHALL FIELD VERIFY ALL DIMENSIONS ASSOCIATED WITH THE EXISTING FENDER PANELS TO ENSURE PROPER SPACING OF HDG THREADED STUDS AND SHEAR CHAIN CONNECTORS.

2. SACRIFICIAL ANODE SHALL BE BOLTED TO BACKSIDE OF FENDER PANEL. SEE SPECIAL PROVISION 655 FOR ADDITIONAL INFORMATION.

3. SEE SPECIAL PROVISIONS 504 FOR STEEL FENDER PANEL REQUIREMENTS FOR SIZE, WEIGHT, AND THICKNESS.

STATE OF MAINE
DEPARTMENT OF TRANSPORTATION

PROJECT NUMBER 022809.20

WIN 022809.20

		BY	DATE
PROJ. MANAGER	J. KITTREDGE		
DESIGN-DETAILED	CRM	MPC	06/14
CHECKED-REVIEWED	-	-	06\14
DESIGN2-DETAILED2	-	-	-
DESIGN3-DETAILED3	-	-	-
REVISIONS 1	-	-	-
REVISIONS 2	-	-	-
REVISIONS 3	-	-	-
REVISIONS 4	-	-	-
FIELD CHANGES	-	-	-

SIGNATURE

P.E. NUMBER

DATE

PORTLAND INTERNATIONAL MARINE TERMINAL
EXISTING LAYDOWN AND CONNECTING CORRIDOR CONNECTION
PORTLAND CUMBERLAND COUNTY

FENDER SYSTEM REPAIRS

SHEET NUMBER

M02

Date:6/27/2014
Username:
Division:
Filename: 111_FenderRepairs.dgn

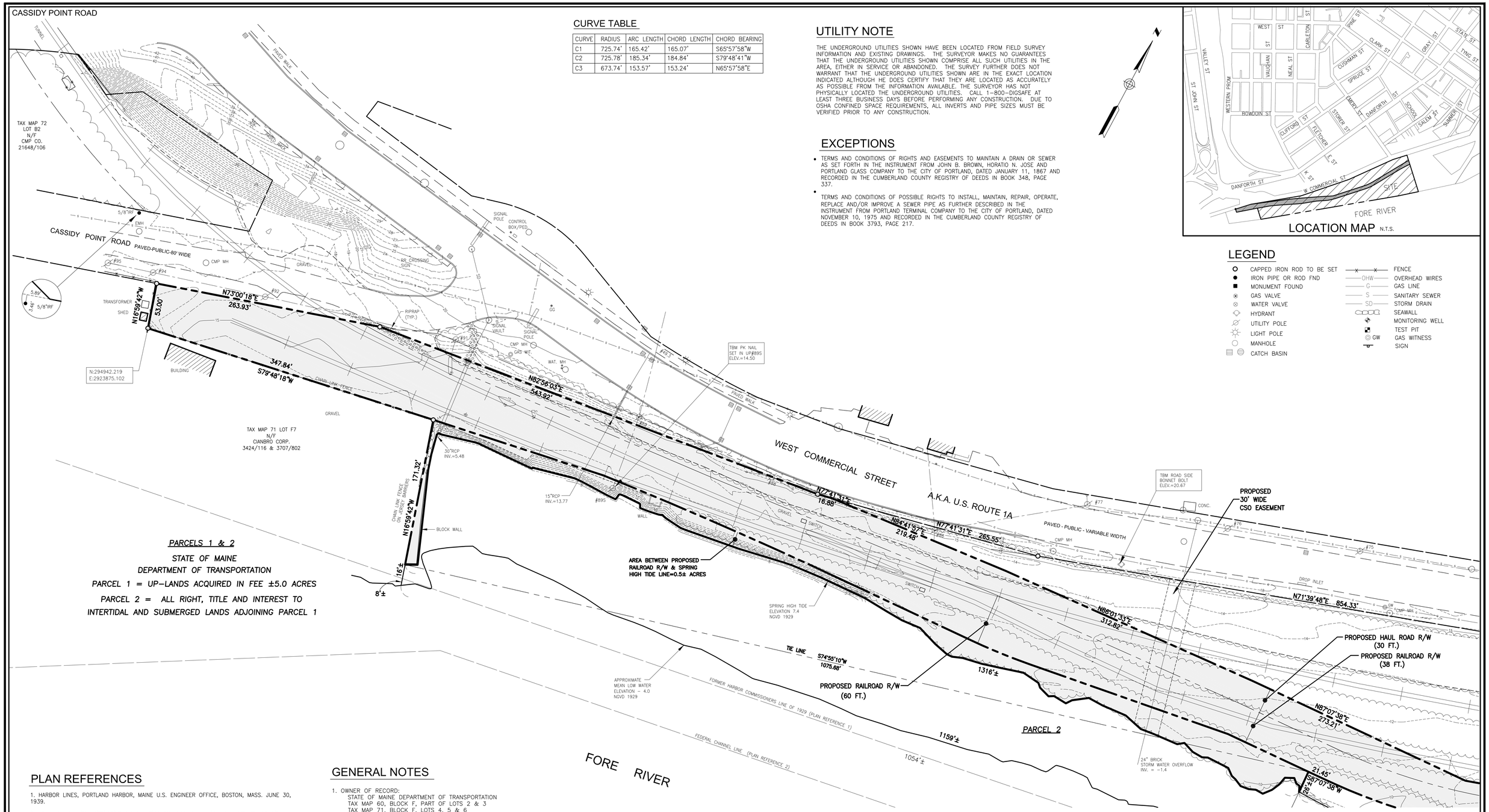

CURVE TABLE

CURVE	RADIUS	ARC LENGTH	CHORD LENGTH	CHORD BEARING
C1	725.74'	165.42'	165.07'	S65°57'58"W
C2	725.78'	185.34'	184.84'	S79°48'41"W
C3	673.74'	153.57'	153.24'	N65°57'58"E

UTILITY NOTE

THE UNDERGROUND UTILITIES SHOWN HAVE BEEN LOCATED FROM FIELD SURVEY INFORMATION AND EXISTING DRAWINGS. THE SURVEYOR MAKES NO GUARANTEES THAT THE UNDERGROUND UTILITIES SHOWN COMPRISE ALL SUCH UTILITIES IN THE AREA, EITHER IN SERVICE OR ABANDONED. THE SURVEY FURTHER DOES NOT WARRANT THAT THE UNDERGROUND UTILITIES SHOWN ARE IN THE EXACT LOCATION INDICATED ALTHOUGH HE DOES CERTIFY THAT THEY ARE LOCATED AS ACCURATELY AS POSSIBLE FROM THE INFORMATION AVAILABLE. THE SURVEYOR HAS NOT PHYSICALLY LOCATED THE UNDERGROUND UTILITIES. CALL 1-800-DIGSAFE AT LEAST THREE BUSINESS DAYS BEFORE PERFORMING ANY CONSTRUCTION. DUE TO OSHA CONFINED SPACE REQUIREMENTS, ALL INVERTS AND PIPE SIZES MUST BE VERIFIED PRIOR TO ANY CONSTRUCTION.

EXCEPTIONS

- TERMS AND CONDITIONS OF RIGHTS AND EASEMENTS TO MAINTAIN A DRAIN OR SEWER AS SET FORTH IN THE INSTRUMENT FROM JOHN B. BROWN, HORATIO N. JOSE AND PORTLAND GLASS COMPANY TO THE CITY OF PORTLAND, DATED JANUARY 11, 1867 AND RECORDED IN THE CUMBERLAND COUNTY REGISTRY OF DEEDS IN BOOK 348, PAGE 337.
- TERMS AND CONDITIONS OF POSSIBLE RIGHTS TO INSTALL, MAINTAIN, REPAIR, OPERATE, REPLACE AND/OR IMPROVE A SEWER PIPE AS FURTHER DESCRIBED IN THE INSTRUMENT FROM PORTLAND TERMINAL COMPANY TO THE CITY OF PORTLAND, DATED NOVEMBER 10, 1975 AND RECORDED IN THE CUMBERLAND COUNTY REGISTRY OF DEEDS IN BOOK 3793, PAGE 217.

LEGEND

- CAPPED IRON ROD TO BE SET
- IRON PIPE OR ROD FND
- MONUMENT FOUND
- GAS VALVE
- WATER VALVE
- HYDRANT
- UTILITY POLE
- LIGHT POLE
- MANHOLE
- CATCH BASIN
- FENCE
- OVERHEAD WIRES
- GAS LINE
- SANITARY SEWER
- STORM DRAIN
- SEAWALL
- MONITORING WELL
- TEST PIT
- GAS WITNESS
- SIGN

PLAN REFERENCES

1. HARBOR LINES, PORTLAND HARBOR, MAINE U.S. ENGINEER OFFICE, BOSTON, MASS. JUNE 30, 1939.

2. PORTLAND HARBOR, PORTLAND, MAINE CONDITION SURVEY, 35 AND 45-FOOT CHANNELS, 45-FOOT ANCHORAGE, 35-FOOT TURNING BASINS, DATED SEPT. 13, 2011 U.S. ARMY CORPS OF ENGINEER NEW ENGLAND DISTRICT SHEET ID. NO. V-105.

3. COMMERCIAL STREET DRAINAGE AND TRAFFIC IMPROVEMENTS CIVIL PLAN MADE BY CITY OF PORTLAND, MAINE PUBLIC WORKS DEPARTMENT ENGINEERING SECTION DATED JUNE 2007.

4. ALTA/ACSM LAND TITLE SURVEY ON WEST COMMERCIAL STREET, PORTLAND, MAINE, MADE FOR NEW YARD LLC, 98 FORE STREET, PORTLAND, MAINE DATED JULY 2, 2013, REVISED THROUGH SEPT. 23, 2013 BY OWEN HASKELL, INC. RECORDED IN PLAN BOOK 213 PAGE 352 AND 353.

5. "ALTA/ACSM LAND TITLE SURVEY AT WEST COMMERCIAL STREET, PORTLAND, MAINE MADE FOR BINGHAM MCCUTCHEN LLP" BY OWEN HASKELL, INC. DATED DEC. 18, 2006.

6. "LAND TITLE SURVEY ON DANFORTH AND WEST COMMERCIAL STREETS, PORTLAND, MAINE MADE FOR MERRILL INDUSTRIES, INC." BY OWEN HASKELL, INC. DATED JAN. 27, 2003 REVISED THROUGH AUGUST 30, 2005.

7. "STANDARD BOUNDARY SURVEY FOR PROPOSED ELECTRIC SUBSTATION WEST COMMERCIAL STREET PORTLAND, MAINE." MADE FOR CMP CO. BY TITCOMB ASSOCIATES. RECORDED IN PLAN BOOK 204 PAGE 571.

GENERAL NOTES

1. OWNER OF RECORD:
   STATE OF MAINE DEPARTMENT OF TRANSPORTATION
   TAX MAP 60, BLOCK F, PART OF LOTS 2 & 3
   TAX MAP 71, BLOCK F, LOTS 4, 5 & 6
   C.C.R.D. BOOK 31408 PAGE 301

2. BEARINGS ARE BASED ON STATE PLANE COORDINATES NAD 83 MAINE WEST.

3. THE FEDERAL CHANNEL LINE TAKEN FROM PLAN REFERENCE NO. 2 USING COORDINATES IN THE DIGITAL FORMAT OF SAID PLAN.

4. VERTICAL DATUM IS NGVD 1929 BASED UPON MAINE DEPARTMENT OF TRANSPORTATION DISK L 5 (NGS) RESET 1997 FOUND SET IN CONCRETE BRIDGE ABUTMENT THAT SUPPORTS THE BEACH STREET ON RAMP WHERE IT CONNECTS TO THE CASCO BAY BRIDGE.

5. THE SEWER LINE SHOWN IS BASED ON THE LOCATION OF SEWER MANHOLES AND A PLAN TITLED "PORTLAND WATER DISTRICT PORTLAND, MAINE POLLUTION ABATEMENT FACILITIES CONTRACT NO. 3 LOWER FORE RIVER INTERCEPTOR SHEETS 23-28" BY CAMP DRESSER & MCKEE INC. DATED APRIL, 1963.

6. THE SUBJECT PARCEL IS IN THE DIVISION 18.5 WATERFRONT PORT DEVELOPMENT ZONE & DIVISION 26 SECTION 14-446 SHORE LAND REGULATION ZONE PER THE CITY OF PORTLAND CODE OF ORDINANCES LAND USE CHAPTER 14.

7. THE SUBJECT PARCEL IS IN ZONE C & ZONE A2 (ELEV. 10) AS SHOWN ON THE FLOOD INSURANCE RATE MAP 230051 0016B WITH AN EFFECTIVE DATE OF JULY 17, 1986.

SCALE : 1" = 50'

0' 25' 50' 100'

CERTIFICATE

OWEN HASKELL, INC. HEREBY CERTIFIES THAT THIS PLAN IS BASED ON, AND THE RESULT OF, AN ON THE GROUND FIELD SURVEY AND THAT TO THE BEST OF OUR KNOWLEDGE, INFORMATION AND BELIEF, IT CONFORMS TO THE BOARD OF LICENSURE FOR PROFESSIONAL LAND SURVEYORS CURRENT STANDARDS OF PRACTICE.

DATE

RANDY R. LOUBIER, PLS NO. 2407

SHEET 1 OF 2

REV.	DATE	DESCRIPTION
1	6/26/14	ADDED PROPOSED EASEMENTS & DRIVEWAY ENTERANCES

STATE OF MAINE

DEPARTMENT OF TRANSPORTATION RIGHT OF WAY MAP

16 STATE HOUSE STATION AUGUSTA, MAINE 04333-0016

"BOUNDARY & TOPOGRAPHIC SURVEY"

WEST COMMERCIAL STREET, PORTLAND, CUMBERLAND COUNTY, MAINE

Date:	Scale	D.O.T. FILE NO. 3-595
APRIL 2014	1" = 50'	

OWEN HASKELL, INC.
390 U.S. ROUTE ONE, FALMOUTH, ME 04105 (207) 774-0424
PROFESSIONAL LAND SURVEYORS

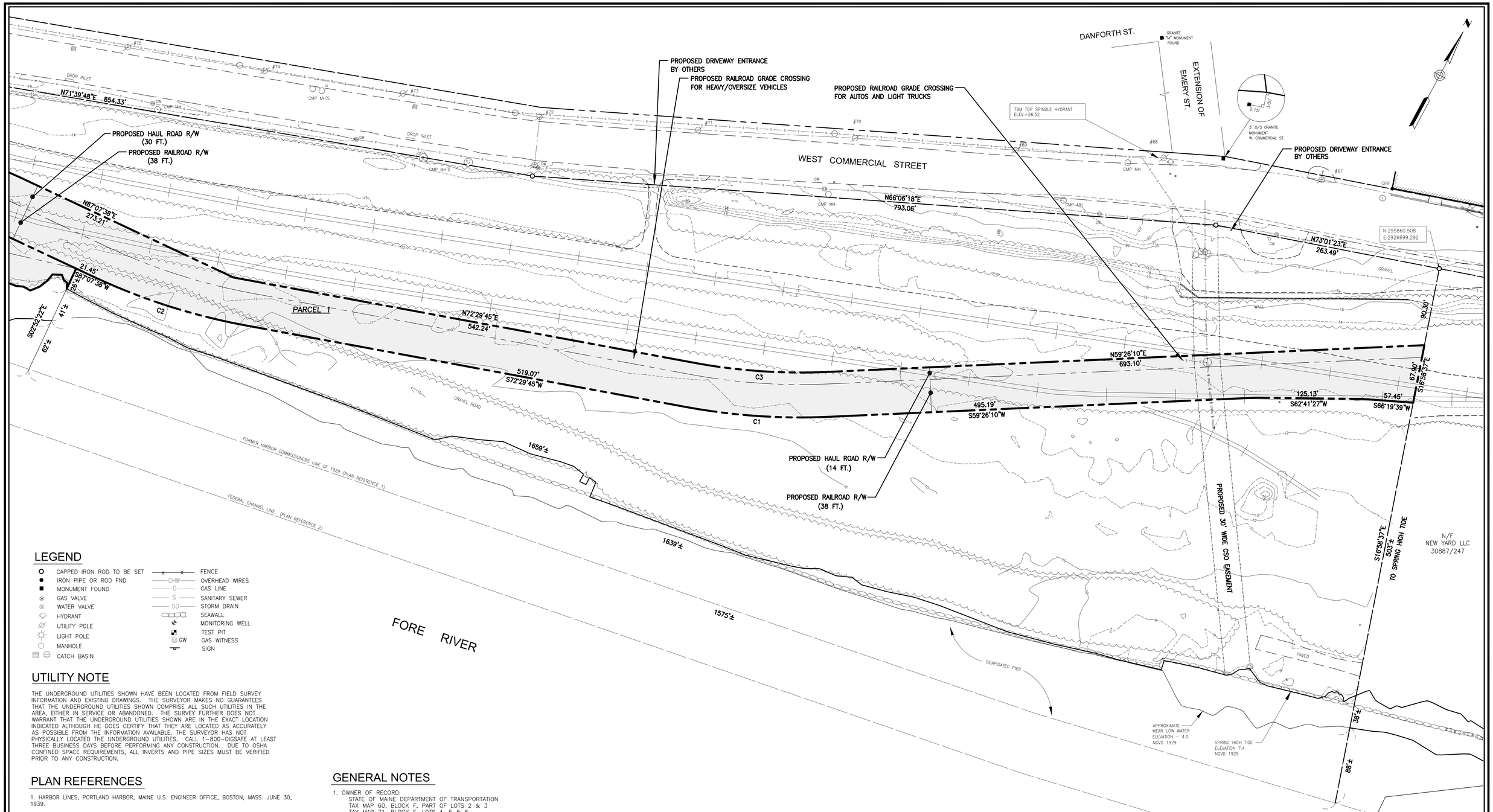

LEGEND

- CAPPED IRON ROD TO BE SET
- IRON PIPE OR ROD FND
- MONUMENT FOUND
- GAS VALVE
- WATER VALVE
- HYDRANT
- UTILITY POLE
- LIGHT POLE
- MANHOLE
- CATCH BASIN
- FENCE
- OVERHEAD WIRES
- GAS LINE
- SANITARY SEWER
- STORM DRAIN
- SEAWALL
- MONITORING WELL
- TEST PIT
- GAS WITNESS
- SIGN

UTILITY NOTE

THE UNDERGROUND UTILITIES SHOWN HAVE BEEN LOCATED FROM FIELD SURVEY INFORMATION AND EXISTING DRAWINGS. THE SURVEYOR MAKES NO GUARANTEES THAT THE UNDERGROUND UTILITIES SHOWN COMPRISE ALL SUCH UTILITIES IN THE AREA, EITHER IN SERVICE OR ABANDONED. THE SURVEY FURTHER DOES NOT WARRANT THAT THE UNDERGROUND UTILITIES SHOWN ARE IN THE EXACT LOCATION INDICATED ALTHOUGH HE DOES CERTIFY THAT THEY ARE LOCATED AS ACCURATELY AS POSSIBLE FROM THE INFORMATION AVAILABLE. THE SURVEYOR HAS NOT PHYSICALLY LOCATED THE UNDERGROUND UTILITIES. CALL 1–800–DIGSAFE AT LEAST THREE BUSINESS DAYS BEFORE PERFORMING ANY CONSTRUCTION. DUE TO OSHA CONFINED SPACE REQUIREMENTS, ALL INVERTS AND PIPE SIZES MUST BE VERIFIED PRIOR TO ANY CONSTRUCTION.

PLAN REFERENCES

1. HARBOR LINES, PORTLAND HARBOR, MAINE U.S. ENGINEER OFFICE, BOSTON, MASS. JUNE 30, 1939.

2. PORTLAND HARBOR, PORTLAND, MAINE CONDITION SURVEY, 35 AND 45–FOOT CHANNELS, 45–FOOT ANCHORAGE, 35–FOOT TURNING BASINS, DATED SEPT. 13, 2011 U.S. ARMY CORPS OF ENGINEER NEW ENGLAND DISTRICT SHEET ID. NO. V–105.

3. COMMERCIAL STREET DRAINAGE AND TRAFFIC IMPROVEMENTS CIVIL PLAN MADE BY CITY OF PORTLAND, MAINE PUBLIC WORKS DEPARTMENT ENGINEERING SECTION DATED JUNE 2007.

4. ALTA/ACSM LAND TITLE SURVEY ON WEST COMMERCIAL STREET, PORTLAND, MAINE, MADE FOR NEW YARD LLC, 98 FORE STREET, PORTLAND, MAINE DATED JULY 2, 2013, REVISED THROUGH SEPT. 23, 2013 BY OWEN HASKELL, INC. RECORDED IN PLAN BOOK 213 PAGE 352 AND 353.

5. "ALTA/ACSM LAND TITLE SURVEY AT WEST COMMERCIAL STREET, PORTLAND, MAINE MADE FOR BINGHAM MCCUTCHEN LLP" BY OWEN HASKELL, INC. DATED DEC. 18, 2006.

6. "LAND TITLE SURVEY ON DANFORTH AND WEST COMMERCIAL STREETS, PORTLAND, MAINE MADE FOR MERRILL INDUSTRIES, INC." BY OWEN HASKELL, INC. DATED JAN. 27, 2003 REVISED THROUGH AUGUST 30, 2005.

7. "STANDARD BOUNDARY SURVEY FOR PROPOSED ELECTRIC SUBSTATION WEST COMMERCIAL STREET PORTLAND, MAINE." MADE FOR CMP CO. BY TITCOMB ASSOCIATES. RECORDED IN PLAN BOOK 204 PAGE 571.

GENERAL NOTES

1. OWNER OF RECORD:
   STATE OF MAINE DEPARTMENT OF TRANSPORTATION
   TAX MAP 60, BLOCK F, PART OF LOTS 2 & 3
   TAX MAP 71, BLOCK F, LOTS 4, 5 & 6
   C.C.R.D. BOOK 31408 PAGE 301

2. BEARINGS ARE BASED ON STATE PLANE COORDINATES NAD 83 MAINE WEST.

3. THE FEDERAL CHANNEL LINE TAKEN FROM PLAN REFERENCE NO. 2 USING COORDINATES IN THE DIGITAL FORMAT OF SAID PLAN.

4. VERTICAL DATUM IS NGVD 1929 BASED UPON MAINE DEPARTMENT OF TRANSPORTATION DISK L 5 (NGS) RESET 1997 FOUND SET IN CONCRETE BRIDGE ABUTMENT THAT SUPPORTS THE BEACH STREET ON RAMP WHERE IT CONNECTS TO THE CASCO BAY BRIDGE.

5. THE SEWER LINE SHOWN IS BASED ON THE LOCATION OF SEWER MANHOLES AND A PLAN TITLED "PORTLAND WATER DISTRICT PORTLAND, MAINE POLLUTION ABATEMENT FACILITIES CONTRACT NO. 3 LOWER FORE RIVER INTERCEPTOR SHEETS 23–28" BY CAMP DRESSER & MCKEE INC. DATED APRIL, 1963.

6. THE SUBJECT PARCEL IS IN THE DIVISION 18.5 WATERFRONT PORT DEVELOPMENT ZONE & DIVISION 26 SECTION 14–446 SHORE LAND REGULATION ZONE PER THE CITY OF PORTLAND CODE OF ORDINANCES LAND USE CHAPTER 14.

7. THE SUBJECT PARCEL IS IN ZONE C & ZONE A2 (ELEV. 10) AS SHOWN ON THE FLOOD INSURANCE RATE MAP 230051 0016B WITH AN EFFECTIVE DATE OF JULY 17, 1986.

EXCEPTIONS

- TERMS AND CONDITIONS OF RIGHTS AND EASEMENTS TO MAINTAIN A DRAIN OR SEWER AS SET FORTH IN THE INSTRUMENT FROM JOHN B. BROWN, HORATIO N. JOSE AND PORTLAND GLASS COMPANY TO THE CITY OF PORTLAND, DATED JANUARY 11, 1867 AND RECORDED IN THE CUMBERLAND COUNTY REGISTRY OF DEEDS IN BOOK 348, PAGE 337.
- TERMS AND CONDITIONS OF POSSIBLE RIGHTS TO INSTALL, MAINTAIN, REPAIR, OPERATE, REPLACE AND/OR IMPROVE A SEWER PIPE AS FURTHER DESCRIBED IN THE INSTRUMENT FROM PORTLAND TERMINAL COMPANY TO THE CITY OF PORTLAND, DATED NOVEMBER 10, 1975 AND RECORDED IN THE CUMBERLAND COUNTY REGISTRY OF DEEDS IN BOOK 3793, PAGE 217.

SCALE : 1" = 50'

0' 25' 50' 100'

CERTIFICATE

OWEN HASKELL, INC. HEREBY CERTIFIES THAT THIS PLAN IS BASED ON, AND THE RESULT OF, AN ON THE GROUND FIELD SURVEY AND THAT TO THE BEST OF OUR KNOWLEDGE, INFORMATION AND BELIEF, IT CONFORMS TO THE BOARD OF LICENSURE FOR PROFESSIONAL LAND SURVEYORS CURRENT STANDARDS OF PRACTICE.

DATE

RANDY R. LOUBIER, PLS NO. 2407

SHEET 2 OF 2

REV.	DATE	DESCRIPTION
1	6/26/14	ADDED PROPOSED EASEMENTS & DRIVEWAY ENTERANCES

STATE OF MAINE

DEPARTMENT OF TRANSPORTATION RIGHT OF WAY MAP

16 STATE HOUSE STATION AUGUSTA, MAINE 04333–0016

"BOUNDARY & TOPOGRAPHIC SURVEY"

WEST COMMERCIAL STREET, PORTLAND, CUMBERLAND COUNTY, MAINE

Date:	Scale	D.O.T. FILE NO. 3–595
APRIL 2014	1" = 50'	

OWEN HASKELL, INC.
390 U.S. ROUTE ONE, FALMOUTH, ME 04105 (207) 774–0424
PROFESSIONAL LAND SURVEYORS

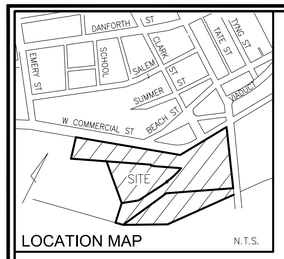

LOCATION MAP N.T.S.

MAINE STATE PLANE
NAD 1983 WEST ZONE
SEE NOTE 3

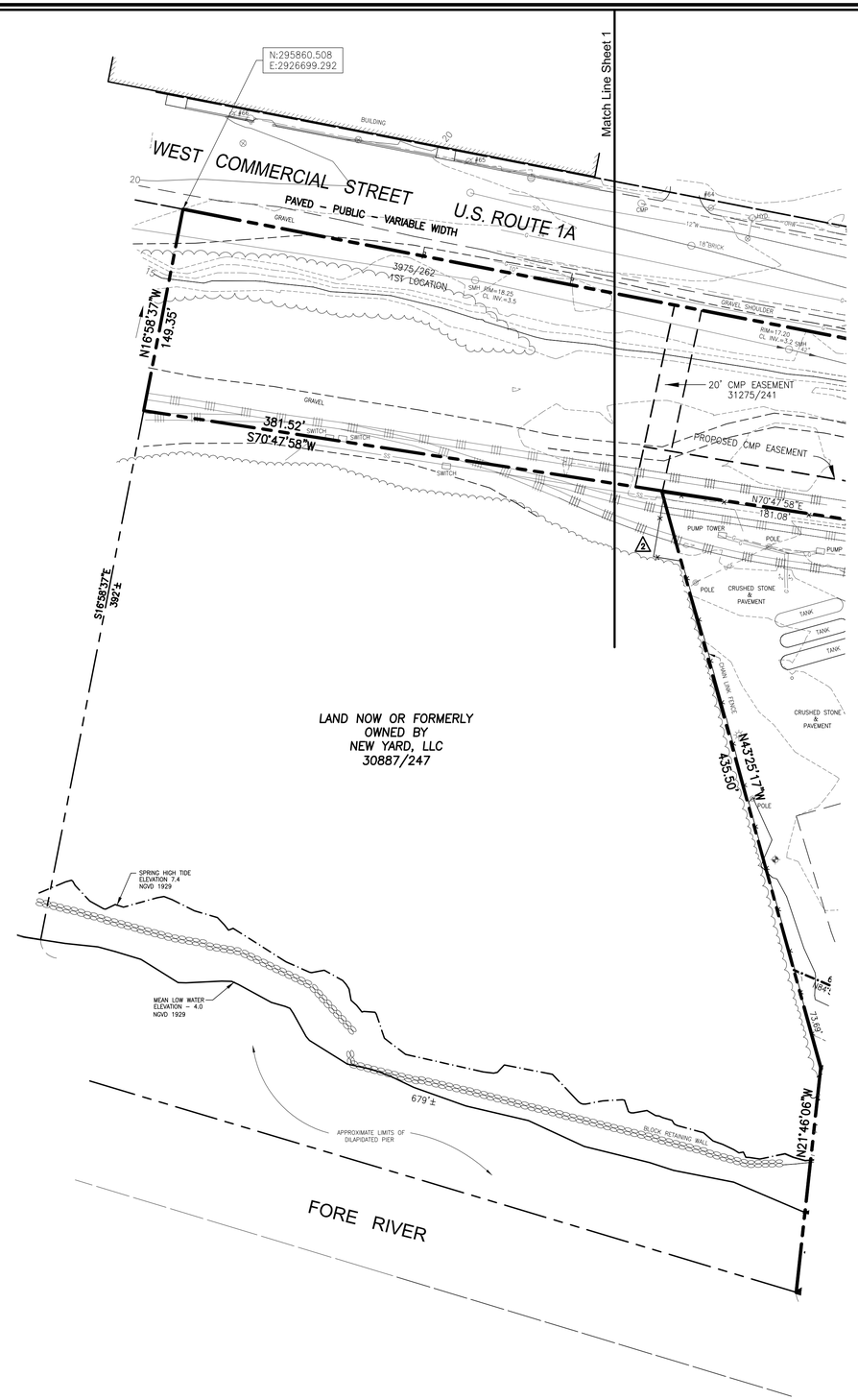

UTILITY COMPANIES

SANITARY SEWER/STORM DRAIN:
CITY OF PORTLAND
DEPARTMENT OF PUBLIC SERVICES
55 PORTLAND STREET
PORTLAND, MAINE 04101

GAS:
UNITIL
1075 FOREST AVENUE
PORTLAND, MAINE 04103
TEL. 207-797-8002
TEL. 1-866-933-3821

WATER:
PORTLAND WATER DISTRICT
225 DOUGLASS STREET
PORTLAND, MAINE 04102
TEL. 207-761-8310

UTILITY NOTE

THE UNDERGROUND UTILITIES SHOWN HAVE BEEN LOCATED FROM FIELD SURVEY INFORMATION AND EXISTING DRAWINGS. THE SURVEYOR MAKES NO GUARANTEES THAT THE UNDERGROUND UTILITIES SHOWN COMPRISE ALL SUCH UTILITIES IN THE AREA, EITHER IN SERVICE OR ABANDONED. THE SURVEY FURTHER DOES NOT WARRANT THAT THE UNDERGROUND UTILITIES SHOWN ARE IN THE EXACT LOCATION INDICATED ALTHOUGH HE DOES CERTIFY THAT THEY ARE LOCATED AS ACCURATELY AS POSSIBLE FROM THE INFORMATION AVAILABLE. THE SURVEYOR HAS NOT PHYSICALLY LOCATED THE UNDERGROUND UTILITIES. CALL 1-800-DIGSAFE AT LEAST THREE BUSINESS DAYS BEFORE PERFORMING ANY CONSTRUCTION. DUE TO OSHA CONFINED SPACE REQUIREMENTS, ALL INVERTS AND PIPE SIZES MUST BE VERIFIED PRIOR TO ANY CONSTRUCTION.

LEGEND

- IRON PIPE OR ROD FND
- MONUMENT FOUND
- GAS VALVE
- WATER VALVE
- HYDRANT
- UTILITY POLE
- LIGHT POLE
- MANHOLE
- CATCH BASIN
- SIGN
- MONITORING WELL
- FENCE
- CURB
- OHW — OVERHEAD WIRES
- UGE — UNDERGROUND ELECTRIC
- T — TELEPHONE
- W — WATER LINE
- G — GAS LINE
- SS — SANITARY SEWER
- SD — STORM DRAIN
- 10 — 1' CONTOUR

SCALE : 1" = 50'

0' 25' 50' 100'

RECORD OWNER

TAX MAP 59, BLOCK A, LOTS 1, 2, 5, 7, 8, 9 & 10
STATE OF MAINE DEPARTMENT OF TRANSPORTATION
C.C.R.D. BOOK 31470 PAGE 191

CERTIFICATE

OWEN HASKELL, INC. HEREBY CERTIFIES THAT THIS PLAN IS BASED ON, AND THE RESULT OF, AN ON THE GROUND FIELD SURVEY AND THAT TO THE BEST OF OUR KNOWLEDGE, INFORMATION AND BELIEF, IT CONFORMS TO THE BOARD OF LICENSURE FOR PROFESSIONAL LAND SURVEYORS CURRENT STANDARDS OF PRACTICE.

RANDY R. LOUBIER
PROFESSIONAL LAND SURVEYOR NO. 2407
IN THE STATE OF MAINE

DATE OF PLAN: APRIL 4, 2014
REVISION DATE: JUNE 26, 2014

BOUNDARY & TOPOGRAPHIC SURVEY

WEST COMMERCIAL STREET
PORTLAND, CUMBERLAND COUNTY, MAINE
MADE FOR
HNTB & THE MAINE DEPARTMENT OF TRANSPORTATION

OWEN HASKELL, INC.
390 U.S. ROUTE ONE, FALMOUTH, ME 04105 (207) 774-0424
PROFESSIONAL LAND SURVEYORS

Drwn By	RRL	Date	Job No.
Trace By	RRL	APRIL 4, 2014	2013-154P
Check By	JLW	Scale	Drwg. No.
Book No.	FILE	1" = 50'	2 OF 3

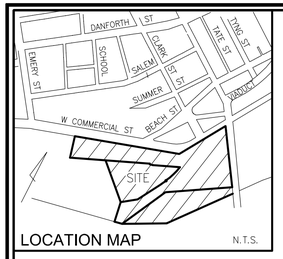

LOCATION MAP N.T.S.

MAINE STATE PLANE
NAD 1983 WEST ZONE
SEE NOTE 2

PLAN REFERENCES

1. HARBOR LINES, PORTLAND HARBOR, MAINE U.S. ENGINEER OFFICE, BOSTON, MASS. JUNE 30, 1939.

2. STANDARD BOUNDARY SURVEY SOUTH OF COMMERCIAL STREET, PORTLAND, MAINE FOR CENTRAL MAINE POWER COMPANY, PROPOSED EASEMENT LOCATION ON LAND OF PORTLAND TERMINAL COMPANY & MAINE CENTRAL RAILROAD AND CASCO WHARF AND STORAGE DATED DEC. 10, 1992 REV. 2 JAN. 27, 1993 BY OWEN HASKELL, INC.

3. STANDARD BOUNDARY & TOPOGRAPHIC SURVEY ON COMMERCIAL STREET, PORTLAND, MAINE MADE FOR NORTHERN UTILITIES, INC. DATED AUGUST 6, 1999 BY OWEN HASKELL, INC.

4. STANDARD BOUNDARY SURVEY FOR PROPERTY AT PORTLAND INTERNATIONAL MARINE TERMINAL, COMMERCIAL STREET, PORTLAND, CUMBERLAND COUNTY, MAINE OWNED BY CITY OF PORTLAND DATED AUGUST 14, 2002 BY EASTERLY SURVEYING, INC.

5. PLAN OF LAND ON WEST COMMERCIAL STREET, PORTLAND, MAINE MADE FOR CENTRAL MAINE POWER COMPANY DATED APRIL 24, 2003 BY OWEN HASKELL, INC.

6. ALTA/ACSM LAND TITLE SURVEY AT WEST COMMERCIAL STREET, PORTLAND, MAINE MADE FOR BINGHAM MCCUTCHEN LLP DATED DEC. 18, 2006 BY OWEN HASKELL, INC.

7. PORTLAND HARBOR, PORTLAND, MAINE CONDITION SURVEY, 35 AND 45-FOOT CHANNELS, 45-FOOT ANCHORAGE, 35-FOOT TURNING BASINS, DATED SEPT. 13, 2011 U.S. ARMY CORPS OF ENGINEER NEW ENGLAND DISTRICT SHEET ID. NO. V-105.

8. STANDARD BOUNDARY SURVEY FOR PROPERTY AT PORTLAND INTERNATIONAL MARINE TERMINAL, COMMERCIAL STREET, PORTLAND, CUMBERLAND COUNTY, MAINE OWNED BY CITY OF PORTLAND DATED AUGUST 14, 2002 BY NORTHEASTERLY SURVEYING, INC.

9. PORTLAND TERMINAL COMPANY OFFICE OF THE VICE PRESIDENT – ENGINEERING, LAND SALE PLAN, PORTLAND, ME DATED DEC. 30, 2011.

10. COMMERCIAL STREET DRAINAGE AND TRAFFIC IMPROVEMENTS CIVIL PLAN MADE BY CITY OF PORTLAND, MAINE PUBLIC WORKS DEPARTMENT ENGINEERING SECTION DATED JUNE 2007.

11. PLAN OF PROPERTY IN THE CITY OF PORTLAND BY W. ANSON, CITY ENGINEER, PORTLAND, JUNE 1854, RECORDED IN THE PLAN BOOK 2 PAGE 5.

12. ATLAS OF THE CITY OF PORTLAND AND SOUTH PORTLAND MAINE PLAT 4 BY RICHARDS MAP CO. SPRINGFIELD, MASS. DATED 1914.

13. LAND ON WEST COMMERCIAL STREET, PORTLAND, MAINE, MAINE CENTRAL RAILROAD COMPANY TO NEW YARD LLC, DATED JULY 30, 2013, BY OWEN HASKELL, INC.

14. ALTA/ACSM LAND TITLE SURVEY WEST COMMERCIAL STREET PORTLAND, CUMBERLAND COUNTY, MAINE MADE FOR NEW YARD LLC BY OWEN HASKELL, INC. DATED JULY 2, 2012 REVISED THROUGH SEPTEMBER 23, 2013. RECORDED IN PLAN BOOK 213 PAGES 352 & 353.

GENERAL NOTES

1. THE FEDERAL CHANNEL LINE TAKEN FROM PLAN REFERENCE NO. 7 USING COORDINATES IN THE DIGITAL FORMAT OF SAID PLAN.

2. VERTICAL DATUM IS NGVD 1929 BASED UPON MAINE DEPARTMENT OF TRANSPORTATION DISK L 5 (NGS) RESET 1997 FOUND SET IN CONCRETE BRIDGE ABUTMENT THAT SUPPORTS THE BEACH STREET ON RAMP WHERE IT CONNECTS TO THE CASCO BAY BRIDGE.

3. BEARINGS ARE MAINE STATE PLANE WEST COORDINATES NAD 83 MAINE WEST. ALL DISTANCES SHOWN HEREON ARE GROUND DISTANCES. THE COMBINED AVERAGE SCALE FACTOR IS 0.99996739601407

4. NO RECORDED DOCUMENTS HAVE BEEN FOUND FOR THIS RIGHT OF WAY, EXCEPT FOR IT HAS BEEN SHOWN ON OR IMPLIED ON THE PLANS REFERENCED AND THERE HAVE BEEN TWO UNRECORDED AGREEMENTS BETWEEN PAN AM'S AND UNITIL'S LEGACY COMPANIES:

–THE INSTALLATION OF A 12-INCH PIPE WITHIN A 10-FOOT WIDE STRIP OR CROSSING (DATED JULY 1, 1897).

–THE SAME CROSSING IS ACKNOWLEDGED VIA THE INSTALLATION OF A 4-INCH STEEL GAS PIPE UNDER RIGHT OF WAY AND DETAILED ON THE PORTLAND TERMINAL COMPANY'S PLAN AS A PRIVATE CROSSING (DATED DECEMBER 30, 1941).

5. FIELD WORK WAS COMPLETED FROM SUMMER 2012 THROUGH MARCH 2014.

6. THE SUBJECT PARCEL IS IN THE DIVISION 18.5 WATERFRONT PORT DEVELOPMENT ZONE & DIVISION 26 SECTION 14-446 SHORE LAND REGULATION ZONE PER THE CITY OF PORTLAND CODE OF ORDINANCES LAND USE CHAPTER 14.

7. THE SUBJECT PARCEL IS IN ZONE C & ZONE A2 (ELEV. 10) AS SHOWN ON THE FLOOD INSURANCE RATE MAP 230051 0016B WITH AN EFFECTIVE DATE OF JULY 17, 1986.

POSSIBLE ENCROADMENTS

1. FENCE OVER LINE 18.5±

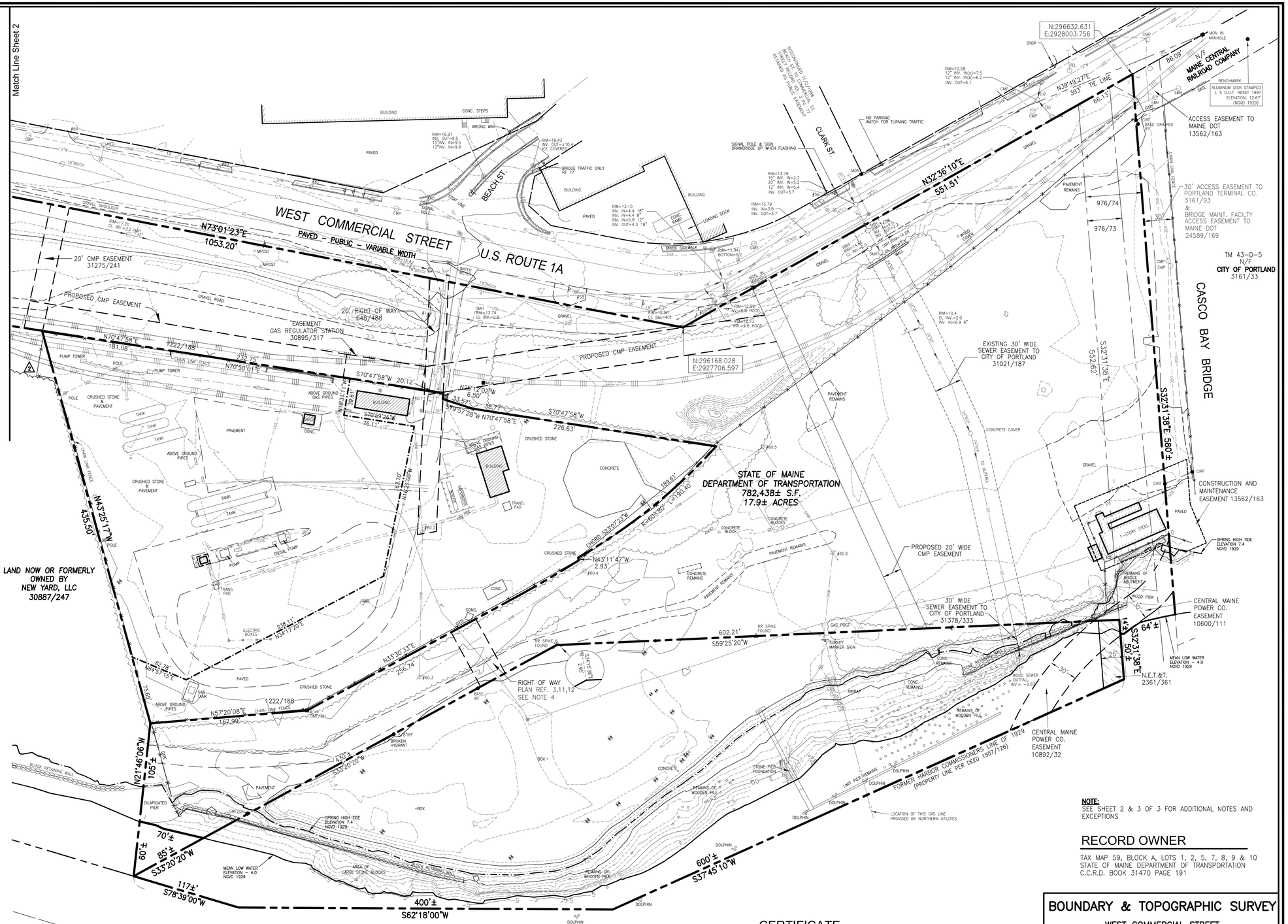

NOTE:
SEE SHEET 2 & 3 OF 3 FOR ADDITIONAL NOTES AND EXCEPTIONS

RECORD OWNER

TAX MAP 59, BLOCK A, LOTS 1, 2, 5, 7, 8, 9 & 10
STATE OF MAINE DEPARTMENT OF TRANSPORTATION
C.C.R.D. BOOK 31470 PAGE 191

LEGEND

- IRON PIPE OR ROD FND
- MONUMENT FOUND
- GAS VALVE
- WATER VALVE
- HYDRANT
- UTILITY POLE
- LIGHT POLE
- MANHOLE
- CATCH BASIN
- SIGN
- MONITORING WELL
- FENCE
- CURB
- OVERHEAD WIRES
- UNDERGROUND ELECTRIC
- TELEPHONE
- WATER LINE
- GAS LINE
- SANITARY SEWER
- STORM DRAIN
- 1' CONTOUR

UTILITY NOTE

THE UNDERGROUND UTILITIES SHOWN HAVE BEEN LOCATED FROM FIELD SURVEY INFORMATION AND EXISTING DRAWINGS. THE SURVEYOR MAKES NO GUARANTEES THAT THE UNDERGROUND UTILITIES SHOWN COMPRISE ALL SUCH UTILITIES IN THE AREA, EITHER IN SERVICE OR ABANDONED. THE SURVEY FURTHER DOES NOT WARRANT THAT THE UNDERGROUND UTILITIES SHOWN ARE IN THE EXACT LOCATION INDICATED ALTHOUGH HE DOES CERTIFY THAT THEY ARE LOCATED AS ACCURATELY AS POSSIBLE FROM THE INFORMATION AVAILABLE. THE SURVEYOR HAS NOT PHYSICALLY LOCATED THE UNDERGROUND UTILITIES. CALL 1-800-DIGSAFE AT LEAST THREE BUSINESS DAYS BEFORE PERFORMING ANY CONSTRUCTION. DUE TO OSHA CONFINED SPACE REQUIREMENTS, ALL INVERTS AND PIPE SIZES MUST BE VERIFIED PRIOR TO ANY CONSTRUCTION.

SCALE : 1" = 50'
0' 25' 50' 100'

CERTIFICATE

OWEN HASKELL, INC. HEREBY CERTIFIES THAT THIS PLAN IS BASED ON, AND THE RESULT OF, AN ON THE GROUND FIELD SURVEY AND THAT TO THE BEST OF OUR KNOWLEDGE, INFORMATION AND BELIEF, IT CONFORMS TO THE BOARD OF LICENSURE FOR PROFESSIONAL LAND SURVEYORS CURRENT STANDARDS OF PRACTICE.

RANDY R. LOUBIER
PROFESSIONAL LAND SURVEYOR NO. 2407
IN THE STATE OF MAINE

DATE OF PLAN: APRIL 4, 2014
REVISION DATE: JUNE 26, 2014

BOUNDARY & TOPOGRAPHIC SURVEY

WEST COMMERCIAL STREET
PORTLAND, CUMBERLAND COUNTY, MAINE
MADE FOR
HNTB & THE MAINE DEPARTMENT OF TRANSPORTATION

OWEN HASKELL, INC.
390 U.S. ROUTE ONE, FALMOUTH, ME 04105 (207) 774-0424
PROFESSIONAL LAND SURVEYORS

Drwn By	RRL	Date	Job No.
Trace By	RRL	APRIL 4, 2014	2013-154P
Check By	JLW	Scale	Drwg. No.
Book No.	FILE	1" = 50'	1 OF 3

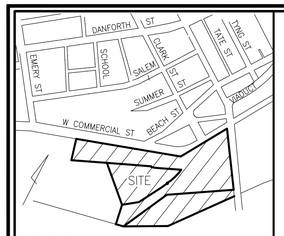

LOCATION MAP N.T.S.

EXCEPTIONS:

THE FOLLOWING ITEMS WERE EXCEPTED FROM THE STATE'S ACQUISITION AGAINST MAINE CENTRAL RAILROAD COMPANY/PORTLAND TERMINAL COMPANY:

1. TERMS AND CONDITIONS OF RIGHTS AND EASEMENT TO MAINTAIN A DRAIN OR SEWER AS SET FORTH IN THE INSTRUMENT FROM JOHN B. BROWN, HORATIO N. JOSE AND PORTLAND GLASS COMPANY TO THE CITY OF PORTLAND DATED JANUARY 11, 1867 AND RECORDED IN SAID REGISTRY OF DEEDS IN BOOK 348, PAGE 337; AND

2. TERMS AND CONDITIONS OF POSSIBLE RIGHTS TO INSTALL, MAINTAIN, REPAIR, OPERATE, REPLACE AND/OR IMPROVE A SEWER PIPE AS FURTHER DESCRIBED IN THE INSTRUMENT FROM PORTLAND TERMINAL COMPANY TO THE CITY OF PORTLAND, DATED NOVEMBER 10, 1975 AND RECORDED IN SAID REGISTRY OF DEEDS IN BOOK 3793, PAGE 217.

THE FOLLOWING ITEMS WERE EXCEPTED FROM THE STATE OF MAINE'S ACQUISITION FROM NEW YARD, LLC, NORTHERN UTILITIES, INC., D/B/A UNITIL, AND OSTERMAN PROPANE, LLC (F/K/A NGL-NE, LLC:

1. RESERVING TO NORTHERN UTILITIES, INC., D/B/A UNITIL ("UNITIL"), THE RIGHT TO ENTER UPON THE ACQUIRED PROPERTY WITHIN THE AREAS DEPICTED ON THE BEFORE MENTIONED RIGHT OF WAY MAP AS PARCEL 2 AND PARCEL 3 (THE "FORMER UNITIL PROPERTY") FOR THE FOLLOWING PURPOSES:

   a. TO REPAIR, REPLACE, MAINTAIN, OPERATE, INSPECT, PATROL, PROTECT AND REMOVE ON, IN, OVER, ACROSS AND UNDER THE FORMER UNITIL PROPERTY ALL EXISTING GAS MAINS, LATERALS, SERVICES, EQUIPMENT, FIXTURES, CONTAINMENT AND OTHER APPURTENANCES THERETO CURRENTLY OWNED BY UNTIL ("GAS FACILITIES");

   b. TO SURVEY, TRIM OR REMOVE WITHIN THE FORMER UNITIL PROPERTY, EXISTING OR FUTURE OCCURRING VEGETATION THAT INTERFERES WITH THE GAS FACILITIES;

   c. TO TAKE SUCH OTHER ACTION AS IS INCIDENT OR ACCESSORY TO THE FOREGOING ACTIONS;

   d. TO CROSS THE FORMER UNITIL PROPERTY TO ACCESS THE GAS FACILITIES, INCLUDING BY VEHICLE AND MACHINERY IN A MANNER THAT DOES NOT INTERFERE WITH THE ONGOING ACTIVITIES OF THE DEPARTMENT;

   e. TO CONDUCT SUCH ENVIRONMENTAL REMEDIATION AND PROTECTION, INCLUDING INVESTIGATION, IMPLEMENTATION, AND MONITORING, AS WELL AS INSTALLATION OF UTILITIES FOR SUCH INVESTIGATION, IMPLEMENTATION AND MONITORING, AS DESCRIBED IN UNITIL'S VOLUNTARY RESPONSE ACTION PROGRAM ("THE VRAP") REMEDIATION PLAN AS APPROVED BY THE MAINE DEPARTMENT OF ENVIRONMENTAL PROTECTION (THE "DEP") BY LETTER DATED JUNE 1, 2012, A COPY OF WHICH IS ON FILE WITH THE DEP (THE "PLAN") INCORPORATED HEREIN BY REFERENCE AND AS THE DEP MAY HEREAFTER AMEND IT, AND FURTHER AS THE DEP MAY HEREAFTER CERTIFY IT AS BEING COMPLETE, INCLUSIVE OF AND EXTENDING TO THE TERMS IN THE DEP'S CERTIFICATION OF THE PLAN'S COMPLETION AND ITS REGULATORY REQUIREMENTS. UNITIL MAY NOT UNREASONABLY INTERFERE WITH THE OPERATIONS OF THE DEPARTMENT IN EXERCISING THESE RIGHTS;

   f. TO ACCESS THE FORMER UNITIL PROPERTY VIA THE RIGHT OF WAY RUNNING FROM WEST COMMERCIAL STREET TO SAID PARCEL 2 AND THE RIGHT OF WAY CONNECTING PARCEL 2 AND PARCEL 3, BOTH AS DEPICTED ON THE RIGHT OF WAY MAP, OR AT SUCH OTHER REASONABLE LOCATION AS MAY BE DIRECTED BY THE DEPARTMENT; AND

   g. TO USE THE FORMER UNITIL PROPERTY AS NECESSARY TO FULFILL THE PURPOSES DESCRIBED IN SUBSECTIONS 3.A-3.E ABOVE.

2. THE DEPARTMENT SHALL NOT CONSTRUCT OR PERMIT TO BE CONSTRUCTED ANY BUILDING, HOUSE, STRUCTURE, OBSTRUCTION OR IMPROVEMENT OF ANY KIND ON OR OVER THE EXISTING GAS FACILITIES WITHOUT UNITIL'S PRIOR WRITTEN CONSENT. THE DEPARTMENT FURTHER AGREES THAT IT WILL NOT CAUSE TO BE CARRIED OUT ANY EXCAVATION, CHANGE OF GRADE, OR WATER IMPOUNDMENT AFFECTING THE GAS FACILITIES WITHOUT UNITIL'S PRIOR WRITTEN CONSENT.

3. TERMS AND CONDITIONS OF AN EASEMENT AND RIGHT OF WAY FOR THE PURPOSE OF MAINTAINING THROUGH, UNDER AND ACROSS THE PROPERTY AN ACCESS WAY FOR INSTALLING AND MAINTAINING CONDUITS OR PIPELINES FOR CONVEYING STORM WATER AND SEWER WATER AS MORE FULLY SET FORTH IN THE INSTRUMENT FROM NORTHERN UTILITIES, INC., D/B/A UNITIL TO THE CITY OF PORTLAND, DATED FEBRUARY 20, 2014 AND RECORDED IN THE CUMBERLAND COUNTY REGISTRY OF DEEDS IN BOOK 31378, PAGE 333.

4. TERMS AND CONDITIONS OF AN EASEMENT AND RIGHT OF WAY FOR THE PURPOSE OF MAINTAINING THROUGH, UNDER AND ACROSS THE PROPERTY AN ACCESS WAY FOR INSTALLING AND MAINTAINING CONDUITS OR PIPELINES FOR CONVEYING STORM WATER AND SEWER WATER AS MORE FULLY SET FORTH IN THE INSTRUMENT FROM NEW YARD, LLC TO THE CITY OF PORTLAND, DATED SEPTEMBER 9, 2013 AND RECORDED IN THE CUMBERLAND COUNTY REGISTRY OF DEEDS IN BOOK 31021, PAGE 187.

5. TERMS AND CONDITIONS OF AN EASEMENT TO ENTER UPON THE PROPERTY FOR THE PURPOSE OF ENVIRONMENTAL REMEDIATION AND PROTECTION, INCLUDING INVESTIGATION, IMPLEMENTATION, AND MONITORING, AND INSTALLATION OF UTILITIES FOR SUCH INVESTIGATION, IMPLEMENTATION AND MONITORING, AS DESCRIBED IN THE VOLUNTARY RESPONSE ACTION PROGRAM REMEDIATION PLAN AS APPROVED BY MAINE DEPARTMENT OF ENVIRONMENTAL PROTECTION, AND TO MANAGE EXISTING GAS FACILITIES AS MORE FULLY SET FORTH IN THE INSTRUMENT FROM NEW YARD, LLC TO NORTHERN UTILITIES, INC., D/B/A UNITIL, DATED AUGUST 2, 2013 AND RECORDED IN THE CUMBERLAND COUNTY REGISTRY OF DEEDS IN BOOK 30895, PAGE 321.

6. TERMS AND CONDITIONS OF AN EASEMENT TO ENTER UPON THE PROPERTY FOR THE INSTALLATION, REPAIR, REPLACEMENT, AND MAINTENANCE OF GAS MAINS, ETC. IN THE OPERATION OF A GAS REGULATOR STATION AS SET FORTH IN THE INSTRUMENT FROM NEW YARD, LLC TO NORTHERN UTILITIES, INC., D/B/A UNITIL, DATED AUGUST 2, 2013 AND RECORDED IN THE CUMBERLAND COUNTY REGISTRY OF DEEDS IN BOOK 30895, PAGE 317.

7. TERMS AND CONDITIONS OF RIGHTS AND EASEMENTS TO INSTALL, MAINTAIN, REPAIR, OPERATE, REPLACE AND/OR REMOVE SEWER PIPES AS FURTHER DESCRIBED IN THE INSTRUMENT FROM PORTLAND TERMINAL COMPANY TO PORTLAND WATER DISTRICT DATED FEBRUARY 11, 1977 AND RECORDED IN THE CUMBERLAND COUNTY REGISTRY OF DEEDS IN BOOK 3975, PAGE 262 AS AFFECTED BY THE RELEASE AND AMENDMENT OF DEED OF EASEMENT DATED JULY 27, 1994 AND RECORDED IN THE SAID REGISTRY OF DEEDS IN BOOK 11571, PAGE 154.

8. TERMS AND CONDITIONS OR RIGHTS AND EASEMENTS FOR THE CONSTRUCTION OF UNDERGROUND ELECTRIC TRANSMISSION DISTRIBUTION AND COMMUNICATION LINES UNDER THE PREMISES AS FURTHER DESCRIBED IN THE INDENTURE BETWEEN NORTHERN UTILITIES, INC. AND CENTRAL MAINE POWER COMPANY, DATED JULY 23, 1993 AND RECORDED IN SAID REGISTRY OF DEEDS IN BOOK 10892, PAGE 32.

9. TERMS AND CONDITIONS OF RIGHTS AND EASEMENTS FOR THE PURPOSE OF ERECTING, CONSTRUCTING, MAINTAINING, REPAIRING, REBUILDING, REPLACING, OPERATING, PATROLLING AND REMOVING ELECTRIC TRANSMISSION, DISTRIBUTION AND COMMUNICATION LINES AS FURTHER DESCRIBED IN THE INSTRUMENT FROM PORTLAND TERMINAL COMPANY AND MAINE CENTRAL RAILROAD COMPANY TO CENTRAL MAINE POWER COMPANY DATED FEBRUARY 9, 1993 AND RECORDED IN THE CUMBERLAND COUNTY REGISTRY OF DEEDS IN BOOK 10600, PAGE 111.

10. TERMS AND CONDITIONS OF RIGHTS AND EASEMENTS TO INSTALL AN UNDERGROUND TRANSMISSION LINE AS FURTHER DESCRIBED IN THE INSTRUMENT FROM PORTLAND TERMINAL COMPANY TO CENTRAL MAINE POWER COMPANY DATED APRIL 15, 1975 AND RECORDED IN THE CUMBERLAND COUNTY REGISTRY OF DEEDS IN BOOK 3669, PAGE 135.

11. TERMS AND CONDITIONS OF RIGHTS AND EASEMENTS INCLUDING THE RIGHT TO LAY, CONSTRUCT, RECONSTRUCT, OPERATE, MAINTAIN, REPLACE AND REMOVE LINES FOR THE TRANSMISSION OF INTELLIGENCE, INCLUDING UNDERGROUND CABLES, PIPES, CONDUITS, MANHOLES AND APPURTENANCES OVER AND UNDER THE PREMISES AS SET FORTH IN THE INSTRUMENT FROM CASCO WHARF AND STORAGE COMPANY TO NEW ENGLAND TELEPHONE AND TELEGRAPH COMPANY, DATED JUNE 25, 1957 AND RECORDED IN SAID REGISTRY OF DEEDS IN BOOK 2361, PAGE 361.

12. TERMS AND CONDITIONS OF RIGHTS AND EASEMENTS INCLUDING THE RIGHT TO CONSTRUCT, ERECT, REBUILD, OPERATE, MAINTAIN, AND REMOVE ELECTRIC DISTRIBUTION AND COMMUNICATION LINES FOR THE TRANSMISSION OF ELECTRICITY AS SET FORTH IN THE INSTRUMENT FROM PORTLAND GAS LIGHT COMPANY TO CENTRAL MAINE POWER COMPANY, DATED JANUARY 6, 1956 AND RECORDED IN SAID REGISTRY OF DEEDS IN BOOK 2276, PAGE 265.

13. TERMS AND CONDITIONS OF RIGHTS AND EASEMENTS INCLUDING THE RIGHT TO CONSTRUCT, ERECT, REBUILD, OPERATE, MAINTAIN, AND REMOVE ELECTRIC DISTRIBUTION LINES FOR THE TRANSMISSION OF ELECTRICITY AND INTELLIGENCE AS SET FORTH IN THE INSTRUMENT FROM PORTLAND GAS LIGHT COMPANY TO CENTRAL MAINE POWER COMPANY AND NEW ENGLAND TELEPHONE AND TELEGRAPH COMPANY, DATED NOVEMBER 1, 1951 AND RECORDED IN SAID REGISTRY OF DEEDS IN BOOK 2070, PAGE 128.

14. A TWENTY FOOT RIGHT OF WAY AND THE RIGHT TO LAY AND MAINTAIN GAS AND WATER PIPES WITHIN SAID RIGHT OF WAY AS DESCRIBED IN THE WARRANTY/RELEASE DEED FROM THE PORTLAND GAS LIGHT COMPANY TO MAINE CENTRAL RAILROAD COMPANY DATED MAY 5, 1897 AND RECORDED IN THE CUMBERLAND COUNTY REGISTRY OF DEEDS IN BOOK 648, PAGE 488.

15. A TWENTY FOOT WIDE RIGHT OF WAY AND THE RIGHT TO LAY, MAINTAIN AND REPAIR GAS AND WATER PIPES AND MAINTAIN AND REPAIR A WELL AND AS FURTHER DESCRIBED IN THE RELEASE DEED FROM THE PORTLAND GAS LIGHT COMPANY TO THE PORTLAND & KENNEBEC RAILROAD COMPANY DATED OCTOBER 6, 1866 AND RECORDED IN THE CUMBERLAND COUNTY REGISTRY OF DEEDS IN BOOK 346, PAGE 376.

16. ALL EXISTING UTILITY COMPANY RIGHTS OF WAY AND/OR EASEMENTS TO THE CITY OF PORTLAND, CENTRAL MAINE POWER COMPANY, NEW ENGLAND TELEPHONE AND TELEGRAPH, AND PORTLAND WATER DISTRICT, THEIR RESPECTIVE SUCCESSORS AND ASSIGNS, HOWEVER ACQUIRED, AND LOCATED WITHIN THE ABOVE DESCRIBED BOUNDARIES.

RANDY R. LOUBIER
PROFESSIONAL LAND SURVEYOR NO. 2407
IN THE STATE OF MAINE

DATE OF PLAN: APRIL 4, 2014
REVISION DATE: JUNE 26, 2014

RECORD OWNER

TAX MAP 59, BLOCK A, LOTS 1, 2, 5, 7, 8, 9 & 10
STATE OF MAINE DEPARTMENT OF TRANSPORTATION
C.C.R.D. BOOK 31470 PAGE 191

BOUNDARY & TOPOGRAPHIC SURVEY

WEST COMMERCIAL STREET
PORTLAND, CUMBERLAND COUNTY, MAINE
MADE FOR
HNTB & THE MAINE DEPARTMENT OF TRANSPORTATION

OWEN HASKELL, INC.
390 U.S. ROUTE ONE, FALMOUTH, ME 04105 (207) 774-0424
PROFESSIONAL LAND SURVEYORS

Drwn By	RRL	Date	Job No.
Trace By	RRL	APRIL 4, 2014	2013-154P
Check By	JLW	Scale	Drwg. No.
Book No.	FILE	1" = 50'	3 OF 3