STATE OF MAINE
DEPARTMENT OF TRANSPORTATION
AUGUSTA, MAINE

MATINICUS FERRY TERMINAL
MATINICUS HARBOR, MATINICUS ISLAND, MAINE

FENDER REPLACEMENT
FEDERAL WIN: ME04-0016
STATE WIN: 22803.00

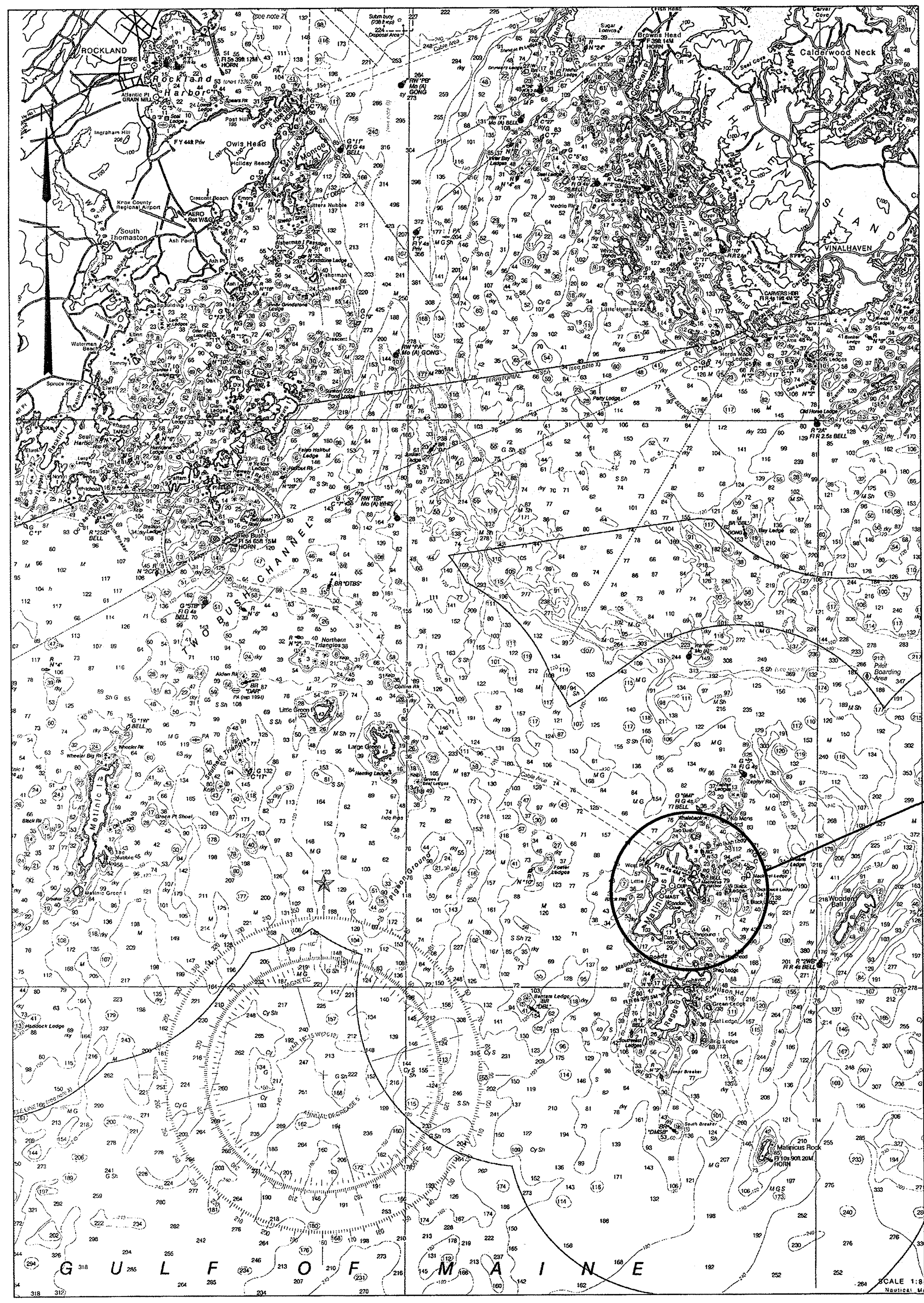

LOCATION

LOCATION MAP

FROM NOAA CHART 13302
(NOT TO BE USED FOR
NAVIGATION, NOT TO SCALE)

LIST OF DRAWINGS

SHEET NO.	DRAWING TITLE
T1	TITLE SHEET – LOCATION MAP AND INDEX
G1	SITE AND GENERAL PLANS
D1	DEMOLITION PLAN AND DETAILS
S1	PLAN AND TYPICAL SECTIONS
S2	FENDER AND DOLPHIN DETAILS

STATE OF MAINE
DEPARTMENT OF TRANSPORTATION

APPROVED	DATE
COMMISSIONER: (signature)	8/7/14
CHIEF ENGINEER: (signature)	8-7-14

STATE OF MAINE PAUL F. HARRINGTON No. 13061 LICENSED PROFESSIONAL ENGINEER

(signature)	SIGNATURE
13061	P.E. NUMBER
AUGUST 1, 2014	DATE

PROJECT INFORMATION

PROGRAM	MULTIMODAL
PROJECT MANAGER	CATHERINE RAND
DESIGNER	MARC NICOLAZZO
CONSULTANT	FAY, SPOFFORD & THORNDIKE
PROJECT RESIDENT	
CONTRACTOR	
PROJECT COMPLETION DATE	

MATINICUS FERRY TERMINAL
MATINICUS HARBOR, MATINICUS ISLAND, MAINE
FENDER REPLACEMENT

TITLE SHEET – LOCATION MAP AND INDEX

SHEET NUMBER

T1

R:\TM-095 Matinicus Island\CADD\COVER.dwg 07/31/14 14:18 [53.07] By Tripp_R

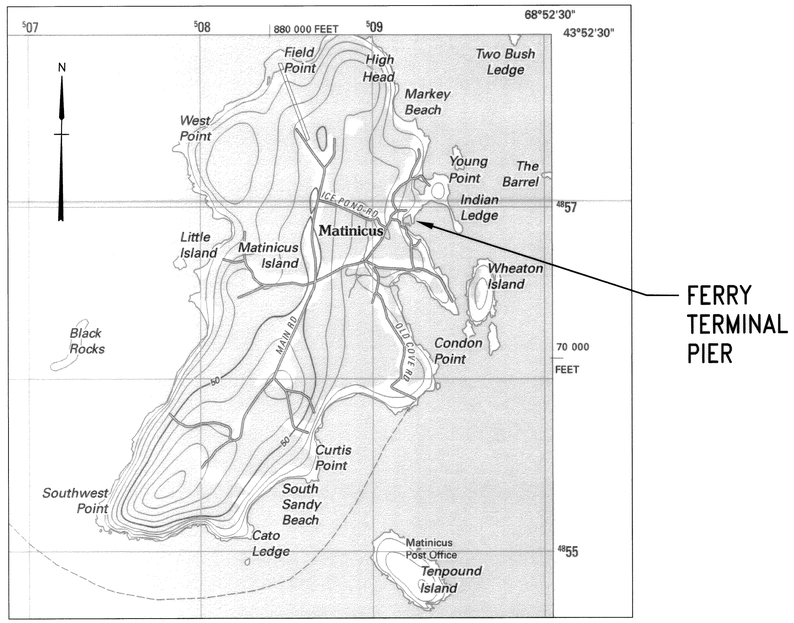

SITE PLAN

NOT TO SCALE

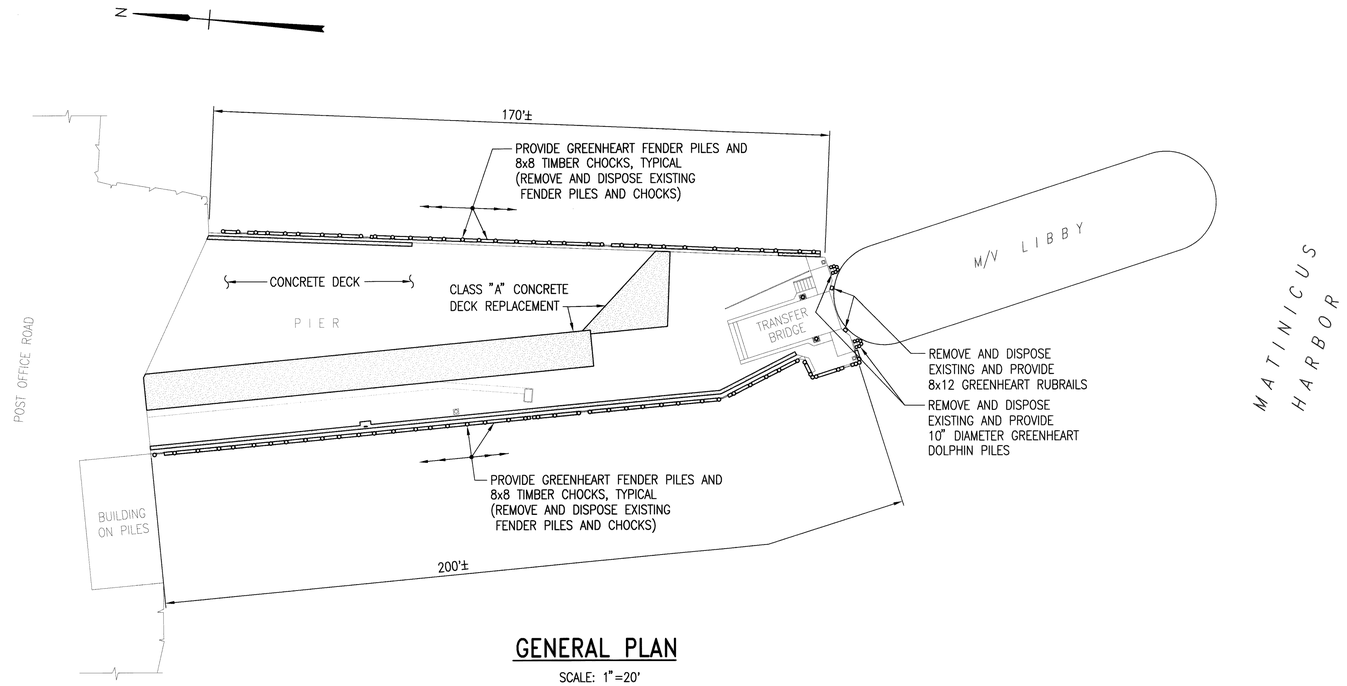

GENERAL PLAN

SCALE: 1"=20'

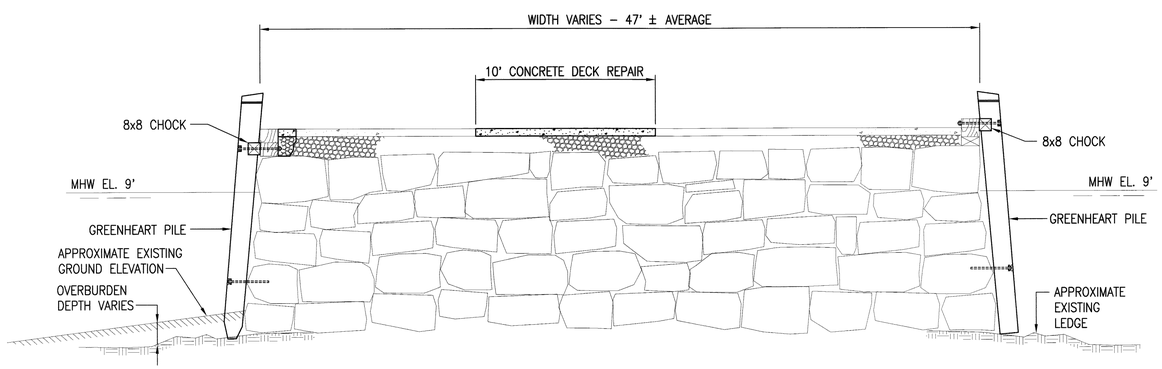

PIER – TYPICAL SECTION

SCALE: 1/4"=1'-0"

LEGEND:

EXISTING FEATURES SHOWN THUS: ————————

FEATURES TO BE PROVIDED OR RELOCATED UNDER THIS CONTRACT SHOWN THUS: ————————

1"=20' 0 20 40 FT.

STATE OF MAINE
DEPARTMENT OF TRANSPORTATION

APPROVED — DATE

COMMISSIONER:

CHIEF ENGINEER:

STATE OF MAINE — PAUL F. HARRINGTON — No. 13061 — LICENSED PROFESSIONAL ENGINEER

SIGNATURE

13061

P.E. NUMBER

AUGUST 1, 2014

DATE

PROJECT INFORMATION

PROGRAM	MULTIMODAL
PROJECT MANAGER	CATHERINE RAND
DESIGNER	MARC NICOLAZZO
CONSULTANT	FAY, SPOFFORD & THORNDIKE
PROJECT RESIDENT	
CONTRACTOR	
PROJECT COMPLETION DATE	

MATINICUS FERRY TERMINAL
MATINICUS HARBOR, MATINICUS ISLAND, MAINE
FENDER REPLACEMENT

SITE AND GENERAL PLANS

SHEET NUMBER

G1

2 OF 5

R:\TM-095 Matinicus Island\CADD\GENERAL PLAN.dwg 08/01/14 10:41 [30.08] By Tripp_R

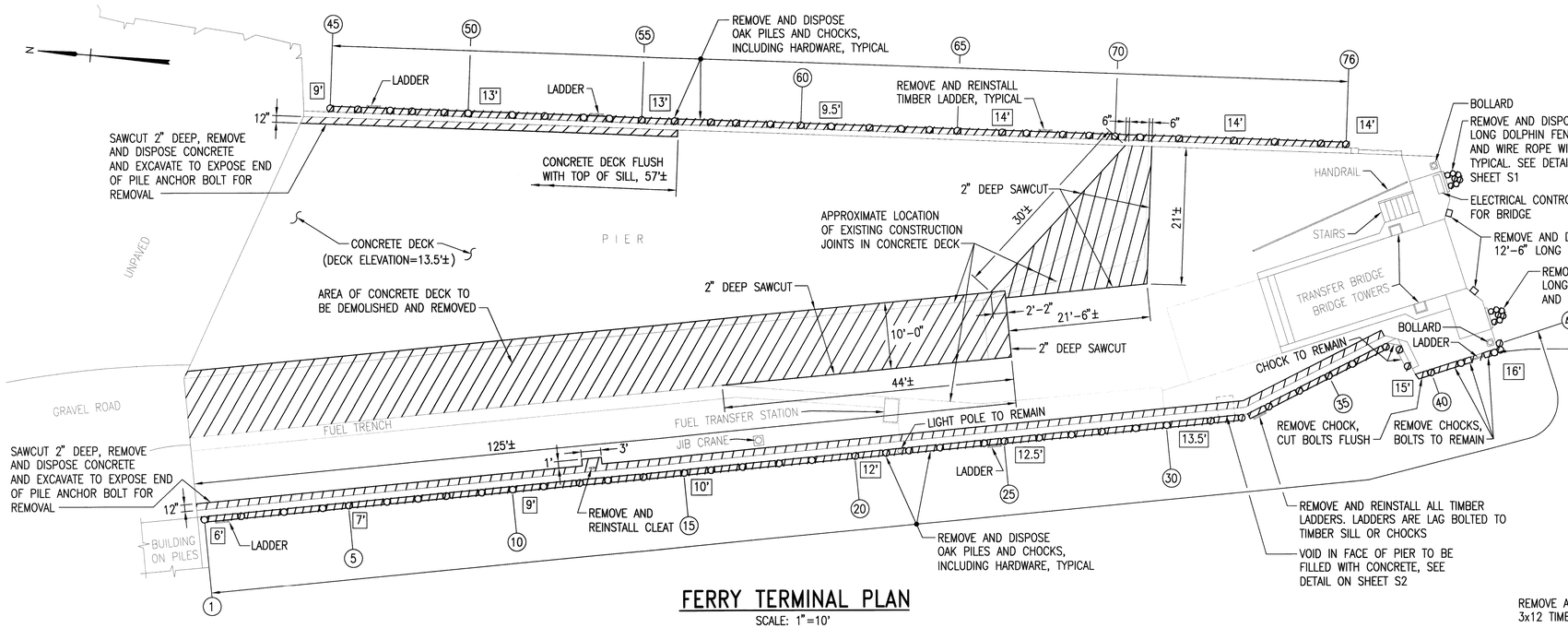

FERRY TERMINAL PLAN

SCALE: 1"=10'

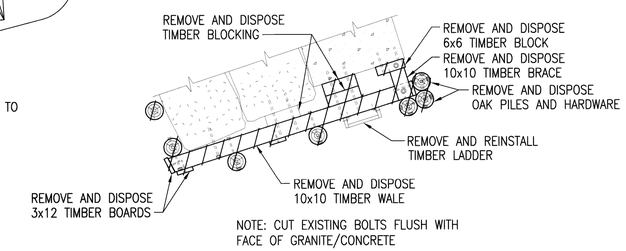

PLAN - LOWER WALE

SCALE: 1/4"=1'-0"

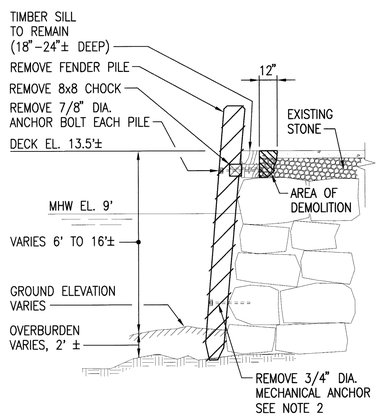

WEST SIDE TYPICAL SECTION

SCALE: 1/4"=1'-0"

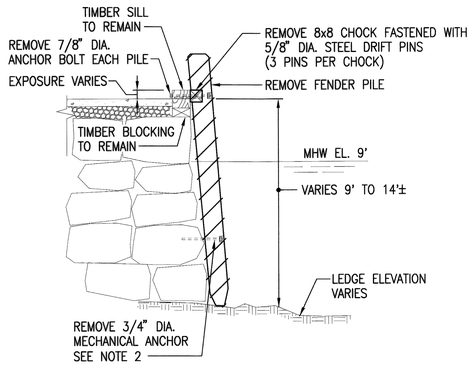

EAST SIDE TYPICAL SECTION

SCALE: 1/4"=1'-0"

NOTES:

A. SIZE OF GRANITE STONES VARY

B. ON THE EAST SIDE, FROM PILE No. 45 TO PILE No. 56, THE CONDITION IS SIMILAR TO WHAT IS SHOWN FOR THE WEST SIDE.

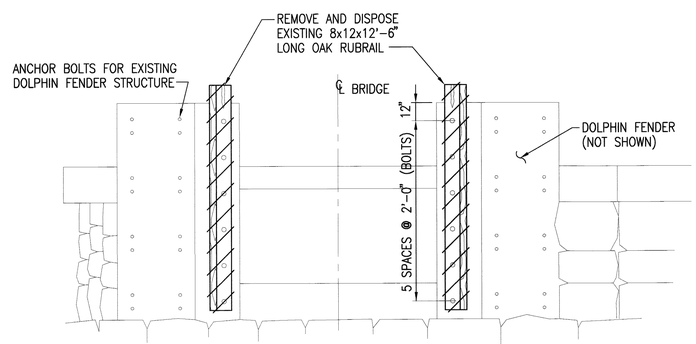

ELEVATION - OFFSHORE END OF PIER

SCALE: 1/4"=1'-0"

LEGEND:

(10) PILE NUMBER

[14'] APPROXIMATE DISTANCE FROM TOP OF TIMBER SILL TO EXISTING GROUND/LEDGE

INDICATES AREAS/OBJECTS TO BE DEMOLISHED

NOTES:

1. DRIFT PINS FASTENING CHOCKS SHALL BE CUT FLUSH WITH THE FACE OF TIMBER SILL.
2. FENDER PILE ANCHOR BOLTS SHALL BE CUT FLUSH WITH THE FACE OF GRANITE BLOCKS. BOLTS ARE TYPICALLY 2'± ABOVE GROUNDLINE OR MEAN LOW WATER (ELEVATION 0.0') WHICHEVER IS HIGHER.
3. FENDER PILE ANCHOR BOLTS THROUGH TIMBER SILL SHALL BE REMOVED.
4. EXISTING HARDWARE MAY BE REUSED IF APPROVED BY THE ENGINEER.

1"=10' 0 10 20 FT.

STATE OF MAINE
DEPARTMENT OF TRANSPORTATION

APPROVED — DATE

COMMISSIONER:

CHIEF ENGINEER:

PAUL J. HARRINGTON No. 13061 LICENSED PROFESSIONAL ENGINEER STATE OF MAINE

SIGNATURE 13061 P.E. NUMBER

AUGUST 1, 2014 DATE

PROJECT INFORMATION

PROGRAM	MULTIMODAL
PROJECT MANAGER	CATHERINE RAND
DESIGNER	MARC NICOLAZZO
CONSULTANT	FAY, SPOFFORD & THORNDIKE
PROJECT RESIDENT	
CONTRACTOR	
PROJECT COMPLETION DATE	

MATINICUS FERRY TERMINAL
MATINICUS HARBOR, MATINICUS ISLAND, MAINE
FENDER REPLACEMENT

DEMOLITION PLAN AND DETAILS

SHEET NUMBER

D1

3 OF 5

R:\TM-095 Matinicus Island\CADD\DEMO PLAN.dwg 08/01/14 10:43 [24.66] By Tripp_R

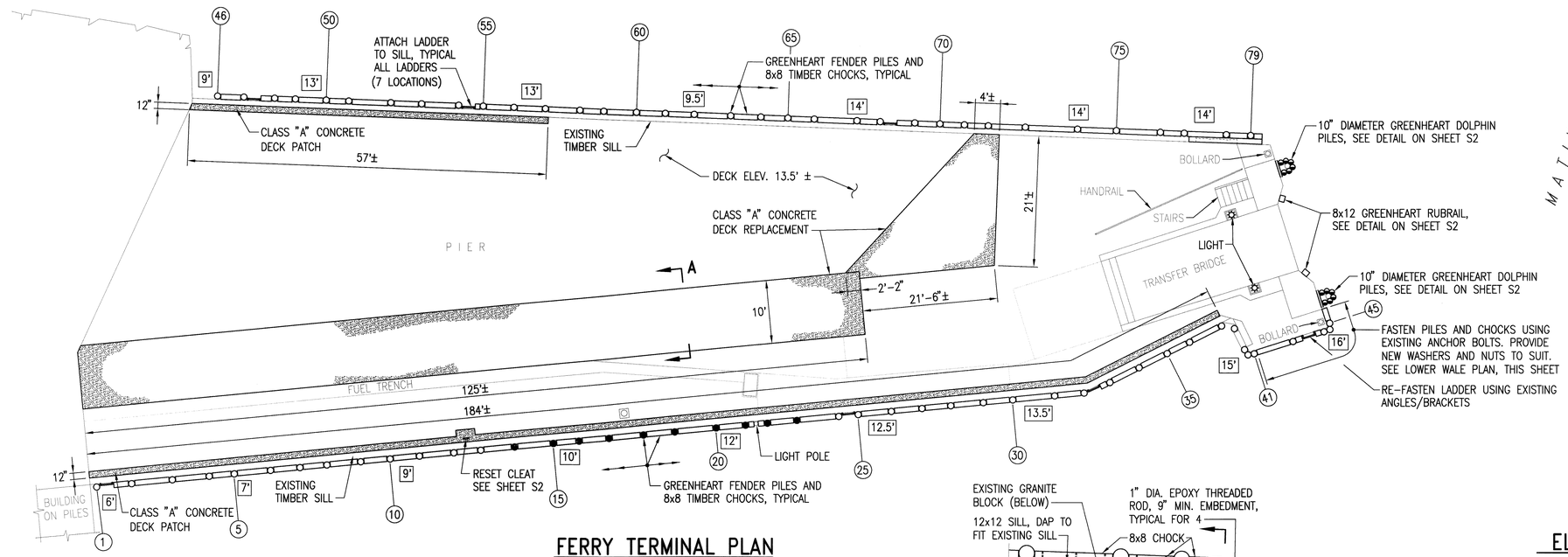

FERRY TERMINAL PLAN

SCALE: 1"=10'

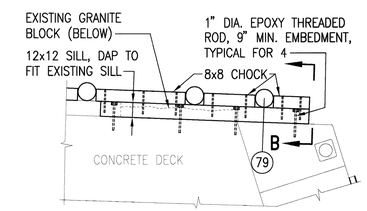

SOUTHEAST CORNER PART PLAN

SCALE: 1/4"=1'-0"

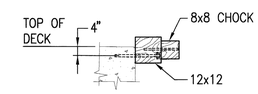

SECTION B

SCALE: 3/8"=1'-0"

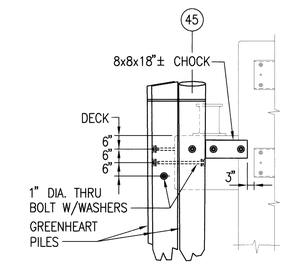

NOTE: BOLT PATTERN WILL BE SIMILAR AT CORNER PILE No. 40

ELEVATION – SOUTHWEST CORNER

SCALE: 3/8"=1'-0"

LEGEND:

- 10' — APPROXIMATE DISTANCE FROM TOP OF TIMBER SILL TO EXISTING GROUND/LEDGE
- (10) — PILE IDENTIFICATION NUMBER
- ● — GREENHEART PIER FENDER PILE TOP OF PILE FLUSH WITH SILL OR DECK
- ○ — GREENHEART PIER FENDER PILE TOP OF PILE 2 FEET ABOVE SILL
- ◒ — GREENHEART DOLPHIN PILE

NOTES:

1. GREENHEART PIER FENDER PILES SHALL HAVE A MINIMUM DIAMETER OF 12 INCHES.
   - A. PILE CUT OFF ELEVATION TO BE FIELD VERIFIED BY MAINE DOT AND TOWN REPRESENTATIVES PRIOR TO CUTTING.
   - B. FOR BIDDING PURPOSES ASSUME PILES 1 TO 45 AND 70 TO 79 TO BE DRIVEN INTO OVERBURDEN. REMAINING PILES SHALL BEAR ON LEDGE.
   - C. PILES TO BEAR ON LEDGE SHALL BE CUT SQUARE.
   - D. PILES TO BE DRIVEN INTO OVERBURDEN SHALL HAVE THEIR TIPS CUT AS SHOWN IN THE FENDER PILE TIP DETAIL, THIS SHEET. DRIVE PILES TO REFUSAL.
2. GREENHEART DOLPHIN PILES SHALL BE SELECTED TO HAVE A UNIFORM DIAMETER OF 10 INCHES.
3. CHOCKS, WALES AND BLOCKING SHALL BE SOUTHERN YELLOW PINE No.1 DENSE, CCA TREATED TO 2.5 PCF AND DRESSED S2S.
4. HARDWARE:
   - A. ALL HARDWARE AND FASTENERS SHALL BE HOT DIP GALVANIZED UNLESS NOTED OTHERWISE.
   - B. ALL GALVANIZED BOLTS AND RELATED HARDWARE SHALL CONFORM TO ASTM A307.
   - C. ALL BOLTS SHALL BE 1 INCH DIAMETER. DRILL 1 1/16" DIAMETER HOLES FOR BOLTS.
   - D. ALL DRIFT PINS SHALL BE 3/4 INCH DIAMETER. DRILL 5/8" DIAMETER HOLES FOR PINS.
   - E. 8x8 CHOCKS SHALL HAVE DRIFT PINS POSITIONED 6" FROM EACH END. CHOCKS LONGER THAN 4 FEET SHALL HAVE AN ADDITIONAL PIN CENTERED. FULLY SEAT DRIFT PINS.
5. REINFORCING STEEL SHALL CONFORM TO ASTM A615, GRADE 60 AND SHALL BE EPOXY COATED TO ASTM A775.

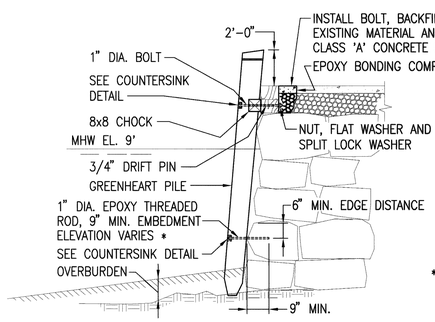

WEST SIDE TYPICAL SECTION

SCALE: 1/4"=1'-0"

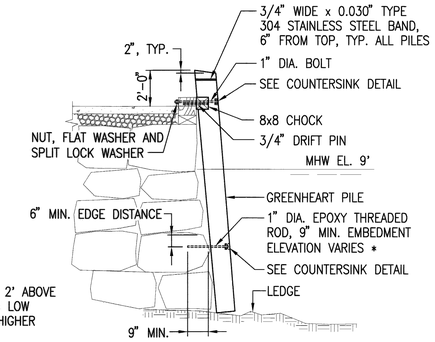

* LOCATE THREADED ROD 2' ABOVE GROUND LINE OR MEAN LOW WATER, WHICHEVER IS HIGHER

EAST SIDE TYPICAL SECTION

SCALE: 1/4"=1'-0"

NOTE:
ON THE EAST SIDE, FROM PILE No. 45 TO PILE No. 56, THE CONDITION IS SIMILAR TO WHAT IS SHOWN FOR THE WEST SIDE.

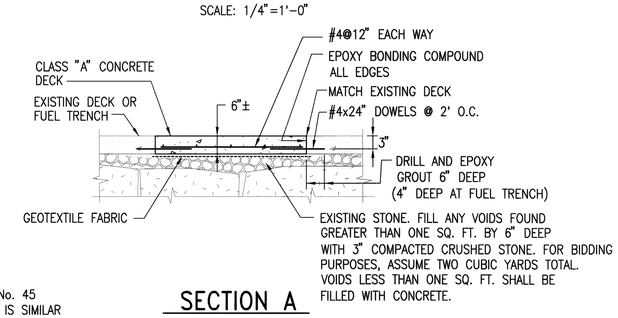

SECTION A

SCALE: 1/2"=1'-0"

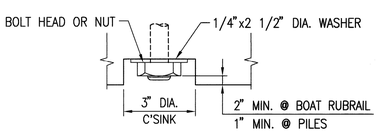

COUNTERSINK DETAIL

NOT TO SCALE

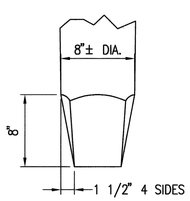

FENDER PILE TIP DETAIL

SCALE: 1 1/2"=1'-0"

ESTIMATED PILE LENGTHS FOR BIDDING PURPOSES*	
PILE No.	LENGTH
1–15, 46–49	15'
16–30, 50–62	20'
31–45, 63–79	25'

* INCLUDES ALLOWANCE FOR CUT OFF

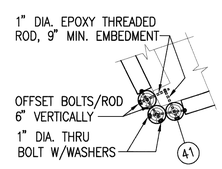

SOUTHWEST CORNER PART PLAN (EL. 13.5'±)

SCALE: 1/4"=1'-0"

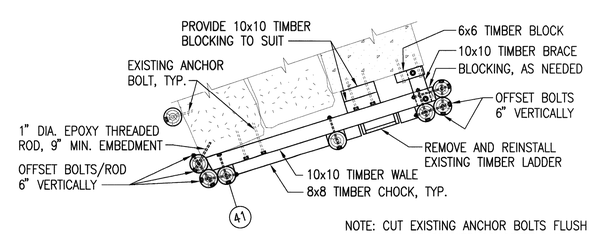

NOTE: CUT EXISTING ANCHOR BOLTS FLUSH WITH FACE OF GRANITE/CONCRETE AND PROVIDE 1" DIA. EPOXY ANCHORS, 9" MINIMUM EMBEDMENT

SOUTHWEST CORNER LOWER WALE PLAN (EL. 2'±)

SCALE: 1/4"=1'-0"

1"=10' 0 10 20 FT.

STATE OF MAINE
DEPARTMENT OF TRANSPORTATION

APPROVED — DATE
COMMISSIONER:
CHIEF ENGINEER:

STATE OF MAINE — PAUL F. HARRINGTON — No. 13061 — PROFESSIONAL ENGINEER

SIGNATURE
13061 P.E. NUMBER
AUGUST 1, 2014 DATE

PROJECT INFORMATION

PROGRAM	MULTIMODAL
PROJECT MANAGER	CATHERINE RAND
DESIGNER	MARC NICOLAZZO
CONSULTANT	FAY, SPOFFORD & THORNDIKE
PROJECT RESIDENT	
CONTRACTOR	
PROJECT COMPLETION DATE	

MATINICUS FERRY TERMINAL
MATINICUS HARBOR, MATINICUS ISLAND, MAINE
FENDER REPLACEMENT

PLAN AND TYPICAL SECTIONS

SHEET NUMBER
S1
4 OF 5

R:\TM-095 Matinicus Island\CADD\TERMINAL PLAN.dwg 08/01/14 10:46 [27.04] By Tripp_R

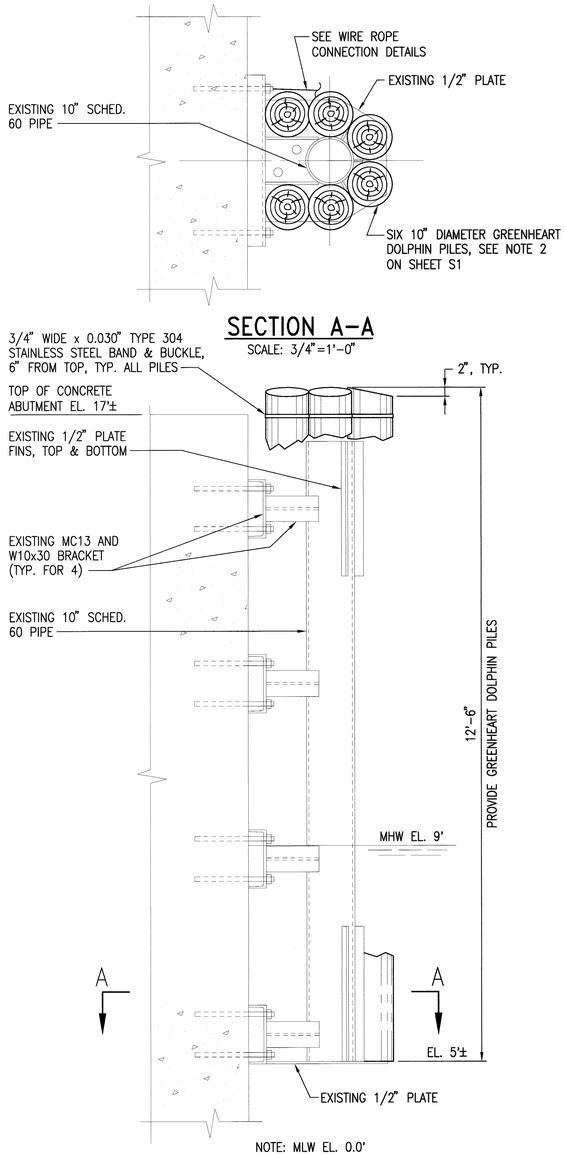

SECTION A–A

SCALE: 3/4"=1'-0"

NOTE: MLW EL. 0.0'

SIDE ELEVATION
EXISTING DOLPHIN PILE SUPPORT

SCALE: 3/4"=1'-0"

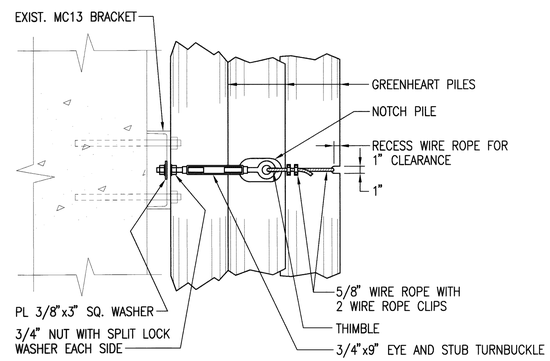

NOTE: TYPICAL AT EACH MC13 BRACKET

SIDE OF DOLPHIN AWAY FROM VESSEL
DETAIL – WIRE ROPE CONNECTION

SCALE: 1"=1'-0"

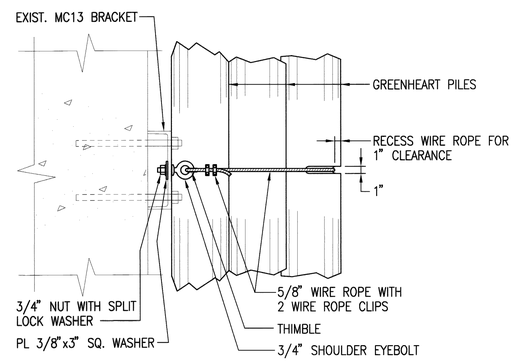

NOTE: TYPICAL AT EACH MC13 BRACKET

VESSEL SIDE OF DOLPHIN
DETAIL – WIRE ROPE CONNECTION

SCALE: 1"=1'-0"

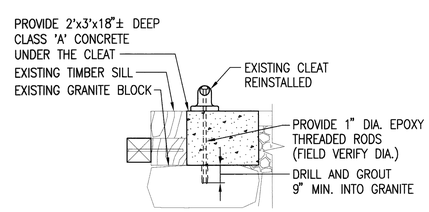

CLEAT DETAIL

SCALE: 1/2"=1'-0"

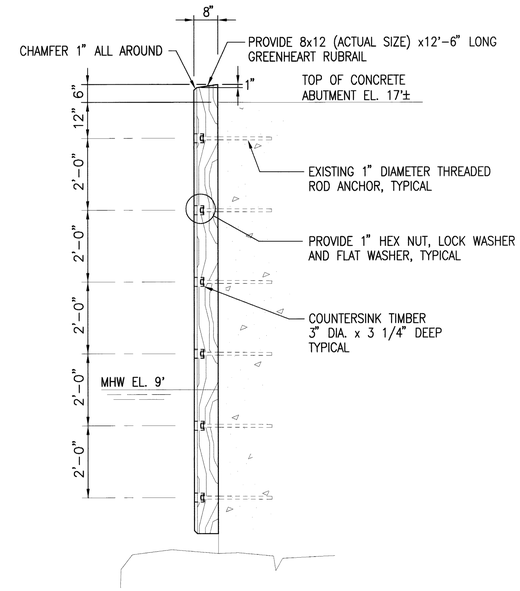

TYPICAL FOR 2, OFFSHORE END OF PIER

DETAIL – GREENHEART RUBRAIL

SCALE: 1/2"=1'-0"

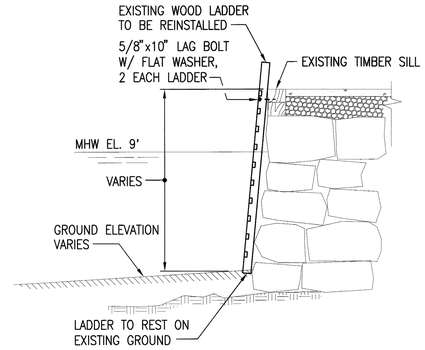

TYPICAL FOR 7 LADDERS

DETAIL – LADDER REINSTALLATION

SCALE: 1/4"=1'-0"

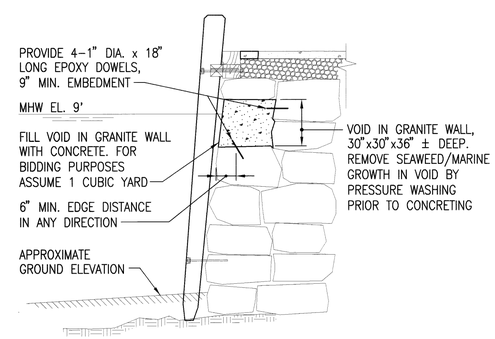

NOTE: FORM WATER SIDE FACE OF CONCRETE FLUSH WITH ADJACENT GRANITE BLOCKS

DETAIL – VOID REPAIR

SCALE: 1/4"=1'-0"

NOTE:

ALL COMPONENTS OF DOLPHIN WIRE ROPE CONNECTIONS SHALL BE HOT DIP GALVANIZED.

STATE OF MAINE
DEPARTMENT OF TRANSPORTATION

APPROVED — DATE

COMMISSIONER:

CHIEF ENGINEER:

STATE OF MAINE · PAUL E. HARRINGTON · No. 13061 · PROFESSIONAL ENGINEER

SIGNATURE 13061 — P.E. NUMBER

AUGUST 1, 2014 — DATE

PROJECT INFORMATION

PROGRAM	MULTIMODAL
PROJECT MANAGER	CATHERINE RAND
DESIGNER	MARC NICOLAZZO
CONSULTANT	FAY, SPOFFORD & THORNDIKE
PROJECT RESIDENT	
CONTRACTOR	
PROJECT COMPLETION DATE	

MATINICUS FERRY TERMINAL
MATINICUS HARBOR, MATINICUS ISLAND, MAINE
FENDER REPLACEMENT

FENDER AND DOLPHIN DETAILS

SHEET NUMBER

S2

5 OF 5

R:\TM-095 Matinicus Island\CADD\DETAILS.dwg 08/01/14 10:47 [18.13] By Tripp_R