STATE OF MAINE
DEPARTMENT OF TRANSPORTATION

EASTPORT

WASHINGTON COUNTY

SULLIVAN STREET

EASTPORT BREAKWATER REPLACEMENT

PREPARED FOR:

EASTPORT PORT AUTHORITY
EASTPORT, MAINE

PREPARED BY:

CHILDS ENGINEERING CORPORATION
34 WILLIAM WAY, BELLINGHAM, MA 02019 U.S.A.
Phone: (508) 966-9092 Fax: (508) 966-9096
E-mail: mail@childseng.com

IN ASSOCIATION WITH:

GZA GEOENVIRONMENTAL, INC.

TRANSYSTEMS

NORTHEAST CIVIL SOLUTIONS

MARITIME ENGINEERING CONSULTANTS

STATE OF MAINE
MAINE DEPARTMENT OF TRANSPORTATION

APPROVED: _____ _____

NAME DATE

DRAWING INDEX

DRAWING NO.	DRAWING TITLE	DRAWING NO.	DRAWING TITLE
GENERAL		**STRUCTURAL (CONT.)**	
G-01	TITLE SHEET AND DRAWING INDEX	S-22	PILE CAP DETAILS
G-02	LOCATION VICINITY AND SITE MAPS	S-23	DECK PLAN
G-03	SITE PLAN	S-24	DECK SLAB DETAILS
G-04	GENERAL ARRANGEMENT PROPOSED PIER PLAN	S-25	DECK PLANK PLAN
G-05	TYPICAL PROPOSED CROSS SECTIONS	S-26	DECK PLANK DETAILS
CIVIL		S-27	DECK DETAILS
C-01	SOIL BORING LOCATION PLAN	S-28	FENDER PILE DETAILS
C-02	SOIL BORINGS SHEET 1	S-29	FENDER UNIT DETAILS
C-03	SOIL BORINGS SHEET 2	S-30	BREAKWATER CATHODIC PROTECTION PLAN
C-04	SOIL BORINGS SHEET 3	S-31	PIER CATHODIC PROTECTION PLAN
C-05	ROCK CONTOURS	S-32	EXISTING FINGER PIER
STRUCTURAL		S-33	LADDER DETAILS
S-01	STRUCTURAL NOTES AND DESIGN CRITERIA	S-34	MISCELLANEOUS DETAILS
S-02	DEMOLITION PLAN	S-35	BREAKWATER EXTENSION DETAILS
S-03	DEMOLITION PHOTOS	S-36	BREAKWATER EXTENSION DETAILS
S-04	DEMOLITION SECTIONS	S-37	SPIN FIN PILES
S-05	PHASE I GENERAL ARRANGEMENT	**PIER MECHANICAL**	
S-06	SHEET PILE LAYOUT	P-1	PLUMBING SYMBOLS LEGEND, GENERAL NOTES
S-07	SHEET PILE/TIE ROD PLAN	P-2	PLUMBING - DEMOLITION
S-08	SHEET PILE DETAILS	P-3	NEW POTABLE WATER
S-09	SHEET PILE CAP PLAN	P-4	PLUMBING DETAILS
S-10	SHEET PILE CAP DETAILS	**PIER ELECTRICAL**	
S-11	PILE PLAN	E-1	ELECTRICAL - SYMBOLS SCHEDULE
S-12	PILE ANCHOR DETAILS	ED-1	ELECTRICAL - DEMOLITION
S-13	PILE CONNECTION DETAILS	E-2	ELECTRICAL - LIGHTING
S-14	PILE CAP PLAN	E-3	LIGHTING PHOTOMETRICS
S-15	PILE CAP 1 DETAILS	E-4	ELECTRICAL - POWER
S-16	PILE CAP 2 DETAILS	E-5	EQUIPMENT RACK AREA
S-17	PILE CAP 3 DETAILS	E-6	ELECTRICAL - SCHEDULE
S-18	PILE CAP 4 DETAILS	E-7	ELECTRICAL - SINGLE LINE AND SCHEDULE
S-19	PILE CAP 5 DETAILS	E-8	ELECTRICAL - DETAILS
S-20	PILE CAP 6 DETAILS	E-9	ELECTRICAL - DETAILS
S-21	PILE CAP DETAILS		

STATE OF MAINE
DEPARTMENT OF TRANSPORTATION

WIN #020806.00

Commissioner: 11/4/14
Chief Engineer: 11/3/14

STATE OF MAINE CRAIG D. SAMS No. 13478 PROFESSIONAL ENGINEER

SIGNATURE	
P.E. NUMBER	13478
DATE	08/15/14

	BY	DATE
PROJ. MANAGER	CDS	
DESIGN-DETAILED	MMS	TEQ 7-14
CHECKED-REVIEWED	CDS	CDS 7-14
DESIGN2-DETAILED2		
DESIGN3-DETAILED3		
REVISIONS 1		
REVISIONS 2		
REVISIONS 3		
REVISIONS 4		
FIELD CHANGES		

EASTPORT BREAKWATER REPLACEMENT
EASTPORT, ME
WASHINGTON COUNTY

TITLE SHEET
AND DRAWING INDEX

SHEET NUMBER

G-01

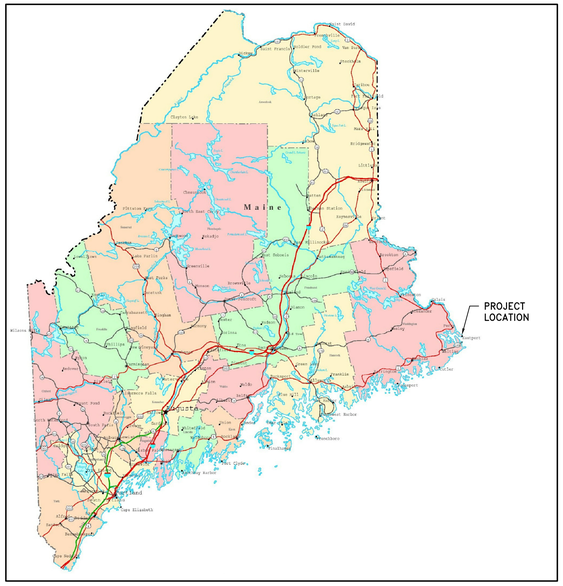

STATE OF MAINE

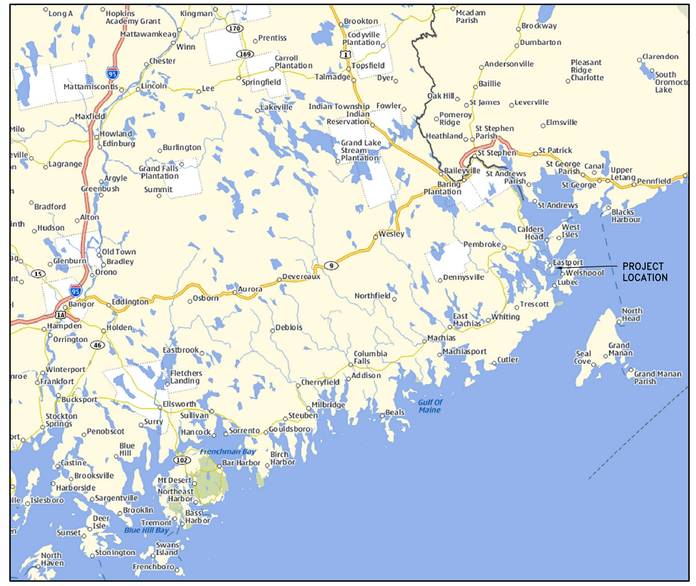

REGIONAL MAP

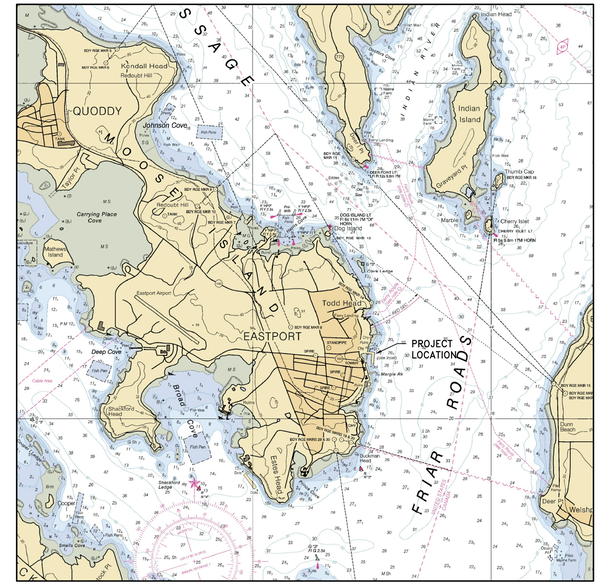

VICINITY MAP

LIST OF ABBREVIATIONS AND SYMBOLS:

AASHTO	American Association of State Highway and Transportation Officials
ACI	American Concrete Institute
AISC	American Institute of Steel Construction
AISI	American Iron and Steel Institute
ASHRAE	American Society of Heating, Refrigerating and Air Conditioning Engineers
AWG	American Wire Gauge
APPROX	Approximately
ASTM	American Society for Testing and Materials
AWS	American Welding Society
BLK	Block
BOT	Bottom
BRKT	Bracket
CIP	Cast-in-Place
CEC	Childs Engineering Corporation
CLR	Clear
COL	Column
CONC	Concrete
CMU	Concrete Masonry Unit
CRSI	Concrete Reinforcing Steel Institute
CONST JT	Construction Joint
CONT	Continuous
CW	Continuous Weld
CJ	Control Joint
DOT	Department of Transportation
DIA	Diameter
DIM	Dimension
EA	Each
EL	Elevation
EHW	Extreme High Water
ELW	Extreme Low Water
EJ	Expansion Joint
EQ	Equal
EXP BOLT	Expansion Bolt
EXP JT	Expansion Joint
FS	Factor of Safety
FRP	Fiber Reinforced Plastic
FT	Foot or Feet
GAL	Gallons
GALV	Galvanized
GA	Gauge
HVAC	Heating Ventilation and Air Conditioning
HT	Height
HMWPE	High Molecular Weight Polyethylene
HS	High Strength
HSS	Hollow Structural Section
HOR	Horizontal
HMA	Hot Mixed Asphalt
IN	Inch
ID	Inside Diameter
INV	Invert
JT	Joint
K	Kip (1000 Pounds)
KTS	Knots
LB	Pounds
LW	Light Weight
LWC	Light Weight Concrete
MAX	Maximum
MIN	Minimum
MHW	Mean High Water
MHHW	Mean Higher High Water
MLW	Mean Low Water
MLLW	Mean Lower Low Water
MTL	Metal
NAD27	North American Datum of 1927
NAD83	North American Datum of 1983
NAD88	North American Vertical Datum of 1988
NWC	Normal Weight Concrete
NIC	Not in Contract
OC	On Center
OD	Outside Diameter
PL	Plate
PT	Point
PVC	Polyvinyl Chloride
PSF	Pounds per Square Foot
PSI	Pounds per Square Inch
R	Radius
REINF	Reinforced
SCH	Schedule
SQ	Square
SP	Spacing
SS	Stainless Steel
STD	Standard
STL	Steel
SDI	Steel Deck Institute
SF	Square Foot
STA	Station (in Feet)
STIFF	Stiffener
SYM	Symmetrical
THK	Thick or Thickness
T&B	Top and Bottom
TO	Top of
TOC	Top of Concrete
TOS	Top of Steel
TOW	Top of Wall
TYP	Typical
WOF	Weld on Female
WOM	Weld on Male
WWF	Welded Wire Fabric
WT	Weight
W/	With
YD	Yard
YD3	Cubic Yards
&	And
∠	Angle
@	At
℄	Center Line
Ø	Diameter
°	Degrees
#	Number
%	Percent
±	Plus or Minus
f'c	Compressive Strength
FY	Yield Strength

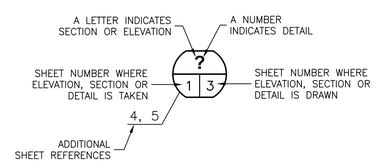

REFERENCE BALLOON KEY

STATE OF MAINE
DEPARTMENT OF TRANSPORTATION

WIN #020806.00

CRAIG D. SAMS
STATE OF MAINE
No. 13478
LICENSED
PROFESSIONAL ENGINEER

		BY	DATE
PROJ. MANAGER	CDS		
DESIGN-DETAILED	MMS	TEQ	7-14
CHECKED-REVIEWED	CDS	CDS	7-14
DESIGN2-DETAILED2			
DESIGN3-DETAILED3			
REVISIONS 1			
REVISIONS 2			
REVISIONS 3			
REVISIONS 4			
FIELD CHANGES			

SIGNATURE

13478
P.E. NUMBER

08/15/14
DATE

EASTPORT BREAKWATER REPLACEMENT
EASTPORT, ME
WASHINGTON COUNTY

LOCATION VICINITY AND SITE MAPS

SHEET NUMBER

G-02

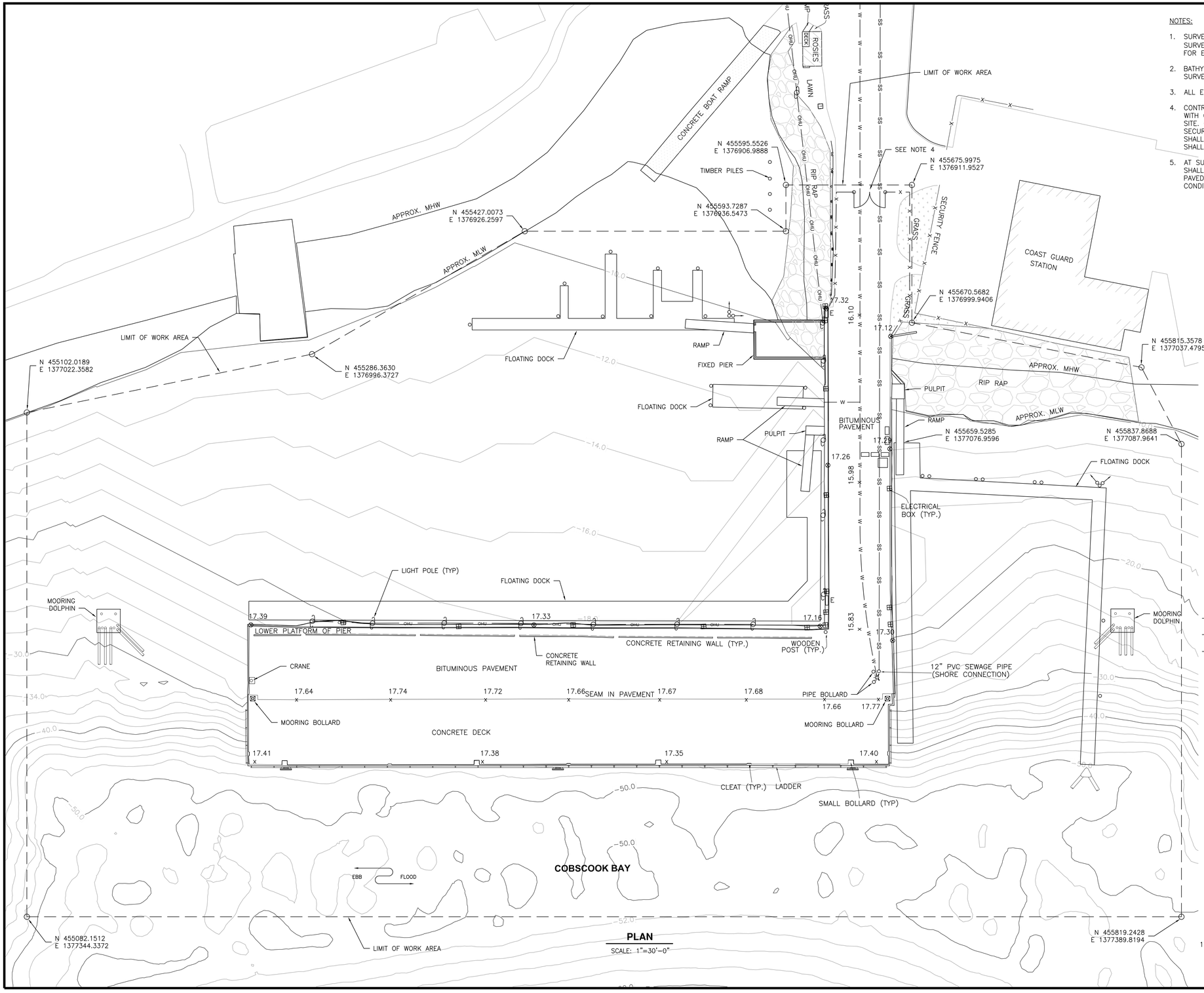

PLAN

SCALE: 1"=30'-0"

NOTES:

1. SURVEY OF EXISTING STRUCTURES REFERENCED FROM SURVEY PLAN PREPARED BY C E S INC. DATED 8/12/13 FOR EASTPORT PORT AUTHORITY.
2. BATHYMETRIC DATA REFERENCED FROM NOAA H12259 SURVEY, JUNE 10, 2010.
3. ALL ELEVATIONS BASED ON NAVD88 DATUM.
4. CONTRACTOR SHALL PROVIDE A CHAIN LINK SECURITY FENCE WITH GATE TO RESTRICT PUBLIC ACCESS TO THE WORK SITE. CONTRACTOR HAS THE SOLE RESPONSIBILITY TO SECURE THE SITE AND PROTECT PUBLIC SAFETY. THIS WORK SHALL BE CONSIDERED INCIDENTAL TO THE CONTRACT AND SHALL NOT BE PAID DIRECTLY.
5. AT SUBSTANTIAL COMPLETION OF THE PROJECT CONTRACTOR SHALL REMOVE THE SECURITY FENCE AND RESTORE ALL PAVED AREAS AND LANDSCAPING TO PRE-CONSTRUCTION CONDITION.

TIDAL DATUM

MHHW	+9.35'
MHW	+8.85'
NAVD88	0.0'
MLW	-9.5'
MLLW	-9.95'

LEGEND

- HYDRANT
- LIGHT POLE WITH OVERHEAD WIRE
- ELECTRICAL PANEL
- ELECTRICAL BOX
- BURIED 6"ø WATER LINE
- BURIED 12"ø SANITARY SEWER LINE
- OVERHEAD UTILITY (ELECTRIC)
- 17.68 TOP OF DECK SPOT ELEVATION
- 17.26 TOP OF SHEET PILE SPOT ELEVATION

1"=30'-0"

30 0 30 60

SCALE IN FEET

STATE OF MAINE
DEPARTMENT OF TRANSPORTATION

WIN #020806.00

STATE OF MAINE
CRAIG D. SAMS
No. 13478
LICENSED
PROFESSIONAL ENGINEER

	BY	DATE
PROJ. MANAGER	CDS	
DESIGN-DETAILED	MMS	7-14
CHECKED-REVIEWED	CDS	7-14
DESIGN2-DETAILED2		
DESIGN3-DETAILED3		
REVISIONS 1		
REVISIONS 2		
REVISIONS 3		
REVISIONS 4		
FIELD CHANGES		

SIGNATURE
13478
P.E. NUMBER
08/15/14
DATE

EASTPORT BREAKWATER REPLACEMENT
EASTPORT, ME
WASHINGTON COUNTY

SITE PLAN

SHEET NUMBER

G-03

GENERAL CONSTRUCTION SEQUENCE

1. THE CONSTRUCTION SHALL BE COMPLETED IN THREE PHASES AS DESCRIBED BELOW.
2. THE CONTRACTOR SHALL HAVE CONTROL OF THE ENTIRE BREAKWATER STRUCTURE DURING ALL PHASES OF CONSTRUCTION.

PHASE I DESCRIPTION

1. PHASE I CONSTRUCTION SHALL INCLUDE THE REPAIR OF THE APPROACH STRUCTURE, ASSOCIATED DEMOLITION, AND SITE PREPARATION.
2. SPECIFIC TASKS INCLUDE BUT ARE NOT LIMITED TO:
   a. INSTALLING SECURITY FENCE AND OTHER SITE PREPARATION RELATED ACTIVITIES.
   b. DEMOLITION AND PREPARATION OF THE EXISTING SHEET PILE STRUCTURE FOR REPAIR.
   c. EXCAVATION AND STORAGE, ON SITE, OF EXISTING FILL MATERIAL.
   d. REMOVAL OF SELECTED EXISTING TIE RODS.
   e. INSTALLATION OF NEW SHEET PILE.
   f. INSTALLATION OF NEW TIE RODS.
   g. INSTALLING CAST IN PLACE CONCRETE CAPS AND CURBS.
   h. INSTALLATION OF FILL BETWEEN THE EXISTING SHEET PILE AND THE NEW SHEET PILE.
   i. CATHODIC PROTECTION.
   j. BACKFILLING AND COMPACTING WITH EXISTING FILL MATERIAL.
   k. TEMPORARY PAVING AND DRAINAGE.
   l. REMOVAL AND RELOCATION OF EXISTING RIP RAP.
   m. INSTALLATION OF UTILITIES.
   n. ALL OTHER ASSOCIATED WORK TO REPAIR THE APPROACH STRUCTURE.

PHASE II DESCRIPTION

1. PHASE II CONSTRUCTION SHALL INCLUDE THE INSTALLATION OF THE FIFTY FOOT WIDE BY 411 FOOT LONG EXTENSION TO THE EAST.
2. SPECIFIC TASKS INCLUDE BUT ARE NOT LIMITED TO:
   a. DEMOLITION OF PIER ELEMENTS AND FENDER SYSTEM.
   b. PILE DRIVING AND INSTALLING ROCK ANCHORS.
   c. INSTALLING CAST IN PLACE CONCRETE ELEMENTS.
   d. FABRICATING AND INSTALLING PRECAST PRESTRESSED CONCRETE ELEMENTS.
   e. INSTALLATION OF THE NEW FENDER SYSTEM.
   f. CATHODIC PROTECTION.
   g. ALL OTHER ASSOCIATED WORK TO INSTALL THE PIER EXTENSION.

PHASE III DESCRIPTION

1. PHASE III CONSTRUCTION SHALL INCLUDE THE INSTALLATION OF THE NEW BREAKWATER, INSTALLATION OF UTILITIES AND DEMOLITION OF THE OUTSHORE LEG OF THE EXISTING 1962 BREAKWATER.
2. SPECIFIC TASKS INCLUDE BUT ARE NOT LIMITED TO:
   a. DEMOLITION AND REMOVAL OF SHEET PILE, TIE RODS, WALES AND FILL.
   b. DRIVING NEW SHEET PILE FOR BREAKWATER.
   c. PILE DRIVING.
   d. CAST IN PLACE CONCRETE
   e. CATHODIC PROTECTION.
   f. INSTALLATION OF UTILITIES.
   g. REMOVAL OF TEMPORARY STRUCTURES.
   h. FINAL PAVING OF APPROACH.
   i. ALL OTHER ASSOCIATED WORK TO INSTALL THE NEW BREAKWATER AND REMOVE THE EXISTING 1962 STRUCTURE.
3. CONSTRUCTION OF THE 96'-6" BREAKWATER EXTENSION SHALL BE SECTION No. 4, OPTION No. 1.

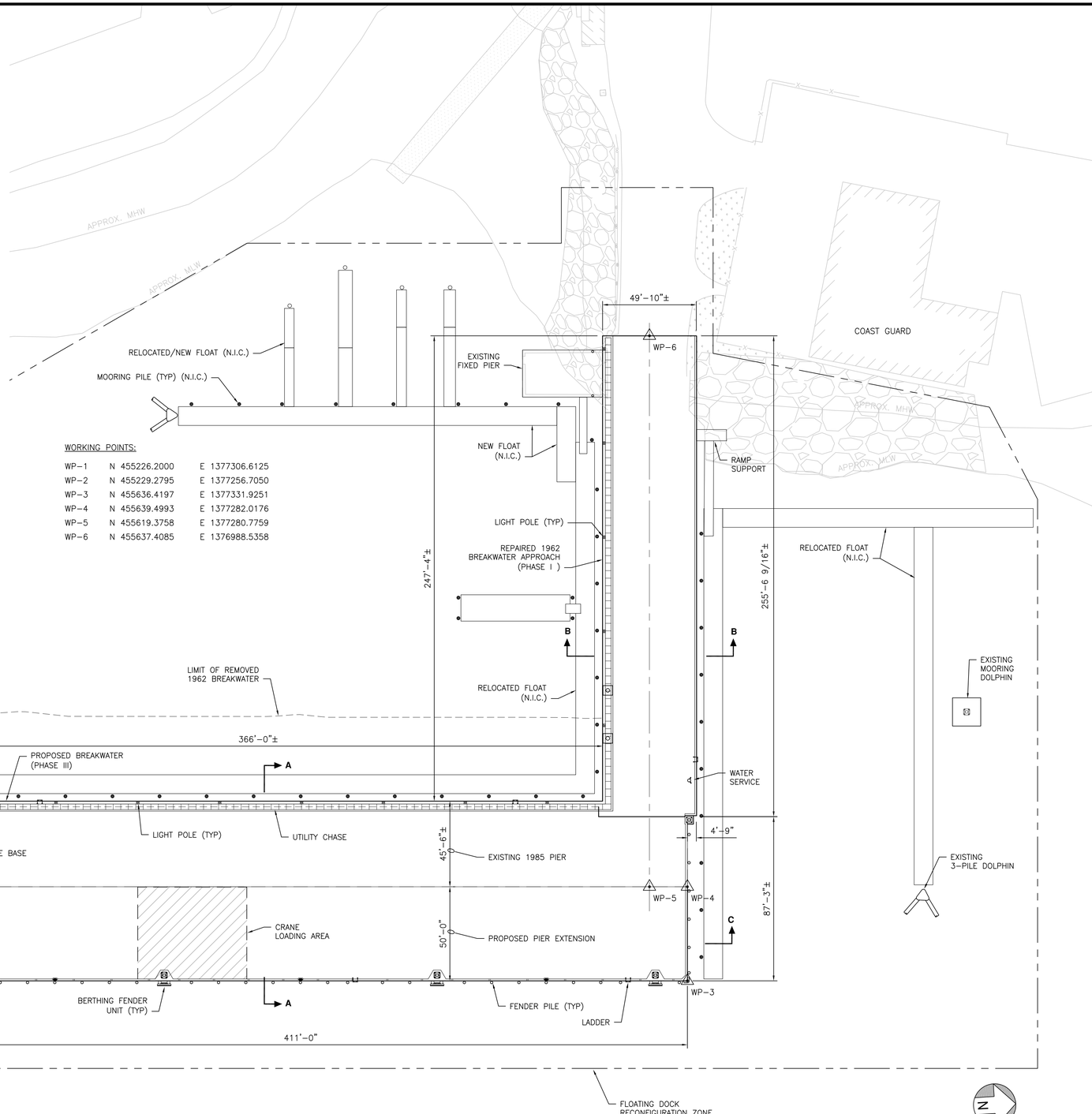

WORKING POINTS:

WP-1	N 455226.2000	E 1377306.6125
WP-2	N 455229.2795	E 1377256.7050
WP-3	N 455636.4197	E 1377331.9251
WP-4	N 455639.4993	E 1377282.0176
WP-5	N 455619.3758	E 1377280.7759
WP-6	N 455637.4085	E 1376988.5358

PLAN

SCALE: 1"=30'-0"

STATE OF MAINE
DEPARTMENT OF TRANSPORTATION

WIN #020806.00

STATE OF MAINE
CRAIG D. SAMS
No. 13478
LICENSED PROFESSIONAL ENGINEER

SIGNATURE		
13478		
P.E. NUMBER		
08/15/14		
DATE		

		BY	DATE
PROJ. MANAGER	CDS		
DESIGN-DETAILED	MMS	TEQ	7-14
CHECKED-REVIEWED	CDS	CDS	7-14
DESIGN2-DETAILED2			
DESIGN3-DETAILED3			
REVISIONS 1			
REVISIONS 2			
REVISIONS 3			
REVISIONS 4			
FIELD CHANGES			

EASTPORT BREAKWATER REPLACEMENT
EASTPORT, ME
WASHINGTON COUNTY

GENERAL ARRANGEMENT
PROPOSED PIER PLAN

SHEET NUMBER

G-04

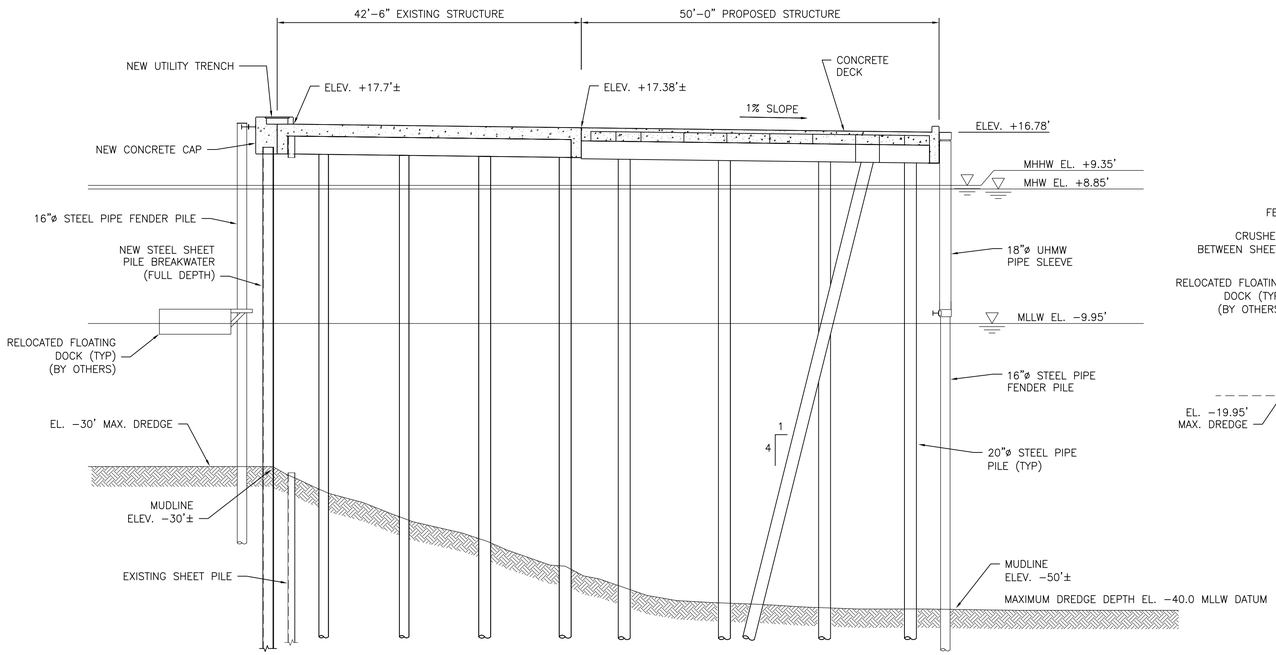

PROPOSED SECTION A-A

SCALE: 1"=10'-0"

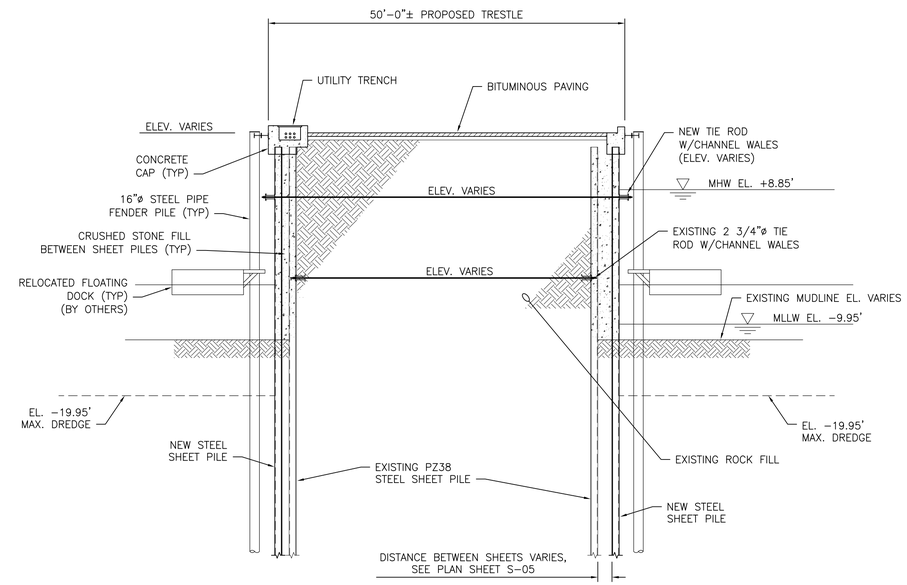

PROPOSED SECTION B-B

SCALE: 1"=10'-0"

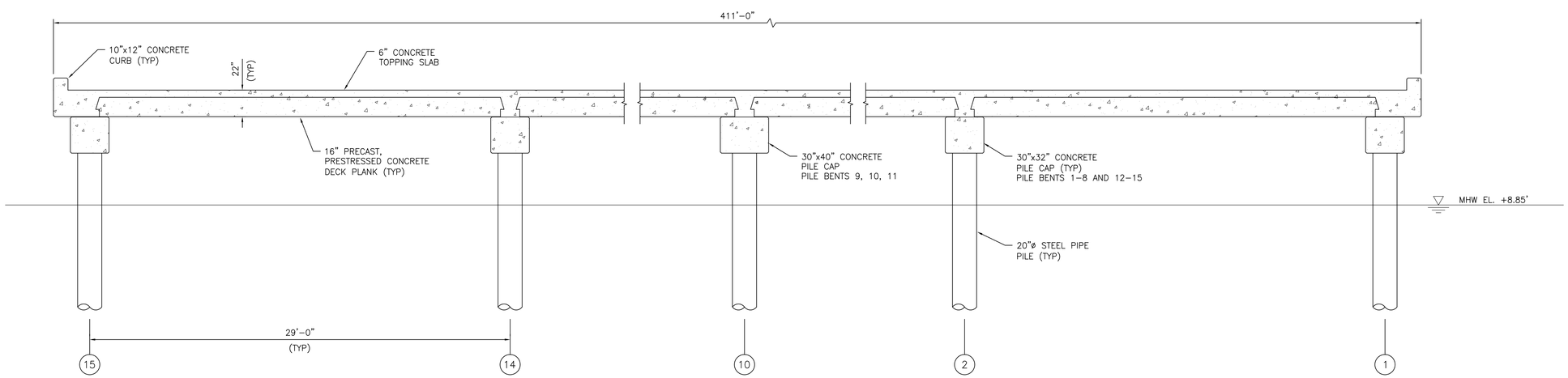

SECTION C-C

SCALE: 1/4"=1'-0"

STATE OF MAINE
DEPARTMENT OF TRANSPORTATION

WIN #020806.00

STATE OF MAINE
CRAIG D. SAMS
No. 13478
LICENSED PROFESSIONAL ENGINEER

SIGNATURE		
13478		
P.E. NUMBER		
08/15/14		
DATE		

		BY	DATE
PROJ. MANAGER	CDS		
DESIGN-DETAILED	MMS	TEQ	7-14
CHECKED-REVIEWED	CDS	CDS	7-14
DESIGN2-DETAILED2			
DESIGN3-DETAILED3			
REVISIONS 1			
REVISIONS 2			
REVISIONS 3			
REVISIONS 4			
FIELD CHANGES			

EASTPORT BREAKWATER REPLACEMENT
EASTPORT, ME
WASHINGTON COUNTY

TYPICAL PROPOSED CROSS SECTIONS

SHEET NUMBER

G-05

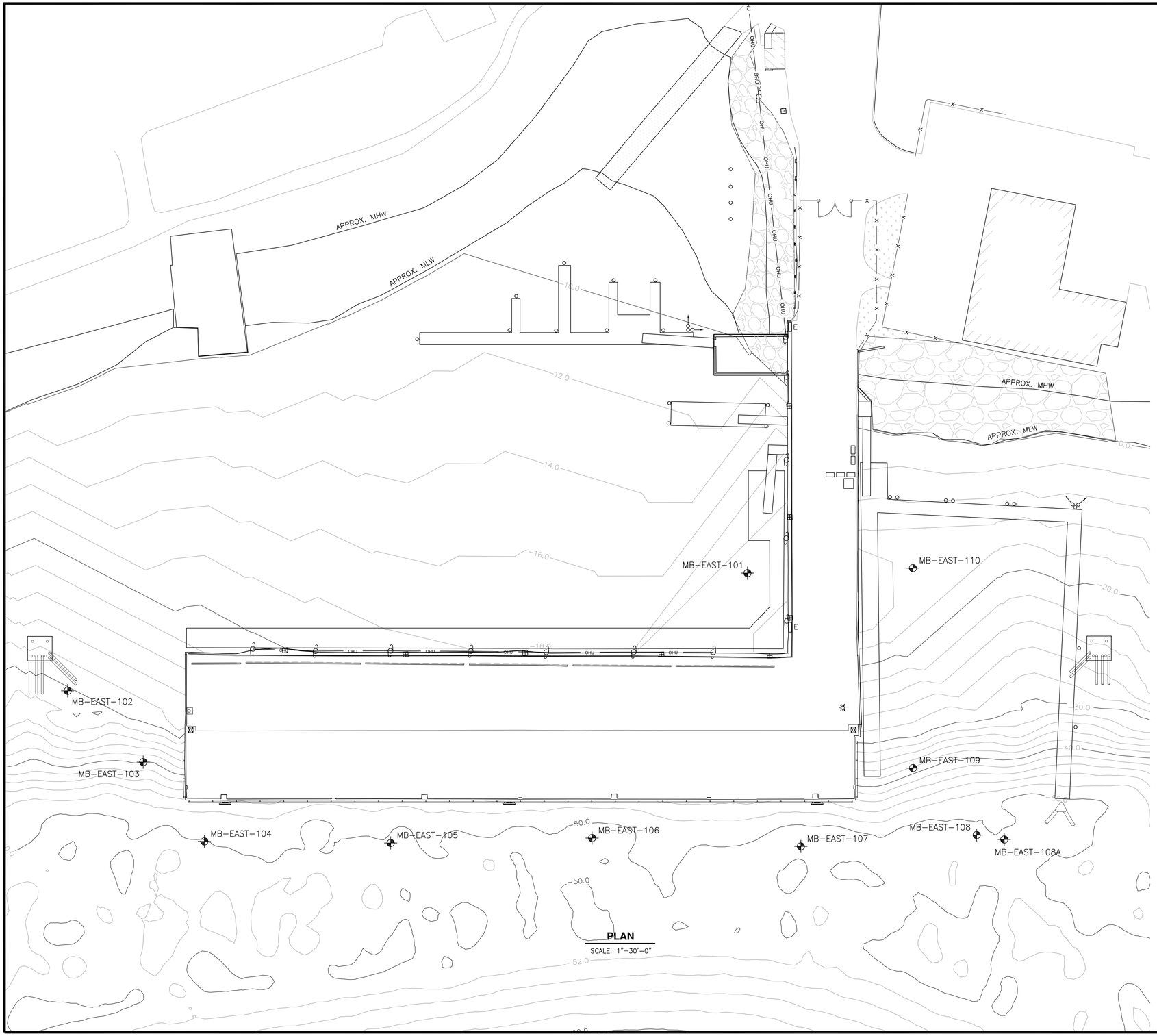

PLAN

SCALE: 1"=30'-0"

NOTES:

1. THIS PLAN IS ORIENTED TO GRID NORTH – NAD 83, MAINE EAST ZONE. ELEVATIONS SHOWN ARE REFERENCED TO THE NAVD 88 DATUM. PROJECT BENCHMARKS ARE:

   A. NATIONAL GEODETIC SURVEY DISK DESIGNATED "841 0140 TIDAL 1" AND SET "IN THE TOP OF THE SOUTH END OF A LANDING STONE AT THE LOADING ENTRANCE" OF THE EASTPORT POST OFFICE.
   ELEVATION: 36.75 FEET (NAVD 88)

   B. A NATIONAL GEODETIC SURVEY DISK DESIGNATED "EPM A" AND "SET FLUSH IN THE TOP OF A ROCK LEDGE" AT THE EASTPORT MUNICIPAL AIRPORT.
   NORTHING: 456308.323 FEET (NAD 83, MAINE EAST ZONE)
   EASTING: 1369779.744 FEET (NAD 83, MAINE EAST ZONE)

   C. A NATIONAL GEODETIC SURVEY DISK DESIGNATED "EPM B" AND "SET FLUSH IN A MASSIVE ROCK OUTCROP AT TOP OF KNOLL" AT THE EASTPORT MUNICIPAL AIRPORT.
   NORTHING: 455370.1752 FEET (NAD 83, MAINE EAST ZONE)
   EASTING: 1371140.834 FEET (NAD 83, MAINE EAST ZONE)

2. "MUDLINE" ELEVATIONS WERE CALCULATED BY SCHONEWALD EA, BASED UPON SURVEYED BARGE DECK ELEVATIONS (RELATIVE TO NAVD 88) PROVIDED BY CES AND WATER DEPTH AT THE TIME OF THE SURVEY.

3. THIS PLAN WAS PREPARED TO DEPICT EXISTING CONDITIONS (AS OF JUNE 19, 2013.)

N

1"=30'-0" 30 0 30 60 SCALE IN FEET

STATE OF MAINE
DEPARTMENT OF TRANSPORTATION

WIN #020806.00

STATE OF MAINE
CRAIG D. SAMS
No. 13478
LICENSED
PROFESSIONAL ENGINEER

Craig D Sams	SIGNATURE	
13478	P.E. NUMBER	
08/15/14	DATE	

		BY	DATE
PROJ. MANAGER	CDS		
DESIGN-DETAILED	MMS	TEQ	7-14
CHECKED-REVIEWED	CDS	CDS	7-14
DESIGN2-DETAILED2			
DESIGN3-DETAILED3			
REVISIONS 1			
REVISIONS 2			
REVISIONS 3			
REVISIONS 4			
FIELD CHANGES			

EASTPORT BREAKWATER REPLACEMENT
EASTPORT, ME
WASHINGTON COUNTY

SOIL BORING PLAN

SHEET NUMBER

C-01

Boring No.: MB-EAST-101

SCHONEWALD ENGINEERING ASSOCIATES, INC.

PROJECT: Maine Department of Transportation, Eastport Breakwater Replacement
LOCATION: Eastport, Maine
Boring No.: MB-EAST-101
WIN: 18436.00

Driller:	Maine Test Borings	**Elevation (ft.)**	-21.7 ft (mudline) [see remarks]	**Auger ID/OD:**	
Operator:	Enos/ Dube	**Datum:**	NAVD88 / NAD83, Maine East Zone	**Sampler:**	standard split-spoon
Logged By:	Schonewald	**Rig Type:**	CME 45C modified	**Hammer Wt./Fall:**	140 lbs / 30 inches
Date Start/Finish:	5/28/13; 1530 - 5/29/13; 1110	**Drilling Method:**	cased; drive and wash	**Core Barrel:**	NQ2
Boring Location:	N455581, E1377139 (inner harbor)	**Casing ID/OD:**	NW (3") to rock	**Water Level*:**	not applicable

Definitions:
D = Split Spoon Sample
MD = Unsuccessful Split Spoon Sample attempt
U = Thin Wall Tube Sample
MU = Unsuccessful Thin Wall Tube Sample attempt
V = Insitu Vane Shear Test
MV = Unsuccessful Insitu Vane Shear Test attempt

Definitions:
S_u = Insitu Field Vane Shear Strength (psf)
R = Rock Core Sample
RQD = Rock Quality Designation (%)
WOC = weight of casing
WOH = weight of 140lb. hammer
WOR = weight of rods

Definitions:
-- = not recorded
LL = Liquid Limit
PL = Plastic Limit
PI = Plasticity Index
WC = water content, percent
G = grain size analysis

Depth (ft.)	Sample No.	Pen./Rec. (in.)	Sample Depth (ft.)	Blows (/6 in.) Shear Strength (psf) or RQD (%)	N-value	Casing Blows	Elevation (ft.)	Visual Description and Remarks	Lab. Testing Results
0						WOC		0 to 2 feet - muck	
						WOC			
	1D	24/9	2.0 - 4.0	6-5-4-10	9	7	-23.7	2.0 — 1D: Black-brown, loose, fine to coarse SAND, some Gravel, trace Silt.	
						9			
						15			
5	2D	18/6	5.0 - 6.5	15-12-16	28	14		2D: Brown-black, m. dense, fine to coarse Sandy GRAVEL, trace to little Silt. Denser layer from 6 to 7.5 ft.	
						43			
						27			
						20			
						19			
10	3D	24/12	10.0 - 12.0	2-8-6-7	14	WOC		3D: Brown, m. dense, fine to medium SAND, trace Gravel, trace Silt.	
						WOC			
						3			
						8			
						13			
15	4D	24/14	15.0 - 17.0	4-4-4-6	8	WOC		4D: Brown, loose, fine to medium SAND, trace Gravel, trace Silt.	
						14			
						30			
						43			
						47			
20	5D	24/13	20.0 - 22.0	16-17-17-18	34	45		5D: Reddish brown, dense, Gravelly fine to coarse SAND, trace Silt; gravel absent from bottom six inches of sample.	
						30			
						30			
						41			
						143			
25								Very difficult drilling; apparent roller cone and casing refusal at 25.0 ft.; attempt core; pop through boulder at about 26.2 ft.	
								Casing and roller cone refusal at 27.4 ft.	
	R1	60/55	27.8 - 32.8	RQD = 30%			-49.1	27.4 — R1: V. hard, fresh to slightly weathered, aphanitic, porphyritic, greenish grey, BASALT with occasional weathered (feldspar and mafic) phenocrysts. Predominantly close, low and high angle fractures; undulating, rough, typically discolored (iron/rust), and open, often with lime infilling. Vertical fracture set from 27.8 to 29.7 ft. Core times: 3: 45/ 3:15/2:35/3:25/4:00 min:sec/ft.	
30									
	R2	50/45	32.8 - 37.0	RQD = 26%				R2: similar to R1, except slightly to moderately weathered and v. close, low angle fractures with lime infilling from 33.3 to 35.2 ft. and felsic-rich (GABBRO) layer with abundant microcline and plagioclase from 35.1 to 36.7 ft. Core times: 3:45 3:35/3:15/3:50/jam min:sec/ft.	
35									
							-58.7	37.0 — **Bottom of Exploration at 37.0 feet below ground surface.**	
40									
45									
50									

Remarks:

Mudline elevation updated 8/26/2013 based upon corrected data recevied from CES, Inc.

Stratification lines represent approximate boundaries between soil types; transitions may be gradual.

* Water level readings have been made at times and under conditions stated. Groundwater fluctuations may occur due to conditions other than those present at the time measurements were made.

Page 2 of 2

Boring No.: MB-EAST-101

Boring No.: MB-EAST-102

SCHONEWALD ENGINEERING ASSOCIATES, INC.

PROJECT: Maine Department of Transportation, Eastport Breakwater Replacement
LOCATION: Eastport, Maine
Boring No.: MB-EAST-102
WIN: 18436.00

Driller:	Maine Test Borings	**Elevation (ft.)**	-27.3 ft (mudline) [see remarks]	**Auger ID/OD:**	
Operator:	Enos/ Dube	**Datum:**	NAVD88 / NAD83, Maine East Zone	**Sampler:**	standard split-spoon
Logged By:	Schonewald	**Rig Type:**	CME 45C modified	**Hammer Wt./Fall:**	140 lbs / 30 inches
Date Start/Finish:	5/29/13; 1240 - 5/29/13; 1740	**Drilling Method:**	cased; drive and wash	**Core Barrel:**	NQ2
Boring Location:	N455161, E1377185 (southerly	**Casing ID/OD:**	HW (4") and NW (3") to rock	**Water Level*:**	not applicable

Definitions:
D = Split Spoon Sample
MD = Unsuccessful Split Spoon Sample attempt
U = Thin Wall Tube Sample
MU = Unsuccessful Thin Wall Tube Sample attempt
V = Insitu Vane Shear Test
MV = Unsuccessful Insitu Vane Shear Test attempt

Definitions:
S_u = Insitu Field Vane Shear Strength (psf)
R = Rock Core Sample
RQD = Rock Quality Designation (%)
WOC = weight of casing
WOH = weight of 140lb. hammer
WOR = weight of rods

Definitions:
-- = not recorded
LL = Liquid Limit
PL = Plastic Limit
PI = Plasticity Index
WC = water content, percent
G = grain size analysis

Depth (ft.)	Sample No.	Pen./Rec. (in.)	Sample Depth (ft.)	Blows (/6 in.) Shear Strength (psf) or RQD (%)	N-value	Casing Blows	Elevation (ft.)	Visual Description and Remarks	Lab. Testing Results
0						WOC		0 to 1 foot - muck	
	1D	24/2	1.0 - 3.0	3/18"-6	0	WOC		1D: Black muck and wood; brown, fine to coarse Sandy GRAVEL, trace Silt in tip of spoon.	
						19	-29.8	2.5	
						25			
						26			
5	2D	24/15	5.0 - 7.0	15-19-15-22	34	WOC		2D: Brown, dense, Gravelly fine to coarse SAND, trace Silt.	
						21			
						41			
						62			
						87			
10	3D	17/17	10.0 - 11.4	18-24-50/5"	>74			3D: Brown, v. dense, Gravelly fine to coarse SAND, trace Silt.	
	R1	60/56	11.7 - 16.7	RQD = 46%			-38.7	11.4 — R1: V. hard, fresh to slightly weathered, aphanitic to fine grained, porphyritic, greenish grey, BASALT, with numerous weathered phenocrysts presenting as pits and vugs. Predominantly close to moderately spaced, low and high angle fractures; typically undulating, rough, fresh to slightly discolored, and open. Notable high angle fracture set from 13.4 to 15.1 ft; surface discolored (rust/iron), no notable infilling, but calcite rind. Core times: 2:50/4:00/3:20/4:00/5:15 min:sec/ft.	
15									
	R2	60/60	16.7 - 21.7	RQD = 63%				R2: V. hard, fresh, aphanitic, greenish grey, BASALT. Predominantly close to moderately spaced, low angle fractures; typically undulating, rough, fresh to slightly discolored, and open. Fractures moderately dipping below 20.4 ft. Core times: 4:35/4:25/4:50/5:00/5:30 min:sec/ft.	
20									
							-49.0	21.7 — **Bottom of Exploration at 21.7 feet below ground surface.**	
25									

Remarks:

Mudline elevation updated 8/26/2013 based upon corrected data recevied from CES, Inc.

Stratification lines represent approximate boundaries between soil types; transitions may be gradual.

* Water level readings have been made at times and under conditions stated. Groundwater fluctuations may occur due to conditions other than those present at the time measurements were made.

Page 1 of 1

Boring No.: MB-EAST-102

Boring No.: MB-EAST-103

SCHONEWALD ENGINEERING ASSOCIATES, INC.

PROJECT: Maine Department of Transportation, Eastport Breakwater Replacement
LOCATION: Eastport, Maine
Boring No.: MB-EAST-103
WIN: 18436.00

Driller:	Maine Test Borings	**Elevation (ft.)**	-40.9 ft (mudline) [see remarks]	**Auger ID/OD:**	
Operator:	Enos/ Dube	**Datum:**	NAVD88 / NAD83, Maine East Zone	**Sampler:**	standard split-spoon
Logged By:	Schonewald	**Rig Type:**	CME 45C modified	**Hammer Wt./Fall:**	140 lbs / 30 inches
Date Start/Finish:	5/30/13; 0815 - 5/30/13; 1530	**Drilling Method:**	cased; drive and wash	**Core Barrel:**	NQ2
Boring Location:	N455205, E1377232	**Casing ID/OD:**	HW (4") and NW (3") to rock	**Water Level*:**	not applicable

Definitions:
D = Split Spoon Sample
MD = Unsuccessful Split Spoon Sample attempt
U = Thin Wall Tube Sample
MU = Unsuccessful Thin Wall Tube Sample attempt
V = Insitu Vane Shear Test
MV = Unsuccessful Insitu Vane Shear Test attempt

Definitions:
S_u = Insitu Field Vane Shear Strength (psf)
R = Rock Core Sample
RQD = Rock Quality Designation (%)
WOC = weight of casing
WOH = weight of 140lb. hammer
WOR = weight of rods

Definitions:
-- = not recorded
LL = Liquid Limit
PL = Plastic Limit
PI = Plasticity Index
WC = water content, percent
G = grain size analysis

Depth (ft.)	Sample No.	Pen./Rec. (in.)	Sample Depth (ft.)	Blows (/6 in.) Shear Strength (psf) or RQD (%)	N-value	Casing Blows	Elevation (ft.)	Visual Description and Remarks	Lab. Testing Results
0						WOC			
						WOC			
						12			
						14			
						18			
5	1D	24/11	5.0 - 7.0	4-3-4-5	7	22		1D: Brown, loose, fine to coarse SAND, some Gravel, trace Silt.	
						19			
						27			
						34			
						38			
10	2D	24/15	10.0 - 12.0	4-4-5-6	9	WOC		2D: Brown, loose, fine to coarse SAND, some Gravel, trace Silt.	
						15			
						33			
						67			
						61			
15	MD	24/0	15.0 - 17.0	11-10-15-14	25	27		MD: no recovery	
						55			
						29			
						30			
	3D	14/8	19.5 - 20.7	67-46-37/2"	>83	34		Casing hesitates at 19.5 ft.; roller cone obstructed by cobble at 19.5 ft; attempt split spoon sample to clear obstruction. 3D: Top of sample: Greenish-grey, angular, GRAVEL; Btm 5 inches: Brown, Gravelly fine to coarse SAND, trace Silt.	
20								Casing and roller cone refusal at 21.5 ft.	
	R1	25/21	21.8 - 23.9	RQD = 0%			-62.4	21.5 — R1: V. hard, fresh to slightly weathered, aphanitic, greenish grey, BASALT. Quartzite vein from 23.0 to 23.4 ft. Highly fractured throughout run; typically discolored (iron/rust) fracture surfaces. Core times: 3: 25/ 3:45/jam min:sec/ft.	
	R2	55/54	23.9 - 28.5	RQD = 27%				R2: V. hard, fresh to slightly weathered, aphanitic, greenish grey, BASALT, with numerous predominantly vertical quartzite and calcite veins and occasional weathered phenocrysts. V. close to close, low angle and near vertical fractures; typically undulating, rough, slightly discolored (rust/iron), and open. Notable near vertical fracture set from 24.5 to 25.2 ft; no visible infilling, but calcite rind. Second vertical fracture set from from 27.4 to 28.5 ft. Core times: 2:55/3:00/3:45/4:30/-- min:sec/ ft.	
25									
	R3	42/42	28.5 - 32.0	RQD = 29%				R3: similar to R2, with numerous weathered phenocrysts from 28.5 to 29.0 ft. and 31.1 to 32.0 ft.; highly fractured from 31.3 to 32.0 ft. Core times: 2:30/2:40 /2:45/-- min:sec/ft.	
30									
							-72.9	32.0 — **Bottom of Exploration at 32.0 feet below ground surface.**	
35									
40									
45									
50									

Remarks:

Mudline elevation updated 8/26/2013 based upon corrected data recevied from CES, Inc.

Stratification lines represent approximate boundaries between soil types; transitions may be gradual.

* Water level readings have been made at times and under conditions stated. Groundwater fluctuations may occur due to conditions other than those present at the time measurements were made.

Page 2 of 2

Boring No.: MB-EAST-103

Boring No.: MB-EAST-104

SCHONEWALD ENGINEERING ASSOCIATES, INC.

PROJECT: Maine Department of Transportation, Eastport Breakwater Replacement
LOCATION: Eastport, Maine
Boring No.: MB-EAST-104
WIN: 18436.00

Driller:	Maine Test Borings	**Elevation (ft.)**	-51.0 ft (mudline) [see remarks]	**Auger ID/OD:**	
Operator:	Enos/ Dube	**Datum:**	NAVD88 / NAD83, Maine East Zone	**Sampler:**	standard split-spoon
Logged By:	Schonewald	**Rig Type:**	CME 45C modified	**Hammer Wt./Fall:**	140 lbs / 30 inches
Date Start/Finish:	5/31/13; 0545 - 6/3/13; 1430	**Drilling Method:**	cased; drive and wash	**Core Barrel:**	NQ2
Boring Location:	N455239, E1377283	**Casing ID/OD:**	HW (4") to 11 ft/ NW (3") to rock	**Water Level*:**	not applicable

Definitions:
D = Split Spoon Sample
MD = Unsuccessful Split Spoon Sample attempt
U = Thin Wall Tube Sample
MU = Unsuccessful Thin Wall Tube Sample attempt
V = Insitu Vane Shear Test
MV = Unsuccessful Insitu Vane Shear Test attempt

Definitions:
S_u = Insitu Field Vane Shear Strength (psf)
R = Rock Core Sample
RQD = Rock Quality Designation (%)
WOC = weight of casing
WOH = weight of 140lb. hammer
WOR = weight of rods

Definitions:
-- = not recorded
LL = Liquid Limit
PL = Plastic Limit
PI = Plasticity Index
WC = water content, percent
G = grain size analysis

Depth (ft.)	Sample No.	Pen./Rec. (in.)	Sample Depth (ft.)	Blows (/6 in.) Shear Strength (psf) or RQD (%)	N-value	Casing Blows	Elevation (ft.)	Visual Description and Remarks	Lab. Testing Results
0						13			
						14			
						17			
						15			
						24			
5	1D	24/13	5.0 - 7.0	11-26-23-13	49	WOC		1D: Brown, dense, fine to coarse Sandy GRAVEL, trace Silt.	
						51			
						66			
						76			
						75			
10	2D	24/13	10.0 - 12.0	5-6-21-40	27	--		2D: Brown, m. dense, Gravelly fine to coarse SAND, trace Silt.	
						--			
						28			
						30			
						52			
15						59			
						101			
						54			
						51			
						56			
20	3D	24/16	20.0 - 22.0	15-23-18-29	41	32		3D: Brown, dense, fine to medium Sandy GRAVEL, trace coarse Sand, trace Silt.	
						58			
						55			
						37			
						29			
25						--			
						42			
						47			
						48			
						45			
30	4D	24/4	30.0 - 32.0	22-9-6-8	15	37		4D: Brown, m. dense, fine to coarse SAND, some Gravel, trace Silt.	
						39			
						40			
						41			
						58			
35						53			
						55			
						71			
						76			
						80			
40	5D	24/10	40.0 - 42.0	29-36-45-81	81	38		5D: Brown, v. dense, Gravelly fine to coarse SAND, trace Silt; pushed piece of gravel.	
						55			
						79			
						78			
						79			
45						75			
						91			
						102			
						106			
						124			
50						58			
						91			
						81			
						65			
						117			
55						121			
						102			
						90			
						76		remnants of silt lens observed in wash water	
						79			
60	6D	7/5	60.0 - 60.6	7-15/1"		--		6D: Brown, fine to medium SAND, little Gravel, trace Silt; rock in tip of spoon.	
	R1	53/52	60.6 - 65.0	RQD = 9%			-111.6	60.6 — R1: V. hard, fresh to slightly weathered, aphanitic, greenish grey BASALT; no notable phenocrysts; with numerous near horizontal to near vertical veins of quartzite and/or healed with lime/calcite; calcite rind over quartzite visible in wider veins. V. close to close, predominantly high angle fractures; typically formed along wider, high angle veins; undulating, rough, fresh to slightly discolored, open to moderately wide and typically infilled (healed) with lime/calcite; remnants of quartzite veins visible in wider fractures. Highly fractured from 60.7 to 61.3 ft. and 62.0 to 64.0 ft.; wider fracture from 62.6 to 65.1 ft. Core times: 3:10/3:00/ 3:15/3:25/-- min:sec/ft.	
65	R2	57/53	65.1 - 69.9	RQD = 46%				R2: similar to R1, except close fracture spacing; highly fractured from 69.1 to 69.9 ft. Core times: 2:55/2:45/3:20/3:15/-- min:sec/ft.	
							-120.9	69.9 — **Bottom of Exploration at 69.9 feet below ground surface.**	
70									
75									

Remarks:

Mudline elevation updated 8/26/2013 based upon corrected data recevied from CES, Inc.

Stratification lines represent approximate boundaries between soil types; transitions may be gradual.

* Water level readings have been made at times and under conditions stated. Groundwater fluctuations may occur due to conditions other than those present at the time measurements were made.

Page 3 of 3

Boring No.: MB-EAST-104

STATE OF MAINE
DEPARTMENT OF TRANSPORTATION

WIN #020806.00

STATE OF MAINE — CRAIG D. SAMS — No. 13478 — LICENSED PROFESSIONAL ENGINEER

SIGNATURE: 13478
P.E. NUMBER: 08/15/14
DATE

		BY	DATE
PROJ. MANAGER	CDS		
DESIGN–DETAILED	MMS	TEQ	7–14
CHECKED–REVIEWED	CDS	CDS	7–14
DESIGN2–DETAILED2			
DESIGN3–DETAILED3			
REVISIONS 1			
REVISIONS 2			
REVISIONS 3			
REVISIONS 4			
FIELD CHANGES			

EASTPORT BREAKWATER REPLACEMENT
EASTPORT, ME
WASHINGTON COUNTY

SOIL BORINGS SHEET 1

SHEET NUMBER
C-02

SCHONEWALD ENGINEERING ASSOCIATES, INC.

PROJECT: Maine Department of Transportation Eastport Breakwater Replacement
LOCATION: Eastport, Maine

Boring No.: MB-EAST-105
WIN: 18436.00

Driller:	Maine Test Borings	**Elevation (ft.)**	50.6 ft (mudline) [see remarks]	**Auger ID/OD:**	
Operator:	Enos/ Dube	**Datum:**	NAVD88 / NAD83, Maine East Zone	**Sampler:**	standard split-spoon
Logged By:	Schonewald	**Rig Type:**	CME 45C modified	**Hammer Wt./Fall:**	140 lbs / 30 inches
Date Start/Finish:	6/4/13; 0620 - 6/5/13; 1130	**Drilling Method:**	cased; drive and wash	**Core Barrel:**	NQ2 - wireline
Boring Location:	N455353, E1277291	**Casing ID/OD:**	HW (4") to 10 ft/ NW (3") to rock	**Water Level*:**	not applicable

Definitions:
D = Split Spoon Sample
MD = Unsuccessful Split Spoon Sample attempt
U = Thin Wall Tube Sample
MU = Unsuccessful Thin Wall Tube Sample attempt
V = Insitu Vane Shear Test
MV = Unsuccessful Insitu Vane Shear Test attempt
S_u = Insitu Field Vane Shear Strength (psf)
R = Rock Core Sample
RQD = Rock Quality Designation (%)
WOC = weight of casing
WOH = weight of 140lb. hammer
WOR = weight of rods
LL = Liquid Limit
PL = Plastic Limit
PI = Plasticity Index
WC = water content, percent
G = grain size analysis

Depth (ft.)	Sample No.	Pen./Rec. (in.)	Sample Depth (ft.)	Blows (6 in.) Shear Strength (psf) or RQD (%)	N-value	Casing Blows	Elevation (ft.)	Visual Description and Remarks	Lab. Testing Results
0						7			
						6			
						11			
5						12			
						25			
						29			
						32			
						35			
						41			
10	1D	24/12	10.0 - 12.0	5-11-15-11	26	WOC			
						43			
						21			
						23			
						24			
15						39		1D: Brown, m. dense, Gravelly fine to coarse SAND, trace Silt.	
						31			
						29			
						27			
						28			
20						27			
						25			
						32			
						18			
						23			
25						24			
						30			
						31			
						41			
						37			
						38			
30	MD	24/0	30.0 - 32.0	9-9-10-11	19	14		MD: no recovery; sand and gravel in wash water	
						23			
						26			
						27			
						31			
35						31			
						34			
						34			
						40			
40						36			
						45			
						54			
						52			
						117			
						99			
45	2D	24/5	45.0 - 47.0	36-29-29-24	58	wash ahead		2D: Reddish-brown, v. dense, Sandy GRAVEL, trace to little Silt; appears to be marginally cemented; pieces of basalt in tip of spoon - possible cobble.	
50									
						62			
						61			
						69			
55						54			
						38			
						49			
						45			
						48			
						56			
60	3D	24/4	60.0 - 62.0	blowing sand	n/a	37		3D: Brown, fine to medium SAND, little Gravel, trace Silt; minor cementation.	
						37			
						48			
						46			
						48			
65						83			
						85			
						77			
						71			
70						76			
						85			
						92			
	R1	48/48	72.8 - 76.8	RQD = 33%		120a	-123.2	a: 120 blows for 8 inches - NW refusal	72.7
75								R1: V. hard, fresh to slightly weathered, aphanitic, dark grey, BASALT, with minor near horizontal veins of quartzite and high angle cracks. Close, predominantly low angle fractures; undulating, rough, typically discolored (iron/rust), and open. Slightly to moderately weathered and	

Remarks:
Mudline elevation updated 8/26/2013 based upon corrected data received from CES, Inc.

Stratification lines represent approximate boundaries between soil types; transitions may be gradual.
* Water level readings have been made at times and under conditions stated. Groundwater fluctuations may occur due to conditions other than those present at the time measurements were made.

Page 5 of 5
Boring No.: MB-EAST-105

SCHONEWALD ENGINEERING ASSOCIATES, INC.

PROJECT: Maine Department of Transportation Eastport Breakwater Replacement
LOCATION: Eastport, Maine

Boring No.: MB-EAST-105 (cont'd)
WIN: 18436.00

Driller:	Maine Test Borings	**Elevation (ft.)**	-50.5 ft (mudline) [see remarks]	**Auger ID/OD:**	
Operator:	Enos/ Dube	**Datum:**	NAVD88 / NAD83, Maine East Zone	**Sampler:**	standard split-spoon
Logged By:	Schonewald	**Rig Type:**	CME 45C modified	**Hammer Wt./Fall:**	140 lbs / 30 inches
Date Start/Finish:	6/4/13; 0620 - 6/5/13; 1130	**Drilling Method:**	cased; drive and wash	**Core Barrel:**	NQ2 - wireline
Boring Location:	N455353, E1277291	**Casing ID/OD:**	HW (4") to 10 ft/ NW (3") to rock	**Water Level*:**	not applicable

Definitions:
D = Split Spoon Sample
MD = Unsuccessful Split Spoon Sample attempt
U = Thin Wall Tube Sample
MU = Unsuccessful Thin Wall Tube Sample attempt
V = Insitu Vane Shear Test
MV = Unsuccessful Insitu Vane Shear Test attempt
S_u = Insitu Field Vane Shear Strength (psf)
R = Rock Core Sample
RQD = Rock Quality Designation (%)
WOC = weight of casing
WOH = weight of 140lb. hammer
WOR = weight of rods
LL = Liquid Limit
PL = Plastic Limit
PI = Plasticity Index
WC = water content, percent
G = grain size analysis

Depth (ft.)	Sample No.	Pen./Rec. (in.)	Sample Depth (ft.)	Blows (6 in.) Shear Strength (psf) or RQD (%)	N-value	Casing Blows	Elevation (ft.)	Visual Description and Remarks	Lab. Testing Results
75								highly fractured with significant quartzite veining and rust/iron discoloration from 74.6 to 76.8 ft. Core times: 5:50/3:50/2:50/2:45 min:sec/ft.	
	R2	30/30	76.8 - 79.3	RQD = 0%				R2: V. hard, fresh to slightly weathered, aphanitic, greenish-grey, BASALT, with numerous near horizontal to near vertical veins of quartzite and/or healed with lime/calcite. V. close to highly fractured, with iron/rust discoloration throughout run. Core times: 3:00/3:00/jam min:sec/ft.	
								R3: V. hard, fresh to slightly weathered, aphanitic, greenish-grey, BASALT, with numerous near horizontal to near vertical cracks and veins of quartzite and/or healed with lime/calcite. Close, predominantly low angle fractures; undulating, rough, with minor iron/rust discoloration, and open. Core times: --/4:10/3:25/5:00 min:sec/ft.	
80	R3	40/42	79.3 - 82.8	RQD = 52%					
								R4: V. hard, fresh to slightly weathered, aphanitic, greenish-grey, BASALT, with numerous near horizontal to near vertical cracks and veins of quartzite and/or healed with lime/calcite. Close, predominantly high angle and lesser low angle fractures; undulating, rough, no notable discoloration, and open, typically with lime (mud) infilling. Highly fractured from 85.1 to 85. 8 ft. Core times: 3:20/2:50/2:45/jam min:sec/ft.	
	R4	45/45	82.8 - 86.6	RQD = 22%					
85								R5: similar to R4, except with close to moderately spaced fractures. Core times: 2:40/2:35/3:15/2:25/-- min:sec/ft.	
	R5	53/52	86.6 - 91.0	RQD = 64%					
								R6: similar to R4, except porphyritic and with v. close to close fracture spacing. Core times: 2:35/3:00/jam min:sec/ft.	
90	R6	33/33	91.0 - 93.8	RQD = 30%					
								R7: similar to R4, except with v. close to close fracture spacing and more lime (mud) infilling; highly fractured from 95.0 to 96.8 ft. Core times: 3:10/3:20/jam min:sec/ft.	
	R7	30/30	93.8 - 96.3	RQD = 13%					
								R8: similar to R4, except with v. close to close fracture spacing. Core times: --/5:10/3:20/4:35 min:sec/ft.	
95	R8	48/48	96.3 - 100.3	RQD = 52%					
								R9: similar to R4, except with v. close to close fracture spacing; notable quartzite veins at 101.1, 101.3 and 101.6 ft.; highly fractured from 103.8 to 105.0 ft. Core times: 2:00/2:35/2:50/2:30/jam min:sec/ft.	
	R9	56/52	100.3 - 105.0	RQD = 39%					
100								R10: similar to R4, except with v. close to close fracture spacing; highly fractured from 105.0 to 105.6 and 107.6 to 108.6 ft. Core times: 2:25/3:00/2:50/jam min:sec/ft.	
	R10	45/44	105.0 - 108.8	RQD = 9%					
								R11: similar to R4, except with v. close to close fracture spacing; highly fractured from 109.7 to 110.3 ft. Core times: 1:50/2:25/4:00 min:sec/ft.	
	R11	36/32	108.8 - 111.8	RQD = 39%					
105							-162.3	**Bottom of Exploration at 111.8 feet below ground surface.**	-111.8
110									
115									
120									
125									

Remarks:
Mudline elevation updated 8/26/2013 based upon corrected data received from CES, Inc.

Stratification lines represent approximate boundaries between soil types; transitions may be gradual.
* Water level readings have been made at times and under conditions stated. Groundwater fluctuations may occur due to conditions other than those present at the time measurements were made.

Page 5 of 5
Boring No.: MB-EAST-105

SCHONEWALD ENGINEERING ASSOCIATES, INC.

PROJECT: Maine Department of Transportation Eastport Breakwater Replacement
LOCATION: Eastport, Maine

Boring No.: MB-EAST-106
WIN: 18436.00

Driller:	Maine Test Borings	**Elevation (ft.)**	-51.2 ft (mudline) [see remarks]	**Auger ID/OD:**	
Operator:	Enos/ Dube	**Datum:**	NAVD88 / NAD83, Maine East Zone	**Sampler:**	standard split-spoon
Logged By:	Schonewald	**Rig Type:**	CME 45C modified	**Hammer Wt./Fall:**	140 lbs / 30 inches
Date Start/Finish:	6/5/13; 1300 - 6/6/13; 1105	**Drilling Method:**	cased; drive and wash	**Core Barrel:**	NQ2
Boring Location:	N455476, E1377295	**Casing ID/OD:**	HW (4") to 10 ft/ NW (3") to rock	**Water Level*:**	not applicable

Definitions:
D = Split Spoon Sample
MD = Unsuccessful Split Spoon Sample attempt
U = Thin Wall Tube Sample
MU = Unsuccessful Thin Wall Tube Sample attempt
V = Insitu Vane Shear Test
MV = Unsuccessful Insitu Vane Shear Test attempt
S_u = Insitu Field Vane Shear Strength (psf)
R = Rock Core Sample
RQD = Rock Quality Designation (%)
WOC = weight of casing
WOH = weight of 140lb. hammer
WOR = weight of rods
LL = Liquid Limit
PL = Plastic Limit
PI = Plasticity Index
WC = water content, percent
G = grain size analysis

Depth (ft.)	Sample No.	Pen./Rec. (in.)	Sample Depth (ft.)	Blows (6 in.) Shear Strength (psf) or RQD (%)	N-value	Casing Blows	Elevation (ft.)	Visual Description and Remarks	Lab. Testing Results
0						wash ahead			
5							-5.5	soft material encountered at about 4.5 ft based on drilling behavior	-4.5
10	1D	24/14	10.0 - 12.0	11-10-15-15	25			material becomes more stiff at about 9.5 feet based on drilling behavior	
							-62.1	1D:Grey, Clayey SILT, trace fine Sand.	-10.9
								Sample changes at 10.9' to brown, fine to coarse SAND, some Gravel, trace Silt.	
15									
20									
25									
30									
35									
40	2D	24/24	40.0 - 42.0	8-16-20-27	36			2D: Brown, dense, fine to medium SAND, little Gravel, trace coarse Sand, trace Silt.	
								boney material encountered from about 45 ft to bottom of overburden based on drilling behavior	
45									
50									
55									
60						wash ahead			
							-110.3	drilling behavior and wash water suggest weathered conglomerate encountered at about 59 ft.	-59.0
								NW refusal at 60.2 ft.	
	R1	40/34	61.5 - 64.8	RQD = 0%				roller cone refusal at 61.5 ft.	
								R1: Medium to soft, moderately to highly weathered, aphanitic to fine grained, porphyritic CONGLOMERATE; highly fractured/ broken.	
							-114.0	R1 (cont'd): Change at 62.8 ft. to: v. hard, fresh to slightly weathered, aphanitic, porphyritic, greyish-green, BASALT; highly fractured to 64.8 ft. Core times: 2:05/3:40/3:40/jam min:sec/ft.	-62.8
65	R2	60/58	64.8 - 69.8	RQD = 77%				R2: V.hard, fresh to slightly weathered, aphanitic, porphyritic, greyish-green, BASALT, with few low to high angle cracks and numerous low to high angle veins, predominantly quartzite, some with rusty margins. Close to moderately spaced, low to high angle fractures, typically formed along veins; undulating, rough, slightly discolored (rust/iron), and partially open to open. Core times: 2:40/2:25/4:00/4:00/2:15 min:sec/ft.	
70	R3	24/22	69.8 - 71.8	RQD = 25%				R3: similar to R2, except with close fracture spacing; highly fractured from 69.8 ft to 70.3 ft. Core times: 3:10/3:20 min:sec/ft.	
							-123.0	**Bottom of Exploration at 71.8 feet below ground surface.**	-71.8
75									

Remarks:
Mudline elevation updated 8/26/2013 based upon corrected data received from CES, Inc.

Stratification lines represent approximate boundaries between soil types; transitions may be gradual.
* Water level readings have been made at times and under conditions stated. Groundwater fluctuations may occur due to conditions other than those present at the time measurements were made.

Page 3 of 3
Boring No.: MB-EAST-106

SCHONEWALD ENGINEERING ASSOCIATES, INC.

PROJECT: Maine Department of Transportation Eastport Breakwater Replacement
LOCATION: Eastport, Maine

Boring No.: MB-EAST-107
WIN: 18436.00

Driller:	Maine Test Borings	**Elevation (ft.)**	-59.6 ft (mudline) [see remarks]	**Auger ID/OD:**	
Operator:	Enos/ Dube	**Datum:**	NAVD88 / NAD83, Maine East Zone	**Sampler:**	standard split-spoon
Logged By:	Schonewald	**Rig Type:**	CME 45C modified	**Hammer Wt./Fall:**	140 lbs / 30 inches
Date Start/Finish:	6/13/13; 1315 - 6/14/13; 1545	**Drilling Method:**	cased; drive and wash	**Core Barrel:**	NQ2
Boring Location:	N455604, E1377308	**Casing ID/OD:**	HW (4") to 29 ft/ NW (3") to rock	**Water Level*:**	not applicable

Definitions:
D = Split Spoon Sample
MD = Unsuccessful Split Spoon Sample attempt
U = Thin Wall Tube Sample
MU = Unsuccessful Thin Wall Tube Sample attempt
V = Insitu Vane Shear Test
MV = Unsuccessful Insitu Vane Shear Test attempt
S_u = Insitu Field Vane Shear Strength (psf)
R = Rock Core Sample
RQD = Rock Quality Designation (%)
WOC = weight of casing
WOH = weight of 140lb. hammer
WOR = weight of rods
LL = Liquid Limit
PL = Plastic Limit
PI = Plasticity Index
WC = water content, percent
G = grain size analysis

Depth (ft.)	Sample No.	Pen./Rec. (in.)	Sample Depth (ft.)	Blows (6 in.) Shear Strength (psf) or RQD (%)	N-value	Casing Blows	Elevation (ft.)	Visual Description and Remarks	Lab. Testing Results
0						2			
						29			
						33			
5						34			
						25			
						44			
						53			
						54			
						61			
						72			
10						wash ahead			
						97			
15						104			
						90			
						89			
						107			
						wash ahead			
20									
						86			
25						124			
						111			
						94			
						89			
	1D	24/20	26.0 - 31.0	5-8-15-15	23	wash		1D: Brown, m. dense, fine to medium SAND, little Gravel, trace coarse Sand, trace Silt.	
						ahead			
						24			
						34			
30						44			
						44			
						45			
						42			
						38			
						47			
						62			
						58			
						47			
						57			
						69			
						69			
						46			
						32			
						54			
						60			
						49/11*			
40						wash ahead			
							-101.4	NW refusal at 49.2 ft.	
								roller cone to 50.6 ft; very difficult drilling; wash water changes from red to grey suggesting layer of CONGLOMERATE.	
									-50.6
								redrive NW to 50.6; clean out to 51.1 ft.	
								R1: V. hard, fresh to slightly weathered, aphanitic, greenish-grey BASALT, with few low and high angle cracks and quartzite veins. Typically v. close to close, low and high angle fractures; undulating, rough, typically slightly discolored (iron/rust), and open; minor lime infilling. Highly fractured from 51.1 to 51.9 ft. and 53.2 to 53.8 ft. Core times: 1:40/1:55/2:25/-- min:sec/ft.	
								R2: similar to R1, except more numerous cracks and veins with more lime infilling. Highly fractured from 55.1 to 55.4 ft. Core times: 5:05/-- min:sec/ft.	
	R1	38/38	51.1 - 54.3	RQD = 0%				R3: similar to R2, except close to moderate fracture spacing; 1/4-inch thick near horizontal clay seam at 58.0 ft. Highly fractured from 59.0 to 59.4 ft. Core times: 3:10/2:10/1:25/1:25/2:00 min:sec/ft.	
	R2	13/12	54.3 - 55.4	RQD = 31%					
	R3	60/60	55.4 - 60.4	RQD = 53%					
60							-111.2	**Bottom of Exploration at 60.4 feet below ground surface.**	-60.4
65									
70									
75									

Remarks:
Mudline elevation updated 8/26/2013 based upon corrected data received from CES, Inc.

Stratification lines represent approximate boundaries between soil types; transitions may be gradual.
* Water level readings have been made at times and under conditions stated. Groundwater fluctuations may occur due to conditions other than those present at the time measurements were made.

Page 3 of 3
Boring No.: MB-EAST-107

STATE OF MAINE
DEPARTMENT OF TRANSPORTATION

WIN #020806.00

STATE OF MAINE
CRAIG D. SAMS
No. 13478
LICENSED PROFESSIONAL ENGINEER

SIGNATURE		DATE
13478	PROJ. MANAGER CDS	
P.E. NUMBER	DESIGN-DETAILED MMS	7-1-14 TEQ
08/15/14	CHECKED-REVIEWED CDS	7-1-14 CDS
DATE	DESIGN2-DETAILED2 CDS	
	DESIGN3-DETAILED3	
	REVISIONS 1	
	REVISIONS 2	
	REVISIONS 3	
	REVISIONS 4	
	FIELD CHANGES	

EASTPORT BREAKWATER REPLACEMENT
EASTPORT, ME
WASHINGTON COUNTY

SOIL BORINGS SHEET 2

SHEET NUMBER
C-03

SCHONEWALD ENGINEERING ASSOCIATES, INC.

PROJECT: Maine Department of Transportation Eastport Breakwater Replacement
LOCATION: Eastport, Maine
Boring No.: MB-EAST-108
WIN: 18436.00

Driller:	Maine Test Borings	**Elevation (ft.)**	-51.1 ft (mudline) [see remarks]	**Auger ID/OD:**	
Operator:	Enos/ Dube	**Datum:**	NAVD88 / NAD83, Maine East Zone	**Sampler:**	standard split-spoon
Logged By:	Schonewald	**Rig Type:**	CME 45C modified	**Hammer Wt./Fall:**	140 lbs / 30 inches
Date Start/Finish:	6/6/13; 1330 - 6/10/13; 1400	**Drilling Method:**	cased; drive and wash	**Core Barrel:**	not used
Boring Location:	N455711, E1377208	**Casing ID/OD:**	HW (4") to 19 ft/ NW (3") to rock	**Water Level*:**	not applicable

Definitions:
D = Split Spoon Sample
MD = Unsuccessful Split Spoon Sample attempt
U = Thin Wall Tube Sample
MU = Unsuccessful Thin Wall Tube Sample attempt
V = Insitu Vane Shear Test
MV = Unsuccessful Insitu Vane Shear Test attempt
S_u = Insitu Field Vane Shear Strength (psf)
R = Rock Core Sample
RQD = Rock Quality Designation (%)
WOC = weight of casing
WOH = weight of 140lb. hammer
WOR = weight of rods
-- = not recorded
LL = Liquid Limit
P_L = Plastic Limit
P = Plasticity Index
WC = water content, percent
G = grain size analysis

Sample Information

Depth (ft.)	Sample No.	Pen./Rec. (in.)	Sample Depth (ft.)	Blows (6 in.) Shear Strength (psf) or RQD (%)	N-value	Casing Blows	Elevation (ft.)	Graphic Log	Visual Description and Remarks	Lab. Testing Results
0						50				
						116				
						115				
						83				
5						wash ahead				
						57				
						161				
						wash ahead				
10	1D	24/7	10.0 - 12.0	11-11-12-14	23	13			2D: Reddish-brown, m. dense, Gravelly fine to coarse SAND, trace to little Silt.	
						25				
						31				
						28				
15						24				
						30				
						33				
						32				
						30				
20						29				
						27				
						43				
						46				
						36				
						32				
25						35				
						42				
						48				
						41				
						46				
30	2D	24/24	30.0 - 32.0	9-13-16-28	29	--			2D: Brown, m. dense, fine to coarse SAND, some Gravel, trace Silt; fine to medium Sand in tip of spoon.	
						52				
						70				
						71				
						68				
35						107				
						100				
						33			adjust lines; wash out with NW at 37 ft. BGS	
						50				
						65				
40						73				
						110				
						113			driving HW with NW; clamp HW	
						51				
						53				
45						57				
						58				
						56				
						60				
						59				
50						60				
						67				
						64				
						72				
55						73				
						114				
						126				
						109				
						134				
60						wash ahead			wash out with NW at 59 ft.	
						78				
65						68				
						90				
						100				
									NW to 67.5 ft.	
									roller cone to 69.2 ft; probable rock	
70							120.3		**Bottom of Exploration at 69.2 feet below ground surface.** line on barge snagged; anchors and barge dragged approx. 30 ft. westerly; NW and HW broken at mudline; relocate boring to MB-EAST-108A	69.2
75										

Remarks:
Mudline elevation updated 8/26/2013 based upon corrected data received from CES, Inc.

Stratification lines represent approximate boundaries between soil types; transitions may be gradual.
* Water level readings have been made at times and under conditions stated. Groundwater fluctuations may occur due to conditions other than those present at the time measurements were made.

SCHONEWALD ENGINEERING ASSOCIATES, INC.

PROJECT: Maine Department of Transportation Eastport Breakwater Replacement
LOCATION: Eastport, Maine
Boring No.: MB-EAST-108A
WIN: 18436.00

Driller:	Maine Test Borings	**Elevation (ft.)**	-47.4 ft (mudline) [see remarks]	**Auger ID/OD:**	
Operator:	Enos/ Dube	**Datum:**	NAVD88 / NAD83, Maine East Zone	**Sampler:**	standard split-spoon
Logged By:	Schonewald	**Rig Type:**	CME 45C modified	**Hammer Wt./Fall:**	140 lbs / 30 inches
Date Start/Finish:	6/10/13; 1430 - 6/11/13; 1755	**Drilling Method:**	cased; drive and wash	**Core Barrel:**	N02 - wireline
Boring Location:	N455728, E1377312	**Casing ID/OD:**	HW (4") to 10 ft/ NW (3") to rock	**Water Level*:**	not applicable

Definitions:
D = Split Spoon Sample
MD = Unsuccessful Split Spoon Sample attempt
U = Thin Wall Tube Sample
MU = Unsuccessful Thin Wall Tube Sample attempt
V = Insitu Vane Shear Test
MV = Unsuccessful Insitu Vane Shear Test attempt
S_u = Insitu Field Vane Shear Strength (psf)
R = Rock Core Sample
RQD = Rock Quality Designation (%)
WOC = weight of casing
WOH = weight of 140lb. hammer
WOR = weight of rods
-- = not recorded
LL = Liquid Limit
P_L = Plastic Limit
P = Plasticity Index
WC = water content, percent
G = grain size analysis

Sample Information

Depth (ft.)	Sample No.	Pen./Rec. (in.)	Sample Depth (ft.)	Blows (6 in.) Shear Strength (psf) or RQD (%)	N-value	Casing Blows	Elevation (ft.)	Graphic Log	Visual Description and Remarks	Lab. Testing Results
70									MB-EAST-108A located approximately 20 ft. NNE from MB-EAST-108. No testing or sampling in overburden; wash water (sand and gravel) similar to MB-EAST-108.	
									NW and roller cone refusal at 75.7 ft.	75.7
75	R1	33/30	75.7 - 78.5	RQD = 48%			-123.1		R1: V. hard, fresh to slightly weathered, aphanitic, greenish-grey BASALT, with few high angle cracks and quartzite veins. Close to moderately spaced, low and high angle fractures; undulating, rough, predominantly fresh (few slightly discolored), and open; minor lime (mud) infilling. Highly fractured from 77.5 to 78.5 ft. Core times: 4:15/ 2:50/jam min:sec/ft.	
	R2	40/39	78.5 - 81.8	RQD = 20%					R2: similar to R1, except v. close to close spacing; highly fractured 78.5 to 79.2 ft.; significant moderately dipping quartzite vein at 81.8 ft. Core times: 3:00/2:30/2:20/jam min:sec/ft.	
80	R3	49/47	81.8 - 85.9	RQD = 41%					R3: similar to R1, except numerous low to high angle quartzite veins from 81.8 to 83.4 ft; v. close to moderately spaced fractures; significant quartzite veins at 81.8 and 83.1 ft. Core times: 1:35/2:20/2:10/2:00/-- min:sec/ft.	
	R4	36/35	85.9 - 88.9	RQD = 22%					R4: similar to R1, except v. close to close spacing. Core times: 2:20/ 2:45/3: 10 min:sec/ft.	
85	R5	60/59	88.9 - 93.9	RQD = 78%					R5: similar to R1, except predominantly moderate fracture spacing. Core times: 2:20/1:50/2:25/2:20/2:10 min:sec/ft.	
	R6	56/55	93.9 - 98.6	RQD = 43%					R6: similar to R1, except large porphyroblast from 96.7 to 97.2 ft.; moderately spaced fractures from 93.9 to 95.8 ft.; predominantly closely	
90									spaced fractures from 95.8 to 98.6 ft.; highly fractured from 96.3 to 96.9 ft; some calcite margins. Core times: 2:50/1:35/1:45/1:40/-- min:sec/ft.	
	R7	19/10	98.6 - 100.2	RQD = 0%					R7: similar to R1, except highly fractured entire length. Core times: - /jam min:sec/ft.	
	R8	44/34	100.2 - 103.9	RQD = 27%					R8: similar to R1, except porphyritic; v. close to close fracture spacing; highly fractured from 100.2 to 100.8 ft. and 103.5 to 103.9 ft; more clay infilling. Core times: 3:00/1:35/3:10/jam min:sec ft.	
95	R9	52/47	103.9 - 108.2	RQD = 15%					R9: similar to R1, except porphyritic with v. close fracture spacing and more lime (mud) infilling; significant high angle quartzite veins at 106.9 and 107.8 ft; highly fractured from 104.3 to 104.7 ft., 105.4 to 106.0 ft., and 107.2 to 107.8 ft. Core times: 5:15/2:50/2:10/3:50/jam min:sec ft.	
100										
105										
110										
115										
							-155.6		unable to continue coring due to high wind and rough water	
120									**Bottom of Exploration at 108.2 feet below ground surface.**	108.2

Remarks:
Mudline elevation updated 8/26/2013 based upon corrected data received from CES, Inc.
NOTE LOG STARTS AT 70 FEET BGS

Stratification lines represent approximate boundaries between soil types; transitions may be gradual.
* Water level readings have been made at times and under conditions stated. Groundwater fluctuations may occur due to conditions other than those present at the time measurements were made.

SCHONEWALD ENGINEERING ASSOCIATES, INC.

PROJECT: Maine Department of Transportation Eastport Breakwater Replacement
LOCATION: Eastport, Maine
Boring No.: MB-EAST-109
WIN: 18436.00

Driller:	Maine Test Borings	**Elevation (ft.)**	-38.8 ft (mudline) [see remarks]	**Auger ID/OD:**	
Operator:	Enos/ Dube	**Datum:**	NAVD88 / NAD83, Maine East Zone	**Sampler:**	standard split-spoon
Logged By:	Schonewald	**Rig Type:**	CME 45C modified	**Hammer Wt./Fall:**	140 lbs / 30 inches
Date Start/Finish:	6/17/13; 0930 - 6/17/13; 1600	**Drilling Method:**	cased; drive and wash	**Core Barrel:**	N02
Boring Location:	N455675, E1377265	**Casing ID/OD:**	HW (4") to 10.8 ft/ NW (3") to 11.8 ft	**Water Level*:**	not applicable

Definitions:
D = Split Spoon Sample
MD = Unsuccessful Split Spoon Sample attempt
U = Thin Wall Tube Sample
MU = Unsuccessful Thin Wall Tube Sample attempt
V = Insitu Vane Shear Test
MV = Unsuccessful Insitu Vane Shear Test attempt
S_u = Insitu Field Vane Shear Strength (psf)
R = Rock Core Sample
RQD = Rock Quality Designation (%)
WOC = weight of casing
WOH = weight of 140lb. hammer
WOR = weight of rods
-- = not recorded
LL = Liquid Limit
P_L = Plastic Limit
P = Plasticity Index
WC = water content, percent
G = grain size analysis

Sample Information

Depth (ft.)	Sample No.	Pen./Rec. (in.)	Sample Depth (ft.)	Blows (6 in.) Shear Strength (psf) or RQD (%)	N-value	Casing Blows	Elevation (ft.)	Graphic Log	Visual Description and Remarks	Lab. Testing Results
0						16				
						42				
						56				
						51				
5						33				
						128				
						172				
						153				
						215				
						wash ahead				
10							-49.8		very difficult driving; attempt to roller cone ahead	
									HW refusal at 10.8 ft; attempt to roller cone through presumed obstruction	10.8
	R1	60/58	11.8 - 16.8	RQD = 47%					roller cone refusal at 11.8 ft.	
									R1: V. hard to hard, fresh to slightly weathered, aphanitic to fine grained, porphyritic, greenish-grey BASALT, with a few mafic phenocrysts and a few low and high angle cracks and quartzite veins. Felsic-rich (GABBRO) layer consisting predominantly of microcline and plagioclase, as well as muscovite, from 13.4 to 14.9 ft.; significant high angle quartzite vein centered at 14.2 ft. Close to moderately spaced, low and high angle fractures; undulating, rough, and open, with some lime infilling. Core times: 5:55/4:50/4:30/4:30/4:20 min:sec/ft.	
15										
	R2	60/58	16.8 - 21.8	RQD = 48%					R2: V. hard to hard, fresh to slightly weathered, aphanitic to fine grained, porphyritic, green-pink-grey GABBRO, consisting predominantly of microcline and plagioclase, as well as muscovite and some mafic phenocrysts; few low and high angle cracks and quartzite veins. Significant high angle quartzite vein centered at 18.8 ft. and 1/4-inch wide high angle quartzite vein centered at 19.8 ft. Close to moderately spaced, low and high angle fractures; undulating, rough, and open, with some lime infilling. Core times: 4:00/3:20/1:50/2:15/3:05 min:sec/ft.	
20										
	R3	60/60	21.8 - 26.8	RQD = 63%					R3: Similar to R2, with 1/2-inch wide high angle quartzite vein centered at 23.4 ft. Core times: 2:30/1:55/2:10/2:05/2:30 min:sec/ft.	
25										
	R4	37/37	26.8 - 29.9	RQD = 0%					R4: Similar to R2, except highly fractured throughout; occasional discolored (rust/iron) fracture surfaces; some lime infilling. Core times: 2:50/3:20/3:40/jam min:sec/ft.	
							-68.7			
30									**Bottom of Exploration at 29.9 feet below ground surface.**	29.9
35										
40										
45										
50										

Remarks:
Mudline elevation updated 8/26/2013 based upon corrected data received from CES, Inc.

Stratification lines represent approximate boundaries between soil types; transitions may be gradual.
* Water level readings have been made at times and under conditions stated. Groundwater fluctuations may occur due to conditions other than those present at the time measurements were made.

SCHONEWALD ENGINEERING ASSOCIATES, INC.

PROJECT: Maine Department of Transportation Eastport Breakwater Replacement
LOCATION: Eastport, Maine
Boring No.: MB-EAST-110
WIN: 18436.00

Driller:	Maine Test Borings	**Elevation (ft.)**	-22.8 ft (mudline) [see remarks]	**Auger ID/OD:**	
Operator:	Enos/ Dube	**Datum:**	NAVD88 / NAD83, Maine East Zone	**Sampler:**	standard split-spoon
Logged By:	Schonewald	**Rig Type:**	CME 45C modified	**Hammer Wt./Fall:**	140 lbs / 30 inches
Date Start/Finish:	6/13/13; 0545 - 6/13/13; 1045	**Drilling Method:**	cased; drive and wash	**Core Barrel:**	N02
Boring Location:	N455663, E1377142	**Casing ID/OD:**	HW (4") to 20 ft/ NW (3") to rock	**Water Level*:**	not applicable

Definitions:
D = Split Spoon Sample
MD = Unsuccessful Split Spoon Sample attempt
U = Thin Wall Tube Sample
MU = Unsuccessful Thin Wall Tube Sample attempt
V = Insitu Vane Shear Test
MV = Unsuccessful Insitu Vane Shear Test attempt
S_u = Insitu Field Vane Shear Strength (psf)
R = Rock Core Sample
RQD = Rock Quality Designation (%)
WOC = weight of casing
WOH = weight of 140lb. hammer
WOR = weight of rods
-- = not recorded
LL = Liquid Limit
P_L = Plastic Limit
P = Plasticity Index
WC = water content, percent
G = grain size analysis

Sample Information

Depth (ft.)	Sample No.	Pen./Rec. (in.)	Sample Depth (ft.)	Blows (6 in.) Shear Strength (psf) or RQD (%)	N-value	Casing Blows	Elevation (ft.)	Graphic Log	Visual Description and Remarks	Lab. Testing Results
0						WOC	-23.8		0 to 1 foot - muck	
						24				1.0
						26				
						28				
5						27				
						25				
						30				
						21				
						28				
						29				
10	1D	24/12	10.0 - 12.0	8-9-11-10	20	39			1D: Brown, m. dense, Gravelly fine to coarse SAND, trace to little Silt.	
						36				
						35				
						26				
15						55				
						71				
						89				
						61				
						96				
						63				
20						wash ahead			very difficult drilling; roller cone ahead of casing	
									NW and roller cone refusal at 22.6 ft.; attempt core; cobbles and boulders.	
25							-48.4			25.6
									NW to 25.6 - set into top of rock	
	R1	26/24	26.6 - 28.8	RQD = 0%					R1: V. hard, slightly weathered, aphanitic, porphyritic, green-pink-grey, GABBRO, consisting predominantly of microcline and plagioclase, as well as muscovite, with predominantly mafic phenocrysts and some vugs and pits from weathering of phenocrysts. Highly fractured throughout run; discolored (rust/iron) fracture surfaces and lime infilling typical. Core times: 1:35/1:40/-- min:sec	
									R2: Similar to R1, except v. close to close, moderately dipping to near vertical fractures; undulating, rough, discolored and open, with lime infilling. Core times: 1:55/2:05/2:00/jam min:sec/ft.	
	R2	43/43	28.8 - 32.4	RQD = 12%						
30									R3: Similar to R1 and R2, with v. close fracture spacing to highly fractured; cracks that are not yet, but easily separated throughout. Core times: 1:40/1:35/jam min:sec/ft.	
	R3	28/28	32.4 - 34.7	RQD = 0%						
							-59.5		R4: Similar to R3, except highly fractured throughout; lime infilling more prevalent. Core times: 1:40/1:50 min:sec/ft.	
	R4	24/20	34.7 - 36.7	RQD = 0%						
35									**Bottom of Exploration at 36.7 feet below ground surface.**	36.7
40										
45										
50										

Remarks:
Mudline elevation updated 8/26/2013 based upon corrected data received from CES, Inc.

Stratification lines represent approximate boundaries between soil types; transitions may be gradual.
* Water level readings have been made at times and under conditions stated. Groundwater fluctuations may occur due to conditions other than those present at the time measurements were made.

STATE OF MAINE
DEPARTMENT OF TRANSPORTATION

WIN #020806.00

STATE OF MAINE
CRAIG D. SAMS
No. 13478
LICENSED
PROFESSIONAL ENGINEER

	13478	P.E. NUMBER
	08/15/14	DATE

PROJ. MANAGER	CDS		
DESIGN-DETAILED	MMS	TEQ	7-14
CHECKED-REVIEWED	CDS	CDS	7-14
DESIGN2-DETAILED2			
DESIGN3-DETAILED3			
REVISIONS 1			
REVISIONS 2			
REVISIONS 3			
REVISIONS 4			
FIELD CHANGES			

EASTPORT BREAKWATER REPLACEMENT
EASTPORT, ME
WASHINGTON COUNTY

SOIL BORINGS SHEET 3

SHEET NUMBER
C-04

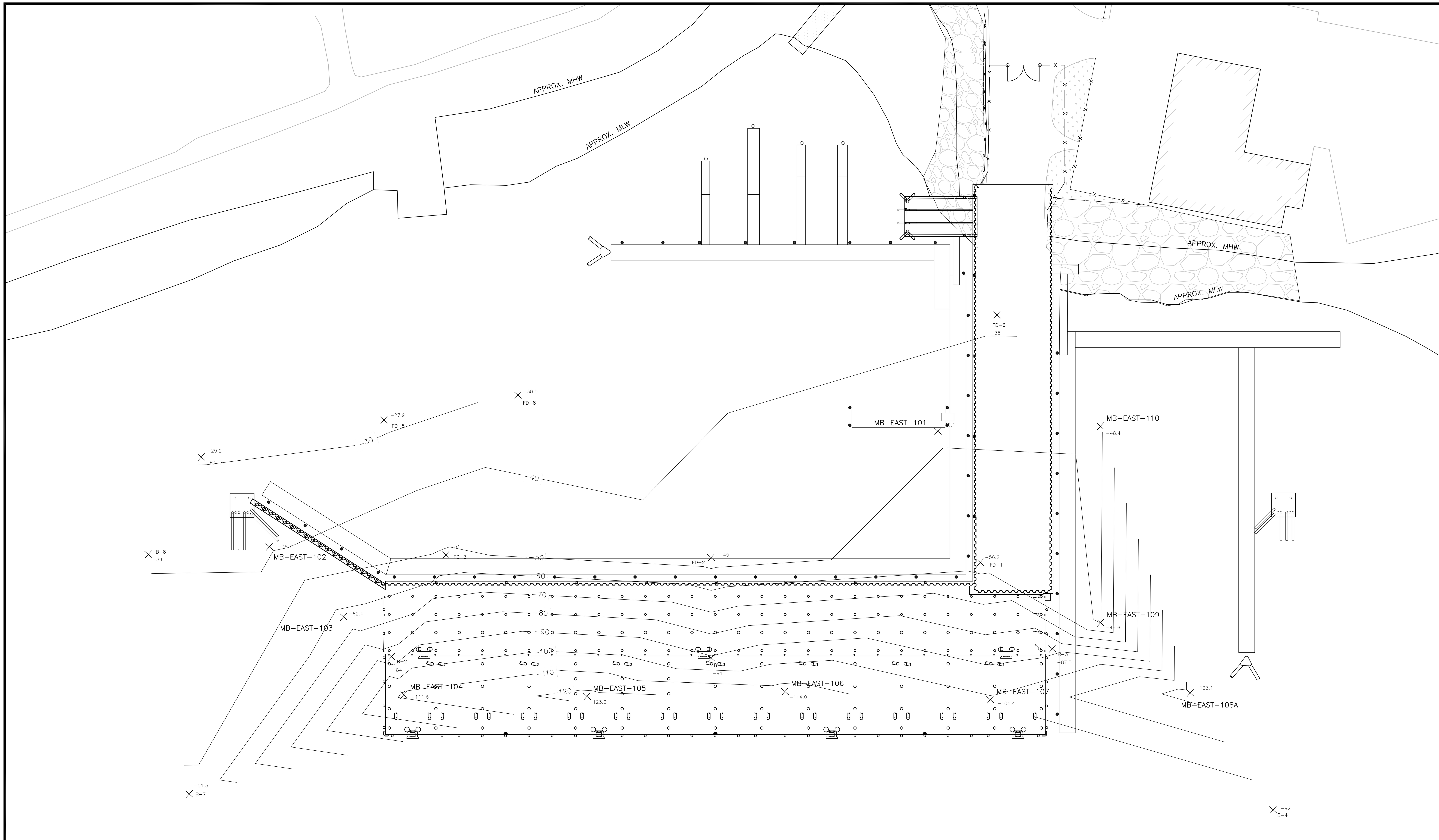

PLAN

SCALE: 1"=30'−0"

NOTE:

1. CONTOUR LINES ARE APPROXIMATE AND BASED ON AVAILABLE SOIL BORING INFORMATION, ACTUAL ROCK ELEVATIONS MAY DIFFER.

2. DATUM IS NAVD88 = 0.0'

1"=30'−0" 30 0 30 60 SCALE IN FEET

STATE OF MAINE
DEPARTMENT OF TRANSPORTATION

WIN #020806.00

STATE OF MAINE CRAIG D. SAMS No. 13478 LICENSED PROFESSIONAL ENGINEER

SIGNATURE 13478
P.E. NUMBER 08/15/14
DATE

		BY	DATE
PROJ. MANAGER	CDS		
DESIGN−DETAILED	MMS	TEQ	7−14
CHECKED−REVIEWED	CDS	CDS	7−14
DESIGN2−DETAILED2			
DESIGN3−DETAILED3			
REVISIONS 1			
REVISIONS 2			
REVISIONS 3			
REVISIONS 4			
FIELD CHANGES			

EASTPORT BREAKWATER REPLACEMENT
EASTPORT, ME
WASHINGTON COUNTY

ROCK CONTOURS

SHEET NUMBER

C-05

GENERAL

1. INFORMATION REGARDING EXISTING CONSTRUCTION AND CONDITIONS IS BASED ON FIELD INSPECTION AND IS INCLUDED TO ASSIST THE CONTRACTOR. THE ACCURACY OR COMPLETENESS OF THIS INFORMATION IS LIMITED AND WILL VARY.
2. THE CONTRACTOR SHALL NOTIFY THE OWNER WHEN UNANTICIPATED OR APPARENTLY DANGEROUS CONDITIONS ARE UNCOVERED DURING CONSTRUCTION OR DEMOLITION.
3. THE CONTRACTOR SHALL VERIFY ALL DIMENSIONS AND CONDITIONS ON THE JOB. DISCREPANCIES SHALL BE BROUGHT TO THE ATTENTION OF THE OWNER BEFORE PROCEEDING WITH THE PORTION OF THE WORK.
4. CONTRACTOR SHALL MAINTAIN A SET OF PROJECT DRAWINGS ON SITE THAT IS MARKED UP FOR AS BUILT CONDITIONS AND SHOWS THE CURRENT PROGRESS OF THE CONSTRUCTION. THESE DRAWINGS SHALL BE MADE AVAILABLE TO THE OWNER AT ANY TIME FOR REVIEW.

CODES AND STANDARDS

1. CONSTRUCTION SHALL CONFORM TO THE REQUIREMENTS OF THE MAINE UNIFORM BUILDING CODE WITH LATEST AMENDMENTS.
2. ALL STRUCTURAL CONCRETE SHALL CONFORM TO THE LATEST ACI 318 BUILDING CODE.
3. ALL STEEL FABRICATION AND CONSTRUCTION SHALL CONFORM TO THE LATEST AISC STEEL CONSTRUCTION MANUAL SPECIFICATIONS AND CODE
4. ALL STRUCTURAL STEEL WELDING SHALL COMPLY WITH AWS D1.1 / D1.1M. UNDERWATER WELDING SHALL COMPLY WITH AWS D3.6
5. ALL REINFORCING STEEL WELDING SHALL COMPLY WITH AWS D1.4.

ENVIRONMENTAL CONDITIONS

1. WATER LEVELS AT THE SITE ARE SHOWN BELOW IN REFERENCE TO THE PROJECT VERTICAL DATUM:

EXTREME HIGH WATER (EHW)	EL = 14.28'
MEAN HIGHER HIGH WATER (MHHW)	EL = 9.33'
MEAN HIGH WATER (MHW)	EL = 8.85'
NAVD 88	EL = 0.0'
MEAN LOW WATER (MLW)	EL = −9.50'
MEAN LOWER LOW WATER (MLLW)	EL = −9.95'
EXTREME LOW WATER (ELW)	EL = −14.62'

STRUCTURAL CONCEPT

1. GRAVITY LOADS WILL BE TRANSMITTED THROUGH COMPOSITE DECK PLANKS TO PILE CAPS, FROM PILE CAPS TO PILES, AND FROM PILES TO BEDROCK THROUGH END BEARING.
2. LATERAL LOADS (INCLUDING SEISMIC, WAVE FORCES, WIND, MOORING AND BERTHING) ARE CURRENTLY SUPPORTED BY THE SOLID FILL PORTION OF THE EXISTING PIER. DUE TO THE REMOVAL OF THE SOLID FILL PORTION OF THE PIER, THE NEW PIER EXTENSION WILL BE RESPONSIBLE FOR SUPPORTING THE ENTIRETY OF THE LATERAL LOADS ON THE PIER. SEISMIC AND VESSEL LOADS WILL BE TRANSFERRED THROUGH THE DECK DIAPHRAGM TO BATTER PILES. THE BATTER PILES TRANSFER THE LOAD TO BEDROCK IN END BEARING WHEN IN COMPRESSION AND THROUGH ROCK ANCHORS WHEN IN TENSION. WAVE LOADS WILL BE PARTIALY SUPPORTED BY THE NEW SHEET PILE BREAKWATER AND PARTIALLY SUPPORTED BY THE BATTER PILES.
3. THE PIER APPROACH WILL BE ENCASED WITH A NEW SHEET PILE BULKHEAD AND WILL REMAIN A SOLID FILL STRUCTURE. THE BULKHEAD WILL RESIST GEOSTATIC AND GRAVITY LOADS USING EXTERNAL WALES SUPPORTED BY TIE RODS THROUGH THE STRUCTURES.

COORDINATE CONTROL

1. VERTICAL CONTROL FOR MARINE STRUCTURES IS IN REFERENCE TO NORTH AMERICAN VERTICAL DATUM (NAVD 88).
2. HORIZONTAL CONTROL IS IN REFERENCE TO THE MAINE STATE PLANE COORDINATE SYSTEM (EAST ZONE), NAD 27.

DEMOLITION

1. CONTRACTOR SHALL FOLLOW ALL LOCAL STATE AND FEDERAL REGULATIONS FOR REMOVAL, TRANSPORT AND DISPOSAL OF DEMOLISHED MATERIALS.
2. CONTRACTOR SHALL REMOVE DEMOLISHED MATERIALS FROM THE SITE ON A DAILY BASIS AND MAINTAIN A CLEAN WORK SITE.
3. ALL DEMOLISHED MATERIALS SHALL BE DISPOSED OF AT A MAINE DOT APPROVED OFF SITE DISPOSAL FACILITY.
4. CONTRACTOR SHALL TAKE PRECAUTIONS WHILE TRANSPORTING DEMOLISHED MATERIALS TO PREVENT SPILLAGE ON STREETS OR OTHER AREAS. ANY MATERIALS SPILLED SHALL BE CLEANED UP IMMEDIATELY TO THE SATISFACTION OF THE OWNER.
5. EXISTING SHEET PILES SHALL BE CUT OFF AT THE MUDLINE AND REMOVED FROM THE SITE.
6. EXISTING FENDER PILES SHALL BE EXTRACTED IN THEIR ENTIRETY.
7. CONTRACTOR SHALL CONSIDER ALL EXISTING TIMBER TO HAVE PRESERVATIVE TREATMENT.
8. CONTRACTOR SHALL NOT ALLOW DEMOLISHED MATERIAL TO FALL IN THE WATER.
9. ANY MATERIAL THAT FALLS INTO THE WATER SHALL BE REMOVED AND DISPOSED OF PROPERLY THAT SAME DAY.
10. CONTRACTOR SHALL INSTALL A DEBRIS BOOM AROUND ALL WORK AREAS OVER WATER. RETAINED DEBRIS SHALL BE REMOVED DAILY.

DESIGN LOAD – PIER EXTENSION

1. DEAD LOAD – SELF WEIGHT OF ALL MATERIALS OF CONSTRUCTION
2. LIVE LOADS
   A. PIER DECK (GENERAL)
      1) UNIFORM LOAD 600 PSF
      2) TRUCK LOAD AASHTO HS 20 + T7 FORMULA B TRUCK
      3) FORKLIFT LOAD 10 TON CAPACITY
   B. PIER DECK (CRANE AREA)
      1) UNIFORM LOAD 1000 PSF
      2) CRAWLER CRANE LOAD 90 TON CAPACITY CRAWLER CRANE
      3) CRANE OUTRIGGER LOAD 200 KIPS MAX ON 1.5' X 1.5' FLOAT NO LESS THAN 20 FEET APART
   C. AN IMPACT FACTOR OF 15% WAS ADDED TO TRUCK WHEEL LOADS FOR THE DESIGN OF PILE CAPS AND DECK SLABS.
   D. DESIGN SHIP
      1) DEAD WEIGHT TONNAGE 50000 TONS
      2) OVERALL LENGTH 800 FT
      3) BEAM 100 FT
      4) DRAFT 43 FT
      5) DISPLACEMENT 69900 TONS
   E. FIXED CRANE MOUNTING PLATE
      1) BEARING 600 PSF
      2) UPLIFT 500 PSF
3. LATERAL LOADS
   A. CURRENT 3.0 KTS
   B. WIND
      1) MOORED VESSELS 40 KTS
   C. SHIP BERTHING
      1) VESSEL TYPE CONTAINER SHIP
      2) APPROACH SPEED 0.2 KTS
      3) APPROACH ANGLE 6 DEGREES
      4) DESIGN BERTHING ENERGY 375 kip−ft
   D. MOORING LINE LOADS 50 TONS PER BOLLARD AT 45 DEGREES
   E. SEISMIC (AASHTO)
      1) ACCELERATION COEFFICIENT A=0.08
      2) SITE COEFFICIENT S=1
      3) NATURAL PERIODS T=.448 SEC (N−S) / T=.296 SEC (E−W)
      4) ELASTIC SEISMIC RESPONSE COEFFICIENT CS=1.2AS / T(2/3) / CS=.16 (N−S) / CS=.20 (E−W)
      5) SELF WEIGHT W=DEAD LOAD
      6) RESPONSE MODIFICATION FACTOR R=2.0 (PILES) / R=1.0 (CONNECTIONS)
      7) EQUIVALENT LATERAL SEISMIC FORCE PE=CSW/R / PE=8.15% OF (E−W) / PE=10.0% OF (N−S)

DESIGN LOAD – APPROACH

1. DEAD LOAD – SELF WEIGHT OF ALL MATERIALS OF CONSTRUCTION
2. LIVE LOAD
   A. UNIFORM LOAD 250 PSF
   B. TRUCK LOAD AASHTO HS 20 + T7 FORMULA B TRUCK
   C. FORKLIFT LOAD 21 KIP FRONT AXLE (10 TON CAPACITY)

CAST IN PLACE CONCRETE

A. THE MINIMUM 28−DAY COMPRESSIVE STRENGTH FOR CAST−IN−PLACE CONCRETE SHALL BE 5075 PSI (CLASS LP).
B. THE MINIMUM 28−DAY COMPRESSIVE STRENGTH FOR PILING CONCRETE FILL SHALL BE 5000 PSI (CLASS A)
C. THE MAXIMUM WATER TO CEMENT RATIO FOR CONCRETE SHALL BE 0.40.
D. CONCRETE SHALL CONTAIN A MINIMUM OF 3 GAL/YD3 OF CALCIUM NITRITE SOLUTION OR EQUIVALENT CORROSION INHIBITOR.
E. CONCRETE SHALL BE PROPORTIONED, MIXED, AND PLACED UNDER THE SUPERVISION OF A TESTING AGENCY APPROVED BY MAINE DOT.
F. CONCRETE SHALL HAVE A MAXIMUM AGGREGATE SIZE OF 3/4 INCH.
G. ALL CONCRETE SHALL HAVE 6% TO 8% ENTRAINED AIR.
H. CONCRETE SHALL BE WET CURED FOR A MINIMUM OF SEVEN DAYS BEFORE ANY LOADS ARE APPLIED THERETO.
I. ALL EXPOSED CONCRETE EDGES SHALL HAVE A 3/4 INCH CHAMFER.
J. ALL CONSTRUCTION JOINTS ARE SHOWN ON THE PLANS. IF ALTERNATE CONSTRUCTION JOINTS ARE PROPOSED THEY SHALL BE SUBMITTED TO THE OWNER FOR APPROVAL PRIOR TO PREPARATION OF REINFORCING SHOP DRAWINGS.

PRESTRESSED PRECAST CONCRETE

A. GENERAL
   1) CONTRACTOR MAY SUBMIT ALTERNATE PLANK DESIGNS OR STRAND AND BAY LAYOUTS FOR APPROVAL. ALTERNATE DESIGNS SHALL BE IN ACCORDANCE WITH ACI 318 AND PCI STANDARDS.
B. CONCRETE
   1) F'c= 5075 psi @ 28 DAYS
   2) Wt= 145 PCF
   3) AIR ENTRAINMENT 6%
   4) MAXIMUM WATER CEMENT RATIO SHALL BE .40
   5) CEMENT SHALL BE PORTLAND TYPE II ONLY
C. PRESTRESSING STRAND DESIGN ASSUMPTIONS:
   1) STANDS SHALL BE 1/2" DIA, 270 KSI, 7 WIRE, LOW−RELAXATION
   2) JACKING FORCE = 31.0 K/STRAND
   3) SEE SCHEDULE ON SHEET S−25 FOR FINAL EFFECTIVE PRESTRESSING FORCES
   4) STRANDS ARE FULLY BONDED
   5) PLANKS SHALL BE SO PROPORTIONED THAT THE MAXIMUM PREDICTED CRACK SIZE IN ANY TENSION ZONE SHALL BE NO LARGER THAN .007 INCHES.
D. ANCHORAGE
   1) CONTRACTOR SHALL BE RESPONSIBLE FOR THE DESIGN OF THE END ZONE REINFORCEMENT TO RESIST PRESTRESSING LOADS.
E. CONSTRUCTION LOADS
   1) CONTRACTOR SHALL ENSURE THAT THE PRECAST / PRESTRESSED CONCRETE COMPONENTS SHALL RESIST ALL FABRICATION, TRANSPORTATION, AND CONSTRUCTION LOADS APPLIED IN ADDITION TO THE NOTED DESIGN LOADING.

REINFORCEMENT

1. REINFORCING STEEL SHALL BE DEFORMED, EPOXY COATED BARS CONFORMING TO ASTM A 615, GRADE 60. EPOXY COATING SHALL CONFORM TO ASTM A775/A775M.
2. ROCK ANCHORS SHALL BE 1.75" DIA. THREADED BARS WITH DOUBLE CORROSION PROTECTION CONFORMING TO ASTM A 722, GRADE 150.
3. MINIMUM LAP OF REINFORCING BARS SHALL BE AS SHOWN BELOW:

BAR SIZE	LAP
#3	16 INCH
#4	21 INCH
#5	30 INCH
#6	34 INCH
#7	54 INCH
#8	72 INCH
#9	90 INCH

4. MINIMUM COVER OVER REINFORCING SHALL BE 3 INCHES UNLESS NOTED OTHERWISE.
5. INSTALLATION OF REINFORCING SHALL BE COMPLETED AT LEAST 24 HOURS PRIOR TO CONCRETE PLACEMENT TO ALLOW FOR INSPECTION BY THE OWNER.
6. PROVIDE AND SCHEDULE ON THE SHOP DRAWINGS THE NECESSARY ACCESSORIES TO HOLD REINFORCEMENT SECURELY IN PORTION. ALL ACCESSORIES LOCATED IN COVER CONCRETE SHALL BE NON CORROSIVE.
7. WHERE CONTINUOUS REINFORCING IS CALLED FOR IT SHALL BE EXTENDED CONTINUOUSLY AROUND CORNERS AND LAPPED AT NECESSARY SPLICES OR HOOKED AT DISCONTINUOUS ENDS.
8. REINFORCEMENT SHALL NOT BE TACK WELDED.

STEEL PILING

1. STEEL SHEET PILES SHALL CONFORM TO ASTM A 572, GRADE 50. CERTAIN STEEL SHEET PILES SHALL CONFORM TO ASTM A572, GRADE 60 WHERE SPECIFIED IN THE PLANS.
2. PIPE PILING USED FOR THE PIER FOUNDATION SHALL BE 20" O.D., .625 INCH WALL THICKNESS AND CONFORM TO ASTM A 252, GRADE 3 MODIFIED (FY=50 KSI).
3. PIPE PILING USED FOR THE BREAKWATER EXTENSION SHALL BE 24 INCH O.D., .625 INCH WALL THICKNESS AND CONFORM TO ASTM A 252, GRADE 3.
4. PIPE PILING USED FOR THE LARGE BOAT FENDER SYSTEM SHALL BE 36 INCH O.D., .500 INCH WALL THICKNESS AND CONFORM TO ASTM A 252, GRADE 3.
5. PIPE PILING USED FOR THE SMALL BOAT FENDER SYSTEM SHALL BE 16 INCH O.D., .500 INCH WALL THICKNESS AND CONFORM TO ASTM A 252, GRADE 3.
6. ALL PIPE PILES SHALL BE FILLED WITH CONCRETE.
7. PIPE PILES SHALL BE DRIVEN TO ULTIMATE CAPACITY SPECIFIED ON THE PLANS. SEE SHEET S−12 FOR SCHEDULE.
8. PIPE PILES SHALL BE COATED WITH FUSION BONDED EPOXY.
9. ALL FIELD WELDS TO PIPE PILES SHALL BE CLEANED AND COATED WITH EPOXY PATCHING COATING FOR COATING SYSTEM USED ON PILES. DFT ON PATCHED AREAS SHALL MATCH PILE DFT.
10. PILES SHALL BE DRIVEN OPEN ENDED WITH CUTTING SHOE WELDED TO TIP.
11. PILE LOAD TESTING USING DYNAMIC TESTING METHODS SHALL BE USED TO DETERMINE THE ULTIMATE PILE CAPACITY AND ASSOCIATED FINAL BLOW COUNTS FOR THE SELECTED HAMMER ACCORDING TO THE SPECIFICATION.
12. IF PILE OBSTRUCTIONS ARE ENCOUNTERED, MINOR RELOCATION OF THE PILES SHALL BE ALLOWED ONLY WITH THE APPROVAL OF THE OWNER.
13. FIELD CUTTING OR ANY OTHER FIELD MODIFICATIONS OF STRUCTURAL STEEL SHALL NOT BE MADE WITHOUT APPROVAL FROM OWNER FOR EACH SPECIFIC CASE.

TIE RODS AND WALES

1. ALL TIE RODS USED IN THE APPROACH REPAIR SHALL HAVE DOUBLE CORROSION PROTECTION.
2. ALL WALES AND FABRICATED ITEMS SHALL BE COATED PRIOR TO INSTALLATION AND AFTER FABRICATION.

MISCELLANEOUS STEEL FABRICATION

1. STEEL GRADES FOR FABRICATION SHALL BE:
   MISCELLANEOUS CHANNELS: ASTM A36
   W SECTIONS: ASTM A992
   PLATES: ASTM A36
   ANGLE SECTIONS: ASTM A992
   WT SECTIONS: ASTM A992
   STEEL BAR: ASTM A36
   TUBE SECTIONS: ASTM A500 GRADE B, FY=46 KSI
   BOLTS: ASTM A325 – GALVANIZED

WELDING

1. ALL WELDING SHALL BE DONE BY QUALIFIED WELDERS ONLY.
2. ALL WELDING ELECTRODES SHALL BE E70XX.

COATINGS

1. STEEL WALES AND ASSOCIATED FABRICATED ITEMS
   A. SHALL BE COATED AFTER FABRICATION AND PRIOR TO INSTALLATION ACCORDING TO THE SPECIFICATION.
   B. AREAS OF STRUCTURE INDICATED TO BE COATED SHALL BE PREPARED FOR COATING ACCORDING TO THE COATING MANUFACTURE'S RECOMMENDATIONS FOR EMERSION IN SALT WATER.
   C. ALL DAMAGED COATING SHALL BE REPAIRED WITH THE COATING MANUFACTURERS RECOMMENDED COATING REPAIR SYSTEM.
   D. ALL MISCELLANEOUS STEEL INCLUDING FASTENERS SHALL BE HOT DIP GALVANIZED UNLESS NOTED OTHERWISE. GALVANIZE ITEMS AFTER FABRICATION. GALVANIZING DAMAGED BY WELDING OR ACCIDENT SHALL BE REPAIRED WITH TORCH−ON MOLTEN GALVANIZING REPAIR STICK.
2. PIPE PILES
   A. ALL PIPE PILES SHALL BE COATED WITH FUSION BONDED EPOXY FROM THE PILE TOP TO A MINIMUM OF 20 FEET BELOW THE FINAL MUDLINE.
3. SHEET PILES
   A. ALL SHEET PILES SHALL BE COATED WITH FUSION BONDED EPOXY ON BOTH SIDES FROM THE SHEET PILE TOP TO A MINIMUM OF 20 FEET BELOW MAXIMUM DREDGE DEPTH.

BEARING PADS

1. NEOPRENE BEARING PADS SHALL HAVE 50 DUROMETER HARDNESS AND SHALL BE AASHTO APPROVED.

GALVANIC ANODES

1. ALL ANODES SHALL HAVE A STEEL CORE AND SHALL BE ALUMINUM ALLOY TO COMPLY WITH MIL−SPEC−A−24779.

EARTHWORK

1. ALL BACKFILL SHALL BE COMPACTED TO 95% DENSITY BASED ON ASTM D−1557
2. ALL BACKFILL SHALL BE PLACED IN LIFTS SUCH THAT THE COMPACTED LIFT IS NO LESS THAN 4 INCHES AND NO MORE THAN 6 INCHES.
3. BACKFILL MATERIAL USED TO FILL BETWEEN THE OLD SHEET PILE AND THE NEW SHEET PILE ON THE APPROACH SHALL BE 2 INCH CRUSHED STONE IN ACCORDANCE WITH MAINE DOT SPECIFICATIONS SECTION 703.31.
4. EXCAVATED MATERIAL SHALL BE DEWATERED ON SITE EITHER ON THE EXISTING STRUCTURE OR ON A BARGE. CONTAINMENT SHALL BE PROVIDED TO PREVENT EXCAVATED MATERIAL FROM ENTERING THE WATER BY RAIN OR WIND. STORM WATER AND DEWATERING WATER SHALL BE FILTERED BY STRAW BALES OR OTHER MATERIAL/SYSTEM TO BE IN COMPLIANCE WITH BEST MANAGEMENT PRACTICES FOR STORM WATER RUNOFF.
5. IF DEWATERING IS DONE ON THE EXISTING STRUCTURE CONTRACTOR SHALL PROTECT THE EXISTING CONCRETE SURFACES WITH A MEMBRANE DESIGED TO CONTAIN THE WATER.
6. CONTRACTOR SHALL SUBMIT A DEWATERING PLAN AND STORM WATER MANAGEMENT PLAN FOR APPROVAL PRIOR TO BEGINNING ANY EXCAVATION.
7. STOCK PILES SHALL NOT EXCEED THE LIVE LOAD CAPACITY OF THE SUPPORTING STRUCTURE. CONTRACTOR SHALL SUBMIT LOAD CALCULATIONS THAT DEMONSTRATE THE LOADS IMPOSED ARE WITHIN SAFE LIMITS.

HIGH CAPACITY FENDER UNIT

1. RUBBER FENDER ELEMENT MAY BE PURCHASED OUTSIDE OF THE UNITED STATES, HOWEVER, ALL OTHER COMPONENTS MUST BE IN COMPLIANCE WITH THE BUY AMERICAN CLAUSE.

UTILITY TRENCH COVER

1. PROVIDE FIBERGLASS REINFORCED PLASTIC (FRP) DROP−IN TYPE COVERS, RATED FOR H20 LOADING. COVERS SHALL BE BOLTED IN PLACE WITH 316 STAINLESS STEEL FASTENERS AND HARDWARE. COVERS SHALL BE U/V STABILIZED AND SHALL HAVE MARINE GRADE HEAVY DUTY GEL COAT. COVER MANUFACTURER SHALL HAVE A MINIMUM OF 5 YEARS EXPERIENCE PRODUCING COVERS.

STATE OF MAINE
DEPARTMENT OF TRANSPORTATION

WIN #020806.00

STATE OF MAINE
CRAIG D. SAMS
No. 13478
LICENSED PROFESSIONAL ENGINEER

SIGNATURE		
13478		
P.E. NUMBER		
08/15/14		
DATE		

		BY	DATE
PROJ. MANAGER	CDS		
DESIGN−DETAILED	MMS	TEQ	7−14
CHECKED−REVIEWED	CDS	CDS	7−14
DESIGN2−DETAILED2			
DESIGN3−DETAILED3			
REVISIONS 1			
REVISIONS 2			
REVISIONS 3			
REVISIONS 4			
FIELD CHANGES			

EASTPORT BREAKWATER REPLACEMENT
EASTPORT, ME
WASHINGTON COUNTY

STRUCTURAL NOTES
AND DESIGN CRITERIA

SHEET NUMBER

S-01

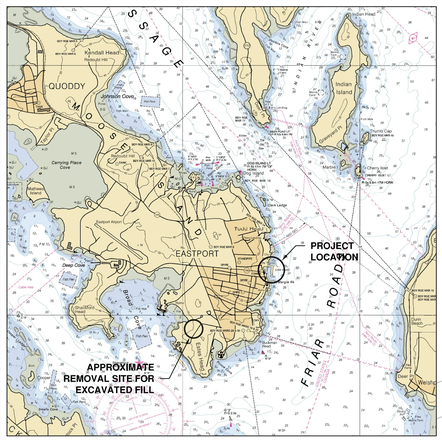

DEMOLITION NOTES:

1. CONTRACTOR SHALL SUBMIT A DEMOLITION PLAN TO THE OWNER FOR REVIEW AND APPROVAL PRIOR TO STARTING ANY DEMOLITION. PLAN SHALL BE CONSISTENT WITH CONSTRUCTION PHASING.
2. OWNER SHALL REMOVE AND STORE OFF SITE ALL EXISTING FLOATING DOCKS AND ACCESS RAMPS.
3. CONTRACTOR SHALL REMOVE AND DISPOSE OF ALL ACCESS RAMP SUPPORT STRUCTURES.
4. THE INSHORE FIXED PIER SHALL REMAIN. CONTRACTOR SHALL PROVIDE TEMPORARY SUPPORT OR REMOVE AND STORE THE DECK WHILE APPROACH STRUCTURE IS REPAIRED. CONTRACTOR SHALL REATTACH THE FIXED PIER TO THE REPAIRED APPROACH ONCE REPAIRS ARE COMPLETE.
5. CONTRACTOR SHALL REMOVE AND DISPOSE OF ALL EXISTING PIER UTILITIES INCLUDING ELECTRICAL, LIGHTING, WATER AND SEWER. CONTRACTOR SHALL RETAIN OWNERSHIP OF ALL REMOVED UTILITIES AND FIXTURES. ALL MATERIALS NOT REUSED SHALL BE DISPOSED OF ACCORDING TO THE SPECIFICATIONS.
6. CONTRACTOR SHALL REMOVE AND STORE (OR REUSE AS INDICATED) ALL EXISTING MOORING HARDWARE AS DIRECTED BY OWNER.
7. CONTRACTOR SHALL REMOVE THE EXISTING RUBBER FENDER UNITS CAREFULLY AND WITHOUT DAMAGE. THE FENDER UNIT SHALL INCLUDE ALL PLATES, BRACKETS, CONNECTING CHAINS AND OTHER APPURTENANCES FOR THE UNIT. CONTRACTOR SHALL TRANSPORT AND DELIVER EACH UNIT TO A STORAGE AREA WITHIN TEN (10) MILES OF THE PROJECT SITE. EACH FENDER UNIT SHALL BE DELIVERED, OFF LOADED, BLOCKED AND SET IN A SECURE POSITION BY THE CONTRACTOR AS DIRECTED BY THE OWNER.
8. CONTRACTOR SHALL CAREFULLY DEMOLISH THE EXISTING 1985 PIER STRUCTURE AT THE INTERSECTION OF THE APPROACH PIER REPAIRS. CONTRACTOR SHALL LIMIT DEMOLITION TO THAT WHICH IS MINIMALLY REQUIRED AND SHALL PROTECT THE 1985 STRUCTURE THAT IS TO REMAIN FROM DAMAGE.
9. ANY DAMAGE TO THE EXISTING STRUCTURE BEYOND THE LIMIT OF DEMOLITION DESCRIBED SHALL BE REPAIRED BY THE CONTRACTOR TO THE SATISFACTION OF THE OWNER AND AT NO COST.
10. CONTRACTOR SHALL REMOVE AND DISPOSE OF THE EXISTING FENDER PILES AND WALES, INCLUDING TIMBER RUB STRIPS, COMPLETELY. FENDER PILES SHALL BE EXTRACTED BY CONTRACTOR.
11. FOR REPAIR OF THE EXISTING 1962 BREAKWATER APPROACH, CONTRACTOR SHALL STRIP OFF AND DISPOSE OF EXISTING PAVEMENT, EXCAVATE AND DEWATER (IF NECESSARY) THE FILL AND STORE ON SITE FOR REUSE. ONCE NEW TIE RODS, SHEET PILE AND CAPS ARE IN PLACE, USE EXCAVATED FILL MATERIAL FOR BACKFILL.
12. FOR DEMOLITION OF THE EXISTING 1962 BREAKWATER UNDER PHASE 3, CONTRACTOR SHALL REMOVE PAVING, CURBS, RETAINING WALLS, TIMBERS AND ALL OTHER SURFACE MATERIAL AND DISPOSE OF ACCORDING TO THE SPECIFICATIONS. CONTRACTOR SHALL THEN EXCAVATE EXISTING FILL TO ELEVATIONS INDICATED, DEWATER, TRANSPORT AND PLACE AT STORAGE LOCATION DESIGNATED BY THE OWNER.
13. CONTRACTOR SHALL PREPARE AND SUBMIT A DEWATERING PLAN TO THE OWNER FOR APPROVAL.
14. EXISTING STEEL SHEET PILE SHALL BE CUT OFF, REMOVED AND DISPOSED OF AT THE ELEVATIONS INDICATED.
15. CONTRACTOR SHALL REMOVE AND DISPOSE OF EXISTING WALES AND TIE RODS AS THE EXCAVATION PROGRESSES.
16. ALL LADDERS, BRACKETS, WELDMENTS AND OTHER MISCELLANEOUS ITEMS ATTACHED TO THE 1962 STRUCTURE AND NOT SHOWN SHALL BE REMOVED BY CONTRACTOR.
17. CONTRACTOR SHALL REMOVE ALL ADDITIONAL SHEET PILES ADDED OUTSIDE OF 1962 STRUCTURE TO REPAIR SEVERELY CORRODED AND SEPARATED SHEET PILE EXCEPT ON THE APPROACH.

LEGEND

- STEEL PIPE PILE (REMAIN– 5 TOTAL)
- STEEL PIPE PILE (REMOVE– 10 TOTAL)
- TIMBER PILE (REMOVE– 12 TOTAL)
- HYDRANT (REMOVE)
- LIGHT POLE WITH OVERHEAD WIRE (REMOVE)
- E ELECTRICAL PANEL (REMOVE)
- W BURIED 4"ø WATER LINE (REMOVE)
- SS BURIED 12"ø SANITARY SEWER LINE (REMOVE)
- OHU OVERHEAD UTILITY (ELECTRIC) (REMOVE)
- 13 PHOTO NUMBER, ARROW INDICATES DIRECTION OF PHOTO (SEE SHEET S–04)

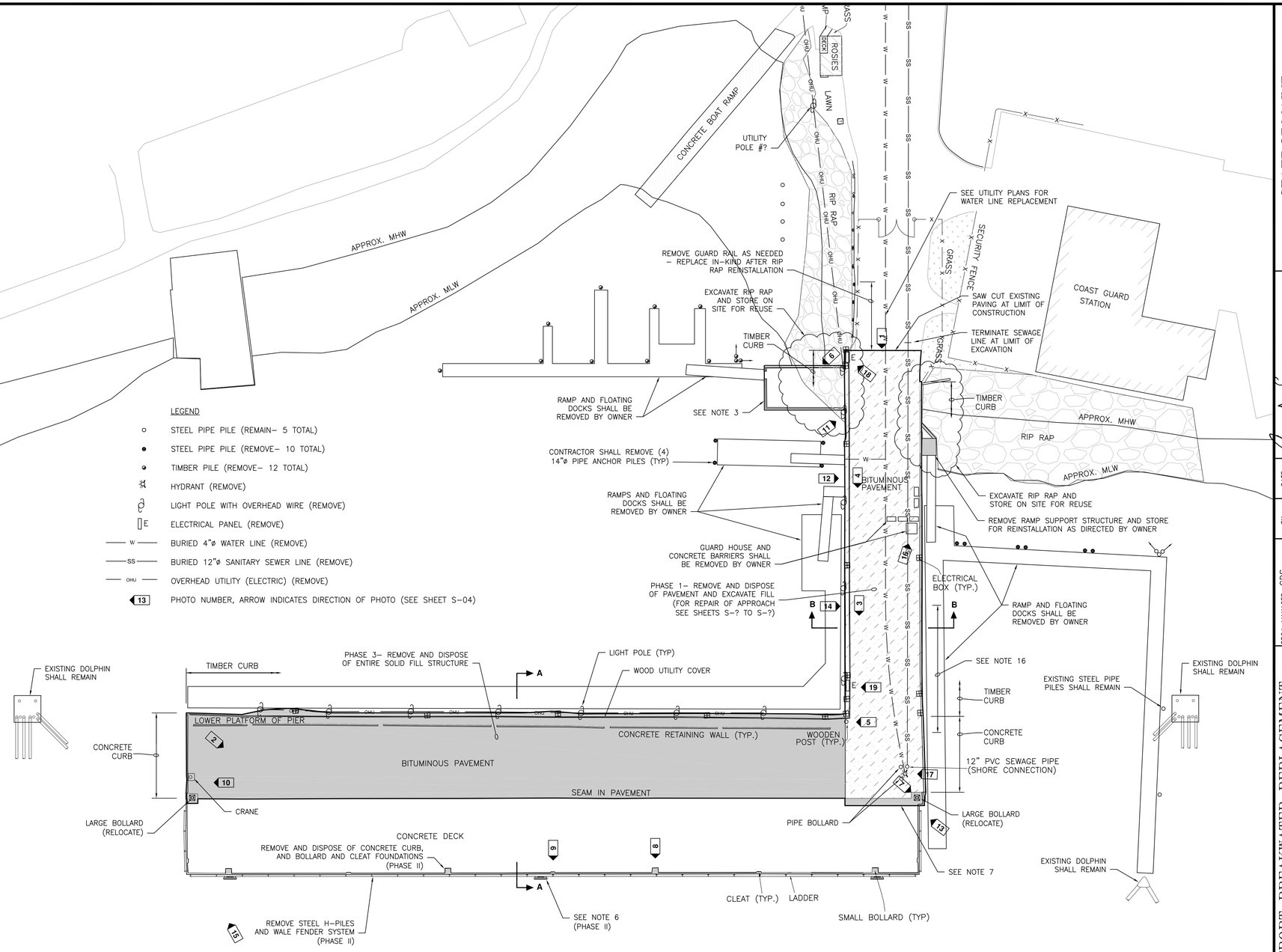

PLAN

SCALE: 1"=30'–0"

STATE OF MAINE
DEPARTMENT OF TRANSPORTATION

WIN #020806.00

STATE OF MAINE
CRAIG D. SAMS
No. 13478
LICENSED PROFESSIONAL ENGINEER

SIGNATURE		
13478		
P.E. NUMBER		
08/15/14		
DATE		

PROJ. MANAGER	CDS	
DESIGN–DETAILED	MMS	TEQ
CHECKED–REVIEWED	CDS	CDS
DESIGN2–DETAILED2		
DESIGN3–DETAILED3		
REVISIONS 1		
REVISIONS 2		
REVISIONS 3		
REVISIONS 4		
FIELD CHANGES		

EASTPORT BREAKWATER REPLACEMENT
EASTPORT, ME
WASHINGTON COUNTY

DEMOLITION PLAN

SHEET NUMBER

S-02

PHOTO 1 – APPROACH LOOKING EAST.

PHOTO 2 – OUTSHORE DECK LOOKING NORTH.

PHOTO 3 – TYPICAL UTILITY CHASE AND DECK CONDITIONS.

PHOTO 4 – TYPICAL DECK CONDITION; CONCRETE BARRIER SHALL BE REMOVED BY OWNER.

PHOTO 5 – WEST SIDE OF OUTSHORE LEG LOOKING SOUTH. CONTRACTOR SHALL REMOVE RETAINING WALL.

PHOTO 6 – UNDER DECK VIEW OF FIXED PIER.

PHOTO 7 – TYPICAL LARGE BOLLARD, 1985 EXTENSION.

PHOTO 8 – TYPICAL SMALL BOLLARD, 1985 EXTENSION.

PHOTO 9 – TYPICAL CLEAT, 1985 EXTENSION.

PHOTO 10 – FIXED CRANE AT SOUTH END OF OUTSHORE LEG.

PHOTO 11 – TYPICAL LIGHT POLE SUPPORT.

PHOTO 12 – TYPICAL LADDER.

PHOTO 13 – TYPICAL SMALL BOAT FENDER SYSTEM.

PHOTO 14 – TYPICAL FLOATING DOCK SLIPPER ARRANGEMENT.

PHOTO 15 – LARGE BOAT FENDER UNIT.

PHOTO 16 – TYPICAL TIMBER CURB.

PHOTO 17 – EXISTING WATER AND SEWER TERMINATION ON APPROACH.

PHOTO 18 – INSHORE ELECTRICAL METERS AND JUNCTION BOXES.

PHOTO 19 – ELECTRICAL JUCTION BOX AT INTERSECTION OF APPROACH AND OUTSHORE LEG.

PHOTO 20 – BREAKWATER FILL

STATE OF MAINE
DEPARTMENT OF TRANSPORTATION

WIN #020806.00

STATE OF MAINE
CRAIG D. SAMS
No. 13478
LICENSED
PROFESSIONAL ENGINEER

SIGNATURE		
13478		
P.E. NUMBER		
08/15/14		
DATE		

		BY
PROJ. MANAGER	CDS	
DESIGN-DETAILED	MMS	TEQ
CHECKED-REVIEWED	CDS	CDS
DESIGN2-DETAILED2		
DESIGN3-DETAILED3		
REVISIONS 1		
REVISIONS 2		
REVISIONS 3		
REVISIONS 4		
FIELD CHANGES		

DATE
7-14
7-14

EASTPORT BREAKWATER REPLACEMENT
EASTPORT, ME
WASHINGTON COUNTY

DEMOLITION PHOTOS

SHEET NUMBER

S-03

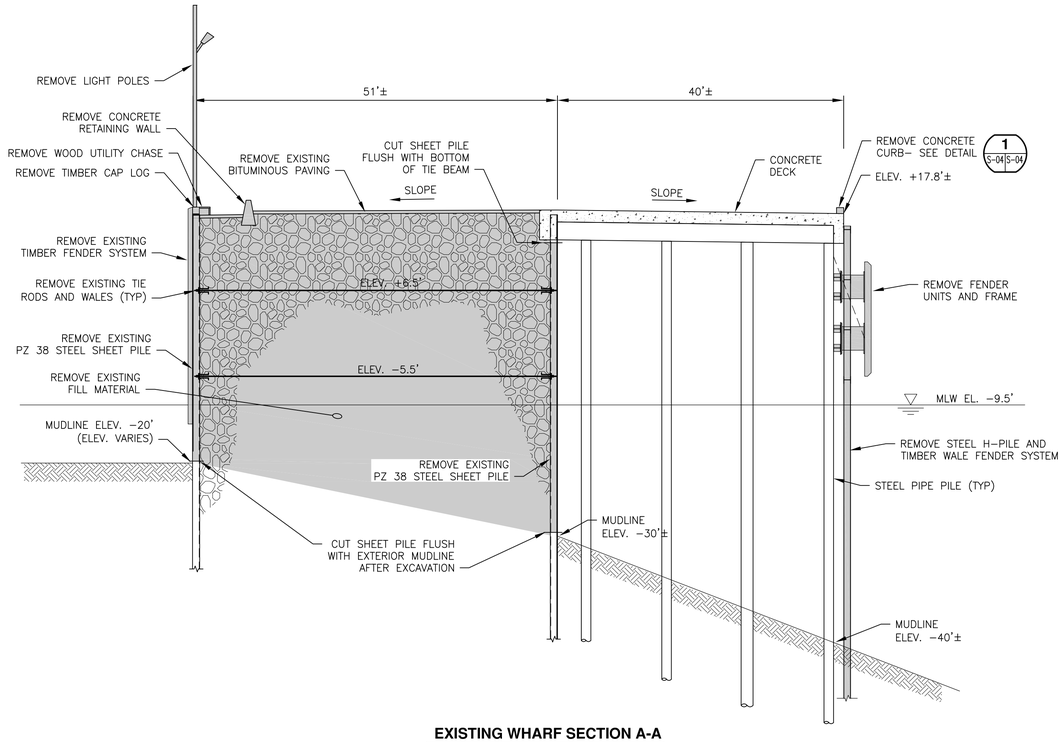

EXISTING WHARF SECTION A-A

SCALE: 1"=10'–0"

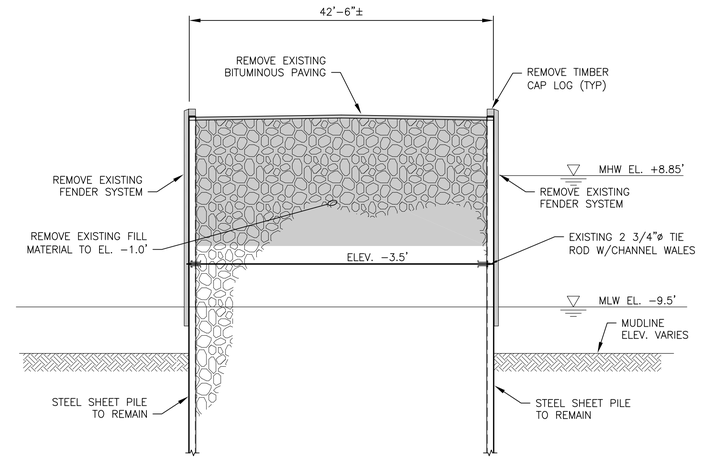

EXISTING APPROACH SECTION B-B

SCALE: 1"=10'–0"

NOTE:

SEE REFERENCE DRAWINGS FOR DIMENSIONS AND DETAILS OF EXISTING STRUCTURES.

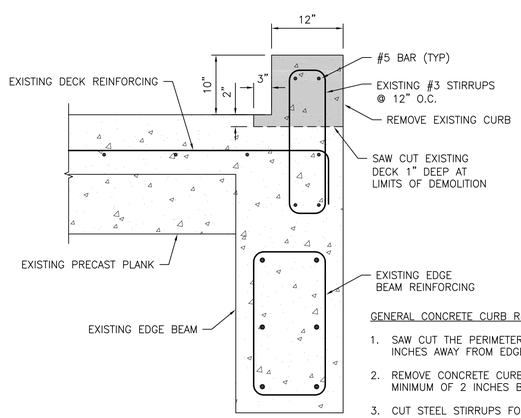

GENERAL CONCRETE CURB REMOVAL NOTES:

1. SAW CUT THE PERIMETER LENGTH OF CONCRETE CURB 3 INCHES AWAY FROM EDGE, 1 INCH DEEP.
2. REMOVE CONCRETE CURB, AND CHIP AWAY CONCRETE TO A MINIMUM OF 2 INCHES BELOW DECK ELEVATION.
3. CUT STEEL STIRRUPS FOR CONCRETE CURB FLUSH WITH SOUND CONCRETE.
4. RESTORE CONCRETE WITH MARINE GRADE CEMENTITIOUS CONCRETE PATCHING MATERIAL FROM MAINE DOT APPROVED PRODUCTS LIST TO MATCH EXISTING DECK GRADE.

1 S-04 S-04 SECTION @ CURB DEMOLITION

SCALE: 1"=1'–0"

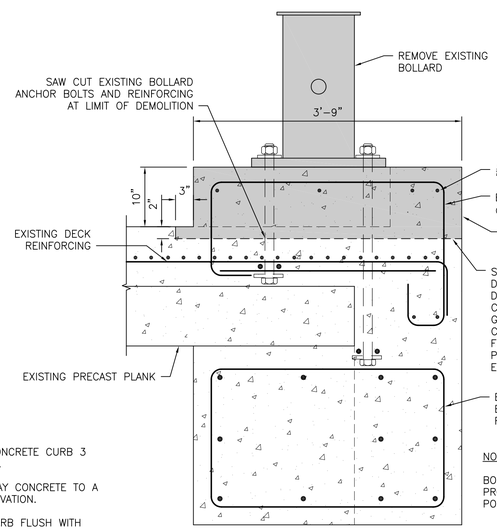

NOTE:

BOLLARD SHALL REMAIN THE PROPERTY OF THE EASTPORT PORT AUTHORITY.

2 S-04 S-04 SECTION @ BOLLARD DEMOLITION

SCALE: 1"=1'–0"

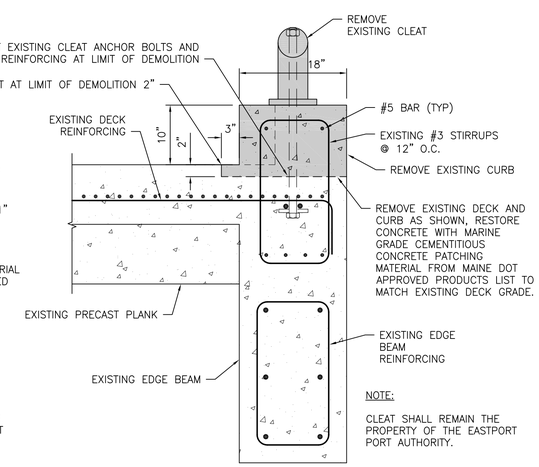

NOTE:

CLEAT SHALL REMAIN THE PROPERTY OF THE EASTPORT PORT AUTHORITY.

3 S-04 S-04 SECTION @ CLEAT DEMOLITION

SCALE: 1"=1'–0"

1"=1'–0" 1 0 1 2 SCALE IN FEET

1"=10'–0" 10 0 10 20 SCALE IN FEET

STATE OF MAINE
DEPARTMENT OF TRANSPORTATION

WIN #020806.00

STATE OF MAINE
CRAIG D. SAMS
No. 13478
LICENSED PROFESSIONAL ENGINEER

SIGNATURE		
13478		
P.E. NUMBER		
08/15/14		
DATE		

		BY	DATE
PROJ. MANAGER	CDS		
DESIGN–DETAILED	MMS	TEQ	7–14
CHECKED–REVIEWED	CDS	CDS	7–14
DESIGN2–DETAILED2			
DESIGN3–DETAILED3			
REVISIONS 1			
REVISIONS 2			
REVISIONS 3			
REVISIONS 4			
FIELD CHANGES			

EASTPORT BREAKWATER REPLACEMENT
EASTPORT, ME
WASHINGTON COUNTY

DEMOLITION SECTIONS

SHEET NUMBER

S-04

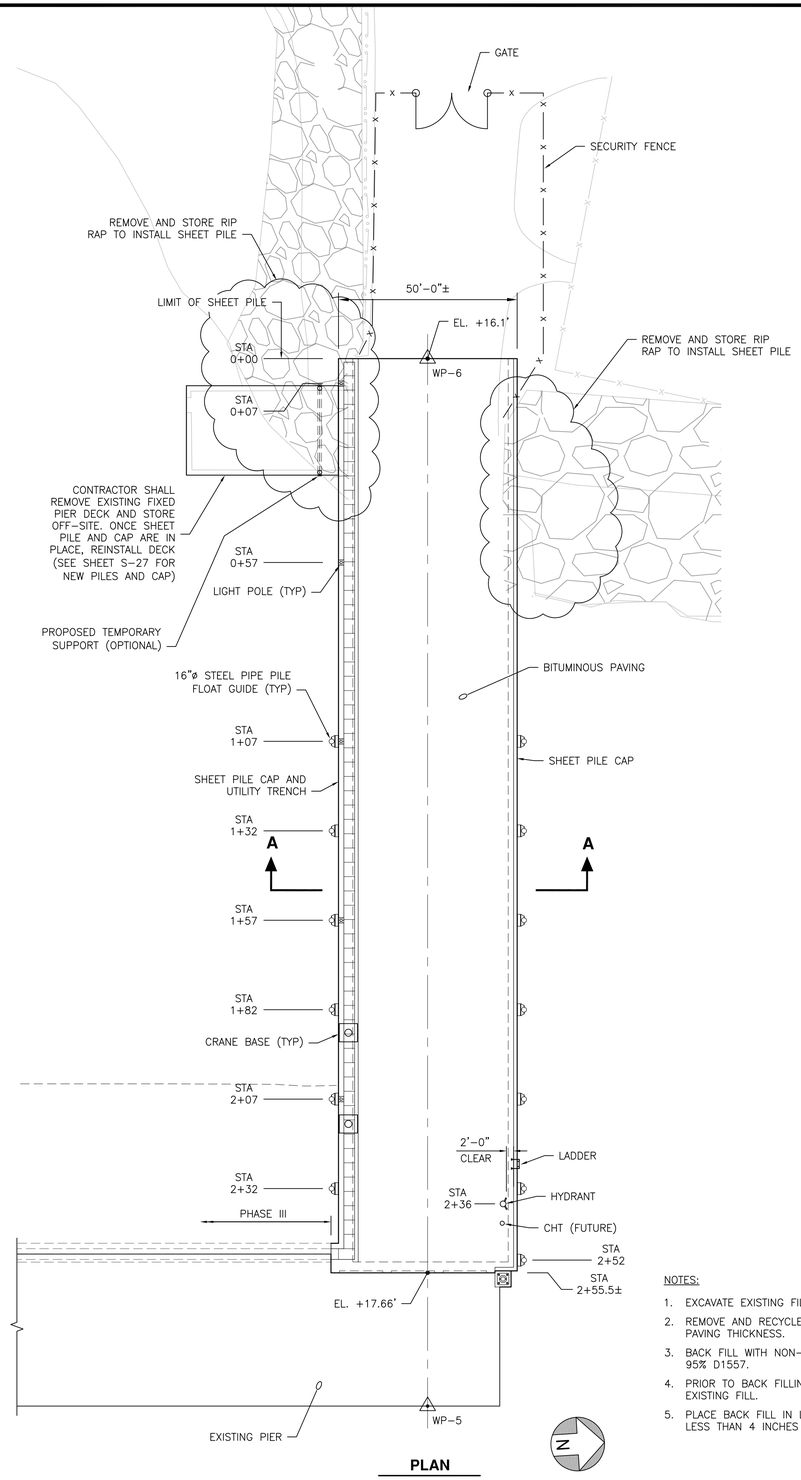

PLAN

SCALE: 1"=20'-0"

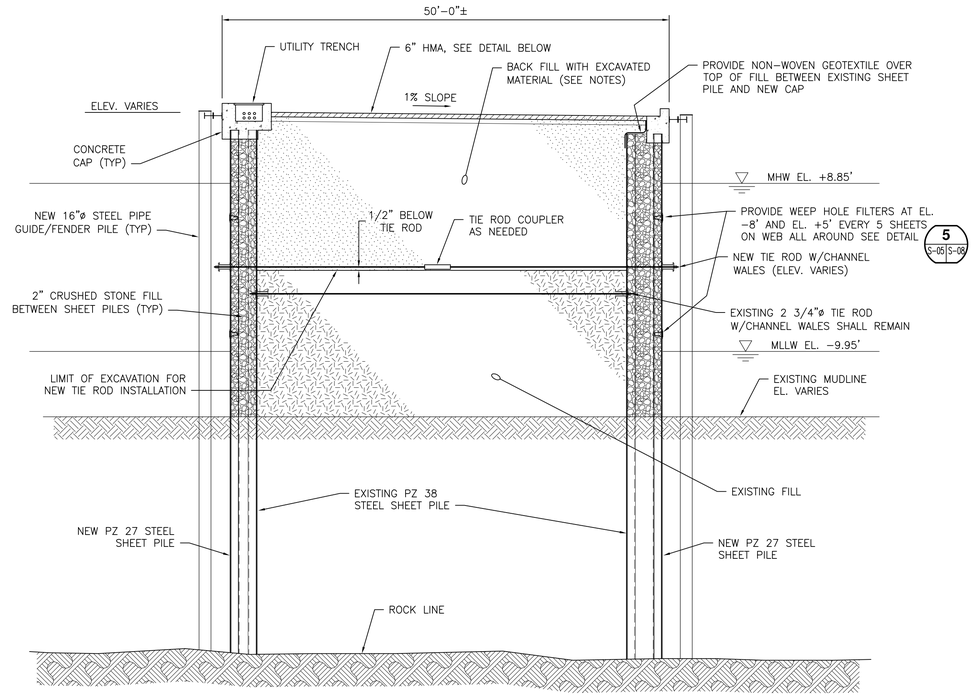

SECTION A-A

SCALE: 1/8"=1'-0"

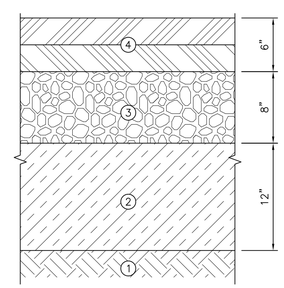

NOTES:

1. COMPACTED FILL OR UNDISTURBED EARTH, 95% D 1557.
2. 12" SUB-GRADE PREPARATION 95% D 1557 MODIFIED PROCTOR.
3. 8" AGGREGATE BASE COURSE PLACED, ROLLED AND COMPACTED 95% D 1557 MODIFIED PROCTOR. EACH BASE COURSE LIFT SHALL BE PLACED IN LIFTS WHICH WILL PROVIDE NOT LESS THAN 4" AND NOT MORE THAN 6" COMPACTED THICKNESS.
4. 6" ASPHALT SURFACE COURSE, PLACED IN 3 LIFTS OF 2 INCHES EACH, ALL LIFTS SHALL BE 75 GYRATION 12.5mm.

PAVING DETAIL

SCALE: 1 1/2"=1'-0"

NOTES:

1. EXCAVATE EXISTING FILL AND DEWATER ON SITE AS NEEDED.
2. REMOVE AND RECYCLE EXISTING PAVING, ASSUME 12 INCH PAVING THICKNESS.
3. BACK FILL WITH NON-SATURATED EXISTING FILL. COMPACT TO 95% D1557.
4. PRIOR TO BACK FILLING PROOF ROLL OR COMPACT SURFACE OF EXISTING FILL.
5. PLACE BACK FILL IN LIFTS SUCH THAT COMPACTED LIFT IS NOT LESS THAN 4 INCHES THICK OR MORE THAN 6 INCHES THICK.

1 1/2"=1'-0" 1 0.5 0 1 SCALE IN FEET

1/8"=1'-0" 8 0 8 16 SCALE IN FEET

1"=20'-0" 20 0 20 40 SCALE IN FEET

STATE OF MAINE
DEPARTMENT OF TRANSPORTATION

WIN #020806.00

STATE OF MAINE
CRAIG D. SAMS
No. 13478
LICENSED PROFESSIONAL ENGINEER

PROJ. MANAGER	CDS		
DESIGN-DETAILED	MMS	TEQ	7-14
CHECKED-REVIEWED	CDS	CDS	7-14
DESIGN2-DETAILED2			
DESIGN3-DETAILED3			
REVISIONS 1			
REVISIONS 2			
REVISIONS 3			
REVISIONS 4			
FIELD CHANGES			

SIGNATURE

13478
P.E. NUMBER

08/15/14
DATE

EASTPORT BREAKWATER REPLACEMENT
EASTPORT, ME
WASHINGTON COUNTY

PHASE I
GENERAL ARRANGEMENT

SHEET NUMBER

S-05

NOTES:

1. CONTRACTOR SHALL EXTRACT SHEETS WHERE NEW SHEET PILES INTERFERE WITH EXISTING SHEETS. ALTERNATE METHODS OF TRANSITION ACROSS EXISTING SHEETS MAY BE SUBMITTED FOR APPROVAL. CONTRACTOR HAS THE ULTIMATE RESPONSIBILITY TO PROVIDE STRUCTURAL INTEGRITY TO THE SHEET PILE ACROSS THE EXISTING STRUCTURE.
2. SHEET PILE SHALL BE DRIVEN TO A MINIMUM PENETRATION OF 20 FEET OR TO REFUSAL IN ROCK.
3. PZ 35 SECTIONS ON THE APPROACH SHALL BE GRADE 60 STEEL.

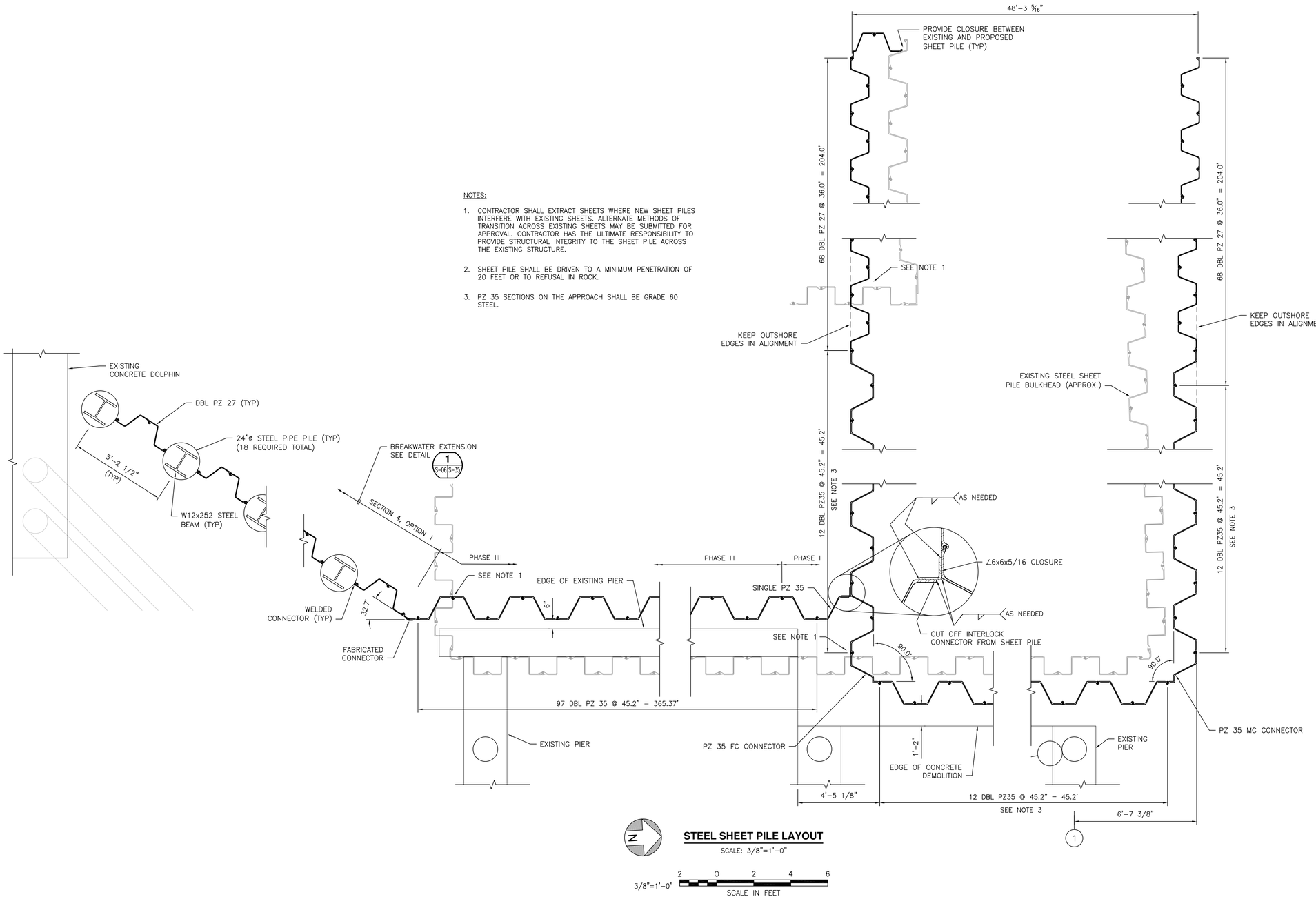

STEEL SHEET PILE LAYOUT

SCALE: 3/8"=1'-0"

3/8"=1'-0" 2 0 2 4 6 SCALE IN FEET

STATE OF MAINE
DEPARTMENT OF TRANSPORTATION

WIN #020806.00

STATE OF MAINE CRAIG D. SAMS No. 13478 LICENSED PROFESSIONAL ENGINEER

SIGNATURE 13478 P.E. NUMBER 08/15/14 DATE

		BY	DATE
PROJ. MANAGER	CDS		
DESIGN-DETAILED	MMS	TEQ	7-14
CHECKED-REVIEWED	CDS	CDS	7-14
DESIGN2-DETAILED2			
DESIGN3-DETAILED3			
REVISIONS 1			
REVISIONS 2			
REVISIONS 3			
REVISIONS 4			
FIELD CHANGES			

EASTPORT BREAKWATER REPLACEMENT
EASTPORT, ME
WASHINGTON COUNTY

SHEET PILE LAYOUT

SHEET NUMBER

S-06

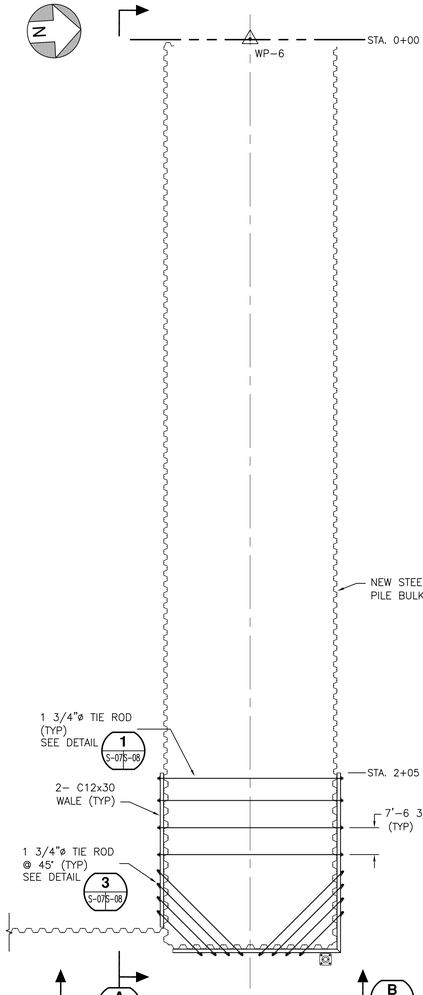

TIE ROD PLAN @ EL. -3.5'

SCALE: 1"=20'-0"

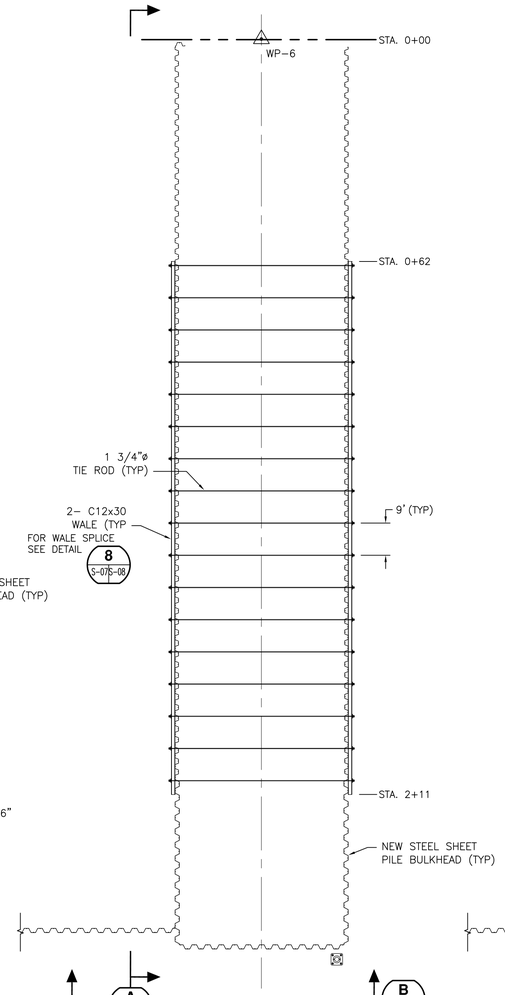

TIE ROD PLAN @ EL. -0.5'

SCALE: 1"=20'-0"

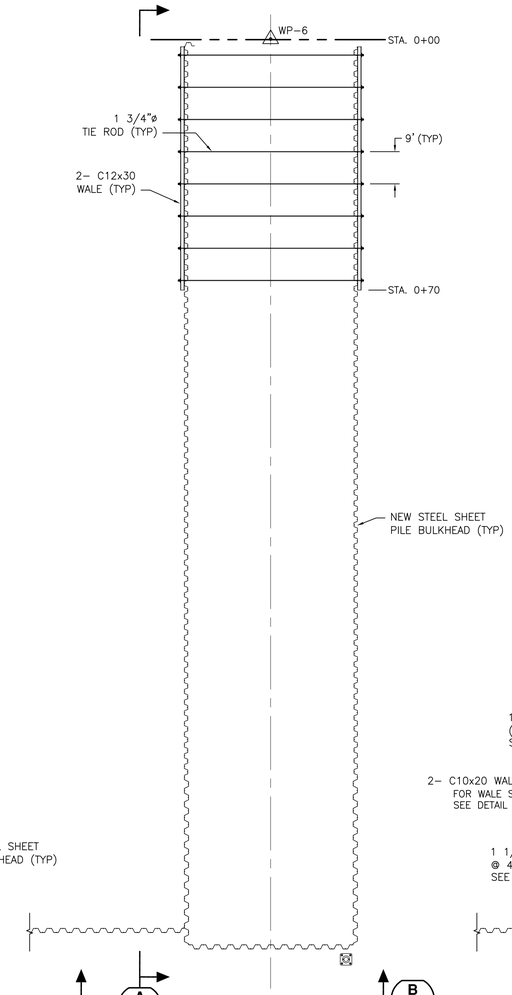

TIE ROD PLAN @ EL. +4.5'

SCALE: 1"=20'-0"

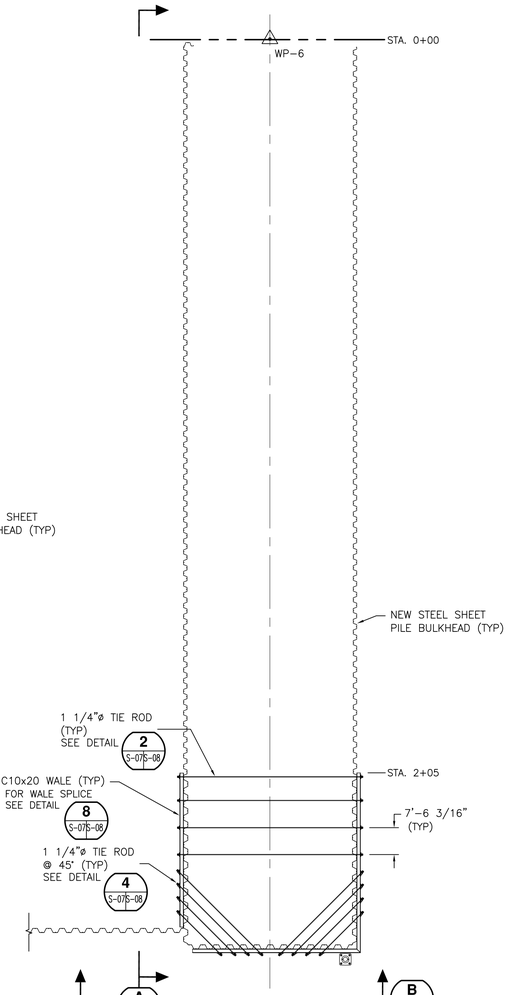

TIE ROD PLAN @ EL. +7.5'

SCALE: 1"=20'-0"

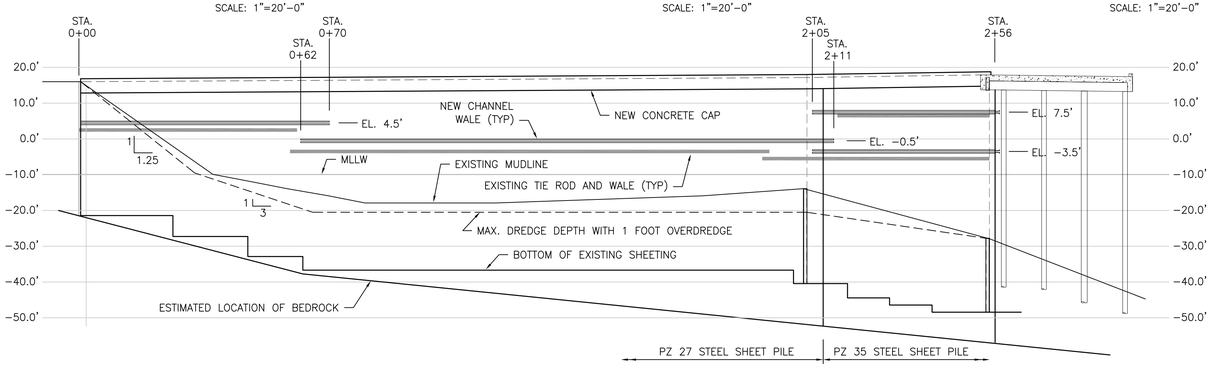

A S-07S-07 **PROFILE LOOKING NORTH**

SCALE: 1"=20'-0"

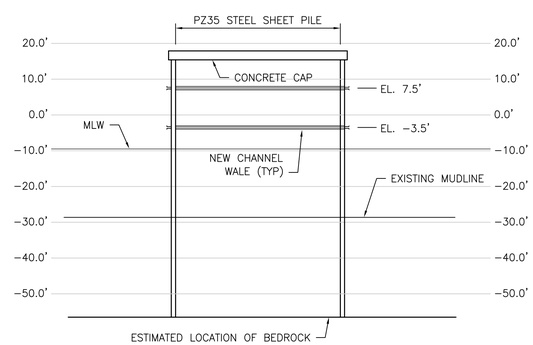

B S-07S-07 **PROFILE LOOKING WEST**

SCALE: 1"=20'-0"

1"=20'-0" 20 0 20 40 SCALE IN FEET

STATE OF MAINE
DEPARTMENT OF TRANSPORTATION

WIN #020806.00

STATE OF MAINE
CRAIG D. SAMS
No. 13478
LICENSED PROFESSIONAL ENGINEER

SIGNATURE		
P.E. NUMBER	13478	
DATE	08/15/14	

		BY	DATE
PROJ. MANAGER	CDS		
DESIGN-DETAILED	MMS	TEQ	7-14
CHECKED-REVIEWED	CDS	CDS	7-14
DESIGN2-DETAILED2			
DESIGN3-DETAILED3			
REVISIONS 1			
REVISIONS 2			
REVISIONS 3			
REVISIONS 4			
FIELD CHANGES			

EASTPORT BREAKWATER REPLACEMENT
EASTPORT, ME
WASHINGTON COUNTY

SHEET PILE/TIE ROD PLAN

SHEET NUMBER

S-07

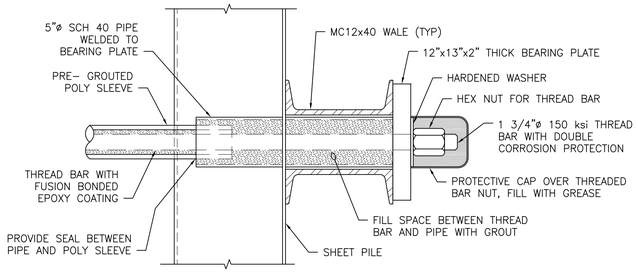

1 S-07 S-08 **1 3/4"Ø TIE ROD AND WALE DETAIL**

SCALE: 1 1/2"=1'-0"

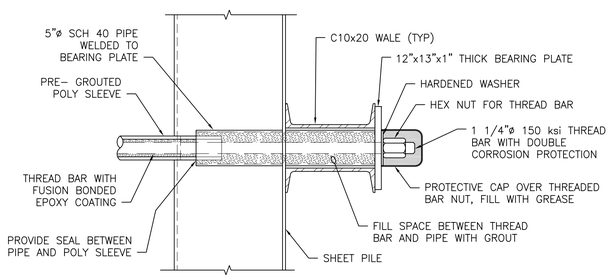

2 S-07 S-08 **1 1/4"Ø TIE ROD AND WALE DETAIL**

SCALE: 1 1/2"=1'-0"

NOTE:

REPAIR DAMAGED COATING AT ALL WELDS.

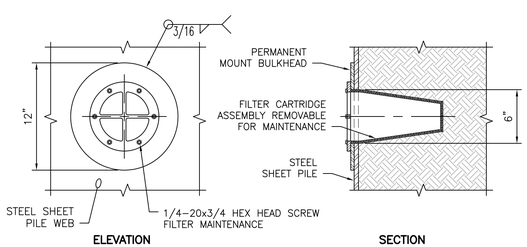

5 S-05 S-08 **6" WEEP HOLE FILTER DETAIL**

SCALE: 1 1/2"=1'-0"

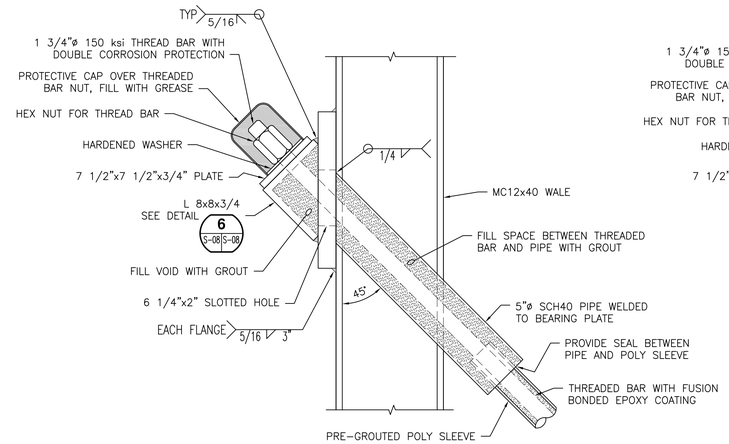

3 S-07 S-08 **1 3/4"Ø ANGLED TIE ROD AND WALE DETAIL**

SCALE: 1 1/2"=1'-0"

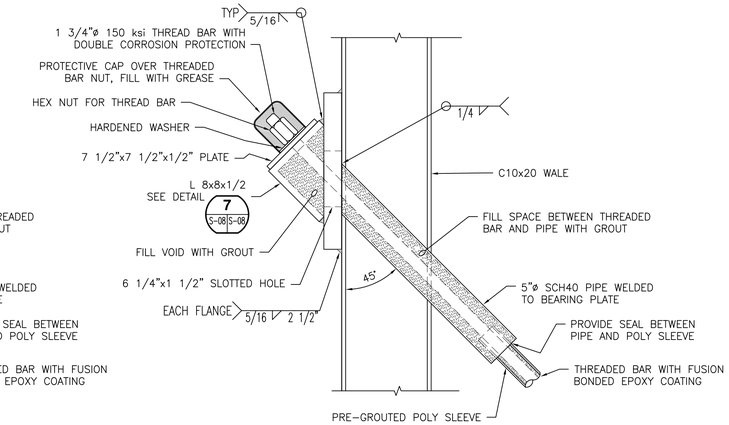

4 S-07 S-08 **1 1/4"Ø ANGLED TIE ROD AND WALE DETAIL**

SCALE: 1 1/2"=1'-0"

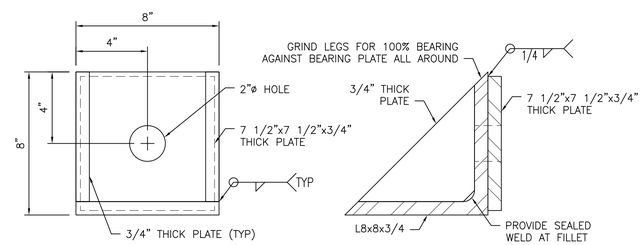

6 S-08 S-08 **L8x8x3/4 DETAIL FOR 1 3/4"Ø TIE ROD**

SCALE: 3"=1'-0"

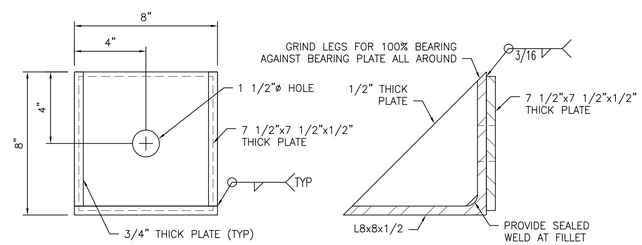

7 S-08 S-08 **L8x8x1/2 DETAIL FOR 1 1/4"Ø TIE ROD**

SCALE: 3"=1'-0"

NOTE: PROVIDE ¾" DIAMETER DRAIN HOLES AT CENTER OF TOP WALE FOR DRAINAGE, SPACED 5' O.C. MAX.

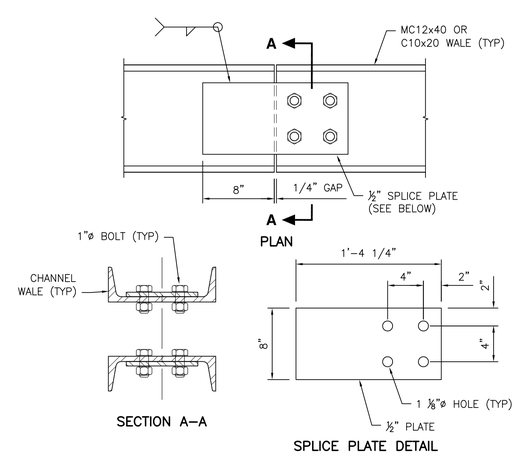

8 S-07 S-08 **TYPICAL WALE SPLICE DETAIL**

SCALE: 1 1/2"=1'-0"

3"=1'-0" 0.5 0.25 0 0.5 SCALE IN FEET

1 1/2"=1'-0" 1 0.5 0 1 SCALE IN FEET

STATE OF MAINE
DEPARTMENT OF TRANSPORTATION

WIN #020806.00

STATE OF MAINE CRAIG D. SAMS No. 13478 LICENSED PROFESSIONAL ENGINEER

SIGNATURE	
P.E. NUMBER	13478
DATE	08/15/14

	BY	DATE
PROJ. MANAGER	CDS	
DESIGN-DETAILED	MMS	7-14
CHECKED-REVIEWED	CDS	7-14
DESIGN2-DETAILED2		
DESIGN3-DETAILED3		
REVISIONS 1		
REVISIONS 2		
REVISIONS 3		
REVISIONS 4		
FIELD CHANGES		

EASTPORT BREAKWATER REPLACEMENT
EASTPORT, ME
WASHINGTON COUNTY

SHEET PILE DETAILS

SHEET NUMBER

S-08

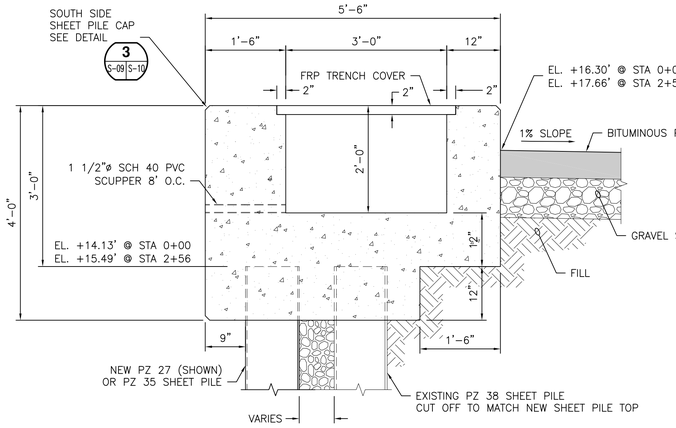

A S-09 S-09 **SECTION**

SCALE: 3/4"=1'-0"

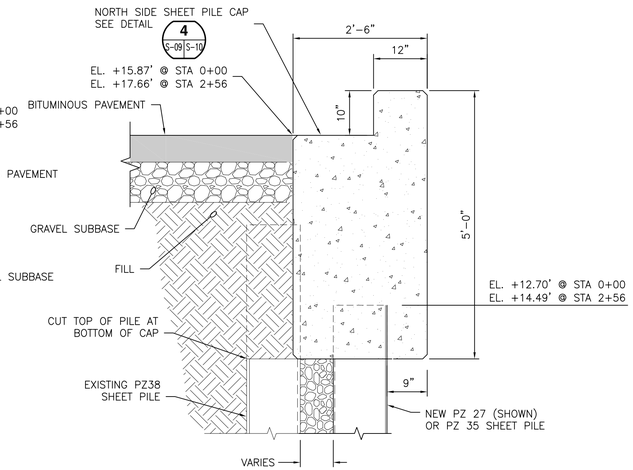

B S-09 S-09 **SECTION**

SCALE: 3/4"=1'-0"

3/4"=1'-0" 1 0 1 2 3 SCALE IN FEET

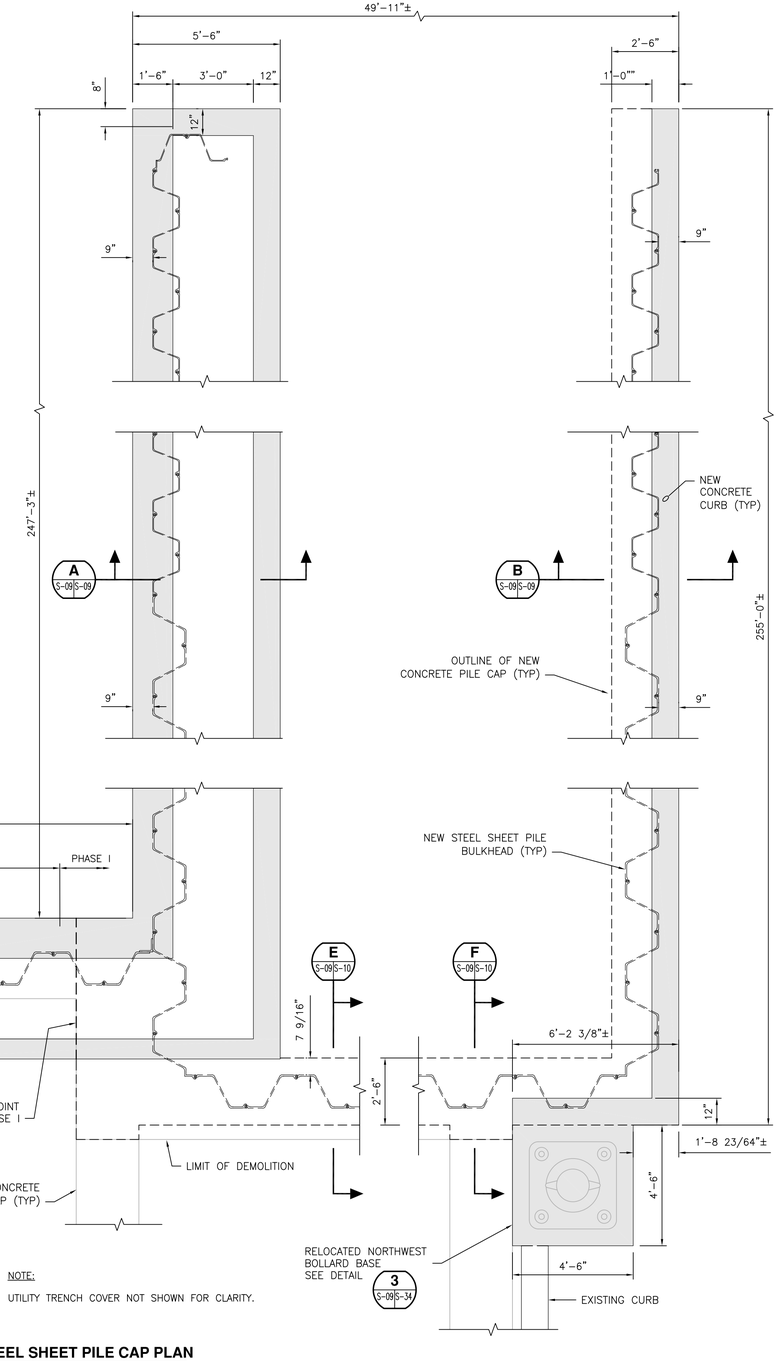

NOTE:

UTILITY TRENCH COVER NOT SHOWN FOR CLARITY.

STEEL SHEET PILE CAP PLAN

SCALE: 3/8"=1'-0"

3/8"=1'-0" 2 0 2 4 6 SCALE IN FEET

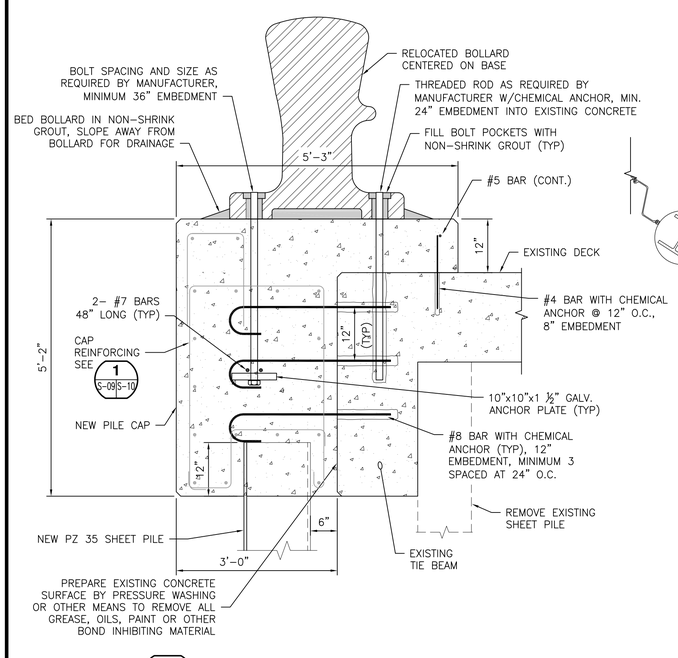

C S-09 S-09 **SECTION**

SCALE: 3/4"=1'-0"

STATE OF MAINE
DEPARTMENT OF TRANSPORTATION

WIN #020806.00

STATE OF MAINE
CRAIG D. SAMS
No. 13478
LICENSED PROFESSIONAL ENGINEER

SIGNATURE		
13478		
P.E. NUMBER		
08/15/14		
DATE		

		BY	DATE
PROJ. MANAGER	CDS		
DESIGN-DETAILED	MMS	TEQ	7-14
CHECKED-REVIEWED	CDS	CDS	7-14
DESIGN2-DETAILED2			
DESIGN3-DETAILED3			
REVISIONS 1			
REVISIONS 2			
REVISIONS 3			
REVISIONS 4			
FIELD CHANGES			

EASTPORT BREAKWATER REPLACEMENT
EASTPORT, ME
WASHINGTON COUNTY

SHEET PILE CAP PLAN

SHEET NUMBER

S-09

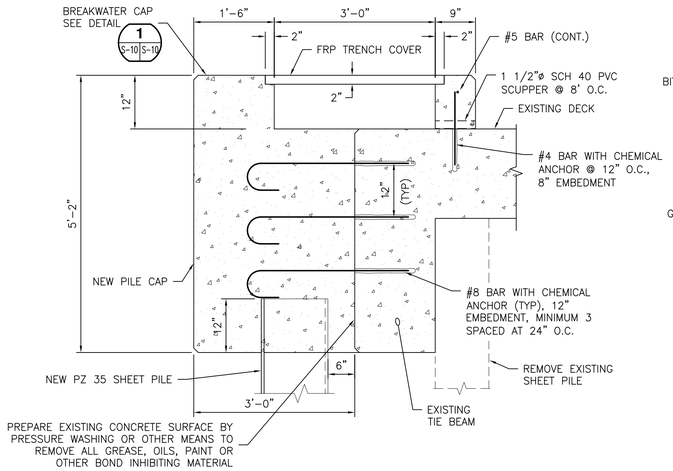

D S-09 S-10 **SECTION**
SCALE: 3/4"=1'-0"

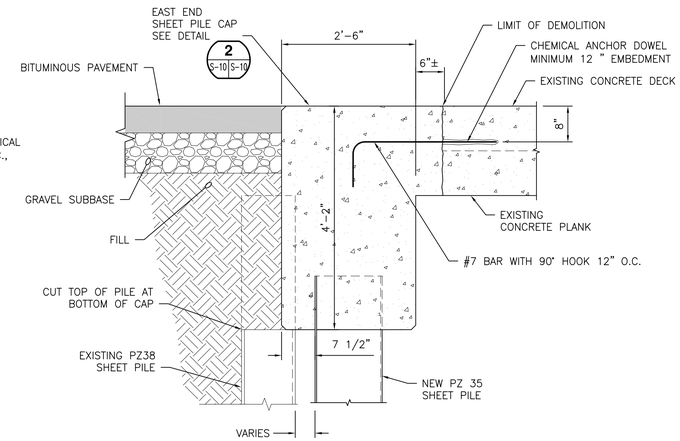

E S-09 S-10 **SECTION**
SCALE: 3/4"=1'-0"

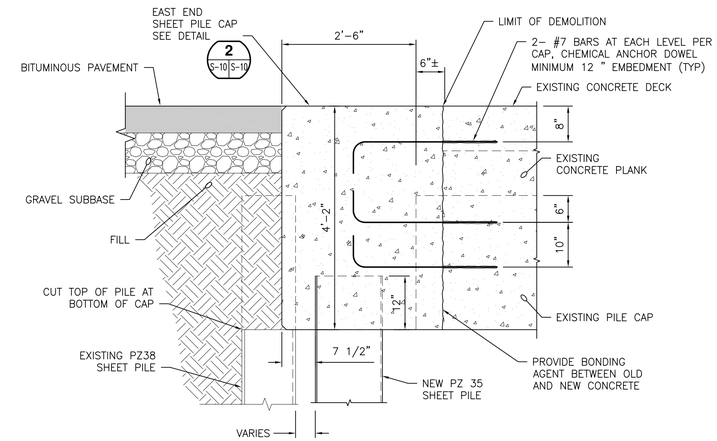

F S-09 S-10 **SECTION**
SCALE: 3/4"=1'-0"

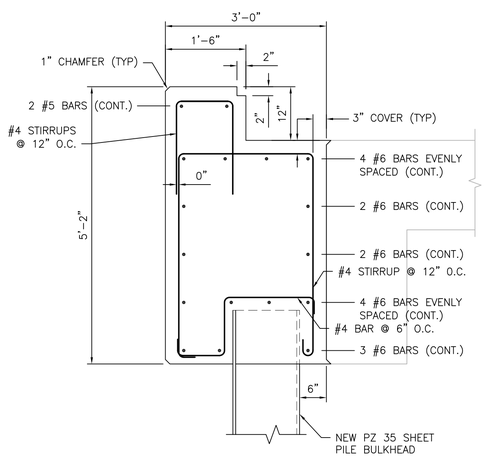

SECTION LOOKING NORTH

1 S-10 S-10 **BREAKWATER CAP REINFORCING DETAIL**
SCALE: 3/4"=1'-0"

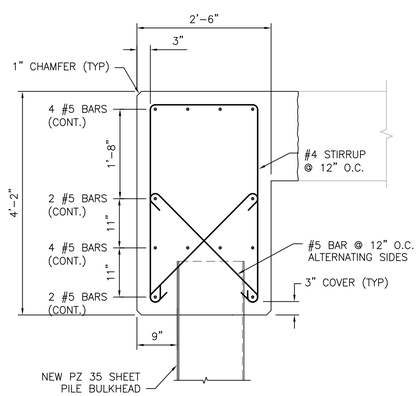

SECTION LOOKING NORTH

2 S-10 S-10 **EAST END SHEET PILE CAP REINFORCING DETAIL**
SCALE: 3/4"=1'-0"

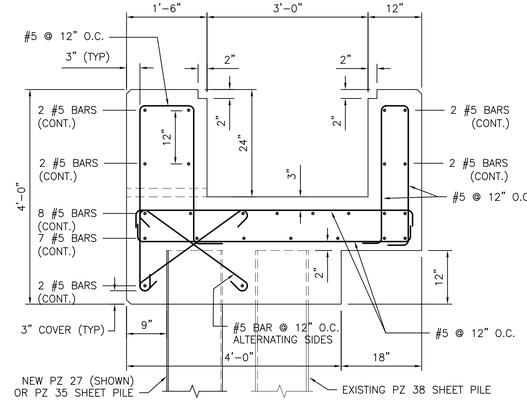

SECTION LOOKING WEST

3 S-09 S-10 **SOUTH SIDE APPROACH SHEET PILE CAP REINFORCING DETAIL**
SCALE: 3/4"=1'-0"

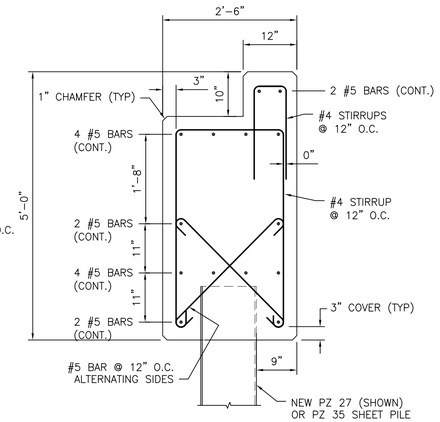

SECTION LOOKING WEST

4 S-09 S-10 **NORTH SIDE APPROACH SHEET PILE CAP REINFORCING DETAIL**
SCALE: 3/4"=1'-0"

3/4"=1'-0" 1 0 1 2 3
SCALE IN FEET

STATE OF MAINE
DEPARTMENT OF TRANSPORTATION

WIN #020806.00

STATE OF MAINE
CRAIG D. SAMS
No. 13478
LICENSED
PROFESSIONAL ENGINEER

SIGNATURE	
P.E. NUMBER	13478
DATE	08/15/14

	BY	DATE
PROJ. MANAGER	CDS	
DESIGN-DETAILED	TEQ	7-14
CHECKED-REVIEWED	MMS	7-14
DESIGN2-DETAILED2	CDS	
DESIGN3-DETAILED3		
REVISIONS 1		
REVISIONS 2		
REVISIONS 3		
REVISIONS 4		
FIELD CHANGES		

EASTPORT BREAKWATER REPLACEMENT
EASTPORT, ME
WASHINGTON COUNTY

SHEET PILE CAP DETAILS

SHEET NUMBER
S-10

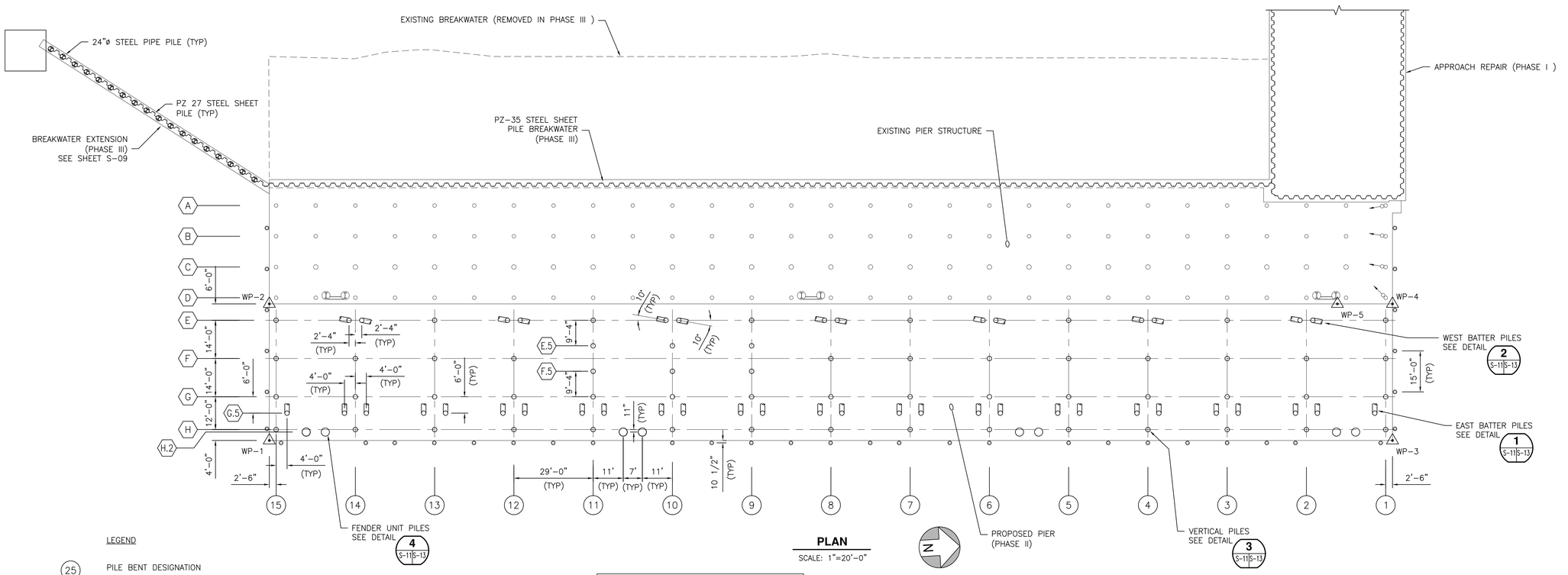

PLAN

SCALE: 1"=20'-0"

LEGEND

- (25) PILE BENT DESIGNATION
- (B) PILE ROW DESIGNATION
- 20"ø STEEL PIPE VERTICAL PILE
- 20"ø STEEL PIPE BATTER PILE
- 16"ø STEEL PIPE FENDER PILE
- 36"ø STEEL PIPE FENDER PILE

NOTES:

1. 36"ø AND 16"ø FENDER PILES SHALL BE DRIVEN OPEN ENDED WITHOUT DRIVING SHOE.
2. 36"ø FENDER PILES SHALL BE DRIVEN TO 20' EMBEDMENT BELOW DREDGE LINE.
3. 16"ø FENDER PILES SHALL BE DRIVEN TO 15' EMBEDMENT BELOW DREDGE LINE.
4. BATTER PILES SHOWN AT CUT OFF ELEVATION.
5. CONTRACTOR SHALL BE LIMITED TO ONE SPLICE PER PILE.

PILE CUT-OFF SCHEDULE

PILE ROW	ELEVATION	
	VERTICAL PILE	BATTER PILE
E	13.973'	13.973'
E.5	13.856'	N/A
F	13.798'	N/A
F.5	13.740'	N/A
G	13.623'	N/A
G.5	N/A	13.538'
H	13.473'	N/A
H.2	13.452'	N/A

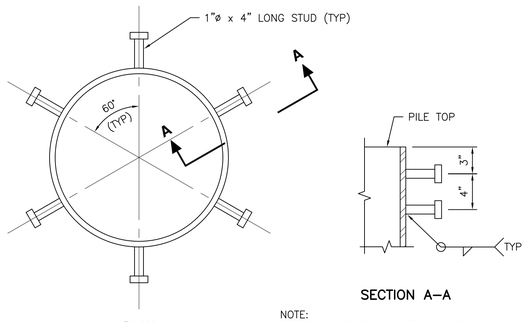

PLAN

SECTION A–A

NOTE:
TORSIONAL RESISTANCE STUDS SHOWN HERE SEE SHEET S-13 FOR TYPICAL REINFORCING.

SPIN FIN PILE TOP ANCHORAGE DETAIL

SCALE: 1 1/2"=1'-0"

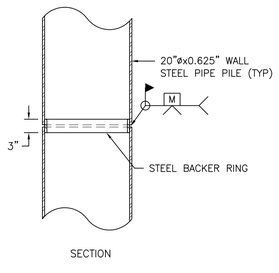

SECTION

PILE SPLICE DETAIL

SCALE: 3/4"=1'-0"

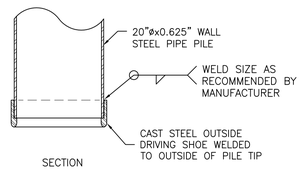

SECTION

PILE TIP DETAIL

SCALE: 3/4"=1'-0"

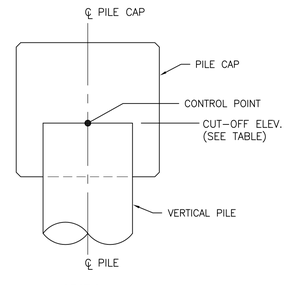

SECTION

VERTICAL PILE CUT-OFF KEY

SCALE: 3/4"=1'-0"

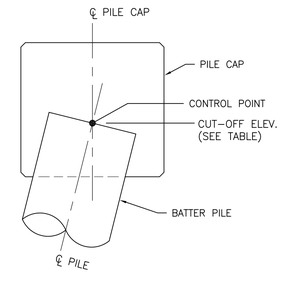

SECTION

BATTER PILE CUT-OFF KEY

SCALE: 3/4"=1'-0"

1 1/2"=1'-0" — 1 0.5 0 1 — SCALE IN FEET

3/4"=1'-0" — 1 0 1 2 3 — SCALE IN FEET

1"=20'-0" — 20 0 20 40 — SCALE IN FEET

STATE OF MAINE
DEPARTMENT OF TRANSPORTATION

WIN #020806.00

STATE OF MAINE — CRAIG D. SAMS — No. 13478 — LICENSED PROFESSIONAL ENGINEER

SIGNATURE	
P.E. NUMBER	13478
DATE	08/15/14

		BY	DATE
PROJ. MANAGER	CDS		
DESIGN-DETAILED	MMS	TEQ	7-14
CHECKED-REVIEWED	CDS	CDS	7-14
DESIGN2-DETAILED2			
DESIGN3-DETAILED3			
REVISIONS 1			
REVISIONS 2			
REVISIONS 3			
REVISIONS 4			
FIELD CHANGES			

EASTPORT BREAKWATER REPLACEMENT
EASTPORT, ME
WASHINGTON COUNTY

PILE PLAN

SHEET NUMBER

S-11

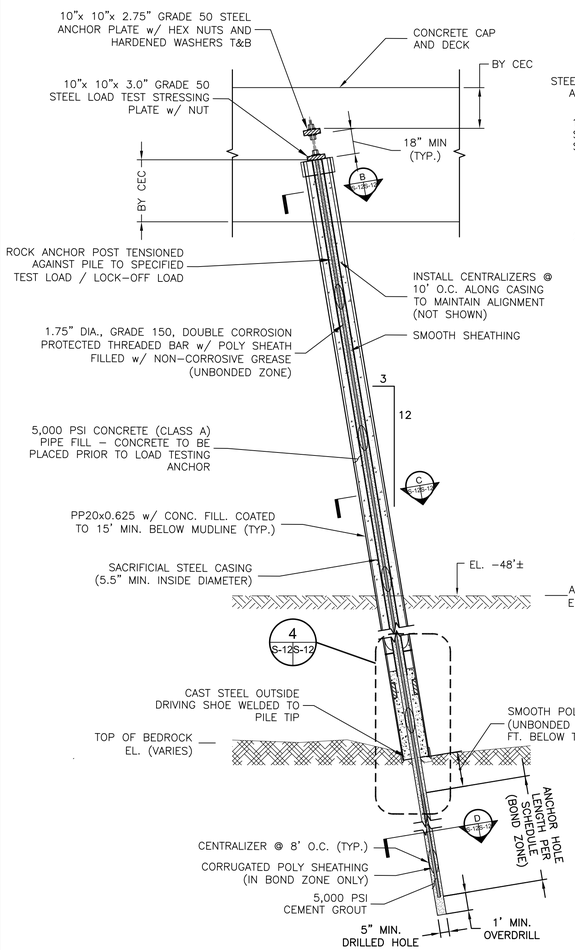

A S-12 S-12 SECTION-BATTER PILE w/ ROCK ANCHOR

NOT TO SCALE

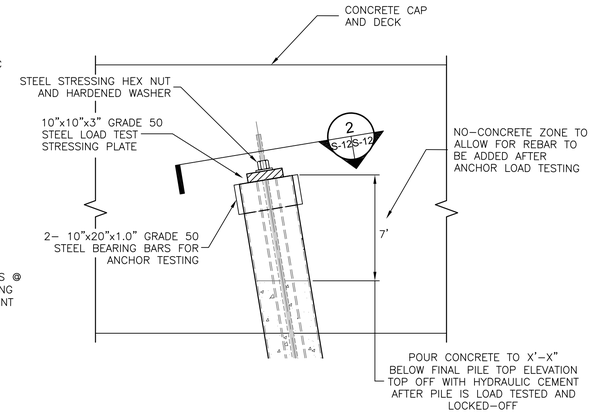

1 S-12 S-12 DETAIL-PILE LOAD TEST SET-UP

NOT TO SCALE

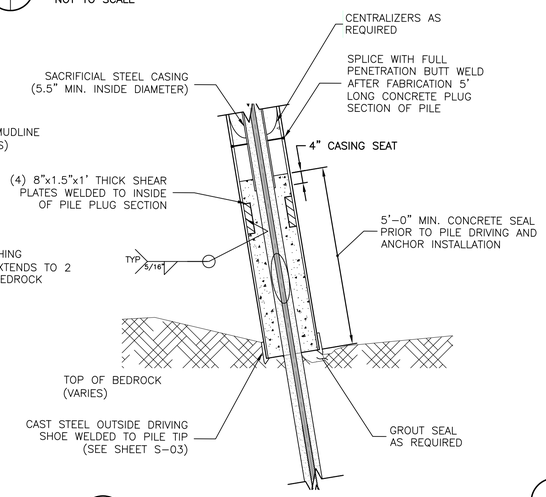

4 S-12 S-12 DETAIL-PILE TIP

NOT TO SCALE

BATTER PILE AND ROCK ANCHOR SUGGESTED CONSTRUCTION SEQUENCE:

1. DRIVE PP20x0.625" OPEN ENDED WITH DRIVING SHOE TO TOP OF OR NEAR TOP OF BEDROCK. DRIVE TO REQUIRED ULTIMATE CAPACITY PROVIDING A FACTOR OF SAFETY OF 2.0 ON THE MAXIMUM DESIGN LOAD PER PILE SCHEDULE.
2. PILE SHALL BE CUT OFF AT FINAL TOP ELEVATION TO PERFORM ANCHOR LOAD TEST. REFER TO STRUCTURAL DRAWINGS FOR TOP OF PILE ELEVATIONS.
3. INSTALL CASING WITH CENTRALIZERS AS REQUIRED TO TOP OF SOIL PLUG INSIDE PP20x0.625". ADVANCE SACRIFICIAL CASING UNTIL IT IS SEATED IN BEDROCK OR REFUSAL OF THE CASING IS ACHIEVED.
4. INSERT ROCK ANCHOR DRILL CASING AND DRILL BIT INTO SACRIFICIAL CASING AND DRILL ANCHOR HOLE. MINIMUM LENGTH OF ANCHOR HOLE BOND ZONE PER PILE SCHEDULE.
5. CLEAN AND FLUSH ROCK CUTTINGS FROM SOCKET. DO NOT ALLOW DRILL CUTTINGS TO ENTER THE PIPE PILE.
6. INSTALL DOUBLE CORROSION PROTECTED ANCHOR ANCHOR WITH CENTRALIZERS.
7. INSTALL 5,000 PSI CEMENT GROUT INSIDE OF ANCHOR HOLE AND CASING USING TREMIE TUBE. PLACE 5000 PSI CONCRETE (CLASS A) BETWEEN CASING AND PP20x0.625" PILES TO 7.5 FEET BELOW TOP OF FINISH PILE ELEVATION.
8. INSTALL REINFORCEMENT AT TOP OF PP20 PILES
9. INSTALL 2- 10"x20"x1.00" GRADE 50 BEARING PLATES AT TOP OF PILE.
10. INSTALL 10"x10"x3.00" LOAD TEST STRESSING PLATE.
11. VERIFY THAT PILE HEAD IS RESTRAINED FROM MOVING LATERALLY BY FIXING THE PILE HEAD TO THE DRIVING TEMPLATE, FALSEWORK OR OTHER APPROPRIATE MEANS.
12. PERFORM ROCK ANCHOR PROOF TEST TO 133% OF DL (SEE PILE SCHEDULE).
13. LOCK OFF ROCK ANCHOR AT 110% OF DL (SEE PILE SCHEDULE).
14. INSTALL 10"x10"x2.75" GRADE 50 ANCHOR PLATE AT TOP OF ANCHOR WITH HEX NUTS AND HARDENED WASHERS TOP AND BOTTOM.
15. PROCEED WITH PILE CAP AND DECK CONSTRUCTION.

VERTICAL PILE SUGGESTED CONSTRUCTION SEQUENCE:

1. DRIVE PP20x0.625" OPEN ENDED WITH DRIVING SHOE TO TOP OF OR NEAR TOP OF BEDROCK. DRIVE TO REQUIRED ULTIMATE CAPACITY PROVIDING A FACTOR OF SAFETY OF 2.0 ON THE MAXIMUM DESIGN LOAD PER PILE SCHEDULE.
2. PILE SHALL BE CUT OF AT FINAL TOP ELEVATION. REFER TO STRUCTURAL DRAWINGS FOR TOP OF PILE ELEVATIONS.
3. INSTALL 5,000 PSI CONCRETE (CLASS A) TO 7.5 FEET BELOW TOP OF FINISH PILE ELEVATION.
4. PROCEED WITH DECK CONSTRUCTION.

PILE LOAD SCHEDULE:	VERTICAL PILES			
	ROW E	ROW F	ROW G	ROW H
DESIGN LOAD - COMPRESSION:	139 KIPS	298 KIPS	306 KIPS	287 KIPS
DESIGN LOAD - TENSION:	-	-	30 KIPS	64 KIPS
REQ. ULTIMATE PILE CAPACITY COMPRESSION (FS=2.0):	278 KIPS	596 KIPS	612 KIPS	574 KIPS
REQ. ULTIMATE PILE CAPACITY TENSION (FS=3.0):	-	-	90 KIPS	192 KIPS
PROOF LOAD:	N/A	N/A	N/A	N/A
LOCK-OFF LOAD:	N/A	N/A	N/A	N/A

NOTE:
1. ROCK ANCHORS NOT REQUIRED FOR TENSION IN VERTICAL PILES.
2. PERFORM PDA TESTING ON FIRST FOUR (4) VERTICAL PILES AND FIRST FOUR (4) BATTER PILES TO ESTABLISH DRIVING CRITERIA AND TO CONFIRM PILE CAPCITIES.

PILE LOAD SCHEDULE:	BATTER PILES	
	ROW G.5	ROW E
DESIGN LOAD - COMPRESSION:	195 KIPS	250 KIPS
DESIGN LOAD - TENSION:	176 KIPS	145 KIPS
REQ. ULTIMATE PILE CAPACITY COMPRESSION (FS=2.0):	742 KIPS	790 KIPS
REQ. ULTIMATE ROCK ANCHOR CAPACITY TENSION (FS=2.0):	352 KIPS	290 KIPS
PROOF LOAD:	234 KIPS	193 KIPS
LOCK-OFF LOAD:	194 KIPS	160 KIPS
ANCHOR BOND ZONE LENGTH:	27 FT	27 FT
ANCHOR HOLE DEPTH BELOW TOP OF BEDROCK:	30 FT	30 FT

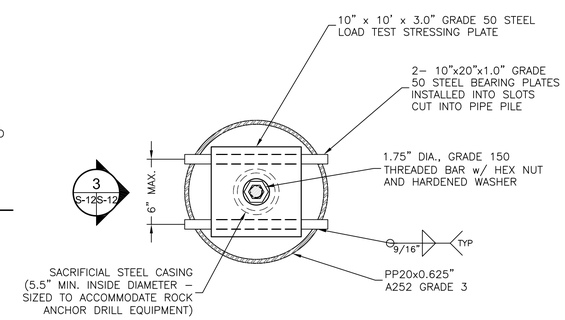

2 S-12 S-12 DETAIL-LOAD TEST SET-UP AT TOP OF PILES

NOT TO SCALE

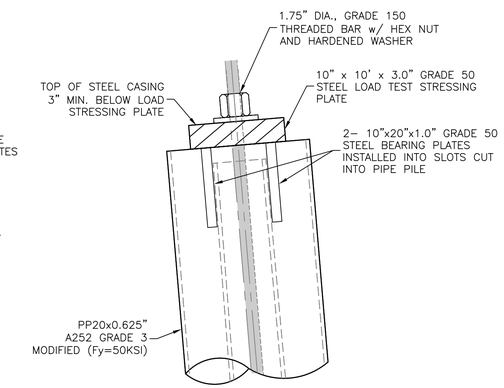

3 S-12 S-12 DETAIL-PILE LOAD TESTING

NOT TO SCALE

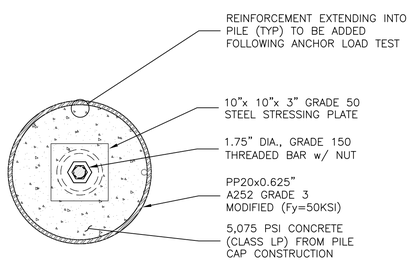

B S-12 S-12 SECTION-ROCK ANCHOR (STRESSING PLATE)

NOT TO SCALE

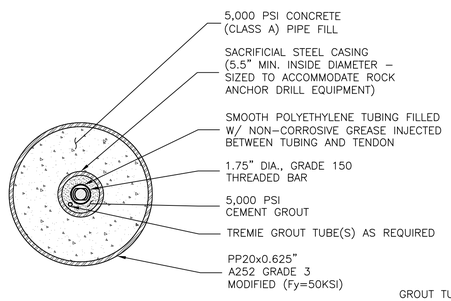

C S-12 S-12 SECTION-ROCK ANCHOR (UNBONDED ZONE)

NOT TO SCALE

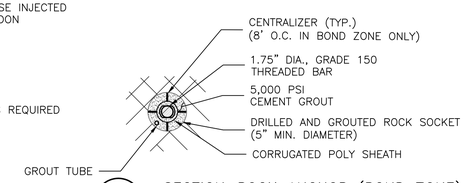

D S-12 S-12 SECTION-ROCK ANCHOR (BOND ZONE)

NOT TO SCALE

PREPARED BY:

GZA GeoEnvironmental, Inc. Engineers and Scientists www.gza.com

STATE OF MAINE DEPARTMENT OF TRANSPORTATION

WIN #020806.00

STATE OF MAINE CRAIG D. SAMS No. 13478 LICENSED PROFESSIONAL ENGINEER

		BY	DATE
PROJ. MANAGER	CDS		
DESIGN-DETAILED		PND	7-14
CHECKED-REVIEWED		PND	7-14
DESIGN2-DETAILED2			
DESIGN3-DETAILED3			
REVISIONS 1			
REVISIONS 2			
REVISIONS 3			
REVISIONS 4			
FIELD CHANGES			

SIGNATURE

13478 P.E. NUMBER

08/15/14 DATE

EASTPORT BREAKWATER REPLACEMENT
EASTPORT, ME
WASHINGTON COUNTY

PILE ANCHOR DETAILS

SHEET NUMBER

S-12

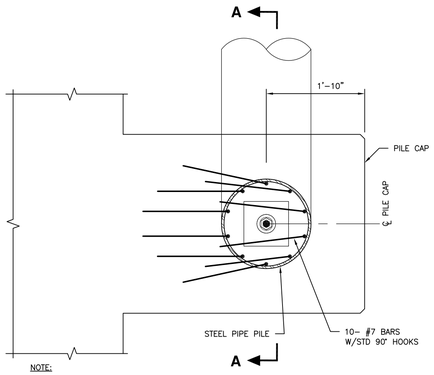

NOTE:

ANGLE REINFORCING BARS TO MAINTAIN 3 INCH CONCRETE COVER AND TO AVOID INTERFERENCE WITH EACH OTHER.

PLAN

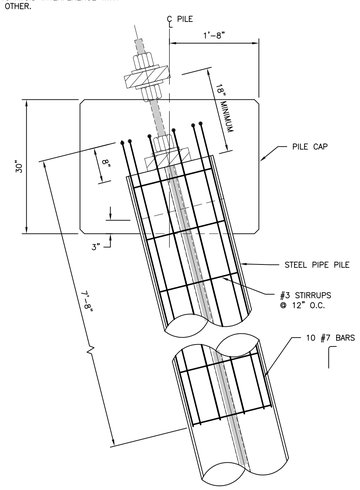

SECTION A–A

1 S-11 S-13 **EAST BATTER PILE CONNECTION DETAIL**

SCALE: 3/4"=1'-0"

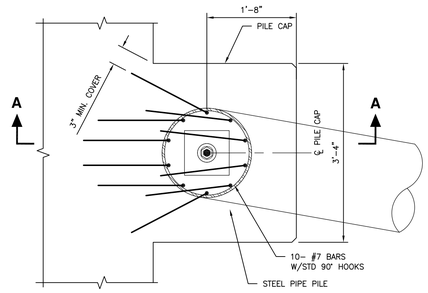

NOTE:

ANGLE REINFORCING BARS TO MAINTAIN 3 INCH CONCRETE COVER AND TO AVOID INTERFERENCE WITH EACH OTHER.

PLAN

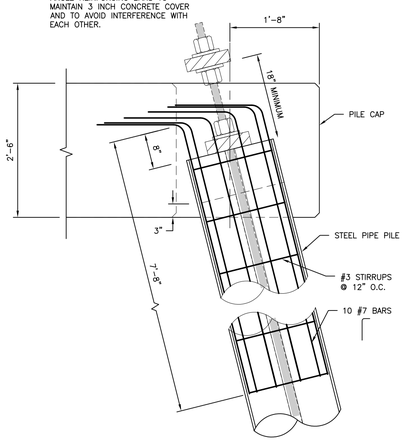

SECTION A–A

2 S-11 S-13 **WEST BATTER PILE CONNECTION DETAIL**

SCALE: 3/4"=1'-0"

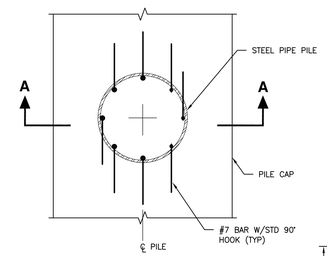

PLAN

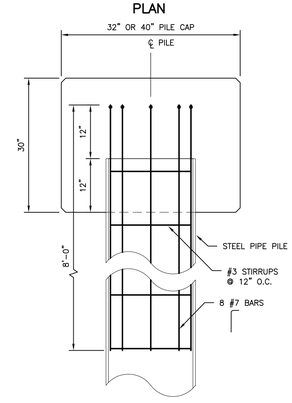

SECTION A–A

3 S-11 S-13 **VERTICAL PILE CONNECTION DETAIL**

SCALE: 3/4"=1'-0"

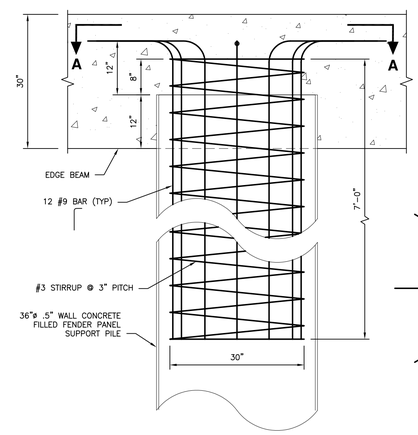

ELEVATION

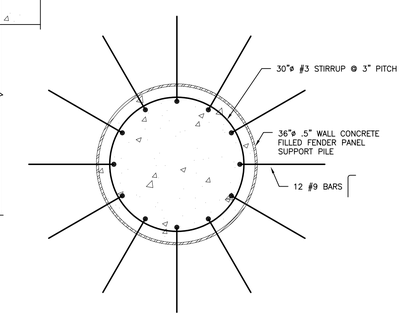

SECTION A-A

4 S-11 S-13 **FENDER PANNEL SUPPORT PILE CONNECTION DETAIL**

SCALE: 3/4"=1'-0"

3/4"=1'-0" 1 0 1 2 3 SCALE IN FEET

STATE OF MAINE
DEPARTMENT OF TRANSPORTATION

WIN #020806.00

STATE OF MAINE
CRAIG D. SAMS
No. 13478
LICENSED
PROFESSIONAL ENGINEER

SIGNATURE		
13478		
P.E. NUMBER		
08/15/14		
DATE		

		BY	DATE
PROJ. MANAGER	CDS		
DESIGN-DETAILED	MMS	TEQ	7-14
CHECKED-REVIEWED	CDS	CDS	7-14
DESIGN2-DETAILED2			
DESIGN3-DETAILED3			
REVISIONS 1			
REVISIONS 2			
REVISIONS 3			
REVISIONS 4			
FIELD CHANGES			

EASTPORT BREAKWATER REPLACEMENT
EASTPORT, ME
WASHINGTON COUNTY

PILE CONNECTION DETAILS

SHEET NUMBER

S-13

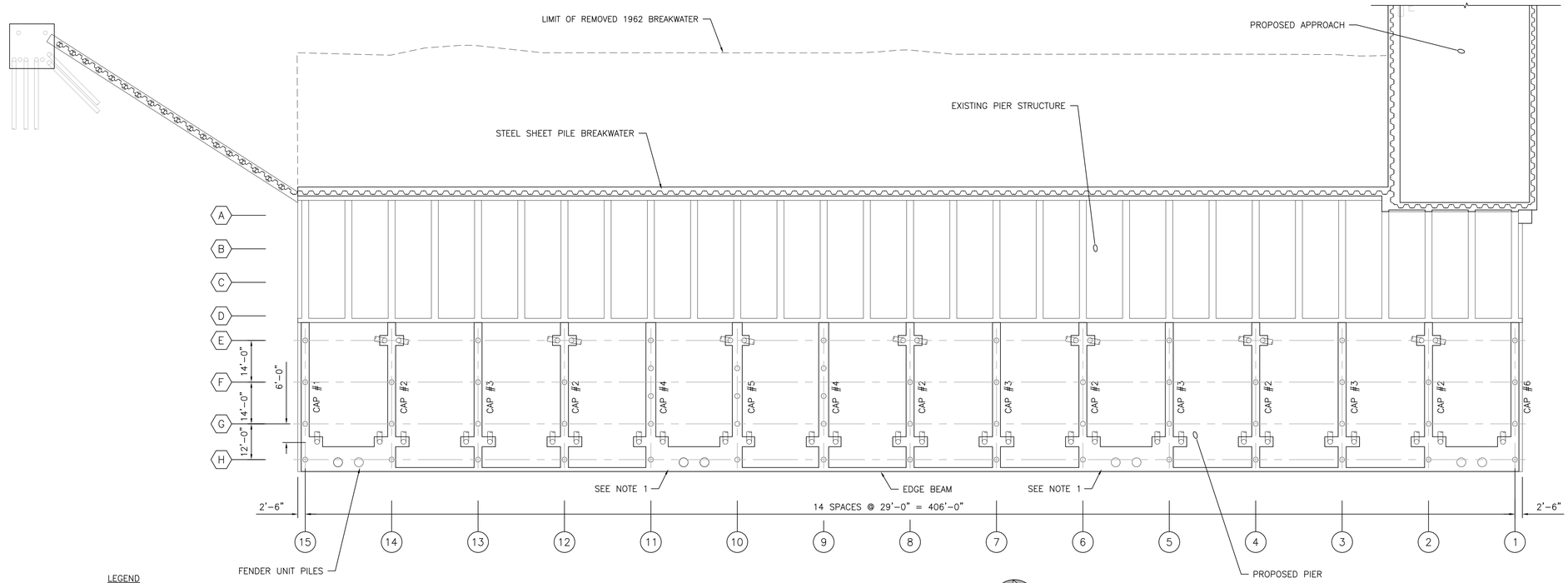

PLAN

SCALE: 1"=20'-0"

LEGEND

- (25) PILE BENT DESIGNATION
- (B) PILE ROW DESIGNATION
- 20"ø STEEL PIPE VERTICAL PILE
- 20"ø STEEL PIPE BATTER PILE
- 36"ø STEEL PIPE FENDER PILE

NOTES:

1. REINFORCING LAYOUT AT FENDER UNIT BEAM SHOWN ON SHEETS S-15 AND S-20 FOR CAP 1 AND CAP 6, LAYOUT FOR CAPS 2, 3, 4, AND 5 IS SIMILAR FOR FENDER UNIT BEAM.
2. CAP 1 AND CAP 6 DIMENSIONS SIMILAR TO CAP 3.

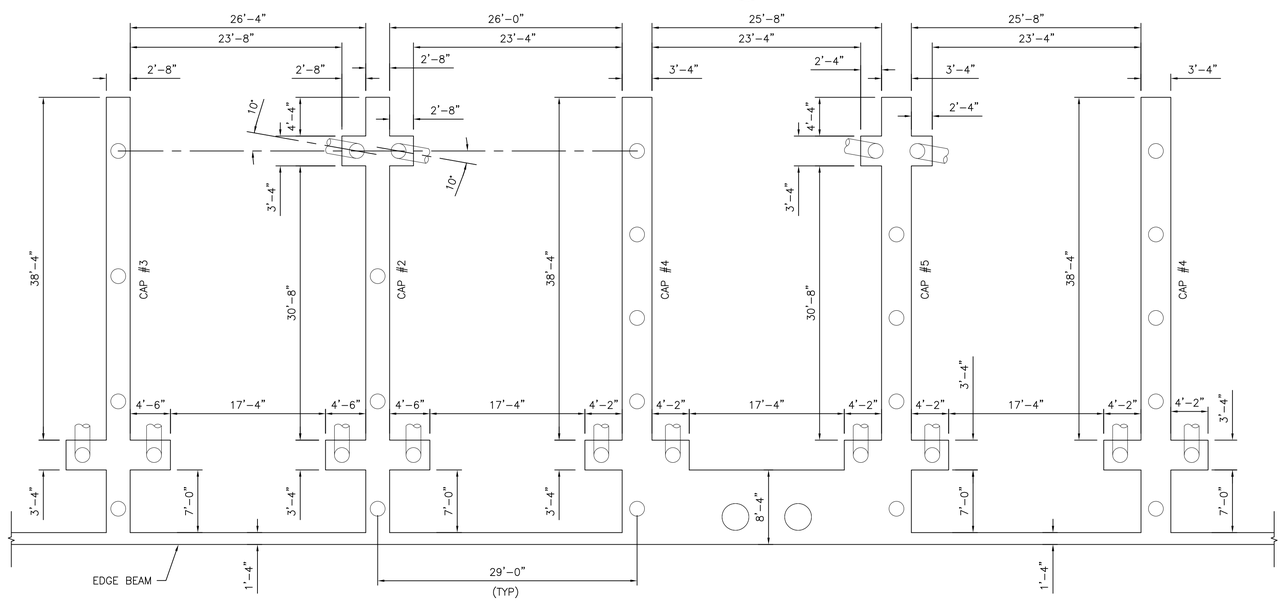

PARTIAL PLAN

SCALE: 1/8"=1'-0"

1/8"=1'-0" 8 0 8 16 SCALE IN FEET

1"=20'-0" 20 0 20 40 SCALE IN FEET

STATE OF MAINE
DEPARTMENT OF TRANSPORTATION

WIN #020806.00

STATE OF MAINE
CRAIG D. SAMS
No. 13478
LICENSED PROFESSIONAL ENGINEER

SIGNATURE
13478
P.E. NUMBER
08/15/14
DATE

		BY	DATE
PROJ. MANAGER	CDS		
DESIGN-DETAILED	MMS	TEQ	7-14
CHECKED-REVIEWED	CDS	CDS	7-14
DESIGN2-DETAILED2			
DESIGN3-DETAILED3			
REVISIONS 1			
REVISIONS 2			
REVISIONS 3			
REVISIONS 4			
FIELD CHANGES			

EASTPORT BREAKWATER REPLACEMENT
EASTPORT, ME
WASHINGTON COUNTY

PILE CAP PLAN

SHEET NUMBER

S-14

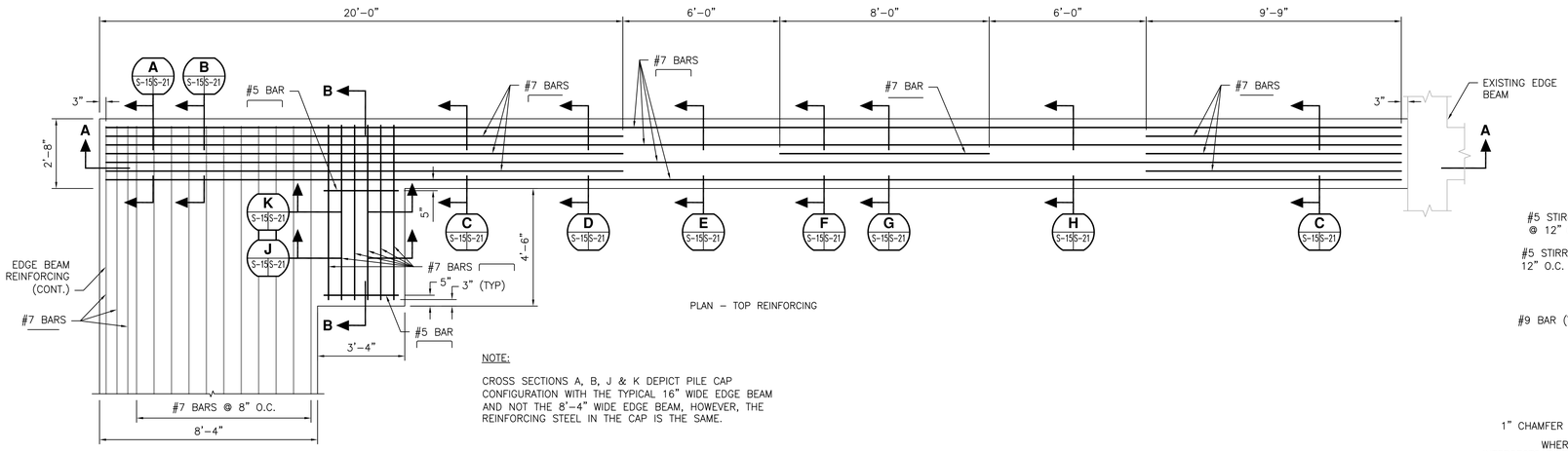

PLAN – TOP REINFORCING

NOTE:

CROSS SECTIONS A, B, J & K DEPICT PILE CAP CONFIGURATION WITH THE TYPICAL 16" WIDE EDGE BEAM AND NOT THE 8'-4" WIDE EDGE BEAM, HOWEVER, THE REINFORCING STEEL IN THE CAP IS THE SAME.

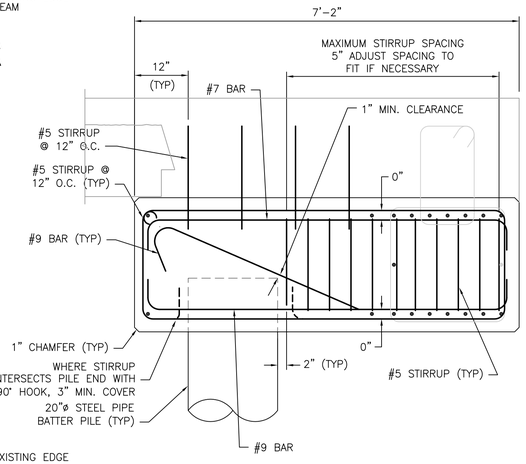

SECTION B-B

SCALE: 3/4"=1'-0"

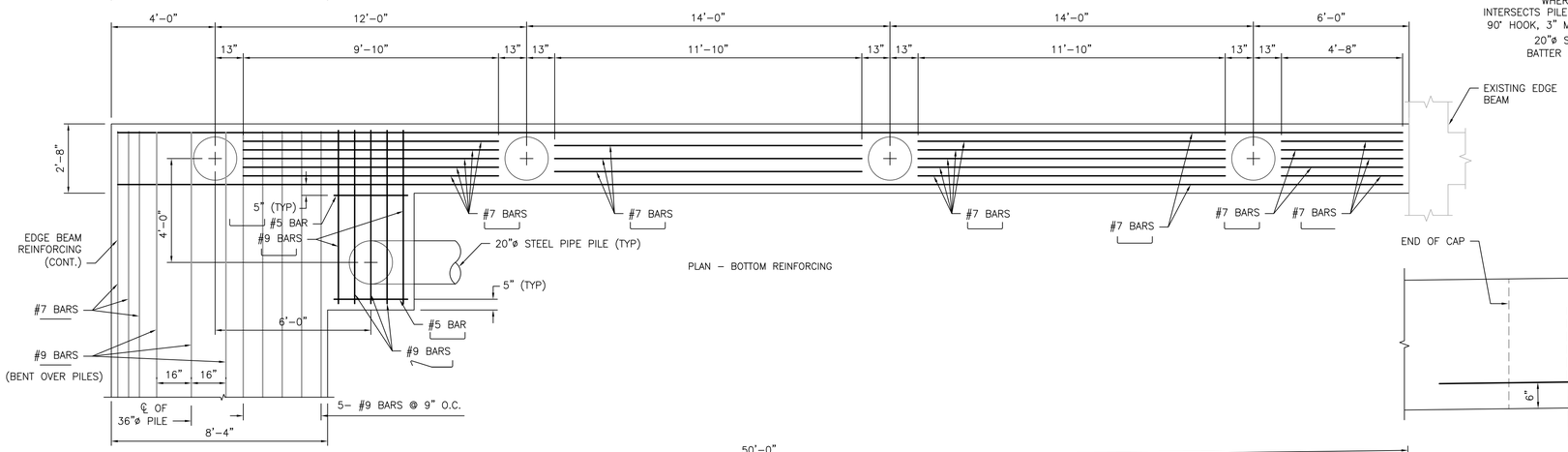

PLAN – BOTTOM REINFORCING

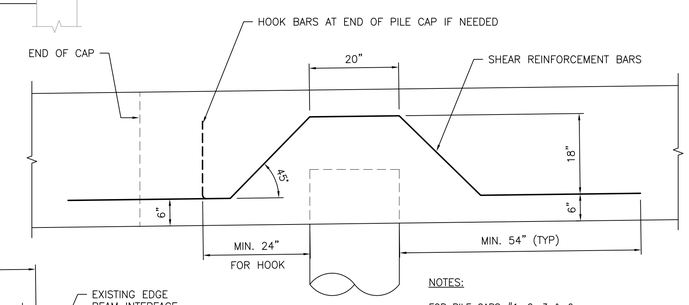

NOTES:

FOR PILE CAPS #1, 2, 3 & 6:
3- #7 BARS SPACED AT 10" O.C. ABOVE PILE

FOR PILE CAPS #4 & 5:
4- #9 BARS SPACED AT 6" O.C. ABOVE PILE

1 S-15S-15 SHEAR REINFORCEMENT DETAIL

SCALE: 3/4"=1'-0"

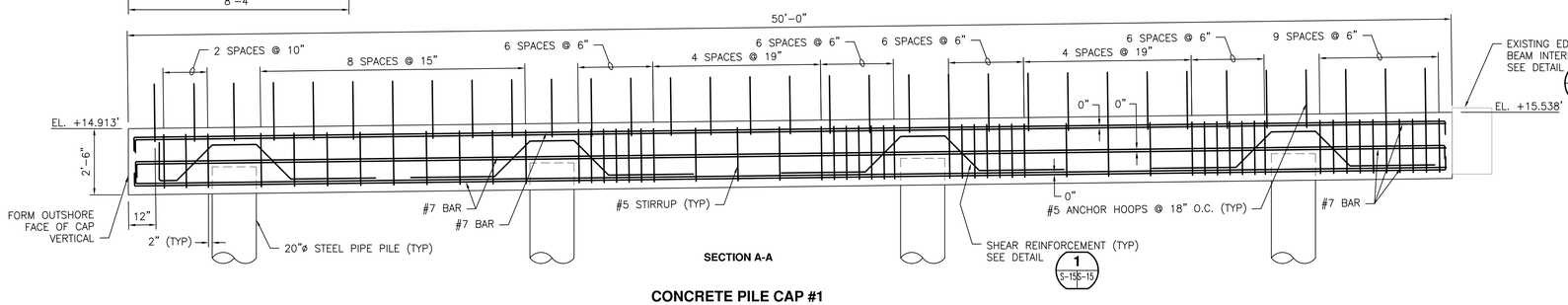

SECTION A-A

CONCRETE PILE CAP #1

SCALE: 3/8"=1'-0"

CONCRETE NOTES:

1. F'c = 5075 psi
2. Fy = 60 ksi
3. 3 INCH MINIMUM COVER UNLESS OTHERWISE NOTED.
4. MINIMUM BAR SPLICE LENGTH SHALL BE AS SHOWN IN SPEC. SECTION 503.
5. ADJUST STIRRUPS AND TIES TO CLEAR BATTER PILE ANCHORS.
6. PROVIDE ROUGHENED SURFACE AT ALL CONSTRUCTION JOINTS FOR GOOD BOND.

3/4"=1'-0" 1 0 1 2 3 SCALE IN FEET

3/8"=1'-0" 2 0 2 4 6 SCALE IN FEET

STATE OF MAINE
DEPARTMENT OF TRANSPORTATION

WIN #020806.00

STATE OF MAINE CRAIG D. SAMS No. 13478 LICENSED PROFESSIONAL ENGINEER

SIGNATURE		
13478	P.E. NUMBER	
08/15/14	DATE	

		BY	DATE
PROJ. MANAGER	CDS		
DESIGN-DETAILED	MMS	TEQ	7-14
CHECKED-REVIEWED	CDS	CDS	7-14
DESIGN2-DETAILED2			
DESIGN3-DETAILED3			
REVISIONS 1			
REVISIONS 2			
REVISIONS 3			
REVISIONS 4			
FIELD CHANGES			

EASTPORT BREAKWATER REPLACEMENT
EASTPORT, ME
WASHINGTON COUNTY

PILE CAP 1 DETAILS

SHEET NUMBER

S-15

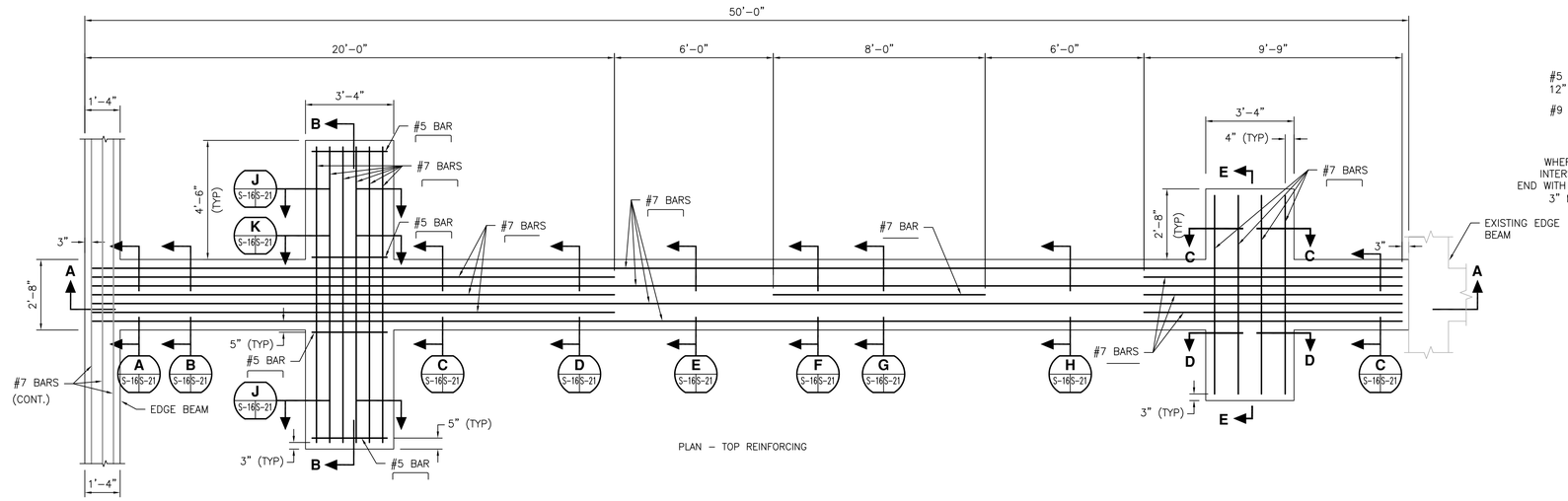

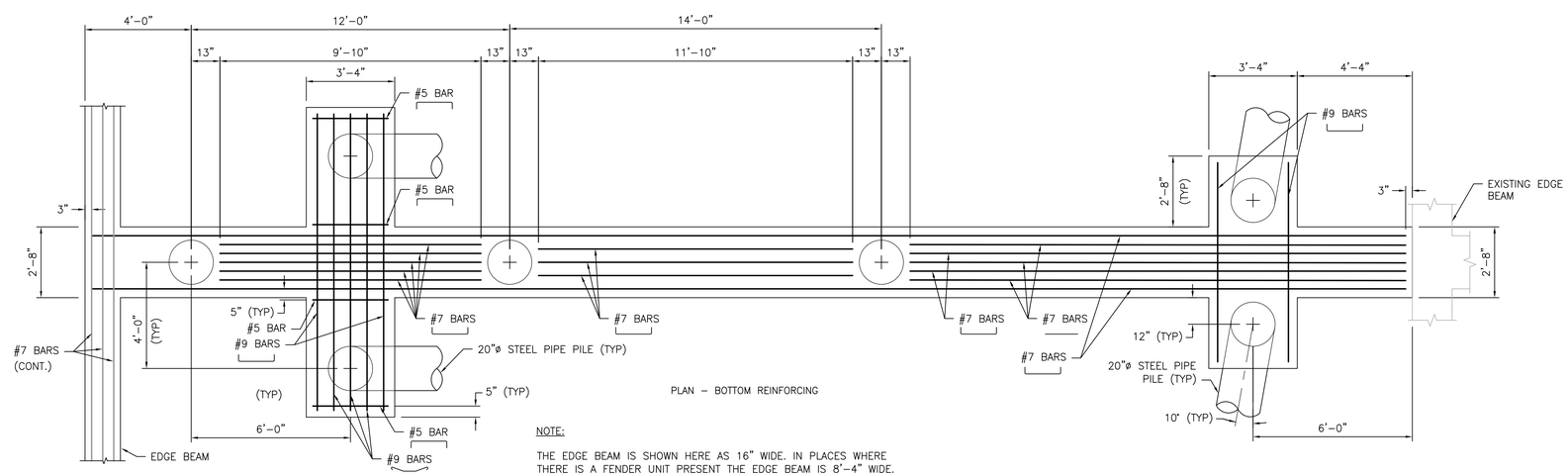

NOTE:

THE EDGE BEAM IS SHOWN HERE AS 16" WIDE. IN PLACES WHERE THERE IS A FENDER UNIT PRESENT THE EDGE BEAM IS 8'-4" WIDE. SEE CONCRETE CAP 1 (SHEET S-13) FOR CONFIGURATION.

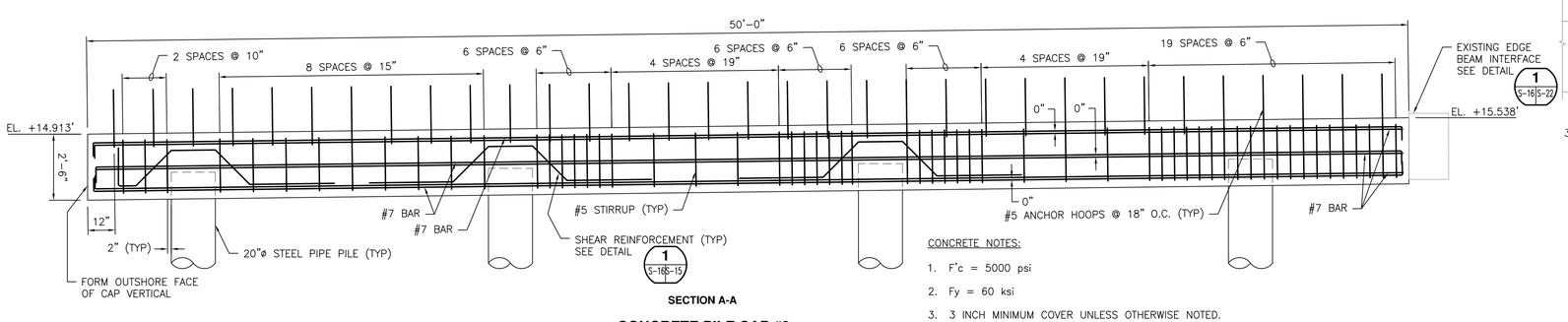

SECTION A-A

CONCRETE PILE CAP #2

SCALE: 3/8"=1'-0"

CONCRETE NOTES:

1. F'c = 5000 psi
2. Fy = 60 ksi
3. 3 INCH MINIMUM COVER UNLESS OTHERWISE NOTED.
4. MINIMUM BAR SPLICE LENGTH SHALL BE AS SHOWN IN SPEC. SECTION 503.
5. ADJUST STIRRUPS AND TIES TO CLEAR BATTER PILE ANCHORS.
6. PROVIDE ROUGHENED SURFACE AT ALL CONSTRUCTION JOINTS FOR GOOD BOND.

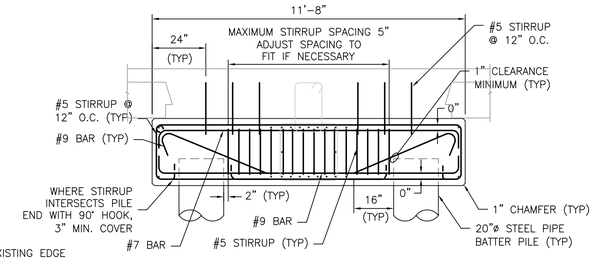

SECTION B-B

SCALE: 3/8"=1'-0"

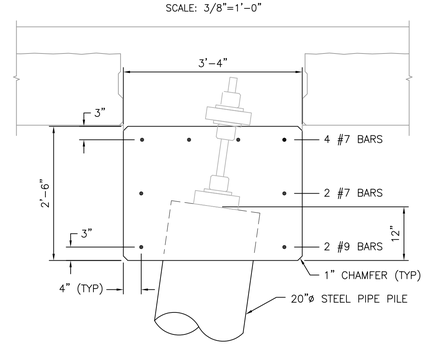

SECTION C-C

SCALE: 3/4"=1'-0"

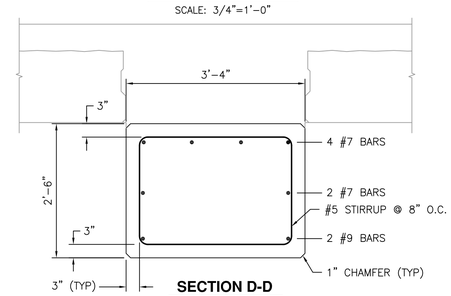

SECTION D-D

SCALE: 3/4"=1'-0"

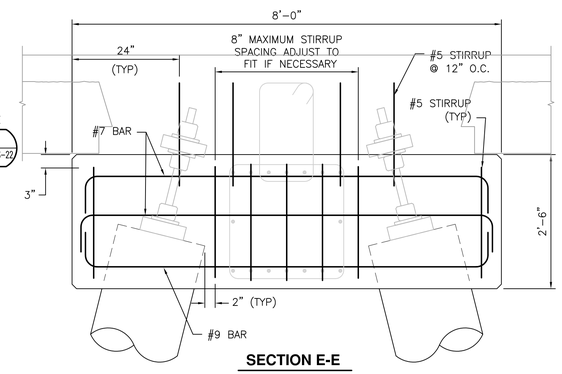

SECTION E-E

SCALE: 3/4"=1'-0"

3/4"=1'-0" 1 0 1 2 3 SCALE IN FEET

3/8"=1'-0" 2 0 2 4 6 SCALE IN FEET

STATE OF MAINE
DEPARTMENT OF TRANSPORTATION

WIN #020806.00

STATE OF MAINE CRAIG D. SAMS No. 13478 LICENSED PROFESSIONAL ENGINEER

SIGNATURE		
13478		
P.E. NUMBER		
08/15/14		
DATE		

		BY	DATE
PROJ. MANAGER	CDS		
DESIGN-DETAILED	MMS	TEQ	7-14
CHECKED-REVIEWED	CDS	CDS	7-14
DESIGN2-DETAILED2			
DESIGN3-DETAILED3			
REVISIONS 1			
REVISIONS 2			
REVISIONS 3			
REVISIONS 4			
FIELD CHANGES			

EASTPORT BREAKWATER REPLACEMENT
EASTPORT, ME
WASHINGTON COUNTY

PILE CAP 2 DETAILS

SHEET NUMBER

S-16

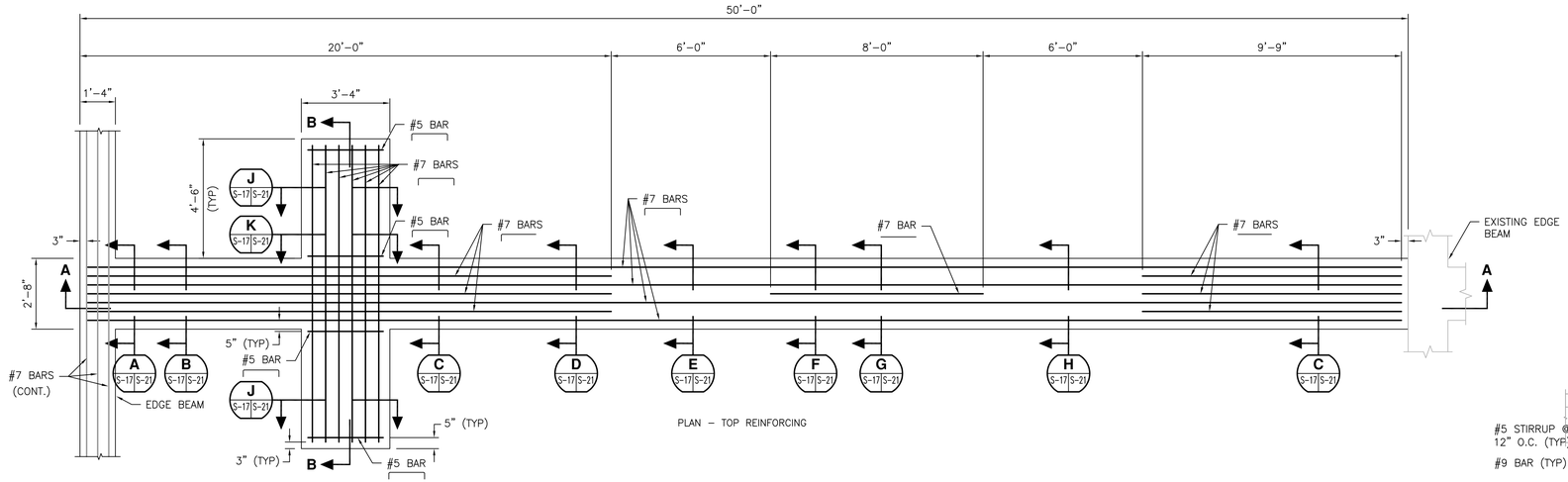

PLAN – TOP REINFORCING

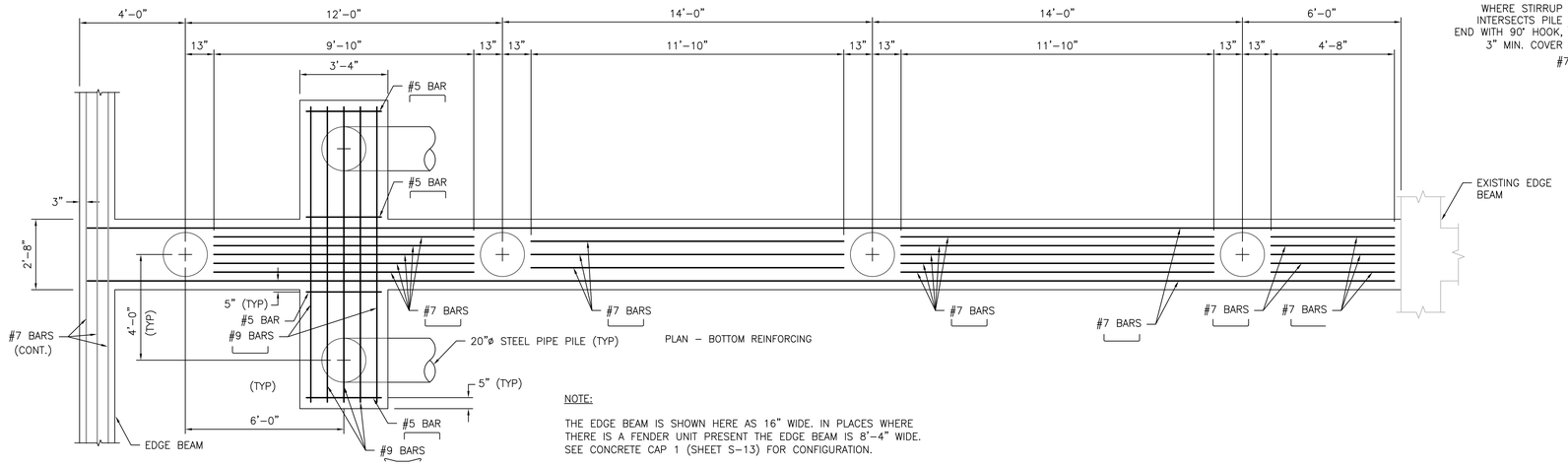

PLAN – BOTTOM REINFORCING

NOTE:

THE EDGE BEAM IS SHOWN HERE AS 16" WIDE. IN PLACES WHERE THERE IS A FENDER UNIT PRESENT THE EDGE BEAM IS 8'-4" WIDE. SEE CONCRETE CAP 1 (SHEET S-13) FOR CONFIGURATION.

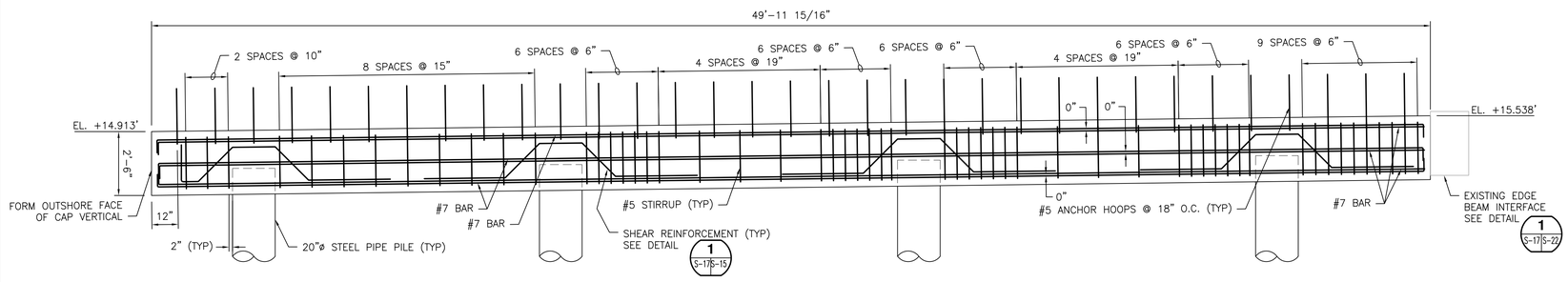

SECTION A-A

CONCRETE PILE CAP #3

SCALE: 3/8"=1'-0"

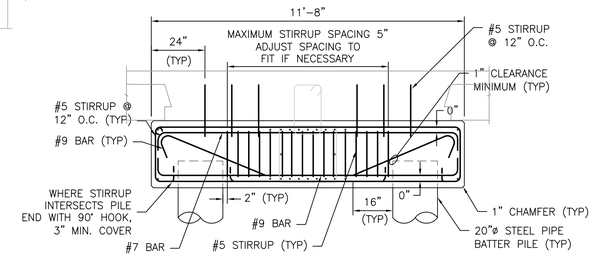

SECTION B-B

SCALE: 3/8"=1'-0"

CONCRETE NOTES:

1. F'c = 5075 psi
2. Fy = 60 ksi
3. 3 INCH MINIMUM COVER UNLESS OTHERWISE NOTED.
4. MINIMUM BAR SPLICE LENGTH SHALL BE AS SHOWN IN SPEC. SECTION 503.
5. ADJUST STIRRUPS AND TIES TO CLEAR BATTER PILE ANCHORS.
6. PROVIDE ROUGHENED SURFACE AT ALL CONSTRUCTION JOINTS FOR GOOD BOND.

3/8"=1'-0" 2 0 2 4 6 SCALE IN FEET

STATE OF MAINE
DEPARTMENT OF TRANSPORTATION

WIN #020806.00

STATE OF MAINE CRAIG D. SAMS No. 13478 LICENSED PROFESSIONAL ENGINEER

SIGNATURE		
13478		
P.E. NUMBER		
08/15/14		
DATE		

		BY	DATE
PROJ. MANAGER	CDS		
DESIGN-DETAILED	MMS	TEQ	7-14
CHECKED-REVIEWED	CDS	CDS	7-14
DESIGN2-DETAILED2			
DESIGN3-DETAILED3			
REVISIONS 1			
REVISIONS 2			
REVISIONS 3			
REVISIONS 4			
FIELD CHANGES			

EASTPORT BREAKWATER REPLACEMENT
EASTPORT, ME
WASHINGTON COUNTY

PILE CAP 3 DETAILS

SHEET NUMBER

S-17

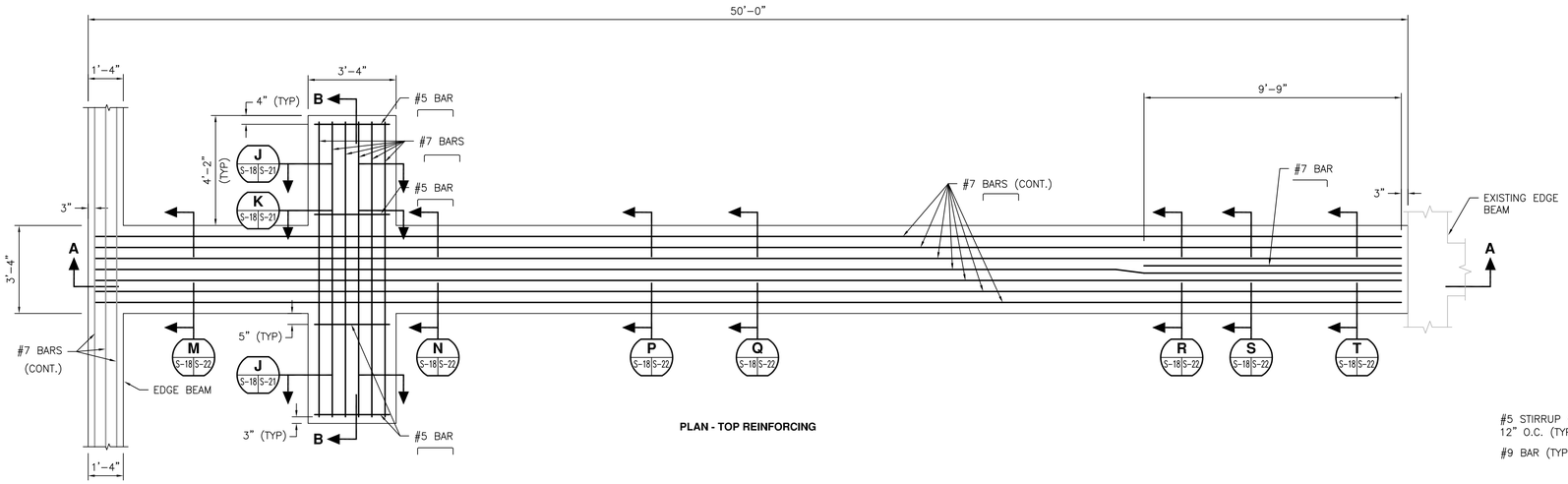

PLAN - TOP REINFORCING

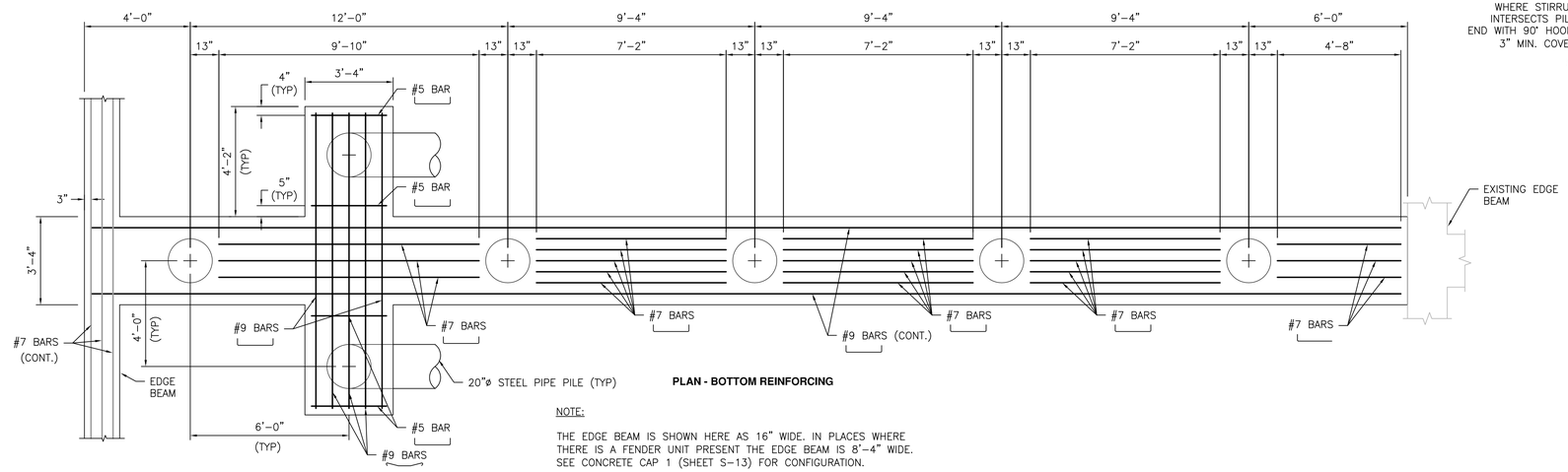

PLAN - BOTTOM REINFORCING

NOTE:

THE EDGE BEAM IS SHOWN HERE AS 16" WIDE. IN PLACES WHERE THERE IS A FENDER UNIT PRESENT THE EDGE BEAM IS 8'-4" WIDE. SEE CONCRETE CAP 1 (SHEET S-13) FOR CONFIGURATION.

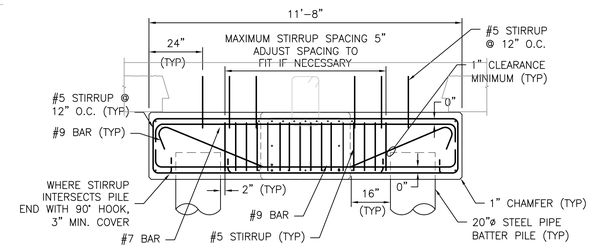

SECTION B-B

SCALE: 3/8"=1'-0"

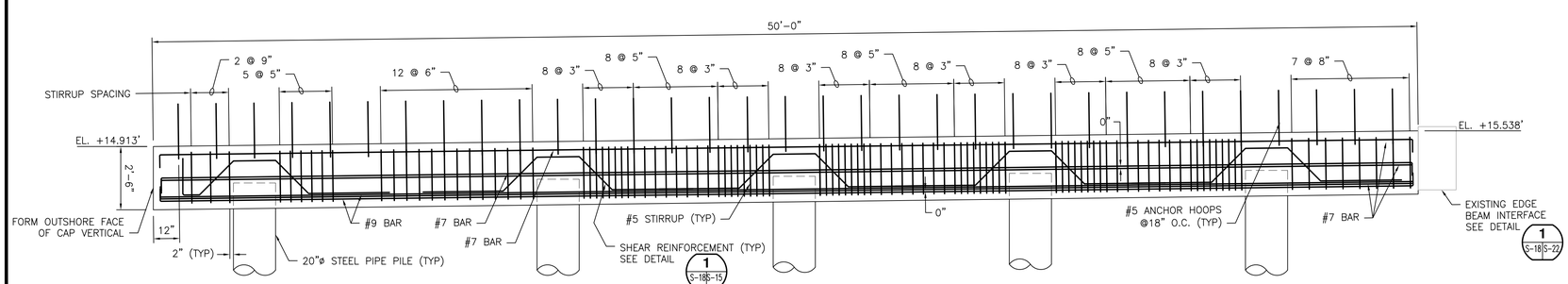

SECTION A-A

CONCRETE PILE CAP #4

SCALE: 3/8"=1'-0"

CONCRETE NOTES:

1. F'c = 5075 psi
2. Fy = 60 ksi
3. 3 INCH MINIMUM COVER UNLESS OTHERWISE NOTED.
4. MINIMUM BAR SPLICE LENGTH SHALL BE AS SHOWN IN SPEC. SECTION 503.
5. ADJUST STIRRUPS AND TIES TO CLEAR BATTER PILE ANCHORS.
6. PROVIDE ROUGHENED SURFACE AT ALL CONSTRUCTION JOINTS FOR GOOD BOND.

3/8"=1'-0" 2 0 2 4 6 SCALE IN FEET

STATE OF MAINE
DEPARTMENT OF TRANSPORTATION

WIN #020806.00

STATE OF MAINE CRAIG D. SAMS No. 13478 LICENSED PROFESSIONAL ENGINEER

SIGNATURE		
P.E. NUMBER	13478	
DATE	08/15/14	

		BY	DATE
PROJ. MANAGER	CDS		
DESIGN-DETAILED	MMS	TEQ	7-14
CHECKED-REVIEWED	CDS	CDS	7-14
DESIGN2-DETAILED2			
DESIGN3-DETAILED3			
REVISIONS 1			
REVISIONS 2			
REVISIONS 3			
REVISIONS 4			
FIELD CHANGES			

EASTPORT BREAKWATER REPLACEMENT
EASTPORT, ME
WASHINGTON COUNTY

PILE CAP 4 DETAILS

SHEET NUMBER

S-18

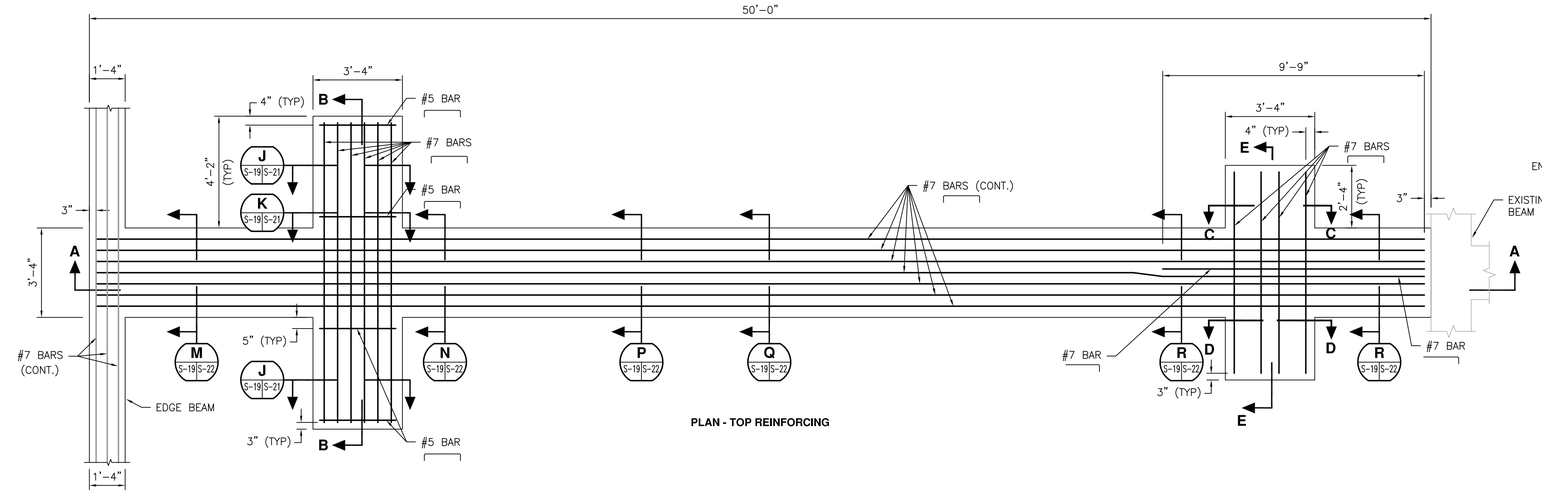

PLAN - TOP REINFORCING

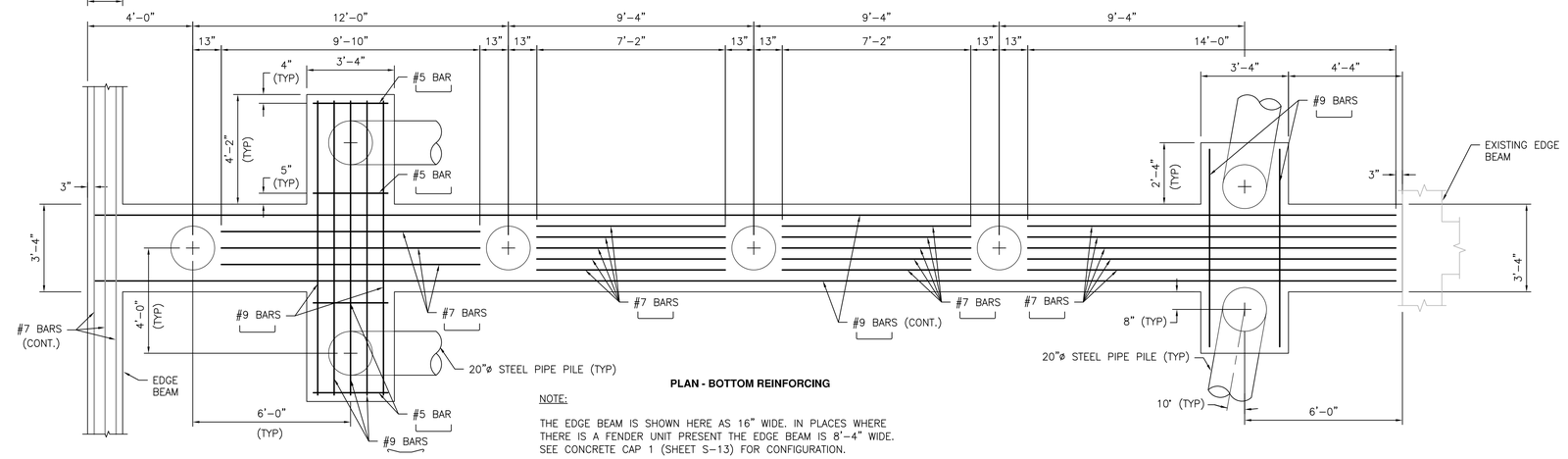

PLAN - BOTTOM REINFORCING

NOTE:

THE EDGE BEAM IS SHOWN HERE AS 16" WIDE. IN PLACES WHERE THERE IS A FENDER UNIT PRESENT THE EDGE BEAM IS 8'-4" WIDE. SEE CONCRETE CAP 1 (SHEET S-13) FOR CONFIGURATION.

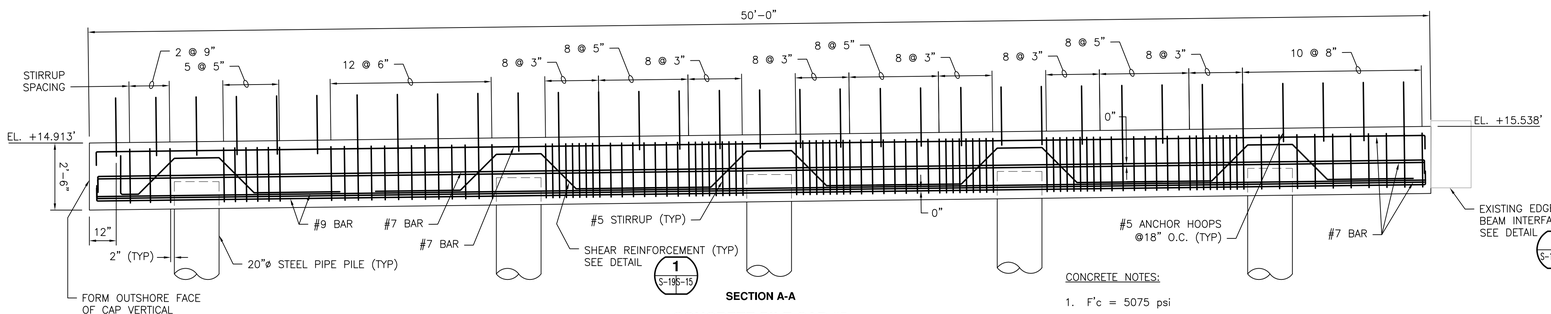

SECTION A-A

CONCRETE PILE CAP #5

SCALE: 3/8"=1'-0"

CONCRETE NOTES:

1. F'c = 5075 psi
2. Fy = 60 ksi
3. 3 INCH MINIMUM COVER UNLESS OTHERWISE NOTED.
4. MINIMUM BAR SPLICE LENGTH SHALL BE AS SHOWN IN SPEC. SECTION 503.
5. ADJUST STIRRUPS AND TIES TO CLEAR BATTER PILE ANCHORS.
6. PROVIDE ROUGHENED SURFACE AT ALL CONSTRUCTION JOINTS FOR GOOD BOND.

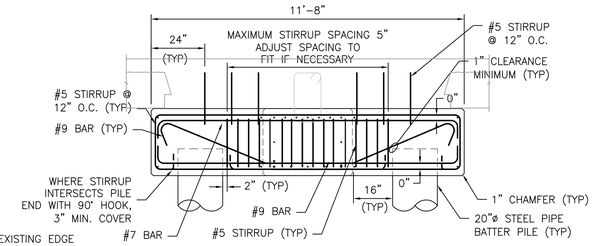

SECTION B-B

SCALE: 3/8"=1'-0"

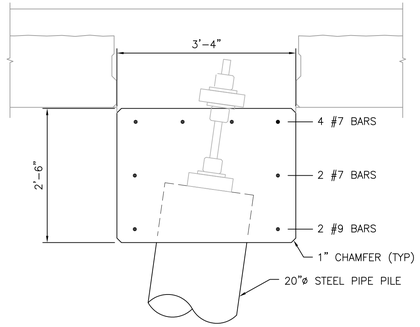

SECTION C-C

SCALE: 3/4"=1'-0"

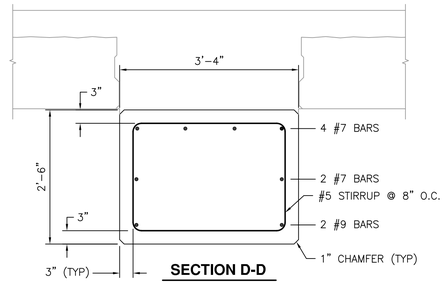

SECTION D-D

SCALE: 3/4"=1'-0"

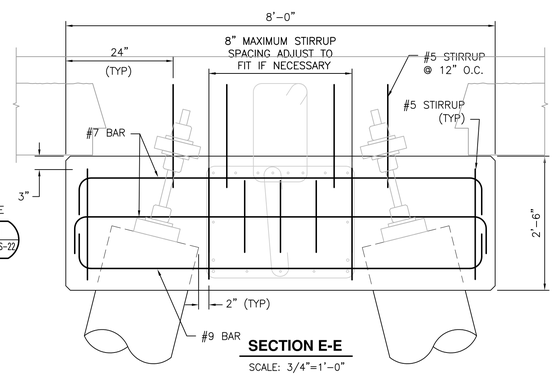

SECTION E-E

SCALE: 3/4"=1'-0"

3/8"=1'-0" 2 0 2 4 6 SCALE IN FEET

STATE OF MAINE
DEPARTMENT OF TRANSPORTATION

WIN #020806.00

STATE OF MAINE CRAIG D. SAMS No. 13478 LICENSED PROFESSIONAL ENGINEER

SIGNATURE		
P.E. NUMBER 13478		
08/15/14		
DATE		

		BY	DATE
PROJ. MANAGER	CDS		
DESIGN-DETAILED	MMS	TEQ	7-14
CHECKED-REVIEWED	CDS	CDS	7-14
DESIGN2-DETAILED2			
DESIGN3-DETAILED3			
REVISIONS 1			
REVISIONS 2			
REVISIONS 3			
REVISIONS 4			
FIELD CHANGES			

EASTPORT BREAKWATER REPLACEMENT
EASTPORT, ME
WASHINGTON COUNTY

PILE CAP 5 DETAILS

SHEET NUMBER

S-19

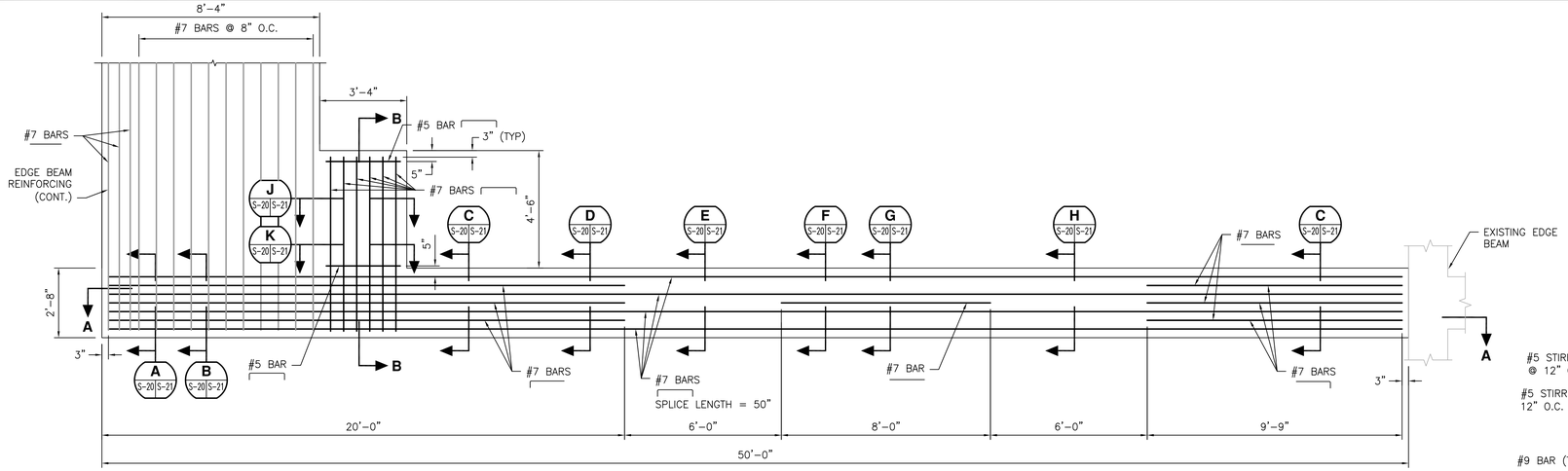

PLAN – TOP REINFORCING

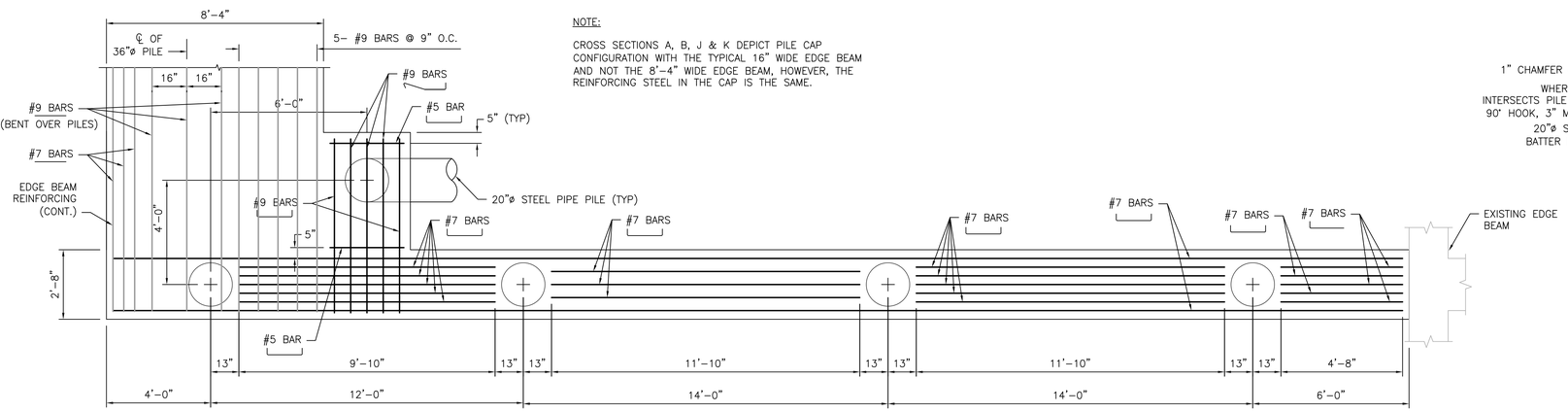

PLAN – BOTTOM REINFORCING

NOTE:

CROSS SECTIONS A, B, J & K DEPICT PILE CAP CONFIGURATION WITH THE TYPICAL 16" WIDE EDGE BEAM AND NOT THE 8'-4" WIDE EDGE BEAM, HOWEVER, THE REINFORCING STEEL IN THE CAP IS THE SAME.

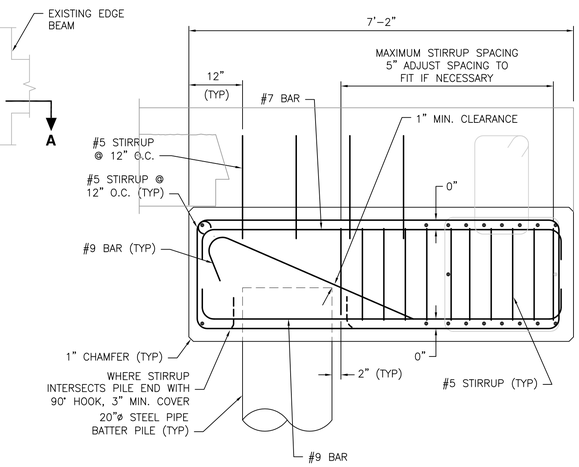

SECTION B-B

SCALE: 3/4"=1'-0"

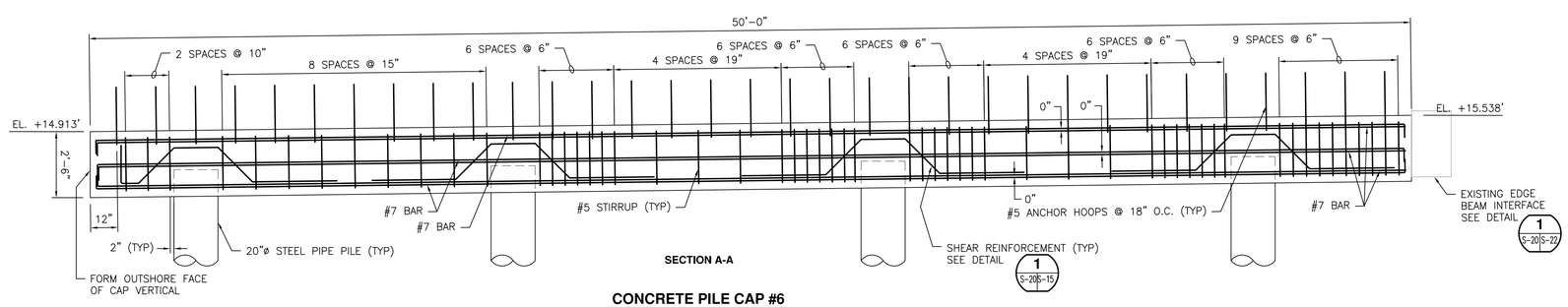

SECTION A-A

CONCRETE PILE CAP #6

SCALE: 3/8"=1'-0"

CONCRETE NOTES:

1. F'c = 5075 psi
2. Fy = 60 ksi
3. 3 INCH MINIMUM COVER UNLESS OTHERWISE NOTED.
4. MINIMUM BAR SPLICE LENGTH SHALL BE AS SHOWN IN SPEC. SECTION 503.
5. ADJUST STIRRUPS AND TIES TO CLEAR BATTER PILE ANCHORS.
6. PROVIDE ROUGHENED SURFACE AT ALL CONSTRUCTION JOINTS FOR GOOD BOND.

3/4"=1'-0" 1 0 1 2 3 SCALE IN FEET

3/8"=1'-0" 2 0 2 4 6 SCALE IN FEET

STATE OF MAINE
DEPARTMENT OF TRANSPORTATION

WIN #020806.00

STATE OF MAINE CRAIG D. SAMS No. 13478 LICENSED PROFESSIONAL ENGINEER

SIGNATURE	
P.E. NUMBER	13478
DATE	08/15/14

	BY	DATE
PROJ. MANAGER	CDS	
DESIGN-DETAILED	TEQ	7-14
CHECKED-REVIEWED	MMS	7-14
DESIGN2-DETAILED2	CDS	
DESIGN3-DETAILED3	CDS	
REVISIONS 1		
REVISIONS 2		
REVISIONS 3		
REVISIONS 4		
FIELD CHANGES		

EASTPORT BREAKWATER REPLACEMENT
EASTPORT, ME
WASHINGTON COUNTY

PILE CAP 6 DETAILS

SHEET NUMBER

S-20

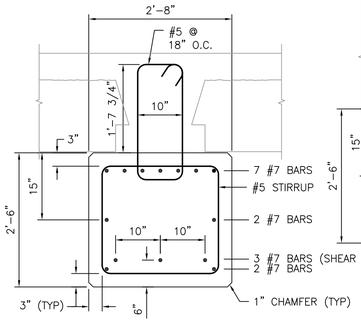

A SECTION
S-15 S-21
SCALE: 3/4"=1'-0"
S-16, S-17, S-20

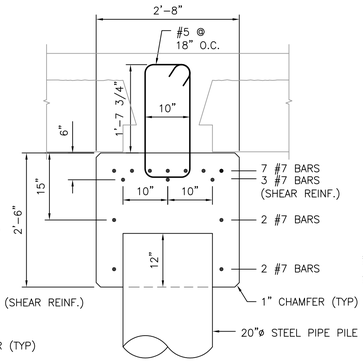

B SECTION
S-15 S-21
SCALE: 3/4"=1'-0"
S-16, S-17, S-20

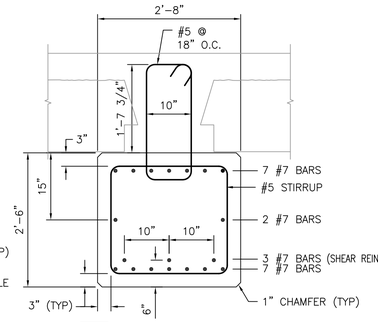

C SECTION
S-15 S-21
SCALE: 3/4"=1'-0"
S-16, S-17, S-20

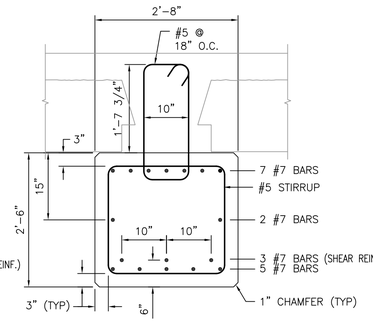

D SECTION
S-15 S-21
SCALE: 3/4"=1'-0"
S-16, S-17, S-20

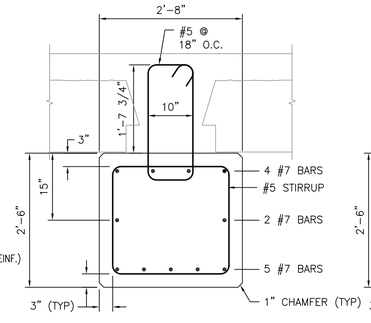

E SECTION
S-15 S-21
SCALE: 3/4"=1'-0"
S-16, S-17, S-20

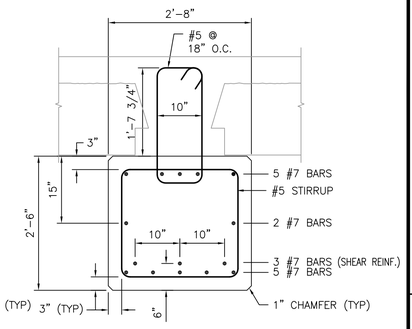

F SECTION
S-15 S-21
SCALE: 3/4"=1'-0"
S-16, S-17, S-20

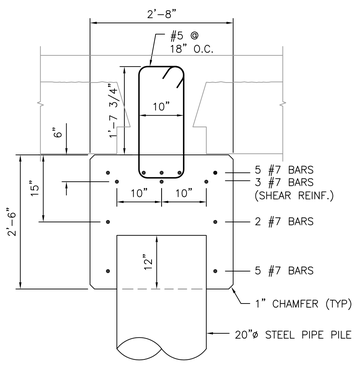

G SECTION
S-15 S-21
SCALE: 3/4"=1'-0"
S-16, S-17, S-20

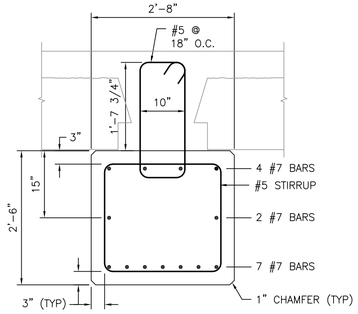

H SECTION
S-15 S-21
SCALE: 3/4"=1'-0"
S-16, S-17, S-20

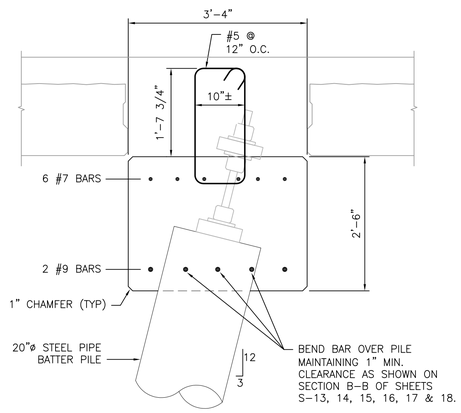

J SECTION
S-15 S-21
SCALE: 3/4"=1'-0"
S-16, S-17, S-18, S-19, S-20

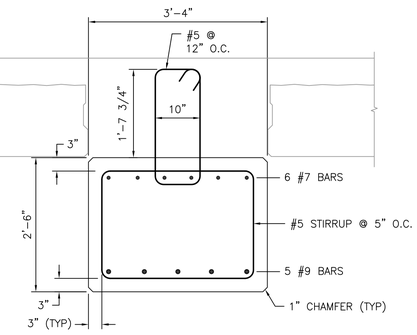

K SECTION
S-15 S-21
SCALE: 3/4"=1'-0"
S-16, S-17, S-18, S-19, S-20

CONCRETE NOTES:

1. F'c = 5075 psi
2. Fy = 60 ksi
3. 3 INCH MINIMUM COVER UNLESS OTHERWISE NOTED.
4. MINIMUM BAR SPLICE LENGTH SHALL BE AS SHOWN IN SPEC. SECTION 503.
5. ADJUST STIRRUPS AND TIES TO CLEAR BATTER PILE ANCHORS.
6. PROVIDE ROUGHENED SURFACE AT ALL CONSTRUCTION JOINTS FOR GOOD BOND.

3/4"=1'-0" 1 0 1 2 3
SCALE IN FEET

STATE OF MAINE
DEPARTMENT OF TRANSPORTATION

WIN #020806.00

STATE OF MAINE
CRAIG D. SAMS
No. 13478
LICENSED PROFESSIONAL ENGINEER

SIGNATURE		
13478		
P.E. NUMBER		
08/15/14		
DATE		

		BY	DATE
PROJ. MANAGER	CDS		
DESIGN-DETAILED	MMS	TEQ	7-14
CHECKED-REVIEWED	CDS	CDS	7-14
DESIGN2-DETAILED2			
DESIGN3-DETAILED3			
REVISIONS 1			
REVISIONS 2			
REVISIONS 3			
REVISIONS 4			
FIELD CHANGES			

EASTPORT BREAKWATER REPLACEMENT
EASTPORT, ME
WASHINGTON COUNTY

PILE CAP DETAILS

SHEET NUMBER

S-21

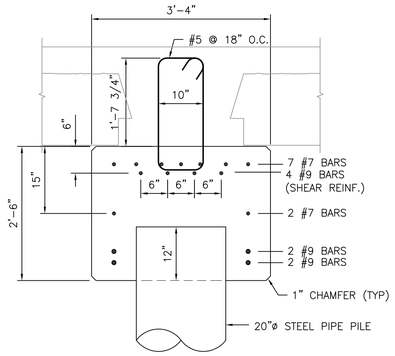

M S-18 S-22 — **SECTION**
SCALE: 3/4"=1'-0"
S-19

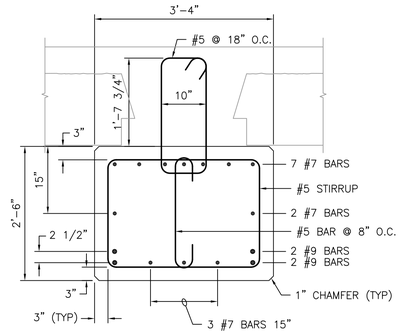

N S-18 S-22 — **SECTION**
SCALE: 3/4"=1'-0"
S-19

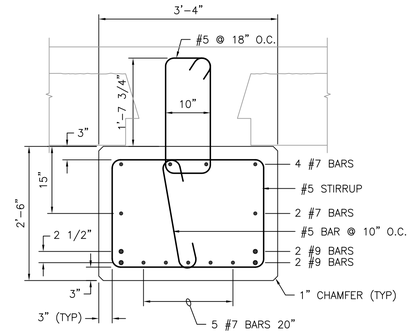

P S-18 S-22 — **SECTION**
SCALE: 3/4"=1'-0"
S-19

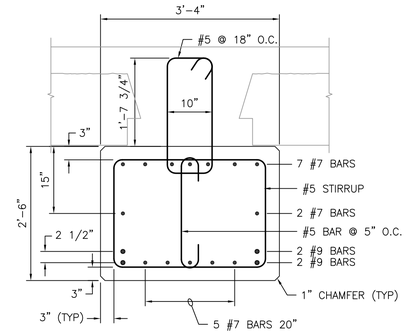

Q S-18 S-22 — **SECTION**
SCALE: 3/4"=1'-0"
S-19

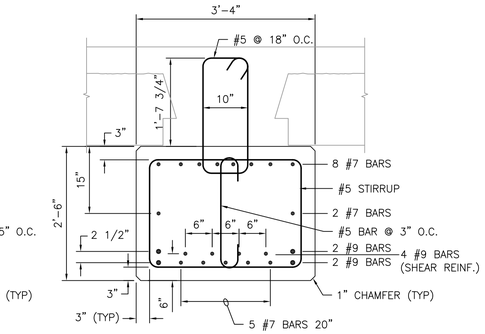

R S-18 S-22 — **SECTION**
SCALE: 3/4"=1'-0"
S-19

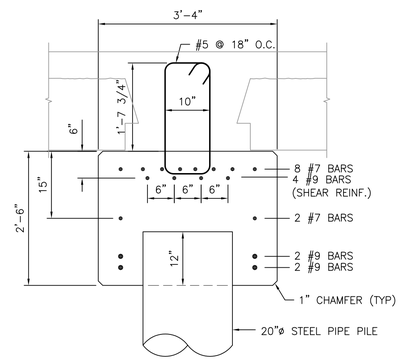

S S-18 S-22 — **SECTION**
SCALE: 3/4"=1'-0"
S-19

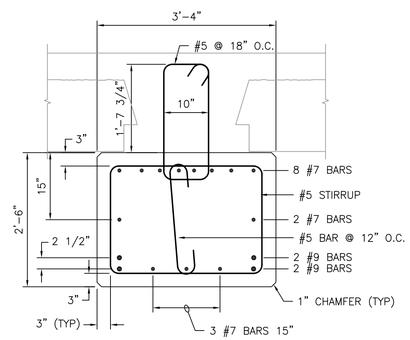

T S-18 S-22 — **SECTION**
SCALE: 3/4"=1'-0"
S-19

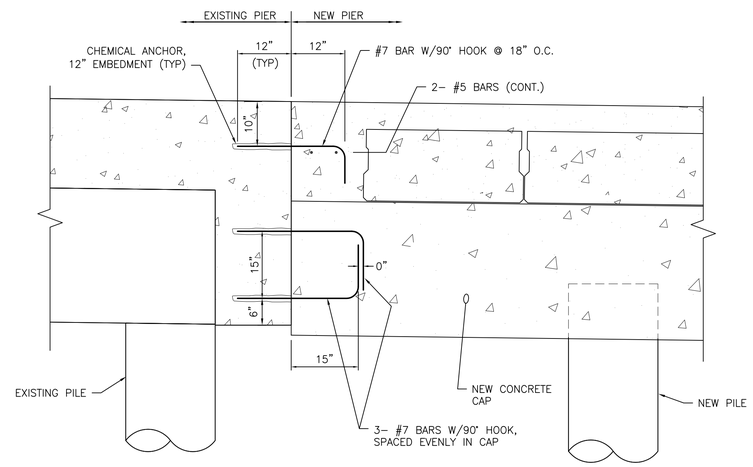

1 S-15 S-22 — **PILE CAP AND DECK INTERFACE WITH EXISTING PIER**
SCALE: 3/4"=1'-0"
S-16, S-17, S-18, S-19, S-20

CONCRETE NOTES:

1. F'c = 5075 psi
2. Fy = 60 ksi
3. 3 INCH MINIMUM COVER UNLESS OTHERWISE NOTED.
4. MINIMUM BAR SPLICE LENGTH SHALL BE AS SHOWN IN SPEC. SECTION 503.
5. ADJUST STIRRUPS AND TIES TO CLEAR BATTER PILE ANCHORS.
6. PROVIDE ROUGHENED SURFACE AT ALL CONSTRUCTION JOINTS FOR GOOD BOND.

3/4"=1'-0" 1 0 1 2 3
SCALE IN FEET

STATE OF MAINE
DEPARTMENT OF TRANSPORTATION
WIN #020806.00

STATE OF MAINE
CRAIG D. SAMS
No. 13478
LICENSED PROFESSIONAL ENGINEER

SIGNATURE		
13478		
P.E. NUMBER		
08/15/14		
DATE		

		BY	DATE
PROJ. MANAGER	CDS		
DESIGN-DETAILED	MMS	TEQ	7-14
CHECKED-REVIEWED	CDS	CDS	7-14
DESIGN2-DETAILED2			
DESIGN3-DETAILED3			
REVISIONS 1			
REVISIONS 2			
REVISIONS 3			
REVISIONS 4			
FIELD CHANGES			

EASTPORT BREAKWATER REPLACEMENT
EASTPORT, ME
WASHINGTON COUNTY

PILE CAP DETAILS

SHEET NUMBER
S-22

LEGEND

- (25) PILE BENT DESIGNATION
- (B) PILE ROW DESIGNATION
- 30" CLEAT
- 50T BOLLARD
- LIGHT POLE W/RECEPTACLE
- HYDRANT
- 5000 LB CRANE (BY OTHERS)
- DIRECTION OF DECK PITCH FOR DRAINAGE

NOTES:

1. FINAL GRADE OF DECK SHALL SLOPE AS SHOWN FOR DRAINAGE AT 1% (.01'/FT.).
2. AT EAST FACE PITCH FINAL GRADE TO DRAIN THROUGH SCUPPERS IN CURB.

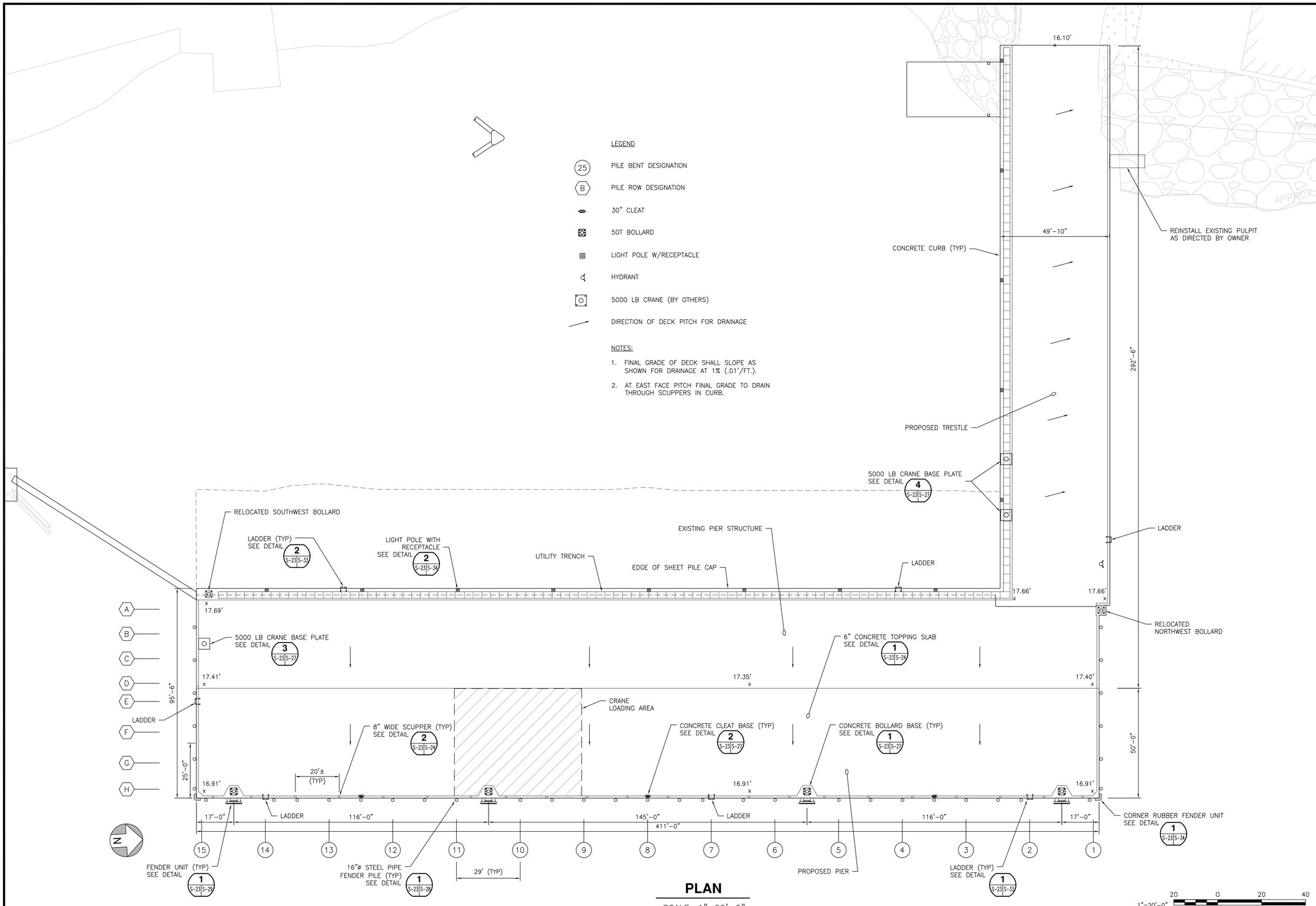

PLAN

SCALE: 1"=20'-0"

STATE OF MAINE
DEPARTMENT OF TRANSPORTATION

WIN #020806.00

STATE OF MAINE
CRAIG D. SAMS
No. 13478
LICENSED PROFESSIONAL ENGINEER

SIGNATURE		
P.E. NUMBER	13478	
DATE	08/15/14	

		BY	DATE
PROJ. MANAGER	CDS		
DESIGN-DETAILED	MMS	TEQ	7-14
CHECKED-REVIEWED	CDS	CDS	7-14
DESIGN2-DETAILED2			
DESIGN3-DETAILED3			
REVISIONS 1			
REVISIONS 2			
REVISIONS 3			
REVISIONS 4			
FIELD CHANGES			

EASTPORT BREAKWATER REPLACEMENT
EASTPORT, ME
WASHINGTON COUNTY

DECK PLAN

SHEET NUMBER

S-23

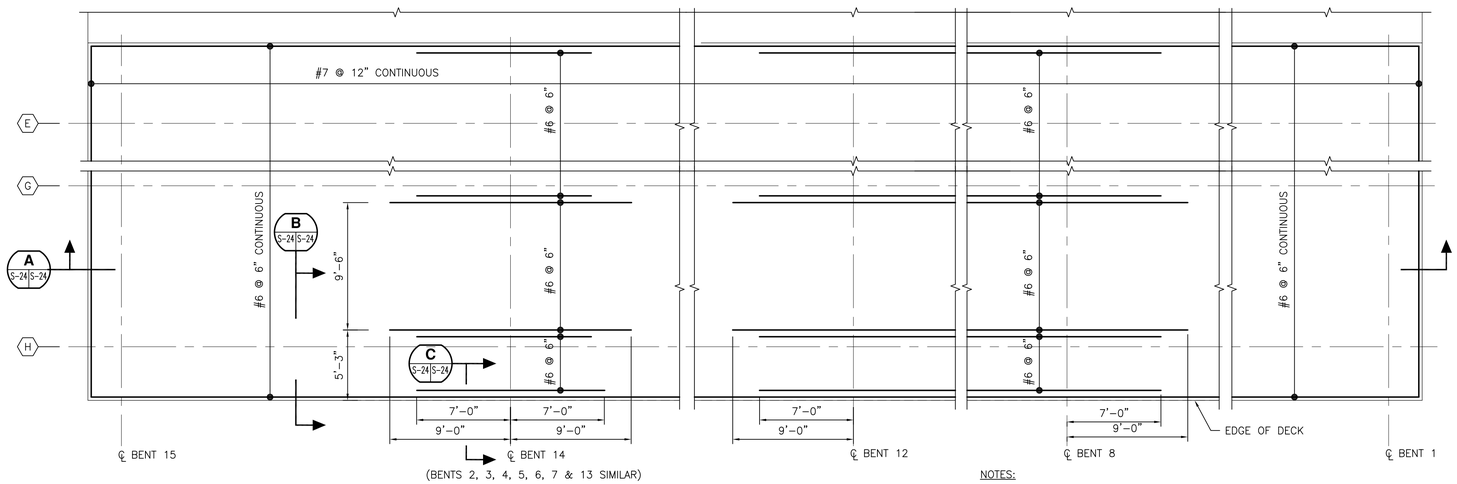

(BENTS 2, 3, 4, 5, 6, 7 & 13 SIMILAR)

1 S-23 S-24 TYPICAL CONCRETE TOPPING SLAB REINFORCEMENT - PLAN

SCALE: 3/16"=1'-0"

NOTES:

1. REINFORCING SHOWN CENTERED OVER BENT 14 IS TYPICAL FOR BENTS 2 THROUGH 7 & 13.
2. SPACE BARS EVENLY.

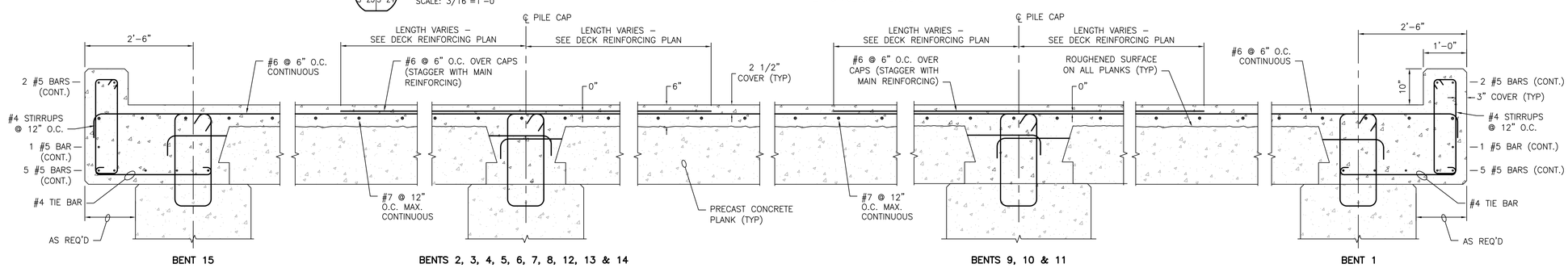

A S-24 S-24 CONCRETE DECK SECTION AT PILE CAPS

SCALE: 3/4"=1'-0"

NOTES:

1. DECK TOPPING SHALL BE PLACED IN INCREMENTS OF NO MORE THAN 58'x50' (2 BAYS).
2. PLACING OF TOPPING IN BAYS ADJACENT TO FRESHLY PLACED TOPPING SHALL NOT BE ALLOWED UNTIL FRESH CONCRETE HAS CURED FOR 7 DAYS.
3. CONTRACTOR SHALL SUBMIT A CONCRETE PLACEMENT PLAN FOR TOPPING CONCRETE FOR APPROVAL BY OWNER.

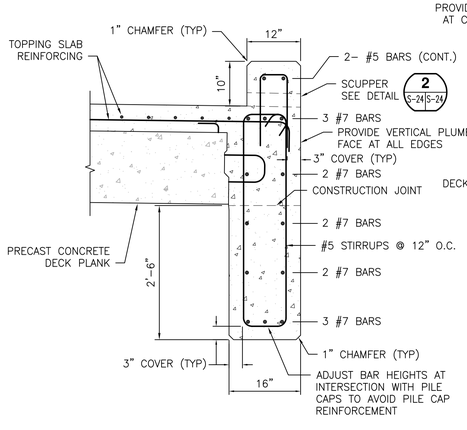

B S-24 S-24 CONCRETE DECK SECTION AT EDGE BEAM

SCALE: 3/4"=1'-0"

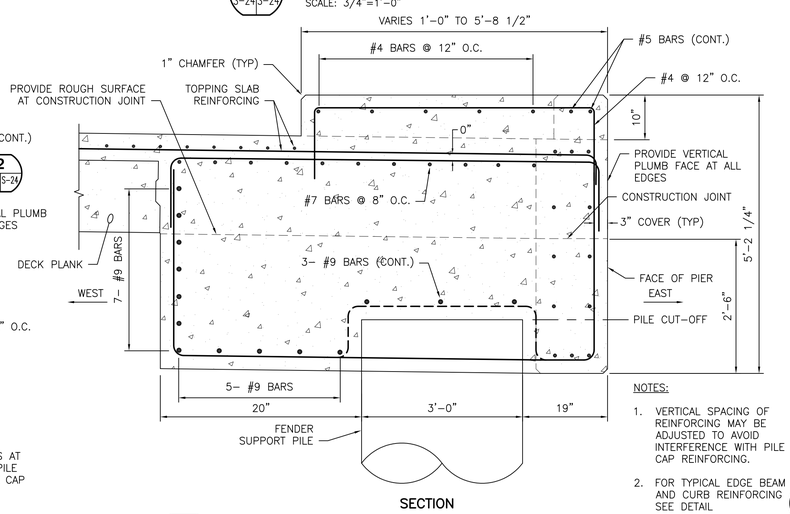

NOTES:

1. VERTICAL SPACING OF REINFORCING MAY BE ADJUSTED TO AVOID INTERFERENCE WITH PILE CAP REINFORCING.
2. FOR TYPICAL EDGE BEAM AND CURB REINFORCING SEE DETAIL B S-24 S-24
3. BOLLARD ANCHORAGE NOT SHOWN, SEE SHEET S-27

C S-24 S-24 EDGE BEAM AT FENDER PANEL SUPPORT PILES

SCALE: 3/4"=1'-0"

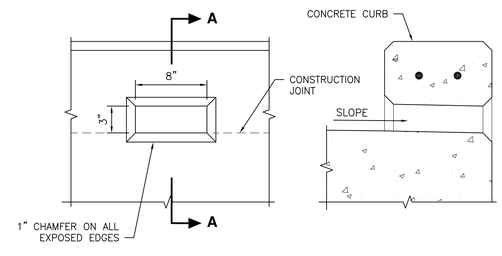

FRONT ELEVATION

SECTION A–A

NOTE:

ADJUST SCUPPER SPACING AS NECESSARY TO AVOID CURB REINFORCING STEEL (SEE DECK PLAN FOR LOCATIONS).

2 S-23 S-24 SCUPPER DETAIL

SCALE: 1 1/2"=1'-0"

1 1/2"=1'-0" 1 0.5 0 1 SCALE IN FEET

1/4"=1'-0" 4 0 4 8 SCALE IN FEET

3/4"=1'-0" 1 0 1 2 3 SCALE IN FEET

STATE OF MAINE
DEPARTMENT OF TRANSPORTATION

WIN #020806.00

STATE OF MAINE CRAIG D. SAMS No. 13478 LICENSED PROFESSIONAL ENGINEER

		SIGNATURE	
		13478	
		P.E. NUMBER	
		08/15/14	
		DATE	

		BY	DATE
PROJ. MANAGER	CDS		
DESIGN-DETAILED	MMS	TEQ	7–14
CHECKED-REVIEWED	CDS	CDS	7–14
DESIGN2-DETAILED2			
DESIGN3-DETAILED3			
REVISIONS 1			
REVISIONS 2			
REVISIONS 3			
REVISIONS 4			
FIELD CHANGES			

EASTPORT BREAKWATER REPLACEMENT
EASTPORT, ME
WASHINGTON COUNTY

DECK SLAB DETAILS

SHEET NUMBER

S-24

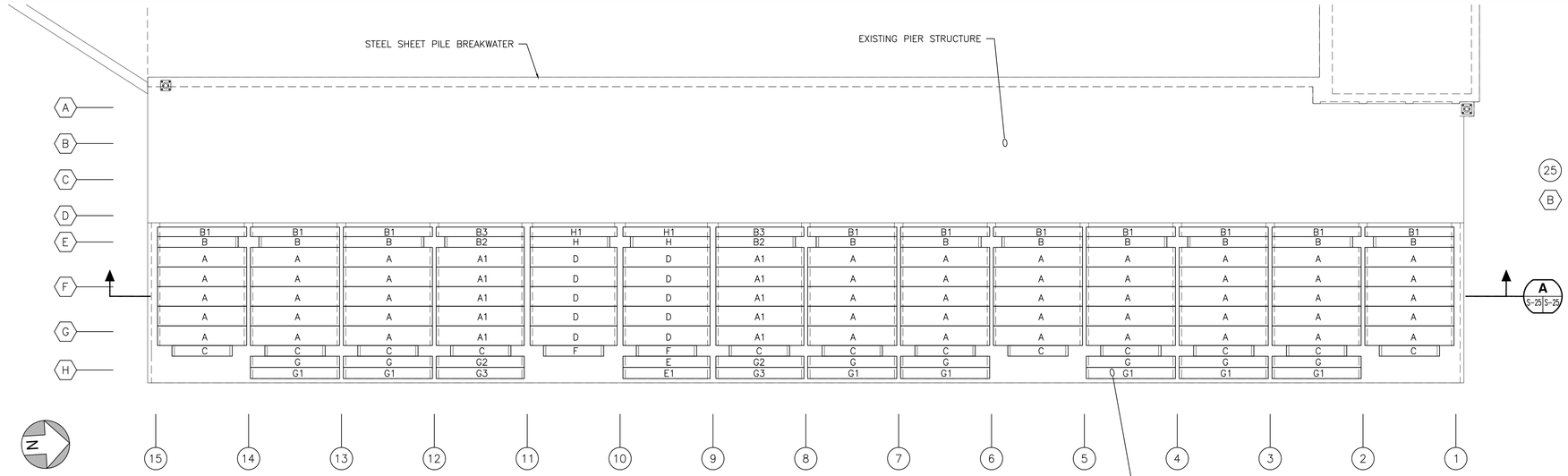

LEGEND

25 PILE BENT DESIGNATION

B PILE ROW DESIGNATION

PLAN

SCALE: 1"=20'-0"

1"=20'-0" 20 0 20 40 SCALE IN FEET

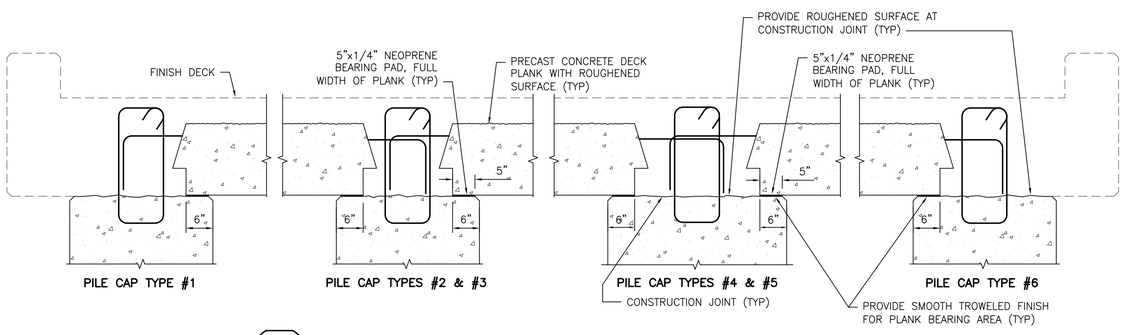

A S-25 S-25 PRECAST CONCRETE DECK PLANK CONNECTION

SCALE: 3/4"=1'-0"

3/4"=1'-0" 1 0 1 2 3 SCALE IN FEET

PRECAST DECK PLANK SCHEDULE								
					REINFORCING (GRADE 60)			
PLANK TYPE	PLANK WIDTH	PLANK LENGTH	PLANK DEPTH	FINAL PRESTRESS (KIPS)	TOP STEEL	BOTTOM STEEL	STIRRUPS	QUANTITY
A	6' - 1 3/8"	27' - 10"	16"	485.7	4 - # 6	-	# 4 @ 12 X 2	50
A1	6' - 1 3/8"	27' - 6"	16"	485.7	4 - # 6	-	# 4 @ 12 X 2	10
B	3' - 3 3/4"	25' - 2"	16"	276.7	4 - # 6	-	# 4 @ 12	10
B1	2' - 11 3/4"	27' - 10"	16"	222.8	4 - # 6	-	# 4 @ 12	10
B2	3' - 3 3/4"	24' - 10"	16"	276.7	4 - # 6	-	# 4 @ 12	2
B3	2' - 11 3/4"	27' - 6"	16"	222.8	4 - # 6	-	# 4 @ 12	2
C	3' - 3 3/4"	18' - 10"	16"	276.7	4 - # 6	-	# 4 @ 12	12
D	6' - 1 3/8"	27' - 2"	16"	805.4	4 - # 6	-	# 4 @ 12 X 2	10
E	3' - 5 3/4"	27' - 2"	16"	492.2	4 - # 6	-	# 4 @ 12 1-#4 TIE BAR	1
E1	3' - 5 3/4"	27' - 2"	16"	492.2	4 - # 6	-	# 4 @ 12 1-#4 TIE BAR # 6 HOOP @12" AT SIDE	1
F	3' - 3 3/4"	18' - 10"	16"	496.3	4 - # 6	-	# 4 @ 12 1-#4 TIE BAR	2
G	3' - 5 3/4"	27' - 10"	16"	269.5	4 - # 6	-	# 4 @ 12	7
G1	3' - 3 3/4"	27' - 10"	16"	269.5	4 - # 6	-	# 4 @ 12 # 6 HOOP @12" AT SIDE	7
G2	3' - 5 3/4"	27' - 6"	16"	269.5	4 - # 6	-	# 4 @ 12	2
G3	3' - 3 3/4"	27' - 6"	16"	269.5	4 - # 6	-	# 4 @ 12 # 6 HOOP @12" AT SIDE	2
H	3' - 3 3/4"	24' - 10"	16"	496.3	4 - # 6	-	# 4 @ 12	2
H1	2' - 11 3/4"	27' - 6"	16"	444.3	4 - # 6	-	# 4 @ 12 # 6 HOOP @12" AT SIDE	2

STATE OF MAINE
DEPARTMENT OF TRANSPORTATION

WIN #020806.00

STATE OF MAINE CRAIG D. SAMS No. 13478 LICENSED PROFESSIONAL ENGINEER

SIGNATURE	
P.E. NUMBER	13478
DATE	08/15/14

	BY	DATE
PROJ. MANAGER	CDS	
DESIGN-DETAILED	MMS	7-14
CHECKED-REVIEWED	CDS	7-14
DESIGN2-DETAILED2		
DESIGN3-DETAILED3		
REVISIONS 1	TEQ	
REVISIONS 2	CDS	
REVISIONS 3		
REVISIONS 4		
FIELD CHANGES		

EASTPORT BREAKWATER REPLACEMENT
EASTPORT, ME
WASHINGTON COUNTY

DECK PLANK PLAN

SHEET NUMBER

S-25

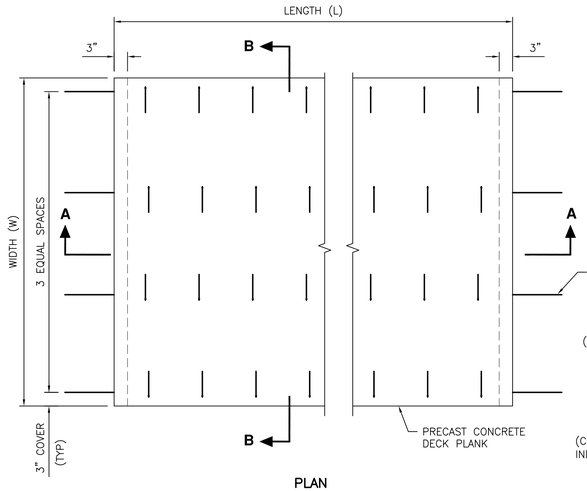

PLAN

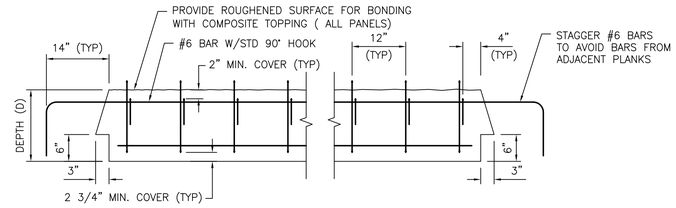

SECTION A–A

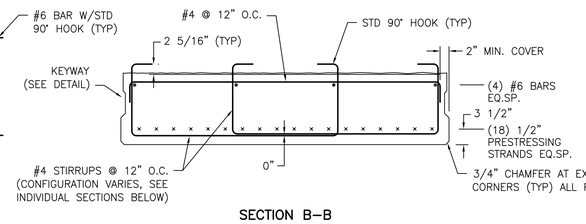

SECTION B–B

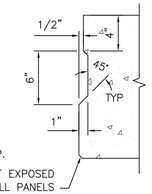

KEYWAY DETAIL

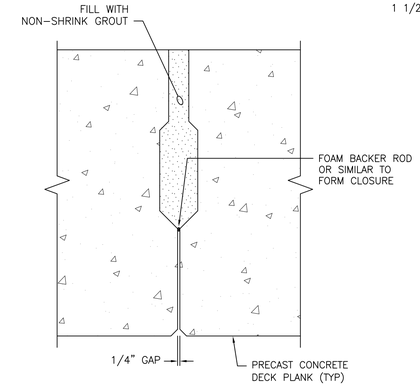

3/4"=1'-0" 1 0 1 2 3 SCALE IN FEET

1 1/2"=1'-0" 1 0.5 0 1 SCALE IN FEET

1 S-25 S-26 **TYPICAL PRECAST CONCRETE DECK PLANK DETAIL**

SCALE: 3/4"=1'-0"

TYPICAL JOINT BETWEEN PLANKS

SCALE: 1 1/2"=1'-0"

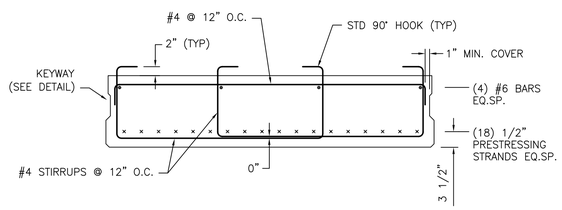

PRECAST CONCRETE DECK PLANK TYPE "A" & "A1" (SECTION)

SCALE: 3/4"=1'-0"

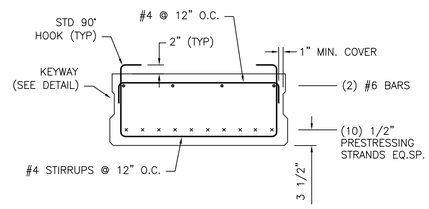

PRECAST CONCRETE DECK PLANK TYPE "B" & "B2" (SECTION)

SCALE: 3/4"=1'-0"

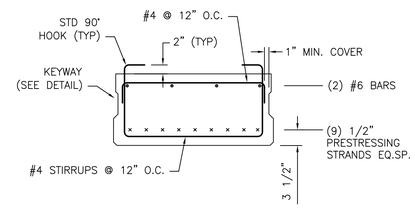

PRECAST CONCRETE DECK PLANK TYPE "B1" & "B3" (SECTION)

SCALE: 3/4"=1'-0"

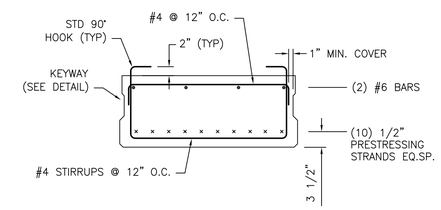

PRECAST CONCRETE DECK PLANK TYPE "C" (SECTION)

SCALE: 3/4"=1'-0"

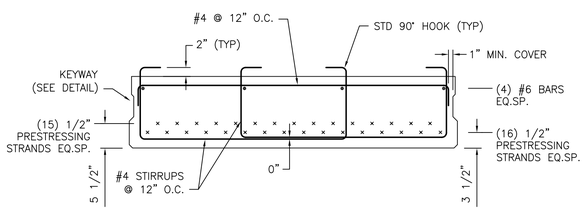

PRECAST CONCRETE DECK PLANK TYPE "D" (SECTION)

SCALE: 3/4"=1'-0"

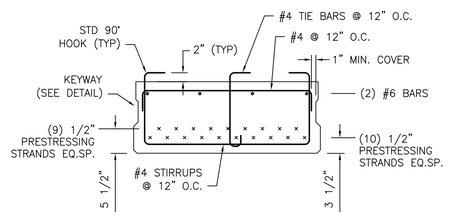

PRECAST CONCRETE DECK PLANK TYPE "E" (SECTION)

SCALE: 3/4"=1'-0"

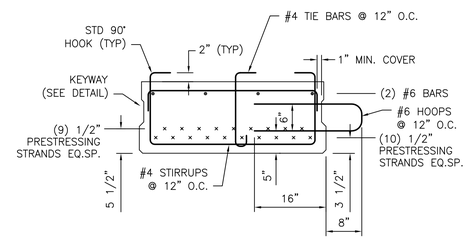

PRECAST CONCRETE DECK PLANK TYPE "E1" (SECTION)

SCALE: 3/4"=1'-0"

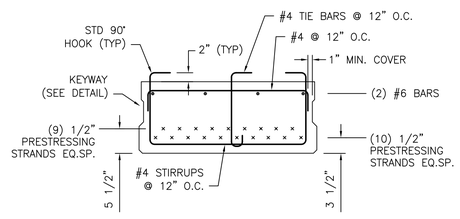

PRECAST CONCRETE DECK PLANK TYPE "F" (SECTION)

SCALE: 3/4"=1'-0"

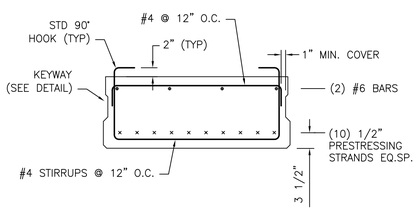

PRECAST CONCRETE DECK PLANK TYPE "G" & "G2" (SECTION)

SCALE: 3/4"=1'-0"

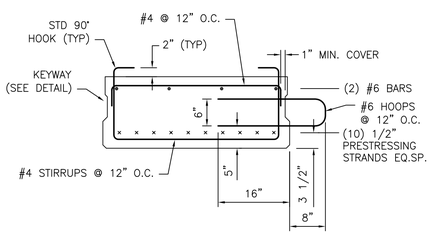

PRECAST CONCRETE DECK PLANK TYPE "G1" & "G3" (SECTION)

SCALE: 3/4"=1'-0"

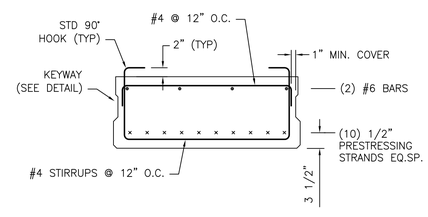

PRECAST CONCRETE DECK PLANK TYPE "H" (SECTION)

SCALE: 3/4"=1'-0"

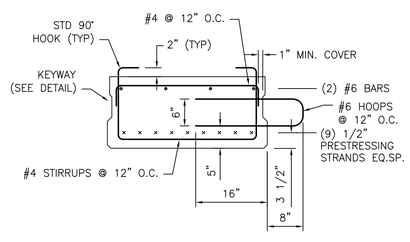

PRECAST CONCRETE DECK PLANK TYPE "H1" (SECTION)

SCALE: 3/4"=1'-0"

STATE OF MAINE
DEPARTMENT OF TRANSPORTATION

WIN #020806.00

STATE OF MAINE CRAIG D. SAMS No. 13478 LICENSED PROFESSIONAL ENGINEER

SIGNATURE			
13478			
P.E. NUMBER			
08/15/14			
DATE			

		BY	DATE
PROJ. MANAGER	CDS		
DESIGN-DETAILED	MMS	TEQ	7-14
CHECKED-REVIEWED	CDS	CDS	7-14
DESIGN2-DETAILED2			
DESIGN3-DETAILED3			
REVISIONS 1			
REVISIONS 2			
REVISIONS 3			
REVISIONS 4			
FIELD CHANGES			

EASTPORT BREAKWATER REPLACEMENT
EASTPORT, ME
WASHINGTON COUNTY

DECK PLANK DETAILS

SHEET NUMBER

S-26

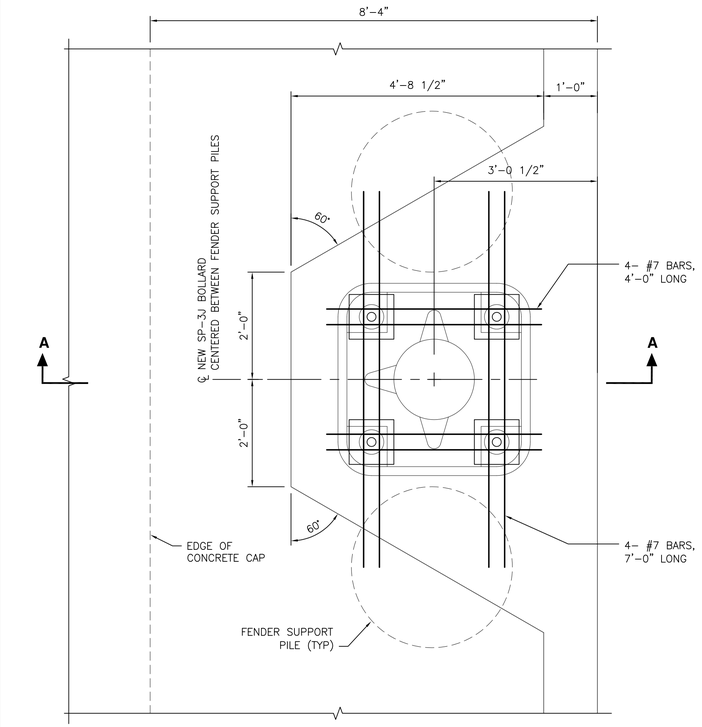

PLAN

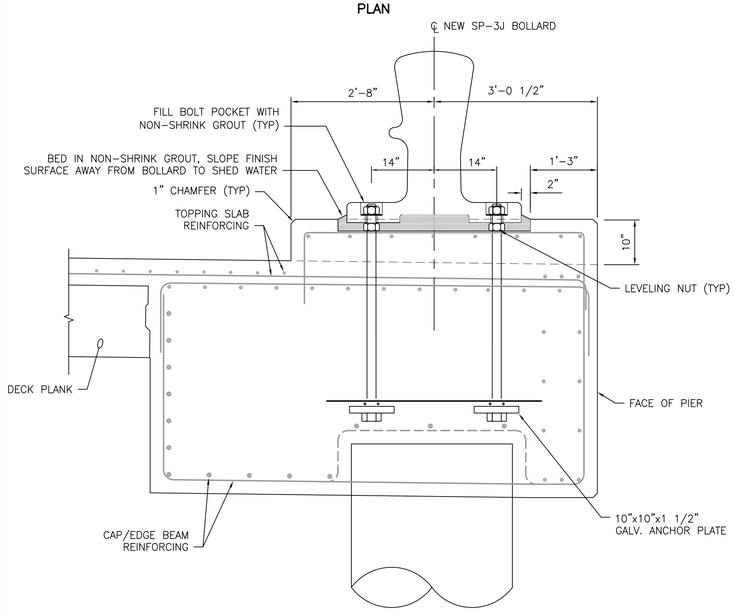

SECTION A–A

1 S-23 S-27 **CONCRETE DECK DETAILS AT BOLLARD**

SCALE: 3/4"=1'-0"

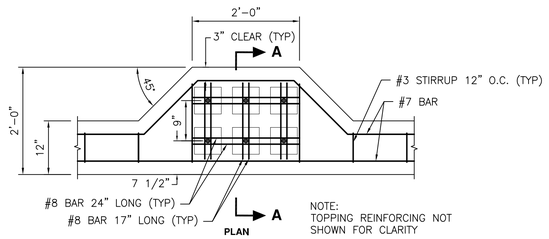

PLAN

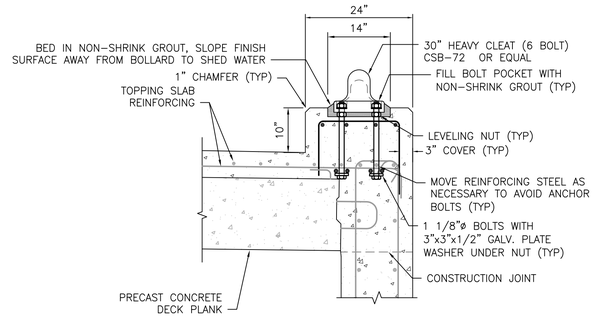

SECTION A-A

2 S-23 S-27 **CLEAT REINFORCEMENT DETAIL**

SCALE: 3/4"=1'-0"

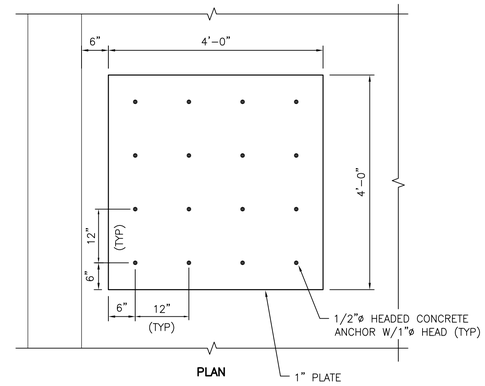

PLAN

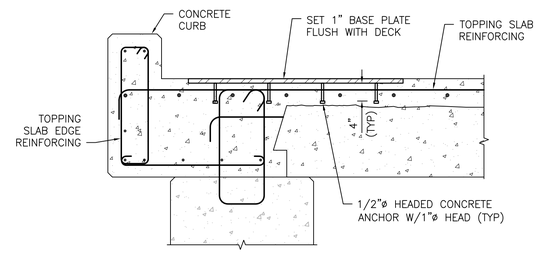

SECTION @ BENT 15

3 S-23 S-27 **CRANE BASE PLATE DETAIL**

SCALE: 3/4"=1'-0"

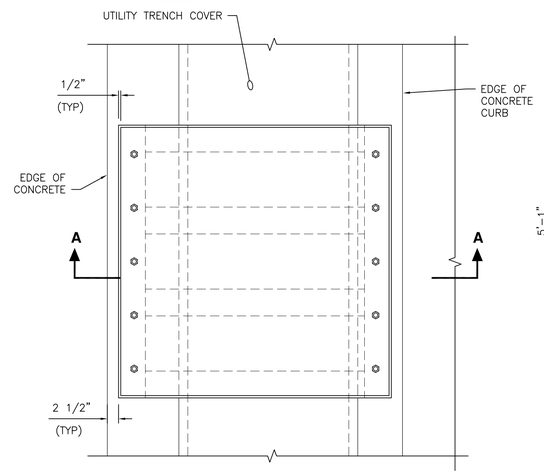

PLAN

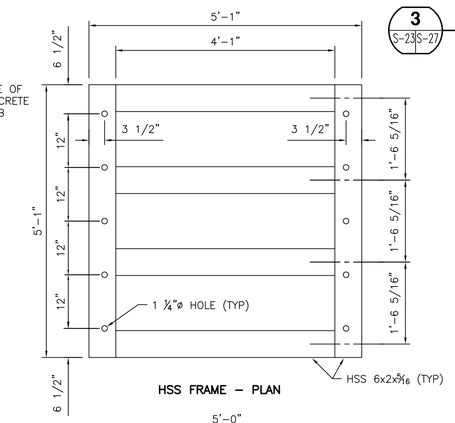

HSS FRAME – PLAN

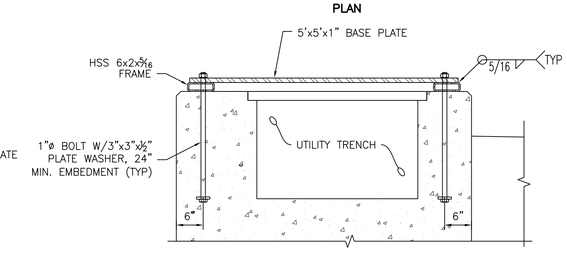

SECTION A–A

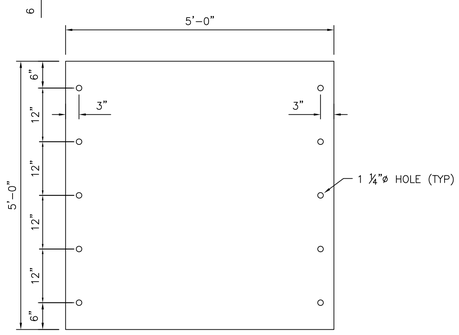

1" STEEL BASE PLATE – PLAN

4 S-23 S-27 **CRANE BASE PLATE DETAIL**

SCALE: 3/4"=1'-0"

3/4"=1'-0" 1 0 1 2 3 SCALE IN FEET

STATE OF MAINE
DEPARTMENT OF TRANSPORTATION

WIN #020806.00

STATE OF MAINE CRAIG D. SAMS No. 13478 LICENSED PROFESSIONAL ENGINEER

SIGNATURE		
13478		
P.E. NUMBER		
08/15/14		
DATE		

		BY	DATE
PROJ. MANAGER	CDS		
DESIGN-DETAILED	MMS	TEQ	7-14
CHECKED-REVIEWED	CDS	CDS	7-14
DESIGN2-DETAILED2			
DESIGN3-DETAILED3			
REVISIONS 1			
REVISIONS 2			
REVISIONS 3			
REVISIONS 4			
FIELD CHANGES			

EASTPORT BREAKWATER REPLACEMENT
EASTPORT, ME
WASHINGTON COUNTY

DECK DETAILS

SHEET NUMBER

S-27

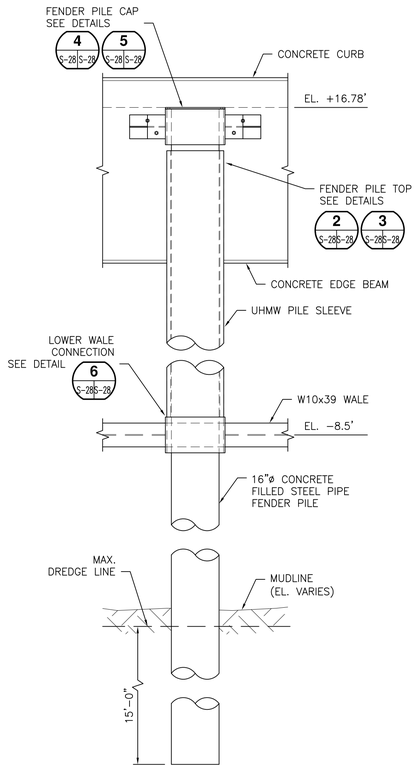

1 S-23 S-28 **STEEL PIPE FENDER PILE DETAIL**

SCALE: 1/2"=1'-0"

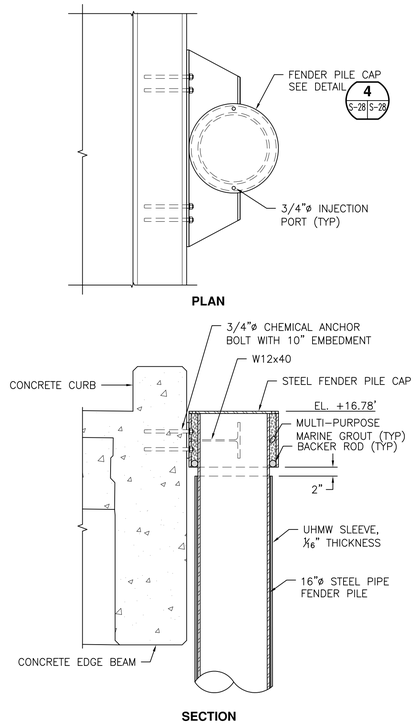

2 S-28 S-28 **FENDER PILE TOP CONNECTION- EAST SIDE**

SCALE: 3/4"=1'-0"

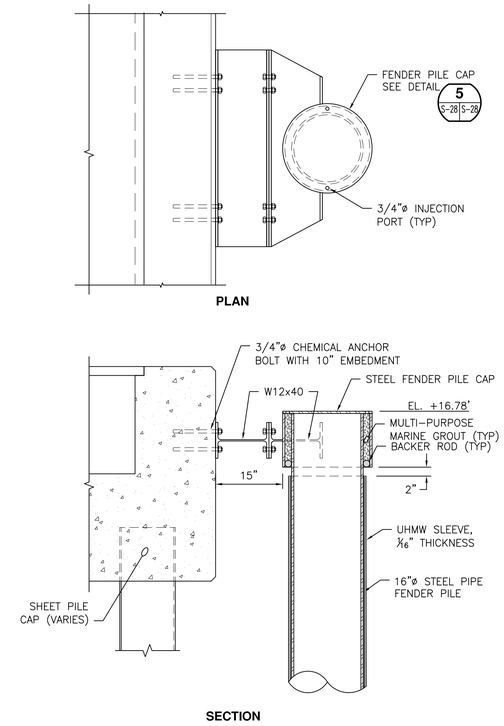

3 S-28 S-28 **FENDER PILE TOP CONNECTION- NORTH, SOUTH & WEST SIDES**

SCALE: 3/4"=1'-0"

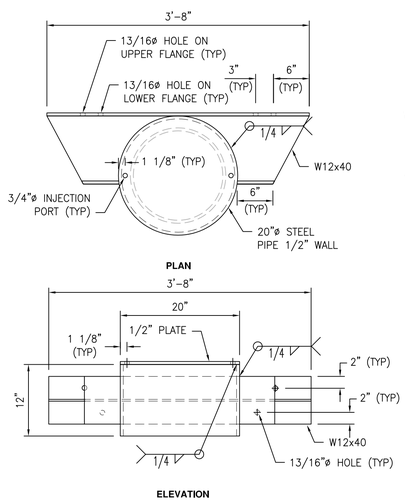

4 S-28 S-28 **FENDER PILE CAP DETAIL - EAST FACE**

SCALE: 1"=1'-0"

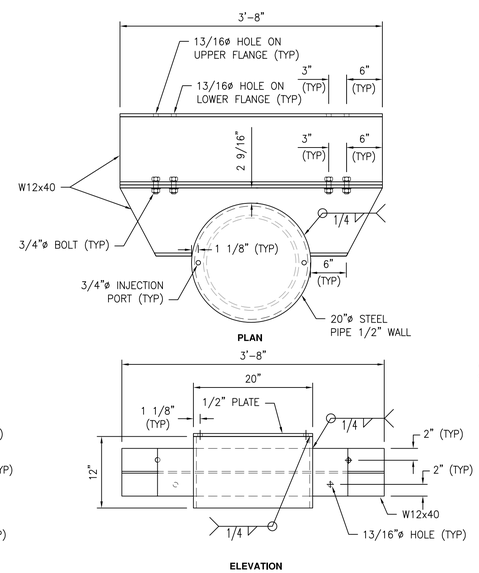

5 S-28 S-28 **FENDER PILE TOP DETAIL - NORTH AND SOUTH FACES**

SCALE: 1"=1'-0"

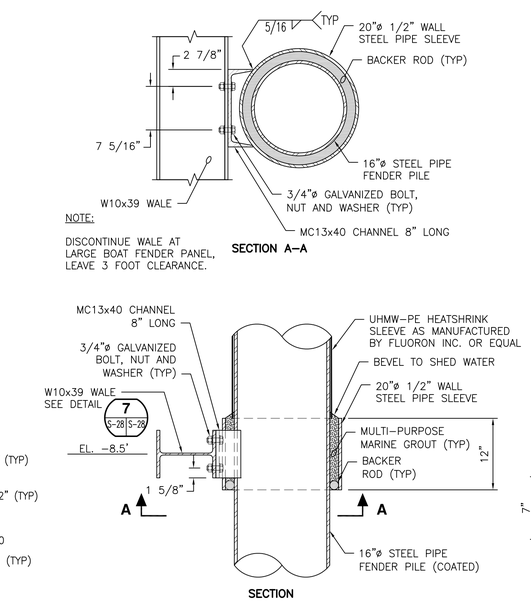

6 S-28 S-28 **LOWER PILE CONNECTION**

SCALE: 1"=1'-0"

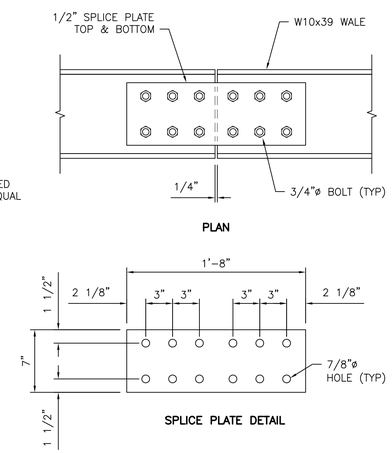

7 S-28 S-28 **LOWER WALE SPLICE DETAIL**

SCALE: 1 1/2"=1'-0"

1 1/2"=1'-0" — 1 0.5 0 1 SCALE IN FEET

1"=1'-0" — 1 0 1 2 SCALE IN FEET

1/2"=1'-0" — 2 0 2 4 SCALE IN FEET

STATE OF MAINE
DEPARTMENT OF TRANSPORTATION

WIN #020806.00

STATE OF MAINE — CRAIG D. SAMS — No. 13478 — LICENSED PROFESSIONAL ENGINEER

SIGNATURE			
13478			
P.E. NUMBER			
08/15/14			
DATE			

PROJ. MANAGER	CDS		
DESIGN-DETAILED	MMS	TEQ	7-14
CHECKED-REVIEWED	CDS	CDS	7-14
DESIGN2-DETAILED2			
DESIGN3-DETAILED3			
REVISIONS 1			
REVISIONS 2			
REVISIONS 3			
REVISIONS 4			
FIELD CHANGES			

EASTPORT BREAKWATER REPLACEMENT
EASTPORT, ME
WASHINGTON COUNTY

FENDER PILE DETAILS

SHEET NUMBER

S-28

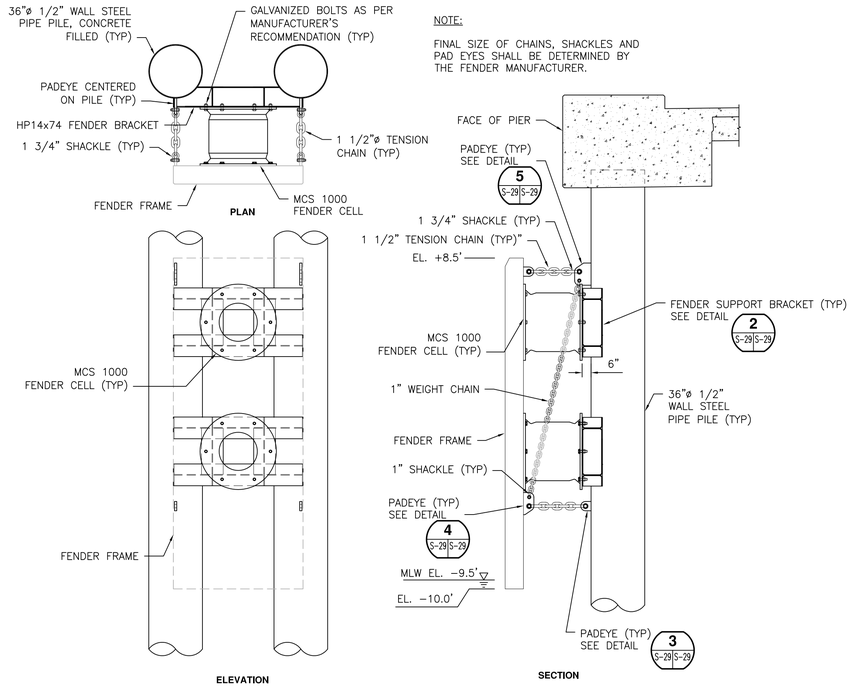

NOTE:

FINAL SIZE OF CHAINS, SHACKLES AND PAD EYES SHALL BE DETERMINED BY THE FENDER MANUFACTURER.

1 S-23 S-29 FENDER ASSEMBLY DETAIL

SCALE: 1/4"=1'-0"

NOTE:

FENDER FRAME SHALL BE DESIGNED BY CONTRACTOR ACCORDING TO SPECIAL PROVISION SECTION 537.

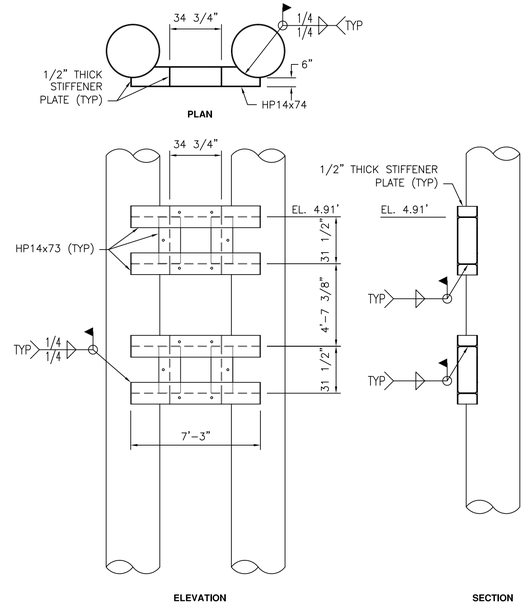

2 S-29 S-29 FENDER SUPPORT BRACKET DETAIL

SCALE: 1/4"=1'-0"

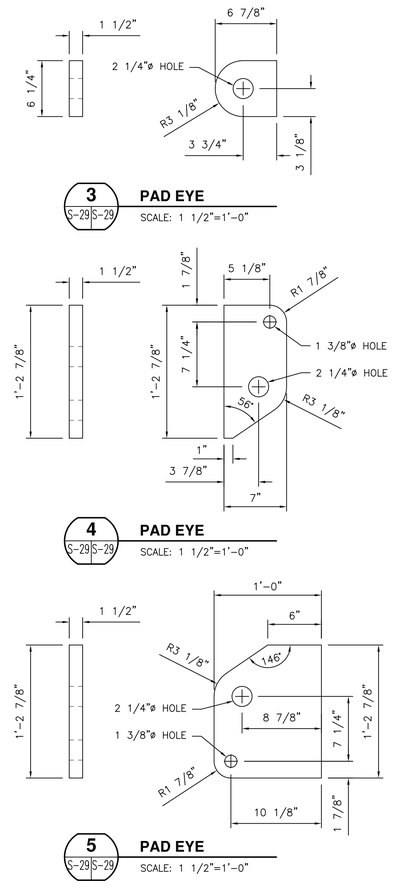

3 S-29 S-29 PAD EYE

SCALE: 1 1/2"=1'-0"

4 S-29 S-29 PAD EYE

SCALE: 1 1/2"=1'-0"

5 S-29 S-29 PAD EYE

SCALE: 1 1/2"=1'-0"

1 1/2"=1'-0" 1 0.5 0 1 SCALE IN FEET

1/4"=1'-0" 4 0 4 8 SCALE IN FEET

STATE OF MAINE
DEPARTMENT OF TRANSPORTATION

WIN #020806.00

STATE OF MAINE CRAIG D. SAMS No. 13478 LICENSED PROFESSIONAL ENGINEER

SIGNATURE		
13478		
P.E. NUMBER		
08/15/14		
DATE		

		BY	DATE
PROJ. MANAGER	CDS		
DESIGN-DETAILED	MMS	TEQ	7-14
CHECKED-REVIEWED	CDS	CDS	7-14
DESIGN2-DETAILED2			
DESIGN3-DETAILED3			
REVISIONS 1			
REVISIONS 2			
REVISIONS 3			
REVISIONS 4			
FIELD CHANGES			

EASTPORT BREAKWATER REPLACEMENT
EASTPORT, ME
WASHINGTON COUNTY

FENDER UNIT DETAILS

SHEET NUMBER

S-29

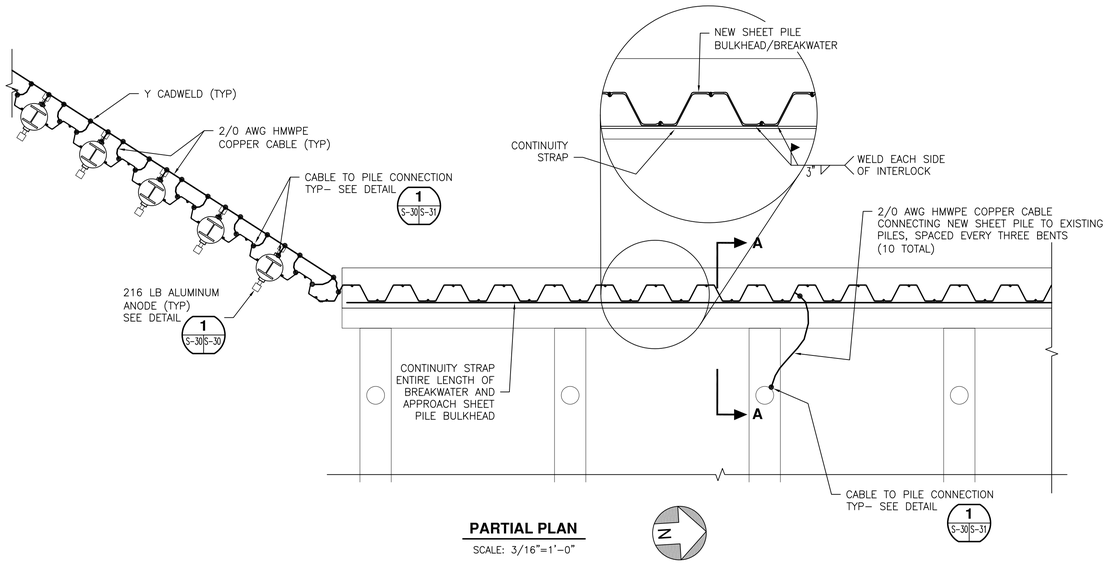

PARTIAL PLAN

SCALE: 3/16"=1'–0"

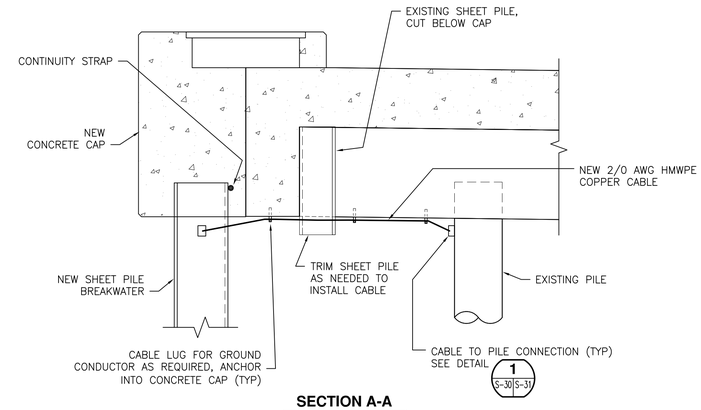

SECTION A-A

SCALE: 1/2"=1'–0"

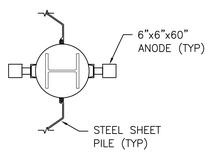

PLAN

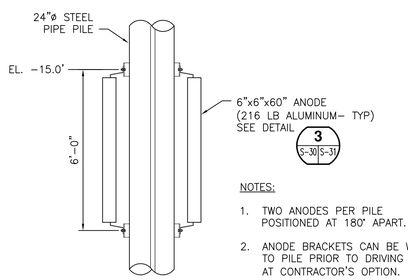

ELEVATION

NOTES:

1. TWO ANODES PER PILE POSITIONED AT 180° APART.
2. ANODE BRACKETS CAN BE WELDED TO PILE PRIOR TO DRIVING PILE AT CONTRACTOR'S OPTION.
3. NO ANODE REQUIRED FOR SHEET PILE ON BREAKWATER EXTENSION.

1 S-30 S-30 ANODE TO 24"Ø PILE CONNECTION

SCALE: 3/8"=1'–0"

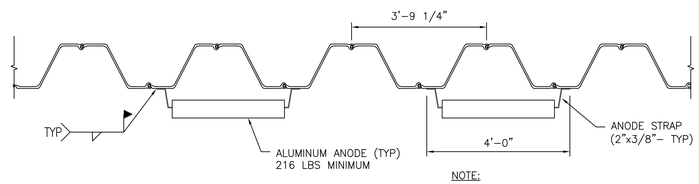

NOTE:

ANODES SHALL BE INSTALLED AT EL. –15.0'.

ANODE INSTALLATION FOR PZ 35 SHEET PILE

SCALE: 1/2"=1'–0"

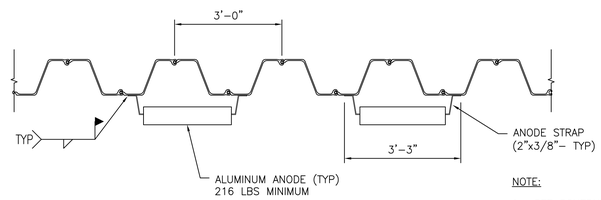

NOTE:

1. SEE SCHEDULE FOR INSTALLATION ELEVATIONS ON PZ 27 SHEET PILES.

ANODE INSTALLATION FOR PZ 27 SHEET PILE

SCALE: 1/2"=1'–0"

ANODE ELEVATION SCHEDULE FOR APPROACH SHEET PILE			
NORTH FACE OF APPROACH		SOUTH FACE OF APPROACH	
DISTANCE FROM WP–6	ANODE ELEVATION	DISTANCE FROM WP–6	ANODE ELEVATION
STA. 0+00 TO 0+70	NO ANODES	STA. 0+00 TO 0+50	NO ANODE
STA. 0+70 TO 1+30	EL. –12.0' OR AT MUDLINE (WHICH EVER IS SHALLOWER)	STA. 0+50 TO 1+30	EL. –12.0' OR AT MUDLINE (WHICH EVER IS SHALLOWER)
STA. 1+30 TO 2+00	EL. –14.0'	STA. 1+30 TO 2+00	EL. –14.0' OR AT MUDLINE (WHICHEVER IS SHALLOWER)

1/2"=1'–0" 2 0 2 4 SCALE IN FEET

3/16"=1'–0" 4 0 4 8 12 SCALE IN FEET

3/8"=1'–0" 2 0 2 4 6 SCALE IN FEET

STATE OF MAINE
DEPARTMENT OF TRANSPORTATION

WIN #020806.00

STATE OF MAINE CRAIG D. SAMS No. 13478 LICENSED PROFESSIONAL ENGINEER

		BY	DATE
PROJ. MANAGER	CDS		
DESIGN–DETAILED	MMS	TEQ	7–14
CHECKED–REVIEWED	CDS	CDS	7–14
DESIGN2–DETAILED2			
DESIGN3–DETAILED3			
REVISIONS 1			
REVISIONS 2			
REVISIONS 3			
REVISIONS 4			
FIELD CHANGES			

SIGNATURE

13478
P.E. NUMBER

08/15/14
DATE

EASTPORT BREAKWATER REPLACEMENT
EASTPORT, ME
WASHINGTON COUNTY

BREAKWATER CATHODIC PROTECTION PLAN

SHEET NUMBER

S-30

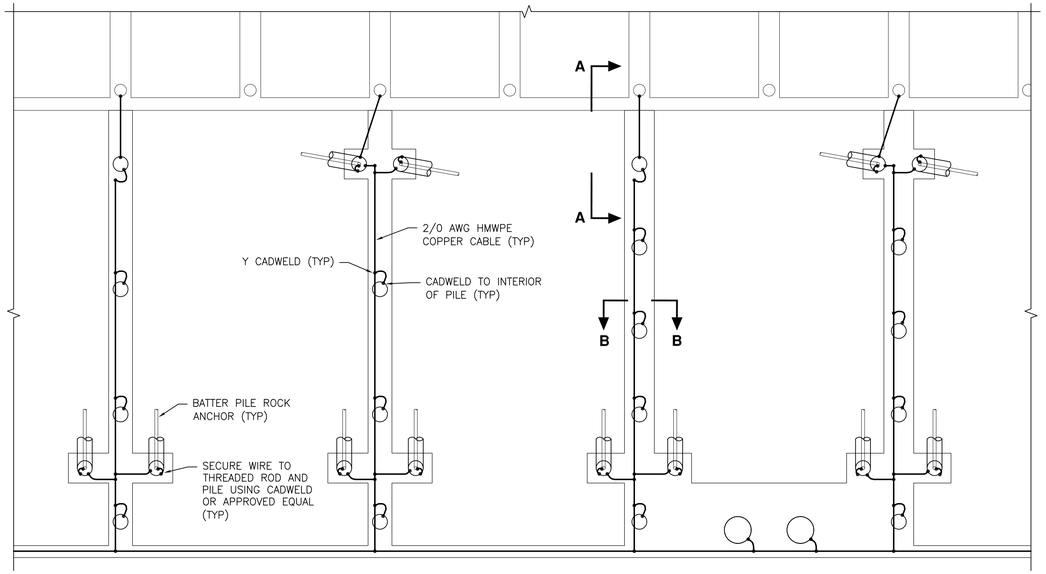

PARTIAL PLAN

SCALE: 1/8"=1'-0"

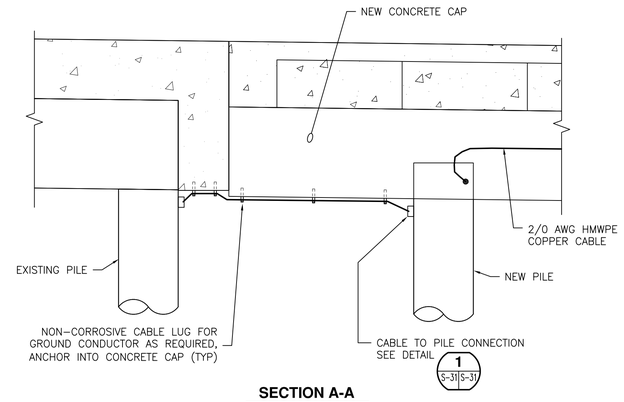

SECTION A-A

SCALE: 1/2"=1'-0"

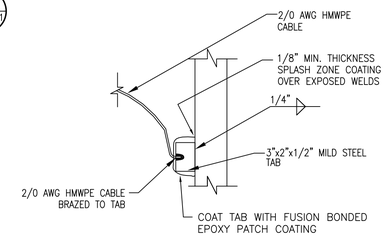

1 S-31 S-31 PILE NEGATIVE CONNECTION (TYPICAL)

SCALE: NTS

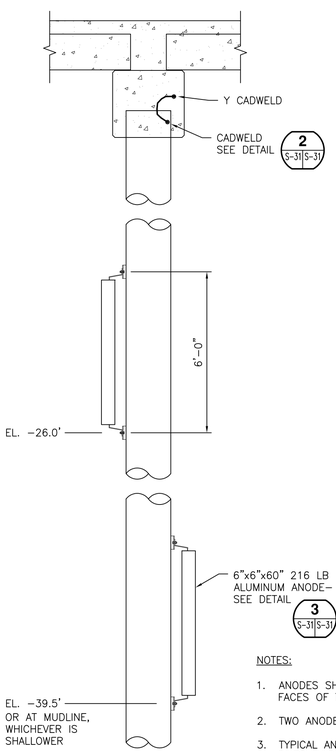

SECTION B-B

SCALE: 3/8"=1'-0"

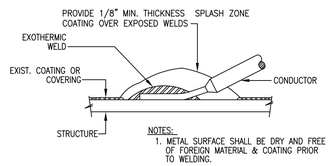

2 S-31 S-31 EXOTHERMIC WELD (TYPICAL)

SCALE: NTS

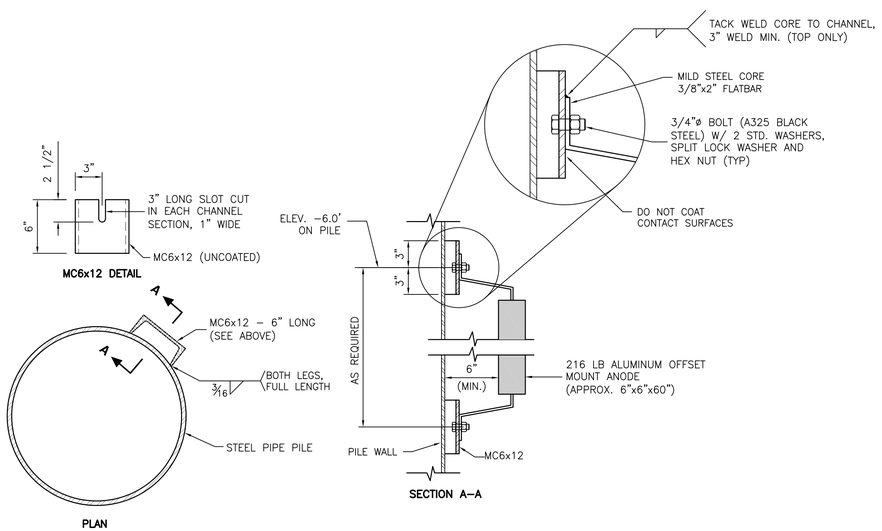

3 S-31 S-31 ANODE ASSEMBLY

SCALE: 1 1/2"=1'-0"

NOTES:

1. ANODES SHALL BE POSITIONED ON NORTH AND/OR SOUTH FACES OF THE PILE.
2. TWO ANODES PER PILE POSITIONED AT 180° APART.
3. TYPICAL ANODE ARRANGEMENT FOR VERTICAL PILES, BATTER PILES, AND FENDER PILES.
4. ANODE BRACKETS CAN BE WELDED TO PILE PRIOR TO DRIVING PILE AT CONTRACTOR'S OPTION.
5. REPAIR COATING AT WELDS.
6. ONLY ONE ANODE REQUIRED ON FENDER OR GUIDE PILES WITH MUDLINE ELEVATION ABOVE EL. -26.0'.

1/2"=1'-0" 2 0 2 4 SCALE IN FEET

3/8"=1'-0" 2 0 2 4 6 SCALE IN FEET

1 1/2"=1'-0" 1 0.5 0 1 SCALE IN FEET

STATE OF MAINE
DEPARTMENT OF TRANSPORTATION

WIN #020806.00

STATE OF MAINE
CRAIG D. SAMS
No. 13478
LICENSED PROFESSIONAL ENGINEER

		BY	DATE
PROJ. MANAGER	CDS		
DESIGN-DETAILED	MMS	TEQ	7-14
CHECKED-REVIEWED	CDS	CDS	7-14
DESIGN2-DETAILED2			
DESIGN3-DETAILED3			
REVISIONS 1			
REVISIONS 2			
REVISIONS 3			
REVISIONS 4			
FIELD CHANGES			

SIGNATURE

13478
P.E. NUMBER

08/15/14
DATE

EASTPORT BREAKWATER REPLACEMENT
EASTPORT, ME
WASHINGTON COUNTY

PIER CATHODIC PROTECTION PLAN

SHEET NUMBER

S-31

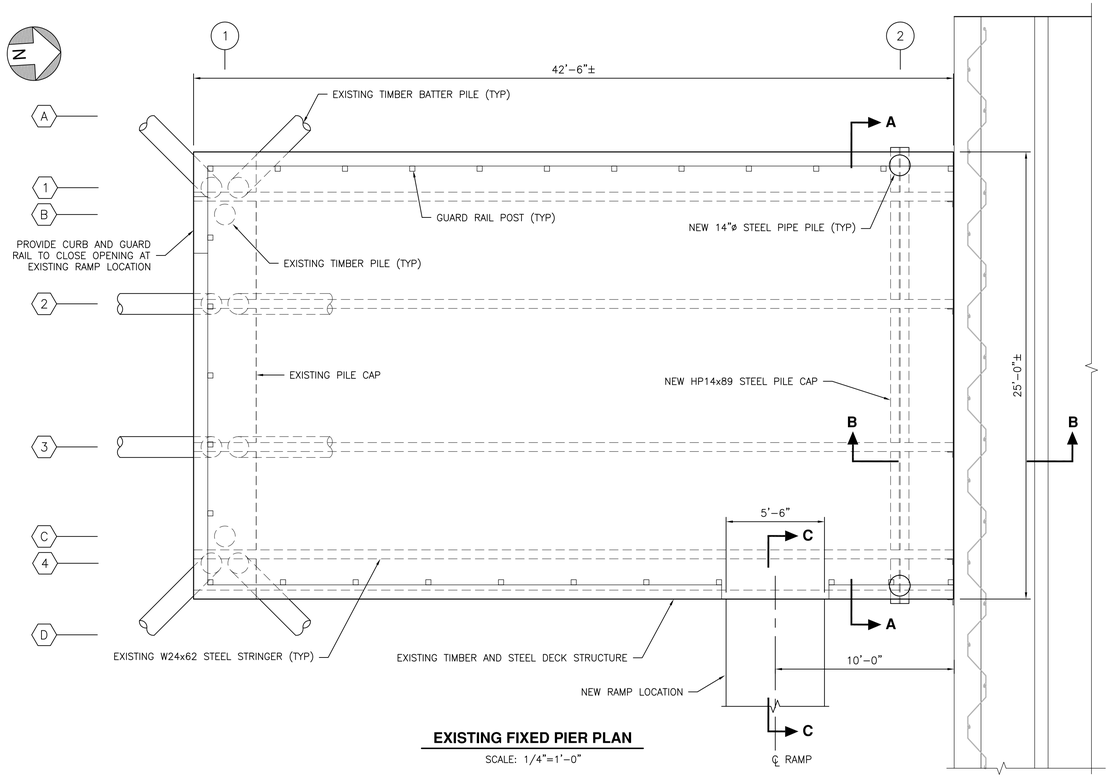

EXISTING FIXED PIER PLAN

SCALE: 1/4"=1'-0"

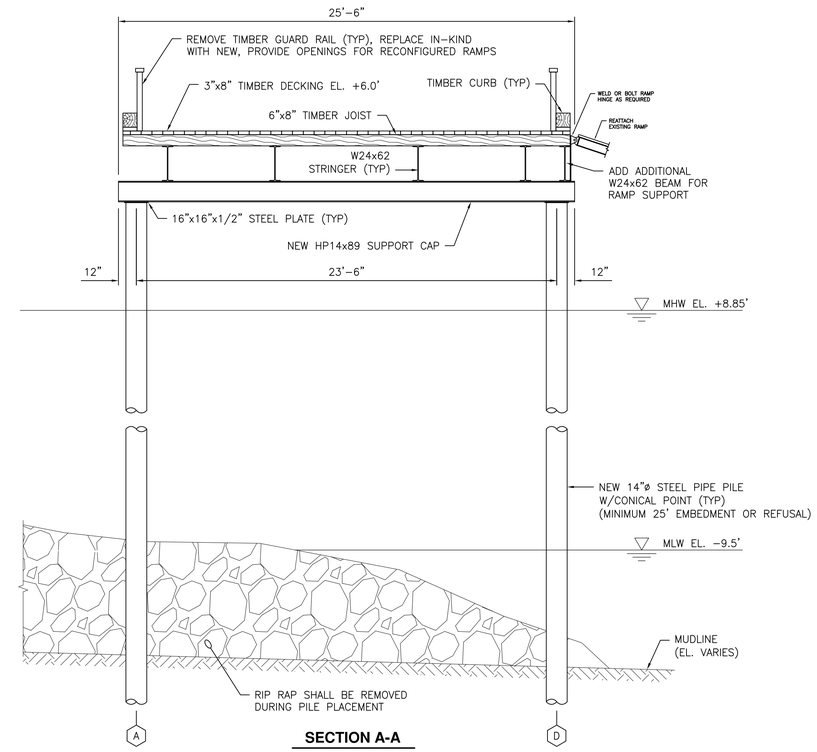

SECTION A-A

SCALE: 1/4"=1'-0"

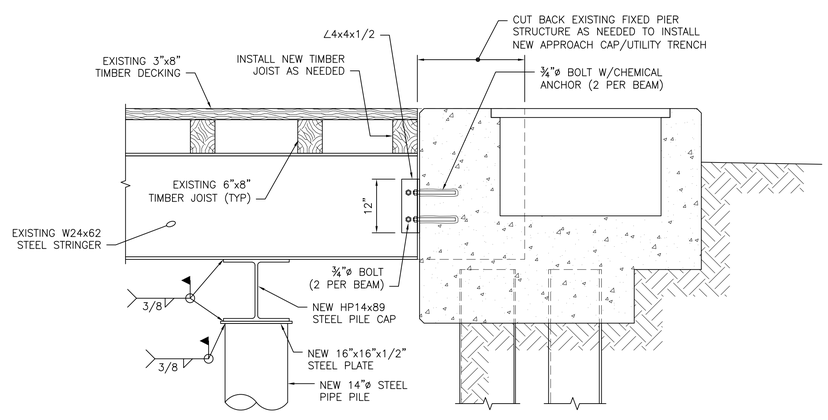

SECTION B-B

SCALE: 3/4"=1'-0"

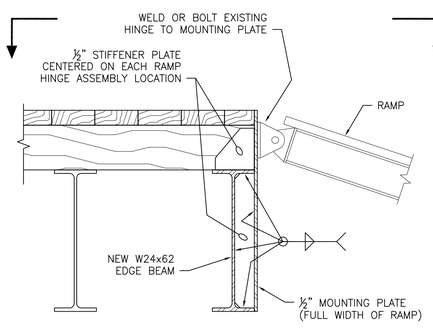

SECTION C-C

SCALE: 1"=1'-0"

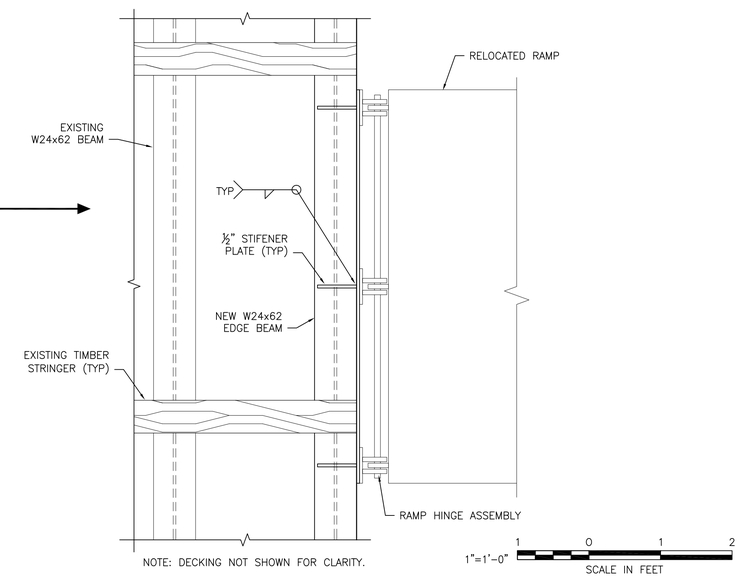

NOTE: DECKING NOT SHOWN FOR CLARITY.

1"=1'-0" 1 0 1 2 SCALE IN FEET

3/4"=1'-0" 1 0 1 2 3 SCALE IN FEET

1/4"=1'-0" 4 0 4 8 SCALE IN FEET

STATE OF MAINE
DEPARTMENT OF TRANSPORTATION

WIN #020806.00

STATE OF MAINE
CRAIG D. SAMS
No. 13478
LICENSED
PROFESSIONAL ENGINEER

		BY	DATE
PROJ. MANAGER	CDS		
DESIGN-DETAILED	MMS	TEQ	7-14
CHECKED-REVIEWED	CDS	CDS	7-14
DESIGN2-DETAILED2			
DESIGN3-DETAILED3			
REVISIONS 1			
REVISIONS 2			
REVISIONS 3			
REVISIONS 4			
FIELD CHANGES			

SIGNATURE

13478
P.E. NUMBER

08/15/14
DATE

EASTPORT BREAKWATER REPLACEMENT
EASTPORT, ME
WASHINGTON COUNTY

EXISTING FIXED PIER

SHEET NUMBER

S-32

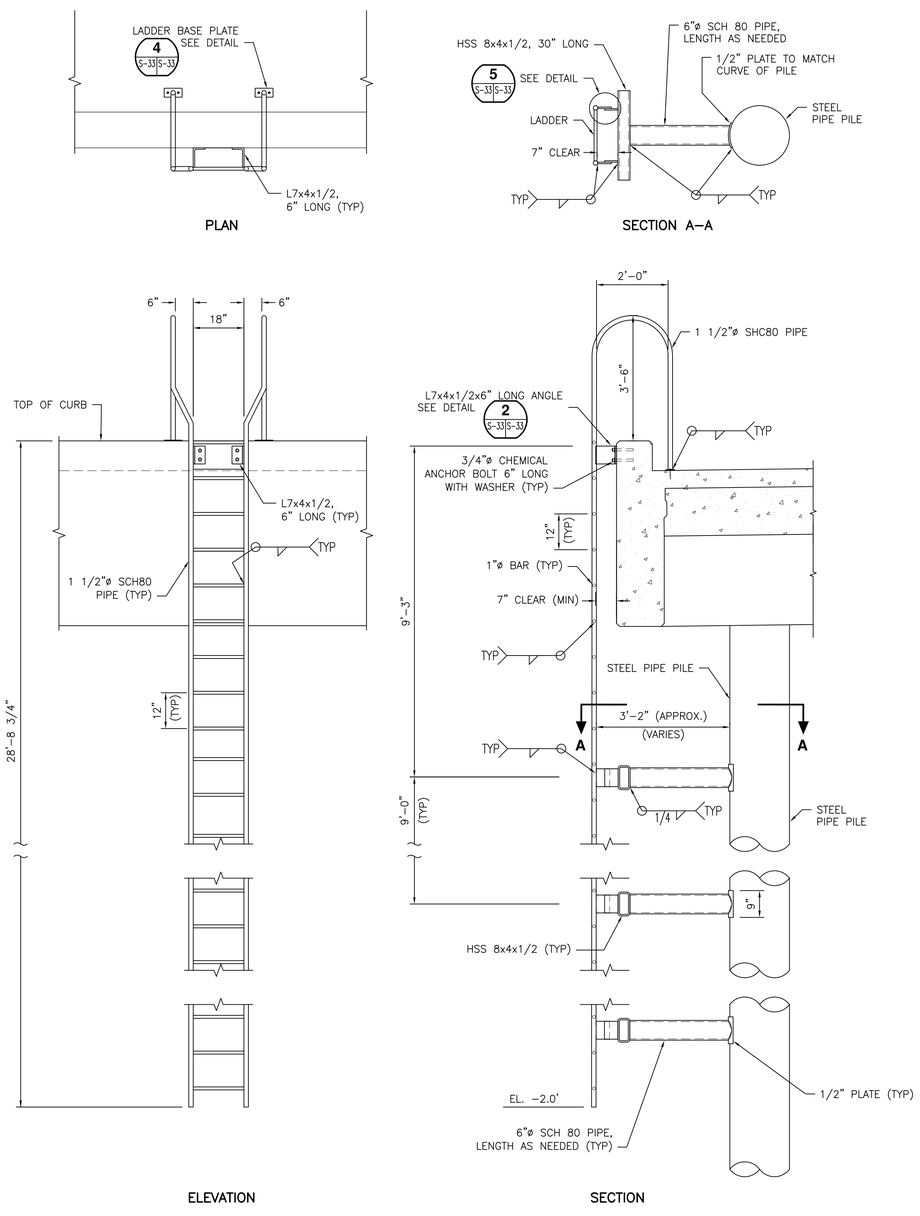

1 S-23|S-33 **PROPOSED PIER EXTENSION LADDER DETAIL**

SCALE: 1/2"=1'–0"

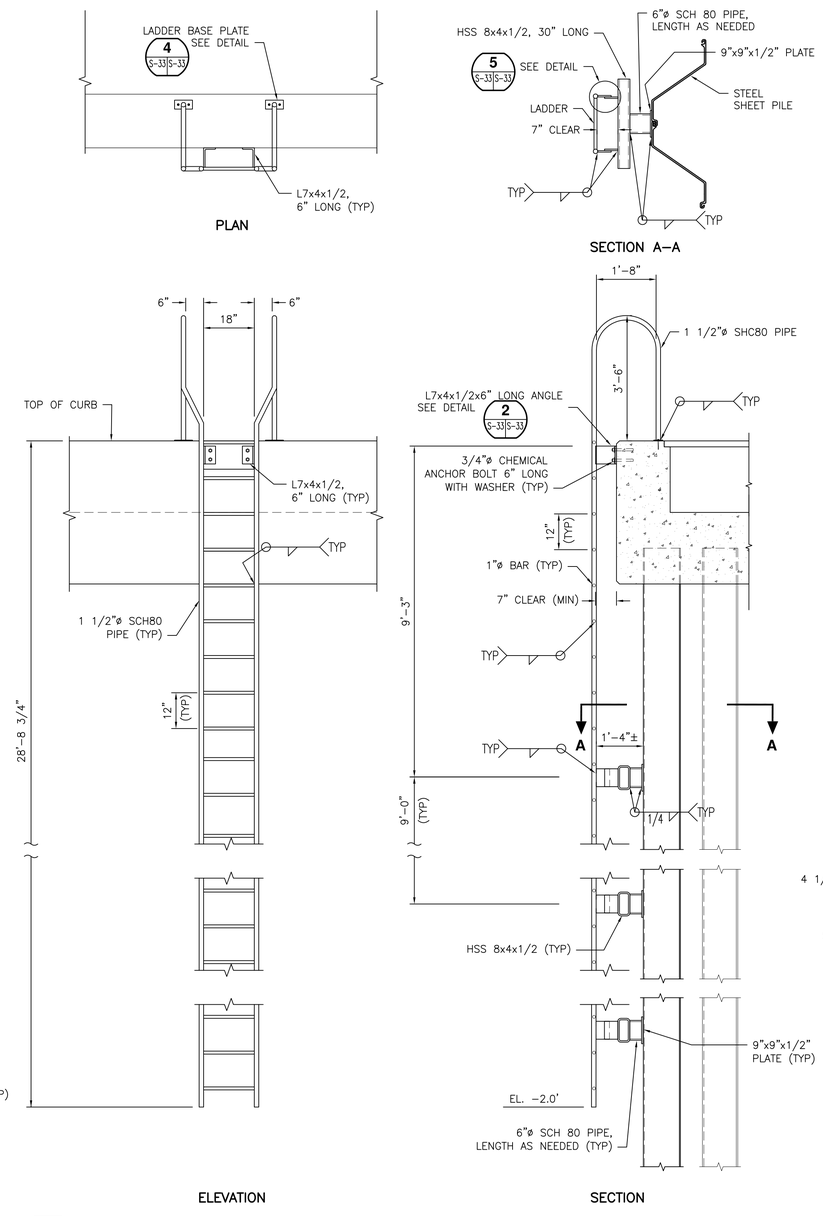

2 S-23|S-33 **PROPOSED BREAKWATER LADDER DETAIL**

SCALE: 1/2"=1'–0"

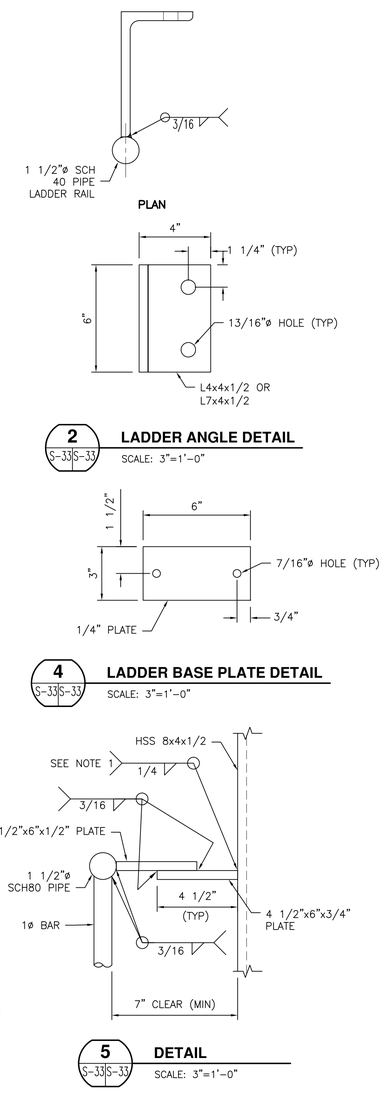

3"=1'–0" 0.5 0.25 0 0.5 SCALE IN FEET

1/2"=1'–0" 2 0 2 4 SCALE IN FEET

STATE OF MAINE
DEPARTMENT OF TRANSPORTATION

WIN #020806.00

STATE OF MAINE
CRAIG D. SAMS
No. 13478
LICENSED
PROFESSIONAL ENGINEER

SIGNATURE		
13478		
P.E. NUMBER		
08/15/14		
DATE		

		BY	DATE
PROJ. MANAGER	CDS		
DESIGN–DETAILED	MMS	TEQ	7–14
CHECKED–REVIEWED	CDS	CDS	7–14
DESIGN2–DETAILED2			
DESIGN3–DETAILED3			
REVISIONS 1			
REVISIONS 2			
REVISIONS 3			
REVISIONS 4			
FIELD CHANGES			

EASTPORT BREAKWATER REPLACEMENT
EASTPORT, ME
WASHINGTON COUNTY

LADDER DETAILS

SHEET NUMBER

S-33

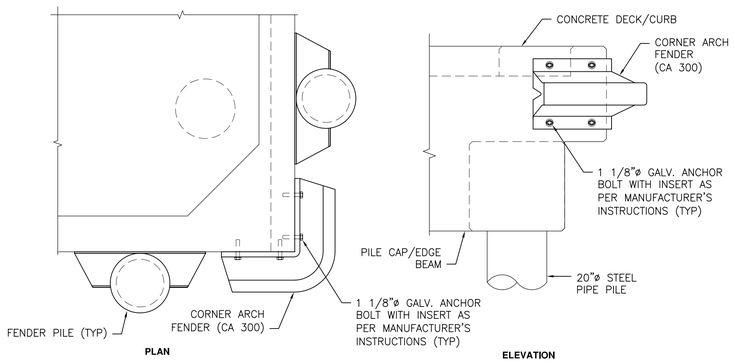

NOTE:

CONTRACTOR SHALL PROVIDE AND INSTALL CORNER ARCH FENDER AS SHOWN ON THE NORTH AND SOUTH CORNERS OF THE NEW PIER EXTENSION.

1 / S-23 S-34 — CORNER FENDER DETAIL

SCALE: 1/2"=1'-0"

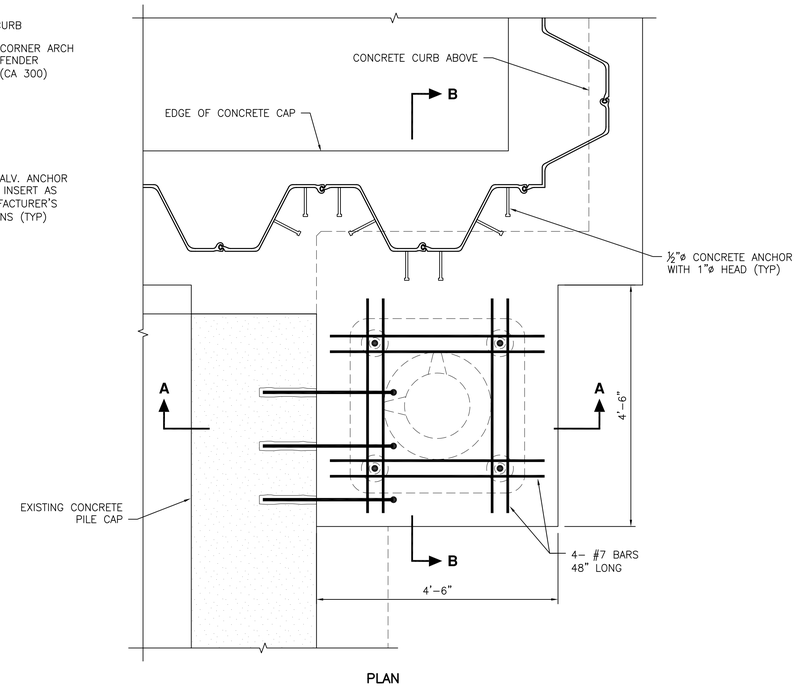

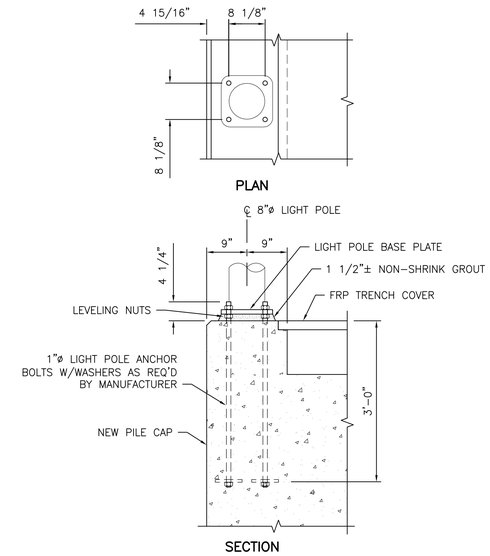

2 / S-23 S-34 — BREAKWATER SECTION AT LIGHT POLE

SCALE: 3/4"=1'-0"

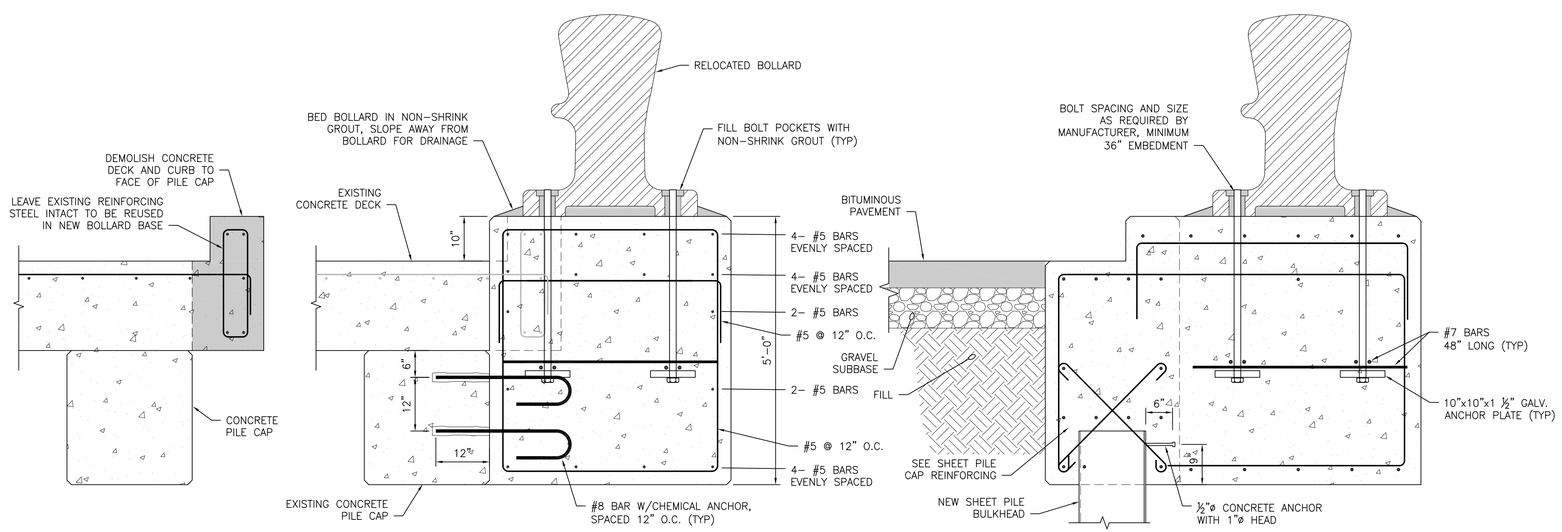

3 / S-09 S-34 — NORTHWEST BOLLARD BASE DETAIL

SCALE: 3/4"=1'-0"

3"=1'-0" — 0.5 0.25 0 0.5 SCALE IN FEET

1/2"=1'-0" — 2 0 2 4 SCALE IN FEET

STATE OF MAINE
DEPARTMENT OF TRANSPORTATION

WIN #020806.00

STATE OF MAINE — CRAIG D. SAMS — No. 13478 — LICENSED PROFESSIONAL ENGINEER

		BY	DATE
PROJ. MANAGER	CDS		
DESIGN-DETAILED	MMS	TEQ	7-14
CHECKED-REVIEWED	CDS	CDS	7-14
DESIGN2-DETAILED2			
DESIGN3-DETAILED3			
REVISIONS 1			
REVISIONS 2			
REVISIONS 3			
REVISIONS 4			
FIELD CHANGES			

SIGNATURE

P.E. NUMBER 13478

08/15/14 DATE

EASTPORT BREAKWATER REPLACEMENT
EASTPORT, ME
WASHINGTON COUNTY

MISCELLANEOUS DETAILS

SHEET NUMBER

S-34

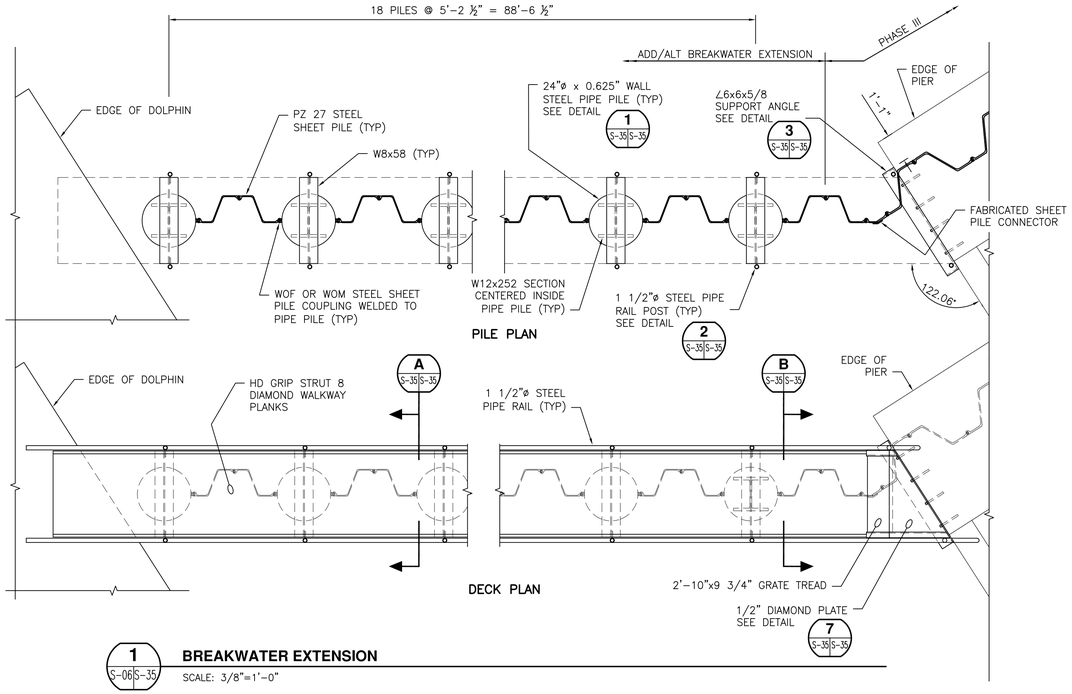

1 S-06 S-35 **BREAKWATER EXTENSION**

SCALE: 3/8"=1'-0"

NOTE:

ALL WALKWAY GUARD RAILS, SUPPORTING BEAMS AND HARDWARE SHALL BE HOT DIP GALVANIZED AFTER FABRICATION.

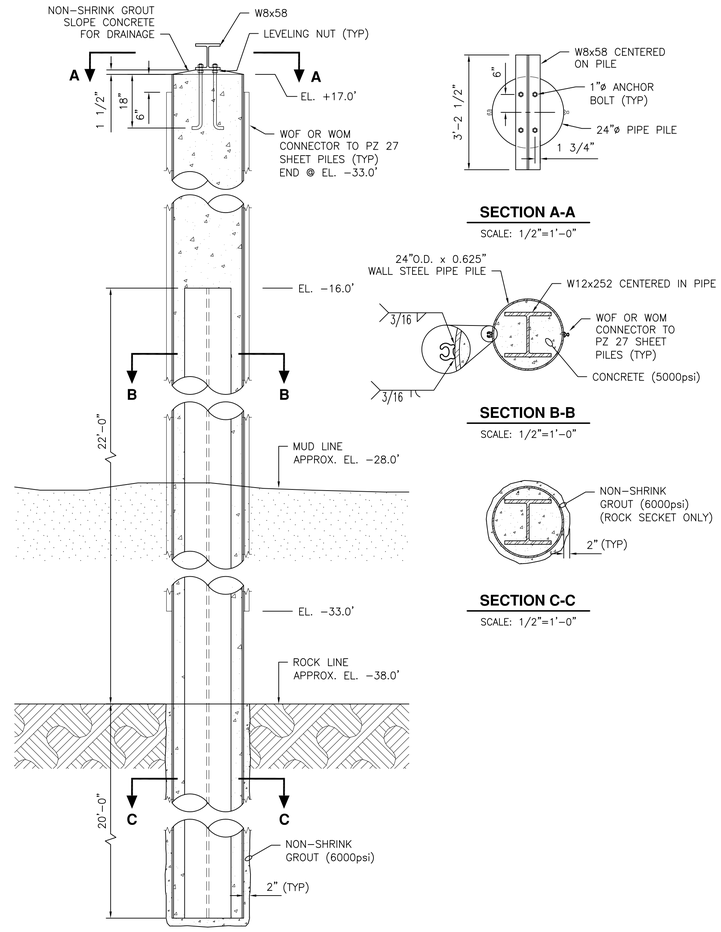

1 S-35 S-35 **BREAKWATER EXTENSION PILE DETAIL**

SCALE: 1/2"=1'-0"

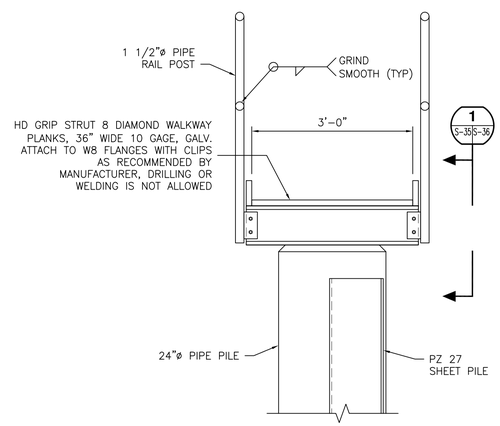

A S-35 S-35 **SECTION**

SCALE: 3/4"=1'-0"

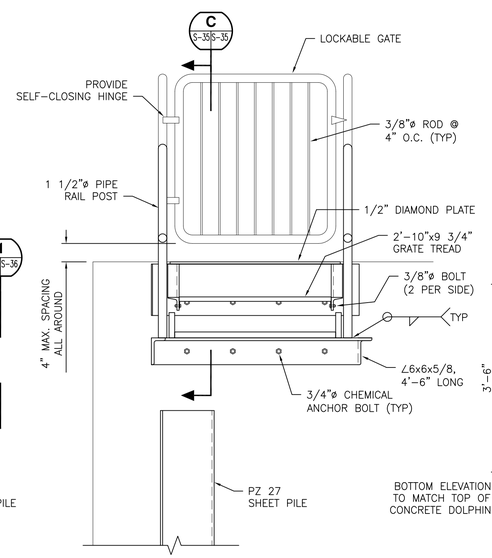

B S-35 S-35 **SECTION**

SCALE: 3/4"=1'-0"

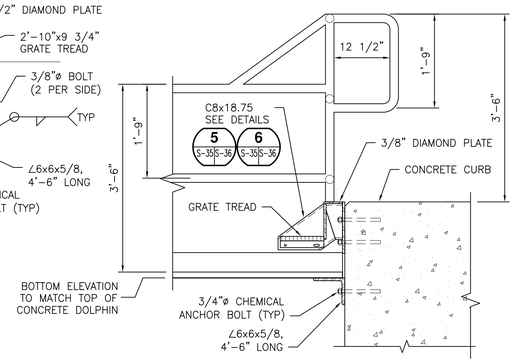

C S-35 S-35 **SECTION**

SCALE: 3/4"=1'-0"

NOTE:

ALL WALKWAY GUARD RAILS, SUPPORTING BEAMS AND HARDWARE SHALL BE HOT DIP GALVANIZED AFTER FABRICATION.

3/4"=1'-0" 1 0 1 2 3 SCALE IN FEET

1/2"=1'-0" 2 0 2 4 SCALE IN FEET

3/8"=1'-0" 2 0 2 4 6 SCALE IN FEET

STATE OF MAINE
DEPARTMENT OF TRANSPORTATION

WIN #020806.00

STATE OF MAINE CRAIG D. SAMS No. 13478 LICENSED PROFESSIONAL ENGINEER

SIGNATURE		
P.E. NUMBER	13478	
DATE	08/15/14	

		BY	DATE
PROJ. MANAGER	CDS		
DESIGN-DETAILED	MMS	TEQ	7-14
CHECKED-REVIEWED	CDS	CDS	7-14
DESIGN2-DETAILED2			
DESIGN3-DETAILED3			
REVISIONS 1			
REVISIONS 2			
REVISIONS 3			
REVISIONS 4			
FIELD CHANGES			

EASTPORT BREAKWATER REPLACEMENT
EASTPORT, ME
WASHINGTON COUNTY

BREAKWATER EXTENSION DETAILS

SHEET NUMBER

S-35

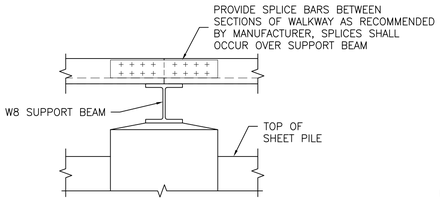

1 SECTION (S-35 | S-36)
SCALE: 3/4"=1'-0"

NOTE:

ALL WALKWAY GUARD RAILS, SUPPORTING BEAMS AND HARDWARE SHALL BE HOT DIP GALVANIZED AFTER FABRICATION.

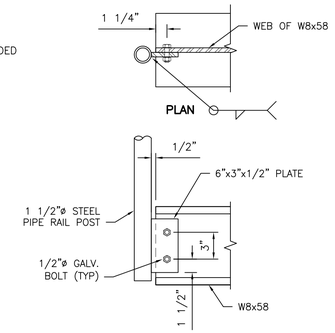

2 WALKWAY HANDRAIL CONNECTION DETAIL (S-35 | S-36)
SCALE: 1 1/2"=1'-0"

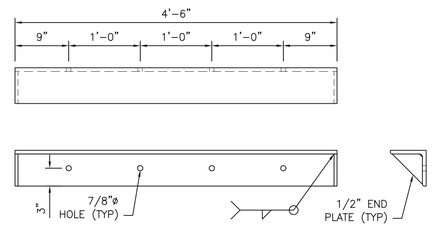

3 ∠6x6x5/8 DETAIL (S-35 | S-36)
SCALE: 1"=1'-0"

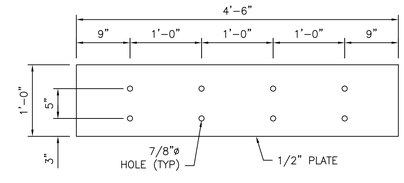

4 STAIR SUPPORT PLATE DETAIL (S-36 | S-36)
SCALE: 1"=1'-0"

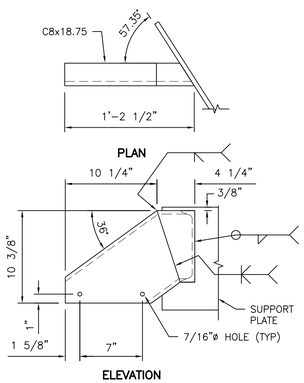

5 WALKWAY STAIR WEST STRINGER DETAIL (S-35 | S-36)
SCALE: 1 1/2"=1'-0"

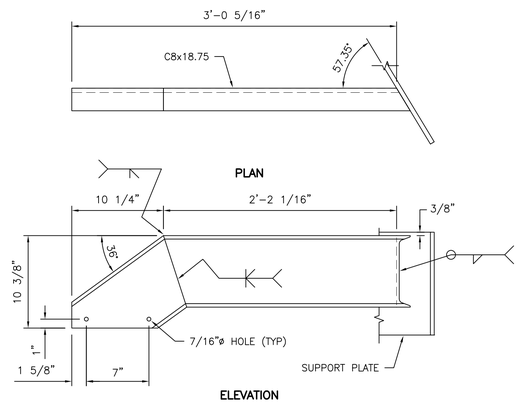

6 WALKWAY STAIR EAST STRINGER DETAIL (S-35 | S-36)
SCALE: 1 1/2"=1'-0"

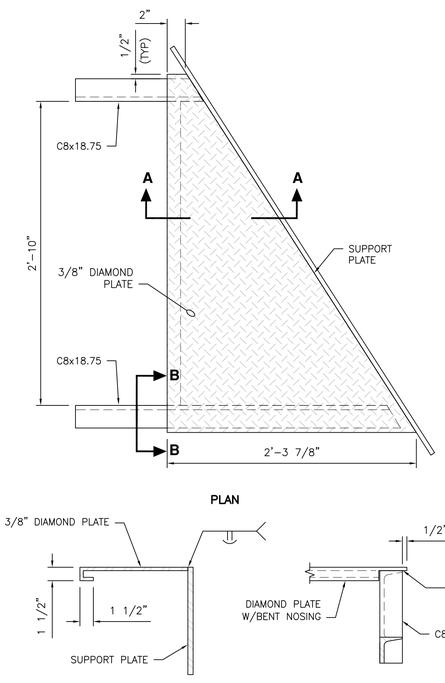

7 WALKWAY STAIR DIAMOND PLATE DETAIL (S-35 | S-36)
SCALE: 1 1/2"=1'-0"

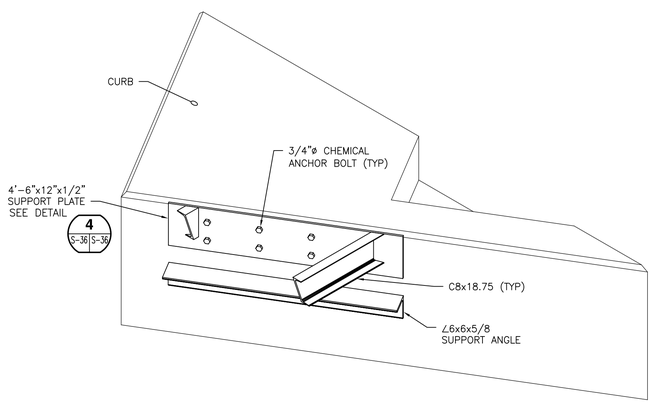

SUPPORT PLATE AND ANGLE- ISOMETRIC
SCALE: NONE

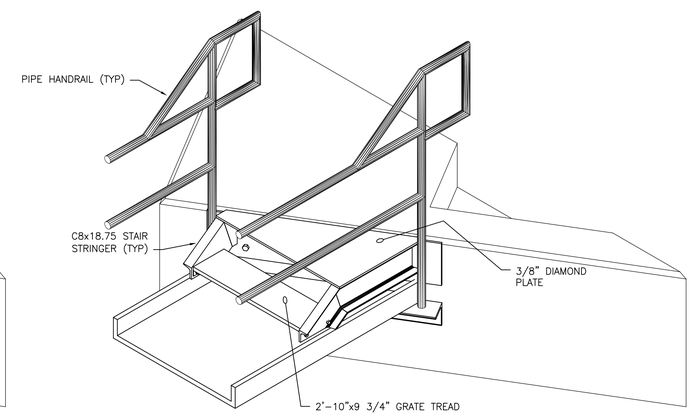

COMPLETED STAIR- ISOMETRIC
SCALE: NONE

1"=1'-0" (1 0 1 2) SCALE IN FEET
1 1/2"=1'-0" (1 0.5 0 1) SCALE IN FEET
3/4"=1'-0" (1 0 1 2 3) SCALE IN FEET

STATE OF MAINE
DEPARTMENT OF TRANSPORTATION

WIN #020806.00

STATE OF MAINE — CRAIG D. SAMS — No. 13478 — LICENSED PROFESSIONAL ENGINEER

SIGNATURE		
13478		P.E. NUMBER
08/15/14		DATE

	BY	DATE
	TEQ	7-14
	CDS	7-14

PROJ. MANAGER	CDS
DESIGN-DETAILED	MMS
CHECKED-REVIEWED	CDS
DESIGN2-DETAILED2	
DESIGN3-DETAILED3	
REVISIONS 1	
REVISIONS 2	
REVISIONS 3	
REVISIONS 4	
FIELD CHANGES	

EASTPORT BREAKWATER REPLACEMENT
EASTPORT, ME
WASHINGTON COUNTY

BREAKWATER EXTENSION DETAILS

SHEET NUMBER

S-36

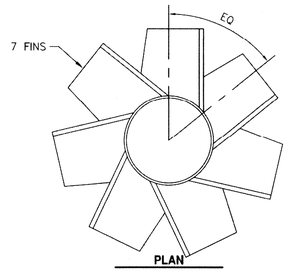

PLAN

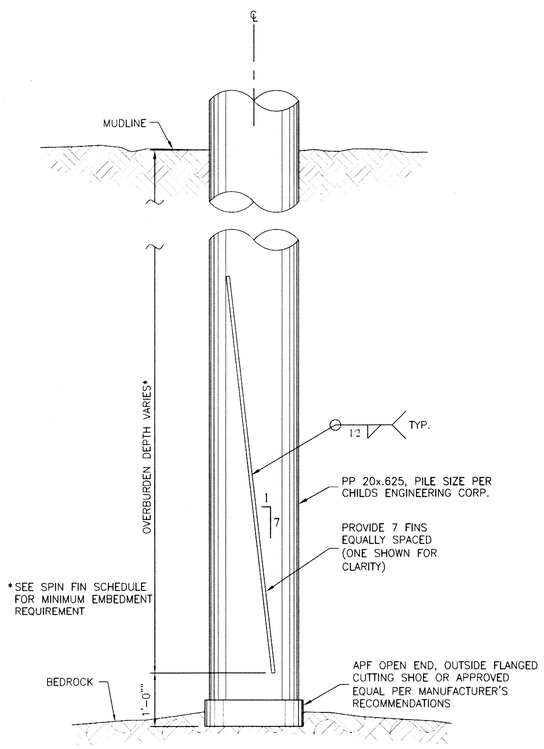

ELEVATION

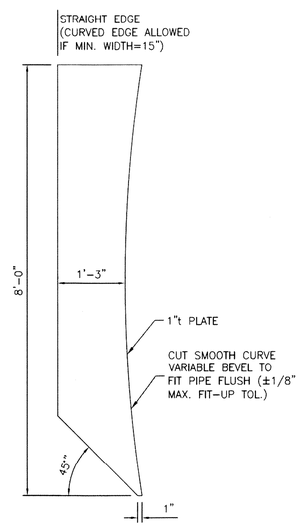

FIN

SPIN FIN PILE

SPIN FIN PILE CAPACITY SCHEDULE:	SPIN FIN BATTER PILES	
	ROW G-H	ROW E
DESIGN LOAD - COMPRESSION:	195 KIPS	250 KIPS
DESIGN LOAD - TENSION:	176 KIPS	145 KIPS
REQ. ULTIMATE PILE CAPACITY COMPRESSION (FS=2.25): (VERIFICATION WITH PDA/CAPWAP/SIGNAL MATCHING)	439 KIPS	563 KIPS
REQ. ULTIMATE PILE CAPACITY TENSION (FS=2.25): (VERIFICATION BASED ON DRIVING LOG EVALUATION BY PND ENGINEERS AND PDA/CAPWAP/SIGNAL MATCHING)	396 KIPS	327 KIPS

NOTE:

THE ABOVE TABLE IS FOR REFERENCE ONLY. PILE CAPACITIES PER CHILDS ENGINEERING CORP.

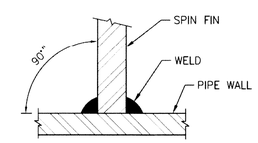

PILE/FIN SECTION @ CENTERLINE OF PLATE

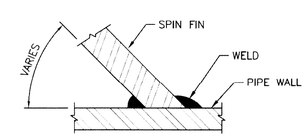

PILE/FIN SECTION

SPIN FIN WELD

SPIN FIN™ PILE IS A REGISTERED TRADEMARK OF PND ENGINEERS, INC.

SPIN FIN SCHEDULE

Location		Estimated Minimum Embedment (feet)
Bent	Row	
1 (n)	G.5	45
2 (n)	G.5	45
2 (s)	G.5	45
2 (n)	E	40
2 (s)	E	40
3 (n)	G.5	45
3 (s)	G.5	45
4 (n)	G.5	45
4 (s)	G.5	40
4 (n)	E	45
4 (s)	E	40
5 (n)	G.5	40
5 (s)	G.5	40
6 (n)	G.5	40
6 (s)	G.5	40
6 (n)	E	40
6 (s)	E	40
7 (n)	G.5	40
7 (s)	G.5	40
8 (n)	G.5	40
8 (s)	G.5	40
8 (n)	E	40
8 (s)	E	40
9 (n)	G.5	40
9 (s)	G.5	40
10 (n)	G.5	40
10 (s)	G.5	40
10 (n)	E	40
10 (s)	E	40
11 (n)	G.5	40
11 (s)	G.5	40
12 (n)	G.5	40
12 (s)	G.5	40
12 (n)	E	40
12 (s)	E	40
13 (n)	G.5	45
13 (s)	G.5	45
14 (n)	G.5	45
14 (s)	G.5	45
14 (n)	E	45
14 (s)	E	45
15 (s)	G.5	45

KEY:

(n) NORTH PILE
(s) SOUTH PILE

NOTES:

1. THE ABOVE SPIN FIN SCHEDULE SUPPLEMENTS THE PILE SCHEDULE ON SHEET S-12.
2. ESTIMATED MINIMUM EMBEDMENTS BASED ON GZA GEOENVIRONMENTAL, INC. GEOTECHNICAL DESIGN REPORT 7/25/14 AND UNFACTORED PILE LOADS PROVIDED BY CHILDS ENGINEERING CORP. SHEET SK-10 DATED 05-09-14.
3. ALL PILES SHALL BE DRIVEN TO BEDROCK AND FIRMLY SEATED. IN ADDITION, ALL PILES SHALL BE DRIVEN TO ACHIEVE THE REQUIRED ULTIMATE COMPRESSION CAPACITY AS SPECIFIED BY CHILDS ENGINEERING CORPORATION PER THE PILE LOAD SCHEDULE PROVIDED ON THIS DRAWING. IF MINIMUM EMBEDMENT IS NOT ACHIEVED, NOTIFY ENGINEER FOR ACCEPTANCE. ALTERNATE PILE ANCHORAGE MAY BE REQUIRED.
4. ACCEPTANCE CRITERIA ON CALCULATED TENSILE CAPACITY OF SPIN FIN PILES IS BASED ON INSTALLATION DATA AND SHALL BE DETERMINED BY PND AFTER PILE INSTALLATION. AT A MINIMUM, THE INSTALLATION OF THE LAST 20-FT OF PILE SHALL BE IMPACT DRIVEN WITH ENERGY AND BLOW COUNT DATA RECORDED ON THE INSTALLATION LOGS (MINIMUM 5 DATA POINTS).
5. SEE SHEET S-11 FOR PILE TOP DETAIL AND SHEET S-13 FOR PILE ANCHORAGE TO CAP.

PND ENGINEERS, INC.
1736 Fourth Avenue S, Suite A
Seattle, Washington 98134
Phone: 206-624-1387
Fax: 206-624-1388
mail@pndengineers.com

STATE OF MAINE
DEPARTMENT OF TRANSPORTATION

WIN #020806.00

STATE OF MAINE — TODD W. BELSACK — No. 13372 — REGISTERED PROFESSIONAL ENGINEER

P.E. NUMBER
SIGNATURE
8/13/14
DATE

	By	DATE
PROJ. MANAGER CDS		
DESIGN-DETAILED	BKP	7-14
CHECKED-REVIEWED	TWB	7-14
DESIGN2-DETAILED2		
DESIGN3-DETAILED3		
REVISIONS 1		
REVISIONS 2		
REVISIONS 3		
REVISIONS 4		
FIELD CHANGES		

EASTPORT BREAKWATER REPLACEMENT
EASTPORT, ME
WASHINGTON COUNTY

SPIN FIN PILE DETAILS

SHEET NUMBER

S-37

PLUMBING SYMBOL LEGEND

(ALL LINES, VALVES, OTHER ITEMS SHOWN ARE NOT NECESSARILY USED ON THE DRAWINGS)

- CW — COLD WATER (DOMESTIC)
- ST — STORM DRAIN (BELOW FLOOR OR GRADE)
- ST — STORM DRAIN (ABOVE FLOOR OR GRADE)
- SS — SANITARY SEWER
- VENT LINE
- CO — CLEAN OUT
- ECO — EXISTING CLEAN OUT
- FCO — FLOOR CLEAN OUT
- EFCO — EXISTING FLOOR CLEAN OUT
- FD — FLOOR DRAIN (TYPE AS NOTED)
- EFD — EXISTING FLOOR DRAIN (TYPE AS NOTED)
- H — HIGH PRESSURE CLEAN-UP HOSE STATION
- EH — EXISTING HIGH PRESSURE CLEAN-UP HOSE STATION
- HB — HOSE BIBB, H.B.
- EHB — EXISTING HOSE BIBB, E.H.B.
- SLOT DRAIN PIT
- EXISTING SLOT DRAIN PIT
- TRENCH DRAIN PIT
- EXISTING TRENCH DRAIN PIT
- WH — WALL HYDRANT, W.H.
- EWH — EXISTING WALL HYDRANT, E.W.H.
- WCO — WALL CLEANOUT
- EWCO — EXISTING WALL CLEANOUT
- W — WATER METER
- EW — EXISTING WATER METER
- YCO — YARD CLEAN OUT
- EYCO — EXISTING YARD CLEAN OUT
- 2-WAY CONTROL VALVE, PNEUMATIC
- EXISTING 2-WAY CONTROL VALVE, PNEUMATIC
- 2-WAY CONTROL VALVE, ELECTRIC
- EXISTING 2-WAY CONTROL VALVE, ELECTRIC
- 3-WAY CONTROL VALVE, PNEUMATIC
- EXISTING 3-WAY CONTROL VALVE, PNEUMATIC
- 3-WAY CONTROL VALVE, ELECTRIC
- EXISTING 3-WAY CONTROL VALVE, ELECTRIC
- AP — ACCESS PANEL
- EAP — EXISTING ACCESS PANEL
- AIR VENT
- EXISTING AIR VENT
- BACKFLOW PREVENTER
- EXISTING BACKFLOW PREVENTER
- BALANCING VALVE
- EXISTING BALANCING VALVE
- BALL VALVE
- EXISTING BALL VALVE
- BUTTERFLY VALVE
- EXISTING BUTTERFLY VALVE
- CAP OR PLUG
- EXISTING CAP OR PLUG
- CHECK VALVE
- EXISTING CHECK VALVE
- CIRCUIT SETTER
- EXISTING CIRCUIT SETTER
- DIRECTION OF FLOW ARROW
- FLOW METER
- EXISTING FLOW METER
- GAS COCK
- EXISTING GAS COCK
- GAS PRESSURE REGULATOR
- EXISTING GAS PRESSURE REGULATOR
- GATE VALVE
- EXISTING GATE VALVE
- GLOBE VALVE
- EXISTING GLOBE VALVE
- HEAT TRACE
- PIPE ANCHOR, EXTERIOR
- PIPE ANCHOR, INTERIOR
- PITCH OF PIPE DOWN (ARROW)
- PIPE GUIDE
- PIPING DROP
- PIPING RISE
- PRESSURE GAUGE
- EXISTING PRESSURE GAUGE
- PRESSURE REDUCING VALVE
- EXISTING PRESSURE REDUCING VALVE
- P — PUMP
- EP — EXISTING PUMP
- RELIEF VALVE
- EXISTING RELIEF VALVE
- RUNNING TRAP
- PDI-" " — SHOCK ABSORBER
- EPDI-" " — EXISTING SHOCK ABSORBER
- STEAM TRAP
- EXISTING STEAM TRAP
- STRAINER
- EXISTING STRAINER
- THERMOMETER
- EXISTING THERMOMETER
- UNION
- EXISTING UNION
- POINT OF CONNECTION (NEW WORK TO EXISTING WORK)
- T.O.F.D. — TOP OF FLOOR DRAIN
- VTR — VENT THRU ROOF
- FIRE WALL
- BLAST RESISTANT WALL

1. PERFORM WORK IN ACCORDANCE WITH THE LATEST EDITIONS, REVISIONS, AMENDMENTS OR SUPPLEMENTS OF APPLICABLE STATUTES, ORDINANCES, CODES OR REGULATIONS OF FEDERAL, STATE, AND LOCAL AUTHORITIES HAVING JURISDICTION IN EFFECT ON THE DATE PLUMBING PACKAGE IS ISSUED.
2. FOLLOW APPROVED STANDARDS ESTABLISHED BY OSHA, UNDERWRITER'S LABORATORY, ASA, 2009 NATIONAL PLUMBING CODE, NEC, STATE FIRE INSURANCE REGULATORY BODY, NFPA OR OTHERS. THESE STANDARDS SHALL BE FOLLOWED WHETHER OR NOT INDICATED ON THE DRAWINGS AND SPECIFICATIONS.
3. ARRANGE WITH AUTHORITIES AND UTILITY COMPANIES FOR PERMITS, FEES AND SERVICE CONNECTIONS. VERIFY LOCATIONS AND ARRANGEMENTS AND PAY ALL CHARGES, INCLUDING INSPECTIONS.
4. THE ENTIRE SYSTEM AND ITS COMPONENT ITEMS OF EQUIPMENT SHALL OPERATE WITHOUT OBJECTIONABLE VIBRATION OR NOISE. REFER TO 2011 ASHRAE HVAC APPLICATIONS HANDBOOK, CHAPTER 48, FOR GENERAL GUIDELINES.
5. VALVES AND STRAINERS SHALL BE SIZED TO MATCH LINE SIZE UNLESS OTHERWISE NOTED.
6. ALL CONTROL VALVES SHALL HAVE A GAUGE AND GAUGE VALVE ASSEMBLY, UNLESS OTHERWISE NOTED.
7. EXPOSED PIPING SHALL BE COORDINATED WITH ENGINEER PRIOR TO INSTALLATION. SLOPE TO DRAIN.
8. PIPE MATERIAL: TYPE L COPPER PIPE FOR DOMESTIC WATER.
9. CONTRACTOR RESPONSIBLE FOR LOCATING ALL UTILITY LINES.
10. THE CONTRACTOR SHALL FIELD VERIFY ALL DIMENSIONS AND CONDITIONS OF EXISTING CONSTRUCTION AND REPORT ANY INCONSISTENCIES TO THE ENGINEER BEFORE PROCEEDING WITH WORK AFFECTED BY SUCH INCONSISTENCIES. THE CONTRACTOR IS RESPONSIBLE FOR OBTAINING THE INTENT OF THE DESIGN AS SHOWN ON THE PLANS. ACTUAL CONDITIONS SHALL GOVERN OVER WRITTEN DIMENSIONS, WRITTEN DIMENSIONS SHALL GOVERN OVER ACTUAL DRAWING REPRESENTATION. ATTEMPTS TO UTILIZE SCALING OR ELECTRONIC MEANS TO DETERMINE QUANTITY TAKE-OFF MAY BE AFFECTED BY NOT-TO-SCALE ITEMS. THE ENGINEER IS NOT RESPONSIBLE FOR, AND SHALL NOT BE HELD LIABLE FOR THE ACCURACY OF RESULTS OF SUCH TAKE OFFS.
11. THE CONTRACTOR SHALL BE RESPONSIBLE FOR VERIFYING THE EXISTENCE AND LOCATION OF ALL UNDERGROUND OR CONCEALED UTILITIES IN ADVANCE OF ANY CONSTRUCTION. IT IS THE CONTRACTOR'S RESPONSIBILITY TO INSPECT THE JOB SITE TO BECOME FAMILIAR WITH ALL EXISTING CONDITIONS THAT COULD AFFECT THE INSTALLATION OF ANY WORK SET FORTH IN THESE PLANS.
12. THE CONTRACTOR SHALL NOT INSTALL ITEMS AS SHOWN ON THE PLANS WHEN IT IS OBVIOUS THAT FIELD CONDITIONS ARE DIFFERENT THAN SHOWN IN THE DESIGN. SUCH CONDITIONS SHALL BE BROUGHT TO THE ATTENTION OF THE ENGINEER. IN THE EVENT THE CONTRACTOR DOES NOT NOTIFY THE ENGINEER, THE CONTRACTOR ASSUMES FULL RESPONSIBILITY AND EXPENSE FOR ANY REVISIONS NECESSARY. THE ENGINEER OF RECORD SHALL NOT BE RESPONSIBLE FOR THE CONTRACTOR'S FAILURE TO CARRY OUT THE CONSTRUCTION WORK IN ACCORDANCE WITH THE CONTRACT DOCUMENTS, NOR SHALL THE ENGINEER BE REQUIRED TO SUPERVISE THE CONDUCT OF THE WORK OR THE CONSTRUCTION PROCEDURES AND SAFETY PROCEDURES FOLLOWED BY THE CONTRACTOR OR THE SUBCONTRACTOR OR THEIR RESPECTIVE EMPLOYEES OR BY ANY OTHER PERSON ON THE JOB SITE OTHER THAT THAT OF THE ENGINEER'S EMPLOYEES.
13. CONTRACTOR AGREES TO ASSUME SOLE AND COMPLETE RESPONSIBILITY FOR THE JOB SITE CONDITIONS DURING THE COURSE OF CONSTRUCTION OF THIS PROJECT, INCLUDING SAFETY OF ALL PERSONS AND PROPERTY; THAT THIS REQUIREMENT SHALL APPLY 24 HOURS A DAY AND NOT BE LIMITED TO NORMAL WORKING HOURS. ANY DAMAGE TO PROPERTY AND/OR ITEMS ON PROPERTY, EXISTING OR NEW, SHALL BE REPAIRED AND/OR PAID FOR BY THE RESPONSIBLE PARTY.
14. IT SHALL BE THE CONTRACTOR'S RESPONSIBILITY TO COORDINATE BASE BID WORK AND ADDITIVE ALTERNATE WORK. ANY PROBLEMS OR POTENTIAL FOR FUTURE PROBLEMS SHALL BE REPORTED TO THE ARCHITECT AND ENGINEER FOR DIRECTION.
15. ALL POINTS-OF-CONNECTION SHOWN ON PLANS ARE APPROXIMATE. IT SHALL BE THE PLUMBING CONTRACTOR'S RESPONSIBILITY TO LOCATE ALL EXISTING PLUMBING LINES THAT ARE BEING CONNECTED TO.
16. GENERAL AND PLUMBING CONTRACTOR SHALL READ AND STUDY ALL DRAWINGS TO FAMILIARIZE THEMSELVES WITH PROJECT AND RESPONSIBILITIES PRIOR TO BIDDING
17. CONTRACTOR SHALL PROTECT PIER FROM DAMAGE AND REPAIR OR REPLACE AT THEIR EXPENSE ANY DAMAGES THAT DO OCCUR.

Unless a Professional Seal with signature And date is affixed , this document is Preliminary and is not intended for construction, recording purposes or implementation.

THIS DRAWING IS A SINGLE PART OF AN INTEGRATED SET OF CONSTRUCTION CONTRACT DOCUMENTS. REFER TO DRAWING AND SPECIFICATION SHEETS INCLUDING, BUT NOT LIMITED TO, ALL "GENERAL CONDITIONS", "SUMMARY OF WORK", AND APPLICABLE SPECIFICATION SECTIONS WHICH APPLY TO THIS DRAWING. REFER TO ALL DOCUMENTS FOR THE COMPLETE SCOPE OF WORK. THE CONTRACTOR WILL BE RESPONSIBLE FOR ALL INFORMATION CONTAINED IN THE "SET" OF DOCUMENTS ISSUED. THIS DRAWING IS SCHEMATIC AND IS NOT TO BE USED AS A SHOP DRAWING. ALTERATIONS FROM THAT SHOWN REQUIRED TO COORDINATE WITH OTHER TRADES OR TO CONFORM TO ACTUAL SITE CONDITIONS ARE THE CONTRACTOR'S RESPONSIBILITY. VERIFY THE LOCATIONS OR DIMENSIONS OF ALL ARCHITECTURAL AND STRUCTURAL ELEMENTS WITH THE ARCHITECTURAL AND STRUCTURAL DRAWINGS ISSUED. THE SHOWING OF THESE ELEMENTS ARE FOR REFERENCE ONLY AND ARE TO BE VERIFIED PRIOR TO DESIGN OR CONSTRUCTION. NO LIABILITY IS ASSUMED BY THE INDICATION OF ELEMENTS IN THESE DRAWINGS. THE ACCOMPANYING PROFESSIONAL SEAL INDICATES THAT THE PERSON WHOSE NAME APPEARS ON THE SEAL HAS PREPARED OR SUPERVISED PREPARATION OF THE DOCUMENT ON WHICH THE SEAL APPEARS. THAT PERSON AND THE FIRM FOR WHICH THAT PERSON IS EMPLOYED BY DISCLAIM RESPONSIBILITY FOR ANY PORTIONS OF THE WORK ON WHICH THEIR SEAL DOES NOT APPEAR.

THIS DOCUMENT SHALL NOT BE USED FOR ANY OTHER PROJECTS, FOR ADDITIONS TO THIS PROJECT, OR FOR COMPLETION OF THIS PROJECT BY OTHERS WITHOUT THE PRIOR WRITTEN CONSENT OF GRIBBINS DRAKE SCOTT. ANY INDIVIDUAL AND/OR COMPANY THAT USES THIS DOCUMENT UNAUTHORIZED, AGREES TO THE FULLEST EXTENT OF THE LAW, TO INDEMNIFY AND HOLD HARMLESS GRIBBINS DRAKE SCOTT, INC., ITS OFFICERS, DIRECTORS AND EMPLOYEES AGAINST ANY DAMAGES, LIABILITIES OR COSTS, INCLUDING REASONABLE ATTORNEY'S FEES AND COSTS OF DEFENSE, ARISING OUT OF THE MISUSE OF THIS DOCUMENT.

THIS DRAWING COPYRIGHT @2013

STATE OF MAINE
DEPARTMENT OF TRANSPORTATION

WIN #020806.00

STATE OF MAINE — ROBERT M. DRAKE — 8974 — LICENSED PROFESSIONAL ENGINEER

SIGNATURE	3-07	DATE
P.E. NUMBER		
8-12-14		DATE

PROJ. MANAGER CDS		
DESIGN-DETAILED		
CHECKED-REVIEWED		
DESIGN2-DETAILED2	SPR	
DESIGN3-DETAILED3		
REVISIONS 1		
REVISIONS 2		
REVISIONS 3		
REVISIONS 4		
FIELD CHANGES		

EASTPORT BREAKWATER REPLACEMENT
EASTPORT, ME
WASHINGTON COUNTY

BREAKWATER PLAN
PLUMBING SYMBOL LEGEND

SHEET NUMBER

P-1

GENERAL PLUMBING NOTES

1. DRAWING IS FOR REFERENCE ONLY. CONTRACTOR SHALL NOT SCALE FROM DRAWING.
2. CONTRACTOR SHALL VERIFY ALL LOCATIONS AND DIMENSIONS.
3. EXISTING WATER MAIN IS DUCTILE IRON.

EXISTING PLUMBING DEMOLITION NOTES

(1) REMOVE EXISTING ¾" POLYETHYLENE FLEXIBLE TUBING SUPPORTED ALONG GANGWAY AND EXISTING HOSE BIBB.
(2) EXISTING ¾" COPPER PIPE BELOW GRADE TO REMAIN.
(3) REMOVE EXISTING ¾" COPPER PIPE BELOW GRADE.
(4) EXISTING ¾" COPPER PIPE SUPPORTED FROM GROUND AND EXISTING WATER METER TO REMAIN.
(5) REMOVE PORTION OF SANITARY SEWER INDICATED.
(6) EXISTING WATER MAIN SHUT-OFF VALVE. CONTRACTOR SHALL VERIFY EXACT LOCATION.
(7) REMOVE EXISTING WATER HYDRANT AT PIER AND ALL ASSOCIATED VALVES, FITTINGS AND SUPPORTS.
(8) EXISTING WATER PIPING SHALL BE DEMOLISHED FROM PIER AND APPROACH BACK TO THE SHUT-OFF VALVE ON SHORE. REFER TO DRAWING P-3 FOR NEW PIPING INSTALLATION.
(9) REMOVE 12" SANITARY SEWER DUMP CONNECTION AT PIER AND ALL ASSOCIATED FITTINGS AND SUPPORTS.
(10) EXISTING 12" SANITARY SEWER PIPING SHALL BE DEMOLISHED FROM PIER TO SHORE AND CAPPED BELOW GRADE.

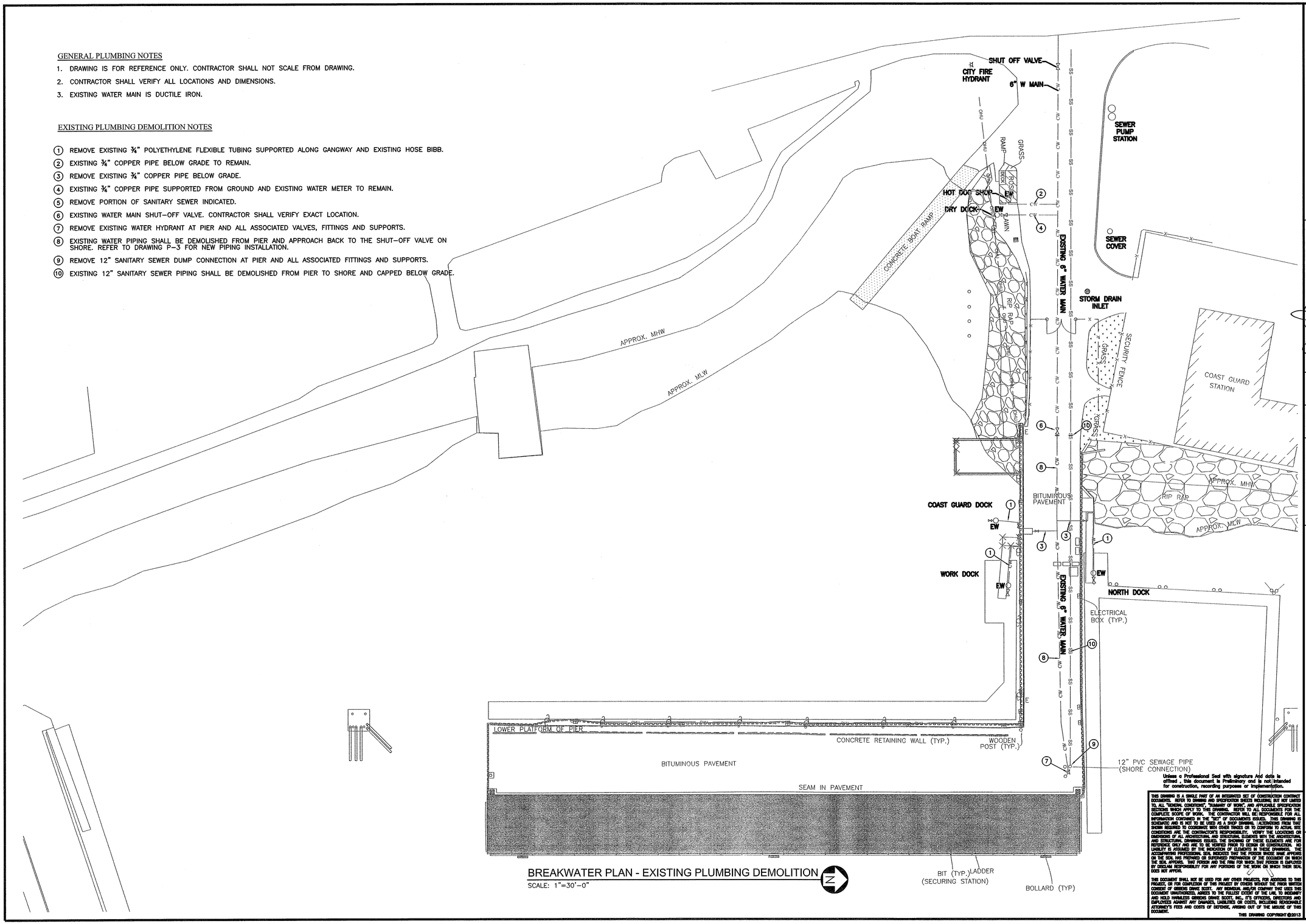

BREAKWATER PLAN - EXISTING PLUMBING DEMOLITION

SCALE: 1"=30'-0"

Unless a Professional Seal with signature And date is affixed , this document is Preliminary and is not intended for construction, recording purposes or implementation.

THIS DRAWING IS A SINGLE PART OF AN INTEGRATED SET OF CONSTRUCTION CONTRACT DOCUMENTS. REFER TO DRAWING AND SPECIFICATION SHEETS INCLUDING, BUT NOT LIMITED TO, ALL "GENERAL CONDITIONS", "SUMMARY OF WORK", AND APPLICABLE SPECIFICATION SECTIONS WHICH APPLY TO THIS DRAWING. REFER TO ALL DOCUMENTS FOR THE COMPLETE SCOPE OF WORK. THE CONTRACTOR WILL BE RESPONSIBLE FOR ALL INFORMATION CONTAINED IN THE "SET" OF DOCUMENTS ISSUED. THIS DRAWING IS SCHEMATIC AND IS NOT TO BE USED AS A SHOP DRAWING. ALTERATIONS FROM THAT SHOWN REQUIRED TO COORDINATE WITH OTHER TRADES OR TO CONFORM TO ACTUAL SITE CONDITIONS ARE THE CONTRACTOR'S RESPONSIBILITY. VERIFY THE LOCATIONS OR DIMENSIONS OF ALL ARCHITECTURAL AND STRUCTURAL ELEMENTS WITH THE ARCHITECTURAL AND STRUCTURAL DRAWINGS ISSUED. THE SHOWING OF THESE ELEMENTS ARE FOR REFERENCE ONLY AND ARE TO BE VERIFIED PRIOR TO DESIGN OR CONSTRUCTION. NO LIABILITY IS ASSUMED BY THE INCLUSION OF ELEMENTS IN THESE DRAWINGS. THE ACCOMPANYING PROFESSIONAL SEAL INDICATES THAT THE PERSON WHOSE NAME APPEARS ON THE SEAL HAS PREPARED OR SUPERVISED PREPARATION OF THE DOCUMENT ON WHICH THE SEAL APPEARS. THAT PERSON AND THE FIRM FOR WHICH THAT PERSON IS EMPLOYED BY DISCLAIM RESPONSIBILITY FOR ANY PORTIONS OF THE WORK ON WHICH THEIR SEAL DOES NOT APPEAR.

THIS DOCUMENT SHALL NOT BE USED FOR ANY OTHER PROJECTS, FOR ADDITIONS TO THIS PROJECT, OR FOR COMPLETION OF THIS PROJECT BY OTHERS WITHOUT THE PRIOR WRITTEN CONSENT OF GERDER DRAKE SCOTT. ANY INDIVIDUAL AND/OR COMPANY THAT USES THIS DOCUMENT UNAUTHORIZED, AGREES TO THE FULLEST EXTENT OF THE LAW, TO INDEMNIFY AND HOLD HARMLESS GERDER DRAKE SCOTT, INC., IT'S OFFICERS, DIRECTORS AND EMPLOYEES AGAINST ANY DAMAGES, LIABILITIES OR COSTS, INCLUDING REASONABLE ATTORNEY'S FEES AND COSTS OF DEFENSE, ARISING OUT OF THE MISUSE OF THIS DOCUMENT.

THIS DRAWING COPYRIGHT ©2013

STATE OF MAINE
DEPARTMENT OF TRANSPORTATION

WIN #020806.00

STATE OF MAINE ROBERT M. DRAKE 8974 LICENSED PROFESSIONAL ENGINEER

	BY	DATE
SIGNATURE		
8974 P.E. NUMBER		
8-12-14 DATE		

PROJ. MANAGER CDS	BY	DATE
DESIGN-DETAILED		
CHECKED-REVIEWED		
DESIGN2-DETAILED2	SPR	3-07
DESIGN3-DETAILED3	SPR	
REVISIONS 1		
REVISIONS 2		
REVISIONS 3		
REVISIONS 4		
FIELD CHANGES		

EASTPORT BREAKWATER REPLACEMENT
EASTPORT, ME
WASHINGTON COUNTY

BREAKWATER PLAN
PLUMBING - DEMOLITION

SHEET NUMBER

P-2

POTABLE WATER GENERAL NOTES

1. DRAWING IS FOR REFERENCE ONLY. CONTRACTOR SHALL NOT SCALE FROM DRAWING.
2. ALL NEW PIPING FROM THE PRE-FABRICATED ENCLOSURE BELOW GRADE AND IN SOUTH PPILE CAP UTILITY TROUGH SHALL BE HIGH-DENSITY POLYETHYLENE PIPE (HDPE).
3. ALL NEW PIPING FROM EXISTING VALVE CONNECTION UP TO AND INCLUDING PIPING IN THE PRE-FABRICATED ENCLOSURE SHALL BE 3-LAYER FBE COATED STEEL PIPE.
4. ALL PIPE SHALL BE SLOPED TO THE ABATEMENT.
5. NEW 3" WATER METER SHALL BE FURNISHED BY THE LOCAL UTILITY COMPANY.

POTABLE WATER PLAN NOTES

(1) CONNECT NEW 3"CW TO EXISTING WATER DEPARTMENT SHUT-OFF VALVE BELOW STREET. CONTRACTOR SHALL FIELD VERIFY EXACT LOCATION OF EXISTING WATER DEPT. SHUT-OFF VALVE.

(2) PROVIDE "SAFE-T-COVER" MODEL 800S-ALC01-3 ENCLOSURE WITH 3" BACKFLOW PREVENTER WITH WATER METER ROUGH-IN AND A 1" BACKFLOW PREVENTER WITH WATER METER ROUGH-IN. REFER TO BACKFLOW PREVENTER AND WATER METER DETAIL ON SHEET P-4.

(3) PROVIDE 2" AND 1" RED BRASS DRAIN VALVE AT EXTERIOR FACE OF STEEL SHEET PILE. ALSO, PROVIDE SLEEVE THROUGH STEEL SHEET PILE FOR 2" CUPRO-NICKEL DRAIN PIPE AND 1" CUPRO-NICKEL DRAIN PIPE.

(4) PROVIDE 3"CW PIPING BELOW GRADE. REFER TO PIPE TRENCH DETAIL ON SHEET P-4.

(5) PROVIDE OPENING IN SOUTH SIDE APPROACH SHEET PILE CAP FOR 3"CW PIPE TO ENTER TROUGH FROM BELOW.

(6) PROVIDE 3"CW PIPING IN SOUTH PILE CAP UTILITY TROUGH. REFER TO WATER PIPE SUPPORT IN TROUGH DETAIL ON SHEET P-4.

(7) PROVIDE EXPANSION LOOP FOR 3"CW PIPING IN SOUTH PILE CAP UTILITY TROUGH PER MANUFACTURER'S INSTALLATION INSTRUCTIONS.

(8) PROVIDE 2" WATER CONNECTION ON APPROACH. REFER TO DOCK WATER SERVICE CONNECTION DETAIL ON SHEET P-4. PROVIDE PROTECTIVE BOLLARD ON EAST AND WEST SIDES OF THE WATER SERVICE CONNECTION.

(9) PROVIDE 2" RED BRASS DRAIN VALVE AT EXTERIOR FACE OF STEEL SHEET PIPE. ALSO, PROVIDE SLEEVE THROUGH STEEL SHEET PILE FOR 2" CUPRO-NICKEL DRAIN PIPE.

(10) PROVIDE ¾" CUPRO-NICKEL PIPE BELOW GRADE WITH CAPPED RED BRASS SHUT-OFF VALVE AT EXTERIOR FACE OF STEEL SHEET PILE FOR NORTH DOCK. TERMINATE 18" BELOW BOTTOM OF PILE CAP. ALSO, PROVIDE SLEEVE THROUGH STEEL SHEET PILE FOR ¾" CUPRO-NICKEL PIPE. COORDINATE LOCATION WITH GANGWAY.

(11) PROVIDE ¾" CUPRO-NICKEL PIPE STUBBED UP FROM TROUGH AND TERMINATE OVER SOUTH PILE CAP WITH CAPPED RED BRASS SHUT-OFF VALVE AND WATER HAMMER ARRESTOR (PDI-"A") FOR COAST GUARD DOCK. COORDINATE LOCATION WITH GANGWAY.

(12) PROVIDE ¾" CUPRO-NICKEL PIPE STUBBED UP FROM TROUGH AND TERMINATE OVER SOUTH PILE CAP WITH CAPPED RED BRASS SHUT-OFF VALVE AND WATER HAMMER ARRESTOR (PDI-"A") FOR WORK DOCK. COORDINATE LOCATION WITH GANGWAY.

(13) PROVIDE 1"CW PIPING BELOW GRADE FOR COAST GUARD. REFER TO PIPE TRENCH DETAIL ON SHEET P-4.

(14) PROVIDE 1"CW PIPING IN SOUTH PILE CAP UTILITY TROUGH.

(15) PROVIDE OPENING IN SOUTH SIDE APPROACH SHEET PILE CAP FOR 1"CW PIPE TO ENTER TROUGH FROM BELOW.

(16) PROVIDE 3"CW UP THROUGH CONCRETE PAD TO INSIDE ENCLOSURE. REFER TO BACKFLOW PREVENTER AND WATER METER DETAIL ON SHEET P-4.

(17) PROVIDE 1"CW UP THROUGH CONCRETE PAD TO INSIDE ENCLOSURE. REFER TO BACKFLOW PREVENTER AND WATER METER DETAIL ON SHEET P-4.

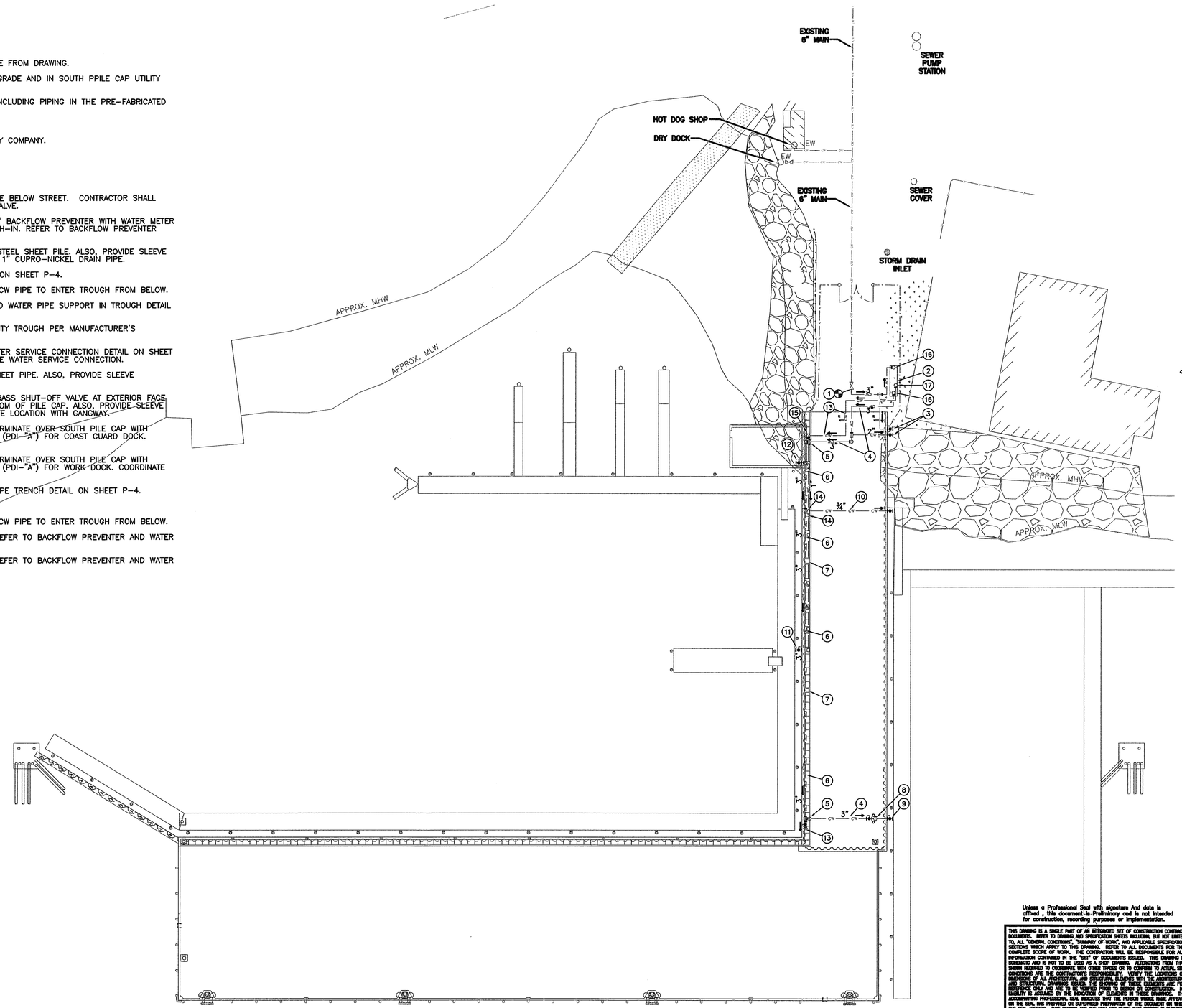

BREAKWATER PLAN - NEW POTABLE WATER

SCALE: 1"=30'-0"

Unless a Professional Seal with signature And date is affixed , this document is Preliminary and is not intended for construction, recording purposes or implementation.

THIS DRAWING IS A SINGLE PART OF AN INTEGRATED SET OF CONSTRUCTION CONTRACT DOCUMENTS. REFER TO DRAWING AND SPECIFICATION SHEETS INCLUDING, BUT NOT LIMITED TO, ALL "GENERAL CONDITIONS", "SUMMARY OF WORK", AND APPLICABLE SPECIFICATION SECTIONS WHICH APPLY TO THIS DRAWING. REFER TO ALL DOCUMENTS FOR THE COMPLETE SCOPE OF WORK. THE CONTRACTOR WILL BE RESPONSIBLE FOR ALL INFORMATION CONTAINED IN THE "SET" OF DOCUMENTS ISSUED. THIS DRAWING IS SCHEMATIC AND IS NOT TO BE USED AS A SHOP DRAWING. ALTERATIONS FROM THE SHOWN REQUIRED TO COORDINATE WITH OTHER TRADES OR TO CONFORM TO ACTUAL SITE CONDITIONS ARE THE CONTRACTOR'S RESPONSIBILITY. VERIFY THE LOCATIONS OR DIMENSIONS OF ALL ARCHITECTURAL AND STRUCTURAL ELEMENTS WITH THE ARCHITECTURAL AND STRUCTURAL DRAWINGS ISSUED. THE SHOWING OF THESE ELEMENTS ARE FOR REFERENCE ONLY AND ARE TO BE VERIFIED PRIOR TO DESIGN OR CONSTRUCTION. NO LIABILITY IS ASSUMED BY THE INDICATION OF ELEMENTS IN THESE DRAWINGS. THE ACCOMPANYING PROFESSIONAL SEAL INDICATES THAT THE PERSON WHOSE NAME APPEARS ON THE SEAL HAS PREPARED OR SUPERVISED PREPARATION OF THE DOCUMENT ON WHICH THE SEAL APPEARS. THAT PERSON AND THE FIRM FOR WHICH THAT PERSON IS EMPLOYED BY DISCLAIM RESPONSIBILITY FOR ANY PORTIONS OF THE WORK ON WHICH THEIR SEAL DOES NOT APPEAR.

THIS DOCUMENT SHALL NOT BE USED FOR ANY OTHER PROJECTS, FOR ADDITIONS TO THIS PROJECT, OR FOR COMPLETION OF THIS PROJECT BY OTHERS WITHOUT THE PRIOR WRITTEN CONSENT OF GERRENS DRAKE SCOTT. ANY INDIVIDUAL AND/OR COMPANY THAT USES THIS DOCUMENT UNAUTHORIZED, AGREES TO THE FULLEST EXTENT OF THE LAW, TO INDEMNIFY AND HOLD HARMLESS GERRENS DRAKE SCOTT, INC., IT'S OFFICERS, DIRECTORS AND EMPLOYEES AGAINST ANY DAMAGES, LIABILITIES OR COSTS, INCLUDING REASONABLE ATTORNEY'S FEES AND COSTS OF DEFENSE, ARISING OUT OF THE MISUSE OF THIS DOCUMENT.

THIS DRAWING COPYRIGHT ©2013

STATE OF MAINE
DEPARTMENT OF TRANSPORTATION

WIN #020806.00

STATE OF MAINE ROBERT M. DRAKE 8974 LICENSED PROFESSIONAL ENGINEER

P.E. NUMBER

SIGNATURE

DATE 8-12-14

		BY	DATE
PROJ. MANAGER	CDS		
DESIGN-DETAILED			
CHECKED-REVIEWED			
DESIGN2-DETAILED2	SPR	SPR	3-07
DESIGN3-DETAILED3			
REVISIONS 1			
REVISIONS 2			
REVISIONS 3			
REVISIONS 4			
FIELD CHANGES			

EASTPORT BREAKWATER REPLACEMENT
EASTPORT, ME
WASHINGTON COUNTY

BREAKWATER PLAN
NEW POTABLE WATER

SHEET NUMBER

P-3

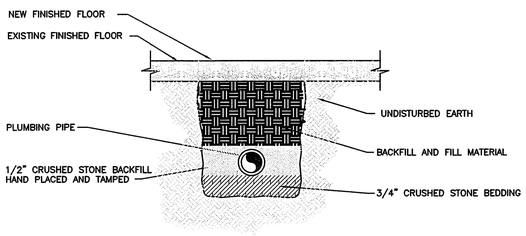

P1 PIPE TRENCH DETAIL
SCALE: NTS

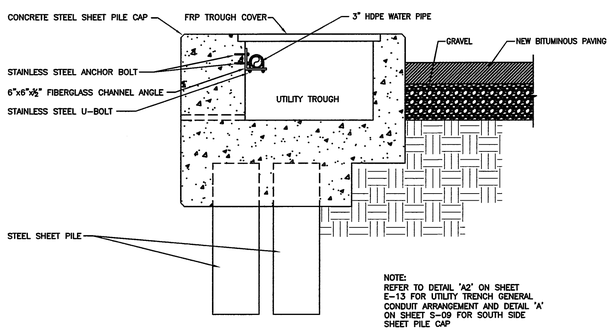

P3 PIPE SUPPORT IN SOUTH PILE CAP TROUGH DETAIL
SCALE: NTS

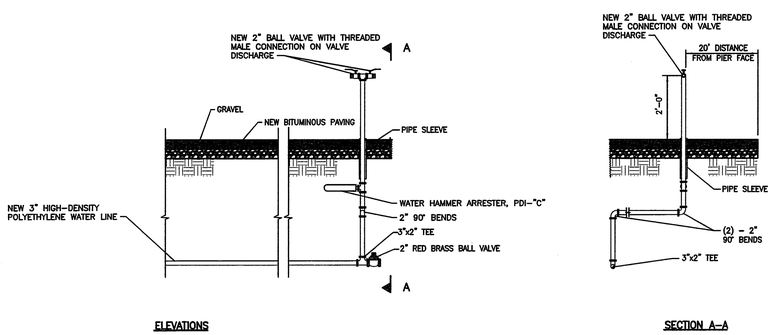

P4 DOCK WATER SERVICE CONNECTION DETAIL
SCALE: NTS

SPECIAL WINTERIZATION NOTE: EACH FALL THE SYSTEM SHALL BE SHUT DOWN AND WINTERIZED TO PREVENT DAMAGE DUE TO FREEZING WEATHER. ALL WATER SHALL BE REMOVED FROM THE BACKFLOW PREVENTION DEVICE EITHER BY AIR OR BY REMOVING THE DEVICE. ALL WATER UP STREAM OF THE DEVICE SHALL BE REMOVED EITHER BY BLOWING OUT OR PUMPING. EACH SPRING AS A PART OF START UP, THE BACKFLOW PREVENTION DEVICE SHALL BE TESTED IN ACCORDANCE WITH WATER DISTRICT STANDARDS AND PROCEDURES BY A CERTIFICATE CROSS CONNECTION BACKFLOW TESTER, (LIST AVAILABLE AT THE WATER DISTRICT).

ELEVATION VIEW

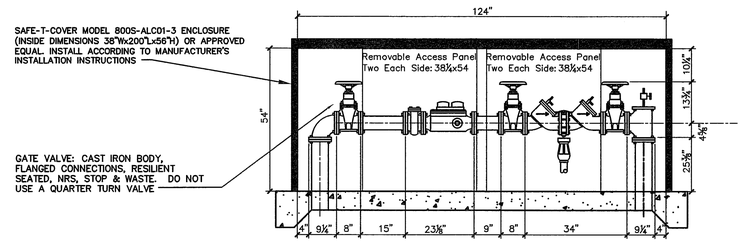

PLAN VIEW

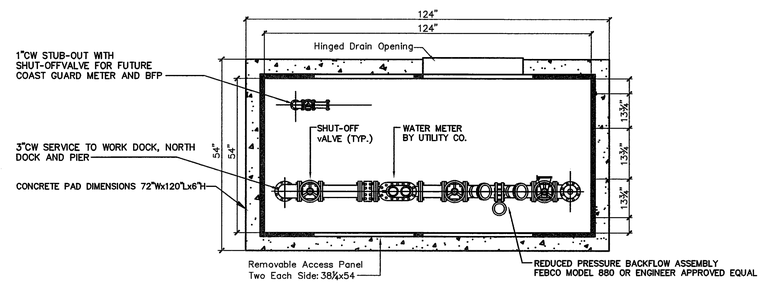

DETAIL SHOWS GENERAL SCHEMATIC REQUIREMENTS. INSTALL ITEMS FURNISHED BY WATER COMPANY, PAY ANY FEES REQUIRED BY WATER COMPANY, FURNISH AND INSTALL ITEMS NOT PROVIDED BY THE WATER COMPANY. PROVIDE BACKFLOW PREVENTER OF TYPE & MANUFACTURER APPROVED BY LOCAL AUTHORITIES. PROVIDE PRESSURE REDUCING VALVE ONLY IF PRESSURE EXCEEDS 80 PSI - VERIFY. STRAINER AND REDUCING VALVE MAY BE INSTALLED IN VERTICAL PIPE IF SPACE LIMITATIONS REQUIRE IT. CLEAN STRAINER BEFORE TURNING BUILDING OVER TO OWNER. PROVIDE ANY REQUIRED CERTIFICATION OF TESTING OF THE BACKFLOW PREVENTER TO LOCAL AUTHORITIES.

P2 BACKFLOW PREVENTER AND WATER METER DETAIL
SCALE: NTS

STATE OF MAINE
DEPARTMENT OF TRANSPORTATION

WIN #020806.00

STATE OF MAINE ROBERT M. DRAKE 8974 LICENSED PROFESSIONAL ENGINEER

		SIGNATURE	P.E. NUMBER
	DATE	3-07	8-12-14
	BY	SPR	DATE
PROJ. MANAGER	CDS		
DESIGN-DETAILED			
CHECKED-REVIEWED			
DESIGN2-DETAILED2	SPR		
DESIGN3-DETAILED3			
REVISIONS 1			
REVISIONS 2			
REVISIONS 3			
REVISIONS 4			
FIELD CHANGES			

EASTPORT BREAKWATER REPLACEMENT
EASTPORT, ME
WASHINGTON COUNTY

BREAKWATER PLAN
PLUMBING DETAILS

Unless a Professional Seal with signature And date is affixed , this document is Preliminary and is not intended for construction, recording purposes or implementation.

THIS DRAWING IS A SINGLE PART OF AN INTEGRATED SET OF CONSTRUCTION CONTRACT DOCUMENTS. REFER TO DRAWING AND SPECIFICATION SHEETS INCLUDING, BUT NOT LIMITED TO, ALL "GENERAL CONDITIONS", "SUMMARY OF WORK", AND APPLICABLE SPECIFICATION SECTIONS WHICH APPLY TO THIS DRAWING. REFER TO ALL DOCUMENTS FOR THE COMPLETE SCOPE OF WORK. THE CONTRACTOR WILL BE RESPONSIBLE FOR ALL INFORMATION CONTAINED IN THE "SET" OF DOCUMENTS ISSUED. THIS DRAWING IS SCHEMATIC AND IS NOT TO BE USED AS A SHOP DRAWING. ALTERATIONS FROM THAT SHOWN REQUIRED TO COORDINATE WITH OTHER TRADES OR TO CONFORM TO ACTUAL SITE CONDITIONS ARE THE CONTRACTOR'S RESPONSIBILITY. VERIFY THE LOCATIONS OR DIMENSIONS OF ALL ARCHITECTURAL AND STRUCTURAL ELEMENTS WITH THE ARCHITECTURAL AND STRUCTURAL DRAWINGS ISSUED. THE SHOWING OF THESE ELEMENTS ARE FOR REFERENCE ONLY AND ARE TO BE VERIFIED PRIOR TO DESIGN OR CONSTRUCTION. NO LIABILITY IS ASSUMED BY THE INCLUSION OF ELEMENTS IN THESE DRAWINGS. THE ACCOMPANYING PROFESSIONAL SEAL INDICATES THAT THE PERSON WHOSE NAME APPEARS ON THE SEAL HAS PREPARED OR SUPERVISED PREPARATION OF THE DOCUMENT OF WHICH THE SEAL APPEARS. THAT PERSON AND THE FIRM FOR WHICH THAT PERSON IS EMPLOYED BY DISCLAIM RESPONSIBILITY FOR ANY PORTIONS OF THE WORK ON WHICH THEIR SEAL DOES NOT APPEAR.

THIS DOCUMENT SHALL NOT BE USED FOR ANY OTHER PROJECTS, FOR ADDITIONS TO THIS PROJECT, OR FOR COMPLETION OF THIS PROJECT BY OTHERS WITHOUT THE PRIOR WRITTEN CONSENT OF GREENE DRAKE SCOTT, INC. ANY REVISION, AND/OR COPYING THAT USES THIS DOCUMENT UNAUTHORIZED, AGREES TO THE FULLEST EXTENT OF THE LAW, TO INDEMNIFY AND HOLD HARMLESS GREENE DRAKE SCOTT, INC., IT'S OFFICERS, DIRECTORS AND EMPLOYEES AGAINST ANY DAMAGES, LIABILITIES OR COSTS, INCLUDING REASONABLE ATTORNEY'S FEES AND COSTS OF DEFENSE, ARISING OUT OF THE MISUSE OF THIS DOCUMENT.

THIS DRAWING COPYRIGHT ©2013

SHEET NUMBER

P-4

P-4.dwg 03-17-14 14:08 stever

ELECTRICAL SYMBOL SCHEDULE

(NOTE 1)

LIGHTING SYMBOLS

POLE MOUNTED EXTERIOR LIGHTING FIXTURE

POWER DISTRIBUTION SYMBOLS

DUPLEX RECEPTACLE, 20A., 125V., 1 PHASE, 2 POLE, 3 WIRE GROUNDING

WP 'WP' INDICATES WEATHERPROOF COVER

GFI 'GFI' INDICATES GROUND FAULT INTERRUPTER

J OR J JUNCTION BOX

SURFACE MOUNTED PANELBOARD – 480V, 3 PHASE, 3 WIRE

SURFACE MOUNTED PANELBOARD – 120/240V, 1 PHASE, 3 WIRE

T OR VOLTAGE TRANSFORMER

CURRENT TRANSFORMER

CONTACTOR

CIRCUIT BREAKER

FUSE

DISCONNECT SWITCH

DISCONNECT SWITCH SUPPLIED WITH CORRESPONDING EQUIPMENT (NOT BY ELECTRICAL CONTRACTOR)

COMBINATION MOTOR STARTER

S_M MANUAL MOTOR STARTER

P MARINE POWER PEDESTAL

PS POWER SUPPLY FOR CCTV EQUIPMENT

M UTILITY REVENUE METER

CCTV CAMERA

TELEPHONE OUTLET

WIRELESS TRANSMITTER ANTENNA

MISCELLANEOUS SYMBOLS

GROUND

CONDUIT CONCEALED BELOW GRADE IN STRUCTURE

CONDUIT INSTALLED EXPOSED

UG CONDUIT INSTALLED UNDERGROUND

OH OVERHEAD CONDUCTORS

HOME RUN TO POWER SOURCE

AFF	ABOVE FINISHED FLOOR
AFG	ABOVE FINISHED GRADE
A	AMPS
AF	AMP FRAME
AT	AMP TRIP
AFL	AMPS FULL LOAD
AHAP	AS HIGH AS POSSIBLE
AUX	AUXILIARY
C	CONDUIT
DS	DISCONNECT SWITCH
EX	EXISTING
EXR	EXISTING RELOCATED
FC	FOOTCANDLE (LIGHTING LEVEL)
FLA	FULL LOAD AMPS
FVNR	FULL VOLTAGE NON REVERSING
G	GROUND
H–O–A	HAND–OFF–AUTOMATIC
HP	HORSEPOWER
JB	JUNCTION BOX
KAIC	KILOAMPS INTERRUPTING CURRENT
KV	KILOVOLTS
KW	KILOWATTS
LTS	LIGHTS
MCA	MINIMUM CIRCUIT AMPS
MCB	MAIN CIRCUIT BREAKER
MLO	MAIN LUGS ONLY
N	NEUTRAL
NC	NORMALLY CLOSED
NO	NORMALLY OPEN
PH	PHASE
RECEPT	RECEPTACLE
SCP	SHORT CIRCUIT POTENTIAL (FAULT CURRENT)
STD	STANDARD
XFMR	TRANSFORMER
UG	UNDERGROUND
UON	UNLESS OTHERWISE NOTED
V	VOLTS
W	WATTS OR WIRE

SHEET NOTES:

1. INCLUSION OF A DEVICE OR SYSTEM IN THIS SYMBOL SCHEDULE DOES NOT NECESSARILY INDICATE THAT THE DEVICE OR SYSTEM IS PART OF THE SCOPE OF WORK.

STATE OF MAINE
DEPARTMENT OF TRANSPORTATION

WIN #020806.00

STATE OF MAINE
DARIN D. PLITT
No. 11484
LICENSED
PROFESSIONAL ENGINEER
8-11-14

	BY	DATE
PROJ. MANAGER CDS		
DESIGN–DETAILED		8–13
CHECKED–REVIEWED		8–13
DESIGN2–DETAILED2		
DESIGN3–DETAILED3		
REVISIONS 1		
REVISIONS 2		
REVISIONS 3		
REVISIONS 4		
FIELD CHANGES		

EASTPORT BREAKWATER REPLACEMENT
EASTPORT, ME
WASHINGTON COUNTY

BREAKWATER PLAN
ELECTRICAL–SYMBOL SCHEDULE

SHEET NUMBER

E-1

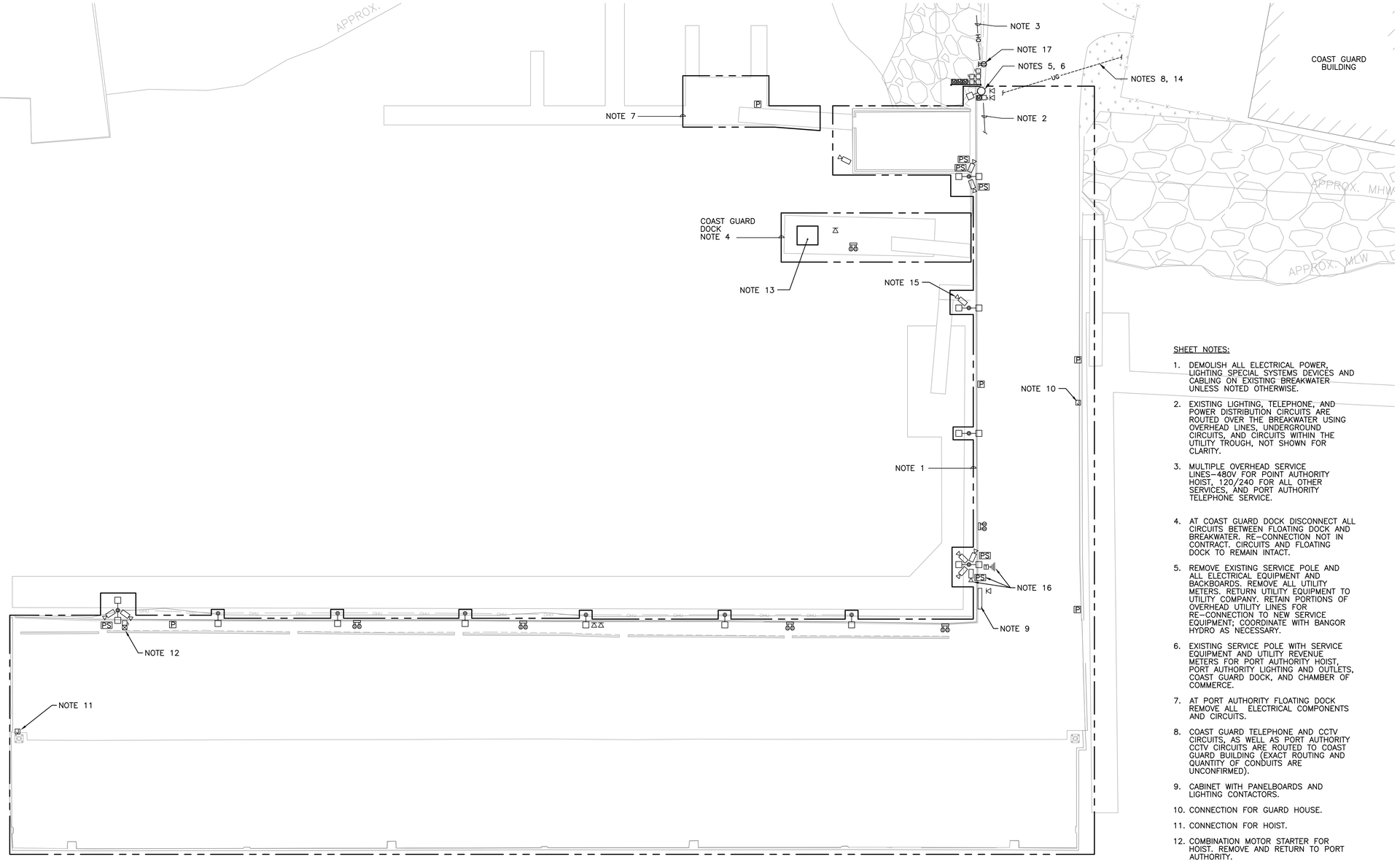

BREAKWATER PLAN - ELECTRICAL DEMOLITION

SCALE: 1"=20'-0"

GENERAL NOTES:

1. ALL ITEMS SHOWN ON THIS SHEET ARE EXISTING. ALL EQUIPMENT IS OWNED BY THE EASTPORT PORT AUTHORITY UNLESS NOTED OTHERWISE.
2. ALL WORK ASSOCIATED WITH CATHODIC PROTECTION IS NOT IN ELECTRICAL CONTRACTORS SCOPE OF WORK. REFER TO CIVIL/STRUCTURAL DRAWINGS FOR INFORMATION.
3. CCTV, TELEPHONE AND WIRELESS ANTENNA EQUIPMENT IS BEING REMOVED BY THE OWNER UNDER SEPARATE CONTRACTS AND IS SHOWN FOR REFERENCE ONLY, UNLESS NOTED OTHERWISE.

SHEET NOTES:

1. DEMOLISH ALL ELECTRICAL POWER, LIGHTING SPECIAL SYSTEMS DEVICES AND CABLING ON EXISTING BREAKWATER UNLESS NOTED OTHERWISE.
2. EXISTING LIGHTING, TELEPHONE, AND POWER DISTRIBUTION CIRCUITS ARE ROUTED OVER THE BREAKWATER USING OVERHEAD LINES, UNDERGROUND CIRCUITS, AND CIRCUITS WITHIN THE UTILITY TROUGH, NOT SHOWN FOR CLARITY.
3. MULTIPLE OVERHEAD SERVICE LINES–480V FOR POINT AUTHORITY HOIST, 120/240 FOR ALL OTHER SERVICES, AND PORT AUTHORITY TELEPHONE SERVICE.
4. AT COAST GUARD DOCK DISCONNECT ALL CIRCUITS BETWEEN FLOATING DOCK AND BREAKWATER. RE–CONNECTION NOT IN CONTRACT. CIRCUITS AND FLOATING DOCK TO REMAIN INTACT.
5. REMOVE EXISTING SERVICE POLE AND ALL ELECTRICAL EQUIPMENT AND BACKBOARDS. REMOVE ALL UTILITY METERS. RETURN UTILITY EQUIPMENT TO UTILITY COMPANY. RETAIN PORTIONS OF OVERHEAD UTILITY LINES FOR RE–CONNECTION TO NEW SERVICE EQUIPMENT; COORDINATE WITH BANGOR HYDRO AS NECESSARY.
6. EXISTING SERVICE POLE WITH SERVICE EQUIPMENT AND UTILITY REVENUE METERS FOR PORT AUTHORITY HOIST, PORT AUTHORITY LIGHTING AND OUTLETS, COAST GUARD DOCK, AND CHAMBER OF COMMERCE.
7. AT PORT AUTHORITY FLOATING DOCK REMOVE ALL ELECTRICAL COMPONENTS AND CIRCUITS.
8. COAST GUARD TELEPHONE AND CCTV CIRCUITS, AS WELL AS PORT AUTHORITY CCTV CIRCUITS ARE ROUTED TO COAST GUARD BUILDING (EXACT ROUTING AND QUANTITY OF CONDUITS ARE UNCONFIRMED).
9. CABINET WITH PANELBOARDS AND LIGHTING CONTACTORS.
10. CONNECTION FOR GUARD HOUSE.
11. CONNECTION FOR HOIST.
12. COMBINATION MOTOR STARTER FOR HOIST. REMOVE AND RETURN TO PORT AUTHORITY.
13. COAST GUARD BOAT HOUSE WITH LIGHTING AND OTHER CIRCUITS.
14. DISCONNECT THE NOTED TELEPHONE AND CCTV CIRCUITS AND PULL BACK TO COAST GUARD BUILDING; COORDINATE WITH PORT AUTHORITY AND COAST GUARD AS NECESSARY. MAKE WIRES SAFE. RECONNECTION IS NOT IN CONTRACT.
15. COAST GUARD CCTV.
16. CUSTOMS AND BORDER PROTECTION CCTV AND TRANSMITTER. TRANSMITS VIA LINE–OF–SIGHT TO CBP OFFICES IN POST OFFICE BUILDING ACROSS WATER STREET.
17. CHAMBER OF COMMERCE RECEPTACLE BOARD.

STATE OF MAINE
DEPARTMENT OF TRANSPORTATION

WIN #020806.00

STATE OF MAINE
DARIN D. PLITT
No. 11484
LICENSED
PROFESSIONAL ENGINEER
8-11-14

	BY	DATE
PROJ. MANAGER CDS		
DESIGN–DETAILED		
CHECKED–REVIEWED		
DESIGN2–DETAILED2		
DESIGN3–DETAILED3		
REVISIONS 1		
REVISIONS 2		
REVISIONS 3		
REVISIONS 4		
FIELD CHANGES		

EASTPORT BREAKWATER REPLACEMENT
EASTPORT, ME
WASHINGTON COUNTY

BREAKWATER PLAN
ELECTRICAL–DEMOLITION

SHEET NUMBER

ED-1

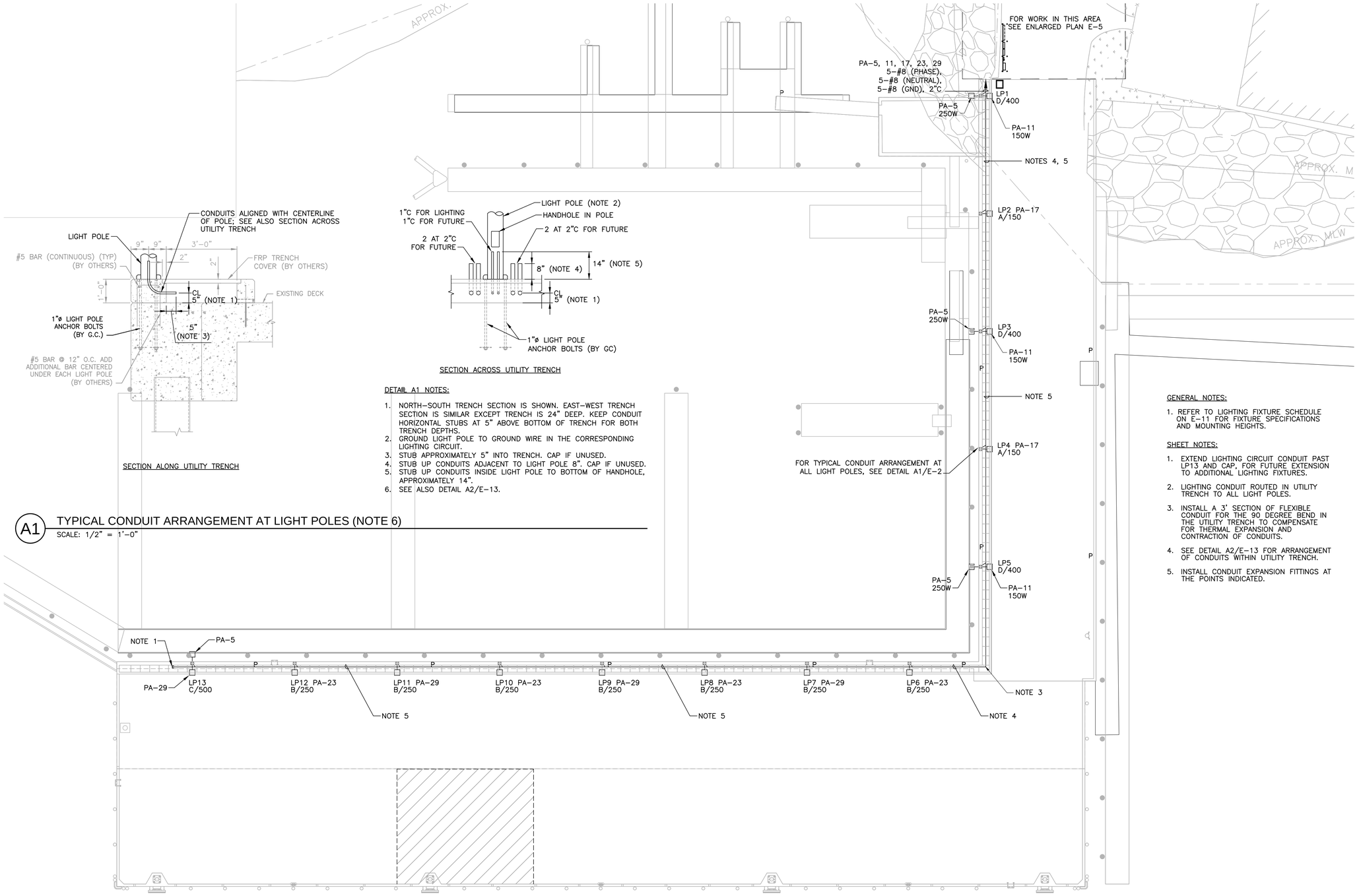

DETAIL A1 NOTES:

1. NORTH-SOUTH TRENCH SECTION IS SHOWN. EAST-WEST TRENCH SECTION IS SIMILAR EXCEPT TRENCH IS 24" DEEP. KEEP CONDUIT HORIZONTAL. STUBS AT 5" ABOVE BOTTOM OF TRENCH FOR BOTH TRENCH DEPTHS.
2. GROUND LIGHT POLE TO GROUND WIRE IN THE CORRESPONDING LIGHTING CIRCUIT.
3. STUB APPROXIMATELY 5" INTO TRENCH. CAP IF UNUSED.
4. STUB UP CONDUITS ADJACENT TO LIGHT POLE 8". CAP IF UNUSED.
5. STUB UP CONDUITS INSIDE LIGHT POLE TO BOTTOM OF HANDHOLE, APPROXIMATELY 14".
6. SEE ALSO DETAIL A2/E-13.

A1 TYPICAL CONDUIT ARRANGEMENT AT LIGHT POLES (NOTE 6)
SCALE: 1/2" = 1'-0"

BREAKWATER PLAN - ELECTRICAL LIGHTING
SCALE: 1"=20'-0"

GENERAL NOTES:

1. REFER TO LIGHTING FIXTURE SCHEDULE ON E-11 FOR FIXTURE SPECIFICATIONS AND MOUNTING HEIGHTS.

SHEET NOTES:

1. EXTEND LIGHTING CIRCUIT CONDUIT PAST LP13 AND CAP, FOR FUTURE EXTENSION TO ADDITIONAL LIGHTING FIXTURES.
2. LIGHTING CONDUIT ROUTED IN UTILITY TRENCH TO ALL LIGHT POLES.
3. INSTALL A 3' SECTION OF FLEXIBLE CONDUIT FOR THE 90 DEGREE BEND IN THE UTILITY TRENCH TO COMPENSATE FOR THERMAL EXPANSION AND CONTRACTION OF CONDUITS.
4. SEE DETAIL A2/E-13 FOR ARRANGEMENT OF CONDUITS WITHIN UTILITY TRENCH.
5. INSTALL CONDUIT EXPANSION FITTINGS AT THE POINTS INDICATED.

STATE OF MAINE
DEPARTMENT OF TRANSPORTATION

WIN #020806.00

STATE OF MAINE
DARIN D. PLITT
No. 11484
LICENSED
PROFESSIONAL ENGINEER
8-11-14

		BY	DATE
PROJ. MANAGER	CDS		
DESIGN-DETAILED			8-13
CHECKED-REVIEWED			8-13
DESIGN2-DETAILED2			
DESIGN3-DETAILED3			
REVISIONS 1			
REVISIONS 2			
REVISIONS 3			
REVISIONS 4			
FIELD CHANGES			

EASTPORT BREAKWATER REPLACEMENT
EASTPORT, ME
WASHINGTON COUNTY

BREAKWATER PLAN
ELECTRICAL-LIGHTING

SHEET NUMBER

E-2

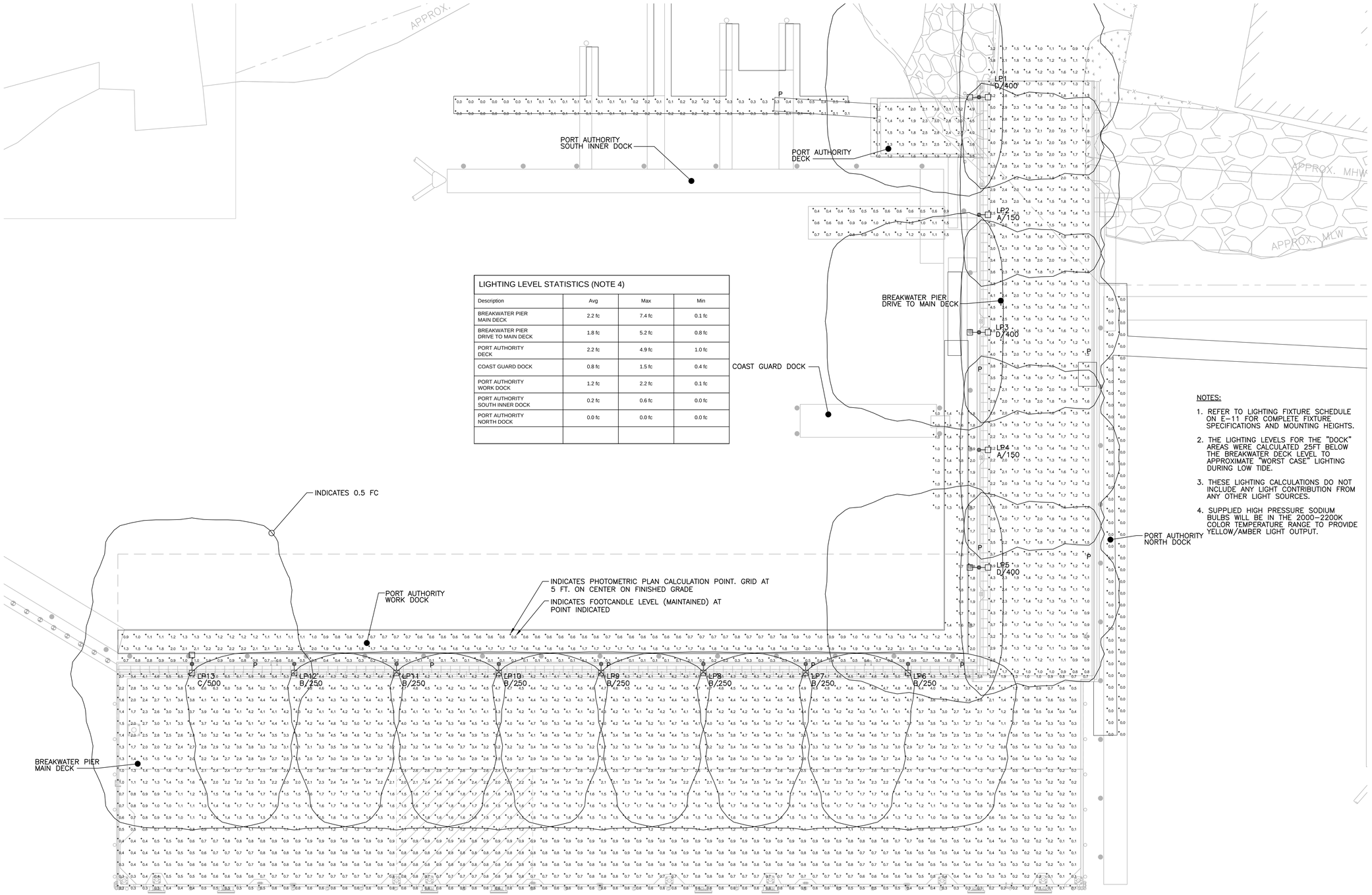

LIGHTING LEVEL STATISTICS (NOTE 4)			
Description	Avg	Max	Min
BREAKWATER PIER MAIN DECK	2.2 fc	7.4 fc	0.1 fc
BREAKWATER PIER DRIVE TO MAIN DECK	1.8 fc	5.2 fc	0.8 fc
PORT AUTHORITY DECK	2.2 fc	4.9 fc	1.0 fc
COAST GUARD DOCK	0.8 fc	1.5 fc	0.4 fc
PORT AUTHORITY WORK DOCK	1.2 fc	2.2 fc	0.1 fc
PORT AUTHORITY SOUTH INNER DOCK	0.2 fc	0.6 fc	0.0 fc
PORT AUTHORITY NORTH DOCK	0.0 fc	0.0 fc	0.0 fc

NOTES:

1. REFER TO LIGHTING FIXTURE SCHEDULE ON E-11 FOR COMPLETE FIXTURE SPECIFICATIONS AND MOUNTING HEIGHTS.
2. THE LIGHTING LEVELS FOR THE "DOCK" AREAS WERE CALCULATED 25FT BELOW THE BREAKWATER DECK LEVEL TO APPROXIMATE "WORST CASE" LIGHTING DURING LOW TIDE.
3. THESE LIGHTING CALCULATIONS DO NOT INCLUDE ANY LIGHT CONTRIBUTION FROM ANY OTHER LIGHT SOURCES.
4. SUPPLIED HIGH PRESSURE SODIUM BULBS WILL BE IN THE 2000-2200K COLOR TEMPERATURE RANGE TO PROVIDE YELLOW/AMBER LIGHT OUTPUT.

BREAKWATER PLAN - LIGHTING PHOTOMETRICS

SCALE: 1"=20'-0"

STATE OF MAINE
DEPARTMENT OF TRANSPORTATION

WIN #020806.00

STATE OF MAINE
DARIN D. PLITT
No. 11484
LICENSED
PROFESSIONAL ENGINEER
8-11-14

		BY	DATE
PROJ. MANAGER	CDS		
DESIGN-DETAILED			8-13
CHECKED-REVIEWED			8-13
DESIGN2-DETAILED2			
DESIGN3-DETAILED3			
REVISIONS 1			
REVISIONS 2			
REVISIONS 3			
REVISIONS 4			
FIELD CHANGES			

EASTPORT BREAKWATER REPLACEMENT
EASTPORT, ME
WASHINGTON COUNTY

BREAKWATER PLAN
LIGHTING PHOTOMETRICS

SHEET NUMBER

E-3

GENERAL NOTES:

1. ALL ELECTRICAL EQUIPMENT AND DEVICES SHOWN ON THIS SHEET ARE NEW UNLESS OTHERWISE NOTED.

2. FOR TYPICAL MARINE POWER PEDESTAL SEE A1/E-14, A2/E-14 AND B2/E-14.

SHEET NOTES:

1. CONNECT TO GUARD HOUSE SERVICE PANEL. GUARD HOUSE IS PORTABLE PREFAB BY OWNER. VERIFY POWER REQUIREMENTS PRIOR TO CONNECTION AND NOTIFY ENGINEER OF ANY DISCREPANCIES.

2. INSTALL A 3' SECTION OF FLEXIBLE CONDUIT FOR THE 90 DEGREE BEND IN THE UTILITY TRENCH TO COMPENSATE FOR THERMAL EXPANSION AND CONTRACTION OF CONDUITS.

3. LOOP-FEED CONDUITS FOR MPP#2 THROUGH MPP#8 AND CONDUIT FOR HOIST ROUTED IN UTILITY TRENCH.

4. LOOP-FEED CONDUIT FOR MPP#9-MPP#10 AND CONDUIT FOR GUARD HOUSE POWER ROUTED ABOVE DECK ALONG OUTER SIDEWALL OF BREAKWATER. ROUTE UNDER LADDERS AND NORTH DOCK GANGWAY.

5. MPP#1 CONDUIT IS ROUTED BELOW DECK LEVEL ON OUTER SIDEWALL OF BREAKWATER.

6. ROUTE MPP#1 CONDUIT ALONG SIDE OF GANGWAY.

7. MPP#1 IS TO BE "WALL MOUNTED" TO HANDRAIL AT LANDING OF THE DOCK GANGWAY; SUPPLY MPP#1 WITHOUT PEDESTAL BASE. SUPPLY AND INSTALL MISCELLANEOUS METAL AND HARDWARE AS NEEDED FOR MOUNTING OF MPP#1. BOTTOM OF MPP#1 SHALL BE 24" ABOVE DOCK SURFACE.

8. USE LIQUIDTIGHT FLEXIBLE NONMETALLIC CONDUIT OVER PIVOT POINT OF DOCK GANGWAY TO ALLOW FOR CONDUIT FLEX AS DOCK RISES AND FALLS WITH TIDE AND WAVE ACTION.

9. CONDUIT FOR HOIST TO PENETRATE OUT AT END OF UTILITY TRENCH, AND SHALL BE ROUTED ALONG THE INTERIOR CURB TO THE HOIST. CONNECT TO HOIST POWER UNIT AS PER MANUFACTURER'S REQUIREMENTS. HOIST WIRING OTHER THAN CONNECTION OF MAIN POWER FEEDER IS NOT IN CONTRACT. VERIFY POINT OF MAIN POWER CONNECTION WITH OWNER.

10. SEE DETAIL A2/E-13 FOR ARRANGEMENT OF CONDUITS WITHIN UTILITY TRENCH.

11. IN ADDITION TO THE MPP POWER CIRCUIT FOR THE NOTED MARINE POWER PEDESTALS, ALSO INSTALL A SPARE 1" CONDUIT FROM THE UTILITY TRENCH TO THE INTERIOR OF THE PEDESTAL, SIMILAR TO THE SPARE CONDUIT ON THE INTERIOR OF THE LIGHT POLES (REFERENCE DETAIL A1/E-2).

12. INSTALL CONDUIT EXPANSION FITTINGS AT THE POINTS INDICATED.

13. STUB FOUR 2" CONDUITS FROM INTERIOR OF TRENCH HORIZONTALLY TO TRENCH EXTERIOR AND CAP. STUBS RESERVED FOR FUTURE COAST GUARD USE.

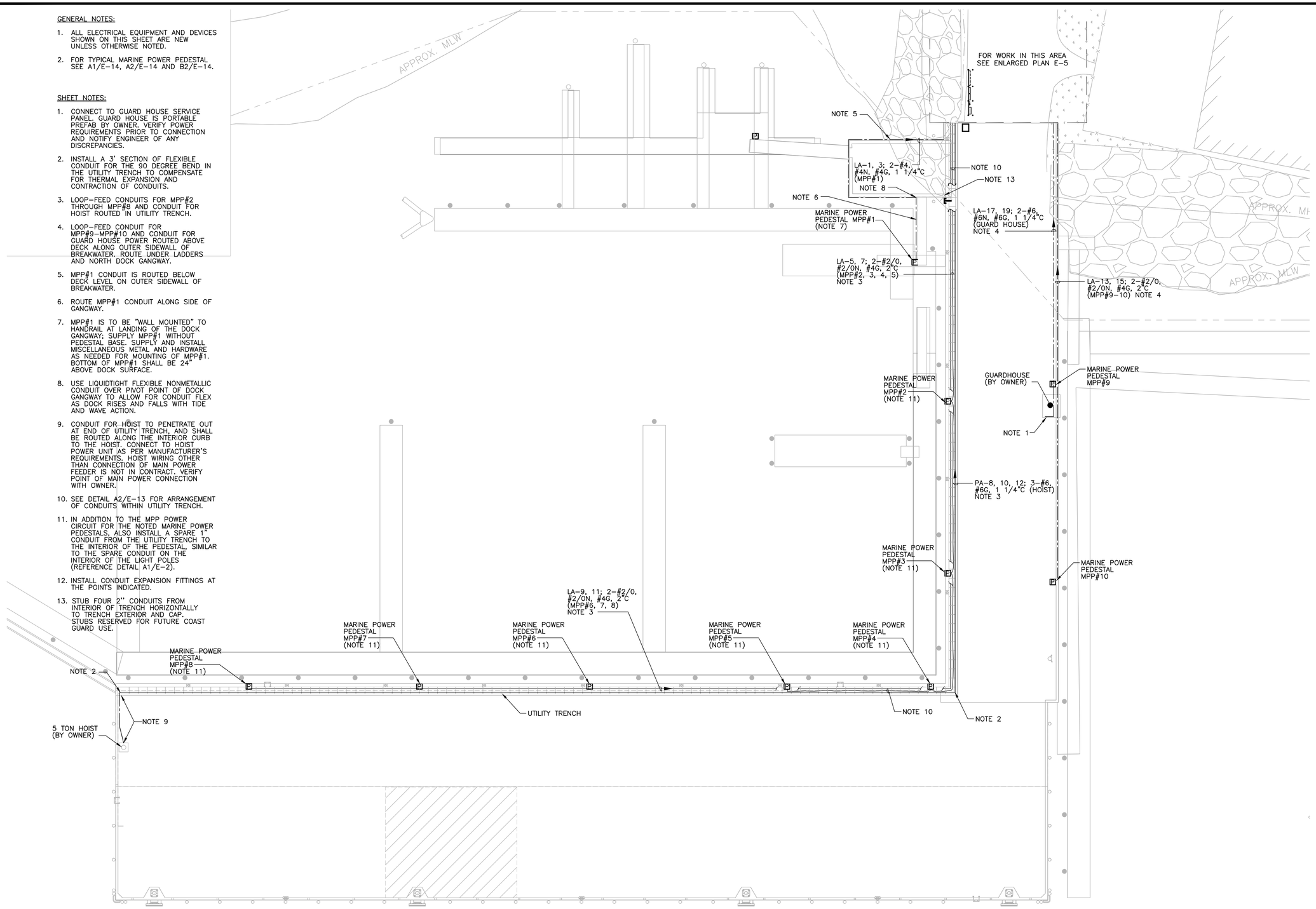

BREAKWATER PLAN - ELECTRICAL POWER

SCALE: 1"=20'-0"

STATE OF MAINE
DEPARTMENT OF TRANSPORTATION

WIN #020806.00

STATE OF MAINE
DARIN D. PLITT
No. 11484
LICENSED
PROFESSIONAL ENGINEER
8-11-14

	BY	DATE
		8-13
		8-13

PROJ. MANAGER CDS
DESIGN-DETAILED
CHECKED-REVIEWED
DESIGN2-DETAILED2
DESIGN3-DETAILED3
REVISIONS 1
REVISIONS 2
REVISIONS 3
REVISIONS 4
FIELD CHANGES

EASTPORT BREAKWATER REPLACEMENT
EASTPORT, ME
WASHINGTON COUNTY

BREAKWATER PLAN
ELECTRICAL-POWER

SHEET NUMBER

E-4

GENERAL NOTES:

1. ALL UNDERGROUND CONDUIT BENDS SHALL BE WIDE RADIUS.
2. ALL UNDERGROUND DUCT BANKS SHALL BE CONCRETE–ENCASED. PLACE WARNING TAPE ABOVE THE DUCT BANK.
3. INSTALL PULL CORDS IN ALL SPARE CONDUITS.

SHEET NOTES:

1. HS20 RATED PULLBOX FOR POWER CIRCUITS. FINAL DIMENSIONS TO BE DETERMINED BY CONTRACTOR. INSTALL COVER LEVEL WITH ROADWAY SURFACE.
2. CONCRETE–FILLED PIPE BOLLARD (TYP.) SEE DETAIL A1/E–5. ALIGN TO AVOID OBSTRUCTING CODE–REQUIRED CLEARANCES TO ELECTRICAL EQUIPMENT.
3. CONCRETE BASE TO ENCOMPASS PIPE BOLLARD AS WELL AS EQUIPMENT RACK POST. OVERALL CONCRETE BASE DIMENSIONS TO BE 6' N–S AND 3' E–W. SEE DETAIL A1/E–13 FOR DEPTH.
4. HS20 RATED PULLBOX FOR FUTURE TELEPHONE AND CCTV CABLES. FINAL DIMENSIONS TO BE DETERMINED BY CONTRACTOR. INSTALL COVER LEVEL WITH ROADWAY SURFACE.
5. HS20 RATED PULLBOX FOR FUTURE TELEPHONE AND CCTV CABLES (COAST GUARD AND PORT AUTHORITY, ETC.). FINAL DIMENSIONS TO BE DETERMINED BY CONTRACTOR. INSTALL IN GRASS AREA ADJACENT TO ROADWAY.
6. CONDUITS ROUTE UP TO ABOVE GRADE AT EDGE OF BREAKWATER STRUCTURE. STUB SPARE CONDUITS UP 12" ABOVE FINISHED GRADE AND CAP.
7. STUB UP CONDUITS UNDER THE CORRESPONDING EQUIPMENT. SPARE CONDUITS TO PANELBOARDS SHALL BE EXTENDED TO THE PANELBOARD. SPARE LOW VOLTAGE CONDUITS SHALL BE STUBBED UP 12" ABOVE FINISHED GRADE AND BE CAPPED.
8. STUB UP CONDUITS INTO THE TRENCH. CAP SPARE POWER CONDUITS AND ALL LOW VOLTAGE CONDUITS IN THE UTILITY TRENCH ON THE BREAKWATER. SEE DETAIL A2/E–13 FOR GENERAL ARRANGEMENT OF CONDUITS WITHIN THE UTILITY TRENCH.
9. GUY WIRE ANCHOR FOR UP TO THREE GUY WIRES. HARDWARE AND BASE TO BE AS PER BANGOR HYDRO REQUIREMENTS.
10. GUY WIRE ANCHOR FOR UP TO THREE GUY WIRES. BENT 90°; BOTTOM EMBEDDED HORIZONTALLY IN CONCRETE PILE CAP APPROXIMATELY 30" BELOW CURB TOP, CENTERED ON CURB. ANCHOR BOTTOM TO BE ANGLED TOWARDS CENTER OF PILE CAP TO PROVIDE AT LEAST 3" OF CONCRETE ENCASEMENT.
11. SEE PLUMBING DRAWINGS FOR INFORMATION REGARDING WATER PIPING AND ASSOCIATED EQUIPMENT.
12. UTILITY POLE #2 SHALL MATCH UTILITY POLE #1, EXCEPT ALL POLE HARDWARE IS FUTURE.

A1 BOLLARD DETAIL
SCALE: NONE

DUCT BANK CONDUIT SUMMARY

POWER DUCT BANKS

PT:	1 1/4"C	(HOIST)
	3 @ 1 1/4'C	(SPARE)
	2"C	(LIGHTING)
	2"C	(MPP 2, 3, 4, 5)
	2"C	(MPP 6, 7, 8)
	2"C	(SPARE)
PA:	1 1/4"C	(HOIST)
	1 1/4"C	(SPARE)
	2"C	(LIGHTING)
	2"C	(SPARE)
LA:	1 1/4"C	(MPP 1)
	1 1/4"C	(GUARDHOUSE)
	3 @ 1 1/4"C	(SPARE)
	2"C	(MPP 2, 3, 4, 5)
	2"C	(MPP 6, 7, 8)
	2"C	(MPP 9, 10)
	2"C	(SPARE)
PF:	4 @ 2"C	(SPARE)
PN1:	1 1/4"C	(GUARDHOUSE)
	1 1/4"C	(SPARE)
	2"C	(MPP 9, 10)
	2"C	(SPARE)

LOW VOLTAGE DUCT BANKS

LVT:	6 @ 2"C	(SPARE)
LVF:	6 @ 2"C	(SPARE)

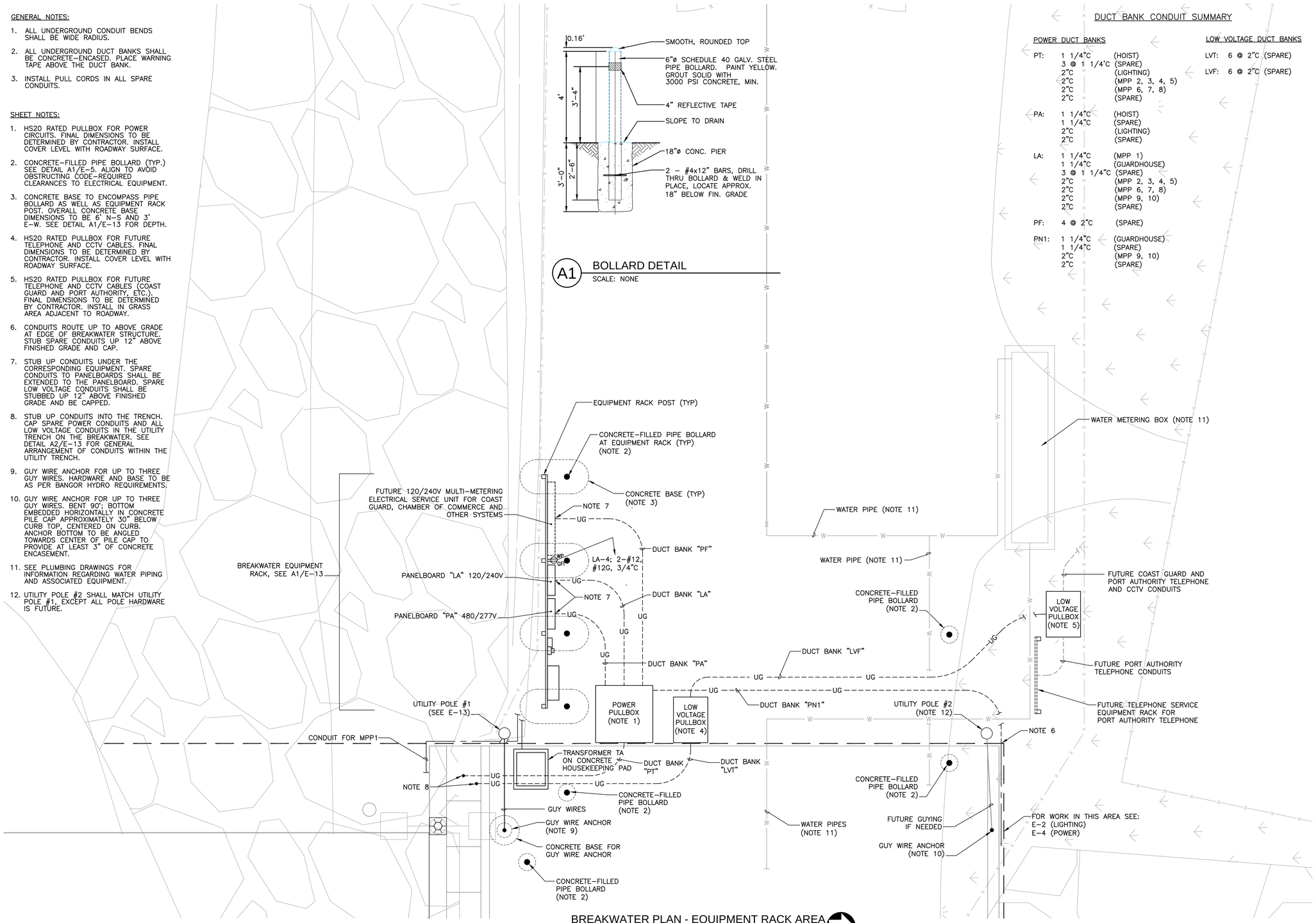

BREAKWATER PLAN - EQUIPMENT RACK AREA
SCALE: 1/4"=1'–0"

STATE OF MAINE
DEPARTMENT OF TRANSPORTATION
WIN #020806.00

DARIN D. PLITT
No. 11484
STATE OF MAINE
LICENSED PROFESSIONAL ENGINEER
8-11-14

	BY	DATE
PROJ. MANAGER CDS		
DESIGN–DETAILED		
CHECKED–REVIEWED		
DESIGN2–DETAILED2		
DESIGN3–DETAILED3		
REVISIONS 1		
REVISIONS 2		
REVISIONS 3		
REVISIONS 4		
FIELD CHANGES		

EASTPORT BREAKWATER REPLACEMENT
EASTPORT, ME
WASHINGTON COUNTY

BREAKWATER PLAN
EQUIPMENT RACK AREA

SHEET NUMBER
E-5

LIGHTING FIXTURE SCHEDULE

SCHEDULE ABBREVIATIONS:

LAMP TYPES – FL = FLUORESCENT: IN = INCANDESCENT: MH = METAL HALIDE: HPS = HIGH PRESSURE SODIUM: PMH = PULSE START METAL HALIDE: H = HALOGEN: Q = QUARTZ: SB = SEALED BEAM: HIT = HIGH INTENSITY TUNGSTEN

BALLAST – EL/I = ELECTRONIC / INSTANT–START: EL/R = ELECTRONIC / RAPID–START: EL/P = ELECTRONIC / PROGRAMMED–START (OR PROGRAMMED RAPID–START): EL/MH = ELECTRONIC METAL HALIDE: HPF = HIGH POWER FACTOR: LOW = LOW TEMPERATURE DEGREE RATING AS INDICATED; EL/D = ELECTRONIC DIMMING

ENVIRONMENT – IN = INDOOR: DL = DAMP LOCATION: WL = WET LOCATION: HD = HOSE DOWN (HIGH PRESSURE): HZ = HAZARDOUS LOCATION: CR = CORROSIVE

MOUNTING – R = RECESSED: S = SURFACE: P = PENDANT: W = WALL: PL = POLE: HCP = HOOK, CORD, PLUG: AHAP = AS HIGH AS POSSIBLE: UNO = UNLESS NOTED OTHERWISE

SYMBOL/ WATTS	MANUFACTURER/ CATALOG NUMBER	FIXTURE DESCRIPTION	LAMPS (PER FIXTURE)				BALLAST/ DRIVER		ENVIRON –MENT	MOUNTING		OPERATING VOLTAGE	REMARKS
			NO.	WATTS	TYPE	MANUFACTURER MODEL NUMBER	NO.	TYPE		TYPE	HEIGHT AFF.		
A/150	LITHONIA LIGHTING AS1–150S–SR4SC–277–SF–PE7–DCAS1R–DWHXD–LPI; OR APPROVED EQUAL	POLE MOUNTED AREA LIGHT; OPTICAL SYSTEM IS IP65 RATED WITH AN ASYMMETRIC FORWARD THROW TYPE IV DISTRIBUTION, SEGMENTED REFLECTOR; FULL CUT OFF; DIE CAST ALUMINUM HOUSING WITH STAINLESS STEEL HARDWARE AND FLAT TEMPERED GLASS LENS, CURVED ARM FOR ROUND POLE MOUNTING; PHOTOELECTRIC CELL, TWISTLOCK TYPE WITH RECEPTACLE; SUPER DURABLE WHITE FINISH	1	150	HPS	SUPPLIED WITH FIXTURE (NOTE 1)	1	HPF	WL	PL	30' AFG	277	
B/250	LITHONIA LIGHTING AS2–250S–SR4SC–277–SF–PE7–DCAS2R–DWHXD–LPI; OR APPROVED EQUAL	POLE MOUNTED AREA LIGHT; OPTICAL SYSTEM IS IP65 RATED WITH AN ASYMMETRIC FORWARD THROW TYPE IV DISTRIBUTION, SEGMENTED REFLECTOR; FULL CUT OFF; DIE CAST ALUMINUM HOUSING WITH STAINLESS STEEL HARDWARE AND FLAT TEMPERED GLASS LENS, CURVED ARM FOR ROUND POLE MOUNTING; PHOTOELECTRIC CELL, TWISTLOCK TYPE WITH RECEPTACLE; SUPER DURABLE WHITE FINISH	1	250	HPS	SUPPLIED WITH FIXTURE (NOTE 1)	1	HPF	WL	PL	30' AFG	277	
C/500	LITHONIA LIGHTING AS2–250S–SR4SC–277–SF–PE7–DCAS2R–DWHXD–LPI; OR APPROVED EQUAL (2 FIXTURES PER POLE AT 180')	EACH FIXTURE THE SAME AS TYPE B/250	1	250	HPS	SUPPLIED WITH FIXTURE (NOTE 1)	1	HPF	WL	PL	30' AFG	277	EACH FIXTURE INDIVIDUALLY WIRED TO SEPARATE CIRCUITS
D/400	2 FIXTURES PER POLE AT 180', ONE OF EACH OF THE FOLLOWING:												EACH FIXTURE INDIVIDUALLY WIRED TO SEPARATE CIRCUITS
	LITHONIA LIGHTING AS1–150S–SR4SC–277–SF–PE7–DCAS1R–DWHXD–LPI; OR APPROVED EQUAL (THIS FIXTURE ON NORTH SIDE OF POLE)	ONE FIXTURE THE SAME AS TYPE A/150 ON NORTH SIDE OF POLE	1	150	HPS	SUPPLIED WITH FIXTURE (NOTE 1)	1	HPF	WL	PL	30' AFG	277	
	LITHONIA LIGHTING AS2–250S–SR4SC–277–SF–PE7–DCAS2R–DWHXD–LPI; OR APPROVED EQUAL (THIS FIXTURE ON SOUTH SIDE OF POLE)	ONE FIXTURE THE SAME AS TYPE B/250 ON SOUTH SIDE OF POLE	1	250	HPS								
POLE A/150 & B/250	LITHONIA LIGHTING RTA 30 8G DM19AS FBC DWH	ROUND TAPERED ALUMINUM POLE, 30'–0", WHITE FINISH, FULL BASE COVER; RATED FOR 7.3 MAX. EPA LOAD AT 100MPH WIND SPEED	-	-	-	-	-	-	-	-	-	-	
POLE C/500 & D/400	LITHONIA LIGHTING RTA 30 8G DM28AS FBC DWH	ROUND TAPERED ALUMINUM POLE, 30'–0", WHITE FINISH, FULL BASE COVER; RATED FOR 7.3 MAX. EPA LOAD AT 100MPH WIND SPEED	-	-	-	-	-	-	-	-	-	-	

NOTES:
1. BULBS SHALL HAVE A COLOR TEMPERATURE BETWEEN 2000–2200K TO PROVIDE YELLOW/AMBER LIGHT OUTPUT FOR THIS MARINE AREA APPLICATION.

STATE OF MAINE
DEPARTMENT OF TRANSPORTATION

WIN #020806.00

STATE OF MAINE
DARIN D. PLITT
No. 11484
LICENSED
PROFESSIONAL ENGINEER
8-11-14

	BY	DATE
		8–13
		8–13

PROJ. MANAGER CDS
DESIGN–DETAILED
CHECKED–REVIEWED
DESIGN2–DETAILED2
DESIGN3–DETAILED3
REVISIONS 1
REVISIONS 2
REVISIONS 3
REVISIONS 4
FIELD CHANGES

EASTPORT BREAKWATER REPLACEMENT
EASTPORT, ME
WASHINGTON COUNTY

BREAKWATER PLAN
ELECTRICAL–SCHEDULES

SHEET NUMBER

E-11

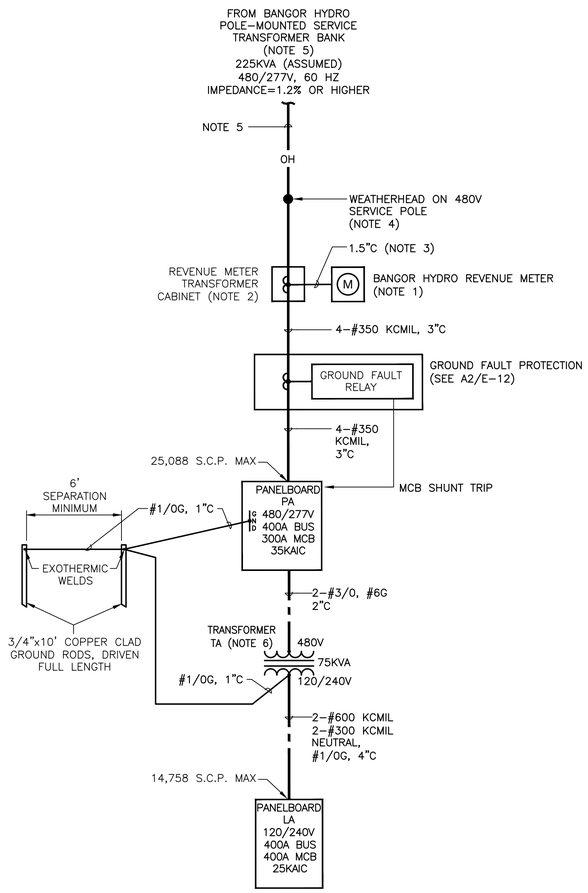

A1 SINGLE-LINE DIAGRAM-PORT AUTHORITY SERVICE AND DISTRIBUTION SYSTEM

SCALE: NONE

SINGLE-LINE DIAGRAM NOTES:

1. METER BY BANGOR HYDRO; METER SOCKET BY CONTRACTOR. SUPPLY AND INSTALL AS PER BANGOR HYDRO REQUIREMENTS.
2. SUPPLY AND INSTALL THE REVENUE METER TRANSFORMER CABINET AS PER BANGOR HYDRO REQUIREMENTS.
3. INSTALL METERING CIRCUIT AS PER REQUIREMENTS OF BANGOR HYDRO.
4. SUPPLY AND INSTALL WEATHERHEAD OF A TYPE APPROVED BY BANGOR HYDRO.
5. CONTRACTOR SHALL PREPARE AND SUBMIT "APPLICATION FOR SERVICE" TO BANGOR HYDRO. CONTRACTOR SHALL COORDINATE AS NECESSARY WITH BANGOR HYDRO FOR DEMOLITION OF EXISTING ELECTRIC SERVICES AND INSTALLATION OF NEW ELECTRIC SERVICE. SUPPLY AND INSTALL OVERHEAD SERVICE LINES OF A TYPE AND RATING AS DIRECTED BY BANGOR HYDRO. CONTRACTOR SHALL INCLUDE ALL COSTS ASSOCIATED WITH PHYSICAL INSTALLATION OF NEW SERVICE, INCLUDING BUT NOT LIMITED TO:

- METERING SOCKETS
- METERING TRANSFORMER CABINETS
- METERING CIRCUITS
- SUPPLY AND INSTALLATION OF NEW OVERHEAD SERVICE LINES, INCLUDING ANY REQUIRED INTERMEDIATE POLES AND POLE HARDWARE, FROM BANGOR HYDRO CONNECTION POINT ON WATER STREET
- SERVICE WEATHERHEAD
- GROUND CONNECTIONS
- TESTING HARDWARE AND SERVICES

MAINTAIN ALL REQUIRED CLEARANCES FOR OVERHEAD LINES AS REQUIRED BY ALL APPLICABLE CODE AND BANGOR HYDRO.

MAINTAIN SUFFICIENT SPACE AND CLEARANCES FOR FUTURE INSTALLATION OF 120/240V SERVICES FOR COAST GUARD AND CHAMBER OF COMMERCE ALONG THE SAME GENERAL SERVICE LINE ROUTING PATH AS THE PORT AUTHORITY ELECTRICAL SERVICE.

MAINTAIN SUFFICIENT SPACE AND CLEARANCES FOR FUTURE INSTALLATION OF PORT AUTHORITY TELEPHONE SERVICE ALONG THE SAME GENERAL SERVICE LINE ROUTING PATH AS THE PORT AUTHORITY ELECTRICAL SERVICE.

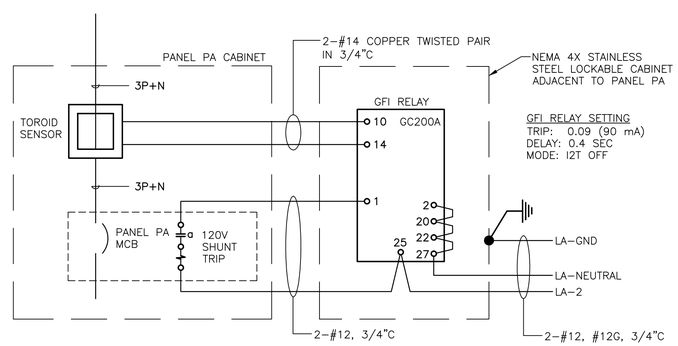

DIAGRAM NOTES:

1. BASIS OF DESIGN IS SQUARE D GC200A WITH T38 TOROID SENSOR.
2. GROUND FAULT MUST BE SET TO TRIP AT NO MORE THAN 100 mA PER N.E.C. ARTICLE 555.3.

A2 MAIN BREAKER-GFI SHUNT TRIP DIAGRAM

SCALE: NONE

PA — LOCATION: AT BREAKWATER EQUIPMENT RACK — 300A — VOLTAGE 480/277V — MAIN BUS 400 A — 3 Ø 4 W — 35 K-AIC — NEUTRAL BUS ■ GROUND BUS ■ ISOLATED GND. □ — 200% □

DESCRIPTION	AMPS	OPTION	A	B	C	BKR NO.	BKR NO.	A	B	C	OPTION	AMPS	DESCRIPTION
PANELBOARD LA VIA	200/2		142			1	2	0				30/3	SPARE
TRANSFORMER TA				142		3	4		0				
LIGHT POLES LP-1, 3, 5, 13 (DOCKS)	15/1				4	5	6			0			
SPACE			0			7	8	10				15/3	5-TON HOIST
SPACE				0		9	10		10				
LIGHT POLES LP-1, 3, 5 (DECK)	15/1				3	11	12			10			
SPACE			0			13	14	0					SPACE
SPACE				0		15	16		0				SPACE
LIGHT POLES LP-2, 4	15/1				1	17	18			0			SPACE
SPACE			0			19	20	0					SPACE
SPACE				0		21	22		0				SPACE
LIGHT POLES LP-6, 8, 10, 12	15/1				4	23	24			0			SPACE
SPACE			0			25	26	0					SPACE
SPACE				0		27	28		0				SPACE
LIGHT POLES LP-7, 9, 11, 13	15/1				4	29	30			0			SPACE
SPACE			0			31	32	0					SPACE
SPACE				0		33	34		0				SPACE
SPACE					0	35	36			0			SPACE
SPACE			0			37	38	0					SPACE
SPACE				0		39	40		0				SPACE
SPACE					0	41	42			0			SPACE
			A	B	C			A	B	C			
			142	142	16			10	10	10			

SURFACE MTD. ■ FLUSH MTD. □ — NEMA 4X — FEED THRU LUGS □

COMBINED AMPS — TOTAL AMPS (AVG.): 110 — TOTAL KVA: 91.3 — A: 152 — B: 152 — C: 26

OPTIONS: ✱ INSTALL "LOCK-ON" HANDLE; ◉ CKT. BKR. RATED HACR; † 6mA ‡ 30mA TRIP RATED GFCI; ST SHUNT TRIP

PANELBOARD PA NOTES:
1. STAINLESS STEEL NEMA 4X; DRILL WEEP HOLE IN BOTTOM
2. LOCKABLE
3. DEAD FRONT
4. SERVICE-ENTRANCE RATED
5. 120V SHUNT TRIP ON MAIN CIRCUIT BREAKER

LA — LOCATION: AT BREAKWATER EQUIPMENT RACK — VOLTAGE 120/240 — MAIN BUS 400A — 1 Ø 3 W — 25 K-AIC — NEUTRAL BUS ■ GROUND BUS ■ ISOLATED GND. □ — 200% ■

DESCRIPTION	AMPS	OPTION	A	B	BKR NO.	BKR NO.	A	B	OPTION	AMPS	DESCRIPTION
MARINE POWER	70/2		52		1	2	1			15/1	PA MCB SHUNT TRIP
PEDESTAL MPP #1				52	3	4		2		15/1	OUTLET-EQUIPMENT RACK
MARINE POWER	125/2		56		5	6	0			15/1	SPARE
PEDESTALS MPP #2, 3, 4, 5				56	7	8		0		15/1	SPARE
MARINE POWER PEDESTALS	125/2		54		9	10	0			15/1	SPARE
MPP #6, 7, 8				54	11	12		0		15/1	SPARE
MARINE POWER	125/2		100		13	14	0			20/1	SPARE
PEDESTALS MPP #9, 10				100	15	16		0		20/1	SPARE
GUARDHOUSE	30/2		20		17	18	0			20/1	SPARE
				20	19	20		0		20/1	SPARE
SPACE			0		21	22	0			20/1	SPARE
SPACE				0	23	24		0		20/1	SPARE
SPACE			0		25	26	0				SPACE
SPACE				0	27	28		0			SPACE
SPACE			0		29	30	0				SPACE
SPACE				0	31	32		0			SPACE
SPACE			0		33	34	0				SPACE
SPACE				0	35	36		0			SPACE
SPACE			0		37	38	0				SPACE
SPACE				0	39	40		0			SPACE
SPACE			0		41	42	0				SPACE
			A	B			A	B			
			282	282			1	2			

SURFACE MTD. ■ FLUSH MTD. □ — NEMA 4X — FEED THRU LUGS □

COMBINED AMPS — TOTAL AMPS (AVG.): 284 — TOTAL KVA: 68.2 — A: 283 — B: 284

OPTIONS: ✱ INSTALL "LOCK-ON" HANDLE; ◉ CKT. BKR. RATED HACR; † 6mA ‡ 30mA TRIP RATED GFCI; ST SHUNT TRIP

PANELBOARD PA NOTES:
1. STAINLESS STEEL NEMA 4X; DRILL WEEP HOLE IN BOTTOM
2. LOCKABLE
3. DEAD FRONT
4. SERIES-RATINGS FOR LA ARE ACCEPTABLE TO ACHIEVE 25 KAIC LEVEL

STATE OF MAINE
DEPARTMENT OF TRANSPORTATION

WIN #020806.00

STATE OF MAINE — DARIN D. PLITT — No. 11484 — LICENSED PROFESSIONAL ENGINEER — 8-1-14

	BY	DATE
		8-13
		8-13

PROJ. MANAGER CDS
DESIGN-DETAILED
CHECKED-REVIEWED
DESIGN2-DETAILED2
DESIGN3-DETAILED3
REVISIONS 1
REVISIONS 2
REVISIONS 3
REVISIONS 4
FIELD CHANGES

EASTPORT BREAKWATER REPLACEMENT
EASTPORT, ME
WASHINGTON COUNTY

BREAKWATER PLAN ELECTRICAL
-SINGLE LINE AND SCHEDULES

SHEET NUMBER

E-12

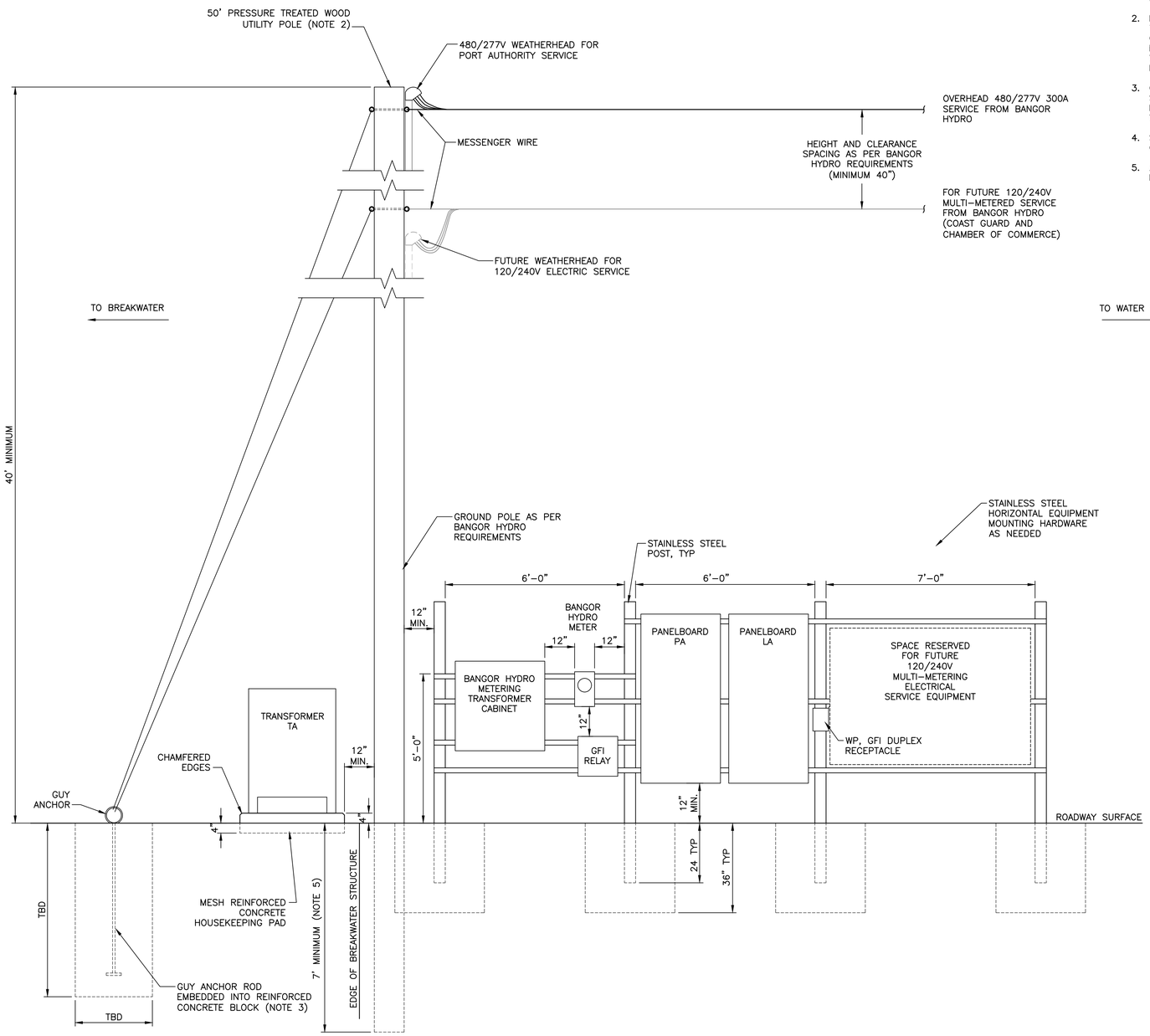

A1 BREAKWATER EQUIPMENT RACK CONCEPTUAL ARRANGEMENT-ELEVATION (NOTE 4)

SCALE: NONE

DETAIL A1 NOTES:

1. DIMENSIONS SHOWN ARE CONCEPTUAL; ADJUST AS NEEDED FOR ACTUAL EQUIPMENT USED. REVENUE METERING EQUIPMENT SHALL BE MOUNTED AT HEIGHTS AND WITH CLEARANCE SPACE AS PER BANGOR HYDRO REQUIREMENTS.
2. POLES AND POLE HARDWARE SHALL BE AS PER THE REQUIREMENTS OF BANGOR HYDRO. COORDINATE WITH BANGOR HYDRO AS NECESSARY. ACTUAL CLASS AND RATINGS OF WOOD POLES TO BE AS PER DIRECTION OF BANGOR HYDRO.
3. GUYING SYSTEM SHOWN IS CONCEPTUAL. GUYING SYSTEM, IF NEEDED, SHALL BE AS PER THE REQUIREMENTS OF BANGOR HYDRO. COORDINATE WITH BANGOR HYDRO AS NECESSARY.
4. SEE ALSO PLAN VIEW OF EQUIPMENT RACK AREA ON DRAWING E-5.
5. ACTUAL DEPTH OF POLE TO BE AS PER BANGOR HYDRO REQUIREMENTS.

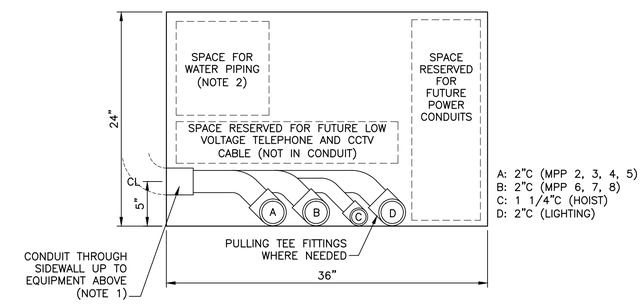

EAST-WEST UTILITY TRENCH

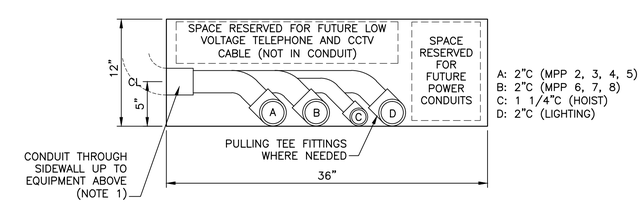

NORTH-SOUTH UTILITY TRENCH

DETAIL A2 NOTES:

1. FOR QUANTITY, SIZE, AND ARRANGEMENT OF CONDUITS AT LIGHT POLES, SEE DETAIL A1/E-2.
2. SEE PLUMBING DRAWINGS FOR INFORMATION REGARDING WATER PIPING.

A2 UTILITY TRENCH GENERAL CONDUIT ARRANGEMENT

SCALE: 1 1/2" = 1'-0"

STATE OF MAINE
DEPARTMENT OF TRANSPORTATION

WIN #020806.00

STATE OF MAINE
DARIN D. PLITT
No. 11484
LICENSED
PROFESSIONAL ENGINEER
8-11-14

	BY	DATE
PROJ. MANAGER CDS		
DESIGN-DETAILED		
CHECKED-REVIEWED		
DESIGN2-DETAILED2		
DESIGN3-DETAILED3		
REVISIONS 1		8-13
REVISIONS 2		8-13
REVISIONS 3		
REVISIONS 4		
FIELD CHANGES		

EASTPORT BREAKWATER REPLACEMENT
EASTPORT, ME
WASHINGTON COUNTY

BREAKWATER PLAN
ELECTRICAL DETAILS

SHEET NUMBER

E-13

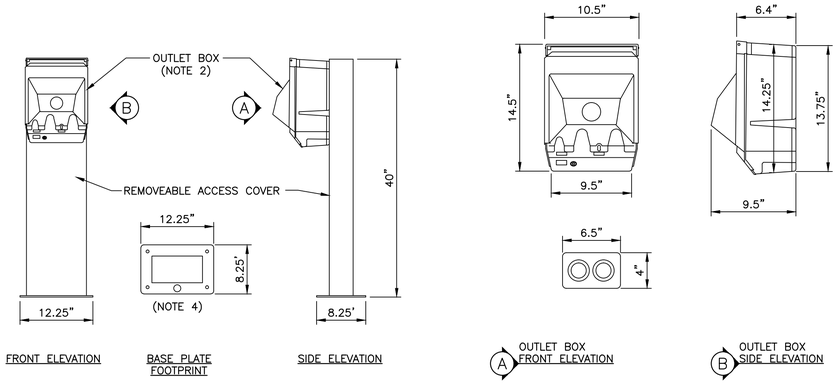

NOTES:

1. DIMENSIONS ARE FOR REFERENCE ONLY AND ARE NOT TO BE USED FOR CONSTRUCTION PURPOSES. VERIFY ACTUAL DIMENSIONS WITH EQUIPMENT VENDOR. ACTUAL APPEARANCE MAY VARY.
2. OUTLETS LOCATED UNDER HINGED LOCKABLE COVER, SEE A2/E-14 FOR TYPICAL MPP INTERNAL WIRING DIAGRAM.
3. MPP#1 IS "WALL MOUNT" WITHOUT PEDESTAL. ALL OTHER MPP UNITS ARE PEDESTAL MOUNTED.
4. FASTEN PEDESTAL OF MPP UNITS TO BREAKWATER DECK AS PER MANUFACTURER'S INSTRUCTIONS.
5. MARINE POWER PEDESTALS ARE TO BE NEWPORT HARBORMATE BY EATON, OR EQUAL. EACH UNIT SHALL HAVE THE FOLLOWING FEATURES:
   - 120/240V
   - UNMETERED
   - RECEPTACLES WITH CIRCUIT BREAKERS AS PER A2/E-14
   - NO PROVISIONS FOR WATER, TELEPHONE OR CATV
   - COPPER LOOP-FEED BUS BARS RATED 140A FOR UP TO #2/0 WIRE
   - STAINLESS STEEL PEDESTAL STAND (EXCEPT FOR MPP#1)
   - COMPACT RESIN HOUSING WITH UV INHIBITOR (ALUMINUM OR STAINLESS STEEL ALSO ACCEPTABLE)
   - LOCKABLE WEATHER PROOF HINGED DOOR PROTECTING OUTLETS AND BREAKERS
   - UL LISTED
   - NO INTERNAL LIGHTING
   - NEMA 3R RATED
6. FOR MPP #2, 3, 4, 5, 6, 7 AND 8: STUB POWER CIRCUIT CONDUIT AND A 1" SPARE CONDUIT UP FROM UTILITY TRENCH INTO INTERIOR OF PEDESTAL SIMILAR TO CONDUIT STUBS FOR LIGHT POLES (REFERENCE DETAIL A1/E-2)

A1 MARINE POWER PEDESTAL (NOTES 3, 5, 6)

SCALE: NONE

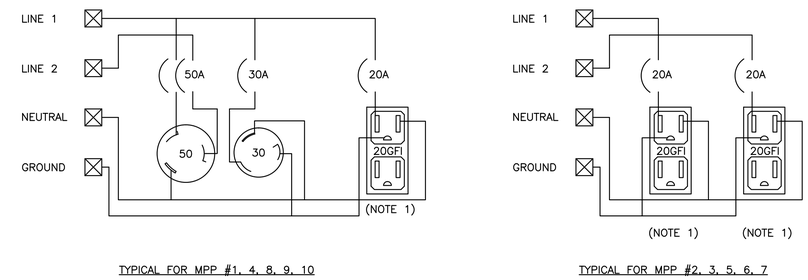

NOTES:

1. 20A GFI OUTLETS SHALL BE PERMANENTLY MARKED "NOT TO BE USED TO SUPPLY POWER TO BOATS".

A2 TYPICAL MARINE POWER PEDESTAL INTERNAL WIRING

SCALE: NONE

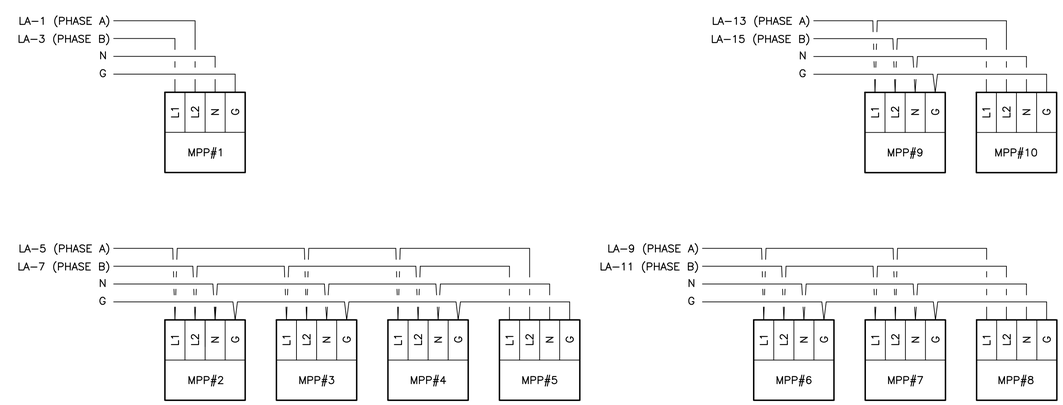

NOTES:

1. L1 AND L2 CONNECTIONS ARE ALTERNATED AS INDICATED TO KEEP DEMAND LOAD BALANCED AT PANELBOARD LA.
2. MPP UNITS ARE LOOP-FEED. ALL TERMINATIONS ARE TO BE MADE ON THE MPP POWER BUS BAR. DO NOT SPLICE LOOP-FEED CIRCUITS OUTSIDE OF THE MPP UNITS
3. SEE DRAWING E-4 FOR WIRE AND CONDUIT SIZES.

B2 MARINE POWER PEDESTAL SOURCE CONNECTION DIAGRAM

SCALE: NONE

STATE OF MAINE
DEPARTMENT OF TRANSPORTATION

WIN #020806.00

STATE OF MAINE
DARIN D. PLITT
No. 11484
LICENSED
PROFESSIONAL ENGINEER
8-11-14

	BY	DATE
		8-13
		8-13

PROJ. MANAGER CDS
DESIGN-DETAILED
CHECKED-REVIEWED
DESIGN2-DETAILED2
DESIGN3-DETAILED3
REVISIONS 1
REVISIONS 2
REVISIONS 3
REVISIONS 4
FIELD CHANGES

EASTPORT BREAKWATER REPLACEMENT
EASTPORT, ME
WASHINGTON COUNTY

BREAKWATER PLAN
ELECTRICAL-DETAILS

SHEET NUMBER

E-14

ESTIMATED QUANTITIES			
ITEM NO.	DESCRIPTION	QUANTITY	UNIT
501.70	STEEL PIPE PILE (24"ϕ), DELIVERED	2170	LF
501.701	STEEL PIPE PILE (24"ϕ), IN PLACE	2170	LF
501.56	COMPOSITE GUIDE PILE (16" ϕ)	780	LF
501.90	PILE TIPS (FOR STEEL PILE)	37	EA
502.21	STRUCTURAL CONCRETE, ABUTMENTS & RETAINING WALLS	650	CY
509.80	FRP PANEL, CONCRETE FILLED, DELIVERED	16,325	SF
509.81	FRP PANEL, CONCRETE FILLED, IN PLACE	16,325	SF
515.20	PROTECTIVE COATING FOR CONCRETE SURFACES	365	SY
503.14	EPOXY-COATED REINFORCING STEEL, FABRICATED & DELIVERED	42,150	LB
503.15	EPOXY-COATED REINFORCING STEEL, PLACING	42,150	LB
504.510	MISCELLANEOUS STEEL FABRICATION	1	LS

GENERAL FABRICATION NOTES

1.) EXACT LIMITS OF PHASE III BREAKWATER PANELS TO BE FIELD VERIFIED PRIOR TO ANY FABRICATION.

2.) CONCRETE FOR THE C.I.P CAP AND THE CONCRETE USED TO FILL THE PILE VOIDS SHALL BE CLASS A (f'c 4,350psi), AND SHALL BE PAID FOR UNDER PAY ITEM# 502.21.

3.) CONCRETE FOR BREAKWATER PANELS SHALL BE CLASS A (f'c 4,350psi), AND SHALL BE CONSIDERED INCIDENTAL TO PAY ITEM# 509.80. (APPROXIMATELY 1455 CY)

4.) PANELS SHALL NOT BE MOVED UNTIL CONCRETE HAS REACHED A MINIMUM STRENGTH OF 3000psi.

5.) THE FRP SHELL IS NOT TO BE USED AS FORMWORK. FORMS WILL NEED TO BE USED WHILE FILLING THE PRECAST PANELS.

6.) NO ADDITIONAL FORMWORK WILL BE REQUIRED WHEN FILLING THE ANNULAR SPACES AROUND THE PILE PROVIDED THAT THE PRESSURE ON THE PANELS DOES NOT EXCEED 1500 psf.

7.) THE CONTROL FLOW MEDIA (CFM) ON THE INTERIOR OF THE FRP SHOULD BE HIGH PROFILE, DEVELOPING APPROXIMATELY 1/4" AMPLITUDE BETWEEN THE CONCRETE AND FRP.

8.) ALL REBAR IN THE PHASE III PRECAST FRP BREAKWATER PANELS IS TO BE GLASS FIBER REINFORCED POLYMER (GFRP) REBAR. SEE SPECIAL PROVISION 530.

9.) THE GFRP REBAR IN THE PRECAST FRP BREAKWATER PANELS SHALL BE CONSIDERED INCIDENTAL TO PAY ITEM# 509.80. (APPROXIMATELY 4.5 LF per SQUARE FOOT OF PANEL)

10.) THE TENSILE MODULUS OF ELASTICITY FOR ALL GFRP REBAR SHALL NOT BE LESS THAN 5,700,000 psi, REGARDLESS OF BAR SIZE.

11.) THE MINIMUM TENSILE STRENGTH FOR GFRP REBAR SHALL MEET THE REQUIREMENTS OF ASTM D7205.

12.) THE REBAR IN THE C.I.P. CONCRETE CAP AND THE REBAR EXTENDING DOWN INTO THE PILE SHALL BE EPOXY-COATED REINFORCING STEEL AND SHALL BE PAID FOR UNDER PAY ITEM# 503.14 & 503.15

13.) PRIOR TO THE INSTALLATION OF THE PRECAST BREAKWATER PANELS, THE CONTRACTOR SHALL PERFORM SPUD EXPLORATION AT THE PILE LOCATIONS & ALONG THE LENGTH OF THE WALL TO ENSURE NO LARGE ROCKS OR OBSTRUCTIONS WILL INTERFERE WITH THE PILE PLACEMENT OR THE BOTTOM OF THE PANELS. IN ADDITION TO THE SPUD EXPLORATION, THE CONTRACTOR SHALL LEVEL THE MUDLINE AS REQ'D TO ENSURE PROPER PLACEMENT OF THE PANELS. EXPLORATION & LEVELING SHALL BE CONSIDERED INCIDENTAL TO PAY ITEM #509.81.

14.) THE VERTICAL JOINTS IN THE TOP ROW OF PANELS SHALL BE POINTED WITH A MULTI-PURUPOSE MARINE GROUT. THIS WORK SHALL BE CONSIDERED INCIDENTAL TO PAY ITEM #509.81

15.) PIPE PILE SHALL BE 24"ϕ SPIRAL WELDED WITH A 3/4" WALL THICKNESS, ASTM A572, GRADE 50. THE BOTTOM 20 FT. +/- OF THE PILE, EXTENDING FROM THE TIP UP INTO THE BOTTOM ROW OF PANELS, SHALL BE COATED WITH A FUSION BONDED EPOXY. THE PANEL STOPS WELDED TO THE PILE DO NOT NEED TO BE COATED.

16.) PILE MAY BE DRIVEN WITH OPEN SHOE OR CONICAL POINT (CONTRACTOR'S OPTION), AND SHALL BE PAID FOR UNDER PAY ITEM #501.90

17.) PILE SHALL BE DRIVEN ONLY TO THE TIP ELEVATION SHOWN IN THESE PLANS WITH A VIBRATORY HAMMER. THE CONTRACTOR MAY CHOOSE USE AN IMPACT HAMMER, BUT THEY WILL NOT BE REQUIRED TO.

18.) THERE ARE NO TESTING REQUIREMENTS FOR THE STEEL PIPE PILE.

19.) THE CONTRACTOR MAY SPLICE THE PILE, BUT SPLICES WILL BE CONSIDERED INCIDENTAL TO THE PAY ITEM #501.701. NO ADDTIONAL PAYMENT SHALL BE MADE.

20.) ALL STEEL FOR THE PAY ITEM #504.510, MISCELLANEOUS STEEL FABRICATION SHALL BE ASTM A709 GRADE 36 (UNO). THIS ITEM# SHALL INCLUDE THE GUIDE PILE ATTACHMENT TO THE C.I.P. CAP, THE GUIDE PILE STEEL CAP (i.e. 20" ϕ STEEL PIPE w/ 1/2" ℙ COVER), MISCELLANEOUS LADDER PIECES, & THE PANEL STOPS WELDED TO THE PILE.

21.) THE PANEL STOP, DETAILED ON SHEET "P1-a", MAY BE REDESIGNED AS LONG AS THE BEARING PRESSURE ON THE 1 1/8" THICK FRP SKIRT DOES NOT EXCEED 3300psi.

SUGGESTED CONSTRUCTION SEQUENCE

1.) DETERMINE THE EXACT LOCATION OF THE 24" ϕ STEEL PIPE PILE. CONTRACTOR SHOULD PERFORM SPUD EXPLORATION AT THESE LOCATIONS TO ENSURE THAT THE PILE CAN BE DRIVEN TO THE TIP ELVATION SHOWN ON THESE PLANS.

2.) LEVEL THE MUDLINE ALONG THE LENGTH OF THE WALL TO ENSURE PROPER PLACEMENT OF THE BOTTOM ROW OF PRECAST FRP BREAKWATER PANELS.

3.) WELD THE PANEL STOPS TO TWO SIDES OF THE PIPE PILE. LIFT THE PILE AND WELD THE OTHER TWO PANEL STOPS TO THE PILE.

4.) DRIVE THE PIPE PILE TO THE TIP ELEVATION SHOWN ON THE PLANS WITH A VIBRATORY OR IMPACT HAMMER (CONTRACTOR'S CHOICE). ROTATION OF THE PILE DOES NOT MATTER, THE PANEL STOPS WILL WORK REGARDLESS OF HOW THE PILE ROTATES WHILE DRIVING.

5.) PLACE THE BOTTOM ROW OF PANELS. STACK THE REMAINING PANELS AS SHOWN SHEET G-05a, MAKING SURE THE CLOSED CELL NEOPRENE PAD IS FIRMLY APPLIED TO THE FEMALE SIDE OF THE HORIZONTAL JOINT.

6.) AT EACH PIPE PILE, PLACE 12 #6 L-BARS EXTENDING 40 FEET INTO THE PILE AS SHOWN ON THE PLANS.

7.) PLACE THE BOTTOM 3 FEET OF CLASS A CONCRETE IN THE STEEL PIPE PILE, ANY STANDING WATER SHOULD BE PUMPED OUT OF THE PILE AT THIS POINT. REPEAT AT EACH PILE LOCATION. ALLOW CONCRETE TO SET FOR 1 DAY BEFORE FILLING THE REST OF THE PILE.

8.) IN ONE CONTINUOUS OPERATION, PLACE THE REMAINING CONCRETE TO THE TOP OF THE PILE. USE AN INTERNAL TYPE VIBRATOR FOR THE TOP 25 FEET. BEFORE MOVING ONTO THE NEXT PILE, PLACE THE CONCRETE IN THE ANNULAR SPACE AROUND THE PILE IN ONE CONTINUOUS OPERATION TO THE TOP OF THE PRECAST PANELS. REPEAT THE PROCESS AT EACH PILE LOCATION.

9.) FORM THE C.I.P. CONCRETE CAP AS SHOWN ON THE PLANS, PLACE EPOXY-COATED REINFORCING STEEL, AND POUR CAP.

10.) INSTALL COMPOSITE GUIDE PILE, LADDER, AND MISCELLANEOUS ITEMS AS REQUIRED.

STATE OF MAINE
DEPARTMENT OF TRANSPORTATION

WIN #20806.00

STATE OF MAINE
ERIC T. CALDERWOOD
No. 9099
LICENSED
PROFESSIONAL ENGINEER

SIGNATURE

P.E. NUMBER
9099

DATE
AUG 2014

		BY	DATE
PROJ. MANAGER		CDS	
DESIGN-DETAILED	ETC	JJH	JULY 2014
CHECKED-REVIEWED	GNM	ETC	AUG 2014
DESIGN2-DETAILED2			
DESIGN3-DETAILED3			
REVISIONS 1			
REVISIONS 2			
REVISIONS 3			
REVISIONS 4			
FIELD CHANGES			

FRP ALTERNATE

EASTPORT BREAKWATER REPLACEMENT
EASTPORT, ME
WASHINGTON, COUNTY

ESTIMATED QUANTITIES
& GENERAL NOTES

SHEET NUMBER

E-01a

OF X

CALDERWOOD ENGINEERING
22 RIVER ROAD
P.O. BOX 1
RICHMOND, ME 04357
PH. (207) 737-2007 FAX (207) 737-2008

Filename: ...\Plans\E_01a_Eastport.dgn Division: BRIDGE Username: common Date:9/4/2014

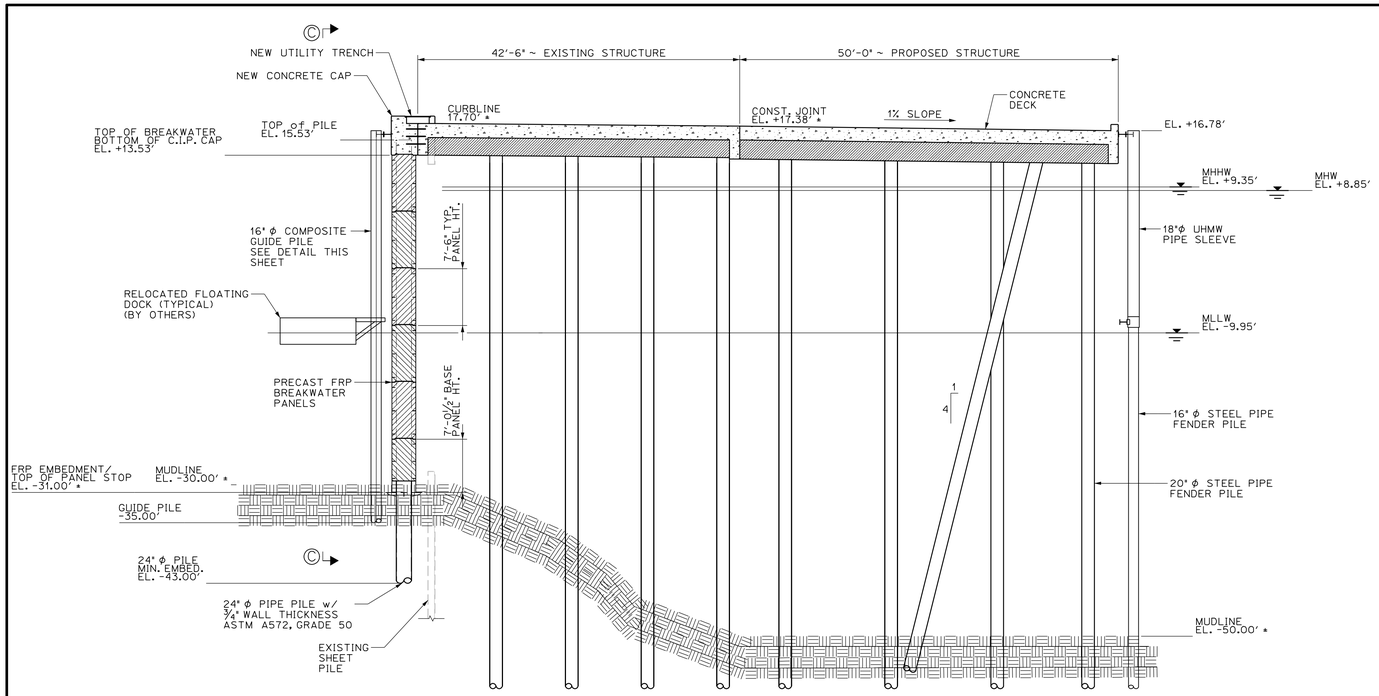

PROPOSED SECTION A-A
FRP BREAKWATER OPTION
SCALE: 1" = 10'-0"

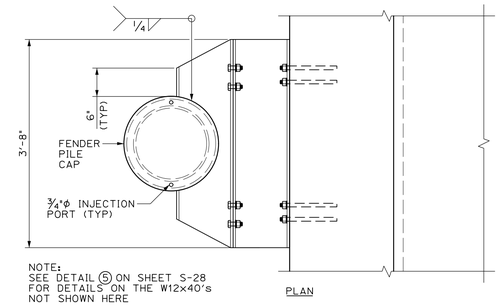

NOTE:
SEE DETAIL 5 ON SHEET S-28 FOR DETAILS ON THE W12x40's NOT SHOWN HERE

NOTE:
1. PROPSOED SECTION B-B & SECTION C-C ARE STILL APPLICABLE WITH THE FRP BREAKWATER OPTION, SEE SHEET G-05.

2. SEE SECTION A-A ON THIS SHEET FOR ORIENTATION OF PROPOSED ELEVATION C-C.

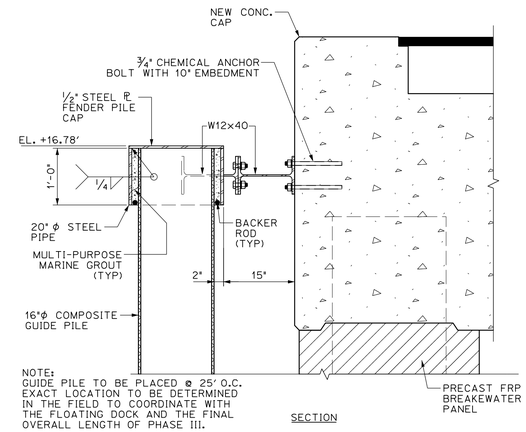

NOTE:
GUIDE PILE TO BE PLACED @ 25' O.C.
EXACT LOCATION TO BE DETERMINED IN THE FIELD TO COORDINATE WITH THE FLOATING DOCK AND THE FINAL OVERALL LENGTH OF PHASE III.

GUIDE PILE @ BREAKWATER
SCALE: 3/4" = 1'-0"

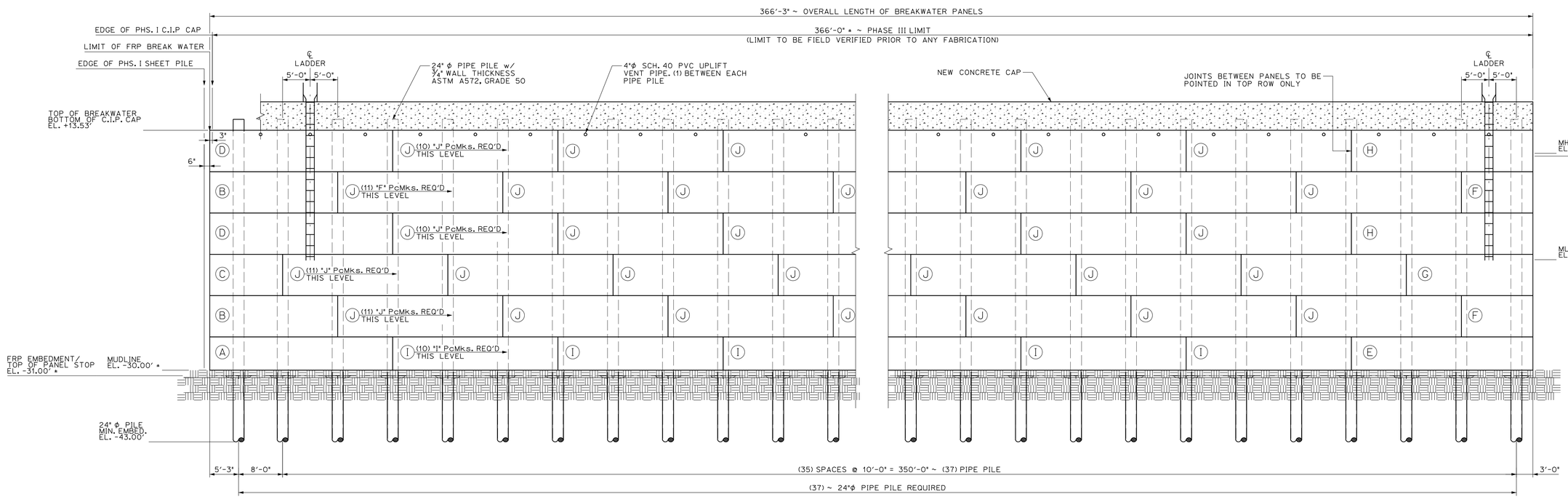

NOTE:
ELEVATION IS LOOKING EAST.
SEE PROPOSED SECTION A-A FOR CLARITY

PROPOSED ELEVATION C-C ~ FRP BREAKWATER OPTION
SCALE: 1" = 10'-0"

STATE OF MAINE
DEPARTMENT OF TRANSPORTATION

WIN #20806.00

STATE OF MAINE
ERIC T. CALDERWOOD
No. 9099
LICENSED
PROFESSIONAL ENGINEER

SIGNATURE

P.E. NUMBER 9099

DATE AUG 2014

	CDS	BY	DATE
PROJ. MANAGER			
DESIGN-DETAILED	ETC	JJH	JULY 2014
CHECKED-REVIEWED	GNM	ETC	AUG 2014
DESIGN2-DETAILED2			
DESIGN3-DETAILED3			
REVISIONS 1			
REVISIONS 2			
REVISIONS 3			
REVISIONS 4			
FIELD CHANGES			

FRP ALTERNATE

EASTPORT BREAKWATER REPLACEMENT
EASTPORT, ME
WASHINGTON, COUNTY

TYPICAL CROSS SECTION & ELEVATION

SHEET NUMBER

G-05a

OF X

CALDERWOOD ENGINEERING
P.O. BOX 1
RICHMOND, ME 04357
PH (207) 737-2007 FAX (207) 737-2008

Date:9/4/2014
Username: common
Division: BRIDGE
Filename: ...\Plans\G_05a_Eastport.dgn

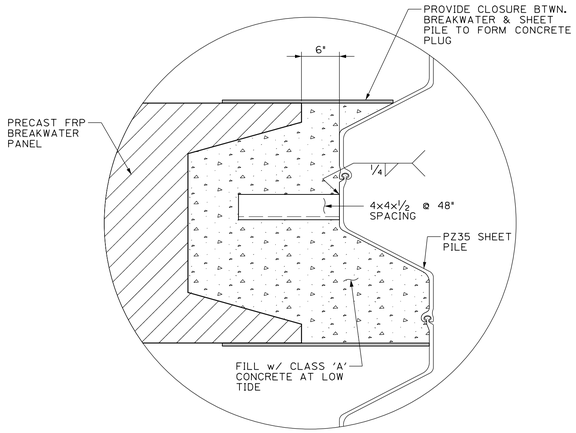

BREAKWATER to SHEET PILE CONNECTION
SCALE: 1" = 1'-0"

NOTES:

1. CONTRACTOR SHALL EXTRACT SHEETS WHERE NEW SHEET PILES OR BREAKWATER INTERFERE WITH EXISTING SHEETS. ALTERNATE METHODS OF TRANSITION ACROSS EXISTING SHEETS MAY BE SUBMITTED FOR APPROVAL. CONTRACTOR HAS THE ULTIMATE RESPONSIBILITY TO PROVIDE STRUCTURAL INTEGRITY TO THE SHEET PILE ACROSS THE EXISTING STRUCTURE.
2. SHEET PILE SHALL BE DRIVEN TO A MINIMUM PENETRATION OF 20 FEET OR TO REFUSAL IN ROCK.

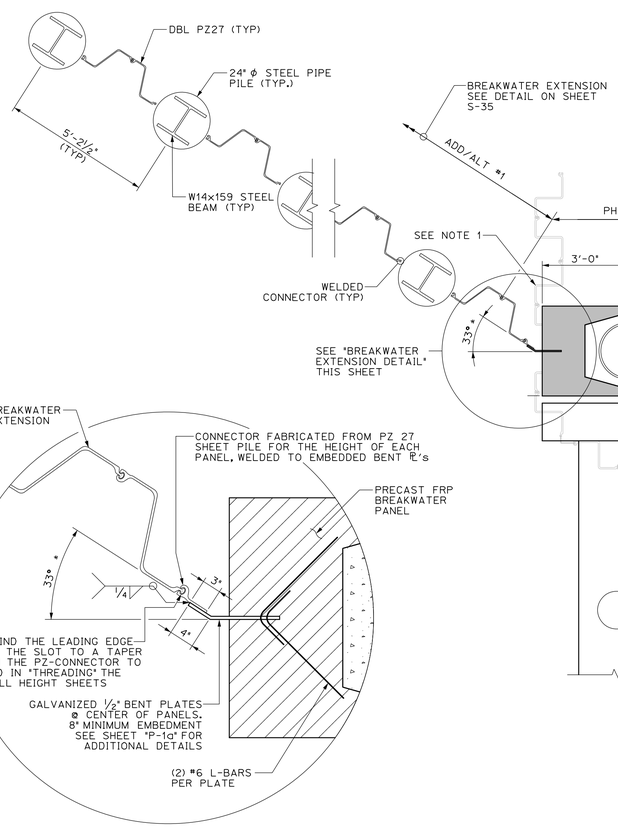

BREAKWATER EXTENSION CONNCECTION DETAIL
SCALE: 1" = 1'-0"

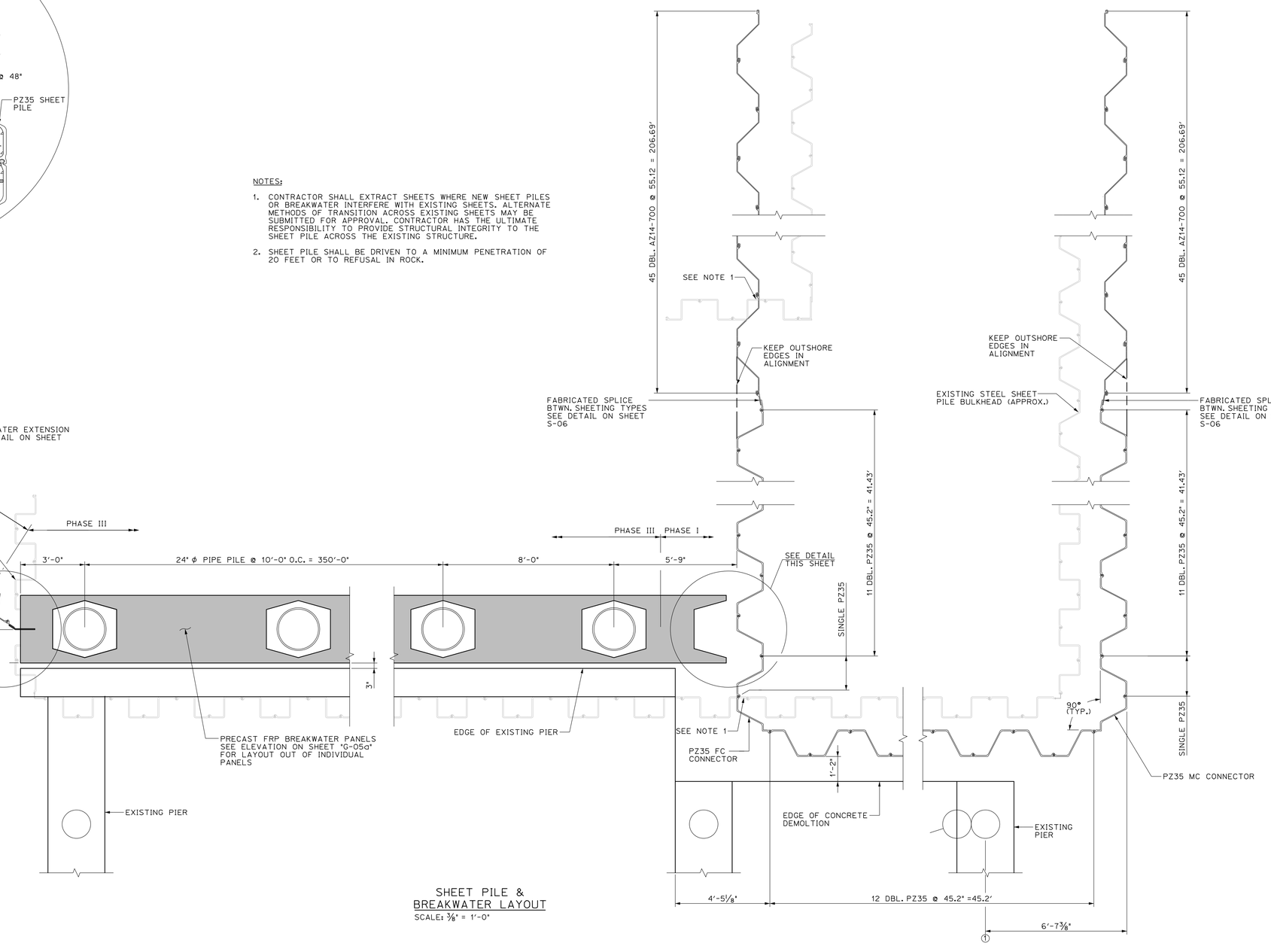

SHEET PILE & BREAKWATER LAYOUT
SCALE: 3/8" = 1'-0"

STATE OF MAINE
DEPARTMENT OF TRANSPORTATION

WIN #20806.00

STATE OF MAINE
ERIC T. CALDERWOOD
No. 9099
LICENSED
PROFESSIONAL ENGINEER

SIGNATURE

P.E. NUMBER 9099

DATE AUG 2014

PROJ. MANAGER			
DESIGN-DETAILED	ETC	JJH	JULY 2014
CHECKED-REVIEWED	GNM	ETC	AUG 2014
DESIGN2-DETAILED2			
DESIGN3-DETAILED3			
REVISIONS 1			
REVISIONS 2			
REVISIONS 3			
REVISIONS 4			
FIELD CHANGES			

FRP ALTERNATE

EASTPORT BREAKWATER REPLACEMENT
EASTPORT, ME
WASHINGTON, COUNTY

SHEET PILE & BREAKWATER LAYOUT

SHEET NUMBER

S-06a

OF X

CALDERWOOD ENGINEERING
225 RIVER ROAD
W. RICHMOND, ME 04573
PH. (207) 375-2007 FAX (207) 375-2008

Filename: ...\Plans\S_06a_Eastport.dgn Division: BRIDGE Username: common Date:9/4/2014

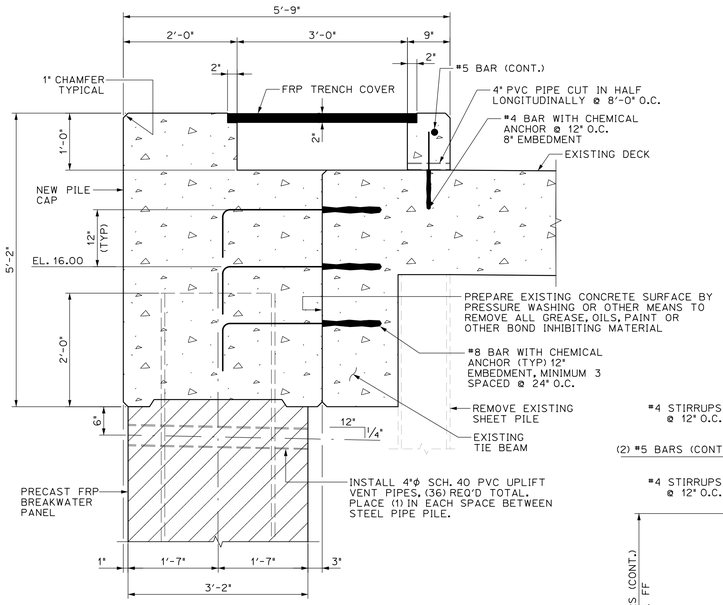

C / S-10a SECTION
SCALE: 3/4" = 1'-0"

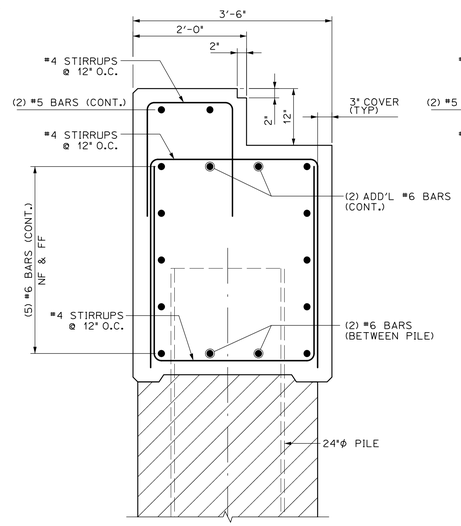

SECTION BTWN. PILE

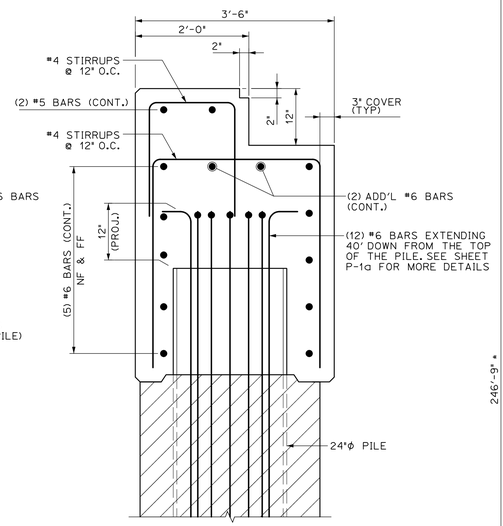

SECTION @ PILE

1 / S-10a BREAKWATER CAP REINFORCING DETAILS
SCALE: 3/4" = 1'-0"

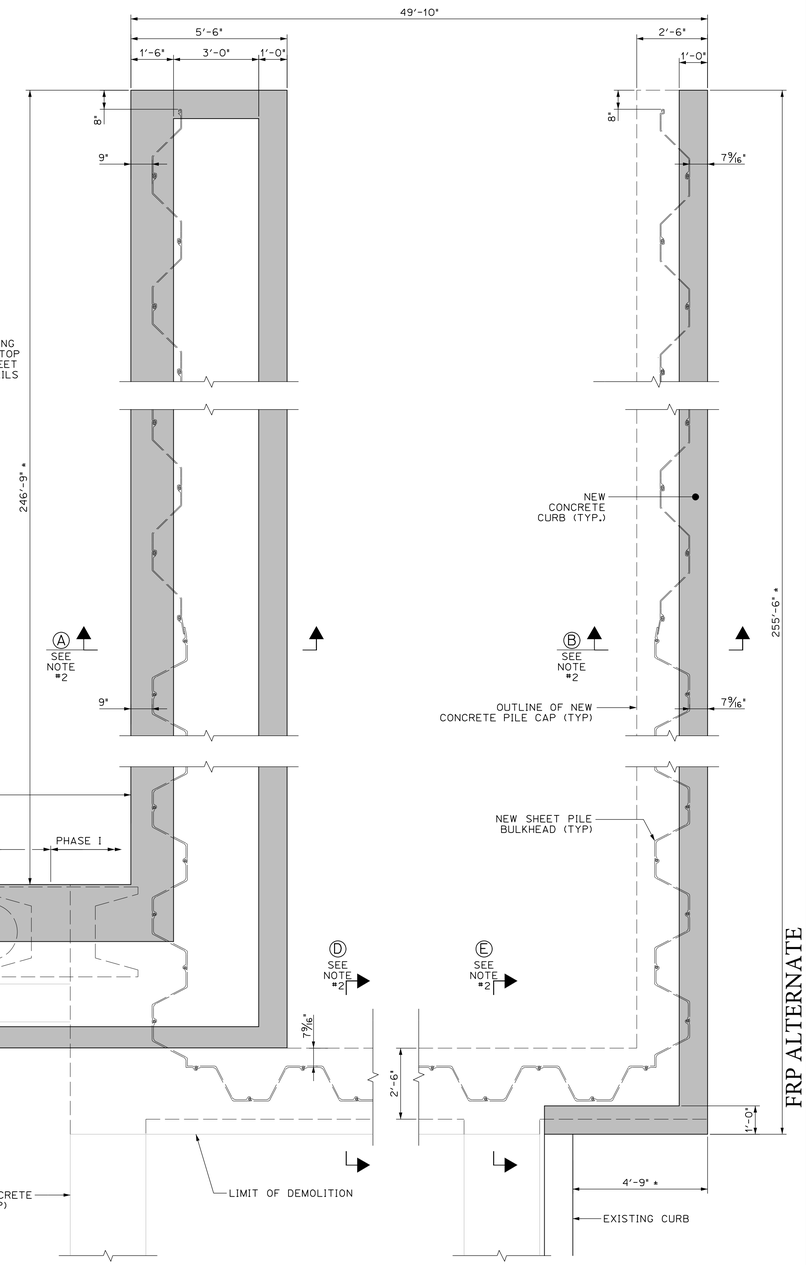

NOTE:
ADD/ALT #1 PILE ARE NOT SHOWN FOR CLARITY

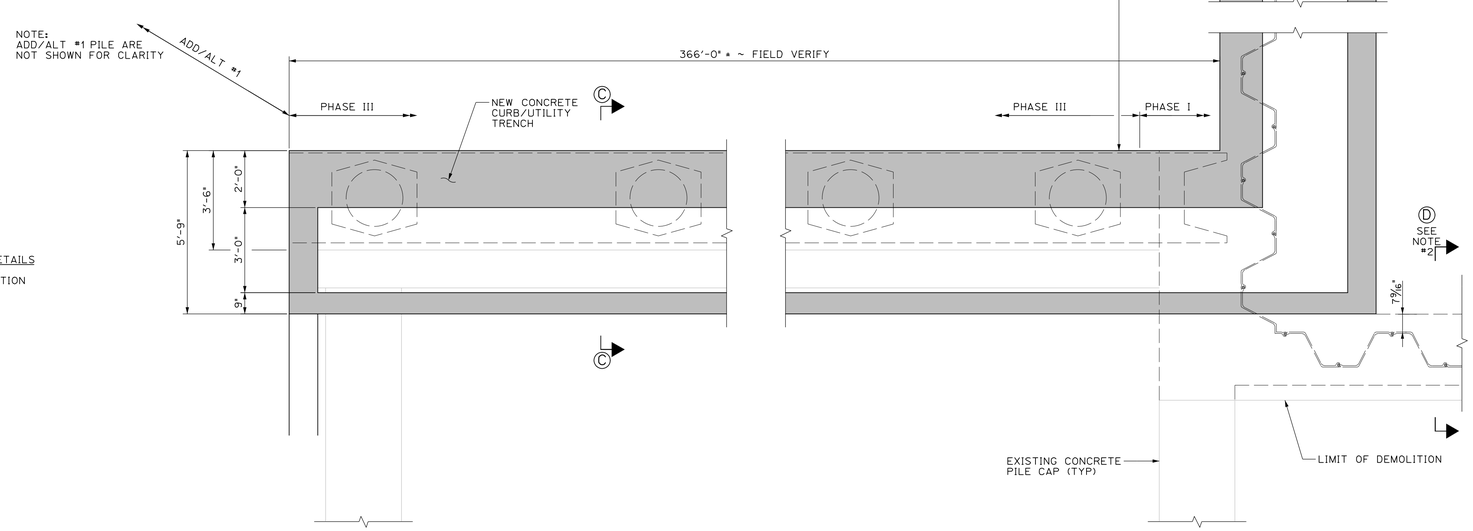

NOTES:

1. FRP TRENCH COVER NOT SHOWN FOR CLARITY
2. FOR SECTIONS Ⓐ Ⓑ Ⓓ & Ⓔ SEE SHEET #'s S-09 & S-10
3. SECTION Ⓒ & THE BREAKWATER CAP REINFORCING DETAILS FOUND ON THIS SHEET ARE TO REPLACE THE SIMILAR DETAILS ON SHEET S-10 IF THE FRP BREAKWATER OPTION IS USED.

C.I.P CAP LAYOUT
SCALE: 3/8" = 1'-0"

STATE OF MAINE
DEPARTMENT OF TRANSPORTATION

WIN #20806.00

STATE OF MAINE ERIC CALDERWOOD No. 9099 LICENSED PROFESSIONAL ENGINEER

SIGNATURE
P.E. NUMBER 9099
DATE AUG 2014

	COS	BY	DATE
PROJ. MANAGER			
DESIGN-DETAILED	ETC	JJH	JULY 2014
CHECKED-REVIEWED	GNM	ETC	AUG 2014
DESIGN2-DETAILED2			
DESIGN3-DETAILED3			
REVISIONS 1			
REVISIONS 2			
REVISIONS 3			
REVISIONS 4			
FIELD CHANGES			

EASTPORT BREAKWATER REPLACEMENT
EASTPORT, ME
WASHINGTON, COUNTY

BREAKWATER CAP DETAILS

SHEET NUMBER
S-09a
OF X

CALDERWOOD ENGINEERING
P.O. BOX 1 RICHMOND, ME 04357
PH (207) 737-2007 FAX (207) 737-2008

Filename: ...\Plans\S_09a_Eastport.dgn Division: BRIDGE Username: common Date:9/4/2014

NOTE:
SEE SHEET S-34 FOR DETAIL 1
PROPOSED PIER EXTENSION LADDER DETAIL

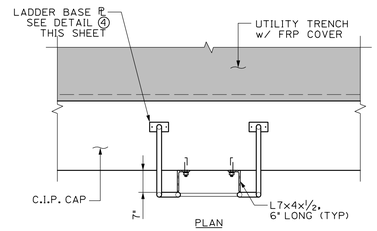

PLAN

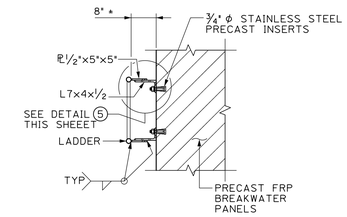

SECTION A-A

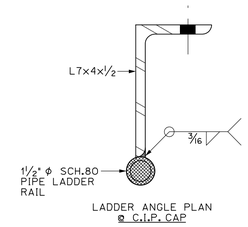

LADDER ANGLE PLAN
@ C.I.P. CAP

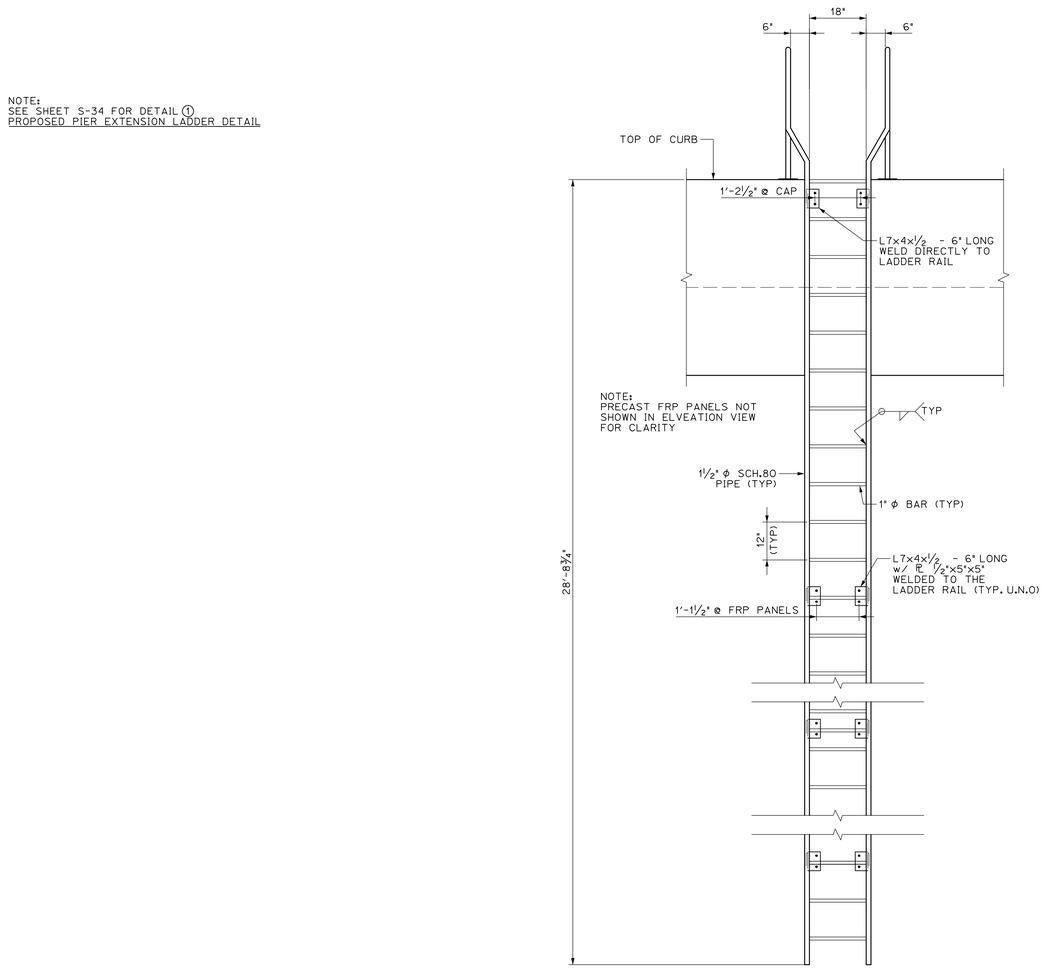

ELEVATION

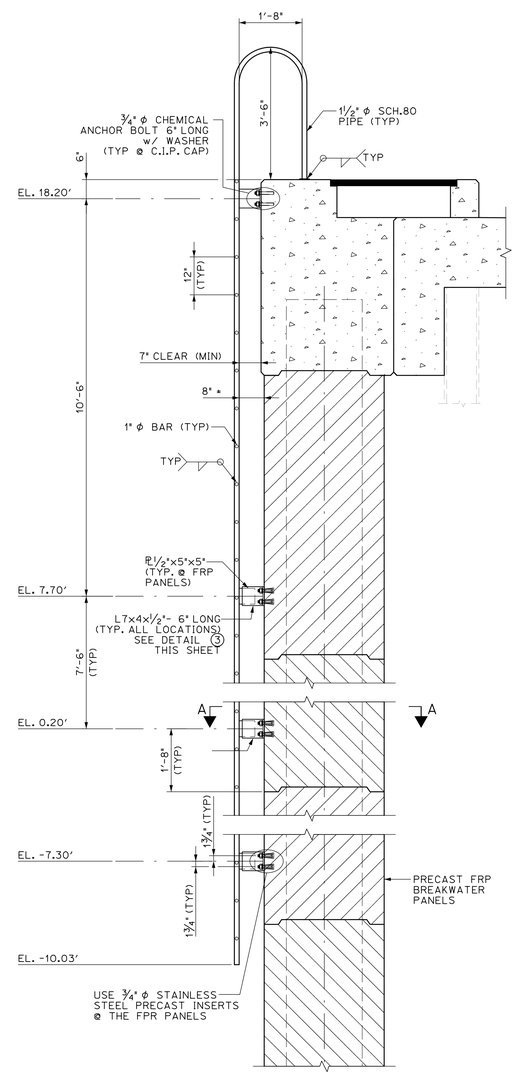

SECTION

2 / S-34a PROPOSED FRP BREAKWATER LADDER DETAILS
SCALE: 1/2" = 1'-0"

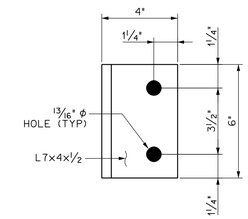

3 / S-34a LADDER ANGLE DETAIL
SCALE: 3" = 1'-0"

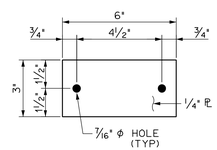

4 / S-34a LADDER BASE PL DETAIL
SCALE: 3" = 1'-0"

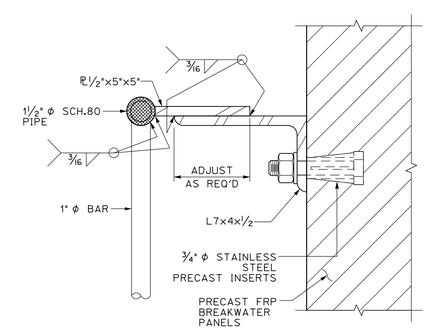

5 / S-34a DETAIL
SCALE: 3" = 1'-0"

FRP ALTERNATE

EASTPORT BREAKWATER REPLACEMENT
EASTPORT, ME
WASHINGTON, COUNTY

FRP BREAKWATER LADDER DETAILS

STATE OF MAINE
DEPARTMENT OF TRANSPORTATION

WIN #20806.00

STATE OF MAINE
ERIC T. CALDERWOOD
No. 9099
LICENSED
PROFESSIONAL ENGINEER

SIGNATURE

P.E. NUMBER 9099

DATE AUG 2014

PROJ. MANAGER	CDS	BY	DATE
DESIGN-DETAILED	ETC	JJH	JULY 2014
CHECKED-REVIEWED	GNM	ETC	AUG 2014
DESIGN2-DETAILED2			
DESIGN3-DETAILED3			
REVISIONS 1			
REVISIONS 2			
REVISIONS 3			
REVISIONS 4			
FIELD CHANGES			

SHEET NUMBER

S-34a

OF X

CALDERWOOD ENGINEERING
25 ROVEE ROAD
P.O. BOX 1, RICHMOND, ME 04357
TEL (207) 737-2007 FAX (207) 737-2008

Filename: ...\Plans\S_34a_Eastport.dgn Division: BRIDGE Username: common Date:9/4/2014

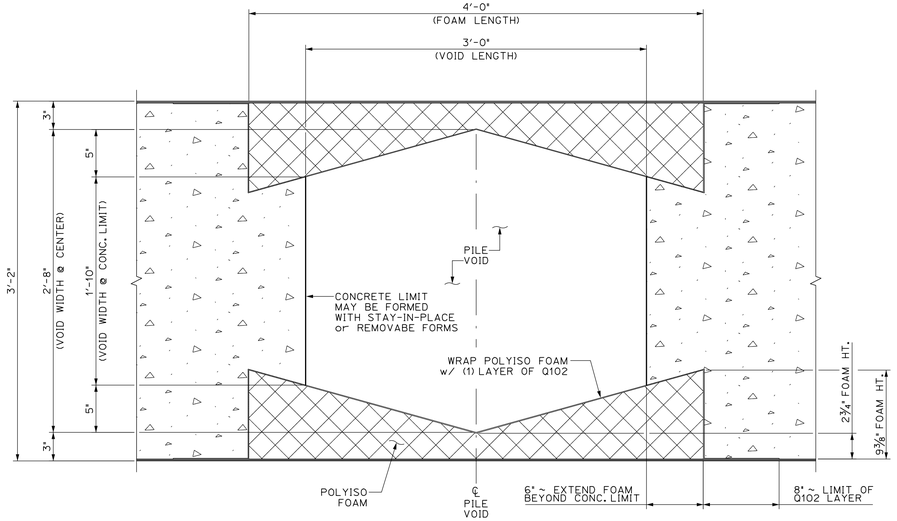

PILE VOID DETAIL
SCALE: 1½" = 1'-0"

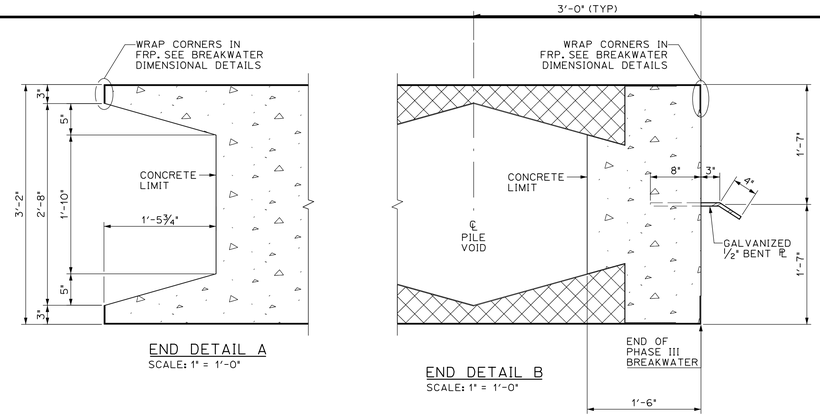

END DETAIL A
SCALE: 1" = 1'-0"

END DETAIL B
SCALE: 1" = 1'-0"

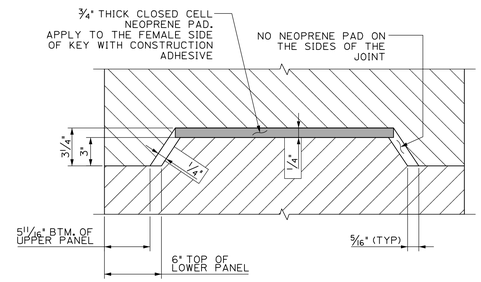

SECTION @ HORIZONTAL JOINT
N.T.S

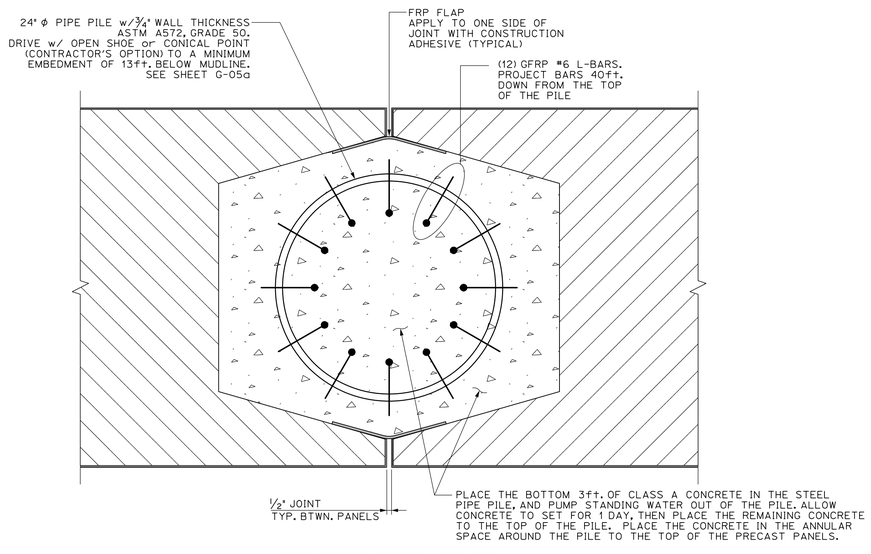

PILE/VOID GROUT DETAIL
SCALE: 1½" = 1'-0"

NOTES:
-AS DETAILED, THE PANEL STOP WILL WORK REGARDLESS OF THE POSTITION IT ROTATES TO WHILE DRIVING THE PILE.

-THE CONTRCTOR MAY USE A DIFFERENT PANEL STOP DETAIL AS LONG AS THE BEARING PRESSURE ON THE 1⅛" THICK FRP SKIRT DOES NOT EXCEED 3300psi.

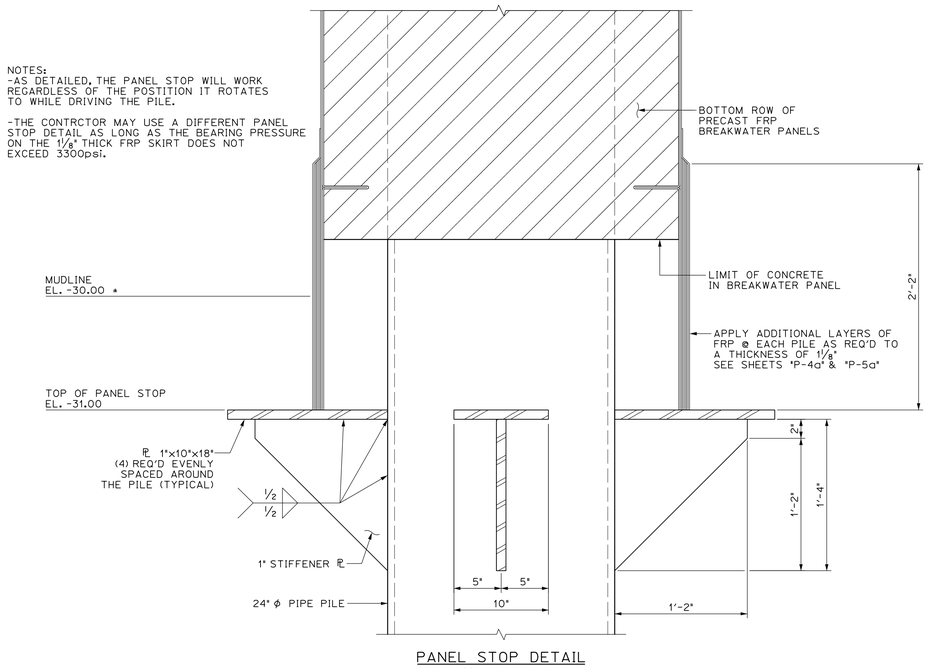

PANEL STOP DETAIL
SCALE: 1½" = 1'-0"
TYPICAL @ EACH PILE

STATE OF MAINE
DEPARTMENT OF TRANSPORTATION

WIN #20806.00

STATE OF MAINE
ERIC T. CALDERWOOD
No. 9099
LICENSED
PROFESSIONAL ENGINEER

SIGNATURE

P.E. NUMBER
9099

DATE
AUG 2014

	COS	BY	DATE
DESIGN-DETAILED		JJH	JULY 2014
CHECKED-REVIEWED		ETC	AUG 2014
DESIGN2-DETAILED2			
DESIGN3-DETAILED3			
REVISIONS 1			
REVISIONS 2			
REVISIONS 3			
REVISIONS 4			
FIELD CHANGES			

PROJ. MANAGER ETC
CHECKED-REVIEWED GNM

FRP ALTERNATE

EASTPORT BREAKWATER REPLACEMENT
EASTPORT, ME
WASHINGTON, COUNTY

FRP PRECAST BREAKWATER MISCELLANEOUS DETAILS

SHEET NUMBER

P-1a

OF X

CALDERWOOD ENGINEERING
85 RIVER ROAD
RICHMOND, ME 04357
PH (207) 737-2007 FAX (207) 737-2008

Filename: ...\Plans\P_1a_Eastport.dgn Division: BRIDGE Username: common Date:9/4/2014

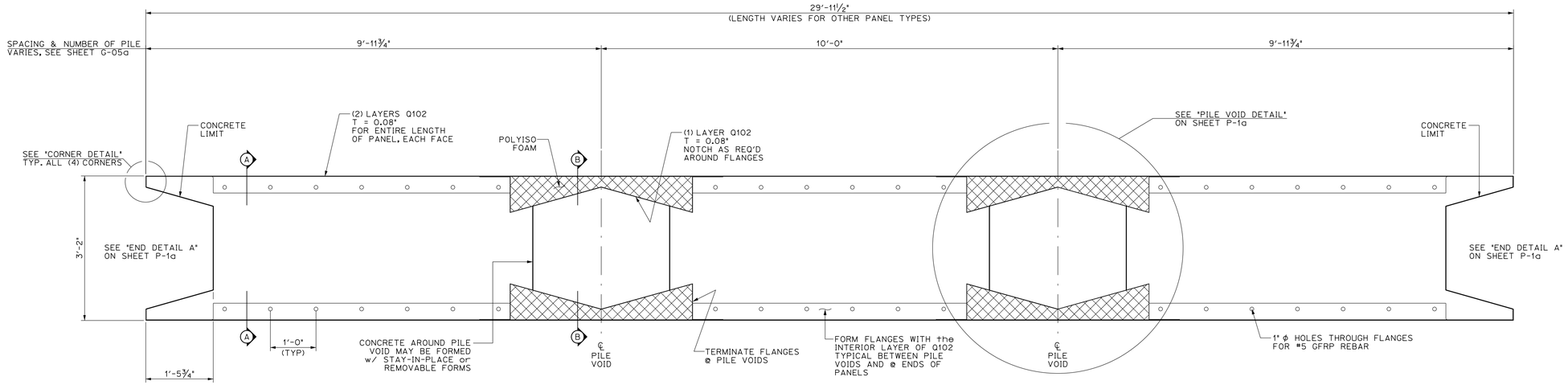

FRP SKIN ~ PLAN VIEW
INTERIOR PANELS & NORTH END PANELS

SCALE: ¾" = 1'-0"
NOTE "J" TYPE PANEL IS SHOWN
"B" "C" & "D" TYPE PANELS ARE SIMILAR
SEE SHEET G-05a FOR LAYOUT

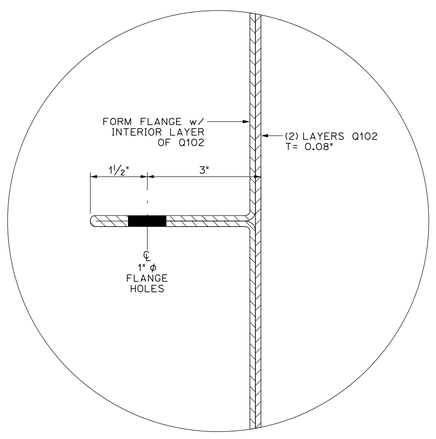

FLANGE DETAIL
SCALE: 6" = 1'-0"

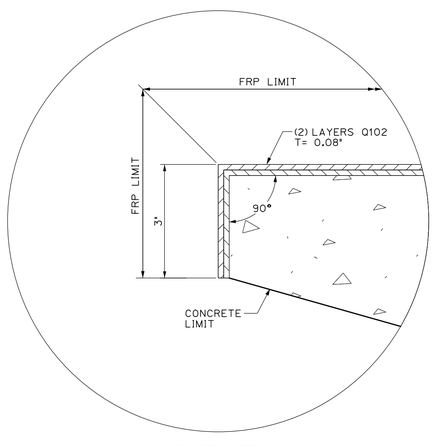

CORNER DETAIL
SCALE: 6" = 1'-0"

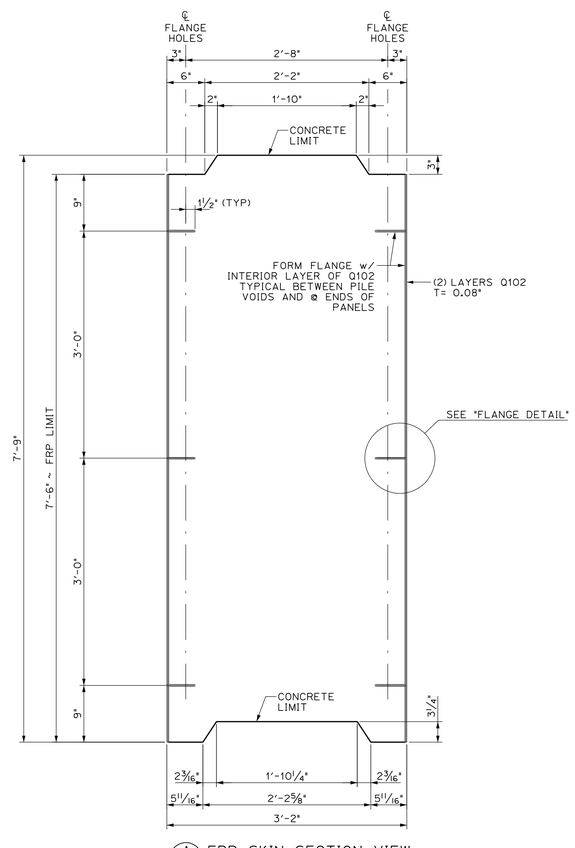

A/A FRP SKIN SECTION VIEW
SCALE: 1" = 1'-0"

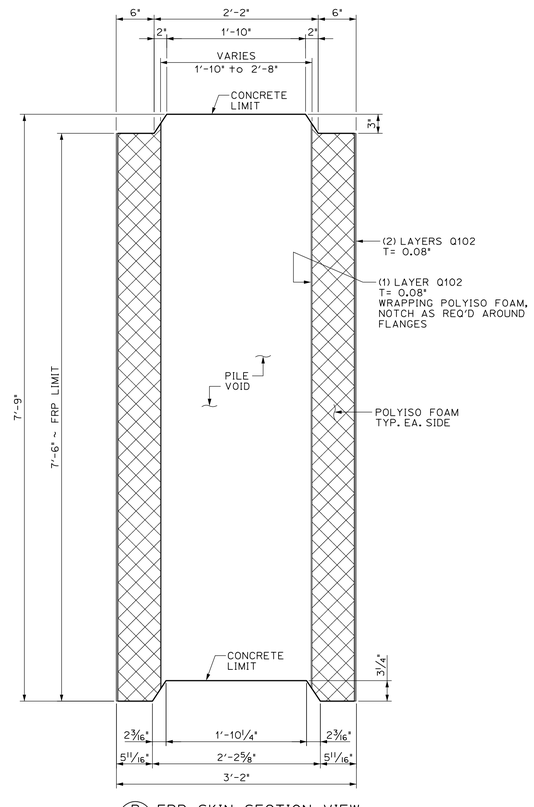

B/B FRP SKIN SECTION VIEW
SCALE: 1" = 1'-0"

Filename: ...\Plans\P_2a_Eastport.dgn Division: BRIDGE Username: common Date:9/4/2014

STATE OF MAINE
DEPARTMENT OF TRANSPORTATION

WIN #20806.00

STATE OF MAINE
ERIC T. CALDERWOOD
No. 9099
LICENSED PROFESSIONAL ENGINEER

SIGNATURE

P.E. NUMBER 9099

DATE AUG 2014

	CDS	BY	DATE
PROJ. MANAGER			
DESIGN-DETAILED	ETC	JJH	JULY 2014
CHECKED-REVIEWED	GNM	ETC	AUG 2014
DESIGN2-DETAILED2			
DESIGN3-DETAILED3			
REVISIONS 1			
REVISIONS 2			
REVISIONS 3			
REVISIONS 4			
FIELD CHANGES			

FRP ALTERNATE
EASTPORT BREAKWATER REPLACEMENT
EASTPORT, ME
WASHINGTON, COUNTY

FRP PRECAST BREAKWATER
DIMENSIONAL DETAILS

SHEET NUMBER
P-2a
OF X

CALDERWOOD ENGINEERING

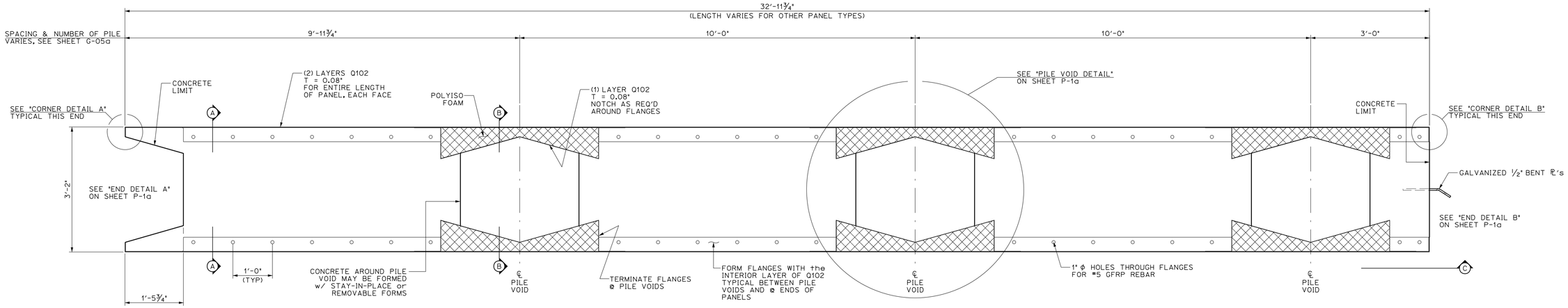

FRP SKIN ~ PLAN VIEW
SOUTH END PANELS

SCALE: ¾" = 1'-0"
NOTE "H" TYPE PANEL IS SHOWN
"F" & "G" TYPE PANELS ARE SIMILAR
SEE SHEET G-05a FOR LAYOUT

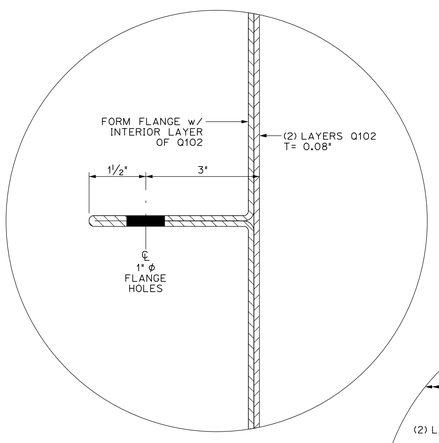

FLANGE DETAIL
SCALE: 6" = 1'-0"

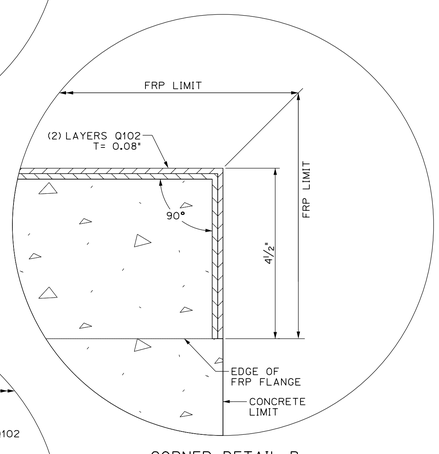

CORNER DETAIL B
SCALE: 6" = 1'-0"

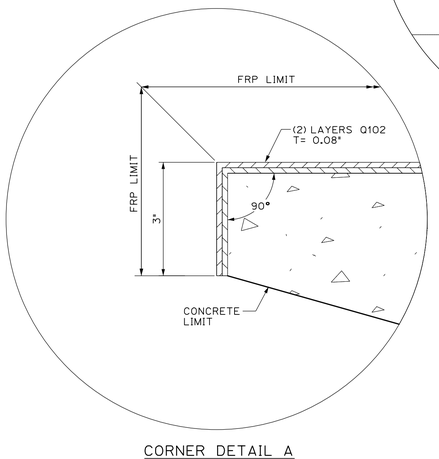

CORNER DETAIL A
SCALE: 6" = 1'-0"

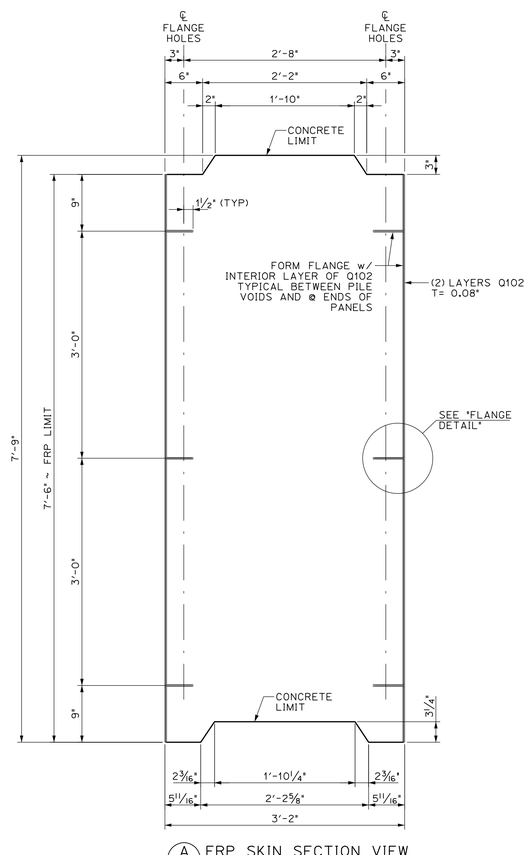

A/A FRP SKIN SECTION VIEW
SCALE: 1" = 1'-0"

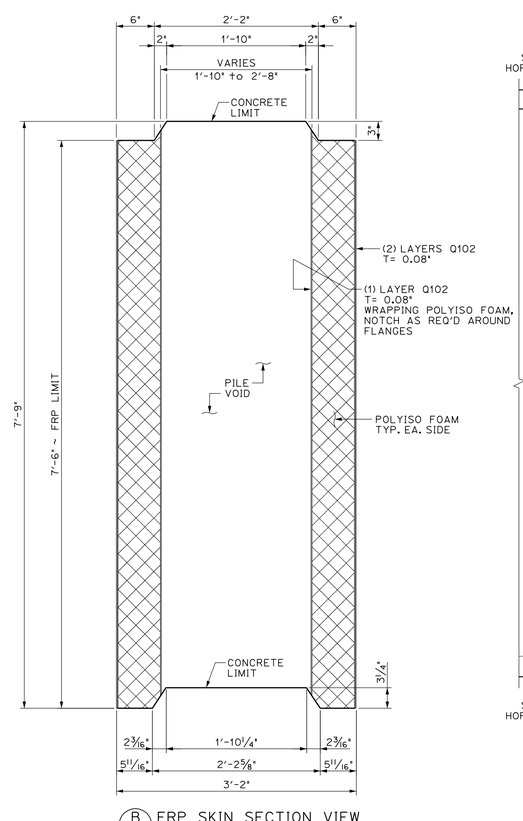

B/B FRP SKIN SECTION VIEW
SCALE: 1" = 1'-0"

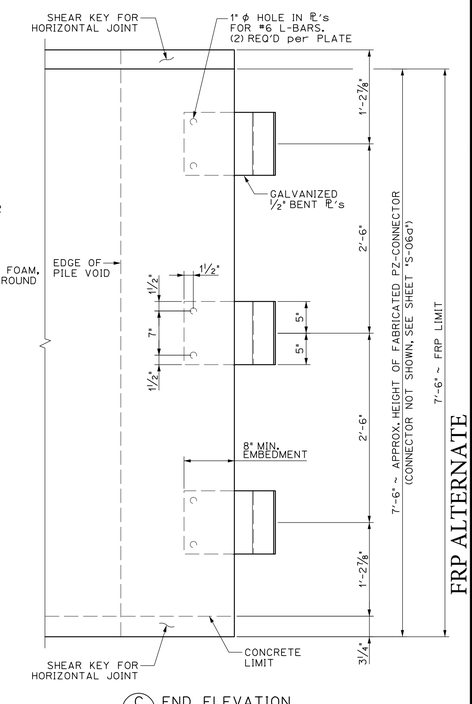

C/C END ELEVATION
SCALE: 1" = 1'-0"

STATE OF MAINE
DEPARTMENT OF TRANSPORTATION

WIN #20806.00

STATE OF MAINE
ERIC CALDERWOOD
No. 9099
LICENSED PROFESSIONAL ENGINEER

SIGNATURE
P.E. NUMBER 9099
DATE AUG 2014

PROJ. MANAGER	CDS	BY	DATE
DESIGN-DETAILED	ETC	JJH	JULY 2014
CHECKED-REVIEWED	GNM	ETC	AUG 2014
DESIGN2-DETAILED2			
DESIGN3-DETAILED3			
REVISIONS 1			
REVISIONS 2			
REVISIONS 3			
REVISIONS 4			
FIELD CHANGES			

FRP ALTERNATE

EASTPORT BREAKWATER REPLACEMENT
EASTPORT, ME
WASHINGTON, COUNTY

FRP PRECAST BREAKWATER DIMENSIONAL DETAILS

SHEET NUMBER
P-3a
OF X

CALDERWOOD ENGINEERING
225 RIVER ROAD
P.O. BOX 1, RICHMOND, ME 04357
PH. (207) 737-2007 FAX (207) 737-2008

Filename: ...\Plans\P_3a_Eastport.dgn Division: BRIDGE Username: common Date:9/4/2014

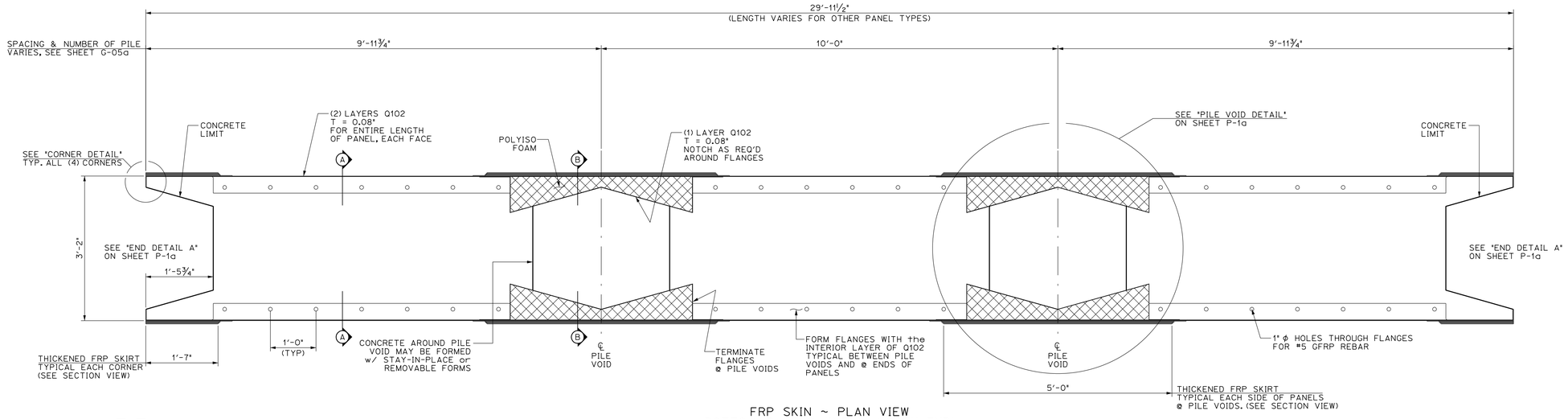

FRP SKIN ~ PLAN VIEW
BOTTOM PANELS (INT. & NORTH END)

SCALE: ¾" = 1'-0"
NOTE "I" TYPE PANEL IS SHOWN
"A" TYPE PANEL IS SIMILAR
SEE SHEET G-05a FOR LAYOUT

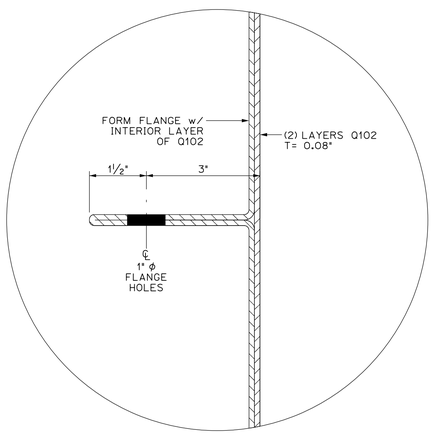

FLANGE DETAIL
SCALE: 6" = 1'-0"

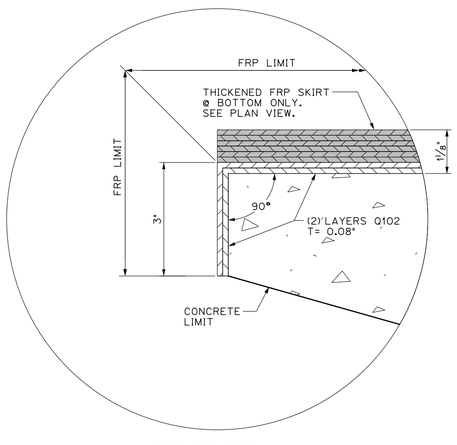

CORNER DETAIL
SCALE: 6" = 1'-0"

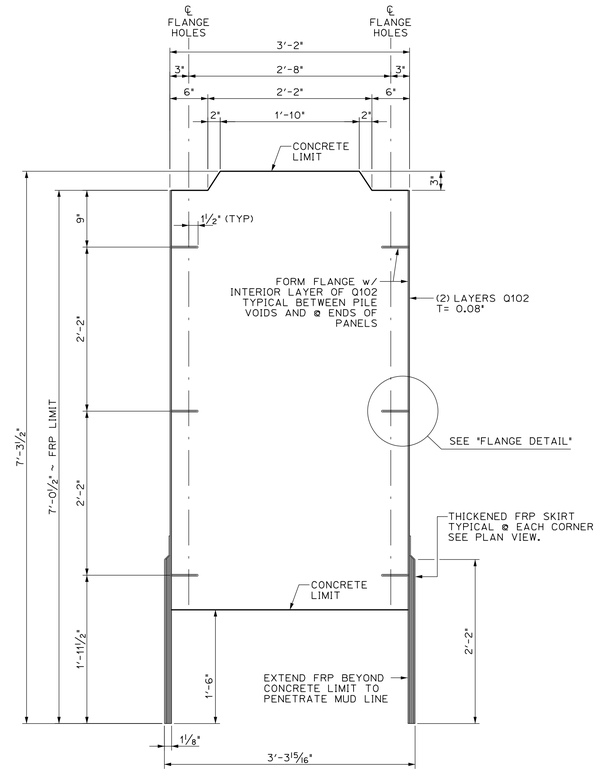

A/A FRP SKIN SECTION VIEW
SCALE: 1" = 1'-0"

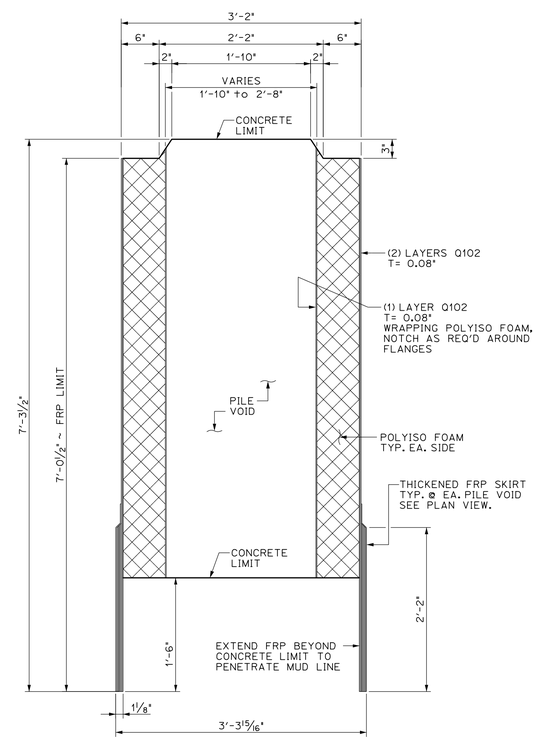

B/B FRP SKIN SECTION VIEW
SCALE: 1" = 1'-0"

STATE OF MAINE
DEPARTMENT OF TRANSPORTATION

WIN #20806.00

STATE OF MAINE
ERIC T. CALDERWOOD
No. 9099
LICENSED
PROFESSIONAL ENGINEER

SIGNATURE

P.E. NUMBER 9099

DATE AUG 2014

		BY	DATE
PROJ. MANAGER	CDS		
DESIGN-DETAILED	ETC	JJH	JULY 2014
CHECKED-REVIEWED	GNM	ETC	AUG 2014
DESIGN2-DETAILED2			
DESIGN3-DETAILED3			
REVISIONS 1			
REVISIONS 2			
REVISIONS 3			
REVISIONS 4			
FIELD CHANGES			

FRP ALTERNATE

EASTPORT BREAKWATER REPLACEMENT
EASTPORT, ME
WASHINGTON, COUNTY

FRP PRECAST BREAKWATER DIMENSIONAL DETAILS

SHEET NUMBER

P-4a

OF X

CALDERWOOD ENGINEERING
25 Bowie Road
W. RICHMOND, ME 04573
PH. (207) 737-2007 FAX (207) 737-2008

Filename: ...\Plans\P_4a_Eastport.dgn Division: BRIDGE Username: common Date:9/4/2014

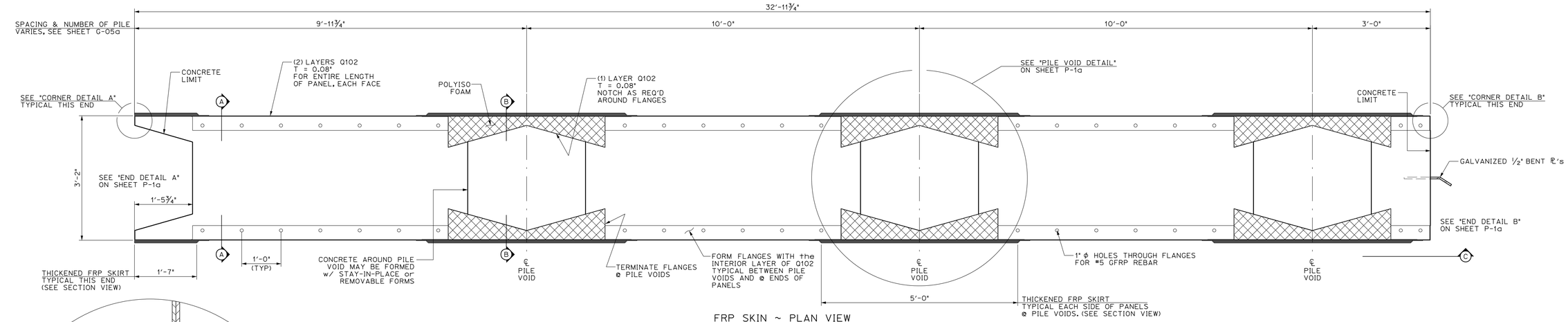

FRP SKIN ~ PLAN VIEW
SOUTH END BOTTOM PANEL "E"
SCALE: ¾" = 1'-0"

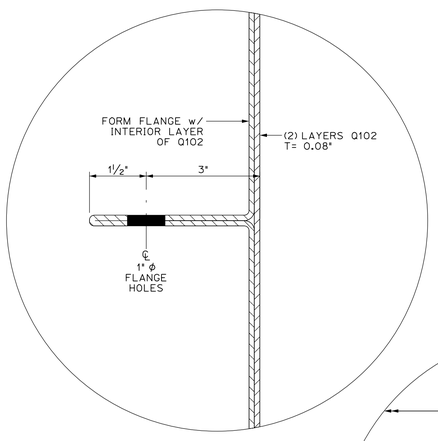

FLANGE DETAIL
SCALE: 6" = 1'-0"

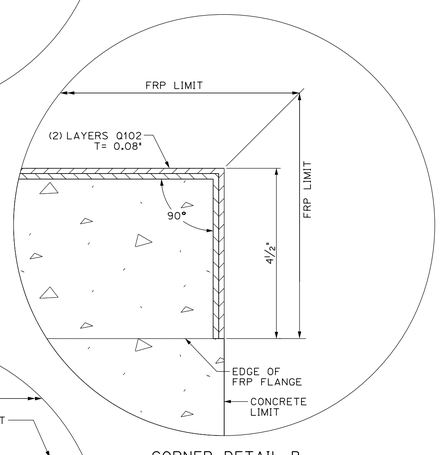

CORNER DETAIL B
SCALE: 6" = 1'-0"

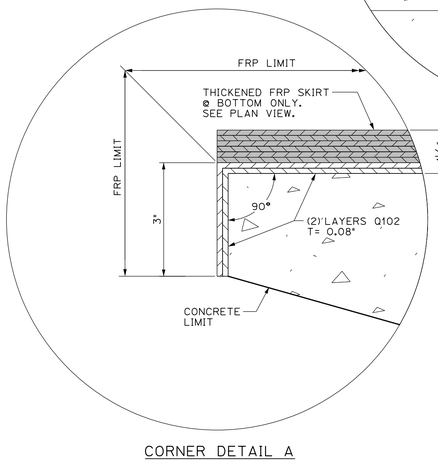

CORNER DETAIL A
SCALE: 6" = 1'-0"

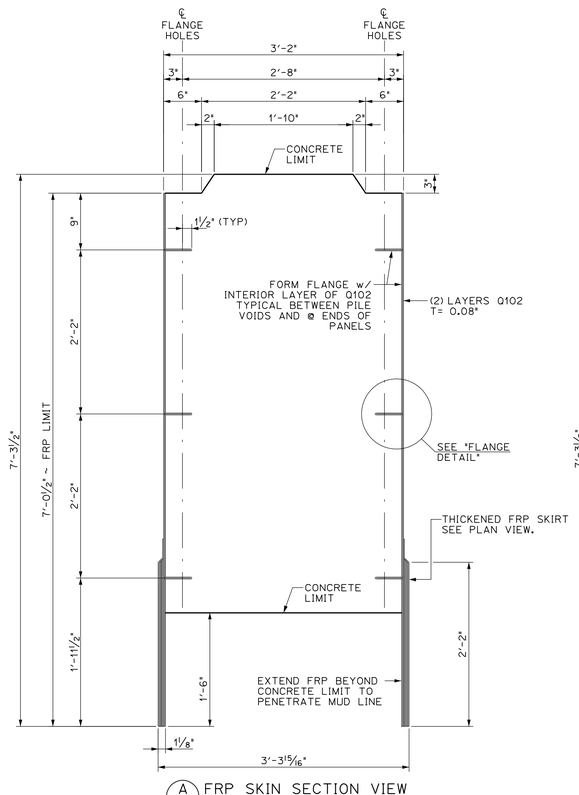

A/A FRP SKIN SECTION VIEW
SCALE: 1" = 1'-0"

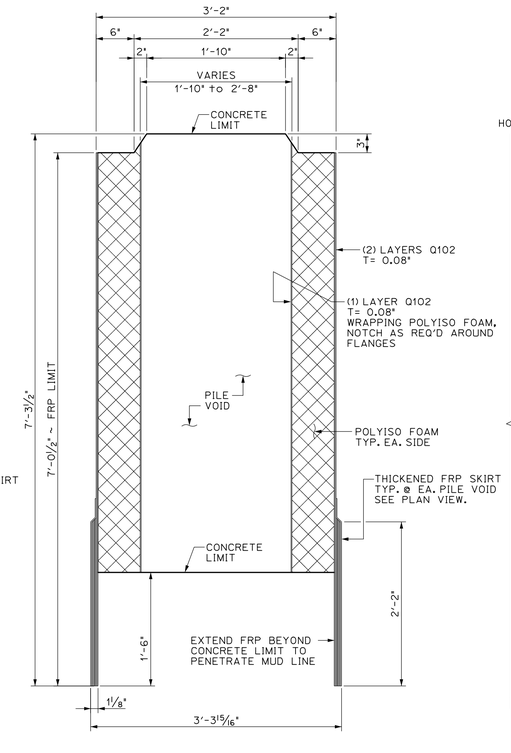

B/B FRP SKIN SECTION VIEW
SCALE: 1" = 1'-0"

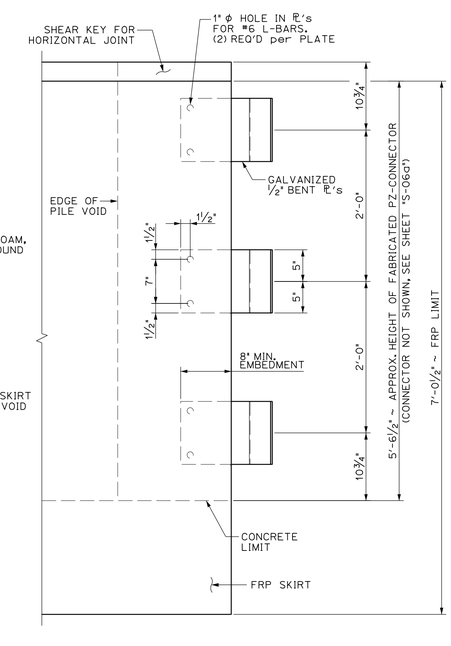

C/C END ELEVATION
SCALE: 1" = 1'-0"

FRP ALTERNATE

EASTPORT BREAKWATER REPLACEMENT
EASTPORT, ME
WASHINGTON, COUNTY

FRP PRECAST BREAKWATER DIMENSIONAL DETAILS

STATE OF MAINE
DEPARTMENT OF TRANSPORTATION

WIN #20806.00

STATE OF MAINE ERIC J. CALDERWOOD No. 9099 LICENSED PROFESSIONAL ENGINEER

SIGNATURE
P.E. NUMBER 9099
DATE AUG 2014

	CDS	BY	DATE
PROJ. MANAGER			
DESIGN-DETAILED	ETC	JJH	JULY 2014
CHECKED-REVIEWED	GNM	ETC	AUG 2014
DESIGN2-DETAILED2			
DESIGN3-DETAILED3			
REVISIONS 1			
REVISIONS 2			
REVISIONS 3			
REVISIONS 4			
FIELD CHANGES			

SHEET NUMBER
P-5a
OF X

CALDERWOOD ENGINEERING
325 RIVER ROAD
P.O. BOX 1 W. RICHMOND, ME 04357
PH. (207) 737-2007 FAX (207) 737-2008

Filename: ...\Plans\P_5a_Eastport.dgn Division: BRIDGE Username: common Date:9/4/2014

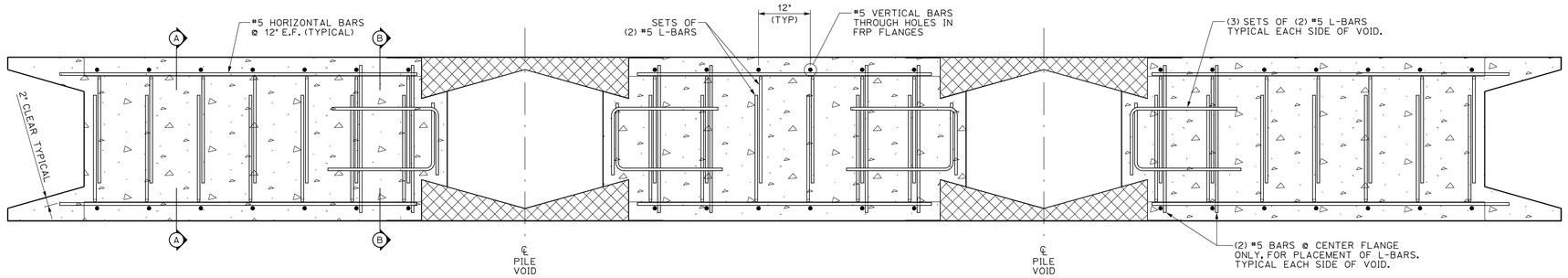

TYPICAL REINFORCING ~ PLAN VIEW

SCALE: ¾" = 1'-0"
NOTE 'J' TYPE PANEL IS SHOWN
REINFORCING FOR ALL OTHER PANEL TYPES IS SIMILAR

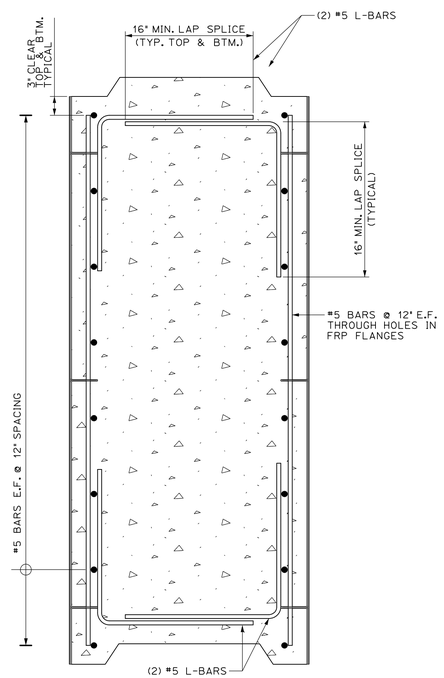

A TYPICAL REINFORCING SECTION
A SCALE: 1" = 1'-0"

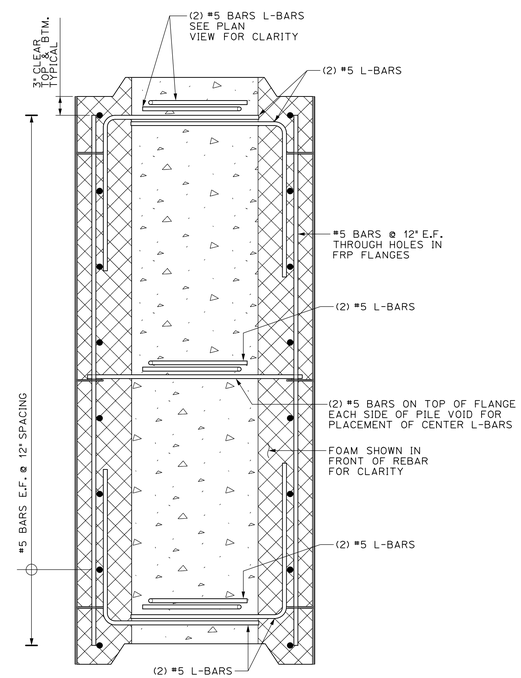

B TYPICAL REINFORCING SECTION
B SCALE: 1" = 1'-0"

STATE OF MAINE
DEPARTMENT OF TRANSPORTATION

WIN #20806.00

STATE OF MAINE
ERIC T. CALDERWOOD
No. 9099
LICENSED
PROFESSIONAL ENGINEER

SIGNATURE

P.E. NUMBER
9099

DATE
AUG 2014

	CDS	BY	DATE
PROJ. MANAGER			
DESIGN-DETAILED	ETC	JJH	JULY 2014
CHECKED-REVIEWED	GNM	ETC	AUG 2014
DESIGN2-DETAILED2			
DESIGN3-DETAILED3			
REVISIONS 1			
REVISIONS 2			
REVISIONS 3			
REVISIONS 4			
FIELD CHANGES			

FRP ALTERNATE

EASTPORT BREAKWATER REPLACEMENT
EASTPORT, ME
WASHINGTON, COUNTY

FRP PRECAST BREAKWATER
REINFORCING DETAILS

SHEET NUMBER

P-6a

OF X

CALDERWOOD ENGINEERING
222 RIVER ROAD
RICHMOND, ME 04357
PH. (207) 737-2007 FAX (207) 737-2008

Filename: ...\Plans\P_6a_Eastport.dgn Division: BRIDGE Username: common Date:9/4/2014