STATE OF MAINE
DEPARTMENT OF TRANSPORTATION

SPECIFICATIONS

DESIGN: AASHTO LRFD BRIDGE DESIGN SPECIFICATIONS, FIFTH EDITION 2010 AND INTERIM REVISIONS THROUGH 2010.

DESIGN LOADING

LIVE LOAD (BRIDGE DECK & ELASTOMERIC BEARINGS)....HL-93 MODIFIED
LIVE LOAD (STRUCTURAL STEEL) HL-93

MATERIALS

CONCRETE (UNLESS NOTED OTHERWISE) .....CLASS "A"
CONCRETE (ABUTMENT BACKWALLS AND BLOCKOUT
AREAS ON BOTH SIDES OF ALL EXPANSION DEVICES,
CURBS, SIDEWALKS & TRANSITION BARRIERS) ..... CLASS "LP"
REINFORCING STEEL ..... ASTM A615/A615M, GRADE 60

STRUCTURAL STEEL:
ALL MATERIAL (EXCEPT AS NOTED).....A709/A709M, GRADE 50 (PAINTED)
HIGH STRENGTH BOLTS .....ASTM A325, TYPE 1 (GALVANIZED)

BASIC DESIGN STRESSES

CONCRETE ..... f 'c = 4,350 PSI
REINFORCING STEEL ..... F y = 60,000 PSI
STRUCTURAL STEEL:
ASTM A709/A709M, GRADE 50/50W ..... F y = 50,000 PSI
ASTM A709/A709M, GRADE 36 ..... F y = 36,000 PSI
ASTM A325 ..... F u = 120,000 PSI

UTILITIES

MAINE CENTRAL RAILROAD
CENTRAL MAINE POWER

MAINTENANCE OF TRAFFIC

MAINTAIN ONE 12'-0" WIDE LANE OF TRAFFIC IN EACH DIRECTION USING MEDIAN CROSSOVERS.

TRAFFIC DATA	SB	NB
CURRENT AADT (2010)	13800	13200
FUTURE AADT (2030)	19000	18500
DHV - % OF AADT	12	12
DESIGN HOUR VOLUME	2280	2220
% HEAVY TRUCKS (AADT)	17	17
% HEAVY TRUCKS (DHV)	12	12
DIRECTIONAL DISTRIBUTION (DHV)	100	100
18 KIP EQUIVALENT P 2.0	X	X
18 KIP EQUIVALENT P 2.5	X	X
DESIGN SPEED (MPH)	70 MPH	70 MPH
CROSSOVER DESIGN SPEED (MPH)	40 MPH	40 MPH

FAIRFIELD - BENTON
SOMERSET & KENNEBEC COUNTIES
INTERSTATE 95

BRIDGE DECK REPLACEMENT
PROJECT LENGTH 0.800 mi.
IM-1668(600)E, IM-A670(000)E & BR-1781(400)X
BRIDGE NUMBERS 1456, 6000 & 5999

LIST OF DRAWINGS

TITLE SHEET 1
ESTIMATED QUANTITIES 2
GENERAL NOTES 3
STAGE CONSTRUCTION ..... 4 - 5
PLANS ..... 6 - 12
PROFILES ..... 13 - 32
TYPICAL APPROACH SECTIONS 33
TYPICAL BRIDGE SECTIONS 34
CROSS SECTIONS ..... 35 - 54

C.A. CLAUSON BRIDGE PLANS
IM-1668(600)E
IM-1670(000)E
GENERAL PLAN 1 55
GENERAL PLAN 2 56
BRIDGE PROFILE SB 57
BRIDGE PROFILE SB 58
BRIDGE PROFILE NB 59
BRIDGE PROFILE NB 60
ABUTMENT NO. 1 ..... 61 - 62
ABUTMENT NO. 2 63
ABUTMENT DETAILS 64
TYPICAL PIER PLAN & ELEVATION 65
PIER DETAILS ..... 66 - 68
FRAMING PLAN 1 69
FRAMING PLAN 2 70
STRUCTURAL STEEL DETAILS ..... 71 - 76
BEARING DETAILS ..... 77 - 81
SUPERSTRUCTURE PLAN 1 82
SUPERSTRUCTURE PLAN 2 83
SUPERSTRUCTURE PLAN 3 84
SUPERSTRUCTURE DETAILS ..... 85 - 90
EXPANSION JOINT DETAILS ..... 91 - 92
RAILING DETAILS ..... 93 - 96
REINFORCING STEEL SCHEDULES ..... 97 - 100

MAINE CENTRAL RAILROAD BRIDGE PLANS
IM-1781(400)X
GENERAL PLAN 101
BRIDGE PROFILE SB 102
BRIDGE PROFILE NB 103
ABUTMENT NO. 1 ..... 104 - 105
ABUTMENT NO. 2 106
ABUTMENT DETAILS 107
FRAMING PLAN 108
STRUCTURAL STEEL DETAILS 109
BEARING DETAILS 110
SUPERSTRUCTURE PLAN 111
SUPERSTRUCTURE DETAILS ..... 112 - 114
RAILING DETAILS 115
REINFORCING STEEL SCHEDULE 116

STAGE CONSTRUCTION PLANS ..... 117 - 122
TRAFFIC CONTROL PLANS ..... 123 - 128
DETOUR PLAN 129
EMERGENCY DETOUR PLAN 130
CONSTRUCTION SIGN SUMMARY SHEET ..... 131 - 132

PROJECT LOCATION:	INTERSTATE 95 OVER THE KENNEBEC RIVER BETWEEN THE TOWN OF FAIRFIELD IN SOUTHERN SOMERSET COUNTY, AND THE TOWN OF BENTON IN NORTHERN KENNEBEC COUNTY; AND INTERSTATE 95 OVER THE SOMERSET/SKOWHEGAN BRANCH OF THE MAINE CENTRAL RAILROAD; 0.2 MILES EAST OF U.S. ROUTE 201 (EXIT 133), APROXIMATELY 24 MILES NORTH OF AUGUSTA AND 49 MILES SOUTH OF BANGOR. 44°36'07"N, 69°35'37"W
PROGRAM AREA:	BRIDGE
OUTLINE OF WORK:	BRIDGE DECK AND BEARING REPLACEMENT; GIRDER REHABILITATION AND STRENGTHENING

PIN 16686.00, 16700.00 & 17814.00

STATE OF MAINE
DEPARTMENT OF TRANSPORTATION

APPROVED	DATE
COMMISSIONER	6/20/11
CHIEF ENGINEER	6/17/11

STATE OF MAINE Thomas P Levins 9921 LICENSED PROFESSIONAL ENGINEER

PROJECT INFORMATION	
PROGRAM	BRIDGE
PROJECT MANAGER	Ben Condon
DESIGNER	John G. Stockton
CONSULTANT	The Louis Berger Group
PROJECT RESIDENT	
CONTRACTOR	
PROJECT COMPLETION DATE	

SIGNATURE
P.E. NUMBER 9921
DATE 6/15/2011

FAIRFIELD - BENTON
C.A. CLAUSON BRIDGES &
MAINE CENTRAL RAILROAD BRIDGE

TITLE SHEET

SHEET NUMBER
1
OF 132

Filename: ...\MSTA\001_Title_Bridge.dgn Division: HIGHWAY Username: mcarignon Date:6/15/2011

ESTIMATED QUANTITIES

ITEM NO.	ITEM DESCRIPTION	CLAUSON SB BRIDGE #1456 PIN 16686.00	CLAUSON NB BRIDGE #6000 PIN 16700.00	MCRR BRIDGE #5999 PIN 17814.00	TOTAL	UNIT
202.132	REMOVING EXISTING RAILINGS (RETAINED BY DEPARTMENT)(4383 LF)	2119	1882	382	1	LS
202.17	REMOVING EXISTING STRUCTURAL CONCRETE (2336 CY)	1050	957	329	1	LS
202.18	REMOVE EXISTING BITUMINOUS PAVEMENT (INCLUDING MEMBRANE) (7876 SY)	3700	3156	1020	1	LS
202.203	PAVEMENT BUTT JOINTS	42	42	41	125	SY
202.205	RUMBLE STRIPS - SHOULDER	1900	1900	1900	5700	LF
304.09	AGGR BASE CRS - CRUSHED	10	10	10	30	CY
403.208	HOT MIX ASPHALT 12.5MM HMA SURFACE	315	286	95	696	T
403.211	HOT MIX ASPHALT (SHIM)	134	133	133	400	T
403.213	HOT MIX ASPHALT 12.5MM HMA BASE	315	286	95	696	T
409.15	BITUMINOUS TACK COAT APPLIED	234	233	233	700	G
502.219	STRUCTURAL CONCRETE, ABUTMENTS AND RETAINING WALLS (31 CY)	10	10	11	1	LS
502.23	STRUCTURAL CONCRETE, PIERS	32	32	-	64	CY
502.26	STRUCTURAL CONCRETE ROADWAY AND SIDEWALK SLABS ON STEEL BRIDGES (2172 CY)	987	901	284	1	LS
502.49	STRUCTURAL CONCRETE CURBS AND SIDEWALKS (279 CY)	131	116	32	1	LS
503.12	REINFORCING STEEL, FABRICATED AND DELIVERED	385180	349743	105780	840703	LB
503.13	REINFORCING STEEL, PLACING	385180	349743	105780	840703	LB
504.8101	REMOVAL OF STRUCTURAL STEEL (26700 LB)	-	-	26700	26700	LB
504.811	STRUCTURAL STEEL REPAIR	22756	22756	1000	46512	LB
505.08	SHEAR CONNECTORS (29632 EA)	12338	11330	5964	1	LS
506.142	FIELD PAINTING OF EXISTING STRUCTURAL STEEL (4860 LB)	-	-	4860	1	LS
506.144	FIELD PAINTING OF NEW AND EXISTING STRUCTURAL STEEL (35760 LB)	17880	17880	-	1	LS
506.17	SURFACE PREPARATION OF EXISTING STRUCTURAL STEEL (57802 LB)	26471	26471	4860	1	LS
506.18	CONTAINMENT AND POLLUTION CONTROL (57802 LB)	26471	26471	4860	1	LS
506.191	DISPOSAL OF SPECIAL WASTE OR HAZARDOUS WASTE	0.44	0.44	0.12	1	LS
506.30	SHOP COATING OF STRUCTURAL STEEL (45512 LB)	22756	22756	-	1	LS
507.0811	STEEL BRIDGE RAILING, 2 BAR (4529 LF)	2120	1931	478	1	LS
508.14	HIGH PERFORMANCE WATERPROOFING MEMBRANE (8074 SY)	3673	3343	1058	1	LS
510.301	EXPRESSWAY MEDIAN CROSSOVER	0.33	0.33	0.33	1	LS
514.06	CURING BOX FOR CONCRETE CYLINDERS	1	1	1	3	EA
515.21	PROTECTIVE COATING FOR CONCRETE SURFACES (4486 SY)	2134	1880	472	1	LS
518.50	REPAIR OF UPWARD FACING SURFACES - TO REINFORCING STEEL	10	10	-	20	SF
518.51	REPAIR OF UPWARD FACING SURFACES - BELOW REINFORCING STEEL	180	120	-	300	SF
518.60	REPAIR OF VERTICAL SURFACES < 7.9 IN.	100	80	5	185	SF
518.61	REPAIR OF VERTICAL SURFACES > 7.9 IN.	5	5	-	10	CY
518.80	CRACK REPAIR	100	60	-	160	LF
520.21	EXPANSION DEVICE - GLAND SEAL	-	1	-	1	EA
520.22	EXPANSION DEVICE - COMPRESSION SEAL	-	-	2	2	EA
521.23	EXPANSION DEVICE - FINGER JOINT TYPE B	1	-	-	1	EA
521.23	EXPANSION DEVICE - FINGER JOINT TYPE D	1	1	-	2	EA
521.32	FABRIC TROUGH - FINGER JOINT	1	-	-	1	EA
521.33	FABRIC CURTAIN - FINGER JOINT	4	4	-	8	EA
523.52	BEARING INSTALLATION	48	40	48	136	EA
523.5301	STEEL BEARING, FIXED, SLIDING PLATE	-	-	12	12	EA
523.5302	STEEL BEARING, EXPANSION, SLIDING PLATE	-	-	36	36	EA
523.5401	LAMINATED ELASTOMERIC BEARINGS, FIXED	16	12	-	28	EA
523.5402	LAMINATED ELASTOMERIC BEARINGS, EXPANSION	32	28	-	60	EA
524.301	TEMPORARY STRUCTURAL SUPPORT - LATERAL BRACING	0.51	0.49	-	1	LS
524.32	TEMPORARY SUPPORT - BEAMS AND GIRDERS	7	6	-	13	EA
524.40	PROTECTIVE SHIELD	-	-	1	1	LS
526.34	PERMANENT CONCRETE TRANSITION BARRIER	-	-	8	8	EA
526.3401	PERMANENT CONCRETE TRANSITION BARRIER - MODIFIED	4	4	-	8	EA
527.34	WORK ZONE CRASH CUSHIONS	2	1	1	4	UN

ESTIMATED QUANTITIES (CONTINUED)

ITEM NO.	ITEM DESCRIPTION	CLAUSON SB BRIDGE #1456 PIN 16686.00	CLAUSON NB BRIDGE #6000 PIN 16700.00	MCRR BRIDGE #5999 PIN 17814.00	TOTAL	UNIT
606.1721	BRIDGE TRANSITION - TYPE 1	4	4	8	16	EA
606.23	GR TY 3C - SINGLE RAIL	150	150	100	400	LF
606.232	GR TY 3C - OVER 15' RADIUS	13	13	11.5	37.5	LF
606.353	REFLECTORIZED FLEXIBLE GUARDRAIL MARKER	5	5	5	15	EA
606.369	GR REMOVED AND STACKED	1275	1275	1250	3800	LF
606.64	GUARDRAIL THRIE BEAM - DOUBLE RAIL	209	208	208	625	LF
606.65	GUARDRAIL THRIE BEAM - SINGLE RAIL	350	350	287.5	987.5	LF
606.78	LOW VOLUME GUARDRAIL ENDS - TYPE 3	-	-	1	1	EA
607.184	CHAIN LINK SNOW FENCE 3'	-	-	240	240	LF
609.312	SPECIAL CURB (PLASTIC)	90	80	80	250	LF
620.6012	HDPE GEOMEMBRANE	17	15	-	32	SY
627.72	6" WHITE PAVEMENT MARKING LINE	1900	1900	1900	5700	LF
627.74	6" YELLOW PAVEMENT MARKING LINE	2500	2500	2500	7500	LF
627.781	TEMP 6" PAINT PAVEMENT MARK LINE, W OR Y	3867	3867	3866	11600	LF
629.05	HAND LABOR, STRAIGHT TIME	20	20	20	60	HR
631.21	ROAD BROOM (INC. OPER & HAULER)	14	13	13	40	HR
637.071	DUST CONTROL	0.33	0.33	0.33	1	LS
639.18	FIELD OFFICE, TYPE A	0.33	0.33	0.33	1	EA
644.31	GLARE SCREEN (REMOVE AND RESET)	210	210	210	630	LF
652.30	FLASHING ARROW BOARD	1	1	-	2	EA
652.312	TYPE III BARRICADE	9	8	8	25	EA
652.32	BATTERY OPERATED LIGHT	10	10	10	30	EA
652.33	DRUM	100	100	100	300	EA
652.34	CONE	40	40	20	100	EA
652.35	CONSTRUCTION SIGNS	1000	1000	1000	3000	SF
652.361	MAINTENANCE OF TRAFFIC CONTROL DEVICES (900 CALENDAR DAYS)	0.33	0.33	0.33	1	LS
652.38	FLAGGER	70	70	60	200	HR
652.381	TRAFFIC OFFICERS	140	140	120	400	HR
652.43	PORTABLE CHANGEABLE MESSAGE SIGN - RETAINED BY DEPT.	2	2	-	4	EA
656.75	TEMPORARY EROSION AND WATER POLLUTION CONTROL	0.33	0.33	0.33	1	LS
659.10	MOBILIZATION	0.33	0.33	0.33	1	LS
660.21	ON-THE-JOB TRAINING	400	400	200	1000	HR

STATE OF MAINE
DEPARTMENT OF TRANSPORTATION

IM-1668(600)E,IM-A670(000)E,BR-1781(400)X

PIN
16686.00,16700.00,17814.00

HIGHWAY PLANS

PROJ. MANAGER	BEN CONDON	BY	DATE
DESIGN-DETAILED	TPL	MJC	06\11
CHECKED-REVIEWED	JGS	--	06\11
DESIGN2-DETAILED2	PDD	TPL	06\11
DESIGN3-DETAILED3		--	------
REVISIONS 1	------		------
REVISIONS 2	------		------
REVISIONS 3	------		------
REVISIONS 4	------		------
FIELD CHANGES	------		------

SIGNATURE

P.E. NUMBER

DATE

FAIRFIELD-BENTON
INTERSTATE 95

ESTIMATED QUANTITIES

SHEET NUMBER

2

OF 132

Filename: ...\BRIDGE\MSTA\002_Estimate.dgn Division: BRIDGE Username: coy.williams Date:6/23/2011

GENERAL NOTES

1. THE UTILITIES INVOLVED IN THIS PROJECT ARE AS FOLLOWS: CENTRAL MAINE POWER AND MAINE CENTRAL RAILROAD.

2. ALL JOINTS BETWEEN EXISTING AND PROPOSED HOT BITUMINOUS PAVEMENT SHALL BE BUTTED. PAYMENT SHALL BE MADE UNDER ITEM 202.203 PAVEMENT BUTT JOINT.

3. GRIND TRANSITION TAPERS AT CATCH BASINS UNDER ITEM 202.203 PAVEMENT BUTT JOINTS. AS DIRECTED BY THE RESIDENT.

4. WHERE DEEMED NECESSARY BY THE RESIDENT, UNSUITABLE EXCESS MATERIAL SHALL BE REMOVED FROM THE EDGES OF SHOULDERS AND PLACED IN DESIGNATED AREAS OR DISPOSED OF. PAYMENT WILL BE MADE UNDER ITEM 510.301.

5. ALL INSLOPE AND DITCHES IN CUT AREAS SHALL BE GRADED AS SHOWN ON THE TYPICALS OR FLATTER, OR AS DIRECTED BY THE RESIDENT. PAYMENT WILL BE MADE UNDER ITEM 510.301.

6. THE CONTRACTOR SHALL PLAN AND CONDUCT THE WORK ACCORDINGLY SO THAT UPON FINAL COMPLETION OF THE PROJECT THERE IS NO DROP-OFF FROM THE EDGE OF SHOULDER PAVEMENT. ALL REMAINING OR DISTURBED MATERIAL ON SLOPES OR IN DITCHES ON THE PROJECT SHALL BE CAPABLE OF ATTAINING A GROWTH OF GRASS THAT IS ACCEPTABLE ACCORDING TO STANDARD SPECIFICATION 618.10. NO SEPARATE PAYMENT WILL BE MADE FOR THIS WORK.

7. ALL WASTE MATERIAL NOT USED ON THE PROJECT SHALL BE DISPOSED OF OFF THE PROJECT IN WASTE AREAS APPROVED BY THE RESIDENT.

8. REQUIRED DITCH PROTECTION SHOWN ON THE PLANS OR IN THE CONSTRUCTION NOTES IS FOR ESTIMATING PURPOSES ONLY. THE ACTUAL TYPE AND LOCATION OF DITCH PROTECTION MAY BE ALTERED BY THE RESIDENT. PAYMENT WILL BE MADE UNDER ITEM 510.301.

9. PLACE 12 INCHES GRAVEL AND 2 INCHES HOT MIX ASPHALT AROUND CATCH BASINS IN GRASSED AREAS (3' OUTSIDE OF FRAME) AND PAINT WITH ACRYLIC LATEX COLOR FINISH - GREEN. PAYMENT SHALL BE UNDER THE CONTRACT ITEMS 304.09, 403.207.

10. ANY NECESSARY CLEANING OF EXISTING PAVEMENT PRIOR TO PAVING SHALL BE INCIDENTAL TO THE RELATED PAVING ITEMS.

11. ALL EXISTING PAVED SHOULDERS AND WIDENINGS TO BE RESURFACED AS DIRECTED BY THE RESIDENT.

12. SHOULDER SHIM SHALL TAPER TO 0 INCHES AT THE FACE OF EXISTING CURB AND GUARDRAIL.

13. WHEN SUPER ELEVATION EXCEEDS THE SLOPE OF THE LOW SIDE SHOULDER, THE SHOULDER PAVEMENT WILL HAVE SAME SLOPE AS TRAVELED WAY.

14. THE FOLLOWING SHALL BE INCIDENTAL TO ITEM 510.301.
- ANY CUTTING OF EXISTING CULVERTS AND OR CONNECTORS NECESSARY TO INSTALL NEW CULVERT REPLACEMENTS OR EXTENSIONS
- ALL PIPE EXCAVATION INCLUDING ANY CUTTING AND REMOVAL OF PAVEMENT
- ALL DITCHING AT PIPE ENDS
- FURNISHING, PLACING, GRADING, AND COMPACTING OF ANY NEW GRAVEL AND/OR FILL MATERIAL INCLUDING GRANULAR BORROW USED UNDER PIPES AND FOR TEMPORARY DETOURS TO MAINTAIN TRAFFIC DURING PIPE INSTALLATION (EXCAVATION IS ALSO INCIDENTAL).
- GRANULAR BORROW UNDER THE PIPE SHALL MEET THE REQUIREMENTS FOR UNDERWATER BACKFILL
- ALL WORK NECESSARY TO CONNECT TO EXISTING PIPES AND DRAINAGE STRUCTURES
- FLOW LINES MAY BE CHANGED BY 1.5 FT
- ANY NECESSARY CLEARING OF BRUSH AND NON-PAY TREES AT CULVERT ENDS

15. NO EXISTING DRAINAGE SHALL BE ABANDONED, REMOVED OR PLUGGED WITHOUT PRIOR APPROVAL OF THE RESIDENT.

16. THE CULVERT SIZES SHOWN ON THE PLANS AND CROSS SECTIONS ARE FOR SMOOTHLINED PIPES. PAYMENT WILL BE MADE UNDER ITEM 510.301.

17. GUARDRAIL END TREATMENTS SHALL BE INSTALLED CONCURRENTLY WITH THE PLACEMENT OF EACH SECTION OF BEAM GUARDRAIL.

18. HOLES CREATED BY GUARDRAIL REMOVAL WILL BE FILLED WITH ASCG, TYPE D AND 2 INCHES OF HOT BITUMINOUS PAVEMENT AS DIRECTED BY THE RESIDENT. PAYMENT TO BE CONSIDERED INCIDENTAL TO THE GUARDRAIL ITEMS.

19. ALL EXISTING GUARDRAIL TO BE REMOVED SHALL BE REMOVED AND STACKED AND BECOME THE PROPERTY OF MAINE DOT. REMOVAL AND DISPOSAL SHALL BE CONSIDERED INCIDENTAL TO THE GUARDRAIL ITEMS.

20. CONNECTIONS FOR PROPOSED GUARDRAIL TO EXISTING GUARDRAIL WILL BE CONSIDERED INCIDENTAL TO ITEMS 606.23, 606.64, 606.65.

21. UNLESS OTHERWISE NOTED SEEDING METHOD NO. 2 WILL BE UTILIZED ON ALL NON-GUARDRAIL SLOPES. SEEDING METHOD NO. 3 SHALL BE UTILIZED ON ALL GUARDRAIL FILL SLOPES. ON LONG NON-GUARDRAIL BACKSLOPES, AT THE DIRECTION OF THE RESIDENT.

22. AT ALL APPROACH PAVING THE CONTRACTOR SHALL TAKE ELEVATIONS EVERY 10 FEET AT CENTERLINE, EDGE OF TRAVELED WAY AND EDGE OF SHOULDERS ON EXISTING PAVEMENT AND DETERMINE SHIM GRADES TO ACHIEVE THE FINISHED PROFILE GRADE SHOWN ON THE PLANS. THE CONTRACTOR SHALL PROVIDE PROPOSED SHIM GRADES TO THE RESIDENT ONE WEEK PRIOR TO PAVING.

23. ALL COSTS FOR SAWCUTTING AND REMOVING EXISTING PAVEMENT, EXCAVATION AND BACKFILL FOR ABUTMENT AND WINGWALL MODIFICATIONS SHALL BE INCIDENTAL TO RELATED CONTRACT ITEMS. BACKFILL MATERIAL SHALL BE ASCG, TYPE D. NEW PAVEMENT THICKNESS SHALL MATCH THE EXISTING AND SHALL BE PAID FOR UNDER BID ITEMS.

24. THE CONTRACTOR IS RESPONSIBLE FOR THE CAREFUL SIDE STAKING OF EXISTING CENTERLINE AS PER STANDARD SPECIFICATION 105.6.2. SIDE STAKES SHALL BE PLACED SAFELY OUTSIDE OF THE CONSTRUCTION LIMITS AND THE EXISTING CENTERLINE GRADES SHALL BE TRANSFERRED TO THESE STAKES. THESE STAKES AND GRADES WILL BE USED TO LAYOUT CENTERLINE AND DETERMINE NEW CONSTRUCTION FINISH GRADES FROM DIFFERENTIAL ELEVATION SHEETS FURNISHED BY MAINEDOT. ALL LAYOUT, STAKES, AND GRADES WILL BE CHECKED AND MUST BE ACCEPTABLE TO THE RESIDENT.

25. NO SEPARATE PAYMENT FOR SUPERINTENDENT OR FOREMAN WILL BE MADE FOR THE SUPERVISION OF EQUIPMENT BEING PAID FOR UNDER THE EQUIPMENT RENTAL ITEMS.

26. ALL WORK SHALL BE DONE IN ACCORDANCE WITH THE MAINE DEPARTMENT OF TRANSPORTATION'S BEST MANAGEMENT PRACTICES FOR EROSION CONTROL & SEDIMENT CONTROL, FEBRUARY 2008.

27. ANY DAMAGE TO THE SLOPES CAUSED BY THE CONTRACTOR'S EQUIPMENT, PERSONNEL, OR OPERATION SHALL BE REPAIRED TO THE SATISFACTION OF THE RESIDENT. ALL WORK, EQUIPMENT, AND MATERIALS REQUIRED TO MAKE REPAIRS SHALL BE AT THE CONTRACTOR'S EXPENSE. REPAIR WORK, IF NECESSARY, SHALL NOT BE DONE FROM A LANE CARRYING TRAFFIC.

28. PROJECT INFORMATION REFERRED TO BELOW MAY BE ACCESSED AT THE FOLLOWING MAINEDOT WEB ADDRESS:
http://www.maine.gov/mdot/comprehensive-list-projects/project-information.php

29. AVAILABLE PROJECT GEOTECHNICAL REPORTS TITLED: FAIRFIELD-BENTON, CLINTON A. CLAUSON MEMORIAL BRIDGES OVER KENNEBEC RIVER, PROJECT NO. 1-95-7(28), BRIDGE # 6000 (NB) AND # 1456 (SB), SOILS REPORT NO. 62-08, JULY 1, 1962; AND, FAIRFIELD, 1-95 OVER MCRR, PROJECT NO. 1-IG-95-6(26), BRIDGE #5999, SOILS REPORT NO. 62-24, JULY 1, 1962, MAY BE ACCESSED AT THE MAINEDOT WEB ADDRESS.

30. GEOTECHNICAL INFORMATION FURNISHED OR REFERRED TO IN THIS PLAN SET IS FOR THE USE OF THE BIDDERS AND THE CONTRACTOR. NO ASSURANCE IS GIVEN THAT THE INFORMATION OR INTERPRETATIONS WILL BE REPRESENTATIVE OF ACTUAL SUBSURFACE CONDITIONS AT THE CONSTRUCTION SITE. MAINEDOT WILL NOT BE RESPONSIBLE FOR THE BIDDERS' OR CONTRACTOR'S INTERPRETATIONS OF, OR CONCLUSIONS DRAWN FROM, THE GEOTECHNICAL INFORMATION. THE BORING LOGS CONTAINED IN THE PLAN SET PRESENT FACTUAL AND INTERPRETIVE SUBSURFACE INFORMATION COLLECTED AT DISCRETE LOCATIONS. DATA PROVIDED MAY NOT BE REPRESENTATIVE OF THE SUBSURFACE CONDITIONS BETWEEN THE BORING LOCATIONS.

31. THE EXISTING BRIDGE PLANS MAY BE ACCESSED AT THE MAINEDOT WEB ADDRESS. THE PLANS ARE REPRODUCTIONS OF THE ORIGINAL DRAWINGS AS PREPARED FOR THE CONSTRUCTION OF THE BRIDGE. IT IS VERY UNLIKELY THAT THE PLANS WILL SHOW ANY CONSTRUCTION FIELD CHANGES OR ANY ALTERATIONS WHICH MAY HAVE BEEN MADE TO THE BRIDGE DURING ITS LIFE SPAN.

32. ALL DIMENSIONS BASED ON OR RELATING TO THE EXISTING BRIDGES SHALL BE VERIFIED IN THE FIELD BY THE CONTRACTOR.

33. THE CONTRACTOR SHALL USE CARE NOT TO DAMAGE THE EXISTING REINFORCING STEEL WHICH IS TO REMAIN. ANY DAMAGED REINFORCING STEEL SHALL BE REPLACED AS DIRECTED BY THE RESIDENT AT NO EXPENSE TO THE DEPARTMENT.

34. THE REINFORCING STEEL FOR DRILLED AND ANCHORED BARS SHALL BE PAID FOR UNDER ITEMS 503.12 AND 503.13. NO SEPARATE PAYMENT WILL BE MADE FOR DRILLING AND ANCHORING.

35. THE CONTRACTOR SHALL LOCATE BY NON-DESTRUCTIVE METHODS, REINFORCING STEEL IN EXISTING CONCRETE BEFORE DRILLING AND GROUTING NEW REINFORCING STEEL AND ANCHOR RODS. ALL COSTS ASSOCIATED WITH THIS WORK SHALL BE INCIDENTAL TO RELATED CONTRACT ITEMS.

36. REINFORCING STEEL SHALL HAVE 2 INCHES COVER UNLESS OTHERWISE NOTED.

37. FOR CLAUSON MEMORIAL BRIDGES THE EXPANSION / CONTRACTION LENGTHS TO BE USED FOR CALCULATING THE TEMPERATURE-ADJUSTED OPENING SETTINGS ARE: 308 FEET FOR THE TYPE B FINGER JOINT AT PIER #5 SB AND 721 FEET FOR THE TYPE D FINGER JOINTS AT ABUTMENT #1 NB & SB.

38. THE EXISTING MEMORIAL PLAQUES EMBEDDED WITHIN THE CONCRETE END POSTS ON THE CLAUSON MEMORIAL BRIDGES SHALL BE CAREFULLY REMOVED AND REMOUNTED INTO THE NEW TRANSITION BARRIERS. PAYMENT SHALL BE CONSIDERED INCIDENTAL TO ITEM 526.3401, PERMANENT CONCRETE TRANSITION BARRIER - MODIFIED.

39. PROTECTIVE COATING FOR CONCRETE SURFACES SHALL BE APPLIED TO THE FOLLOWING AREAS AND PAID UNDER ITEM 515.21:

ALL EXPOSED SURFACES OF CONCRETE CURBS.
FASCIAS DOWN TO THE DRIP NOTCH.
ALL EXPOSED SURFACES OF CONCRETE TRANSITION BARRIERS.
TOP OF ABUTMENT BACKWALLS AND TO ONE FOOT BELOW THE TOP OF BACKWALLS ON THE BACK SIDE.
ABUTMENT BEAM SEATS AND BACKWALLS IN MEDIAN (MCRR BRIDGE)
TOP SURFACE OF PIER CAPS IN MEDIAN (MCRR BRIDGE)
TOP, SIDE, AND OVERHANG SURFACES OF PIER CAPS (CLAUSON BRIDGES)

40. UNLESS NOTED OTHERWISE, ALL CONCRETE SHALL BE CLASS A.

41. QUANTITIES AND LIMITS OF WORK MAY BE ADJUSTED IN THE FIELD BY THE RESIDENT TO SUIT ACTUAL CONDITIONS ENCOUNTERED.

42. QUANTITIES INCLUDED FOR PAY ITEMS MEASURED AND PAID FOR BY LUMP SUM ARE ESTIMATED QUANTITIES AND ARE PROVIDED BY MAINEDOT FOR INFORMATIONAL PURPOSES ONLY. LUMP SUM PAY ITEMS WILL BE PAID FOR AT THE CONTRACT BID AMOUNT WITH NO ADDITION OR REDUCTION IN PAYMENT TO THE CONTRACTOR IF THE ACTUAL FINAL QUANTITIES ARE DIFFERENT FROM THE MAINEDOT PROVIDED ESTIMATED QUANTITIES, EXCEPT AS FOLLOWS:

A. IF A LUMP SUM PAY ITEM IS ELIMINATED, THE REQUIREMENTS OF STANDARD SPECIFICATIONS SECTION 109.2. ELIMINATION OF ITEMS WILL TAKE PRECEDENCE.

B. IF OTHER CONTRACT DOCUMENTS SPECIFICALLY ALLOW A CHANGE IN PAYMENT FOR A LUMP SUM PAY ITEM, THOSE REQUIREMENTS WILL BE FOLLOWED.

C. IF A DESIGN CHANGE RESULTS IN CHANGES TO ESTIMATED QUANTITIES FOR LUMP SUM PAY ITEMS, PRICE ADJUSTMENTS WILL BE MADE IN ACCORDANCE WITH STANDARD SPECIFICATIONS SECTION 109.7. EQUITABLE ADJUSTMENTS TO COMPENSATION.

43. REMOVAL OF THE EXISTING STRUCTURAL CONCRETE BRIDGE DECKS, CURBS, CONCRETE END POSTS, BRIDGE DRAINS AND DOWNSPOUTS, SHEAR CONNECTORS, ABUTMENT BACKWALLS, BEARING SEATS, WINGWALLS, AND INCIDENTAL ITEMS WILL BE PAID UNDER ITEM 202.17.

44. AFTER REMOVING THE EXISTING CONCRETE DECK SLAB, THE CONTRACTOR SHALL REMOVE FROM THE TOPS AND SIDES OF THE STRUCTURAL STEEL BEAMS, GIRDERS, CROSS-FRAMES, AND DIAPHRAGMS ALL RUST, SCALE, OIL, GREASE, AND ANY OTHER BOND INHIBITOR. ALL COSTS ASSOCIATED WITH THIS WORK SHALL BE INCIDENTAL TO RELATED CONTRACT ITEMS.

45. EXISTING SHEAR CONNECTORS SHALL BE REMOVED SUCH THAT THEY PROJECT 1 INCH MAXIMUM ABOVE THE TOP OF THE EXISTING TOP FLANGE UNLESS THEY CONFLICT WITH THE INSTALLATION OF THE NEW SHEAR CONNECTORS OR ANY OTHER WORK. IF THE EXISTING SHEAR CONNECTORS INTERFERE WITH INSTALLATION OF THE NEW SHEAR CONNECTORS OR ANY OTHER WORK, THEY SHALL BE REMOVED COMPLETELY AND GROUND FLUSH WITH THE TOP FLANGE. ALL COSTS ASSOCIATED WITH THIS WORK SHALL BE INCIDENTAL TO RELATED CONTRACT ITEMS.

46. REMOVAL OF EXISTING DETERIORATED CONCRETE AT ABUTMENT AND PIER BEAM SEATS, BEARING PEDESTALS, AND PIER CAPS SHALL BE INCIDENTAL TO THE CONCRETE REPAIR ITEMS OR STRUCTURAL CONCRETE ITEMS, AS SHOWN ON THE PLANS.

47. EXISTING CONCRETE AT ABUTMENTS AND WINGWALLS TO BE REMOVED AS SHOWN ON THE PLANS SHALL BE SAWCUT 1 INCH DEEP PRIOR TO REMOVING EXISTING CONCRETE. ALL COSTS ASSOCIATED WITH THIS WORK SHALL BE INCIDENTAL TO RELATED CONTRACT ITEMS.

48. ALL CONCRETE AND STEEL TO BE REMOVED AS SHOWN ON THE PLANS SHALL BECOME THE PROPERTY OF THE CONTRACTOR AND DISPOSED OFF-SITE AT AN APPROVED LOCATION.

49. THE STEEL PORTIONS OF THE EXISTING BRIDGE ARE COATED WITH A LEAD-BASED PAINT SYSTEM. THE CONTRACTOR IS RESPONSIBLE FOR THE CONTAINMENT, PROPER MANAGEMENT AND DISPOSAL OF ALL LEAD-CONTAMINATED HAZARDOUS WASTE GENERATED BY THE PROCESS OF REHABILITATING THE BRIDGE. THE CONTRACTOR IS RESPONSIBLE FOR IMPLEMENTING APPROPRIATE OSHA MANDATED PERSONAL PROTECTION STANDARDS RELATED TO THIS PROCESS. ONCE REMOVED, THE CONTRACTOR IS SOLELY RESPONSIBLE FOR THE CARE, CUSTODY AND CONTROL OF THE COMPONENTS OF THE EXISTING BRIDGE AND ANY HAZARDOUS WASTE GENERATED AS A RESULT OF THE STORAGE, RECYCLING OR DISPOSAL OF THE BRIDGE COMPONENTS, INCLUDING LEAD-COATED STEEL. THE CONTRACTOR SHALL RECYCLE OR REUSE THE STEEL IN ACCORDANCE WITH THE MAINE DEPARTMENT OF ENVIRONMENTAL PROTECTION'S "MAINE HAZARDOUS WASTE MANAGEMENT REGULATIONS," CHAPTER 850. A COPY OF THIS REGULATION IS AVAILABLE AT MAINEDOT'S OFFICES ON CHILD STREET IN AUGUSTA. PAYMENT FOR ALL LABOR, MATERIALS, EQUIPMENT AND OTHER COSTS REQUIRED TO REMOVE AND DISPOSE OF THE EXISTING BRIDGE WILL BE CONSIDERED INCIDENTAL TO THE REMOVAL PAY ITEMS.

50. MINIMUM SPLICE LENGTHS FOR PLAIN REINFORCING STEEL NOT OTHERWISE SHOWN SHALL BE AS GIVEN IN THE TABLE IN SUBSECTION 503.07 OF THE STANDARD SPECIFICATIONS. MINIMUM EMBEDMENT LENGTHS SHALL BE 15 INCHES FOR #5 REINFORCING BARS AND 18 INCHES FOR #6 REINFORCING BARS, UNLESS A DRILL AND GROUT ANCHORING SYSTEM WITH SHORTER BAR LENGTHS IS APPROVED BY THE RESIDENT.

51. ALUMINUM BRIDGE RAIL WHICH IS REMOVED BECOMES THE PROPERTY OF THE STATE AND SHALL BE DELIVERED TO MAINEDOT MAINTENANCE LOT ON MOUNTAIN AVE. IN FAIRFEILD. REMOVAL, DELIVERY, DISMANTLING, AND STACKING SHALL BE INCIDENTAL TO ITEM 202.132.

52. THE CONTRACTOR SHALL SUBMIT A BRIDGE DECK REMOVAL PLAN TO THE RESIDENT AT LEAST 10 BUSINESS DAYS PRIOR TO THE START OF BRIDGE DECK REMOVAL. THE PLAN SHALL OUTLINE THE METHODS AND EQUIPMENT TO BE USED TO REMOVE AND DISPOSE OF ALL MATERIALS INCLUDED IN THE EXISTING BRIDGE DECK. NO WORK RELATED TO THE REMOVAL OF THE BRIDGE DECK SHALL BE UNDERTAKEN BY THE CONTRACTOR UNTIL MAINEDOT HAS REVIEWED THE BRIDGE DECK REMOVAL PLAN FOR APPROPRIATENESS AND COMPLETENESS. PAYMENT FOR ALL WORK NECESSARY FOR DEVELOPING, SUBMITTING AND FINALIZING THE REMOVAL PLAN WILL BE CONSIDERED INCIDENTAL TO ITEM 202.17.

53. ALL EXPOSED EDGES OF CONCRETE SHALL HAVE A 3/4 " CHAMFER UNLESS NOTED OTHERWISE.

54. CONCRETE BEARING SEAT ELEVATIONS SHALL BE DRESSED TO WITHIN 0.01 FEET OF THAT SHOWN ON THE PLANS. ALL COSTS ASSOCIATED WITH THIS WORK SHALL BE INCIDENTAL TO RELATED CONTRACT ITEMS.

55. BRIDGE DRAINS AND DRAIN SUPPORTS, INCLUDING THE CONNECTION TO THE EXISTING GIRDERS, WILL NOT BE PAID DIRECTLY, BUT WILL BE CONSIDERED INCIDENTAL TO ITEM 502.26.

STATE OF MAINE
DEPARTMENT OF TRANSPORTATION

IM-1668(600)E, IM-A670(000)E & BR-1781(400)X

PIN
PIN 16686.00, 16700.00 & 17814.00 HIGHWAY PLANS

PROJ. MANAGER	B. CONDON	BY	DATE
DESIGN-DETAILED	TPL	MJC	06\11
CHECKED-REVIEWED	JGS	..	06\11
DESIGN2-DETAILED2	PDD	TPL	06\11
DESIGN3-DETAILED3	..	..	..
REVISIONS 1	..	..	..
REVISIONS 2	..	..	..
REVISIONS 3	..	..	..
REVISIONS 4	..	..	..
FIELD CHANGES	..	..	..

SIGNATURE

P.E. NUMBER

DATE

FAIRFIELD - BENTON
INTERSTATE 95

GENERAL NOTES

SHEET NUMBER
3
OF 132

Filename: ...\highway\mste\003_Notes.dgn Division: HIGHWAY Username: thigginson Date:6/20/2011

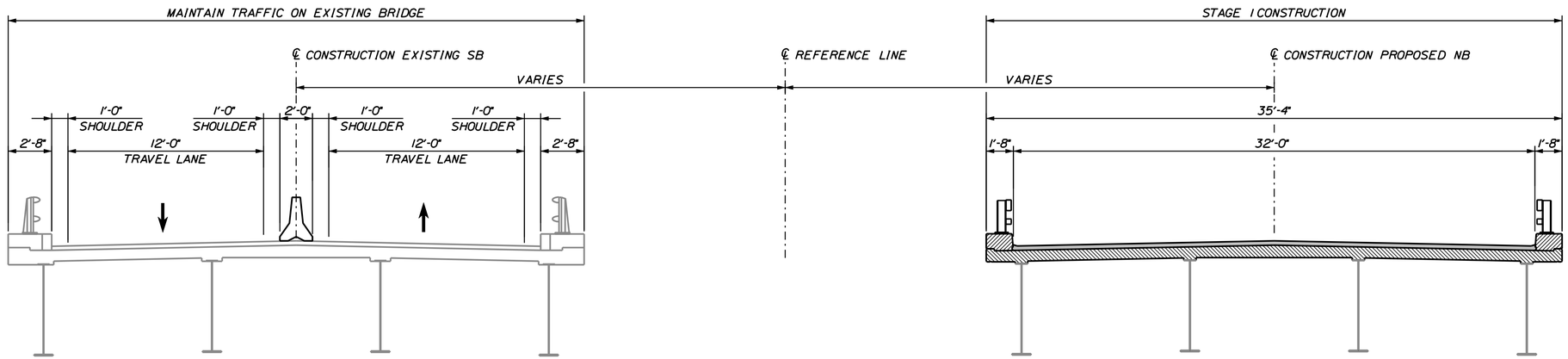

STAGE 1
SCALE: 1/4" = 1'-0"

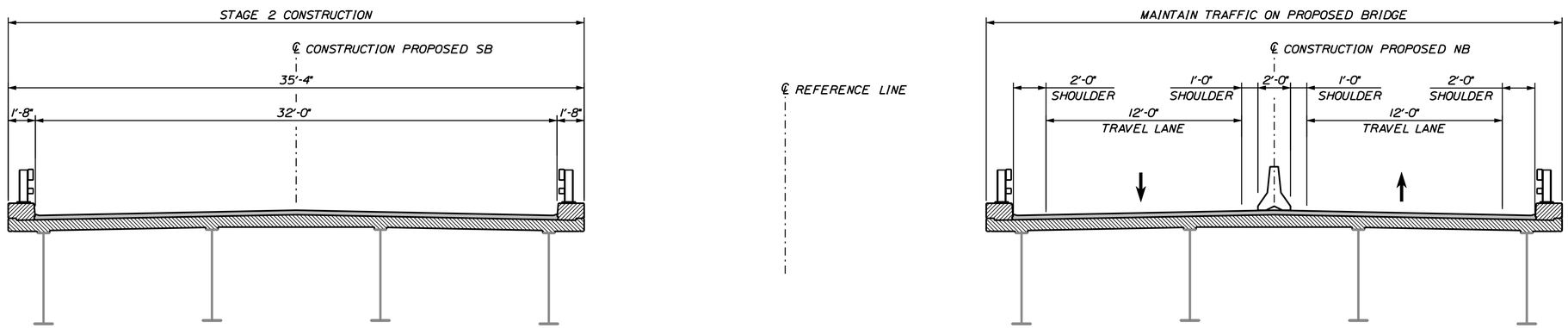

STAGE 2
SCALE: 1/4" = 1'-0"

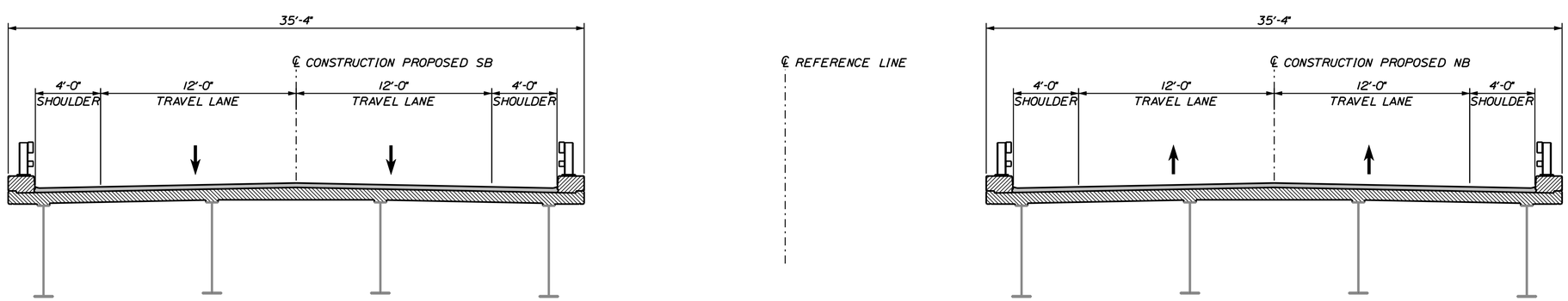

STAGE 3
SCALE: 1/4" = 1'-0"

NOTES

TEMPORARY CONCRETE BARRIERS SHALL NOT BE FASTENED TO THE BRIDGE DECK.

STATE OF MAINE
DEPARTMENT OF TRANSPORTATION

IM-1668(600)E & IM-A670(000)E

PIN 16686.00 & 16700.00

1456 & 6000

BRIDGE PLANS

PROJ. MANAGER	B. CONDON	BY	DATE
DESIGN-DETAILED	TPL	MJC	06\11
CHECKED-REVIEWED	JCS	--	06\11
DESIGN2-DETAILED2	PDD	TPL	06\11
DESIGN3-DETAILED3	--	--	--
REVISIONS 1	--		--
REVISIONS 2	--		--
REVISIONS 3	--		--
REVISIONS 4	--		--
FIELD CHANGES	--		--

SIGNATURE

P.E. NUMBER

DATE

C.A. CLAUSON BRIDGES
KENNEBEC RIVER
FAIRFIELD - BENTON SOMERSET & KENNEBEC COUNTIES

STAGE CONSTRUCTION

SHEET NUMBER
4
OF 132

Filename: ...\MSTA\004_StageConstr_Sect.dgn Division: HIGHWAY Username: mcarignan Date:6/15/2011

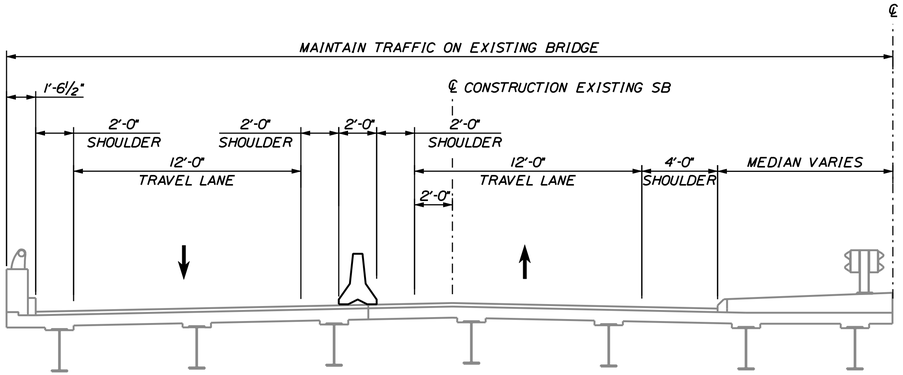

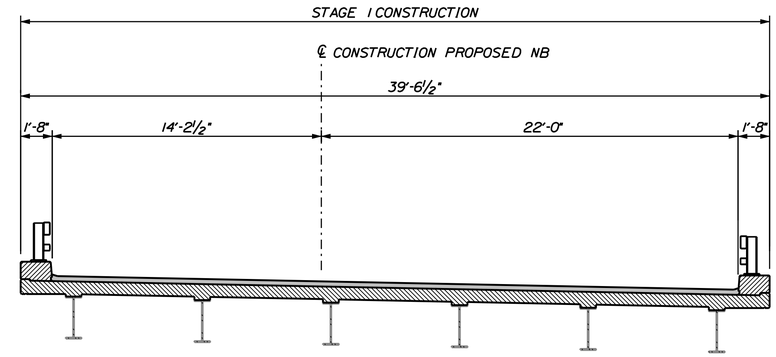

STAGE 1
SCALE: ¼" = 1'-0"

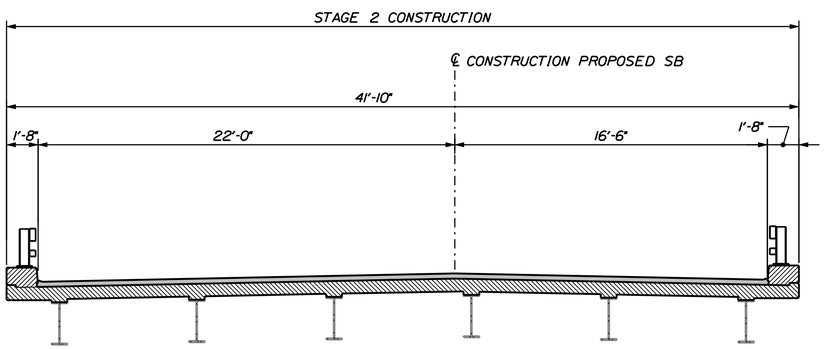

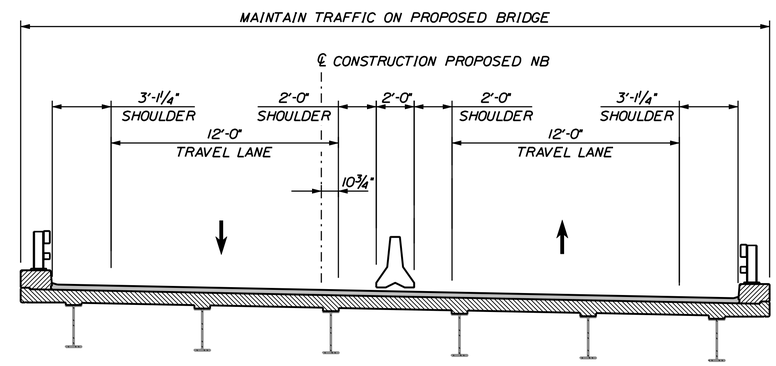

STAGE 2
SCALE: ¼" = 1'-0"

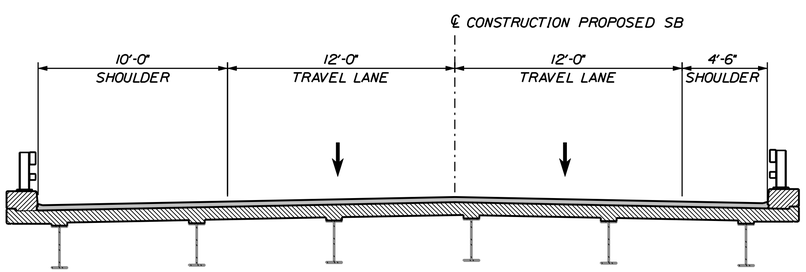

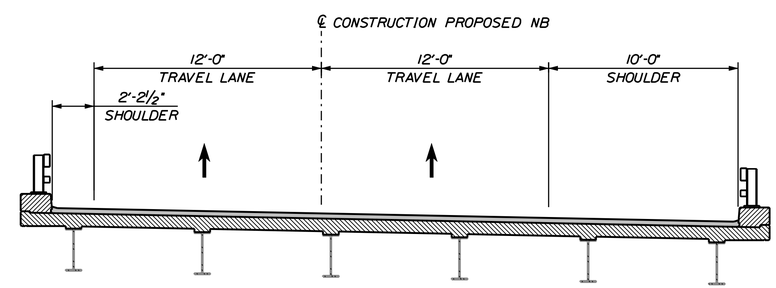

STAGE 3
SCALE: ¼" = 1'-0"

NOTES
TEMPORARY CONCRETE BARRIERS SHALL NOT BE FASTENED TO THE BRIDGE DECK.

STATE OF MAINE
DEPARTMENT OF TRANSPORTATION

IM-1781(400)X

PIN 17814.00

BRIDGE PLANS

5999

		BY	DATE
PROJ. MANAGER	B. CONDON		
DESIGN-DETAILED	TPL	MJC	06\11
CHECKED-REVIEWED	JGS	--	06\11
DESIGN2-DETAILED2	PDD	TPL	06\11
DESIGN3-DETAILED3	--	--	--
REVISIONS 1	--		--
REVISIONS 2	--		--
REVISIONS 3	--		--
REVISIONS 4	--		--
FIELD CHANGES	--		--

SIGNATURE

P.E. NUMBER

DATE

MAINE CENTRAL RAILROAD BRIDGE
INTERSTATE 95
FAIRFIELD - BENTON SOMERSET & KENNEBEC COUNTIES

STAGE CONSTRUCTION

SHEET NUMBER
5
OF 132

Filename: ...\005_StageConstr_MCRRsect.dgn Division: HIGHWAY Username: mcarignan Date:6/15/2011

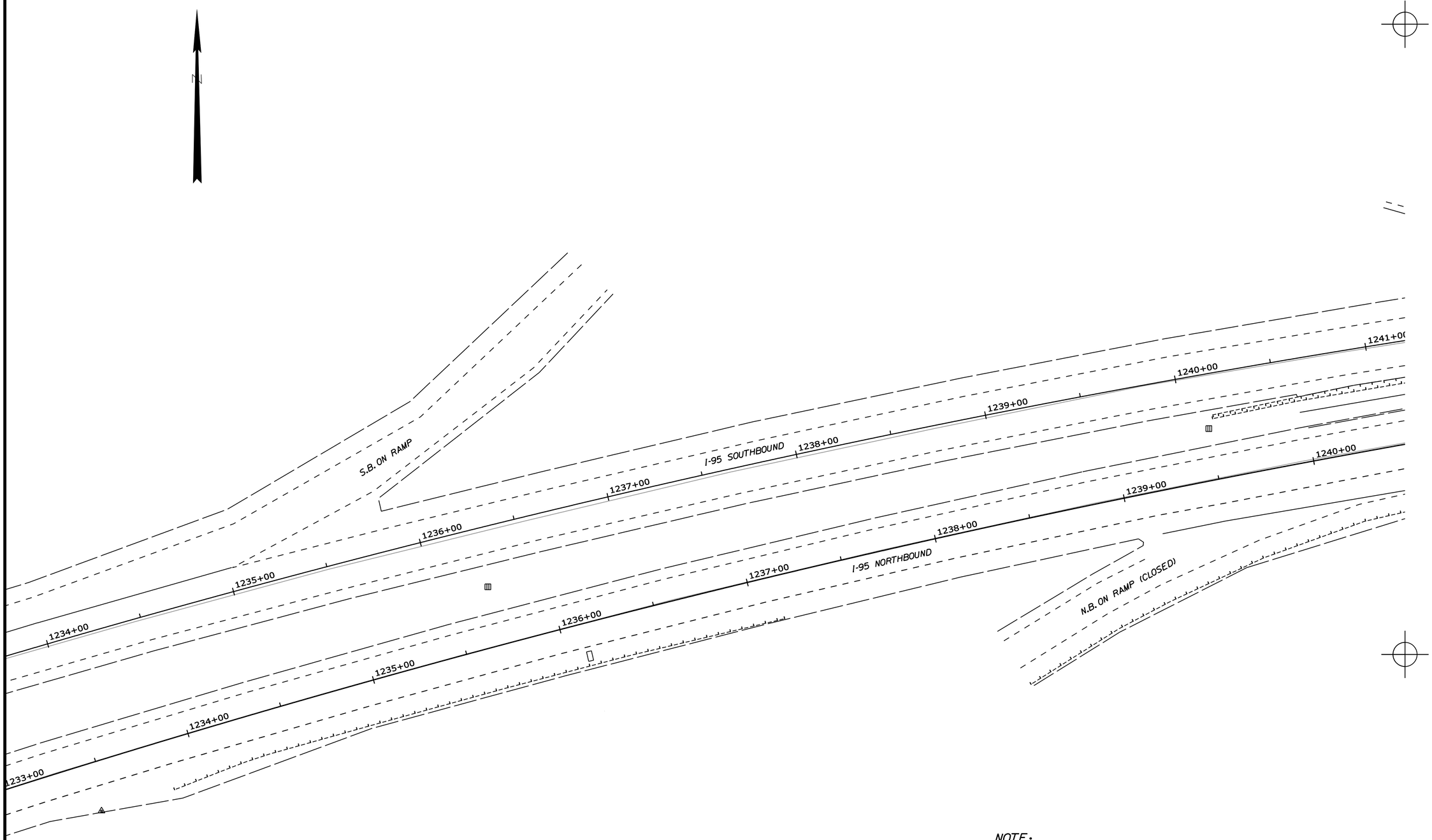

PLAN

25 0 25 50

SCALE

NOTE:
INTERSTATE 95 ALIGNMENT TAKEN FROM DESIGN PLAN SET:
"CLINTON A. CLAUSON MEMORIAL BRIDGES BETWEEN FAIRFIELD AND BENTON, SOMERSET AND KENEBEC COUNTIES, F.A. PROJECT NO. I-95-7(28)127".
"INTERSTATE 95 OVER MAINE CENTRAL RAILROAD, FAIRFIELD, SOMERSET COUNTY, F.A. PROJECT NO. I-IG-95-6(26)127".
PREPARED BY: THE STATE OF MAINE, APPROVAL DATE: 10-31-1962.

STATE OF MAINE
DEPARTMENT OF TRANSPORTATION

IM-1668(600)E, IM-A670(000)E & BR-1781(400)X

PIN
PIN 16686.00, 16700.00 & 17814.00 HIGHWAY PLANS

PROJ. MANAGER	B. CONDON	BY	DATE
DESIGN-DETAILED	TPL	MJC	06\11
CHECKED-REVIEWED	JGS	--	06\11
DESIGN2-DETAILED2	PDD	TPL	06\11
DESIGN3-DETAILED3	--	--	--
REVISIONS 1	--		--
REVISIONS 2	--		--
REVISIONS 3	--		--
REVISIONS 4	--		--
FIELD CHANGES	--		--

SIGNATURE

P.E. NUMBER

DATE

FAIRFIELD - BENTON
INTERSTATE 95

PLAN 1

SHEET NUMBER

6

OF 132

Filename: ...\highway\ms1o\006_Plan_1.dgn Division: HIGHWAY Username: thigginson Date:6/20/2011

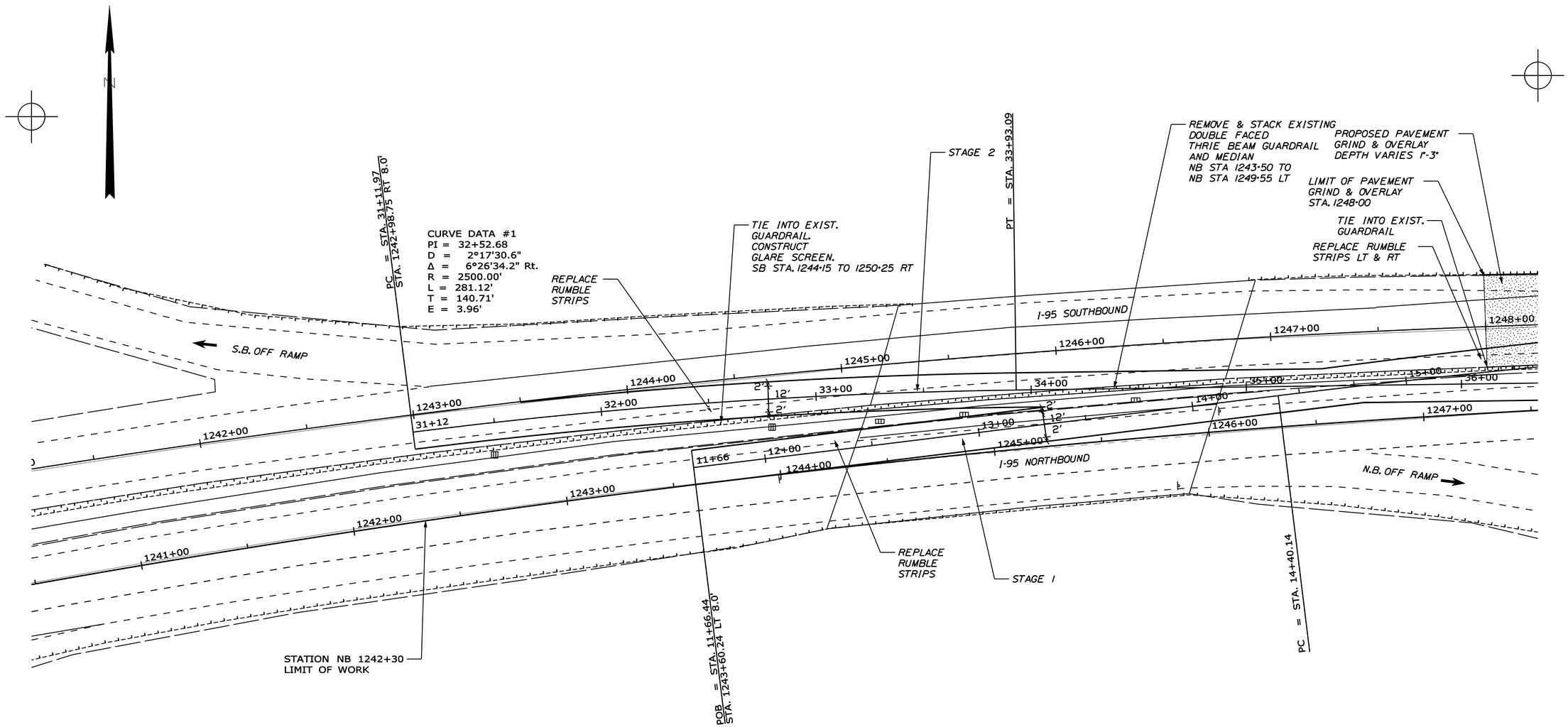

SOUTHERLY CROSSOVER

25 0 25 50

SCALE

STATE OF MAINE
DEPARTMENT OF TRANSPORTATION

IM-1668(600)E, IM-A670(000)E & BR-1781(400)X

PIN
PIN 16686.00, 16700.00 & 17814.00 HIGHWAY PLANS

PROJ. MANAGER	B. CONDON	BY	DATE
DESIGN-DETAILED	TPL	MJC	06\11
CHECKED-REVIEWED	JGS	--	06\11
DESIGN2-DETAILED2	PDD	TPL	06\11
DESIGN3-DETAILED3	--	--	--
REVISIONS 1	--		--
REVISIONS 2	--		--
REVISIONS 3	--		--
REVISIONS 4	--		--
FIELD CHANGES	--		--

SIGNATURE

P.E. NUMBER

DATE

FAIRFIELD - BENTON
INTERSTATE 95

PLAN 2

SHEET NUMBER

7

OF 132

Filename: ...\highway\msto\007_Plan_2.dgn Division: HIGHWAY Username: thigginson Date:6/20/2011

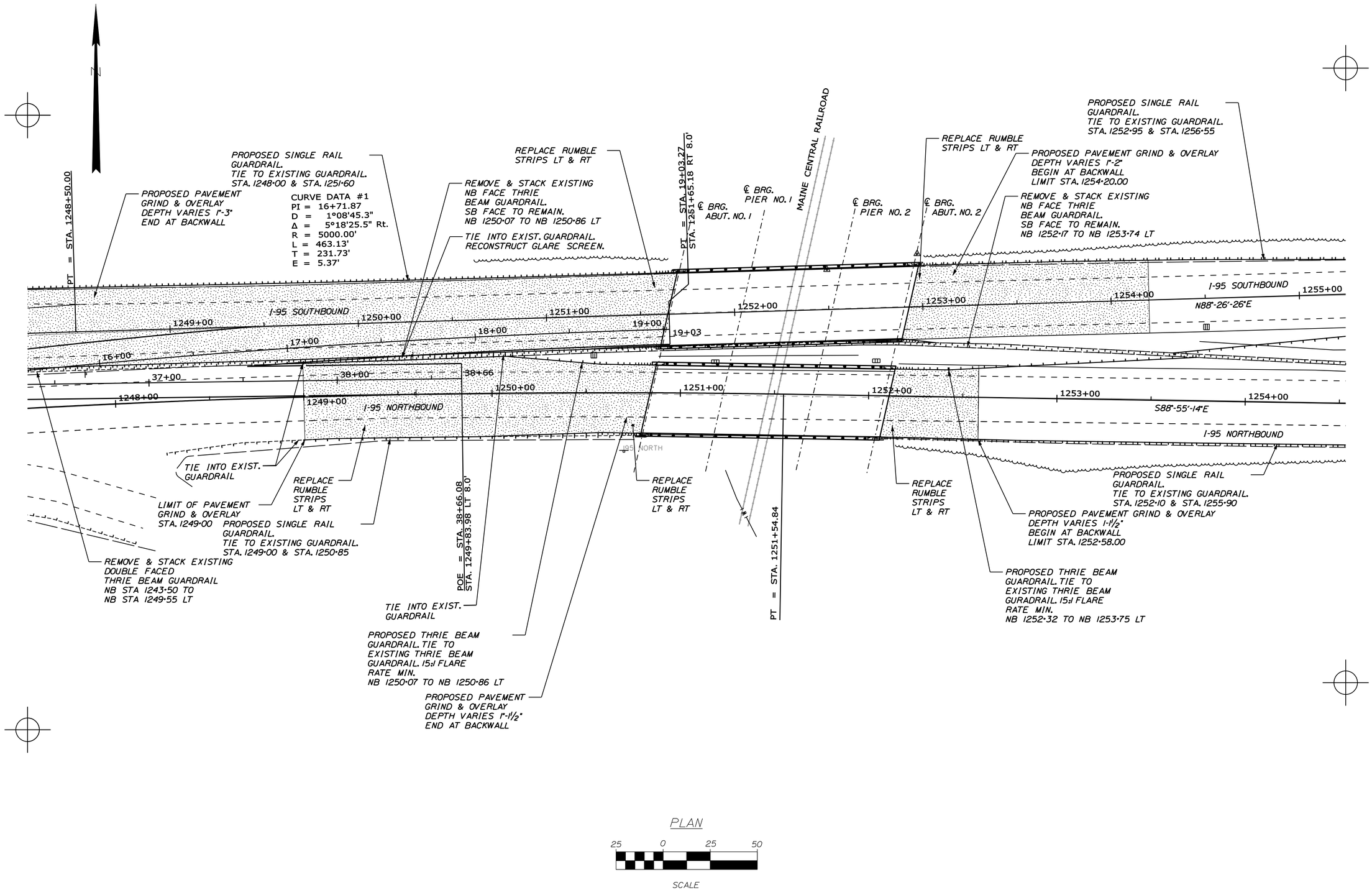

STATE OF MAINE
DEPARTMENT OF TRANSPORTATION

IM-1668(600)E, IM-A670(000)E & BR-1781(400)X

PIN
PIN 16686.00, 16700.00 & 17814.00 HIGHWAY PLANS

PROJ. MANAGER	B. CONDON	BY	DATE
DESIGN-DETAILED	TPL	MJC	06\11
CHECKED-REVIEWED	JGS	--	06\11
DESIGN2-DETAILED2	PDD	TPL	06\11
DESIGN3-DETAILED3	--	--	--
REVISIONS 1	--	--	--
REVISIONS 2	--	--	--
REVISIONS 3	--	--	--
REVISIONS 4	--	--	--
FIELD CHANGES	--	--	--

SIGNATURE

P.E. NUMBER

DATE

FAIRFIELD - BENTON
INTERSTATE 95

PLAN 3

SHEET NUMBER
8
OF 132

Filename: ...\highway\rnsto\008_Plan_3.dgn Division: HIGHWAY Username: thigginson Date:6/20/2011

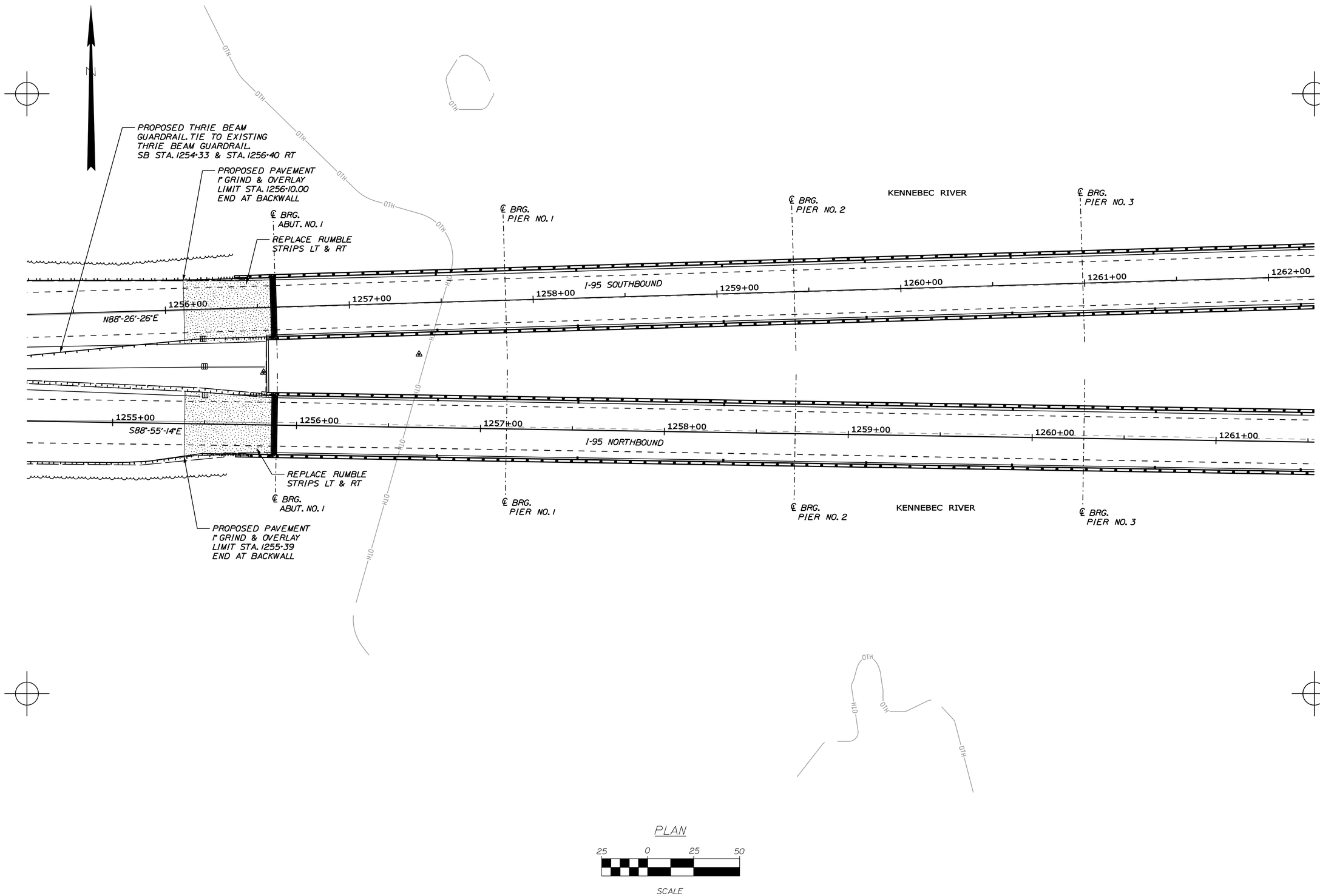

STATE OF MAINE
DEPARTMENT OF TRANSPORTATION

IM-1668(600)E, IM-A670(000)E & BR-1781(400)X

PIN
PIN 16686.00, 16700.00 & 17814.00 HIGHWAY PLANS

PROJ. MANAGER	B. CONDON	BY	DATE
DESIGN-DETAILED	TPL	MJC	06\11
CHECKED-REVIEWED	JGS	--	06\11
DESIGN2-DETAILED2	PDD	TPL	06\11
DESIGN3-DETAILED3	--	--	--
REVISIONS 1	--		--
REVISIONS 2	--		--
REVISIONS 3	--		--
REVISIONS 4	--		--
FIELD CHANGES	--		--

SIGNATURE

P.E. NUMBER

DATE

FAIRFIELD - BENTON
INTERSTATE 95

PLAN 4

SHEET NUMBER
9
OF 132

Filename: ...\highway\ms1a\009_Plan_4.dgn Division: HIGHWAY Username: thigginson Date:6/20/2011

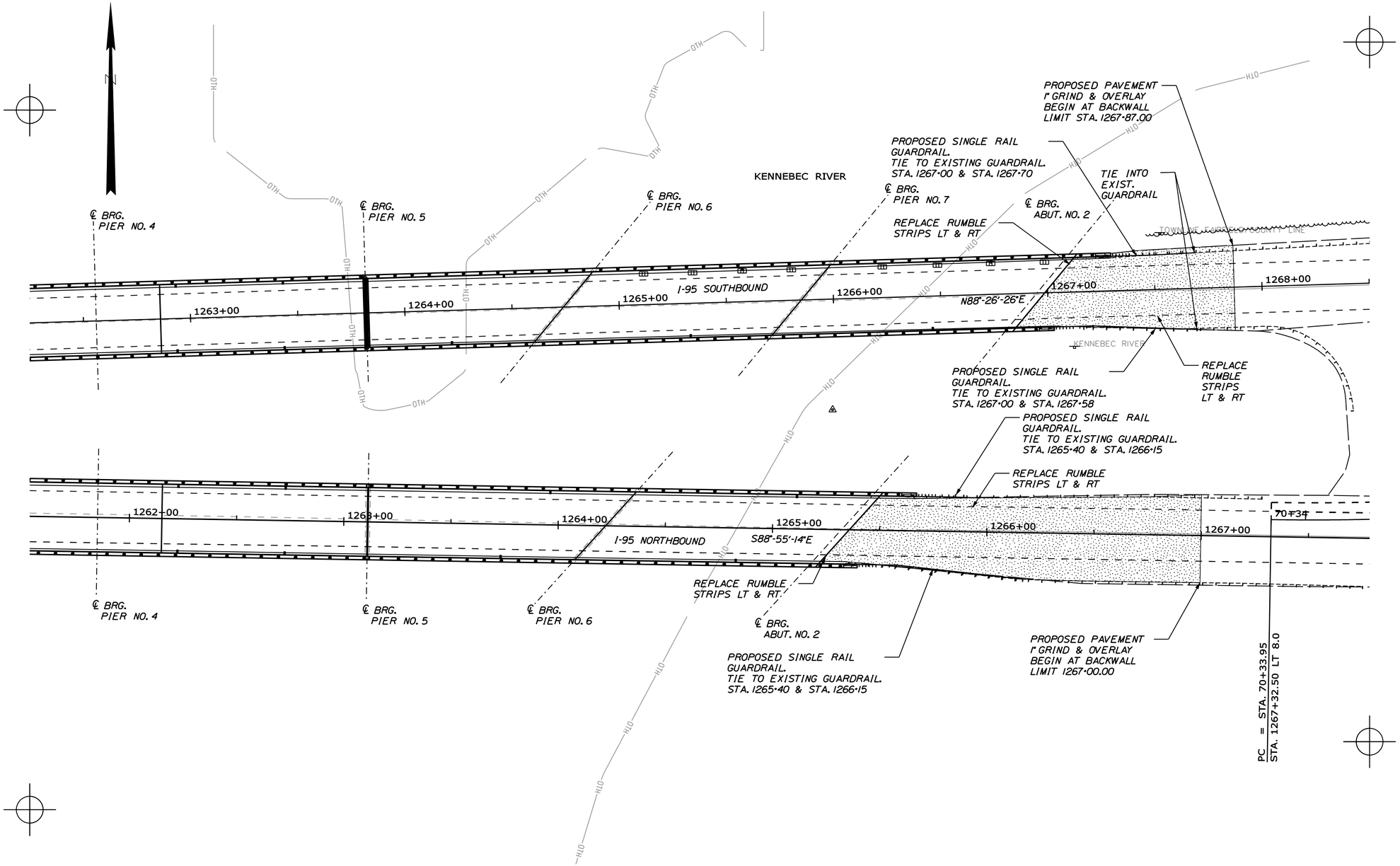

PLAN

25 0 25 50

SCALE

STATE OF MAINE
DEPARTMENT OF TRANSPORTATION

IM-1668(600)E, IM-A670(000)E & BR-1781(400)X

PIN
PIN 16686.00, 16700.00 & 17814.00 HIGHWAY PLANS

PROJ. MANAGER	B. CONDON	BY	DATE
DESIGN-DETAILED	TPL	MJC	06\11
CHECKED-REVIEWED	JGS	--	06\11
DESIGN2-DETAILED2	PDD	TPL	06\11
DESIGN3-DETAILED3	--	--	--
REVISIONS 1	--		--
REVISIONS 2	--		--
REVISIONS 3	--		--
REVISIONS 4	--		--
FIELD CHANGES	--		--

SIGNATURE

P.E. NUMBER

DATE

FAIRFIELD - BENTON
INTERSTATE 95

PLAN 5

SHEET NUMBER

10

OF 132

Filename: ...\highway\ms10\010_Plan_5.dgn Division: HIGHWAY Username: thigginson Date:6/20/2011

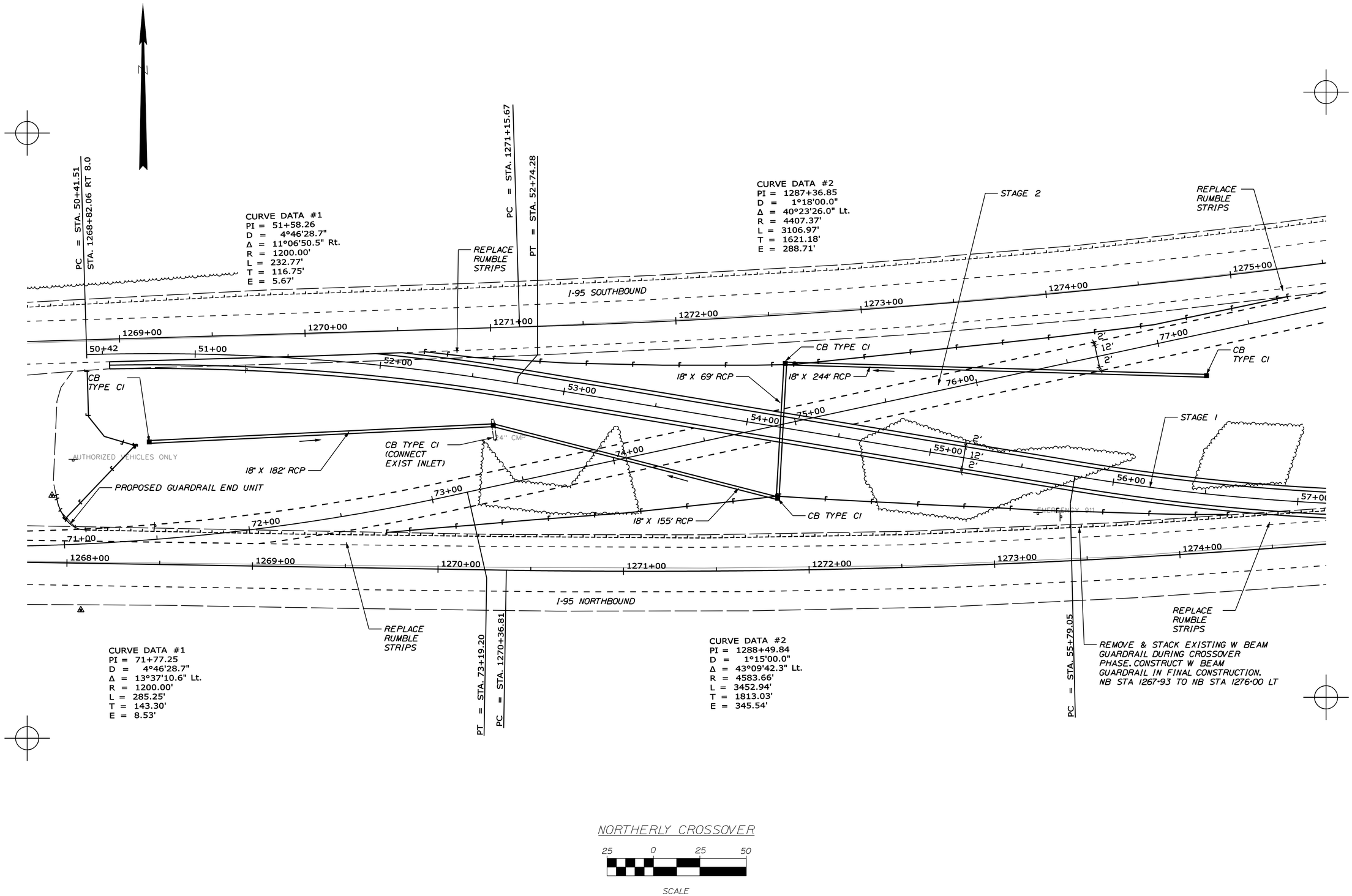

STATE OF MAINE
DEPARTMENT OF TRANSPORTATION

IM-1668(600)E, IM-A670(000)E & BR-1781(400)X

PIN
PIN 16686.00, 16700.00 & 17814.00 HIGHWAY PLANS

PROJ. MANAGER	B. CONDON	BY	DATE
DESIGN-DETAILED	TPL	MJC	06\11
CHECKED-REVIEWED	JGS	--	06\11
DESIGN2-DETAILED2	PDD	TPL	06\11
DESIGN3-DETAILED3	--	--	--
REVISIONS 1	--	--	--
REVISIONS 2	--	--	--
REVISIONS 3	--	--	--
REVISIONS 4	--	--	--
FIELD CHANGES	--	--	--

SIGNATURE

P.E. NUMBER

DATE

FAIRFIELD - BENTON
INTERSTATE 95

PLAN 6

SHEET NUMBER

11

OF 132

Filename: ...\highway\ms1o\011_Plan_6.dgn Division: HIGHWAY Username: thigginson Date:6/20/2011

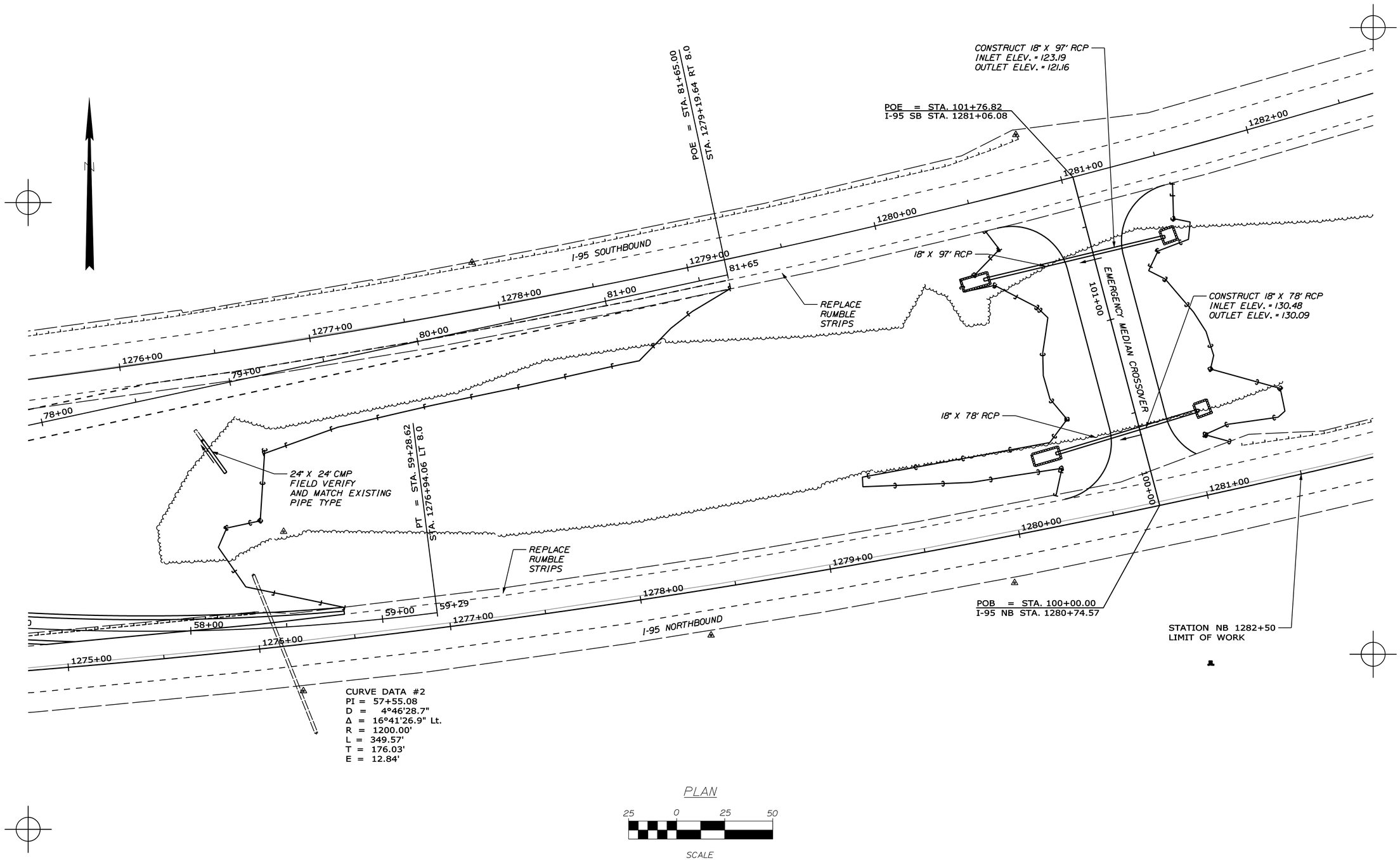

STATE OF MAINE
DEPARTMENT OF TRANSPORTATION

IM-1668(600)E, IM-A670(000)E & BR-1781(400)X

PIN
PIN 16686.00, 16700.00 & 17814.00 HIGHWAY PLANS

PROJ. MANAGER	B. CONDON	BY	DATE
DESIGN-DETAILED	TPL	MJC	06\11
CHECKED-REVIEWED	JGS	--	06\11
DESIGN2-DETAILED2	PDD	TPL	06\11
DESIGN3-DETAILED3	--	--	--
REVISIONS 1	--		--
REVISIONS 2	--		--
REVISIONS 3	--		--
REVISIONS 4	--		--
FIELD CHANGES	--		--

SIGNATURE

P.E. NUMBER

DATE

FAIRFIELD - BENTON
INTERSTATE 95

PLAN 7

SHEET NUMBER

12

OF 132

Filename: ...\highway\msta\012_Plan_7.dgn Division: HIGHWAY Username: thigginson Date:6/20/2011

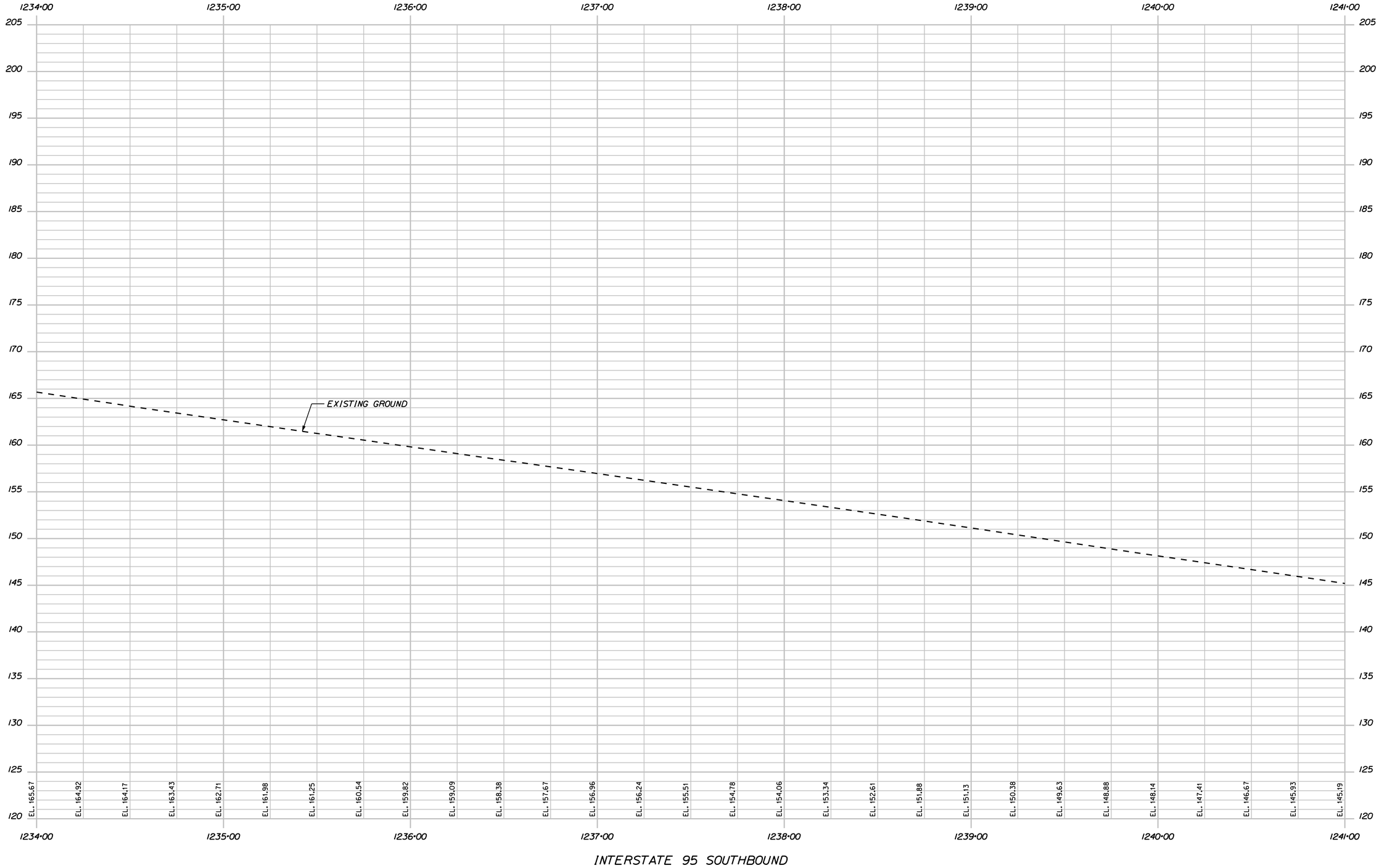

STATE OF MAINE
DEPARTMENT OF TRANSPORTATION

IM-1668(600)E, IM-A670(000)E & BR-1781(400)X

PIN
PIN 16686.00, 16700.00 & 17814.00 HIGHWAY PLANS

PROJ. MANAGER	B. CONDON	BY	DATE
DESIGN-DETAILED	TPL	MJC	06\11
CHECKED-REVIEWED	JGS	--	06\11
DESIGN2-DETAILED2	PDD	TPL	06\11
DESIGN3-DETAILED3	--	--	--
REVISIONS 1	--		--
REVISIONS 2	--		--
REVISIONS 3	--		--
REVISIONS 4	--		--
FIELD CHANGES	--		--

SIGNATURE

P.E. NUMBER

DATE

FAIRFIELD - BENTON
INTERSTATE 95

PROFILE 1

SHEET NUMBER
13
OF 132

Sta. 1234+00 to Sta. 1241+00

Filename: ...\msta\013_Profile_SB1.dgn Division: HIGHWAY Username: thigginson Date:6/20/2011

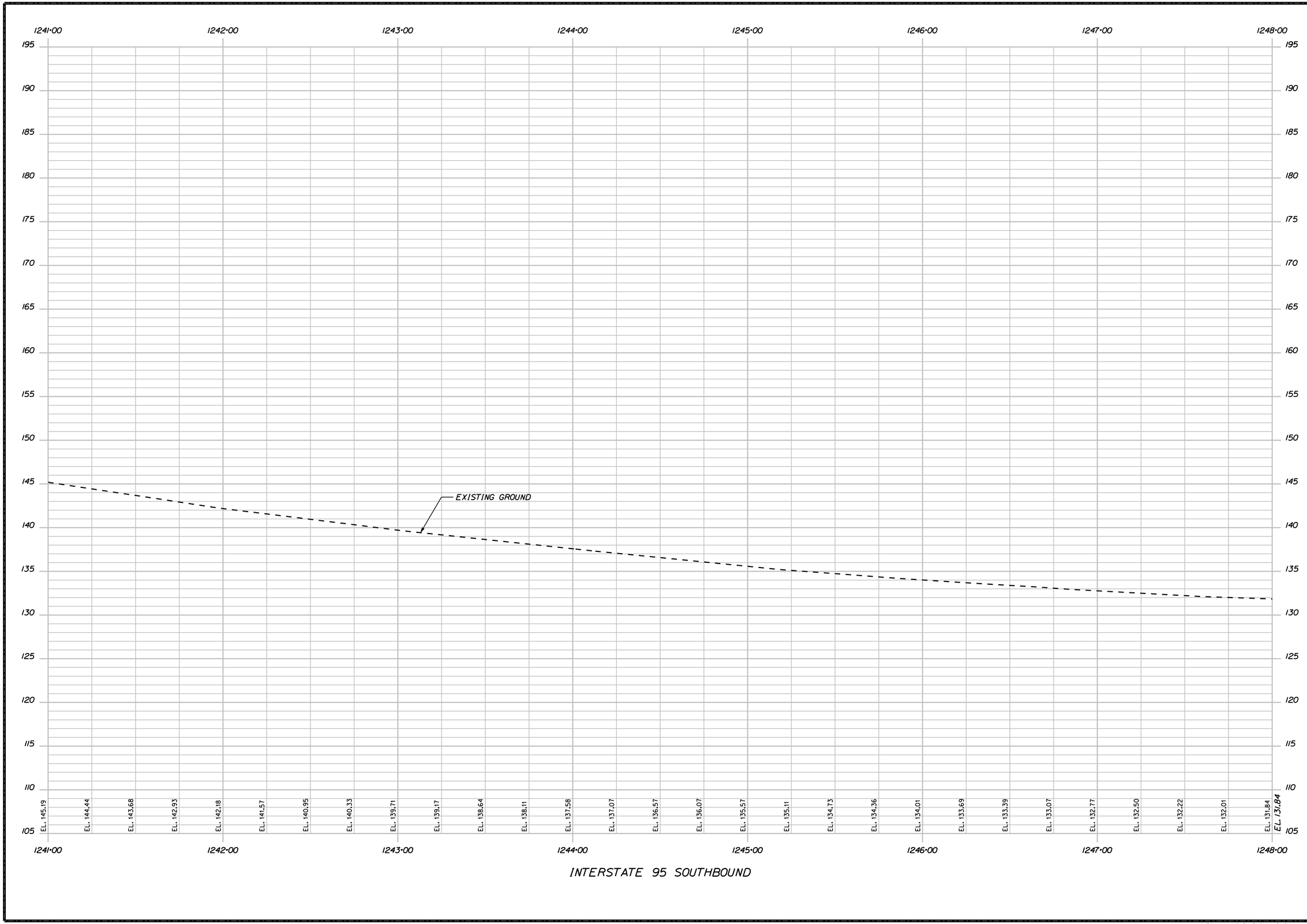

STATE OF MAINE
DEPARTMENT OF TRANSPORTATION

IM-1668(600)E, IM-A670(000)E & BR-1781(400)X

PIN
PIN 16686.00, 16700.00 & 17814.00 HIGHWAY PLANS

PROJ. MANAGER	B. CONDON	BY	DATE
DESIGN-DETAILED	TPL	MJC	06\11
CHECKED-REVIEWED	JGS	--	06\11
DESIGN2-DETAILED2	PDD	TPL	06\11
DESIGN3-DETAILED3	--	--	--
REVISIONS 1	--		--
REVISIONS 2	--		--
REVISIONS 3	--		--
REVISIONS 4	--		--
FIELD CHANGES	--		--

SIGNATURE

P.E. NUMBER

DATE

FAIRFIELD - BENTON
INTERSTATE 95

PROFILE 2

SHEET NUMBER
14
OF 132

Sta. 1241+00 to Sta. 1248+00

Filename: ...\msta\014_Profile_SB2.dgn Division: HIGHWAY Username: thigginson Date:6/20/2011

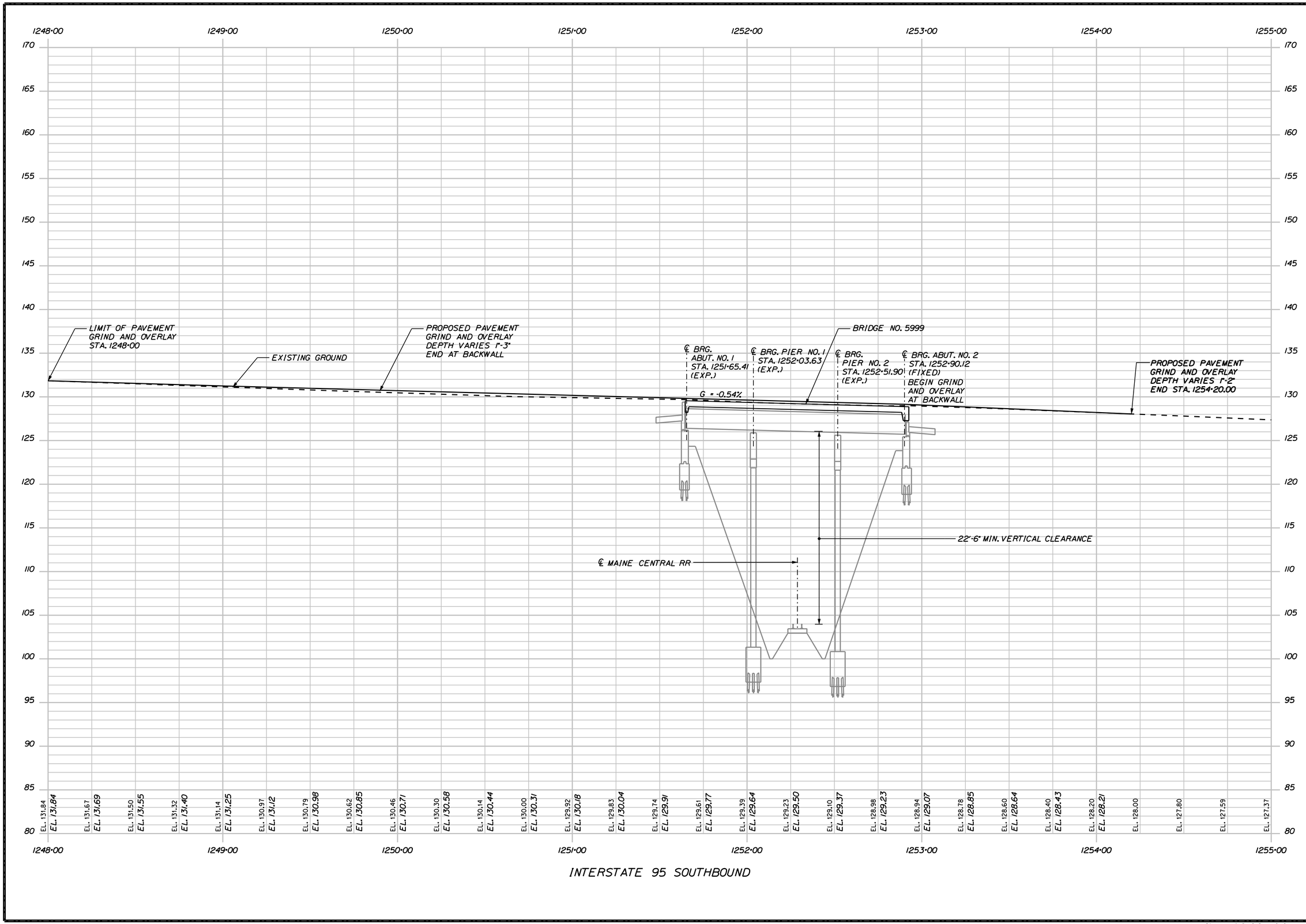

Sta. 1248+00 to Sta. 1255+00

STATE OF MAINE
DEPARTMENT OF TRANSPORTATION

IM-1668(600)E, IM-A670(000)E & BR-1781(400)X

PIN
PIN 16686.00, 16700.00 & 17814.00 HIGHWAY PLANS

PROJ. MANAGER	B. CONDON	BY	DATE
DESIGN-DETAILED	TPL	MJC	06\11
CHECKED-REVIEWED	JGS	--	06\11
DESIGN2-DETAILED2	PDD	TPL	06\11
DESIGN3-DETAILED3	--	--	--
REVISIONS 1	--	--	--
REVISIONS 2	--	--	--
REVISIONS 3	--	--	--
REVISIONS 4	--	--	--
FIELD CHANGES	--	--	--

SIGNATURE

P.E. NUMBER

DATE

FAIRFIELD - BENTON
INTERSTATE 95

PROFILE 3

SHEET NUMBER

15

OF 132

Filename: ...\rnsto\015_Profile_SB3.dgn Division: HIGHWAY Username: thigginson Date:6/20/2011

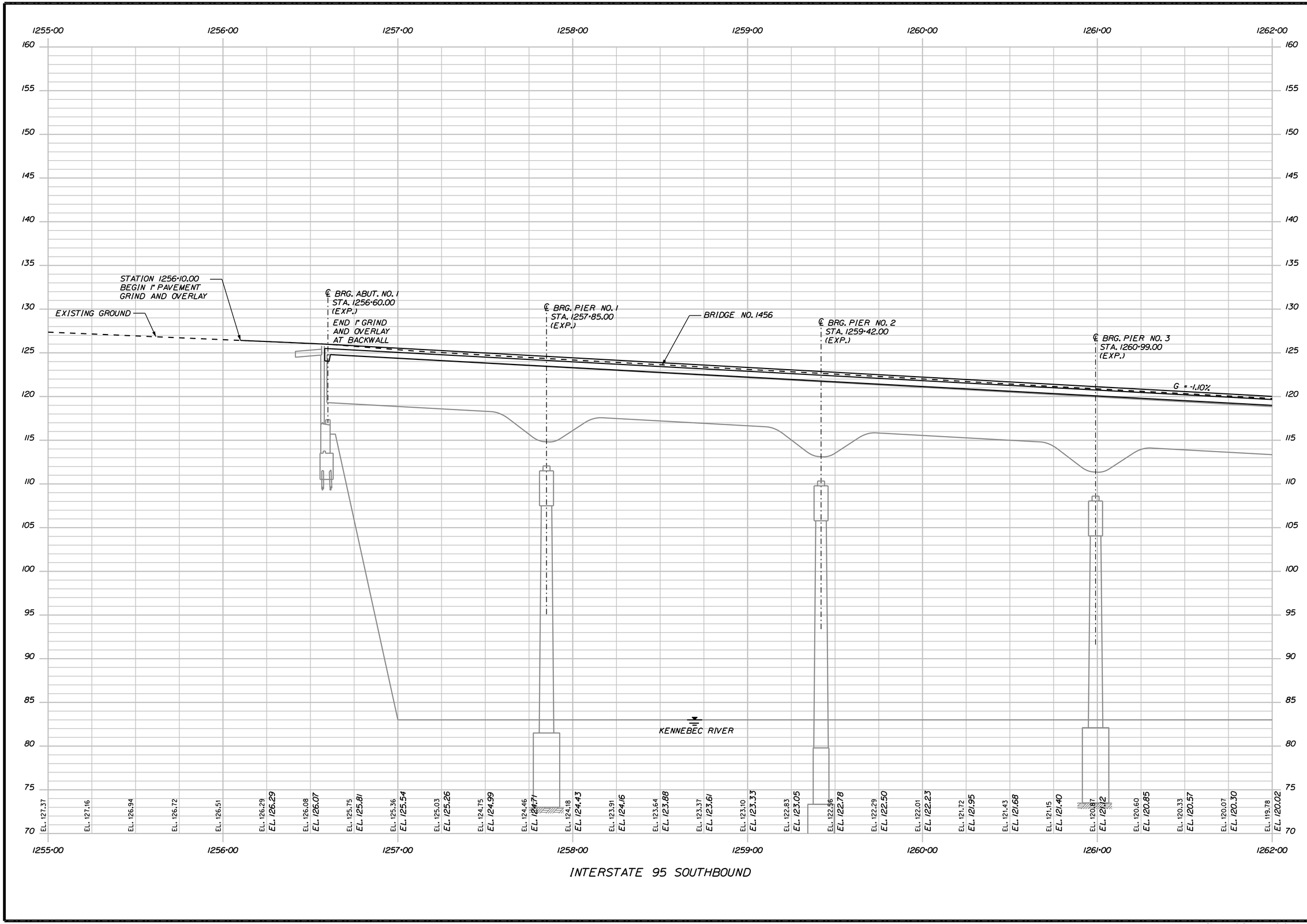

Filename: ...\msta\016_Profile_SB4.dgn Division: HIGHWAY Username: thigginson Date:6/20/2011

STATE OF MAINE
DEPARTMENT OF TRANSPORTATION

IM-1668(600)E, IM-A670(000)E & BR-1781(400)X

PIN
PIN 16686.00, 16700.00 & 17814.00 HIGHWAY PLANS

PROJ. MANAGER	B. CONDON	BY	DATE
DESIGN-DETAILED	TPL	MJC	06\11
CHECKED-REVIEWED	JGS	--	06\11
DESIGN2-DETAILED2	PDD	TPL	06\11
DESIGN3-DETAILED3	--	--	--
REVISIONS 1	--		--
REVISIONS 2	--		--
REVISIONS 3	--		--
REVISIONS 4	--		--
FIELD CHANGES	--		--

SIGNATURE

P.E. NUMBER

DATE

FAIRFIELD - BENTON
INTERSTATE 95

PROFILE 4

SHEET NUMBER
16
OF 132

Sta. 1255+00 to Sta. 1262+00

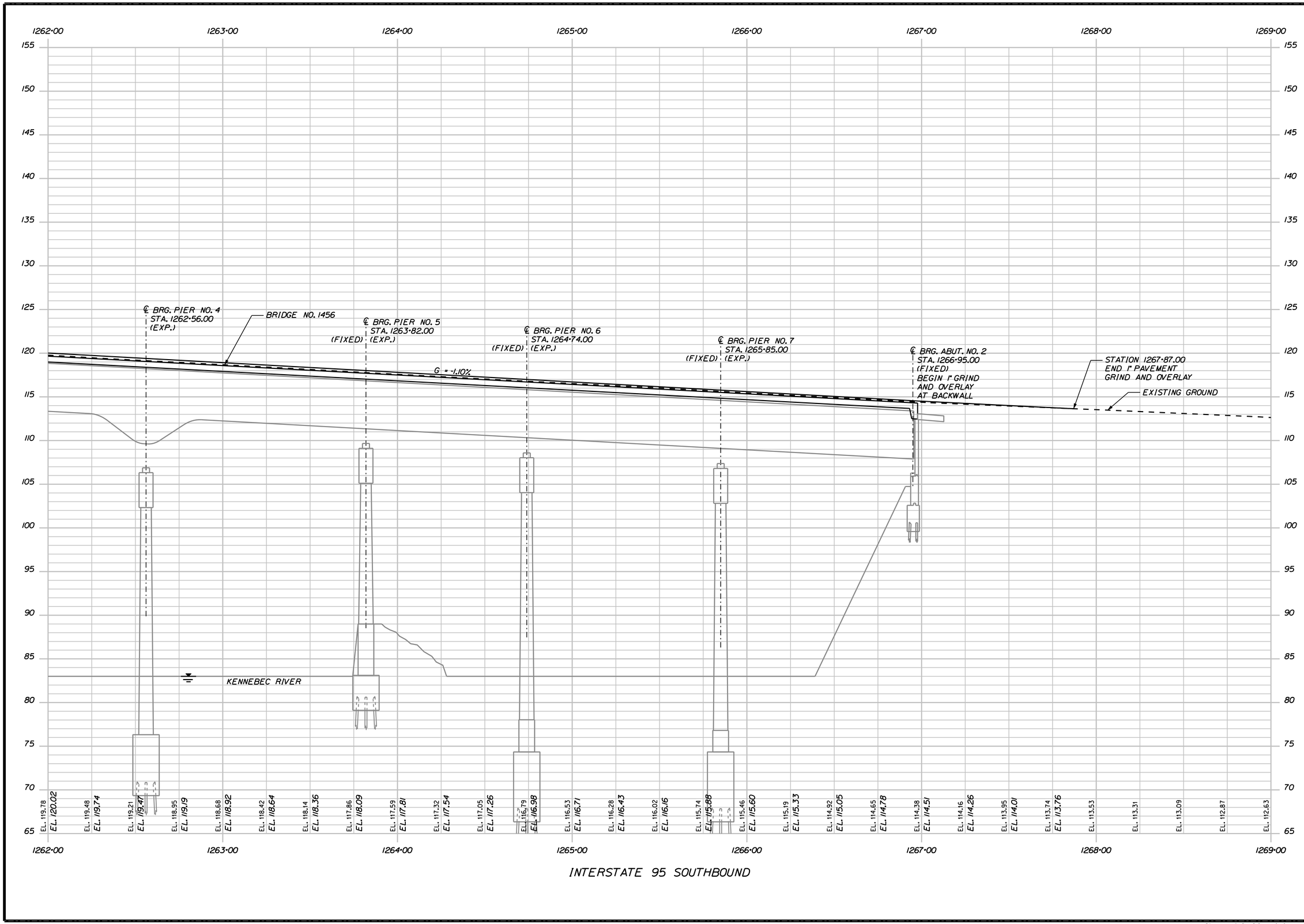

STATE OF MAINE
DEPARTMENT OF TRANSPORTATION

IM-1668(600)E, IM-A670(000)E & BR-1781(400)X

PIN
PIN 16686.00, 16700.00 & 17814.00 HIGHWAY PLANS

		BY	DATE
PROJ. MANAGER	B. CONDON		
DESIGN-DETAILED	TPL	MJC	06\11
CHECKED-REVIEWED	JGS	..	06\11
DESIGN2-DETAILED2	PDD	TPL	06\11
DESIGN3-DETAILED3	..	..	..
REVISIONS 1	..		..
REVISIONS 2	..		..
REVISIONS 3	..		..
REVISIONS 4	..		..
FIELD CHANGES	..		..

SIGNATURE

P.E. NUMBER

DATE

FAIRFIELD - BENTON
INTERSTATE 95

PROFILE 5

SHEET NUMBER
17
OF 132

Sta. 1262+00 to Sta. 1269+00

Filename: ...\msta\017_Profile_SB5.dgn Division: HIGHWAY Username: thigginson Date:6/20/2011

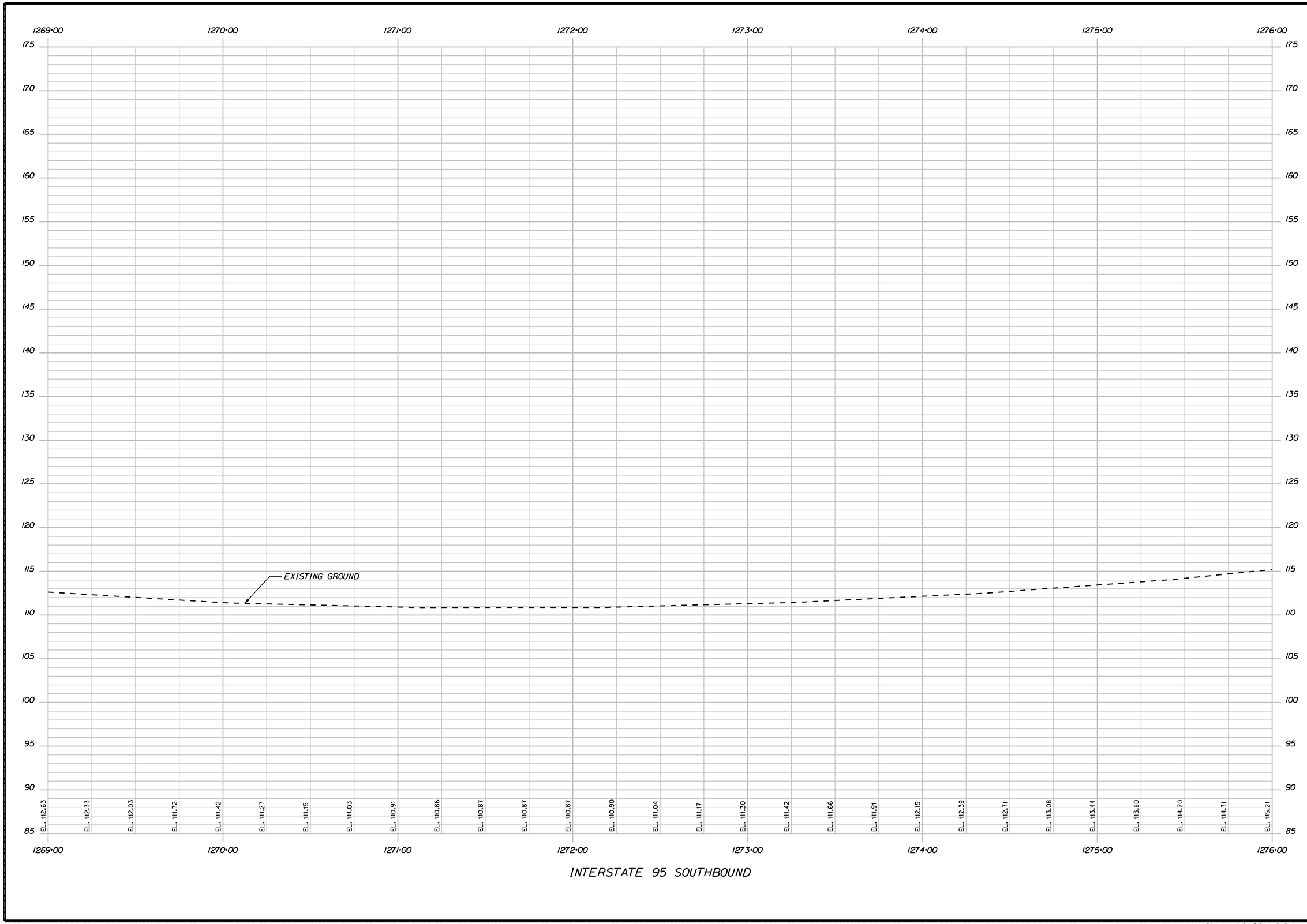

STATE OF MAINE
DEPARTMENT OF TRANSPORTATION

IM-1668(600)E, IM-A670(000)E & BR-1781(400)X

PIN
PIN 16686.00, 16700.00 & 17814.00 HIGHWAY PLANS

PROJ. MANAGER	B. CONDON	BY	DATE
DESIGN-DETAILED	TPL	MJC	06\11
CHECKED-REVIEWED	JGS	--	06\11
DESIGN2-DETAILED2	PDD	TPL	06\11
DESIGN3-DETAILED3	--	--	--
REVISIONS 1	--		--
REVISIONS 2	--		--
REVISIONS 3	--		--
REVISIONS 4	--		--
FIELD CHANGES	--		--

SIGNATURE

P.E. NUMBER

DATE

FAIRFIELD - BENTON
INTERSTATE 95

PROFILE 6

SHEET NUMBER
18
OF 132

Sta. 1269+00 to Sta. 1276+00

Filename: ...\msta\018_Profile_SB6.dgn Division: HIGHWAY Username: thigginson Date:6/20/2011

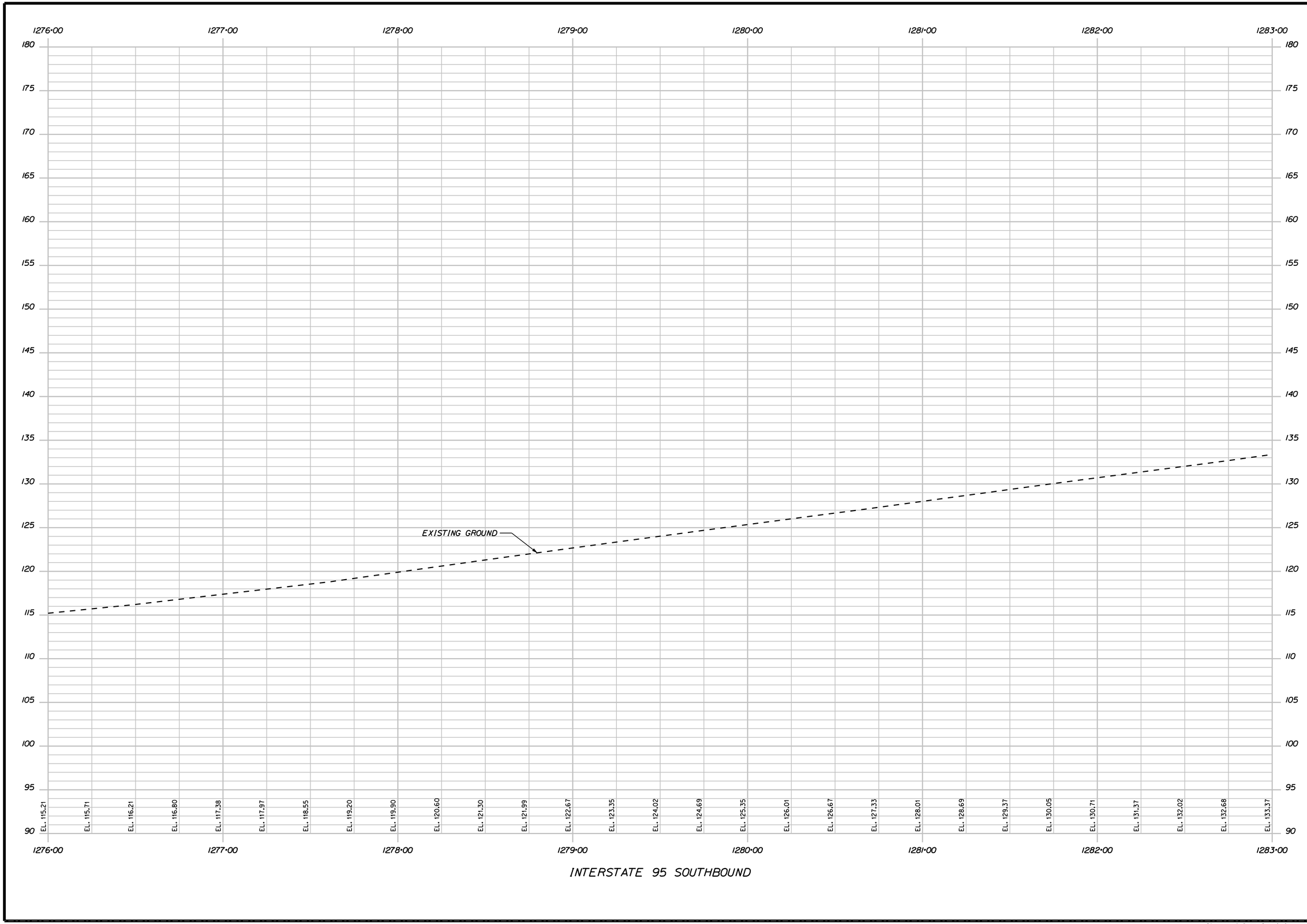

STATE OF MAINE
DEPARTMENT OF TRANSPORTATION

IM-1668(600)E, IM-A670(000)E & BR-1781(400)X

PIN
PIN 16686.00, 16700.00 & 17814.00 HIGHWAY PLANS

PROJ. MANAGER	B. CONDON	BY	DATE
DESIGN-DETAILED	TPL	MJC	06\11
CHECKED-REVIEWED	JGS	--	06\11
DESIGN2-DETAILED2	PDD	TPL	06\11
DESIGN3-DETAILED3	--	--	--
REVISIONS 1	--		--
REVISIONS 2	--		--
REVISIONS 3	--		--
REVISIONS 4	--		--
FIELD CHANGES	--		--

SIGNATURE

P.E. NUMBER

DATE

FAIRFIELD - BENTON
INTERSTATE 95

PROFILE 7

SHEET NUMBER
19
OF 132

Sta. 1276+00 to Sta. 1283+00

Filename: ...\msta\019_Profile_SB7.dgn Division: HIGHWAY Username: thigginson Date:6/20/2011

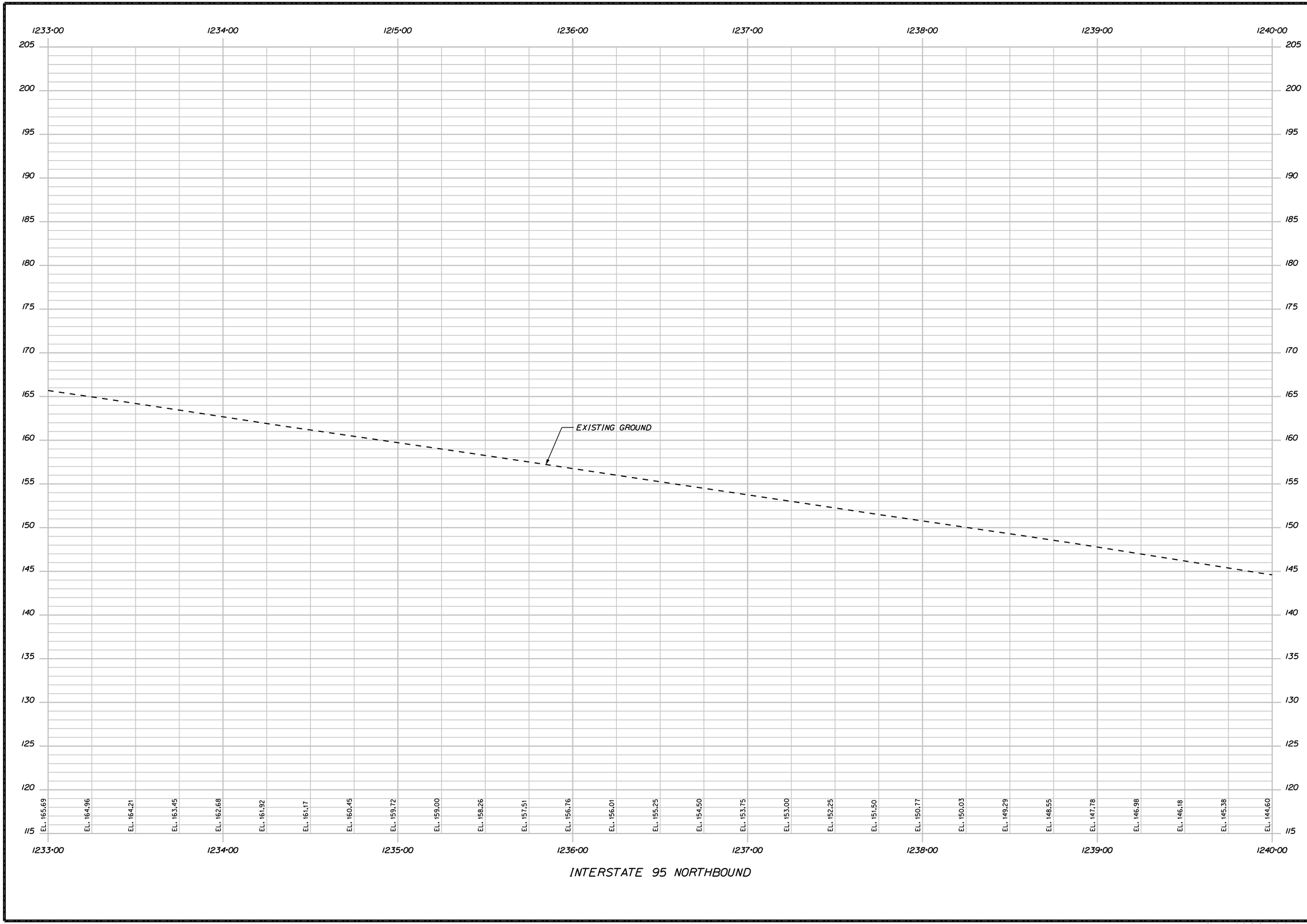

STATE OF MAINE
DEPARTMENT OF TRANSPORTATION

IM-1668(600)E, IM-A670(000)E & BR-1781(400)X

PIN
PIN 16686.00, 16700.00 & 17814.00 HIGHWAY PLANS

PROJ. MANAGER	B. CONDON	BY	DATE
DESIGN-DETAILED	TPL	MJC	06\11
CHECKED-REVIEWED	JGS	--	06\11
DESIGN2-DETAILED2	PDD	TPL	06\11
DESIGN3-DETAILED3	--	--	--
REVISIONS 1	--		--
REVISIONS 2	--		--
REVISIONS 3	--		--
REVISIONS 4	--		--
FIELD CHANGES	--		--

SIGNATURE

P.E. NUMBER

DATE

FAIRFIELD - BENTON
INTERSTATE 95

PROFILE 9

SHEET NUMBER
20
OF 132

Sta. 1233+00 to Sta. 1240+00

Filename: ...\msta\020_Profile_NB9.dgn Division: HIGHWAY Username: thigginson Date:6/20/2011

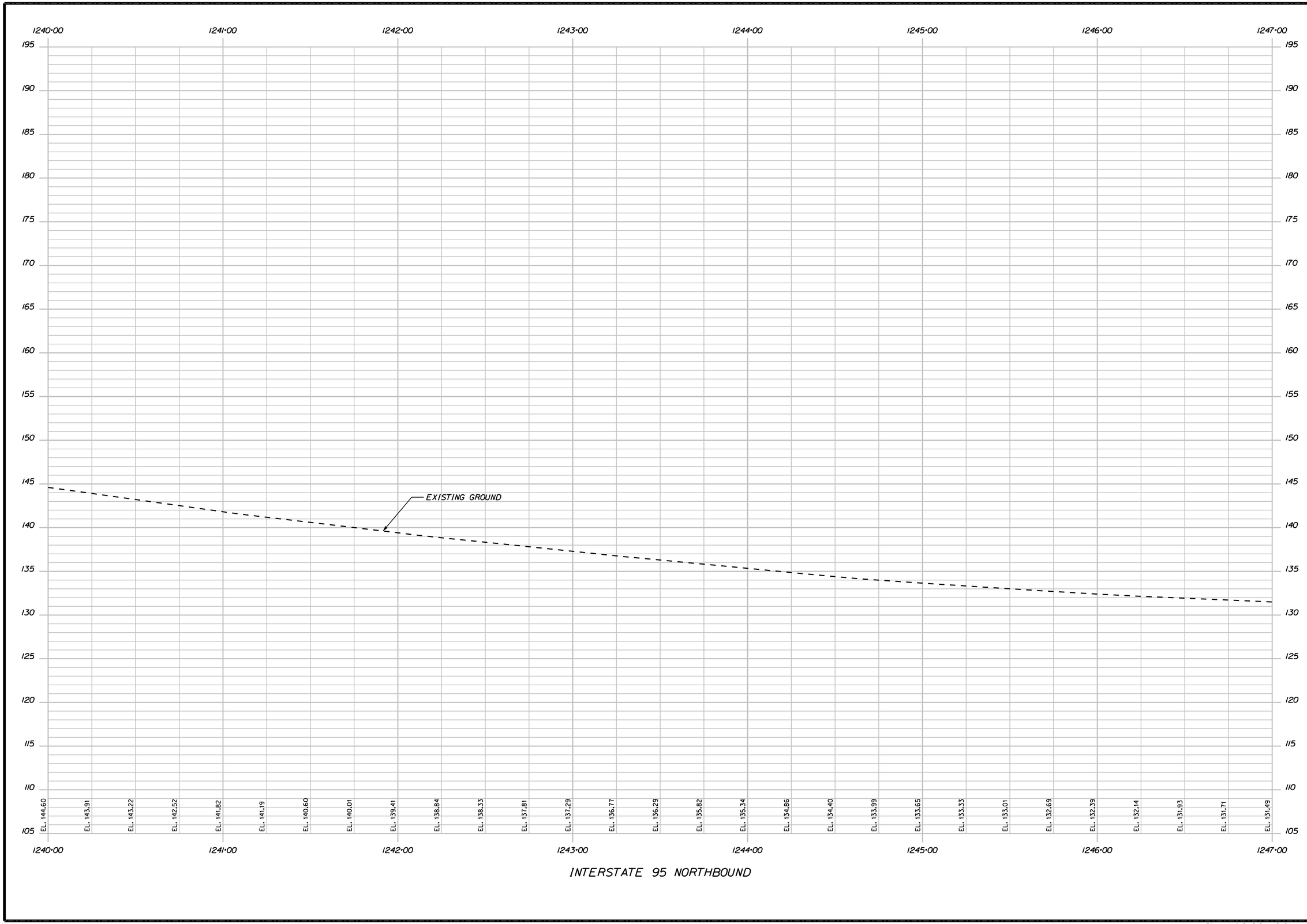

STATE OF MAINE
DEPARTMENT OF TRANSPORTATION

IM-1668(600)E, IM-A670(000)E & BR-1781(400)X

PIN
PIN 16686.00, 16700.00 & 17814.00 HIGHWAY PLANS

PROJ. MANAGER	B. CONDON	BY	DATE
DESIGN-DETAILED	TPL	MJC	06\11
CHECKED-REVIEWED	JGS	--	06\11
DESIGN2-DETAILED2	PRD	TPL	06\11
DESIGN3-DETAILED3	--	--	--
REVISIONS 1	--		--
REVISIONS 2	--		--
REVISIONS 3	--		--
REVISIONS 4	--		--
FIELD CHANGES	--		--

SIGNATURE

P.E. NUMBER

DATE

FAIRFIELD - BENTON
INTERSTATE 95

PROFILE 10

SHEET NUMBER
21
OF 132

Sta. 1240+00 to Sta. 1247+00

Filename: ...\msta\021_Profile_NB10.dgn Division: HIGHWAY Username: thigginson Date:6/20/2011

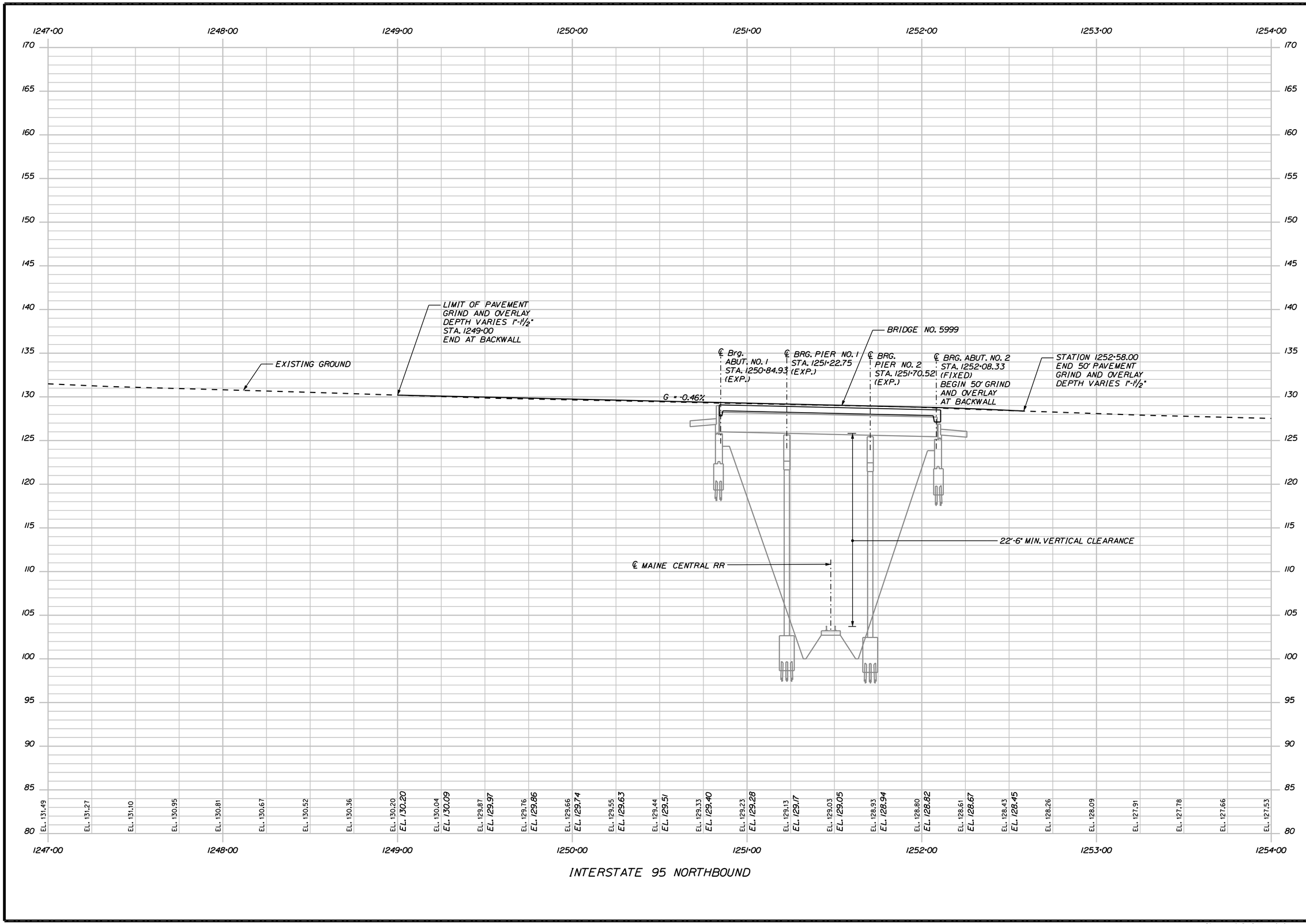

Sta. 1247+00 to Sta. 1254+00

STATE OF MAINE
DEPARTMENT OF TRANSPORTATION

IM-1668(600)E, IM-A670(000)E & BR-1781(400)X

PIN
PIN 16686.00, 16700.00 & 17814.00 HIGHWAY PLANS

PROJ. MANAGER	B. CONDON	BY	DATE
DESIGN-DETAILED	TPL	MJC	06\11
CHECKED-REVIEWED	JGS	--	06\11
DESIGN2-DETAILED2	PDD	TPL	06\11
DESIGN3-DETAILED3	--	--	--
REVISIONS 1	--		--
REVISIONS 2	--		--
REVISIONS 3	--		--
REVISIONS 4	--		--
FIELD CHANGES	--		--

SIGNATURE

P.E. NUMBER

DATE

FAIRFIELD - BENTON
INTERSTATE 95

PROFILE 11

SHEET NUMBER
22
OF 132

Filename: ...\msto\022_Profile_NB11.dgn Division: HIGHWAY Username: thigginson Date:6/20/2011

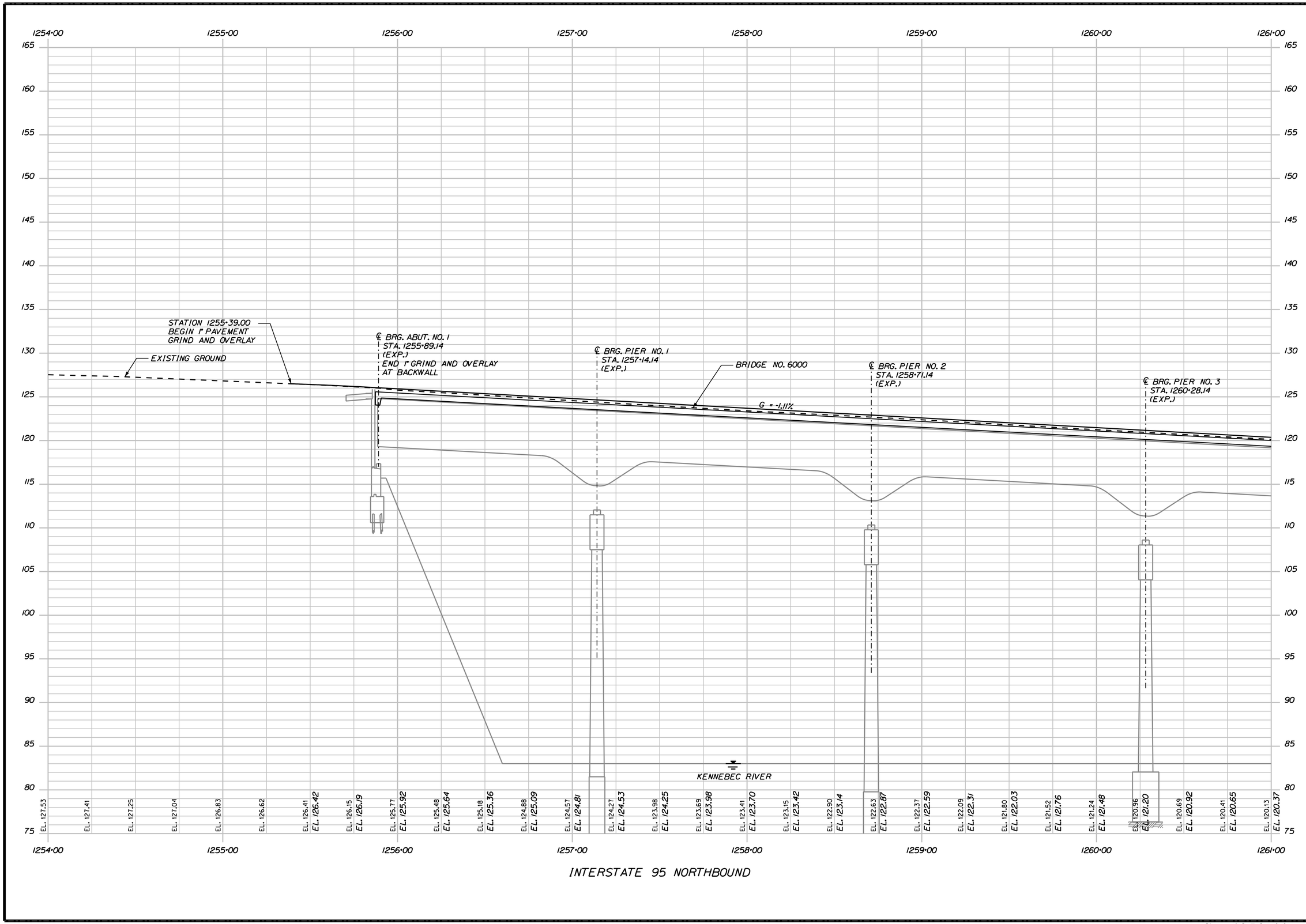

Filename: ...\msto\023_Profile_NB12.dgn Division: HIGHWAY Username: thigginson Date:6/20/2011

STATE OF MAINE
DEPARTMENT OF TRANSPORTATION

IM-1668(600)E, IM-A670(000)E & BR-1781(400)X

PIN
PIN 16686.00, 16700.00 & 17814.00 HIGHWAY PLANS

PROJ. MANAGER	B. CONDON	BY	DATE
DESIGN-DETAILED	TPL	MJC	06\11
CHECKED-REVIEWED	JGS	--	06\11
DESIGN2-DETAILED2	PDD	TPL	06\11
DESIGN3-DETAILED3	--	--	--
REVISIONS 1	--	--	--
REVISIONS 2	--	--	--
REVISIONS 3	--	--	--
REVISIONS 4	--	--	--
FIELD CHANGES	--	--	--

SIGNATURE

P.E. NUMBER

DATE

FAIRFIELD - BENTON
INTERSTATE 95

PROFILE 12

SHEET NUMBER

23

OF 132

Sta. 1254+00 to Sta. 1261+00

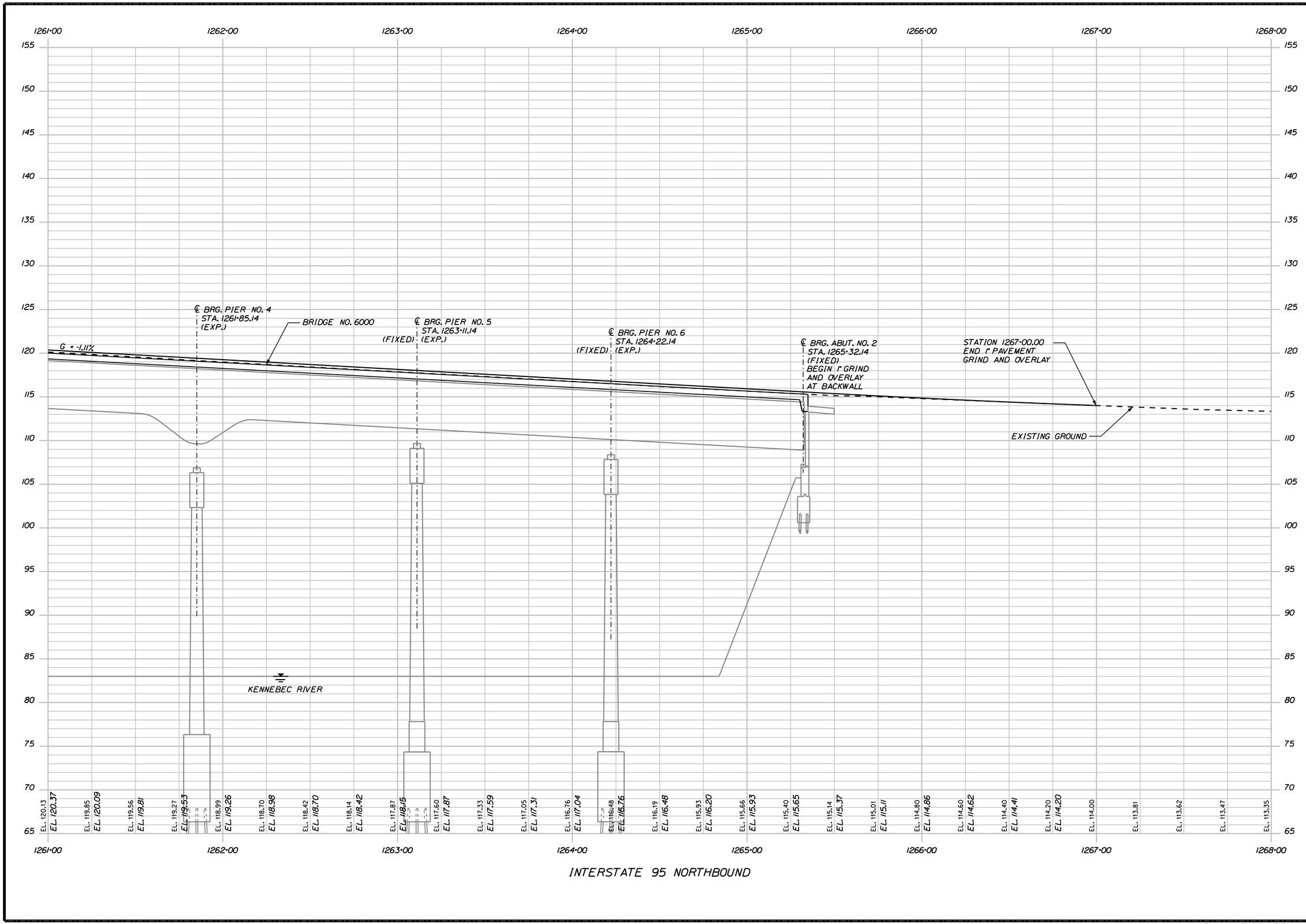

STATE OF MAINE
DEPARTMENT OF TRANSPORTATION

IM-1668(600)E, IM-A670(000)E & BR-1781(400)X

PIN
PIN 16686.00, 16700.00 & 17814.00 HIGHWAY PLANS

PROJ. MANAGER	B. CONDON	BY	DATE
DESIGN-DETAILED	TPL	MJC	06\11
CHECKED-REVIEWED	JGS	--	06\11
DESIGN2-DETAILED2	PDD	TPL	06\11
DESIGN3-DETAILED3	--	--	--
REVISIONS 1	--	--	--
REVISIONS 2	--	--	--
REVISIONS 3	--	--	--
REVISIONS 4	--	--	--
FIELD CHANGES	--	--	--

SIGNATURE

P.E. NUMBER

DATE

FAIRFIELD - BENTON
INTERSTATE 95

PROFILE 13

SHEET NUMBER
24
OF 132

Sta. 1261+00 to Sta. 1268+00

Filename: ...\nmsto\024_Profile_NB13.dgn Division: HIGHWAY Username: thigginson Date:6/20/2011

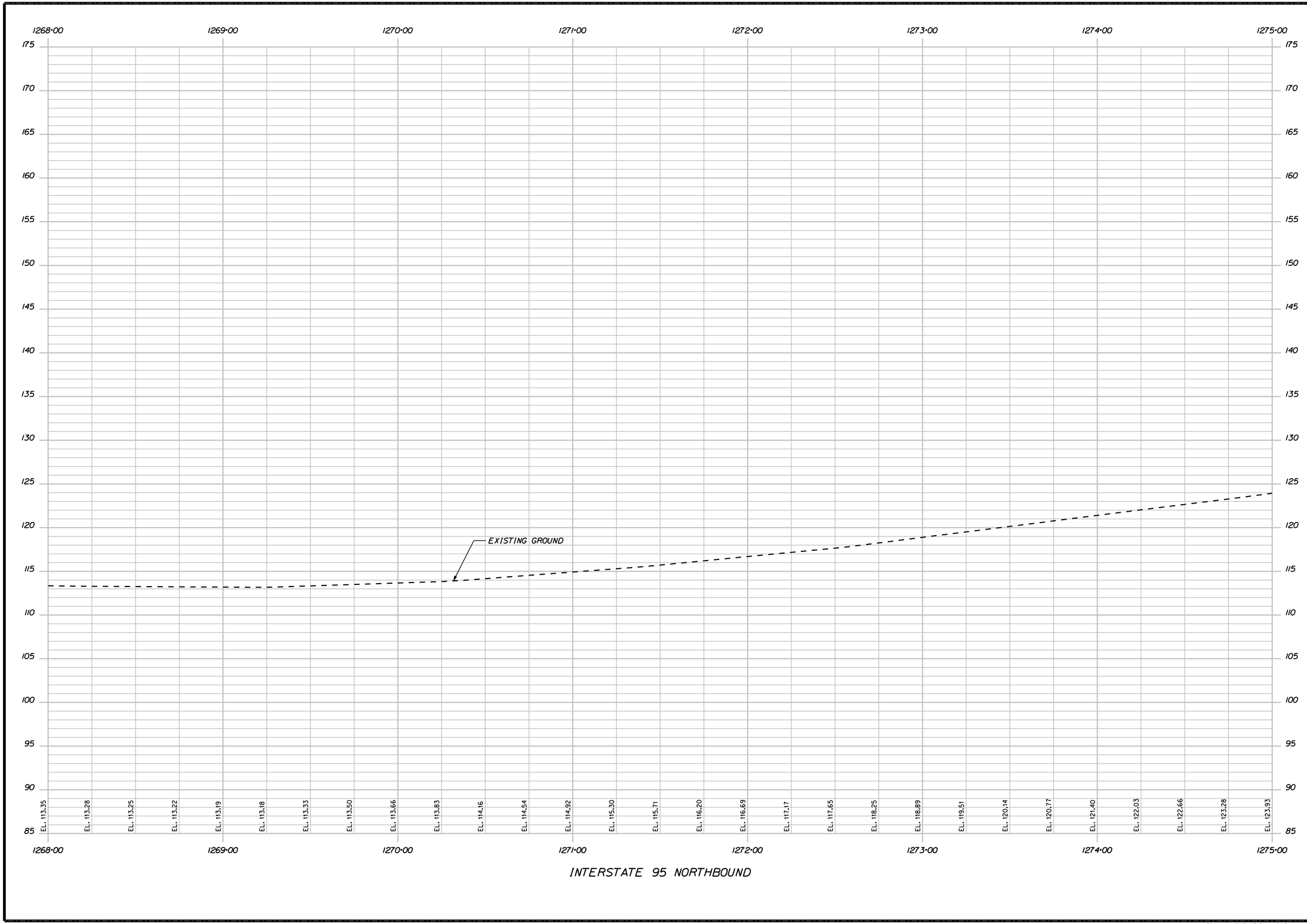

STATE OF MAINE
DEPARTMENT OF TRANSPORTATION

IM-1668(600)E, IM-A670(000)E & BR-1781(400)X

PIN
PIN 16686.00, 16700.00 & 17814.00 HIGHWAY PLANS

		BY	DATE
PROJ. MANAGER	B. CONDON		
DESIGN-DETAILED	TPL	MJC	06\11
CHECKED-REVIEWED	JGS	--	06\11
DESIGN2-DETAILED2	PRD	TPL	06\11
DESIGN3-DETAILED3	--	--	--
REVISIONS 1	--		--
REVISIONS 2	--		--
REVISIONS 3	--		--
REVISIONS 4	--		--
FIELD CHANGES	--		--

SIGNATURE

P.E. NUMBER

DATE

FAIRFIELD - BENTON
INTERSTATE 95

PROFILE 14

SHEET NUMBER
25
OF 132

Sta. 1268+00 to Sta. 1275+00

Filename: ...\msta\025_Profile_NB14.dgn Division: HIGHWAY Username: thigginson Date:6/20/2011

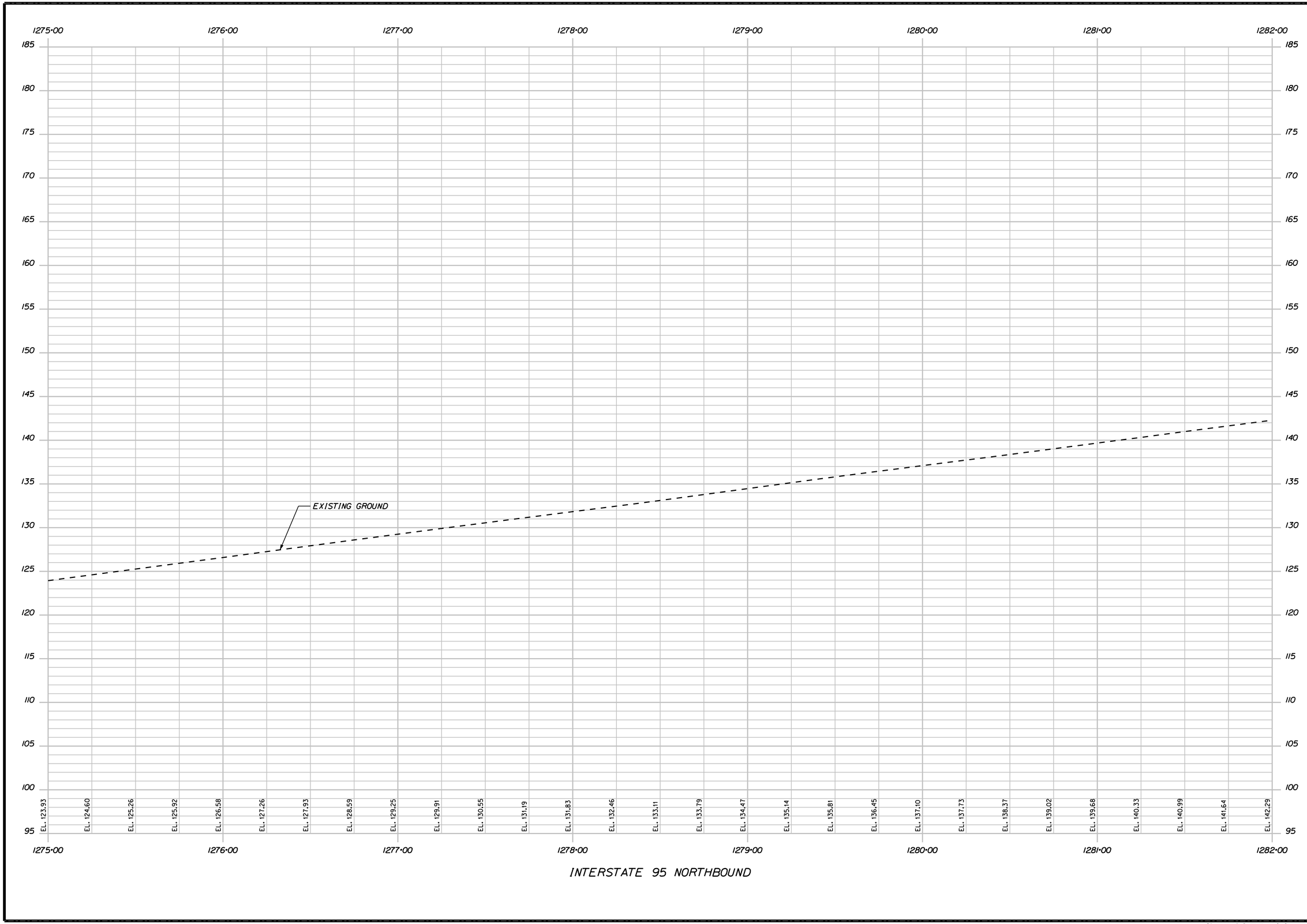

STATE OF MAINE
DEPARTMENT OF TRANSPORTATION

IM-1668(600)E, IM-A670(000)E & BR-1781(400)X

PIN
PIN 16686.00, 16700.00 & 17814.00 HIGHWAY PLANS

PROJ. MANAGER	B. CONDON	BY	DATE
DESIGN-DETAILED	TPL	MJC	06\11
CHECKED-REVIEWED	JGS	--	06\11
DESIGN2-DETAILED2	PBD	TPL	06\11
DESIGN3-DETAILED3	--	--	--
REVISIONS 1	--		--
REVISIONS 2	--		--
REVISIONS 3	--		--
REVISIONS 4	--		--
FIELD CHANGES	--		--

SIGNATURE

P.E. NUMBER

DATE

FAIRFIELD - BENTON
INTERSTATE 95

PROFILE 15

SHEET NUMBER
26
OF 132

Sta. 1275+00 to Sta. 1282+00

Filename: ...\msta\026_Profile_NB15.dgn Division: HIGHWAY Username: thigginson Date:6/20/2011

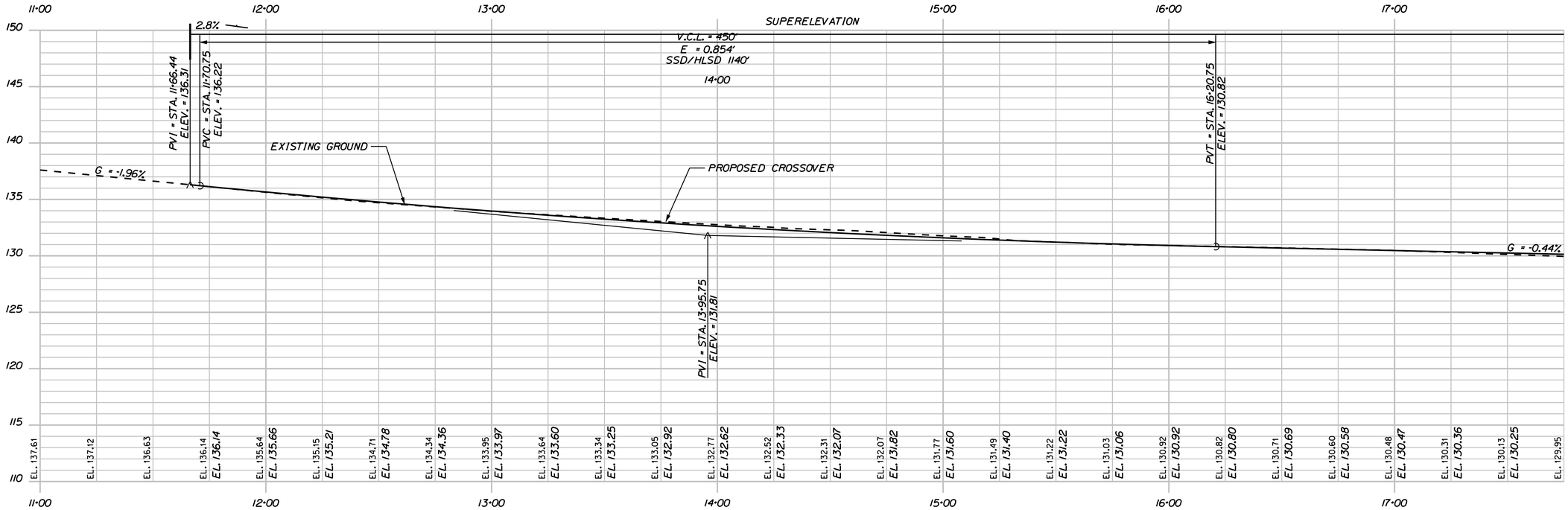

SOUTH CROSSOVER
STAGE 1

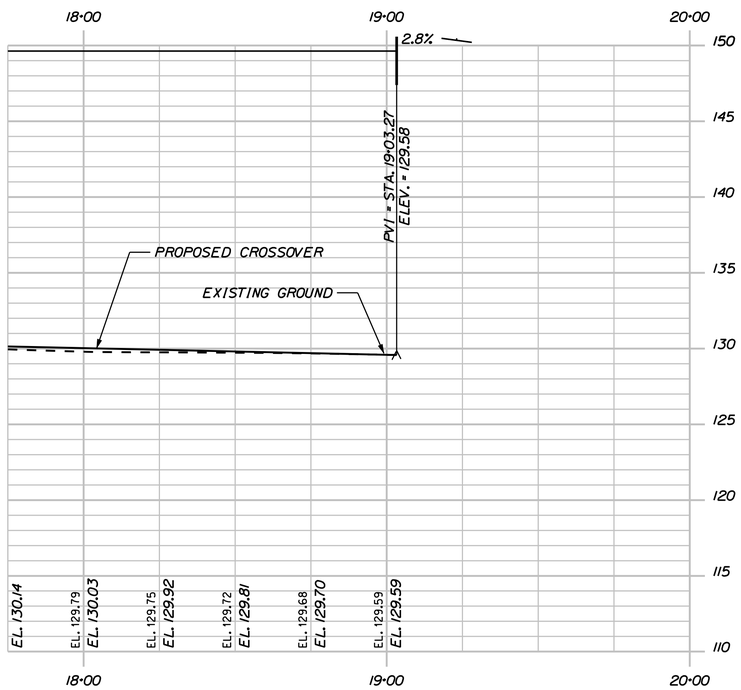

SOUTH CROSSOVER
STAGE 1

Filename: ...\msta\027_Profile_Det5.dgn Division: HIGHWAY Username: thigginson Date:6/20/2011

STATE OF MAINE
DEPARTMENT OF TRANSPORTATION

IM-1668(600)E, IM-A670(000)E & BR-1781(400)X

PIN
PIN 16686.00, 16700.00 & 17814.00 HIGHWAY PLANS

PROJ. MANAGER	B. CONDON	BY	DATE
DESIGN-DETAILED	TPL	MJC	06\11
CHECKED-REVIEWED	JGS	--	06\11
DESIGN2-DETAILED2	PDD	TPL	06\11
DESIGN3-DETAILED3	--	--	--
REVISIONS 1	--	--	--
REVISIONS 2	--	--	--
REVISIONS 3	--	--	--
REVISIONS 4	--	--	--
FIELD CHANGES	--	--	--

SIGNATURE

P.E. NUMBER

DATE

FAIRFIELD - BENTON
INTERSTATE 95

DETOUR PROFILE 5

SHEET NUMBER
27
OF 132

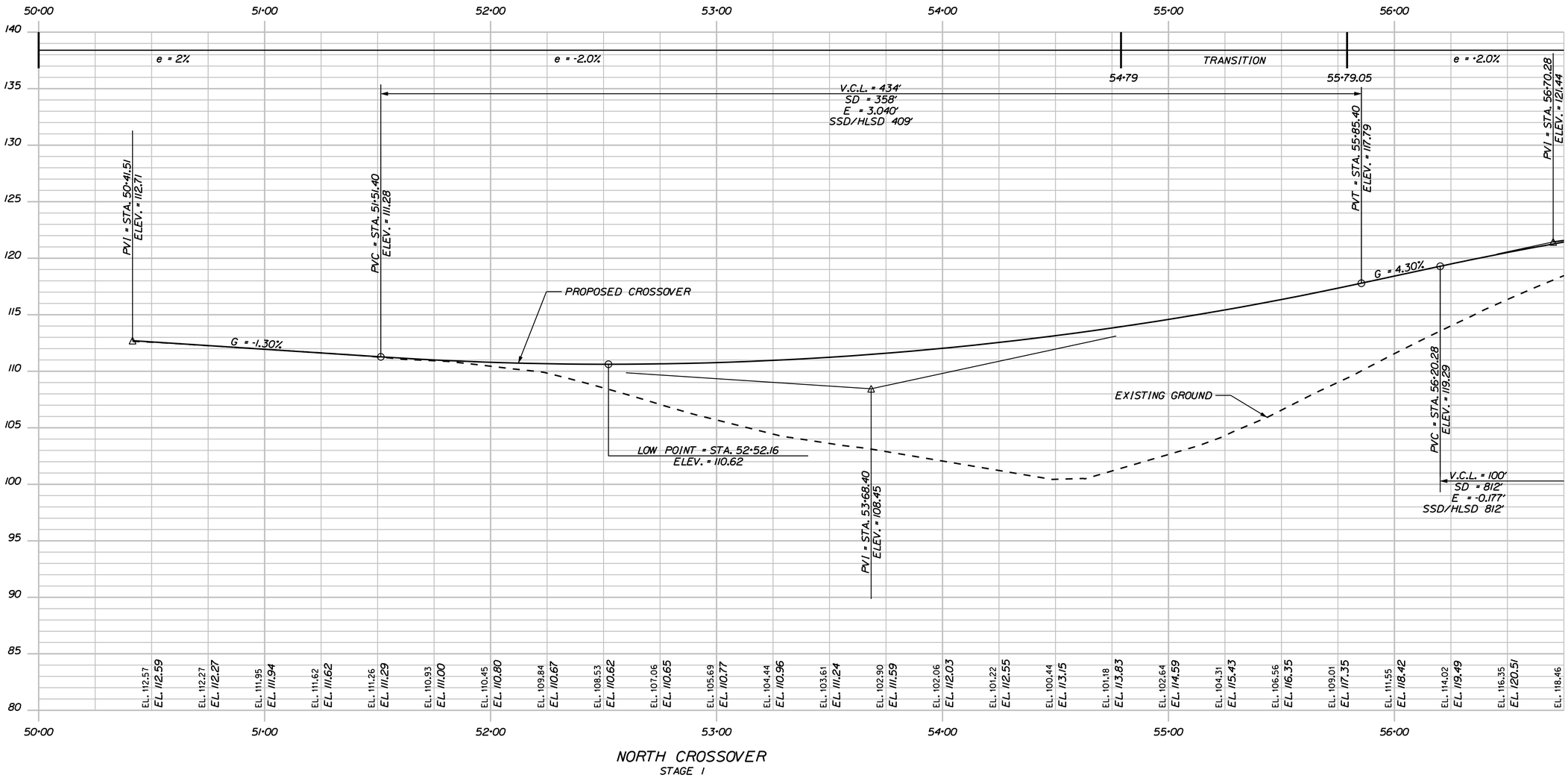

NORTH CROSSOVER
STAGE 1

Filename: ...\msta\028_Profile_Det1.dgn Division: HIGHWAY Username: thigginson Date:6/20/2011

STATE OF MAINE
DEPARTMENT OF TRANSPORTATION

IM-1668(600)E, IM-A670(000)E & BR-1781(400)X

PIN
PIN 16686.00, 16700.00 & 17814.00 HIGHWAY PLANS

PROJ. MANAGER	B. CONDON	BY	DATE
DESIGN-DETAILED	TPL	MJC	06\11
CHECKED-REVIEWED	JGS	--	06\11
DESIGN2-DETAILED2	PDD	TPL	06\11
DESIGN3-DETAILED3	--	--	--
REVISIONS 1	--		--
REVISIONS 2	--		--
REVISIONS 3	--		--
REVISIONS 4	--		--
FIELD CHANGES	--		--

SIGNATURE

P.E. NUMBER

DATE

FAIRFIELD - BENTON
INTERSTATE 95

DETOUR PROFILE 1

SHEET NUMBER
28
OF 132

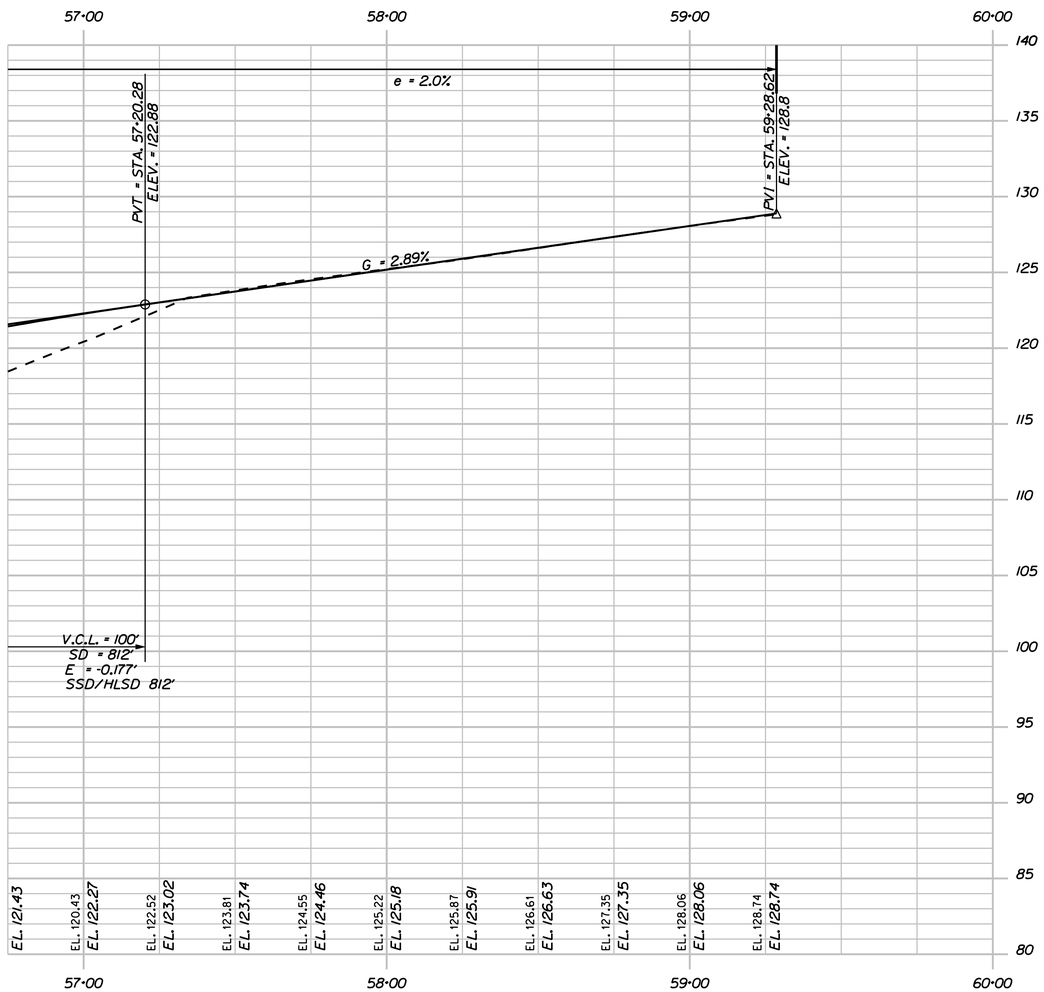

NORTH CROSSOVER
STAGE 1

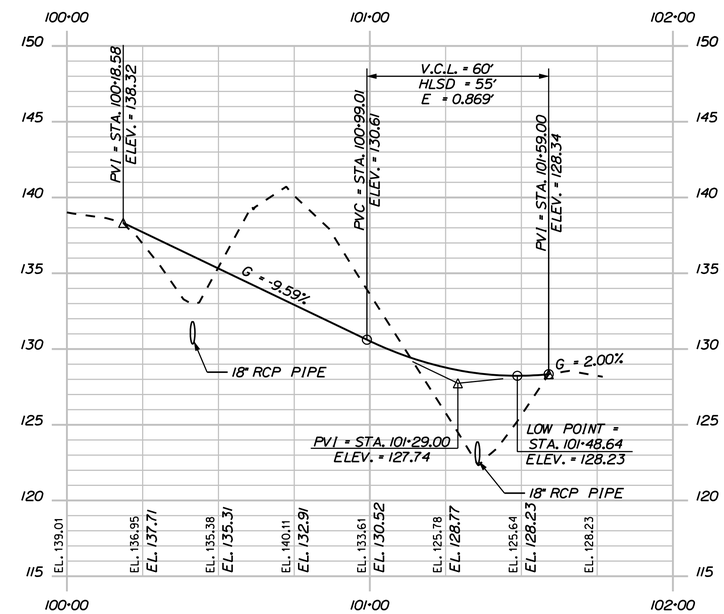

EMERGENCY MEDIAN
CROSSOVER PROFILE

STATE OF MAINE
DEPARTMENT OF TRANSPORTATION

IM-1668(600)E, IM-A670(000)E & BR-1781(400)X

PIN
PIN 16686.00, 16700.00 & 17814.00 HIGHWAY PLANS

PROJ. MANAGER	B. CONDON	BY	DATE
DESIGN-DETAILED	TPL	MJC	06\11
CHECKED-REVIEWED	JGS	--	06\11
DESIGN2-DETAILED2	PDD	TPL	06\11
DESIGN3-DETAILED3	--	--	--
REVISIONS 1	--		--
REVISIONS 2	--		--
REVISIONS 3	--		--
REVISIONS 4	--		--
FIELD CHANGES	--		--

SIGNATURE

P.E. NUMBER

DATE

FAIRFIELD - BENTON
INTERSTATE 95

DETOUR PROFILE 2

SHEET NUMBER
29
OF 132

Filename: ...\msta\029_Profile_Det2.dgn Division: HIGHWAY Username: thigginson Date:6/20/2011

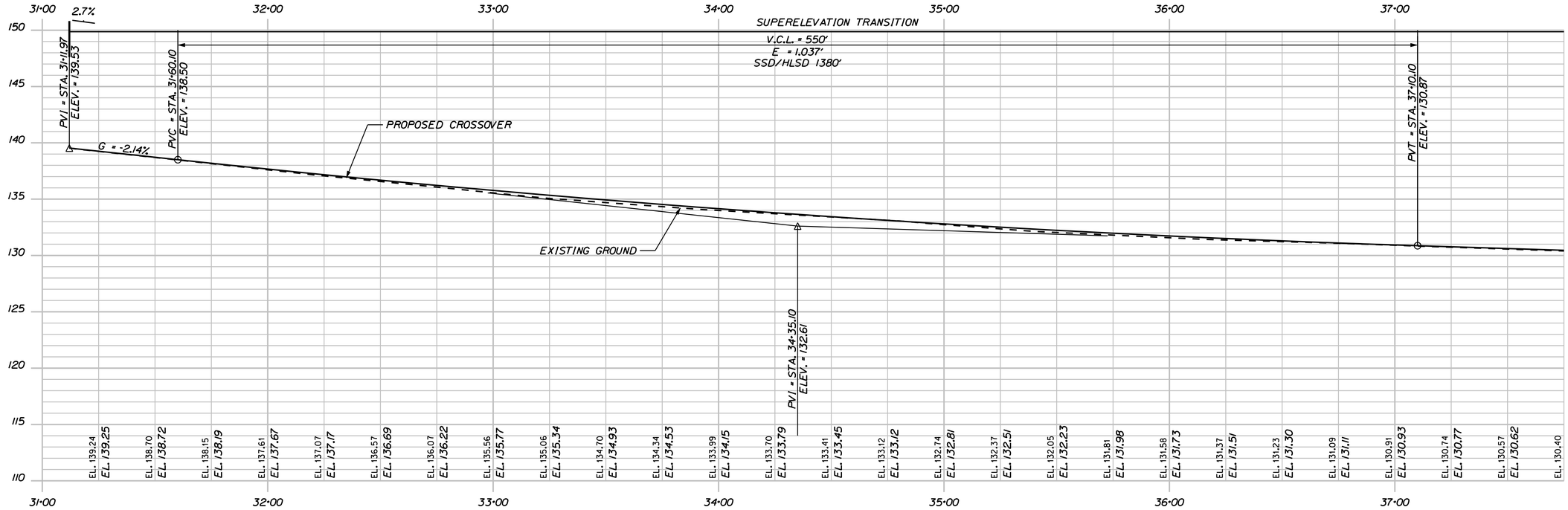

SOUTH CROSSOVER
STAGE 2

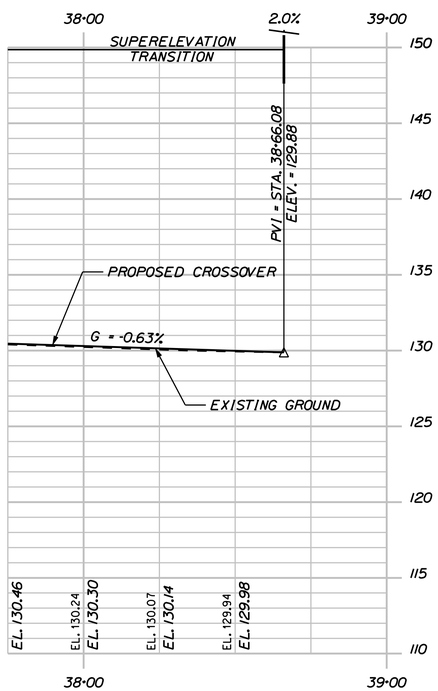

SOUTH CROSSOVER
STAGE 2

Filename: ...\msta\030_Profile_Det6.dgn Division: HIGHWAY Username: thigginson Date:6/20/2011

STATE OF MAINE
DEPARTMENT OF TRANSPORTATION

IM-1668(600)E, IM-A670(000)E & BR-1781(400)X

PIN
PIN 16686.00, 16700.00 & 17814.00 HIGHWAY PLANS

PROJ. MANAGER	B. CONDON	BY	DATE
DESIGN-DETAILED	TPL	MJC	06\11
CHECKED-REVIEWED	JGS	--	06\11
DESIGN2-DETAILED2	PDD	TPL	06\11
DESIGN3-DETAILED3	--	--	--
REVISIONS 1	--	--	--
REVISIONS 2	--	--	--
REVISIONS 3	--	--	--
REVISIONS 4	--	--	--
FIELD CHANGES	--	--	--

SIGNATURE

P.E. NUMBER

DATE

FAIRFIELD - BENTON
INTERSTATE 95

DETOUR PROFILE 6

SHEET NUMBER
30
OF 132

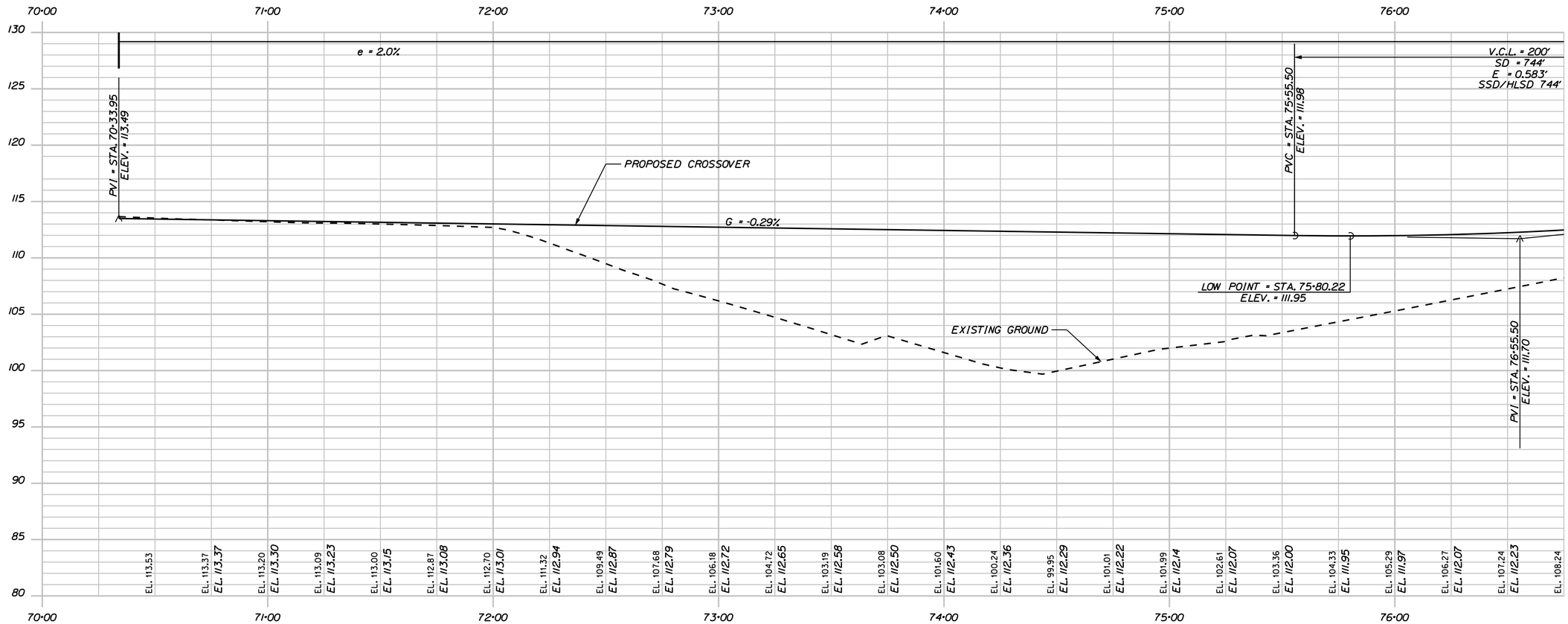

NORTH CROSSOVER
STAGE 2

PROFILE

Filename: ...\msta\031_Profile_Det3.dgn Division: HIGHWAY Username: thigginson Date:6/20/2011

STATE OF MAINE
DEPARTMENT OF TRANSPORTATION

IM-1668(600)E, IM-A670(000)E & BR-1781(400)X

PIN
PIN 16686.00, 16700.00 & 17814.00 HIGHWAY PLANS

PROJ. MANAGER	B. CONDON	BY	DATE
DESIGN-DETAILED	TPL	MJC	06\11
CHECKED-REVIEWED	JGS	--	06\11
DESIGN2-DETAILED2	PDD	TPL	06\11
DESIGN3-DETAILED3	--	--	--
REVISIONS 1	--		--
REVISIONS 2	--		--
REVISIONS 3	--		--
REVISIONS 4	--		--
FIELD CHANGES	--		--

SIGNATURE

P.E. NUMBER

DATE

FAIRFIELD - BENTON
INTERSTATE 95

DETOUR PROFILE 3

SHEET NUMBER

31

OF 132

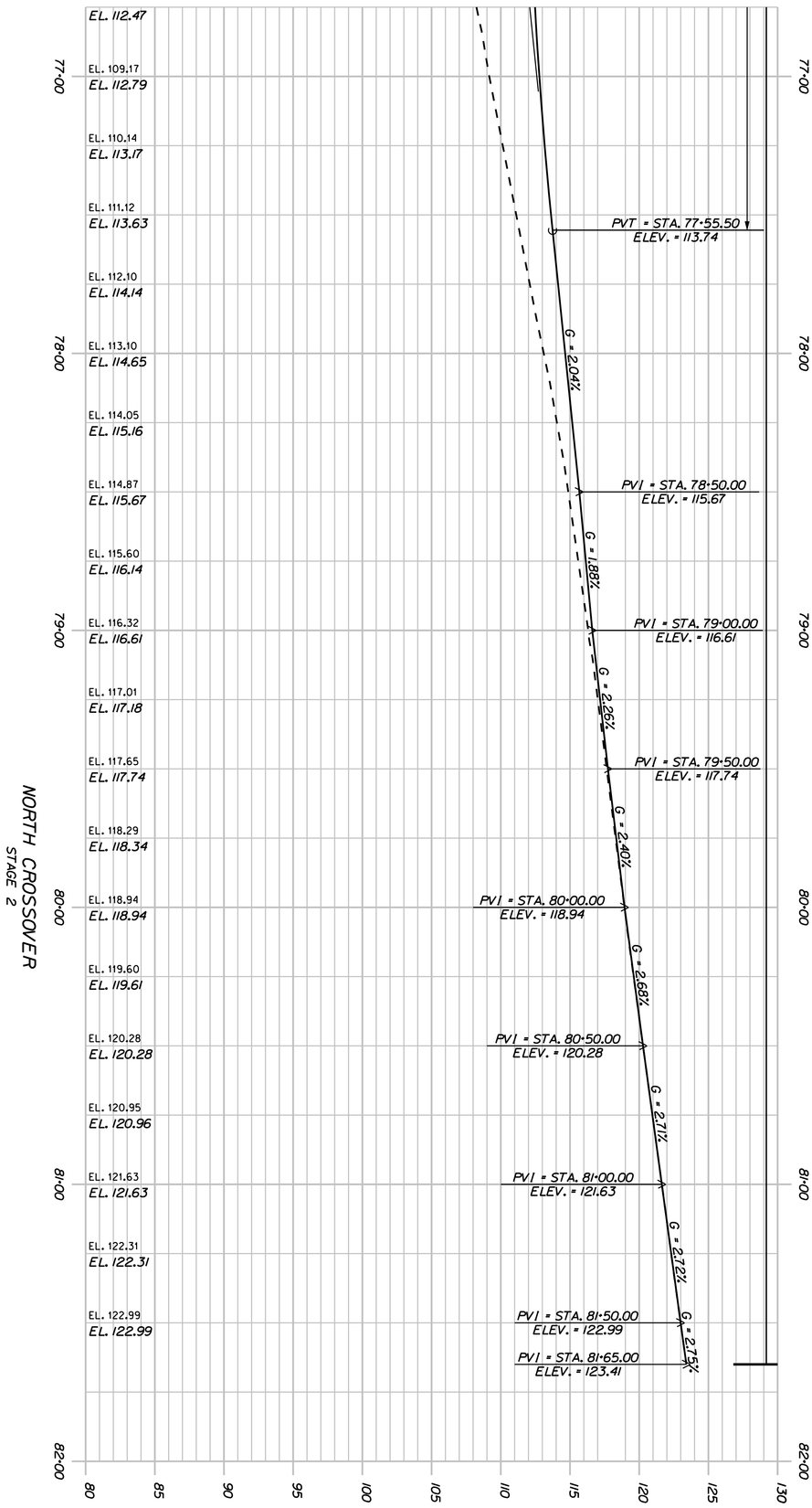

PROJ. MANAGER	B. CONDON	BY	DATE
DESIGN-DETAILED	TPL	MJC	06\11
CHECKED-REVIEWED	JGS	--	06\11
DESIGN2-DETAILED2	PDD	TPL	06\11
DESIGN3-DETAILED3	--	--	--
REVISIONS 1	--		--
REVISIONS 2	--		--
REVISIONS 3	--		--
REVISIONS 4	--		--
FIELD CHANGES	--		--

SIGNATURE

P.E. NUMBER

DATE

FAIRFIELD - BENTON
INTERSTATE 95

DETOUR PROFILE 4

STATE OF MAINE
DEPARTMENT OF TRANSPORTATION

IM-1668(600)E, IM-A670(000)E & BR-1781(400)X

PIN
PIN 16686.00, 16700.00 & 17814.00 HIGHWAY PLANS

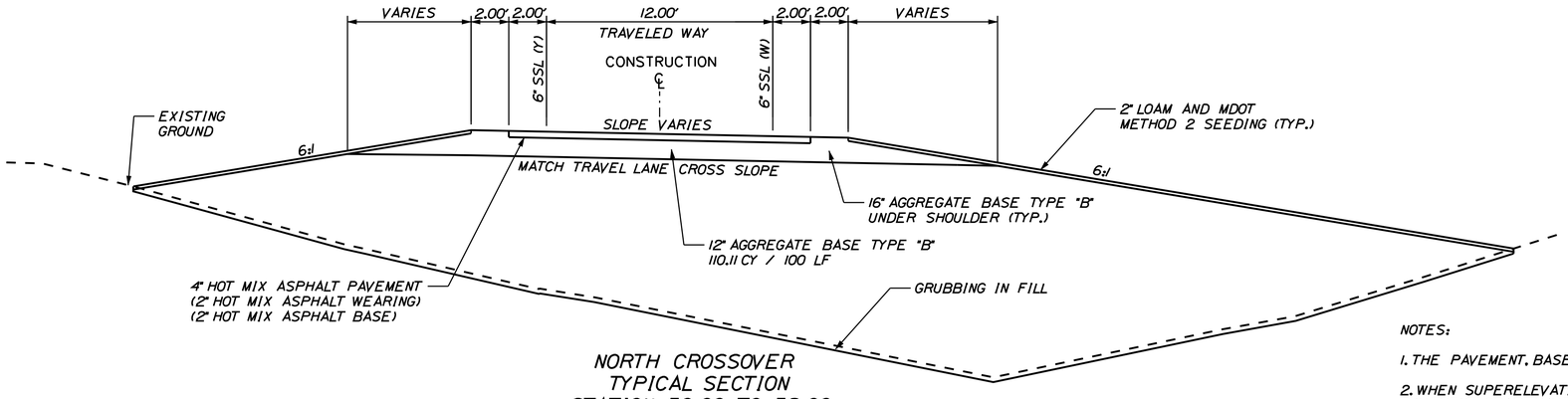

NORTH CROSSOVER
TYPICAL SECTION
STATION 50+00 TO 58+00
STATION 70+00 TO 80+00

NOTES:

1. THE PAVEMENT, BASE, AND SUBBASE DEPTHS AS SHOWN ON THE PLANS ARE INTENDED TO BE NOMINAL.
2. WHEN SUPERELEVATION EXCEEDS THE SLOPE OF THE LOW SIDE SHOULDER, THE LOW SIDE SHOULDERS PAVEMENT SHALL HAVE THE SAME CROSS SLOPE AS THE TRAVELED WAY.
3. CROWNS FOR BOTH NORMAL AND SUPERELEVATED SECTIONS FOR ALL COURSES OF SUBBASE AND PAVEMENT SHALL BE STRAIGHT.
4. THE ALGEBRAIC DIFFERENCE BETWEEN SHOULDER AND TRAVELED LANE CROSS SLOPES "ROLLOVER" SHALL NOT EXCEED 8%.
5. THE STATIONING SHOWN UNDER EACH TYPICAL IS APPROXIMATE.
6. REFER TO PROFILES FOR SUPERELEVATION TRANSITIONS.

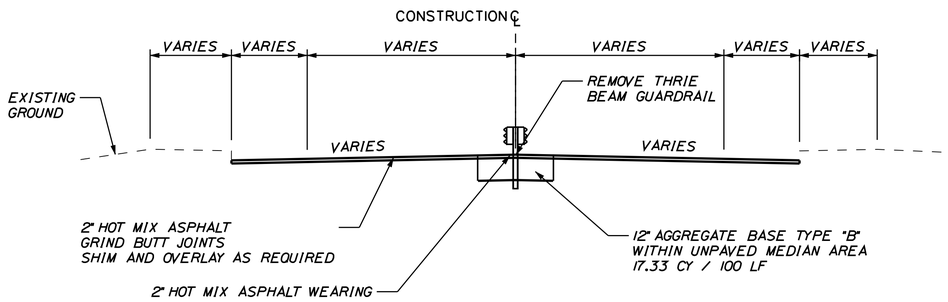

SOUTHERLY CROSSOVERS
TYPICAL SECTION

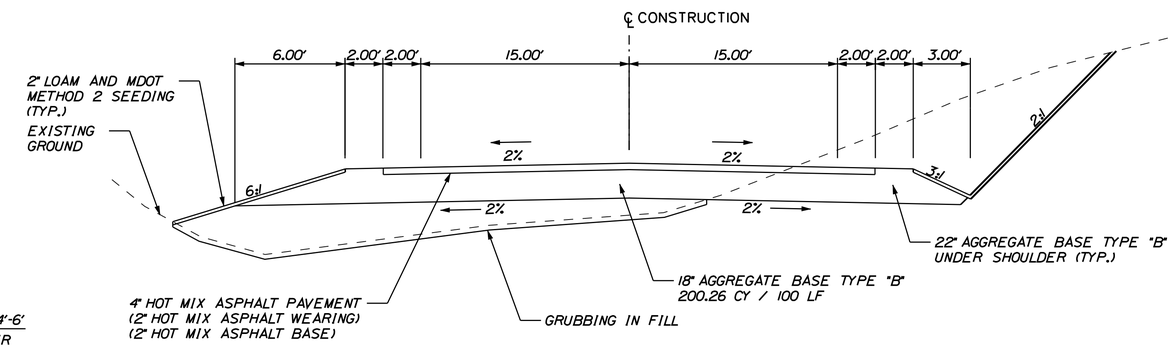

EMERGENCY MEDIAN CROSSOVER
TYPICAL SECTION

NOTE: INTERIM 2-WAY TRAFFIC PAVEMENT MARKINGS SHALL BE OBLITERATED AS REQUIRED TO RETURN TO EXISTING LANE CONFIGURATION.

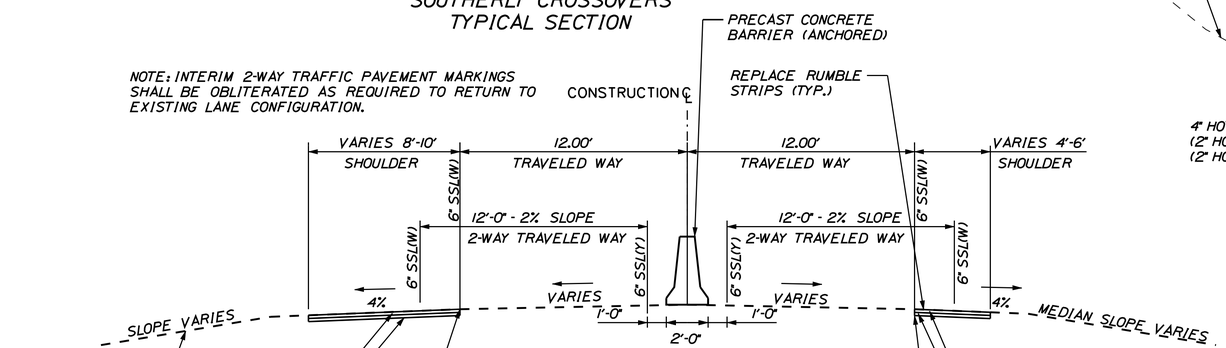

TWO WAY TRAFFIC
TYPICAL SECTION

STAGE I
STATION SB 1249+00 TO 1270+00

STAGE II
STATION NB 1247+00 TO 1268+50

LIMIT OF SHOULDER RECONSTRUCTION:

STAGE I
STATION SB 1249+00 TO 1252+00
SB 1252+92 TO 1256+58
SB 1266+98 TO 1270+00

STAGE II
STATION NB 1247+00 TO 1250+84
NB 1252+10 TO 1256+00
NB 1265+35 TO 1268+50

SCALE: 1" = 4'-0"

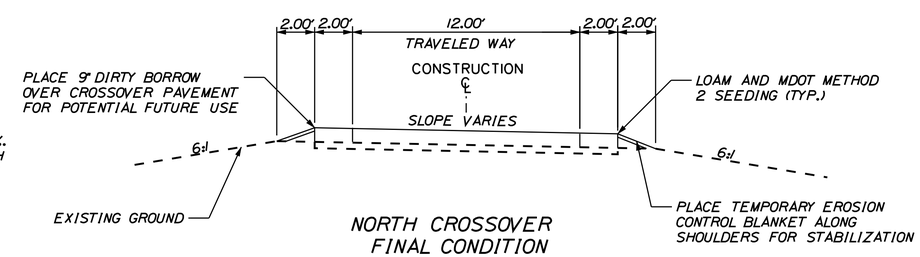

NORTH CROSSOVER
FINAL CONDITION
TYPICAL SECTION
STATION 50+00 TO 58+00
STATION 70+00 TO 80+00

STATE OF MAINE
DEPARTMENT OF TRANSPORTATION

IM-1668(600)E, IM-A670(000)E & BR-1781(400)X

PIN
PIN 16686.00, 16700.00 & 17814.00 HIGHWAY PLANS

PROJ. MANAGER	B. CONDON	BY	DATE
DESIGN-DETAILED	TPL	MJC	06\11
CHECKED-REVIEWED	JGS	--	06\11
DESIGN2-DETAILED2	PDD	TPL	06\11
DESIGN3-DETAILED3	--	--	--
REVISIONS 1	--		--
REVISIONS 2	--		--
REVISIONS 3	--		--
REVISIONS 4	--		--
FIELD CHANGES	--		--

SIGNATURE

P.E. NUMBER

DATE

FAIRFIELD - BENTON
INTERSTATE 95

TYPICAL APPROACH SECTIONS

SHEET NUMBER
33
OF 132

Filename: ...\highway\msta\033_Typical.dgn Division: HIGHWAY Username: thigginson Date:6/20/2011

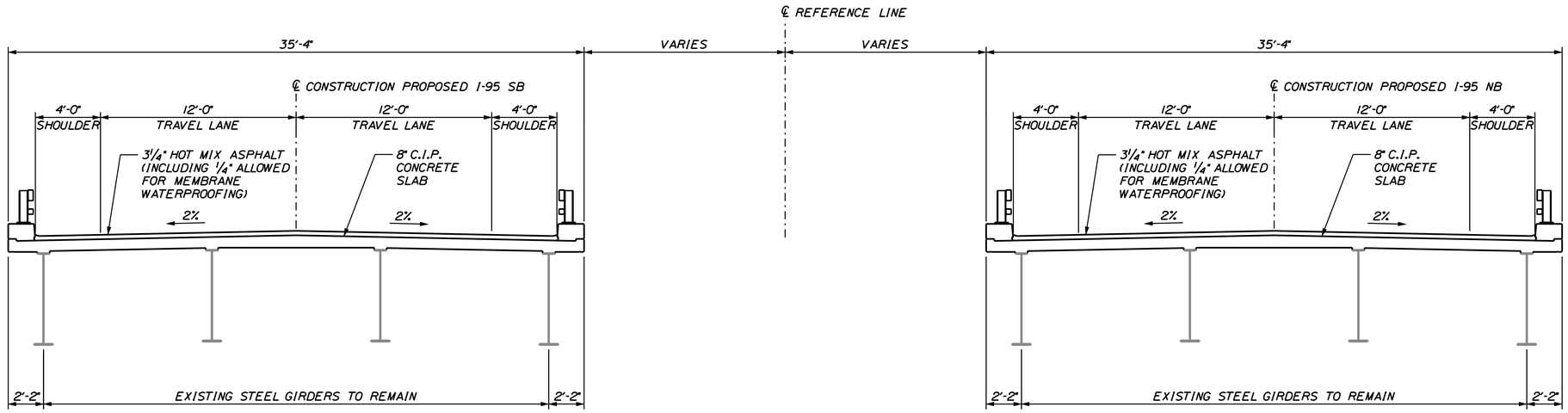

PROPOSED SECTION - C. A. CLAUSON MEMORIAL BRIDGES

SCALE: ¼" = 1'-0"

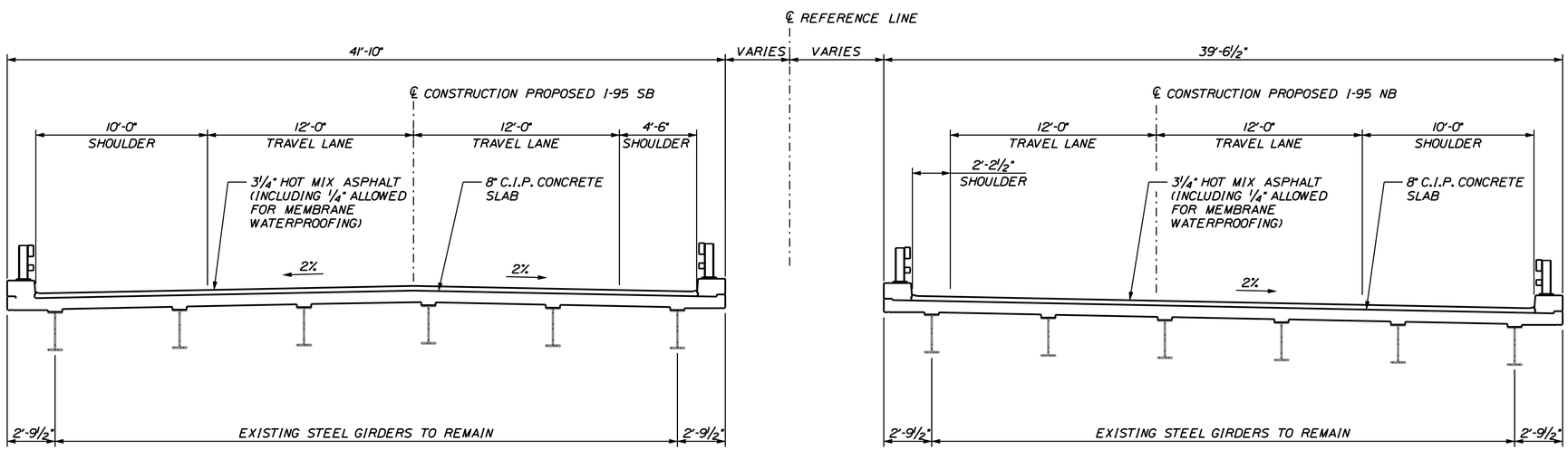

PROPOSED SECTION - MAINE CENTRAL RAILROAD BRIDGE

SCALE: ¼" = 1'-0"

STATE OF MAINE
DEPARTMENT OF TRANSPORTATION

IM-1781(400)X

PIN 17814.00

PROJ. MANAGER	B. CONDON	BY	DATE
DESIGN-DETAILED	TPL	MJC	06\11
CHECKED-REVIEWED	JGS	--	06\11
DESIGN2-DETAILED2	PDD	TPL	06\11
DESIGN3-DETAILED3	--	--	--
REVISIONS 1	--		--
REVISIONS 2	--		--
REVISIONS 3	--		--
REVISIONS 4	--		--
FIELD CHANGES	--		--

SIGNATURE

P.E. NUMBER

DATE

FAIRFIELD - BENTON
INTERSTATE 95

TYPICAL BRIDGE SECTIONS

SHEET NUMBER

34

OF 132

Filename: ...\MSTA\034_BTypical_sect.dgn Division: HIGHWAY Username: mcarignan Date:6/6/2011

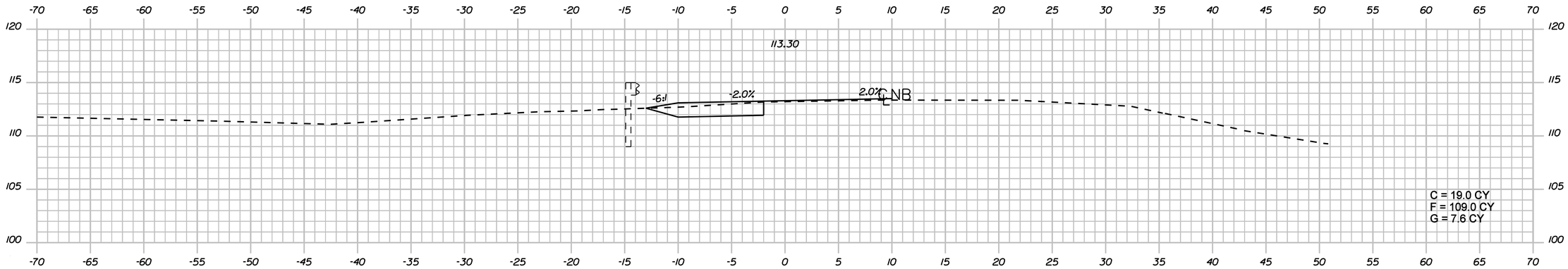

71+00.00

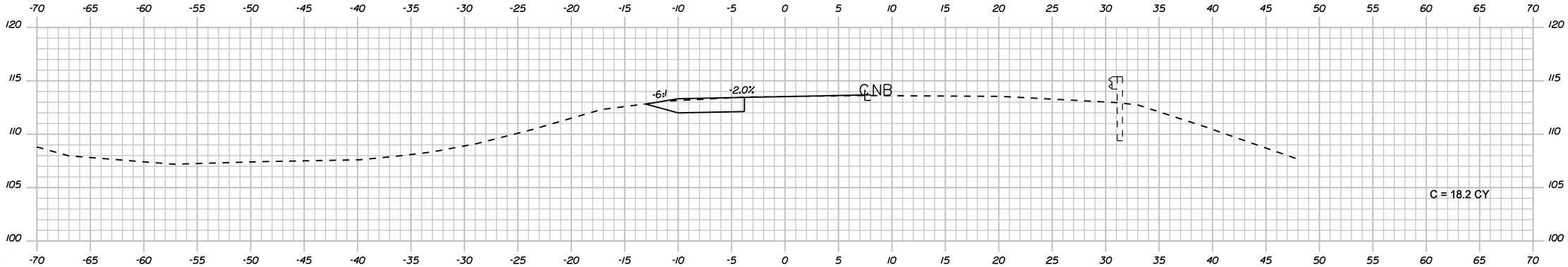

70+50.00

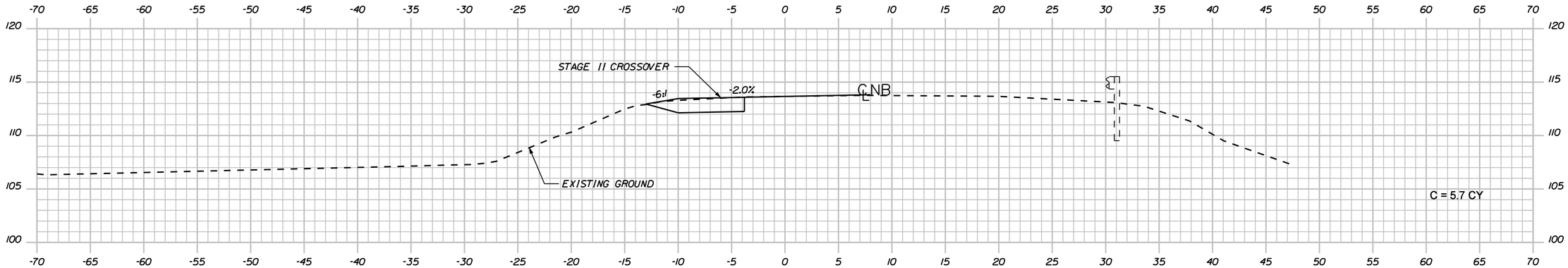

70+33.95

STATE OF MAINE
DEPARTMENT OF TRANSPORTATION

IM-1668(600)E, IM-A670(000)E & BR-1781(400)X

PIN
PIN 16686.00, 16700.00 & 17814.00 HIGHWAY PLANS

		BY	DATE
PROJ. MANAGER	B. CONDON		
DESIGN-DETAILED	TPL	MJC	06\11
CHECKED-REVIEWED	JGS	--	06\11
DESIGN2-DETAILED2	PDD	TPL	06\11
DESIGN3-DETAILED3	--	--	--
REVISIONS 1	--		--
REVISIONS 2	--		--
REVISIONS 3	--		--
REVISIONS 4	--		--
FIELD CHANGES	--		--

SIGNATURE

P.E. NUMBER

DATE

FAIRFIELD - BENTON
INTERSTATE 95

STAGE 2 CROSS SECTIONS

SHEET NUMBER
35
OF 132

Sta. 70+33.95 to Sta. 71+00.00

Filename: ...\highway\msta\038_Xsect.dgn Division: HIGHWAY Username: thigginson Date:6/20/2011

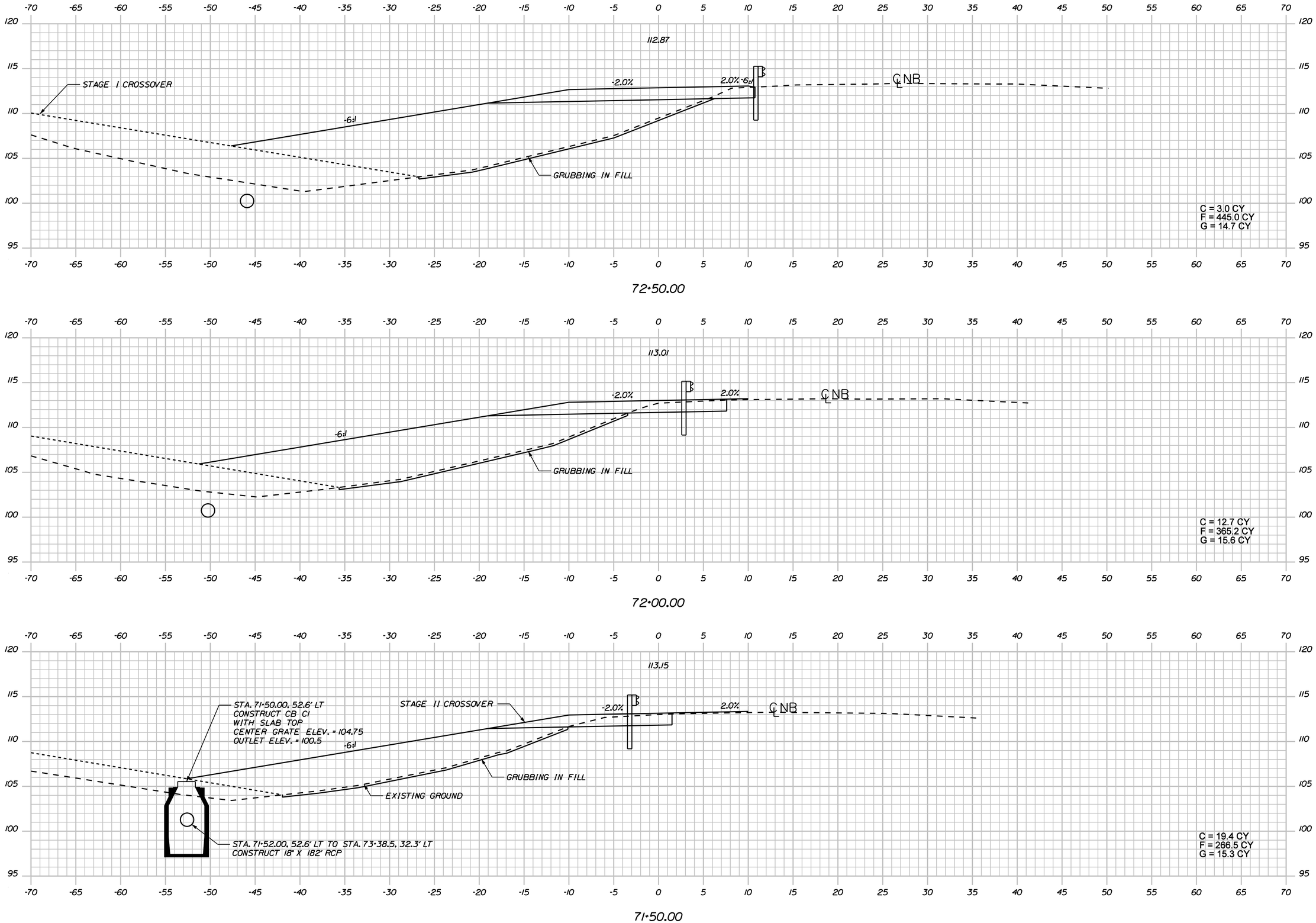

STATE OF MAINE
DEPARTMENT OF TRANSPORTATION

IM-1668(600)E, IM-A670(000)E & BR-1781(400)X

PIN
PIN 16686.00, 16700.00 & 17814.00 HIGHWAY PLANS

		BY	DATE
PROJ. MANAGER	B. CONDON		
DESIGN-DETAILED	TPL	MJC	06\11
CHECKED-REVIEWED	JGS	--	06\11
DESIGN2-DETAILED2	PDD	TPL	06\11
DESIGN3-DETAILED3	--	--	--
REVISIONS 1	--		--
REVISIONS 2	--		--
REVISIONS 3	--		--
REVISIONS 4	--		--
FIELD CHANGES	--		--

SIGNATURE

P.E. NUMBER

DATE

FAIRFIELD - BENTON
INTERSTATE 95

STAGE 2 CROSS SECTIONS

SHEET NUMBER
36
OF 132

Sta. 71+50.00 to Sta. 72+50.00

Filename: ...\highway\ms1o\038_Xsect.dgn Division: HIGHWAY Username: thigginson Date:6/20/2011

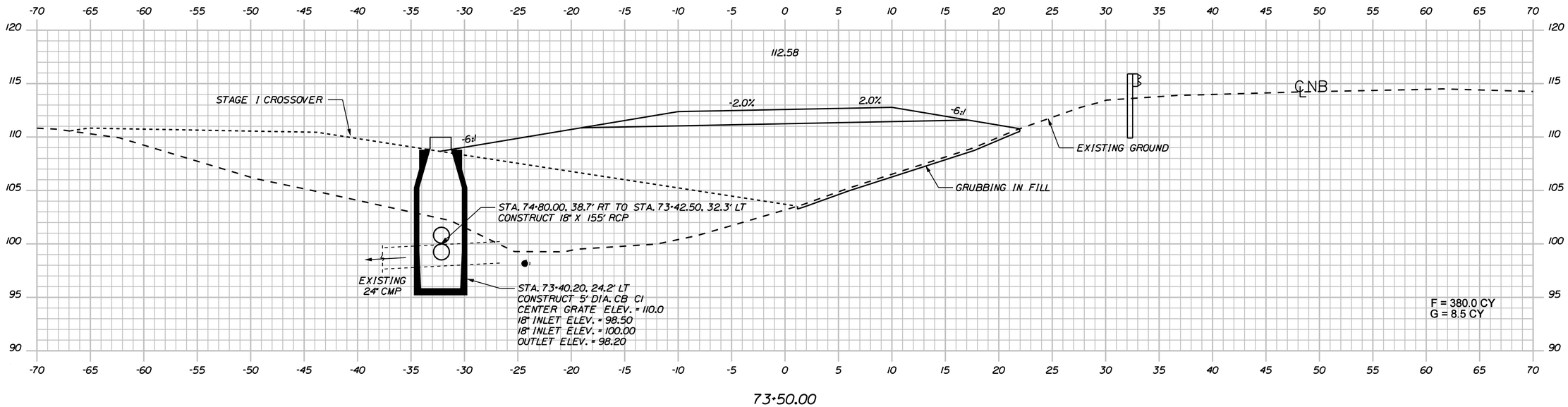

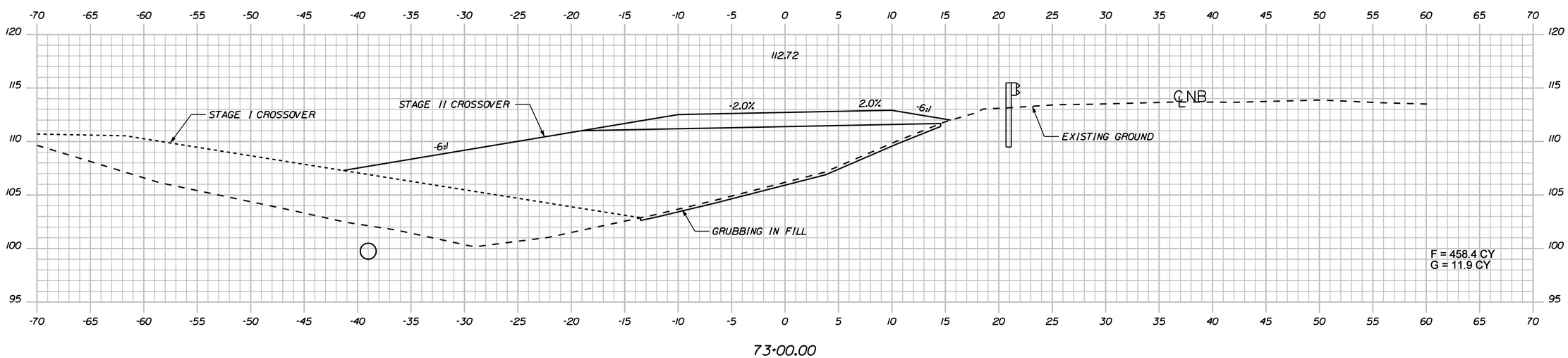

STATE OF MAINE
DEPARTMENT OF TRANSPORTATION

IM-1668(600)E, IM-A670(000)E & BR-1781(400)X

PIN
PIN 16686.00, 16700.00 & 17814.00 HIGHWAY PLANS

PROJ. MANAGER	B. CONDON	BY	DATE
DESIGN-DETAILED	TPL	MJC	06\11
CHECKED-REVIEWED	JGS	--	06\11
DESIGN2-DETAILED2	PDD	TPL	06\11
DESIGN3-DETAILED3	--	--	--
REVISIONS 1	--	--	--
REVISIONS 2	--	--	--
REVISIONS 3	--	--	--
REVISIONS 4	--	--	--
FIELD CHANGES	--	--	--

SIGNATURE

P.E. NUMBER

DATE

FAIRFIELD - BENTON
INTERSTATE 95

STAGE 2 CROSS SECTIONS

SHEET NUMBER
37
OF 132

Filename: ...\highway\ms1o\038_Xsect.dgn Division: HIGHWAY Username: thigginson Date:6/20/2011

Sta. 73+00.00 to Sta. 73+50.00

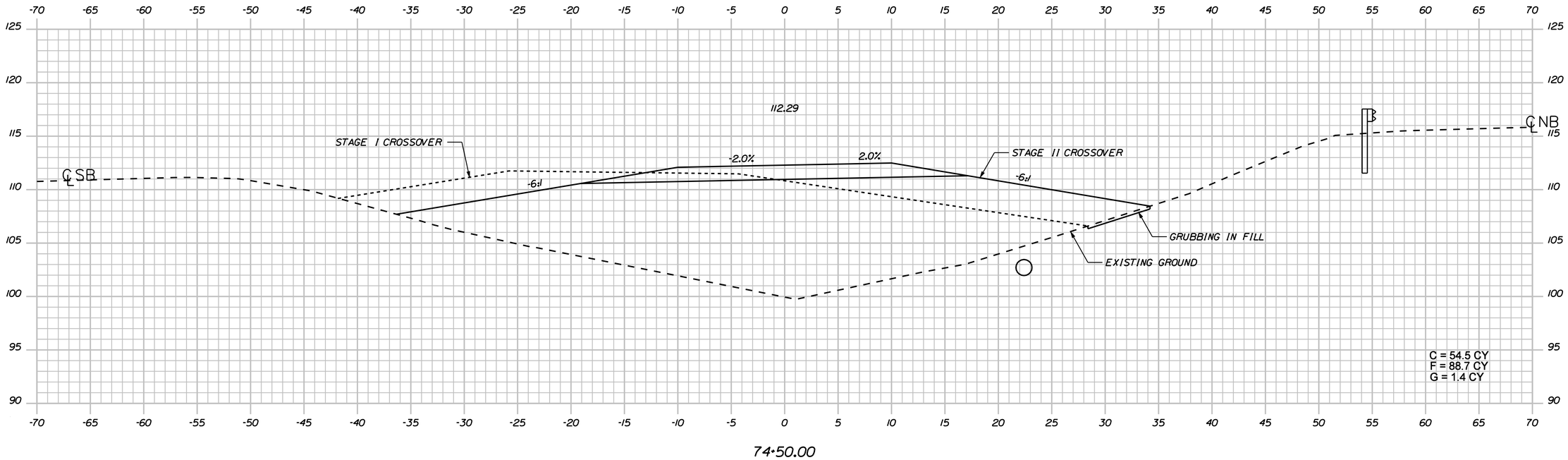

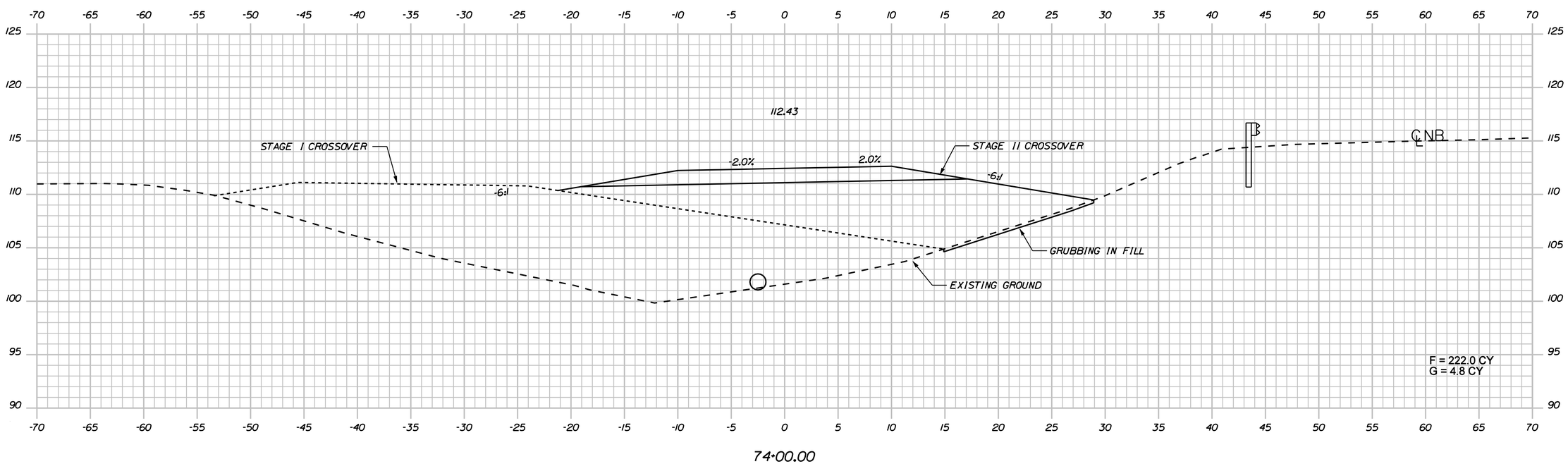

Sta. 74+00.00 to Sta. 74+50.00

STATE OF MAINE
DEPARTMENT OF TRANSPORTATION

IM-1668(600)E, IM-A670(000)E & BR-1781(400)X

PIN
PIN 16686.00, 16700.00 & 17814.00 HIGHWAY PLANS

PROJ. MANAGER	B. CONDON	BY	DATE
DESIGN-DETAILED	TPL	MJC	06\11
CHECKED-REVIEWED	JGS	--	06\11
DESIGN2-DETAILED2	PDD	TPL	06\11
DESIGN3-DETAILED3	--	--	--
REVISIONS 1	--	--	--
REVISIONS 2	--	--	--
REVISIONS 3	--	--	--
REVISIONS 4	--	--	--
FIELD CHANGES	--	--	--

SIGNATURE

P.E. NUMBER

DATE

FAIRFIELD - BENTON
INTERSTATE 95

STAGE 2 CROSS SECTIONS

SHEET NUMBER
38
OF 132

Filename: ...\highway\msto\038_Xsect.dgn Division: HIGHWAY Username: thigginson Date:6/20/2011

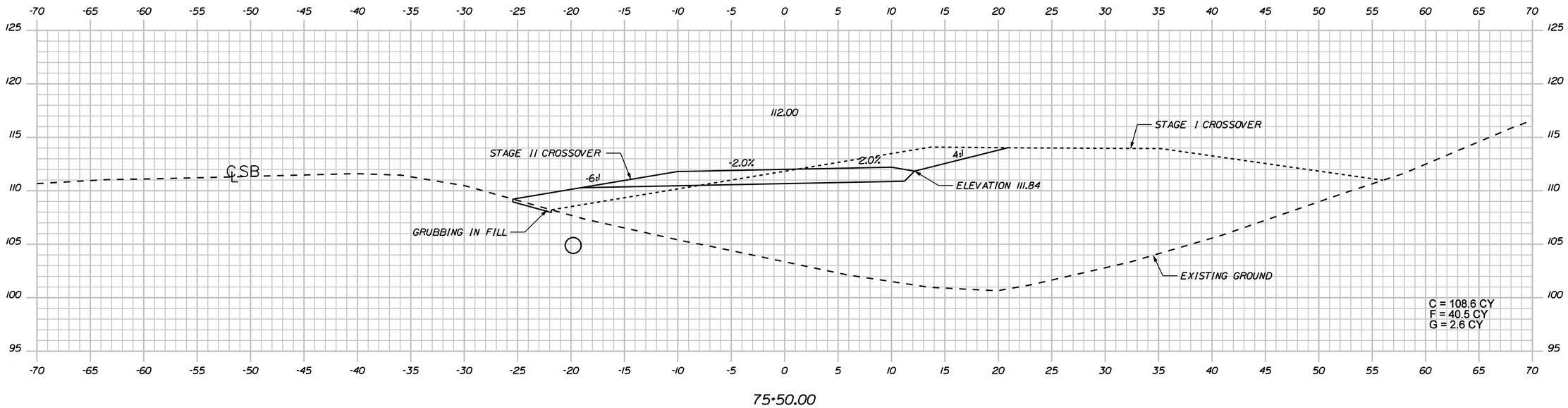

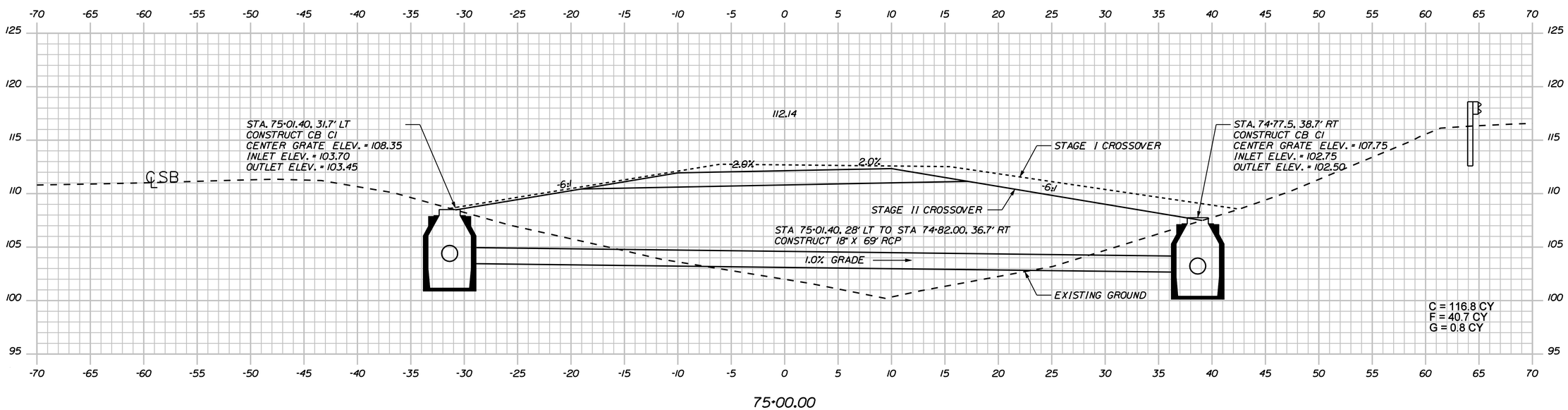

Sta. 75+00.00 to Sta. 75+50.00

STATE OF MAINE
DEPARTMENT OF TRANSPORTATION

IM-1668(600)E, IM-A670(000)E & BR-1781(400)X

PIN
PIN 16686.00, 16700.00 & 17814.00 HIGHWAY PLANS

PROJ. MANAGER	B. CONDON	BY	DATE
DESIGN-DETAILED	TPL	MJC	06\11
CHECKED-REVIEWED	JGS	--	06\11
DESIGN2-DETAILED2	PDD	TPL	06\11
DESIGN3-DETAILED3	--	--	--
REVISIONS 1	--	--	--
REVISIONS 2	--	--	--
REVISIONS 3	--	--	--
REVISIONS 4	--	--	--
FIELD CHANGES	--	--	--

SIGNATURE

P.E. NUMBER

DATE

FAIRFIELD - BENTON
INTERSTATE 95

STAGE 2 CROSS SECTIONS

SHEET NUMBER
39
OF 132

Filename: ...\highway\msto\038_Xsect.dgn Division: HIGHWAY Username: thigginson Date:6/20/2011

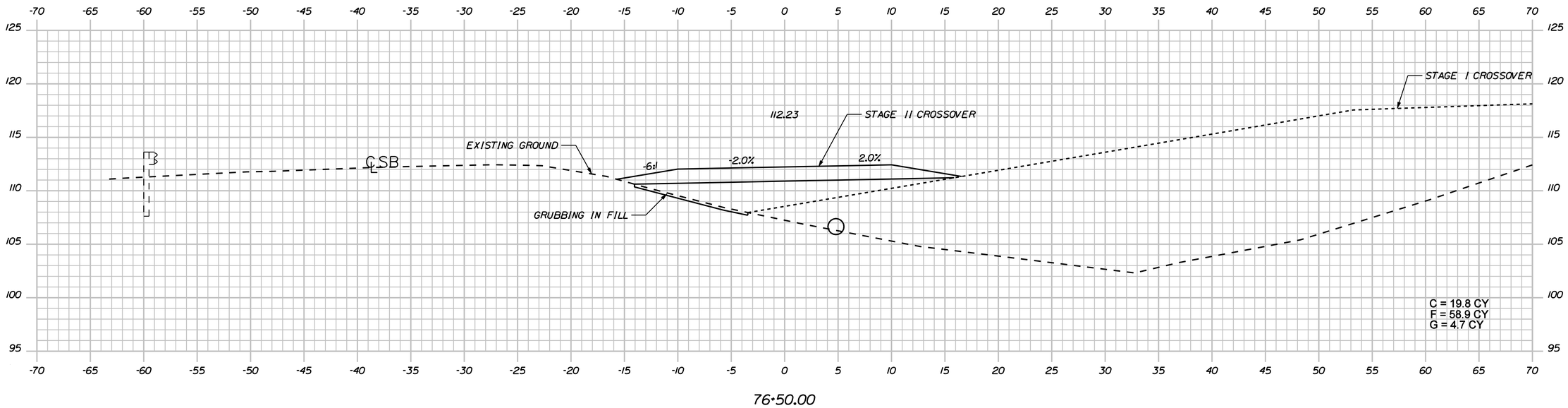

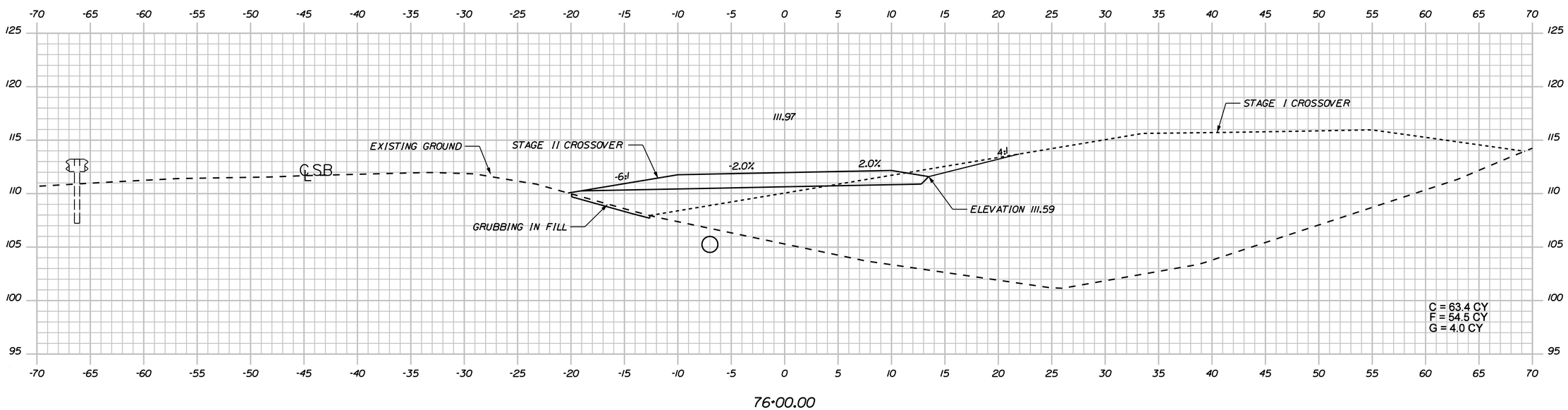

Sta. 76+00.00 to Sta. 76+50.00

STATE OF MAINE
DEPARTMENT OF TRANSPORTATION

IM-1668(600)E, IM-A670(000)E & BR-1781(400)X

PIN
PIN 16686.00, 16700.00 & 17814.00 HIGHWAY PLANS

PROJ. MANAGER	B. CONDON	BY	DATE
DESIGN-DETAILED	TPL	MJC	06\11
CHECKED-REVIEWED	JGS	--	06\11
DESIGN2-DETAILED2	PDD	TPL	06\11
DESIGN3-DETAILED3	--	--	--
REVISIONS 1	--	--	--
REVISIONS 2	--	--	--
REVISIONS 3	--	--	--
REVISIONS 4	--	--	--
FIELD CHANGES	--	--	--

SIGNATURE

P.E. NUMBER

DATE

FAIRFIELD - BENTON
INTERSTATE 95

STAGE 2 CROSS SECTIONS

SHEET NUMBER
40
OF 132

Filename: ...\highway\msto\038_Xsect.dgn Division: HIGHWAY Username: thigginson Date:6/20/2011

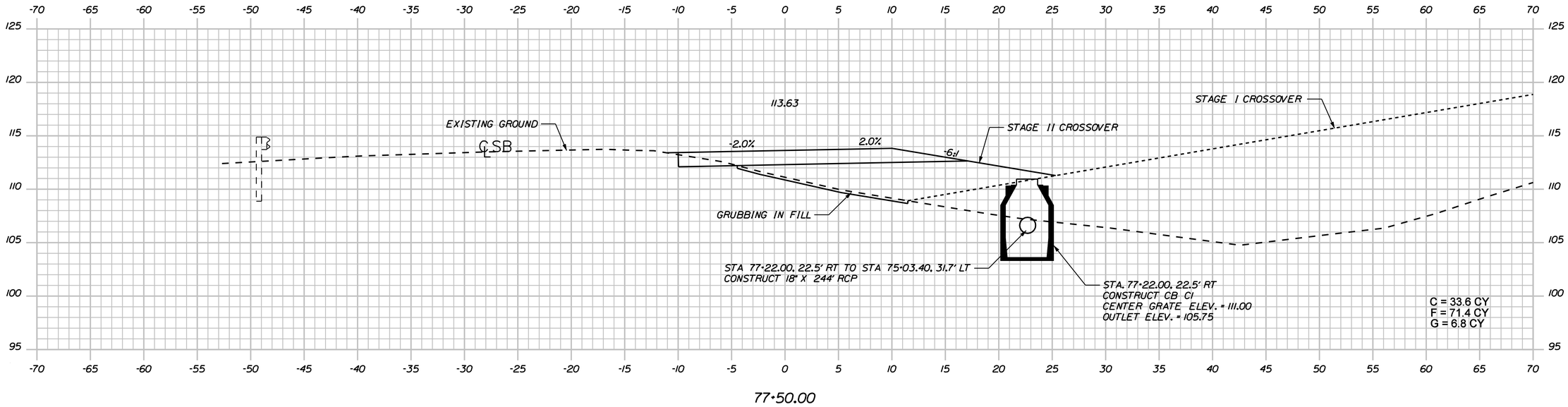

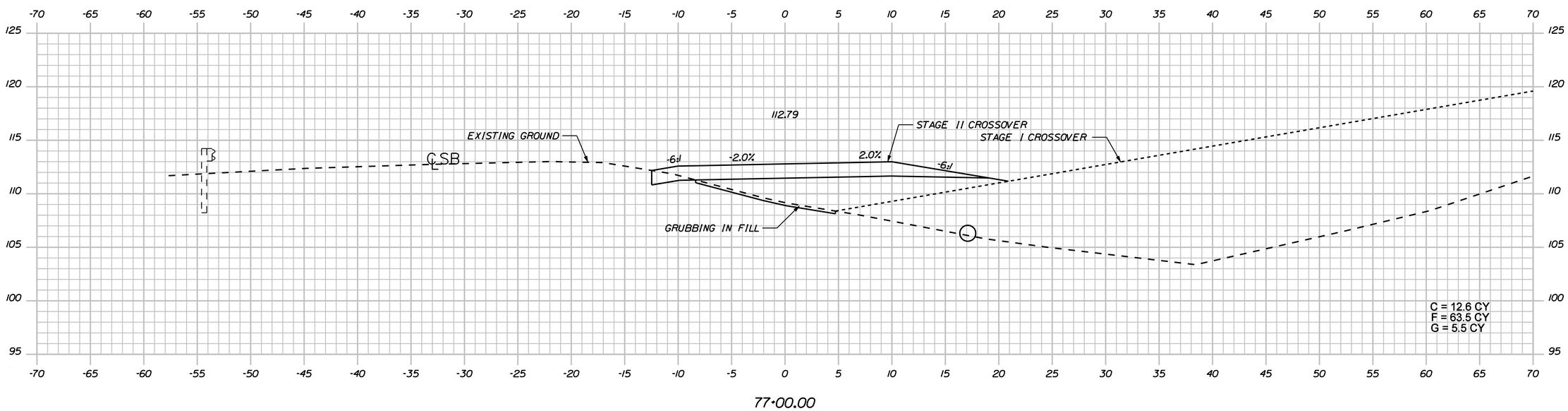

STATE OF MAINE
DEPARTMENT OF TRANSPORTATION

IM-1668(600)E, IM-A670(000)E & BR-1781(400)X

PIN
PIN 16686.00, 16700.00 & 17814.00 HIGHWAY PLANS

PROJ. MANAGER	B. CONDON	BY	DATE
DESIGN-DETAILED	TPL	MJC	06\11
CHECKED-REVIEWED	JGS	--	06\11
DESIGN2-DETAILED2	PDD	TPL	06\11
DESIGN3-DETAILED3	--	--	--
REVISIONS 1	--		--
REVISIONS 2	--		--
REVISIONS 3	--		--
REVISIONS 4	--		--
FIELD CHANGES	--		--

SIGNATURE

P.E. NUMBER

DATE

FAIRFIELD - BENTON
INTERSTATE 95

STAGE 2 CROSS SECTIONS

SHEET NUMBER
41
OF 132

Sta. 77+00.00 to Sta. 77+50.00

Filename: ...\highway\msta\038_Xsect.dgn Division: HIGHWAY Username: thigginson Date:6/20/2011

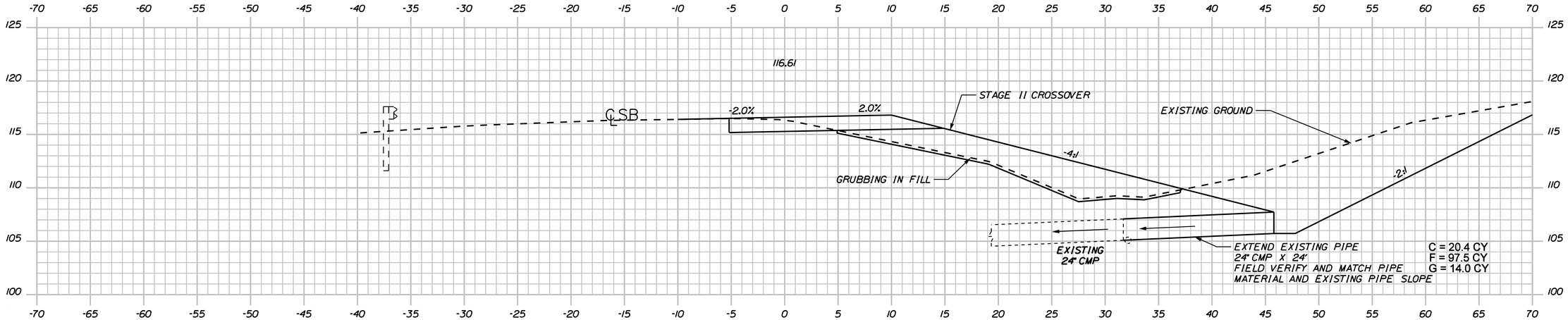

79+00.00

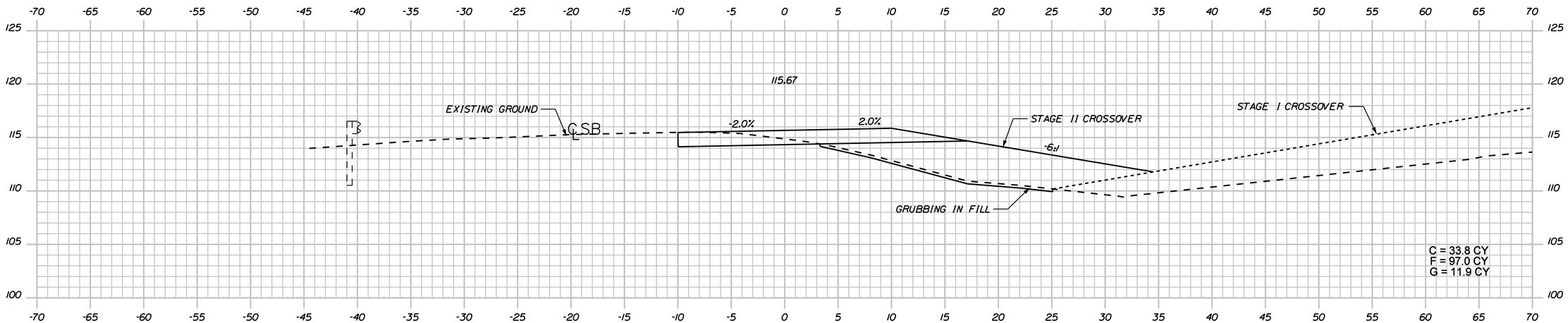

78+50.00

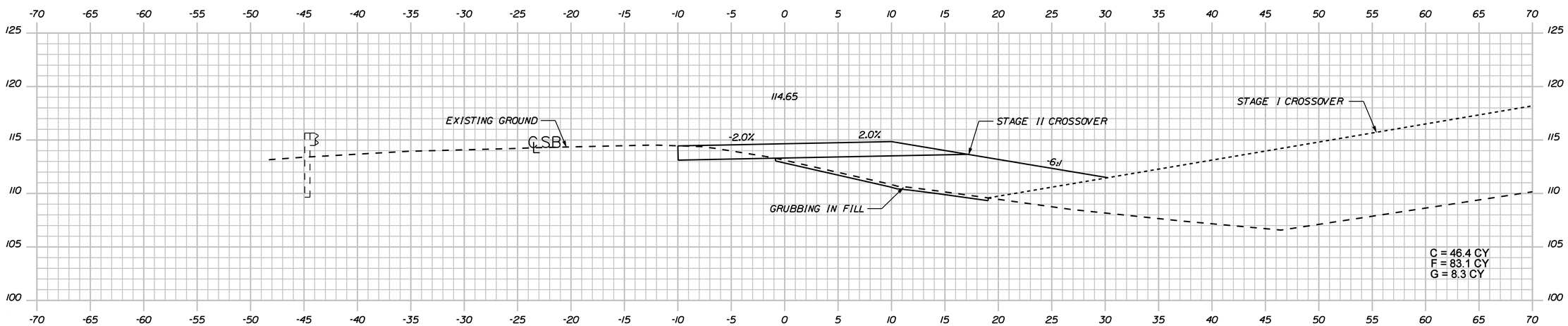

78+00.00

STATE OF MAINE
DEPARTMENT OF TRANSPORTATION

IM-1668(600)E, IM-A670(000)E & BR-1781(400)X

PIN
PIN 16686.00, 16700.00 & 17814.00 HIGHWAY PLANS

PROJ. MANAGER	B. CONDON	BY	DATE
DESIGN-DETAILED	TPL	MJC	06\11
CHECKED-REVIEWED	JGS	--	06\11
DESIGN2-DETAILED2	PDD	TPL	06\11
DESIGN3-DETAILED3	--	--	--
REVISIONS 1	--	--	--
REVISIONS 2	--	--	--
REVISIONS 3	--	--	--
REVISIONS 4	--	--	--
FIELD CHANGES	--	--	--

SIGNATURE

P.E. NUMBER

DATE

FAIRFIELD - BENTON
INTERSTATE 95

STAGE 2 CROSS SECTIONS

SHEET NUMBER
42
OF 132

Sta. 78+00.00 to Sta. 79+00.00

Filename: ...\highway\msto\038_Xsect.dgn Division: HIGHWAY Username: thigginson Date:6/20/2011

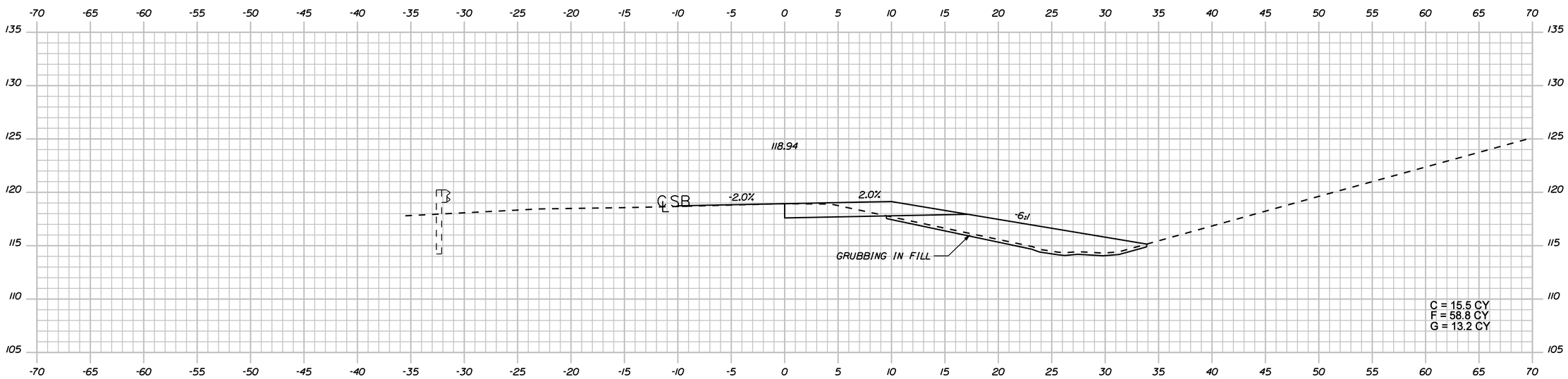

80+00.00

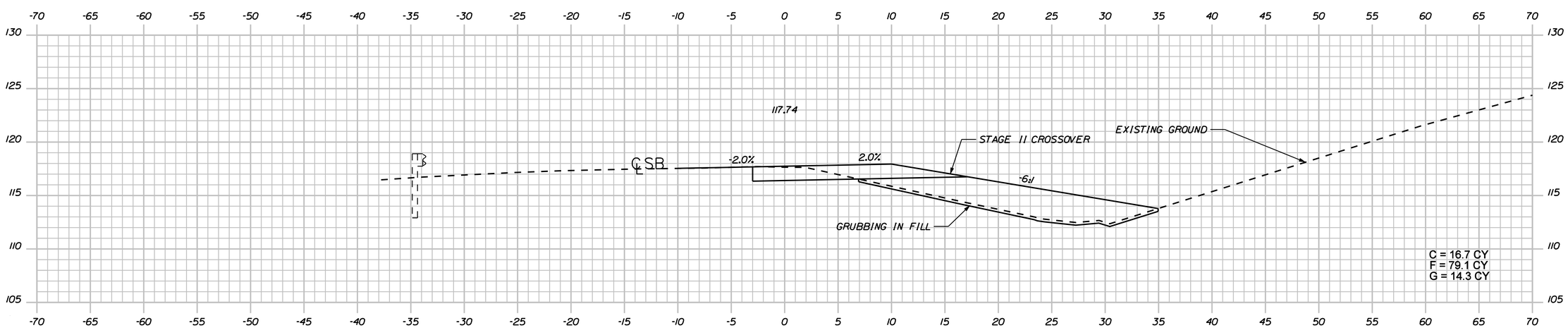

79+50.00

Sta. 79+50.00 to Sta. 80+00.00

STATE OF MAINE
DEPARTMENT OF TRANSPORTATION

IM-1668(600)E, IM-A670(000)E & BR-1781(400)X

PIN
PIN 16686.00, 16700.00 & 17814.00 HIGHWAY PLANS

PROJ. MANAGER	B. CONDON	BY	DATE
DESIGN-DETAILED	TPL	MJC	06\11
CHECKED-REVIEWED	JGS	--	06\11
DESIGN2-DETAILED2	PDD	TPL	06\11
DESIGN3-DETAILED3	--	--	--
REVISIONS 1	--		--
REVISIONS 2	--		--
REVISIONS 3	--		--
REVISIONS 4	--		--
FIELD CHANGES	--		--

SIGNATURE

P.E. NUMBER

DATE

FAIRFIELD - BENTON
INTERSTATE 95

STAGE 2 CROSS SECTIONS

SHEET NUMBER
43
OF 132

Filename: ...\highway\ms1o\038_Xsect.dgn Division: HIGHWAY Username: thigginson Date:6/20/2011

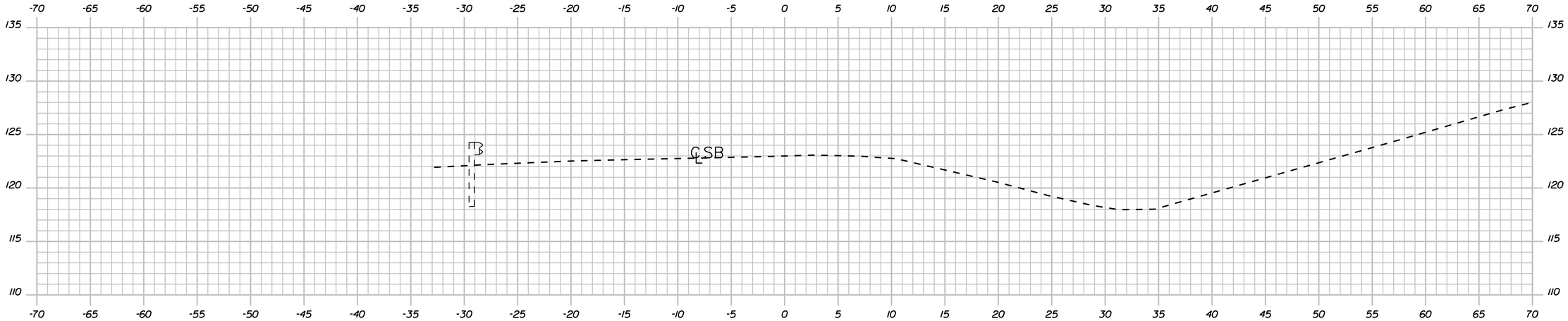

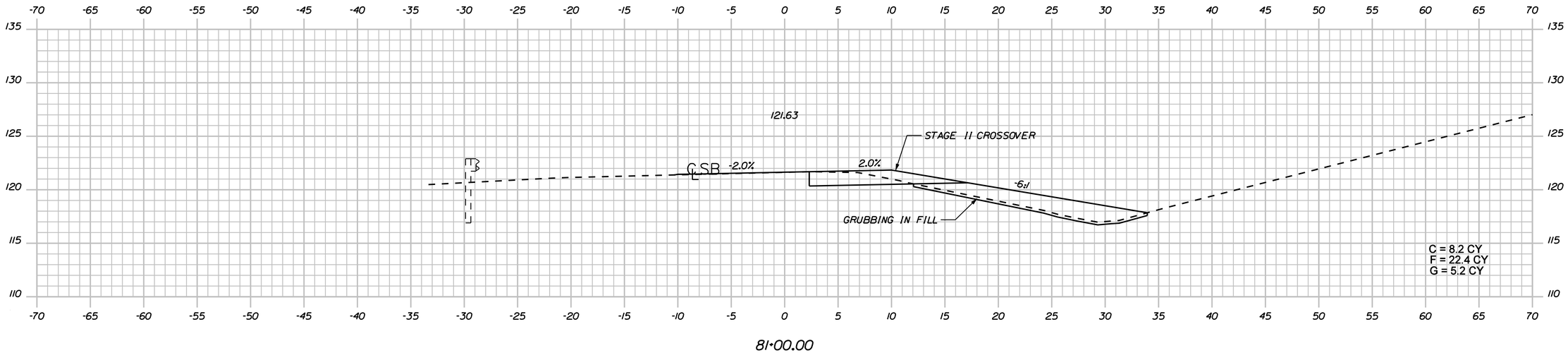

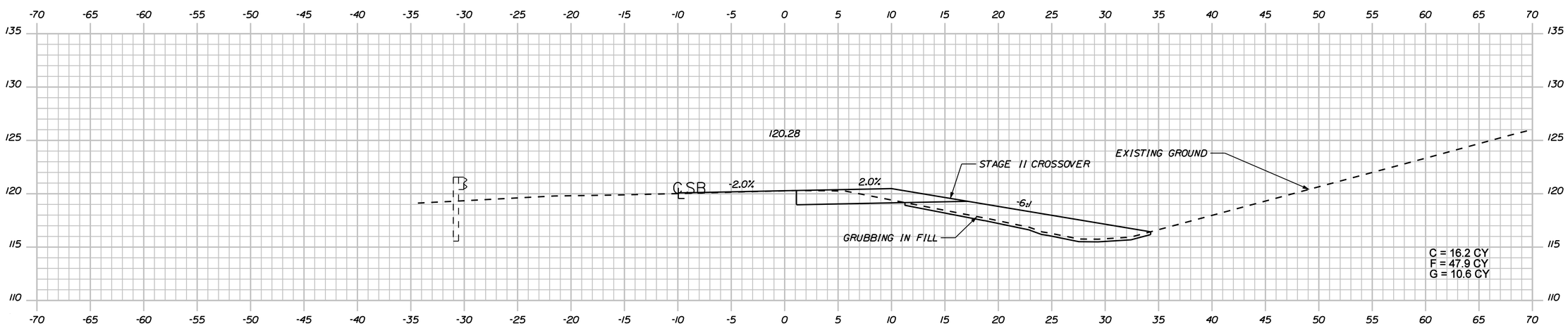

STATE OF MAINE
DEPARTMENT OF TRANSPORTATION

IM-1668(600)E, IM-A670(000)E & BR-1781(400)X

PIN
PIN 16686.00, 16700.00 & 17814.00 HIGHWAY PLANS

PROJ. MANAGER	B. CONDON	BY	DATE
DESIGN-DETAILED	TPL	MJC	06\11
CHECKED-REVIEWED	JGS	--	06\11
DESIGN2-DETAILED2	PBD	TPL	06\11
DESIGN3-DETAILED3	--	--	--
REVISIONS 1	--		--
REVISIONS 2	--		--
REVISIONS 3	--		--
REVISIONS 4	--		--
FIELD CHANGES	--		--

SIGNATURE

P.E. NUMBER

DATE

FAIRFIELD - BENTON
INTERSTATE 95

STAGE 2 CROSS SECTIONS

SHEET NUMBER
44
OF 132

Sta. 80+50.00 to Sta. 81+50.00

Filename: ...\highway\rnsto\038_Xsect.dgn Division: HIGHWAY Username: thigginson Date:6/20/2011

Filename: ...\highway\msta\038_Xsect.dgn Division: HIGHWAY Username: thigginson Date:6/20/2011

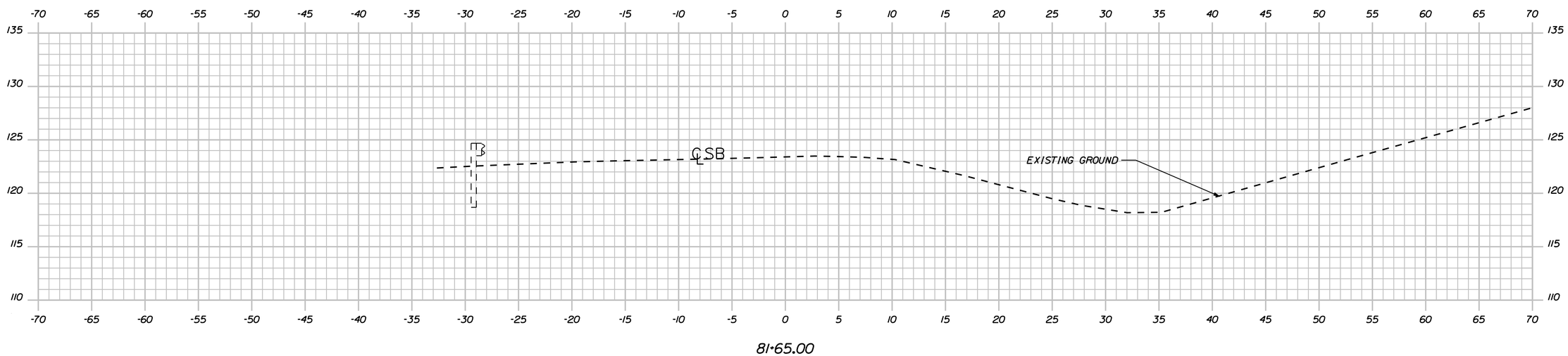

PROJ. MANAGER	B. CONDON	BY	DATE
DESIGN-DETAILED	TPL	MJC	06\11
CHECKED-REVIEWED	JGS	--	06\11
DESIGN2-DETAILED2	PDD	TPL	06\11
DESIGN3-DETAILED3	--	--	--
REVISIONS 1	--		--
REVISIONS 2	--		--
REVISIONS 3	--		--
REVISIONS 4	--		--
FIELD CHANGES	--		--

SIGNATURE

P.E. NUMBER

DATE

STATE OF MAINE
DEPARTMENT OF TRANSPORTATION

IM-1668(600)E, IM-A670(000)E & BR-1781(400)X

PIN
PIN 16686.00, 16700.00 & 17814.00 HIGHWAY PLANS

FAIRFIELD - BENTON
INTERSTATE 95

STAGE 2 CROSS SECTIONS

SHEET NUMBER
45
OF 132

Sta. 81+65.00 to Sta. 81+65.00

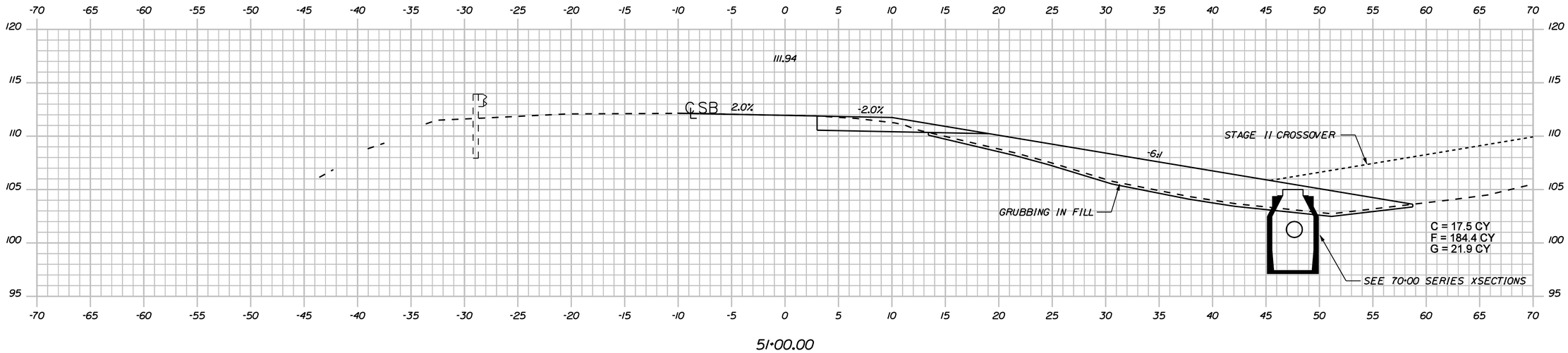

51+00.00

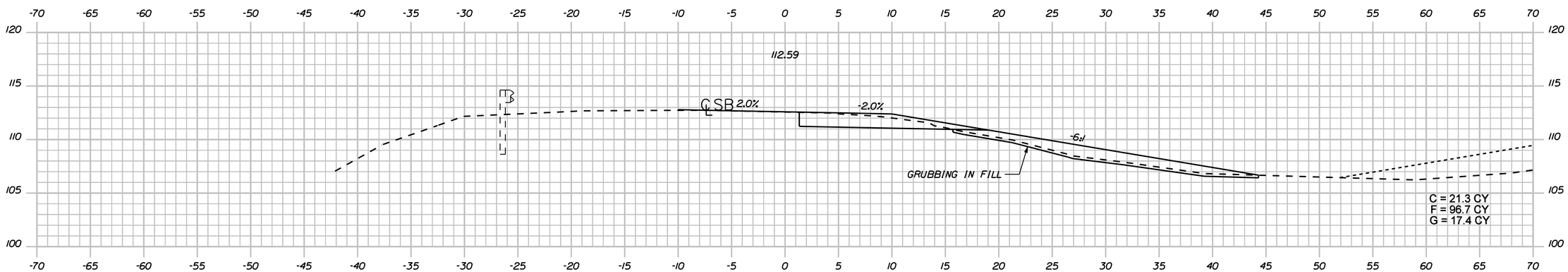

50+50.00

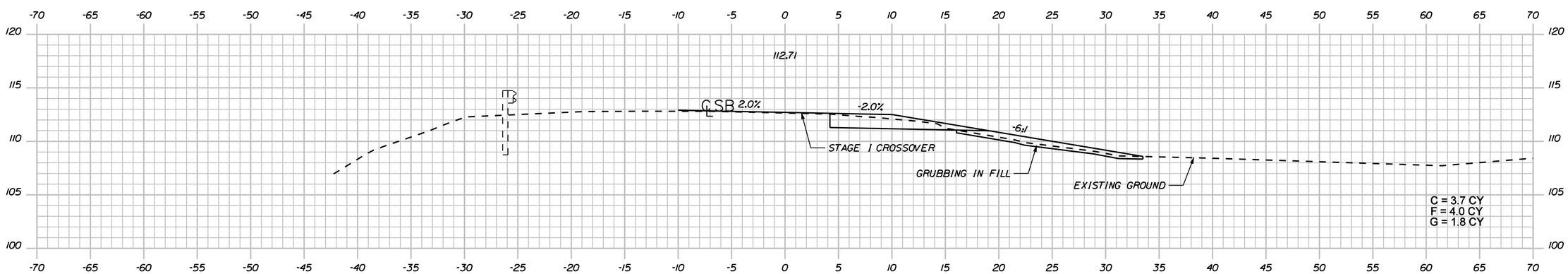

50+41.51

Sta. 50+41.51 to Sta. 51+00.00

STATE OF MAINE
DEPARTMENT OF TRANSPORTATION

IM-1668(600)E, IM-A670(000)E & BR-1781(400)X

PIN
PIN 16686.00, 16700.00 & 17814.00 HIGHWAY PLANS

PROJ. MANAGER	B. CONDON	BY	DATE
DESIGN-DETAILED	TPL	MJC	06\11
CHECKED-REVIEWED	JGS	--	06\11
DESIGN2-DETAILED2	PDD	TPL	06\11
DESIGN3-DETAILED3	--	--	--
REVISIONS 1	--	--	--
REVISIONS 2	--	--	--
REVISIONS 3	--	--	--
REVISIONS 4	--	--	--
FIELD CHANGES	--	--	--

SIGNATURE

P.E. NUMBER

DATE

FAIRFIELD - BENTON
INTERSTATE 95

STAGE 1 CROSS SECTIONS

SHEET NUMBER
46
OF 132

Filename: ...\highway\msto\038_Xsect.dgn Division: HIGHWAY Username: thigginson Date:6/20/2011

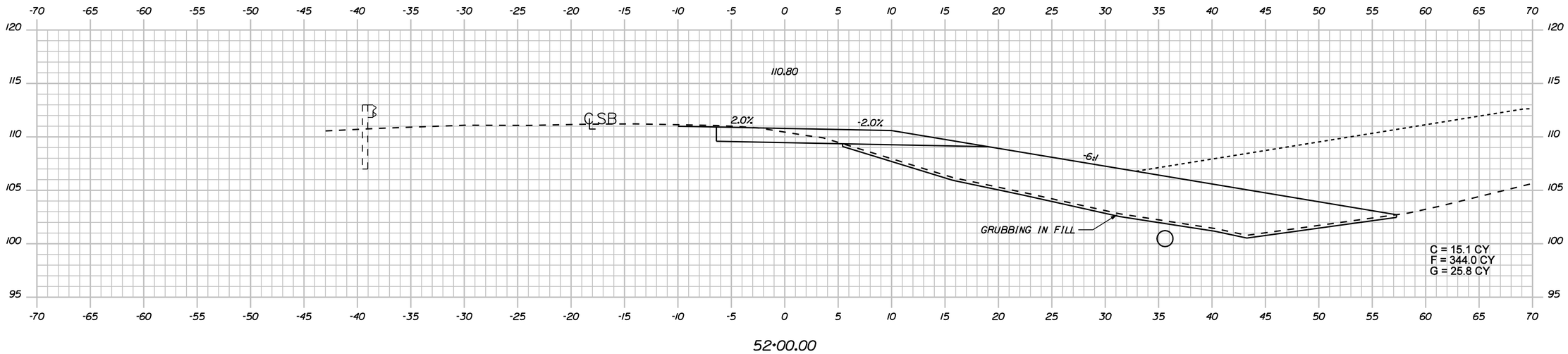

52+00.00

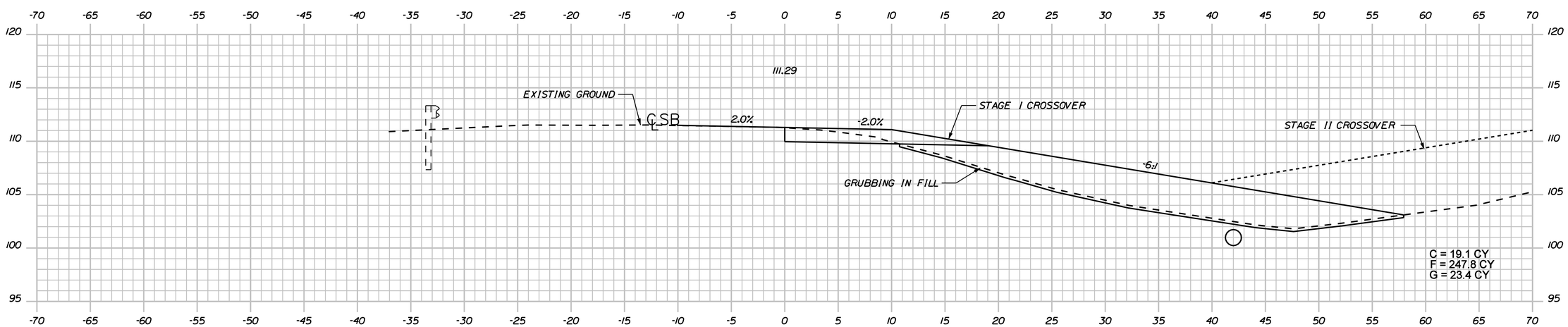

51+50.00

Sta. 51+50.00 to Sta. 52+00.00

STATE OF MAINE
DEPARTMENT OF TRANSPORTATION

IM-1668(600)E, IM-A670(000)E & BR-1781(400)X

PIN
PIN 16686.00, 16700.00 & 17814.00 HIGHWAY PLANS

PROJ. MANAGER	B. CONDON	BY	DATE
DESIGN-DETAILED	TPL	MJC	06\11
CHECKED-REVIEWED	JGS	--	06\11
DESIGN2-DETAILED2	PDD	TPL	06\11
DESIGN3-DETAILED3	--	--	--
REVISIONS 1	--		--
REVISIONS 2	--		--
REVISIONS 3	--		--
REVISIONS 4	--		--
FIELD CHANGES	--		--

SIGNATURE

P.E. NUMBER

DATE

FAIRFIELD - BENTON
INTERSTATE 95

STAGE 1 CROSS SECTIONS

SHEET NUMBER
47
OF 132

Filename: ...\highway\nsta\038_Xsect.dgn Division: HIGHWAY Username: thigginson Date:6/20/2011

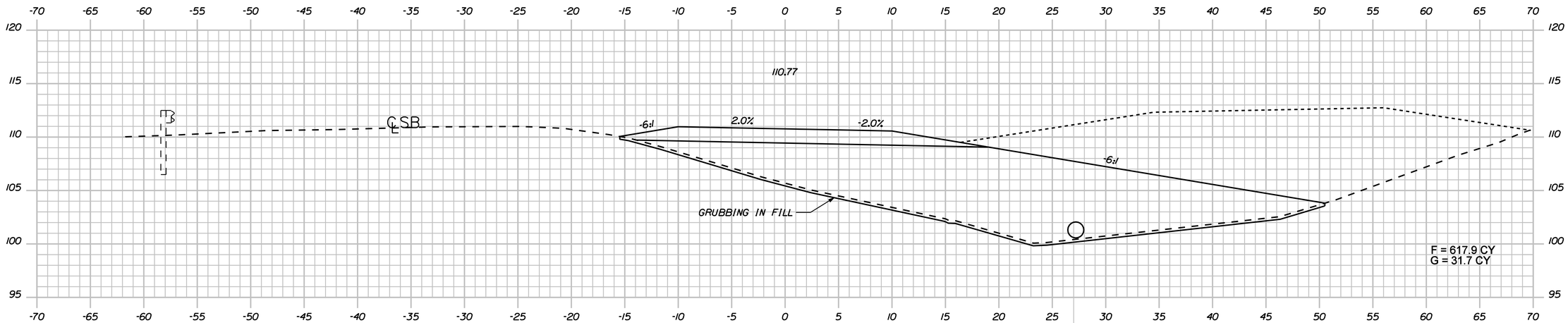

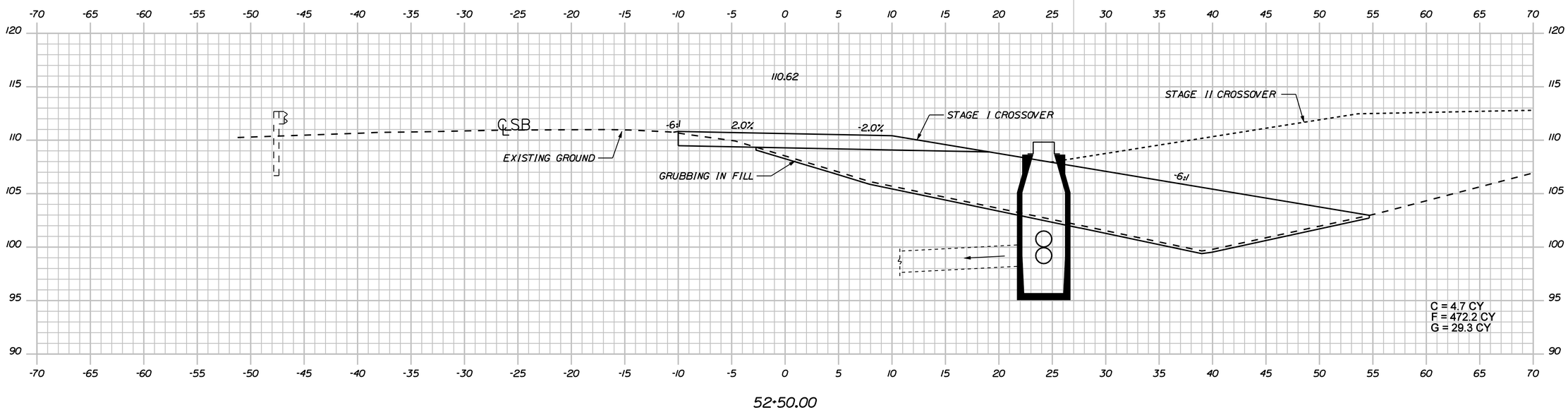

Sta. 52+50.00 to Sta. 53+00.00

STATE OF MAINE
DEPARTMENT OF TRANSPORTATION

IM-1668(600)E, IM-A670(000)E & BR-1781(400)X

PIN
PIN 16686.00, 16700.00 & 17814.00 HIGHWAY PLANS

PROJ. MANAGER	B. CONDON	BY	DATE
DESIGN-DETAILED	TPL	MJC	06\11
CHECKED-REVIEWED	JGS	--	06\11
DESIGN2-DETAILED2	PDD	TPL	06\11
DESIGN3-DETAILED3	--	--	--
REVISIONS 1	--	--	--
REVISIONS 2	--	--	--
REVISIONS 3	--	--	--
REVISIONS 4	--	--	--
FIELD CHANGES	--	--	--

SIGNATURE

P.E. NUMBER

DATE

FAIRFIELD - BENTON
INTERSTATE 95

STAGE 1 CROSS SECTIONS

SHEET NUMBER
48
OF 132

Filename: ...\highway\rmsto\038_Xsect.dgn Division: HIGHWAY Username: thigginson Date:6/20/2011

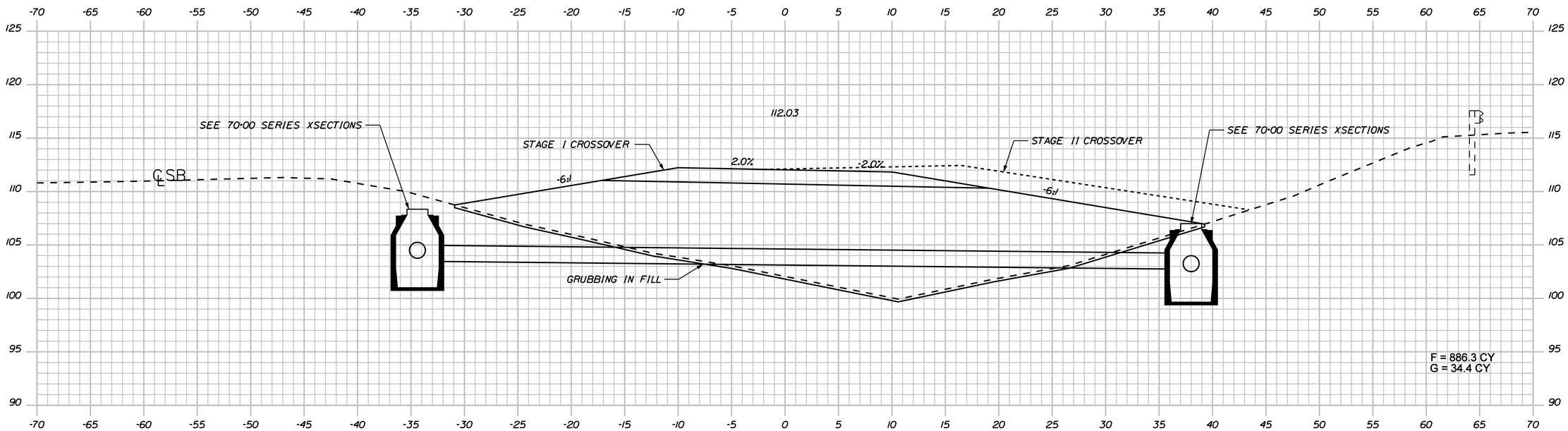

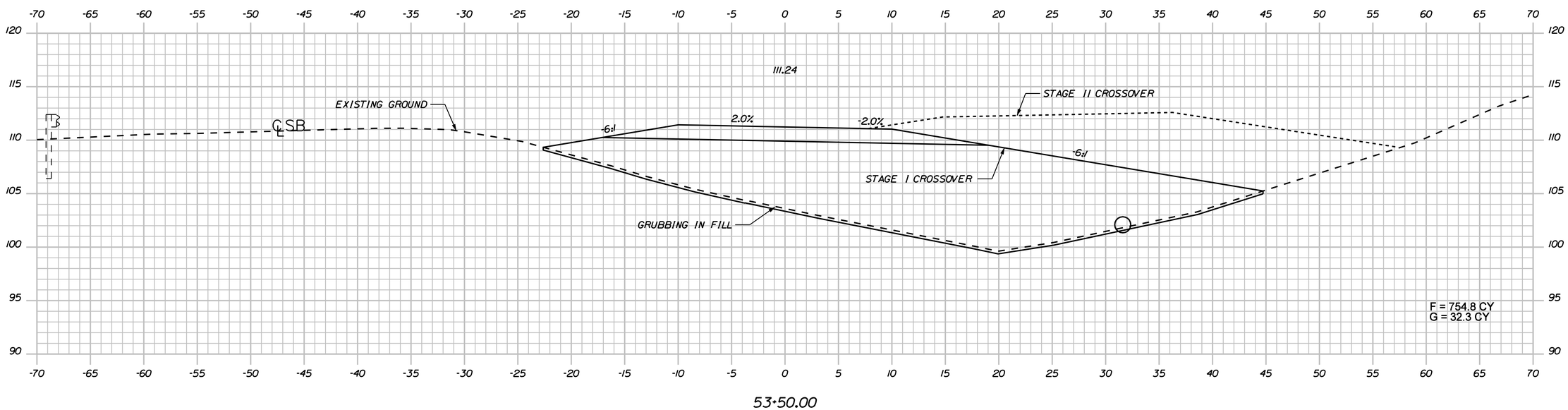

Sta. 53+50.00 to Sta. 54+00.00

STATE OF MAINE
DEPARTMENT OF TRANSPORTATION

IM-1668(600)E, IM-A670(000)E & BR-1781(400)X

PIN
PIN 16686.00, 16700.00 & 17814.00 HIGHWAY PLANS

PROJ. MANAGER	B. CONDON	BY	DATE
DESIGN-DETAILED	TPL	MJC	06\11
CHECKED-REVIEWED	JGS	--	06\11
DESIGN2-DETAILED2	PDD	TPL	06\11
DESIGN3-DETAILED3	--	--	--
REVISIONS 1	--	--	--
REVISIONS 2	--	--	--
REVISIONS 3	--	--	--
REVISIONS 4	--	--	--
FIELD CHANGES	--	--	--

SIGNATURE

P.E. NUMBER

DATE

FAIRFIELD - BENTON
INTERSTATE 95

STAGE 1 CROSS SECTIONS

SHEET NUMBER
49
OF 132

Filename: ...\highway\msto\038_Xsect.dgn Division: HIGHWAY Username: thigginson Date:6/20/2011

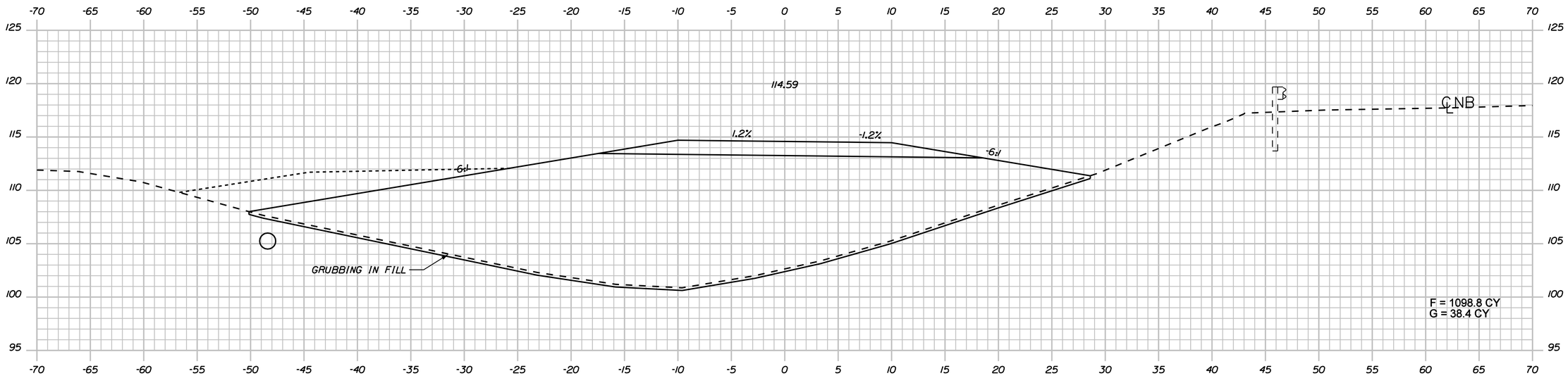

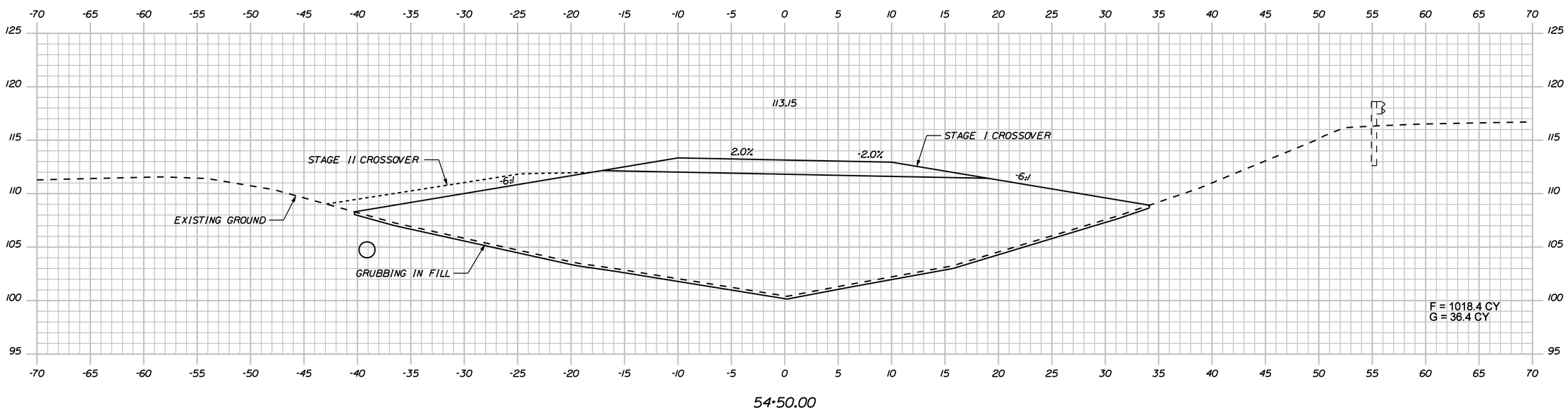

Sta. 54+50.00 to Sta. 55+00.00

STATE OF MAINE
DEPARTMENT OF TRANSPORTATION

IM-1668(600)E, IM-A670(000)E & BR-1781(400)X

PIN
PIN 16686.00, 16700.00 & 17814.00 HIGHWAY PLANS

		BY	DATE
PROJ. MANAGER	B. CONDON		
DESIGN-DETAILED	TPL	MJC	06\11
CHECKED-REVIEWED	JGS	--	06\11
DESIGN2-DETAILED2	PDD	TPL	06\11
DESIGN3-DETAILED3	--	--	--
REVISIONS 1	--		--
REVISIONS 2	--		--
REVISIONS 3	--		--
REVISIONS 4	--		--
FIELD CHANGES	--		--

SIGNATURE

P.E. NUMBER

DATE

FAIRFIELD - BENTON
INTERSTATE 95

STAGE 1 CROSS SECTIONS

SHEET NUMBER
50
OF 132

Filename: ...\highway\ms1o\038_Xsect.dgn Division: HIGHWAY Username: thigginson Date:6/20/2011

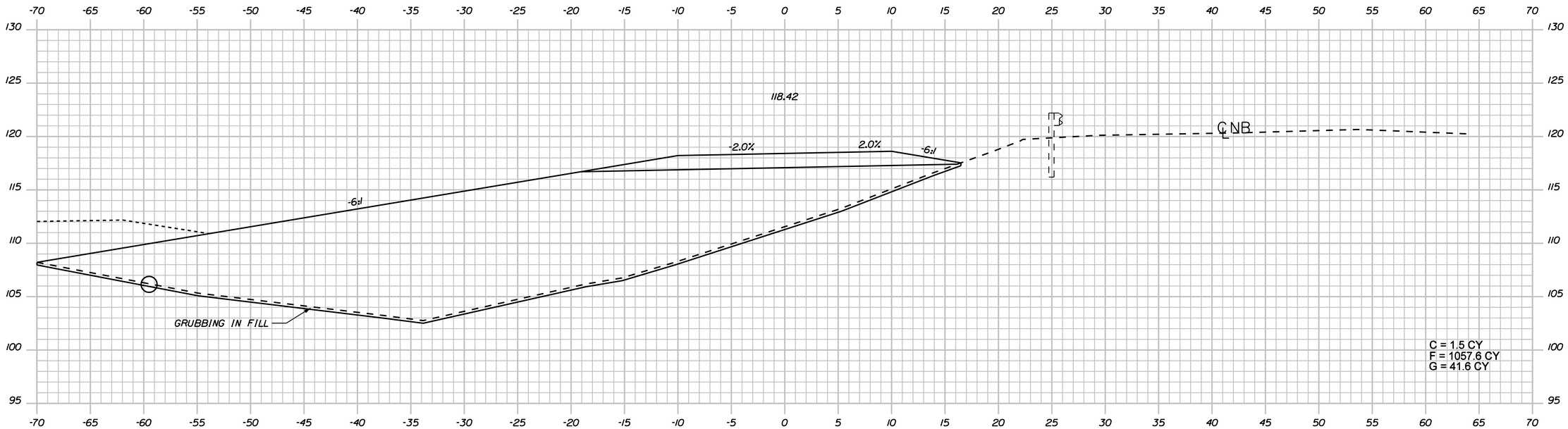

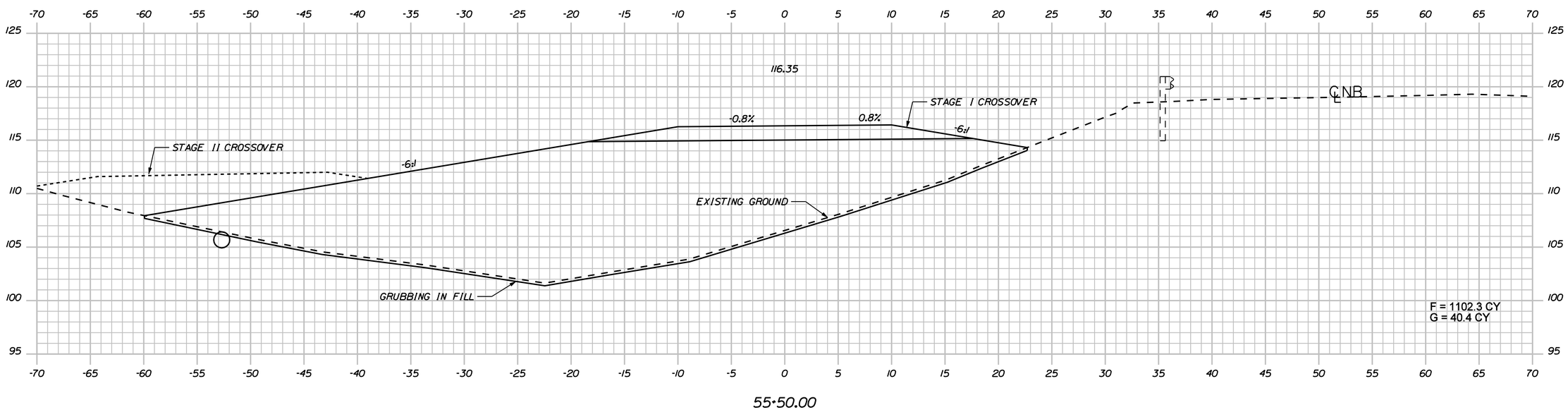

STATE OF MAINE
DEPARTMENT OF TRANSPORTATION

IM-1668(600)E, IM-A670(000)E & BR-1781(400)X

PIN
PIN 16686.00, 16700.00 & 17814.00 HIGHWAY PLANS

PROJ. MANAGER	B. CONDON	BY	DATE
DESIGN-DETAILED	TPL	MJC	06\11
CHECKED-REVIEWED	JGS	--	06\11
DESIGN2-DETAILED2	PDD	TPL	06\11
DESIGN3-DETAILED3	--	--	--
REVISIONS 1	--		--
REVISIONS 2	--		--
REVISIONS 3	--		--
REVISIONS 4	--		--
FIELD CHANGES	--		--

SIGNATURE

P.E. NUMBER

DATE

FAIRFIELD - BENTON
INTERSTATE 95

STAGE 1 CROSS SECTIONS

SHEET NUMBER
51
OF 132

Sta. 55+50.00 to Sta. 56+00.00

Filename: ...\highway\msto\038_Xsect.dgn Division: HIGHWAY Username: thigginson Date:6/20/2011

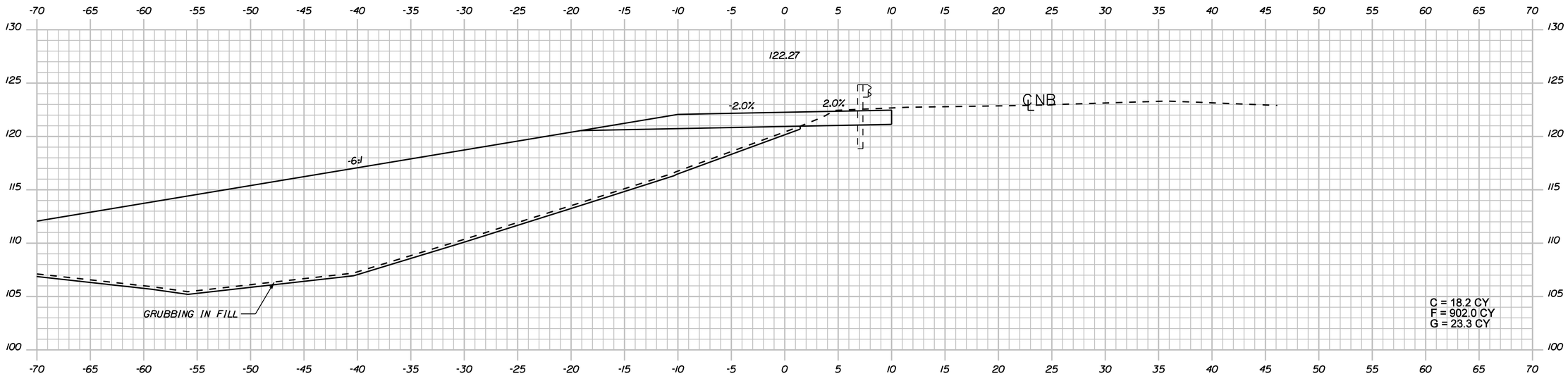

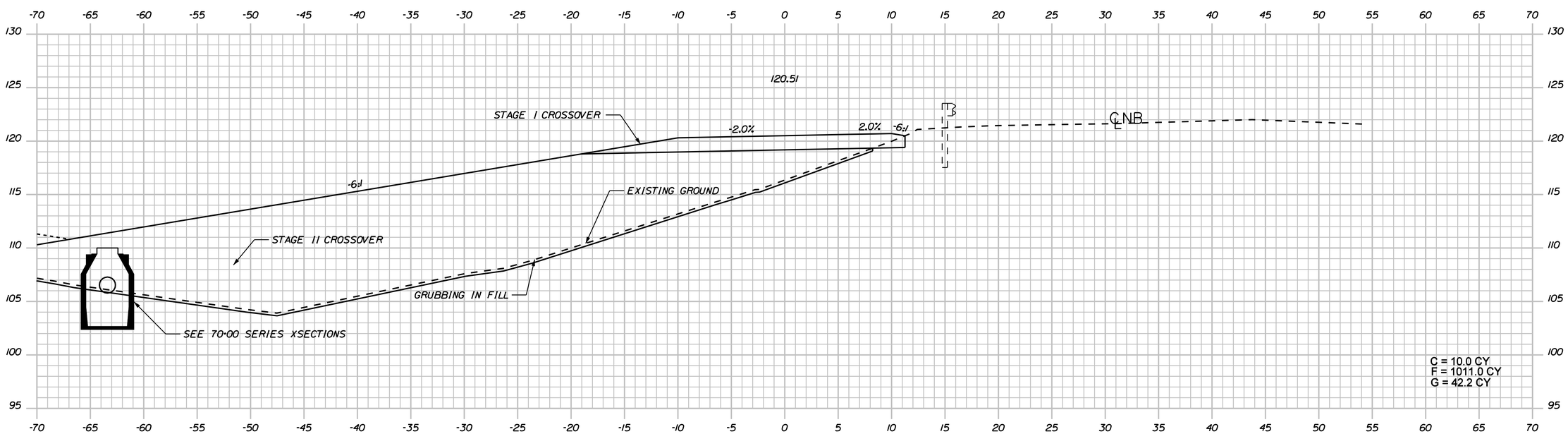

STATE OF MAINE
DEPARTMENT OF TRANSPORTATION

IM-1668(600)E, IM-A670(000)E & BR-1781(400)X

PIN
PIN 16686.00, 16700.00 & 17814.00 HIGHWAY PLANS

		BY	DATE
PROJ. MANAGER	B. CONDON		
DESIGN-DETAILED	TPL	MJC	06\11
CHECKED-REVIEWED	JGS	--	06\11
DESIGN2-DETAILED2	PDD	TPL	06\11
DESIGN3-DETAILED3	--	--	--
REVISIONS 1	--	--	--
REVISIONS 2	--	--	--
REVISIONS 3	--	--	--
REVISIONS 4	--	--	--
FIELD CHANGES	--	--	--

SIGNATURE

P.E. NUMBER

DATE

FAIRFIELD - BENTON
INTERSTATE 95

STAGE 1 CROSS SECTIONS

SHEET NUMBER
52
OF 132

Sta. 56+50.00 to Sta. 57+00.00

Filename: ...\highway\msta\038_Xsect.dgn Division: HIGHWAY Username: thigginson Date:6/20/2011

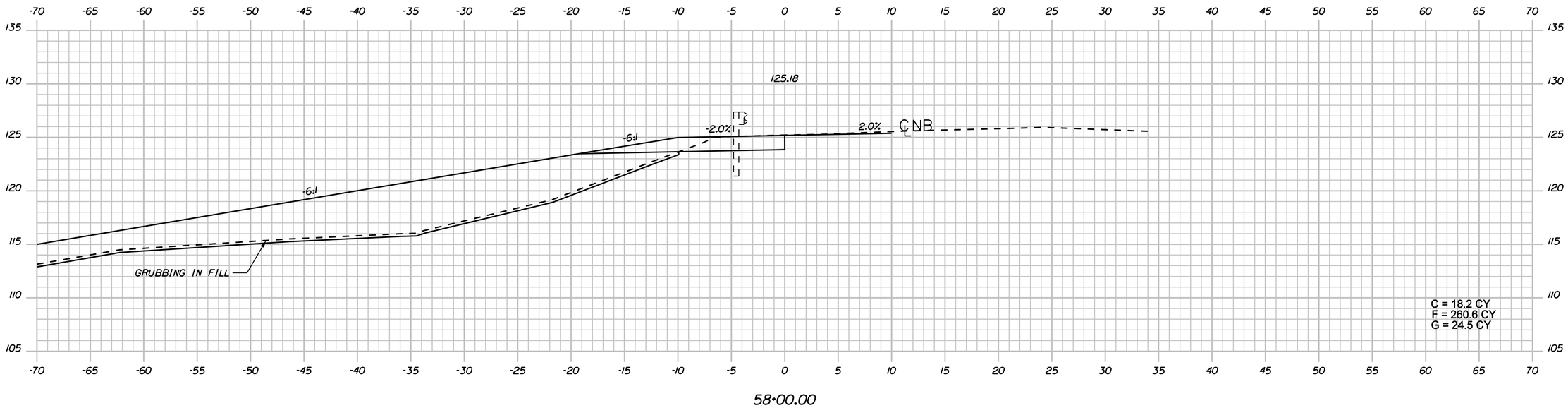

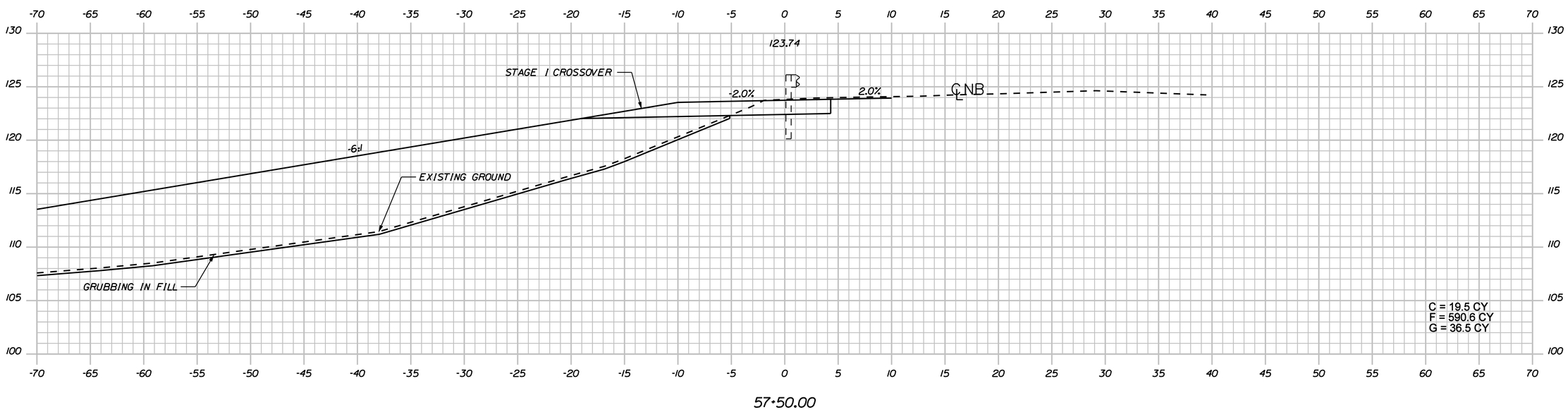

STATE OF MAINE
DEPARTMENT OF TRANSPORTATION

IM-1668(600)E, IM-A670(000)E & BR-1781(400)X

PIN
PIN 16686.00, 16700.00 & 17814.00 HIGHWAY PLANS

PROJ. MANAGER	B. CONDON	BY	DATE
DESIGN-DETAILED	TPL	MJC	06\11
CHECKED-REVIEWED	JGS	--	06\11
DESIGN2-DETAILED2	PDD	TPL	06\11
DESIGN3-DETAILED3	--	--	--
REVISIONS 1	--		--
REVISIONS 2	--		--
REVISIONS 3	--		--
REVISIONS 4	--		--
FIELD CHANGES	--		--

SIGNATURE

P.E. NUMBER

DATE

FAIRFIELD - BENTON
INTERSTATE 95

STAGE 1 CROSS SECTIONS

SHEET NUMBER
53
OF 132

Sta. 57+50.00 to Sta. 58+00.00

Filename: ...\highway\rmsto\038_Xsect.dgn Division: HIGHWAY Username: thigginson Date:6/20/2011

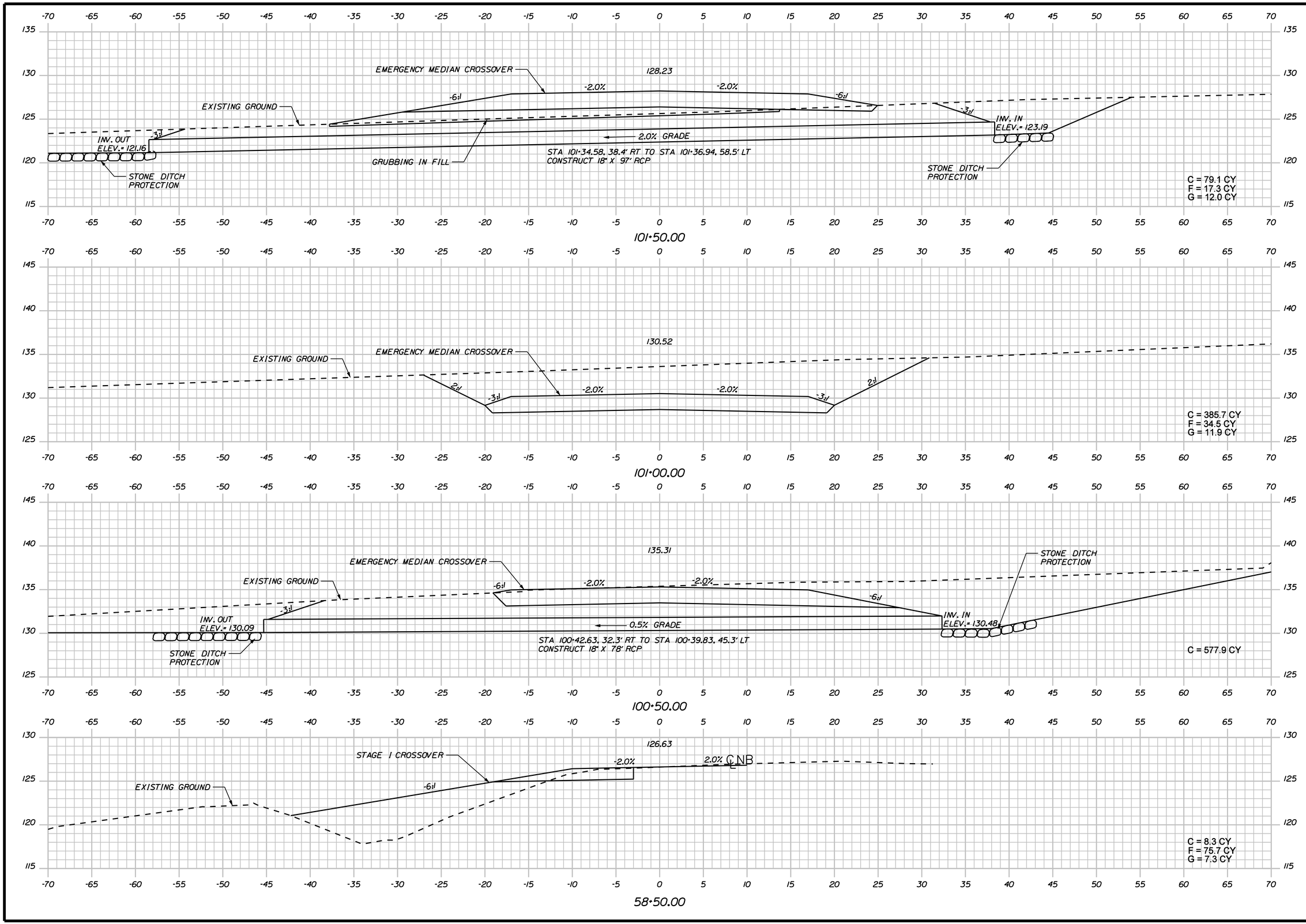

STATE OF MAINE
DEPARTMENT OF TRANSPORTATION

IM-1668(600)E, IM-A670(000)E & BR-1781(400)X

PIN
PIN 16686.00, 16700.00 & 17814.00 HIGHWAY PLANS

PROJ. MANAGER	B. CONDON	BY	DATE
DESIGN-DETAILED	TPL	MJC	06\11
CHECKED-REVIEWED	JGS	--	06\11
DESIGN2-DETAILED2	PDD	TPL	06\11
DESIGN3-DETAILED3	--	--	--
REVISIONS 1	--	--	--
REVISIONS 2	--	--	--
REVISIONS 3	--	--	--
REVISIONS 4	--	--	--
FIELD CHANGES	--	--	--

SIGNATURE

P.E. NUMBER

DATE

FAIRFIELD - BENTON
INTERSTATE 95

STAGE 1 CROSS SECTIONS
EMERGENCY MEDIAN CROSSOVER

SHEET NUMBER
54
OF 132

Sta. 58+50.00 & Sta. 100+50.00 to Sta. 101+50.00

Filename: ...\highway\ms1o\038_Xsect.dgn Division: HIGHWAY Username: thigginson Date:6/20/2011

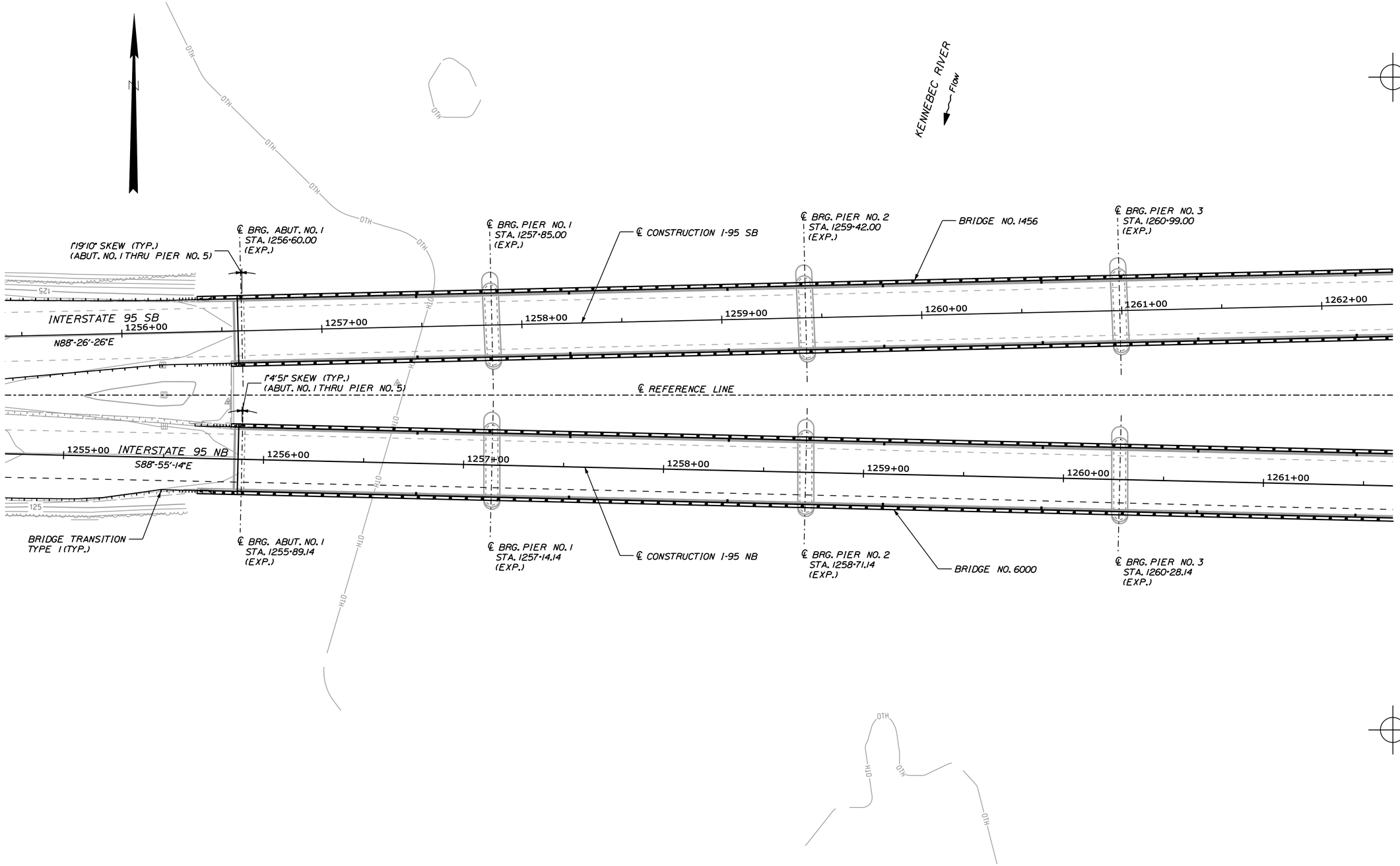

PLAN

25 0 25 50

SCALE OF FEET

STATE OF MAINE
DEPARTMENT OF TRANSPORTATION

IM-1668(600)E & IM-A670(000)E

PIN
1456 & 6000 16686.00 & 16700.00 BRIDGE PLANS

PROJ. MANAGER	B. CONDON	BY	DATE
DESIGN-DETAILED	TPL	MJC	06\11
CHECKED-REVIEWED	JGS	--	06\11
DESIGN2-DETAILED2	PDD	TPL	06\11
DESIGN3-DETAILED3	--	--	--
REVISIONS 1	--	--	--
REVISIONS 2	--	--	--
REVISIONS 3	--	--	--
REVISIONS 4	--	--	--
FIELD CHANGES	--	--	--

SIGNATURE

P.E. NUMBER

DATE

C.A. CLAUSON BRIDGES
KENNEBEC RIVER
FAIRFIELD - BENTON SOMERSET & KENNEBEC COUNTIES

GENERAL PLAN 1

SHEET NUMBER
55
OF 132

Filename: ...\BRIDGE\MSTA\055_Plan_1.dgn Division: HIGHWAY Username: mcorignon Date:6/10/2011

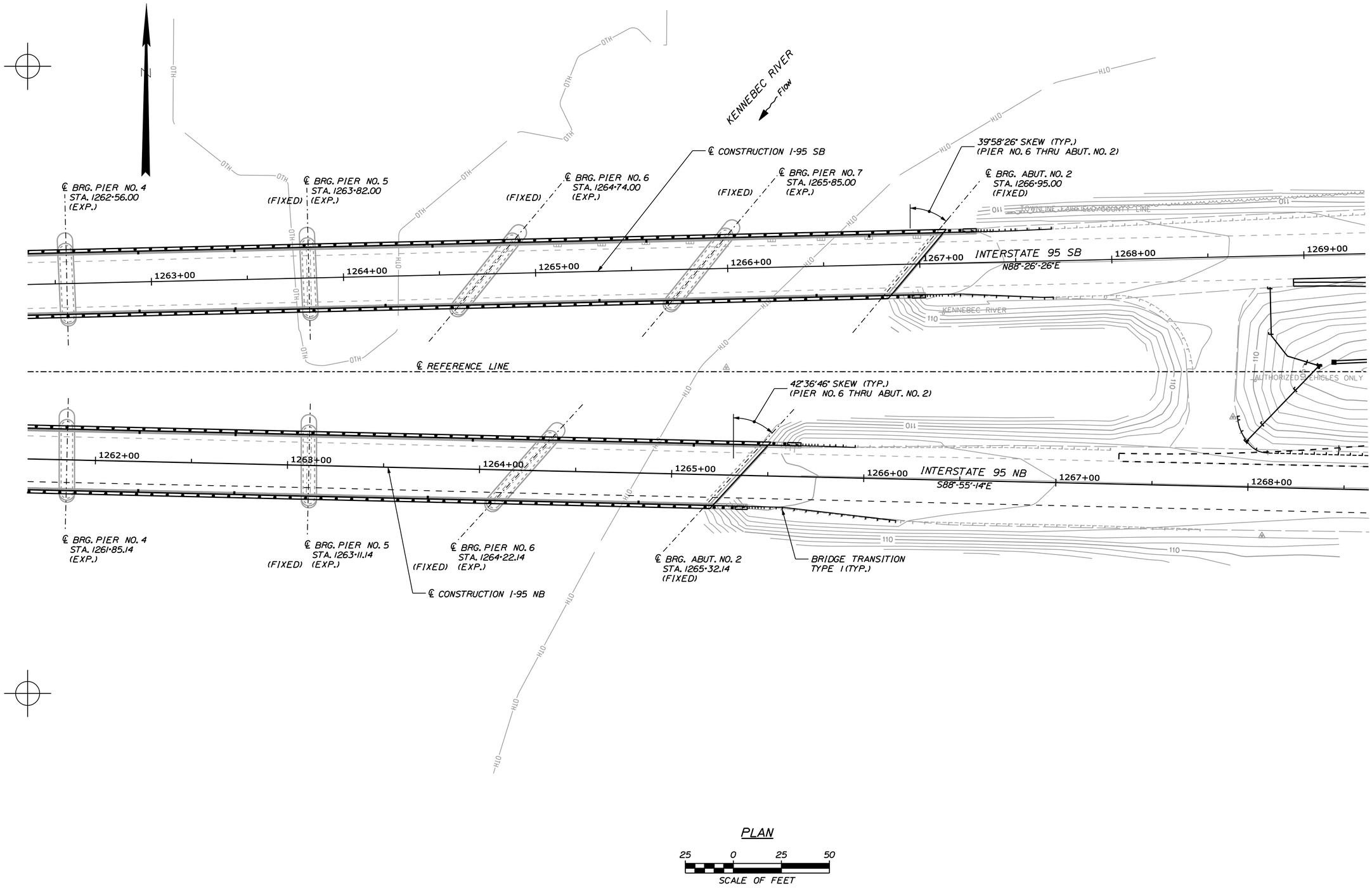

STATE OF MAINE
DEPARTMENT OF TRANSPORTATION

IM-1668(600)E & IM-A670(000)E

PIN
1456 & 6000 16686.00 & 16700.00 BRIDGE PLANS

		BY	DATE
PROJ. MANAGER	B. CONDON		
DESIGN-DETAILED	TPL	MJC	06\11
CHECKED-REVIEWED	JGS	--	06\11
DESIGN2-DETAILED2	PDD	TPL	06\11
DESIGN3-DETAILED3	--	--	--
REVISIONS 1	--	--	--
REVISIONS 2	--	--	--
REVISIONS 3	--	--	--
REVISIONS 4	--	--	--
FIELD CHANGES	--	--	--

SIGNATURE

P.E. NUMBER

DATE

C.A. CLAUSON BRIDGES
KENNEBEC RIVER
FAIRFIELD - BENTON SOMERSET & KENNEBEC COUNTIES

GENERAL PLAN 2

SHEET NUMBER
56
OF 132

Filename: ...\BRIDGE\MSTA\056_Plan_2.dgn Division: HIGHWAY Username: mcorignon Date:6/10/2011

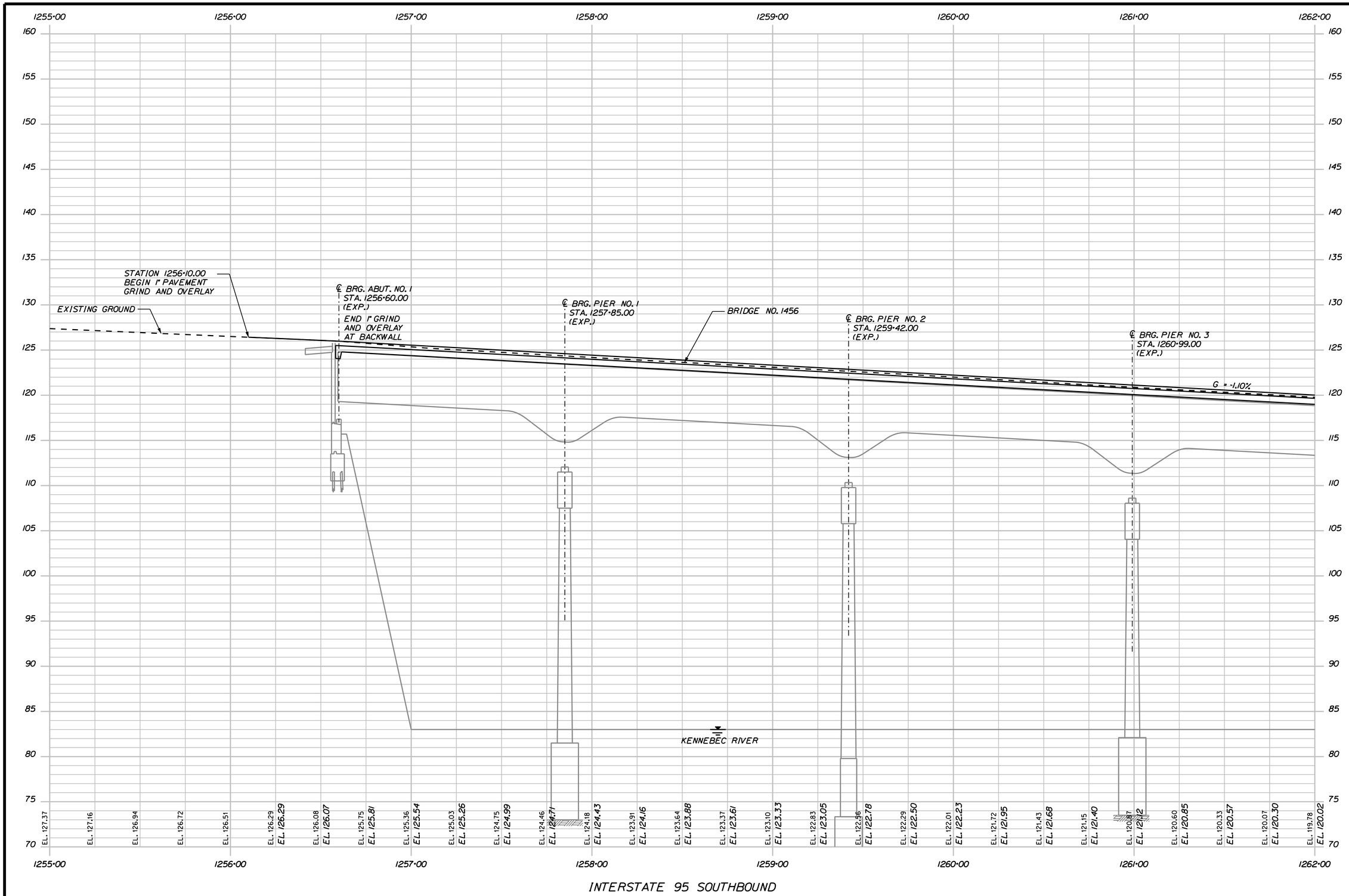

Filename: ...\MSTA\057_Profile_SB1.dgn Division: HIGHWAY Username: mcarignan Date:6/10/2011

STATE OF MAINE
DEPARTMENT OF TRANSPORTATION

IM-1668(600)E & IM-A670(000)E

PIN
16686.00 & 16700.00

1456 & 6000 BRIDGE PLANS

PROJ. MANAGER	B. CONDON		
DESIGN-DETAILED	TPL	MJC	06\11
CHECKED-REVIEWED	JGS	--	06\11
DESIGN2-DETAILED2	PDD	TPL	06\11
DESIGN3-DETAILED3	--	--	--
REVISIONS 1	--		--
REVISIONS 2	--		--
REVISIONS 3	--		--
REVISIONS 4	--		--
FIELD CHANGES	--		--

SIGNATURE

P.E. NUMBER

DATE

C.A. CLAUSON BRIDGES
KENNEBEC RIVER

FAIRFIELD - BENTON SOMERSET & KENNEBEC COUNTIES

BRIDGE PROFILE SB

SHEET NUMBER

57

OF 132

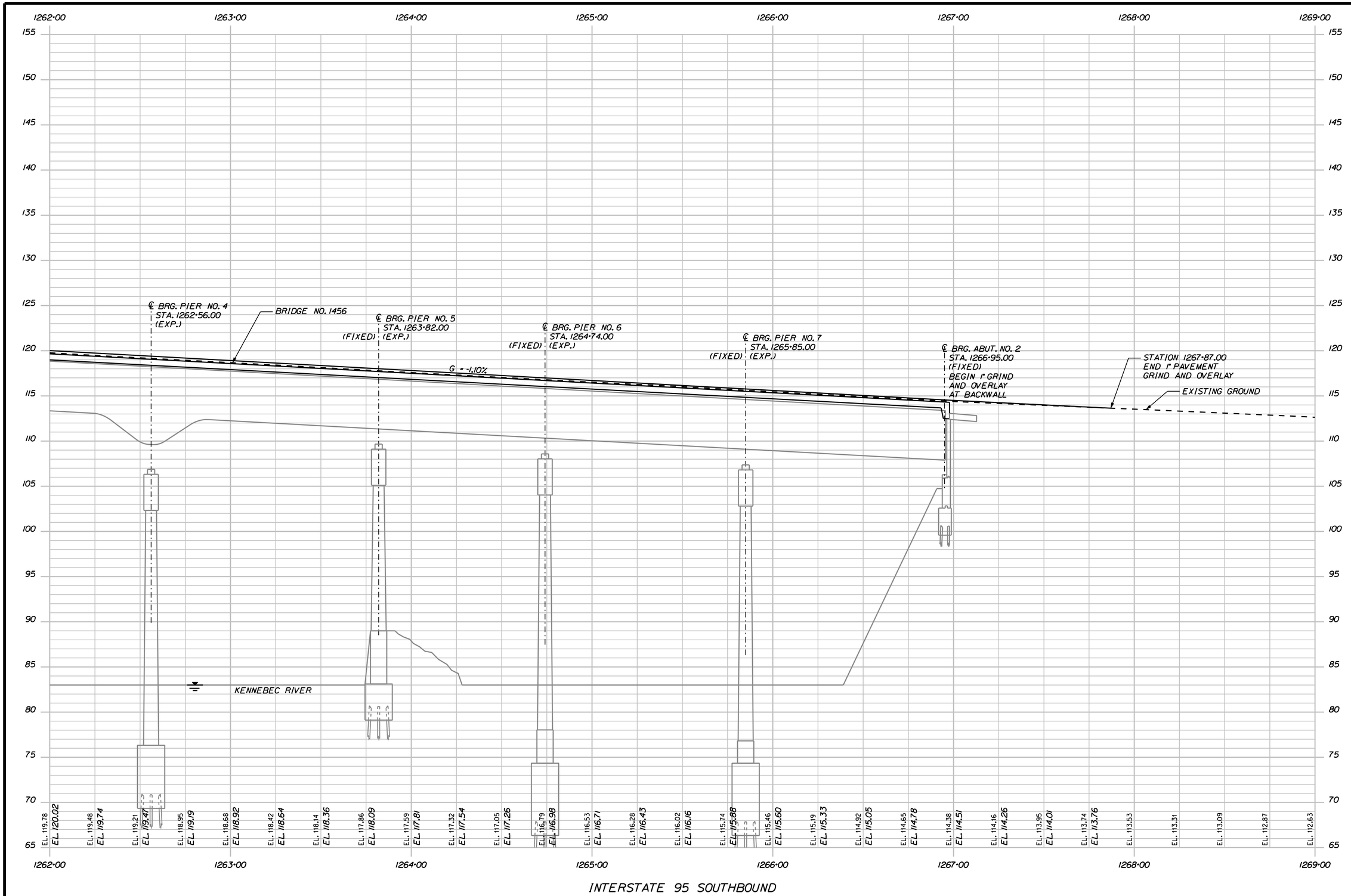

Filename: ...\MSTA\058_Profile_SB2.dgn Division: HIGHWAY Username: mcorignon Date:6/10/2011

STATE OF MAINE
DEPARTMENT OF TRANSPORTATION

IM-1668(600)E & IM-A670(000)E

PIN
1456 & 6000 **16686.00 & 16700.00** BRIDGE PLANS

PROJ. MANAGER	B. CONDON	BY	DATE
DESIGN-DETAILED	TPL	MJC	06\11
CHECKED-REVIEWED	JGS	--	06\11
DESIGN2-DETAILED2	PDD	TPL	06\11
DESIGN3-DETAILED3	--	--	--
REVISIONS 1	--		--
REVISIONS 2	--		--
REVISIONS 3	--		--
REVISIONS 4	--		--
FIELD CHANGES	--		--

SIGNATURE

P.E. NUMBER

DATE

C.A. CLAUSON BRIDGES
KENNEBEC RIVER
FAIRFIELD - BENTON SOMERSET & KENNEBEC COUNTIES

BRIDGE PROFILE SB

SHEET NUMBER
58
OF 132

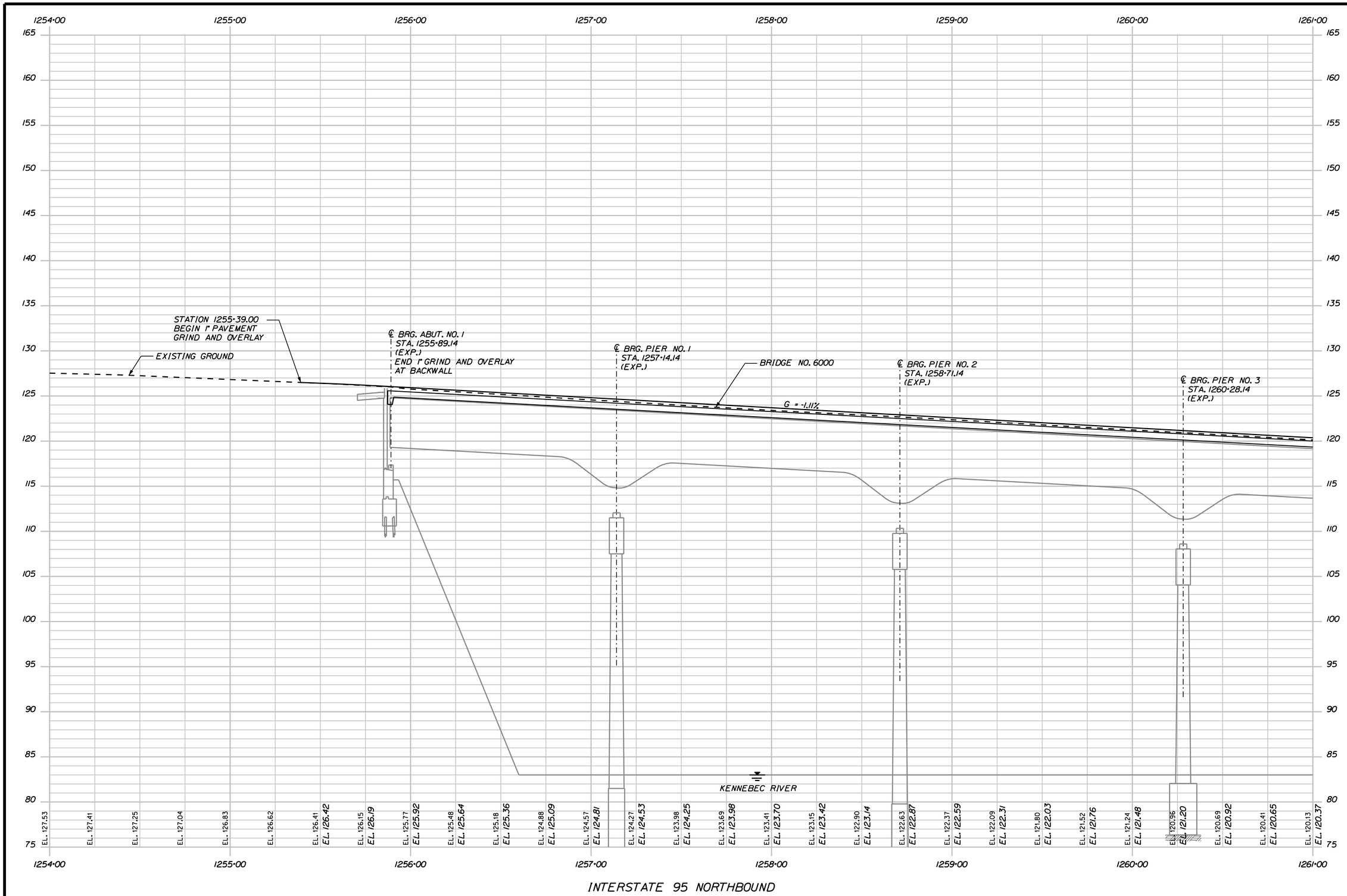

STATE OF MAINE
DEPARTMENT OF TRANSPORTATION

IM-1668(600)E & IM-A670(000)E

PIN
1456 & 6000 **16686.00 & 16700.00** BRIDGE PLANS

		BY	DATE
PROJ. MANAGER	B. CONDON		
DESIGN-DETAILED	TPL	MJC	06\11
CHECKED-REVIEWED	JGS	--	06\11
DESIGN2-DETAILED2	PDD	TPL	06\11
DESIGN3-DETAILED3	--	--	--
REVISIONS 1	--		--
REVISIONS 2	--		--
REVISIONS 3	--		--
REVISIONS 4	--		--
FIELD CHANGES	--		--

SIGNATURE

P.E. NUMBER

DATE

C.A. CLAUSON BRIDGES
KENNEBEC RIVER
FAIRFIELD - BENTON SOMERSET & KENNEBEC COUNTIES

BRIDGE PROFILE NB

SHEET NUMBER
59
OF 132

Filename: ...\MSTA\059_Profile_NB1.dgn Division: HIGHWAY Username: mcarignan Date:6/10/2011

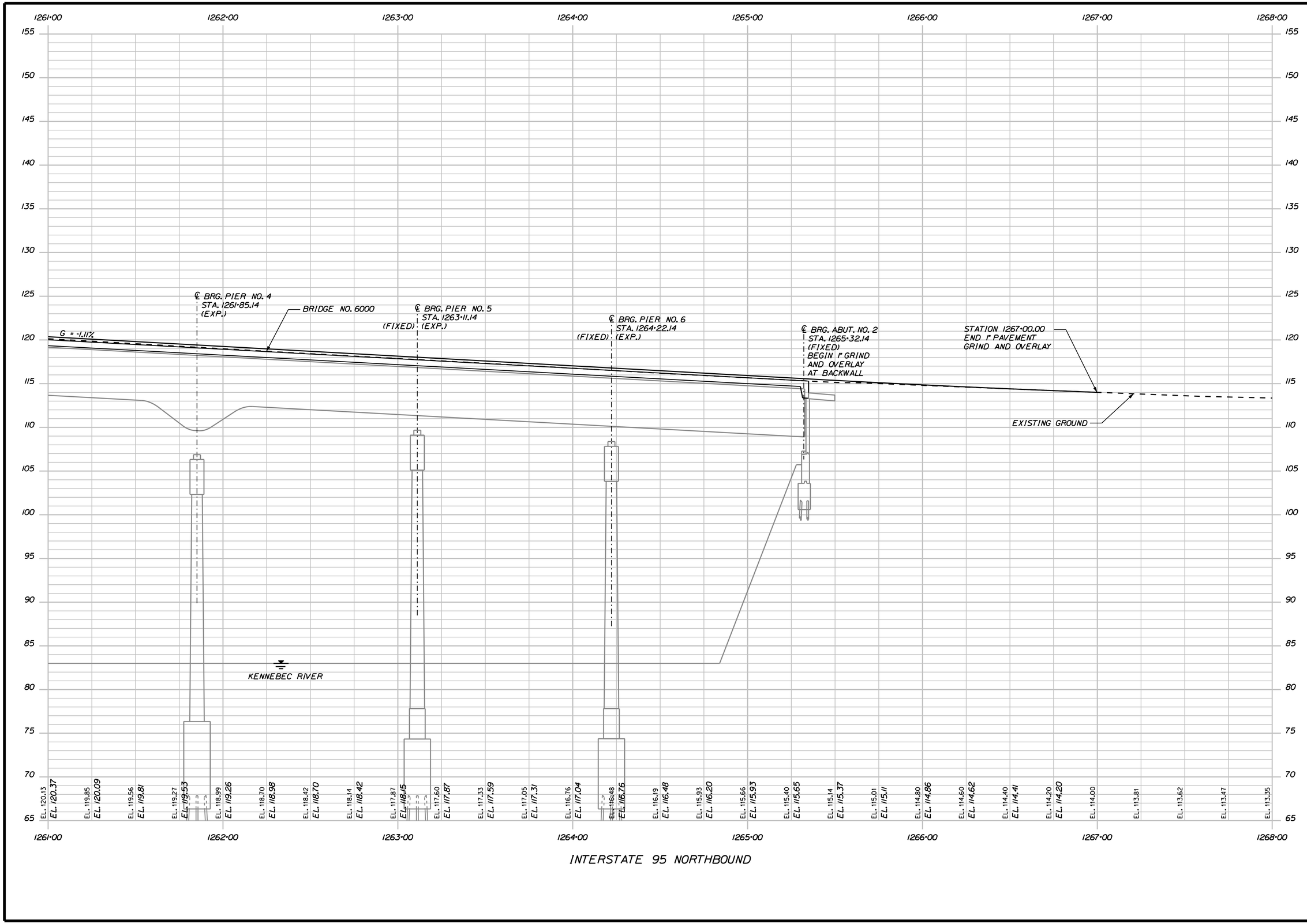

STATE OF MAINE
DEPARTMENT OF TRANSPORTATION

IM-1668(600)E & IM-A670(000)E

PIN
16686.00 & 16700.00

1456 & 6000

BRIDGE PLANS

PROJ. MANAGER	B. CONDON	BY	DATE
DESIGN-DETAILED	TPL	MJC	06\11
CHECKED-REVIEWED	JGS	--	06\11
DESIGN2-DETAILED2	PDD	TPL	06\11
DESIGN3-DETAILED3	--	--	--
REVISIONS 1	--		--
REVISIONS 2	--		--
REVISIONS 3	--		--
REVISIONS 4	--		--
FIELD CHANGES	--		--

SIGNATURE

P.E. NUMBER

DATE

C.A. CLAUSON BRIDGES
KENNEBEC RIVER
FAIRFIELD - BENTON SOMERSET & KENNEBEC COUNTIES

BRIDGE PROFILE NB

SHEET NUMBER
60
OF 132

Filename: ...\MSTA\060_Profile_NB2.dgn Division: HIGHWAY Username: mcorignon Date:6/10/2011

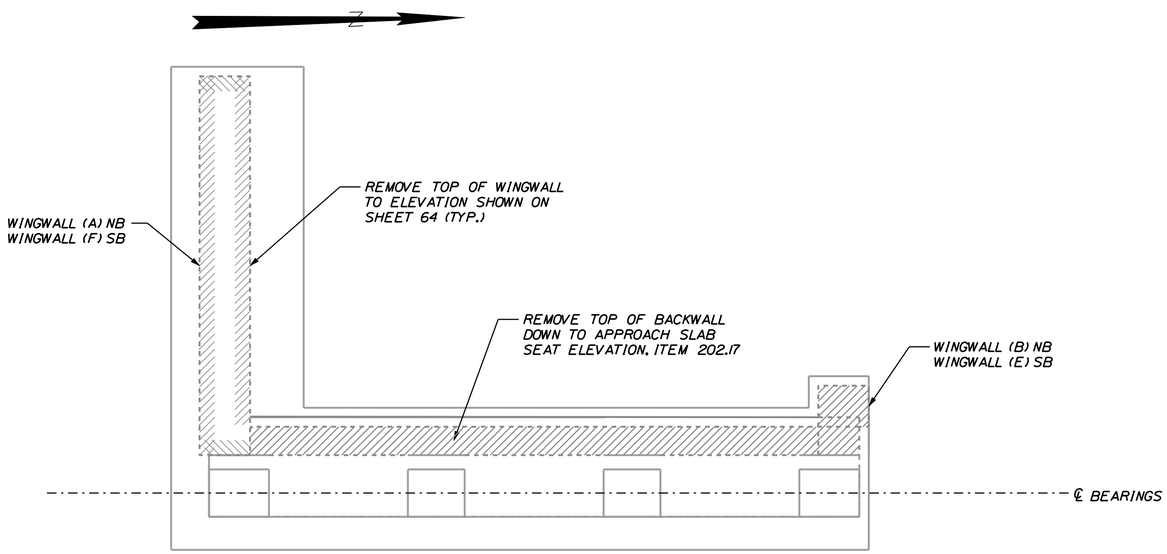

PLAN - ABUTMENT NO. 1 (NB)
(SOUTHBOUND OPPOSITE HAND)
SCALE: 1/4" = 1'-0"

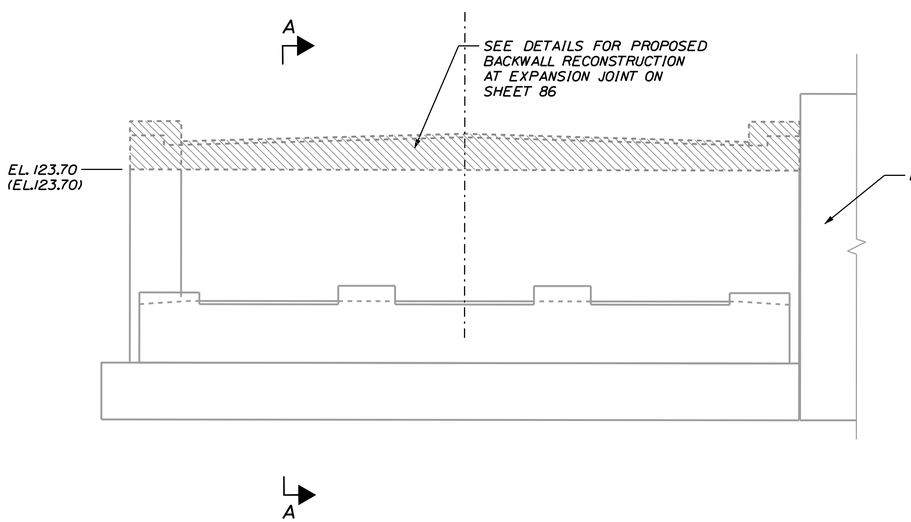

ELEVATION - ABUTMENT NO. 1 (NB)
(SOUTHBOUND OPPOSITE HAND)
SCALE: 1/4" = 1'-0"

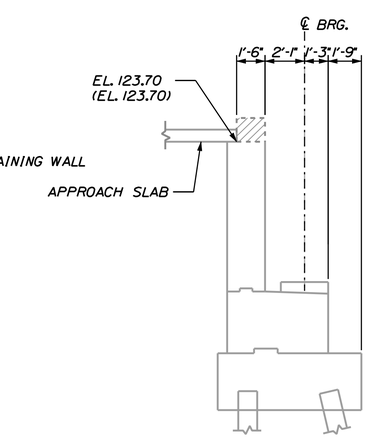

SECTION A-A
SCALE: 1/4" = 1'-0"

ABUTMENT NOTES

1. A THOROUGH INSPECTION BY THE RESIDENT WILL BE MADE OF ALL EXPOSED SUBSTRUCTURE AREAS AT THE TIME OF CONSTRUCTION. AND THOSE AREAS FOUND TO HAVE SPALLED, DELAMINATED, OR OTHERWISE UNSOUND CONCRETE WILL BE REPAIRED. THE CONTRACTOR SHALL SUPPLY ANY STAGING, WORK PLATFORMS AND LADDERS REQUIRED FOR THIS INSPECTION. THE COST SHALL BE INCIDENTAL TO RELATED CONTRACT ITEMS.
2. ANY DETERIORATED CONCRETE FOUND IN THE EXISTING BEARING PEDESTALS SHALL BE REMOVED AND REPAIRED AS APPROVED BY THE RESIDENT PRIOR TO REPLACING THE BEARINGS. REMOVAL COST INCLUDED IN CONCRETE REPAIR ITEMS.
3. ALL CONCRETE REPAIR WORK SHALL COMPLETELY PROTECT THE BRIDGE BEARINGS AND GIRDERS FROM REBOUND MATERIAL DURING CONCRETE DEMOLITION AND APPLICATION PROCEDURES.
4. PRIOR TO STARTING REPAIRS ON THE PIERS AND ABUTMENTS, TEMPORARY STRUCTURAL SUPPORTS FOR THE GIRDERS SHALL BE ERECTED. TEMPORARY STRUCTURAL SUPPORTS SHALL BE DESIGNED AND STAMPED BY A PROFESSIONAL ENGINEER LICENSED IN THE STATE OF MAINE AND SHALL BE SUBMITTED FOR REVIEW 14 DAYS PRIOR TO USE. ALL COSTS SHALL BE INCIDENTAL TO ITEM 524.32.
5. THE CONTRACTOR SHALL EXERCISE CARE TO AVOID DAMAGING EXISTING REINFORCING STEEL TO REMAIN.
6. PROTECTIVE COATING FOR CONCRETE SURFACES SHALL BE APPLIED AFTER ANY REQUIRED CONCRETE REPAIRS ARE COMPLETE.

STATE OF MAINE
DEPARTMENT OF TRANSPORTATION

IM-1668(600)E & IM-A670(000)E

PIN
1456 & 6000 16686.00 & 16700.00 BRIDGE PLANS

PROJ. MANAGER	B. CONDON	BY	DATE
DESIGN-DETAILED	TPL	MJC	06\11
CHECKED-REVIEWED	JGS	--	06\11
DESIGN2-DETAILED2	PDD	TPL	06\11
DESIGN3-DETAILED3	--	--	--
REVISIONS 1	--		--
REVISIONS 2	--		--
REVISIONS 3	--		--
REVISIONS 4	--		--
FIELD CHANGES	--		--

SIGNATURE

P.E. NUMBER

DATE

C.A. CLAUSON BRIDGES
KENNEBEC RIVER
FAIRFIELD - BENTON SOMERSET & KENNEBEC COUNTIES

ABUTMENT NO. 1 - REMOVALS

SHEET NUMBER
61
OF 132

Filename: ...\MSTA\061_Abutment_1-rem.dgn Division: HIGHWAY Username: mcarignan Date:6/10/2011

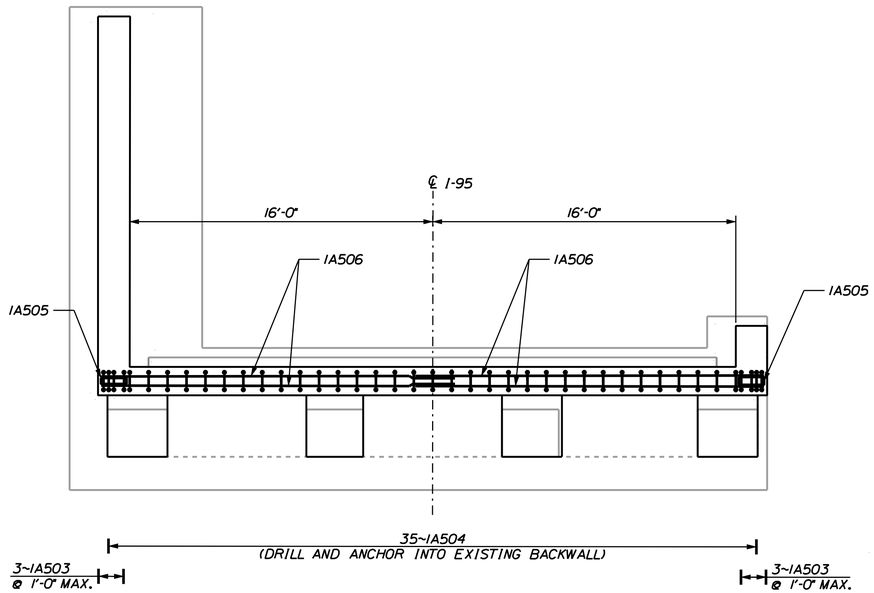

PLAN - ABUTMENT NO. 1 (NB)
(SOUTHBOUND OPPOSITE HAND)
SCALE: 1/4" = 1'-0"

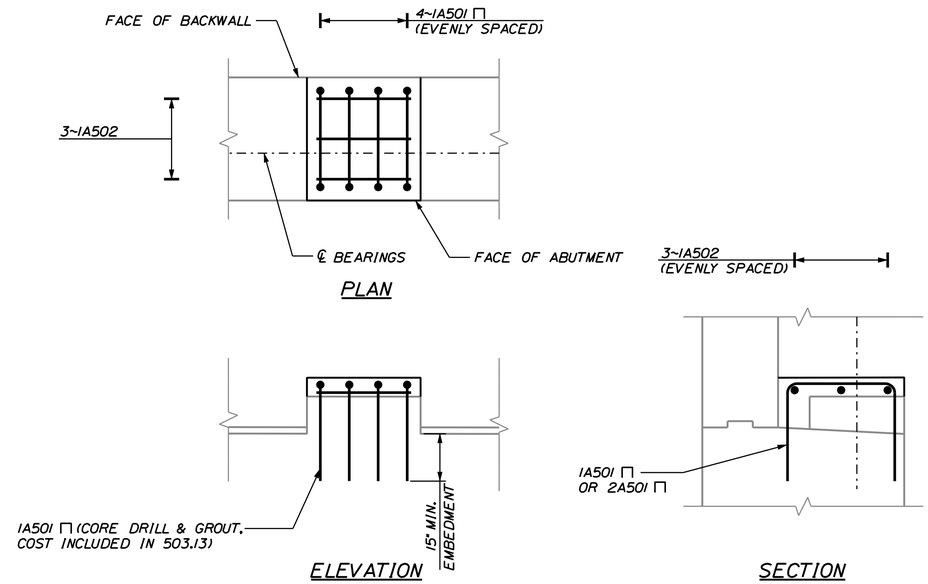

ABUTMENT BEARING PEDESTAL DETAIL
SCALE: 1/2" = 1'-0"

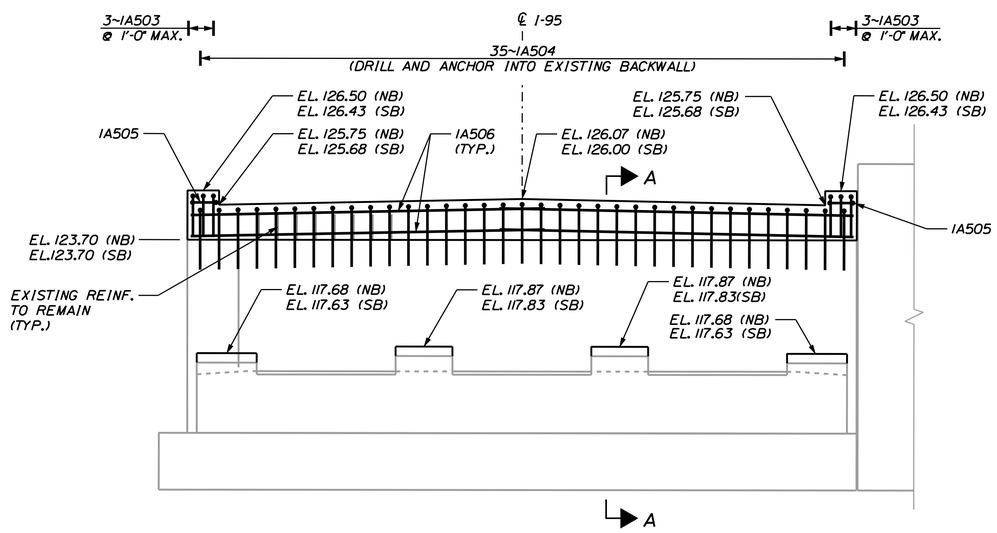

ELEVATION - ABUTMENT NO. 1 (NB)
(SOUTHBOUND OPPOSITE HAND)
SCALE: 1/4" = 1'-0"

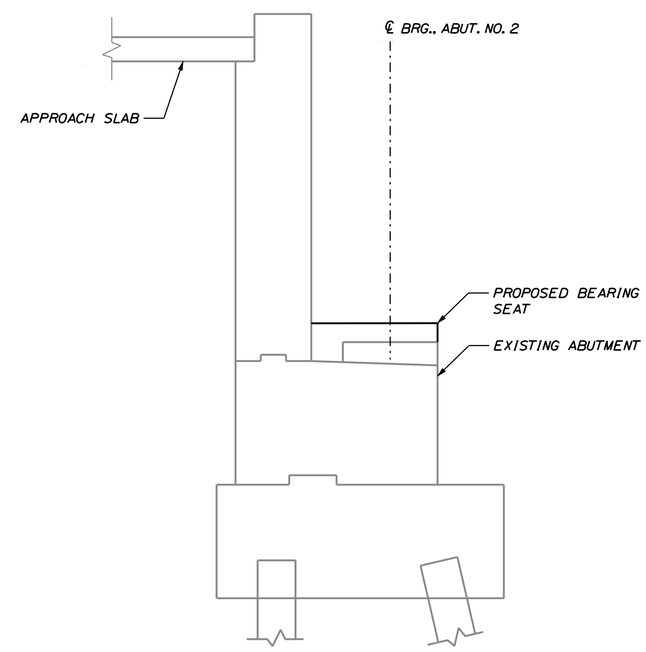

SECTION A - A
SCALE: 1/2" = 1'-0"

STATE OF MAINE
DEPARTMENT OF TRANSPORTATION

IM-1668(600)E & IM-A670(000)E

PIN
1456 & 6000 16686.00 & 16700.00 BRIDGE PLANS

PROJ. MANAGER	B. CONDON	BY	DATE
DESIGN-DETAILED	TPL	MJC	06\11
CHECKED-REVIEWED	JGS	..	06\11
DESIGN2-DETAILED2	PDD	TPL	06\11
DESIGN3-DETAILED3	..	..	..
REVISIONS 1	..	..	..
REVISIONS 2	..	..	..
REVISIONS 3	..	..	..
REVISIONS 4	..	..	..
FIELD CHANGES	..	..	..

SIGNATURE
P.E. NUMBER
DATE

C.A. CLAUSON BRIDGES
KENNEBEC RIVER
FAIRFIELD - BENTON SOMERSET & KENNEBEC COUNTIES

ABUTMENT NO. 1 - PROPOSED

SHEET NUMBER
62
OF 132

Filename: ...\BRIDGE\MSTA\062_Abutment_1.dgn Division: HIGHWAY Username: mcarignan Date:6/6/2011

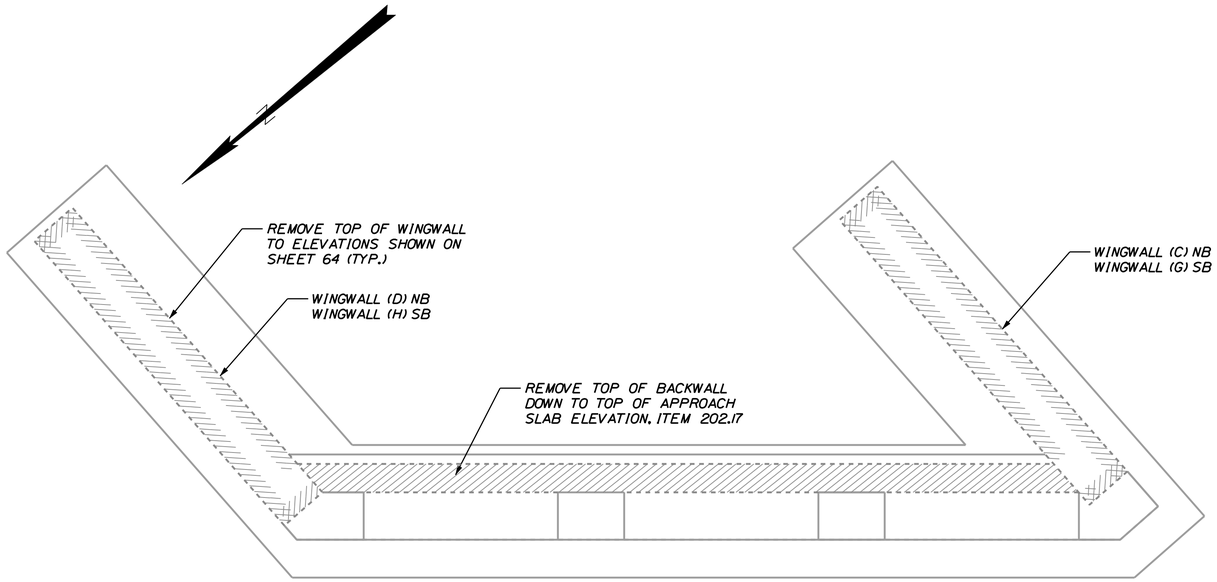

PLAN - ABUTMENT NO. 2 NB & SB
SCALE: 1/4" = 1'-0"

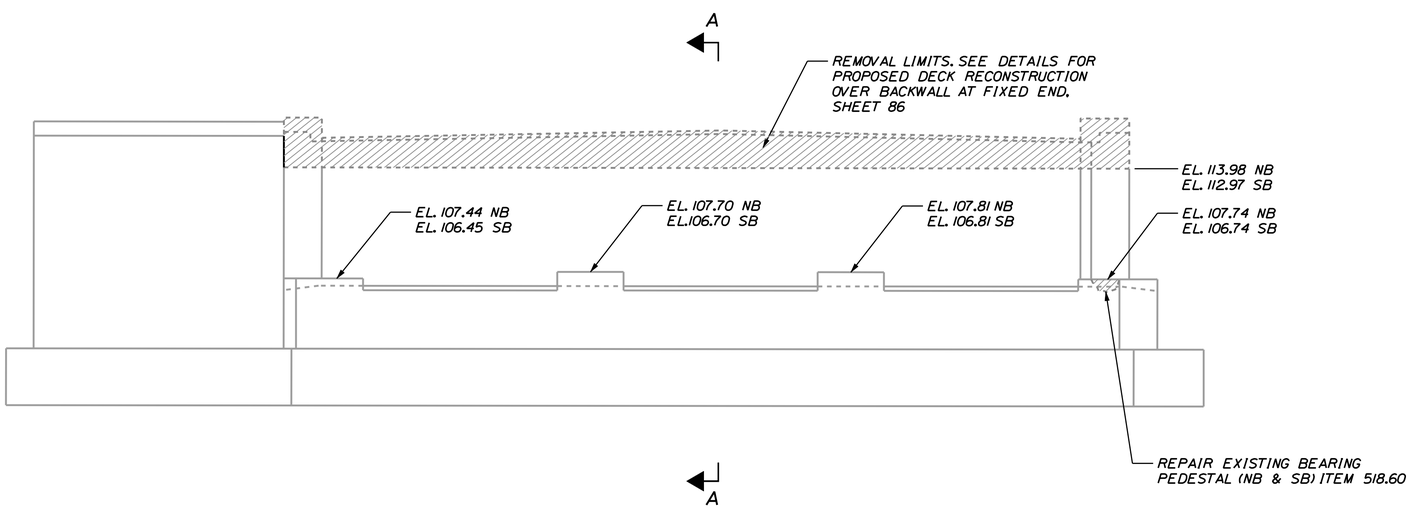

ELEVATION - ABUTMENT NO. 2 NB & SB
SCALE: 1/4" = 1'-0"

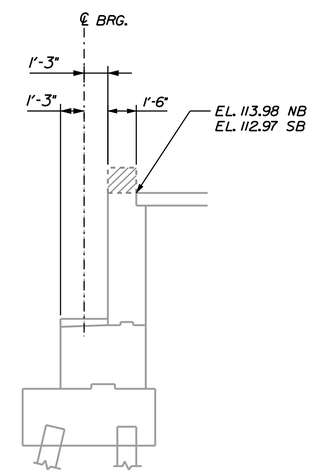

SECTION A-A
SCALE: 1/4" = 1'-0"

STATE OF MAINE
DEPARTMENT OF TRANSPORTATION

IM-1668(600)E & IM-A670(000)E

PIN
1456 & 6000 16686.00 & 16700.00 BRIDGE PLANS

PROJ. MANAGER	B. CONDON	BY	DATE
DESIGN-DETAILED	TPL	MJC	06\11
CHECKED-REVIEWED	JGS	--	06\11
DESIGN2-DETAILED2	PDD	TPL	06\11
DESIGN3-DETAILED3	--	--	--
REVISIONS 1	--		--
REVISIONS 2	--		--
REVISIONS 3	--		--
REVISIONS 4	--		--
FIELD CHANGES	--		--

SIGNATURE

P.E. NUMBER

DATE

C.A. CLAUSON BRIDGES
KENNEBEC RIVER
FAIRFIELD - BENTON SOMERSET & KENNEBEC COUNTIES

ABUTMENT NO. 2

SHEET NUMBER
63
OF 132

Filename: ...\BRIDGE\MSTA\063_Abutment_2.dgn Division: HIGHWAY Username: mcorignon Date:6/6/2011

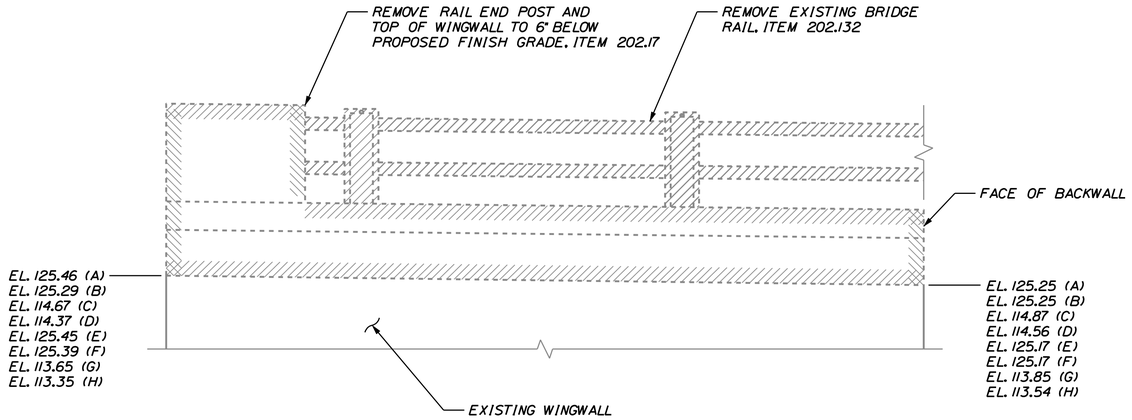

WINGWALL DEMOLITION ELEVATION

SCALE: 1/2" = 1'-0"

NOTE:
(A) NB SOUTHEAST WINGWALL
(B) NB SOUTHWEST WINGWALL
(C) NB NORTHEAST WINGWALL
(D) NB NORTHWEST WINGWALL
(E) SB SOUTHEAST WINGWALL
(F) SB SOUTHWEST WINGWALL
(G) SB NORTHEAST WINGWALL
(H) SB NORTHWEST WINGWALL

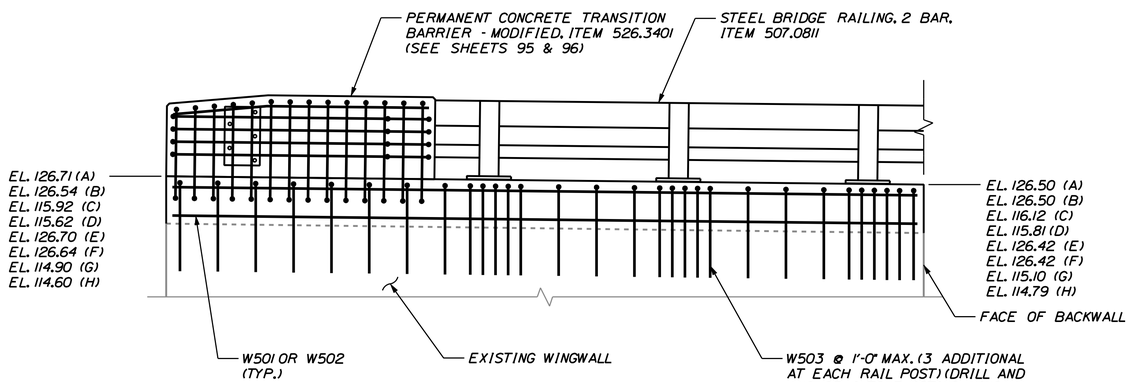

WINGWALL REPLACEMENT ELEVATION

SCALE: 1/2" = 1'-0"

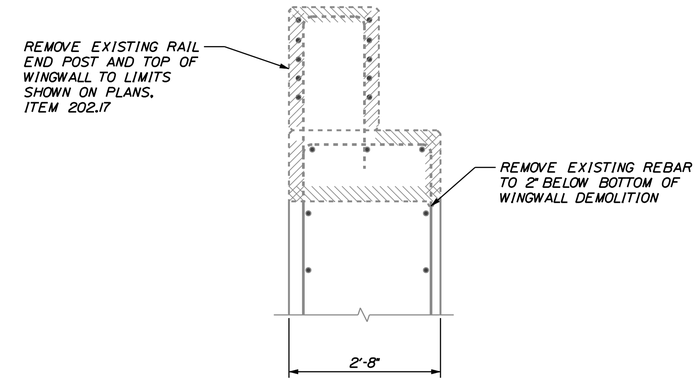

WINGWALL DEMOLITION DETAIL

SCALE: 3/4" = 1'-0"

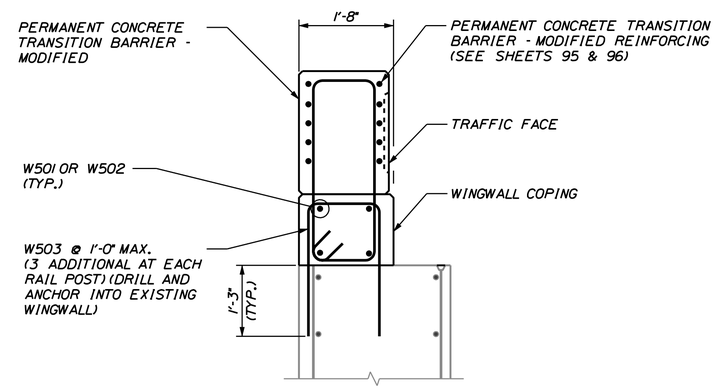

PROPOSED WINGWALL DETAIL

SCALE: 3/4" = 1'-0"

STATE OF MAINE
DEPARTMENT OF TRANSPORTATION

IM-1668(600)E & IM-A670(000)E

PIN 16686.00 & 16700.00

1456 & 6000 BRIDGE PLANS

PROJ. MANAGER	B. CONDON	BY	DATE
DESIGN-DETAILED	TPL	MJC	06\11
CHECKED-REVIEWED	JGS	--	06\11
DESIGN2-DETAILED2	PDD	TPL	06\11
DESIGN3-DETAILED3	--	--	--
REVISIONS 1	--	--	--
REVISIONS 2	--	--	--
REVISIONS 3	--	--	--
REVISIONS 4	--	--	--
FIELD CHANGES	--	--	--

SIGNATURE

P.E. NUMBER

DATE

C.A. CLAUSON BRIDGES
KENNEBEC RIVER
FAIRFIELD - BENTON SOMERSET & KENNEBEC COUNTIES

ABUTMENT DETAILS

SHEET NUMBER

64

OF 132

Filename: ...\MSTA\064_Abutment_det.dgn Division: HIGHWAY Username: mcorignon Date:6/6/2011

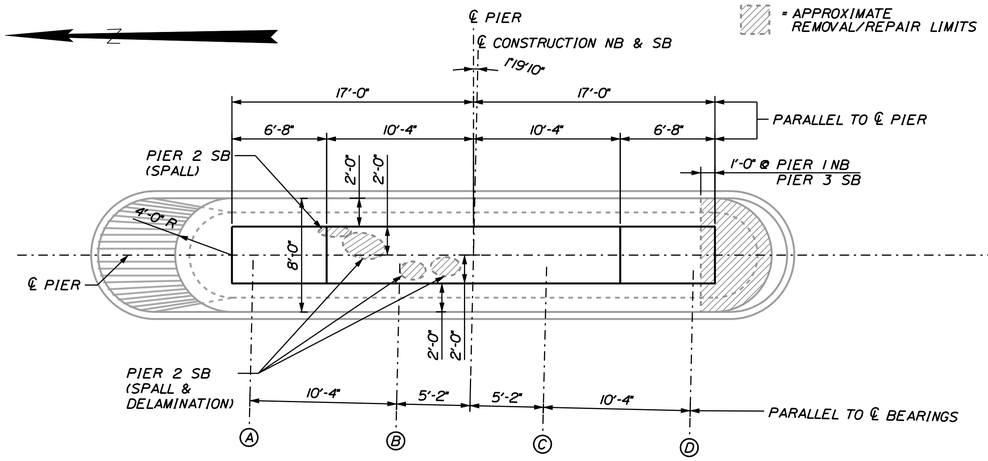

TYPICAL PIER PLAN (PIERS 1 THRU 4) NB & SB

SCALE: 3/16" = 1'-0"

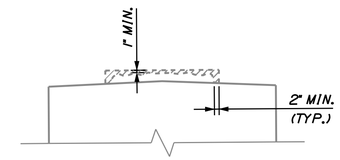

MINIMUM BEARING SEAT REMOVAL LIMITS

SCALE: 3/8" = 1'-0"

PIER NOTES

1. A THOROUGH INSPECTION BY THE RESIDENT WILL BE MADE OF ALL PIER CAPS AND BEARING SEATS AT THE TIME OF CONSTRUCTION, AND THOSE AREAS FOUND TO HAVE SPALLED, DELAMINATED, OR OTHERWISE UNSOUND CONCRETE WILL BE REPAIRED. THE CONTRACTOR SHALL SUPPLY ANY STAGING WORK PLATFORMS AND LADDERS REQUIRED FOR THIS INSPECTION. THE COST SHALL BE INCIDENTAL TO THE CONCRETE REPAIR ITEMS.
2. ALL CONCRETE REPAIR WORK SHALL COMPLETELY PROTECT THE BRIDGE BEARINGS AND GIRDERS FROM REBOUND MATERIAL DURING CONCRETE DEMOLITION AND APPLICATION PROCEDURES.
3. PRIOR TO STARTING REPAIRS ON THE PIERS AND ABUTMENTS, TEMPORARY STRUCTURAL SUPPORTS FOR THE GIRDERS SHALL BE ERECTED. TEMPORARY STRUCTURAL SUPPORTS SHALL BE DESIGNED AND STAMPED BY A PROFESSIONAL ENGINEER LICENSED IN THE STATE OF MAINE AND SHALL BE SUBMITTED FOR REVIEW 14 DAYS PRIOR TO USE. ALL COSTS SHALL BE INCIDENTAL TO ITEM 524.32.
4. PIER REINFORCING STEEL IN THE PROPOSED BEARING PEDESTALS SHALL HAVE A MINIMUM CONCRETE COVER OF 3 INCHES UNLESS OTHERWISE NOTED. IF THE PROPOSED BEARING PEDESTAL ELEVATION IS LESS THAN 4 INCHES HIGHER THAN THE EXISTING PEDESTAL ELEVATION OR REMOVAL LIMIT ELEVATION, REINFORCING NEED NOT BE USED. THE EXISTING SURFACE SHALL BE ROUGHENED AS DIRECTED BY THE RESIDENT PRIOR TO PLACING NEW CONCRETE, AND SHALL BE INCIDENTAL TO ITEM 502.23.
5. THE PROPOSED WORK INCLUDES REMOVAL OF PORTIONS OF THE BEARING SEATS AT EACH PIER TO THE MINIMUM REMOVAL LIMITS SHOWN ON THIS SHEET OR AS DIRECTED BY THE RESIDENT, AND WILL BE PAID UNDER ITEM 202.17. REMOVAL OF DETERIORATED CONCRETE BEYOND THE MINIMUM REMOVAL LIMITS WITHIN THE BEARING SEAT AREA WILL BE PAID UNDER ITEM 202.17.
6. ITEM 502.23, STRUCTURAL CONCRETE, PIERS, SHALL BE USED TO CONSTRUCT THE PROPOSED BEARING SEATS INCLUDING FILLING AREAS REQUIRING REMOVAL OF DETERIORATED CONCRETE.
7. EXISTING REBAR THAT IS EXPOSED BY CONCRETE REMOVAL SHALL BE CLEANED. WORK SHALL BE INCIDENTAL TO THE APPROPRIATE 502 OR 518 ITEMS.
8. ALL CRACKS OF 15 MILS OR GREATER IN WIDTH SHALL BE FILLED WITH AN APPROVED EPOXY. CRACK LOCATIONS SHOWN ARE APPROXIMATE. SEE CRACK REPAIR DETAIL ON SHEET 68.
9. PROTECTIVE COATING FOR CONCRETE SURFACES SHALL BE APPLIED AFTER ALL REQUIRED CONCRETE WORK IS COMPLETE.

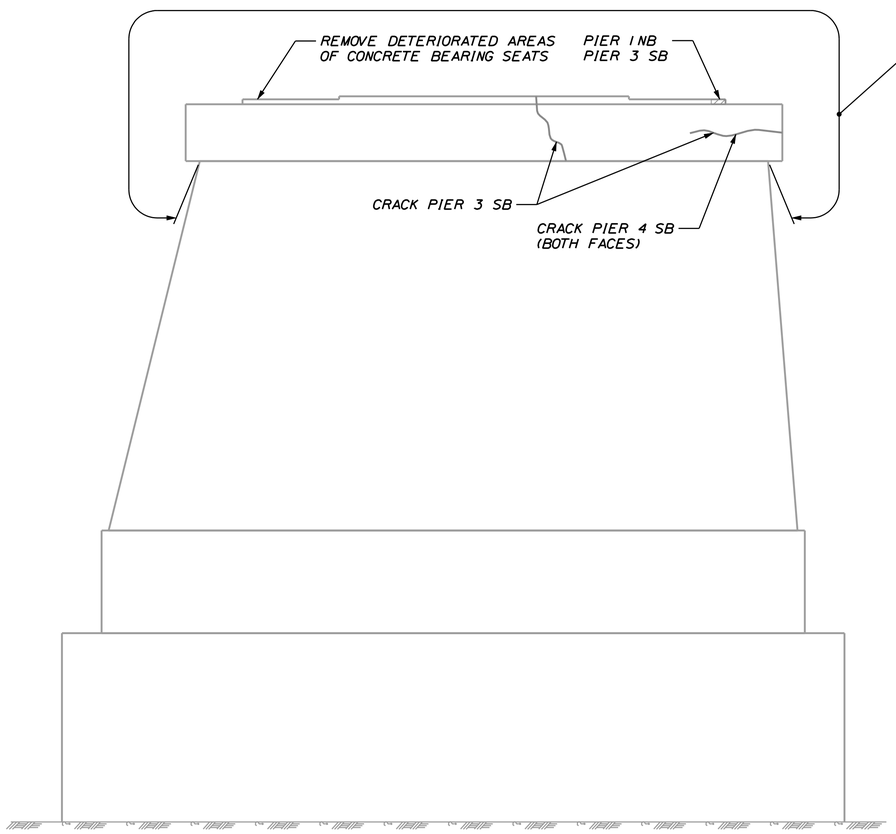

TYPICAL PIER ELEVATION (PIERS 1 THRU 4) NB & SB

SCALE: 3/16" = 1'-0"

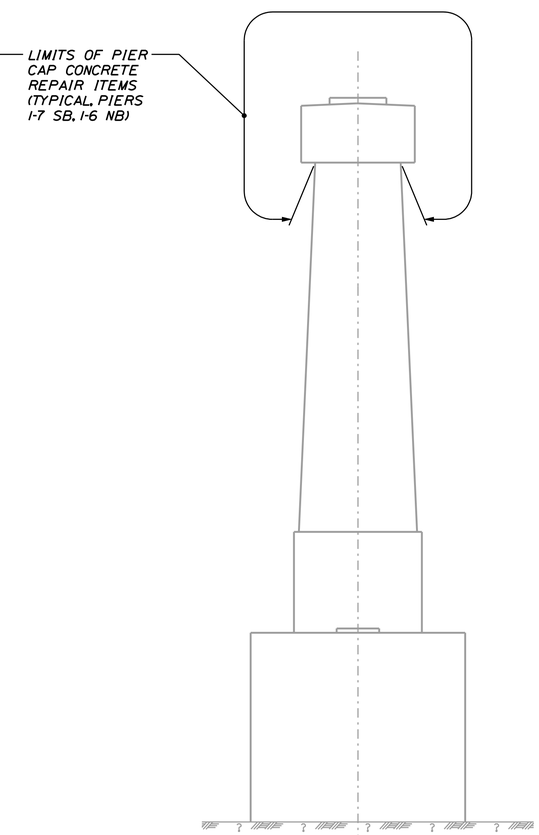

TYPICAL PIER SECTION (PIERS 1 THRU 4) NB & SB

SCALE: 3/16" = 1'-0"

STATE OF MAINE
DEPARTMENT OF TRANSPORTATION

IM-1668(600)E & IM-A670(000)E

PIN 16686.00 & 16700.00

1456 & 6000

BRIDGE PLANS

PROJ. MANAGER	B. CONDON	BY	DATE
DESIGN-DETAILED	TPL	MJC	06\11
CHECKED-REVIEWED	JGS	--	06\11
DESIGN2-DETAILED2	PDD	TPL	06\11
DESIGN3-DETAILED3		--	--
REVISIONS 1		--	--
REVISIONS 2		--	--
REVISIONS 3		--	--
REVISIONS 4		--	--
FIELD CHANGES		--	--

SIGNATURE

P.E. NUMBER

DATE

C.A. CLAUSON BRIDGES
KENNEBEC RIVER

FAIRFIELD - BENTON SOMERSET & KENNEBEC COUNTIES

TYPICAL PIER PLAN & ELEVATION

SHEET NUMBER

65

OF 132

Filename: ...\MSTA\065_Pier_plan&elev.dgn Division: HIGHWAY Username: mcarignan Date:6/6/2011

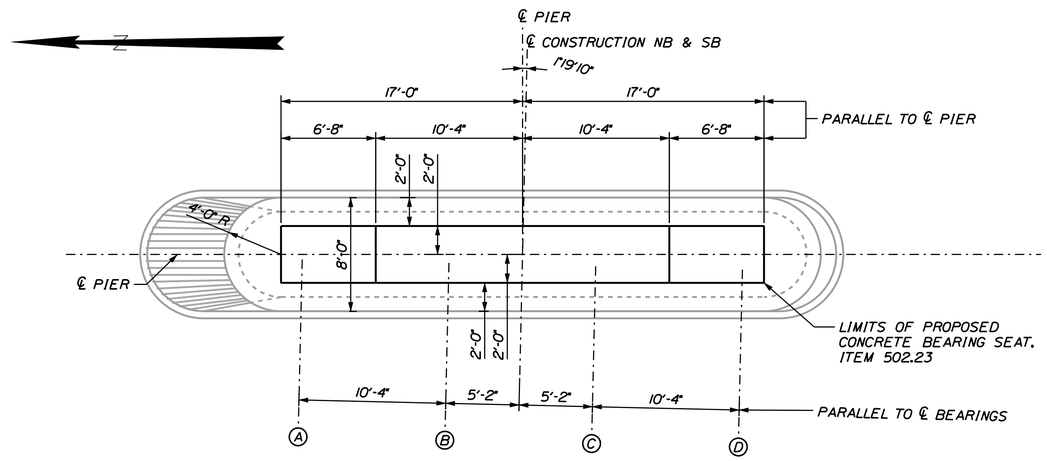

TYPICAL PIER PLAN (PIERS 1 THRU 4) NB & SB

SCALE: 3/16" = 1'-0"

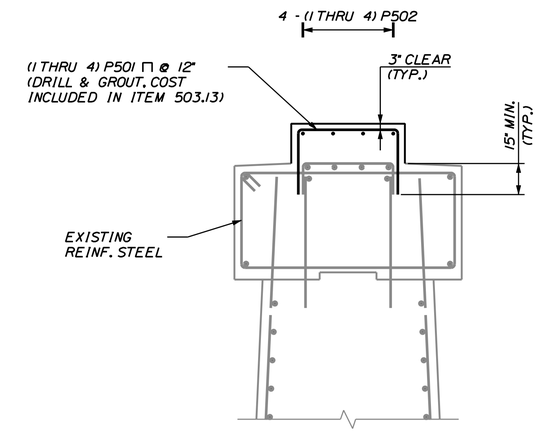

SECTION A-A

SCALE: 3/8" = 1'-0"

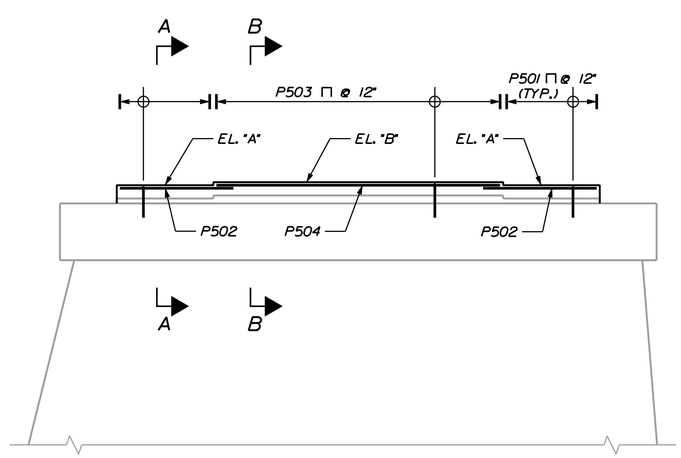

TYPICAL PIER ELEVATION (PIERS 1 THRU 4) NB & SB

SCALE: 3/16" = 1'-0"

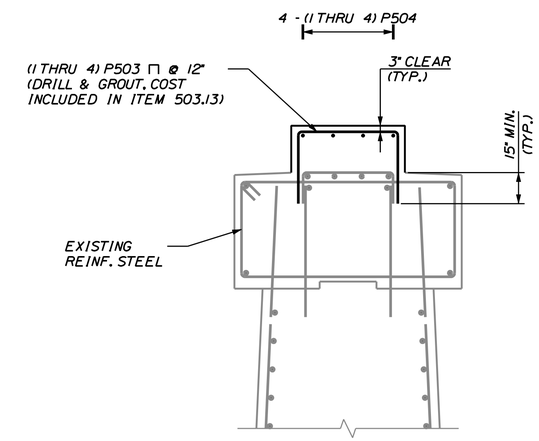

SECTION B-B

SCALE: 3/8" = 1'-0"

CONCRETE BEARING SEAT ELEVATIONS		
LOCATION	EL. "A"	EL. "B"
PIER 1 NB	113.22	113.42
PIER 2 NB	111.48	111.68
PIER 3 NB	109.74	109.93
PIER 4 NB	107.99	108.19
PIER 1 SB	113.19	113.38
PIER 2 SB	111.45	111.65
PIER 3 SB	109.71	109.91
PIER 4 SB	107.98	108.18

STATE OF MAINE
DEPARTMENT OF TRANSPORTATION

IM-1668(600)E & IM-A670(000)E

PIN 16686.00 & 16700.00

1456 & 6000 BRIDGE PLANS

PROJ. MANAGER	B. CONDON	BY	DATE
DESIGN-DETAILED	TPL	MJC	06\11
CHECKED-REVIEWED	JGS	--	06\11
DESIGN2-DETAILED2	PDD	TPL	06\11
DESIGN3-DETAILED3	--	--	--
REVISIONS 1	--		--
REVISIONS 2	--		--
REVISIONS 3	--		--
REVISIONS 4	--		--
FIELD CHANGES	--		--

SIGNATURE

P.E. NUMBER

DATE

C.A. CLAUSON BRIDGES
KENNEBEC RIVER
FAIRFIELD - BENTON SOMERSET & KENNEBEC COUNTIES

PIERS 1-4 - PLAN & ELEV.

SHEET NUMBER

66

OF 132

Filename: ...\BRIDGE\MSTA\066_Pier_1-4.dgn Division: HIGHWAY Username: mcarignan Date:6/6/2011

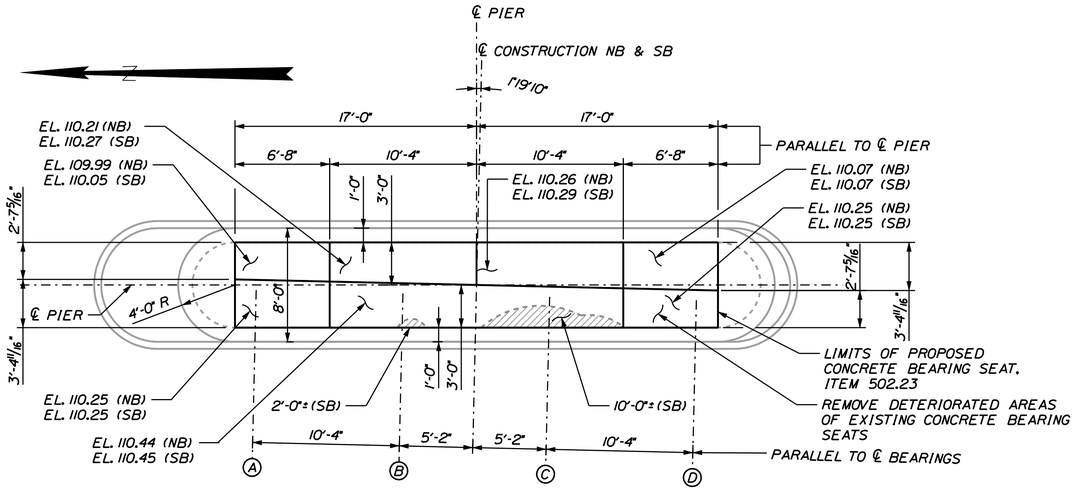

TYPICAL REMOVAL & PROPOSED PIER PLAN (PIER 5 NB & SB)

SCALE: 3/16" = 1'-0"

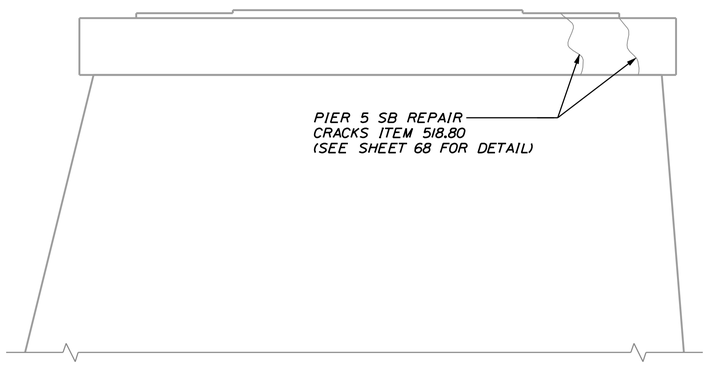

TYPICAL REMOVAL PIER ELEVATION (PIER 5)

SCALE: 3/16" = 1'-0"

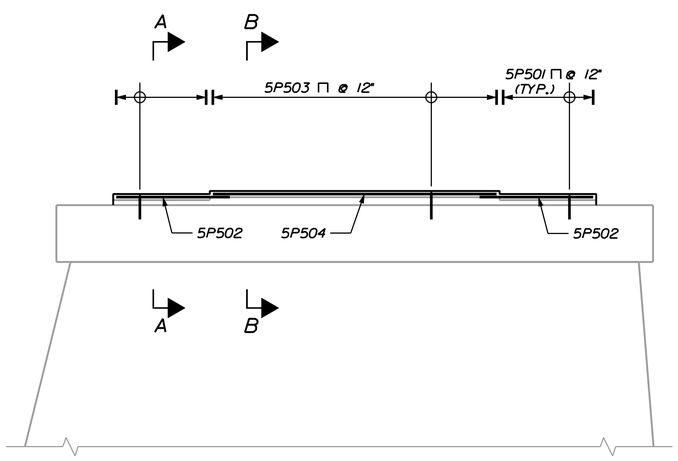

TYPICAL PROPOSED PIER ELEVATION (PIER 5 NB & SB)

SCALE: 3/16" = 1'-0"

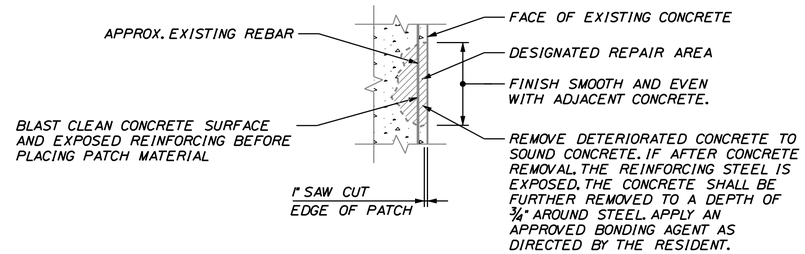

CONCRETE REPAIR DETAIL - REBAR EXPOSED (ITEMS 518.51, 518.60, & 518.61)

SCALE: 1/2" = 1'-0"

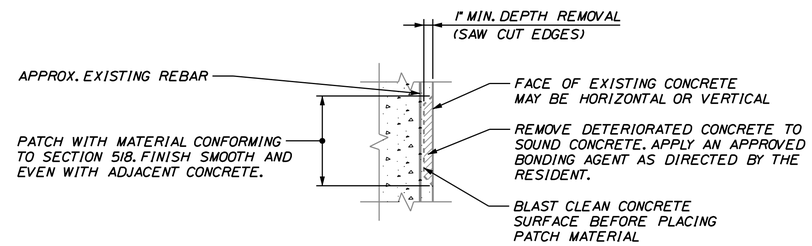

CONCRETE REPAIR/PATCH DETAIL - REBAR NOT EXPOSED (ITEMS 518.50 & 518.60)

SCALE: 1/2" = 1'-0"

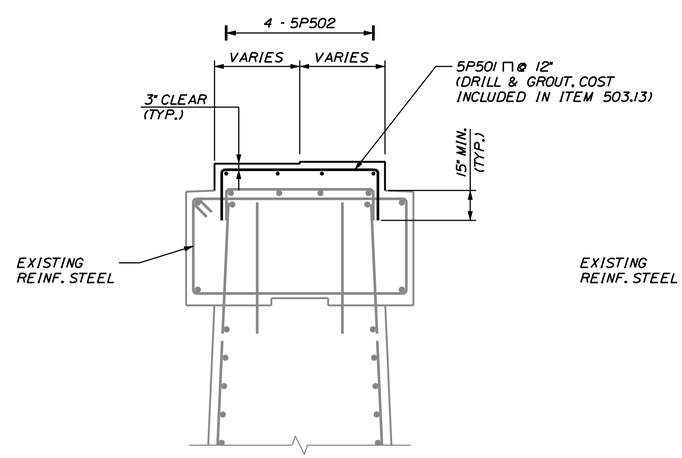

SECTION A-A

SCALE: 3/8" = 1'-0"

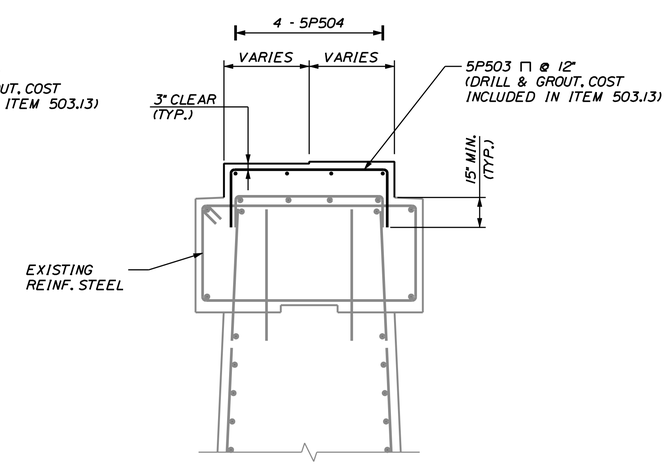

SECTION B-B

SCALE: 3/8" = 1'-0"

STATE OF MAINE
DEPARTMENT OF TRANSPORTATION

IM-1668(600)E & IM-A670(000)E

PIN 16686.00 & 16700.00

1456 & 6000 BRIDGE PLANS

PROJ. MANAGER	B. CONDON	BY	DATE
DESIGN-DETAILED	TPL	MJC	06\11
CHECKED-REVIEWED	JGS	--	06\11
DESIGN2-DETAILED2	PDD	TPL	06\11
DESIGN3-DETAILED3	--	--	--
REVISIONS 1	--		--
REVISIONS 2	--		--
REVISIONS 3	--		--
REVISIONS 4	--		--
FIELD CHANGES	--		--

SIGNATURE

P.E. NUMBER

DATE

C.A. CLAUSON BRIDGES
KENNEBEC RIVER
FAIRFIELD - BENTON SOMERSET & KENNEBEC COUNTIES

PIER 5

SHEET NUMBER
67
OF 132

Filename: ...\BRIDGE\MSTA\067_Pier_5.dgn Division: HIGHWAY Username: mcorignon Date:6/10/2011

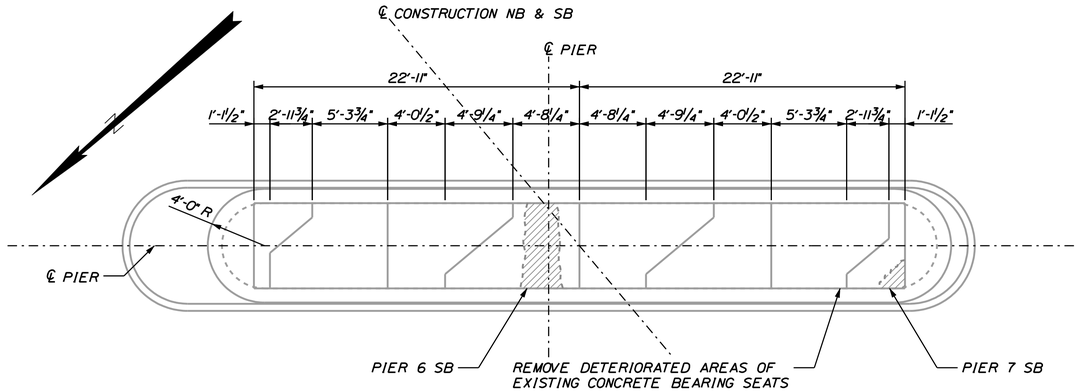

TYPICAL REMOVAL PIER PLAN (PIER 6 NB & SB, PIER 7 SB)

SCALE: 3/16" = 1'-0"

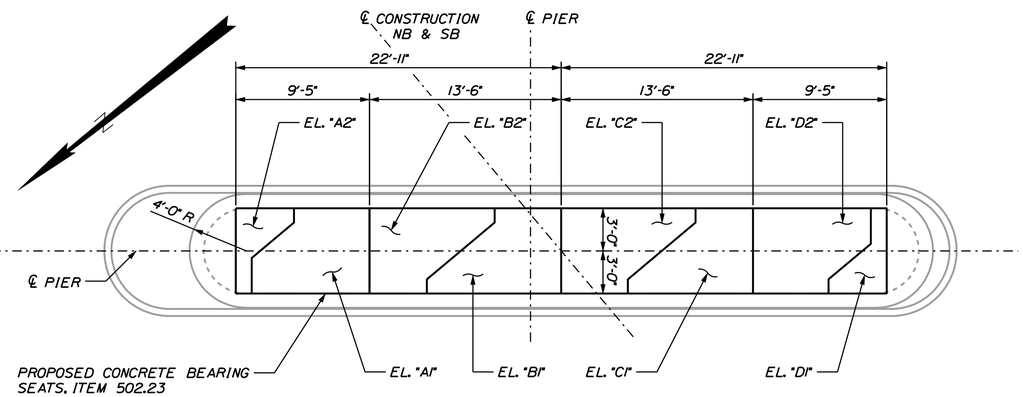

TYPICAL PROPOSED PIER PLAN (PIER 6 NB & SB, PIER 7 SB)

SCALE: 3/16" = 1'-0"

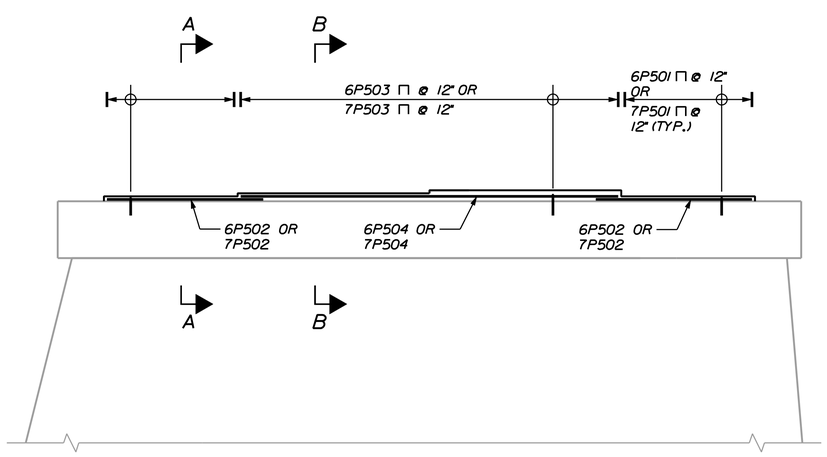

TYPICAL PROPOSED PIER ELEVATION (PIER 6 NB & SB, PIER 7 SB)

SCALE: 3/16" = 1'-0"

CONCRETE BEARING SEAT ELEVATIONS			
LOCATION	PIER 6 NB	PIER 6 SB	PIER 7 SB
EL. "A1"	108.62	108.89	107.68
EL. "A2"	108.67	108.89	107.68
EL. "B1"	108.94	109.21	107.92
EL. "B2"	108.94	109.14	107.92
EL. "C1"	109.09	109.33	108.02
EL. "C2"	109.03	109.24	108.02
EL. "D1"	109.01	109.23	107.98
EL. "D2"	108.97	109.19	107.98

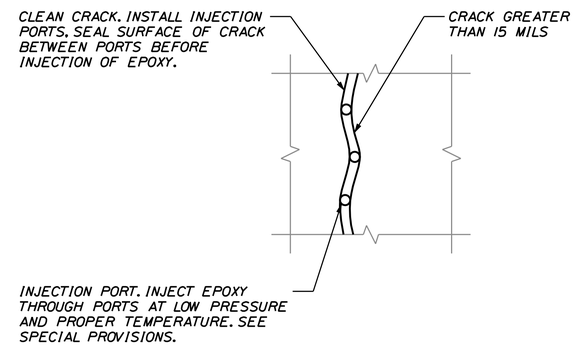

CRACK REPAIR DETAIL

SCALE: 1/2" = 1'-0"

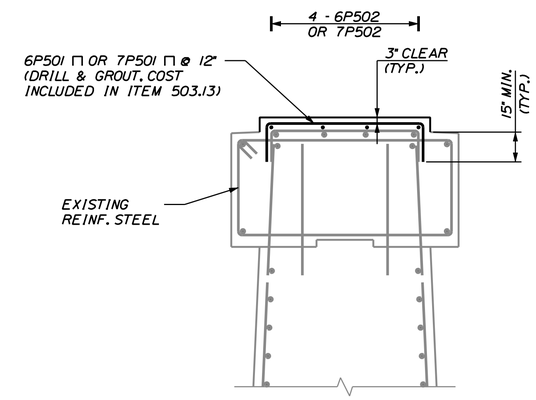

SECTION A-A

SCALE: 3/8" = 1'-0"

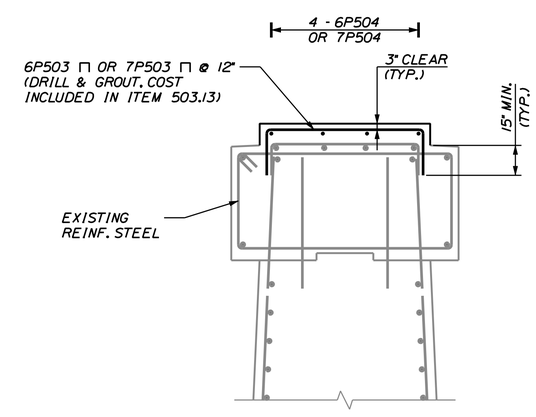

SECTION B-B

SCALE: 3/8" = 1'-0"

STATE OF MAINE
DEPARTMENT OF TRANSPORTATION

IM-1668(600)E & IM-A670(000)E

PIN 16686.00 & 16700.00

1456 & 6000

BRIDGE PLANS

PROJ. MANAGER	B. CONDON	BY	DATE
DESIGN-DETAILED	TPL	MJC	06\11
CHECKED-REVIEWED	JCS	--	06\11
DESIGN2-DETAILED2	PDD	TPL	06\11
DESIGN3-DETAILED3	--	--	--
REVISIONS 1	--		--
REVISIONS 2	--		--
REVISIONS 3	--		--
REVISIONS 4	--		--
FIELD CHANGES	--		--

SIGNATURE

P.E. NUMBER

DATE

C.A. CLAUSON BRIDGES
KENNEBEC RIVER

FAIRFIELD - BENTON SOMERSET & KENNEBEC COUNTIES

PIERS 6-7

SHEET NUMBER

68

OF 132

Filename: ...\BRIDGE\MSTA\068_Pier_6-8.dgn Division: HIGHWAY Username: mcarignan Date:6/6/2011

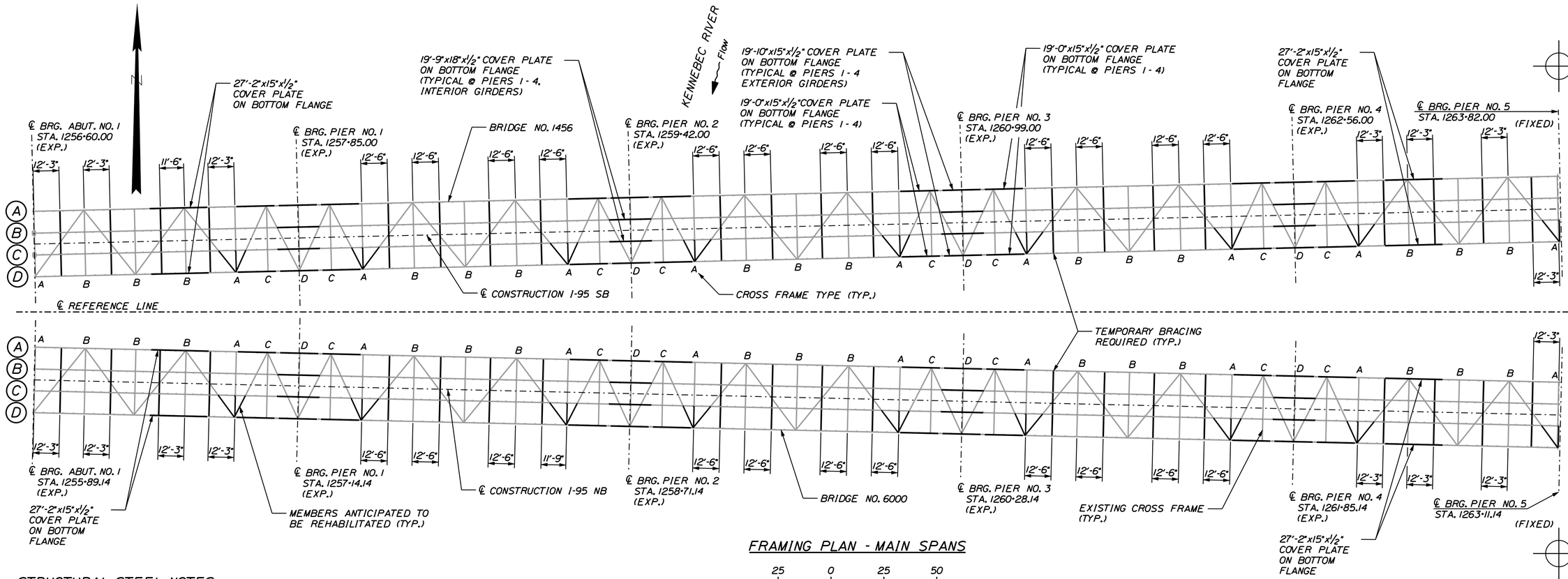

FRAMING PLAN - MAIN SPANS

25 0 25 50
SCALE OF FEET

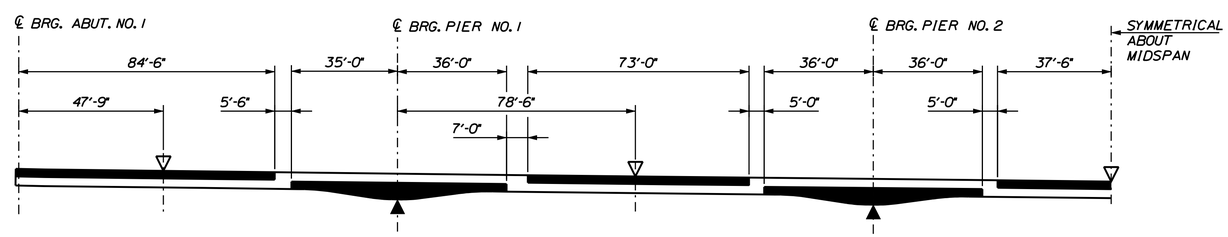

BEAM STRESS DIAGRAM - MAIN SPANS

LEGEND

- INDICATES AREAS ALWAYS IN COMPRESSION. ALL OTHERS ARE IN TENSION OR HAVE STRESS REVERSAL AT SERVICE LOADS.
- ▽ POINT OF MAXIMUM POSITIVE MOMENT.
- ▲ POINT OF MAXIMUM NEGATIVE MOMENT.

STRUCTURAL STEEL NOTES

1. THE PROPOSED PLANS ARE BASED ON THE ORIGINAL CONSTRUCTION PLANS, AND DO NOT NECESSARILY REFLECT AS-BUILT CONDITIONS. IT IS THE CONTRACTOR'S RESPONSIBILITY TO FIELD-VERIFY ALL DIMENSIONS, ANGLES, MEMBER SIZES, AND LAYOUT PRIOR TO ORDERING AND FABRICATING NEW MATERIAL.

2. ONCE THE BRIDGE DECK HAS BEEN REMOVED, THERE MAY BE ADDITIONAL AREAS TO BE REHABILITATED.

3. THE CONTRACTOR SHALL TAKE CARE TO AVOID DAMAGING THE PORTIONS OF THE EXISTING MEMBERS TO REMAIN. ANY DAMAGE TO EXISTING MEMBERS CAUSED BY THE CONTRACTOR'S OPERATIONS SHALL BE REPAIRED OR REPLACED AT THE DEPARTMENT'S DISCRETION AND AT THE CONTRACTOR'S SOLE EXPENSE. REPAIR MATERIALS AND METHODS SHALL BE APPROVED BY THE RESIDENT.

4. ALL AREAS OF REMAINING EXISTING STEEL EXPOSED BY REMOVAL OR REHABILITATION SHALL BE PREPARED AND PAINTED IN ACCORDANCE WITH THE SPECIFICATIONS.

5. THE TEMPORARY BRACING ADJACENT TO THE MEMBERS TO BE REHABILITATED SHALL BE INSTALLED PRIOR TO REMOVING ANY EXISTING MEMBERS.

6. ALL STRUCTURAL STEEL REHABILITATION WITHIN A SPAN MUST BE COMPLETED PRIOR TO PLACING CONCRETE AT ANY LOCATION WITHIN THE SAME SPAN.

7. THE CONTRACTOR MAY PROPOSE ALTERNATE REHABILITATION DETAILS. ANY PROPOSED CHANGE MUST BE APPROVED BY THE RESIDENT PRIOR TO COMMENCING THE WORK.

8. TEMPORARY BRACING SHALL BE INSTALLED PRIOR TO PLACEMENT OF THE DECK CONCRETE, AND SHALL REMAIN IN PLACE FOR 7 DAYS AFTER PLACEMENT. TEMPORARY BRACING WILL BE PAID UNDER ITEM 524.301.

9. NO TEMPORARY BRACING MAY BE LEFT IN PLACE. ONCE THE TEMPORARY BRACING IS REMOVED, ALL HOLES SHALL BE FILLED WITH 7/8"ϕ ASTM 325 TYPE 1 GALVANIZED BOLTS. BOLT HEADS TO BE ON OUTSIDE FACE OF EXTERIOR GIRDERS. ALL COSTS FOR INSTALLING AND REMOVING TEMPORARY BRACING, AND INSTALLING HIGH-STRENGTH BOLTS SHALL BE INCIDENTAL TO ITEM 524.301.

10. WELDING AND NONDESTRUCTIVE EXAMINATION SHALL BE PERFORMED IN ACCORDANCE WITH AASHTO/AWS D1.5 BRIDGE WELDING CODE.

COVER PLATE NOTES

1. WITHIN THE MAIN SPAN UNIT, THE BRIDGE DECK SHALL BE REMOVED A MINIMUM OF TWO SPANS TO EITHER SIDE OF THE COVER PLATES BEING INSTALLED. COVER PLATES MUST BE INSTALLED PRIOR TO PLACING CONCRETE AT ANY LOCATION WITHIN THE SAME SPAN.

2. COVER PLATES SHALL FOLLOW THE CURVATURE OF THE EXISTING FLANGE AND HAVE CONTINUOUS CONTACT.

3. BOLTS SHALL BE 7/8"ϕ A325 WITH 15/16"ϕ HOLES.

4. EXISTING FLANGE SURFACES IN CONTACT WITH COVER PLATES SHALL MEET CLASS B SURFACE REQUIREMENTS.

5. COVER PLATES SHALL BE TEMPORARILY CLAMPED IN PLACE PRIOR TO BOLTING.

COVER PLATE NOTES (CONTINUED)

6. FOR THE WELDED CONNECTIONS, THE REQUIRED CONSTRUCTION SEQUENCE SHALL BE AS FOLLOWS:
   - CLEAN FAYING SURFACES
   - DRILL HOLES IN EXISTING FLANGE USING PREFABRICATED COVER PLATE AS A TEMPLATE
   - INSTALL BOLTS & WASHERS, FINGER TIGHT
   - CLAMP COVER PLATE TO EXISTING FLANGE TO PROVIDE CONTINUOUS CONTACT AS APPROVED BY THE RESIDENT
   - WELD PLATES (WELD FROM CENTER OF COVER PLATE OUT TO ENDS)
   - TIGHTEN BOLTS

MATERIALS

PROPOSED STRUCTURAL STEEL:
ALL MATERIAL (EXCEPT AS NOTED)..... 709/A709M, GRADE 50 (PAINTED)
HIGH STRENGTH BOLTS .....ASTM A325, TYPE 1 (GALVANIZED)

EXISTING STRUCTURAL STEEL
GIRDERS AND BEARING STIFFENERS .....ASTM A441
FIELD SPLICE PLATES ..... ASTM A440 OR A441
HIGH STRENGTH BOLTS .....ASTM A325
PEDESTALS - PINS .....ASTM A325 OR A108
- ROCKER AND MASONRY PLATES ..... ASTM A36
EXPANSION DAMS ..... ASTM A441
ALL OTHER .....ASTM A7 OR A36

BASIC DESIGN STRESSES

PROPOSED STRUCTURAL STEEL:
ASTM A 709/A 709M, GRADE 50W..... Fy = 50,000 PSI
ASTM A 709/A 709M, GRADE 36..... Fy = 36,000 PSI
ASTM A 325 ..... Fu = 120,000 PSI

STATE OF MAINE
DEPARTMENT OF TRANSPORTATION

IM-1668(600)E & IM-A670(000)E

PIN 16686.00 & 16700.00

1456 & 6000

BRIDGE PLANS

PROJ. MANAGER		B. CONDON	BY	DATE
DESIGN-DETAILED	TPL	MJC		06/11
CHECKED-REVIEWED	JGS	--		06/11
DESIGN2-DETAILED2	PDD	TPL		06/11
DESIGN3-DETAILED3	--	--		06/11
REVISIONS 1	--	COVER PLATES		05/11
REVISIONS 2	--	--		--
REVISIONS 3	--	--		--
REVISIONS 4	--	--		--
FIELD CHANGES	--	--		--

SIGNATURE

P.E. NUMBER

DATE

C.A. CLAUSON BRIDGES
KENNEBEC RIVER
FAIRFIELD - BENTON SOMERSET & KENNEBEC COUNTIES

FRAMING PLAN 1

SHEET NUMBER
69
OF 132

Filename: ...\BRIDGE\MSTA\069_Framing_1.dgn Division: HIGHWAY Username: mcarignan Date:6/15/2011

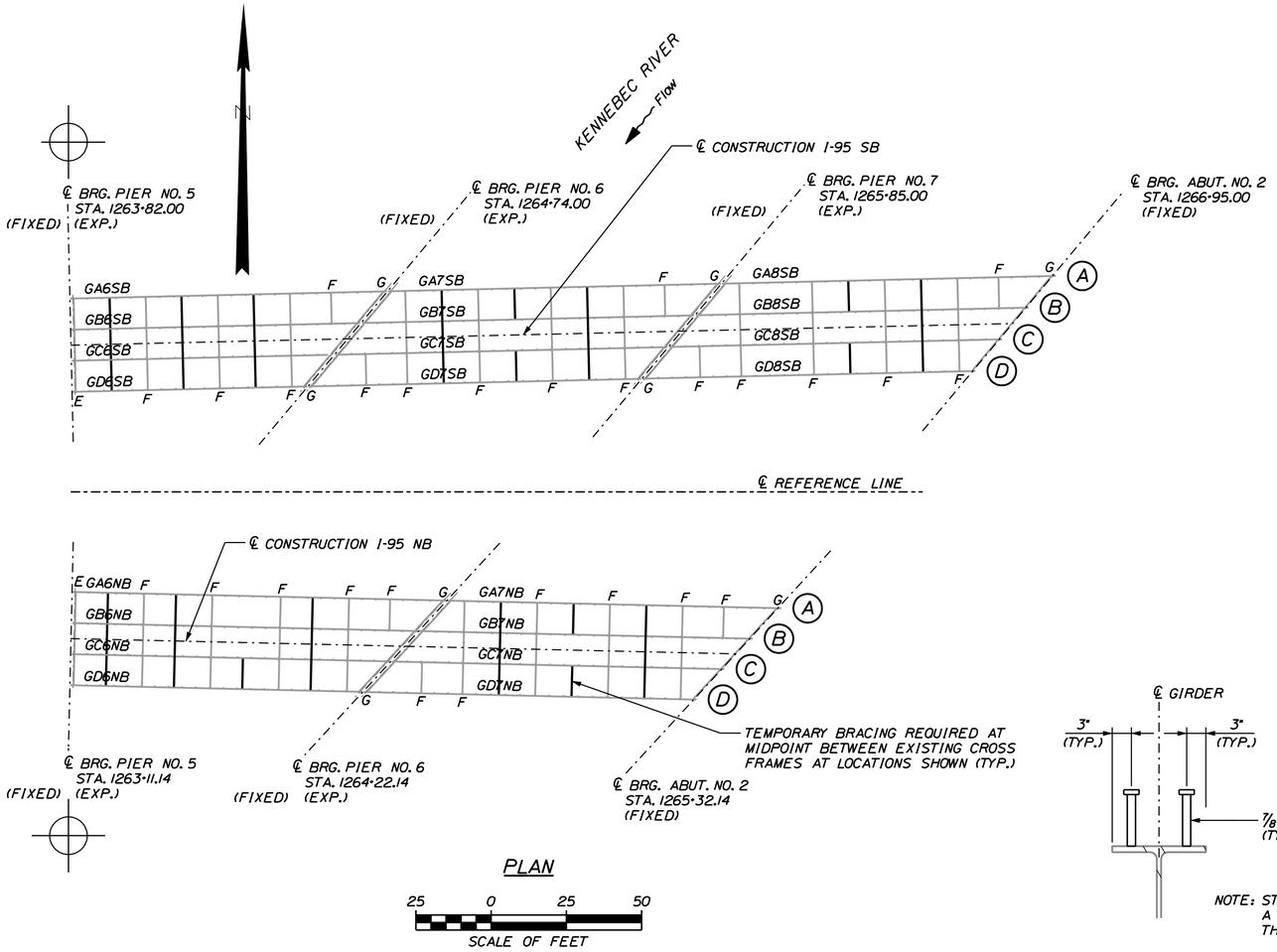

PLAN

25 0 25 50

SCALE OF FEET

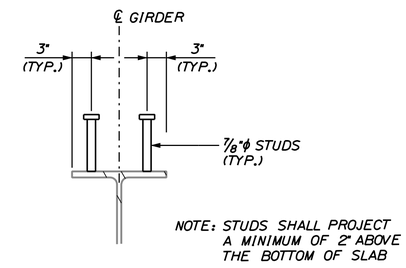

SHEAR STUD DETAIL

NOT TO SCALE

INDICATES AREAS ALWAYS IN COMPRESSION. ALL OTHERS ARE IN TENSION OR HAVE STRESS REVERSAL AT SERVICE LOADS.

BEAM STRESS DIAGRAM - APPROACH SPANS

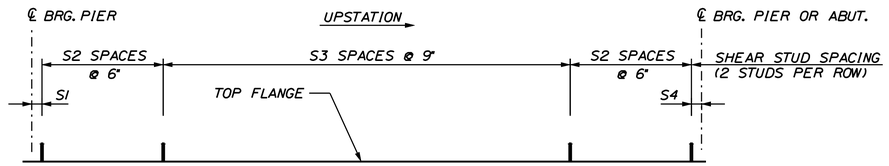

SHEAR STUD SPACING DIAGRAM - APPROACH SPANS

SHEAR STUD LAYOUT TABLE						
LOCATION	L	S1	S2	S3	S4	TOTAL STUDS
GA6SB	103'-7"	0"	27	95	5'-4"	300
GB6SB	94'-6"	1"	26	84	5'-5"	274
GC6SB	85'-6"	1"	26	72	5'-5"	250
GD6SB	76'-4 1/2"	1/4"	26	60	5'-4 1/4"	226
GA6NB	122'-7 1/2"	1/4"	31	115	5'-4 1/4"	356
GB6NB	113'-6"	1"	30	104	5'-5"	330
GC6NB	104'-6"	1"	30	92	5'-5"	306
GD6NB	95'-4 1/2"	1/4"	30	80	5'-4 1/4"	282
GA7SB	109'-0"	5'-4 1/2"	33	87	5'-4 1/2"	308
GB7SB	109'-0"	5'-4 1/2"	33	87	5'-4 1/2"	308
GC7SB	109'-0"	5'-4 1/2"	33	87	5'-4 1/2"	308
GD7SB	109'-0"	5'-4 1/2"	33	87	5'-4 1/2"	308
GA7NB	109'-0"	5'-5"	33	94	1"	322
GB7NB	109'-0"	5'-5"	33	94	1"	322
GC7NB	109'-0"	5'-5"	33	94	1"	322
GD7NB	109'-0"	5'-5"	33	94	1"	322
GA8SB	109'-0"	5'-5"	33	94	1"	322
GB8SB	109'-0"	5'-5"	33	94	1"	322
GC8SB	109'-0"	5'-5"	33	94	1"	322
GD8SB	109'-0"	5'-5"	33	94	1"	322

3570 STUDS TOTAL SB APPROACH SPANS

2562 STUDS TOTAL NB APPROACH SPANS

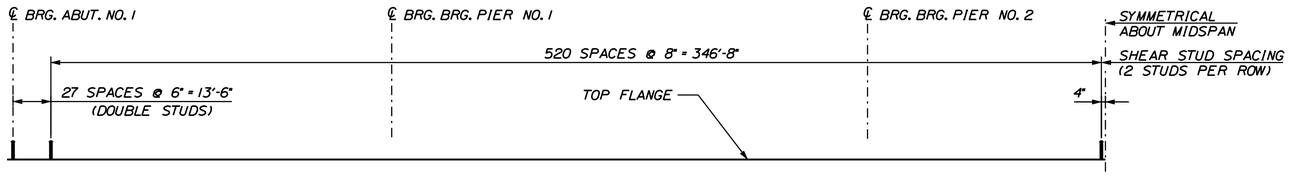

SHEAR STUD SPACING DIAGRAM - MAIN SPANS

2192 STUDS PER GIRDER MAIN SPANS
(8768 STUDS TOTAL - MAIN SPANS)

NOTE:
SHEAR STUDS AT FIELD SPLICE LOCATIONS SHALL BE ARRANGED TO CLEAR FASTENERS AND SHALL BE WELDED TO THE SPLICE PLATE.

STATE OF MAINE
DEPARTMENT OF TRANSPORTATION

IM-1668(600)E & IM-A670(000)E

PIN 16686.00 & 16700.00

1456 & 6000 BRIDGE PLANS

PROJ. MANAGER	B. CONDON	BY	DATE
DESIGN-DETAILED	TPL	MJC	06\11
CHECKED-REVIEWED	JGS	--	06\11
DESIGN2-DETAILED2	PDD	TPL	06\11
DESIGN3-DETAILED3	--	--	--
REVISIONS 1	--	--	--
REVISIONS 2	--	--	--
REVISIONS 3	--	--	--
REVISIONS 4	--	--	--
FIELD CHANGES	--	--	--

SIGNATURE

P.E. NUMBER

DATE

C.A. CLAUSON BRIDGES
KENNEBEC RIVER
FAIRFIELD - BENTON SOMERSET & KENNEBEC COUNTIES

FRAMING PLAN 2

SHEET NUMBER
70
OF 132

Filename: ...\BRIDGE\MSTA\070_Framing_2.dgn Division: HIGHWAY Username: mcarignan Date:6/6/2011

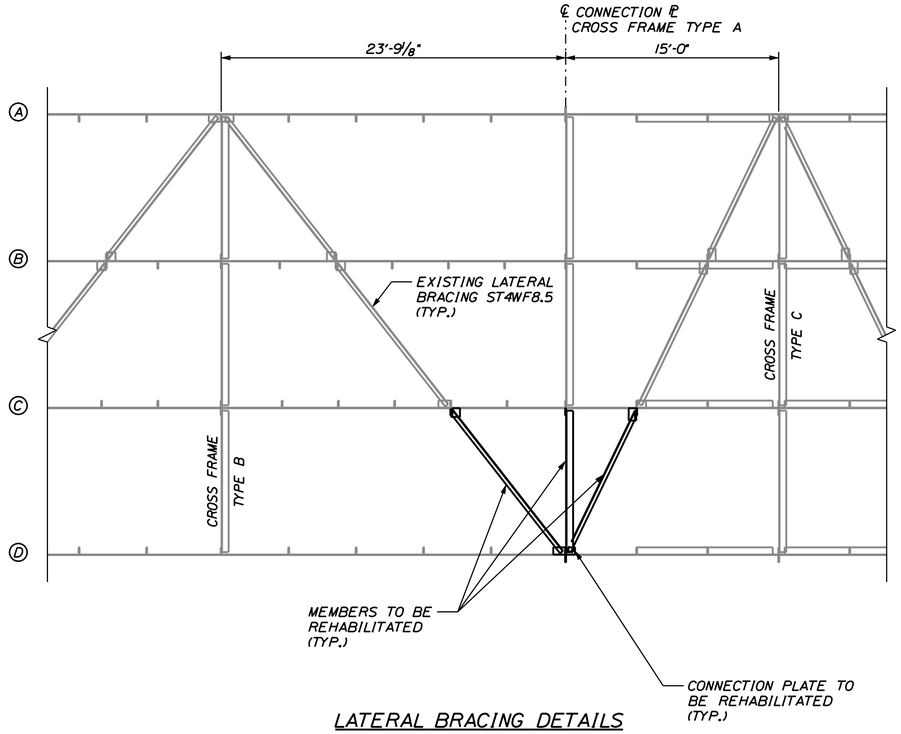

LATERAL BRACING DETAILS

SCALE: 3/16" = 1'-0"

STRUCTURAL STEEL REHABILITATION NOTES

1. BASED ON VISUAL FIELD INVESTIGATION, AREAS OF DETERIORATION ARE GENERALLY LOCATED AT THE CROSS FRAMES TYPE A, LOCATED BELOW THE EXISTING BRIDGE DECK CONSTRUCTION JOINTS. THE MOST SEVERE DETERIORATION WAS NOTED NEAR THE LATERAL BRACING CONNECTION TO THE EXTERIOR GIRDER.
2. THE REPAIR LIMITS AND LOCATIONS SHOWN ARE APPROXIMATE, AND MAY VARY. THE ACTUAL LIMITS AND NUMBER OF LOCATIONS SHALL BE DETERMINED IN THE FIELD BY THE RESIDENT.
3. CUT PORTIONS OF EXISTING MEMBERS TO REMAIN SHALL BE CLEANED AND PAINTED. ADDITIONAL AREAS REQUIRING TOUCH-UP SHALL BE INDENTIFIED IN THE FIELD BY THE RESIDENT.
4. THE REPAIR DETAILS SHOWN MAY BE APPLIED TO OTHER CROSS FRAME TYPES AS REQUIRED.
5. SPLICE PLATES FOR MEMBERS NOT SHOWN SHALL HAVE A MINIMUM THICKNESS EQUAL TO THE ORIGINAL THICKNESS OF THE EXISTING MEMBER, AND THE TOTAL SPLICE PLATE AREA SHOULD BE EQUAL OR GREATER TO THE AREA OF THE EXISTING MEMBER.

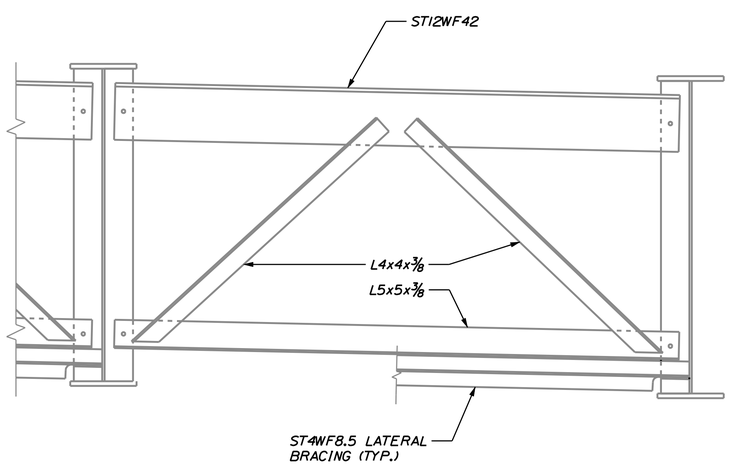

EXISTING CROSS FRAME TYPE A

SCALE: 3/4" = 1'-0"

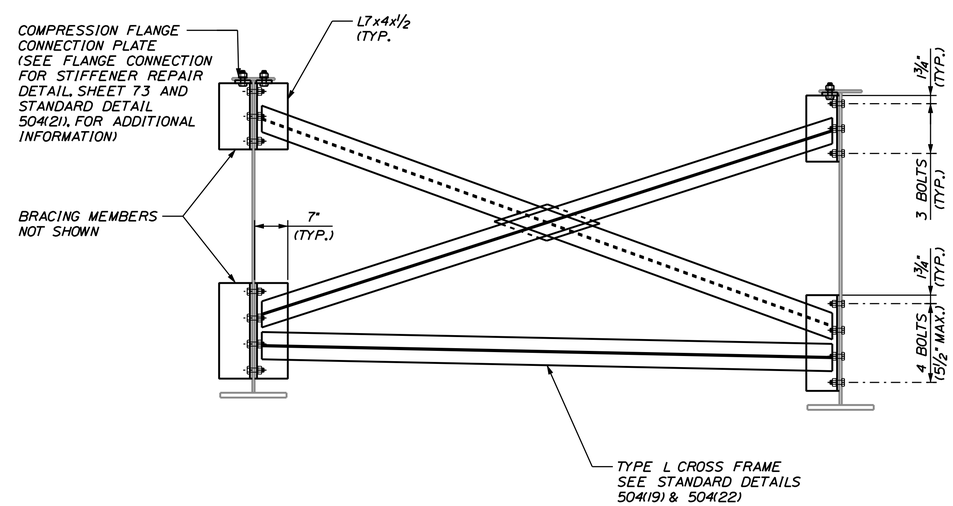

TEMPORARY BRACING DETAIL

SCALE: 3/4" = 1'-0"

STATE OF MAINE
DEPARTMENT OF TRANSPORTATION

IM-1668(600)E & IM-A670(000)E

PIN 16686.00 & 16700.00

1456 & 6000 BRIDGE PLANS

PROJ. MANAGER	B. CONDON	BY	DATE
DESIGN-DETAILED	TPL	MJC	06\11
CHECKED-REVIEWED	JGS	--	06\11
DESIGN2-DETAILED2	PDD	TPL	06\11
DESIGN3-DETAILED3	--	--	--
REVISIONS 1	--		--
REVISIONS 2	--		--
REVISIONS 3	--		--
REVISIONS 4	--		--
FIELD CHANGES	--		--

SIGNATURE

P.E. NUMBER

DATE

C.A. CLAUSON BRIDGES
KENNEBEC RIVER
FAIRFIELD - BENTON SOMERSET & KENNEBEC COUNTIES

STRUCTURAL STEEL DETAILS 1

SHEET NUMBER
71
OF 132

Filename: ...\MSTA\071_Framing_det1.dgn Division: HIGHWAY Username: mcarignan Date:6/6/2011

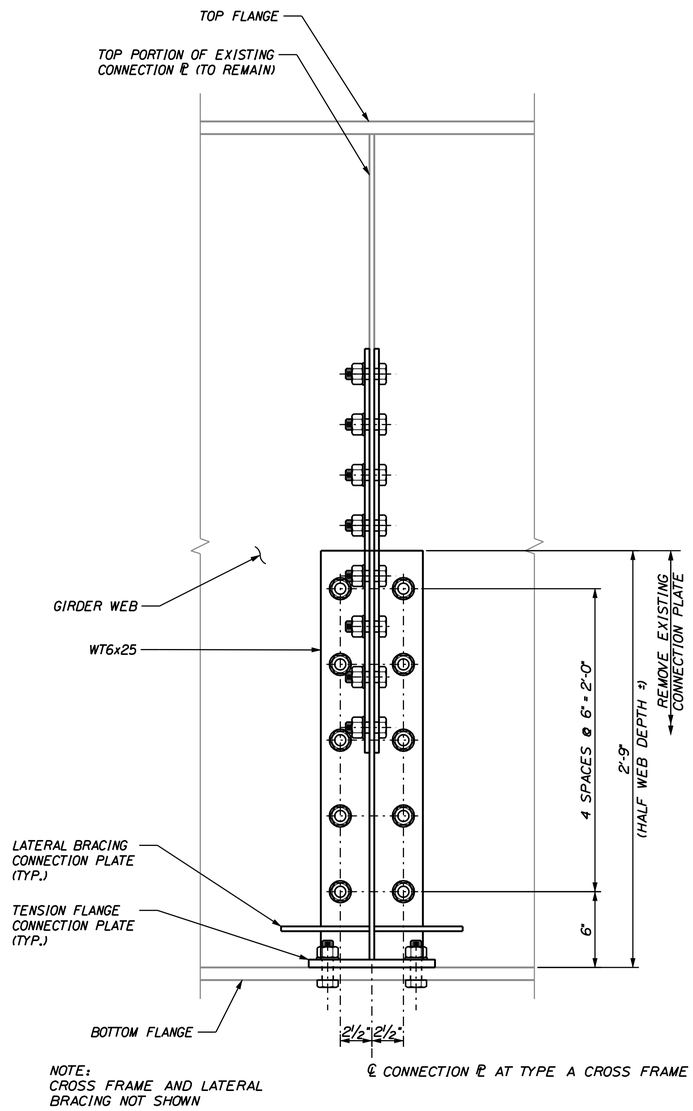

CONNECTION PLATE REPAIR (TYPE A CROSS FRAME)

SCALE: 2"=1'-0"

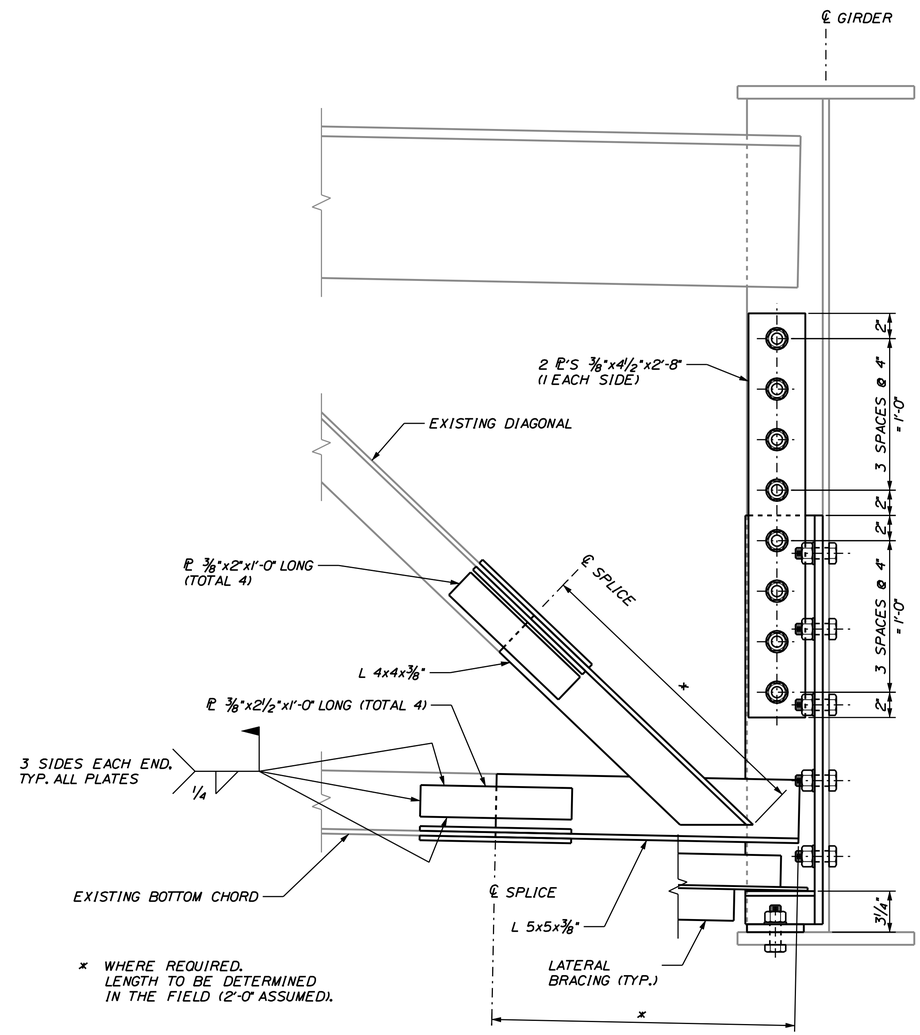

CROSS FRAME REPAIR

SCALE: 2"=1'-0"

STATE OF MAINE
DEPARTMENT OF TRANSPORTATION

IM-1668(600)E & IM-A670(000)E

PIN
1456 & 6000 16686.00 & 16700.00 BRIDGE PLANS

		BY	DATE
PROJ. MANAGER	B. CONDON		
DESIGN-DETAILED	TPL	MJC	06\11
CHECKED-REVIEWED	JGS	--	06\11
DESIGN2-DETAILED2	PDD	TPL	06\11
DESIGN3-DETAILED3	--	--	--
REVISIONS 1	--		--
REVISIONS 2	--		--
REVISIONS 3	--		--
REVISIONS 4	--		--
FIELD CHANGES	--		--

SIGNATURE

P.E. NUMBER

DATE

C.A. CLAUSON BRIDGES
KENNEBEC RIVER
FAIRFIELD - BENTON SOMERSET & KENNEBEC COUNTIES

STRUCTURAL STEEL DETAILS 2

SHEET NUMBER
72
OF 132

Filename: ...\MSTA\072_Framing_det2.dgn Division: HIGHWAY Username: mcarignan Date:6/9/2011

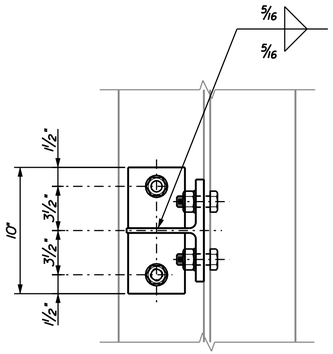

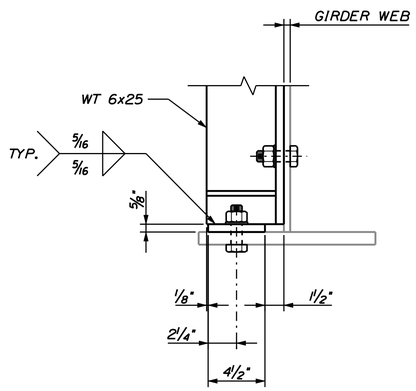

FLANGE CONNECTION FOR STIFFENER REPAIR

SCALE: 2"=1'-0"

NOTE: STIFFENER REPAIR SHOWN SIMILAR FOR COMPRESSION FLANGE CONNECTION OF TEMPORARY BRACING.

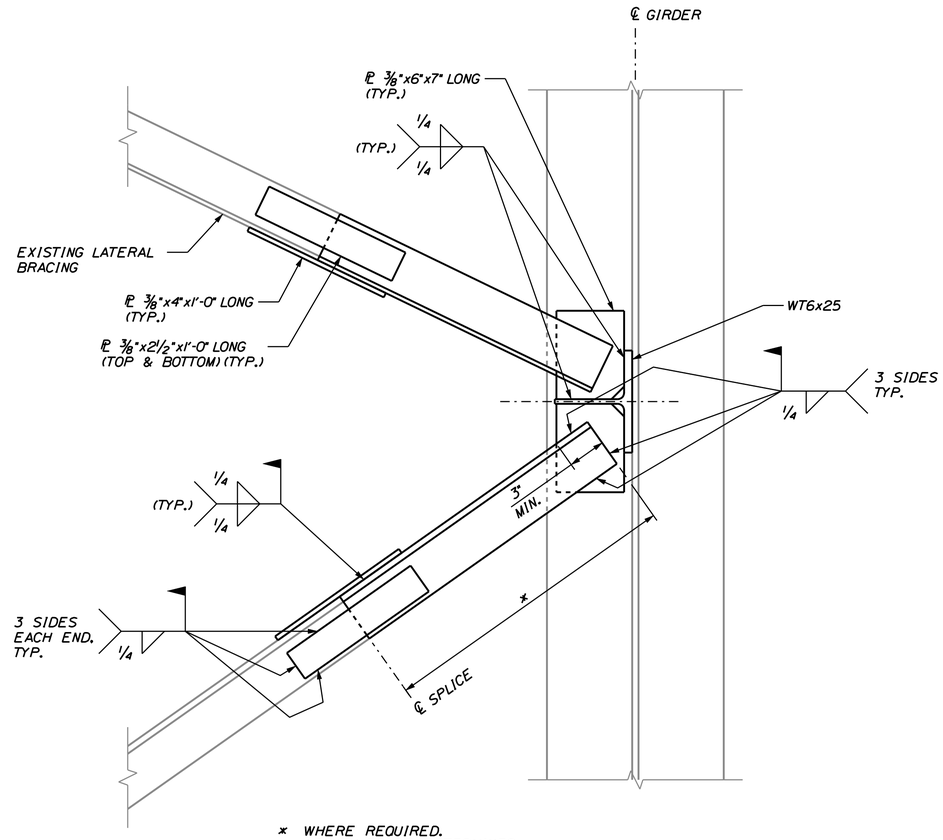

* WHERE REQUIRED. LENGTH TO BE DETERMINED IN THE FIELD (2'-0" ASSUMED).

LATERAL BRACING REPAIR

SCALE: 2"=1'-0"

STATE OF MAINE
DEPARTMENT OF TRANSPORTATION

IM-1668(600)E & IM-A670(000)E

PIN
1456 & 6000 16686.00 & 16700.00 BRIDGE PLANS

PROJ. MANAGER	B. CONDON	BY	DATE
DESIGN-DETAILED	TPL	MJC	06\11
CHECKED-REVIEWED	JGS	--	06\11
DESIGN2-DETAILED2	PDD	TPL	06\11
DESIGN3-DETAILED3	--	--	--
REVISIONS 1	--	--	--
REVISIONS 2	--	--	--
REVISIONS 3	--	--	--
REVISIONS 4	--	--	--
FIELD CHANGES	--	--	--

SIGNATURE

P.E. NUMBER

DATE

C.A. CLAUSON BRIDGES
KENNEBEC RIVER
FAIRFIELD - BENTON SOMERSET & KENNEBEC COUNTIES

STRUCTURAL STEEL DETAILS 3

SHEET NUMBER
73
OF 132

Filename: ...\MSTA\073_Framing_det3.dgn Division: HIGHWAY Username: mcarignan Date:6/6/2011

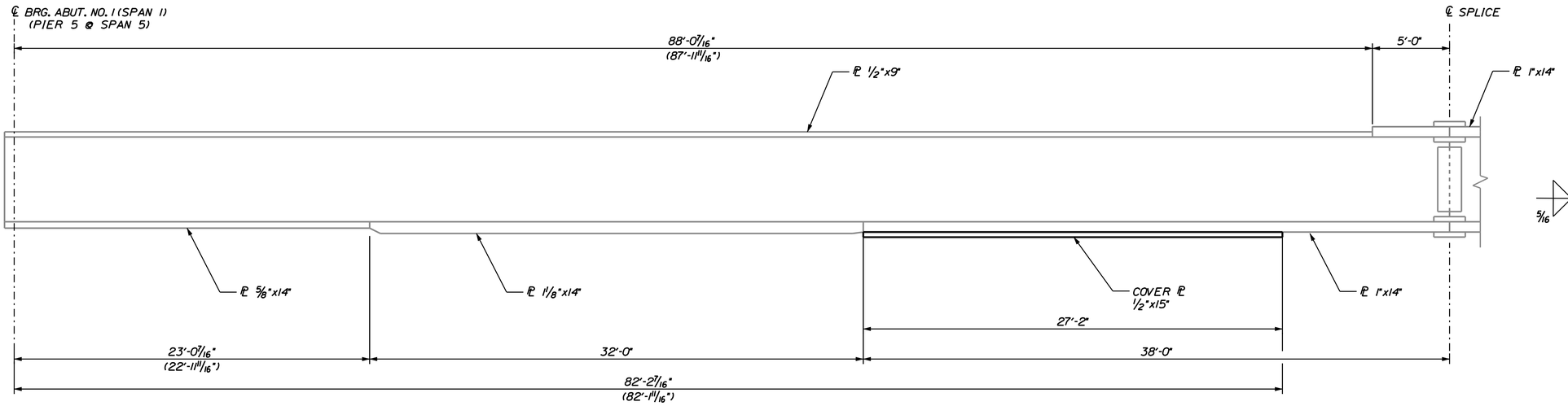

TYPICAL EXTERIOR GIRDER (LINES A & D) ELEVATION NB & SB
SPAN 1 (SPAN 5 OPPOSITE HAND)

HORIZONTAL SCALE: 1/4" = 1'-0"
VERTICAL SCALE: NOT TO SCALE

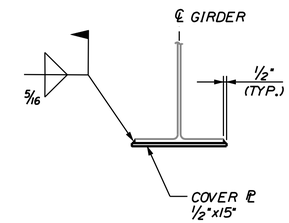

SECTION A-A
SCALE: 1" = 1'-0"

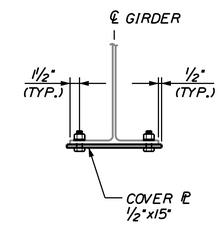

SECTION B-B
SCALE: 1" = 1'-0"

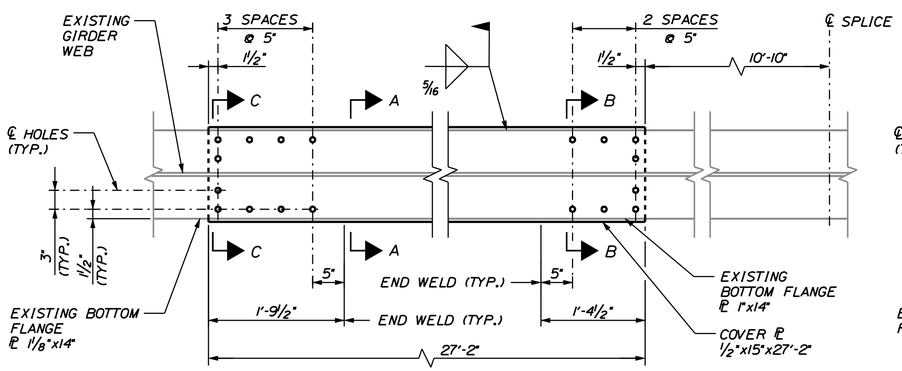

CONNECTION OPTION 1 - WELDED WITH BOLTED ENDS
SCALE: 1" = 1'-0"

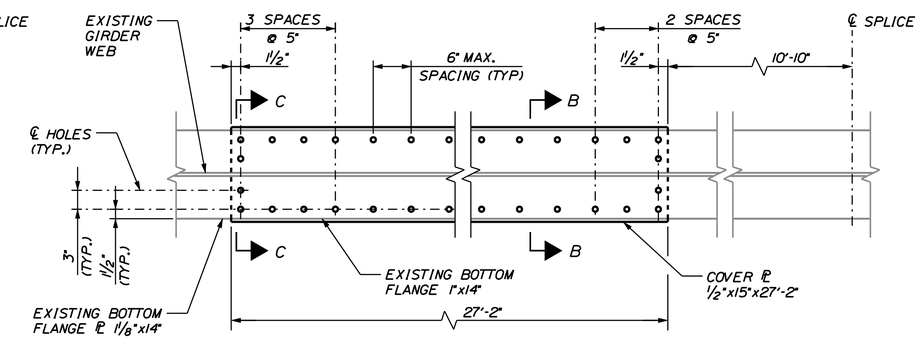

CONNECTION OPTION 2 - BOLTED
SCALE: 1" = 1'-0"

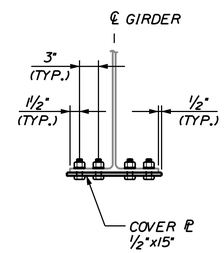

SECTION C-C
SCALE: 1" = 1'-0"

STATE OF MAINE
DEPARTMENT OF TRANSPORTATION

IM-1668(600)E & IM-A670(000)E

PIN
1456 & 6000 16686.00 & 16700.00 BRIDGE PLANS

PROJ. MANAGER	B. CONDON	BY	DATE
DESIGN-DETAILED	TPL	MJC	06\11
CHECKED-REVIEWED	JGS	--	06\11
DESIGN2-DETAILED2	PDD	TPL	06\11
DESIGN3-DETAILED3	--	--	--
REVISIONS 1	--		--
REVISIONS 2	--		--
REVISIONS 3	--		--
REVISIONS 4	--		--
FIELD CHANGES	--		--

SIGNATURE

P.E. NUMBER

DATE

C.A. CLAUSON BRIDGES
KENNEBEC RIVER
FAIRFIELD - BENTON SOMERSET & KENNEBEC COUNTIES

EXTERIOR GIRDER DETAILS 1

SHEET NUMBER
74
OF 132

Filename: ...\MSTA\074_Framing _det4.dgn Division: HIGHWAY Username: mcarignan Date:6/6/2011

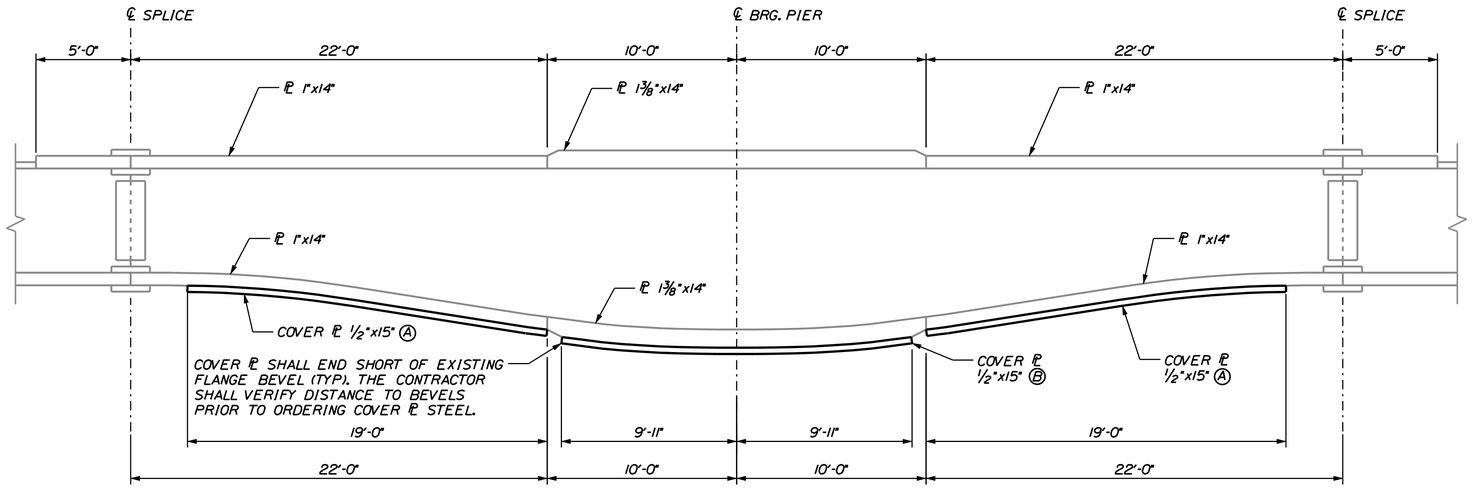

TYPICAL EXTERIOR GIRDER (LINES A & D) ELEVATION NB & SB PIERS 1 THRU 4

HORIZONTAL SCALE: ¼" = 1'-0"
VERTICAL SCALE: NOT TO SCALE

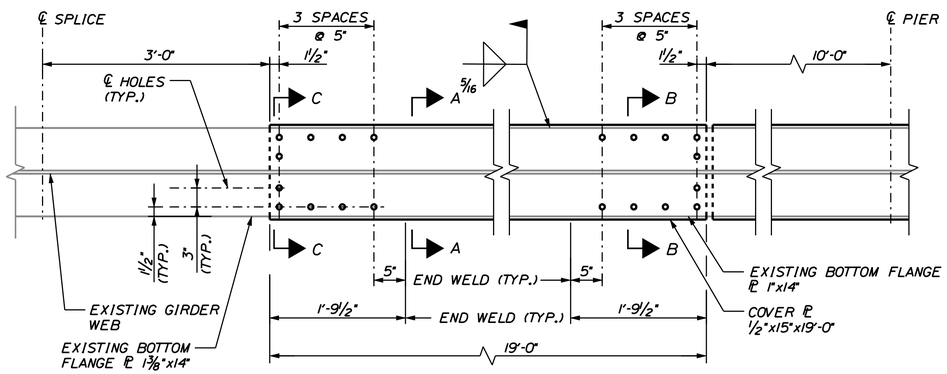

PL Ⓐ CONNECTION OPTION 1 - WELDED WITH BOLTED ENDS

SCALE: 1" = 1'-0"

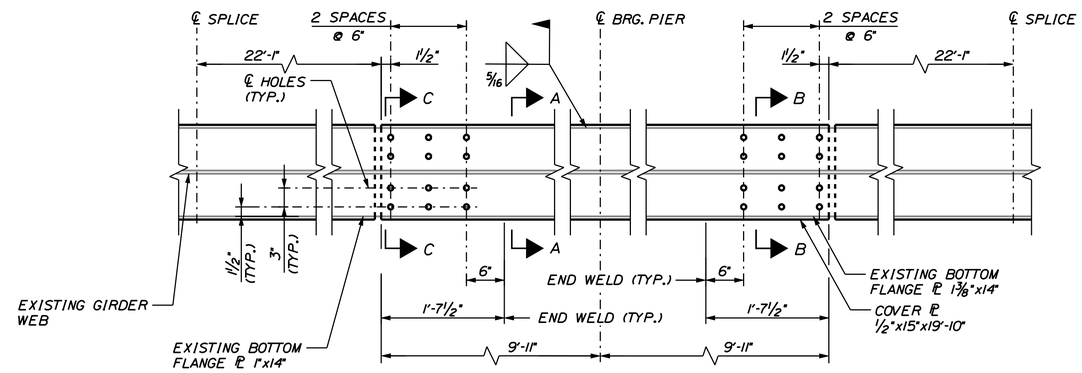

PL Ⓑ CONNECTION OPTION 1 - WELDED WITH BOLTED ENDS

SCALE: 1" = 1'-0"

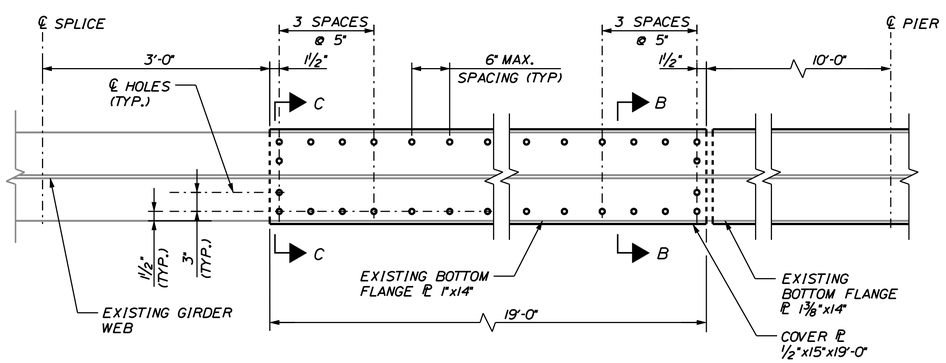

PL Ⓐ CONNECTION OPTION 2 - BOLTED

SCALE: 1" = 1'-0"

SEE SHEET 74 FOR SECTIONS A-A, B-B, & C-C.

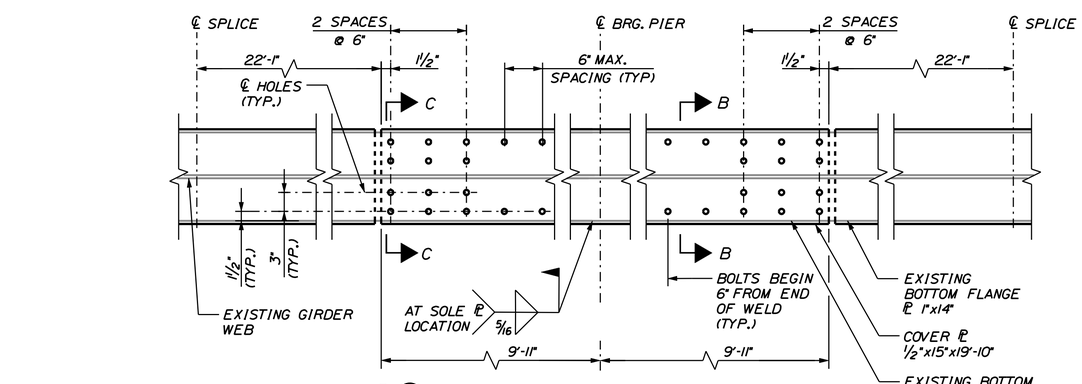

PL Ⓑ CONNECTION OPTION 2 - BOLTED

SCALE: 1" = 1'-0"

STATE OF MAINE
DEPARTMENT OF TRANSPORTATION

IM-1668(600)E & IM-A670(000)E

PIN
1456 & 6000 16686.00 & 16700.00 BRIDGE PLANS

PROJ. MANAGER		B. CONDON	BY	DATE
DESIGN-DETAILED	TPL	MJC		06\11
CHECKED-REVIEWED	JGS	--		06\11
DESIGN2-DETAILED2	PDD	TPL		06\11
DESIGN3-DETAILED3	--	--		--
REVISIONS 1	--			--
REVISIONS 2	--			--
REVISIONS 3	--			--
REVISIONS 4	--			--
FIELD CHANGES	--			--

SIGNATURE

P.E. NUMBER

DATE

C.A. CLAUSON BRIDGES
KENNEBEC RIVER
FAIRFIELD - BENTON SOMERSET & KENNEBEC COUNTIES

EXTERIOR GIRDER DETAILS 2

SHEET NUMBER
75
OF 132

Filename: ...\MSTA\075_Framing _det5.dgn Division: HIGHWAY Username: mcarignan Date:6/8/2011

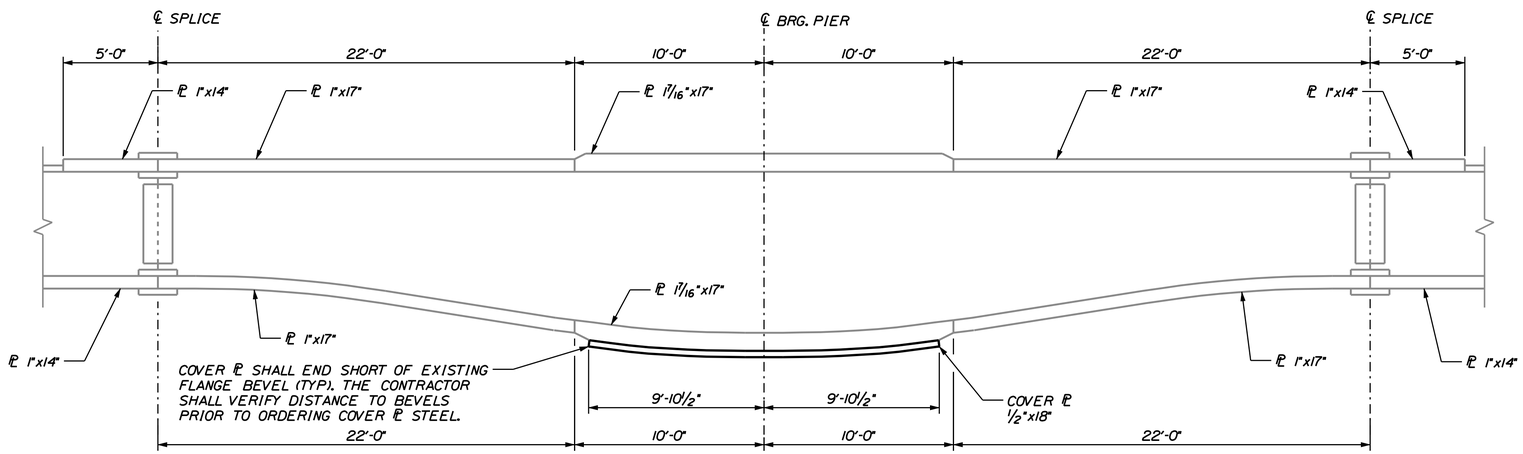

TYPICAL INTERIOR GIRDER (LINES B & C) ELEVATION NB & SB
PIERS 1 THRU 4

HORIZONTAL SCALE: 1/4" = 1'-0"
VERTICAL SCALE: NOT TO SCALE

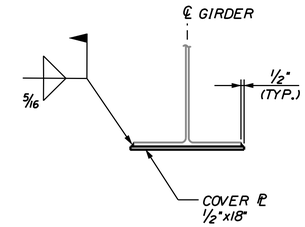

SECTION A-A
SCALE: 1" = 1'-0"

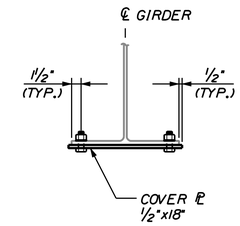

SECTION B-B
SCALE: 1" = 1'-0"

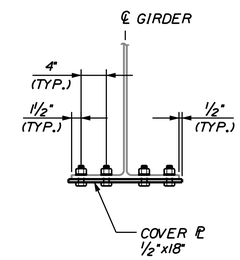

SECTION C-C
SCALE: 1" = 1'-0"

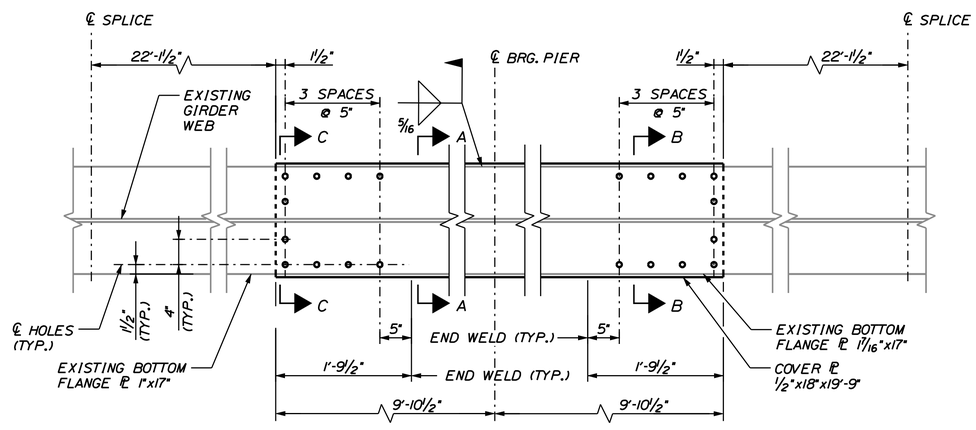

CONNECTION OPTION 1 - WELDED WITH BOLTED ENDS
SCALE: 1" = 1'-0"

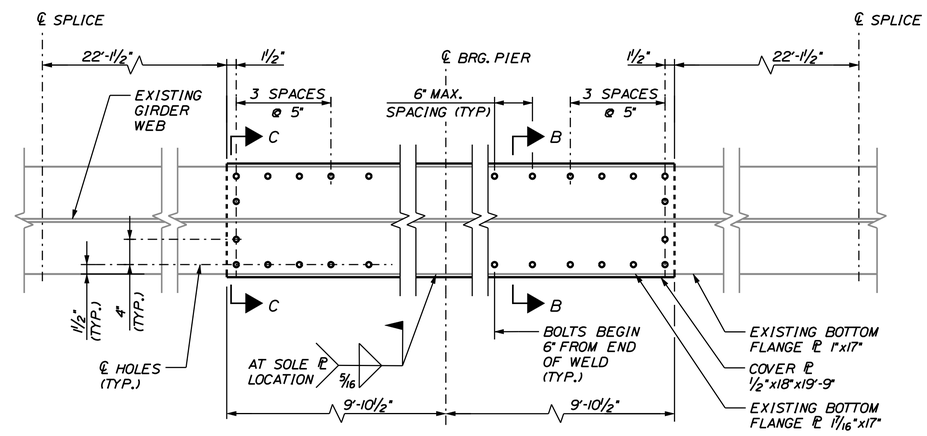

CONNECTION OPTION 2 - BOLTED
SCALE: 1" = 1'-0"

STATE OF MAINE
DEPARTMENT OF TRANSPORTATION

IM-1668(600)E & IM-A670(000)E

PIN 16686.00 & 16700.00

1456 & 6000 BRIDGE PLANS

PROJ. MANAGER	B. CONDON	BY	DATE
DESIGN-DETAILED	TPL	MJC	06\11
CHECKED-REVIEWED	JGS	--	06\11
DESIGN2-DETAILED2	PDD	TPL	06\11
DESIGN3-DETAILED3	--	--	--
REVISIONS 1	--	--	--
REVISIONS 2	--	--	--
REVISIONS 3	--	--	--
REVISIONS 4	--	--	--
FIELD CHANGES	--	--	--

SIGNATURE
P.E. NUMBER
DATE

C.A. CLAUSON BRIDGES
KENNEBEC RIVER
FAIRFIELD - BENTON SOMERSET & KENNEBEC COUNTIES

INTERIOR GIRDER DETAILS

SHEET NUMBER
76
OF 132

Filename: ...\MSTA\076_Framing _det6.dgn Division: HIGHWAY Username: mcorignon Date:6/8/2011

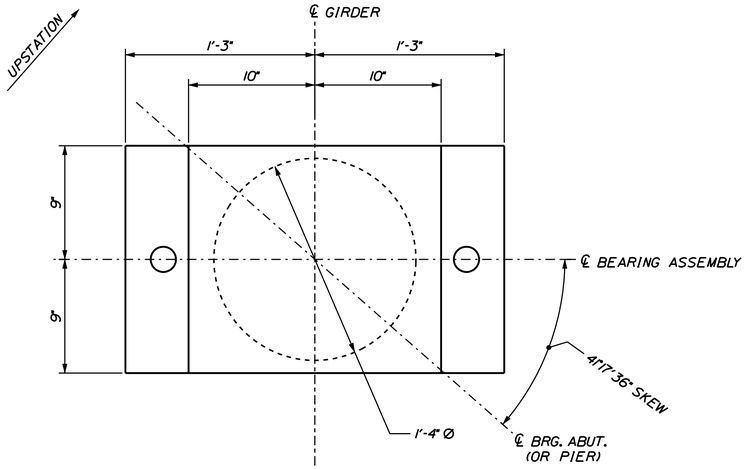

PLAN

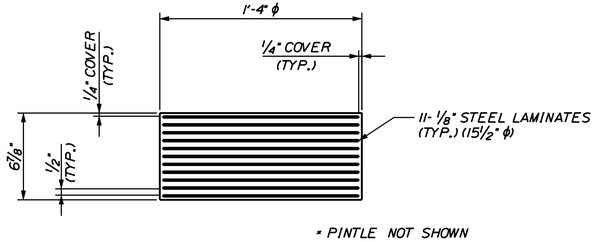

* PINTLE NOT SHOWN

BEARING PAD
SCALE: 2" = 1'-0"

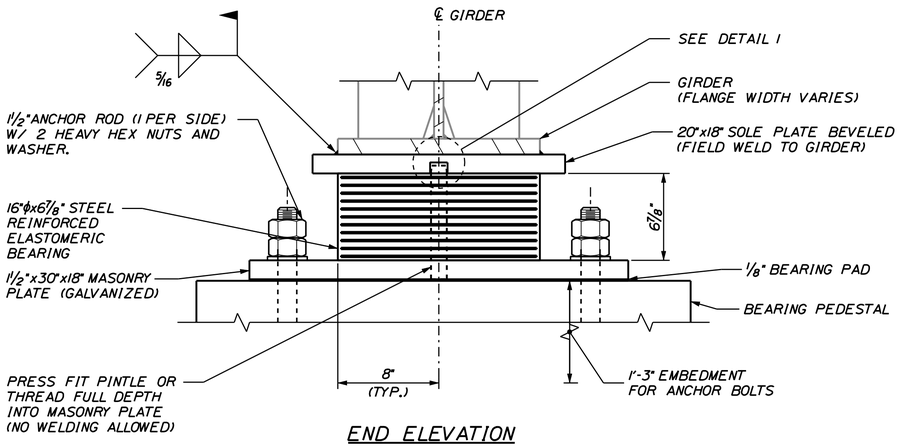

END ELEVATION

PIER NO. 6 NB & SB, PIER NO. 7 SB, ABUTMENT NO. 2 NB & SB (FIXED) ELASTOMERIC BEARINGS
SCALE: 2" = 1'-0"

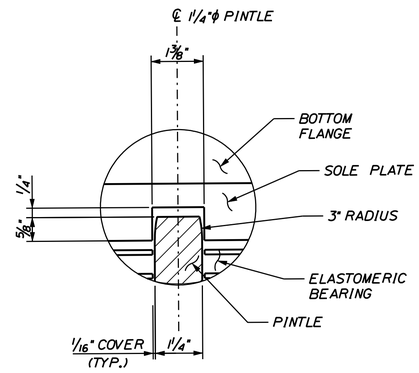

DETAIL 1
SCALE: 6" = 1'-0"

ELASTOMERIC BEARING NOTES

1. THE SHEAR MODULUS OF THE ELASTOMER SHALL BE BETWEEN 115 AND 130 PSI.
2. VULCANIZING OF THE ELASTOMER TO THE STEEL PLATES SHALL BE DONE DURING THE PRIMARY MOLD PROCESS
3. MASONRY PLATES, SOLE PLATES AND SHEAR PINS SHALL MEET THE REQUIREMENTS OF ASTM A 709/A 709M, GRADE 50 OR 50W. ANCHOR RODS SHALL MEET THE REQUIREMENTS OF ASTM F 1554, GRADE 105 AND SHALL BE SWEDGED ON THE EMBEDDED PORTION OF THE ROD.
4. MASONRY PLATES SHALL BE GALVANIZED IN ACCORDANCE WITH SECTION 506. SOLE PLATES FOR STEEL SUPERSTRUCTURES SHALL BE TREATED IN THE SAME MANNER AS THE STRUCTURAL STEEL. ANCHOR RODS, WASHERS, NUTS AND SHEAR BLOCKS SHALL BE GALVANIZED TO ASTM A 153 OR ASTM B 695, CLASS 50, TYPE 1.
5. ALL BEARINGS SHALL BE MARKED PRIOR TO SHIPPING. THE MARKS SHALL INCLUDE THE BEARING LOCATION ON THE BRIDGE AND A DIRECTION ARROW WHICH POINTS UPSTATION. ALL MARKS SHALL BE PERMANENT AND SHALL BE VISIBLE AFTER THE BEARING IS INSTALLED.
6. BEARINGS SHALL BE COVERED DURING TRANSIT.
7. THE BEARINGS ARE DESIGNED SO THAT THE SUPERSTRUCTURE MAY BE ERECTED WHEN THE AMBIENT AIR TEMPERATURE IS WITHIN THE RANGE OF 65°F AND 80°F. IF THE AMBIENT AIR TEMPERATURE IS OUTSIDE THIS RANGE, THE BEARINGS SHALL BE RESET AS DIRECTED BY THE RESIDENT.
8. ALL NECESSARY PRECAUTIONS SHALL BE TAKEN TO PROTECT BEARING COMPONENTS FROM FIELD WELD FLASH AND SPATTER. HEAT FROM WELDING OPERATIONS SHALL BE CONTROLLED SUCH THAT STEEL ADJACENT TO THE ELASTOMER DOES NOT EXCEED 200 °F. THE TEMPERATURE SHALL BE VERIFIED BY THE USE OF TEMPERATURE INDICATING CRAYONS OR OTHER SUITABLE MEANS.
9. UPSET THE THREADS ON THE ANCHOR RODS AFTER ASSEMBLY OF THE BEARING.
10. DESIGN LOADS (DESIGN METHOD B SERVICE LOADS)

	DEAD LOAD	LIVE LOAD	LL ROTATION
PIERS 6-7, ABUT. 2 (FIXED)	102.4K	99.7K	0.00746 RAD
PIER 5-7 (EXPANSION)	102.4K	99.7K	0.00746 RAD
PIER 5 (FIXED)	75.7K	115.1K	0.00818 RAD
PIER 1-4 (EXPANSION)	294.9K	236.3K	0.00769 RAD
ABUT. 1 (EXPANSION)	75.6K	115.1K	0.00818 RAD

LL ROTATION INCLUDES 0.005 RAD CONSTRUCTION TOLERANCE

11. PRIOR TO REPLACING THE BEARINGS, THE CONTRACTOR SHALL SUBMIT A JACKING PLAN TO THE RESIDENT. THE JACKING PLAN SHALL BE DESIGNED AND STAMPED BY A PROFESSIONAL ENGINEER LICENSED IN THE STATE OF MAINE. ALL COSTS FOR JACKING THE EXISTING GIRDERS, REMOVING EXISTING BEARINGS, AND INSTALLING NEW BEARINGS SHALL BE INCIDENTAL TO ITEM 523.52.
12. PRIOR TO REPLACING THE BEARINGS, TEMPORARY STRUCTURAL SUPPORTS FOR THE GIRDERS SHALL BE ERECTED. TEMPORARY STRUCTURAL SUPPORTS SHALL BE DESIGNED AND STAMPED BY A PROFESSIONAL ENGINEER LICENSED IN THE STATE OF MAINE AND SHALL BE SUBMITTED FOR REVIEW 14 DAYS PRIOR TO USE. ALL COSTS SHALL BE INCIDENTAL TO ITEM 524.32.

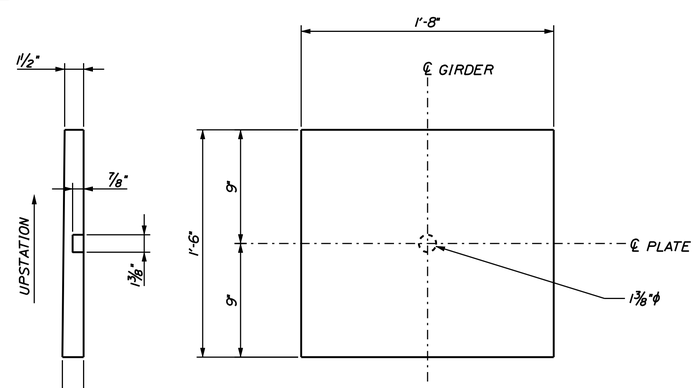

SOLE PLATE PLAN
SCALE: 2" = 1'-0"

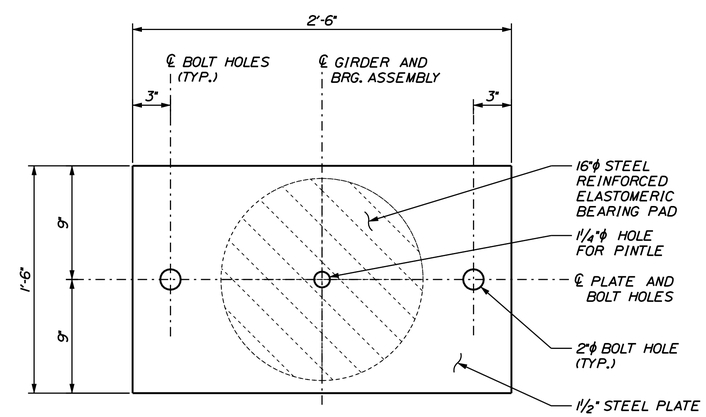

MASONRY PLATE PLAN
SCALE: 2" = 1'-0"

STATE OF MAINE
DEPARTMENT OF TRANSPORTATION

IM-1668(600)E & IM-A670(000)E

PIN 16686.00 & 16700.00
1456 & 6000 BRIDGE PLANS

	BY	DATE
PROJ. MANAGER	B. CONDON	
DESIGN-DETAILED	TPL	06\11
CHECKED-REVIEWED	JGS	06\11
DESIGN2-DETAILED2	PDD	06\11
DESIGN3-DETAILED3	--	--
REVISIONS 1	--	--
REVISIONS 2	--	--
REVISIONS 3	--	--
REVISIONS 4	--	--
FIELD CHANGES	--	--

SIGNATURE
P.E. NUMBER
DATE

C.A. CLAUSON BRIDGES
KENNEBEC RIVER
FAIRFIELD - BENTON SOMERSET & KENNEBEC COUNTIES

BEARING DETAILS 1

SHEET NUMBER
77
OF 132

Filename: ...\MSTA\077_Bearings_det1.dgn Division: HIGHWAY Username: mcarignan Date:6/6/2011

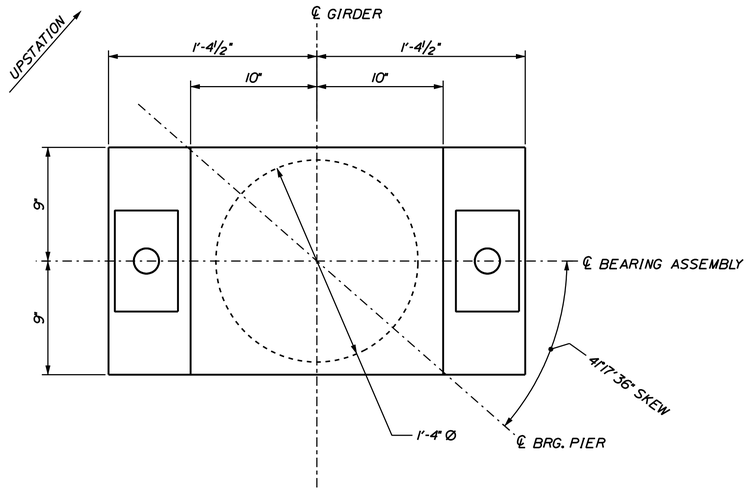

PLAN

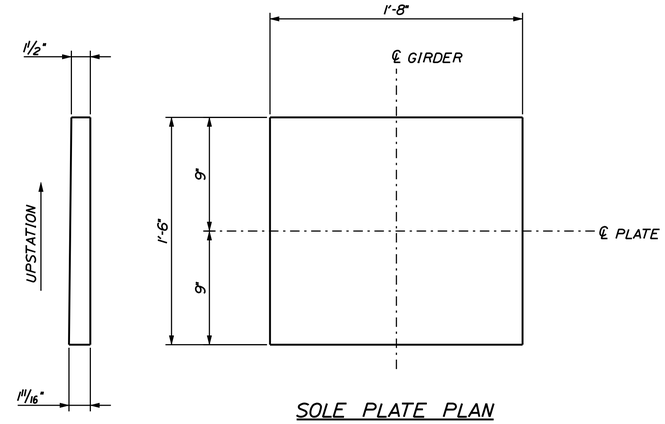

SOLE PLATE PLAN
SCALE: 2" = 1'-0"

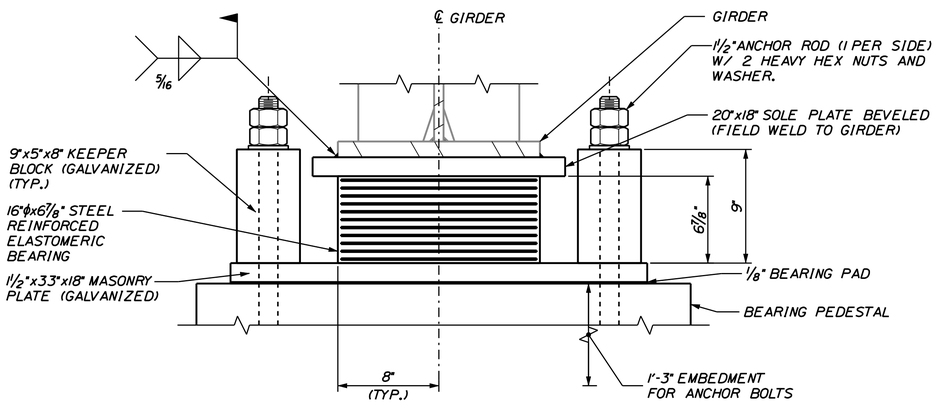

END ELEVATION

PIER NO. 5-6 NB & SB, PIER NO. 7 SB (EXPANSION) ELASTOMERIC BEARINGS
SCALE: 2" = 1'-0"

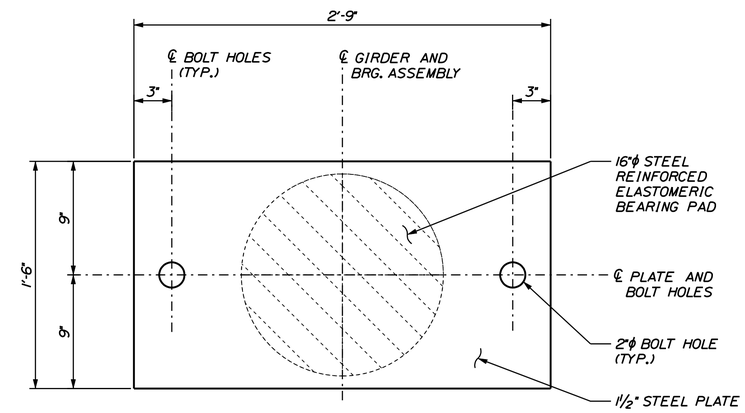

MASONRY PLATE PLAN
SCALE: 2" = 1'-0"

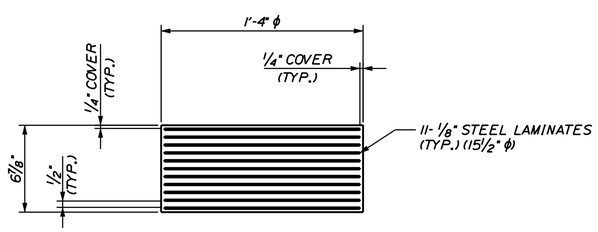

BEARING PAD
SCALE: 2" = 1'-0"

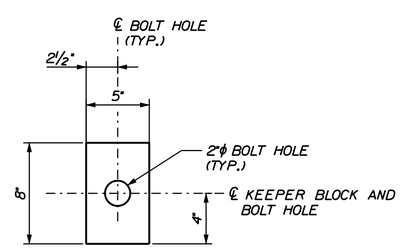

KEEPER BLOCK PLAN
SCALE: 2" = 1'-0"

STATE OF MAINE
DEPARTMENT OF TRANSPORTATION

IM-1668(600)E & IM-A670(000)E

PIN
1456 & 6000 16686.00 & 16700.00 BRIDGE PLANS

PROJ. MANAGER	B. CONDON	BY	DATE
DESIGN-DETAILED	TPL	MJC	06\11
CHECKED-REVIEWED	JGS	--	06\11
DESIGN2-DETAILED2	PDD	TPL	06\11
DESIGN3-DETAILED3	--	--	--
REVISIONS 1	--	--	--
REVISIONS 2	--	--	--
REVISIONS 3	--	--	--
REVISIONS 4	--	--	--
FIELD CHANGES	--	--	--

SIGNATURE
P.E. NUMBER
DATE

C.A. CLAUSON BRIDGES
KENNEBEC RIVER
FAIRFIELD - BENTON SOMERSET & KENNEBEC COUNTIES

BEARING DETAILS 2

SHEET NUMBER
78
OF 132

Filename: ...\MSTA\078_Bearings_de12.dgn Division: HIGHWAY Username: mcarignan Date:6/6/2011

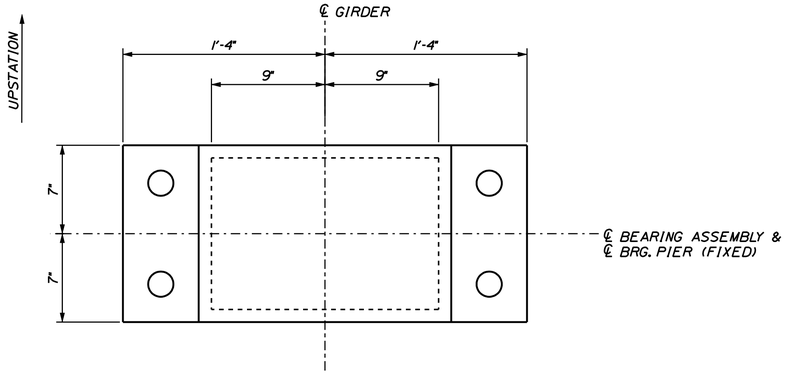

PLAN

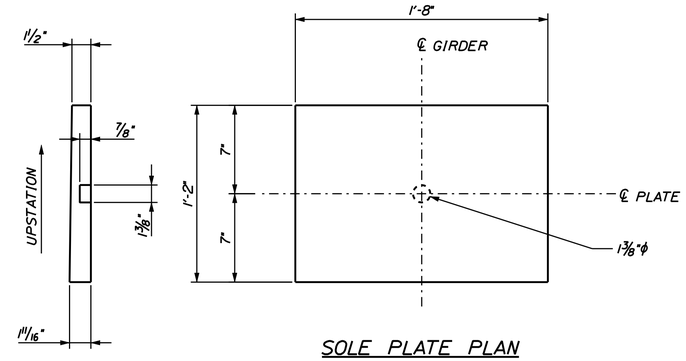

SOLE PLATE PLAN

SCALE: 2" = 1'-0"

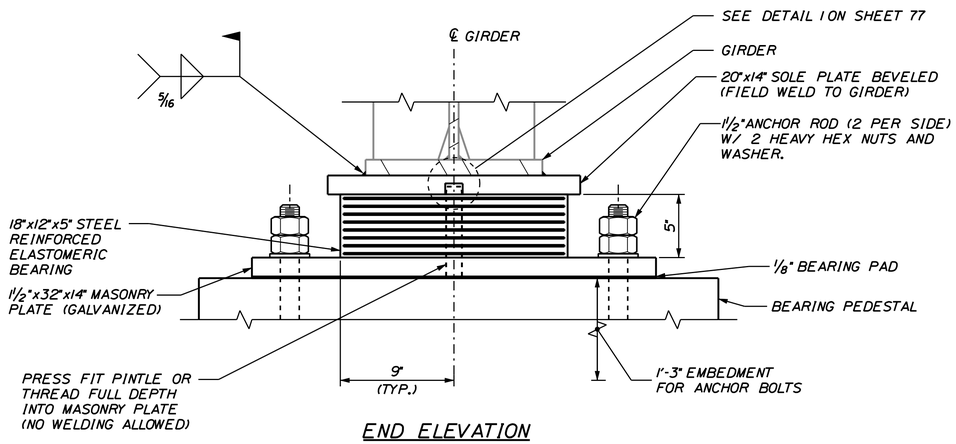

END ELEVATION

PIER NO. 5 NB & SB (FIXED)
ELASTOMERIC BEARINGS

SCALE: 2" = 1'-0"

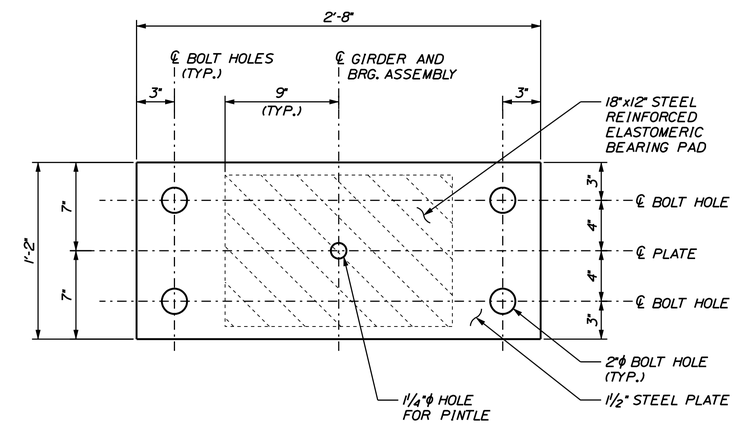

MASONRY PLATE PLAN

SCALE: 2" = 1'-0"

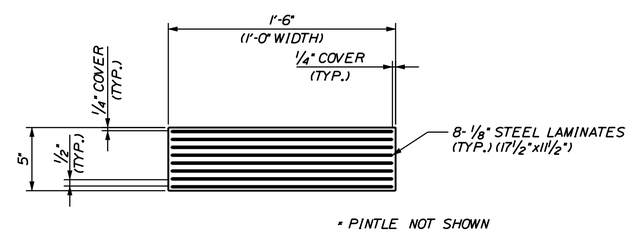

* PINTLE NOT SHOWN

BEARING PAD

SCALE: 2" = 1'-0"

STATE OF MAINE
DEPARTMENT OF TRANSPORTATION

IM-1668(600)E & IM-A670(000)E

PIN
1456 & 6000 16686.00 & 16700.00 BRIDGE PLANS

	BY	DATE
PROJ. MANAGER	B. CONDON	
DESIGN-DETAILED	TPL	06\11
CHECKED-REVIEWED	JGS	06\11
DESIGN2-DETAILED2	PDD	06\11
DESIGN3-DETAILED3		
REVISIONS 1		
REVISIONS 2		
REVISIONS 3		
REVISIONS 4		
FIELD CHANGES		

SIGNATURE

P.E. NUMBER

DATE

C.A. CLAUSON BRIDGES
KENNEBEC RIVER
FAIRFIELD - BENTON SOMERSET & KENNEBEC COUNTIES

BEARING DETAILS 3

SHEET NUMBER
79
OF 132

Filename: ...\MSTA\079_Bearings_det3.dgn Division: HIGHWAY Username: mcorignon Date:6/6/2011

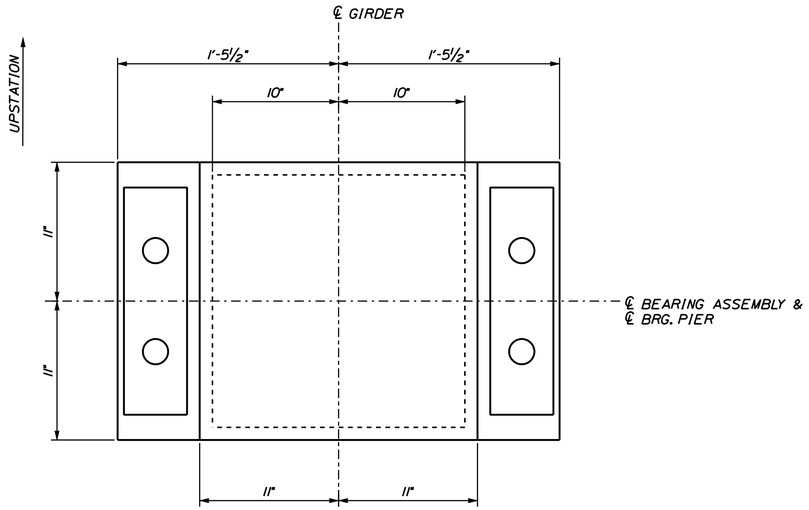

PLAN

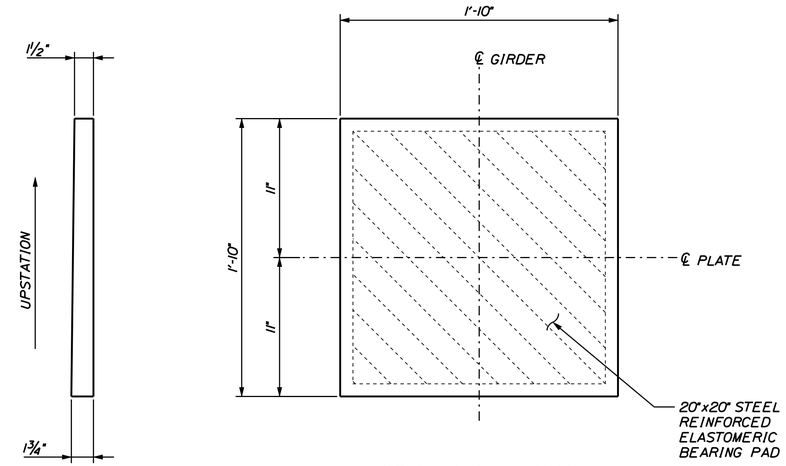

SOLE PLATE PLAN

SCALE: 2" = 1'-0"

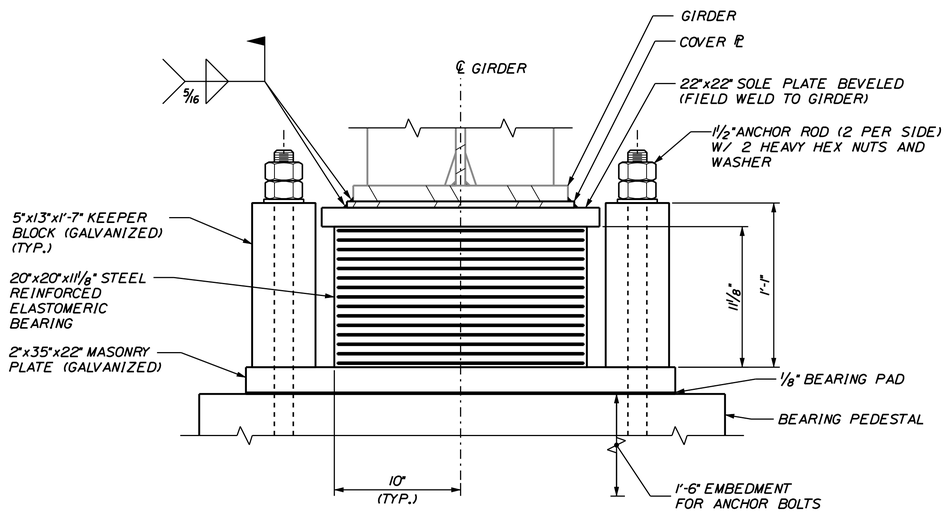

END ELEVATION

PIER NO. 1-4 NB & SB (EXPANSION)
ELASTOMERIC BEARINGS

SCALE: 2" = 1'-0"

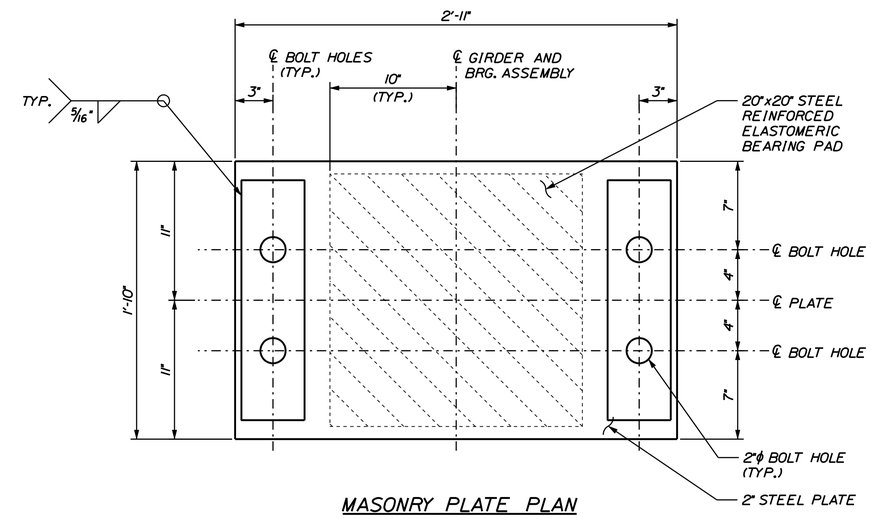

MASONRY PLATE PLAN

SCALE: 2" = 1'-0"

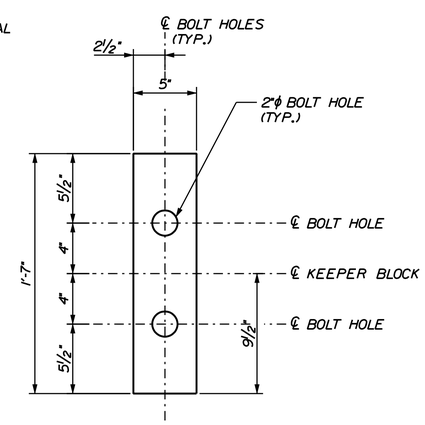

KEEPER BLOCK PLAN

SCALE: 2" = 1'-0"

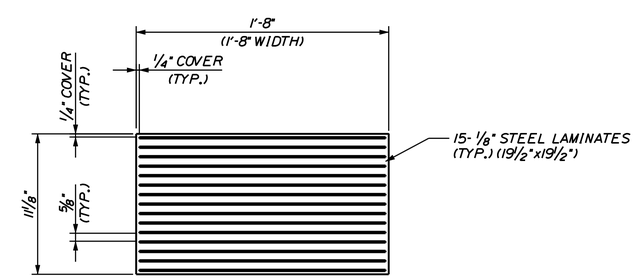

BEARING PAD

SCALE: 2" = 1'-0"

STATE OF MAINE
DEPARTMENT OF TRANSPORTATION

IM-1668(600)E & IM-A670(000)E

PIN
1456 & 6000 16686.00 & 16700.00 BRIDGE PLANS

		BY	DATE
PROJ. MANAGER	B. CONDON		
DESIGN-DETAILED	TPL	MJC	06\11
CHECKED-REVIEWED	JGS	--	06\11
DESIGN2-DETAILED2	PDD	TPL	06\11
DESIGN3-DETAILED3	--	--	--
REVISIONS 1	--		--
REVISIONS 2	--		--
REVISIONS 3	--		--
REVISIONS 4	--		--
FIELD CHANGES	--		--

SIGNATURE

P.E. NUMBER

DATE

C.A. CLAUSON BRIDGES
KENNEBEC RIVER
FAIRFIELD - BENTON SOMERSET & KENNEBEC COUNTIES

BEARING DETAILS 4

SHEET NUMBER
80
OF 132

Filename: ...\MSTA\080_Bearings_det4.dgn Division: HIGHWAY Username: mcarignan Date:6/9/2011

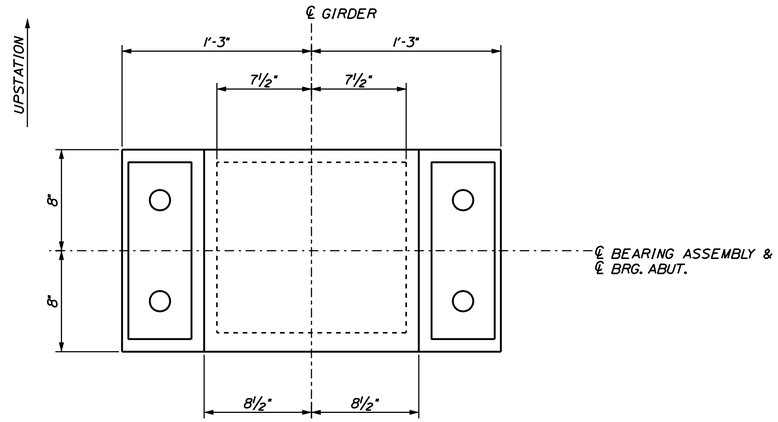

PLAN

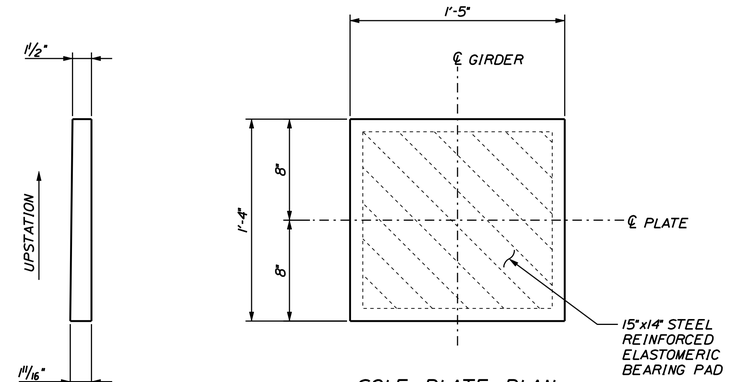

SOLE PLATE PLAN

SCALE: 2" = 1'-0"

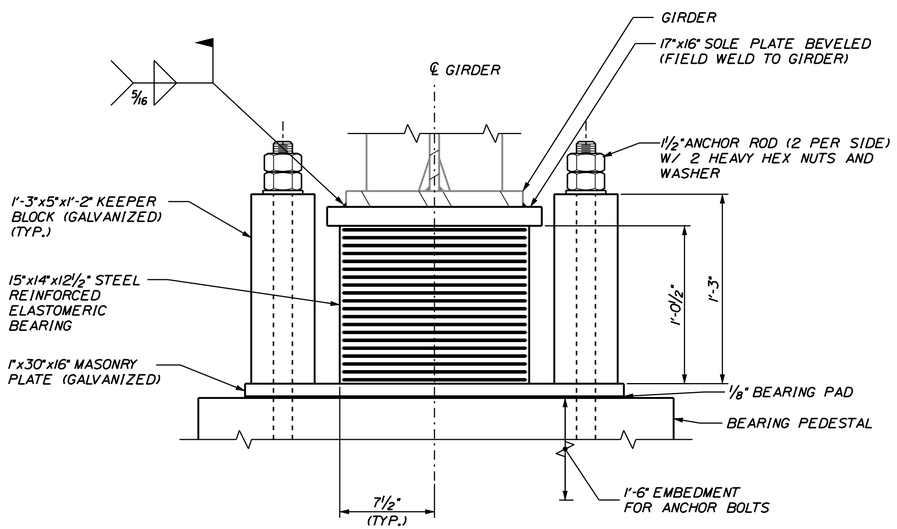

END ELEVATION

ABUTMENT NO. 1 NB & SB (EXPANSION)
ELASTOMERIC BEARINGS

SCALE: 2" = 1'-0"

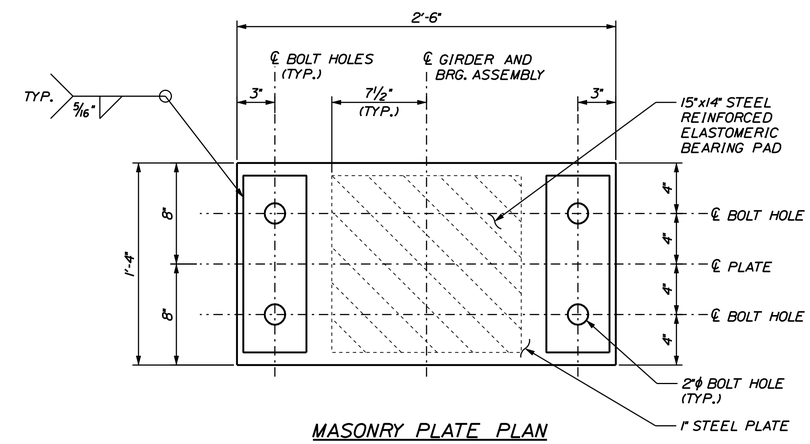

MASONRY PLATE PLAN

SCALE: 2" = 1'-0"

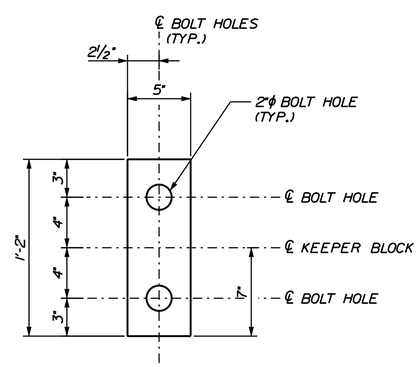

KEEPER BLOCK PLAN

SCALE: 2" = 1'-0"

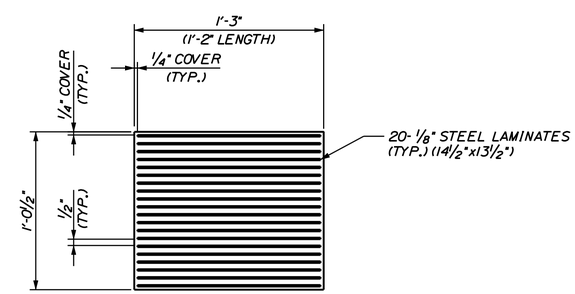

BEARING PAD

SCALE: 2" = 1'-0"

STATE OF MAINE
DEPARTMENT OF TRANSPORTATION

IM-1668(600)E & IM-A670(000)E

PIN
1456 & 6000 16686.00 & 16700.00 BRIDGE PLANS

PROJ. MANAGER	B. CONDON		
DESIGN-DETAILED	TPL	MJC	06\11
CHECKED-REVIEWED	JCS	"	06\11
DESIGN2-DETAILED2	PDD	TPL	06\11
DESIGN3-DETAILED3	"	"	"
REVISIONS 1	"	"	"
REVISIONS 2	"	"	"
REVISIONS 3	"	"	"
REVISIONS 4	"	"	"
FIELD CHANGES	"	"	"

SIGNATURE

P.E. NUMBER

DATE

C.A. CLAUSON BRIDGES
KENNEBEC RIVER
FAIRFIELD - BENTON SOMERSET & KENNEBEC COUNTIES

BEARING DETAILS 5

SHEET NUMBER
81
OF 132

Filename: ...\MSTA\081_Bearings_det5.dgn Division: HIGHWAY Username: mcarignan Date:6/10/2011

SUPERSTRUCTURE NOTES

1. THE THEORETICAL BLOCKING USED FOR DESIGN OF THE STRUCTURE IS SHOWN ON SHEET 88. REFER TO STANDARD DETAIL 502(02) FOR BLOCKING DETAILS.

2. REINFORCING STEEL SHALL HAVE A MINIMUM CONCRETE COVER OF 2 INCHES UNLESS OTHERWISE NOTED.

3. ADJUST REINFORCING STEEL TO FIT AROUND THE BRIDGE DRAINS IN A MANNER APPROVED BY THE RESIDENT. DO NOT CUT TRANSVERSE REINFORCING BARS.

4. FORM A ONE INCH V-GROOVE ON THE FASCIAS AT THE HORIZONTAL JOINT BETWEEN THE CURB AND SLAB.

5. THE SUPERSTRUCTURE SLAB CONCRETE FOR THE MAIN SPANS SHALL BE PLACED IN ACCORDANCE WITH THE DECK PLACEMENT SEQUENCE SHOWN ON SHEET 89. A MINIMUM OF 5 DAYS SHALL ELAPSE BETWEEN SUCCESSIVE PARTIAL PLACEMENTS. THE SUPERSTRUCTURE SLAB CONCRETE PLACEMENT SEQUENCE SHALL BE APPROVED BY THE RESIDENT.

6. THE SUPERSTRUCTURE SLAB CONCRETE FOR EACH PLACEMENT SHALL BE PLACED IN ONE CONTINUOUS OPERATION AND SHALL BE KEPT PLASTIC UNTIL THE ENTIRE PLACEMENT HAS BEEN MADE.

7. THE NEW BEARINGS SHALL BE INSTALLED BEFORE ELEVATIONS ARE TAKEN ON THE TOP FLANGES OF THE GIRDER TO DETERMINE BLOCKING.

8. AT THE CONTRACTOR'S OPTION, PRECAST DECK PANELS MAY BE USED IN PLACE OF THE FULL DEPTH CAST-IN-PLACE DECK SLAB, IN ACCORDANCE WITH SPECIAL PROVISIONS SECTION 502, STRUCTURAL CONCRETE - PRECAST DECK PANELS, AND IN ACCORDANCE WITH THE STANDARD DETAILS. THE CONTRACTOR SHALL TAKE SPECIAL CARE TO MAINTAIN THE BOTTOM OF SLAB ELEVATIONS AND FINAL PROFILE GRADES.

9. IF PRECAST DECK PANELS ARE USED, A NON-STANDARD DESIGN MAY BE REQUIRED DUE TO THE WIDTH OF THE EXISTING TOP FLANGES. FURTHERMORE, THE SHEAR CONNECTOR SPACING AND NUMBER OF STUDS PER ROW SHALL BE ADJUSTED AS REQUIRED.

10. IF PRECAST DECK PANELS ARE USED, THE S503 AND S504 BARS SHALL BE REVISED TO PROVIDE #5 BARS @ 4½" IN CONJUNCTION WITH THE S500 BARS OVER PIERS 1 THROUGH 4. THE LONGITUDINAL LIMITS OF THESE BARS REMAIN AS SHOWN.

11. PRECAST PANELS SHALL NOT BE USED IN LINK SLAB AREAS AT PIERS 6 AND 7. THE #6 LONGITUDINAL BARS MUST BE DEVELOPED WITHIN THE CAST-IN-PLACE LIMITS.

12. IF PRECAST DECK PANELS ARE USED, PAYMENT FOR REINFORCING STEEL FABRICATED, DELIVERED, AND PLACED IN THE CAST-IN-PLACE PORTION OF THE STRUCTURAL CONCRETE SLAB WILL BE CONSIDERED INCIDENTAL TO THE APPROPRIATE SECTION 502 PAY ITEM.

13. THE CONTRACTOR SHALL INSTALL TRANSITION BARRIER VERTICAL CLOSED STIRRUPS, AS SHOWN IN STANDARD DETAILS SECTION 526, PRIOR TO THE PLACEMENT OF THE CURB OR SIDEWALK CONCRETE.

14. ALL CONCRETE IN THE EXPANSION DEVICE BLOCKOUTS, CURBS AND TRANSITION BARRIERS SHALL BE CLASS LP.

15. TOP OF BRIDGE CURB ELEVATIONS SHALL BE SET AT 10 FT INTERVALS BASED ON THE FINISH GRADE PROFILE SHOWN ON THE PLANS AND SHALL ACCOUNT FOR ANTICIPATED DEAD LOAD DEFLECTION OF THE BRIDGE CURB AND HOT BITUMINOUS PAVEMENT. THE CONTRACTOR SHALL SUBMIT PROPOSED TOP OF CURB GRADES FOR THE BRIDGE CURB ONE WEEK BEFORE PLACEMENT.

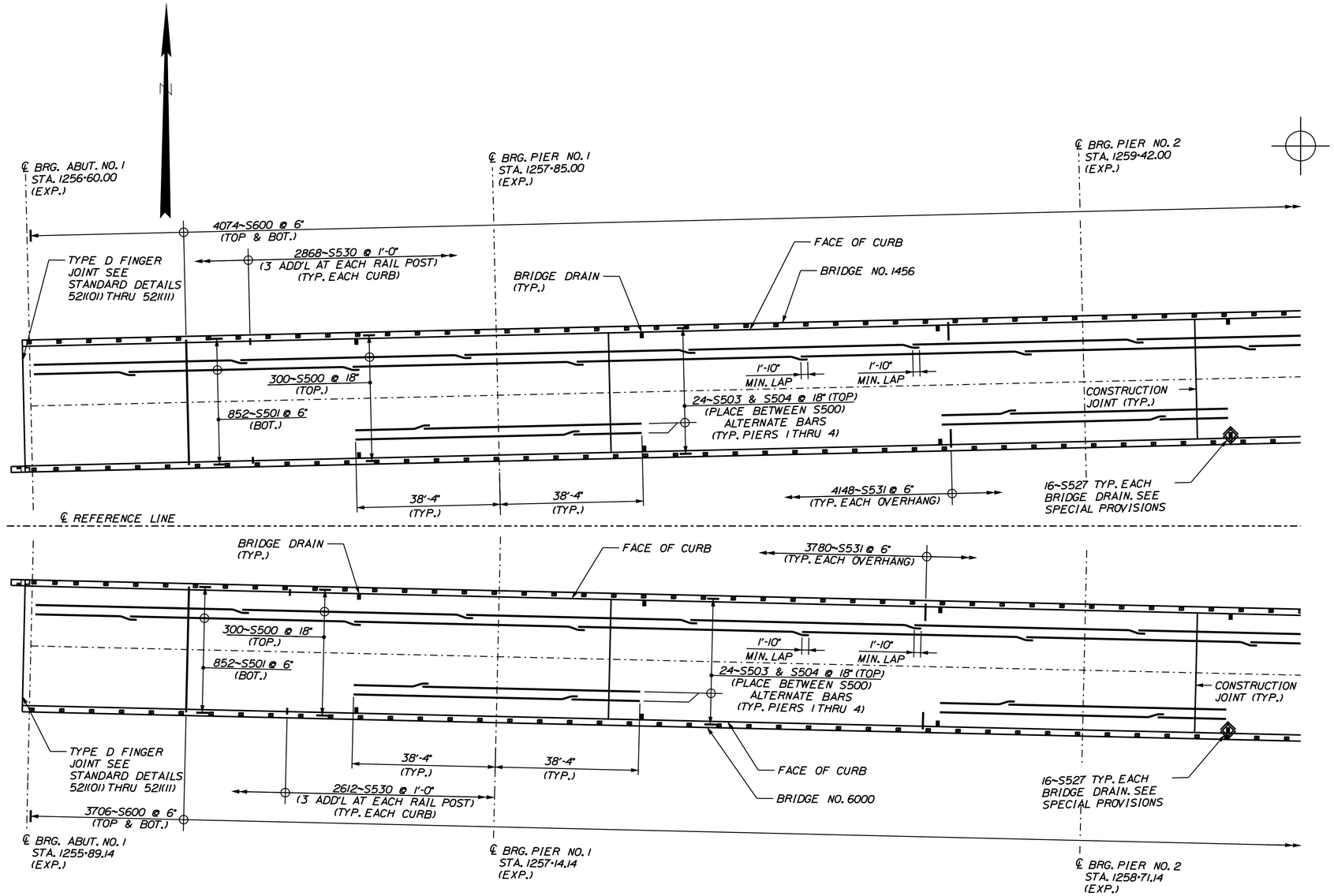

SUPERSTRUCTURE PLAN

SCALE: 1/16" = 1'-0"

STATE OF MAINE
DEPARTMENT OF TRANSPORTATION

IM-1668(600)E & IM-A670(000)E

PIN 16686.00 & 16700.00

1456 & 6000 BRIDGE PLANS

PROJ. MANAGER	B. CONDON	BY	DATE
DESIGN-DETAILED	TPL	MJC	06\11
CHECKED-REVIEWED	JGS	--	06\11
DESIGN2-DETAILED2	PDD	TPL	06\11
DESIGN3-DETAILED3	--	--	--
REVISIONS 1	--	--	--
REVISIONS 2	--	--	--
REVISIONS 3	--	--	--
REVISIONS 4	--	--	--
FIELD CHANGES	--	--	--

SIGNATURE

P.E. NUMBER

DATE

C.A. CLAUSON BRIDGES
KENNEBEC RIVER
FAIRFIELD - BENTON SOMERSET & KENNEBEC COUNTIES

SUPERSTRUCTURE PLAN 1

SHEET NUMBER
82
OF 132

Filename: ...\MSTA\082_Superstructure_1.dgn Division: HIGHWAY Username: mcorignon Date:6/8/2011

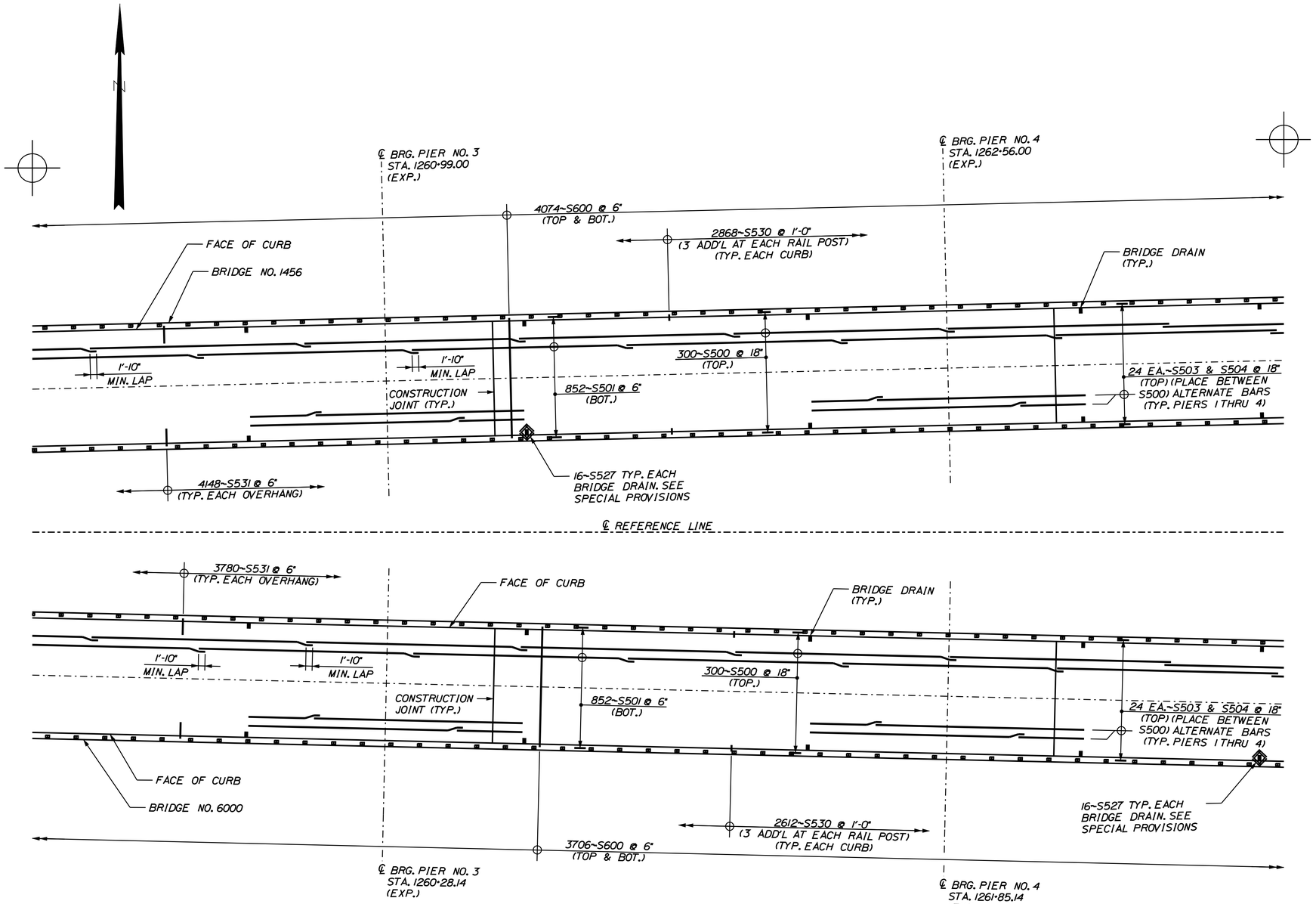

SUPERSTRUCTURE PLAN

SCALE: 1/16" = 1'-0"

Filename: ...\MSTA\083_Superstructure_2.dgn Division: HIGHWAY Username: mcarignan Date:6/8/2011

STATE OF MAINE
DEPARTMENT OF TRANSPORTATION

IM-1668(600)E & IM-A670(000)E

PIN
1456 & 6000 16686.00 & 16700.00 BRIDGE PLANS

PROJ. MANAGER	B. CONDON	BY	DATE
DESIGN-DETAILED	TPL	MJC	06\11
CHECKED-REVIEWED	JGS	--	06\11
DESIGN2-DETAILED2	PDD	TPL	06\11
DESIGN3-DETAILED3	--	--	--
REVISIONS 1	--	--	--
REVISIONS 2	--	--	--
REVISIONS 3	--	--	--
REVISIONS 4	--	--	--
FIELD CHANGES	--	--	--

SIGNATURE

P.E. NUMBER

DATE

C.A. CLAUSON BRIDGES
KENNEBEC RIVER
FAIRFIELD - BENTON SOMERSET & KENNEBEC COUNTIES

SUPERSTRUCTURE PLAN 2

SHEET NUMBER
83
OF 132

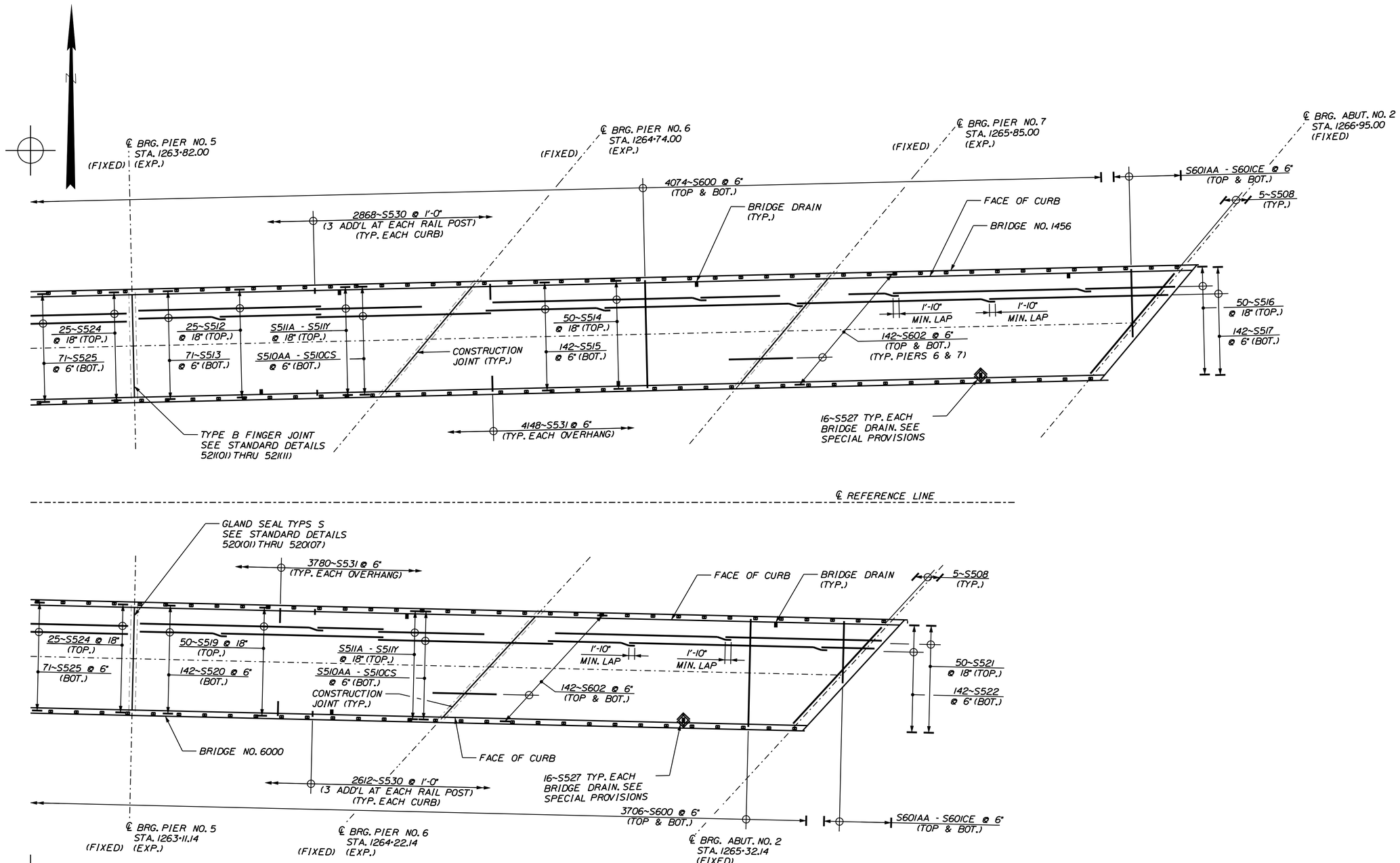

SUPERSTRUCTURE PLAN

SCALE: 1/16" = 1'-0"

STATE OF MAINE
DEPARTMENT OF TRANSPORTATION

IM-1668(600)E & IM-A670(000)E

PIN 16686.00 & 16700.00

1456 & 6000 BRIDGE PLANS

PROJ. MANAGER	B. CONDON	BY	DATE
DESIGN-DETAILED	TPL	MJC	06\11
CHECKED-REVIEWED	JGS	--	06\11
DESIGN2-DETAILED2	PDD	TPL	06\11
DESIGN3-DETAILED3	--	--	--
REVISIONS 1	--		--
REVISIONS 2	--		--
REVISIONS 3	--		--
REVISIONS 4	--		--
FIELD CHANGES	--		--

SIGNATURE

P.E. NUMBER

DATE

C.A. CLAUSON BRIDGES
KENNEBEC RIVER
FAIRFIELD - BENTON SOMERSET & KENNEBEC COUNTIES

SUPERSTRUCTURE PLAN 3

SHEET NUMBER

84

OF 132

Filename: ...\MSTA\084_Superstructure_3.dgn Division: HIGHWAY Username: mcarignan Date:6/8/2011

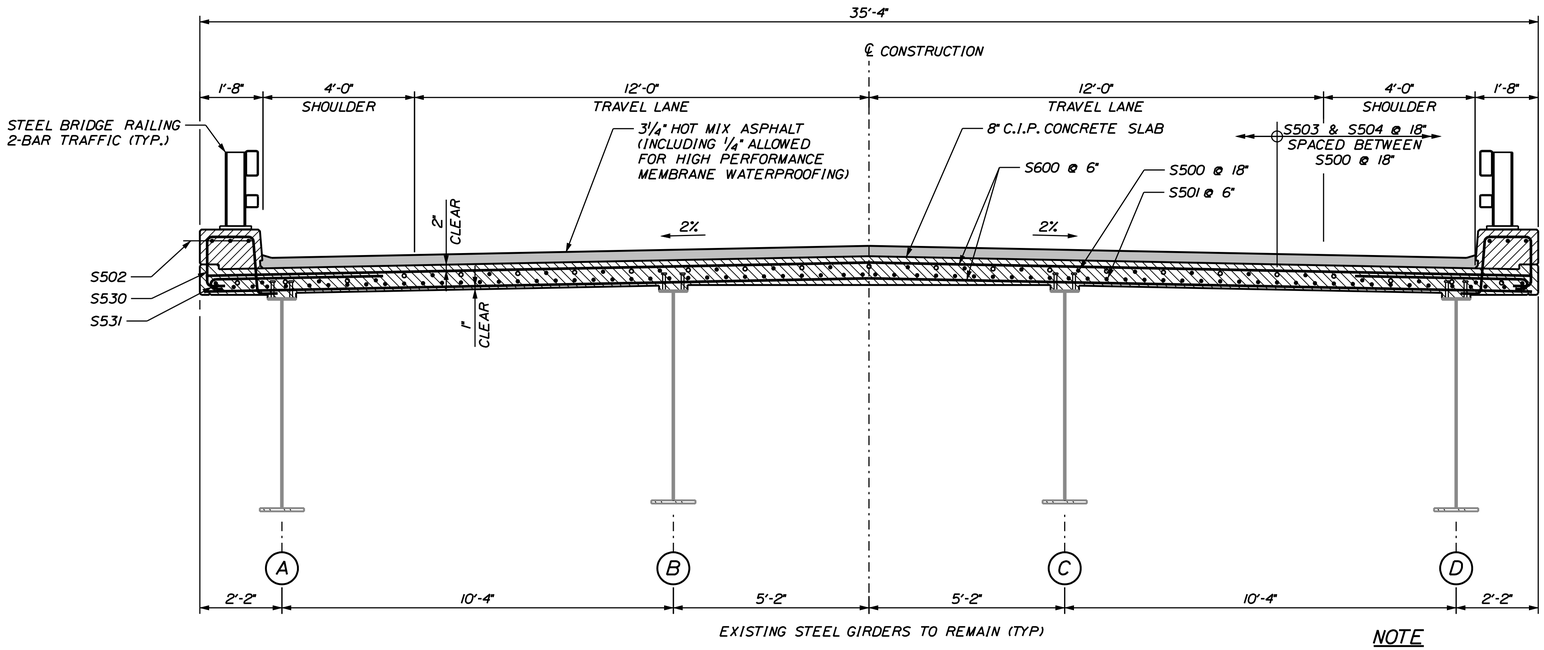

TRANSVERSE SECTION (NB & SB)

SCALE: 1/2" = 1'-0"

NOTE

MAIN SPANS SHOWN.
APPROACH SPANS SIMILAR

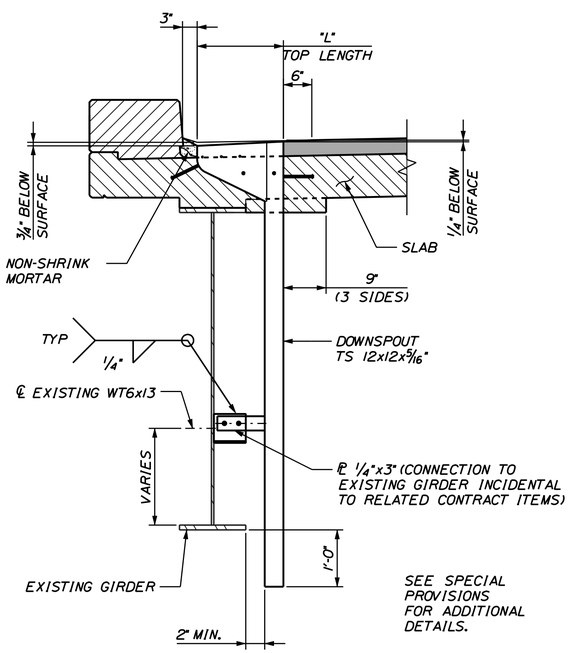

BRIDGE DRAIN TYPE I DETAIL

SCALE: 3/4" = 1'-0"

STATE OF MAINE
DEPARTMENT OF TRANSPORTATION

IM-1668(600)E & IM-A670(000)E

PIN
1456 & 6000 16686.00 & 16700.00 BRIDGE PLANS

		BY	DATE
PROJ. MANAGER	B. CONDON		
DESIGN-DETAILED	TPL	MJC	06\11
CHECKED-REVIEWED	JGS	"	06\11
DESIGN2-DETAILED2	PDD	TPL	06\11
DESIGN3-DETAILED3	"	"	"
REVISIONS 1	"	"	"
REVISIONS 2	"	"	"
REVISIONS 3	"	"	"
REVISIONS 4	"	"	"
FIELD CHANGES	"	"	"

SIGNATURE

P.E. NUMBER

DATE

C.A. CLAUSON BRIDGES
KENNEBEC RIVER
FAIRFIELD - BENTON SOMERSET & KENNEBEC COUNTIES

SUPERSTRUCTURE DETAILS 1

SHEET NUMBER
85
OF 132

Filename: ...\085_Superstructure_Sect.dgn Division: HIGHWAY Username: mcarignan Date:6/6/2011

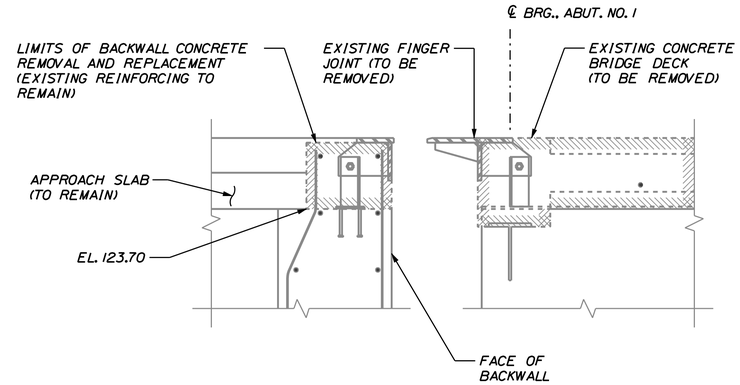

ABUTMENT NO. 1 NB & SB JOINT REMOVAL DETAIL

SCALE: 3/4" = 1'-0"

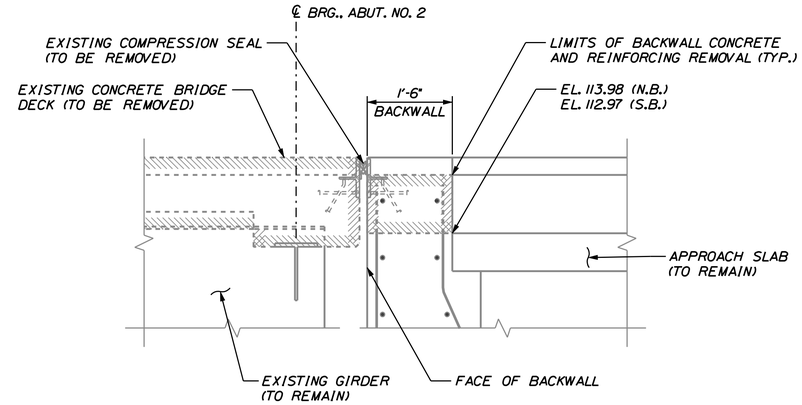

ABUTMENT NO. 2 NB & SB JOINT REMOVAL

SCALE: 3/4" = 1'-0"

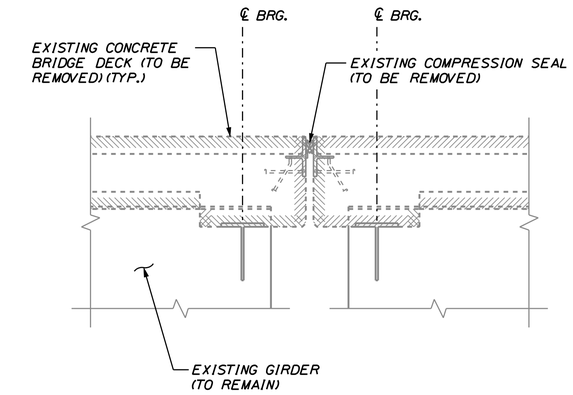

JOINT REMOVAL AT PIERS NO. 5-6 NB & SB, PIER NO. 7 SB

SCALE: 3/4" = 1'-0"

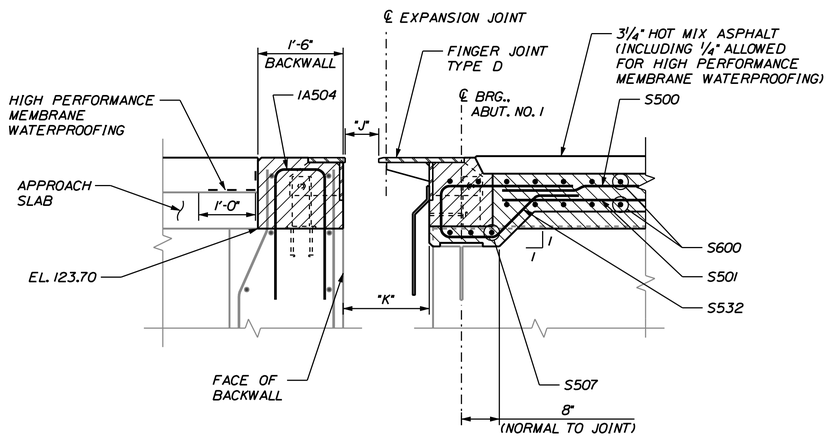

ABUTMENT NO. 1 NB & SB DECK END SECTION

SCALE: 3/4" = 1'-0"

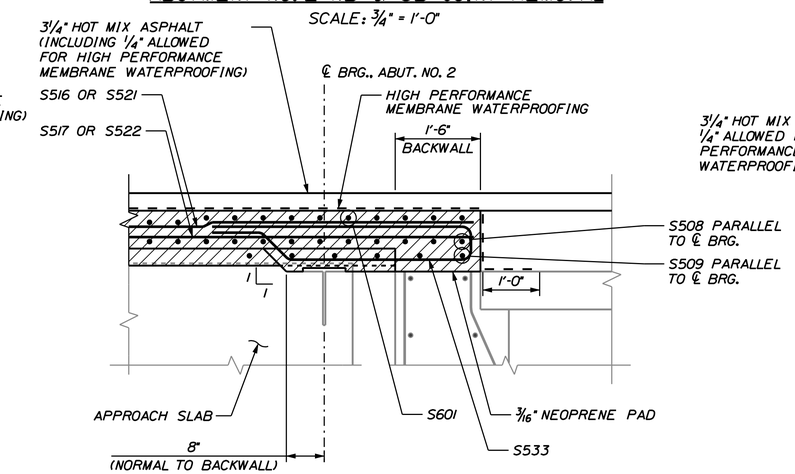

ABUTMENT NO. 2 NB & SB DECK END SECTION

SCALE: 3/4" = 1'-0"

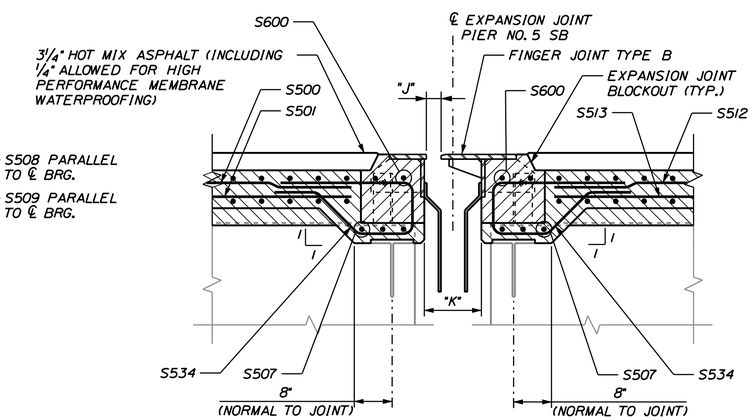

SOUTHBOUND PIER NO. 5 DECK END SECTION

SCALE: 3/4" = 1'-0"

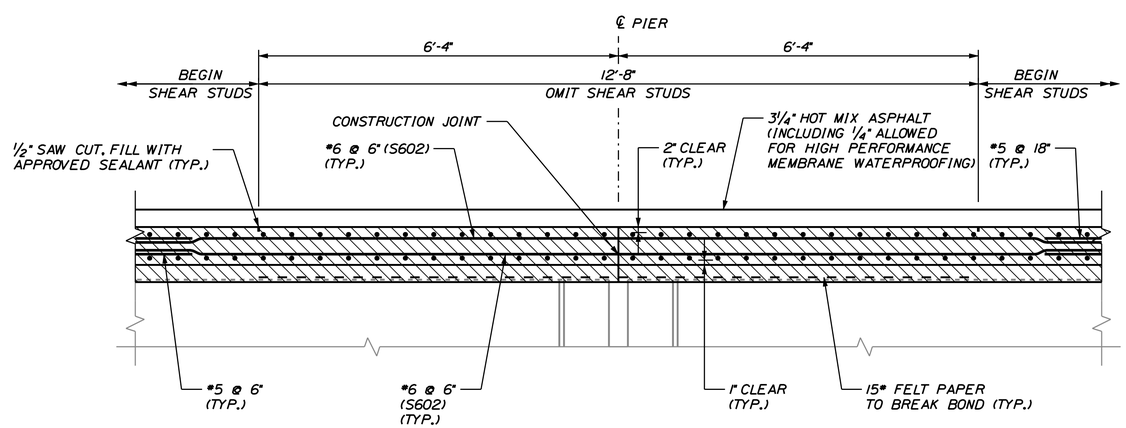

LINK SLAB AT PIERS NO. 6 NB & SB, PIER NO. 7 SB

SCALE: 3/4" = 1'-0"

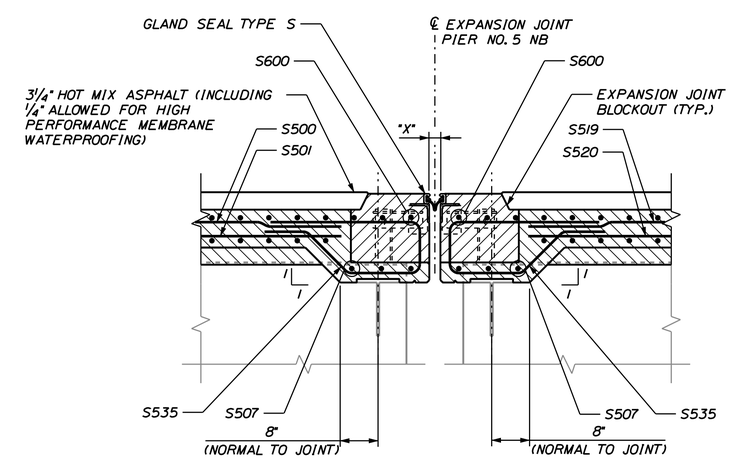

NORTHBOUND PIER NO. 5 DECK END SECTION

SCALE: 3/4" = 1'-0"

STATE OF MAINE
DEPARTMENT OF TRANSPORTATION

IM-1668(600)E & IM-A670(000)E

PIN 16686.00 & 16700.00

1456 & 6000

BRIDGE PLANS

		BY	DATE
PROJ. MANAGER	B. CONDON		
DESIGN-DETAILED	TPL	MJC	06\11
CHECKED-REVIEWED	JGS	--	06\11
DESIGN2-DETAILED2	PDD	TPL	06\11
DESIGN3-DETAILED3	--	--	--
REVISIONS 1	--		--
REVISIONS 2	--		--
REVISIONS 3	--		--
REVISIONS 4	--		--
FIELD CHANGES	--		--

SIGNATURE

P.E. NUMBER

DATE

C.A. CLAUSON BRIDGES
KENNEBEC RIVER
FAIRFIELD - BENTON SOMERSET & KENNEBEC COUNTIES

SUPERSTRUCTURE DETAILS 2

SHEET NUMBER
86
OF 132

Filename: ...\086_Superstructure_det1.dgn Division: HIGHWAY Username: mcorignon Date:6/15/2011

BOTTOM OF SLAB ELEVATION TABLE - SOUTHBOUND SPAN 1

LOCATION	℄ BRG ABUT. 1	1	2	3	4	5	6	7	8	9	10	11	12	13	14	15	16	17	18	19	℄ BRG PIER 1
A	124.73	124.70	124.66	124.62	124.58	124.53	124.47	124.41	124.34	124.27	124.20	124.11	124.03	123.94	123.85	123.76	123.67	123.59	123.51	123.43	123.36
B	124.94	124.91	124.88	124.84	124.80	124.75	124.70	124.64	124.57	124.50	124.42	124.33	124.24	124.15	124.06	123.97	123.88	123.79	123.71	123.64	123.56
C	124.94	124.91	124.88	124.84	124.80	124.75	124.69	124.63	124.57	124.49	124.42	124.33	124.24	124.15	124.06	123.97	123.88	123.79	123.71	123.63	123.56
D	124.73	124.70	124.66	124.62	124.58	124.53	124.47	124.41	124.34	124.27	124.19	124.11	124.02	123.93	123.84	123.75	123.67	123.58	123.50	123.42	123.35

BOTTOM OF SLAB ELEVATION TABLE - SOUTHBOUND SPAN 2

LOCATION	℄ BRG PIER 1	1	2	3	4	5	6	7	8	9	10	11	12	13	14	15	16	17	18	19	℄ BRG PIER 2
A	123.36	123.27	123.19	123.11	123.04	122.98	122.91	122.85	122.78	122.70	122.62	122.53	122.43	122.33	122.22	122.12	122.01	121.90	121.81	121.71	121.62
B	123.56	123.48	123.39	123.32	123.25	123.19	123.13	123.07	123.00	122.92	122.84	122.75	122.66	122.55	122.44	122.33	122.22	122.11	122.01	121.92	121.83
C	123.56	123.47	123.39	123.32	123.25	123.19	123.13	123.06	122.99	122.92	122.84	122.75	122.65	122.55	122.44	122.33	122.22	122.11	122.01	121.92	121.83
D	123.35	123.27	123.18	123.11	123.04	122.97	122.91	122.84	122.77	122.69	122.61	122.52	122.42	122.32	122.22	122.11	122.00	121.90	121.80	121.70	121.62

BOTTOM OF SLAB ELEVATION TABLE - SOUTHBOUND SPAN 3

LOCATION	℄ BRG PIER 2	1	2	3	4	5	6	7	8	9	10	11	12	13	14	15	16	17	18	19	℄ BRG PIER 3
A	121.62	121.54	121.47	121.39	121.33	121.26	121.20	121.14	121.07	120.99	120.91	120.82	120.72	120.62	120.51	120.40	120.29	120.18	120.08	119.98	119.89
B	121.83	121.75	121.67	121.60	121.53	121.47	121.40	121.34	121.27	121.19	121.11	121.02	120.92	120.82	120.71	120.60	120.49	120.38	120.28	120.18	120.10
C	121.83	121.74	121.66	121.59	121.53	121.46	121.40	121.34	121.27	121.19	121.11	121.02	120.92	120.82	120.71	120.60	120.49	120.38	120.28	120.18	120.09
D	121.62	121.53	121.46	121.39	121.32	121.26	121.19	121.13	121.06	120.98	120.90	120.81	120.71	120.61	120.50	120.39	120.28	120.17	120.07	119.97	119.88

BOTTOM OF SLAB ELEVATION TABLE - SOUTHBOUND SPAN 4

LOCATION	℄ BRG PIER 3	1	2	3	4	5	6	7	8	9	10	11	12	13	14	15	16	17	18	19	℄ BRG PIER 4
A	119.89	119.81	119.73	119.65	119.58	119.52	119.45	119.38	119.31	119.23	119.15	119.06	118.96	118.86	118.75	118.64	118.54	118.43	118.33	118.25	118.16
B	120.10	120.01	119.93	119.86	119.79	119.73	119.67	119.61	119.54	119.46	119.37	119.28	119.18	119.08	118.97	118.86	118.75	118.64	118.54	118.45	118.36
C	120.09	120.01	119.93	119.86	119.79	119.73	119.67	119.60	119.53	119.46	119.37	119.28	119.18	119.08	118.96	118.85	118.74	118.64	118.54	118.45	118.36
D	119.88	119.80	119.72	119.64	119.57	119.51	119.44	119.38	119.30	119.23	119.14	119.05	118.95	118.85	118.74	118.64	118.53	118.43	118.33	118.24	118.15

BOTTOM OF SLAB ELEVATION TABLE - SOUTHBOUND SPAN 5

LOCATION	℄ BRG PIER 4	1	2	3	4	5	6	7	8	9	10	11	12	13	14	15	16	17	18	19	℄ BRG PIER 5
A	118.16	118.09	118.03	117.97	117.92	117.87	117.82	117.77	117.72	117.67	117.61	117.55	117.49	117.42	117.34	117.26	117.17	117.08	116.98	116.88	116.77
B	118.36	118.30	118.24	118.18	118.13	118.08	118.03	117.99	117.94	117.89	117.84	117.78	117.71	117.64	117.56	117.48	117.39	117.29	117.19	117.09	116.98
C	118.36	118.29	118.23	118.18	118.12	118.08	118.03	117.98	117.94	117.89	117.83	117.78	117.71	117.64	117.56	117.48	117.39	117.29	117.19	117.09	116.98
D	118.15	118.09	118.02	117.97	117.91	117.86	117.81	117.77	117.72	117.67	117.61	117.55	117.48	117.41	117.34	117.25	117.17	117.07	116.98	116.88	116.77

BOTTOM OF SLAB ELEVATION TABLE - SOUTHBOUND SPAN 6

LOCATION	℄ BRG PIER 5	1	2	3	4	5	6	7	8	9	10	11	12	13	14	15	16	17	18	19	℄ BRG PIER 6
GA6SB	116.75	116.73	116.70	116.68	116.65	116.62	116.58	116.54	116.49	116.44	116.39	116.33	116.26	116.19	116.12	116.04	115.96	115.88	115.79	115.70	115.61
GB6SB	116.96	116.94	116.91	116.89	116.86	116.83	116.79	116.75	116.71	116.67	116.61	116.56	116.50	116.44	116.37	116.30	116.23	116.16	116.08	116.00	115.91
GC6SB	116.96	116.93	116.91	116.88	116.85	116.82	116.79	116.75	116.71	116.67	116.63	116.58	116.52	116.47	116.41	116.35	116.29	116.22	116.15	116.08	116.01
GD6SB	116.75	116.72	116.69	116.67	116.64	116.60	116.57	116.54	116.50	116.46	116.42	116.37	116.33	116.28	116.23	116.18	116.13	116.08	116.02	115.96	115.91

BOTTOM OF SLAB ELEVATION TABLE - SOUTHBOUND SPAN 7

LOCATION	℄ BRG PIER 6	1	2	3	4	5	6	7	8	9	10	11	12	13	14	15	16	17	18	19	℄ BRG PIER 7
GA7SB	115.59	115.56	115.54	115.51	115.48	115.45	115.41	115.37	115.32	115.27	115.21	115.15	115.08	115.01	114.93	114.85	114.76	114.67	114.58	114.48	114.38
GB7SB	115.89	115.87	115.85	115.83	115.80	115.77	115.73	115.69	115.64	115.59	115.53	115.47	115.40	115.33	115.25	115.16	115.08	114.98	114.89	114.79	114.69
GC7SB	115.99	115.97	115.95	115.93	115.90	115.87	115.83	115.79	115.74	115.69	115.63	115.57	115.50	115.43	115.35	115.26	115.18	115.08	114.99	114.89	114.79
GD7SB	115.89	115.86	115.84	115.82	115.79	115.75	115.71	115.67	115.62	115.57	115.51	115.45	115.38	115.31	115.23	115.15	115.06	114.97	114.88	114.78	114.68

BOTTOM OF SLAB ELEVATION TABLE - SOUTHBOUND SPAN 8

LOCATION	℄ BRG PIER 7	1	2	3	4	5	6	7	8	9	10	11	12	13	14	15	16	17	18	19	℄ BRG ABUT. 2
GA8SB	114.36	114.34	114.31	114.29	114.26	114.23	114.19	114.15	114.10	114.05	113.99	113.93	113.86	113.78	113.71	113.62	113.54	113.45	113.35	113.25	113.16
GB8SB	114.67	114.65	114.63	114.60	114.57	114.54	114.50	114.46	114.41	114.36	114.31	114.24	114.17	114.10	114.02	113.94	113.85	113.76	113.66	113.56	113.46
GC8SB	114.77	114.75	114.73	114.70	114.67	114.64	114.60	114.56	114.51	114.46	114.41	114.34	114.27	114.20	114.12	114.04	113.95	113.86	113.76	113.66	113.56
GD8SB	114.66	114.64	114.62	114.59	114.56	114.53	114.49	114.45	114.40	114.35	114.29	114.23	114.16	114.08	114.01	113.92	113.84	113.75	113.65	113.55	113.46

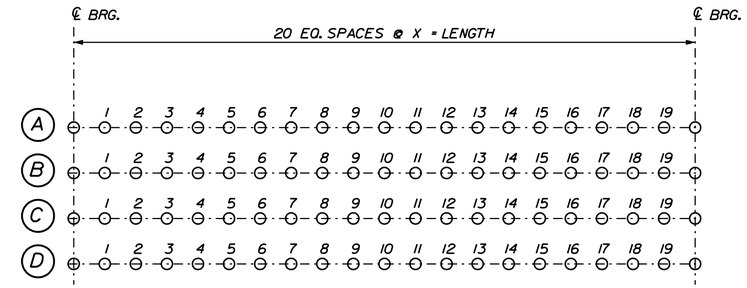

BOTTOM OF SLAB ELEVATION LAYOUT PLAN

NOT TO SCALE

LAYOUT TABLE

SPAN	GIRDER	X	LENGTH
1	A - D	6'-3"	125'-0"
2	A - D	7'-10 3/16"	157'-0"
3	A - D	7'-10 3/16"	157'-0"
4	A - D	7'-10 3/16"	157'-0"
5	A - D	6'-3"	125'-0"
6	GA6SB	5'-2 3/16"	103'-7 11/16"
6	GB6SB	4'-8 3/4"	94'-6 1/2"
6	GC6SB	4'-3 1/4"	85'-5 5/8"
6	GD6SB	3-9 3/16"	76'-4 11/16"
7	A - D	5'-5 3/8"	109'-0 1/16"
8	A - D	5'-5 3/8"	109'-0 1/16"

NOTE
THEORETICAL BLOCKING
(DO NOT USE FOR
SETTING FORMWORK).

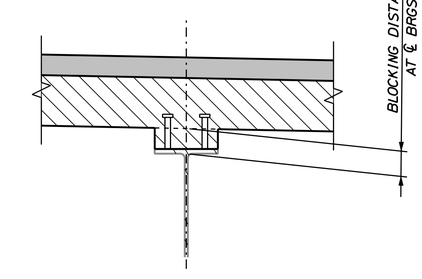

SLAB HAUNCH & BLOCKING DETAIL

SCALE: 1" = 1'-0"

STATE OF MAINE
DEPARTMENT OF TRANSPORTATION

IM-1668(600)E & IM-A670(000)E

PIN 16686.00 & 16700.00

1456 & 6000 BRIDGE PLANS

		BY	DATE
PROJ. MANAGER	B. CONDON		
DESIGN-DETAILED	TPL	MJC	06\11
CHECKED-REVIEWED	JGS	--	06\11
DESIGN2-DETAILED2	PDD	TPL	06\11
DESIGN3-DETAILED3	--	--	--
REVISIONS 1	--		--
REVISIONS 2	--		--
REVISIONS 3	--		--
REVISIONS 4	--		--
FIELD CHANGES	--		--

SIGNATURE

P.E. NUMBER

DATE

C.A. CLAUSON BRIDGES
KENNEBEC RIVER
FAIRFIELD - BENTON SOMERSET & KENNEBEC COUNTIES

SUPERSTRUCTURE DETAILS 3

SHEET NUMBER
87
OF 132

Filename: ...\087_Superstructure_slabSB.dgn Division: HIGHWAY Username: mcorignon Date:6/6/2011

BOTTOM OF SLAB ELEVATION TABLE - NORTHBOUND SPAN 1

LOCATION	℄ BRG ABUT. 1	1	2	3	4	5	6	7	8	9	10	11	12	13	14	15	16	17	18	19	℄ BRG PIER 1
A	124.78	124.75	124.71	124.67	124.62	124.57	124.52	124.45	124.39	124.32	124.24	124.15	124.07	123.98	123.89	123.80	123.71	123.63	123.55	123.47	123.40
B	124.99	124.96	124.92	124.88	124.84	124.79	124.74	124.68	124.61	124.54	124.46	124.37	124.29	124.19	124.10	124.01	123.92	123.83	123.75	123.68	123.60
C	124.99	124.96	124.92	124.88	124.84	124.79	124.74	124.68	124.61	124.54	124.46	124.37	124.28	124.19	124.10	124.01	123.92	123.83	123.75	123.67	123.60
D	124.78	124.74	124.71	124.67	124.62	124.57	124.51	124.45	124.38	124.31	124.23	124.15	124.06	123.97	123.88	123.79	123.71	123.62	123.54	123.46	123.39

BOTTOM OF SLAB ELEVATION TABLE - NORTHBOUND SPAN 2

LOCATION	℄ BRG PIER 1	1	2	3	4	5	6	7	8	9	10	11	12	13	14	15	16	17	18	19	℄ BRG PIER 2
A	123.40	123.31	123.23	123.15	123.08	123.01	122.95	122.88	122.81	122.73	122.65	122.56	122.47	122.36	122.26	122.15	122.04	121.94	121.84	121.74	121.66
B	123.60	123.52	123.43	123.36	123.29	123.23	123.16	123.10	123.03	122.96	122.88	122.79	122.69	122.59	122.48	122.36	122.25	122.15	122.04	121.95	121.86
C	123.60	123.51	123.43	123.35	123.29	123.22	123.16	123.10	123.03	122.96	122.87	122.78	122.69	122.58	122.47	122.36	122.25	122.14	122.04	121.95	121.86
D	123.39	123.30	123.22	123.14	123.07	123.01	122.94	122.87	122.80	122.73	122.64	122.55	122.46	122.36	122.25	122.14	122.03	121.93	121.83	121.74	121.65

BOTTOM OF SLAB ELEVATION TABLE - NORTHBOUND SPAN 3

LOCATION	℄ BRG PIER 2	1	2	3	4	5	6	7	8	9	10	11	12	13	14	15	16	17	18	19	℄ BRG PIER 3
A	121.66	121.57	121.49	121.42	121.36	121.29	121.23	121.16	121.09	121.02	120.93	120.84	120.75	120.64	120.53	120.42	120.31	120.20	120.10	120.00	119.91
B	121.86	121.77	121.70	121.62	121.56	121.49	121.43	121.37	121.30	121.22	121.14	121.05	120.95	120.84	120.74	120.62	120.51	120.40	120.30	120.21	120.12
C	121.86	121.77	121.69	121.62	121.55	121.49	121.43	121.36	121.29	121.22	121.13	121.04	120.95	120.84	120.73	120.62	120.51	120.40	120.30	120.20	120.11
D	121.65	121.56	121.49	121.42	121.35	121.29	121.22	121.16	121.09	121.01	120.93	120.84	120.74	120.63	120.52	120.41	120.30	120.20	120.09	120.00	119.90

BOTTOM OF SLAB ELEVATION TABLE - NORTHBOUND SPAN 4

LOCATION	℄ BRG PIER 3	1	2	3	4	5	6	7	8	9	10	11	12	13	14	15	16	17	18	19	℄ BRG PIER 4
A	119.91	119.83	119.75	119.67	119.60	119.54	119.47	119.40	119.33	119.25	119.17	119.08	118.98	118.88	118.77	118.66	118.55	118.45	118.35	118.26	118.17
B	120.12	120.03	119.95	119.88	119.81	119.75	119.69	119.62	119.55	119.48	119.39	119.30	119.20	119.09	118.98	118.87	118.76	118.65	118.55	118.46	118.37
C	120.11	120.03	119.95	119.88	119.81	119.75	119.69	119.62	119.55	119.47	119.39	119.30	119.20	119.09	118.98	118.87	118.76	118.65	118.55	118.46	118.37
D	119.90	119.82	119.74	119.66	119.59	119.53	119.46	119.39	119.32	119.24	119.16	119.07	118.97	118.87	118.76	118.65	118.54	118.44	118.34	118.25	118.16

BOTTOM OF SLAB ELEVATION TABLE - NORTHBOUND SPAN 5

LOCATION	℄ BRG PIER 4	1	2	3	4	5	6	7	8	9	10	11	12	13	14	15	16	17	18	19	℄ BRG PIER 5
A	118.17	118.11	118.04	117.99	117.93	117.88	117.83	117.78	117.73	117.68	117.62	117.56	117.50	117.42	117.35	117.26	117.18	117.08	116.98	116.88	116.78
B	118.37	118.31	118.25	118.19	118.14	118.09	118.04	118.00	117.95	117.90	117.85	117.79	117.72	117.65	117.57	117.49	117.40	117.30	117.20	117.09	116.99
C	118.37	118.31	118.25	118.19	118.14	118.09	118.04	118.00	117.95	117.90	117.84	117.78	117.72	117.65	117.57	117.49	117.39	117.30	117.20	117.09	116.99
D	118.16	118.10	118.04	117.98	117.93	117.87	117.83	117.78	117.73	117.68	117.62	117.56	117.49	117.42	117.34	117.26	117.17	117.08	116.98	116.88	116.78

BOTTOM OF SLAB ELEVATION TABLE - NORTHBOUND SPAN 6

LOCATION	℄ BRG PIER 5	1	2	3	4	5	6	7	8	9	10	11	12	13	14	15	16	17	18	19	℄ BRG PIER 6
GA6NB	116.76	116.74	116.72	116.70	116.67	116.64	116.60	116.56	116.51	116.45	116.38	116.31	116.23	116.15	116.05	115.95	115.85	115.74	115.63	115.51	115.39
GB6NB	116.96	116.95	116.93	116.90	116.88	116.84	116.81	116.76	116.71	116.66	116.60	116.53	116.46	116.38	116.30	116.21	116.11	116.01	115.91	115.80	115.69
GC6NB	116.96	116.94	116.92	116.89	116.86	116.83	116.79	116.75	116.71	116.66	116.60	116.54	116.47	116.40	116.33	116.25	116.16	116.07	115.98	115.89	115.79
GD6NB	116.76	116.73	116.71	116.68	116.65	116.62	116.58	116.54	116.50	116.45	116.40	116.34	116.28	116.22	116.15	116.08	116.01	115.93	115.85	115.77	115.69

BOTTOM OF SLAB ELEVATION TABLE - NORTHBOUND SPAN 7

LOCATION	℄ BRG PIER 6	1	2	3	4	5	6	7	8	9	10	11	12	13	14	15	16	17	18	19	℄ BRG ABUT. 2
GA7NB	115.37	115.35	115.33	115.30	115.27	115.24	115.20	115.16	115.11	115.06	115.00	114.94	114.87	114.80	114.72	114.63	114.55	114.46	114.36	114.26	114.16
GB7NB	115.68	115.66	115.64	115.62	115.59	115.55	115.52	115.47	115.43	115.38	115.32	115.25	115.19	115.11	115.03	114.95	114.86	114.77	114.67	114.57	114.47
GC7NB	115.78	115.76	115.74	115.72	115.69	115.65	115.62	115.58	115.53	115.48	115.42	115.36	115.29	115.21	115.13	115.05	114.96	114.87	114.77	114.67	114.57
GD7NB	115.68	115.65	115.63	115.61	115.58	115.54	115.50	115.46	115.41	115.36	115.30	115.24	115.17	115.10	115.02	114.94	114.85	114.76	114.66	114.57	114.47

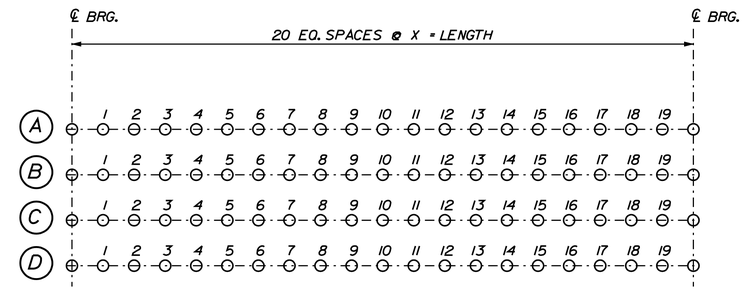

BOTTOM OF SLAB ELEVATION LAYOUT PLAN

NOT TO SCALE

LAYOUT TABLE

SPAN	GIRDER	X	LENGTH
1	A - D	6'-3"	125'-0"
2	A - D	7'-10 3/16"	157'-0"
3	A - D	7'-10 3/16"	157'-0"
4	A - D	7'-10 3/16"	157'-0"
5	A - D	6'-3"	125'-0"
6	GA6NB	6'-1 9/16"	122'-7 7/16"
6	GB6NB	5'-8 1/8"	113'-6 1/2"
6	GC6NB	5'-2 11/16"	104'-5 5/8"
6	GD6NB	4-9 1/4"	95'-4 11/16"
7	A - D	5'-5 3/8"	109'-0 1/16"

NOTE:
THEORETICAL BLOCKING
(DO NOT USE FOR SETTING FORMWORK)

THEORETICAL BLOCKING

	SOUTHBOUND				NORTHBOUND			
LOCATION	GIRDER A	GIRDER B	GIRDER C	GIRDER D	GIRDER A	GIRDER B	GIRDER C	GIRDER D
ABUTMENT NO. 1	3 3/8	3 3/8	3 3/8	3 3/8	3 3/8	3 3/8	3 3/8	3 3/8
PIER NO. 1	3 3/8	3 1/2	3 1/2	3 3/8	3 3/8	3 1/2	3 1/2	3 3/8
PIER NO. 2	3 3/8	3 1/2	3 1/2	3 3/8	3 3/8	3 1/2	3 1/2	3 3/8
PIER NO. 3	3 3/8	3 1/2	3 1/2	3 3/8	3 3/8	3 1/2	3 1/2	3 3/8
PIER NO. 4	3 3/8	3 1/2	3 1/2	3 3/8	3 3/8	3 1/2	3 1/2	3 3/8
PIER NO. 5 (FIXED)	3 3/8	3 3/8	3 3/8	3 3/8	3 1/2	3 1/2	3 1/2	3 1/2
PIER NO. 5 (EXP)	3 3/8	3 3/8	3 3/8	3 3/8	3 1/2	3 1/2	3 1/2	3 1/2
PIER NO. 6 (FIXED)	3 1/2	3 1/2	3 1/2	3 1/2	3 1/2	3 1/2	3 1/2	3 1/2
PIER NO. 6 (EXP)	3 3/8	3 1/2	3 1/2	3 3/8	3 1/2	3 1/2	3 1/2	3 1/2
PIER NO. 7 (FIXED)	3 3/8	3 1/2	3 1/2	3 3/8	----	----	----	----
PIER NO. 7 (EXP)	3 3/8	3 1/2	3 1/2	3 3/8	----	----	----	----
ABUTMENT NO. 2	3 1/2	3 5/8	3 1/2	3 5/8	4	3 3/4	3 5/8	4

NOTE:
SEE SHEET 87 FOR SLAB HAUNCH & BLOCKING DETAIL.

STATE OF MAINE
DEPARTMENT OF TRANSPORTATION

IM-1668(600)E & IM-A670(000)E

PIN 16686.00 & 16700.00

1456 & 6000

BRIDGE PLANS

PROJ. MANAGER	B. CONDON	BY	DATE
DESIGN-DETAILED	TPL	MJC	06\11
CHECKED-REVIEWED	JGS	--	06\11
DESIGN2-DETAILED2	PDD	TPL	06\11
DESIGN3-DETAILED3	--	--	--
REVISIONS 1	--		--
REVISIONS 2	--		--
REVISIONS 3	--		--
REVISIONS 4	--		--
FIELD CHANGES	--		--

SIGNATURE

P.E. NUMBER

DATE

C.A. CLAUSON BRIDGES
KENNEBEC RIVER
FAIRFIELD - BENTON SOMERSET & KENNEBEC COUNTIES

SUPERSTRUCTURE DETAILS 4

SHEET NUMBER
88
OF 132

Filename: ...\088_Superstructure_slabNB.dgn Division: HIGHWAY Username: mcarignan Date:6/6/2011

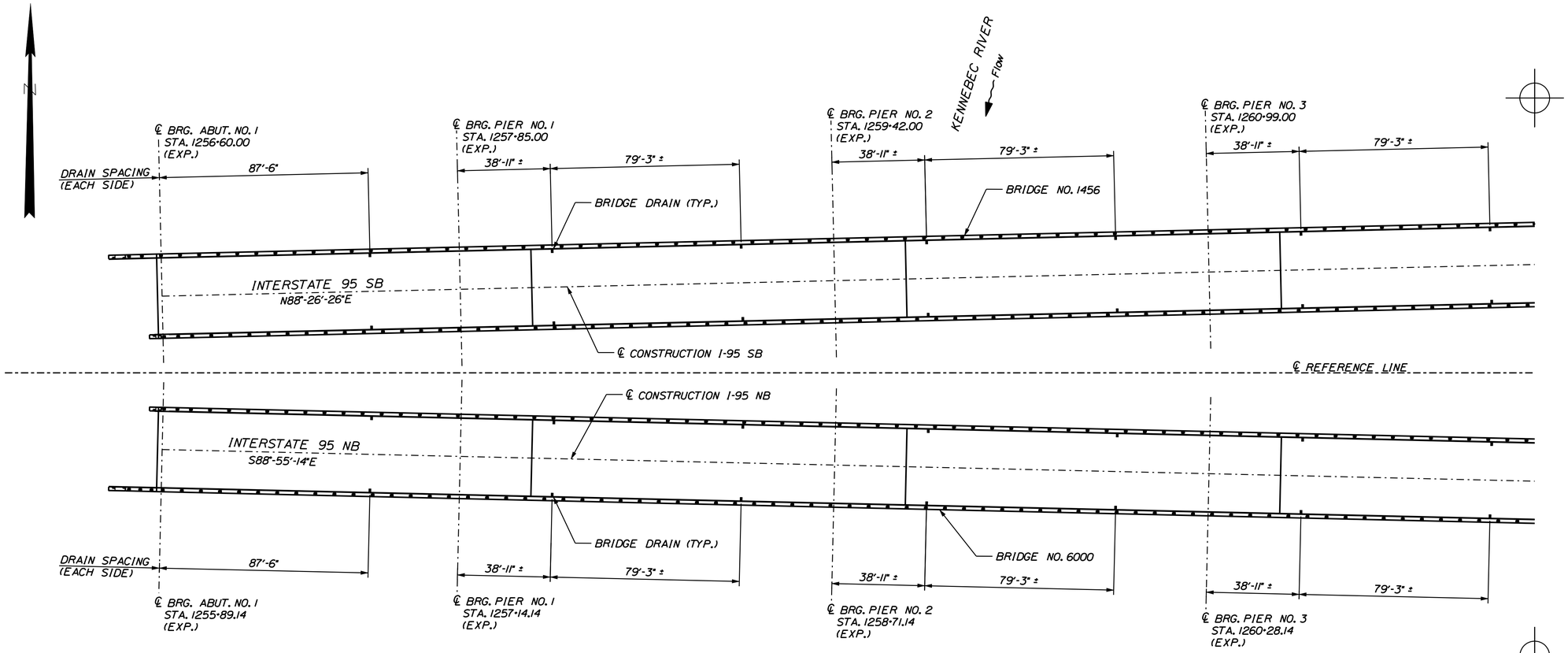

DRAIN LAYOUT PLAN

25 0 25 50
SCALE OF FEET

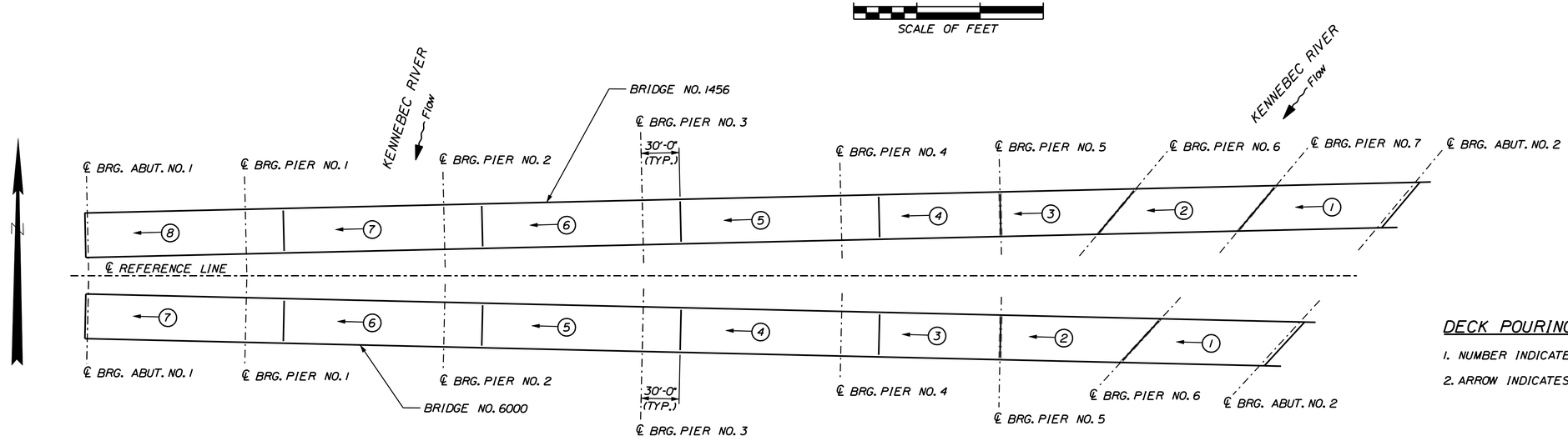

DECK POURING SEQUENCE

50 0 50 100
SCALE OF FEET

DECK POURING SEQUENCE NOTES

1. NUMBER INDICATES POURING SEQUENCE.
2. ARROW INDICATES DIRECTION OF POUR (UPHILL)

STATE OF MAINE
DEPARTMENT OF TRANSPORTATION

IM-1668(600)E & IM-A670(000)E

PIN 16686.00 & 16700.00

1456 & 6000 BRIDGE PLANS

PROJ. MANAGER	B. CONDON	BY	DATE
DESIGN-DETAILED	TPL	MJC	06\11
CHECKED-REVIEWED	JGS	--	06\11
DESIGN2-DETAILED2	PDD	TPL	06\11
DESIGN3-DETAILED3	--	--	--
REVISIONS 1	--	--	--
REVISIONS 2	--	--	--
REVISIONS 3	--	--	--
REVISIONS 4	--	--	--
FIELD CHANGES	--	--	--

SIGNATURE

P.E. NUMBER

DATE

C.A. CLAUSON BRIDGES
KENNEBEC RIVER
FAIRFIELD - BENTON SOMERSET & KENNEBEC COUNTIES

SUPERSTRUCTURE DETAILS 5

SHEET NUMBER
89
OF 132

Filename: ...\089_Superstructure_drain1.dgn Division: HIGHWAY Username: mcarignan Date:6/6/2011

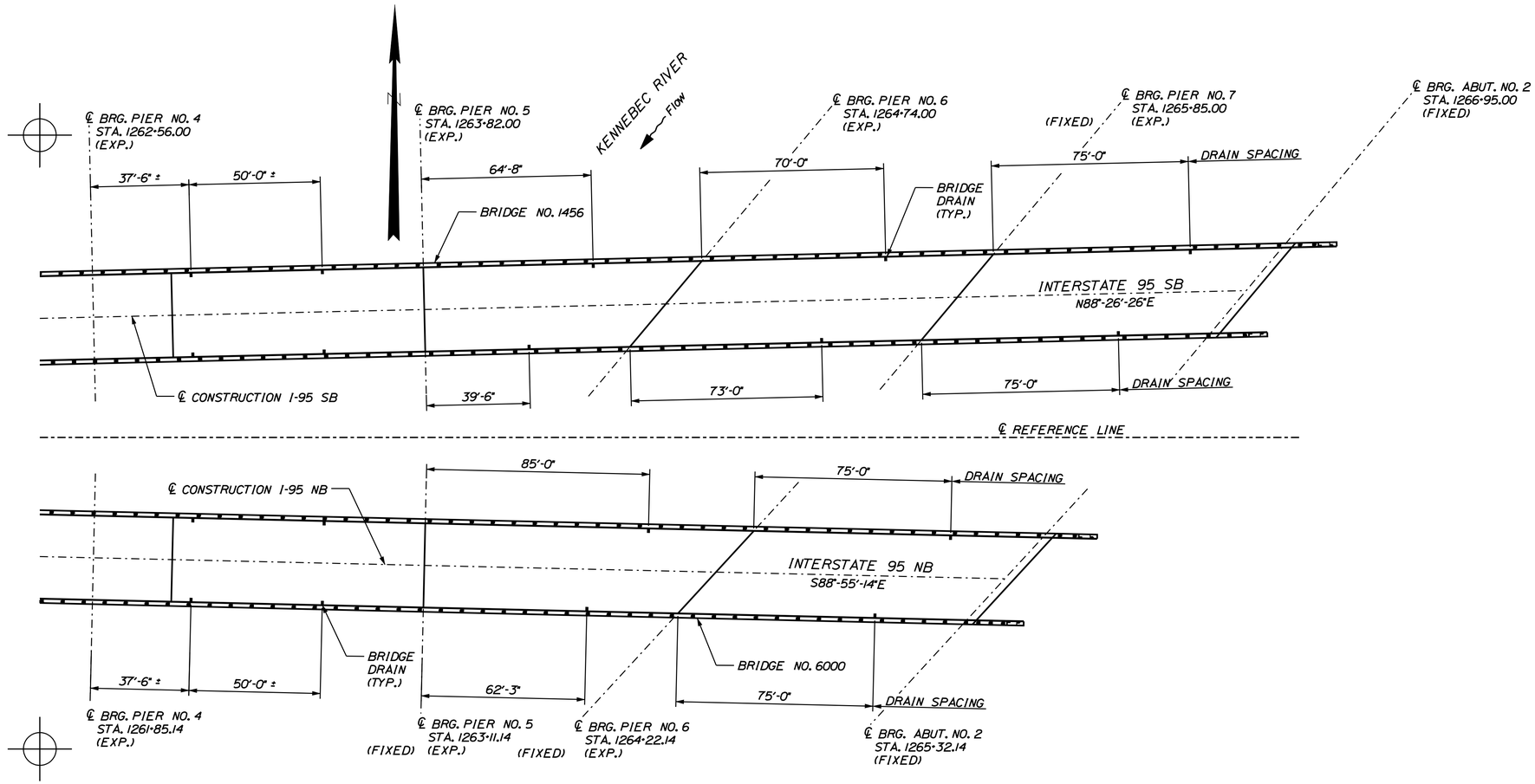

DRAIN LAYOUT PLAN

25 0 25 50

SCALE OF FEET

STATE OF MAINE
DEPARTMENT OF TRANSPORTATION

IM-1668(600)E & IM-A670(000)E

PIN
1456 & 6000 16686.00 & 16700.00 BRIDGE PLANS

PROJ. MANAGER	B. CONDON	BY	DATE
DESIGN-DETAILED	TPL	MJC	06\11
CHECKED-REVIEWED	JGS	--	06\11
DESIGN2-DETAILED2	PDD	TPL	06\11
DESIGN3-DETAILED3	--	--	--
REVISIONS 1	--		--
REVISIONS 2	--		--
REVISIONS 3	--		--
REVISIONS 4	--		--
FIELD CHANGES	--		--

SIGNATURE

P.E. NUMBER

DATE

C.A. CLAUSON BRIDGES
KENNEBEC RIVER
FAIRFIELD - BENTON SOMERSET & KENNEBEC COUNTIES

SUPERSTRUCTURE DETAILS 6

SHEET NUMBER

90

OF 132

Filename: ...\090_Superstructure_drain2.dgn Division: HIGHWAY Username: mcarignan Date:6/6/2011

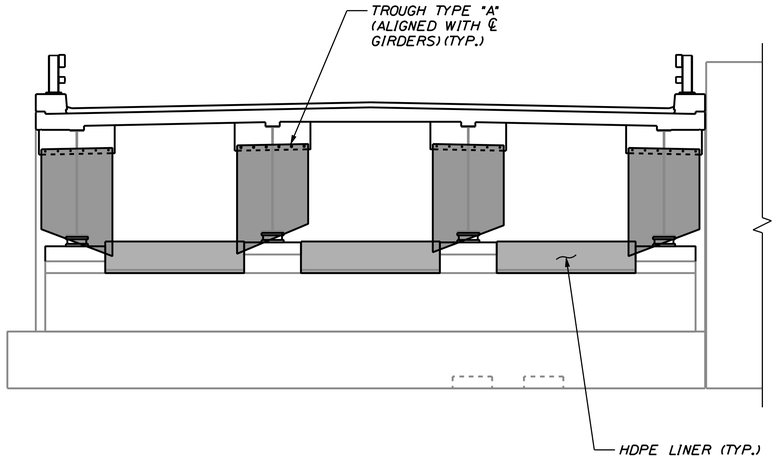

ABUTMENT NO. 1 NB & SB FABRIC TROUGH ELEVATION

SCALE: 1/4" = 1'-0"

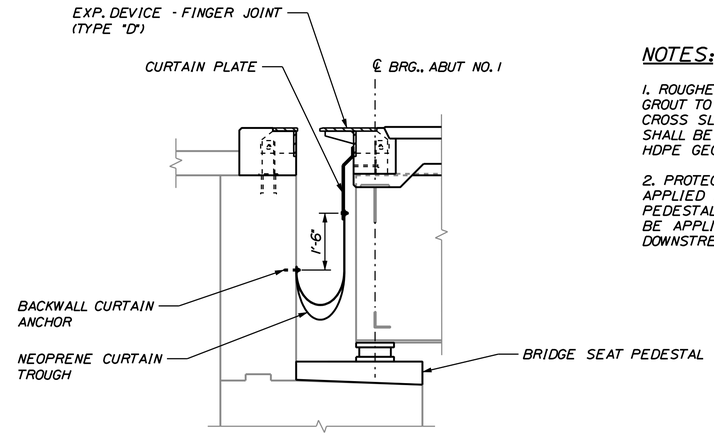

CURTAIN TROUGH AT ABUTMENT EXPANSION JOINT

SCALE: 1/2" = 1'-0"

NOTES:

1. ROUGHEN EXISTING SURFACE 1/2" AND APPLY 1/2" THICK GROUT TO THE PREPARED SURFACE MAINTAINING EXISTING CROSS SLOPE TO DRAIN. PREPARATION OF EXISTING SURFACE SHALL BE CONSIDERED INCIDENTAL TO PAY ITEM 620.6012 HDPE GEOMEMBRANE.

2. PROTECTIVE COATING FOR CONCRETE SURFACES SHALL BE APPLIED TO THE INSIDE VERTICAL FACE OF ABUTMENT NO. 1 PEDESTALS ADJACENT TO THE TROUGHS AND IT SHALL ALSO BE APPLIED TO THE OUTSIDE VERTICAL FACE OF THE DOWNSTREAM PEDESTAL AT PIER NO. 5 SB.

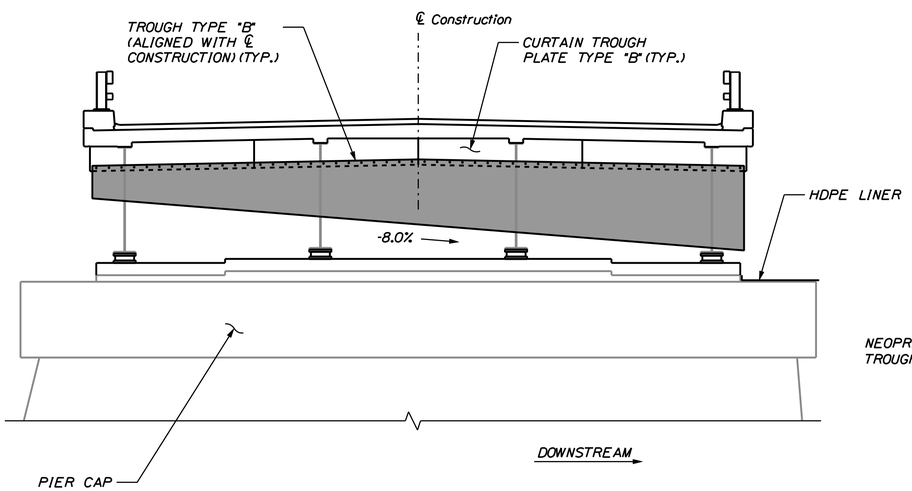

PIER NO. 5 SB FABRIC CURTAIN ELEVATION

SCALE: 1/4" = 1'-0"

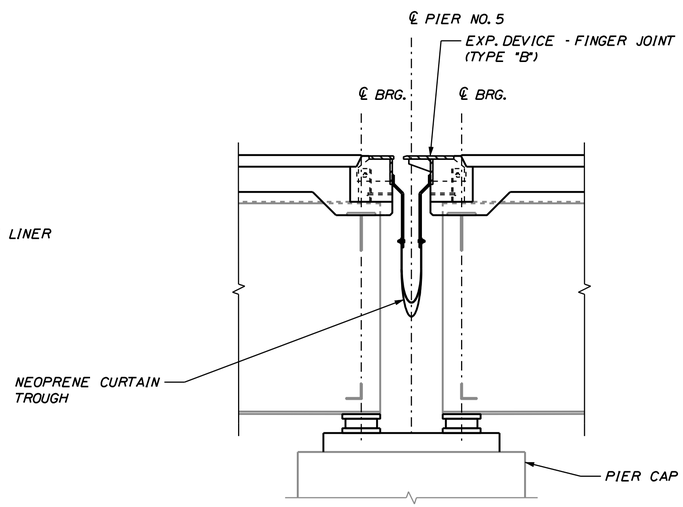

CURTAIN TROUGH AT PIER EXPANSION JOINT

SCALE: 1/2" = 1'-0"

STATE OF MAINE
DEPARTMENT OF TRANSPORTATION

IM-1668(600)E & IM-A670(000)E

PIN
1456 & 6000 16686.00 & 16700.00 BRIDGE PLANS

PROJ. MANAGER	B. CONDON	BY	DATE
DESIGN-DETAILED	TPL	MJC	06\11
CHECKED-REVIEWED	JGS	--	06\11
DESIGN2-DETAILED2	PDD	TPL	06\11
DESIGN3-DETAILED3	--	--	--
REVISIONS 1	--		--
REVISIONS 2	--		--
REVISIONS 3	--		--
REVISIONS 4	--		--
FIELD CHANGES	--		--

SIGNATURE

P.E. NUMBER

DATE

C.A. CLAUSON BRIDGES
KENNEBEC RIVER
FAIRFIELD - BENTON SOMERSET & KENNEBEC COUNTIES

EXPANSION JOINT DETAILS 1

SHEET NUMBER
91
OF 132

Filename: ...\091_Superstructure_expJt1.dgn Division: HIGHWAY Username: mcarignan Date:6/9/2011

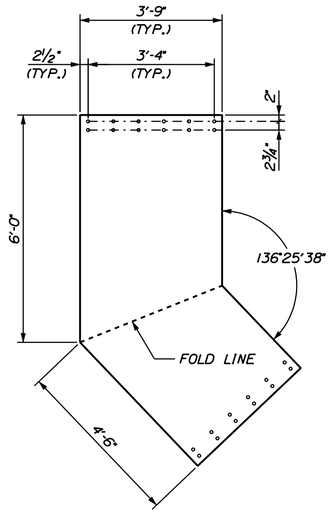

NEOPRENE SHEET TYPE "A"

SCALE: ½" = 1'-0"

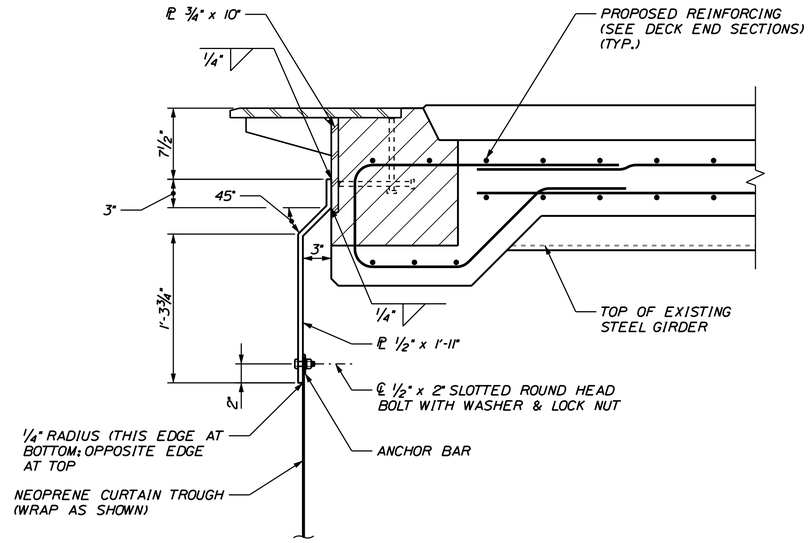

TYPICAL CURTAIN PLATE DETAIL

SCALE: 1 ½" = 1'-0"

EXPANSION DEVICE AND FABRIC TROUGH NOTES

1. PROVIDE ONE EXPANSION DEVICE - FINGER JOINT (TYPE "D") AT ABUTMENT NO. 1 AND ONE EXPANSION DEVICE - FINGER JOINT (TYPE "B") AT SOUTHBOUND PIER NO. 5. CONSTRUCT FINGER JOINTS IN ACCORDANCE WITH STANDARD DETAILS SECTION 521.

2. CURB EXPANSION DAMS SHALL BE CONSTRUCTED IN ACCORDANCE WITH THE STANDARD DETAILS.

3. FABRICATION AND MATERIALS FOR THE CURTAIN TROUGH, INCLUDING GALVANIZATION OF STEEL COMPONENTS, SHALL BE IN ACCORDANCE WITH THE PROVISIONS OF SECTION 521 OF THE STANDARD SPECIFICATION.

4. PAYMENT FOR CURTAIN PLATES SHALL BE CONSIDERED INCIDENTAL TO THE RESPECTIVE EXPANSION DEVICE - FINGER JOINT PAY ITEM.

5. PAYMENT FOR ONE SET OF CURTAIN TROUGHS FOR EACH JOINT (ONE SET OF FOUR (4) FOR ABUTMENT NO. 1 AND (ONE SET OF ONE (1) FOR SOUTHBOUND PIER NO. 5), INCLUDING ANCHOR BARS AND HARDWARE, WILL BE MADE UNDER ITEM 521.32, FABRIC TROUGH FOR FINGER JOINT AND ITEM 521.33 FABRIC CURTAIN FOR FINGER JOINT.

6. HDPE LINER SHALL BE INSTALLED IN THE LOCATIONS SHOWN ON THE DESIGN DRAWINGS AND SECURELY FASTENED IN ACCORDANCE WITH SECTION 620 SPECIAL PROVSION. PAYMENT FOR THE HDPE LINERS WILL BE MADE UNDER ITEM 620.6012 HDPE GEOMEMBRANE.

7. THE CONTRACTOR SHALL TAKE CARE IN THE INSTALLATION OF THE HDPE MEMBRANE THAT THE EXTRUDED ANCHORS ARE COMPLETELY UNDAMAGED AND INSTALLED IN THE CEMENTITIOUS SUBSTRATE IN ACCORDANCE WITH THE MANUFACTURER'S RECOMMENDATIONS. PAYMENT FOR ALL WORK AND MATERIALS NEEDED TO INSTALL THE HDPE MEMBRANE AND WHERE REQUIRED THE GROUT BEDDING SHALL BE CONSIDERED PAID FOR UNDER PAY ITEM 620.6012, HDPE GEOMEMBRANE.

8. REFER TO STANDARD DETAILS SECTIONS 521 FOR DETAILS AND INFORMATION NOT SHOWN.

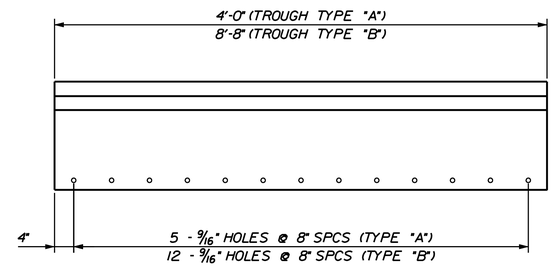

TROUGH PLATE DETAIL

SCALE: ¾" = 1'-0"

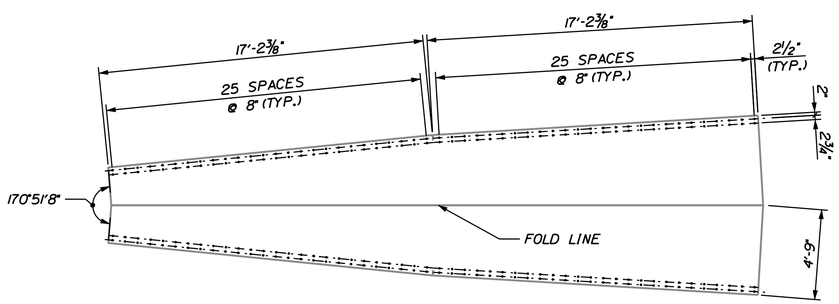

NEOPRENE SHEET TYPE "B"

SCALE: ¼" = 1'-0"

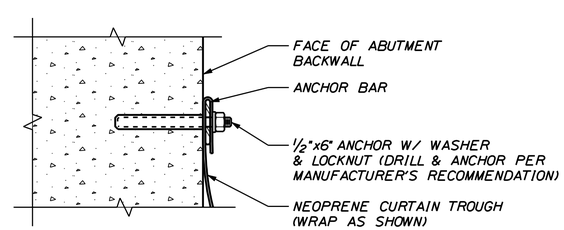

ABUTMENT NO. 1 CURTAIN ANCHOR DETAIL

SCALE: 3" = 1'-0"

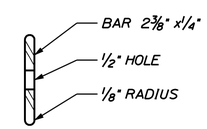

ANCHOR BAR

SCALE: 6" = 1'-0"
(MATCH LENGTH AND HOLE SPACING
TO CORRESPONDING TROUGH PLATE)

STATE OF MAINE
DEPARTMENT OF TRANSPORTATION

IM-1668(600)E & IM-A670(000)E

PIN 16686.00 & 16700.00

1456 & 6000 BRIDGE PLANS

PROJ. MANAGER	B. CONDON	BY	DATE
DESIGN-DETAILED	TPL	MJC	06\11
CHECKED-REVIEWED	JGS	--	06\11
DESIGN2-DETAILED2	PDD	TPL	06\11
DESIGN3-DETAILED3	--	--	--
REVISIONS 1	--	--	--
REVISIONS 2	--	--	--
REVISIONS 3	--	--	--
REVISIONS 4	--	--	--
FIELD CHANGES	--	--	--

SIGNATURE

P.E. NUMBER

DATE

C.A. CLAUSON BRIDGES
KENNEBEC RIVER
FAIRFIELD - BENTON SOMERSET & KENNEBEC COUNTIES

EXPANSION JOINT DETAILS 2

SHEET NUMBER
92
OF 132

Filename: ...\092_Superstructure_expJt2.dgn Division: HIGHWAY Username: mcarignan Date:6/6/2011

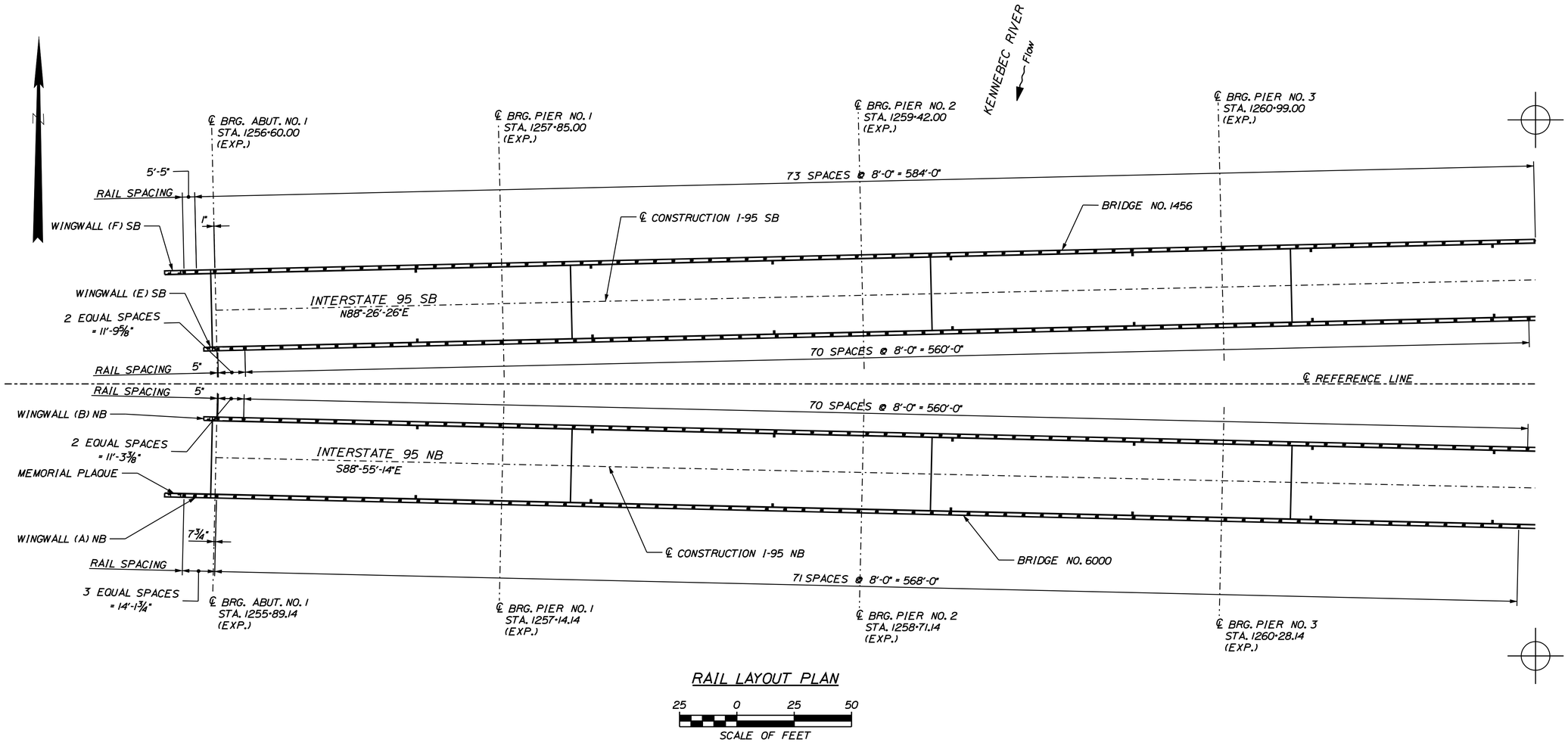

RAIL LAYOUT PLAN

STATE OF MAINE
DEPARTMENT OF TRANSPORTATION

IM-1668(600)E & IM-A670(000)E

PIN
1456 & 6000 16686.00 & 16700.00 BRIDGE PLANS

		BY	DATE
PROJ. MANAGER	B. CONDON		
DESIGN-DETAILED	TPL	MJC	06\11
CHECKED-REVIEWED	JCS	..	06\11
DESIGN2-DETAILED2	PDD	TPL	06\11
DESIGN3-DETAILED3	..	..	..
REVISIONS 1	..		..
REVISIONS 2	..		..
REVISIONS 3	..		..
REVISIONS 4	..		..
FIELD CHANGES	..		..

SIGNATURE

P.E. NUMBER

DATE

C.A. CLAUSON BRIDGES
KENNEBEC RIVER
FAIRFIELD - BENTON SOMERSET & KENNEBEC COUNTIES

BRIDGE RAIL LAYOUT 1

SHEET NUMBER
93
OF 132

Filename: ...\093_Superstructure_rail.dgn Division: HIGHWAY Username: mcarignan Date:6/6/2011

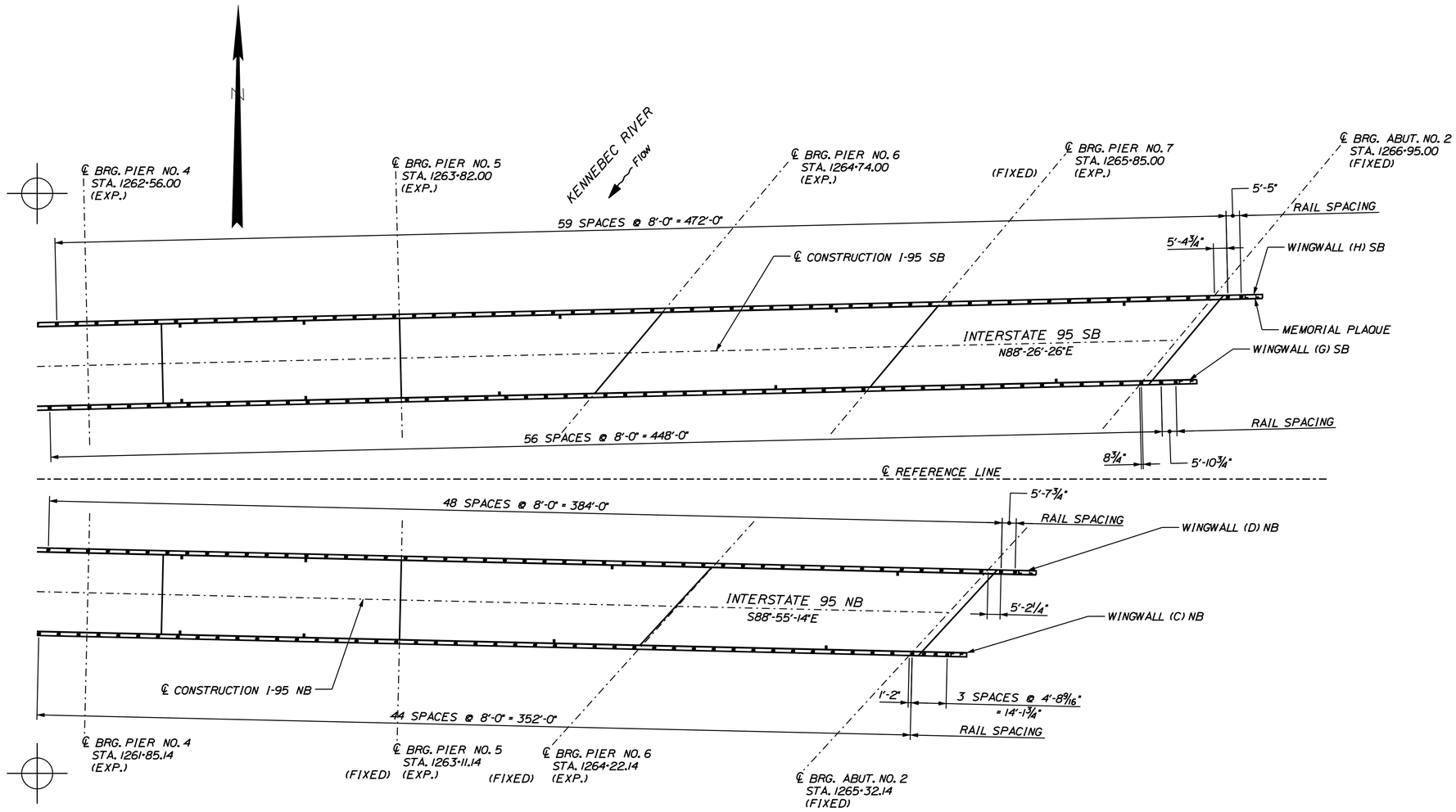

RAIL LAYOUT PLAN

25 0 25 50

SCALE OF FEET

STATE OF MAINE
DEPARTMENT OF TRANSPORTATION

IM-1668(600)E & IM-A670(000)E

PIN
1456 & 6000 16686.00 & 16700.00 BRIDGE PLANS

PROJ. MANAGER	B. CONDON	BY	DATE
DESIGN-DETAILED	TPL	MJC	06\11
CHECKED-REVIEWED	JGS	--	06\11
DESIGN2-DETAILED2	PDD	TPL	06\11
DESIGN3-DETAILED3	--	--	--
REVISIONS 1	--	--	--
REVISIONS 2	--	--	--
REVISIONS 3	--	--	--
REVISIONS 4	--	--	--
FIELD CHANGES	--	--	--

SIGNATURE

P.E. NUMBER

DATE

C.A. CLAUSON BRIDGES
KENNEBEC RIVER
FAIRFIELD - BENTON SOMERSET & KENNEBEC COUNTIES

BRIDGE RAIL LAYOUT 2

SHEET NUMBER
94
OF 132

Filename: ...\094_Superstructure_rail2.dgn Division: HIGHWAY Username: mcarignan Date:6/6/2011

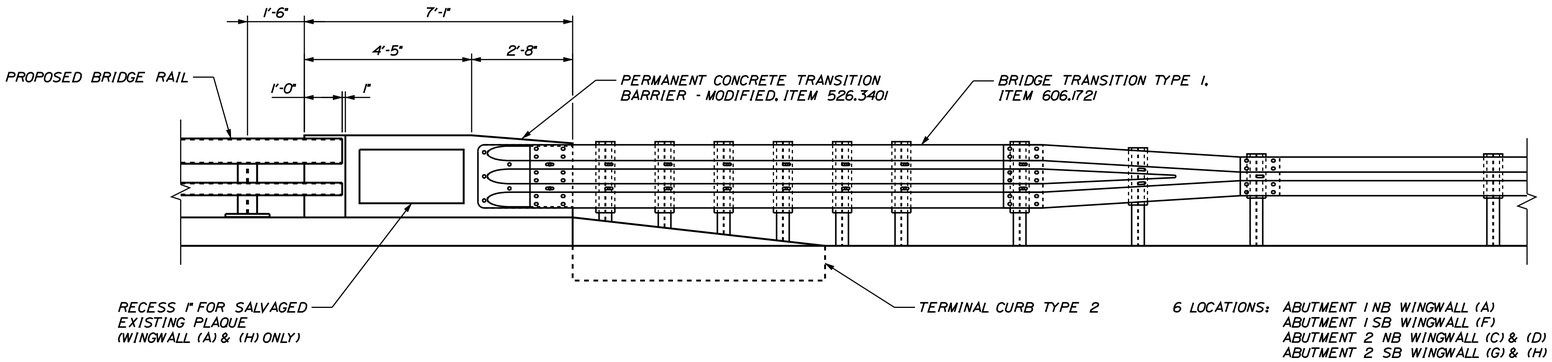

CONCRETE TRANSITION BARRIER

SCALE: 1/2" = 1'-0"

BRIDGE CONNECTION NOTES

1. REFER TO STANDARD DETAILS SECTION 526 - CONCRETE TRANSITION BARRIER FOR DETAILS AND INFORMATION NOT SHOWN.

2. REINFORCING STEEL FOR THE TRANSITION BARRIERS IS BASED ON DETAILS SHOWN IN THE STANDARD DETAILS.

3. ANCHOR PLATES AND THREADED RODS SHAL BE GALVANIZED IN ACCORDANCE WITH THE STANDARD SPECIFICATIONS AND STANDARD DETAILS.

4. MODIFY THE EXISTING GUARDRAIL BEAM AS NECESSARY TO CONNECT TO THE END OF THE BRIDGE TRANSITION - TYPE 1. PAYMENT FOR MODIFICATIONS WILL BE CONSIDERED INCIDENTAL TO ITEM 606.1721 BRIDGE TRANSITION - TYPE 1.

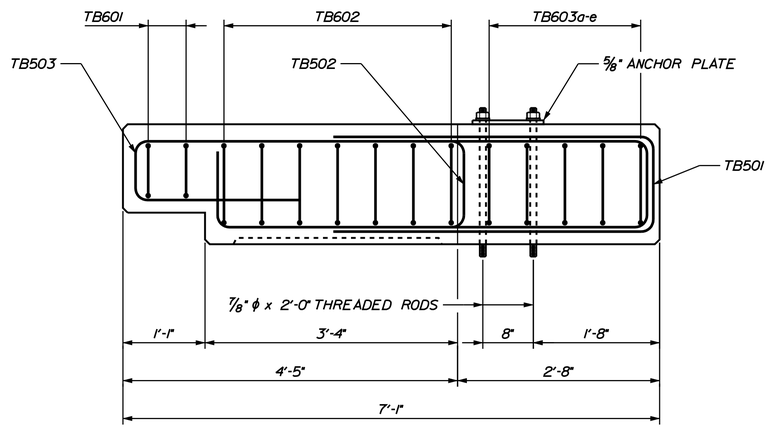

WINGWALL TRANSITION BARRIER PLAN

SCALE: 1" = 1'-0"

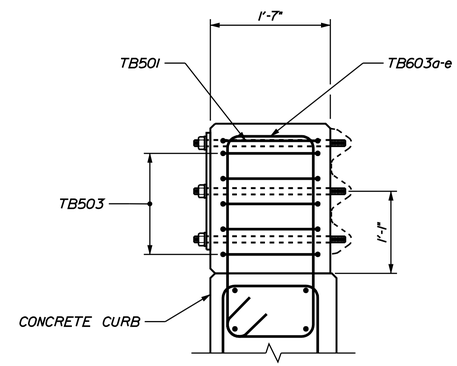

TYPICAL TRANSITION BARRIER NOSE SECTION

SCALE: 1" = 1'-0"

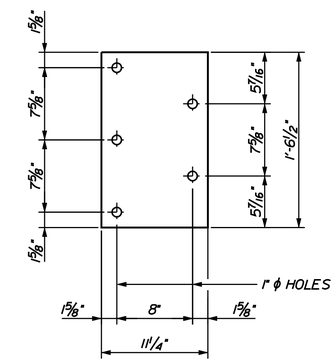

ANCHOR PLATE

SCALE: 1 1/2" = 1'-0"

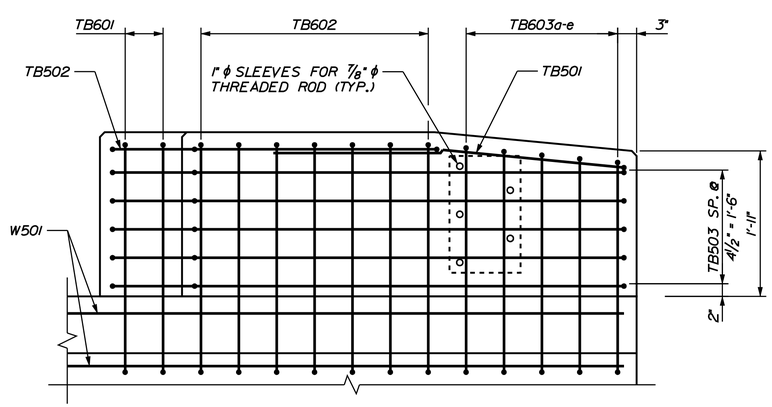

WINGWALL TRANSITION BARRIER ELEVATION

SCALE: 1" = 1'-0"

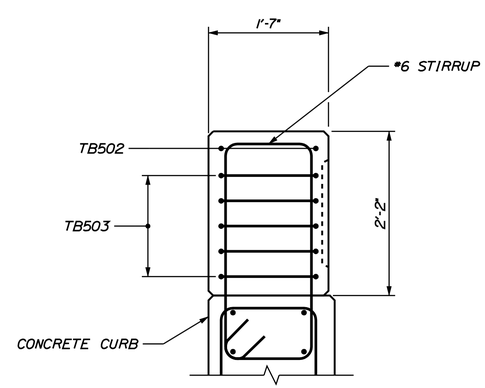

TYPICAL TRANSITION BARRIER STEM SECTION

SCALE: 1" = 1'-0"

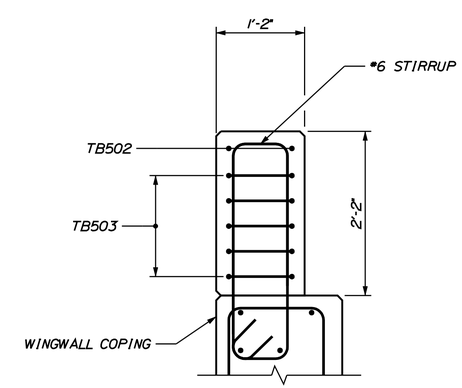

WINGWALL TRANSITION BARRIER RECESS SECTION

SCALE: 1" = 1'-0"

STATE OF MAINE
DEPARTMENT OF TRANSPORTATION

IM-1668(600)E & IM-A670(000)E

PIN 16686.00 & 16700.00

1456 & 6000

BRIDGE PLANS

PROJ. MANAGER	B. CONDON	BY	DATE
DESIGN-DETAILED	TPL	MJC	06\11
CHECKED-REVIEWED	JGS	--	06\11
DESIGN2-DETAILED2	PDD	TPL	06\11
DESIGN3-DETAILED3	--	--	--
REVISIONS 1	--	--	--
REVISIONS 2	--	--	--
REVISIONS 3	--	--	--
REVISIONS 4	--	--	--
FIELD CHANGES	--	--	--

SIGNATURE

P.E. NUMBER

DATE

C.A. CLAUSON BRIDGES
KENNEBEC RIVER
FAIRFIELD - BENTON SOMERSET & KENNEBEC COUNTIES

RAILING DETAILS

SHEET NUMBER

95

OF 132

Filename: ...\MSTA\095_Railing_det.dgn Division: HIGHWAY Username: mcarignan Date:6/6/2011

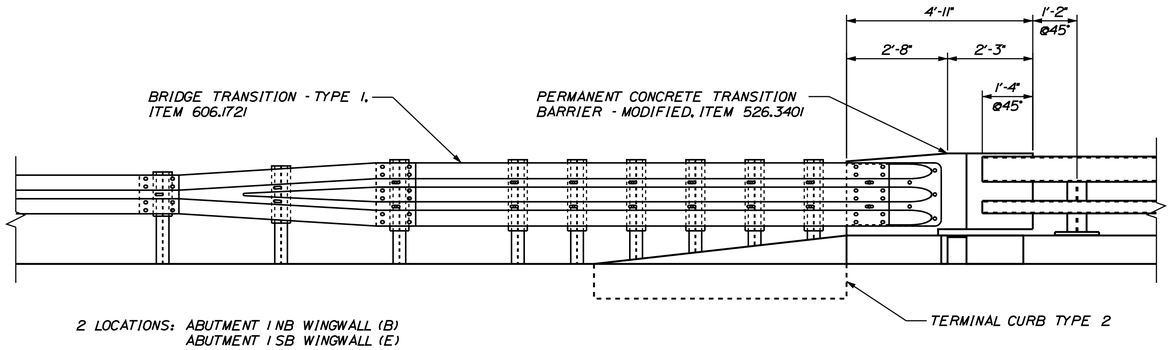

ABUTMENT NO. 1 NB & SB MEDIAN CONCRETE TRANSITION BARRIER

SCALE: 1/2" = 1'-0"

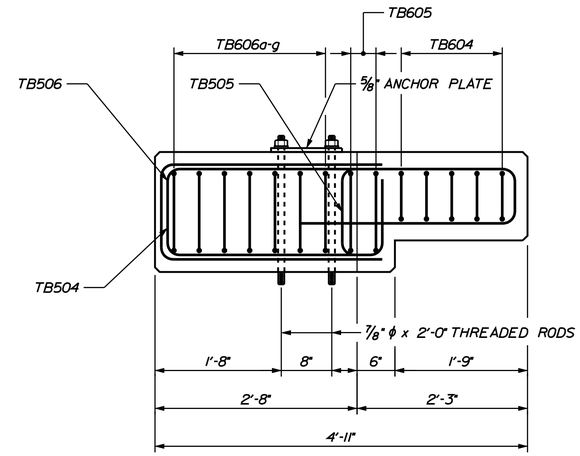

ABUTMENT NO. 1 NB & SB MEDIAN TRANSITION BARRIER PLAN

SCALE: 1" = 1'-0"

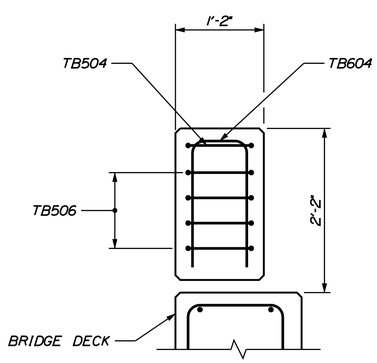

ABUTMENT NO. 1 NB & SB MEDIAN TRANSITION BARRIER RECESS SECTION

SCALE: 1" = 1'-0"

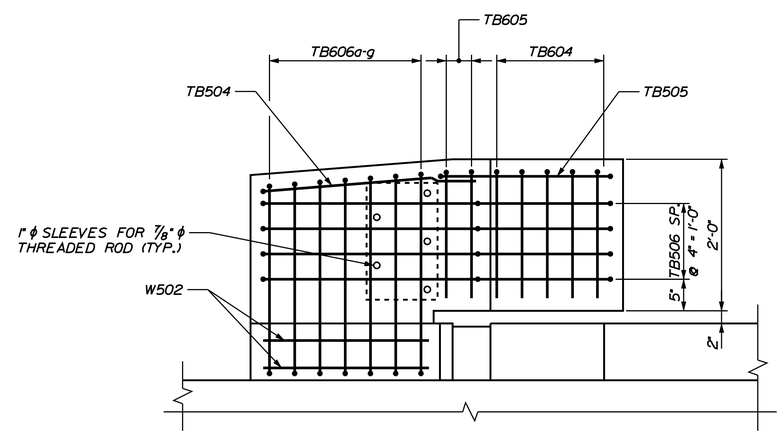

ABUTMENT NO. 1 NB & SB MEDIAN TRANSITION BARRIER ELEVATION

SCALE: 1" = 1'-0"

STATE OF MAINE
DEPARTMENT OF TRANSPORTATION

IM-1668(600)E & IM-A670(000)E

PIN
1456 & 6000 16686.00 & 16700.00 BRIDGE PLANS

PROJ. MANAGER	B. CONDON	BY	DATE
DESIGN-DETAILED	TPL	MJC	06\11
CHECKED-REVIEWED	JGS	--	06\11
DESIGN2-DETAILED2	PDD	TPL	06\11
DESIGN3-DETAILED3	--	--	--
REVISIONS 1	--		--
REVISIONS 2	--		--
REVISIONS 3	--		--
REVISIONS 4	--		--
FIELD CHANGES	--		--

SIGNATURE

P.E. NUMBER

DATE

C.A. CLAUSON BRIDGES
KENNEBEC RIVER
FAIRFIELD - BENTON SOMERSET & KENNEBEC COUNTIES

RAILING DETAILS

SHEET NUMBER
96
OF 132

Filename: ...\MSTA\096_Railing_det2.dgn Division: HIGHWAY Username: mcorignon Date:6/6/2011

REINFORCING STEEL SCHEDULE

STRAIGHT BARS - NORTHBOUND CLAUSON

MARK	QTY.	LENGTH	LOCATION
1A502	12	2'-6"	ABUTMENT 1 BEARING SEAT
1A506	12	17'-6"	ABUTMENT 1 BACKWALL
1P502	8	8'-6"	PIER 1
1P504	4	20'-4"	PIER 1
2P502	8	8'-6"	PIER 2
2P504	4	20'-4"	PIER 2
3P502	8	8'-6"	PIER 3
3P504	4	20'-4"	PIER 3
4P502	8	8'-6"	PIER 4
4P504	4	20'-4"	PIER 4
5P502	8	8'-6"	PIER 5
5P504	4	20'-4"	PIER 5
6P502	8	11'-3"	PIER 6
6P504	4	26'-8"	PIER 6
W501	12	19'-8"	WINGWALL COPING
W502	4	3'-4"	WINGWALL COPING
S500	300	57'-0"	DECK LONGITUDINAL (TOP)
S501	852	57'-0"	DECK LONGITUDINAL (BOT)
S502	72	57'-0"	CURB LONGITUDINAL
S503	96	60'-0"	DECK LONGITUDINAL NEG. MOMENT REGION (TOP)
S504	96	20'-0"	DECK LONGITUDINAL NEG. MOMENT REGION (TOP)
S505	3	40'-6"	APPROACH SPANS - ADDT'L CURB LONGITUDINAL
S506	3	11'-0"	APPROACH SPANS - ADDT'L CURB LONGITUDINAL
S507	27	9'-6"	DECK PARALLEL TO 0° SKEW BRGS (BETWEEN GIRDERS)
S508	5	46'-7"	DECK PARALLEL TO ABUT. 2 BRG (BOT)
S509	15	12'-0"	DECK PARALLEL TO ABUT. 2 BRG (BETWEEN GIRDERS)
S510aa	1	43'-9"	SPAN 6 - DECK LONGITUDINAL (BOT)
S510ab	1	43'-4"	SPAN 6 - DECK LONGITUDINAL (BOT)
S510ac	1	42'-11"	SPAN 6 - DECK LONGITUDINAL (BOT)
S510ad	1	42'-5"	SPAN 6 - DECK LONGITUDINAL (BOT)
S510ae	1	42'-0"	SPAN 6 - DECK LONGITUDINAL (BOT)
S510af	1	41'-7"	SPAN 6 - DECK LONGITUDINAL (BOT)
S510ag	1	41'-1"	SPAN 6 - DECK LONGITUDINAL (BOT)
S510ah	1	40'-8"	SPAN 6 - DECK LONGITUDINAL (BOT)
S510ai	1	40'-3"	SPAN 6 - DECK LONGITUDINAL (BOT)
S510aj	1	39'-9"	SPAN 6 - DECK LONGITUDINAL (BOT)
S510ak	1	39'-4"	SPAN 6 - DECK LONGITUDINAL (BOT)
S510al	1	38'-11"	SPAN 6 - DECK LONGITUDINAL (BOT)
S510am	1	38'-6"	SPAN 6 - DECK LONGITUDINAL (BOT)
S510an	1	38'-0"	SPAN 6 - DECK LONGITUDINAL (BOT)
S510ao	1	37'-7"	SPAN 6 - DECK LONGITUDINAL (BOT)
S510ap	1	37'-2"	SPAN 6 - DECK LONGITUDINAL (BOT)
S510aq	1	36'-9"	SPAN 6 - DECK LONGITUDINAL (BOT)
S510ar	1	36'-3"	SPAN 6 - DECK LONGITUDINAL (BOT)
S510as	1	35'-10"	SPAN 6 - DECK LONGITUDINAL (BOT)
S510at	1	35'-5"	SPAN 6 - DECK LONGITUDINAL (BOT)
S510au	1	35'-0"	SPAN 6 - DECK LONGITUDINAL (BOT)
S510av	1	34'-6"	SPAN 6 - DECK LONGITUDINAL (BOT)
S510aw	1	34'-1"	SPAN 6 - DECK LONGITUDINAL (BOT)
S510ax	1	33'-8"	SPAN 6 - DECK LONGITUDINAL (BOT)
S510ay	1	33'-2"	SPAN 6 - DECK LONGITUDINAL (BOT)
S510az	1	32'-9"	SPAN 6 - DECK LONGITUDINAL (BOT)
S510ba	1	32'-4"	SPAN 6 - DECK LONGITUDINAL (BOT)
S510bb	1	31'-11"	SPAN 6 - DECK LONGITUDINAL (BOT)
S510bc	1	31'-6"	SPAN 6 - DECK LONGITUDINAL (BOT)
S510bd	1	31'-0"	SPAN 6 - DECK LONGITUDINAL (BOT)
S510be	1	30'-7"	SPAN 6 - DECK LONGITUDINAL (BOT)
S510bf	1	30'-2"	SPAN 6 - DECK LONGITUDINAL (BOT)
S510bg	1	29'-8"	SPAN 6 - DECK LONGITUDINAL (BOT)
S510bh	1	29'-3"	SPAN 6 - DECK LONGITUDINAL (BOT)
S510bi	1	28'-8"	SPAN 6 - DECK LONGITUDINAL (BOT)
S510bj	1	28'-4"	SPAN 6 - DECK LONGITUDINAL (BOT)

STRAIGHT BARS - NORTHBOUND CLAUSON

MARK	QTY.	LENGTH	LOCATION
S510bk	1	27'-11"	SPAN 6 - DECK LONGITUDINAL (BOT)
S510bl	1	27'-6"	SPAN 6 - DECK LONGITUDINAL (BOT)
S510bm	1	27'-1"	SPAN 6 - DECK LONGITUDINAL (BOT)
S510bn	1	26'-8"	SPAN 6 - DECK LONGITUDINAL (BOT)
S510bo	1	26'-2"	SPAN 6 - DECK LONGITUDINAL (BOT)
S510bp	1	25'-9"	SPAN 6 - DECK LONGITUDINAL (BOT)
S510bq	1	25'-4"	SPAN 6 - DECK LONGITUDINAL (BOT)
S510br	1	24'-10"	SPAN 6 - DECK LONGITUDINAL (BOT)
S510bs	1	24'-5"	SPAN 6 - DECK LONGITUDINAL (BOT)
S510bt	1	24'-0"	SPAN 6 - DECK LONGITUDINAL (BOT)
S510bu	1	23'-6"	SPAN 6 - DECK LONGITUDINAL (BOT)
S510bv	1	23'-1"	SPAN 6 - DECK LONGITUDINAL (BOT)
S510bw	1	22'-8"	SPAN 6 - DECK LONGITUDINAL (BOT)
S510bx	1	22'-3"	SPAN 6 - DECK LONGITUDINAL (BOT)
S510by	1	21'-9"	SPAN 6 - DECK LONGITUDINAL (BOT)
S510bz	1	21'-4"	SPAN 6 - DECK LONGITUDINAL (BOT)
S510ca	1	20'-11"	SPAN 6 - DECK LONGITUDINAL (BOT)
S510cb	1	20'-6"	SPAN 6 - DECK LONGITUDINAL (BOT)
S510cc	1	20'-0"	SPAN 6 - DECK LONGITUDINAL (BOT)
S510cd	1	19'-7"	SPAN 6 - DECK LONGITUDINAL (BOT)
S510ce	1	19'-2"	SPAN 6 - DECK LONGITUDINAL (BOT)
S510cf	1	18'-9"	SPAN 6 - DECK LONGITUDINAL (BOT)
S510cg	1	18'-3"	SPAN 6 - DECK LONGITUDINAL (BOT)
S510ch	1	17'-10"	SPAN 6 - DECK LONGITUDINAL (BOT)
S510ci	1	17'-5"	SPAN 6 - DECK LONGITUDINAL (BOT)
S510cj	1	17'-0"	SPAN 6 - DECK LONGITUDINAL (BOT)
S510ck	1	16'-6"	SPAN 6 - DECK LONGITUDINAL (BOT)
S510cl	1	16'-1"	SPAN 6 - DECK LONGITUDINAL (BOT)
S510cm	1	15'-8"	SPAN 6 - DECK LONGITUDINAL (BOT)
S510cn	1	15'-2"	SPAN 6 - DECK LONGITUDINAL (BOT)
S510co	1	14'-9"	SPAN 6 - DECK LONGITUDINAL (BOT)
S510cp	1	14'-4"	SPAN 6 - DECK LONGITUDINAL (BOT)
S510cq	1	13'-11"	SPAN 6 - DECK LONGITUDINAL (BOT)
S510cr	1	13'-6"	SPAN 6 - DECK LONGITUDINAL (BOT)
S510cs	1	13'-0"	SPAN 6 - DECK LONGITUDINAL (BOT)
S511a	1	43'-9"	SPAN 6 - DECK LONGITUDINAL (TOP)
S511b	1	42'-5"	SPAN 6 - DECK LONGITUDINAL (TOP)
S511c	1	41'-1"	SPAN 6 - DECK LONGITUDINAL (TOP)
S511d	1	39'-9"	SPAN 6 - DECK LONGITUDINAL (TOP)
S511e	1	38'-6"	SPAN 6 - DECK LONGITUDINAL (TOP)
S511f	1	37'-2"	SPAN 6 - DECK LONGITUDINAL (TOP)
S511g	1	35'-10"	SPAN 6 - DECK LONGITUDINAL (TOP)
S511h	1	34'-6"	SPAN 6 - DECK LONGITUDINAL (TOP)
S511i	1	33'-2"	SPAN 6 - DECK LONGITUDINAL (TOP)
S511j	1	31'-11"	SPAN 6 - DECK LONGITUDINAL (TOP)
S511k	1	30'-7"	SPAN 6 - DECK LONGITUDINAL (TOP)
S511l	1	29'-3"	SPAN 6 - DECK LONGITUDINAL (TOP)
S511m	1	27'-11"	SPAN 6 - DECK LONGITUDINAL (TOP)
S511n	1	26'-8"	SPAN 6 - DECK LONGITUDINAL (TOP)
S511o	1	25'-4"	SPAN 6 - DECK LONGITUDINAL (TOP)
S511p	1	24'-0"	SPAN 6 - DECK LONGITUDINAL (TOP)
S511q	1	22'-8"	SPAN 6 - DECK LONGITUDINAL (TOP)
S511r	1	21'-4"	SPAN 6 - DECK LONGITUDINAL (TOP)
S511s	1	20'-0"	SPAN 6 - DECK LONGITUDINAL (TOP)
S511t	1	18'-9"	SPAN 6 - DECK LONGITUDINAL (TOP)
S511u	1	17'-5"	SPAN 6 - DECK LONGITUDINAL (TOP)
S511v	1	16'-1"	SPAN 6 - DECK LONGITUDINAL (TOP)
S511w	1	14'-9"	SPAN 6 - DECK LONGITUDINAL (TOP)
S511x	1	13'-6"	SPAN 6 - DECK LONGITUDINAL (TOP)
S511y	1	12'-2"	SPAN 6 - DECK LONGITUDINAL (TOP)
S519	50	39'-0"	SPAN 6 - DECK LONGITUDINAL (TOP)
S520	142	39'-0"	SPAN 6 - DECK LONGITUDINAL (BOT)
S521	50	52'-0"	SPAN 7 - DECK LONGITUDINAL (TOP)
S522	142	52'-0"	SPAN 7 - DECK LONGITUDINAL (BOT)

GENERAL NOTES

1. THE FIRST DIGIT FOLLOWING THE LETTER(S) OF THE MARK INDICATE THE SIZE OF THE BAR:

MARK "A502" = BAR SIZE #5
MARK "P801" = BAR SIZE #8
MARK "S650" = BAR SIZE #6

TYPE - BENDING DIAGRAMS

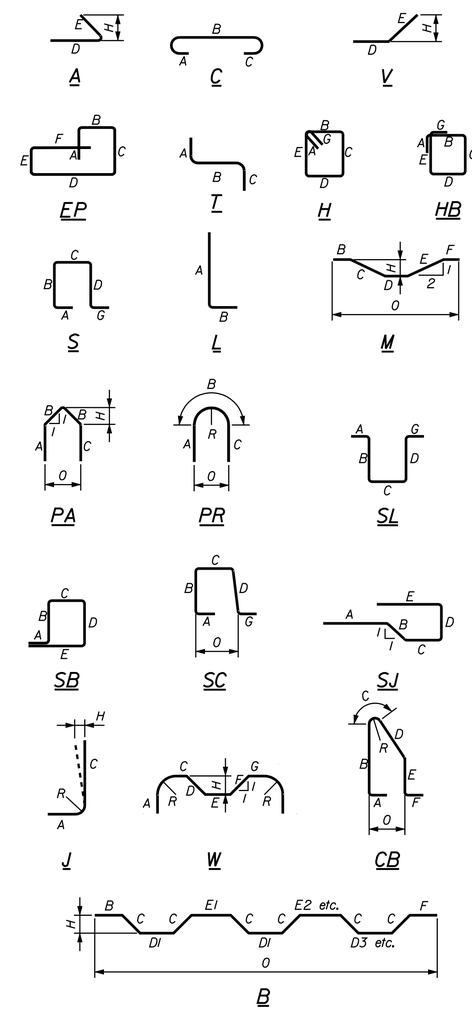

ALL DIMENSIONS ARE OUT-TO-OUT OF BAR.

BENDING DETAILS AND HOOKS SHALL CONFORM TO THE RECOMMENDATIONS OF THE CURRENT REVISION OF ACI STANDARD 318.

REINFORCING BAR: ASTM A615/A615M, GRADE 60

STATE OF MAINE
DEPARTMENT OF TRANSPORTATION

IM-1668(600)E & IM-A670(000)E

PIN 16686.00 & 16700.00

1456 & 6000 BRIDGE PLANS

PROJ. MANAGER	B. CONDON	BY	DATE
DESIGN-DETAILED	TPL	MJC	06\11
CHECKED-REVIEWED	JGS	--	06\11
DESIGN2-DETAILED2	P0D	TPL	06\11
DESIGN3-DETAILED3	--	--	--
REVISIONS 1	--	--	--
REVISIONS 2	--	--	--
REVISIONS 3	--	--	--
REVISIONS 4	--	--	--
FIELD CHANGES	--	--	--

SIGNATURE

P.E. NUMBER

DATE

C.A. CLAUSON BRIDGES
KENNEBEC RIVER
FAIRFIELD - BENTON SOMERSET & KENNEBEC COUNTIES

REINFORCING STEEL SCHEDULE

SHEET NUMBER
97
OF 132

Filename: ...\097_Superstructure_reinfSch1.dgn Division: HIGHWAY Username: mcorignon Date:6/6/2011

REINFORCING STEEL SCHEDULE (CONTINUED)

STRAIGHT BARS - NORTHBOUND CLAUSON

MARK	QTY.	LENGTH	LOCATION
S523	30	41'-0"	APPROACH SPANS - CURB LONGITUDINAL
S524	25	59'-0"	DECK LONGITUDINAL (TOP)
S525	71	59'-0"	DECK LONGITUDINAL (BOT)
S526	6	59'-0"	CURB LONGITUDINAL
S527	352	3'-0"	DECK DRAINS
S600	3706	35'-0"	DECK TRANSVERSE (TOP & BOT)
S601aa	2	34'-5"	DECK TRANSVERSE (TOP & BOT)
S601ab	2	33'-10"	DECK TRANSVERSE (TOP & BOT)
S601ac	2	33'-3"	DECK TRANSVERSE (TOP & BOT)
S601ad	2	32'-9"	DECK TRANSVERSE (TOP & BOT)
S601ae	2	32'-2"	DECK TRANSVERSE (TOP & BOT)
S601af	2	31'-7"	DECK TRANSVERSE (TOP & BOT)
S601ag	2	31'-0"	DECK TRANSVERSE (TOP & BOT)
S601ah	2	30'-5"	DECK TRANSVERSE (TOP & BOT)
S601ai	2	29'-10"	DECK TRANSVERSE (TOP & BOT)
S601aj	2	29'-4"	DECK TRANSVERSE (TOP & BOT)
S601ak	2	28'-9"	DECK TRANSVERSE (TOP & BOT)
S601al	2	28'-2"	DECK TRANSVERSE (TOP & BOT)
S601am	2	27'-7"	DECK TRANSVERSE (TOP & BOT)
S601an	2	27'-0"	DECK TRANSVERSE (TOP & BOT)
S601ao	2	26'-5"	DECK TRANSVERSE (TOP & BOT)
S601ap	2	25'-10"	DECK TRANSVERSE (TOP & BOT)
S601aq	2	25'-4"	DECK TRANSVERSE (TOP & BOT)
S601ar	2	24'-9"	DECK TRANSVERSE (TOP & BOT)
S601as	2	24'-2"	DECK TRANSVERSE (TOP & BOT)
S601at	2	23'-7"	DECK TRANSVERSE (TOP & BOT)
S601au	2	23'-0"	DECK TRANSVERSE (TOP & BOT)
S601av	2	22'-6"	DECK TRANSVERSE (TOP & BOT)
S601aw	2	21'-11"	DECK TRANSVERSE (TOP & BOT)
S601ax	2	21'-4"	DECK TRANSVERSE (TOP & BOT)
S601ay	2	20'-9"	DECK TRANSVERSE (TOP & BOT)
S601az	2	20'-2"	DECK TRANSVERSE (TOP & BOT)
S601ba	2	19'-7"	DECK TRANSVERSE (TOP & BOT)
S601bb	2	19'-0"	DECK TRANSVERSE (TOP & BOT)
S601bc	2	18'-6"	DECK TRANSVERSE (TOP & BOT)
S601bd	2	17'-11"	DECK TRANSVERSE (TOP & BOT)
S601be	2	17'-4"	DECK TRANSVERSE (TOP & BOT)
S601bf	2	16'-9"	DECK TRANSVERSE (TOP & BOT)
S601bg	2	16'-2"	DECK TRANSVERSE (TOP & BOT)
S601bh	2	15'-7"	DECK TRANSVERSE (TOP & BOT)
S601bi	2	15'-0"	DECK TRANSVERSE (TOP & BOT)
S601bj	2	14'-6"	DECK TRANSVERSE (TOP & BOT)
S601bk	2	13'-11"	DECK TRANSVERSE (TOP & BOT)
S601bl	2	13'-4"	DECK TRANSVERSE (TOP & BOT)
S601bm	2	12'-9"	DECK TRANSVERSE (TOP & BOT)
S601bn	2	12'-2"	DECK TRANSVERSE (TOP & BOT)
S601bo	2	11'-8"	DECK TRANSVERSE (TOP & BOT)
S601bp	2	11'-1"	DECK TRANSVERSE (TOP & BOT)
S601bq	2	10'-6"	DECK TRANSVERSE (TOP & BOT)
S601br	2	9'-11"	DECK TRANSVERSE (TOP & BOT)
S601bs	2	9'-4"	DECK TRANSVERSE (TOP & BOT)
S601bt	2	8'-10"	DECK TRANSVERSE (TOP & BOT)
S601bu	2	8'-3"	DECK TRANSVERSE (TOP & BOT)
S601bv	2	7'-8"	DECK TRANSVERSE (TOP & BOT)
S601bw	2	7'-1"	DECK TRANSVERSE (TOP & BOT)
S601bx	2	6'-6"	DECK TRANSVERSE (TOP & BOT)
S601by	2	5'-11"	DECK TRANSVERSE (TOP & BOT)
S601bz	2	5'-4"	DECK TRANSVERSE (TOP & BOT)
S601ca	2	4'-10"	DECK TRANSVERSE (TOP & BOT)
S601cb	2	4'-3"	DECK TRANSVERSE (TOP & BOT)
S601cc	2	3'-8"	DECK TRANSVERSE (TOP & BOT)
S601cd	2	3'-1"	DECK TRANSVERSE (TOP & BOT)
S601ce	2	2'-6'	DECK TRANSVERSE (TOP & BOT)
S602	142	20'-0"	LINK SLAB DECK LONGITUDINAL (TOP & BOT)

BENT BARS - NORTHBOUND CLAUSON

MARK	QTY.	LENGTH	TYPE	A	B	C	D	E	F	G	H	O	R	LOCATION
S530	2612	5'-2 1/4"	SC	10"	1'-2"	1'-5"	1'-2"			10"		1'-6 1/2"		CURB STIRRUPS
S531	3780	3'-10"	C	5"	3'-3"	---					5"			DECK OVERHANG REINF.
S532	30	8'-1 1/4"	SJ	1'-10"	11 1/2"	11 1/8"	10 5/8"	3'-6"						ABUTMENT 1 (BETWEEN GIRDERS)
S533	36	12'-1 7/8"	SJ	1'-10"	7 1/4"	3'-3 5/8"	8"	5'-9"						ABUTMENT 2 (BETWEEN GIRDERS)
S535	60	8'-7 3/8"	SJ	1'-10"	11 1/2"	1'-2 1/4"	10 5/8"	3'-9"						PIER 5 (BETWEEN GIRDERS)
1A501	16	5'-9"	S		1'-6"	2'-9"	1'-6"							ABUTMENT 1 BEARING SEAT
1A503	6	5'-8"	S		2'-3"	1'-2"	2'-3"							ABUTMENT 1 BACKWALL
1A504	35	7'-7"	S		3'-2 1/2"	1'-2"	3'-2 1/2"							ABUTMENT 1 BACKWALL
1A505	2	5'-4 1/2"	H	3 3/4"	1'-4"	1'-0 1/2"	1'-4"	1'-0 1/2"		3 3/4"				ABUTMENT 1 BACKWALL
1P501	14	8'-8"	S		2'-7"	3'-6"	2'-7"							PIER 1
1P503	21	9'-2"	S		2'-10"	3'-6"	2'-10"							PIER 1
2P501	14	8'-8"	S		2'-7"	3'-6"	2'-7"							PIER 2
2P503	21	9'-2"	S		2'-10"	3'-6"	2'-10"							PIER 2
3P501	14	8'-8"	S		2'-7"	3'-6"	2'-7"							PIER 3
3P503	21	9'-2"	S		2'-10"	3'-6"	2'-10"							PIER 3
4P501	14	8'-8"	S		2'-7"	3'-6"	2'-7"							PIER 4
4P503	21	9'-2"	S		2'-10"	3'-6"	2'-10"							PIER 4
5P501	14	9'-10"	S		2'-2"	5'-6"	2'-2"							PIER 5
5P503	21	10'-2"	S		2'-5"	5'-6"	2'-5"							PIER 5
6P501	20	10'-0"	S		2'-3"	5'-6"	2'-3"							PIER 6
6P503	27	10'-3"	S		2'-6"	5'-6"	2'-6"							PIER 6
W503	94	6'-0"	S		2'-4"	1'-4"	2'-4"							WINGWALL COPING
TB501	3	9'-3"	S		4'-0"	1'-3"	4'-0"							TRANSITION BARRIER REINF.
TB502	3	12'-8"	EP	1'-0"	3'-2"	1'-3"	4'-3"	10"	2'-2"					TRANSITION BARRIER REINF.
TB503	12	17'-8"	EP	1'-0"	5'-8"	1'-3"	6'-9"	10"	2'-2"					TRANSITION BARRIER REINF.
TB504	1	8'-9"	S		3'-9"	1'-3"	3'-9"							TRANSITION BARRIER REINF.
TB505	1	8'-0"	EP	1'-0"	5"	1'-3"	2'-3"	10"	2'-3"					TRANSITION BARRIER REINF.
TB506	1	13'-4"	EP	1'-0"	2'-10"	1'-3"	4'-7"	10"	2'-10"					TRANSITION BARRIER REINF.
TB601	6	8'-2 1/8"	H	4 1/2"	3'-0"	8 5/8"	3'-0"	8 5/8"		4 1/2"				TRANSITION BARRIER REINF.
TB602	21	9'-0 1/4"	H	4 1/2"	3'-0"	1'-1 5/8"	3'-0"	1'-1 5/8"		4 1/2"				TRANSITION BARRIER REINF.
TB603a	3	6'-11 7/8"	S		2'-11 1/8"	1'-1 5/8"	2'-11 1/8"							TRANSITION BARRIER REINF.
TB603b	3	6'-10 5/8	S		2'-10 1/2"	1'-1 5/8"	2'-10 1/2"							TRANSITION BARRIER REINF.
TB603c	3	6'-9 3/4"	S		2'-10"	1'-1 5/8"	2'-10"							TRANSITION BARRIER REINF.
TB603d	3	6'-8 1/2"	S		2'-9 1/2"	1'-1 5/8"	2'-9 1/2"							TRANSITION BARRIER REINF.
TB603e	3	6'-7 1/2"	S		2'-9"	1'-1 5/8"	2'-9"							TRANSITION BARRIER REINF.
TB604	5	4'-0 1/2"	S		1'-8"	8 5/8"	1'-8"							TRANSITION BARRIER REINF.
TB605	2	4'-5 5/8"	S		1'-8"	1'-1 5/8"	1'-8"							TRANSITION BARRIER REINF.
TB606a	1	8'-11 1/2"	H	4 1/2"	2'-11 5/8"	1'-1 5/8"	2'-11 5/8"	1'-1 5/8"		4 1/2"				TRANSITION BARRIER REINF.
TB606b	1	8'-10 7/8"	H	4 1/2"	2'-11 1/4"	1'-1 5/8"	2'-11 1/4"	1'-1 5/8"		4 1/2"				TRANSITION BARRIER REINF.
TB606c	1	8'-10 1/4"	H	4 1/2"	2'-10 7/8"	1'-1 5/8"	2'-10 7/8"	1'-1 5/8"		4 1/2"				TRANSITION BARRIER REINF.
TB606d	1	8'-9 3/4"	H	4 1/2"	2'-10 5/8"	1'-1 5/8"	2'-10 5/8"	1'-1 5/8"		4 1/2"				TRANSITION BARRIER REINF.
TB606e	1	8'-9"	H	4 1/2"	2'-10 3/8"	1'-1 5/8"	2'-10 3/8"	1'-1 5/8"		4 1/2"				TRANSITION BARRIER REINF.
TB606f	1	8'-8 3/8"	H	4 1/2"	2'-10"	1'-1 5/8"	2'-10"	1'-1 5/8"		4 1/2"				TRANSITION BARRIER REINF.
TB606g	1	8'-6 3/8"	H	4 1/2"	2'-9"	1'-1 5/8"	2'-9"	1'-1 5/8"		4 1/2"				TRANSITION BARRIER REINF.

TYPE - BENDING DIAGRAMS

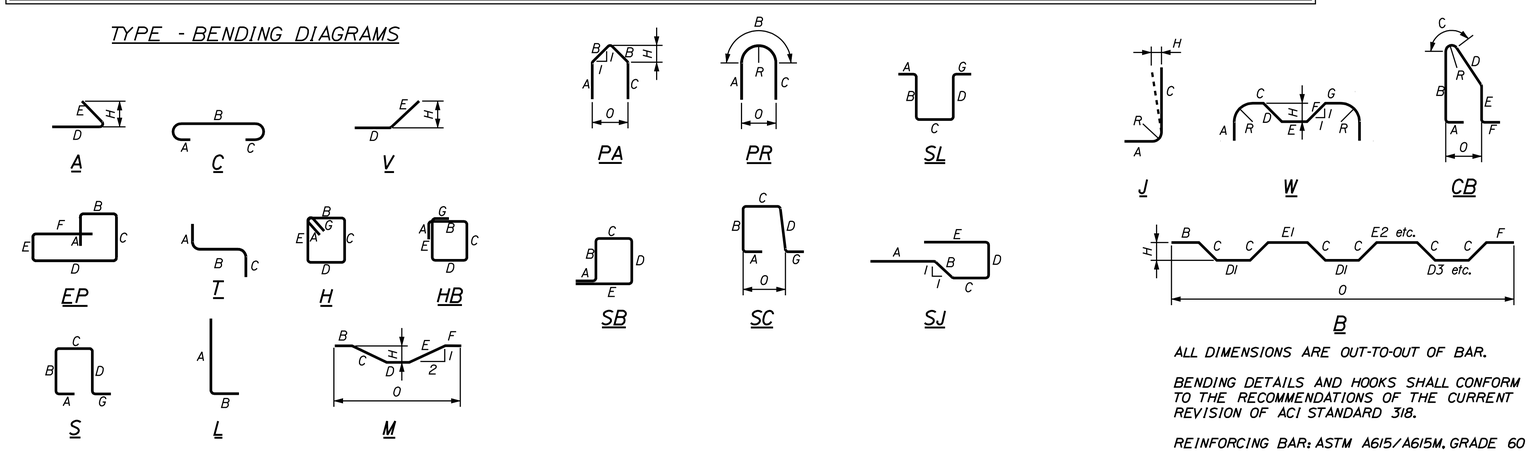

ALL DIMENSIONS ARE OUT-TO-OUT OF BAR.

BENDING DETAILS AND HOOKS SHALL CONFORM TO THE RECOMMENDATIONS OF THE CURRENT REVISION OF ACI STANDARD 318.

REINFORCING BAR: ASTM A615/A615M, GRADE 60

STATE OF MAINE
DEPARTMENT OF TRANSPORTATION

IM-1668(600)E & IM-A670(000)E

PIN 16686.00 & 16700.00

1456 & 6000 BRIDGE PLANS

	B. CONDON	BY	DATE
PROJ. MANAGER			
DESIGN-DETAILED	TPL	MJC	06\11
CHECKED-REVIEWED	JGS	--	06\11
DESIGN2-DETAILED2	PDD	TPL	06\11
DESIGN3-DETAILED3	--	--	--
REVISIONS 1	--		--
REVISIONS 2	--		--
REVISIONS 3	--		--
REVISIONS 4	--		--
FIELD CHANGES	--		--

SIGNATURE

P.E. NUMBER

DATE

C.A. CLAUSON BRIDGES
KENNEBEC RIVER

FAIRFIELD - BENTON SOMERSET & KENNEBEC COUNTIES

REINFORCING STEEL SCHEDULE

SHEET NUMBER

98

OF 132

Filename: ...\098_Superstructure_reinfSch2.dgn Division: HIGHWAY Username: mcorignon Date:6/6/2011

REINFORCING STEEL SCHEDULE

STRAIGHT BARS - SOUTHBOUND CLAUSON

MARK	QTY.	LENGTH	LOCATION
1A502	12	2'-6"	ABUTMENT 1 BEARING SEAT
1A506	12	17'-6"	ABUTMENT 1 BACKWALL
1P502	8	8'-6"	PIER 1
1P504	4	20'-4"	PIER 1
2P502	8	8'-6"	PIER 2
2P504	4	20'-4"	PIER 2
3P502	8	8'-6"	PIER 3
3P504	4	20'-4"	PIER 3
4P502	8	8'-6"	PIER 4
4P504	4	20'-4"	PIER 4
5P502	8	8'-6"	PIER 5
5P504	4	20'-4"	PIER 5
6P502	8	11'-3"	PIER 6
6P504	4	26'-8"	PIER 6
7P502	8	11'-3"	PIER 7
7P504	4	26'-8"	PIER 7
W501	12	19'-8"	WINGWALL COPING
W502	4	3'-4"	WINGWALL COPING
S500	300	57'-0"	DECK LONGITUDINAL (TOP)
S501	852	57'-0"	DECK LONGITUDINAL (BOT)
S502	72	57'-0"	CURB LONGITUDINAL
S503	96	60'-0"	DECK LONGITUDINAL NEG. MOMENT REGION (TOP)
S504	96	20'-0"	DECK LONGITUDINAL NEG. MOMENT REGION (TOP)
S505	3	40'-6"	APPROACH SPANS - ADDT'L CURB LONGITUDINAL
S506	3	11'-0"	APPROACH SPANS - ADDT'L CURB LONGITUDINAL
S507	27	9'-6"	DECK PARALLEL TO 0° SKEW BRGS (BETWEEN GIRDERS)
S508	5	46'-7"	DECK PARALLEL TO ABUT. 2 BRG (BOT)
S509	15	12'-0"	DECK PARALLEL TO ABUT. 2 BRG (BETWEEN GIRDERS)
S510aa	1	43'-9"	SPAN 6 - DECK LONGITUDINAL (BOT)
S510ab	1	43'-4"	SPAN 6 - DECK LONGITUDINAL (BOT)
S510ac	1	42'-11"	SPAN 6 - DECK LONGITUDINAL (BOT)
S510ad	1	42'-5"	SPAN 6 - DECK LONGITUDINAL (BOT)
S510ae	1	42'-0"	SPAN 6 - DECK LONGITUDINAL (BOT)
S510af	1	41'-7"	SPAN 6 - DECK LONGITUDINAL (BOT)
S510ag	1	41'-1"	SPAN 6 - DECK LONGITUDINAL (BOT)
S510ah	1	40'-8"	SPAN 6 - DECK LONGITUDINAL (BOT)
S510ai	1	40'-3"	SPAN 6 - DECK LONGITUDINAL (BOT)
S510aj	1	39'-9"	SPAN 6 - DECK LONGITUDINAL (BOT)
S510ak	1	39'-4"	SPAN 6 - DECK LONGITUDINAL (BOT)
S510al	1	38'-11"	SPAN 6 - DECK LONGITUDINAL (BOT)
S510am	1	38'-6"	SPAN 6 - DECK LONGITUDINAL (BOT)
S510an	1	38'-0"	SPAN 6 - DECK LONGITUDINAL (BOT)
S510ao	1	37'-7"	SPAN 6 - DECK LONGITUDINAL (BOT)
S510ap	1	37'-2"	SPAN 6 - DECK LONGITUDINAL (BOT)
S510aq	1	36'-9"	SPAN 6 - DECK LONGITUDINAL (BOT)
S510ar	1	36'-3"	SPAN 6 - DECK LONGITUDINAL (BOT)
S510as	1	35'-10"	SPAN 6 - DECK LONGITUDINAL (BOT)
S510at	1	35'-5"	SPAN 6 - DECK LONGITUDINAL (BOT)
S510au	1	35'-0"	SPAN 6 - DECK LONGITUDINAL (BOT)
S510av	1	34'-6"	SPAN 6 - DECK LONGITUDINAL (BOT)
S510aw	1	34'-1"	SPAN 6 - DECK LONGITUDINAL (BOT)
S510ax	1	33'-8"	SPAN 6 - DECK LONGITUDINAL (BOT)
S510ay	1	33'-2"	SPAN 6 - DECK LONGITUDINAL (BOT)
S510az	1	32'-9"	SPAN 6 - DECK LONGITUDINAL (BOT)
S510ba	1	32'-4"	SPAN 6 - DECK LONGITUDINAL (BOT)
S510bb	1	31'-11"	SPAN 6 - DECK LONGITUDINAL (BOT)
S510bc	1	31'-6"	SPAN 6 - DECK LONGITUDINAL (BOT)
S510bd	1	31'-0"	SPAN 6 - DECK LONGITUDINAL (BOT)
S510be	1	30'-7"	SPAN 6 - DECK LONGITUDINAL (BOT)
S510bf	1	30'-2"	SPAN 6 - DECK LONGITUDINAL (BOT)
S510bg	1	29'-8"	SPAN 6 - DECK LONGITUDINAL (BOT)
S510bh	1	29'-3"	SPAN 6 - DECK LONGITUDINAL (BOT)
S510bi	1	28'-8"	SPAN 6 - DECK LONGITUDINAL (BOT)

STRAIGHT BARS - SOUTHBOUND CLAUSON

MARK	QTY.	LENGTH	LOCATION
S510bj	1	28'-4"	SPAN 6 - DECK LONGITUDINAL (BOT)
S510bk	1	27'-11"	SPAN 6 - DECK LONGITUDINAL (BOT)
S510bl	1	27'-6"	SPAN 6 - DECK LONGITUDINAL (BOT)
S510bm	1	27'-1"	SPAN 6 - DECK LONGITUDINAL (BOT)
S510bn	1	26'-8"	SPAN 6 - DECK LONGITUDINAL (BOT)
S510bo	1	26'-2"	SPAN 6 - DECK LONGITUDINAL (BOT)
S510bp	1	25'-9"	SPAN 6 - DECK LONGITUDINAL (BOT)
S510bq	1	25'-4"	SPAN 6 - DECK LONGITUDINAL (BOT)
S510br	1	24'-10"	SPAN 6 - DECK LONGITUDINAL (BOT)
S510bs	1	24'-5"	SPAN 6 - DECK LONGITUDINAL (BOT)
S510bt	1	24'-0"	SPAN 6 - DECK LONGITUDINAL (BOT)
S510bu	1	23'-6"	SPAN 6 - DECK LONGITUDINAL (BOT)
S510bv	1	23'-1"	SPAN 6 - DECK LONGITUDINAL (BOT)
S510bw	1	22'-8"	SPAN 6 - DECK LONGITUDINAL (BOT)
S510bx	1	22'-3"	SPAN 6 - DECK LONGITUDINAL (BOT)
S510by	1	21'-9"	SPAN 6 - DECK LONGITUDINAL (BOT)
S510bz	1	21'-4"	SPAN 6 - DECK LONGITUDINAL (BOT)
S510ca	1	20'-11"	SPAN 6 - DECK LONGITUDINAL (BOT)
S510cb	1	20'-6"	SPAN 6 - DECK LONGITUDINAL (BOT)
S510cc	1	20'-0"	SPAN 6 - DECK LONGITUDINAL (BOT)
S510cd	1	19'-7"	SPAN 6 - DECK LONGITUDINAL (BOT)
S510ce	1	19'-2"	SPAN 6 - DECK LONGITUDINAL (BOT)
S510cf	1	18'-9"	SPAN 6 - DECK LONGITUDINAL (BOT)
S510cg	1	18'-3"	SPAN 6 - DECK LONGITUDINAL (BOT)
S510ch	1	17'-10"	SPAN 6 - DECK LONGITUDINAL (BOT)
S510ci	1	17'-5"	SPAN 6 - DECK LONGITUDINAL (BOT)
S510cj	1	17'-0"	SPAN 6 - DECK LONGITUDINAL (BOT)
S510ck	1	16'-6"	SPAN 6 - DECK LONGITUDINAL (BOT)
S510cl	1	16'-1"	SPAN 6 - DECK LONGITUDINAL (BOT)
S510cm	1	15'-8"	SPAN 6 - DECK LONGITUDINAL (BOT)
S510cn	1	15'-2"	SPAN 6 - DECK LONGITUDINAL (BOT)
S510co	1	14'-9"	SPAN 6 - DECK LONGITUDINAL (BOT)
S510cp	1	14'-4"	SPAN 6 - DECK LONGITUDINAL (BOT)
S510cq	1	13'-11"	SPAN 6 - DECK LONGITUDINAL (BOT)
S510cr	1	13'-6"	SPAN 6 - DECK LONGITUDINAL (BOT)
S510cs	1	13'-0"	SPAN 6 - DECK LONGITUDINAL (BOT)
S511a	1	43'-9"	SPAN 6 - DECK LONGITUDINAL (TOP)
S511b	1	42'-5"	SPAN 6 - DECK LONGITUDINAL (TOP)
S511c	1	41'-1"	SPAN 6 - DECK LONGITUDINAL (TOP)
S511d	1	39'-9"	SPAN 6 - DECK LONGITUDINAL (TOP)
S511e	1	38'-6"	SPAN 6 - DECK LONGITUDINAL (TOP)
S511f	1	37'-2"	SPAN 6 - DECK LONGITUDINAL (TOP)
S511g	1	35'-10"	SPAN 6 - DECK LONGITUDINAL (TOP)
S511h	1	34'-6"	SPAN 6 - DECK LONGITUDINAL (TOP)
S511i	1	33'-2"	SPAN 6 - DECK LONGITUDINAL (TOP)
S511j	1	31'-11"	SPAN 6 - DECK LONGITUDINAL (TOP)
S511k	1	30'-7"	SPAN 6 - DECK LONGITUDINAL (TOP)
S511l	1	29'-3"	SPAN 6 - DECK LONGITUDINAL (TOP)
S511m	1	27'-11"	SPAN 6 - DECK LONGITUDINAL (TOP)
S511n	1	26'-8"	SPAN 6 - DECK LONGITUDINAL (TOP)
S511o	1	25'-4"	SPAN 6 - DECK LONGITUDINAL (TOP)
S511p	1	24'-0"	SPAN 6 - DECK LONGITUDINAL (TOP)
S511q	1	22'-8"	SPAN 6 - DECK LONGITUDINAL (TOP)
S511r	1	21'-4"	SPAN 6 - DECK LONGITUDINAL (TOP)
S511s	1	20'-0"	SPAN 6 - DECK LONGITUDINAL (TOP)
S511t	1	18'-9"	SPAN 6 - DECK LONGITUDINAL (TOP)
S511u	1	17'-5"	SPAN 6 - DECK LONGITUDINAL (TOP)
S511v	1	16'-1"	SPAN 6 - DECK LONGITUDINAL (TOP)
S511w	1	14'-9"	SPAN 6 - DECK LONGITUDINAL (TOP)
S511x	1	13'-6"	SPAN 6 - DECK LONGITUDINAL (TOP)
S511y	1	12'-2"	SPAN 6 - DECK LONGITUDINAL (TOP)
S512	25	57'-0"	SPAN 6 - DECK LONGITUDINAL (TOP)
S513	71	57'-0"	SPAN 6 - DECK LONGITUDINAL (BOT)
S514	50	48'-6"	SPAN 7 - DECK LONGITUDINAL (TOP)
S515	142	48'-6"	SPAN 7 - DECK LONGITUDINAL (BOT)

TYPE - BENDING DIAGRAMS

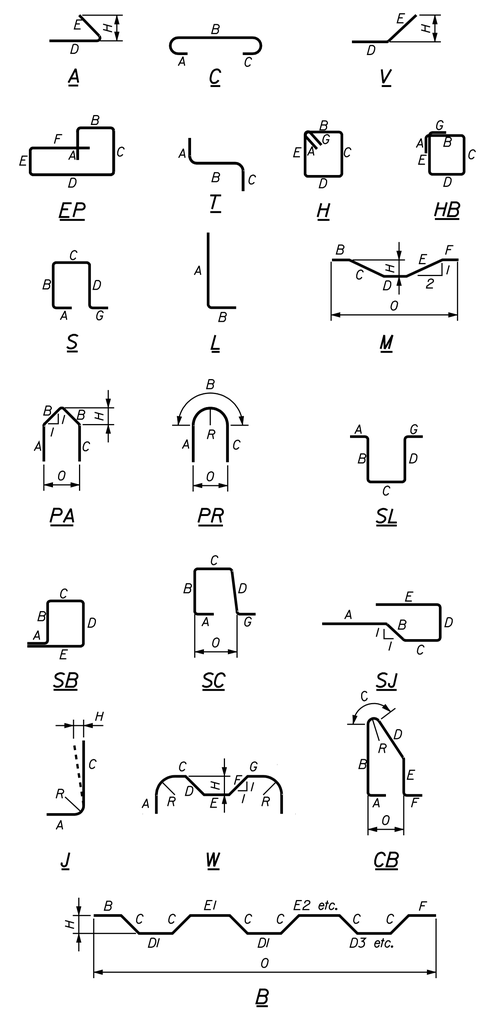

ALL DIMENSIONS ARE OUT-TO-OUT OF BAR.

BENDING DETAILS AND HOOKS SHALL CONFORM TO THE RECOMMENDATIONS OF THE CURRENT REVISION OF ACI STANDARD 318.

REINFORCING BAR: ASTM A615/A615M, GRADE 60

STATE OF MAINE
DEPARTMENT OF TRANSPORTATION

IM-1668(600)E & IM-A670(000)E

PIN 16686.00 & 16700.00

1456 & 6000 BRIDGE PLANS

PROJ. MANAGER	B. CONDON	BY	DATE
DESIGN-DETAILED	TPL	MJC	06\11
CHECKED-REVIEWED	JCS	--	06\11
DESIGN2-DETAILED2	PDD	TPL	06\11
DESIGN3-DETAILED3	--	--	--
REVISIONS 1	--	--	--
REVISIONS 2	--	--	--
REVISIONS 3	--	--	--
REVISIONS 4	--	--	--
FIELD CHANGES	--	--	--

SIGNATURE

P.E. NUMBER

DATE

C.A. CLAUSON BRIDGES
KENNEBEC RIVER
FAIRFIELD - BENTON SOMERSET & KENNEBEC COUNTIES

REINFORCING STEEL SCHEDULE

SHEET NUMBER
99
OF 132

Filename: ...\099_SuperStructure_reinfSch3.dgn Division: HIGHWAY Username: mcorignon Date:6/6/2011

STRAIGHT BARS - SOUTHBOUND CLAUSON

MARK	QTY.	LENGTH	LOCATION
S516	50	52'-0"	SPAN 8 - DECK LONGITUDINAL (TOP)
S517	142	52'-0"	SPAN 8 - DECK LONGITUDINAL (BOT)
S518	42	43'-0"	APPROACH SPANS - CURB LONGITUDINAL
S524	25	59'-0"	DECK LONGITUDINAL (TOP)
S525	71	59'-0"	DECK LONGITUDINAL (BOT)
S526	6	59'-0"	CURB LONGITUDINAL
S527	384	3'-0"	DECK DRAINS
S600	4074	35'-0"	DECK TRANSVERSE (TOP & BOT)
S601aa	2	34'-5"	DECK TRANSVERSE (TOP & BOT)
S601ab	2	33'-10"	DECK TRANSVERSE (TOP & BOT)
S601ac	2	33'-3"	DECK TRANSVERSE (TOP & BOT)
S601ad	2	32'-9"	DECK TRANSVERSE (TOP & BOT)
S601ae	2	32'-2"	DECK TRANSVERSE (TOP & BOT)
S601af	2	31'-7"	DECK TRANSVERSE (TOP & BOT)
S601ag	2	31'-0"	DECK TRANSVERSE (TOP & BOT)
S601ah	2	30'-5"	DECK TRANSVERSE (TOP & BOT)
S601ai	2	29'-10"	DECK TRANSVERSE (TOP & BOT)
S601aj	2	29'-4"	DECK TRANSVERSE (TOP & BOT)
S601ak	2	28'-9"	DECK TRANSVERSE (TOP & BOT)
S601al	2	28'-2"	DECK TRANSVERSE (TOP & BOT)
S601am	2	27'-7"	DECK TRANSVERSE (TOP & BOT)
S601an	2	27'-0"	DECK TRANSVERSE (TOP & BOT)
S601ao	2	26'-5"	DECK TRANSVERSE (TOP & BOT)
S601ap	2	25'-10"	DECK TRANSVERSE (TOP & BOT)
S601aq	2	25'-4"	DECK TRANSVERSE (TOP & BOT)
S601ar	2	24'-9"	DECK TRANSVERSE (TOP & BOT)
S601as	2	24'-2"	DECK TRANSVERSE (TOP & BOT)
S601at	2	23'-7"	DECK TRANSVERSE (TOP & BOT)
S601au	2	23'-0"	DECK TRANSVERSE (TOP & BOT)
S601av	2	22'-6"	DECK TRANSVERSE (TOP & BOT)
S601aw	2	21'-11"	DECK TRANSVERSE (TOP & BOT)
S601ax	2	21'-4"	DECK TRANSVERSE (TOP & BOT)
S601ay	2	20'-9"	DECK TRANSVERSE (TOP & BOT)
S601az	2	20'-2"	DECK TRANSVERSE (TOP & BOT)
S601ba	2	19'-7"	DECK TRANSVERSE (TOP & BOT)
S601bb	2	19'-0"	DECK TRANSVERSE (TOP & BOT)
S601bc	2	18'-6"	DECK TRANSVERSE (TOP & BOT)
S601bd	2	17'-11"	DECK TRANSVERSE (TOP & BOT)
S601be	2	17'-4"	DECK TRANSVERSE (TOP & BOT)
S601bf	2	16'-9"	DECK TRANSVERSE (TOP & BOT)
S601bg	2	16'-2"	DECK TRANSVERSE (TOP & BOT)
S601bh	2	15'-7"	DECK TRANSVERSE (TOP & BOT)
S601bi	2	15'-0"	DECK TRANSVERSE (TOP & BOT)
S601bj	2	14'-6"	DECK TRANSVERSE (TOP & BOT)
S601bk	2	13'-11"	DECK TRANSVERSE (TOP & BOT)
S601bl	2	13'-4"	DECK TRANSVERSE (TOP & BOT)
S601bm	2	12'-9"	DECK TRANSVERSE (TOP & BOT)
S601bn	2	12'-2"	DECK TRANSVERSE (TOP & BOT)
S601bo	2	11'-8"	DECK TRANSVERSE (TOP & BOT)
S601bp	2	11'-1"	DECK TRANSVERSE (TOP & BOT)
S601bq	2	10'-6"	DECK TRANSVERSE (TOP & BOT)
S601br	2	9'-11"	DECK TRANSVERSE (TOP & BOT)
S601bs	2	9'-4"	DECK TRANSVERSE (TOP & BOT)
S601bt	2	8'-10"	DECK TRANSVERSE (TOP & BOT)
S601bu	2	8'-3"	DECK TRANSVERSE (TOP & BOT)
S601bv	2	7'-8"	DECK TRANSVERSE (TOP & BOT)
S601bw	2	7'-1"	DECK TRANSVERSE (TOP & BOT)
S601bx	2	6'-6"	DECK TRANSVERSE (TOP & BOT)
S601by	2	5'-11"	DECK TRANSVERSE (TOP & BOT)
S601bz	2	5'-4"	DECK TRANSVERSE (TOP & BOT)
S601ca	2	4'-10"	DECK TRANSVERSE (TOP & BOT)
S601cb	2	4'-3"	DECK TRANSVERSE (TOP & BOT)
S601cc	2	3'-8"	DECK TRANSVERSE (TOP & BOT)
S601cd	2	3'-1"	DECK TRANSVERSE (TOP & BOT)
S601ce	2	2'-6'	DECK TRANSVERSE (TOP & BOT)
S602	284	20'-0"	LINK SLAB DECK LONGITUDINAL (TOP & BOT)

REINFORCING STEEL SCHEDULE

BENT BARS - SOUTHBOUND CLAUSON

MARK	QTY.	LENGTH	TYPE	A	B	C	D	E	F	G	H	O	R	LOCATION
S530	2868	5'-2 1/4"	SC	10"	1'-2"	1'-5"	1'-2"			10"		1'-6 1/2"		CURB STIRRUPS
S531	4148	3'-10"	C	5"	3'-3"	---					5"			DECK OVERHANG REINF.
S532	30	8'-1 1/4"	SJ	1'-10"	11 1/2"	11 1/8"	10 5/8"	3'-6"						ABUTMENT 1 (BETWEEN GIRDERS)
S533	36	12'-1 7/8"	SJ	1'-10"	7 1/4"	3'-3 5/8"	8"	5'-9"						ABUTMENT 2 (BETWEEN GIRDERS)
S534	60	8'-1 1/4"	SJ	1'-10"	11 1/2"	11 1/8"	10 5/8"	3'-6"						PIER 5 (BETWEEN GIRDERS)
1A501	16	5'-8"	S		1'-5 1/2"	2'-9"	1'-5 1/2"							ABUTMENT 1 BEARING SEAT
1A503	6	5'-8"	S		2'-3"	1'-2"	2'-3"							ABUTMENT 1 BACKWALL
1A504	35	7'-7"	S		3'-2 1/2"	1'-2"	3'-2 1/2"							ABUTMENT 1 BACKWALL
1A505	2	5'-4 1/2"	H	3 3/4"	1'-4"	1'-0 1/2"	1'-4"	1'-0 1/2"		3 3/4"				ABUTMENT 1 BACKWALL
1P501	14	8'-8"	S		2'-7"	3'-6"	2'-7"							PIER 1
1P503	21	9'-2"	S		2'-10"	3'-6"	2'-10"							PIER 1
2P501	14	8'-8"	S		2'-7"	3'-6"	2'-7"							PIER 2
2P503	21	9'-2"	S		2'-10"	3'-6"	2'-10"							PIER 2
3P501	14	8'-8"	S		2'-7"	3'-6"	2'-7"							PIER 3
3P503	21	9'-2"	S		2'-10"	3'-6"	2'-10"							PIER 3
4P501	14	8'-8"	S		2'-7"	3'-6"	2'-7"							PIER 4
4P503	21	9'-2"	S		2'-10"	3'-6"	2'-10"							PIER 4
5P501	14	9'-10"	S		2'-2"	5'-6"	2'-2"							PIER 5
5P503	21	10'-2"	S		2'-5"	5'-6"	2'-5"							PIER 5
6P501	20	10'-0"	S		2'-3"	5'-6"	2'-3"							PIER 6
6P503	27	10'-3"	S		2'-6"	5'-6"	2'-6"							PIER 6
7P501	20	10'-0"	S		2'-3"	5'-6"	2'-3"							PIER 7
7P503	27	10'-3"	S		2'-6"	5'-6"	2'-6"							PIER 7
W503	94	6'-0"	S		2'-4"	1'-4"	2'-4"							WINGWALL COPING
TB501	3	9'-3"	S		4'-0"	1'-3"	4'-0"							TRANSITION BARRIER REINF.
TB502	3	12'-8"	EP	1'-0"	3'-2"	1'-3"	4'-3"	10"	2'-2"					TRANSITION BARRIER REINF.
TB503	12	17'-8"	EP	1'-0"	5'-8"	1'-3"	6'-9"	10"	2'-2"					TRANSITION BARRIER REINF.
TB504	1	8'-9"	S		3'-9"	1'-3"	3'-9"							TRANSITION BARRIER REINF.
TB505	1	8'-0"	EP	1'-0"	5"	1'-3"	2'-3"	10"	2'-3"					TRANSITION BARRIER REINF.
TB506	1	13'-4"	EP	1'-0"	2'-10"	1'-3"	4'-7"	10"	2'-10"					TRANSITION BARRIER REINF.
TB601	6	8'-2 1/8"	H	4 1/2"	3'-0"	8 5/8"	3'-0"	8 5/8"		4 1/2"				TRANSITION BARRIER REINF.
TB602	21	9'-0 1/4"	H	4 1/2"	3'-0"	1'-1 5/8"	3'-0"	1'-1 5/8"		4 1/2"				TRANSITION BARRIER REINF.
TB603a	3	6'-11 7/8"	S		2'-11 1/8"	1'-1 5/8"	2'-11 1/8"							TRANSITION BARRIER REINF.
TB603b	3	6'-10 5/8	S		2'-10 1/2"	1'-1 5/8"	2'-10 1/2"							TRANSITION BARRIER REINF.
TB603c	3	6'-9 3/4"	S		2'-10"	1'-1 5/8"	2'-10"							TRANSITION BARRIER REINF.
TB603d	3	6'-8 1/2"	S		2'-9 1/2"	1'-1 5/8"	2'-9 1/2"							TRANSITION BARRIER REINF.
TB603e	3	6'-7 1/2"	S		2'-9"	1'-1 5/8"	2'-9"							TRANSITION BARRIER REINF.
TB604	5	4'-0 1/2"	S		1'-8"	8 5/8"	1'-8"							TRANSITION BARRIER REINF.
TB605	2	4'-5 5/8"	S		1'-8"	1'-1 5/8"	1'-8"							TRANSITION BARRIER REINF.
TB606a	1	8'-11 1/2"	H	4 1/2"	2'-11 5/8"	1'-1 5/8"	2'-11 5/8"	1'-1 5/8"		4 1/2"				TRANSITION BARRIER REINF.
TB606b	1	8'-10 7/8"	H	4 1/2"	2'-11 1/4"	1'-1 5/8"	2'-11 1/4"	1'-1 5/8"		4 1/2"				TRANSITION BARRIER REINF.
TB606c	1	8'-10 1/4"	H	4 1/2"	2'-10 7/8"	1'-1 5/8"	2'-10 7/8"	1'-1 5/8"		4 1/2"				TRANSITION BARRIER REINF.
TB606d	1	8'-9 3/4"	H	4 1/2"	2'-10 5/8"	1'-1 5/8"	2'-10 5/8"	1'-1 5/8"		4 1/2"				TRANSITION BARRIER REINF.
TB606e	1	8'-9"	H	4 1/2"	2'-10 3/8"	1'-1 5/8"	2'-10 3/8"	1'-1 5/8"		4 1/2"				TRANSITION BARRIER REINF.
TB606f	1	8'-8 3/8"	H	4 1/2"	2'-10"	1'-1 5/8"	2'-10"	1'-1 5/8"		4 1/2"				TRANSITION BARRIER REINF.
TB606g	1	8'-6 3/8"	H	4 1/2"	2'-9"	1'-1 5/8"	2'-9"	1'-1 5/8"		4 1/2"				TRANSITION BARRIER REINF.

TYPE - BENDING DIAGRAMS

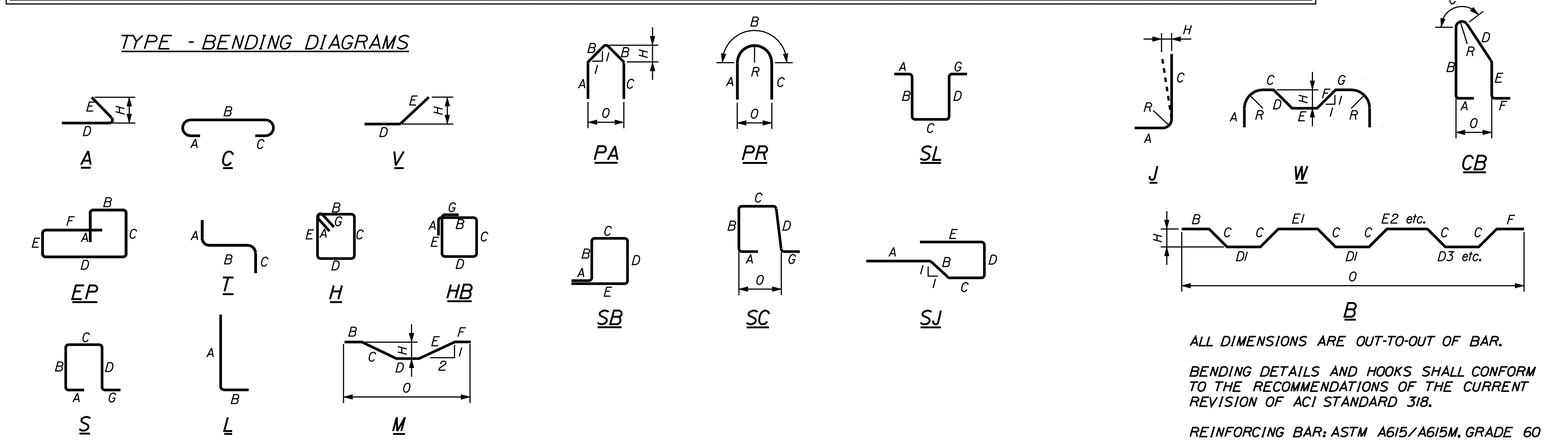

STATE OF MAINE
DEPARTMENT OF TRANSPORTATION

IM-1668(600)E & IM-A670(000)E

PIN 16686.00 & 16700.00

1456 & 6000 BRIDGE PLANS

PROJ. MANAGER	B. CONDON	BY	DATE	
DESIGN-DETAILED	TPL	MJC	06\11	
CHECKED-REVIEWED	JGS	--	06\11	SIGNATURE
DESIGN2-DETAILED2	PDD	TPL	06\11	
DESIGN3-DETAILED3	--	--	--	P.E. NUMBER
REVISIONS 1	--	--	--	
REVISIONS 2	--	--	--	
REVISIONS 3	--	--	--	DATE
REVISIONS 4	--	--	--	
FIELD CHANGES	--	--	--	

C.A. CLAUSON BRIDGES
KENNEBEC RIVER
FAIRFIELD - BENTON SOMERSET & KENNEBEC COUNTIES

REINFORCING STEEL SCHEDULE

SHEET NUMBER
100
OF 132

Filename: ...\100_Superstructure_reinfSch4.dgn Division: HIGHWAY Username: mcorignon Date:6/6/2011

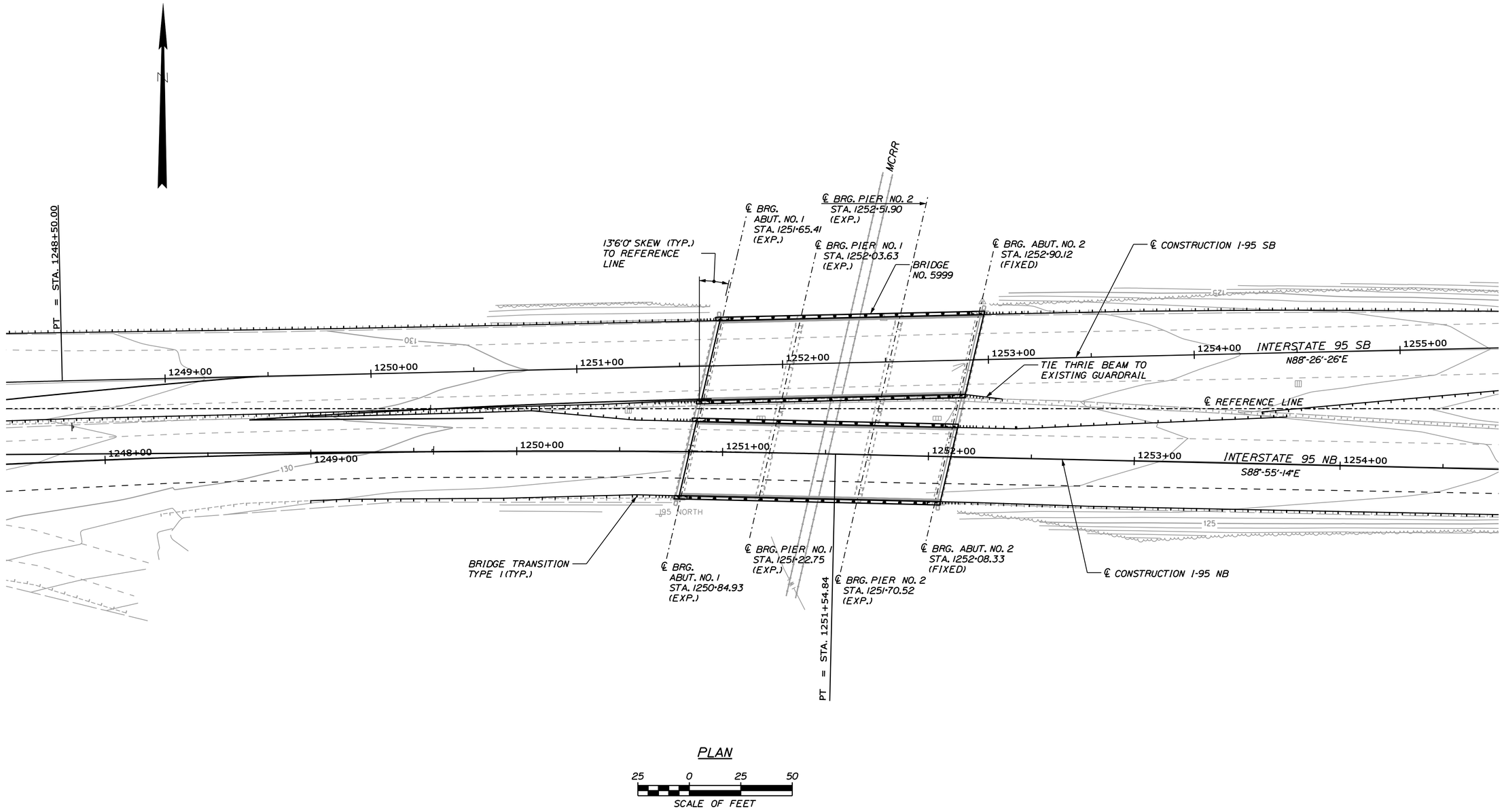

PLAN

25 0 25 50

SCALE OF FEET

STATE OF MAINE
DEPARTMENT OF TRANSPORTATION

IM-1781(400)X

PIN 17814.00

5999

BRIDGE PLANS

PROJ. MANAGER	B. CONDON	BY	DATE
DESIGN-DETAILED	TPL	MJC	06\11
CHECKED-REVIEWED	JGS	--	06\11
DESIGN2-DETAILED2	PDD	TPL	06\11
DESIGN3-DETAILED3	--	--	--
REVISIONS 1	--	--	--
REVISIONS 2	--	--	--
REVISIONS 3	--	--	--
REVISIONS 4	--	--	--
FIELD CHANGES	--	--	--

SIGNATURE

P.E. NUMBER

DATE

MAINE CENTRAL RAILROAD BRIDGE
INTERSTATE 95
FAIRFIELD - BENTON SOMERSET & KENNEBEC COUNTIES

GENERAL PLAN

SHEET NUMBER

101

OF 132

Filename: ...\BRIDGE\MSTA\101_Plan_MCRR.dgn Division: HIGHWAY Username: mcorignon Date:6/10/2011

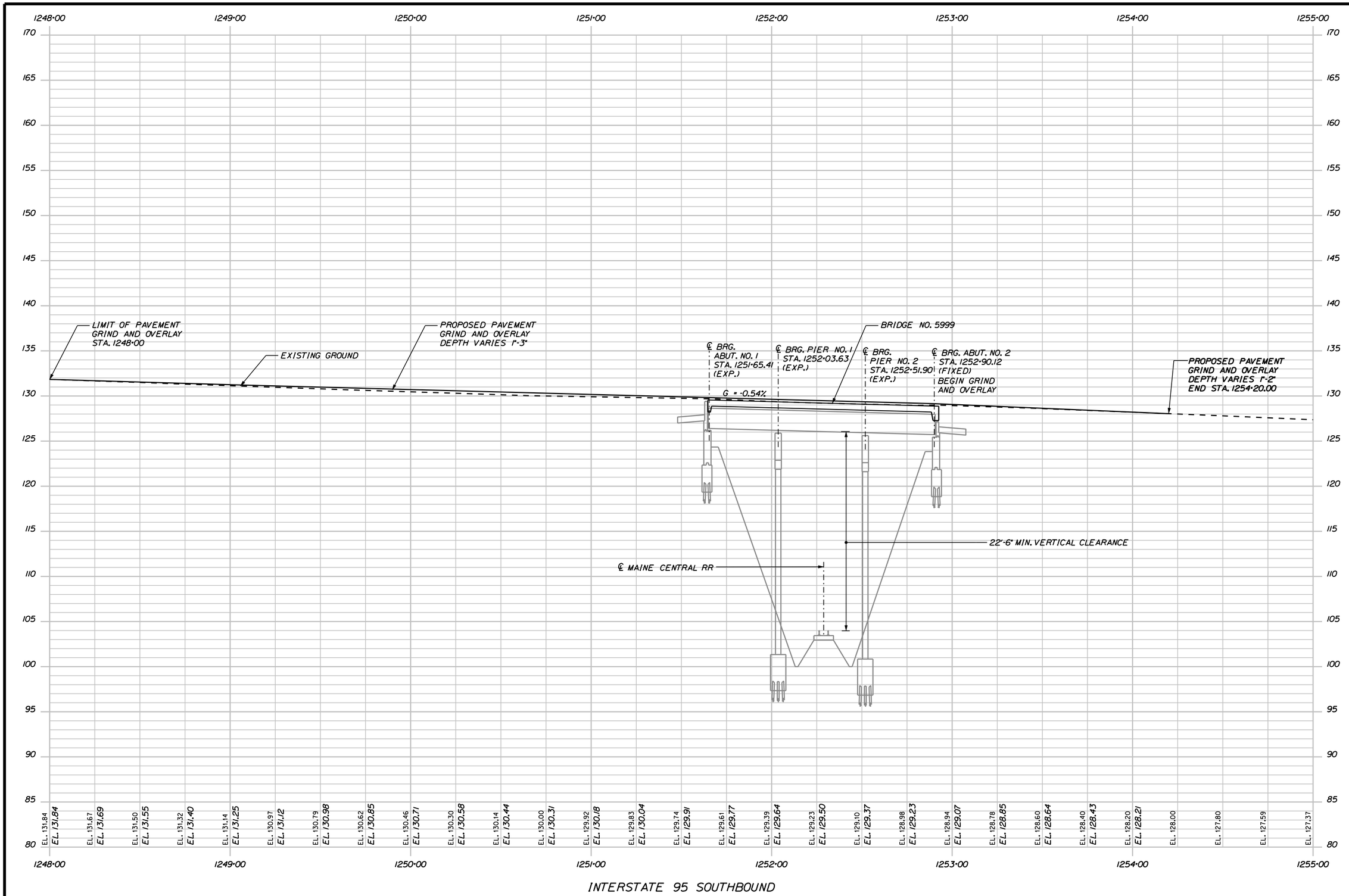

Filename: ...\MSTA\102_Profile_MCRRsb.dgn Division: HIGHWAY Username: mcarignan Date:6/9/2011

STATE OF MAINE
DEPARTMENT OF TRANSPORTATION

IM-1781(400)X

PIN 17814.00

BRIDGE PLANS

5999

PROJ. MANAGER	B. CONDON		
DESIGN-DETAILED	TPL	MJC	06\11
CHECKED-REVIEWED	JGS	--	06\11
DESIGN2-DETAILED2	PDD	TPL	06\11
DESIGN3-DETAILED3	--	--	--
REVISIONS 1	--		--
REVISIONS 2	--		--
REVISIONS 3	--		--
REVISIONS 4	--		--
FIELD CHANGES	--		--

SIGNATURE

P.E. NUMBER

DATE

MAINE CENTRAL RAILROAD BRIDGE
INTERSTATE 95
FAIRFIELD - BENTON SOMERSET & KENNEBEC COUNTIES

BRIDGE PROFILE SB

SHEET NUMBER

102

OF 132

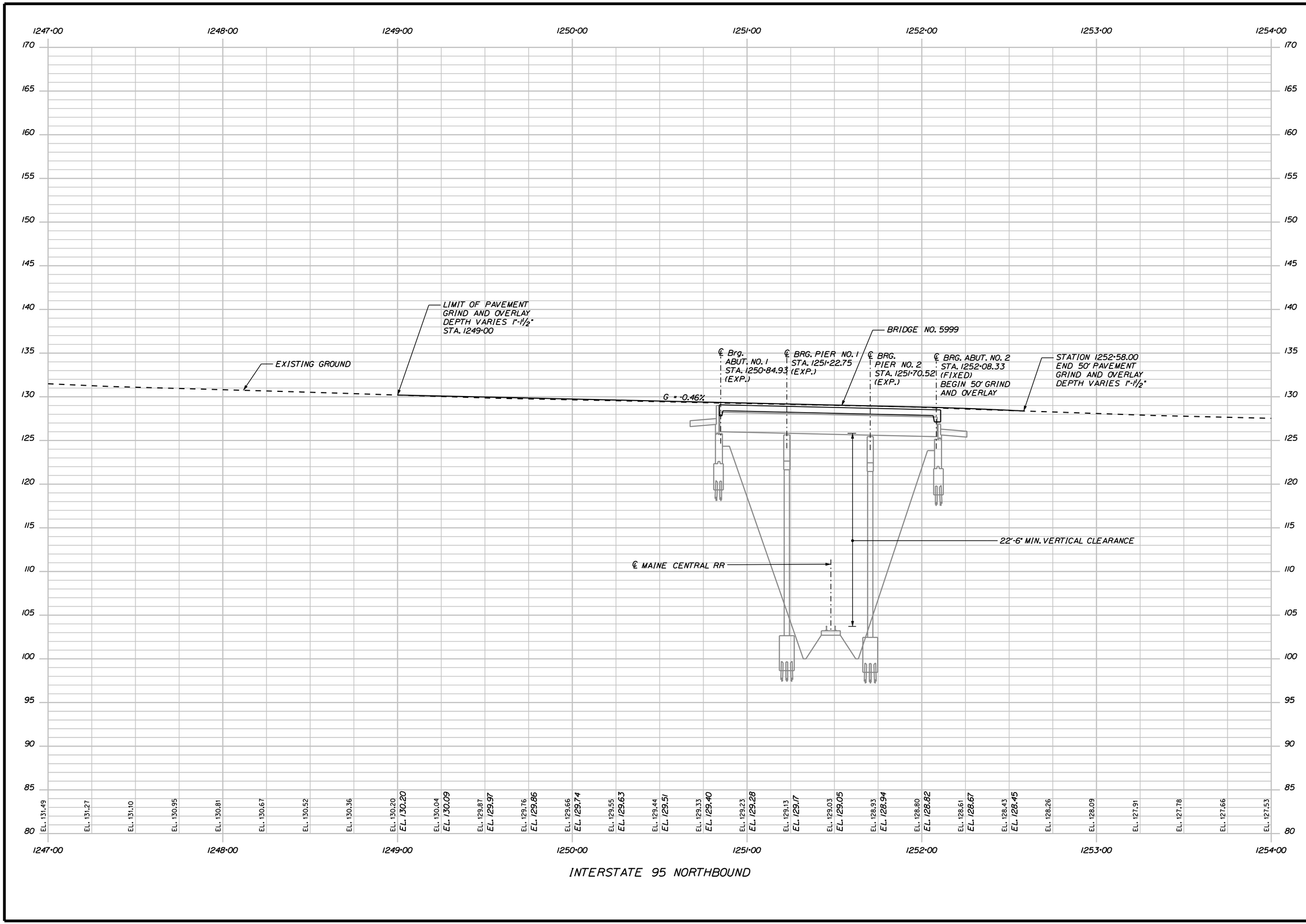

STATE OF MAINE
DEPARTMENT OF TRANSPORTATION

IM-1781(400)X

PIN 17814.00

BRIDGE PLANS

5999

		BY	DATE
PROJ. MANAGER	B. CONDON		
DESIGN-DETAILED	TPL	MJC	06\11
CHECKED-REVIEWED	JGS	--	06\11
DESIGN2-DETAILED2	PDD	TPL	06\11
DESIGN3-DETAILED3	--	--	--
REVISIONS 1	--	--	--
REVISIONS 2	--	--	--
REVISIONS 3	--	--	--
REVISIONS 4	--	--	--
FIELD CHANGES	--	--	--

SIGNATURE

P.E. NUMBER

DATE

MAINE CENTRAL RAILROAD BRIDGE
INTERSTATE 95
FAIRFIELD - BENTON SOMERSET & KENNEBEC COUNTIES

BRIDGE PROFILE NB

SHEET NUMBER

103

OF 132

Filename: ...\MSTA\103_Profile_MCRRnb.dgn Division: HIGHWAY Username: mcarignan Date:6/9/2011

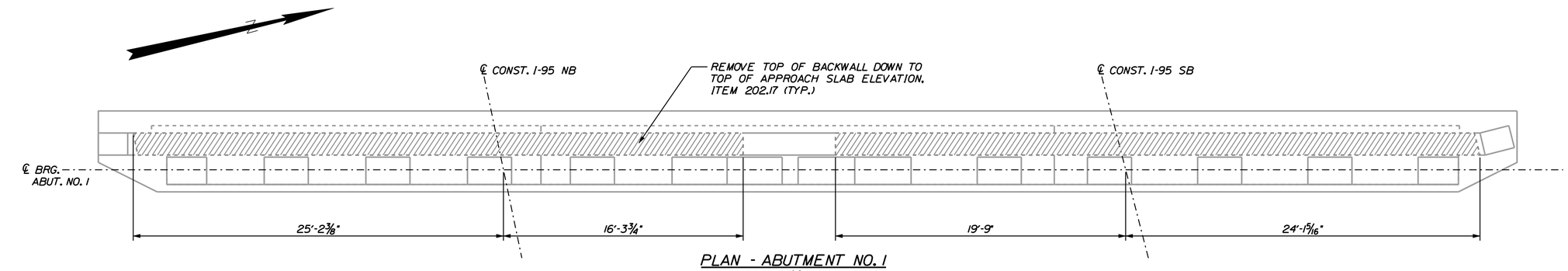

PLAN - ABUTMENT NO. I

SCALE: 1/4" = 1'-0"

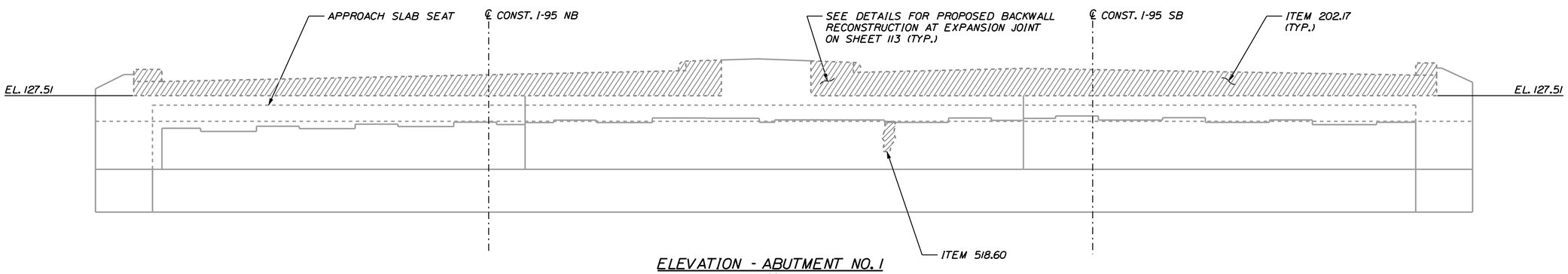

ELEVATION - ABUTMENT NO. I

SCALE: 1/4" = 1'-0"

ABUTMENT NOTES

1. A THOROUGH INSPECTION BY THE RESIDENT WILL BE MADE OF ALL EXPOSED SUBSTRUCTURE AREAS AT THE TIME OF CONSTRUCTION, AND THOSE AREAS FOUND TO HAVE SPALLED, DELAMINATED, OR OTHERWISE UNSOUND CONCRETE WILL BE REPAIRED. THE CONTRACTOR SHALL SUPPLY ANY STAGING, WORK PLATFORMS AND LADDERS REQUIRED FOR THIS INSPECTION. THE COST SHALL BE INCIDENTAL TO RELATED CONTRACT ITEMS.
2. THE CONTRACTOR SHALL EXERCISE CAUTION TO AVOID DAMAGING EXISTING REINFORCING STEEL TO REMAIN.
3. PROTECTIVE COATING FOR CONCRETE SURFACES SHALL BE APPLIED AFTER ANY REQUIRED CONCRETE REPAIRS ARE COMPLETE.

STATE OF MAINE
DEPARTMENT OF TRANSPORTATION

IM-1781(400)X

PIN 17814.00

BRIDGE PLANS

5999

		BY	DATE
PROJ. MANAGER	B. CONDON		
DESIGN-DETAILED	TPL	MJC	06\11
CHECKED-REVIEWED	JGS	--	06\11
DESIGN2-DETAILED2	PDD	TPL	06\11
DESIGN3-DETAILED3	--	--	--
REVISIONS 1	--		--
REVISIONS 2	--		--
REVISIONS 3	--		--
REVISIONS 4	--		--
FIELD CHANGES	--		--

SIGNATURE

P.E. NUMBER

DATE

MAINE CENTRAL RAILROAD BRIDGE
INTERSTATE 95
FAIRFIELD - BENTON SOMERSET & KENNEBEC COUNTIES

ABUTMENT NO. 1 - REMOVALS

SHEET NUMBER

104

OF 132

Filename: ...\MSTA\104_Abutment_MCRRIrem.dgn Division: HIGHWAY Username: mcorignon Date:6/8/2011

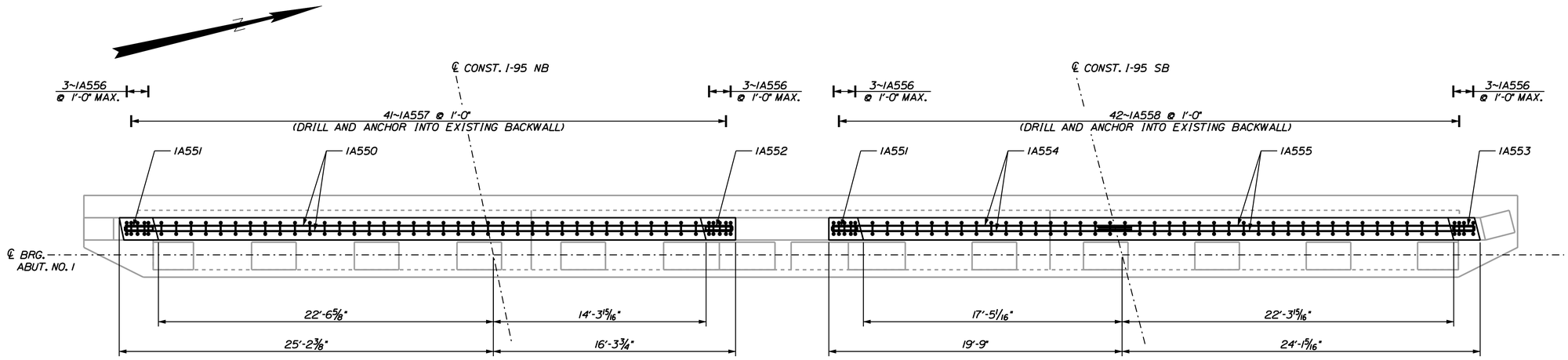

PLAN - ABUTMENT NO. 1

SCALE: 1/4" = 1'-0"

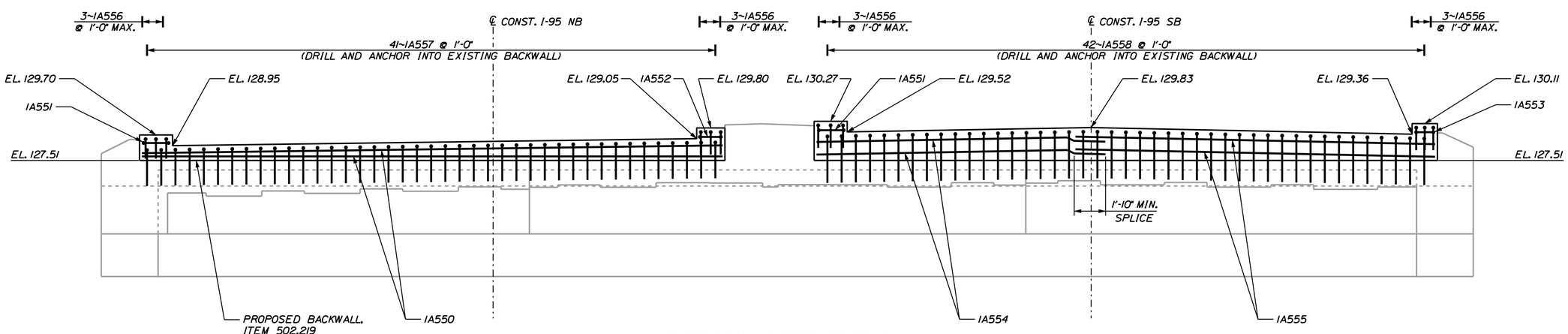

ELEVATION - ABUTMENT NO. 1

SCALE: 1/4" = 1'-0"

STATE OF MAINE
DEPARTMENT OF TRANSPORTATION

IM-1781(400)X

PIN 17814.00

5999

BRIDGE PLANS

PROJ. MANAGER	B. CONDON	BY	DATE
DESIGN-DETAILED	TPL	MJC	06\11
CHECKED-REVIEWED	JGS	--	06\11
DESIGN2-DETAILED2	PDD	TPL	06\11
DESIGN3-DETAILED3	--	--	--
REVISIONS 1	--		--
REVISIONS 2	--		--
REVISIONS 3	--		--
REVISIONS 4	--		--
FIELD CHANGES	--		--

SIGNATURE

P.E. NUMBER

DATE

MAINE CENTRAL RAILROAD BRIDGE
INTERSTATE 95
FAIRFIELD - BENTON SOMERSET & KENNEBEC COUNTIES

ABUTMENT NO. 1 - PROPOSED

SHEET NUMBER

105

OF 132

Filename: ...\MSTA\105_Abutment_MCRR1.dgn Division: HIGHWAY Username: mcarignan Date:6/6/2011

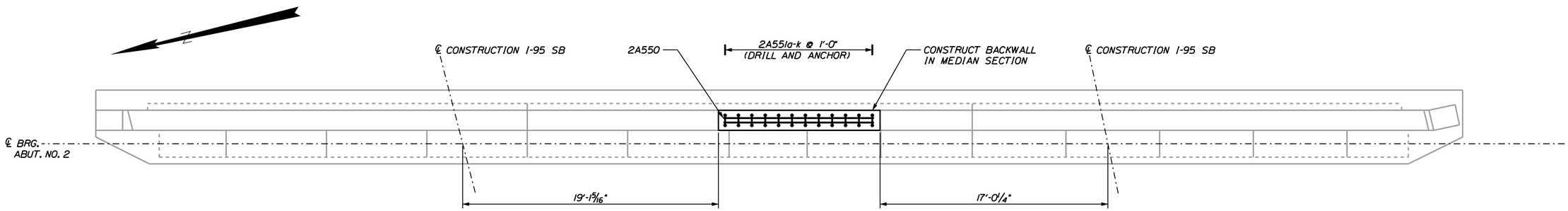

PLAN - ABUTMENT NO. 2

SCALE: 1/4" = 1'-0"

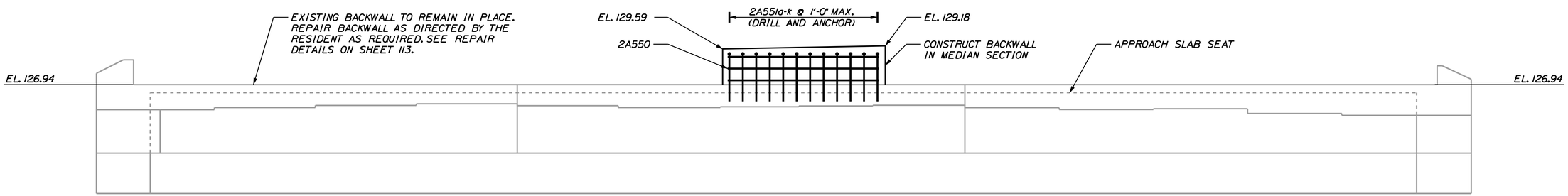

ELEVATION - ABUTMENT NO. 2

SCALE: 1/4" = 1'-0"

STATE OF MAINE
DEPARTMENT OF TRANSPORTATION

IM-1781(400)X

PIN 17814.00

5999

BRIDGE PLANS

PROJ. MANAGER	B. CONDON	BY	DATE
DESIGN-DETAILED	TPL	MJC	06\11
CHECKED-REVIEWED	JGS	--	06\11
DESIGN2-DETAILED2	PDD	TPL	06\11
DESIGN3-DETAILED3	--	--	--
REVISIONS 1	--		--
REVISIONS 2	--		--
REVISIONS 3	--		--
REVISIONS 4	--		--
FIELD CHANGES	--		--

SIGNATURE

P.E. NUMBER

DATE

MAINE CENTRAL RAILROAD BRIDGE
INTERSTATE 95
FAIRFIELD - BENTON SOMERSET & KENNEBEC COUNTIES

ABUTMENT NO. 2

SHEET NUMBER

106

OF 132

Filename: ...\MSTA\106_Abutment_MCRR2.dgn Division: HIGHWAY Username: mcorignon Date:6/8/2011

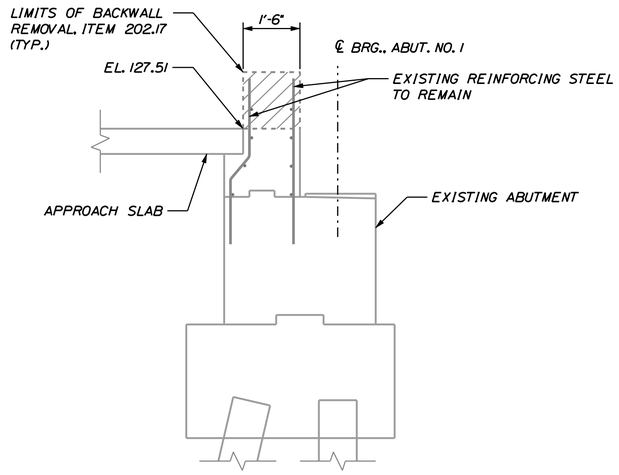

ABUTMENT NO. 1 DEMOLITION SECTION

SCALE: 1/2" = 1'-0"

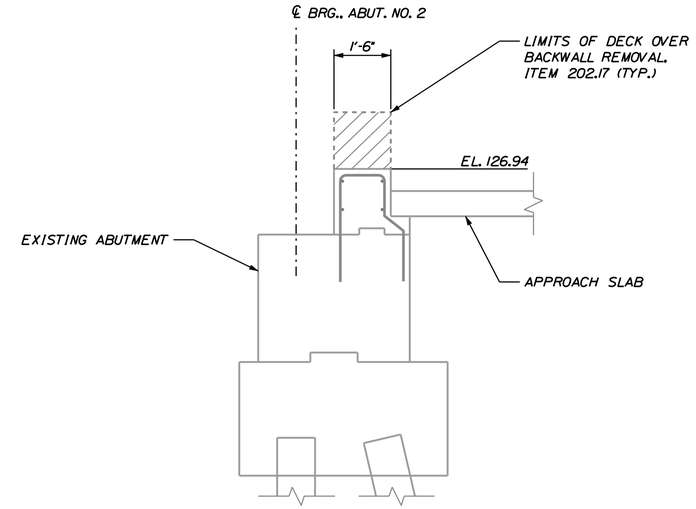

ABUTMENT NO. 2 DEMOLITION SECTION

SCALE: 1/2" = 1'-0"

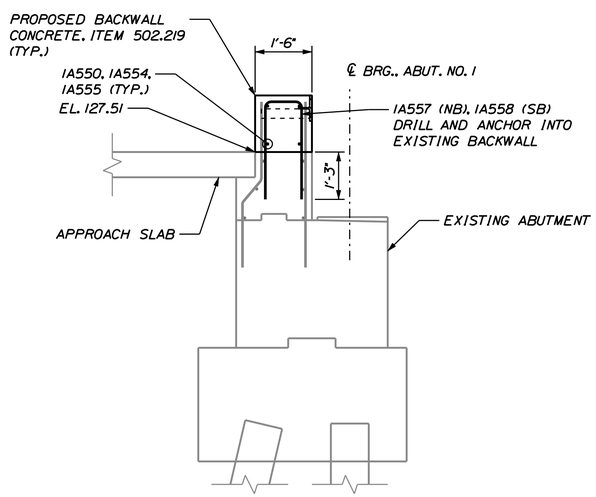

ABUTMENT NO. 1 PROPOSED SECTION

SCALE: 1/2" = 1'-0"

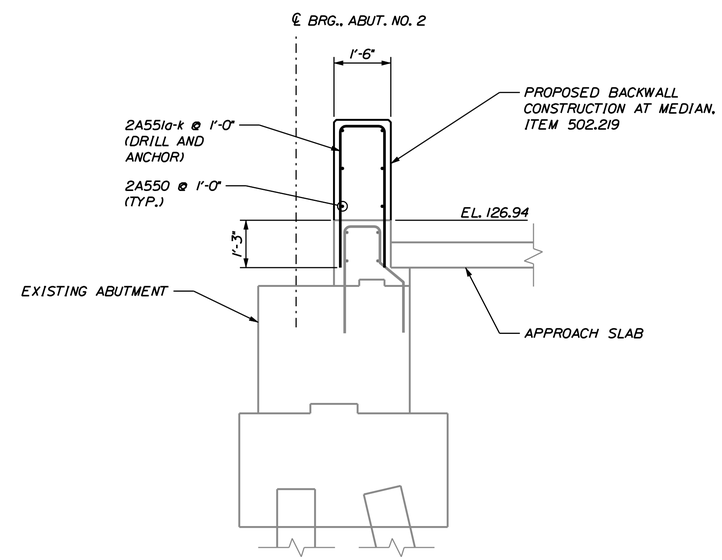

ABUTMENT NO. 2 PROPOSED SECTION

SCALE: 1/2" = 1'-0"

STATE OF MAINE
DEPARTMENT OF TRANSPORTATION

IM-1781(400)X

PIN 17814.00

5999

BRIDGE PLANS

PROJ. MANAGER	B. CONDON	BY	DATE
DESIGN-DETAILED	TPL	MJC	06\11
CHECKED-REVIEWED	JGS	--	06\11
DESIGN2-DETAILED2	PDD	TPL	06\11
DESIGN3-DETAILED3	--	--	--
REVISIONS 1	--		--
REVISIONS 2	--		--
REVISIONS 3	--		--
REVISIONS 4	--		--
FIELD CHANGES	--		--

SIGNATURE

P.E. NUMBER

DATE

MAINE CENTRAL RAILROAD BRIDGE
INTERSTATE 95
FAIRFIELD - BENTON SOMERSET & KENNEBEC COUNTIES

ABUTMENT DETAILS

SHEET NUMBER

107

OF 132

Filename: ...\MSTA\107_Abutment_MCRRdet.dgn Division: HIGHWAY Username: mcarignan Date:6/6/2011

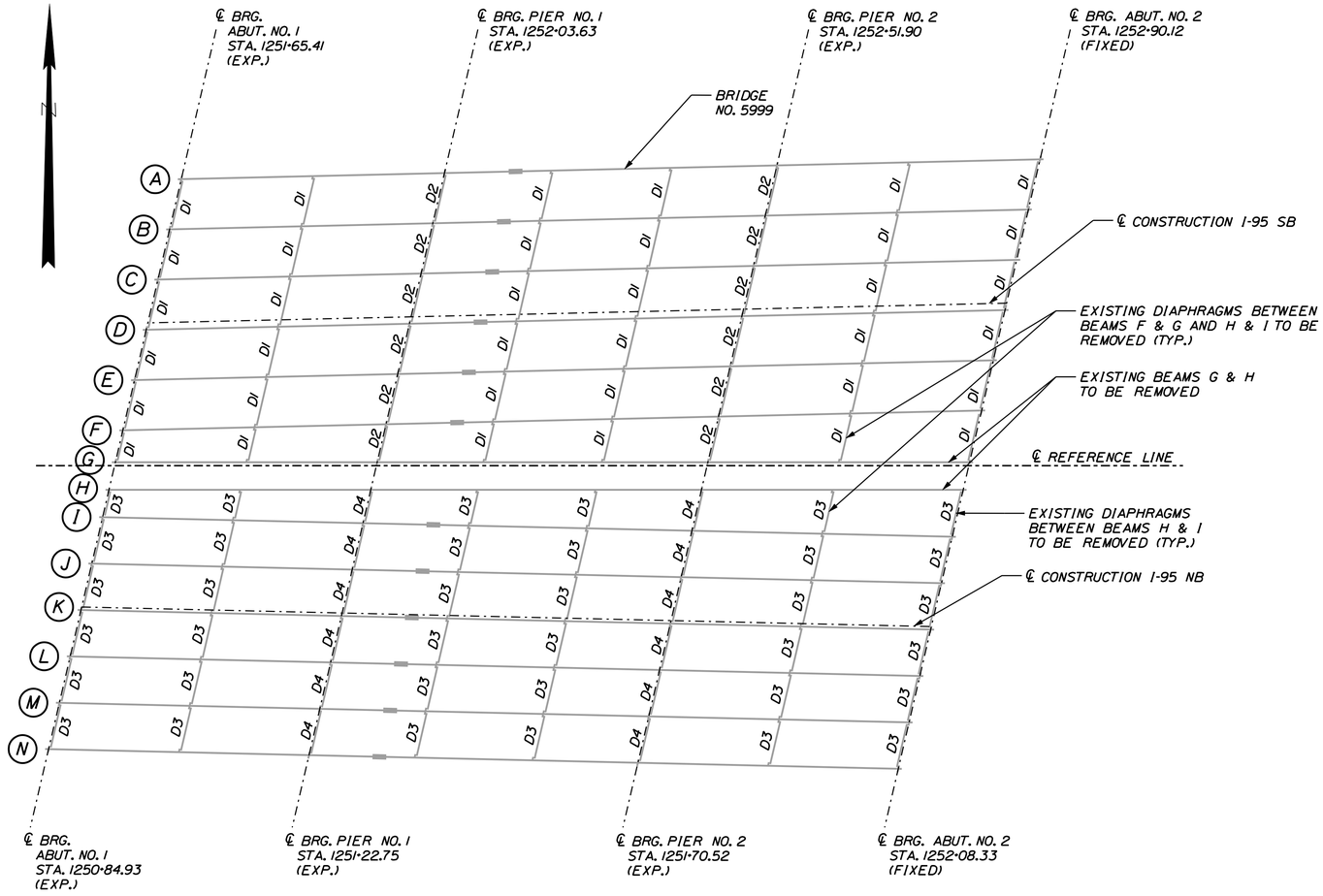

FRAMING PLAN

SCALE: 3/32" = 1'-0"

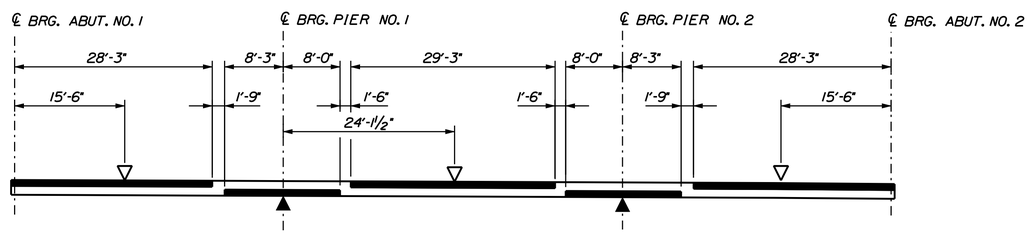

INDICATES AREAS ALWAYS IN COMPRESSION. ALL OTHERS ARE IN TENSION OR HAVE STRESS REVERSAL AT SERVICE LOADS.

▽ POINT OF MAXIMUM POSITIVE MOMENT.

▲ POINT OF MAXIMUM NEGATIVE MOMENT.

BEAM STRESS DIAGRAM

STRUCTURAL STEEL NOTES

1. THE PROPOSED PLANS ARE BASED ON THE ORIGINAL CONSTRUCTION PLANS, AND DOES NOT NECESSARILY REFLECT AS-BUILT CONDITIONS. IT IS THE CONTRACTOR'S RESPONSIBILITY TO FIELD-VERIFY ALL DIMENSIONS, ANGLES, MEMBER SIZES, AND LAYOUT PRIOR TO ORDERING AND FABRICATING NEW MATERIAL.

2. ANTICIPATED REHABILITATION INCLUDES FIELD PAINTING THE ABUTMENT DIAPHRAGMS. ONCE THE BRIDGE DECK HAS BEEN REMOVED, THERE MAY BE ADDITIONAL AREAS TO BE REHABILITATED.

3. THE CONTRACTOR SHALL TAKE CARE TO AVOID DAMAGING THE PORTIONS OF THE EXISTING MEMBERS TO REMAIN. ANY DAMAGE TO EXISTING MEMBERS CAUSED BY THE CONTRACTOR'S OPERATIONS SHALL BE REPAIRED OR REPLACED AT THE DEPARTMENT'S DISCRETION, AND AT THE CONTRACTOR'S SOLE EXPENSE. REPAIR MATERIALS AND METHODS SHALL BE APPROVED BY THE RESIDENT.

4. ALL AREAS OF REMAINING EXISTING STEEL EXPOSED BY REMOVAL OR REHABILITATION SHALL BE PREPARED AND PAINTED IN ACCORDANCE WITH THE SPECIFICATIONS.

MATERIALS

PROPOSED STRUCTURAL STEEL:
ALL MATERIAL (EXCEPT AS NOTED).....A709/A709M, GRADE 50 (PAINTED)
HIGH STRENGTH BOLTS .....ASTM A325, TYPE 1 (GALVANIZED)

EXISTING STRUCTURAL STEEL
BEAMS, COVER PLATES, AND SPLICE PLATES..... ASTM 36
ALL OTHER ..... ASTM A7 OR A36

BASIC DESIGN STRESSES

PROPOSED STRUCTURAL STEEL:
ASTM A 709/A 709M, GRADE 50W..... Fy = 50,000 PSI
ASTM A 709/A 709M, GRADE 36..... Fy = 36,000 PSI
ASTM A 325 ..... Fu = 120,000 PSI

STATE OF MAINE
DEPARTMENT OF TRANSPORTATION

IM-1781(400)X

PIN 17814.00

BRIDGE PLANS

5999

PROJ. MANAGER	B. CONDON	BY	DATE
DESIGN-DETAILED	TPL	MJC	06\11
CHECKED-REVIEWED	JGS	--	06\11
DESIGN2-DETAILED2	PDD	TPL	06\11
DESIGN3-DETAILED3	--	--	--
REVISIONS 1	--	--	--
REVISIONS 2	--	--	--
REVISIONS 3	--	--	--
REVISIONS 4	--	--	--
FIELD CHANGES	--	--	--

SIGNATURE

P.E. NUMBER

DATE

MAINE CENTRAL RAILROAD BRIDGE
INTERSTATE 95
FAIRFIELD - BENTON SOMERSET & KENNEBEC COUNTIES

FRAMING PLAN

SHEET NUMBER

108

OF 132

Filename: ...\MSTA\108_Framing_MCRR.dgn Division: HIGHWAY Username: mcorignon Date:6/6/2011

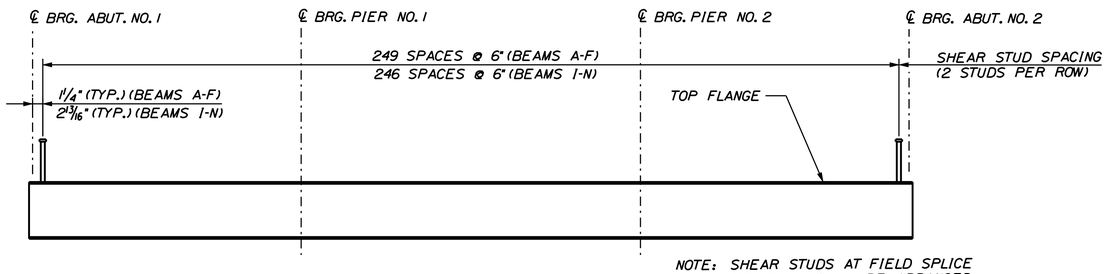

SHEAR STUD SPACING DIAGRAM

NOT TO SCALE
500 STUDS PER BEAM (BEAMS A-F)
494 STUDS PER BEAM (BEAMS I-N)
(5964 STUDS TOTAL)

NOTE: SHEAR STUDS AT FIELD SPLICE LOCATIONS SHALL BE ARRANGED TO CLEAR FASTENERS AND SHALL BE WELDED TO THE SPLICE PLATES.

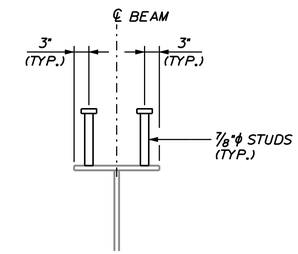

SHEAR STUD DETAIL

NOT TO SCALE

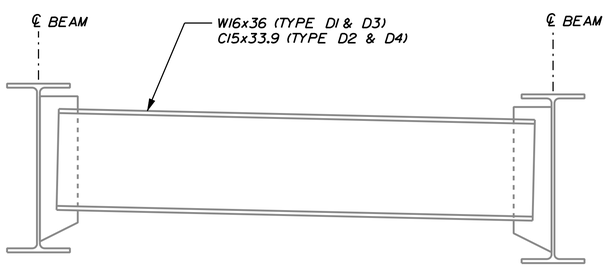

TYPICAL EXISTING DIAPHRAGM

SCALE: 1" = 1'-0"

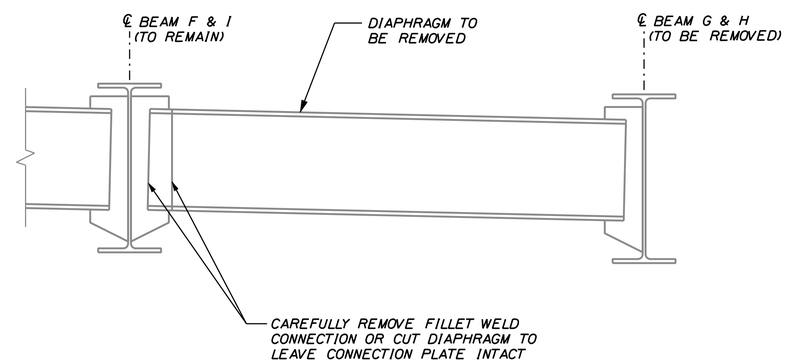

DIAPHRAGM REMOVAL

SCALE: 1" = 1'-0"

STATE OF MAINE
DEPARTMENT OF TRANSPORTATION

IM-1781(400)X

PIN 17814.00

5999

BRIDGE PLANS

PROJ. MANAGER	B. CONDON	BY	DATE
DESIGN-DETAILED	TPL	MJC	06\11
CHECKED-REVIEWED	JGS	--	06\11
DESIGN2-DETAILED2	PDD	TPL	06\11
DESIGN3-DETAILED3	--	--	--
REVISIONS 1	--		--
REVISIONS 2	--		--
REVISIONS 3	--		--
REVISIONS 4	--		--
FIELD CHANGES	--		--

SIGNATURE

P.E. NUMBER

DATE

MAINE CENTRAL RAILROAD BRIDGE
INTERSTATE 95
FAIRFIELD - BENTON SOMERSET & KENNEBEC COUNTIES

STRUCTURAL STEEL DETAILS

SHEET NUMBER
109
OF 132

Filename: ...\MSTA\109_Framing_MCRRdet.dgn Division: HIGHWAY Username: mcorignon Date:6/6/2011

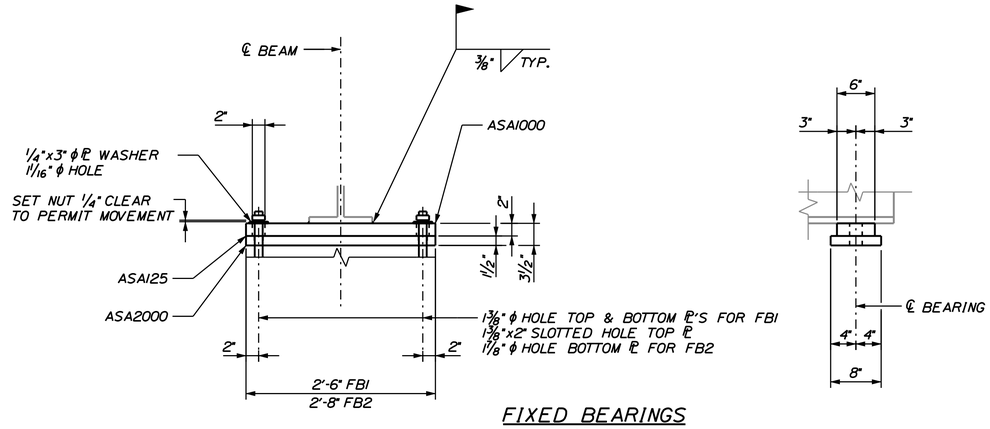

FIXED BEARINGS

SCALE: 1"=1'-0"

4 FB1 REQUIRED @ ABUT. #2 ON LINES E, F, I, J
8 FB2 REQUIRED @ ABUT. #2 ON LINES A THRU D & K THRU N

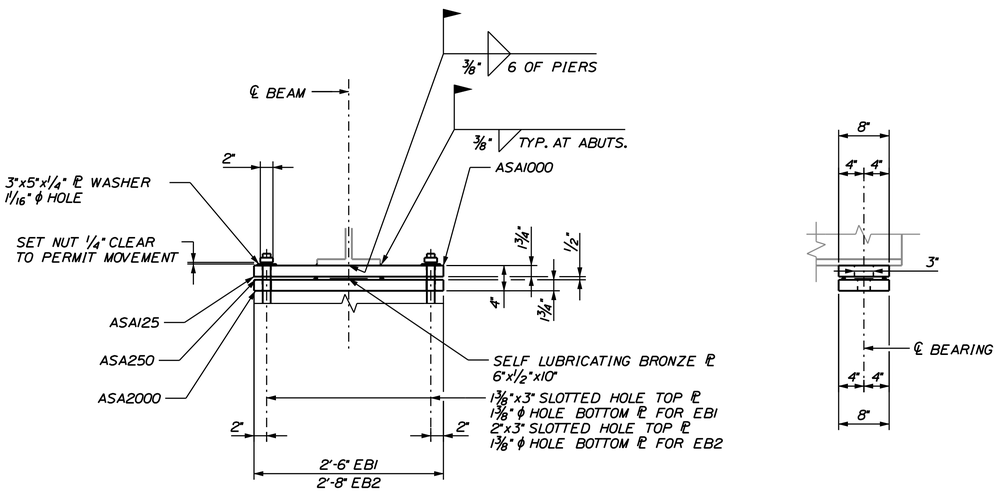

EXPANSION BEARINGS

SCALE: 1"=1'-0"

12 EB1 REQUIRED @ ABUT. #1 & PIERS ON LINES E, F, I, J
24 EB2 REQUIRED @ ABUT. #1 & PIERS ON LINES A THRU D & K THRU N

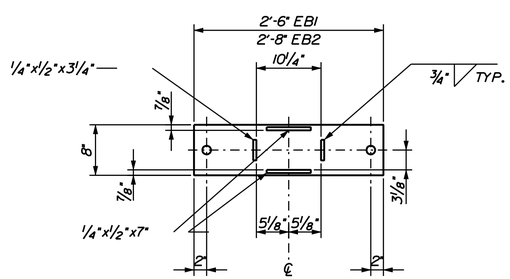

MASONRY PLATE FOR EB1 & EB2

SCALE: 1"=1'-0"

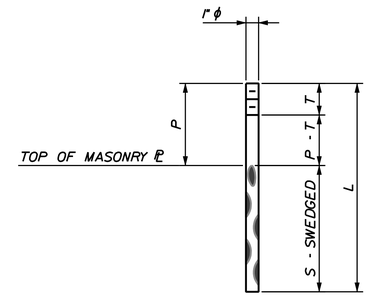

ANCHOR BOLT

SCALE: N.T.S.

ANCHOR BOLTS						
BEARING	P	T	P - T	S	L	REQ'D
EB1	6 1/2"	2 1/2"	4"	10"	1'-4 1/2"	24
EB2	6 1/2"	2 1/2"	4"	10"	1'-4 1/2"	48
FB1	6"	2 1/2"	3 1/2"	10"	1'-4"	8
FB2	6"	2 1/2"	3 1/2"	10"	1'-4"	16

NOTE:
SET ANCHOR BOLTS IN CENTER OF HOLES IN BEARING PLATES AT MEAN OF TEMPERATURE RANGE. CAULK AROUND EDGES OF MASONRY PLATES WITH AN APPROVED CAULKING MATERIAL. PAYMENT FOR THIS WORK SHALL BE INCIDENTAL TO THE CONTRACT ITEMS.

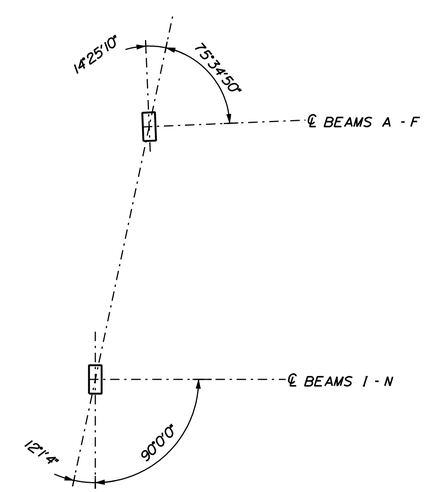

TYPICAL PLACEMENT OF BEARINGS

SCALE: 1/4" = 1'-0"

BEARING NOTES

1. STEEL PLATES SHALL MEET THE REQUIREMENTS OF ASTM A 709/A 709M, GRADE 50 OR 50W. ANCHOR RODS SHALL MEET THE REQUIREMENTS OF ASTM F 1554, GRADE 105 AND SHALL BE SWEDGED ON THE EMBEDDED PORTION OF THE ROD.

2. STEEL PLATES SHALL BE PAINTED IN ACCORDANCE WITH SECTION 506. ANCHOR RODS, WASHERS, NUTS AND SHEAR PINS SHALL BE GALVANIZED TO ASTM A 153 OR ASTM B 695, CLASS 50, TYPE 1.

3. ALL BEARINGS SHALL BE MARKED PRIOR TO SHIPPING. THE MARKS SHALL INCLUDE THE BEARING LOCATION ON THE BRIDGE AND A DIRECTION ARROW WHICH POINTS UPSTATION. ALL MARKS SHALL BE PERMANENT AND SHALL BE VISIBLE AFTER THE BEARING IS INSTALLED.

4. BEARINGS SHALL BE COVERED DURING TRANSIT.

5. UPSET THE THREADS ON THE ANCHOR RODS AFTER ASSEMBLY OF THE BEARING.

6. PRIOR TO REPLACING THE BEARINGS, THE CONTRACTOR SHALL SUBMIT A JACKING PLAN TO THE RESIDENT. THE JACKING PLAN SHALL BE DESIGNED AND STAMPED BY A PROFESSIONAL ENGINEER LICENSED IN THE STATE OF MAINE. ALL COSTS FOR JACKING THE EXISTING BEAMS, REMOVING EXISTING BEARINGS, INCLUDING BEARINGS FOR BEAMS G & H, AND INSTALLING NEW BEARINGS SHALL BE INCIDENTAL TO ITEM 523.52.

STATE OF MAINE
DEPARTMENT OF TRANSPORTATION

IM-1781(400)X

PIN 17814.00

BRIDGE PLANS

5999

		BY	DATE
PROJ. MANAGER	B. CONDON		
DESIGN-DETAILED	TPL	MJC	06\11
CHECKED-REVIEWED	JGS	"	06\11
DESIGN2-DETAILED2	PDD	TPL	06\11
DESIGN3-DETAILED3	"	"	"
REVISIONS 1	"	"	"
REVISIONS 2	"	"	"
REVISIONS 3	"	"	"
REVISIONS 4	"	"	"
FIELD CHANGES	"	"	"

SIGNATURE

P.E. NUMBER

DATE

MAINE CENTRAL RAILROAD BRIDGE
INTERSTATE 95
FAIRFIELD - BENTON SOMERSET & KENNEBEC COUNTIES

BEARING DETAILS

SHEET NUMBER
110
OF 132

Filename: ...\MSTA\110_Bearing_MCRRdet1.dgn Division: HIGHWAY Username: mcarignan Date:6/6/2011

SUPERSTRUCTURE NOTES

1. THE THEORETICAL BLOCKING USED FOR DESIGN OF THE STRUCTURE IS SHOWN ON SHEET 114. REFER TO STANDARD DETAIL 502(02) FOR BLOCKING DETAILS.

2. REINFORCING STEEL SHALL HAVE A MINIMUM CONCRETE COVER OF 2 INCHES UNLESS OTHERWISE NOTED.

3. ADJUST REINFORCING STEEL TO FIT AROUND THE BRIDGE DRAINS IN A MANNER APPROVED BY THE RESIDENT. DO NOT CUT TRANSVERSE REINFORCING BARS.

4. FORM A ONE INCH V-GROOVE ON THE FASCIAS AT THE HORIZONTAL JOINT BETWEEN THE CURB AND SLAB.

5. THE SUPERSTRUCTURE SLAB CONCRETE FOR EACH SPAN SHALL BE PLACED IN ONE CONTINUOUS OPERATION AND SHALL BE KEPT PLASTIC UNTIL THE ENTIRE PLACEMENT HAS BEEN MADE.

6. THE NEW BEARINGS SHALL BE INSTALLED BEFORE ELEVATIONS ARE TAKEN ON THE TOP FLANGES OF THE BEAMS TO DETERMINE BLOCKING.

7. AT THE CONTRACTOR'S OPTION, PRECAST DECK PANELS MAY BE USED IN PLACE OF THE FULL DEPTH CAST-IN-PLACE DECK SLAB, IN ACCORDANCE WITH SPECIAL PROVISIONS SECTION 502, STRUCTURAL CONCRETE - PRECAST DECK PANELS, AND IN ACCORDANCE WITH THE STANDARD DETAILS. THE CONTRACTOR SHALL TAKE SPECIAL CARE TO MAINTAIN THE BOTTOM OF SLAB ELEVATIONS AND FINAL PROFILE GRADES.

8. IF PRECAST DECK PANELS ARE USED, A NON-STANDARD DESIGN MAY BE REQUIRED DUE TO THE NARROW BEAM SPACING. FURTHERMORE, THE SHEAR CONNECTOR SPACING MAY NEED TO BE ADJUSTED.

9. IF PRECAST DECK PANELS ARE USED, THE S553 BARS SHALL BE REVISED TO PROVIDE #5 BARS @ 4½" IN CONJUNCTION WITH THE S550 BARS OVER PIERS 1 THROUGH 4. THE LONGITUDINAL LIMITS OF THESE BARS REMAIN AS SHOWN.

10. IF PRECAST DECK PANELS ARE USED, PAYMENT FOR REINFORCING STEEL FABRICATED, DELIVERED, AND PLACED IN THE CAST-IN-PLACE PORTION OF THE STRUCTURAL CONCRETE SLAB WILL BE CONSIDERED INCIDENTAL TO THE APPROPRIATE SECTION 502 PAY ITEM.

11. THE SEAL TO BE FURNISHED SHALL HAVE A MINIMUM MOVEMENT RATING FOLLOWS:

ABUTMENT NO. 1 = 1⅝ INCH

12. THE RESIDENT SHALL APPROVE THE SEALS PRIOR TO FABRICATION OF THE EXPANSION DEVICE.

13. THE CONTRACTOR SHALL INSTALL TRANSITION BARRIER VERTICAL CLOSED STIRRUPS, AS SHOWN IN STANDARD DETAILS SECTION 526, PRIOR TO THE PLACEMENT OF THE CURB OR SIDEWALK CONCRETE.

14. ALL CONCRETE IN THE EXPANSION DEVICE BLOCKOUTS, CURBS AND TRANSITION BARRIERS SHALL BE CLASS LP.

15. TOP OF BRIDGE CURB ELEVATIONS SHALL BE SET AT 10 FT INTERVALS BASED ON THE FINISH GRADE PROFILE SHOWN ON THE PLANS AND SHALL ACCOUNT FOR ANTICIPATED DEAD LOAD DEFLECTION OF THE BRIDGE CURB AND HOT BITUMINOUS PAVEMENT. THE CONTRACTOR SHALL SUBMIT PROPOSED TOP OF CURB GRADES FOR THE BRIDGE CURB ONE WEEK BEFORE PLACEMENT.

COMPRESSION SEAL ADJUSTMENT CHART

TEMPERATURE	ADJUSTMENT
15° F	+ 5/16"
30° F	+ 1/8"
45° F	0"
60° F	- 1/8"
75° F	- 5/16"
90° F	- 7/16"

POSITIVE ADJUSTMENT INDICATES LARGER OPENING.

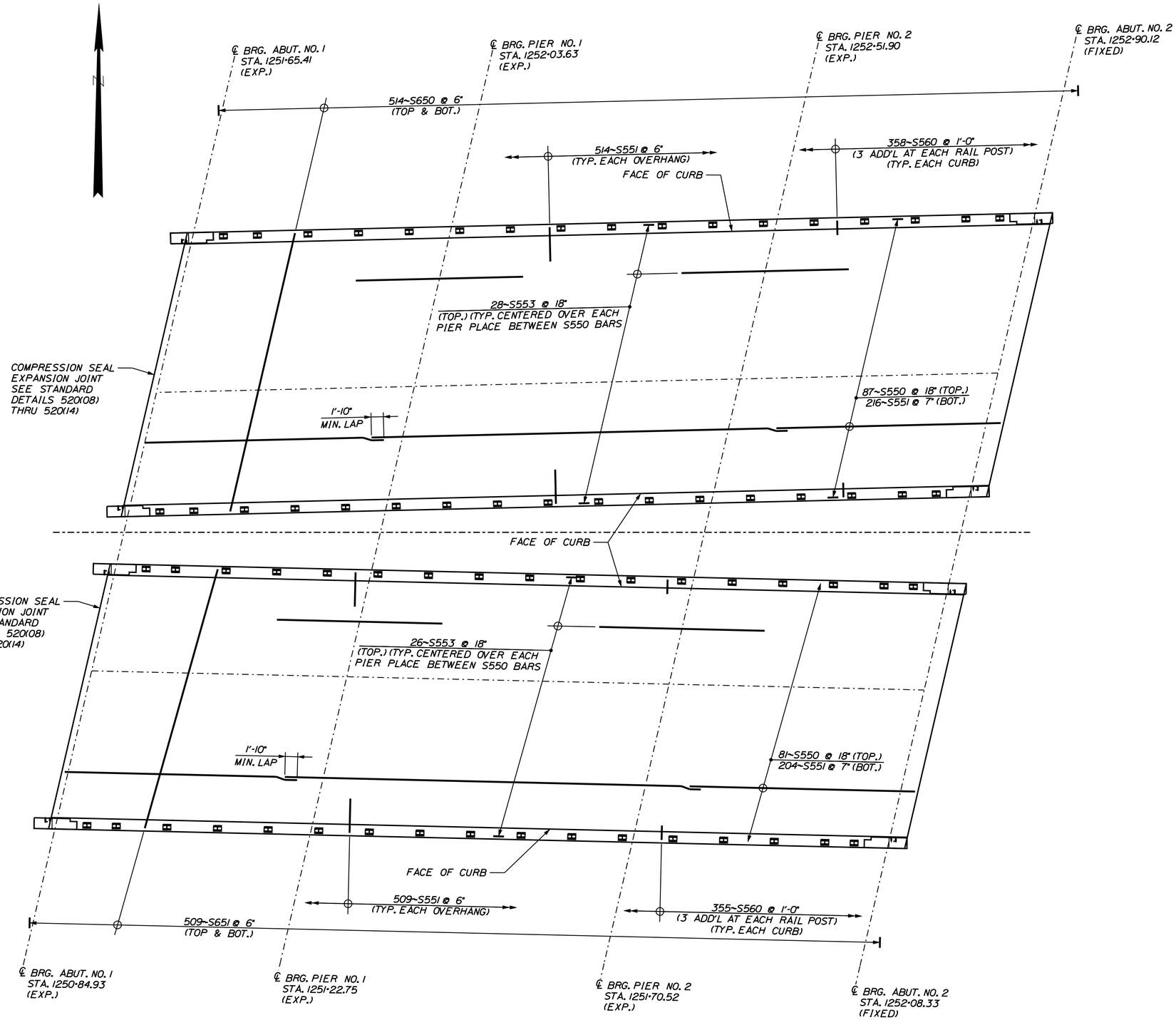

SUPERSTRUCTURE PLAN

SCALE: ⅛" = 1'-0"

STATE OF MAINE
DEPARTMENT OF TRANSPORTATION

IM-1781(400)X

PIN 17814.00

5999

BRIDGE PLANS

PROJ. MANAGER	B. CONDON	BY	DATE
DESIGN-DETAILED	TPL	MJC	06\11
CHECKED-REVIEWED	JGS	..	06\11
DESIGN2-DETAILED2	PDD	TPL	06\11
DESIGN3-DETAILED3	..	..	..
REVISIONS 1	..	..	..
REVISIONS 2	..	..	..
REVISIONS 3	..	..	..
REVISIONS 4	..	..	..
FIELD CHANGES	..	..	..

SIGNATURE

P.E. NUMBER

DATE

MAINE CENTRAL RAILROAD BRIDGE
INTERSTATE 95
FAIRFIELD - BENTON SOMERSET & KENNEBEC COUNTIES

SUPERSTRUCTURE PLAN

SHEET NUMBER

111

OF 132

Filename: ...\111_Superstructure_MCRR.dgn Division: HIGHWAY Username: mcorignon Date:6/8/2011

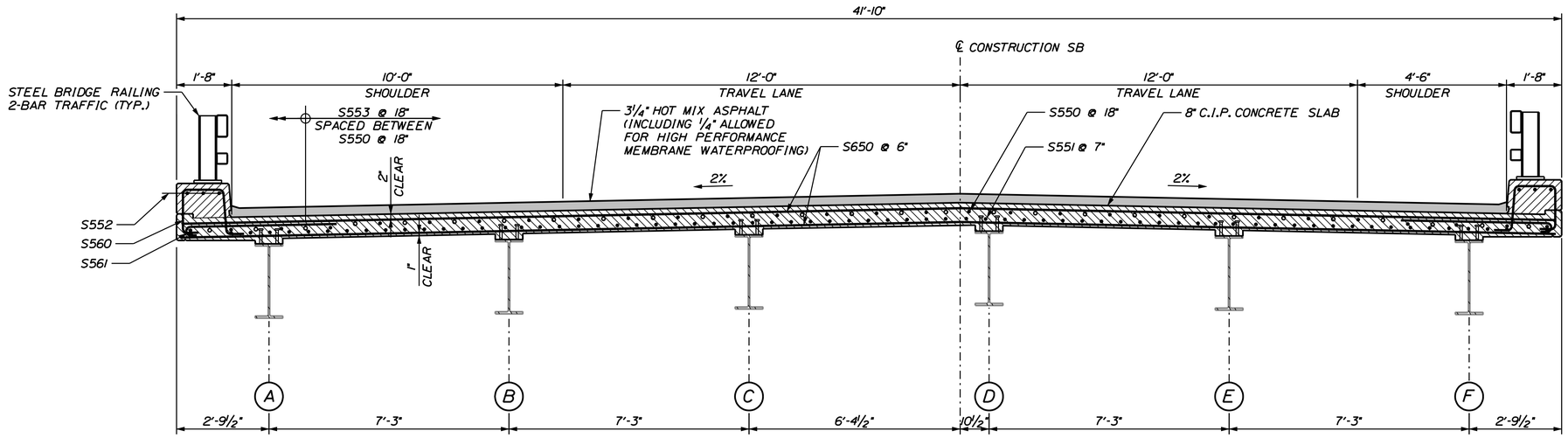

EXISTING STEEL GIRDERS TO REMAIN (TYP)

TRANSVERSE SECTION - SOUTHBOUND

SCALE: ½" = 1'-0"

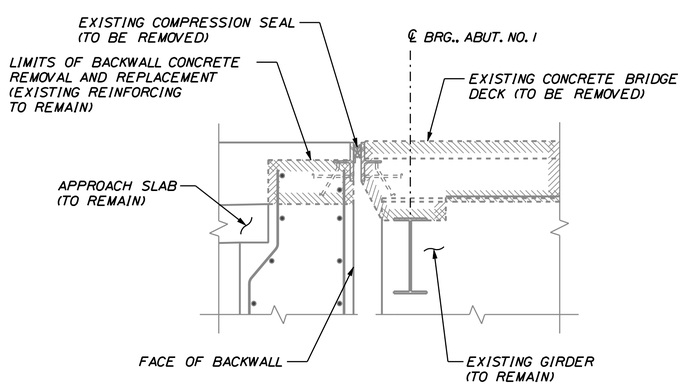

ABUTMENT NO. 1 JOINT REMOVAL DETAIL

SCALE: ¾" = 1'-0"

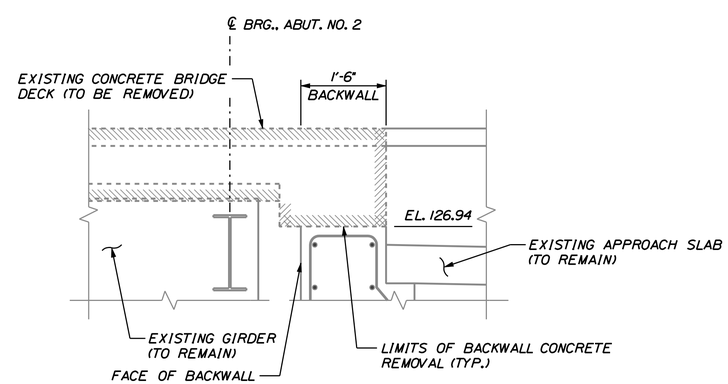

ABUTMENT NO. 2 DECK REMOVAL DETAIL

SCALE: ¾" = 1'-0"

STATE OF MAINE
DEPARTMENT OF TRANSPORTATION

IM-1781(400)X

PIN 17814.00

5999

BRIDGE PLANS

PROJ. MANAGER	B. CONDON	BY	DATE
DESIGN-DETAILED	TPL	MJC	06\11
CHECKED-REVIEWED	JGS	--	06\11
DESIGN2-DETAILED2	PDD	TPL	06\11
DESIGN3-DETAILED3	--	--	--
REVISIONS 1	--	--	--
REVISIONS 2	--	--	--
REVISIONS 3	--	--	--
REVISIONS 4	--	--	--
FIELD CHANGES	--	--	--

SIGNATURE

P.E. NUMBER

DATE

MAINE CENTRAL RAILROAD BRIDGE
INTERSTATE 95
FAIRFIELD - BENTON SOMERSET & KENNEBEC COUNTIES

SUPERSTRUCTURE DETAILS 1

SHEET NUMBER

112

OF 132

Filename: ...\112_Superstructure_MCRRsectNB.dgn Division: HIGHWAY Username: mcarignan Date:6/6/2011

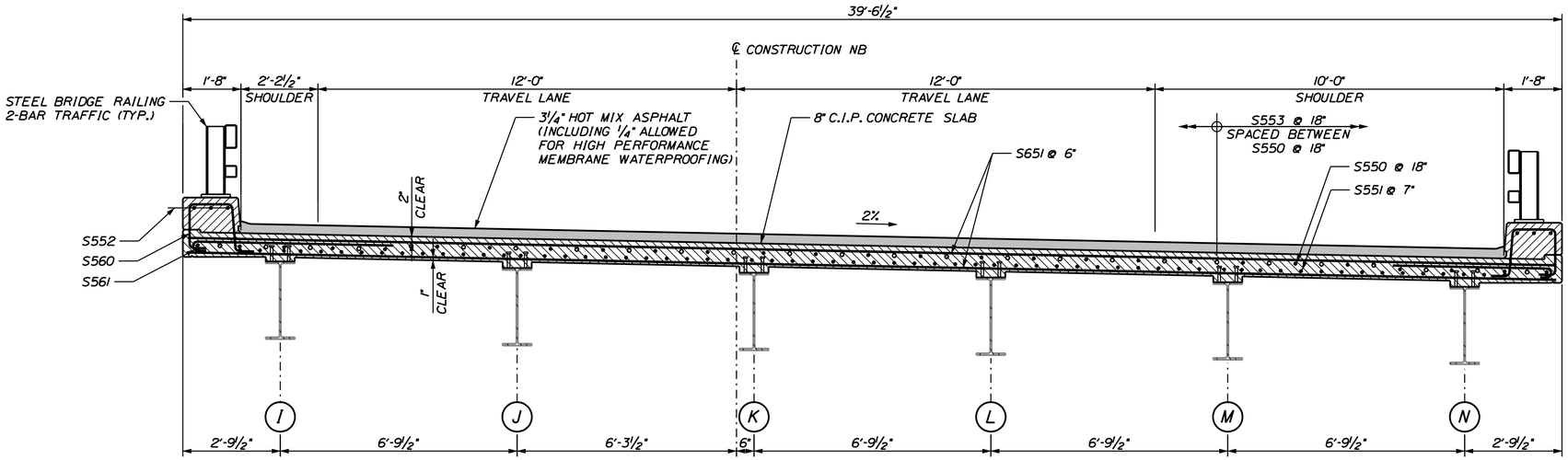

EXISTING STEEL GIRDERS TO REMAIN (TYP)

TRANSVERSE SECTION - NORTHBOUND

SCALE: ½" = 1'-0"

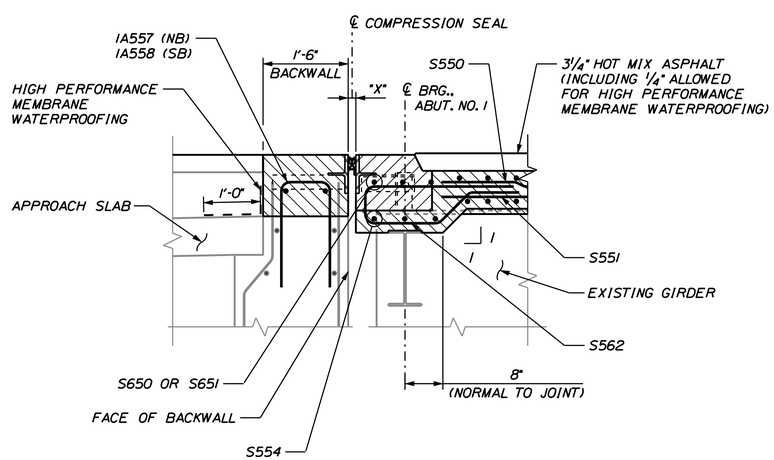

ABUTMENT NO. 1 DECK END SECTION

SCALE: ¾" = 1'-0"

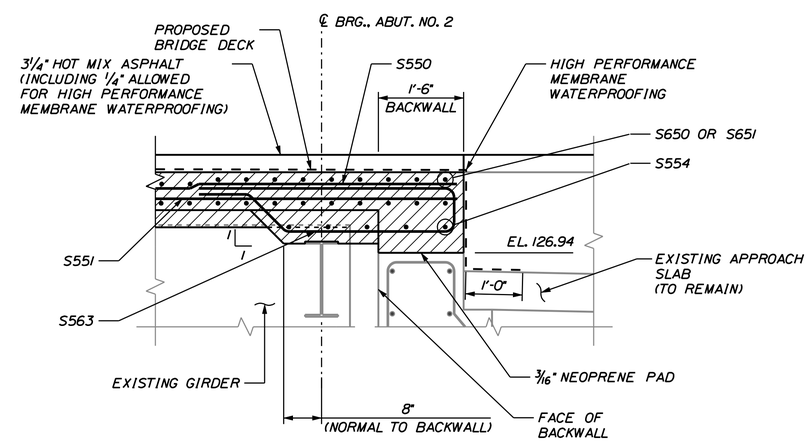

ABUTMENT NO. 2 DECK END SECTION

SCALE: ¾" = 1'-0"

STATE OF MAINE
DEPARTMENT OF TRANSPORTATION

IM-1781(400)X

PIN
17814.00

5999

BRIDGE PLANS

PROJ. MANAGER	B. CONDON	BY	DATE
DESIGN-DETAILED	TPL	MJC	06\11
CHECKED-REVIEWED	JGS	--	06\11
DESIGN2-DETAILED2	PDD	TPL	06\11
DESIGN3-DETAILED3	--	--	--
REVISIONS 1	--	--	--
REVISIONS 2	--	--	--
REVISIONS 3	--	--	--
REVISIONS 4	--	--	--
FIELD CHANGES	--	--	--

SIGNATURE

P.E. NUMBER

DATE

MAINE CENTRAL RAILROAD BRIDGE
INTERSTATE 95
FAIRFIELD - BENTON SOMERSET & KENNEBEC COUNTIES

SUPERSTRUCTURE DETAILS 2

SHEET NUMBER
113
OF 132

Filename: ...\113_Superstructure_MCRRsectSB.dgn Division: HIGHWAY Username: mcorignon Date:6/10/2011

BOTTOM OF SLAB ELEVATION TABLE - SOUTHBOUND SPAN 1											
LOCATION	℄ BRG ABUT. 1	1	2	3	4	5	6	7	8	9	℄ BRG PIER 1
A	128.44	128.43	128.41	128.39	128.37	128.35	128.33	128.30	128.28	128.26	128.23
B	128.60	128.58	128.57	128.55	128.53	128.51	128.48	128.46	128.44	128.41	128.39
C	128.75	128.74	128.72	128.70	128.68	128.66	128.64	128.62	128.59	128.57	128.54
D	128.87	128.86	128.84	128.82	128.80	128.78	128.76	128.74	128.71	128.69	128.66
E	128.74	128.72	128.71	128.69	128.67	128.65	128.62	128.60	128.58	128.55	128.53
F	128.60	128.59	128.57	128.55	128.53	128.51	128.49	128.46	128.44	128.42	128.39

BOTTOM OF SLAB ELEVATION TABLE - SOUTHBOUND SPAN 2											
LOCATION	℄ BRG PIER 1	1	2	3	4	5	6	7	8	9	℄ BRG PIER 2
A	128.23	128.21	128.19	128.17	128.15	128.13	128.10	128.07	128.04	128.00	127.97
B	128.39	128.37	128.35	128.33	128.31	128.28	128.25	128.22	128.19	128.16	128.13
C	128.54	128.52	128.50	128.48	128.46	128.44	128.41	128.38	128.35	128.31	128.28
D	128.66	128.64	128.62	128.60	128.58	128.56	128.53	128.50	128.47	128.43	128.40
E	128.53	128.51	128.49	128.47	128.45	128.42	128.39	128.36	128.33	128.30	128.27
F	128.39	128.37	128.35	128.33	128.31	128.29	128.26	128.23	128.20	128.16	128.13

BOTTOM OF SLAB ELEVATION TABLE - SOUTHBOUND SPAN 3											
LOCATION	℄ BRG PIER 2	1	2	3	4	5	6	7	8	9	℄ BRG ABUT. 2
A	127.98	127.95	127.94	127.92	127.90	127.89	127.87	127.84	127.82	127.79	127.77
B	128.13	128.11	128.09	128.08	128.06	128.04	128.02	128.00	127.98	127.95	127.92
C	128.29	128.26	128.25	128.23	128.21	128.20	128.18	128.16	128.13	128.11	128.08
D	128.41	128.38	128.37	128.35	128.34	128.32	128.30	128.28	128.25	128.23	128.20
E	128.27	128.25	128.23	128.22	128.20	128.18	128.16	128.14	128.12	128.09	128.06
F	128.14	128.11	128.10	128.08	128.06	128.05	128.03	128.00	127.98	127.96	127.93

BOTTOM OF SLAB ELEVATION TABLE - NORTHBOUND SPAN 1											
LOCATION	℄ BRG ABUT. 1	1	2	3	4	5	6	7	8	9	℄ BRG PIER 1
I	128.66	128.65	128.64	128.62	128.61	128.59	128.57	128.55	128.52	128.50	128.49
J	128.53	128.52	128.51	128.49	128.48	128.46	128.44	128.42	128.40	128.38	128.36
K	128.40	128.39	128.38	128.36	128.35	128.33	128.31	128.29	128.27	128.25	128.23
L	128.28	128.26	128.25	128.24	128.22	128.20	128.18	128.16	128.14	128.12	128.10
M	128.15	128.13	128.12	128.11	128.09	128.07	128.05	128.03	128.01	127.99	127.97
N	128.02	128.00	127.99	127.98	127.96	127.94	127.92	127.90	127.88	127.86	127.84

BOTTOM OF SLAB ELEVATION TABLE - NORTHBOUND SPAN 2											
LOCATION	℄ BRG PIER 1	1	2	3	4	5	6	7	8	9	℄ BRG PIER 2
I	128.49	128.47	128.45	128.44	128.42	128.40	128.37	128.35	128.32	128.29	128.27
J	128.36	128.34	128.32	128.31	128.29	128.27	128.25	128.22	128.19	128.16	128.14
K	128.23	128.21	128.19	128.18	128.16	128.14	128.12	128.09	128.06	128.03	128.01
L	128.10	128.08	128.06	128.05	128.03	128.01	127.99	127.96	127.93	127.90	127.88
M	127.97	127.95	127.93	127.92	127.90	127.88	127.86	127.83	127.80	127.77	127.75
N	127.84	127.82	127.81	127.79	127.77	127.75	127.73	127.70	127.67	127.64	127.62

BOTTOM OF SLAB ELEVATION TABLE - NORTHBOUND SPAN 3											
LOCATION	℄ BRG PIER 2	1	2	3	4	5	6	7	8	9	℄ BRG ABUT. 2
I	128.27	128.25	128.24	128.22	128.21	128.19	128.18	128.16	128.14	128.11	128.09
J	128.14	128.12	128.11	128.09	128.08	128.06	128.05	128.03	128.01	127.98	127.96
K	128.01	127.99	127.98	127.96	127.95	127.94	127.92	127.90	127.88	127.85	127.83
L	127.88	127.86	127.85	127.83	127.82	127.81	127.79	127.77	127.75	127.73	127.70
M	127.75	127.73	127.72	127.71	127.69	127.68	127.66	127.64	127.62	127.60	127.57
N	127.62	127.60	127.59	127.58	127.56	127.55	127.53	127.51	127.49	127.47	127.44

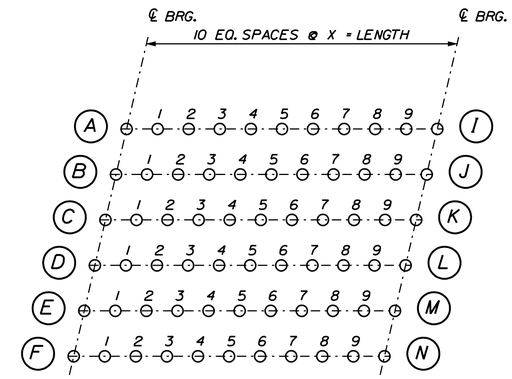

BOTTOM OF SLAB ELEVATION LAYOUT PLAN

NOT TO SCALE

LAYOUT TABLE			
SPAN	GIRDER	X	LENGTH
1	A - F	3'-9 7/8"	38'-2 5/8"
2	A - F	4'-9 15/16"	48'-3 1/4"
3	A - F	3'-9 7/8"	38'-2 5/8"
1	I - N	3'-9 3/8"	37'-10"
2	I - N	4'-9 3/8"	47'-9 5/8"
3	I - N	3'-9 3/8"	37'-10"

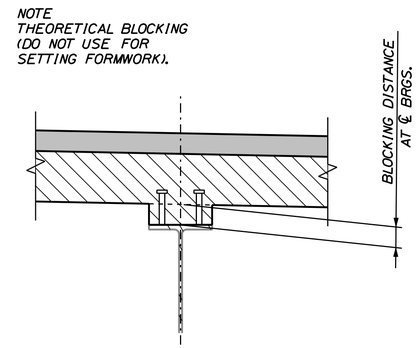

SLAB HAUNCH & BLOCKING DETAIL

SCALE: 1" = 1'-0"

THEORETICAL BLOCKING		
SPAN	ABUTMENT	PIER
SB	1 7/8"	2 5/8"
NB	1 3/4"	2 1/2"

STATE OF MAINE
DEPARTMENT OF TRANSPORTATION

IM-1781(400)X

PIN 17814.00

BRIDGE PLANS

5999

PROJ. MANAGER	B. CONDON	BY	DATE
DESIGN-DETAILED	TPL	MJC	06\11
CHECKED-REVIEWED	JGS	--	06\11
DESIGN2-DETAILED2	PDD	TPL	06\11
DESIGN3-DETAILED3	--	--	--
REVISIONS 1	--	--	--
REVISIONS 2	--	--	--
REVISIONS 3	--	--	--
REVISIONS 4	--	--	--
FIELD CHANGES	--	--	--

SIGNATURE

P.E. NUMBER

DATE

MAINE CENTRAL RAILROAD BRIDGE
INTERSTATE 95
FAIRFIELD - BENTON SOMERSET & KENNEBEC COUNTIES

SUPERSTRUCTURE DETAILS 3

SHEET NUMBER

114

OF 132

Filename: ...\114_Superstructure_MCRRslab.dgn Division: HIGHWAY Username: mcarignan Date:6/6/2011

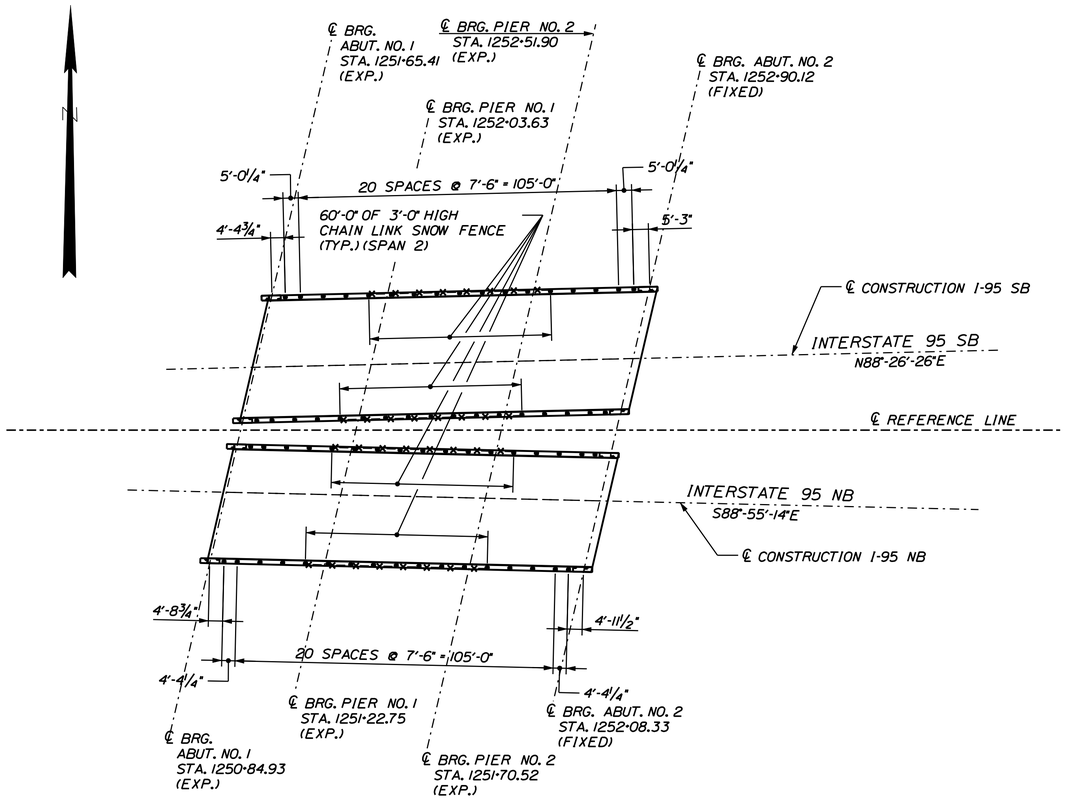

RAIL LAYOUT PLAN

25 0 25 50

SCALE OF FEET

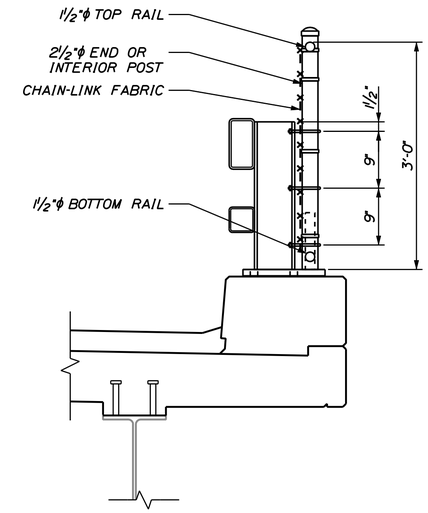

TRAFFIC RAIL SECTION

SCALE: 1"=1'-0"

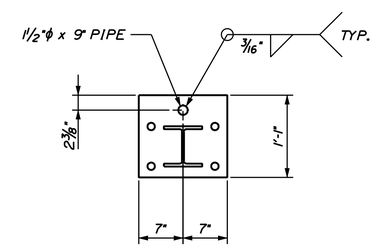

MODIFIED BASE PLATE PLAN

SCALE: 1"=1'-0"

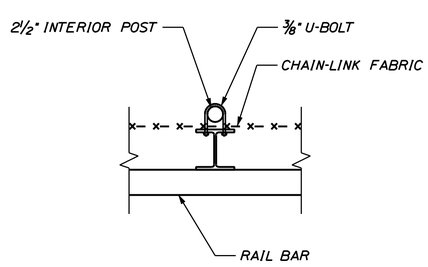

LINE POST DETAIL

SCALE: 1"=1'-0"

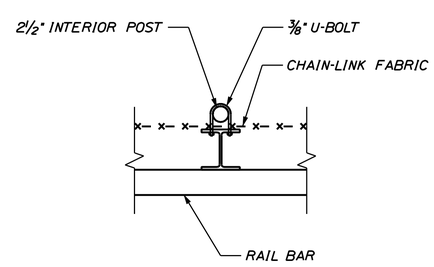

LINE POST DETAIL

SCALE: 1"=1'-0"

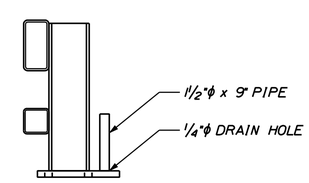

MODIFIED RAIL POST SECTION

SCALE: 1"=1'-0"

STATE OF MAINE
DEPARTMENT OF TRANSPORTATION

IM-1781(400)X

PIN 17814.00

5999

BRIDGE PLANS

		BY	DATE
PROJ. MANAGER	B. CONDON		
DESIGN-DETAILED	TPL	MJC	06\11
CHECKED-REVIEWED	JCS	--	06\11
DESIGN2-DETAILED2	PDD	TPL	06\11
DESIGN3-DETAILED3	--	--	--
REVISIONS 1	--		--
REVISIONS 2	--		--
REVISIONS 3	--		--
REVISIONS 4	--		--
FIELD CHANGES	--		--

SIGNATURE

P.E. NUMBER

DATE

MAINE CENTRAL RAILROAD BRIDGE
INTERSTATE 95
FAIRFIELD - BENTON SOMERSET & KENNEBEC COUNTIES

RAILING DETAILS

SHEET NUMBER

115

OF 132

Filename: ...\115_Superstructure_MCRRroll.dgn Division: HIGHWAY Username: mcarignan Date:6/6/2011

REINFORCING STEEL SCHEDULE

STRAIGHT BARS - MCRR			
MARK	QTY.	LENGTH	LOCATION
S550	168	44'-0"	DECK LONGITUDINAL (TOP)
S551	420	44'-0"	DECK LONGITUDINAL (BOT)
S552	36	44'-0"	CURB LONGITUDINAL
S553	108	17'-0"	DECK LONGITUDINAL NEG. MOMENT REGION (TOP)
S554	60	6'-0"	DECK PARALLEL TO BRG (BETWEEN GIRDERS)
1A550	4	40'-10"	ABUTMENT BACKWALL
1A554	4	19'-4"	ABUTMENT BACKWALL
1A555	4	24'-2"	ABUTMENT BACKWALL
2A550	6	2'-4"	ABUTMENT BACKWALL
S650	514	41'-6"	SOUTHBOUND - DECK TRANSVERSE (TOP & BTM)
S651	509	39'-2 1/2"	NORTHBOUND - DECK TRANSVERSE (TOP & BTM)
TB1600	80	†	TRANSITION BARRIER REINF.
TB1601	16	†	TRANSITION BARRIER REINF.
TB1602	16	†	TRANSITION BARRIER REINF.
TB1603	16	†	TRANSITION BARRIER REINF.
TB1604	16	†	TRANSITION BARRIER REINF.
TB1605	16	†	TRANSITION BARRIER REINF.
			† REF. MAINE DOT STD. DETAILS 526(33) FOR DIMENSIONS

BENT BARS - MCRR														
MARK	QTY.	LENGTH	TYPE	A	B	C	D	E	F	G	H	O	R	LOCATION
S560	713	5'-7"	SC	10"	1'-4"	1'-3"	1'-4"			10"		1'-4"		CURB STIRRUPS
S561	1022	4'-5 1/2"	C	5"	3'-11"	---					5"			DECK OVERHANG REINF.
S562	60	8'-0 1/4"	SJ	1'-10"	8 1/4"	1'-2 3/4"	8 1/4"	3'-7"						ABUTMENT 1 (BETWEEN GIRDERS)
S563	60	12'-3 7/8"	SJ	1'-10"	10 3/8"	3'-0 3/4"	11 3/4"	5'-7"						ABUTMENT 2 (BETWEEN GIRDERS)
1A551	4	6'-8 1/2"	H	3 3/4"	2'-0"	1'-0 1/2"	2'-0"	1'-0 1/2"		3 3/4"				ABUTMENT 1 BACKWALL
1A552	2	6'-0 1/2"	H	3 3/4"	1'-8"	1'-0 1/2"	1'-8"	1'-0 1/2"		3 3/4"				ABUTMENT 1 BACKWALL
1A553	2	5'-6 1/2"	H	3 3/4"	1'-5"	1'-0 1/2"	1'-5"	1'-0 1/2"		3 3/4"				ABUTMENT 1 BACKWALL
1A556	12	4'-4"	S		1'-7"	1'-2"	1'-7"							ABUTMENT 1 BACKWALL
1A557	41	5'-3 1/2"	S		2'-7 3/4"	1'-2"	2'-7 3/4"							ABUTMENT 1 BACKWALL
1A558	42	7'-4"	S		3'-3"	1'-2"	3'-3"							ABUTMENT 1 BACKWALL
2A551a	1	8'-8"	S		3'-9"	1'-2"	3'-9"							ABUTMENT BACKWALL
2A551b	1	8'-6"	S		3'-8"	1'-2"	3'-8"							ABUTMENT BACKWALL
2A551c	1	8'-5 1/2"	S		3'-7 3/4"	1'-2"	3'-7 3/4"							ABUTMENT BACKWALL
2A551d	1	8'-4 1/2"	S		3'-7 1/4"	1'-2"	3'-7 1/4"							ABUTMENT BACKWALL
2A551e	1	8'-3 1/2"	S		3'-6 3/4"	1'-2"	3'-6 3/4"							ABUTMENT BACKWALL
2A551f	1	8'-2 1/2"	S		3'-6 1/4"	1'-2"	3'-6 1/4"							ABUTMENT BACKWALL
2A551g	1	8'-1 1/2"	S		3'-5 3/4"	1'-2"	3'-5 3/4"							ABUTMENT BACKWALL
2A551h	1	8'-0 1/2"	S		3'-5 1/4"	1'-2"	3'-5 1/4"							ABUTMENT BACKWALL
2A551i	1	7'-11 1/2"	S		3'-4 3/4"	1'-2"	3'-4 3/4"							ABUTMENT BACKWALL
2A551j	1	7'-10 1/2"	S		3'-4 1/4"	1'-2"	3'-4 1/4"							ABUTMENT BACKWALL
2A551k	1	7'-10"	S		3'-4"	1'-2"	3'-4"							ABUTMENT BACKWALL
TB1650	40		REF. MAINE DOT STD. DETAILS 526(33) FOR DIMENSIONS											TRANSITION BARRIER REINF.
TB1951	16		REF. MAINE DOT STD. DETAILS 526(33) FOR DIMENSIONS											TRANSITION BARRIER REINF.
TB1952	40		REF. MAINE DOT STD. DETAILS 526(33) FOR DIMENSIONS											TRANSITION BARRIER REINF.

GENERAL NOTES

1. THE FIRST DIGIT FOLLOWING THE LETTER(S) OF THE MARK INDICATE THE SIZE OF THE BAR:

MARK "A502" = BAR SIZE #5
MARK "P801" = BAR SIZE #8
MARK "S650" = BAR SIZE #6

TYPE - BENDING DIAGRAMS

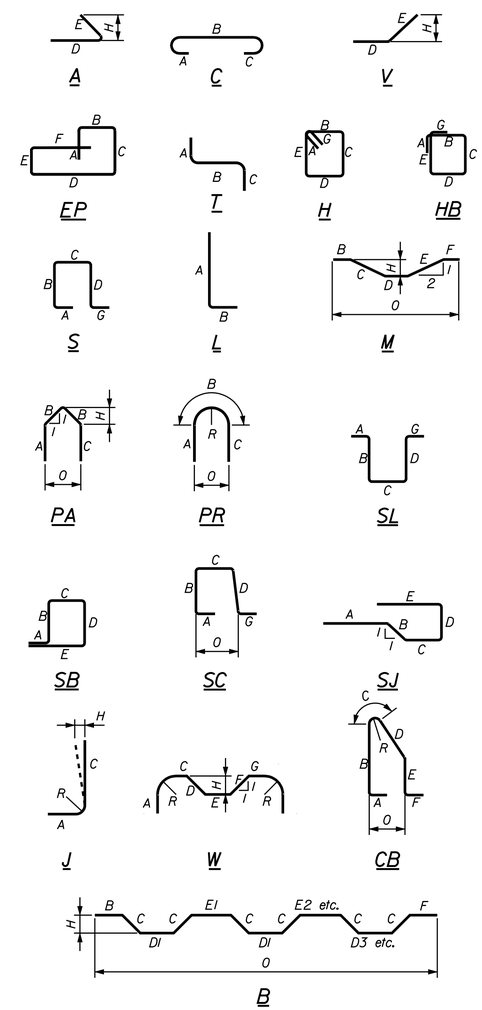

ALL DIMENSIONS ARE OUT-TO-OUT OF BAR.

BENDING DETAILS AND HOOKS SHALL CONFORM TO THE RECOMMENDATIONS OF THE CURRENT REVISION OF ACI STANDARD 318.

REINFORCING BAR: ASTM A615/A615M, GRADE 60

STATE OF MAINE
DEPARTMENT OF TRANSPORTATION

IM-1781(400)X

PIN 17814.00

BRIDGE PLANS

5999

PROJ. MANAGER	B. CONDON	BY	DATE
DESIGN-DETAILED	TPL	MJC	06\11
CHECKED-REVIEWED	JGS	--	06\11
DESIGN2-DETAILED2	PDD	TPL	06\11
DESIGN3-DETAILED3	--	--	--
REVISIONS 1	--	--	--
REVISIONS 2	--	--	--
REVISIONS 3	--	--	--
REVISIONS 4	--	--	--
FIELD CHANGES	--	--	--

SIGNATURE

P.E. NUMBER

DATE

MAINE CENTRAL RAILROAD BRIDGE
INTERSTATE 95
FAIRFIELD - BENTON SOMERSET & KENNEBEC COUNTIES

REINFORCING STEEL SCHEDULE

SHEET NUMBER
116
OF 132

Filename: ...\116_Superstructure_MCRRreinfSch.dgn Division: HIGHWAY Username: mcorignon Date:6/6/2011

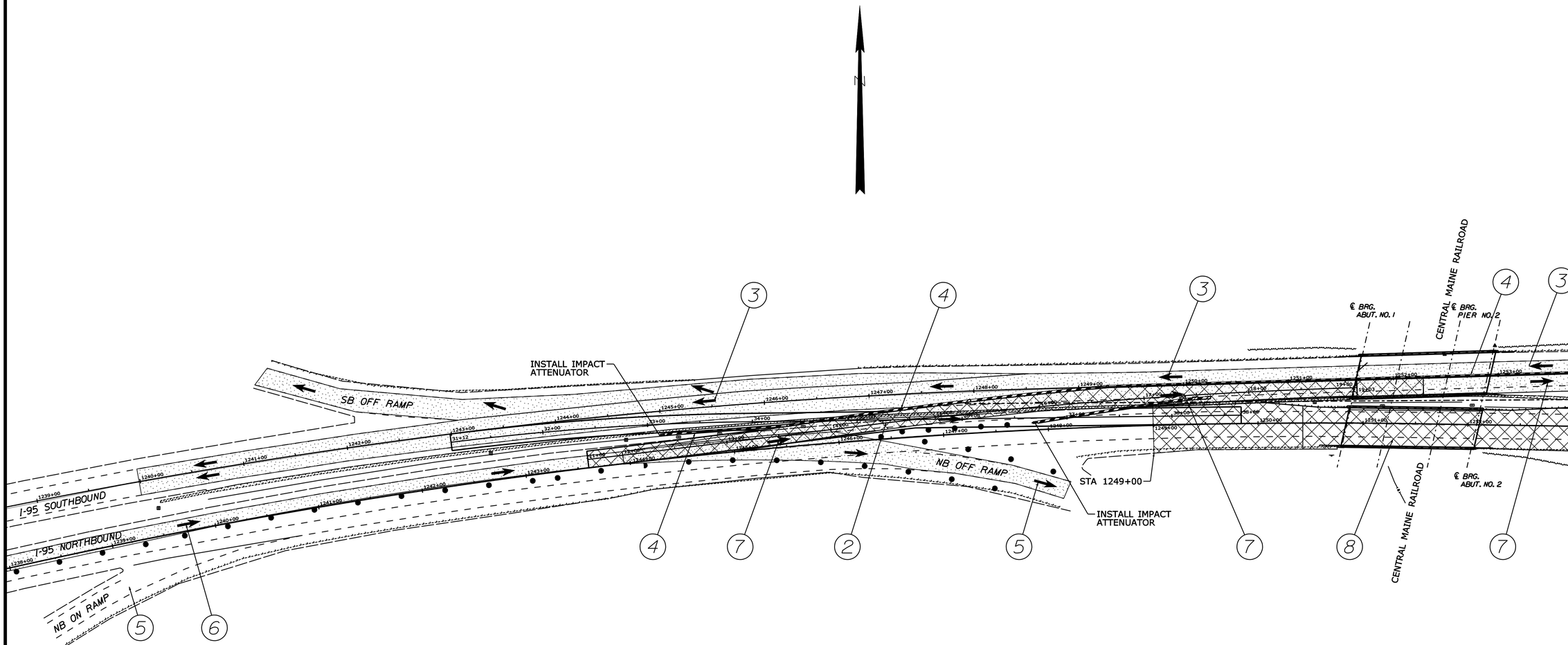
N
SB OFF RAMP
I-95 SOUTHBOUND
I-95 NORTHBOUND
NB ON RAMP
NB OFF RAMP
INSTALL IMPACT ATTENUATOR
STA 1249+00
INSTALL IMPACT ATTENUATOR
CENTRAL MAINE RAILROAD
℄ BRG. ABUT. NO. 1
℄ BRG. PIER NO. 2
℄ BRG. ABUT. NO. 2
CENTRAL MAINE RAILROAD
1238+00
1239+00
1240+00
1241+00
1242+00
1243+00
1244+00
1245+00
1246+00
1247+00
1248+00
1249+00
1250+00
1251+00
1252+00
1253+00
31+12
32+00
33+00
34+00
35+00
36+00
37+00
38+00
39+00
40+00
41+00
42+00
43+00
44+00
45+00
46+00
47+00
48+00
49+00
50+00
51+00
52+00
53+00
54+00
55+00
56+00
57+00
58+00
59+00
60+00
61+00
62+00
63+00
64+00
65+00
66+00
67+00
68+00
69+00
70+00
71+00

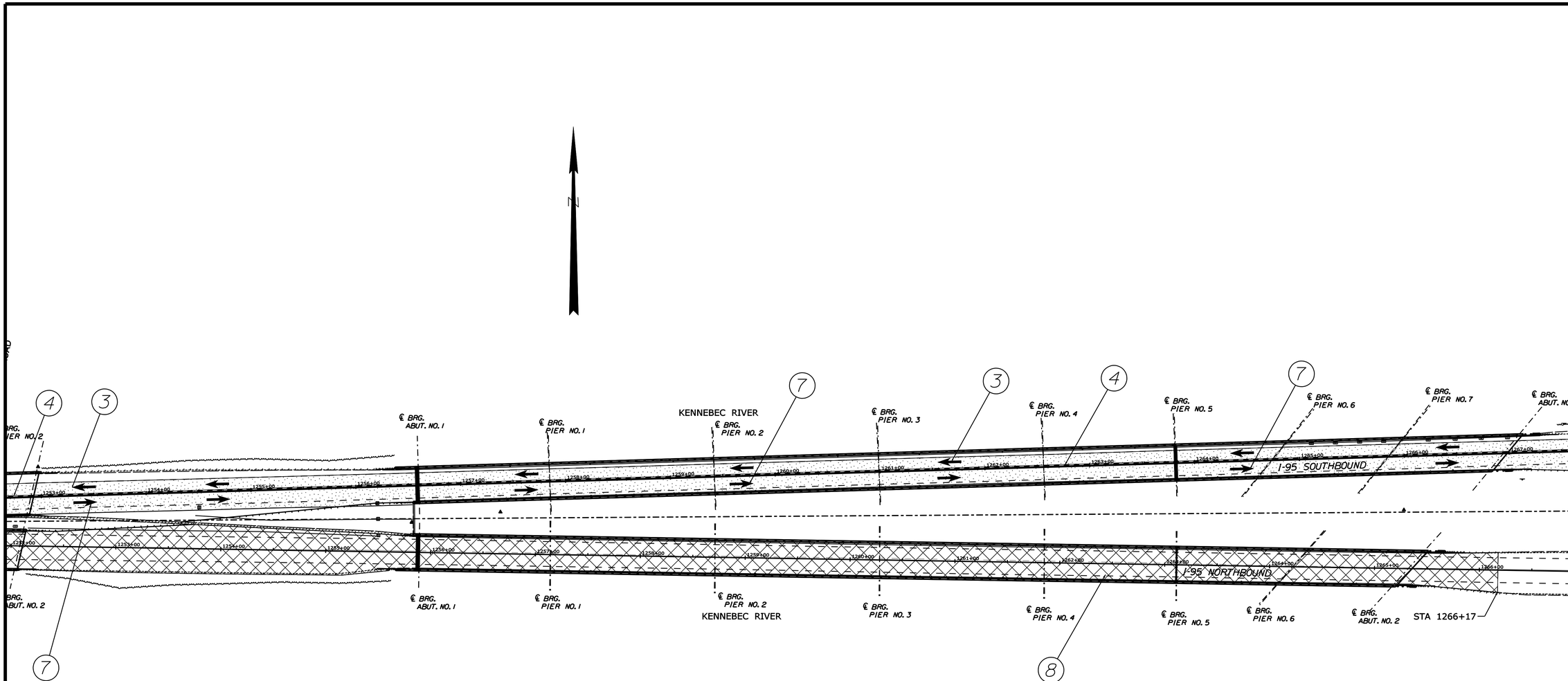

CONSTRUCTION STAGING

STAGE 1

1. CONSTRUCT EMERGENCY MEDIAN CROSSOVER. (STA 1280+00±).
2. CONSTRUCT CROSSOVERS FOR NORTHBOUND TRAFFIC TO SOUTHBOUND BARREL AND BACK TO NORTHBOUND.
3. RESTRICT SOUTHBOUND TRAFFIC TO ONE LANE. SEE TRAFFIC CONTROL PLANS.
4. INSTALL PRECAST CONCRETE BARRIER ALONG SOUTHBOUND CENTERLINE.
5. CLOSE NORTHBOUND ON RAMP. MAINTAIN NORTHBOUND OFF RAMP.
6. RESTRICT NORTHBOUND TRAFFIC TO ONE LANE. SEE TRAFFIC CONTROL PLANS.
7. SHIFT NORTHBOUND TRAFFIC TO CROSSOVERS AND SOUTHBOUND BARREL.
8. CONSTRUCT MCRR AND CLAUSON NORTHBOUND BRIDGES AND APPROACHES.

REMOVE TRAFFIC FROM CROSSOVERS. REMOVE BARRIER AND SHIFT TRAFFIC BACK TO NORTHBOUND AND SOUTHBOUND BARRELS AT THE COMPLETION OF STAGE 1.

NOTES:

1. MAINTAIN 12 FT. LANE WIDTHS MINIMUM.

NOT TO SCALE

LEGEND

- ROAD OPEN TO TRAFFIC
- TRAFFIC FLOW
- UNDER CONSTRUCTION
- PRECAST BARRIERS
- DRUMS

STATE OF MAINE
DEPARTMENT OF TRANSPORTATION

IM-1668(600)E, IM-A670(000)E & BR-1781(400)X

PIN
PIN 16686.00, 16700.00 & 17814.00 HIGHWAY PLANS

		BY	DATE
PROJ. MANAGER			
DESIGN-DETAILED	TPL	MJC	06\11
CHECKED-REVIEWED	JGS	--	06\11
DESIGN2-DETAILED2	PDD	TPL	06\11
DESIGN3-DETAILED3		--	--
REVISIONS 1	--	--	--
REVISIONS 2	--	--	--
REVISIONS 3	--	--	--
REVISIONS 4	--	--	--
FIELD CHANGES	--	--	--

SIGNATURE

P.E. NUMBER

DATE

FAIRFIELD - BENTON
INTERSTATE 95

STAGE 1 CONSTRCUTION PLAN 2

SHEET NUMBER
118
OF 132

Filename: ...\118_Stage Const Plans_2.dgn Division: HIGHWAY Username: thigginson Date:6/20/2011

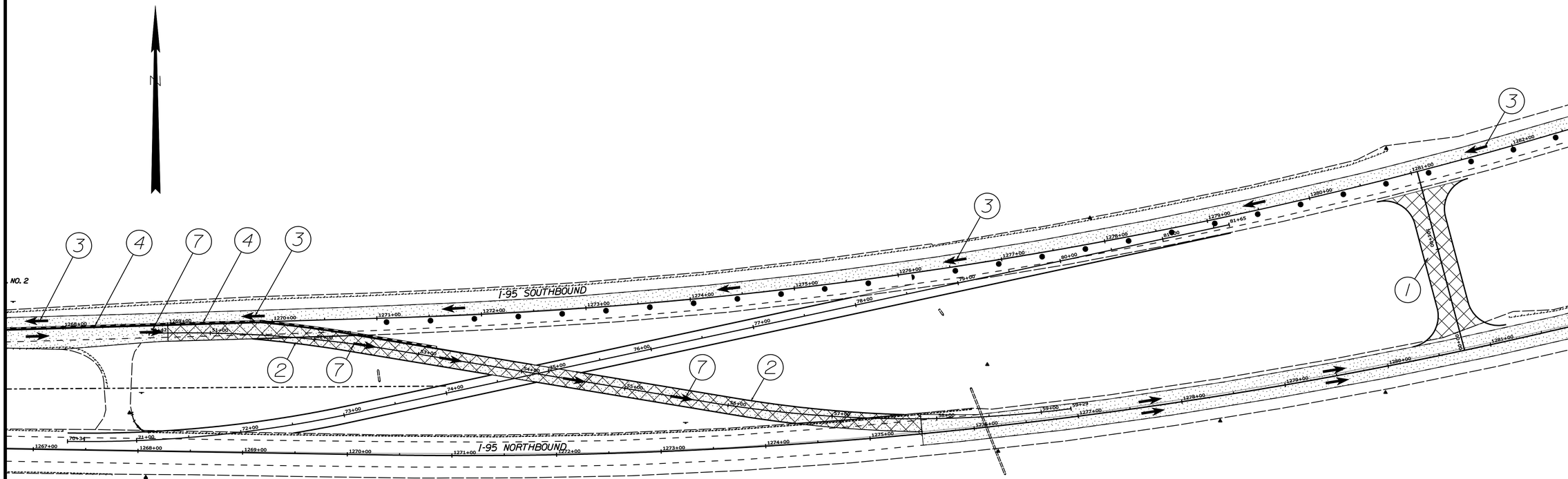

CONSTRUCTION STAGING

STAGE 1

1. CONSTRUCT EMERGENCY MEDIAN CROSSOVER. (STA 1280+00±).
2. CONSTRUCT CROSSOVERS FOR NORTHBOUND TRAFFIC TO SOUTHBOUND BARREL AND BACK TO NORTHBOUND.
3. RESTRICT SOUTHBOUND TRAFFIC TO ONE LANE. SEE TRAFFIC CONTROL PLANS.
4. INSTALL PRECAST CONCRETE BARRIER ALONG SOUTHBOUND CENTERLINE.
5. CLOSE NORTHBOUND ON RAMP. MAINTAIN NORTHBOUND OFF RAMP.
6. RESTRICT NORTHBOUND TRAFFIC TO ONE LANE. SEE TRAFFIC CONTROL PLANS.
7. SHIFT NORTHBOUND TRAFFIC TO CROSSOVERS AND SOUTHBOUND BARREL.
8. CONSTRUCT MCRR AND CLAUSON NORTHBOUND BRIDGES AND APPROACHES.

REMOVE TRAFFIC FROM CROSSOVERS. REMOVE BARRIER AND SHIFT TRAFFIC BACK TO NORTHBOUND AND SOUTHBOUND BARRELS AT THE COMPLETION OF STAGE 1.

NOTES:

1. MAINTAIN 12 FT. LANE WIDTHS MINIMUM.

NOT TO SCALE

LEGEND

- ROAD OPEN TO TRAFFIC
- TRAFFIC FLOW
- UNDER CONSTRUCTION
- PRECAST BARRIERS
- DRUMS

STATE OF MAINE
DEPARTMENT OF TRANSPORTATION

IM-1668(600)E, IM-A670(000)E & BR-1781(400)X

PIN
PIN 16686.00, 16700.00 & 17814.00 HIGHWAY PLANS

PROJ. MANAGER	B. CONDON	BY	DATE
DESIGN-DETAILED	TPL	MJC	06\11
CHECKED-REVIEWED	JGS	--	06\11
DESIGN2-DETAILED2	PDD	TPL	06\11
DESIGN3-DETAILED3	--	--	--
REVISIONS 1	--	--	--
REVISIONS 2	--	--	--
REVISIONS 3	--	--	--
REVISIONS 4	--	--	--
FIELD CHANGES	--	--	--

SIGNATURE

P.E. NUMBER

DATE

FAIRFIELD - BENTON
INTERSTATE 95

STAGE 1 CONSTRUCTION PLAN 3

SHEET NUMBER
119
OF 132

Filename: ...\119_Stage Const Plans_3.dgn Division: HIGHWAY Username: thigginson Date:6/20/2011

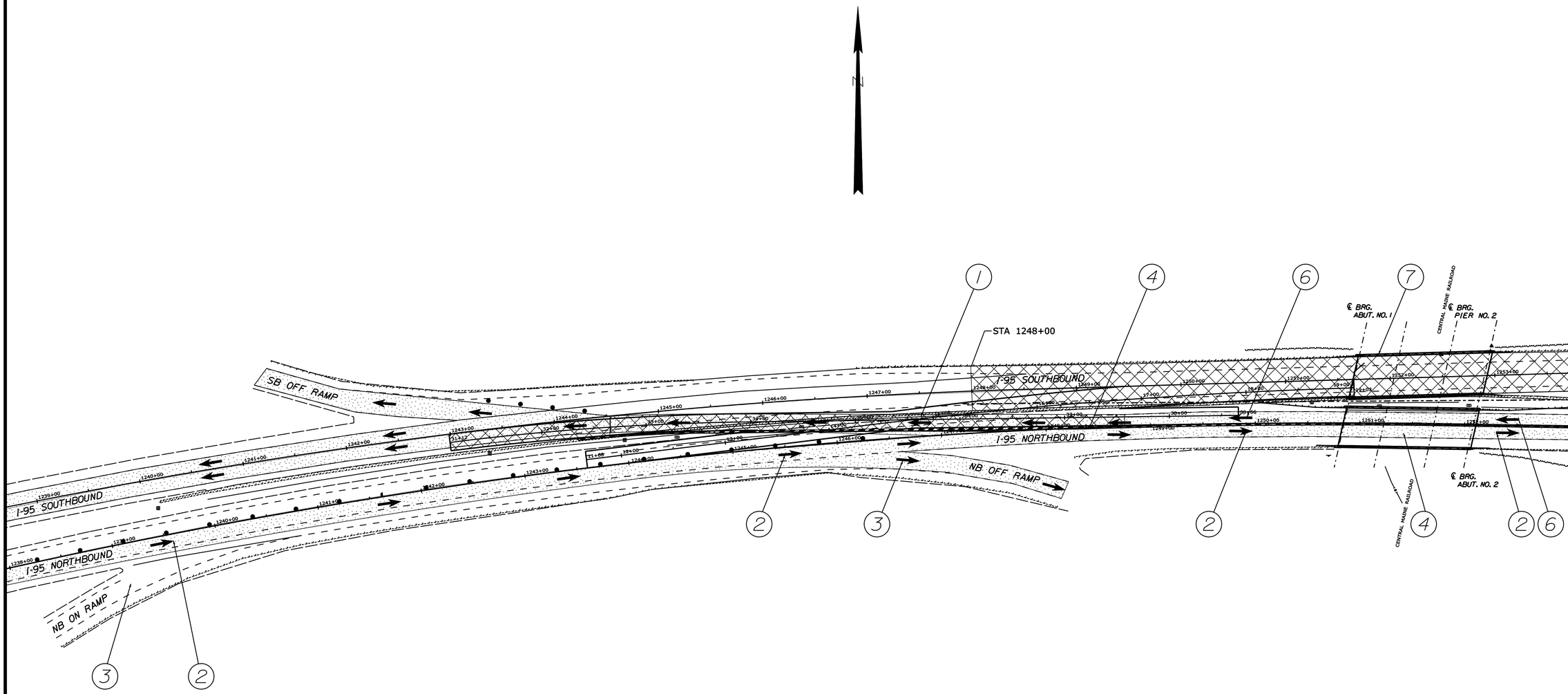

NOT TO SCALE

CONSTRUCTION STAGING

STAGE 11

1. CONSTRUCT CROSSOVERS FOR SOUTHBOUND TRAFFIC TO NORTHBOUND BARREL AND BACK TO SOUTHBOUND.
2. RESTRICT NORTHBOUND TRAFFIC TO ONE LANE. SEE TRAFFIC CONTROL PLANS.
3. MAINTAIN NORTHBOUND OFF RAMP. CLOSE NORTHBOUND ON RAMP.
4. INSTALL PRECAST CONCRETE BARRIER ALONG NORTHBOUND CENTERLINE.
5. RESTRICT SOUTHBOUND TRAFFIC TO ONE LANE. SEE TRAFFIC CONTROL PLANS.
6. SHIFT SOUTHBOUND TRAFFIC TO CROSSOVERS AND NORTHBOUND BARREL.
7. CONSTRUCT MCRR AND CLAUSON SOUTHBOUND BRIDGES AND APPROACHES

REMOVE TRAFFIC FROM CROSSOVERS. REMOVE BARRIER AND SHIFT TRAFFIC BACK TO NORTHBOUND AND SOUTHBOUND BARRELS AT THE COMPLETION OF STAGE 2.

NOTES:

1. MAINTAIN 12 FT. LANE WIDTHS MINIMUM.

LEGEND

- ROAD OPEN TO TRAFFIC
- TRAFFIC FLOW
- UNDER CONSTRUCTION
- PRECAST BARRIERS
- DRUMS

STATE OF MAINE
DEPARTMENT OF TRANSPORTATION

IM-1668(600)E, IM-A670(000)E & BR-1781(400)X

PIN
PIN 16686.00, 16700.00 & 17814.00 HIGHWAY PLANS

		BY	DATE
PROJ. MANAGER			
DESIGN-DETAILED	TPL	MJC	06\11
CHECKED-REVIEWED	JGS	--	06\11
DESIGN2-DETAILED2	PDD	TPL	06\11
DESIGN3-DETAILED3	--	--	--
REVISIONS 1	--	--	--
REVISIONS 2	--	--	--
REVISIONS 3	--	--	--
REVISIONS 4	--	--	--
FIELD CHANGES	--	--	--

SIGNATURE

P.E. NUMBER

DATE

FAIRFIELD - BENTON
INTERSTATE 95

STAGE 2 CONSTRUCTION PLAN 1

SHEET NUMBER
120
OF 132

Filename: ...\120_Stage Const Plans_4.dgn Division: HIGHWAY Username: thigginson Date:6/20/2011

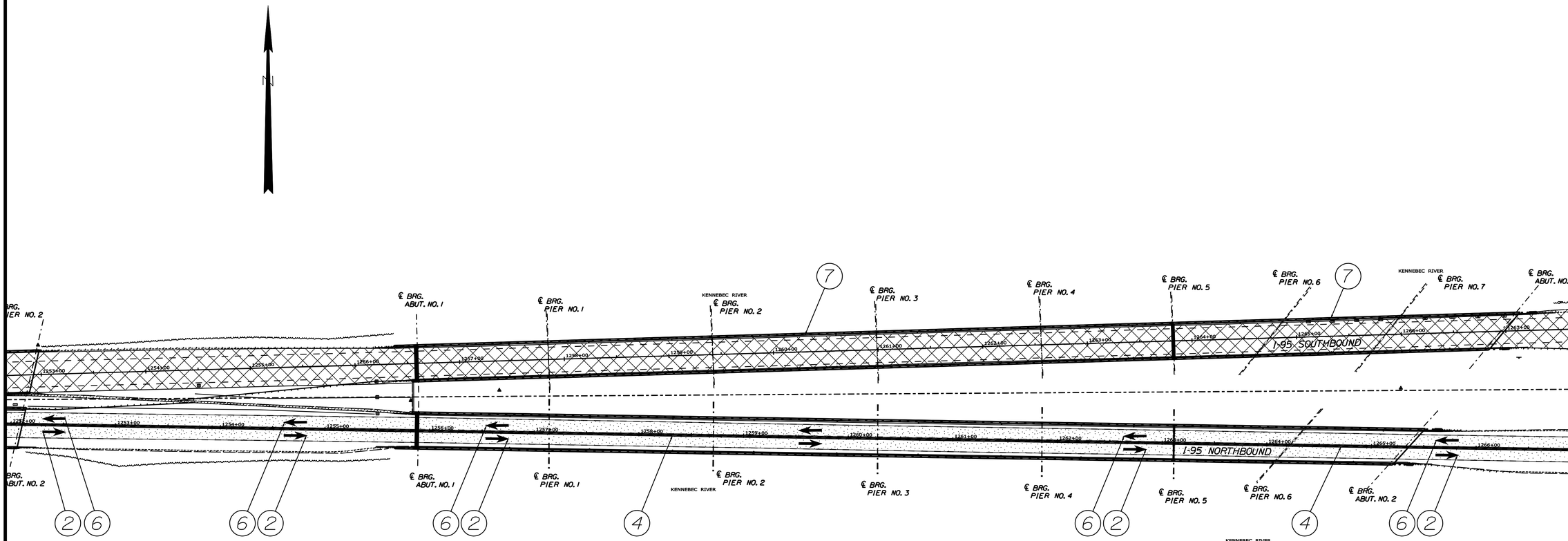

NOT TO SCALE

CONSTRUCTION STAGING

STAGE 11

1. CONSTRUCT CROSSOVERS FOR SOUTHBOUND TRAFFIC TO NORTHBOUND BARREL AND BACK TO SOUTHBOUND.
2. RESTRICT NORTHBOUND TRAFFIC TO ONE LANE. SEE TRAFFIC CONTROL PLANS.
3. MAINTAIN NORTHBOUND OFF RAMP. CLOSE NORTHBOUND ON RAMP.
4. INSTALL PRECAST CONCRETE BARRIER ALONG NORTHBOUND CENTERLINE.
5. RESTRICT SOUTHBOUND TRAFFIC TO ONE LANE. SEE TRAFFIC CONTROL PLANS.
6. SHIFT SOUTHBOUND TRAFFIC TO CROSSOVERS AND NORTHBOUND BARREL.
7. CONSTRUCT MCRR AND CLAUSON SOUTHBOUND BRIDGES AND APPROACHES

REMOVE TRAFFIC FROM CROSSOVERS. REMOVE BARRIER AND SHIFT TRAFFIC BACK TO NORTHBOUND AND SOUTHBOUND BARRELS AT THE COMPLETION OF STAGE 2.

NOTES:

1. MAINTAIN 12 FT. LANE WIDTHS MINIMUM.

LEGEND

- ROAD OPEN TO TRAFFIC
- TRAFFIC FLOW
- UNDER CONSTRUCTION
- PRECAST BARRIERS
- DRUMS

STATE OF MAINE
DEPARTMENT OF TRANSPORTATION

IM-1668(600)E, IM-A670(000)E & BR-1781(400)X

PIN
PIN 16686.00, 16700.00 & 17814.00 HIGHWAY PLANS

PROJ. MANAGER	B. CONDON	BY	DATE
DESIGN-DETAILED	TPL	MJC	06\11
CHECKED-REVIEWED	JGS	--	06\11
DESIGN2-DETAILED2	PDD	TPL	06\11
DESIGN3-DETAILED3	--	--	--
REVISIONS 1	--	--	--
REVISIONS 2	--	--	--
REVISIONS 3	--	--	--
REVISIONS 4	--	--	--
FIELD CHANGES	--	--	--

SIGNATURE

P.E. NUMBER

DATE

FAIRFIELD - BENTON
INTERSTATE 95

STAGE 2 CONSTRUCTION PLAN 2

SHEET NUMBER

121

OF 132

Filename: ...\121_Stage Const Plans_5.dgn Division: HIGHWAY Username: thigginson Date:6/20/2011

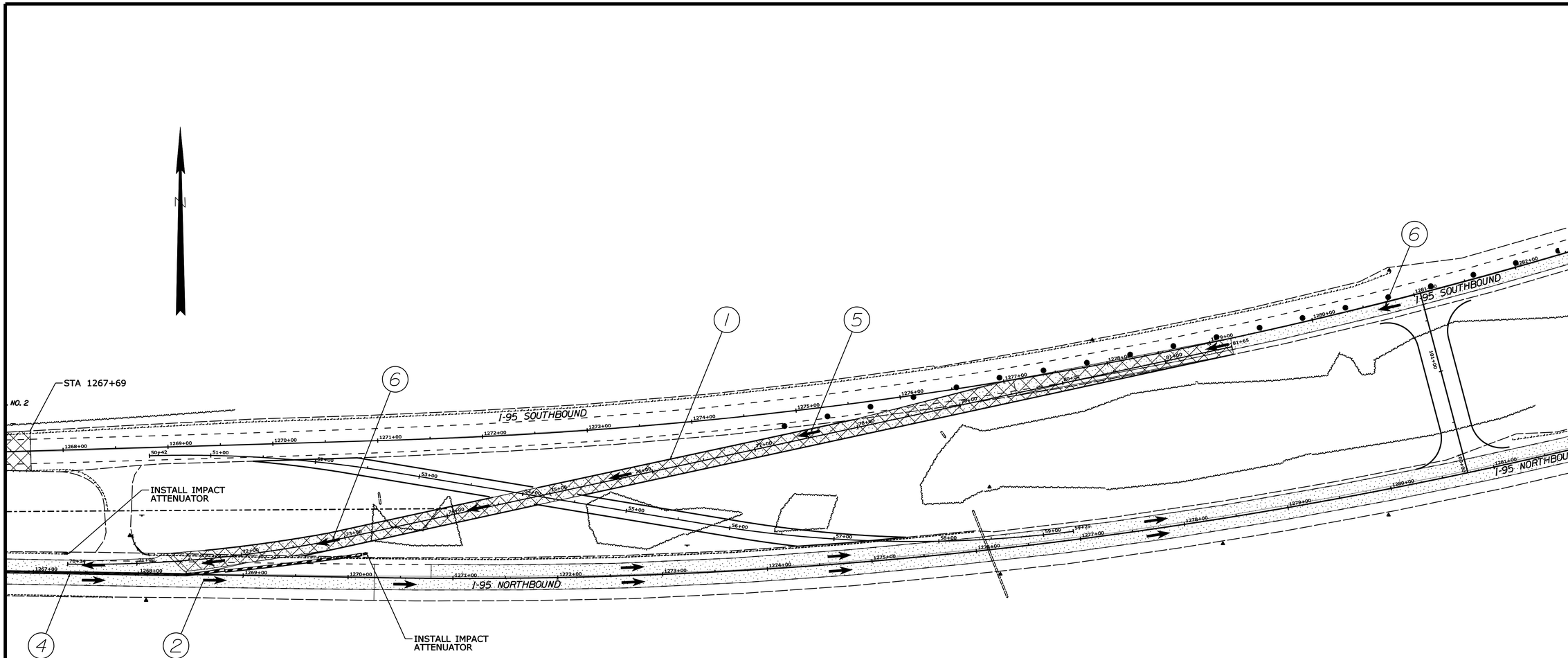

NOT TO SCALE

CONSTRUCTION STAGING

STAGE 11

1. CONSTRUCT CROSSOVERS FOR SOUTHBOUND TRAFFIC TO NORTHBOUND BARREL AND BACK TO SOUTHBOUND.
2. RESTRICT NORTHBOUND TRAFFIC TO ONE LANE. SEE TRAFFIC CONTROL PLANS.
3. MAINTAIN NORTHBOUND OFF RAMP. CLOSE NORTHBOUND ON RAMP.
4. INSTALL PRECAST CONCRETE BARRIER ALONG NORTHBOUND CENTERLINE.
5. RESTRICT SOUTHBOUND TRAFFIC TO ONE LANE. SEE TRAFFIC CONTROL PLANS.
6. SHIFT SOUTHBOUND TRAFFIC TO CROSSOVERS AND NORTHBOUND BARREL.
7. CONSTRUCT MCRR AND CLAUSON SOUTHBOUND BRIDGES AND APPROACHES

REMOVE TRAFFIC FROM CROSSOVERS. REMOVE BARRIER AND SHIFT TRAFFIC BACK TO NORTHBOUND AND SOUTHBOUND BARRELS AT THE COMPLETION OF STAGE 2.

NOTES:

1. MAINTAIN 12 FT. LANE WIDTHS MINIMUM.

LEGEND

- ROAD OPEN TO TRAFFIC
- TRAFFIC FLOW
- UNDER CONSTRUCTION
- PRECAST BARRIERS
- DRUMS

STATE OF MAINE
DEPARTMENT OF TRANSPORTATION

IM-1668(600)E, IM-A670(000)E & BR-1781(400)X

PIN
PIN 16686.00, 16700.00 & 17814.00 HIGHWAY PLANS

		BY	DATE
PROJ. MANAGER	B. CONDON		
DESIGN-DETAILED	TPL	MJC	06\11
CHECKED-REVIEWED	JGS	--	06\11
DESIGN2-DETAILED2	PDD	TPL	06\11
DESIGN3-DETAILED3	--	--	--
REVISIONS 1	--		--
REVISIONS 2	--		--
REVISIONS 3	--		--
REVISIONS 4	--		--
FIELD CHANGES	--		--

SIGNATURE

P.E. NUMBER

DATE

FAIRFIELD - BENTON
INTERSTATE 95

STAGE 2 CONSTRUCTION PLAN 3

SHEET NUMBER
122
OF 132

Filename: ...\122_Stage Const Plans_6.dgn Division: HIGHWAY Username: thigginson Date:6/20/2011

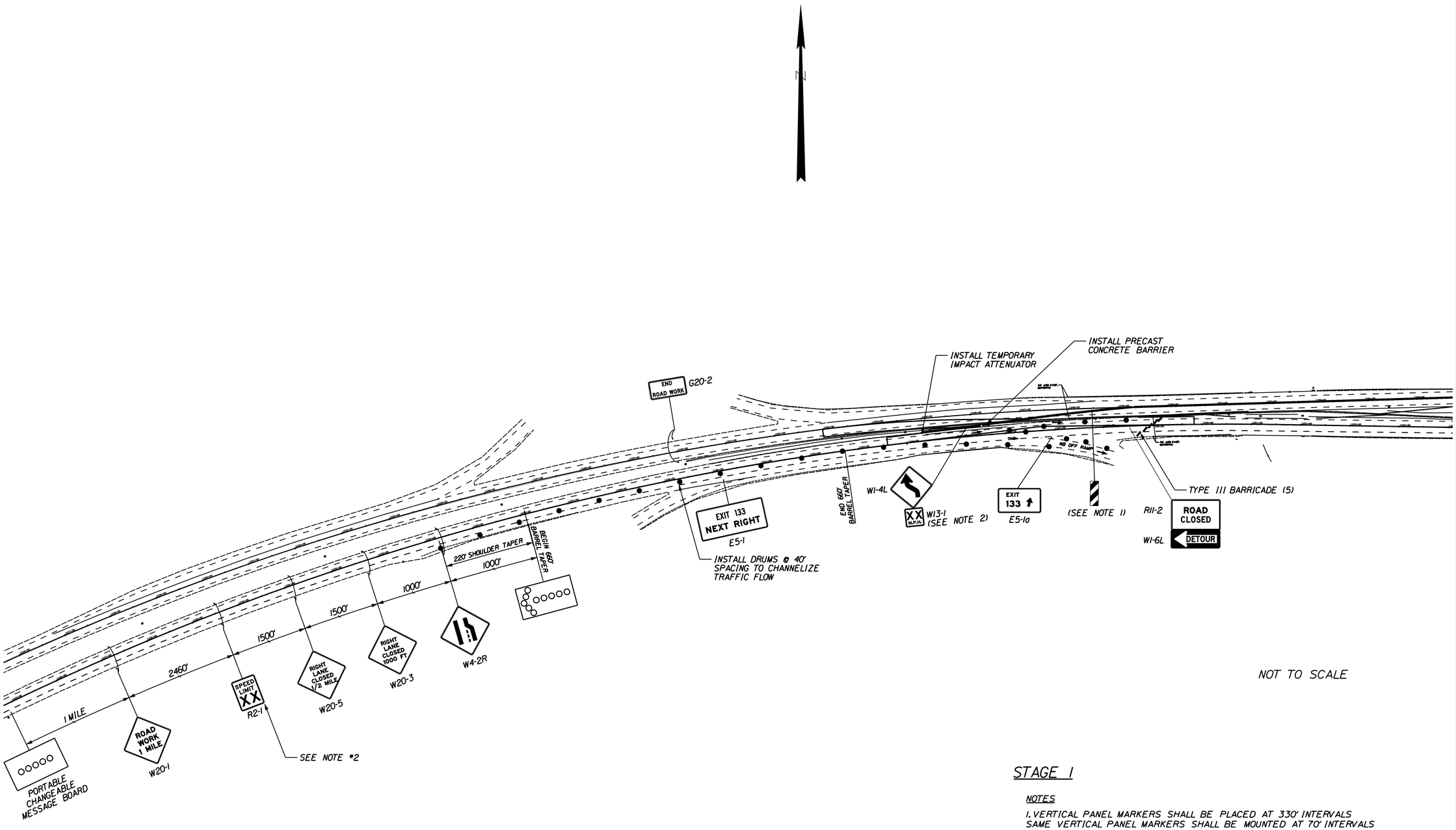

NOT TO SCALE

STAGE 1

NOTES

1. VERTICAL PANEL MARKERS SHALL BE PLACED AT 330' INTERVALS SAME VERTICAL PANEL MARKERS SHALL BE MOUNTED AT 70' INTERVALS ON BRIDGE RAILINGS OR BARRIER.

2. THE REDUCED SPEED LIMIT SHALL BE AS DIRECTED BY THE RESIDENT ENGINEER AND THE CONTRACTOR SHALL SIGN ACCORDINGLY

STATE OF MAINE
DEPARTMENT OF TRANSPORTATION

IM-1668(600)E, IM-A670(000)E & BR-1781(400)X

PIN
PIN 16686.00, 16700.00 & 17814.00 HIGHWAY PLANS

PROJ. MANAGER	B. CONDON	BY	DATE
DESIGN-DETAILED	TPL	MJC	06\11
CHECKED-REVIEWED	JGS	--	06\11
DESIGN2-DETAILED2	PDD	TPL	06\11
DESIGN3-DETAILED3	--	--	--
REVISIONS 1	--		--
REVISIONS 2	--		--
REVISIONS 3	--		--
REVISIONS 4	--		--
FIELD CHANGES	--		--

SIGNATURE

P.E. NUMBER

DATE

FAIRFIELD - BENTON
INTERSTATE 95

TRAFFIC CONTROL PLAN

SHEET NUMBER

123

OF 132

Filename: ...\123_Construction Signing Schematic_1.dgn Division: HIGHWAY Username: thigginson Date:6/20/2011

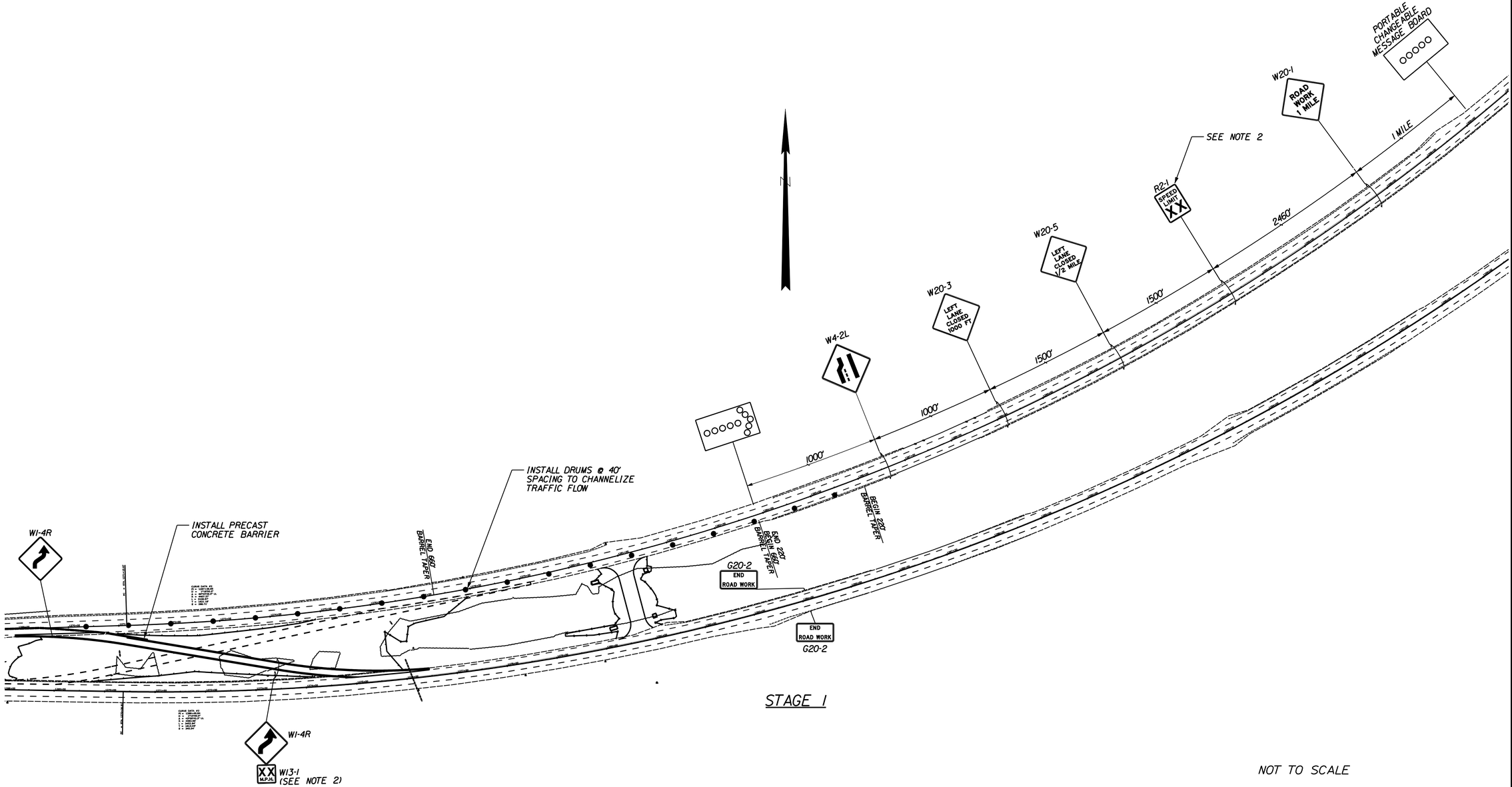

STAGE 1

NOT TO SCALE

STAGE 1

NOTES

1. VERTICAL PANEL MARKERS SHALL BE PLACED AT 330' INTERVALS SAME VERTICAL PANEL MARKERS SHALL BE MOUNTED AT 70' INTERVALS ON BRIDGE RAILINGS OR BARRIER.

2. THE REDUCED SPEED LIMIT SHALL BE AS DIRECTED BY THE RESIDENT ENGINEER AND THE CONTRACTOR SHALL SIGN ACCORDINGLY

STATE OF MAINE
DEPARTMENT OF TRANSPORTATION

IM-1668(600)E, IM-A670(000)E & BR-1781(400)X

PIN
PIN 16686.00, 16700.00 & 17814.00 HIGHWAY PLANS

PROJ. MANAGER	B. CONDON	BY	DATE
DESIGN-DETAILED	TPL	MJC	06\11
CHECKED-REVIEWED	JGS	"	06\11
DESIGN2-DETAILED2	PDD	TPL	06\11
DESIGN3-DETAILED3	"	"	"
REVISIONS 1	"	"	"
REVISIONS 2	"	"	"
REVISIONS 3	"	"	"
REVISIONS 4	"	"	"
FIELD CHANGES	"	"	"

SIGNATURE

P.E. NUMBER

DATE

FAIRFIELD - BENTON
INTERSTATE 95

TRAFFIC CONTROL PLAN

SHEET NUMBER
124
OF 132

Filename: ...\124_Construction Signing Schematic_2D.dgn Division: HIGHWAY Username: thigginson Date:6/20/2011

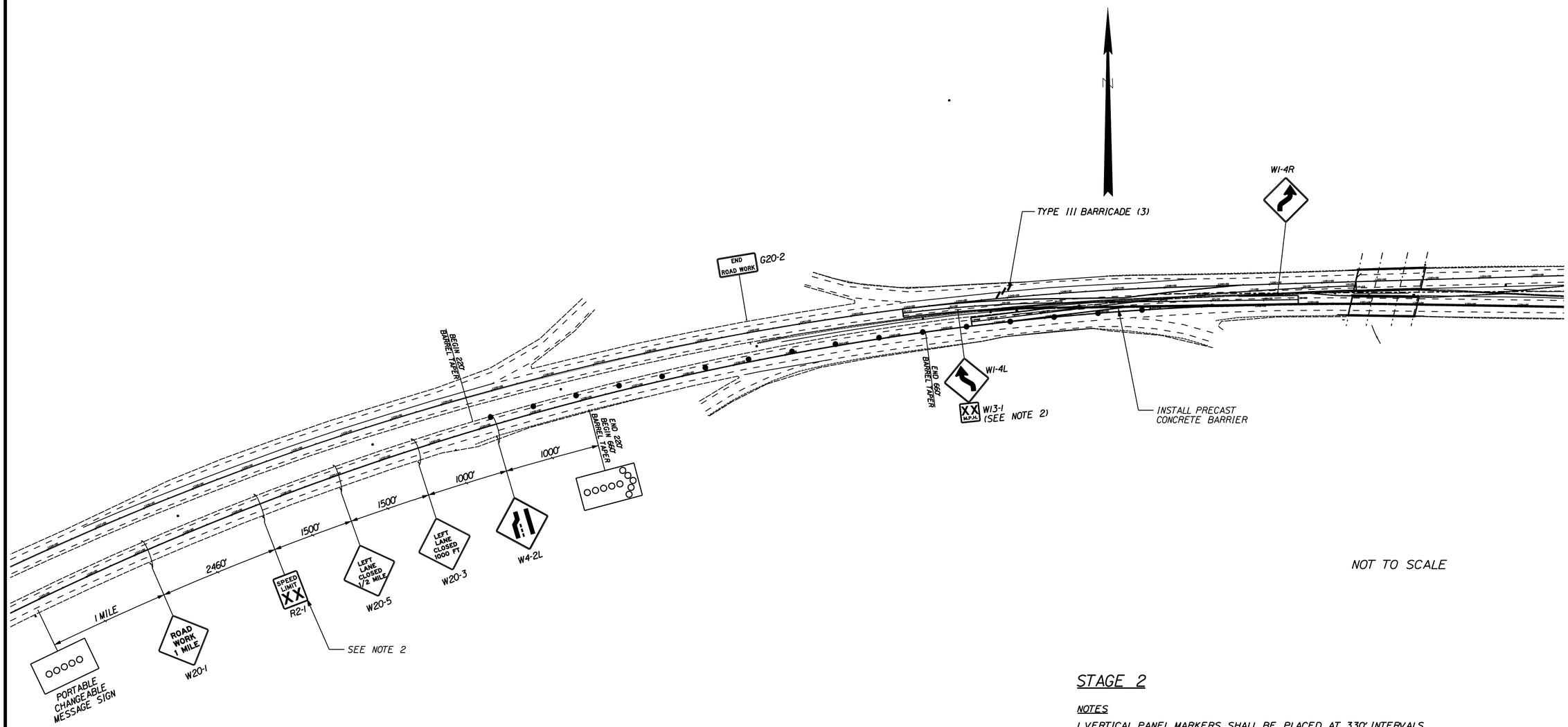

NOT TO SCALE

STAGE 2

NOTES

1. VERTICAL PANEL MARKERS SHALL BE PLACED AT 330' INTERVALS SAME VERTICAL PANEL MARKERS SHALL BE MOUNTED AT 70' INTERVALS ON BRIDGE RAILINGS OR BARRIER.

2. THE REDUCED SPEED LIMIT SHALL BE AS DIRECTED BY THE RESIDENT ENGINEER AND THE CONTRACTOR SHALL SIGN ACCORDINGLY

STATE OF MAINE
DEPARTMENT OF TRANSPORTATION

IM-1668(600)E, IM-A670(000)E & BR-1781(400)X

PIN
PIN 16686.00, 16700.00 & 17814.00 HIGHWAY PLANS

PROJ. MANAGER	B. CONDON	BY	DATE
DESIGN-DETAILED	TPL	MJC	06\11
CHECKED-REVIEWED	JGS	--	06\11
DESIGN2-DETAILED2	PDD	TPL	06\11
DESIGN3-DETAILED3	--	--	--
REVISIONS 1	--		--
REVISIONS 2	--		--
REVISIONS 3	--		--
REVISIONS 4	--		--
FIELD CHANGES	--		--

SIGNATURE

P.E. NUMBER

DATE

FAIRFIELD - BENTON
INTERSTATE 95

TRAFFIC CONTROL PLAN

SHEET NUMBER
125
OF 132

Filename: ...\125_Construction Signing Schematic_1.dgn Division: HIGHWAY Username: thigginson Date:6/20/2011

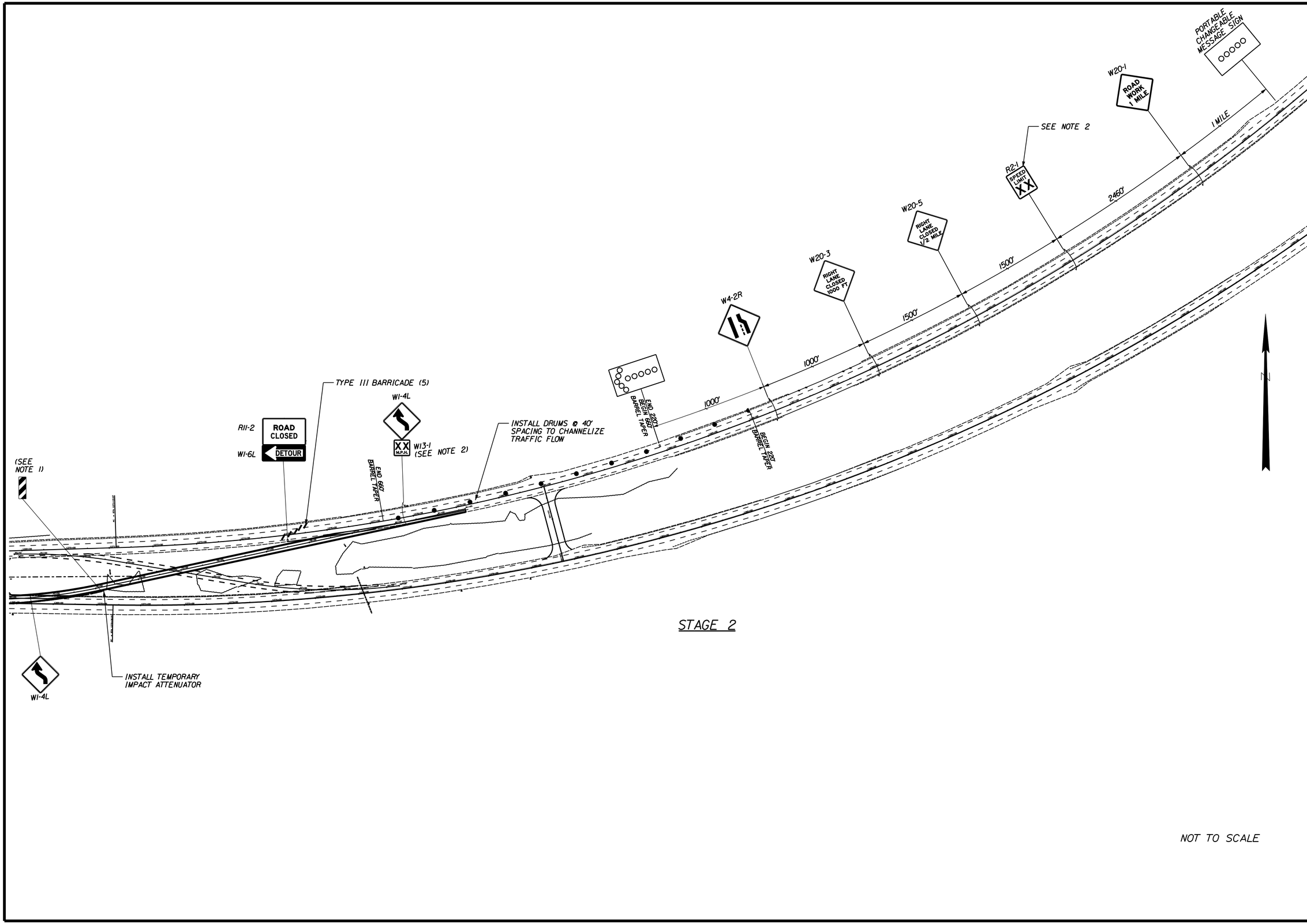

STAGE 2

NOT TO SCALE

STATE OF MAINE
DEPARTMENT OF TRANSPORTATION

IM-1668(600)E, IM-A670(000)E & BR-1781(400)X

PIN
PIN 16686.00, 16700.00 & 17814.00 HIGHWAY PLANS

PROJ. MANAGER	B. CONDON	BY	DATE
DESIGN-DETAILED	TPL	MJC	06\11
CHECKED-REVIEWED	JGS	--	06\11
DESIGN2-DETAILED2	PDD	TPL	06\11
DESIGN3-DETAILED3	--	--	--
REVISIONS 1	--	--	--
REVISIONS 2	--	--	--
REVISIONS 3	--	--	--
REVISIONS 4	--	--	--
FIELD CHANGES	--	--	--

SIGNATURE

P.E. NUMBER

DATE

FAIRFIELD - BENTON
INTERSTATE 95

TRAFFIC CONTROL PLAN

SHEET NUMBER
126
OF 132

Filename: ...\126_Construction Signing Schematic_2011.dgn Division: HIGHWAY Username: thigginson Date:6/20/2011

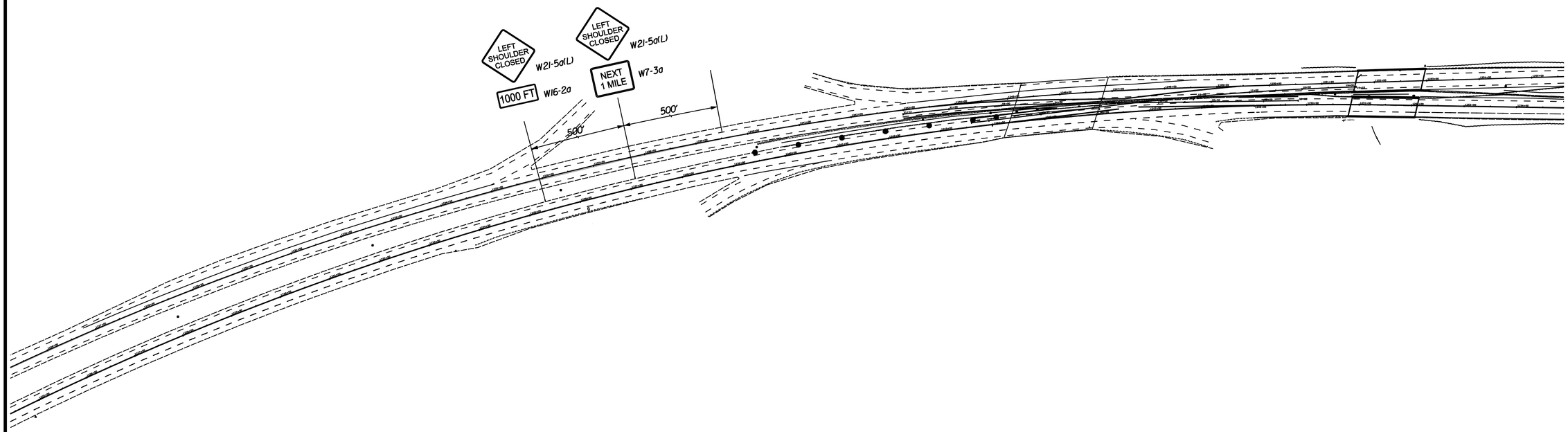

NOTES:

1. LEFT-SHOULDER CLOSURES ARE REQUIRED FOR BOTH STAGE I AND STAGE II OF THE PROJECT.
2. INSTALL DRUMS AT 65-FOOT SPACING TO CHANNELIZE TRAFFIC FLOW.
3. ANY REVISIONS TO THE TRAFFIC CONTROL PLANS SHALL BE DONE IN ACCORDANCE WITH THE MANUAL ON UNIFORM TRAFFIC CONTROL DEVICES (MUTCD).

NOT TO SCALE

STATE OF MAINE
DEPARTMENT OF TRANSPORTATION

IM-1668(600)E, IM-A670(000)E & BR-1781(400)X

PIN
PIN 16686.00, 16700.00 & 17814.00 HIGHWAY PLANS

PROJ. MANAGER	B. CONDON	BY	DATE
DESIGN-DETAILED	TPL	MJC	06\11
CHECKED-REVIEWED	JGS	--	06\11
DESIGN2-DETAILED2	PDD	TPL	06\11
DESIGN3-DETAILED3	--	--	--
REVISIONS 1	--		--
REVISIONS 2	--		--
REVISIONS 3	--		--
REVISIONS 4	--		--
FIELD CHANGES	--		--

SIGNATURE

P.E. NUMBER

DATE

FAIRFIELD - BENTON
INTERSTATE 95

TRAFFIC CONTROL PLAN

SHEET NUMBER
127
OF 132

Filename: ...\127_TCP_LT Shoulder Closure1.dgn Division: HIGHWAY Username: thigginson Date:6/20/2011

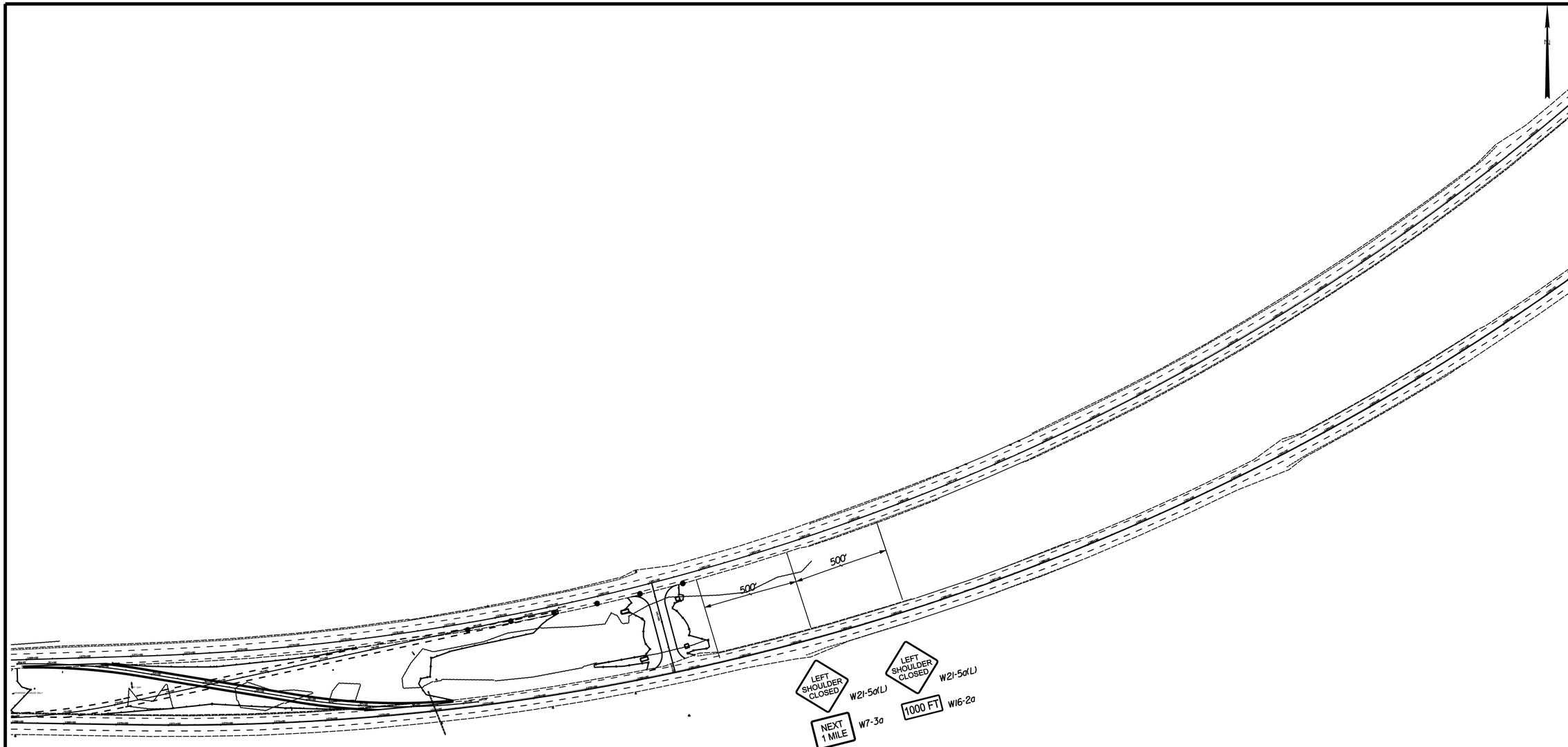

NOTES:

1. LEFT-SHOULDER CLOSURES ARE REQUIRED FOR BOTH STAGE I AND STAGE II OF THE PROJECT.
2. INSTALL DRUMS AT 65-FOOT SPACING TO CHANNELIZE TRAFFIC FLOW.
3. ANY REVISIONS TO THE TRAFFIC CONTROL PLANS SHALL BE DONE IN ACCORDANCE WITH THE MANUAL ON UNIFORM TRAFFIC CONTROL DEVICES (MUTCD).

NOT TO SCALE

STATE OF MAINE
DEPARTMENT OF TRANSPORTATION

IM-1668(600)E, IM-A670(000)E & BR-1781(400)X

PIN
PIN 16686.00, 16700.00 & 17814.00 HIGHWAY PLANS

PROJ. MANAGER	B. CONDON	BY	DATE
DESIGN-DETAILED	TPL	MJC	06\11
CHECKED-REVIEWED	JGS	--	06\11
DESIGN2-DETAILED2	PDD	TPL	06\11
DESIGN3-DETAILED3	--	--	--
REVISIONS 1	--	--	--
REVISIONS 2	--	--	--
REVISIONS 3	--	--	--
REVISIONS 4	--	--	--
FIELD CHANGES	--	--	--

SIGNATURE

P.E. NUMBER

DATE

FAIRFIELD - BENTON
INTERSTATE 95

TRAFFIC CONTROL PLAN

SHEET NUMBER
128
OF 132

Filename: ...\128_TCP_LT Shoulder Closure2.dgn Division: HIGHWAY Username: thigginson Date:6/20/2011

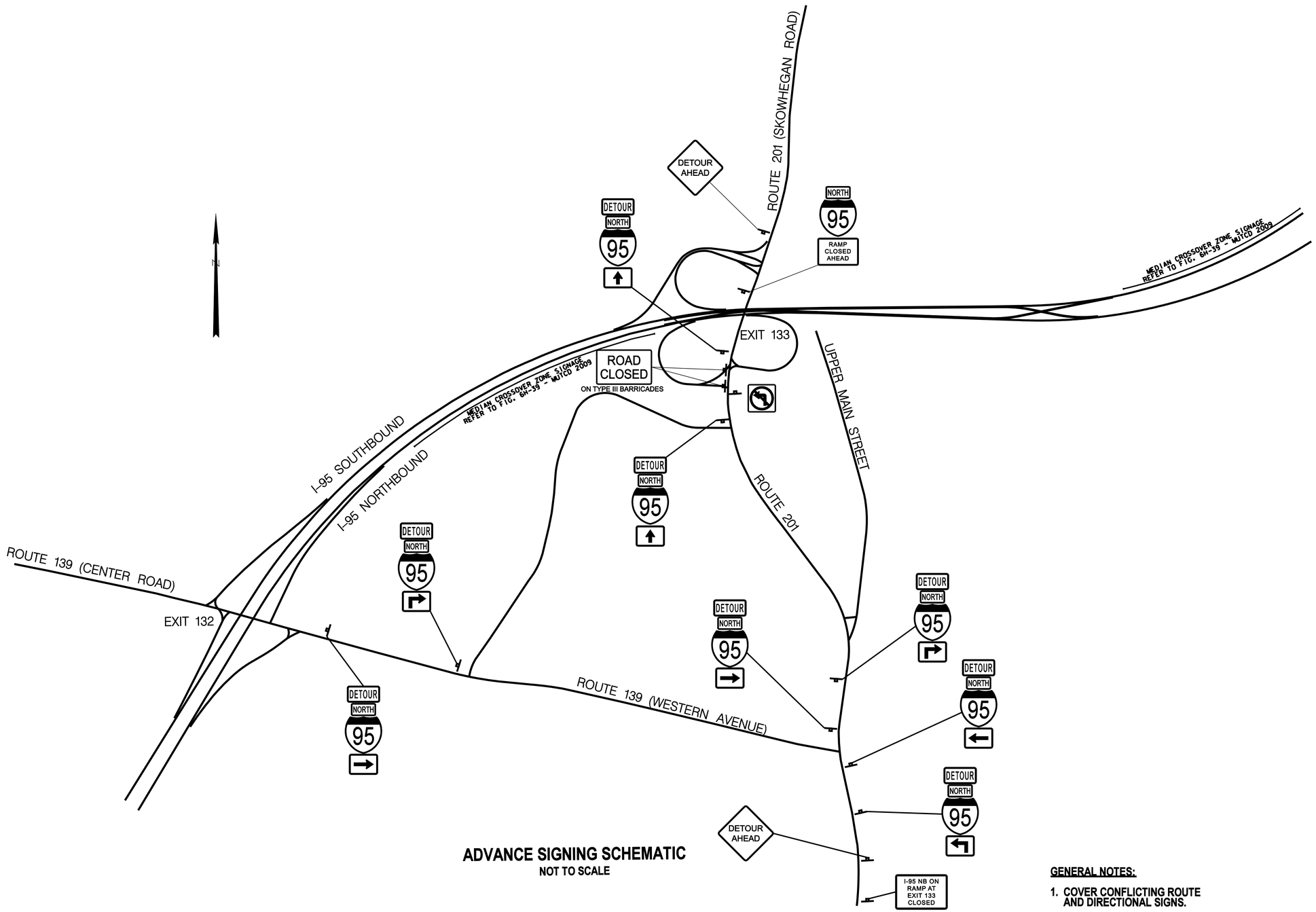

ADVANCE SIGNING SCHEMATIC
NOT TO SCALE

GENERAL NOTES:

1. COVER CONFLICTING ROUTE AND DIRECTIONAL SIGNS.

STATE OF MAINE
DEPARTMENT OF TRANSPORTATION

IM-1668(600)E, IM-A670(000)E & BR-1781(400)X

PIN
PIN 16686.00, 16700.00 & 17814.00 HIGHWAY PLANS

PROJ. MANAGER	B. CONDON	BY	DATE
DESIGN-DETAILED	TPL	MJC	06\11
CHECKED-REVIEWED	JGS	--	06\11
DESIGN2-DETAILED2	PDD	TPL	06\11
DESIGN3-DETAILED3	--	--	--
REVISIONS 1	--		--
REVISIONS 2	--		--
REVISIONS 3	--		--
REVISIONS 4	--		--
FIELD CHANGES	--		--

SIGNATURE

P.E. NUMBER

DATE

FAIRFIELD - BENTON
INTERSTATE 95

DETOUR PLANS

SHEET NUMBER
129
OF 132

Filename: ...\ms\to\129_Detour Plans 1.dgn Division: HIGHWAY Username: thigginson Date:6/20/2011

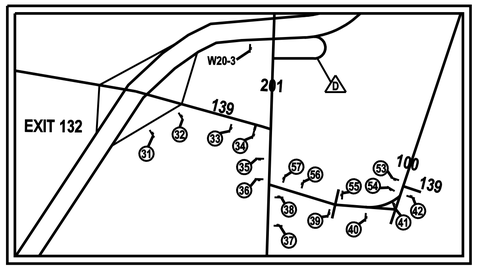

DETAIL 1

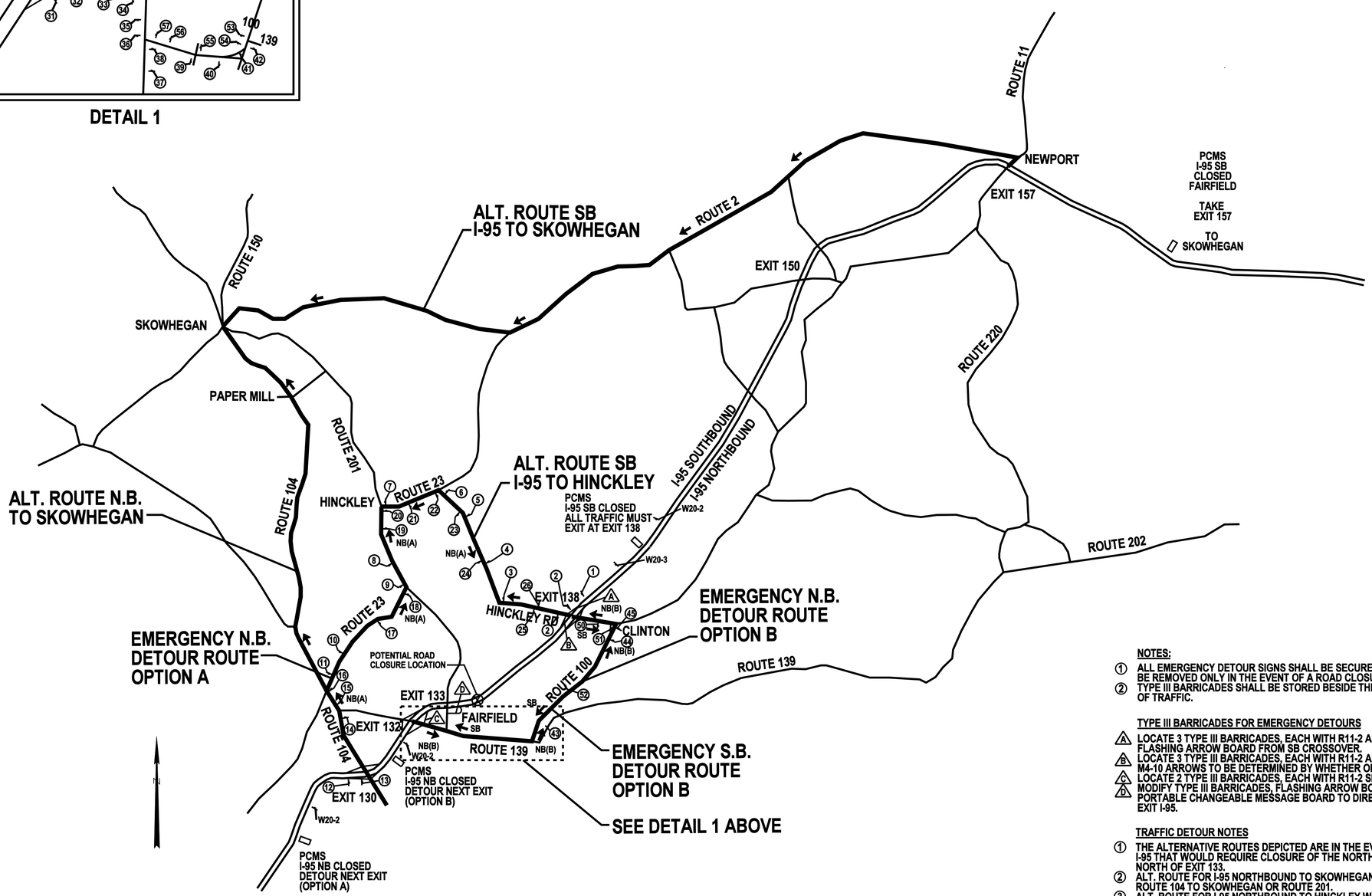

EMERGENCY ALTERNATIVE DETOUR ROUTES
I-95 EMERGENCY CLOSURES

NOT TO SCALE

EMERGENCY DETOUR SIGNS

SOUTHBOUND OPTION A

1. M4-8 M3-3 M1-1 M5-1R
2. M4-8 M3-3 M1-1 M6-1R
3. M4-8 M3-3 M1-1 M6-2R
4. M4-8 M3-3 M1-1 M6-3
5. M4-8 M3-3 M1-1 M6-2L
6. M4-8 M3-3 M1-1 M6-1L
7. M4-8 M3-3 M1-1 M6-1L
8. M4-8 M3-3 M1-1 M5-1R
9. M4-8 M3-3 M1-1 M6-1R
10. M4-8 M3-3 M1-1 M5-1L
11. M4-8 M3-3 M1-1 M6-1L

NORTHBOUND OPTION A

12. M4-8 M3-1 M1-1 M5-1L
13. M4-8 M3-1 M1-1 M6-1L
14. M4-8 M3-1 M1-1 M6-3
15. M4-8 M3-1 M1-1 M5-1R
16. M4-8 M3-1 M1-1 M6-1R
17. M4-8 M3-1 M1-1 M6-3
18. M4-8 M3-1 M1-1 M6-1L
19. M4-8 M3-1 M1-1 M5-1R
20. M4-8 M3-1 M1-1 M6-1R
21. M4-8 M3-1 M1-1 M5-1R
22. M4-8 M3-1 M1-1 M6-1R
23. M4-8 M3-1 M1-1 M6-3
24. M4-8 M3-1 M1-1 M6-3
25. M4-8 M3-1 M1-1 M6-3
26. M4-8 M3-3 M1-1 M6-3

NORTHBOUND OPTION B

31. M4-8 M3-1 M1-1 M5-1R
32. M4-8 M3-1 M1-1 M6-1R
33. M4-8 M3-1 M1-1 M5-1R
34. M4-8 M3-1 M1-1 M6-1R
35. M4-8 M3-1 M1-1 M5-1L
36. M4-8 M3-1 M1-1 M6-1L
37. M4-8 M3-1 M1-1 M5-1R
38. M4-8 M3-1 M1-1 M6-1R
39. M4-8 M3-1 M1-1 M6-3
40. M4-8 M3-1 M1-1 M5-1L
41. M4-8 M3-1 M1-1 M6-1L
42. M4-8 M3-1 M1-1 M6-3
43. M4-8 M3-1 M1-1 M6-3
44. M4-8 M3-1 M1-1 M5-1L
45. M4-8 M3-1 M1-1 M6-1L

SOUTHBOUND OPTION B

1. M4-8 M3-3 M1-1 M5-1L (MODIFY SIGN #1)
2. M4-8 M3-3 M1-1 M6-1L (MODIFY SIGN #2)
50. M4-8 M3-3 M1-1 M5-1R
51. M4-8 M3-3 M1-1 M6-1R
52. M4-8 M3-3 M1-1 M6-3
53. M4-8 M3-3 M1-1 M5-1R
54. M4-8 M3-3 M1-1 M6-1R
55. M4-8 M3-3 M1-1 M6-3
56. M4-8 M3-3 M1-1 M5-1R
57. M4-8 M3-3 M1-1 M6-1R

NOTES:

1. ALL EMERGENCY DETOUR SIGNS SHALL BE SECURELY COVERED. COVERINGS SHALL BE REMOVED ONLY IN THE EVENT OF A ROAD CLOSURE.
2. TYPE III BARRICADES SHALL BE STORED BESIDE THE ROAD, PARALLEL TO THE FLOW OF TRAFFIC.

TYPE III BARRICADES FOR EMERGENCY DETOURS

- A. LOCATE 3 TYPE III BARRICADES, EACH WITH R11-2 AND M4-10R SIGNS. RELOCATE FLASHING ARROW BOARD FROM SB CROSSOVER.
- B. LOCATE 3 TYPE III BARRICADES, EACH WITH R11-2 AND M4-10 SIGNS. DIRECTION OF M4-10 ARROWS TO BE DETERMINED BY WHETHER OPTION A OR B IS EMPLOYED.
- C. LOCATE 2 TYPE III BARRICADES, EACH WITH R11-2 SIGNS.
- D. MODIFY TYPE III BARRICADES, FLASHING ARROW BOARD, CHANNELIZING DEVICES AND PORTABLE CHANGEABLE MESSAGE BOARD TO DIRECT ALL REMAINING TRAFFIC TO EXIT I-95.

TRAFFIC DETOUR NOTES

1. THE ALTERNATIVE ROUTES DEPICTED ARE IN THE EVENT OF A SIGNIFICANT EVENT ALONG I-95 THAT WOULD REQUIRE CLOSURE OF THE NORTHBOUND AND/OR SOUTHBOUND LANES NORTH OF EXIT 133.
2. ALT. ROUTE FOR I-95 NORTHBOUND TO SKOWHEGAN WOULD BEGIN AT EXIT 130 AND FOLLOW ROUTE 104 TO SKOWHEGAN OR ROUTE 201.
3. ALT. ROUTE FOR I-95 NORTHBOUND TO HINCKLEY WOULD BEGIN AT EXIT 130 AND FOLLOW ROUTE 104 TO ROUTE 23 BACK TO ROUTE 201 TO HINCKLEY.
4. ALT. ROUTE FOR I-95 SOUTHBOUND TO HINCKLEY WOULD BEGIN AT EXIT 138 AND FOLLOW HINCKLEY ROAD TO ROUTE 23 TO ROUTE 201 TO HINCKLEY.
5. ALT. ROUTE FOR I-95 SOUTHBOUND TO SKOWHEGAN WOULD BEGIN AT EXIT 157 AND FOLLOW ROUTE 11 TO ROUTE 2 TO SKOWHEGAN.

EMERGENCY DETOUR OPTIONS

- A. BEGIN AT EXIT 130 AND FOLLOW ROUTE 104 TO ROUTE 23 TO HINCKLEY ROAD AND BACK TO I-95 AT EXIT 138.
- B. BEGIN AT EXIT 132 AND FOLLOW ROUTE 139 THROUGH FAIRFIELD INTO BENTON TO ROUTE 100 AND NORTH TO CLINTON THEN BACK TO I-95 AT EXIT 138 VIA BAKER STREET/HINCKLEY ROAD.
- 1. IN THE EVENT OF COMPLETE CLOSURE OF I-95, SOUTHBOUND TRAFFIC WOULD BE ROUTED VIA OPTION B AND NORTHBOUND VIA OPTION A.
- 2. FOR CLOSURE OF I-95 NORTHBOUND ONLY, TRAFFIC WOULD BE ROUTED VIA NB(B).

STATE OF MAINE
DEPARTMENT OF TRANSPORTATION

IM-1668(600)E, IM-A670(000)E & BR-1781(400)X

PIN
PIN 16686.00, 16700.00 & 17814.00 HIGHWAY PLANS

PROJ. MANAGER	B. CONDON	BY	DATE
DESIGN-DETAILED	TPL	MJC	06\11
CHECKED-REVIEWED	JGS	--	06\11
DESIGN2-DETAILED2	PDD	TPL	06\11
DESIGN3-DETAILED3	--	--	--
REVISIONS 1	--		--
REVISIONS 2	--		--
REVISIONS 3	--		--
REVISIONS 4	--		--
FIELD CHANGES	--		--

SIGNATURE

P.E. NUMBER

DATE

FAIRFIELD - BENTON
INTERSTATE 95

EMERGENCY DETOUR PLAN

SHEET NUMBER
130
OF 132

Filename: ...\msla\130_Detour Plans 2.dgn Division: HIGHWAY Username: thigginson Date:6/20/2011

MUTCD IDENT #	SIGN SIZE WIDTH (in)	SIGN SIZE HEIGHT (in)	TEXT	# SIGNS REQ'D	SIGN AREA (ft^2) NOM AREA	SIGN AREA (ft^2) TOTAL AREA	COLORS BACKGROUND / TEXT
W1-4L	24	24		4	4.00	16.00	ORANGE / BLACK
W1-4R	24	24		4	4.00	16.00	ORANGE / BLACK
W4-2L	36	36		2	9.00	18.00	ORANGE / BLACK
W4-2R	36	36		2	9.00	18.00	ORANGE / BLACK
W13-1	18	18	XX MPH	3	2.25	6.75	ORANGE / BLACK
W20-1	36	36	ROAD WORK 1 MILE	4	9.00	36.00	ORANGE / BLACK
W20-3	36	36	RIGHT LANE CLOSED 1000 FT	2	9.00	18.00	ORANGE / BLACK
W20-5	36	36	RIGHT LANE CLOSED ½ MILE	2	9.00	18.00	ORANGE / BLACK
W20-3	36	36	LEFT LANE CLOSED 1000 FT	2	9.00	18.00	ORANGE / BLACK
W20-5	36	36	LEFT LANE CLOSED ½ MILE	2	9.00	18.00	ORANGE / BLACK

MUTCD IDENT #	SIGN SIZE WIDTH (in)	SIGN SIZE HEIGHT (in)	TEXT	# SIGNS REQ'D	SIGN AREA (ft^2) NOM AREA	SIGN AREA (ft^2) TOTAL AREA	COLORS BACKGROUND/TEXT
R2-1	24	36	SPEED LIMIT 40	4	6.00	24.00	WHITE / BLACK
R11-2	48	30	ROAD CLOSED	2	10.00	20.00	WHITE / BLACK
E5-1	48	36	EXIT 133 NEXT RIGHT	1	12.00	12.00	ORANGE / BLACK
E5-1a	48	36	EXIT 133	1	12.00	12.00	ORANGE / BLACK
G20-2	36	18	END ROAD WORK	4	4.50	18.00	ORANGE / BLACK
OM-3R	12	30		38	2.50	95.00	YELLOW / BLACK

MUTCD IDENT #	SIGN SIZE WIDTH (in)	SIGN SIZE HEIGHT (in)	TEXT	# SIGNS REQ'D	SIGN AREA (ft^2) NOM AREA	SIGN AREA (ft^2) TOTAL AREA	COLORS BACKGROUND/TEXT
W1-6L	48	18	DETOUR	2.00	6.00	12.00	ORANGE / BLACK
W7-3a	36	24	NEXT 1 MILE	2	6.00	12.00	ORANGE / BLACK
W16-2a	36	18	1000 FT	2	4.50	9.00	ORANGE / BLACK
W21-5a(L)	36	36	LEFT SHOULDER CLOSED	4	9.00	36.00	ORANGE / BLACK
SP-1	52	96	CHANNEL TEMPORARILY CLOSED TO PASSAGE	2	34.67	69.33	WHITE / BLACK
SP-2	52	96	- BRIDGE CONSTRUCTION- FOR YOUR SAFETY, STAY BETWEEN CHANNEL MARKERS AT THE CONSTRUCTION SITE. PASS AT YOUR OWN RISK	2	34.67	69.33	WHITE / BLACK

STATE OF MAINE
DEPARTMENT OF TRANSPORTATION

IM-1668(600)E, IM-A670(000)E & BR-1781(400)X

PIN
PIN 16686.00, 16700.00 & 17814.00 HIGHWAY PLANS

PROJ. MANAGER	B. CONDON	BY	DATE
DESIGN-DETAILED	TPL	MJC	06/11
CHECKED-REVIEWED	JGS	--	06/11
DESIGN2-DETAILED2	PDD	TPL	06/11
DESIGN3-DETAILED3	--	--	--
REVISIONS 1	--		--
REVISIONS 2	--		--
REVISIONS 3	--		--
REVISIONS 4	--		--
FIELD CHANGES	--		--

SIGNATURE

P.E. NUMBER

DATE

FAIRFIELD - BENTON
INTERSTATE 95

CONSTRUCTION SIGN SUMMARY

SHEET NUMBER
131
OF 132

Filename: ...\131_Construction_Sign_Summary1.dgn Division: HIGHWAY Username: thigginson Date:6/20/2011

MUTCD IDENT #	SIGN SIZE WIDTH (in)	SIGN SIZE HEIGHT (in)	TEXT	# SIGNS REQ'D	SIGN AREA (ft^2) NOM AREA	SIGN AREA (ft^2) TOTAL AREA	COLORS BACKGROUND / TEXT
M1-1	24	24		DETOUR 9	4.00	36.00	RED & BLUE / WHITE
				EMERGENCY 51	4.00	204.00	
M3-1	24	12		DETOUR 9	2.00	18.00	BLUE / WHITE (INTERSTATE) OR WHITE / BLACK (STATE OR US ROUTE)
				EMERGENCY 29	2.00	58.00	
M3-3	24	12		DETOUR 0	0.00	0.00	BLUE / WHITE (INTERSTATE) OR WHITE / BLACK (STATE OR US ROUTE)
				EMERGENCY 21	2.00	42.00	
M4-8	30	15		DETOUR 8	3.13	25.00	ORANGE / BLACK
				EMERGENCY 51	3.13	159.38	
M5-1 (R)	21	15		DETOUR 2	2.19	4.38	BLUE / WHITE (INTERSTATE) OR WHITE / BLACK (STATE OR US ROUTE)
				EMERGENCY 11	2.19	24.06	
M5-1 (L)	21	15		DETOUR 1	2.19	2.19	WHITE / BLACK
				EMERGENCY 6	2.19	13.13	
M6-1L	21	15		DETOUR 3	2.19	6.56	WHITE / BLACK
				EMERGENCY 9	2.19	19.69	
M6-1R	21	15		DETOUR 0	0.00	0.00	WHITE / BLACK
				EMERGENCY 11	2.19	24.06	
M6-2L	21	15		DETOUR 0	0.00	0.00	WHITE / BLACK
				EMERGENCY 1	2.19	2.19	
M6-2R	21	15		DETOUR 0	0.00	0.00	WHITE / BLACK
				EMERGENCY 1	2.19	2.19	

MUTCD IDENT #	SIGN SIZE WIDTH (in)	SIGN SIZE HEIGHT (in)	TEXT	# SIGNS REQ'D	SIGN AREA (ft^2) NOM AREA	SIGN AREA (ft^2) TOTAL AREA	COLORS BACKGROUND/TEXT
M6-3	21	15		DETOUR 2	2.19	4.38	WHITE / BLACK
				EMERGENCY 12	2.19	26.25	
R3-2	24	24		DETOUR 1	4.00	4.00	RED & BLACK / WHITE
				EMERGENCY 0	0.00	0.00	
R11-2	48	30		DETOUR 2	10.00	20.00	WHITE / BLACK
				EMERGENCY 8	10.00	80.00	
M4-10R	30	15		DETOUR 0	0.00	0.00	ORANGE / BLACK
				EMERGENCY 4	3.13	12.50	
M4-10L	30	15		DETOUR 0	0.00	0.00	ORANGE / BLACK
				EMERGENCY 4	3.13	12.50	

MUTCD IDENT #	SIGN SIZE WIDTH (in)	SIGN SIZE HEIGHT (in)	TEXT	# SIGNS REQ'D	SIGN AREA (ft^2) NOM AREA	SIGN AREA (ft^2) TOTAL AREA	COLORS BACKGROUND/TEXT
W1-6	30	15	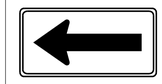	DETOUR 0	0.00	0.00	ORANGE / BLACK
				EMERGENCY 2	3.13	6.25	
W20-2	36	36		DETOUR 2	9.00	18.00	ORANGE / BLACK
				EMERGENCY 0	0.00	0.00	
W20-3	36	36		DETOUR 0	0.00	0.00	ORANGE / BLACK
				EMERGENCY 2	9.00	18.00	
E5-2a	24	18		DETOUR 1	3.00	3.00	ORANGE / BLACK
				EMERGENCY 0	0.00	0.00	
E5-2b	36	24		DETOUR 1	6.00	6.00	ORANGE / BLACK
				EMERGENCY 0	0.00	0.00	

NOTES:

1. PERMANENT SIGN POSTS SHALL BE CONSTRUCTED ACCORDING TO THE FOLLOWING SCHEDULE BASED ON THE TOTAL AREA OF THE SIGN(S) MOUNTED UPON THEM:

POST TYPE	SIGN AREA (SF)
"U-CHANNEL" GALVANIZED METAL POST	< 4 SF
4" X 4" WOODEN POST	4 SF < X < 8.99 SF
4" X 6" WOODEN POST	9 SF < X < 15.99 SF
6" X 6" WOODEN POST	> 16 SF

2. PERMANENT SIGNS OR SIGN ASSEMBLIES WIDER THAN 60" WILL REQUIRE TWO WOODEN POSTS.

3. PERMANENT TWO-SIDED W1-8 CHEVRONS SHALL BE MOUNTED ON 4" X 4" WOODEN POSTS.

4. SIGN MATERAIALS SHALL MEET THE REQUIREMENTS OF MAINE DEPARTMENT OF TRANSPORTATION SPECIFICATION SECTION 719.

STATE OF MAINE
DEPARTMENT OF TRANSPORTATION

IM-1668(600)E, IM-A670(000)E & BR-1781(400)X

PIN
PIN 16686.00, 16700.00 & 17814.00

HIGHWAY PLANS

PROJ. MANAGER	B. CONDON	BY	DATE
DESIGN-DETAILED	TPL	MJC	06/11
CHECKED-REVIEWED	JGS	--	06/11
DESIGN2-DETAILED2	PDD	TPL	06/11
DESIGN3-DETAILED3	--	--	--
REVISIONS 1	--	--	--
REVISIONS 2	--	--	--
REVISIONS 3	--	--	--
REVISIONS 4	--	--	--
FIELD CHANGES	--	--	--

SIGNATURE

P.E. NUMBER

DATE

FAIRFIELD - BENTON
INTERSTATE 95

DETOUR SIGNING SUMMARY

SHEET NUMBER
132
OF 132

Filename: ...\msto\132_Sign_Summary1.dgn Division: HIGHWAY Username: thigginson Date:6/20/2011