Updated 02/04/14

STATE PROJECT

BIDDING INSTRUCTIONS

FOR ALL PROJECTS:

1. Use pen and ink to complete all paper Bids.
2. As a minimum, the following must be received prior to the time of Bid opening:

For a Paper Bid:

a) a copy of the Notice to Contractors, b) the completed Acknowledgement of Bid Amendments form, c) the completed Schedule of Items, d) two copies of the completed and signed Contract Offer, Agreement & Award form, e) a Bid Guaranty, (if required), and f) any other certifications or Bid requirements listed in the Bid Documents as due by Bid opening.

For an Electronic Bid:

a) a completed Bid using Expedite® software and submitted via the Bid Express™ web-based service, b) an electronic Bid Guaranty (if required) or a faxed copy of a Bid Bond (with original to be delivered within 72 hours), and c) any other Certifications or Bid requirements listed in the Bid Documents as due by Bid opening.

3. Include prices for all items in the Schedule of Items (<u>excluding non-selected alternates</u>).
4. Bid Guaranty acceptable forms are:
   a) a properly completed and signed Bid Bond on the Department's prescribed form (or on a form that does not contain any significant variations from the Department's form as determined by the Department) for 5% of the Bid Amount or
   b) an Official Bank Check, Cashier's Check, Certified Check, U.S. Postal Money Order or Negotiable Certificate of Deposit in the amount stated in the Notice to Contractors or
   c) an electronic bid bond submitted with an electronic bid.

5. If a paper Bid is to be sent, "FedEx First Overnight" delivery is suggested as the package is delivered directly to the DOT Headquarters Building located at 16 Child Street in Augusta. Other means, such as U.S. Postal Service's Express Mail has proven not to be reliable.

IN ADDITION, FOR FEDERAL AID PROJECTS:

6. Complete the DBE Proposed Utilization form, and submit with your bid. If you are submitting your bid electronically, you must FAX the form to (207) 624-3431. This is a curable defect.

If you need further information regarding Bid preparation, call the DOT Contracts Section at (207) 624-3410.

For complete bidding requirements, refer to Section 102 of the Maine Department of Transportation, Standard Specifications, Revision of December 2002.

January 19, 2012
Supersedes September 09, 2011

NOTICE

The Maine Department of Transportation is attempting to improve the way Bid Amendments/Addendums are handled, and allow for an electronic downloading of bid packages from our website, while continuing to maintain an optional planholders list.

Prospective bidders, subcontractors or suppliers who wish to download a copy of the bid package and receive a courtesy notification of project specific bid amendments, must provide an email address to Diane Barnes or David Venner at the MDOT Contracts mailbox at: MDOT.contracts@maine.gov. Each bid package will require a separate request.

Additionally, interested parties will be responsible for reviewing and retrieving the Bid Amendments from our web site, and acknowledging receipt and incorporating those Bid Amendments in their bids using the Acknowledgement of Bid Amendment Form.

The downloading of bid packages from the MDOT website is not the same as providing an electronic bid to the Department. Electronic bids must be submitted via http://www.BIDX.com. For information on electronic bidding contact Patrick Corum at patrick.corum@maine.gov , Rebecca Snowden at rebecca.snowden@maine.gov or Diane Barnes at diane.barnes@maine.gov.

NOTICE

For security and other reasons, all Bid Packages which are mailed, shall be provided in double (one envelope inside the other) envelopes. The *Inner Envelope* shall have the following information provided on it:

Bid Enclosed - Do Not Open
PIN:
Town:
Date of Bid Opening:
Name of Contractor with mailing address and telephone number:

In Addition to the usual address information, the *Outer Envelope* should have written or typed on it:

Double Envelope: Bid Enclosed
PIN:
Town:
Date of Bid Opening:
Name of Contractor:
This should not be much of a change for those of you who use Federal Express or similar services.

Hand-carried Bids may be in one envelope as before, and should be marked with the following infrormation:

Bid Enclosed: Do Not Open
PIN:
Town:
Name of Contractor:

STATE OF MAINE DEPARTMENT OF TRANSPORTATION

Bid Guaranty-Bid Bond Form

KNOW ALL MEN BY THESE PRESENTS THAT_____

_____, of the City/Town of _____and State of_____

as Principal, and _____as Surety, a

Corporation duly organized under the laws of the State of_____and having a usual place of

Business in _____and hereby held and firmly bound unto the Treasurer of

the State of Maine in the sum of_____,for payment which Principal and Surety bind

themselves, their heirs, executers, administrators, successors and assigns, jointly and severally.

The condition of this obligation is that the Principal has submitted to the Maine Department of Transportation, hereafter Department, a certain bid, attached hereto and incorporated as a part herein, to enter into a written contract for the construction of _____

_____

_____and if the Department shall accept said bid and the Principal shall execute and deliver a contract in the form attached hereto (properly completed in accordance with said bid) and shall furnish bonds for this faithful performance of said contract, and for the payment of all persons performing labor or furnishing material in connection therewith, and shall in all other respects perform the agreement created by the acceptance of said bid, then this obligation shall be null and void; otherwise it shall remain in full force, and effect.

Signed and sealed this_____day of _____20_____

WITNESS:

_____

_____

_____

WITNESS

_____

_____

_____

PRINCIPAL:

By_____

By:_____

By:_____

SURETY:

By_____

By:_____

Name of Local Agency: _____

SAMPLE

NOTICE

Bidders:

Please use the attached "Request for Information" form when faxing questions and comments concerning specific Contracts that have been Advertised for Bid. Include additional numbered pages as required. Questions are to be faxed to the number listed in the Notice to Contractors. This is the only allowable mechanism for answering Project specific questions. Maine DOT will not be bound to any answers to Project specific questions received during the Bidding phase through other processes.

State of Maine
Department of Transportation

REQUEST FOR INFORMATION

Date _____ Time _____

Information Requested: **PIN:** _____ **Town(s):** _____

_____

_____

_____

_____

_____

_____

_____

_____

_____

_____

_____

_____

Request by: _____ **Phone: (_____)**_____
Bid Date: _____ **Fax: (_____)**_____

Complete top portion of form and transmit to the number listed in the Notice to Contractors

RFI No: _____ **RFI received:** _____

Response:_____

_____

_____

_____

_____

_____

_____

_____

_____

_____

_____

Response By:_____ Date: _____

Vendor Registration

Prospective Bidders must register as a vendor with the Department of Administrative & Financial Services if the vendor is awarded a contract. Vendors will not be able to receive payment without first being registered. Vendors/Contractors will find information and register through the following link – http://www.maine.gov/purchases/venbid/index.shtml

STATE OF MAINE DEPARTMENT OF TRANSPORTATION
NOTICE TO CONTRACTORS

Sealed Bids addressed to the Maine Department of Transportation, Augusta, Maine 04333 and endorsed on the wrapper "Bids for **Concrete Rubblization, Full Depth Recycled Pavement with Cement, Pavement Milling, Hot Mix Asphalt Overlay with Drainage and Safety Improvements in the city of Auburn**" will be received from contractors at the Reception Desk, Maine DOT Building, Capitol Street, Augusta, Maine, until 11:00 o'clock A.M. (prevailing time) on May 28, 2014 and at that time and place publicly opened and read. Bids will be accepted from all bidders. The lowest responsive bidder must have completed, or successfully complete, a Highway Construction, Paving, or project specific prequalification to be considered for the award of this contract. **We now accept electronic bids for those bid packages posted on the bidx.com website. Electronic bids do not have to be accompanied by paper bids. Please note: the Department will accept a facsimile of the bid bond; however, the original bid bond must then be received at the MDOT Contract Section within 72 hours of the bid opening. Until further notice, dual bids (one paper, one electronic) will be accepted, with the paper copy taking precedence.**

Description: WINS 20246.00 & 22663.00

Location: In Androscoggin County:

Project No. 20246.00 is located on Route 122 beginning at Route 202 and extending northwesterly 1.49 miles to the New Gloucester/Auburn TL.

Project No. 22663.00 is located on Route 122 and consists of guardrail upgrades and replacement within the limits of WIN 20246.00 on the bridge over the Maine Turnpike.

Outline of Work: Concrete Rubblization, Full Depth Reclamation with Cement, Pavement Milling, Hot Mix Asphalt Overlay with Drainage and Safety Improvements and other incidental work.

For general information regarding Bidding and Contracting procedures, contact George Macdougall at (207) 624-3410. Our webpage at http://www.maine.gov/mdot/contractors/ contains a copy of the schedule of items, Plan Holders List, written portions of bid amendments (not drawings), and bid results. For Project-specific information fax all questions to **Scott Bickford** at (207) 624-3431. Questions received after 12:00 noon of **Friday** prior to bid date will not be answered. Bidders shall not contact any other Departmental staff for clarification of Contract provisions, and the Department will not be responsible for any interpretations so obtained. TTY users call Maine Relay 711.

Specifications and bid forms may be seen at the Maine DOT Building in Augusta, Maine and at the Department of Transportation's Regional Office in Scarborough. They may be purchased from the Department between the hours of 8:00 a.m. to 4:30 p.m. by cash, credit card (Visa/Mastercard) or check payable to Treasurer, State of Maine sent to Maine Department of Transportation, Attn.: Mailroom, 16 State House Station, Augusta, Maine 04333-0016. They also may be purchased by telephone at (207) 624-3536 between the hours of 8:00 a.m. to 4:30 p.m. Bid Book $10 ($13 by mail), payment in advance, all non-refundable.

Each Bid must be made upon blank forms provided by the Department and must be accompanied by a bid bond at 5% of the bid amount or an official bank check, cashier's check, certified check, certificate of deposit, or United States postal money order in the amount of **$30,000** payable to Treasurer, State of Maine as a Bid guarantee. A Contract Performance Surety Bond and a Contract Payment Surety Bond, each in the amount of 100 percent of the Contract price, will be required of the successful Bidder.

This Contract is subject to all applicable State Laws.

All work shall be governed by "State of Maine, Department of Transportation, Standard Specifications, Revision of December 2002", price $10 [$13 by mail], and Standard Details, Revision of December 2002, price $20 [$25 by mail]. They also may be purchased by telephone at (207) 624-3536 between the hours of 8:00 a.m. to 4:30 p.m. Standard Detail updates can be found at http://www.maine.gov/mdot/contractors/publications/ .

The right is hereby reserved to the Maine DOT to reject any or all bids.

Augusta, Maine
May 7, 2014

STATE OF MAINE
Joyce Noel Taylor
6997
LICENSED
PROFESSIONAL ENGINEER

Joyce Noel Taylor

JOYCE NOEL TAYLOR P. E.
CHIEF ENGINEER

SPECIAL PROVISION 102.7.3
ACKNOWLEDGMENT OF BID AMENDMENTS

With this form, the Bidder acknowledges its responsibility to check for all Amendments to the Bid Package. For each Project under Advertisement, Amendments are located at http://www.maine.gov/mdot/contractors/ . It is the responsibility of the Bidder to determine if there are Amendments to the Project, to download them, to incorporate them into their Bid Package, and to reference the Amendment number and the date on the form below. The Maine DOT will not post Bid Amendments any later than noon the day before Bid opening without individually notifying all the planholders.

Amendment Number	Date

The Contractor, for itself, its successors and assigns, hereby acknowledges that it has received all of the above referenced Amendments to the Bid Package.

CONTRACTOR

_____
Date

_____
Signature of authorized representative

_____
(Name and Title Printed)

Maine Department of Transportation

Proposal Schedule of Items

Proposal ID: 020246.00 Project(s): 020246.00, 022663.00

SECTION: 1 HIGHWAY ITEMS

Alt Set ID: Alt Mbr ID:

Contractor: _____

Proposal Line Number	Item ID Description	Approximate Quantity and Units	Unit Price		Bid Amount	
			Dollars	Cents	Dollars	Cents
0010	202.202 REMOVING PAVEMENT SURFACE	5,900.000 SY	_____	_____	_____	_____
0020	202.203 PAVEMENT BUTT JOINTS	130.000 SY	_____	_____	_____	_____
0030	203.34 CRUSHED STONE FILL	10.000 T	_____	_____	_____	_____
0040	304.103 AGGREGATE SUBBASE - GRAVEL (TRUCK MEASURE)	2,800.000 CY	_____	_____	_____	_____
0050	304.13 DENSE GRADED CRUSHED AGGREGATE SUBBASE	600.000 CY	_____	_____	_____	_____
0060	307.332 FULL DEPTH RECYCLED PAVEMENT(W EMULSIFIED ASPHALT STABILIZER) 5 IN. DEPTH	15,230.000 SY	_____	_____	_____	_____
0070	311.36 FULL DEPTH CONCRETE RUBBLIZATION	5,000.000 SY	_____	_____	_____	_____
0080	403.208 HOT MIX ASPHALT 12.5 MM HMA SURFACE	2,600.000 T	_____	_____	_____	_____
0090	403.209 HOT MIX ASPHALT 9.5 MM (SIDEWALKS, DRIVES, INCIDENTALS)	70.000 T	_____	_____	_____	_____
0100	403.213 HOT MIX ASPHALT 12.5 MM BASE	2,700.000 T	_____	_____	_____	_____
0110	409.15 BITUMINOUS TACK COAT - APPLIED	500.000 G	_____	_____	_____	_____

Proposal ID: 020246.00 Project(s): 020246.00, 022663.00

SECTION: 1 HIGHWAY ITEMS

Alt Set ID: Alt Mbr ID:

Contractor: _____

Proposal Line Number	Item ID Description	Approximate Quantity and Units	Unit Price		Bid Amount	
			Dollars	Cents	Dollars	Cents
0120	411.09 UNTREATED AGGREGATE SURFACE COURSE	50.000 CY				
0130	527.303 ENERGY ABSORBING SYSTEM (ET-PLUS)	5.000 EA				
0140	604.18 ADJUSTING MANHOLE OR CATCH BASIN TO GRADE	1.000 EA				
0150	606.1721 BRIDGE TRANSITION - TYPE 1	4.000 EA				
0160	606.23 GUARDRAIL TYPE 3C - SINGLE RAIL	928.000 LF				
0170	606.232 GUARDRAIL TYPE 3C - OVER 15 FOOT RADIUS	40.000 LF				
0180	606.265 TERMINAL END - SINGLE RAIL - GALVANIZED STEEL	1.000 EA				
0190	606.353 REFLECTORIZED FLEXIBLE GUARDRAIL MARKER	15.000 EA				
0200	606.47 SINGLE WOOD POST	10.000 EA				
0210	609.31 CURB TYPE 3	220.000 LF				
0220	609.40 RESET CURB TYPE 5	250.000 LF				
0230	615.07 LOAM	20.000 CY				

Proposal ID: 020246.00 Project(s): 020246.00, 022663.00

SECTION: 1 HIGHWAY ITEMS

Alt Set ID: Alt Mbr ID:

Contractor: _____

Proposal Line Number	Item ID Description	Approximate Quantity and Units	Unit Price		Bid Amount	
			Dollars	Cents	Dollars	Cents
0240	627.733 4" WHITE OR YELLOW PAINTED PAVEMENT MARKING LINE	25,460.000 LF				
0250	627.78 TEMPORARY 4 INCH PAINTED PAVEMENT MARKING LINE, WHITE OR YELLOW	50,920.000 LF				
0260	629.05 HAND LABOR, STRAIGHT TIME	40.000 HR				
0270	631.12 ALL PURPOSE EXCAVATOR (INCLUDING OPERATOR)	40.000 HR				
0280	631.172 TRUCK - LARGE (INCLUDING OPERATOR)	80.000 HR				
0290	639.18 FIELD OFFICE TYPE A	1.000 EA				
0300	652.33 DRUM	40.000 EA				
0310	652.34 CONE	200.000 EA				
0320	652.35 CONSTRUCTION SIGNS	980.000 SF				
0330	652.36 MAINTENANCE OF TRAFFIC CONTROL DEVICES	83.000 CD				
0340	652.38 FLAGGER	2,600.000 HR				

Maine Department of Transportation

Proposal Schedule of Items

Proposal ID: 020246.00 Project(s): 020246.00, 022663.00

SECTION: 1 HIGHWAY ITEMS

Alt Set ID: Alt Mbr ID:

Contractor: _____

Proposal Line Number	Item ID Description	Approximate Quantity and Units	Unit Price Dollars Cents	Bid Amount Dollars Cents
0350	656.75 TEMPORARY SOIL EROSION AND WATER POLLUTION CONTROL	LUMP SUM	LUMP SUM	_____.____
0360	659.10 MOBILIZATION	LUMP SUM	LUMP SUM	_____.____

Section: 1 Total: _____.____

Total Bid: _____.____

CONTRACT AGREEMENT, OFFER & AWARD

AGREEMENT made on the date last signed below, by and between the State of Maine, acting through and by its Department of Transportation (Department), an agency of state government with its principal administrative offices located at Child Street, Augusta, Maine, with a mailing address at 16 State House Station, Augusta, Maine 04333-0016, and _____ a corporation or other legal entity organized under the laws of the State of _____, with its principal place of business located at _____ _____

The Department and the Contractor, in consideration of the mutual promises set forth in this Agreement (the "Contract"), hereby agree as follows:

A. The Work.

The Contractor agrees to complete all Work as specified or indicated in the Contract including Extra Work in conformity with the Contract, **WIN Nos. 20246.00 & 22663.00, for the Concrete Rubblization, Full Depth Recycled Pavement with Cement, Pavement Milling, Hot Mix Asphalt Overlay with Drainage and Safety Improvements in the city of Auburn, County of Androscoggin, Maine.** The Work includes construction, maintenance during construction, warranty as provided in the Contract, and other incidental work.

The Contractor shall be responsible for furnishing all supervision, labor, equipment, tools supplies, permanent materials and temporary materials required to perform the Work including construction quality control including inspection, testing and documentation, all required documentation at the conclusion of the project, warranting its work and performing all other work indicated in the Contract.

The Department shall have the right to alter the nature and extent of the Work as provided in the Contract; payment to be made as provided in the same.

B. Time.

The Contractor agrees to complete all Work, except warranty work, on or before **September 27, 2014.** Further, the Department may deduct from moneys otherwise due the Contractor, not as a penalty, but as Liquidated Damages in accordance with Sections 107.7 and 107.8 of the State of Maine Department of Transportation Standard Specifications, Revision of December 2002 and related Special Provisions.

C. Price.

The quantities given in the Schedule of Items of the Bid Package will be used as the basis for determining the original Contract amount and for determining the amounts of the required Performance Surety Bond and Payment Surety Bond, and that the amount of this offer is _____

_____

$_____ Performance Bond and Payment Bond each being 100% of the amount of this Contract.

D. Contract.

This Contract, which may be amended, modified, or supplemented in writing only, consists of the Contract documents as defined in the Plans, Standard Specifications, Revision of December 2002, Standard Details Revision of December 2002 as updated through advertisement, Supplemental Specifications, Special Provisions, Contract Agreement; and Contract Bonds. It is agreed and understood that this Contract will be governed by the documents listed above.

E. Certifications.

By signing below, the Contractor hereby certifies that to the best of the Contractor's knowledge and belief:

1. All of the statements, representations, covenants, and/or certifications required or set forth in the Bid and the Bid Documents, including those in the Contract are still complete and accurate as of the date of this Agreement.

2. The Contractor knows of no legal, contractual, or financial impediment to entering into this Contract.

3. The person signing below is legally authorized by the Contractor to sign this Contract on behalf of the Contractor and to legally bind the Contractor to the terms of the Contract.

F. Offer.

The undersigned, having carefully examined the site of work, the Plans, Standard Specifications Revision of December 2002, Standard Details Revision of December 2002 as updated through advertisement, Supplemental Specifications, Special Provisions, Contract Agreement; and Contract Bonds contained herein for construction of: **WIN Nos. 20246.00 & 22663.00, for the Concrete Rubblization, Full Depth Recycled Pavement with Cement, Pavement Milling, Hot Mix Asphalt Overlay with Drainage and Safety Improvements in the city of Auburn, County of Androscoggin**, State of Maine, on which bids will be received until the time specified in the "Notice to Contractors" do(es) hereby bid and offer to enter into this contract to supply all the materials, tools, equipment and labor to construct the whole of the Work in strict accordance with the terms and conditions of this Contract at the unit prices in the attached "Schedule of Items".

The Offeror agrees to perform the work required at the price specified above and in accordance with the bids provided in the attached "Schedule of Items" in strict accordance with the terms of this solicitation, and to provide the appropriate insurance and bonds if this offer is accepted by the Government in writing.

As Offeror also agrees:

First: To do any extra work, not covered by the attached "Schedule of Items", which may be ordered by the Resident, and to accept as full compensation the amount determined upon a "Force Account" basis as provided in the Standard Specifications, Revision of December 2002, and as addressed in the contract documents.

Second: That the bid bond at 5% of the bid amount or the official bank check, cashier's check, certificate of deposit or U. S. Postal Money Order in the amount given in the "Notice to Contractors", payable to the Treasurer of the State of Maine and accompanying this bid, shall be forfeited, as liquidated damages, if in case this bid is accepted, and the undersigned shall fail to abide by the terms and conditions of the offer and fail to furnish satisfactory insurance and Contract bonds under the conditions stipulated in the Specifications within 15 days of notice of intent to award the contract.

Third: To begin the Work as stated in Section 107.2 of the Standard Specifications Revision of December 2002 and complete the Work within the time limits given in the Special Provisions of this Contract.

Fourth: That this offer shall remain open for 30 calendar days after the date of opening of bids.

Fifth: The Bidder hereby certifies, to the best of its knowledge and belief that: the Bidder has not, either directly or indirectly, entered into any agreement, participated in any collusion, or otherwise taken any action in restraint of competitive bidding in connection with its bid, and its subsequent contract with the Department.

IN WITNESS WHEREOF, the Contractor, for itself, its successors and assigns, hereby execute two duplicate originals of this Agreement and thereby binds itself to all covenants, terms, and obligations contained in the Contract Documents.

CONTRACTOR

_____	_____
Date	(Signature of Legally Authorized Representative of the Contractor)
_____	_____
Witness	(Name and Title Printed)

G. Award.

Your offer is hereby accepted. This award consummates the Contract, and the documents referenced herein.

MAINE DEPARTMENT OF TRANSPORTATION

_____	_____
Date	By: David Bernhardt, Commissioner
_____	
Witness	

CONTRACT AGREEMENT, OFFER & AWARD

AGREEMENT made on the date last signed below, by and between the State of Maine, acting through and by its Department of Transportation (Department), an agency of state government with its principal administrative offices located at Child Street, Augusta, Maine, with a mailing address at 16 State House Station, Augusta, Maine 04333-0016, and _____ a corporation or other legal entity organized under the laws of the State of _____, with its principal place of business located at _____ _____

The Department and the Contractor, in consideration of the mutual promises set forth in this Agreement (the "Contract"), hereby agree as follows:

A. The Work.

The Contractor agrees to complete all Work as specified or indicated in the Contract including Extra Work in conformity with the Contract, **WIN Nos. 20246.00 & 22663.00, for the Concrete Rubblization, Full Depth Recycled Pavement with Cement, Pavement Milling, Hot Mix Asphalt Overlay with Drainage and Safety Improvements in the city of Auburn, County of Androscoggin, Maine.** The Work includes construction, maintenance during construction, warranty as provided in the Contract, and other incidental work.

The Contractor shall be responsible for furnishing all supervision, labor, equipment, tools supplies, permanent materials and temporary materials required to perform the Work including construction quality control including inspection, testing and documentation, all required documentation at the conclusion of the project, warranting its work and performing all other work indicated in the Contract.

The Department shall have the right to alter the nature and extent of the Work as provided in the Contract; payment to be made as provided in the same.

B. Time.

The Contractor agrees to complete all Work, except warranty work, on or before **September 27, 2014.** Further, the Department may deduct from moneys otherwise due the Contractor, not as a penalty, but as Liquidated Damages in accordance with Sections 107.7 and 107.8 of the State of Maine Department of Transportation Standard Specifications, Revision of December 2002 and related Special Provisions.

C. Price.

The quantities given in the Schedule of Items of the Bid Package will be used as the basis for determining the original Contract amount and for determining the amounts of the required Performance Surety Bond and Payment Surety Bond, and that the amount of this offer is _____

_____

$_____ Performance Bond and Payment Bond each being 100% of the amount of this Contract.

D. Contract.

This Contract, which may be amended, modified, or supplemented in writing only, consists of the Contract documents as defined in the Plans, Standard Specifications, Revision of December 2002, Standard Details Revision of December 2002 as updated through advertisement, Supplemental Specifications, Special Provisions, Contract Agreement; and Contract Bonds. It is agreed and understood that this Contract will be governed by the documents listed above.

E. Certifications.

By signing below, the Contractor hereby certifies that to the best of the Contractor's knowledge and belief:

1. All of the statements, representations, covenants, and/or certifications required or set forth in the Bid and the Bid Documents, including those in the Contract are still complete and accurate as of the date of this Agreement.

2. The Contractor knows of no legal, contractual, or financial impediment to entering into this Contract.

3. The person signing below is legally authorized by the Contractor to sign this Contract on behalf of the Contractor and to legally bind the Contractor to the terms of the Contract.

F. Offer.

The undersigned, having carefully examined the site of work, the Plans, Standard Specifications Revision of December 2002, Standard Details Revision of December 2002 as updated through advertisement, Supplemental Specifications, Special Provisions, Contract Agreement; and Contract Bonds contained herein for construction of: **WIN Nos. 20246.00 & 22663.00, for the Concrete Rubblization, Full Depth Recycled Pavement with Cement, Pavement Milling, Hot Mix Asphalt Overlay with Drainage and Safety Improvements in the city of Auburn, County of Androscoggin**, State of Maine, on which bids will be received until the time specified in the "Notice to Contractors" do(es) hereby bid and offer to enter into this contract to supply all the materials, tools, equipment and labor to construct the whole of the Work in strict accordance with the terms and conditions of this Contract at the unit prices in the attached "Schedule of Items".

The Offeror agrees to perform the work required at the price specified above and in accordance with the bids provided in the attached "Schedule of Items" in strict accordance with the terms of this solicitation, and to provide the appropriate insurance and bonds if this offer is accepted by the Government in writing.

As Offeror also agrees:

First: To do any extra work, not covered by the attached "Schedule of Items", which may be ordered by the Resident, and to accept as full compensation the amount determined upon a "Force Account" basis as provided in the Standard Specifications, Revision of December 2002, and as addressed in the contract documents.

Second: That the bid bond at 5% of the bid amount or the official bank check, cashier's check, certificate of deposit or U. S. Postal Money Order in the amount given in the "Notice to Contractors", payable to the Treasurer of the State of Maine and accompanying this bid, shall be forfeited, as liquidated damages, if in case this bid is accepted, and the undersigned shall fail to abide by the terms and conditions of the offer and fail to furnish satisfactory insurance and Contract bonds under the conditions stipulated in the Specifications within 15 days of notice of intent to award the contract.

Third: To begin the Work as stated in Section 107.2 of the Standard Specifications Revision of December 2002 and complete the Work within the time limits given in the Special Provisions of this Contract.

Fourth: That this offer shall remain open for 30 calendar days after the date of opening of bids.

Fifth: The Bidder hereby certifies, to the best of its knowledge and belief that: the Bidder has not, either directly or indirectly, entered into any agreement, participated in any collusion, or otherwise taken any action in restraint of competitive bidding in connection with its bid, and its subsequent contract with the Department.

IN WITNESS WHEREOF, the Contractor, for itself, its successors and assigns, hereby execute two duplicate originals of this Agreement and thereby binds itself to all covenants, terms, and obligations contained in the Contract Documents.

CONTRACTOR

_____	_____
Date	(Signature of Legally Authorized Representative of the Contractor)
_____	_____
Witness	(Name and Title Printed)

G. Award.

Your offer is hereby accepted. This award consummates the Contract, and the documents referenced herein.

MAINE DEPARTMENT OF TRANSPORTATION

_____	_____
Date	By: David Bernhardt, Commissioner
_____	
Witness	

CONTRACT AGREEMENT, OFFER & AWARD

AGREEMENT made on the date last signed below, by and between the State of Maine, acting through and by its Department of Transportation (Department), an agency of state government with its principal administrative offices located at Child Street Augusta, Maine, with a mailing address at 16 State House Station, Augusta, Maine 04333-0016, and **(Name of the firm bidding the job)** a corporation or other legal entity organized under the laws of the State of Maine, with its principal place of business located at **(address of the firm bidding the job)**

The Department and the Contractor, in consideration of the mutual promises set forth in this Agreement (the "Contract"), hereby agree as follows:

SAMPLE

A. The Work.

The Contractor agrees to complete all Work as specified or indicated in the Contract including Extra Work in conformity with the Contract, PIN No. **1224.00**, for the **Hot Mix Asphalt Overlay** in the town/city of **South Nowhere,** County of **Washington**, Maine. The Work includes construction, maintenance during construction, warranty as provided in the Contract, and other incidental work.

The Contractor shall be responsible for furnishing all supervision, labor, equipment, tools supplies, permanent materials and temporary materials required to perform the Work including construction quality control including inspection, testing and documentation, all required documentation at the conclusion of the project, warranting its work and performing all other work indicated in the Contract.

The Department shall have the right to alter the nature and extent of the Work as provided in the Contract; payment to be made as provided in the same.

B. Time.

The Contractor agrees to complete all Work, except warranty work, on or before **November 15, 2006.** Further, the Department may deduct from moneys otherwise due the Contractor, not as a penalty, but as Liquidated Damages in accordance with Sections 107.7 and 107.8 of the State of Maine Department of Transportation Standard Specifications, Revision of December 2002 and related Special Provisions.

C. Price.

The quantities given in the Schedule of Items of the Bid Package will be used as the basis for determining the original Contract amount and for determining the amounts of the required Performance Surety Bond and Payment Surety Bond, and that the amount of this offer is ____(**Place bid here in alphabetical form such as One Hundred and Two dollars and 10 cents**)_____ **$_(repeat bid here in numerical terms, such as $102.10**)_____ Performance Bond and Payment Bond each being 100% of the amount of this Contract.

D. Contract.

This Contract, which may be amended, modified, or supplemented in writing only, consists of the Contract documents as defined in the Plans, Standard Specifications, Revision of December 2002, Standard Details Revision of December 2002, Supplemental Specifications, Special Provisions, Contract Agreement; and Contract Bonds. It is agreed and understood that this Contract will be governed by the documents listed above.

E. Certifications.

By signing below, the Contractor hereby certifies that to the best of the Contractor's knowledge and belief:

1. All of the statements, representations, covenants, and/or certifications required or set forth in the Bid and the Bid Documents, including those in Appendix A to Division 100 of the Standard Specifications Revision of December 2002 (Federal Contract Provisions Supplement), and the Contract are still complete and accurate as of the date of this Agreement.

2. The Contractor knows of no legal, contractual, or financial impediment to entering into this Contract.

3. The person signing below is legally authorized by the Contractor to sign this Contract on behalf of the Contractor and to legally bind the Contractor to the terms of the Contract.

SAMPLE

F. Offer.

The undersigned, having carefully examined the site of work, the Plans, Standard Specifications, Revision of December 2002, Standard Details Revision of December 2002, Supplemental Specifications, Special Provisions, Contract Agreement; and Contract Bonds contained herein for construction of:

PIN 1234.00 South Nowhere, Hot Mix Asphalt Overlay,
State of Maine, on which bids will be received until the time specified in the "Notice to Contractors" do(es) hereby bid and offer to enter into this contract to supply all the materials, tools, equipment and labor to construct the whole of the Work in strict accordance with the terms and conditions of this Contract at the unit prices in the attached "Schedule of Items".

The Offeror agrees to perform the work required at the price specified above and in accordance with the bids provided in the attached "Schedule of Items" in strict accordance with the terms of this solicitation, and to provide the appropriate insurance and bonds if this offer is accepted by the Government in writing.

As Offeror also agrees:

First: To do any extra work, not covered by the attached "Schedule of Items", which may be ordered by the Resident, and to accept as full compensation the amount determined upon a "Force Account" basis as provided in the Standard Specifications, Revision of December 2002, and as addressed in the contract documents.

Second: That the bid bond at 5% of the bid amount or the official bank check, cashier's check, certificate of deposit or U. S. Postal Money Order in the amount given in the "Notice to Contractors", payable to the Treasurer of the State of Maine and accompanying this bid, shall be forfeited, as liquidated damages, if in case this bid is accepted, and the undersigned shall fail to abide by the terms and conditions of the offer and fail to furnish satisfactory insurance and Contract bonds under the conditions stipulated in the Specifications within 15 days of notice of intent to award the contract.

Third: To begin the Work as stated in Section 107.2 of the Standard Specifications Revision of 2002 and complete the Work within the time limits given in the Special Provisions of this Contract.

Fourth: The Contractor will be bound to the Disadvantaged Business Enterprise (DBE) Requirements contained in the attached Notice (Additional Instructions to Bidders) and submit a completed Contractor's Disadvantaged Business Enterprise Utilization Plan with their bid.

Fifth: That this offer shall remain open for 30 calendar days after the date of opening of bids.

SAMPLE

Sixth: The Bidder hereby certifies, to the best of its knowledge and belief that: the Bidder has not, either directly or indirectly, entered into any agreement, participated in any collusion, or otherwise taken any action in restraint of competitive bidding in connection with its bid, and its subsequent contract with the Department.

IN WITNESS WHEREOF, the Contractor, for itself, its successors and assigns, hereby execute two duplicate originals of this Agreement and thereby binds itself to all covenants, terms, and obligations contained in the Contract Documents.

CONTRACTOR

_____ **(Sign Here)**
Date (Signature of Legally Authorized Representative of the Contractor)

____(**Witness Sign Here**) **(Print Name Here)**
Witness (Name and Title Printed)

SAMPLE

G. Award.

Your offer is hereby accepted. This award consummates the Contract, and the documents referenced herein.

MAINE DEPARTMENT OF TRANSPORTATION

_____ _____
Date By: David Bernhardt, Commissioner

_____
(Witness)

BOND # _____

CONTRACT PERFORMANCE BOND
(Surety Company Form)

KNOW ALL MEN BY THESE PRESENTS: That _____ _____ **in the State of** _____, as principal, and…….....,
a corporation duly organized under the la ws of the State of ..... and having a usual place of business ....,
as Surety, are held and firm ly bound unto the Treasurer of the State of Maine in the sum of _____ **and 00/100 Dollars ($)**, to be paid said Treasurer of the State of Maine or his successors in office, for which payment well and truly to be m ade, Principa l and Surety bind them selves, their heirs, executors and adm inistrators, successors a nd assigns, jointly and severally by these presents.

The condition of this obligation is such that if the Principal designated as Contractor in the Contract to construct Project Num ber _____ in the Municipality of _____ prom ptly and faithfully perfor ms the Contract, then this obligation shall be null and void; otherwise it shall remain in full force and effect.

The Surety hereby waives notice of any altera tion or extension of tim e made by the State of Maine.

Signed and sealed this ..... day of ....., 20….. .

WITNESSES: SIGNATURES:
CONTRACTOR:
Signature..... .....….....
Print Name Legibly ..... Print Name Legibly ...…….....
SURETY:
Signature ....…….....
Print Name Legibly ..... Print Name Legibly .....
SURETY ADDRESS: NAME OF LOCAL AGENCY:
..... ADDRESS .....
....…….....
....…….....
TELEPHONE..... .....…….....

SAMPLE

BOND # _____

CONTRACT PAYMENT BOND
(Surety Company Form)

KNOW ALL MEN BY THESE PRESENTS: That _____ _____ **in the State of** _____, as principal, and.....….....
a corporation duly organized under the laws of the State of ..... and having a usual place of business in .....……,
as Surety, are held and firmly bound unto the Treasurer of the State of Maine for the use and benefit of claimants as herein below defined, in the sum of _____ **and 00/100 Dollars ($)**
for the payment whereof Principal and Surety bind themselves, their heirs, executors and administrators, successors and assigns, jointly and severally by these presents.

The condition of this obligation is such that if the Principal designated as Contractor in the Contract to construct Project Number _____ in the Municipality of _____ promptly satisfies all claims and demands incurred for all labor and material, used or required by him in connection with the work contemplated by said Contract, and fully reimburses the obligee for all outlay and expense which the obligee may incur in making good any default of said Principal, then this obligation shall be null and void; otherwise it shall remain in full force and effect.

A claimant is defined as one having a direct contract with the Principal or with a Subcontractor of the Principal for labor, material or both, used or reasonably required for use in the performance of the contract.

Signed and sealed this ..... day of ...……....., 20 ... .
WITNESS: SIGNATURES:

CONTRACTOR:

Signature……..... .....….....
Print Name Legibly .....…….. Print Name Legibly ….....

SURETY:

Signature..... ...….....
Print Name Legibly ..... Print Name Legibly ….....

SURETY ADDRESS: NAME OF LOCAL AGENCY:
...…..... ADDRESS ….....
..... …….....
TELEPHONE ..... …….....

SAMPLE

THIS DOCUMENT MUST BE CLEARLY POSTED AT THE PERTAINING STATE FUNDED PREVAILING WAGE CONSTRUCTION SITE

State of Maine
Department of Labor
Bureau of Labor Standards
Wage and Hour Division
Augusta, Maine 04333-0045
Telephone (207) 623-7906

Wage Determination - In accordance with 26 MRSA §1301 et. seq., this is a determination by the Bureau of Labor Standards, of the fair minimum wage rate to be paid laborers and workers employed on the below titled project.

Title of Project -------- Auburn-New Gloucester, Route 122 WIN 20246.00

Location of Project – Auburn, Androscoggin County

2014 Fair Minimum Wage Rates
Highway & Earthwork Androscoggin County

Occupation Title	Minimum Wage	Minimum Benefit	Total	Occupation Title	Minimum Wage	Minimum Benefit	Total
Asphalt Raker	$14.00	$0.60	$14.60	Ironworker - Structural	$22.57	$5.88	$28.45
Backhoe Loader Operator	$17.00	$1.68	$18.68	Laborers (Incl.Helpers & Tenders)	$13.15	$1.29	$14.44
Boom Truck (Truck Crane) Operator	$25.00	$15.46	$40.46	Laborer - Skilled	$16.50	$2.55	$19.05
Bulldozer Operator	$18.00	$2.95	$20.95	Loader Operator - Front-End	$16.38	$2.63	$19.01
Carpenter	$18.50	$1.49	$19.99	Mechanic- Maintenance	$19.75	$2.89	$22.64
Carpenter - Rough	$17.00	$1.85	$18.85	Painter	$14.50	$0.00	$14.50
Cement Mason/Finisher	$17.05	$0.43	$17.48	Paver Operator	$17.63	$2.99	$20.62
Concrete Pump Operator	$20.50	$3.53	$24.03	Pipelayer	$35.72	$21.35	$57.07
Crane Operator =>15 Tons)	$23.25	$6.45	$29.70	Pump Installer	$21.00	$2.77	$23.77
Crusher Plant Operator	$17.95	$2.76	$20.71	Reclaimer Operator	$20.00	$10.84	$30.84
Diver	$25.00	$3.07	$28.07	Roller Operator - Earth	$19.36	$22.45	$41.81
Driller - Rock	$18.00	$5.01	$23.01	Roller Operator - Pavement	$17.00	$2.35	$19.35
Driller - Well	$14.00	$3.20	$17.20	Roofer	$16.00	$1.40	$17.40
Electrician - Licensed	$24.50	$5.86	$30.36	Screed/Wheelman	$18.20	$2.49	$20.69
Excavator Operator	$18.00	$1.97	$19.97	Truck Driver - Light	$15.75	$3.03	$18.78
Fence Setter	$12.00	$0.00	$12.00	Truck Driver - Medium	$14.00	$0.57	$14.57
Flagger	$10.00	$0.00	$10.00	Truck Driver - Heavy	$15.00	$1.72	$16.72
Grader/Scraper Operator	$16.25	$2.60	$18.85	Truck Driver - Tractor Trailer	$16.88	$4.96	$21.84
Highway Worker/Guardrail Installer	$16.40	$0.41	$16.81	Truck Driver - Mixer (Cement)	$11.42	$2.90	$14.32
Hot Top Plant Operator	$21.75	$10.34	$32.09				

The Laborer classifications include a wide range of work duties. Therefore, if any specific occupation to be employed on this project is not listed in this determination, call the Bureau of Labor Standards at the above number for further clarification.

Welders are classified in the trade to which the welding is incidental.

Apprentices - The minimum wage rate for registered apprentices are those set forth in the standards and policies of the Maine State Apprenticeship and Training Council for approved apprenticeship programs.

Posting of Schedule - Posting of this schedule is required in accordance with 26 MRSA §1301 et. seq., by any contractor holding a State contract for construction valued at $50,000 or more and any subcontractors to such a contractor.

Appeal - Any person affected by the determination of these rates may appeal to the Commissioner of Labor by filing a written notice with the Commissioner stating the specific grounds of the objection within ten (10) days from the filing of these rates with the Secretary of State.

Determination No: HI-068-2014

Filing Date: April 29, 2014

Expiration Date: 12-31-2014

A true copy

Attest: Pamela Taylor

Pamela D Taylor
Director
Bureau of Labor Standards

March 14, 2007
Supersedes March 3, 1966

Non-federal Projects Only

NOTICE TO CONTRACTORS - PREFERRED EMPLOYEES

Sec. 1303. Public Works; minimum wage

In the employment of laborers in the construction of public works, including state highways, by the State or by persons contracting for the construction, preference must first be given to citizens of the State who are qualified to perform the work to which the employment relates and, if they can not be obtained in sufficient numbers, then to citizens of the United States. Every contract for public works construction must contain a provision for employing citizens of this State or the United States. The hourly wage and benefit rate paid to laborers employed in the construction of public works, including state highways, may not be less than the fair minimum rate as determined in accordance with section 1308. Any contractor who knowingly and willfully violates this section is subject to a fine of not less than $250 per employee violation. Each day that any contractor employs a laborer at less than the wage and benefit minimum stipulated in this section constitutes a separate violation of this section. [1997, c. 757, §1 (amd).]

STATE OF MAINE
DEPARTMENT OF TRANSPORTATION

AUBURN

ANDROSCOGGIN COUNTY

ROUTE 122

STATE PROJECT 020246.00

PROJECT LENGTH : 1.49 MILES

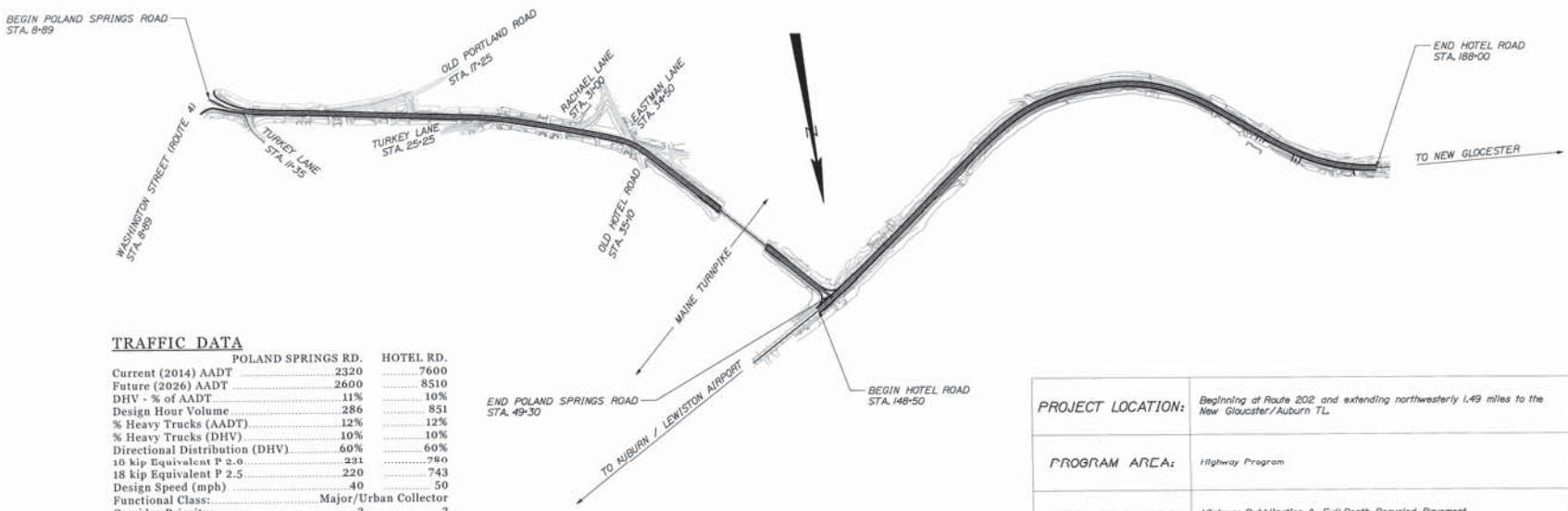

TRAFFIC DATA

	POLAND SPRINGS RD.	HOTEL RD.
Current (2014) AADT	2320	7600
Future (2026) AADT	2600	8510
DHV - % of AADT	11%	10%
Design Hour Volume	286	851
% Heavy Trucks (AADT)	12%	12%
% Heavy Trucks (DHV)	10%	10%
Directional Distribution (DHV)	60%	60%
18 kip Equivalent P 2.0	231	780
18 kip Equivalent P 2.5	220	743
Design Speed (mph)	40	50
Functional Class:	Major/Urban Collector	
Corridor Priority:	3	3

PROJECT LOCATION:	Beginning at Route 202 and extending northwesterly 1.49 miles to the New Gloucster/Auburn TL.
PROGRAM AREA:	Highway Program
SCOPE OF WORK:	Highway Rubbilization & Full Depth Recycled Pavement (w/ Emulsified Asphalt) with Safety Improvements

WIN 20246.00 020246.00

STATE OF MAINE
DEPARTMENT OF TRANSPORTATION

		DATE
APPROVED		
COMMISSIONER:		5/1/14
CHIEF ENGINEER:		5-1-14

PROJECT INFORMATION			
PROGRAM	HIGHWAY	SIGNATURE	
PROJECT MANAGER	LAURY L. LOVELY	P.E. NUMBER	
DESIGNER	TIM STORER	DATE	
CONSULTANT			
PROJECT R/W SUPERV			
CONTRACTOR			
PROJECT COMPLETION DATE			

AUBURN
ROUTE 122

TITLE SHEET

SHEET NUMBER
1
OF 1

Filename: ...\00\HIGHWAY\MSTA\001_Title.dgn Division: HIGHWAY Username: Wyatt.B.Johnson Date: 4/23/2014

NOTE:

1. THE PAVEMENT, BASE AND SUBBASE DEPTHS AS SHOWN ON THE PLANS ARE INTENDED TO BE NOMINAL.

2. WHEN SUPERELEVATION EXCEEDS THE SLOPE OF THE LOW SIDE SHOULDER, THE LOW SIDE SHOULDER SHALL HAVE THE SAME SLOPE AS THE TRAVELWAY.

3. CROWNS FOR BOTH NORMAL AND SUPERELEVATION SECTIONS FOR ALL COURSES OF SUBBASE AND PAVEMENT SHALL BE STRAIGHT.

4. THE ALGEBRAIC DIFFERENCE BETWEEN THE SHOULDER AND TRAVEWAY CROSS SLOPES "ROLLOVER" SHALL NOT EXCEED 8%.

5. THE STATIONING SHOWN UNDER EACH TYPICAL IS APPROXIMATE.

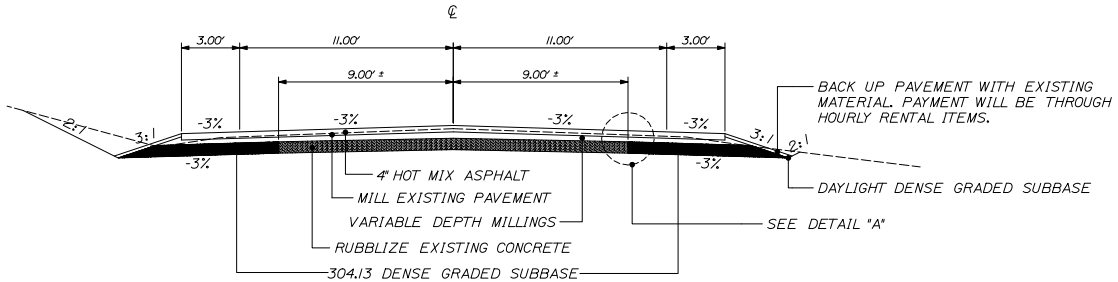

--TYPICAL RUBBLIZED SECTION--
POLAND SPRINGS ROAD
NORMAL CROWN
STA. 12+00 TO 23+00
STA. 29+50 TO 30+25

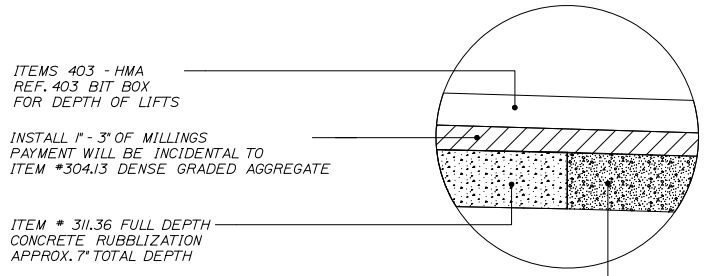

DETAIL "A"

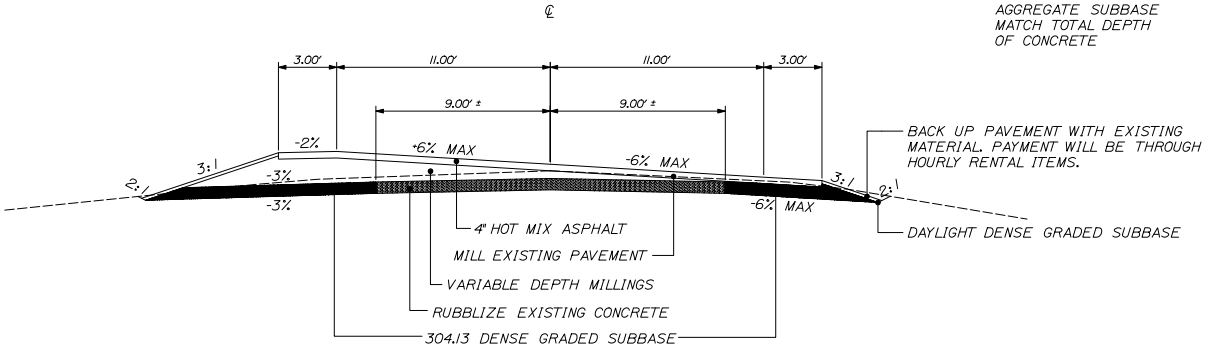

--TYPICAL RUBBLIZED SECTION--
POLAND SPRINGS ROAD
SUPER ELEVATION
STA. 23+00 TO 29+50

NOT TO SCALE

STATE OF MAINE
DEPARTMENT OF TRANSPORTATION

20246.00

WIN 20246.00

HIGHWAY PLANS

		BY	DATE
PROJ. MANAGER	EMORY LOVELY		
DESIGN-DETAILER1			
DESIGN-DETAILER2			
DESIGN-DETAILED3			
REVISIONS 1			
REVISIONS 2			
REVISIONS 3			
REVISIONS 4			
FIELD CHANGES			

SIGNATURE

P.E. NUMBER

DATE

AUBURN
ROUTE 122

TYPICAL SECTIONS

SHEET NUMBER
1
OF 5

Filename: $file$ Division: $wkgroup$ Username: $user$ Date:$date$

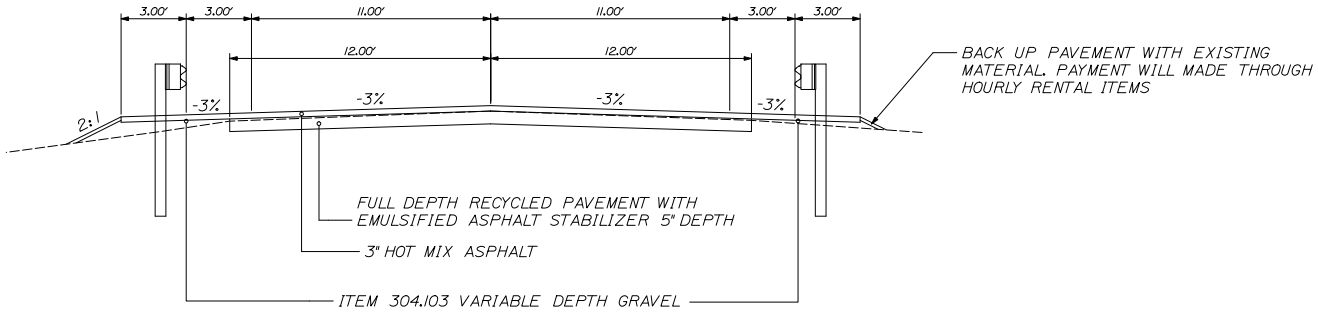

--TYPICAL GUARDRAIL--
POLAND SPRINGS ROAD
STA. 39+08 TO 41+05
STA 44+55 TO 46+54

NOT TO SCALE

STATE OF MAINE
DEPARTMENT OF TRANSPORTATION

20246.00

WIN
20246.00

HIGHWAY PLANS

PROJ. MANAGER	EMORY LOVELY	BY	DATE
DESIGN-DETAILER1			
DESIGN-DETAILER2			
DESIGN2-DETAILER2			
DESIGN3-DETAILER3			
REVISIONS 1			
REVISIONS 2			
REVISIONS 3			
REVISIONS 4			
FIELD CHANGES			

SIGNATURE

P.E. NUMBER

DATE

AUBURN
ROUTE 122

TYPICAL SECTIONS

SHEET NUMBER
2
OF 5

Filename: $file$ Division: $wkgroup$ Username: $user$ Date:$date$

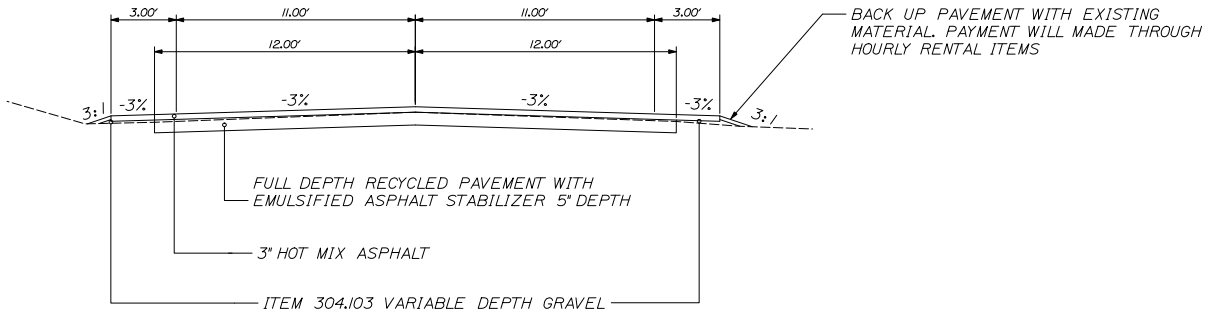

--TYPICAL EMULSIFIED ASPHALT SECTION--
POLAND SPRINGS ROAD
NORMAL CROWN
STA. 8+89 TO 12+00
STA. 30+25 TO 31+25
STA. 37+75 TO 39+08
STA 46+54 TO 49+50

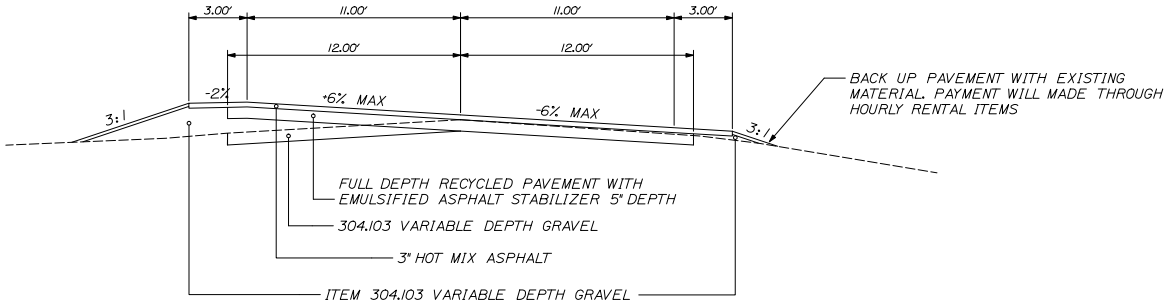

--TYPICAL EMULSIFIED ASPHALT SECTION--
POLAND SPRINGS ROAD
SUPER ELEVATION
STA. 31+25 TO 37+75

NOT TO SCALE

STATE OF MAINE
DEPARTMENT OF TRANSPORTATION

20246.00

WIN
20246.00

HIGHWAY PLANS

PROJ. MANAGER	EMORY LOVELY	BY	DATE
DESIGN-DETAILED1			
DESIGN-DETAILED2			SIGNATURE
DESIGN-DETAILED3			
REVISIONS 1			P.E. NUMBER
REVISIONS 2			
REVISIONS 3			DATE
REVISIONS 4			
FIELD CHANGES			

AUBURN
ROUTE 122

TYPICAL SECTIONS

SHEET NUMBER
3
OF 5

Filename: $file$ Division: $wkgroup$ Username: $user$ Date:$date$

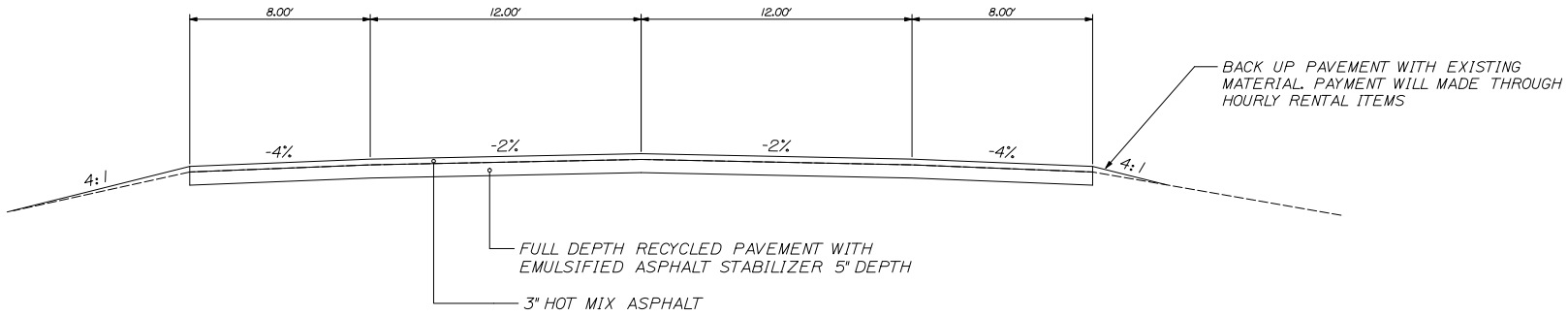

--TYPICAL SECTION--
HOTEL ROAD
STA. 148+50 TO 151+50

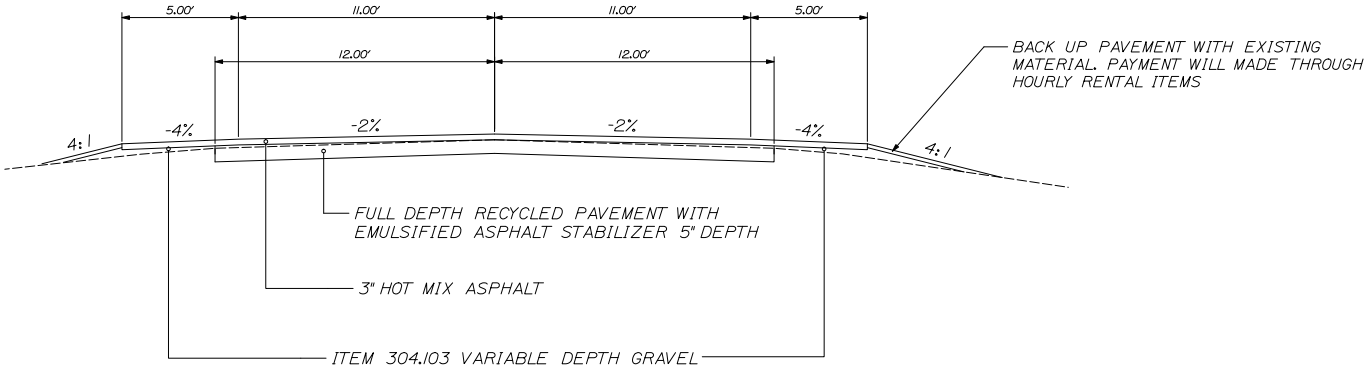

--TYPICAL SECTION--
HOTEL ROAD
STA. 151+50 TO 161+00

NOT TO SCALE

STATE OF MAINE
DEPARTMENT OF TRANSPORTATION

20246.00

WIN
20246.00

HIGHWAY PLANS

		BY	DATE
PROJ. MANAGER	EMORY LOVELY		
DESIGN-DETAILED1			
DESIGN-DETAILED2			
DESIGN-DETAILED3			
REVISIONS 1			
REVISIONS 2			
REVISIONS 3			
REVISIONS 4			
FIELD CHANGES			

SIGNATURE

P.E. NUMBER

DATE

AUBURN
ROUTE 122

TYPICAL SECTIONS

SHEET NUMBER
4
OF 5

Filename: $file$ Division: $wkgroup$ Username: $user$ Date:$date$

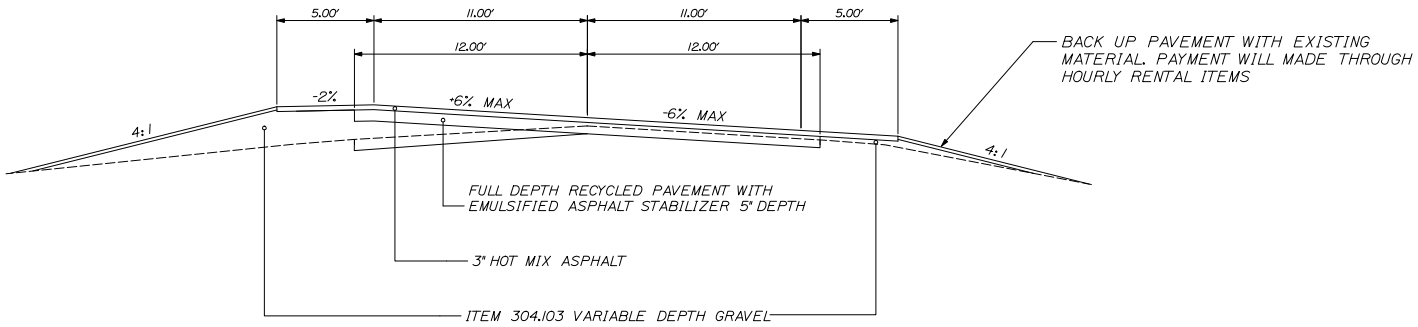

--TYPICAL SUPER ELEVATION--
HOTEL ROAD
STA. 161+00 TO 183+50
STA. 186+50 TO 188+00

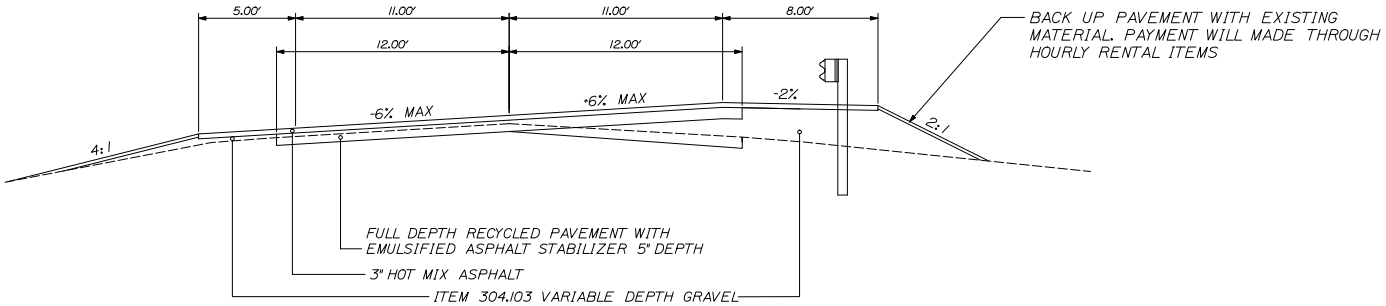

--TYPICAL GUARDRAIL SECTION--
SUPER ELEVATION
HOTEL ROAD
STA. 183+50 TO 186+50

NOT TO SCALE

STATE OF MAINE
DEPARTMENT OF TRANSPORTATION

20246.00

WIN
20246.00

HIGHWAY PLANS

PROJ. MANAGER	EMORY LOVELY	BY	DATE
DESIGN-DETAILER1			
DESIGN-DETAILER2			
DESIGN-DETAILER3			
REVISIONS 1			
REVISIONS 2			
REVISIONS 3			
REVISIONS 4			
FIELD CHANGES			

SIGNATURE

P.E. NUMBER

DATE

AUBURN
ROUTE 122

TYPICAL SECTIONS

SHEET NUMBER
5
OF 5

Filename: $file$ Division: $wkgroup$ Username: $user$ Date:$date$

CONSTRUCTION NOTES

202.202 REMOVING PAVEMENT SURFACE

Station	To	Station
12+00		30+25

Pavement depth is approximately 6 inches. Contractor should verify this independently.

202.203 PAVEMENT BUTT JOINTS

Description	Quantity
Side Roads	7

203.34 CRUSHED STONE FILL

Station	To	Station
12+00		30+25

Item to be used in rubblization area for grading if needed.

304.103 AGGREGATE SUBBASE COURSE GRAVEL – TRUCK MEASURE

Item to be used to restore cross slopes as directed by Resident.

304.13 DENSE GRADED AGGREGATE SUBBASE

Station	To	Station
12+00		30+25

Item to be used in rubblization area for grading shoulders

307.332 FULL DEPTH RECYCLED PAVEMENT (WITH EMULSIFIED ASPHALT STABILIZER) 5 INCH DEPTH.

Station	To	Station
8+89		12+00
30+25		39+08
44+55		49+50
148+50		188+00

In the super elevated sections where new aggregate is being placed, the pulverized bituminous pavement from the existing roadway shall be salvaged and hauled to an approved location to be stockpiled, hauled back and placed on the newly constructed roadway to a depth of 6” above the new aggregate. This work shall be incidental to Item 307.332.

CONSTRUCTION NOTES

311.36 FULL DEPT CONCRETE RUBBLIZATION

Station	To	Station
12+00		30+25

527.303 ENERGY ABSORBING SYSTEM (ET-2000)

Left Side Station	Right Side Station
39+08	39+18
46+44	46+54
	182+38

604.18 ADJUSTING MANHOLE OR CATCH BASIN TO GRADE

Right Side Station	Quantity
8+90	1

606.1721 BRIDGE TRANSITION - TYPE I

Left Side Station	Right Side Station
41+00	41+10
44+50	44+60

606.232 GUARDRAIL TYPE 3C - OVER 15 FT RADIUS
606.265 TERMINAL END – SINGLE RAIL – GALVANIZED STEEL

Right Side Station	To	Station
186+50		186+88

606.23 GUARDRAIL TYPE 3C - SINGLE RAIL

Left Side Station	To	Station	Right Side Station	To	Station
39+45		40+83	39+55		40+93
44+68		46+06 1	44+78		46+16
			182+75		186+50

CONSTRUCTION NOTES

609.31 CURB TYPE 3

Right Side

Station	To	Station	Side
180+40		181+50	16’ RT
180+40		181+50	20’ RT

609.40 RESET CURB TYPE 5

Left Side Of Island			Right Side Of Island		
Station	To	Station	Station	To	Station
8+90		10+12	8+90		10+12

627.733 4 INCH WHITE OR YELLOW PAINTED PAVEMENT MARKING LINE

Final striping will not commence until 10 days have elapsed from the completion of surface pavement and must be completed within 20 days of the completion of surface pavement. Unless otherwise directed, failure to comply will result in a Traffic Control Violation.

Once Construction is Complete, Maintenance of Traffic Control Devices (652.36) will not be paid while waiting to final stripe.

Once Construction is Complete, Liquidated Damages will not be charged while waiting to final stripe

627.78 TEMPORARY 4 INCH PAINTED PAVEMENT MARKING LINE, WHITE OR YELLOW

Temporary center lines shall be painted on all matched pavement within one week.

Temporary edge lines shall be painted on all pavement layers within four weeks.

All temporary lines shall be painted prior to final striping.

Multilane sections, truck lanes, and milled surfaces must be striped daily on all matched pavement layers.

TOMs must be used on all pavement layers until temporary paint is applied.

TOMs will be removed before final striping.

TOM removal will be addressed in the Traffic Control Plan.

Only painted temporary line will be paid under this item. TOMs will be considered incidental to the contract.

SUPERELEVATIONS

LT (%)	Station	RT (%)
3.0	**163+00**	**-3.0**
2.0	162+50	-3.0
0.5	162+00	-2.0
-1.0	161+50	-2.0
-2.0	**161+00**	**-2.0**
	TO	
-2.0	**150+50**	**-2.0**

Intersection of Hotel Road

LT (%)	Station	RT (%)
-3.0	**49+50**	**-3.0**
	TO	
-3.0	**38+50**	**-3.0**
-1.5	38+00	-3.0
0.0	37+50	-3.0
1.5	37+00	-3.0
3.0	36+50	-3.0
4.5	36+00	-4.5
6.0	**35+50**	**-6.0**
	TO	
6.0	**34+00**	**-6.0**
4.5	33+50	-4.5
3.0	33+00	-3.0
1.5	32+50	-3.0
0.0	32+00	-3.0
-1.5	31+50	-3.0
-3.0	**31+00**	**-3.0**
	TO	
-3.0	**29+50**	**-3.0**
-1.5	29+00	-3.0
0.0	28+50	-3.0
1.5	28+00	-3.0
3.0	**27+50**	**-3.0**
	TO	
3.0	**25+50**	**-3.0**
2.0	25+00	-3.0
1.0	24+50	-3.0
-0.5	24+00	-3.0
-2.0	23+50	-3.0
-3.0	**23+00**	**-3.0**
	TO	
-3.0	**8+89**	**-3.0**

LT (%)	Station	RT (%)
-2.0	190+50	-2.0
-2.0	190+00	-1.5
-2.0	189+50	0.0
-2.0	189+00	1.5
-3.0	188+50	3.0
-4.5	188+00	4.5
-6.0	187+50	6.0
-6.0	183+50	6.0
-5.0	**183+00**	5.0
	TO	
-5.0	**181+50**	**5.0**
-3.0	181+00	3.0
-2.0	180+50	2.0
-2.0	180+00	1.0
-2.0	179+50	-0.5
-0.5	179+00	-2.0
1.0	178+50	-2.0
2.5	178+00	-2.5
4.0	177+50	-4.0
5.5	**177+00**	**-5.5**
	TO	
5.5	**175+50**	**-5.5**
6.0	**175+00**	**-6.0**
	TO	
6.0	**165+00**	**-6.0**
4.5	164+50	-4.5
3.0	**164+00**	**-3.0**
	TO	
3.0	**163+00**	**-3.0**

STATE OF MAINE
DEPARTMENT OF TRANSPORTATION

AUBURN

ANDROSCOGGIN COUNTY

ROUTE 122

STATE PROJECT 022663.00

PROJECT LENGTH : 0.12 MILES

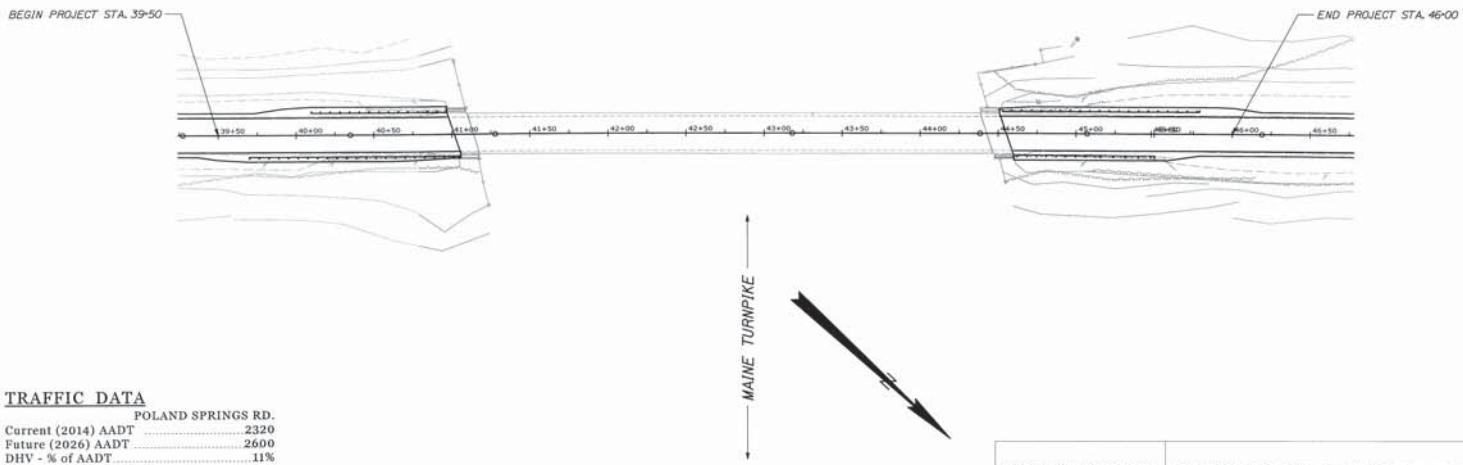

TRAFFIC DATA

	POLAND SPRINGS RD.
Current (2014) AADT	2320
Future (2026) AADT	2600
DHV - % of AADT	11%
Design Hour Volume	286
% Heavy Trucks (AADT)	12%
% Heavy Trucks (DHV)	10%
Directional Distribution (DHV)	60%
18 kip Equivalent P 2.0	231
18 kip Equivalent P 2.5	220
Design Speed (mph)	40
Functional Class:	Major/Urban Collector
Corridor Priority:	3

PROJECT LOCATION:	Route 122 / I-95 Bridge approach, 0.65 miles westerly of Route 4.
PROGRAM AREA:	Highway Program
SCOPE OF WORK:	Operational and Safety Improvements

022663.00

WIN 22663.00

STATE OF MAINE
DEPARTMENT OF TRANSPORTATION

APPROVED

		DATE
COMMISSIONER:		5/1/14
CHIEF ENGINEER:		5-1-14

PROJECT INFORMATION		
PROGRAM	HIGHWAY	
PROJECT MANAGER	EMORY LOVELY	SIGNATURE
DESIGNER	TIM STORER	P.E. NUMBER
CONSULTANT		
PROJECT RESIDENT		
CONTRACTOR		DATE
PROJECT COMPLETION DATE		

AUBURN
ROUTE 122

TITLE SHEET

SHEET NUMBER

1

OF 1

Filename: ...\highway\msta\001_Title_GR.dgn Division: HIGHWAY Username: Wyatt.B.Johnson Date:4/23/2014

LEFT-HANDED VERSION WILL BE INSTALLED AT STA. 40+99 LT AND STA. 44+62 RT. ESTIMATED 2.0 EA

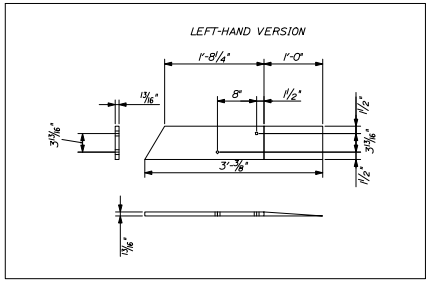

RIGHT-HANDED VERSION WILL BE INSTALLED AT STA. 41+07 RT AND STA. 44+53 LT. ESTIMATED 2.0 EA

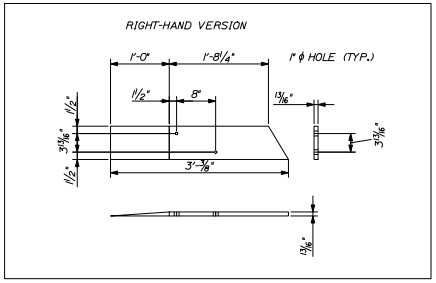

BACK SPACER WILL BE INSTALLED AT STA. 40+99 LT. STA. 41+07 RT. STA. 44+53 LT. AND STA. 44+62 RT. ESTIMATED 4.0 EA

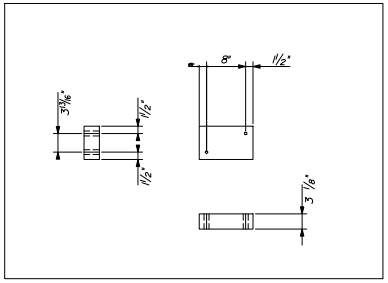

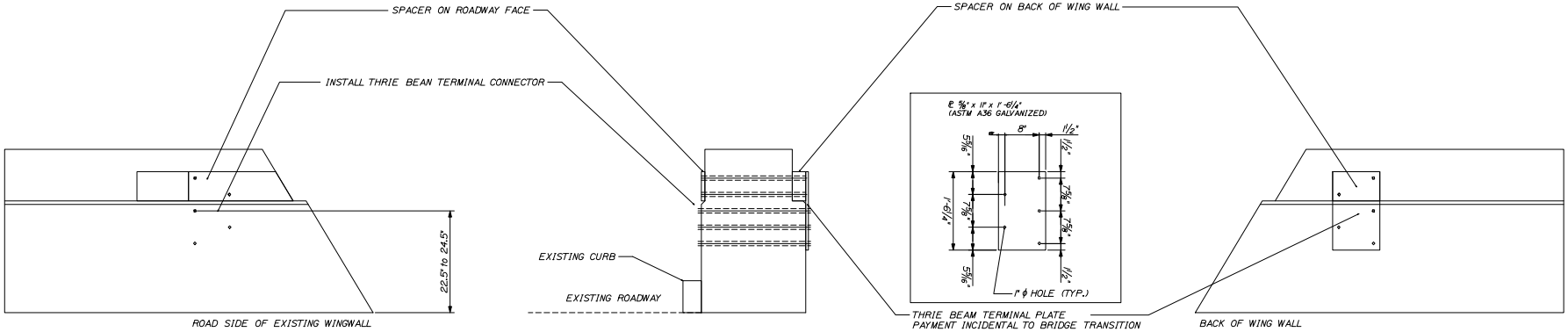

NOTES:
1. PAYMENT FOR SPACERS WILL BE INCIDENTAL TO 606.1721 BRIDGE TRANSITION
2. SPACERS SHALL BE STEEL
3. ALL STEEL SHALL CONFORM TO ASTM A36

NOT TO SCALE

STATE OF MAINE
DEPARTMENT OF TRANSPORTATION

22663.00

PIN 22663.00 HIGHWAY PLANS

PROJ. MANAGER	EMORY LOVELY	BY	DATE
DESIGN-DETAILED1			
DESIGN2-DETAILED1			SIGNATURE
DESIGN2-DETAILED2			
DESIGN3-DETAILED3			P.E. NUMBER
REVISIONS 1			
REVISIONS 2			
REVISIONS 3			DATE
REVISIONS 4			
FIELD CHANGES			

AUBURN
ROUTE 122

TYPICAL SECTIONS

SHEET NUMBER
1
OF 1

Filename: ...\MSTA\002_Typical_GR.dgn Division: HIGHWAY Username: Michael.Lenko Date:4/16/2014

GENERAL NOTES

1) All joints between existing and proposed hot bituminous pavement shall be butted. Payment shall be made under Item 202.203 Pavement Butt Joint.

2) A temporary ramp shall be constructed with HMA at the ends of the roadway section paved or milled each day. The use of millings or RAP will not allowed, but cold patch may be temporarily utilized until HMA plants are open for the season.

   For all other roadways with speed limits less than 50 mph, temporary ramps shall be constructed with one foot of length for every 1/4" of transition depth on the leading and the trailing end.

   Materials, placement, maintenance, and removal shall be incidental to contract items.

3) All waste material not used on the project shall be disposed of in acceptable waste areas and reviewed by the Resident. Grading, seeding, and mulching of waste areas shall be considered incidental.

4) Any necessary cleaning of existing pavement prior to paving (or milling) shall be incidental to the related paving (or milling) items.

5) Guardrail end treatments shall be installed concurrently with the placement of each section of beam guardrail.

6) Holes created by Guardrail removal will be filled and compacted with approved materials as directed by the Resident. Payment to be considered incidental to the guardrail items.

7) Any guardrail removed and not reused shall become the property of the Contractor. Removal and disposal shall be considered incidental to the guardrail items.

8) Backing up bituminous curb is incidental to the curb items. If directed, loam or dirty borrow will be paid for separately. In areas where new bituminous curb is designated to replace existing, the removal of the old bituminous curb shall be incidental to the new curb.

9) The contractor will be responsible for maintaining all existing mailboxes to ensure that the mail will be deliverable each day. Payment will be made under appropriate rental items.

10) Any damage to the slopes caused by the contractor's equipment, personnel, or operation shall be repaired to the satisfaction of the resident. All work, equipment, and materials required to make repairs shall be at the contractor's expense.

GENERAL NOTES

11) Additional excavation for the contractor's convenience or to comply with backsloping requirements will not be paid for directly but will be considered incidental to the related drainage items.

12) No separate payment for superintendent or foreman will be made for the supervision of equipment being paid for under the equipment rental items.

13) “Undetermined Locations” shall be determined by the Resident.

14) Stations referenced are approximate.

15) All work shall be done in accordance with the Maine Department of Transportation’s Best Management Practices for Erosion & Sedimentation Control, February, 2008.

Town: **Auburn**
Project: **WIN 20246.00 and 22663.00**
Date: **April 10, 2014**

SPECIAL PROVISIONS
SECTION 104
Utilities

UTILITY COORDINATION

The contractor has primary responsibility for coordinating their work with utilities after contract award. The contractor shall communicate directly with the utilities regarding any utility work necessary to maintain the contractor's schedule and prevent project construction delays. The contractor shall notify the resident of any issues.

THE CONTRACTOR SHALL PLAN AND CONDUCT WORK ACCORDINGLY.

MEETING

A Preconstruction Utility Conference, as defined in Subsection 104.4.6 of the Standard Specifications **IS** required.

GENERAL INFORMATION

These Special Provisions outline the arrangements that have been made by the Department for utility and/or railroad work to be undertaken in conjunction with this project. The following list identifies all known utilities or railroads having facilities presently located within the limits of this project or intending to install facilities during project construction. Utilities have been notified and will be furnished a project specification.

Utility Contact Information				
Utility	**Contact Person**	**Contact Phone**	**Aerial**	**Underground**
Central Maine Power	Tony Martin	753-3108	X	
Time Warner Cable	Paul Ouellette	783-9902	X	
Fairpoint	James McLean	797-1745	X	

Utility working days are generally Monday through Friday. Times are estimated on the basis of a single crew working 8 hours per day for each utility. Any times and dates mentioned are **estimates only** and are dependent upon favorable weather, working conditions, and freedom from emergencies.

All adjustments are to be made by the respective utility unless otherwise specified herein.

All clearing and tree removal in areas where utilities are involved must be completed before the utilities are able to relocate their facilities.

Fire hydrants shall not be disturbed until all necessary work has been accomplished to provide proper fire protection.

The contractor shall give all Utilities **10 working days notice** prior to beginning any work on this project.

AERIAL

Aerial utility adjustments **are** anticipated as part of this project. If any unexpected utility relocations become necessary, they will be scheduled in compliance with Section 104 of the Standard Specifications and will be done by the utilities in conjunction with the work by the Contractor.

Temporary utility adjustments **are not** anticipated on this project. Should the contractor choose to have any poles temporarily relocated, all work will be done by pole owner at the contractor's request and expense with no additional cost or schedule impacts to the Department. All adjustments are to be made by the respective utility unless otherwise specified herein.

All of the aerial utilities have lines along and crossing the project location. There may also be underground services from the utility poles into homes or businesses.

The aerial utility companies have multiple pole adjustments along the project including those noted below. Paving should be able to be completed without moving any poles. It is anticipated that the poles on the attached pole list will need to be moved after the paving is completed due to existing issues. There may be other poles that will be added to the list. Before any facility relocations are performed, Maine DOT will determine available Right-Of-Way, offset requirements and other applicable accommodation requirements as appropriate in consideration of the final highway construction conditions. The pole adjustments will be reviewed and scheduled after the road construction in order to avoid interference with the Contractor's schedule.

Please See the Attached Pole List

SUBSURFACE

Summary:

Subsurface utility adjustments **are not** anticipated as part of this project. If any unexpected utility relocations become necessary, they will be scheduled in compliance with Section 104 of the Standard Specifications and will be done by the utilities in conjunction with the work by the Contractor.

Temporary utility adjustments **are not** anticipated as part of this project. If any unexpected utility relocations become necessary, they will be scheduled in compliance with Section 104 of the Standard Specifications and will be done by the utilities in conjunction with the work by the Contractor. All work will be done at the contractor's request and expense with no additional cost or schedule impacts to the Department.

MAINTAINING UTILITY LOCATION MARKINGS

The Contractor will be responsible for maintaining the buried utility location markings following the initial locating by the appropriate utility or their designated representative.

UTILITY SIGNING

Any utility working within the construction limits of this project shall ensure that the traveling public is adequately protected at all times. All work areas shall be signed, lighted, and traffic flaggers employed as determined by field conditions. All traffic controls shall be in accordance with the latest edition of the Manual on Uniform Traffic Control Devices for Streets and Highways, as issued by the Federal Highway Administration.

Pole List

Pole	Station	Issue
#2	10+68 Rt	Pole in ditch
#14	33+51 Rt	Less than 10' from edge of travel way (6')

Project Nos.: 020246.00
& 022663.00

SPECIAL PROVISION 105
CONSTRUCTION AREA

Construction Areas located in the **City of Auburn** have been established by the Maine Department of Transportation (MDOT) in accordance with provisions of 29-A § 2382 Maine Revised Statutes Annotated (MRSA).

The sections of highway under construction in Androscoggin County include:

(a) Project No. 020246.00 is located on Route 122, beginning at Route 202 and extending northwesterly 1.49 miles to the Auburn/New Gloucester town line.
(b) Project No. 022663.00 is located on Route 122, within Project 020246.0 at the Maine Turnpike Overpass Approaches. For a length of 0.12 miles. Operational and Safety Improvements.

Per 29-A § 2382 (7) MRSA, the MDOT may "*issue permits for stated periods of time for loads and equipment employed on public way construction projects, United States Government projects or construction of private ways, when within construction areas established by the Department of Transportation. The permit:*

A. Must be procured from the municipal officers for a construction area within that municipality;

B. May require the contractor to be responsible for damage to ways used in the construction areas and may provide for:

(1) Withholding by the agency contracting the work of final payment under contract; or

(2) The furnishing of a bond by the contractor to guarantee suitable repair or payment of damages.

The suitability of repairs or the amount of damage is to be determined by the Department of Transportation on state-maintained ways and bridges, otherwise by the municipal officers;

C. May be granted by the Department of Transportation or by the state engineer in charge of the construction contract; and

D. For construction areas, carries no fee and does not come within the scope of this section."

The Municipal Officers for the **City of Auburn** agreed that an Overlimit Permit will be issued to the Contractor for the purpose of using loads and equipment on municipal ways in excess of the limits as specified in 29-A MRSA, on the municipal ways as described in the "Construction Area".

As noted above, a bond may be required by the municipality, the exact amount of said bond to be determined prior to use of any municipal way. The MDOT will assist in determining the bond amount if requested by the municipality.

The maximum speed limits for trucks on any town way will be 25 mph (40 km per hour) unless a higher legal limit is specifically agreed upon in writing by the Municipal Officers concerned.

SPECIAL PROVISION
SECTION 105
General Scope of Work
(Limitations of Operations)

1) No work shall be allowed on Saturday without 48 hour notice and / or prior approval of the Resident.

2) Only one paving operation will be allowed at one time unless otherwise approved by the Resident.

3) No work shall be allowed from noon August 29, 2014 to sunrise on September 2, 2014.

SPECIAL PROVISION
SECTION 107
Prosecution and Progress
(Contract Time)

1) The contractor will be allowed to commence work anytime on or after July 7, 2014, provided that all required plans/submittals have been received and approved by the MaineDOT.

2) A 48 hour notice will be required for any changes in the work schedule.

3) The completion date for this contract is September 27 , 2014.

4) For every weekday not worked once operations commence, the Contractor will be charged supplemental liquidated damages per Section 107.7.2 of the Supplemental Specifications (Corrections, Additions, & Revisions to Standard Specifications - Revision of December 2002).(excluding days lost to inclement weather).

SPECIAL PROVISION
SECTION 107
SCHEDULING OF WORK

Replace Section 107.4.2 with the following:

"107.4.2 Schedule of Work Required Within 21 Days of Contract Execution and before beginning any on-site activities, the Contractor shall provide the Department with its Schedule of Work. The Contractor shall plan the Work, including the activity of Subcontractors, vendors, and suppliers, such that all Work will be performed in Substantial Conformity with its Schedule of Work. The Schedule must include sufficient time for the Department to perform its functions as indicated in this Contract, including QA inspection and testing, approval of the Contractor's TCP, SEWPCP and QCP, and review of Working Drawings.

At a minimum, the Schedule of Work shall include a bar chart which shows the major Work activities, milestones, durations, and a timeline. Milestones to be included in the schedule include: (A) start of Work, (B) beginning and ending of planned Work suspensions, (C) Completion of Physical Work, and (D) Completion. If the Contractor Plans to Complete the Work before the specified Completion date, the Schedule shall so indicate.

Any restrictions that affect the Schedule of Work such as paving restrictions or In-Stream Work windows must be charted with the related activities to demonstrate that the Schedule of Work complies with the Contract.

The Department will review the Schedule of Work and provide comments to the Contractor within 20 days of receipt of the schedule. The Contractor will make the requested changes to the schedule and issue the finalized version to the Department."

SPECIAL PROVISION
SECTION 107
TIME
(Scheduling of Work – Projected Payment Schedule)

Description The Contractor shall also provide the Department with a Quarterly Projected Payment Schedule that estimates the value of the Work as scheduled, including requests for payment of Delivered Materials. The Projected Payment Schedule must be in accordance with the Contractor's Schedule of Work and prices submitted by the Contractor's Bid. The Contractor shall submit the Projected Payment Schedule as a condition of Award.

SPECIAL PROVISION
SECTION 108
PAYMENT
(Asphalt Escalator)

108.4.1 Price Adjustment for Hot Mix Asphalt: For all contracts with hot mix asphalt in excess of 500 tons total, a price adjustment for performance graded binder will be made for the following pay items:

Item 403.102 Mot Mix Asphalt – Special Areas
Item 403.206 Hot Mix Asphalt - 25 mm
Item 403.207 Hot Mix Asphalt - 19 mm
Item 403.2071 Hot Mix Asphalt - 19 mm (Polymer Modified)
Item 403.2072 Hot Mix Asphalt - 19 mm (Asphalt Rich Base)
Item 403.2073 Warm Mix Asphalt - 19 mm
Item 403.208 Hot Mix Asphalt - 12.5 mm
Item 403.2081 Hot Mix Asphalt - 12.5 mm (Polymer Modified)
Item 403.20813 Warm Mix Asphalt - 12.5 mm (Polymer Modified)
Item 403.2083 Warm Mix Asphalt - 12.5 mm
Item 403.209 Hot Mix Asphalt - 9.5 mm (sidewalks, drives, & incidentals)
Item 403.210 Hot Mix Asphalt - 9.5 mm
Item 403.2101 Hot Mix Asphalt - 9.5 mm (Polymer Modified)
Item 403.2102 Hot Mix Asphalt - 9.5 mm (Asphalt Rich Base)
Item 403.2103 Warm Mix Asphalt - 9.5 mm
Item 403.2104 Hot Mix Asphalt - 9.5 mm (3/4" Surface)
Item 403.211 Hot Mix Asphalt – Shim
Item 403.2111 Hot Mix Asphalt – Shim (Polymer Modified)
Item 403.2113 Warm Mix Asphalt - Shim
Item 403.212 Hot Mix Asphalt - 4.75 mm (Shim)
Item 403.2123 Warm Mix Asphalt - 4.75 mm (Shim)
Item 403.213 Hot Mix Asphalt - 12.5 mm (base and intermediate course)
Item 403.2131 Hot Mix Asphalt - 12.5 mm (base and intermediate course Polymer Modified)
Item 403.2132 Hot Mix Asphalt - 12.5 mm (Asphalt Rich Base and intermediate course)
Item 403.2133 Warm Mix Asphalt - 12.5 mm (base and intermediate course)
Item 403.214 Hot Mix Asphalt - 4.75 mm (Surface)
Item 403.2143 Warm Mix Asphalt - 4.75 mm (Surface)
Item 403.301 Hot Mix Asphalt (Asphalt Rubber Gap-Graded)
Item 404.70 Colored Hot Mix Asphalt – 9.5mm (Surface)
Item 404.72 Colored Hot Mix Asphalt – 9.5mm (Islands, sidewalks, & incidentals)
Item 461.13 Maintenance Surface Treatment

Price adjustments will be based on the variance in costs for the performance graded binder component of hot mix asphalt. They will be determined as follows:

The quantity of hot mix asphalt for each pay item will be multiplied by the performance graded binder percentages given in the table below times the difference in price between the base price and the period price of asphalt cement. Adjustments will be made upward or downward, as prices increase or decrease.

Item 403.102–6.2%			
Item 403.206–4.8%			
Item 403.207–5.2%	Item 403.2071–5.2%	Item 403.2072–5.8%	Item 403.2073–5.2%
Item 403.208–5.6%	Item 403.2081–5.6%	Item 403.20813–5.6%	Item 403.2083–5.6%
Item 403.209–6.2%			
Item 403.210–6.2%	Item 403.2101–6.2%	Item 403.2102–6.8%	Item 403.2103–6.2%
Item 403.2104–6.2%			
Item 403.211–6.2%	Item 403.2111–6.2%		Item 403.2113–6.2%
Item 403.212–6.8%			Item 403.2123–6.8%
Item 403.213–5.6%	Item 403.2131–5.6%	Item 403.2132–6.2%	Item 403.2133–5.6%
Item 403.214–6.8%			Item 403.2143–6.8%
Item 403.301–6.2%			
Item 404.70–6.2%			
Item 404.72–6.2%			
Item 461.13–6.4%			

Hot Mix Asphalt**:** The quantity of hot mix asphalt will be determined from the quantity shown on the progress estimate for each pay period.

Base Price: The base price of performance graded binder to be used is the price per standard ton current with the bid opening date. This price is determined by using the average New England Selling Price (Excluding the Connecticut market area), as listed in the Asphalt Weekly Monitor.

Period Price: The period price of performance graded binder will be determined by the Department by using the average New England Selling Price (Excluding the Connecticut market area), listed in the Asphalt Weekly Monitor current with the paving date. The maximum Period Price for paving after the adjusted Contract Completion Date will be the Period Price on the adjusted Contract Completion Date.

SPECIAL PROVISIONS
SECTION 108 PAYMENT
(Diesel fuel Adjustment)

108.4.2 Price Adjustment for Diesel Fuel: A price adjustment for diesel fuel will be made for all 461 items.

Price adjustments will be based on the variance in costs for diesel fuel. They will be determined as follows:

The quantity of hot mix asphalt, in tons, for each pay item will be multiplied by 2.75 times the difference in price in excess of 5 percent between the base price and the period price of diesel fuel. Adjustments will be made upward or downward, as prices increase or decrease.

Hot Mix Asphalt: The quantity of hot mix asphalt will be determined from the quantity shown on the progress estimate for each pay period.

Base Price: The base price of diesel fuel to be used is the price per gallon current with the **bid opening date**. This price is determined by using the weekly retail diesel price for the New England area, as listed on the Energy Information Administration's webpage.

Period Price: The period price of diesel fuel will be determined by the Department by using the weekly retail diesel price for the New England area, as listed on the Energy Information Administration's webpage current with the pay period ending date of the progress estimate.

SPECIAL PROVISIONS
SECTION 202
REMOVING STRUCTURES AND OBSTRUCTIONS
(Removing Pavement Surface)

The December 2002 Revision of the Standard Specifications, Section 202-Removing Structures and Obstructions, subsection 202.061-Removing Pavement Surface, has been removed and replaced in it's entirety by the following:

202.061 Removing Pavement Surface The equipment for removing the bituminous surface shall be a power operated milling machine or grinder capable of removing bituminous concrete pavement to the required depth, transverse cross slope, and profile grade by the use of an automated grade and slope control system. The controls shall automatically increase or decrease the pavement removal depth as required, and readily maintain desired cross slope, to compensate for surface irregularities in the existing pavement course. The equipment shall be capable of accurately establishing profile grades by referencing from a fixed reference such as a grade wire, or from the existing pavement surface using a 30 foot minimum contact ski (floating beam), or 24 foot non-contact grade control beam.

The Contractor shall locate and remove all objects in the pavement through the work area that would be detrimental to the planing or grinding machine. Any structures or obstructions left within the travel lane or shoulders shall have tapers installed according to Standard Detail 202(01).

The finished milled surface will be inspected before being accepted, and any deviations in the profile exceeding 1/2 inch under a 16 foot string line or straightedge placed parallel to the centerline will be corrected. Any deviations in the cross-slope that exceed 3/8 inch under a 10 foot string line or straightedge placed transversely to centerline will be corrected. All corrections will be made with approved methods and materials. Any areas that require corrective measures will be subject to the same acceptance tolerances. Excess material that becomes bonded to the milled surface will be removed to the Resident's satisfaction before the area is accepted.

On highways or expressways with directional traffic, the Contractor will be required to remove the pavement surface on the adjacent sections of travel lane and designated portions of adjacent shoulder before the end of the following calendar day unless the centerline edge is tapered to a 12:1. Failure to remove the centerline vertical edge by milling, using the approved taper, or matching the adjacent course the following day will constitute a traffic control violation unless an excusable delay is granted by the Department. The Contractor will be required to remove the specified pavement course over the full width of the mainline traveled ways prior to opening the sections to weekend or holiday traffic.

On roadways with two-way traffic, the Contractor will be required to remove the specified pavement course over the full width of the mainline traveled ways prior to opening the sections to weekend or holiday traffic.

During any period that a centerline vertical or tapered edge exists, the Contractor will be responsible for installing additional warning signage that clearly defines the centerline vertical or tapered edge and elevation differential hazard, as well as additional centerline delineation such as double RPM application, or temporary painted line. The Traffic Control Plan shall include the additional requirements. All signs and traffic control devices will conform to Section 719.01, and Section 652, and will be installed prior to the work, at a maximum spacing of 0.50 mile for the entire length of the effected roadway section. All additional signing, labor, traffic control devices, or incidentals will not be paid for directly, but will be considered incidental to the appropriate 652 bid items.

Any areas of concern, such as de-lamination or pot-holing shall be identified on a continuous basis as milling progresses. Proper corrective action will be determined by the Resident and paid for under the appropriate contract items, and if required, completed prior to opening lane to traffic. Any issues that arise **up to** 7 calendar days after being milled will be the responsibility of the MaineDOT unless otherwise noted in Special Provision Section 105 – Limitations Of Operations.

SPECIAL PROVISION
SECTION 203
CRUSHED STONE

Description This work shall consist of constructing a leveling pad of crushed stone in accordance with these specifications and in reasonably close conformity with the width, grade and thickness shown on the plans or established by the Resident.

MATERIALS

Aggregate Crushed stone material shall meet the requirements of ASTM Standard Specification C33, Standard Specification for Concrete Aggregates.

The aggregate shall meet the following gradation requirements:

Particle size	Percent by Weight Passing
1 inch	100
¾ inch	90 – 100
½ inch	20 – 55
⅜ inch	0 – 15
No. 4	0 - 5

Construction Requirements The crushed stone shall be placed and graded as shown on the plans or as directed by the Resident. The crushed stone shall be compacted as required to ensure that all voids in the stone are filled, as approved by the Resident.

Method of Measurement Aggregate for crushed stone will be measured by the Ton as shown on delivery slips and agreed upon by the Resident.

Basis of Payment The accepted quantity of crushed stone will be paid for at the contract unit price per Ton of aggregate complete in place.

Payment will be under

Pay Item	Unit
203.34 Crushed Stone	Ton

SPECIAL PROVISION
SECTION 304
AGGREGATE BASE AND SUBBASE COURSE
(Dense Graded Crushed Aggregate Subbase with Salvaged Bituminous Pavement)

Description This work shall consist of manufacturing, placing, grading and compacting of dense graded crushed aggregate subbase and the removal, salvaging and reuse of existing pavement. The salvaged bituminous pavement shall be used for the top 1" - 3" of dense graded crushed aggregate subbase for the travel lanes, shoulders and entrances. Any salvaged bituminous pavement in excess of the 75mm (3") needed to complete this work shall become the property of the Contractor.

MATERIALS

Dense graded crushed aggregate subbase may be manufactured from ledge or natural aggregates and shall be obtained from a source approved by the Resident. When tested by the Los Angeles wear test, the percent loss shall not exceed 25. The material will be tested before being used and retested at intervals of approximately 25%, 50%, and 75% completion of the course.

At least 50 percent by weight of the material coarser than the No. 4 sieve shall have at least one fractured face as tested by ASTM D5821.

The material shall meet the grading requirements of the following table:

Sieve Designation	Percentage by Weight Passing Square Mesh Sieves
90 mm (3 ½ inches)	100
75 mm (3 inches)	90-100
50 mm (2 inches)	75-100
25 mm (1 inch)	50-80
13 mm (½ inch)	30-60
No. 4	10-40
No. 200	0-6

CONSTRUCTION REQUIREMENTS

The existing pavement shall all be removed, processed (crushed or screened) so that 100% of the material will pass a 38mm (1-1/2") square mesh screen. The salvaged pavement shall be stockpiled at an approved site for later reuse as the final layer of dense graded crushed aggregate subbase. The depth of the layer will be 75 mm (3") on mainline, shoulders and entrances.

Traffic will not be allowed on the dense graded crushed aggregate subbase (natural aggregate or ledge options) within the traveled way width until the salvaged bituminous pavement has been placed.

The surface of the dense graded crushed aggregate subbase shall be fine graded to +/- 19mm (¾") and compacted prior to placing the layer of salvaged pavement. Density of the dense graded crushed aggregate subbase shall be as required by the Standard Specifications. Placing, shaping, compacting and surface tolerance for the salvaged bituminous pavement shall be in accordance with the Standard Specifications.

Method of Measurement The removal, salvaging and stockpiling of existing bituminous pavement will be measured and paid for under item 203.20 Common Excavation. The processing, placing, grading and compacting of existing bituminous pavement will be measured and paid for as item 304.13 Dense graded crushed aggregate subbase.

Dense graded crushed aggregate subbase will be measured as provided in Section 304.06.

Basis of Payment Section 304.07 is amended by addition of the following: The cost of salvaging existing bituminous pavement will be included for payment under the applicable pay items, with no additional allowances made, which will be full compensation for removing, temporarily stockpiling and rehandling, if necessary. This will also include the loading and trucking of excess salvaged bituminous pavement that becomes property of Contractor.

The reuse of salvaged bituminous pavement will be measured and paid for under the applicable pay items for which it was removed and reused.

The accepted quantity of dense graded crushed aggregate subbase will be paid for at the contract unit price per cubic meter (yard) complete in place.

Payment will be made under:

Pay Item	Pay Unit
304.13 Dense Graded Crushed Aggregate Subbase	Cubic Meter [Cubic Yard]

SPECIAL PROVISION
SECTION 307
FDR w/ Emulsion

Mix Design

The Recycled Pavement on this project will be treated with the following material proportions:

Emulsion	3.0 %
Water needed to ensure proper foaming	2.9 %
Portland cement (Type I or II)	1.0 %

* Total liquid percent content (water & emulsion) shall not exceed 5.9%

The optimum moisture content for compaction shall be determined by the Department using samples obtained from the recycled material prior to addition of the emulsion, by means of AASHTO T 180, Method D.

A contract modification will be executed if percentages change from the requirements above for added emulsion, Portland cement or lime changes by more than 0.10%. Positive and negative price adjustments will be made. The price adjustment will be based upon receipted bills for materials delivered the project site. If a price adjustment is warranted, the contractor will supply the Department with all receipted bills for emulsion, Portland cement or lime for the entire project. Adjustments in water content exceeding the initial targets shall not be paid for directly, but shall be incidental.

SECTION 307
FULL DEPTH RECYCLING
(UNTREATED OR TREATED WITH EMULSIFIED ASPHALT STABILIZER)

307.01 Description This work shall consist of pulverizing a portion of the existing roadway structure into a homogenous mass, adding an emulsified asphalt stabilizer (if required) to the depth of the pulverized material specified in the contract, placing and compacting this material to the lines, grades, and dimensions shown on the plans or established by the Resident.

MATERIALS

307.02 Pulverized Material Pulverized material shall consist of the existing asphalt pavement layers and one inch or more as specified of the underlying gravel, pulverized and blended into a homogenous mass. Pulverized material will be processed to 100% passing a 2 inch square mesh sieve.

307.021 New Aggregate and Additional Recycled Material New aggregate, if required by the contract, shall meet the requirements of Subsection 703.10 - Aggregate for Untreated Surface Course and Leveling Course, Type A. Aggregate Subbase Course Gravel Type D processed to 100 percent passing a 2 inch square mesh sieve and meeting the requirements of 703.06 – Aggregate for Base and Subbase may be used in areas requiring depths greater than 2 inches. New aggregate, will be measured and paid for under the appropriate item.

Recycled material, if required, shall consist of salvaged asphalt material from the project or from off-site stockpiles that has been processed before use to 100 percent passing a 2 inch square mesh sieve. Recycled material shall be conditionally accepted at the source by the Resident. It shall be free of winter sand, granular fill, construction debris, or other materials not generally considered asphalt pavement.

Recycled material generated and salvaged from the project shall be used within the roadway limits to the extent it is available as described in 307.09. No additional payment will be made for material salvaged from the project.

Recycled material supplied from off-site stockpiles shall be paid for as described in the contract, or by contract modification.

307.022 Emulsified Asphalt Stabilizer. If required, the emulsified asphalt stabilizer shall be grade MS-2, MS-4, SS-1, or CSS-1 meeting the requirements of Subsection 702.04 Emulsified Asphalt.

307.023 Water Water shall be clean and free from deleterious concentrations of acids, alkalis, salts or other organic or chemical substances.

307.024 Portland Cement If required, Portland Cement shall be Type I or II meeting the requirements of AASHTO M85.

307.025 Hydrated Lime If required, Hydrated Lime shall meet the requirements of AASHTO M216.

EQUIPMENT

307.03 Pulverizer The pulverizer shall be a self-propelled machine, specifically manufactured for full-depth recycling work and capable of reducing the required existing materials to a size that will pass a 2 inch square mesh sieve. The machine shall be equipped with standard automatic depth controls and must maintain a consistent cutting depth and width. The machine also shall be equipped with a gauge to show depth of material being processed.

307.04 Liquid Mixer Unit or Distributor. If treatment of the recycled layer with emulsified asphalt is required by the contract, a liquid mixing unit or distributor shall be used to introduce the emulsified asphalt stabilizer into the pulverized material. The mixing unit shall contain a liquid distribution and mixing system which has been specifically manufactured for full-depth recycling work, capable of mixing the pulverized material with an evenly metered distribution of emulsified asphalt into a homogeneous mixture, to the depth and width required.

The mixing unit shall be designed, equipped, maintained, and operated so that emulsified asphalt stabilizer at constant temperature may be applied uniformly on variable widths of pulverized material up to 6 feet at readily determined and controlled rates from 0.01 to 1.06 gal/yd^2 with uniform pressure and with an allowable variation from any specified rate not to exceed 0.01 gal/yd^2. Mixing units shall include a tachometer, pressure gages, and accurate volume measuring devices or a calibrated tank and a thermometer for measuring temperatures of tank contents.

307.041 Cement or Lime Spreader If required by the contract, spreading of the Portland Cement or Hydrated Lime shall be done with a spreader truck designed to spread dry particulate (such as Portland Cement or Lime) or other approved means to insure a uniform distribution across the roadway and minimize fugitive dust. Pneumatic application, including through a slotted pipe, will not be permitted. Other systems that have been developed include fog systems, vacuum systems, etc. Slurry applications may also be accepted. The Department reserves the right to accept or reject the method of spreading cement. The Contractor shall provide a method for verifying that the correct amount of cement is being applied.

307.05 Placement Equipment Placement of the Full Depth recycled material to the required slope and grade shall be done with an approved highway grader or by another method approved by the Resident.

307.06 Rollers The full depth recycled material shall be rolled with a vibratory pad foot roller, a vibratory steel drum soil compactor and a pneumatic tire roller. The pad foot roller drum shall have a minimum of 112 tamping feet 3 inches in height, a minimum contact area per foot of 17 inch^2, and a minimum width of 84 inches. The vibratory steel drum roller shall have a minimum 84 inch width single drum. The pneumatic tire roller shall meet the requirements of Section 401.10 and the minimum allowable tire pressure shall be 85 psi.

MIX DESIGN

If treatment of the recycled layer with emulsified asphalt is required by the contract, the Department will supply a mix design for the emulsified asphalt stabilized material based on test results from pavement and soil analysis taken to the design depth. The Department will provide the following information prior to construction:

1. Percent of emulsified asphalt to be used.
2. Quantity of lime or cement to be added.
3. Optimum moisture content for proper compaction.
4. Additional aggregate (if required).

After a test strip has been completed or as the work progresses, it may be necessary for the Resident to make necessary adjustments to the mix design. Changes to compensation will be in accordance with the Mix Design Special Provision.

CONSTRUCTION REQUIREMENTS

307.06 Pulverizing The entire depth of existing pavement shall be pulverized together with 1 inch or more of the underlying gravel into a homogenous mass. All pulverizing shall be done with equipment that will provide a homogenous mass of pulverized material, processed in-place, which will pass a 2 inch square mesh sieve.

307.07 Weather Limitations Full depth recycled work shall be performed when;

A. Recycling operations will be allowed between May 15th and September 15th inclusive in Zone 1 - Areas north of US Route 2 from Gilead to Bangor and north of Route 9 from Bangor to Calais.
B. The atmospheric temperature, as determined by an approved thermometer placed in the shade at the recycling location, is 50°F and rising.
C. When there is no standing water on the surface.
D. During generally dry conditions, or when weather conditions are such that proper pulverizing, mixing, grading, finishing and curing can be obtained using proper procedures, and when compaction can be accomplished as determined by the Resident.
E. When the surface is not frozen and when overnight temperatures are expected to be above 32°F.
F. Wind conditions are such that the spreading of lime or cement on the roadway ahead of the recycling machine will not adversely affect the operation.

307.08 Surface Tolerance The complete surface of the Full Depth Recycled course shall be shaped and maintained to a tolerance, above or below the required cross sectional shape, of ⅜ inch.

307.09 Full Depth Recycling Procedure New aggregate or recycled material meeting the requirements of Section 307.021 - New Aggregate and Additional Recycled Material, shall be added as necessary to restore cross-slope and/or grade before pulverizing. Locations will be shown on the plans or described in the construction notes. The Resident may add other locations while construction of the project is in progress. The Contractor will use recycled material to the extent it is available, in lieu of new aggregate. The material shall then be pulverized, processed, and blended into a homogeneous mass passing a 2 inch square mesh sieve. Material found not pulverized down to a 2 inch size will be required to be reprocessed by the recycler with successive passes until approved by the Resident.

Should the Contractor be required to add new aggregate or recycled material to restore cross-slope and/or grade after the initial pulverizing process, those areas will require re-processing to blend into a homogenous mass passing a 2 in square mesh sieve.

Sufficient water shall be added during the recycling process to maintain optimum moisture for compaction.

The resultant material from the initial pulverizing processes shall be graded and compacted to the cross-slope and profile shown on the plans or as directed by the Resident. The Contractor will also be responsible for re-establishing the existing profile grade. The completed surface of the full depth recycled course shall be shaped and maintained to a tolerance, above or below the required cross sectional shape, of ⅜ inch. Areas not meeting this tolerance will be repaired as described in Section 307.091. The initial pulverizing process density requirements will be the same as Section 307.101 unless otherwise directed by the Resident.

Additives, if required, shall be introduced following completion of the initial pulverizing and blending process. Emulsified asphalt stabilizer shall be incorporated into the top of the processed material as specified in section 307.04 to the depth specified in the contract by use of the liquid mixer unit or a distributor, at the rate specified in the mix design. The emulsified asphalt shall then be uniformly blended into a homogeneous mass until an apparent uniform distribution has occurred. The rate of application may be adjusted as necessary by the Resident. Cement or lime shall be introduced as described in section 307.041. The resultant material shall be graded and compacted to the cross-slope and profile shown on the plans or as directed by the Resident. The Contractor will also be responsible for re-establishing the existing profile grade.

After final compaction, the roadway surface shall be treated with a light application of water, and rolled with pneumatic-tired rollers to create a close-knit texture. The finished layer shall be free from:

A. Surface laminations.
B. Segregation of fine and coarse aggregate.
C. Corrugations, centerline differential, potholes, or any other defects that may adversely affect the performance of the layer, or any layers to be placed upon it.

The Contractor shall protect and maintain the recycled layer until a lift of pavement is applied. Any damage or defects in the layer shall be repaired immediately. An even and uniform surface shall be maintained. The recycled surface shall be swept prior to hot mix asphalt overlay placement.

307.091 Repairs Repairs and maintenance of the recycled layers, resulting from damage caused by traffic, weather or environmental conditions, or resulting from damage caused by the Contractor's operations or equipment, shall be completed at no additional cost to the Department.

For recycled layers stabilized with emulsified asphalt, low areas will be repaired using a hot mix asphalt shim. Areas up to 1 inch high can be repaired by milling or shimming with hot mix asphalt. Areas greater than 1 inch high will be repaired using a hot mix asphalt shim. All repair work will be done with the Resident's approval at the Contractor's expense.

TESTING REQUIREMENTS

307.10 Quality Control The Contractor shall operate in accordance with the approved Quality Control Plan (QCP) to assure a product meeting the contract requirements. The QCP shall meet the requirements of Section 106.4 - Quality Control and this Section. The Contractor shall not begin recycling operations until the Department approves the QCP in writing.

Prior to performing any recycling process, the Department and the Contractor shall hold a Pre-recycle conference to discuss the recycling schedule, type and amount of equipment to be used, sequence of operations, and traffic control. A copy of the QC random numbers to be used on the project shall be provided to the Resident. All field supervisors including the responsible onsite recycling process supervisor shall attend this meeting.

The QCP shall address any items that affect the quality of the Recycling Process including, but not limited to, the following:

A. Sources for all materials, including New Aggregate and Additional Recycled Material.
B. Make and type of rollers including weight, weight per inch of steel wheels, and average contact pressure for pneumatic tired rollers.
C. Testing Plan.
D. Recycling operations including recycling speed, methods to ensure that segregation is minimized, grading and compacting operations.
E. Methods for protecting the finished product from damage and procedures for any necessary corrective action.
F. Method of grade checks.
G. Examples of Quality Control forms.
H. Name, responsibilities, and qualifications of the Responsible onsite Recycling Supervisor experienced and knowledgeable with the process.
I. A note that all testing will be done in accordance with AASHTO and MDOT/ACM procedures.

The Project Superintendent shall be named in the QCP, and the responsibilities for successful implementation of the QCP shall be outlined.

The Contractor shall sample, test, and evaluate the full depth reclamation process in accordance with the following minimum frequencies:

MINIMUM QUALITY CONTROL FREQUENCIES

Test or Action	Frequency	Test Method
Density	1 per 1000 feet / lane	AASHTO T 310
Air Temperature	4 per day at even intervals	
Surface Temperature	At the beginning and end of each days operation	
Yield of all materials (Daily yield, yield since last test, and total project yield.)	1 per 1000 ft/lane	

The Department may view any QC test and request a QC test at any time. The Contractor shall submit all QC test reports and summaries in writing, signed by the appropriate technician, to the Department's onsite representative by 1:00 P.M. on the next working day, except when otherwise noted in the QCP due to local restrictions. The Contractor shall make all test results, including randomly sampled densities, available to the Department onsite.

The Contractor shall cease recycling operations whenever one of the following occurs:

A. The Contractor fails to follow the approved QCP.
B. The Contractor fails to achieve 98 percent density after corrective action has been taken.
C. The finished product is visually defective, as determined by the Resident.
D. The computed yield differs from the mix design by 10 percent or more.

Recycling operations shall not resume until the Department approves the corrective action to be taken.

<u>307.101 Test Strip</u> The contractor shall assemble all items of equipment for the recycling operation on the first day of the recycling work. The Contractor shall construct a test strip for the project at a location approved by the Resident. The Responsible onsite Recycling Supervisor will work with Department personnel to determine the suitability of the mixed material, moisture control within the mixed material, and compaction and surface finish test strip section is required to:

A. Demonstrate that the equipment and processes can produce recycled layers to meet the requirements specified in these special provisions.
B. Determine the effect on the gradation of the recycled material by varying the forward speed of the recycling machine and the rotation rate of the milling drum.
C. Determine the optimum moisture necessary to achieve proper compaction of the recycled layer.

D. Determine the sequence and manner of rolling necessary to obtain the compaction requirements and establish a target density. The Contractor and the Department will both conduct testing with their respective gauges at this time.

The test strip shall be at least 300 feet in length of a full lane-width (or a half-road width). Full recycling production will not start until a passing test strip has been accomplished. If a test strip fails to meet the requirements of this specification, the Contractor will be required to repair or replace the test strip to the satisfaction of the Resident. Any repairs, replacement, or duplication of the test strip will be at the Contractor's expense.

After the test strip has been pulverized, and the roadway brought to proper shape, the Contractor shall add water until it is determined that optimum moisture has been obtained. The test strip shall then be rolled using the specified compaction equipment as directed until the density readings show an increase in dry density of less than 1 pcf for the final four roller passes of each roller. The Contractor and Department will each determine a target density using their respective gauges by performing several additional density tests and averaging them. The average of these tests will be used as the target density of the recycled material for QC and Acceptance purposes.

Following completion of the test strip, compaction of the material shall continue until a density of not less than 98 percent of the test strip target density has been achieved for the full width and depth of the layer. During the construction and compaction of the Full Depth Recycled base, should three consecutive Acceptance test results for density fail to meet a minimum of 95 percent of the target density, or exceed 102 percent of target density, a new test strip shall be constructed.

ACCEPTANCE TEST FREQUENCY

Property	Frequency	Test Method
In-place Density	1 per 2000 ft / lane	AASHTO T 310

308.102 Curing. No new pavement shall be placed on the full depth recycled pavement until curing has reduced the moisture content to 1 percent or less by total weight of the mixture, or a curing period of 4 days has elapsed, whichever comes first.

307.11 Method of Measurement Full Depth Recycled Pavement (Untreated or Treated with Emulsified Asphalt Stabilizer) will be measured by the square yard.

307.12 Basis of Payment The accepted quantity of Full Depth Recycled Asphalt Pavement (Untreated or Treated with Emulsified Asphalt Stabilizer) will be paid for at the contract unit price per square yard, complete in-place which price will be full compensation for furnishing all equipment, materials and labor for pulverizing, blending, placing, grading, compacting, and for all incidentals necessary to complete the work.

The addition of materials to restore profile grade and/or cross-slope in areas shown on the plans or described in the construction notes will be paid separately under designated pay items within the contract. No additional payment will be made for materials salvaged from the project.

Payments will be made under:

Pay Item	Description	Pay Unit
307.331	Full Depth Recycled Pavement (Untreated)	Square Yard
307.332	Full Depth Recycled Pavement (with Emulsified Asphalt Stabilizer) 5 in. depth	Square Yard
307.333	Full Depth Recycled Pavement (with Emulsified Asphalt Stabilizer) 6 in. depth	Square Yard

SPECIAL PROVISION
SECTION 311
Full Depth Concrete Rubblization

311.01 Description This work shall consist of pulverizing/rubblizing Portland cement concrete pavement full depth to provide a rubblized concrete base on which to pave. The contractor shall grade and compact this material to the lines, grades, and dimensions shown on the plans or established in the field by the Resident.

MATERIALS

311.02 Rubblized Material Rubblized material shall consist of the existing Portland cement concrete pavement being rubblized to a material where all particles are 6 inches or less in the largest dimension. In general, the particle sizes should be 2 inches or less at the surface of the rubblized base.

311.021 Recycled Material Recycled asphalt pavement material salvaged from the project or from off-site stockpiles shall be used. Material must be processed so that 100% of the material passes a 1 ½ inch square mesh sieve. Recycled material shall be conditionally accepted at the source by the Resident. It shall be free of winter sand, granular fill, construction debris, and other materials not generally considered bituminous pavement. The maximum thickness of recycled asphalt pavement material to be used over the rubblized material is 3 inches. **Salvage, processing, hauling, placement, compaction, and all incidentals shall be incidental to Item 311.36**

EQUIPMENT

311.03 Concrete Rubblizer Rubblizing shall be accomplished with a resonant breaker that breaks the PCC pavement into the required particle sizes without damaging the existing subbase material and without excessively displacing the rubblized material into the base or subgrade. The rubblization equipment shall be a self-contained, self-propelled unit utilizing resonant frequency to produce a low amplitude breaking force. The concrete rubblizing machine shall be specifically manufactured for full-depth concrete rubblizing work and capable of reducing the required existing materials to a size that will meet the requirements of subsection 311.02 Rubblized Material. The rubblizing machine shall be equipped with an approved watering system which shall be used as needed to suppress dust generated by the rubblizing operation.

311.04 Health and Safety/Right-to-Know Portland cement is considered a hazardous chemical under US OSHA Hazard Communication Rule 29 CFR 1910.120, therefore, all Contractors and Subcontractors are required to notify their workers of the potential health hazards associated with working with Portland cement.
In no area of the work site, where cement or cement-pavement-gravel combination is being applied, reworked, rolled or graded, shall respirable dust be allowed to exceed the NIOSH [1974] established respirable dust standard (RDS) recommended exposure limit (REL) of 0.05 mg/m3 (for up to a 10 hour workday during a 40 hour work week).
The Contractor shall notify the Resident before commencing any work that involves Portland cement application, reclaiming, rolling, or grading.

The Contractor shall designate a Hazardous Waste Operations "Competent Person" to provide direct on-site supervision plus health and safety monitoring for work in the Portland cement impacted sections of the project. The Competent Person shall have certified training and experience in field implementation of the aforementioned regulations.

Submittals The Contractor shall submit a site specific Health and Safety Plan (HASP) to the Resident at least two weeks in advance of any Portland cement related work on the project.

Health and Safety Monitoring In any area of the project where Portland cement is being worked, the Contractor's designated Competent Person shall monitor the worker breathing zone for respirable dust. In the event the OSHA respirable dust REL is exceeded, the Contractor's Competent Person shall direct operations to cease. Operations will not recommence until the situation is corrected and respirable air returns to acceptable levels. The Contractor shall provide all required health and safety monitoring equipment.

311.05 Rollers The full depth concrete rubblized material shall be rolled with a 10 ton vibratory steel roller and Type II 18 ton pneumatic tire roller. The 10 ton steel roller shall have a minimum contact area per foot of 17 in^2 and a minimum width of 84 inches. The pneumatic tire roller shall meet the requirements of Section 401.10 and the minimum allowable tire pressure shall be 85 psi.

311.08 Surface Tolerance The completed surface of the Full Depth concrete rubblization shall be shaped and maintained to a tolerance of 1 inch above or below the required cross sectional template.

311.09 Full Depth Rubblizing Procedure The existing concrete pavement material shall pulverized/rubblized into a homogeneous mass passing the gradation as specified in section 311.02. Material found not to meet the gradation as specified in section 311.02 shall be required to be reprocessed by the rubblizer. The material shall then be shaped to the cross slope and grade shown on the plans, typicals, or as directed by the Resident and meeting the tolerances of section 311.08. The rubblized concrete shall then be compacted using the rollers specified in section 311.05. Each roller shall make four passes with a pass being down and back. The 10 ton vibratory roller shall make the initial four passes and then the Type II 18 ton pneumatic tire roller shall make the final four passes. If the rubblized material still shows signs of movement or lack of compaction more passes will be required.

If at this time it is apparent that the existing subgrade and subbase has been damaged, the contractor shall excavate down to subgrade and replace with 304.13 Dense Graded Crushed Aggregate Subbase from subgrade to finish grade of the rubblized Portland Cement. If the Department determines the damage was caused by the contractor and their operations, The Department will not reimburse the contractor for any expenses to correct any damages.

Any exposed steel shall be removed prior to placing the leveling course.

After compaction of the rubblized concrete material, the contractor shall place a leveling course of new aggregate as directed by the Department. Any new aggregate shall meet the requirements of section 311.021 and shall be paid for under item 411.10. This course will then be required to be compacted by making as many passes as needed with a 10 ton vibratory roller to assure the Department that the material is properly compacted. The leveling course of new aggregate shall be fine-graded to ± 3/8 in tolerance.

Sufficient water shall be added during the compaction process to aide in the compaction of both the rubblized concrete material and the leveling course of new aggregate. The resultant material shall be graded and compacted to the cross-slope and profile shown on the plans or as directed by the Resident. The Contractor will also be responsible for reestablishing the existing profile grade as specified on the typical, in the plans, or as directed by the Resident in the field. The new profile grade shall be within 3” of the old profile grade or as directed in bridge, overpass, or vertical correction areas.

QUALITY CONTROL

311.10 Quality Control The Contractor shall operate in accordance with the approved Quality Control Plan (QCP) to assure a product meeting the contract requirements. The QCP shall meet the requirements of Section 106.4 - Quality Control and this Section. The Contractor shall not begin recycling operations until the Department approves the QCP in writing.

Prior to performing any rubblizing, the Department and the Contractor shall hold a Pre-Rubblization conference to discuss the rubblizing schedule, type and amount of equipment to be used, sequence of operations, and traffic control. A copy of the QC random numbers to be used on the project shall be provided to the Resident. All field supervisors including the responsible onsite supervisor for the rubblizing operation shall attend this meeting.

The QCP shall address any items that affect the quality of the Rubblizing Process including, but not limited to, the following:

A. Make and type of rollers including weight, weight per inch of steel wheels, and average contact pressure for pneumatic tired rollers.
B. Rubblizing operations including type of equipment, speed of equipment, monitoring, methods to ensure that segregation is minimized, and procedures for grading and compacting operations.
C. Method of grade checks.
D. Name, responsibilities, and qualifications of the Responsible onsite Rubblizing Supervisor experienced and knowledgeable with the process.
E. Access to operators manual on all equipment.

The Project Superintendent shall be named in the QCP, and the responsibilities for successful implementation of the QCP shall be outlined.

At the initiation of and during rubblizing, establish, demonstrate and document the capability of the equipment, including the machine’s speed and impact frequency to achieve the required results.

At a minimum frequency of one every 1500 feet per lane, inspect the rubblized concrete pavement full depth to determine whether the gradation is being met and whether the reinforcement is debonded. The Resident may increase or decrease the frequency of inspection depending on the results of the inspections.

The completed rubblized surface shall have a uniform appearance without unbroken strips of pavement, exposed reinforcement steel, rubberized crack seal material, and excessive voids or cross slope issues.

Rubblization equipment will not be allowed to operate within 30 feet of any bridge structure.

311.12 Method of Measurement Full Depth Concrete Rubblization will be measured by square yard.

311.13 Basis of Payment The accepted quantity of Full Depth Concrete Rubblization will be paid for at the contract unit price per square yard, complete in-place which price will be full compensation for furnishing all equipment and labor for rubblizing, grading, compacting, and for all incidentals necessary to complete the work.

Payments will be made under:

Pay Item		Pay Unit
311.36	Full Depth Concrete Rubblization	Square Yard

SPECIAL PROVISION 400 - PAVEMENTS

SECTION 401 - HOT MIX ASPHALT PAVEMENT

401.01 Description The Contractor shall furnish a uniformly blended, homogeneous mixture placed as one or more courses of Hot Mix Asphalt Pavement (HMA) on an approved base in accordance with the contract documents and in reasonably close conformity with the lines, grades, thickness, and typical cross sections shown on the plans or established by the Resident. The Department will accept this work under Quality Assurance provisions, in accordance with these specifications and the requirements of Section 106 – Quality, the provisions of AASHTO M 323 except where otherwise noted in sections 401 and 703 of these specifications, and the MaineDOT Policies and Procedures for HMA Sampling and Testing.

401.02 Materials Materials shall meet the requirements specified in Section 700 - Materials:

Asphalt Cement	702.01
Aggregates for HMA Pavement	703.07
RAP for HMA Pavement	703.08
HMA Mixture Composition	703.09

401.03 Composition of Mixtures The Contractor shall compose the Hot Mix Asphalt Pavement with aggregate, Performance Graded Asphalt Binder (PGAB), and mineral filler if required. HMA shall be designed and tested according to AASHTO R35 and the volumetric criteria in Table 1. The Contractor shall size, uniformly grade, and combine the aggregate fractions in proportions that provide a mixture meeting the grading requirements of the Job Mix Formula (JMF).

The Contractor shall submit for Department approval a JMF to the Central Laboratory in Bangor for each mixture to be supplied. The Department may approve 1 active design per nominal maximum size, per traffic level, per plant, plus a 9.5mm "fine" mix for shimming and where required, a non-RAP design for bridge decks. The Department shall then have 15 calendar days in which to process a new design before approval. The JMF shall establish a single percentage of aggregate passing each sieve size within the limits shown in section 703.09. The mixture shall be designed and produced, including all production tolerances, to comply with the allowable control points for the particular type of mixture as outlined in 703.09. The JMF shall state the original source, gradation, and percentage to be used of each portion of the aggregate including RAP when utilized, and mineral filler if required. It shall also state the proposed PGAB content, the name and location of the refiner, the supplier, the source of PGAB submitted for approval, the type of PGAB modification if applicable, and the location of the terminal if applicable.

In addition, the Contractor shall provide the following information with the proposed JMF:

- Properly completed JMF indicating all mix properties (Gmm, VMA, VFB, etc.)
- Stockpile Gradation Summary
- Design Aggregate Structure Consensus Property Summary
- Design Aggregate Structure Trial Blend Gradation Plots (0.45 power chart)
- Trial Blend Test Results for at least three different asphalt contents
- Design Aggregate Structure for at least three trial blends
- Test results for the selected aggregate blend at a minimum of three binder contents
- Specific Gravity and temperature/viscosity charts for the PGAB to be used
- Recommended mixing and compaction temperatures from the PGAB supplier
- Material Safety Data Sheets (MSDS) For PGAB
- Asphalt Content vs. Air Voids trial blend curve
- Test report for Contractor's Verification sample

Summary of RAP test results (if used), including count, average and standard deviation of binder content and gradation

At the time of JMF submittal, the Contractor shall identify and make available the stockpiles of all proposed aggregates at the plant site. There must be a minimum of 150 ton for stone stockpiles, 75 ton for sand stockpiles, and 50 ton of blend sand before the Department will sample. The Department shall obtain samples for laboratory testing. The Contractor shall also make available to the Department the PGAB proposed for use in the mix in sufficient quantity to test the properties of the asphalt and to produce samples for testing of the mixture. Before the start of paving, the Contractor and the Department shall split a production sample for evaluation. The Contractor shall test its split of the sample and determine if the results meet the requirements of the Department's written policy for mix design verification (See MaineDOT Policies and Procedures for HMA Sampling and Testing available at the Central Laboratory in Bangor). If the results are found to be acceptable, the Contractor will forward their results to the Department's Lab, which will test the Department's split of the sample. The results of the two split samples will be compared and shared between the Department and the Contractor. If the Department finds the mixture acceptable, an approved JMF will be forwarded to the Contractor and paving may commence. The first day's production shall be monitored, and the approval may be withdrawn if the mixture exhibits undesirable characteristics such as checking, shoving or displacement.

The Contractor shall be allowed to submit aim changes within 24 hours of receipt of the first Acceptance test result. Should all of the Acceptance samples of a Lot be obtained prior to the receipt of the first Acceptance result, the Department will not allow the aim changes to be applied to that Lot. Adjustments will be allowed of up to 2% on the percent passing the 2.36 mm sieve through the 0.075 mm and 3% on the percent passing the 4.75 mm or larger sieves. Adjustments will be allowed on the %PGAB of up to 0.2%. Adjustments will be allowed on GMM of up to 0.010.

The Contractor shall submit a new JMF for approval each time a change in material source or materials properties is proposed. The same approval process shall be followed. The cold feed percentage of any aggregate may be adjusted up to 10 percentage points from the amount listed on the JMF, however no aggregate listed on the JMF shall be eliminated. The cold feed percentage for RAP may be reduced up to 10 percentage points from the amount listed on the JMF and shall not exceed the percentage of RAP approved in the JMF or for the specific application under any circumstances.

TABLE 1: VOLUMETRIC DESIGN CRITERIA

Design ESAL's (Millions)	Required Density (Percent of G_{mm})			Voids in the Mineral Aggregate (VMA)(Minimum Percent)					Voids Filled with Binder (VFB) (Minimum %)	Fines/Eff. Binder Ratio
				Nominal Maximum Aggregate Size (mm)						
	$N_{initial}$	N_{design}	N_{max}	25	19	12.5	9.5	4.75		
<0.3	≤91.5	96.0	≤98.0	13.0	14.0	15.0	16.0	16.0	70-80	0.6-1.2
0.3 to <3	≤90.5								65-80	
3 to <10	≤89.0								65-80*	
10 to <30										
≥ 30										

*For 9.5 mm nominal maximum aggregate size mixtures, the maximum VFB is 82.
*For 4.75 mm nominal maximum aggregate size mixtures, the maximum VFB is 84.

<u>401.031 Warm Mix Technology</u> The Contractor may place Hot Mix Asphalt Pavement produced with an accepted WMA technology if approved by the Department. Methods or technologies shall generally be at the Contractors option, but will be limited to proven, Agency and Industry accepted practice. Mixture production,

placement and volumetric testing details, including temperatures, shall be included in the project specific QCP, and submitted to the Department for approval prior to any work.

401.04 Temperature Requirements After the JMF is established, the temperatures of the mixture shall conform to the following tolerances:

In the truck at the mixing plant – allowable range 275 to 325°F
At the Paver – allowable range 275 to 325°F

The JMF and the mix subsequently produced shall meet the requirements of Tables 1 and Section 703.07.

401.05 Performance Graded Asphalt Binder Unless otherwise noted in Special Provision 403 - Hot Mix Asphalt Pavement, the Contractor may utilize either a 64-28 or 58-28 PGAB. The Contractor must stipulate which PGAB grading will be used to construct the entire HMA pavement structure prior to starting work. For mixtures containing greater than 20 percent but no more than 30 percent RAP the PGAB shall be PG 58-34 (or PG 52-34 when approved by the Department). The PGAB shall meet the applicable requirements of AASHTO M320 - Standard Specification for PGAB. Polymer-modified PGAB shall meet the applicable requirements of AASHTO MP 19. The Contractor shall provide the Department with an approved copy of the Quality Control Plan for PGAB in accordance with AASHTO R 26 Certifying Suppliers of PGAB.
The Contractor shall request approval from the Department for a change in PGAB supplier or source by submitting documentation stating the new supplier or source a minimum of 24 hours prior to the change. In the event that the PGAB supplier or source is changed, the Contractor shall make efforts to minimize the occurrence of PGAB co-mingling.

401.06 Weather and Seasonal Limitations The State is divided into two paving zones as follows:

a. Zone 1 Areas north of US Route 2 from Gilead to Bangor and north of Route 9 from Bangor to Calais.
b. Zone 2 Areas south of Zone 1 including the US Route 2 and Route 9 boundaries.

The Contractor may place Hot Mix Asphalt Pavement for use other than a traveled way wearing course in either Zone between the dates of April 15th and November 15th, provided that the air temperature as determined by an approved thermometer (placed in the shade at the paving location) is 40°F or higher.
The Contractor may place Hot Mix Asphalt Pavement produced with an accepted WMA technology for any base, intermediate base, or shim course in either Zone between the dates of April 15th and November 15th, provided that the air temperature as determined by an approved thermometer (placed in the shade at the paving location) is 35°F or higher, and the area to be paved is not frozen. The Hot Mix Asphalt Pavement produced with an approved WMA technology shall meet the requirements of section 401.04 - Temperature Requirements, unless otherwise approved by the Department.

The Contractor may place Hot Mix Asphalt Pavement as traveled way wearing course in Zone 1 between the dates of May 1st and the Saturday following October 1st and in Zone 2 between the dates of April 15th and the Saturday following October 15th, provided the air temperature determined as above is 50°F or higher. For the purposes of this Section, the traveled way includes truck lanes, ramps, approach roads and auxiliary lanes. The atmospheric temperature for all courses on bridge decks shall be 50°F or higher.

Hot Mix Asphalt Pavement used for curb, driveways, sidewalks, islands, or other incidentals is not subject to seasonal limitations, except that conditions shall be satisfactory for proper handling and finishing of the mixture. All mixtures used for curb, driveways, sidewalks, islands, or other incidentals shall conform to section 401.04 - Temperature Requirements. Unless otherwise specified, the Contractor shall not place Hot Mix Asphalt Pavement on a wet or frozen surface and the air temperature shall be 40°F or higher.

On all sections of overlay with wearing courses less than 1 in thick, the wearing course for the travelway and adjacent shoulders shall be placed between the dates of May 15th and the Saturday following September 15th.

On all sections of overlay with wearing courses less than 1 inch thick, the wearing course for the travelway and adjacent shoulders shall be placed between the dates of June 1st and the Saturday following September 1st if the work is to be performed, either by contract requirement, or Contractor option, during conditions defined as "night work".

401.07 Hot Mix Asphalt Plant

401.071 General Requirements HMA plants shall conform to AASHTO M156.

a. Truck Scales When the hot mix asphalt is to be weighed on scales meeting the requirements of Section 108 - Payment, the scales shall be inspected and sealed by the State Sealer as often as the Department deems necessary to verify their accuracy.

Plant scales shall be checked prior to the start of the paving season, and each time a plant is moved to a new location. Subsequent checks will be made as determined by the Resident. The Contractor will have at least ten 20 Kg [50 pound] masses for scale testing.

401.072 Automation of Batching Batch plants shall be automated for weighing, recycling, and monitoring the system. In the case of a malfunction of the printing system, the requirements of Section 401.074 c. of this specification will apply.

The batch plant shall accurately proportion the various materials in the proper order by weight. The entire batching and mixing cycle shall be continuous and shall not require any manual operations. The batch plant shall use auxiliary interlock circuits to trigger an audible alarm whenever an error exceeding the acceptable tolerance occurs. Along with the alarm, the printer shall print an asterisk on the delivery slip in the same row containing the out-of-tolerance weight. The automatic proportioning system shall be capable of consistently delivering material within the full range of batch sizes. When RAP is being used, the plant must be capable of automatically compensating for the moisture content of the RAP.

All plants shall be equipped with an approved digital recording device. The delivery slip load ticket shall contain information required under Section 108.1.3 - Provisions Relating to Certain Measurements, Mass and paragraphs a, b, and c of Section 401.073

401.073 Automatic Ticket Printer System on Automatic HMA Plant An approved automatic ticket printer system shall be used with all approved automatic HMA plants. The requirements for delivery slips for payment of materials measured by weight, as given in the following Sections, shall be waived: 108.1.3 a., 108.1.3 b., 108.1.3 c., and 108.1.3 d. The automatic printed ticket will be considered as the Weight Certificate.

The requirements of Section 108.1.3 f. - Delivery Slips, shall be met by the weigh slip or ticket, printed by the automatic system, which accompanies each truckload, except for the following changes:

a. The quantity information required shall be individual weights of each batch or total net weight of each truckload.
b. Signatures (legible initials acceptable) of Weighmaster (required only in the event of a malfunction as described in 401.074 c.).
c. The MaineDOT designation for the JMF.

401.074 Weight Checks on Automatic HMA Plant At least twice during each 5 days of production either of the following checks will be performed:

a. A loaded truck may be intercepted and weighed on a platform scale that has been sealed by the State Sealer of Weights and Measures within the past 12 months. The inspector will notify the producer to take corrective action on any discrepancy over 1.0%. The producer may continue to operate for 48 hours under the following conditions.

1. If the discrepancy does not exceed 1.5%; payment will still be governed by the printed ticket.
2. If the discrepancy exceeds 1.5%, the plant will be allowed to operate as long as payment is determined by truck platform scale net weight.

If, after 48 hours the discrepancy has not been addressed and reduced below 1.0%, than plant operations will cease. Plant operation may resume after the discrepancy has been brought within 1.0%.

b. Where platform scales are not readily available, a check will be made to verify the accuracy and sensitivity of each scale within the normal weighing range and to assure that the interlocking devices and automatic printer system are functioning properly.

c. In the event of a malfunction of the automatic printer system, production may be continued without the use of platform truck scales for a period not to exceed the next two working days, providing total weights of each batch are recorded on weight tickets and certified by a Licensed Public Weighmaster.

401.08 Hauling Equipment Trucks for hauling Hot Mix Asphalt Pavement shall have tight, clean, and smooth metal dump bodies, which have been thinly coated with a small amount of approved release agent to prevent the mixture from adhering to the bodies. Solvent based agents developed to strip asphalts from aggregates will not be allowed as release agents.

All truck dump bodies shall have a cover of canvas or other water repellent material capable of heat retention, which completely covers the mixture. The cover shall be securely fastened on the truck, unless unloading.

All truck bodies shall have an opening on both sides, which will accommodate a thermometer stem. The opening shall be located near the midpoint of the body, at least 12 in above the bed.

401.09 Pavers Pavers shall be self-contained, self-propelled units with an activated screed (heated if necessary) capable of placing courses of Hot Mix Asphalt Pavement in full lane widths specified in the contract on the main line, shoulder, or similar construction.

On projects with no price adjustment for smoothness, pavers shall be of sufficient class and size to place Hot Mix Asphalt Pavement over the full width of the mainline travel way with a 10 ft minimum main screed with activated extensions.

The Contractor shall place Hot Mix Asphalt Pavement on the main line with a paver using an automatic grade and slope controlled screed, unless otherwise authorized by the Department. The controls shall automatically adjust the screed and increase or decrease the layer thickness to compensate for irregularities in the preceding course. The controls shall maintain the proper transverse slope and be readily adjustable so that transitions and superelevated curves can be properly paved. The controls shall operate from a fixed or moving reference such as a grade wire or ski type device (floating beam) with a minimum length of 30 ft, a non-contact grade control with a minimum span of 24 ft, except that a 40 ft reference shall be used on Expressway projects.

The Contractor shall operate the paver in such a manner as to produce a visually uniform surface texture and a thickness within the requirements of Section 401.101 - Surface Tolerances. The paver shall have a receiving hopper with sufficient capacity for a uniform spreading operation and a distribution system to place the mixture uniformly, without segregation in front of the screed. The screed assembly shall produce a finished surface of the required evenness and texture without tearing, shoving, or gouging the mixture. Pavers with extendible screeds shall have auger extensions and tunnel extenders as per the manufacturer's recommendations, a copy of which shall be available if requested.

The Contractor shall have the paver at the project site sufficiently before the start of paving operations to be inspected and approved by the Department. The Contractor shall repair or replace any paver found worn or defective, either before or during placement, to the satisfaction of the Department. Pavers that produce an unevenly textured or non-uniform mat will be repaired or replaced before continuing to place HMA on MaineDOT projects.

On a daily basis, the Contractor shall perform density testing across the mat being placed, prior to being compacted by equipment at 12 in intervals. If the density values vary by more than 2.0% from the mean, the Contractor shall make adjustments to the screed until the inconsistencies are remedied. Failure to replace or repair defective placement equipment may result in a letter of suspension of work and notification of a quality control violation resulting in possible monetary penalties as governed by Section 106 - Quality

<u>401.10 Rollers</u> Rollers shall be static steel, pneumatic tire, oscillatory, or approved vibrator type. Rollers shall be in good mechanical condition, capable of starting and stopping smoothly, and be free from backlash when reversing direction. Rollers shall be equipped and operated in such a way as to prevent the picking up of hot mixed material by the roller surface. The use of rollers, which result in crushing of the aggregate or in displacement of the HMA will not be permitted. Any Hot Mix Asphalt Pavement that becomes loose, broken, contaminated, shows an excess or deficiency of Performance Graded Asphalt Binder, or is in any other way defective shall be removed and replaced at no additional cost with fresh Hot Mix Asphalt Pavement, which shall be immediately compacted to conform to the adjacent area.

The Contractor shall repair or replace any roller found to be worn or defective, either before or during placement, to the satisfaction of the Department. Rollers that produce grooved, unevenly textured or non-uniform mat will be repaired or replaced before continuing to place HMA on MaineDOT projects. The type of rollers to be used and their relative position in the compaction sequence shall generally be the Contractor's option, provided specification densities are attained and with the following requirements:

a. On variable-depth courses, the first lift of pavement over gravel, reclaimed pavement, on irregular or milled surfaces, or on bridges, at least one roller shall be 16 ton pneumatic-tired. Unless otherwise allowed by the Resident, pneumatic-tired rollers shall be equipped with skirting to minimize the pickup of HMA materials from the paved surface. When required by the Resident, the roller shall be ballasted to 20 ton.

b. Compaction with a vibratory or steel wheel roller shall precede pneumatic-tired rolling, unless otherwise authorized by the Department.

c. Vibratory rollers shall not be operated in the vibratory mode when checking or cracking of the mat occurs, or on bridge decks.

d. Any method, which results in cracking or checking of the mat, will be discontinued and corrective action taken.

e. The use of an oscillating steel roller shall be required to compact all mixtures placed on bridge decks

The maximum operating speed for a steel wheel or pneumatic roller shall not exceed the manufacturer's recommendations, a copy of which shall be available if requested.

401.101 Surface Tolerances The Department will check surface tolerance utilizing the following methods :

a.) A 16 ft straightedge or string line placed directly on the surface, parallel to the centerline of pavement.
b.) A 10 ft straightedge or string line placed directly on the surface, transverse to the centerline of pavement.

The Contractor shall correct variations exceeding ¼ in by removing defective work and replacing it with new material as directed by the Department. The Contractor shall furnish a 10 foot straightedge for the Departments use.

401.11 Preparation of Existing Surface The Contractor shall thoroughly clean the surface upon which Hot Mix Asphalt Pavement is to be placed of all objectionable material. When the surface of the existing base or pavement is irregular, the Contractor shall bring it to uniform grade and cross section. All surfaces shall have a tack coat applied prior to placing any new HMA course. Tack coat shall conform to the requirements of Section 409 – Bituminous Tack Coat, Section 702 – Bituminous Material, and all applicable sections of the contract.

401.12 Hot Mix Asphalt Documentation The Contractor and the Department shall agree on the amount of Hot Mix Asphalt Pavement that has been placed each day. All delivery slips shall conform to the requirements of 401.073.

401.13 Preparation of Aggregates The Contractor shall dry and heat the aggregates for the HMA to the required temperature. The Contractor shall properly adjust flames to avoid physical damage to the aggregate and to avoid depositing soot on the aggregate.

401.14 Mixing The Contractor shall combine the dried aggregate in the mixer in the amount of each fraction of aggregate required to meet the JMF. The Contractor shall measure the amount of PGAB and introduce it into the mixer in the amount specified by the JMF.

The Contractor shall produce the HMA at the temperature established by the JMF.

The Contractor shall dry the aggregate sufficiently so that the HMA will not flush, foam excessively, or displace excessively under the action of the rollers. The Contractor shall introduce the aggregate into the mixer at a temperature of not more than 25°F above the temperature at which the viscosity of the PGAB being used is 0.150 Pa·s.

The Contractor shall store and introduce into the mixer the Performance Graded Asphalt Binder at a uniformly maintained temperature at which the viscosity of the PGAB is between 0.150 Pa·s and 0.300 Pa·s. The aggregate shall be coated completely and uniformly with a thorough distribution of the PGAB. The Contractor shall determine the wet mixing time for each plant and for each type of aggregate used. The resultant material shall be a uniformly blended, homogeneous HMA mixture.

401.15 Spreading and Finishing On areas where irregularities or unavoidable obstacles make the use of mechanical spreading and finishing equipment impracticable, the Contractor shall spread, rake, and lute the HMA with hand tools to provide the required compacted thickness. Solvent based agents developed to strip asphalts from aggregates will not be allowed as release agents.

On roadways with adjoining lanes carrying traffic, the Contractor shall place each course over the full width of the traveled way section being paved that day, unless otherwise noted by the Department in Section 403 - Hot Mix Asphalt Pavement.

In addition, hot mix asphalt pavement placed on bridges shall also conform to Section 508.04 and the following requirements.

a. The bottom course shall be placed with an approved rubber mounted paver of such type and operated in such a manner that the membrane waterproofing will not be damaged in any way.

b. The top course shall not be placed until the bottom course has cooled sufficiently to provide stability.

c. The Contractor will not be required to cut sample cores from the compacted pavement on the bridge deck, unless otherwise directed by Special Provision.

d. After the top course has been placed, the shoulder areas shall be sealed 3 ft wide with two applications of an emulsified bituminous sealer meeting the requirements of Section 612.03 – Sealing and Section 702.12 - Emulsified Bituminous Sealing Compound. The first application shall be pre-mixed with fine, sharp sand, similar to mortar sand, as needed to fill all voids in the mix in the area being sealed. The second application may be applied without sand. The sealer shall be carried to the curb at the gutter line in sufficient quantity to leave a bead or fillet of material at the face of the curb. The area to be sealed shall be clean, dry and the surface shall be at ambient temperature.

e. The furnishing and applying of the required quantity of sealer for the bridge shoulder areas shall be incidental to placing the hot mix asphalt pavement.

f. The atmospheric temperature for all courses placed on bridge decks shall be 50°F or higher.

<u>401.16 Compaction</u> Immediately after the Hot Mix Asphalt Pavement has been spread, struck off, and any surface irregularities adjusted, the Contractor shall thoroughly and uniformly compact the HMA by rolling.

The Contractor shall roll the surface when the mixture is in the proper condition and when the rolling does not cause undue displacement, cracking, or shoving. The Contractor shall prevent adhesion of the HMA to the rollers or vibrating compactors without the use of fuel oil or other petroleum based release agents. Solvents designed to strip asphalt binders from aggregates will not be permitted as release agents on equipment, tools, or pavement surfaces.

The Contractor shall immediately correct any displacement occurring as a result of the reversing of the direction of a roller or from other causes to the satisfaction of the Department. Any operation other than placement of variable depth shim course that results in breakdown of the aggregate shall be discontinued. Any new pavement that shows obvious cracking, checking, or displacement shall be removed and replaced for the full lane width as directed by the Resident at no cost to the Department.

Along forms, curbs, headers, walls, and other places not accessible to the rollers, the Contractor shall thoroughly compact the HMA with mechanical vibrating compactors. The Contractor shall only use hand tamping in areas inaccessible to all other compaction equipment. On depressed areas, the Contractor may use a trench roller or cleated compression strips under a roller to transmit compression to the depressed area.

Any HMA that becomes unacceptable due to cooling, cracking, checking, segregation or deformation as a result of an interruption in mix delivery shall be removed and replaced, with material that meets contract specifications at no cost to the Department.

401.17 Joints The Contractor shall construct wearing course transverse and longitudinal joints in such a manner that minimum tolerances shown in Section 401.101 - Surface Tolerances are met when measured with a straightedge.

The paver shall maintain a uniform head of HMA during transverse and longitudinal joint construction.

The HMA shall be free of segregation and meet temperature requirements outlined in section 401.04. Transverse joints of the wearing course shall be straight and neatly trimmed. The Contractor may form a vertical face exposing the full depth of the course by inserting a header, by breaking the bond with the underlying course, or by cutting back with hand tools. The Department may allow feathered or "lap" joints on lower base courses or when matching existing base type pavements.

Longitudinal joints shall be generally straight to the line of travel, and constructed in a manner that best ensure joint integrity. Methods or activities that prove detrimental to the construction of straight, sound longitudinal joints will be discontinued.

The Contractor shall apply a coating of emulsified asphalt immediately before paving all joints to the vertical face and 3 in of the adjacent portion of any pavement being overlaid except those formed by pavers operating in echelon. The Contractor shall use an approved spray apparatus designed for covering a narrow surface. The Department may approve application by a brush for small surfaces, or in the event of a malfunction of the spray apparatus, but for a period of not more than one working day.

Where pavement under this contract joins an existing pavement, or when the Department directs, the Contractor shall cut the existing pavement along a smooth line, producing a neat, even, vertical joint. The Department will not permit broken or raveled edges. The cost of all work necessary for the preparation of joints is incidental to related contract pay items.

401.18 Quality Control Method A, B & C The Contractor shall operate in accordance with the approved Quality Control Plan (QCP) to assure a product meeting the contract requirements. The QCP shall meet the requirements of Section 106.6 - Acceptance and this Section. The Contractor shall not begin paving operations until the Department approves the QCP in writing.

Prior to placing any mix, the Department and the Contractor shall hold a Pre-paving conference to discuss the paving schedule, source of mix, type and amount of equipment to be used, sequence of paving pattern, rate of mix supply, random sampling, project lots and sublots and traffic control. A copy of the QC random numbers to be used on the project shall be provided to The Resident. The Departments' random numbers for Acceptance testing shall be generated and on file with the Resident and the Project Manager. All personnel of the Department and the Contractor who have significant information relevant to the paving items shall attend, including the responsible onsite paving supervisor for the Contractor. The Resident will prepare minutes of the conference and distribute them to all attendees. Any requests to revise the minutes must be made to the Resident within 7 Days of Receipt. These minutes will constitute the final record of the Pre-paving conference.

The QCP shall address any items that affect the quality of the Hot Mix Asphalt Pavement including, but not limited to, the following:

a. JMF(s)
b. Hot mix asphalt plant details
c. Stockpile Management (to include provisions for a minimum 2 day stockpile)
d. Make and type of paver(s)
e. Make and type of rollers including weight, weight per inch of steel wheels, and average contact pressure for pneumatic tired rollers
f. Name of QCP Administrator, and certification number
g. Name of Process Control Technician(s) and certification number(s)
h. Name of Quality Control Technicians(s) and certification number(s)
i. Mixing & transportation including process for ensuring that truck bodies are clean and free of debris or contamination that could adversely affect the finished pavement
j. Testing Plan
k. Laydown operations including longitudinal joint construction, procedures for avoiding paving in inclement weather, type of release agent to be used on trucks tools and rollers, compaction of shoulders, tacking of all joints, methods to ensure that segregation is minimized, procedures to determine the maximum rolling and paving speeds based on best engineering practices as well as past experience in achieving the best possible smoothness of the pavement. Solvent based agents developed to strip asphalts from aggregates will not be allowed as release agents.
l. Examples of Quality Control forms including a daily plant report, daily paving report, and delivery slip template for any plant to be utilized.
m. Silo management and details (can show storage for use on project of up to 36 hours)
n. Provisions for varying mix temperature due to extraordinary conditions or production limitations. If a warm-mix technology is utilized, a proposed target production temperature range (not to exceed 50°F) will be provided for each mix design.
o. Name and responsibilities of the Responsible onsite Paving Supervisor.
p. Method for calibration/verification of Density Gauge
q. A note that all testing will be done in accordance with AASHTO and the MaineDOT Policies and Procedures for HMA Sampling and Testing.
r. A detailed description of RAP processing, stockpiling and introduction into the plant as well as a note detailing conditions under which the percent of RAP will vary from that specified on the JMF.
s. A detailed procedure outlining when production will be halted due to QC or Acceptance testing results.
t. A plan to address the change in PGAB source or supplier and the potential co-mingling of differing PGAB's.
u. A procedure to take immediate possession of acceptance samples once released by MaineDOT and deliver said samples to the designated acceptance laboratory.
v. Provisions for how the QCP will be communicated to the Contractor's field personnel

The QCP shall include the following technicians together with following minimum requirements:

a. QCP Administrator - A qualified individual shall administer the QCP. The QCP Administrator must be a full-time employee of or a consultant engaged by the Contractor or paving subcontractor. The QCP Administrator shall have full authority to institute any and all actions necessary for the successful operation of the QCP. The QCP Administrator (or its designee in the QCP Administrator's absence) shall be available to communicate with the Department at all times. The QCP Administrator shall be certified as a Quality Assurance Technologist certified by the New England Transportation Technician Certification Program (NETTCP).

b. Process Control Technician(s) (PCT) shall utilize test results and other quality control practices to assure the quality of aggregates and other mix components and control proportioning to meet the JMF(s). The PCT shall inspect all equipment used in mixing to assure it is operating properly and that mixing conforms to the mix design(s) and other Contract requirements, and that delivery slips and plant recordation accurately reflects the mix being produced with all the required information. The QCP shall detail how these duties and responsibilities are to be accomplished and documented, and whether more than one PCT is required. The Plan shall include the criteria to be utilized by the PCT to correct or reject unsatisfactory materials. The PCT shall be certified as a Plant Technician by the NETTCP.

c. Quality Control Technician(s) (QCT) shall perform and utilize quality control tests at the job site to assure that delivered materials meet the requirements of the JMF(s). The QCT shall inspect all equipment utilized in transporting, laydown, and compacting to assure it is operating properly and that all laydown and compaction conform to the Contract requirements. The QCP shall detail how these duties and responsibilities are to be accomplished and documented, and whether more than one QCT is required. The QCP shall include the criteria utilized by the QCT to correct or reject unsatisfactory materials. The QCT shall be certified as a Paving Inspector by the NETTCP.

The QCP shall detail the coordination of the activities of the Plan Administrator, the PCT and the QCT. The Project Superintendent shall be named in the QCP, and the responsibilities for successful implementation of the QCP shall be outlined.

The Contractor shall sample, test, and evaluate Hot Mix Asphalt Pavement in accordance with the following minimum frequencies:

TABLE 2 : MINIMUM QUALITY CONTROL FREQUENCIES

Test or Action	Frequency	Test Method
Temperature of mix	6 per day at street and plant	-
Temperature of mat	4 per day	-
%TMD (Surface)	1 per 125 ton (As noted in QC Plan)	ASTM D2950
%TMD (Base)	1 per 250 ton (As noted in QC Plan)	AASHTO T269
Fines / Effective Binder	1 per 500 ton	AASHTO T 312*
Gradation	1 per 500 ton	AASHTO T30
PGAB content	1 per 500 ton	AASHTO T164 or T308
Voids at N_{design}	1 per 500 ton	AASHTO T 312*
Voids in Mineral Aggregate at N_{design}	1 per 500 ton	AASHTO T 312*
Rice Specific Gravity	1 per 500 ton	AASHTO T209
Coarse Aggregate Angularity	1 per 5000 ton	ASTM D5821
Flat and Elongated Particles	1 Per 5000 ton	ASTM D4791
Fine Aggregate Angularity	1 Per 5000 ton	AASHTO T304

*Method A and B only

The Contractor may utilize innovative equipment or techniques not addressed by the Contract documents to produce or monitor the production of the mix, subject to approval by the Department.

The Contractor shall submit all Hot Mix Asphalt Pavement plant test reports, inspection reports and updated pay factors in writing, signed by the appropriate technician and present them to the Department by 1:00 P.M. on the next working day, except when otherwise noted in the QCP due to local restrictions. The Contractor shall also retain splits of the previous 5 QC tests, with QC results enclosed for random selection and testing by The Department during QA inspections of the HMA production facility. Test results of splits that do not meet the Dispute Resolution Variance Limits in Table 10 shall trigger an investigation by the MaineDOT Independent Assurance Unit, and may result in that lab losing NETTCP certification and the ability to request a dispute [Section 401.223 - Process for Dispute Resolution (Methods A , B and C only)].

The Contractor shall make density test results, including randomly sampled densities, available to the Department onsite. Summaries of each day's results, including a daily paving report, shall be recorded and signed by the QCT and presented to the Department by 1:00 p.m. the next working day.

The Contractor shall have a testing lab at the plant site, equipped with all testing equipment necessary to complete the tests in Table 2. The Contractor shall locate an approved Gyratory Compactor at the plant testing lab or within 30 minutes of the plant site.

The Contractor shall fill all holes in the pavement resulting from cutting cores by the Contractor or the Department with a properly compacted, acceptable mixture no later than the following working day. Before filling, the Contractor shall carefully clean the holes and apply a coating of emulsified asphalt. On surface courses, cores shall not be cut except for Verification of the Nuclear Density Gauge, at a rate not to exceed 3 per day or 2 per 1000 Mg [1000 ton] placed.

The Contractor shall monitor plant production using running average of three control charts as specified in Section 106 - Quality. Control limits shall be as noted in Table 3 below. The UCL and LCL, shall not exceed the allowable gradation control points for the particular type of mixture as outlined in Table 1 of section 703.09

TABLE 3: Control Limits

Property	UCL and LCL
Passing 4.75 mm and larger sieves	Target +/-4.0
Passing 2.36 mm sieve	Target +/-2.5
Passing .075 mm sieve	Target +/-1.2
PGAB Content*	Target +/-0.3
Voids in the Mineral Aggregate	LCL = LSL + 0.2
% Voids at N_{design}	JMF Target +/-1.3

*Based on AASHTO T 308

The Contractor shall cease paving operations whenever one of the following occurs on a lot in progress:

a. Method A: The Pay Factor for VMA, Voids @ N_d, Percent PGAB, composite gradation, VFB, fines to effective binder or density using all Acceptance or all Quality Control tests for the current lot is less than 0.85.
b. Method B: The Pay Factor for VMA, Voids @ N_d, Percent PGAB, composite gradation, VFB, fines to effective binder or density using all Acceptance or all Quality Control tests for the current lot is less than 0.90.
c. Method C: The Pay Factor for VMA, Voids @ $N_{d,}$ Percent PGAB, percent passing the nominal maximum sieve, percent passing 2.36 mm sieve, percent passing 0.300 mm sieve, percent passing 0.075 mm sieve or density using all Acceptance or all available Quality Control tests for the current lot is less than 0.85.

d. The Coarse Aggregate Angularity or Fine Aggregate Angularity value falls below the requirements of Table 3: Aggregate Consensus Properties Criteria in Section 703.07 for the design traffic level.
e. Each of the first 2 control tests for a Method A or B lot fall outside the upper or lower limits for VMA, Voids @ Nd, or Percent PGAB; or under Method C, each of the first 2 control tests for the lot fall outside the upper or lower limits for the nominal maximum, 2.36 mm, 0.300 mm or 0.075 mm sieves, or percent PGAB.
f. The Flat and Elongated Particles value exceeds 10% by ASTM D4791.
g. There is any visible damage to the aggregate due to over-densification other than on variable depth shim courses.
h. The Contractor fails to follow the approved QCP.

The Contractor shall notify the Resident in writing as to the reason for shutdown, as well as the proposed corrective action, by the end of the work day. Failure to do so will be treated as a second incident under 106.4.6 QCP Non-compliance. The Department will consider corrective action acceptable if the pay factor for the failing property increases, based on samples already in transit, or a verification sample is tested and the property falls within the specification limits.

In cases where the corrective action can be accomplished immediately, such as batch weight or cold feed changes, the Contractor may elect to resume production once the corrective action is completed. Additional QC testing shall be performed to verify the effectiveness of the corrective action. Subsequent occurrences of shutdown for the same property in a Lot in progress will require paving operations to cease. Paving operations shall not resume until the Contactor and the Department determines that material meeting the Contract requirements will be produced. The Department may allow the Contractor to resume production based upon a passing QC sample, with a split of the sample being sent to the Department for verification testing. If the submitted verification sample test results fall outside the specification limits, the Contractor shall cease production until a verification sample is submitted to the Department has been tested by the Department and found to be within specification limits.

If the Contractor's control chart shows the process to be out of control (defined as a single point outside of the control limits on the running average of three chart) on any property listed in Table 3: Control Limits, the Contractor shall notify the Resident in writing of any proposed corrective action by 1:00 PM the next working day.

The Department retains the exclusive right, with the exception of the first day's production of a new JMF, to determine whether the resumption of production involves a significant change to the production process. If the Department so determines, then the current lot will be terminated, a pay factor established, and a new lot will begin.

<u>401.19 Quality Control Method D</u> For Items covered under Method D, the Contractor shall submit a modified QC Plan detailing, how the mix is to be placed, what equipment is to be used, and what HMA plant is to be used. All mix designs (JMF) shall be approved and verified by MaineDOT prior to use. Certified QC personnel shall not be required. The Contractor shall certify the mix and the test results for each item by a Certificate of Compliance.

<u>401.20 Acceptance Method A, B & C</u> These methods utilizes Quality Level Analysis and pay factor specifications. For Hot Mix Asphalt Pavement designated for acceptance under Quality Assurance provisions, the Department will sample once per sublot on a statistically random basis, test, and evaluate in accordance with the following Acceptance Criteria:

TABLE 4: ACCEPTANCE CRITERIA

PROPERTIES	POINT OF SAMPLING	TEST METHOD
Gradation	Paver Hopper	AASHTO T30
PGAB Content	Paver Hopper	AASHTO T308
%TMD (Surface)	Mat behind all Rollers	AASHTO T269
%TMD (Base or Binder)	Mat behind all Rollers	AASHTO T269
Air Voids at N_d	Paver Hopper	AASHTO T 312
%VMA at N_d	Paver Hopper	AASHTO T 312
Fines to Effective Binder	Paver Hopper	AASHTO T 312
%VFB	Paver Hopper	AASHTO T 312

In the event the Department terminates a Lot prematurely but fails to obtain the required number of acceptance samples to calculate the volumetric property pay factor under the test method specified in the contract, the pay factor shall be calculated using the number of samples actually obtained from the contract. Should the number of acceptance samples taken total less than three, the resulting pay factor shall be 1.0 for volumetric properties. A minimum of three cores will be used for a density pay factor using the contract's specified Acceptance method, if applicable, for quantities placed to date.

Should the Contractor request a termination of the Lot in progress prior to three acceptance samples being obtained, and the Department agrees to terminate the Lot, then the pay factor for mixture properties shall be 0.80. A minimum of three cores will be used to determine a density pay factor using the contract's specified Acceptance method, if applicable, for quantities placed to date.

Lot Size For purposes of evaluating all acceptance test properties, a lot shall consist of the total quantity represented by each item listed under the lot size heading.

Sublot size - Refer to section 401.201, 401.202, and 401.203 for minimum size and number of sublots. The quantity represented by each sample will constitute a sublot.

If there is less than one-half of a sublot remaining at the end, then it shall be combined with the previous sublot. If there is more than one-half sublot remaining at the end, then it shall constitute the last sublot and shall be represented by test results. If it becomes apparent partway through a Lot that, due to an underrun, there will be insufficient mix quantity to obtain the minimum number of sublots needed, the Resident may adjust the size of the remaining sublots and select new sample locations based on the estimated quantity of material remaining in the Lot.

Acceptance Testing The Department will obtain samples of Hot Mix Asphalt Pavement in conformance with AASHTO T168 Sampling Bituminous Paving Mixtures, and the MaineDOT Policies and Procedures for HMA Sampling and Testing, which will then be transported by the Contractor to the designated MaineDOT Laboratory within 48 hours (except when otherwise noted in the project specific QCP due to local restrictions), as directed by MaineDOT in approved transport containers to be provided by the Department, unless otherwise directed by the Resident. Failure to deliver an acceptance sample to the designated acceptance laboratory will be considered the second incident under 106.4.6–QCP Non-Compliance.

The Department will take the sample randomly within each sublot. Target values shall be as specified in the JMF. The Department will use Table 5 for calculating pay factors for gradation, PGAB Content, Air Voids at N_{design}, VMA, Fines to Effective Binder and VFB. The Department will withhold reporting of the test results for the Acceptance sample until 7:00 AM, on the second working day of receipt of the sample, or after receipt of the Contractors results of the Acceptance sample split. Upon conclusion of each lot, where there is a minimum of four sublots, results shall be examined for statistical outliers, as stated in Section 106.7.2 - Statistical Outliers.

Isolated Areas During the course of inspection, should it appear that there is an isolated area that is not representative of the lot based on a lack of observed compactive effort, excessive segregation, a change in process or any other questionable practice, that area may be isolated and tested separately. An area so isolated that has a calculated pay factor below 0.80 for Method A and C or below 0.86 for Method B, based on three random tests shall be removed and replaced at the expense of the Contractor for the full lane width and a length not to be less than 150 ft.

Pavement Density The Department will measure pavement density using core samples tested according to AASHTO T-166. The Department will randomly determine core locations. The Contractor shall cut 6 inch diameter cores at no additional cost to the Department by the end of the working day following the day the pavement is placed, and immediately give them to the Department. Cores for Acceptance testing shall be cut such that the nearest edge is never within 9 inches of any joint. The cores will be placed in a transport container provided by the Department and transported by the Contractor to the designated MaineDOT Lab as directed by the Department. Pre-testing of the cores will not be allowed. At the time of sampling, the Contractor and the Department shall mutually determine if a core is damaged. If it is determined that the core(s) is damaged, the Contractor shall cut new core(s) at the same offset and within 3 ft of the initial sample. At the time the core is cut, the Contractor and the Department will mutually determine if saw cutting of the core is needed, and will mark the core at the point where sawing is needed. The core may be saw cut by the Contractor in the Department's presence onsite, or in an MaineDOT Lab by The Department, without disturbing the layer being tested to remove lower layers of Hot Mix Asphalt Pavement, gravel, or RAP. No recuts are allowed at a test location after the core has been tested. Upon conclusion of each lot, density results shall be examined for statistical outliers as stated in Section 106.7.2.

On all sections of overlay with wearing courses designed to be 3/4 in or less in thickness, there shall be no pay adjustment for density otherwise noted in Section 403 - Hot Mix Asphalt Pavement. For overlays designed to be 3/4 in or less in thickness, density shall be obtained by the same rolling train and methods as used on mainline travelway surface courses with a pay adjustments for density, unless otherwise directed by the Department.

There shall be no pay adjustment for density on shoulders unless otherwise noted in Section 403 - Hot Mix Asphalt Pavement. Density for shoulders shall be obtained by the same rolling train and methods as used on mainline travelway, unless otherwise directed by the Department. Efforts to obtain optimum compaction will not be waived by the Department unless it is apparent during construction that local conditions make densification to this point detrimental to the finished pavement surface course.

401.201 Method A Lot Size will be the entire production per JMF for the project, or if so agreed at the Pre-paving Conference, equal lots of up to 4500 tons, with unanticipated over-runs of up to 1500 ton rolled into the last lot. Sublot sizes shall be 750 ton for mixture properties, 500 ton for base or binder densities and 250 ton for surface densities. The minimum number of sublots for mixture properties shall be 4, and the minimum number of sublots for density shall be five.

TABLE 5: METHOD A ACCEPTANCE LIMITS

Property	USL and LSL
Percent Passing 4.75 mm and larger sieves	Target +/-7%
Percent Passing 2.36 mm to 1.18 mm sieves	Target +/-4%
Percent Passing 0.60 mm	Target +/-3%
Percent Passing 0.30 mm to 0.075 mm sieve	Target +/-2%
PGAB Content	Target +/-0.4%
Air Voids	4.0% +/-1.5%
Fines to Effective Binder	0.9 +/-0.3
Voids in the Mineral Aggregate	LSL Only from Table 1
Voids Filled with Binder	Table 1 values plus a 4% production tolerance for USL only
% TMD (In-place Density)	95.0% +/- 2.5%

401.202 Method B Lot Size will be the entire production per JMF for the project and shall be divided into 3 equal sublots for Mixture Properties and 3 equal sublots for density.

TABLE 6: METHOD B ACCEPTANCE LIMITS

Property	USL and LSL
Percent Passing 4.75 mm and larger sieves	Target +/-7
Percent Passing 2.36 mm to 1.18 mm sieves	Target +/-5
Percent Passing 0.60 mm	Target +/-4
Percent Passing 0.30 mm to 0.075 mm sieve	Target +/-3
PGAB Content	Target +/-0.5
Air Voids	4.0% +/-2.0
Fines to Effective Binder	0.9 +/-0.3
Voids in the Mineral Aggregate	LSL from Table 1
Voids Filled with Binder	Table1 plus a 4% production tolerance for USL.
% TMD (In-place Density)	95.0% +/- 2.5%

401.203 Method C Lot Size will be the entire production per JMF for the project, or if so agreed at the Pre-paving Conference, equal lots of up to 4500 tons, with unanticipated over-runs of up to 1500 ton rolled into the last lot. Sublot sizes shall be 750 ton for mixture properties, 500 ton for base or binder densities and 250 ton for surface densities. The minimum number of sublots for mixture properties shall be 4, and the minimum number of sublots for density shall be five.

TABLE 7: METHOD C ACCEPTANCE LIMITS

Property	USL and LSL
Passing 4.75 mm and larger sieves	Target +/-7%
Passing 2.36 mm to 1.18 mm sieves	Target +/-5%
Passing 0.60 mm	Target +/-4%
Passing 0.30 mm to 0.075 mm sieve	Target +/-2%
PGAB Content	Target +/-0.4%
Air Voids	4.0% +/-1.5%
Fines to Effective Binder	0.9 +/-0.3
Voids in the Mineral Aggregate	LSL Only from Table 1
Voids Filled with Binder	Table 1 values plus a 4% production tolerance for USL only
% TMD (In place density)	95.0% +/- 2.5%

401.204 Method D For hot mix asphalt items designated as Method D in Section 403 - Hot Mix Asphalt Pavement, one sample will be taken from the paver hopper or the truck body per 250 ton per pay item. The mix will be tested for gradation and PGAB content. Disputes will not be allowed. If the mix is within the tolerances listed in Table 8: Method D Acceptance Limits, the Department will pay the contract unit price. Contractor shall cut two 6 in cores, which shall be tested for percent TMD per AASHTO T-269 unless otherwise noted in Section 403 - Hot Mix Asphalt Pavement. If the average for the two tests falls below 92.5% the disincentive shall apply. If the test results for each 250 ton increment are outside these limits, the following deductions (Table 8B) shall apply to the HMA quantity represented by the test.

TABLE 8: METHOD D ACCEPTANCE LIMITS

Property	USL and LSL
Percent Passing 4.75 mm and larger sieves	Target +/-7
Percent Passing 2.36 mm to 1.18 mm sieves	Target +/-5
Percent Passing 0.60 mm	Target +/-4
Percent Passing 0.30 mm to 0.075 mm sieve	Target +/-3
PGAB Content	Target +/-0.5
% TMD (In-place Density)	95.0% +/- 2.5%

TABLE 8B Method “D” Price Adjustments

PGAB Content	-5%
2.36 mm sieve	-2%
0.30 mm sieve	-1%
0.075 mm sieve	-2%
Density	-10%

401.21 Method of Measurement The Department will measure Hot Mix Asphalt Pavement by the ton in accordance with Section 108.1 - Measurement of Quantities for Payment.

401.22 Basis of Payment The Department will pay for the work, in place and accepted, in accordance with the applicable sections of this Section, for each type of HMA specified.

The Department will pay for the work specified in Section 401.11, for the HMA used, except that cleaning objectionable material from the pavement and furnishing and applying bituminous material to joints and contact surfaces is incidental. Payment for this work under the appropriate pay items shall be full compensation for all labor, equipment, materials, and incidentals necessary to meet all related contract requirements, including design

of the JMF, implementation of the QCP, obtaining core samples, transporting cores and samples, filling core holes, applying emulsified asphalt to joints, and providing testing facilities and equipment.
The Department will make a pay adjustment for quality as specified below.

401.221 Pay Adjustment The Department will sample, test, and evaluate Hot Mix Asphalt Pavement in accordance with Section 106 - Quality and Section 401.20 - Acceptance, of this Specification.

In addition, for 9.5 mm NMAS mixtures the following pay adjustment shall also apply:

The average percent passing for the 0.075 mm sieve shall be evaluated for each Lot. If the average is greater than 6.5%, a pay adjustment according to Table 8C below shall apply in addition to the other pay adjustments for the given method of testing.

TABLE 8C: 0.075 mm SIEVE PAY ADJUSTMENT

AVERAGE PERCENT PASSING 0.075 MM SIEVE	PAY ADJUSTMENT
6.6% - 7.0%	-5% Pay Adjustment
> 7.0%	-10% Pay Adjustment

The Department shall notify the Contractor whenever the average of at least three samples in a given Lot is greater than 6.5%.

401.222 Pay Factor (PF) The Department will use the following criteria for pay adjustment using the pay adjustment factors under Section 106.7 - Quality Level Analysis:

Density If the pay factor for Density falls below 0.80 for Method A or C or 0.86 for Method B, all of the cores will be randomly re-cut by Sublot. A new pay factor will be calculated that combines all initial and retest results. If the resulting pay factor is below 0.80 for Method A or C or below 0.86 for Method B, the entire Lot shall be removed and replaced with material meeting the specifications at no additional cost to the Department, except that the Department may, when it appears that there is a distinct pattern of defective material, isolate any defective material by investigating each mix sample sublot and require removal of defective mix sample sublots only, leaving any acceptable material in place if it is found to be free of defective material. Pay factors equal to or greater than the reject level will be paid accordingly.

Gradation For HMA evaluated under Acceptance Method A or B, the Department will determine a composite pay factor (CPF) using applicable price adjustment factors “f“ from Table 9: Table of Gradation Composite “f” Factors, and Acceptance limits from Table 5: Method A Acceptance Limits, for Method A or Table 6: Method B Acceptance Limits, for Method B. The Department will not make price adjustments for gradation on Methods A and B except for 9.5mm NMAS mixtures as outlined in Table 4A. Gradations for Methods A and B shall be monitored as shutdown criteria.

TABLE 9: TABLE OF GRADATION COMPOSITE " f " FACTORS (Methods A and B)

Constituent		"f" Factor			
		19 mm	12.5 mm	9.5 mm	4.75 mm
Gradation	25 mm	-	-	-	-
	19 mm	4	-	-	-
	12.5 mm		4	4	-
	9.50 mm				4
	2.36 mm	6	6	6	8
	1.18 mm				
	0.60 mm	2	2	2	2
	0.30 mm	2	2	2	2
	0.075 mm	6	6	6	8

For HMA evaluated under Acceptance Method C, the Department will determine a pay factor using acceptance limits from Table **7**: Method C Acceptance Limits.

VMA, Air Voids, VFB and Fines to Effective Binder The Department will determine a pay factor (PF) using the applicable Acceptance Limits.

The following variables will be used for pay adjustment:

PA = Pay Adjustment
Q = Quantity represented by PF in ton
P = Contract price per ton
PF = Pay Factor

Pay Adjustment Method A

The Department will use the following criteria for pay adjustment: density, Performance Graded Asphalt Binder content, voids @N_d, VMA, VFB, F/B_{eff}, and the screen sizes listed in Table 9 for the type of HMA represented in the JMF. If any single pay factor for PGAB Content, VMA, or Air Voids falls below 0.80, then the composite pay factor for PGAB Content, VMA, and Air Voids shall be 0.55.

Density: For mixes having a density requirement, the Department will determine a pay factor using Table 5: Method A Acceptance Limits:

PA = (density PF- 1.0)(Q)(P)x0.50

PGAB Content, VMA and Air Voids: The Department will determine a pay adjustment using Table 5: Method A Acceptance Limits as follows:

PA = (voids @ N_d PF- 1.0)(Q)(P)x0.20 + (VMA @ N_d PF- 1.0)(Q)(P)x0.20 + (PGAB PF- 1.0)(Q)(P)x0.10

VFB and Fines to Effective Binder The Department will determine a pay factor (PF) using Table 5: Method A Acceptance Limits. The Department will not make price adjustments for VFB or Fines to Effective Binder, but will monitor them as shutdown criteria.

Pay Adjustment Method B

The Department will use the following criteria for pay adjustment: density, Performance Graded Asphalt Binder content, voids @N_d, VMA, VFB, F/B_{eff}, and the screen sizes listed in Table 9 for the type of HMA represented in the JMF. If any single pay factor for PGAB Content, VMA, or Air Voids falls below 0.86, then the composite pay factor for PGAB Content, VMA, and Air Voids shall be 0.70.

Density: For mixes having a density requirement, the Department will determine a pay factor using Table 6: Method B Acceptance Limits:

PA = (density PF- 1.0)(Q)(P)x0.50

PGAB Content, VMA and Air Voids: The Department will determine a pay adjustment using Table 6: Method B Acceptance Limits as follows:

PA = (voids @ N_d PF- 1.0)(Q)(P)x0.20 + (VMA @ N_d PF- 1.0)(Q)(P)x0.20 + (PGAB PF- 1.0)(Q)(P)x0.10

VFB and Fines to Effective Binder The Department will determine a pay factor (PF) using Table 6: Method B Acceptance Limits. The Department will not make price adjustments for VFB or Fines to Effective Binder, but will monitor them as shutdown criteria.

Pay Adjustment Method C

The Department will use density, Performance Graded Asphalt Binder content, and the percent passing the nominal maximum, 2.36 mm, 0.300 mm and 0.075 mm sieves for the type of HMA represented in the JMF. If the PGAB content falls below 0.80, then the PGAB pay factor shall be 0.55.

Density: For mixes having a density requirement, the Department will determine a pay factor using Table 7: Method C Acceptance Limits:

PA = (density PF- 1.0)(Q)(P)x0.50

PGAB Content and Gradation The Department will determine a pay factor using Table **7**: Method C Acceptance Limits. The Department will calculate the price adjustment for Mixture Properties as follows:

PA = (% Passing Nom. Max PF-1.0)(Q)(P)X0.05+(% passing 2.36 mm PF-1.0)(Q)(P)X0.05+(%passing 0.30 mm PF-1.0)(Q)(P)X0.05+(%passing 0.075 mm PF-1.0)(Q)(P)X0.10+(PGAB PF-1.0)(Q)(P)X0.25

VMA, Air Voids, VFB and Fines to Effective Binder The Department will determine a pay factor (PF) using Table 7: Method C Acceptance Limits. The Department will not make price adjustments for VMA, Air Voids, VFB or Fines to Effective Binder, but will monitor them as shutdown criteria.

Pay Adjustment Method D

The Department will use density, Performance Graded Asphalt Binder content, and the screen sizes listed in Table 8b for the type of HMA represented in the JMF. If test results do not meet the Table 8 requirements, deducts as shown in Table 8b shall be applied to the quantity of mix represented by the test.

401.223 Process for Dispute Resolution (Methods A B & C only)

a. Dispute Resolution sampling At the time of Hot-Mix Asphalt sampling, the Department will obtain a split sample of each Acceptance test random sample for possible dispute resolution testing. The Contractor shall also obtain a split sample of the HMA at this same time. If the Contractor wishes to retain the option of requesting dispute testing of the initial Acceptance sample, the Contractor will test their split of the

Acceptance sample and shall report their results to the Resident, with a copy to the QA Engineer by 7:00 AM, on the second working day from time of QA sampling, otherwise dispute resolution will not be initiated. The Department's dispute resolution split sample will be properly labeled and stored for a period of at least two weeks, or until the sample is tested.

b. Disputing Acceptance results The Contractor may dispute the Department's Acceptance results and request (Methods A, B, & C) that the dispute resolution split sample be tested by notifying the Department's Resident and the QA Engineer in writing within two working days after receiving the results of the Acceptance test. The following shall be provided in the request:

- Acceptance sample reference number
- The specific test result(s) or property(ies) being disputed, and
- The complete, signed report of the Contractor's testing (In a lab certified by the NETTCP and MaineDOT) of their split of the Acceptance sample indicating that the variances in Table10: Dispute Resolution Variance Limits, for the specific test result(s) or property(ies) were exceeded.

c. Disputable items

For Methods A and B: The Contractor may dispute any or all of the following test results when the difference between the Department's value and the Contractor's value for that test equals or exceeds the corresponding allowable variation in Table 10: Dispute Resolution Variance Limits, PGAB content, G_{mb}, and G_{mm}. In addition, if the allowable variation for the G_{mb} or G_{mm} is not met or exceeded, the Contractor may dispute either or both of the following material properties provided the difference between results for them equals or exceeds the corresponding allowable variation in Table 10: Voids at N_{design}, and VMA. The Contractor may dispute the 0.075 mm sieve test result when a 9.5 mm NMAS mixture is used.

For Method C only: The results for PGAB content and the screen sizes used for pay adjustment may be disputed.

d. Outcome The value of any disputed result or property reported for the initial Acceptance sample shall stand if the value reported for the dispute resolution sample is not closer to the value the Contractor reported for their split sample than to the value reported for the initial Acceptance sample. If the value reported for the dispute resolution falls precisely half-way between the other two values the value reported for the dispute resolution will replace the original acceptance value. Otherwise, the value reported for the dispute resolution sample will replace the value reported for the initial Acceptance sample, and will be used to re-calculate any other affected results or properties.

TABLE 10: DISPUTE RESOLUTION VARIANCE LIMITS

PGAB Content	+/-0.4%
G_{mb}	+/-0.030
G_{mm}	+/-0.020
Voids @ N_d	+/-0.8%
VMA	+/-0.8%
Passing 4.75 mm and larger sieves	+/- 4.0%
Passing 2.36 mm to 0.60 mm sieves	+/- 3.0%
Passing 0.30 mm to 0.15	+/- 2.0 %
0.075 mm sieve	+/- 1.0%

SECTION 402 - PAVEMENT SMOOTHNESS

402.00 Smoothness Projects Projects to have their pavement smoothness analyzed in accordance with this Specification will be so noted in Special Provision 403 - Hot Mix Asphalt Pavement

402.01 Pavement Smoothness The final pavement surface shall be evaluated for smoothness using a Class I or Class II profiler as defined by ASTM E950 (94). Smoothness measurements will be expressed in terms of the International Roughness Index (IRI) as defined by the World Bank, in units of inches/mile.

402.02 Lot Size Lot size for smoothness will be 3000 lane-feet. A sublot will consist of 20 50 lane-feet. Partial lots will be included in the previous lot if less than one-half the size of a normal lot. If equal to or greater than one-half the normal lot size, it will be tested as a separate lot.

402.03 Acceptance Testing The Department will conduct Acceptance testing following completion of the surface course. Sections to be excluded from testing include the following:

Bridge decks and joints (no smoothness measurements will be taken within 100 ft of bridge joints)
Acceleration and deceleration lanes
Shoulders and ramps
Side streets and roads
Within 100 ft of transverse joints at the beginning and end of the project
Within 100 ft of railroad crossings
Urban areas with speed limits of 30 mph or lower

Each lot shall have 2 measurements made in each wheel path. The average of the 4 measurements will determine the smoothness for that lot.

The smoothness measurements will be statistically evaluated for pay factors as described in Subsection 106.7 - Quality Level Analysis, using the specification limits shown below.

ACCEPTANCE LIMITS

Level	USL
I	60 in/mile
II	70 in/mile
III	80 in/mile

Computation of Smoothness Pay Adjustment:

PA = (PF-1.0)(Q)(P)
where:
Q = Quantity of surface course in the Lot (excluding shoulders, side streets, bridge decks, ramps, acceleration and deceleration lanes)
PF = smoothness pay factor for the Lot
P = Contract unit price for surface pavement
PA = pay adjustment

402.04 Unacceptable Work In the event that any Lot is found to have a pay factor less than 0.80, the Contractor shall take whatever remedial action is required to correct the pavement surface in that Lot at no additional expense to the Department. Such remedial action may include but is not limited to removal and replacement of the unacceptable pavement. In the event remedial action is necessary, the Contractor shall submit a written plan to the Resident outlining the scope of the remedial work. The Resident must approve this plan before the remedial work can begin. Following remedial work, the Lot shall be retested, and will be subject to the specification limits listed above. The resulting pay factor, if within the acceptable range, will be used in the final pay adjustment. The Contractor shall pay the cost of retesting the pavement following corrective action. Localized surface tolerance defects will be subject to the provisions outlined in Section 401.101 Surface Tolerances.

Payment will be made under:

Pay Item	Pay Unit
402.10 Incentive/Disincentive - Pavement Smoothness	Lump Sum

SECTION 403 - HOT MIX ASPHALT PAVEMENT

403.01 Description This work shall consist of constructing one or more courses of Hot Mix Asphalt pavement on an approved base in accordance with these specifications, and in reasonably close conformity with the lines, grades, thickness and typical cross sections shown on the plans or established.

The HMA pavement shall be composed of a mixture of aggregate, filler if required, and asphalt material.

403.02 General The materials and their use shall conform to the requirements of Section 401 - Hot Mix Asphalt Pavement.

403.03 Construction The construction requirements shall be as specified in Section 401 - Hot Mix Asphalt Pavement.

403.04 Method of Measurement Hot mix asphalt pavement will be measured as specified in Section 401.21-Method of Measurement.

403.05 Basis of Payment The accepted quantities of hot mix asphalt pavement will be paid for at the contract unit price per ton for the mixtures, including hot mix asphalt material complete in place.

Method A, Method B, Method C and Method D shall be used for acceptance as specified in Section 401 - Hot Mix Asphalt Pavements. (See Complementary Notes, Section 403 - Hot Mix Asphalt Pavement, for Method location).

Payment will be made under:

	Pay Item	Pay Unit
403.102	Hot Mix Asphalt Pavement for Special Areas	Ton
403.206	Hot Mix Asphalt, 25 mm Nominal Maximum Size	Ton
403.207	Hot Mix Asphalt, 19.0 mm Nominal Maximum Size	Ton
403.2071	Hot Mix Asphalt , 19.0 mm Nominal Maximum Size (Polymer Modified)	Ton
403.2072	Asphalt Rich Hot Mix Asphalt, 19.0 mm Nominal Maximum Size (Asphalt Rich Base and Intermediate course)	Ton
403.2073	Warm Mix Asphalt, 19.0 mm Nominal Maximum Size	Ton
403.208	Hot Mix Asphalt, 12.5 mm Nominal Maximum Size	Ton
403.2081	Hot Mix Asphalt - 12.5 mm Nominal Maximum Size (Polymer Modified)	Ton
403.20813	Warm Mix Asphalt - 12.5 mm Nominal Maximum Size (Polymer Modified)	Ton
403.2083	Warm Mix Asphalt, 12.5 mm Nominal Maximum Size	Ton
403.209	Hot Mix Asphalt, 9.5 mm Nominal Maximum Size (sidewalks, drives, islands & incidentals)	Ton
403.210	Hot Mix Asphalt, 9.5 mm Nominal Maximum Size	Ton
403.2101	Hot Mix Asphalt, 9.5 mm Nominal Maximum Size (Polymer Modified)	Ton
403.2102	Asphalt Rich Hot Mix Asphalt, 9.5 mm Nominal Maximum Size (Asphalt Rich Intermediate course)	Ton
403.2103	Warm Mix Asphalt, 9.5 mm Nominal Maximum Size	Ton
403.2104	Hot Mix Asphalt, 9.5 mm Nominal Maximum Size (Thin Lift Surface Treatment)	Ton
403.211	Hot Mix Asphalt, 9.5 mm Nominal Maximum Size (Shimming)	Ton
403.2111	Hot Mix Asphalt, 9.5 mm Nominal Maximum Size (Shimming, Polymer Modified))	Ton
403.2113	Warm Mix Asphalt, 9.5 mm Nominal Maximum Size (Shimming)	Ton
403.212	Hot Mix Asphalt, 4.75 mm Nominal Maximum Size	Ton
403.2123	Warm Mix Asphalt, 4.75 mm Nominal Maximum Size	Ton
403.213	Hot Mix Asphalt, 12.5 mm Nominal Maximum Size (Base and Intermediate Base course)	Ton
403.2131	Hot Mix Asphalt, 12.5 mm Nominal Maximum Size (Base and Intermediate Base course, Polymer Modified)	Ton
403.2132	Asphalt Rich Hot Mix Asphalt, 12.5 mm Nominal Maximum Size (Base and Intermediate Base course)	Ton
403.2133	Warm Mix Asphalt, 12.5 mm Nominal Maximum Size (Base and Intermediate Base course)	Ton
403.214	Hot Mix Asphalt, 4.75 Nominal Maximum Size (5/8” Surface Treatment)	Ton
403.2143	Warm Mix Asphalt, 4.75 Nominal Maximum Size (5/8” Surface Treatment)	Ton

SPECIAL PROVISION
SECTION 403
HOT MIX ASPHALT

Desc. Of Course	Grad Design.	Item Number	Total Thick	No. Of Layers	Comp. Notes
		4" HMA Overlay Areas			
		Concrete Rubblization Areas			
		Mainline Travelway & Shoulders			
Wearing	12.5 mm	403.208	1 ½"	1	1,5,7,20
Base	12.5 mm	403.213	2 ½"	1	1,4,7
		3" HMA Overlay Areas			
		Full-Depth Reclaim w/Emulsion			
		Mainline Travelway & Shoulders			
Wearing	12.5 mm	403.208	1 ½"	1	1,5,7,20
Base	12.5 mm	403.213	1 ½"	1	1,4,7
		Islands, Drives, Misc.			
Wearing	9.5 mm	403.209	2"	1/more	2,3,10,11,14

COMPLEMENTARY NOTES

1. The required PGAB for this mixture will meet a **PG 64-28** grading.
2. The incentive/disincentive provisions for density shall not apply. Rollers shall meet the requirements of this special provision. The use of an oscillating steel roller shall be required to compact all mixtures pavements placed on bridge decks.
3. The design traffic level for mix placed shall be <0.3 million ESALS. The design, verification, Quality Control, and Acceptance tests for this mix will be performed at **50 gyrations**.
4. The design traffic level for mix placed shall be 0.3 to <3 million ESALS. The design, verification, Quality Control, and Acceptance tests for this mix will be performed at **50 gyrations**.
5. The aggregate qualities shall meet the design traffic level of 3 to <10 million ESALS for mix placed under this contract. The design, verification, Quality Control, and Acceptance tests for this mix will be performed at **75 gyrations**.

7. Section 106.6 Acceptance, (1) Method A.

10. Section 106.6 Acceptance, (2) Method D.

11. The combined aggregate gradation required for this item shall be classified as a 9.5mm "**fine graded"** mixture, (using the Primary Control Sieve control point) as defined in 703.09.

14. The combined aggregate gradation required for this item shall be classified as a 9.5mm Thin Lift Mixture (TLM) mixture, using the Aggregate Gradation Control Points as defined in 703.09.

20. The Contractor may place the specified HMA pavement course, not to exceed 2" inch compacted depth, over the full single travel lane width, for each production day. If this option is utilized the Contractor will be required to place a matching course of HMA over the adjacent section of travel lane before the end of the following calendar day. The Contractor will also be responsible for installing additional warning signage that clearly defines the centerline elevation differential hazard, as well as additional centerline delineation such as double RPM application, or temporary painted line. The Traffic Control Plan shall be amended to include this option and the additional requirements. All signs and traffic control devices will conform to Section 719.01, and Section 652, and will be installed prior to the work, at a maximum spacing of 0.50 mile for the entire length of effected roadway section. On roadways with two-way traffic, the Contractor will be required to place the specified course over the full width of the mainline traveled way being paved prior to opening the sections to weekend or holiday traffic. If this option is utilized, all additional signing, labor, traffic control devices, or incidentals will not be paid for directly, will be considered incidental to the appropriate 652 items.

Tack Coat

A tack coat of emulsified asphalt, RS-1, Item 409.15 shall be applied to any existing pavement at a rate of approximately 0.025 gal/yd², and on milled pavement approximately 0.05 gal/yd² prior to placing a new course. A fog coat of emulsified asphalt shall be applied between shim /base courses and the surface course, at a rate not to exceed 0.025 gal/yd². Tack used between layers of pavement will be paid for at the contract unit price for Item 409.15 Bituminous Tack Coat.

SPECIAL PROVISION
SECTION 527
ENERGY ABSORBING UNIT
(ET-Plus System)

Description This work consists of furnishing and installing an ET-Plus crash cushion as a permanent energy absorbing system in accordance with these specifications at location(s) shown on the plans or established by the Resident.

Materials The energy absorbing system shall be the ET-Plus System as manufactured by Syro Steel Company of Girard, Ohio as approved and crash tested by the Federal Highway Administration.

Installation A set of installation drawings will be provided to the Resident for the system installation. The system shall be installed in accordance with the manufacturer's recommendations and the installation drawings.

Method of Measurement Energy absorbing system will be measured by each unit, complete in place and accepted.

Basis of Payment The accepted quantity of energy absorbing system will be paid for at the contract unit price each, including all incidentals necessary to complete the installation.

Payment will be made under:

Pay Item	Pay Unit
527.303 Energy Absorbing System (ET-Plus)	Each

SPECIAL PROVISION
SECTION 606
GUARDRAIL

606.01 Description This work shall consist of furnishing and installing guardrail components in accordance with these specifications and in reasonably close conformity with the lines and grades shown on the plans or as established. The types of guardrail are designated as follows:

Type 3-Galvanized steel "w" beam, wood posts or galvanized steel posts.
Type 3a-Galvanized steel "w" beam, wood posts, wood or composite offset blocks.
Type 3aa-Corrosion resistant steel "w" beam, wood posts, wood or composite offset blocks.
Type 3b-Galvanized steel "w" beam, galvanized steel posts, galvanized steel offset blocks.
Type 3c-Galvanized steel "w" beam, wood posts or galvanized steel posts, wood or composite offset blocks.
Type 3d-Galvanized steel "w" beam, galvanized steel posts, wood or composite offset blocks.
Thrie Beam-Galvanized steel thrie beam, wood posts or galvanized steel posts, wood or composite offset blocks.

Median barriers shall consist of two beams of the above types, mounted on single posts. Except for thrie beam, median barriers may include rub rails when called for.

Bridge mounted guardrail shall consist of furnishing all labor, materials, and equipment necessary to install guardrail as shown on the plans. This work shall also include drilling for and installation of offset blocks if specified, and incidental hardware necessary for satisfactory completion of the work.

Remove and Reset and Remove, Modify, and Reset guardrail shall consist of removing the existing designated guardrail and resetting in a new location as shown on the plans or directed by the Resident. Remove, Modify, and Reset guardrail and Modify guardrail include the following guardrail modifications: Removing plate washers at all posts, except at anchorage assemblies as noted on the Standard Details, Adding offset blocks, and other modifications as listed in the Construction Notes or General Notes. Modifications shall conform to the guardrail Standard Details.

Bridge Connection shall consist of the installation and attachment of beam guardrail to the existing bridge. This work shall consist of constructing a concrete end post or modifying an existing endpost as required, furnishing, and installing a terminal connector, necessary hardware, and incidentals required to complete the work as shown on the plans. Bridge Transition shall consist of a bridge connection and furnishing and installing guardrail components as shown in the Standard Details.

606.02 Materials Materials shall meet the requirements specified in the following Sections of Division 700 - Materials:

Timber Preservative	708.05
Metal Beam Rail	710.04
Guardrail Posts	710.07
Guardrail Hardware	710.08

Guardrail components shall meet the applicable standards of "A Guide to Standardized Highway Barrier Hardware" prepared and approved by the AASHTO-AGC-ARTBA Joint Cooperative Committee, Task Force 13 Report.

Posts for underdrain delineators shall be “U” channel steel, 2.44m [8 ft] long, 3.72 kg/m [2 ½ lb/ft] minimum and have 9.5 mm [3/8 in] round holes, 25 mm [1 in] center to center for a minimum distance of 610 mm [2 ft] from the top of the post.

Reflectorized Flexible Guardrail Markers shall be mounted on all guardrails. A marker shall be mounted onto guardrail posts at the flared end treatment’s terminal and its tangent point, both at the leading and trailing ends of each run of guardrail. The marker’s flexible posts shall be grey with either silver-white or yellow reflectors (to match the edge line striping) at the tangents, red at leading ends, and green at trailing ends. Whenever the end treatment is not flared, markers will only be required at the end treatment’s terminal. These shall be red or green as appropriate. Markers shall be installed on the protected side of guardrail posts unless otherwise approved by the Resident. Reflectorized flexible guardrail markers shall be from the Maine DOT’s Approved Product List of Guardrail Material. The marker shall be grey, flexible, durable, and of a non-discoloring material to which 75 mm [3 in] by 225 mm [9 in] reflectors shall be applied, and capable of recovering from repeated impacts. Reflective material shall meet the requirements of Section 719.01 for ASTM D 4956 Type III reflective sheeting. The marker shall be secured to the guardrail post with two fasteners, as shown in the Standard Details.

Reflectorized beam guardrail (“butterfly”-type) delineators shall be mounted on all “w”-beam guardrail. The delineators shall be mounted within the guardrail beam at guardrail posts. Delineators shall be fabricated from high-impact, ultraviolet & weather resistant thermoplastic. Reflectorized beam guardrail delineators shall be placed at approximately 20 m [62.5 ft] intervals or every tenth post on tangents and at approximately 10 m [31.25 ft] intervals or every fifth post on curves. Exact locations of the delineators shall be as directed by the Resident. On divided highways, the left hand delineators shall be yellow and the right hand delineators shall be silver/white. On two directional highways, the right hand side shall be silver/white and no reflectorized delineator used on the left. All reflectors shall have reflective sheeting applied to only one side of the delineator facing the direction of traffic as shown in the Standard Detail 606(07). Reflectorized sheeting for guardrail delineators shall meet the requirements of Section 719.01.

Single wood post shall be of cedar, white oak, or tamarack, well seasoned, straight, and sound and have been cut from live trees. The outer and inner bark shall be removed and all knots trimmed flush with the surface of the post. Posts shall be uniform taper and free of kinks and bends.

Single steel post shall conform to the requirements of Section 710.07 b.

Single steel pipe post shall be galvanized, seamless steel pipe conforming to the requirements of ASTM A120, Schedule No. 40, Standard Weight.

Acceptable multiple mailbox assemblies shall be listed on the Department’s Approved Products List and shall be NCHRP 350 tested and approved.

The Guardrail 350 Flared Terminal shall be a terminal with a 1.2 m [4 ft] offset as shown in the Manufacturer's installation instructions.

Existing materials damaged or lost during adjusting, removing and resetting, or removing, modifying, and resetting, shall be replaced by the Contractor without additional compensation. Existing guardrail posts and guardrail beams found to be unfit for reuse shall be replaced when directed by the Resident.

606.03 Posts Posts for guardrail shall be set plumb in holes or they may be driven if suitable driving equipment is used to prevent battering and distorting the post. When posts are driven through pavement, the damaged area around the post shall be repaired with approved bituminous patching. Damage to lighting and signal conduit and conductors shall be repaired by the Contractor.

When set in holes, posts shall be on a stable foundation and the space around the posts, backfilled in layers with suitable material, thoroughly tamped.

The reflectorized flexible guardrail markers shall be set plumb with the reflective surface facing the oncoming traffic. Markers shall be installed on the protected side of guardrail posts. Markers, which become bent or otherwise damaged, shall be removed and replaced with new markers.

Single wood posts shall be set plumb in holes and backfilled in layers with suitable material, thoroughly tamped. The Resident will designate the elevation and shape of the top. The posts, that are not pressure treated, shall be painted two coats of good quality oil base exterior house paint.

Single steel posts shall be set plumb in holes as specified for single wood posts or they may be driven if suitable driving equipment is used to prevent battering and distorting the post.

Additional bolt holes required in existing posts shall be drilled or punched, but the size of the holes shall not exceed the dimensions given in the Standard Details. Metal around the holes shall be thoroughly cleaned and painted with two coats of approved aluminum rust resistant paint. Holes shall not be burned.

606.04 Rails Brackets and fittings shall be placed and fastened as shown on the plans. Rail beams shall be erected and aligned to provide a smooth, continuous barrier. Beams shall be lapped with the exposed end away from approaching traffic.

End assemblies shall be installed as shown on the plans and shall be securely attached to the rail section and end post.

All bolts shall be of sufficient length to extend beyond the nuts but not more than 13 mm [½ in]. Nuts shall be drawn tight.

Additional bolt holes required in existing beams shall be drilled or punched, but the size of the holes shall not exceed the dimensions given in the Standard Details. Metal around the holes shall be thoroughly cleaned and painted with two coats of approved aluminum rust resistant paint. Holes shall not be burned.

606.045 Offset Blocks The same offset block material is to be provided for the entire project unless otherwise specified.

606.05 Shoulder Widening At designated locations the existing shoulder of the roadway shall be widened as shown on the plans. All grading, paving, seeding, and other necessary work shall be in accordance with the Specifications for the type work being done.

606.06 Mail Box Post Single wood post shall be installed at the designated location for the support of the mailbox. The multiple mailbox assemblies shall be installed at the designated location in accordance with the Standard Details and as recommended by the Manufacturer. Attachment of the mailbox to the post will be the responsibility of the home or business owner.

606.07 Abraded Surfaces All galvanized surfaces of new guardrail and posts, which have been abraded so that the base metal is exposed, and the threaded portions of all fittings and fasteners and cut ends of bolts shall be cleaned and painted with two coats of approved rust resistant paint.

606.08 Method of Measurement Guardrail will be measured by the meter [linear foot] from center to center of end posts along the gradient of the rail except where end connections are made to masonry or steel structures, in which case measurement will be as shown on the plans.

Terminal section, low volume end, NCHRP 350 end treatments, reflectorized flexible guardrail marker, terminal end, bridge transition, bridge connection, multiple mailbox post, and single post will be measured by each unit of the kind specified and installed.

Widened shoulder will be measured as a unit of grading within the limits shown on the plans.

Excavation in solid rock for placement of posts will be measured by the cubic meter [cubic yard] determined from the actual depth of the hole and a hypothetical circle diameter of 600 mm [2 ft].

606.09 Basis of Payment The accepted quantities of guardrail will be paid for at the contract unit price per meter [linear foot] for the type specified, complete in place. Reflectorized beam guardrail (“butterfly”-type) delineators will not be paid for directly, but will be considered incidental to guardrail items. Terminal section, buffer end, NCHRP 350 end treatment, bridge connection, single post and reflectorized flexible guardrail markers will be paid for at the contract unit price each for the kind specified complete in place.

NCHRP 350 end treatments and low volume guardrail ends will be paid for at the contract price each, complete in place which price shall be full payment for furnishing and installing all components including the terminal section, posts, offset blocks, "w" beam, cable foundation posts, plates and for all incidentals necessary to complete the installation within the limits as shown on the Standard Details or the Manufacturer’s installation instructions. Each end treatment will be clearly marked with the manufacturers name and model number to facilitate any future needed repair. Such payment shall also be full compensation for furnishing all material, excavating, backfilling holes, assembling, and all incidentals necessary to complete the work, except that for excavation for posts or anchorages in solid ledge rock, payment will be made under Pay Item 206.07. Type III Retroreflective Adhesive Sheeting

shall be applied to the approach buffer end sections and sized to substantially cover the end section. On all roadways, the ends shall be marked with alternating black and retroreflective yellow stripes. The stripes shall be 75 mm [3 in] wide and sloped down at an angle of 45 degrees toward the side on which traffic is to pass the end section. Guardrail 350 flared terminal shall also include a set of installation drawings supplied to the Resident.

Anchorages to bridge end posts will be part of the bridge work. Connections thereto will be considered included in the unit bid price for guardrail.

Guardrail to be placed on a radius of curvature of 45 m [150 ft] or less will be paid for under the designated radius pay item for the type guardrail being placed.

Widened shoulder will be paid for at the contract unit price each complete in place and will be full compensation for furnishing and placing, grading and compaction of aggregate subbase and any required fill material.

Adjust guardrail will be paid for at the contract unit price per meter and will be full compensation for adjusting to grade. Payment shall also include adjusting terminal end treatments where required.

Modify guardrail will be paid for at the contract unit price per meter and will be full compensation for furnishing and installing offset blocks, additional posts, and other specified modifications; removing, modifying, installing, and adjusting to grade existing posts and beams; removing plate washers and backup plates, and all incidentals necessary to complete the work. Payment shall also include removing and resetting terminal ends where required.

Remove and Reset guardrail will be paid for at the contract unit price per meter and will be full compensation for removing, transporting, storing, reassembling all parts, necessary cutting, furnishing new parts when necessary, reinstalling at the new location, and all other incidentals necessary to complete the work. Payment shall also include removing and resetting terminal ends when required. No payment will be made for guardrail removed, but not reset and all costs for such removal shall be considered incidental to the various contract pay items.

Remove, Modify, and Reset guardrail will be paid for at the contract unit price per meter and will be full compensation for the requirements listed in Modify guardrail and Remove and Reset guardrail.

Bridge Connections will be paid for at the contract unit price each. Payment shall include, attaching the connection to the endpost including furnishing and placing concrete and reinforcing steel necessary to construct new endposts if required, furnishing and installing the terminal connector, and all miscellaneous hardware, labor, equipment, and incidentals necessary to complete the work.

Bridge Transitions will be paid for at the contract unit price each. Payment shall include furnishing and installing the thrie beam or “w”-beam terminal connector, doubled beam section, and transition section, where called for, posts, hardware, precast concrete transition curb, and any other necessary materials and labor, including the bridge connection as stated in the previous paragraph.

Payment will be made under:

	Pay Item	Pay Unit
606.15	Guardrail Type 3a-Single Rail	meter [Linear Foot]
606.151	Guardrail Type 3aa-Single Rail	meter [Linear Foot]
606.17	Guardrail Type 3b-Single Rail	meter [Linear Foot]
606.1721	Bridge Transition - Type I	Each
606.1722	Bridge Transition - Type II	Each
606.1731	Bridge Connection - Type I	Each
606.1732	Bridge Connection - Type II	Each
606.178	Guardrail Beam	meter [Linear foot]
606.18	Guardrail Type 3b - Double Rail	meter [Linear foot]
606.19	Guardrail Type 3a - 4.5 m [15 ft] radius and less	meter [Linear Foot]
606.191	Guardrail Type 3aa - 4.5 m [15 ft] radius and less	meter [Linear Foot]
606.20	Guardrail Type 3a - over 4.5 m [15 ft] radius	meter [Linear Foot]
606.201	Guardrail Type 3aa - over 4.5 m [15 ft] radius	meter [Linear Foot]
606.21	Guardrail Type 3b - 4.5 m [15 ft] radius and less	meter [Linear Foot]
606.22	Guardrail Type 3b - over 4.5 m [15 ft] radius	meter [Linear Foot]
606.23	Guardrail Type 3c - Single Rail	meter [Linear Foot]
606.2301	Guardrail Type 3c - Double Rail	meter [Linear Foot]
606.231	Guardrail Type 3c - 4.5 m [15 ft] radius and less	meter [Linear Foot]
606.232	Guardrail Type 3c - over 4.5 m [15 ft] radius	meter [Linear Foot]
606.24	Guardrail Type 3d - Single Rail	meter [Linear Foot]
606.2401	Guardrail Type 3d - Double Rail	meter [Linear Foot]
606.241	Guardrail Type 3d - 4.5 m [15 ft] radius and less	meter [Linear Foot]
606.242	Guardrail Type 3d - over 4.5 m [15 feet] radius	meter [Linear Foot]
606.25	Terminal Connector	Each
606.257	Terminal Connector - Thrie Beam	Each
606.265	Terminal End-Single Rail - Galvanized Steel	Each
606.266	Terminal End-Single Rail - Corrosion Resistant Steel	Each
606.275	Terminal End-Double Rail - Galvanized Steel	Each
606.276	Terminal End-Double Rail - Corrosion Resistant Steel	Each
606.353	Reflectorized Flexible Guardrail Marker	Each
606.354	Remove and Reset Reflectorized Flexible Guardrail Marker	Each
606.356	Underdrain Delineator Post	Each
606.358	Guardrail, Modify, Type 3b to 3c	meter [Linear Foot]
606.3581	Guardrail, Modify Existing to Type 3d	meter [Linear Foot]
606.362	Guardrail, Adjust	meter [Linear Foot]
606.365	Guardrail, Remove, Modify, and Reset, Type 3b to 3c	meter [Linear Foot]
606.3651	Guardrail, Remove, Modify, and Reset Existing to Type 3d	meter [Linear Foot]
606.366	Guardrail, Removed and Reset, Type 3c	meter [Linear Foot]
606.367	Replace Unusable Existing Guardrail Posts	Each
606.47	Single Wood Post	Each
606.48	Single Galvanized Steel Post	Each
606.50	Single Steel Pipe Post	Each

606.51	Multiple Mailbox Support	Each
606.55	Guardrail Type 3 - Single Rail	meter [Linear Foot]
606.551	Guardrail Type 3 - Single Rail with Rub Rail	meter [Linear Foot]
606.56	Guardrail Type 3 - Double Rail	meter [Linear Foot]
606.561	Guardrail Type 3 - Double Rail with Rub Rail	meter [Linear Foot]
606.568	Guardrail, Modify Type 3c -Double Rail	meter [Linear Foot]
606.59	Guardrail Type 3 - 4.5 m [15 ft] radius and less	meter [Linear Foot]
606.60	Guardrail Type 3 - over 4.5 m [15 ft] radius	meter [Linear Foot]
606.63	Thrie Beam Rail Beam	meter [Linear Foot]
606.64	Guardrail Thrie Beam - Double Rail	meter [Linear Foot]
606.65	Guardrail Thrie Beam - Single Rail	meter [Linear Foot]
606.66	Terminal End Thrie Beam	Each
606.70	Transition Section - Thrie Beam	Each
606.71	Guardrail Thrie Beam - 4.5 m [15 ft] radius and less	meter [Linear Foot]
606.72	Guardrail Thrie Beam - over 4.5 m [15 ft] radius	meter [Linear Foot]
606.73	Guardrail Thrie Beam - Single Rail Bridge Mounted	meter [Linear Foot]
606.74	Guardrail Type 3 - Single Rail Bridge Mounted	meter [Linear Foot]
606.753	Widen Shoulder for Low Volume Guardrail End - Type 3	Each
606.754	Widen Shoulder for Guardrail 350 Flared Terminal	Each
606.78	Low Volume Guardrail End - Type 3	Each
606.79	Guardrail 350 Flared Terminal	Each

1. Reflectorized Flexible Guardrail Markers shall be from Maine DOT's Approved Product List of Guardrail Material.

2. Installation:
   a. Each bolt-hole diameter shall be the bolt diameter + 1/16".
   b. Wood post attachment - attach marker with 2, 5/16" diameter zinc-coated lag bolts, having 2" of embedment into wood post.
   c. Steel post attachment - attach marker with 2, 1/4" diameter zinc-coated bolt, washer and nut assemblies, having 1/2" of bolt extension behind steel post.
   d. When provided by the marker manufacturer, a stiffening pipe shall be inserted into the base of the marker prior to drilling bolt holes and shall remain in-place.

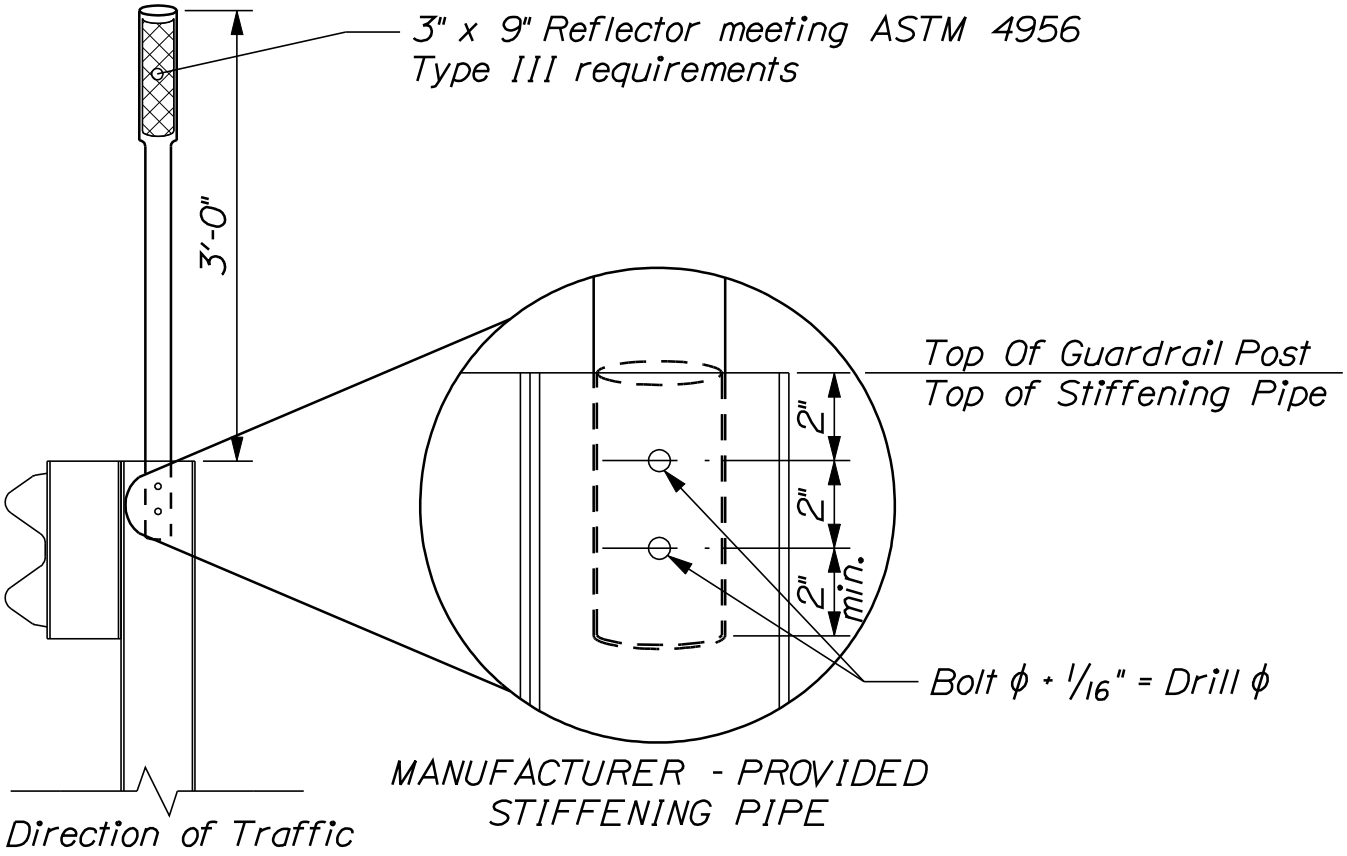

REFLECTORIZED FLEXIBLE GUARDRAIL MARKER DETAILS

606(34)

February 4, 2011
Supersedes February 27, 2003

SPECIAL PROVISION
SECTION 652
MAINTENANCE OF TRAFFIC

Approaches Approach signing shall include the following signs as a minimum. Field conditions may warrant the use of additional signs as determined by the Resident.

Road work Next x Miles
Road work 500 Feet
End Road Work

Work Area At each work site, signs and channelizing devices shall be used as directed by the Resident. Signs include:

Road Work xxxx [1]
One Lane Road Ahead
Flagger Sign

Other typical signs include:

Be Prepared to Stop
Low Shoulder
Bump
Pavement Ends

The above lists of Approach signs and Work Area signs are representative of the contract Requirements. Other sign legends may be required.

The Contractor shall conduct their operations in such a manner that the roadway will not be restricted to one lane for more than 800 m [2,500 ft] at each work area. To encourage quality paving in warm-weather conditions, the length can be extended to 4,000 ft depending on the traffic impacts. Where more than one work area restricts traffic to one lane operation, these work areas shall be separated by at least 1.6 km [1 mile] of two way operation.

Temporary Centerline A temporary centerline shall be placed each day on all new pavement to be used by traffic. The temporary centerline, when specified of reflectorized traffic paint, shall conform to the standard marking patterns used for permanent markings.

Failure to apply a temporary centerline daily will result in a Traffic Control Violation and suspension of paving operations until temporary markers are applied to all previously placed pavement.

[1] "Road Work Ahead" to be used in mobile operations and "Road Work xx ft" to be used in stationary operations as directed by the Resident.

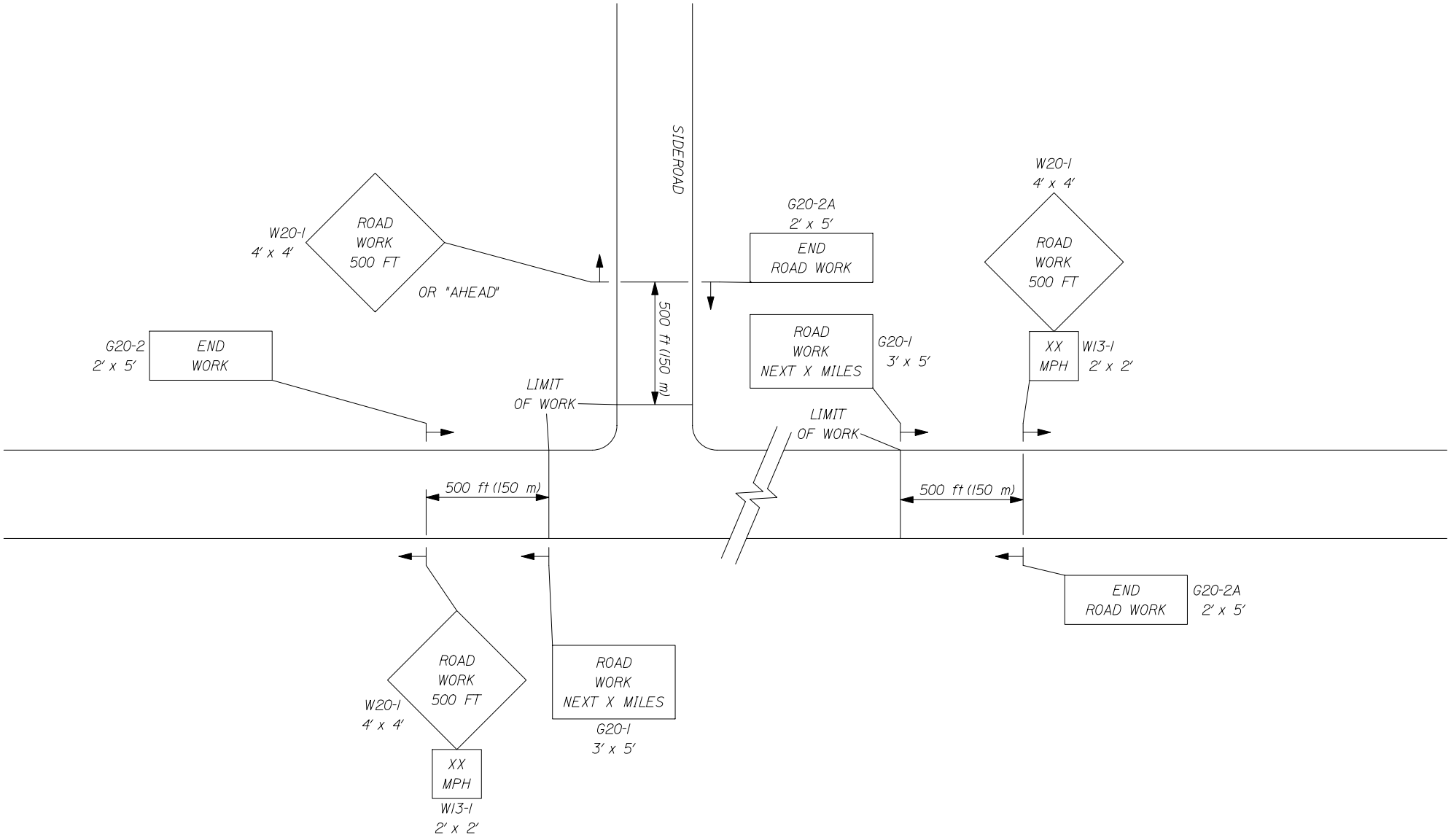

1 of 3

-- PROJECT APPROACH SIGNING --
TWO WAY TRAFFIC

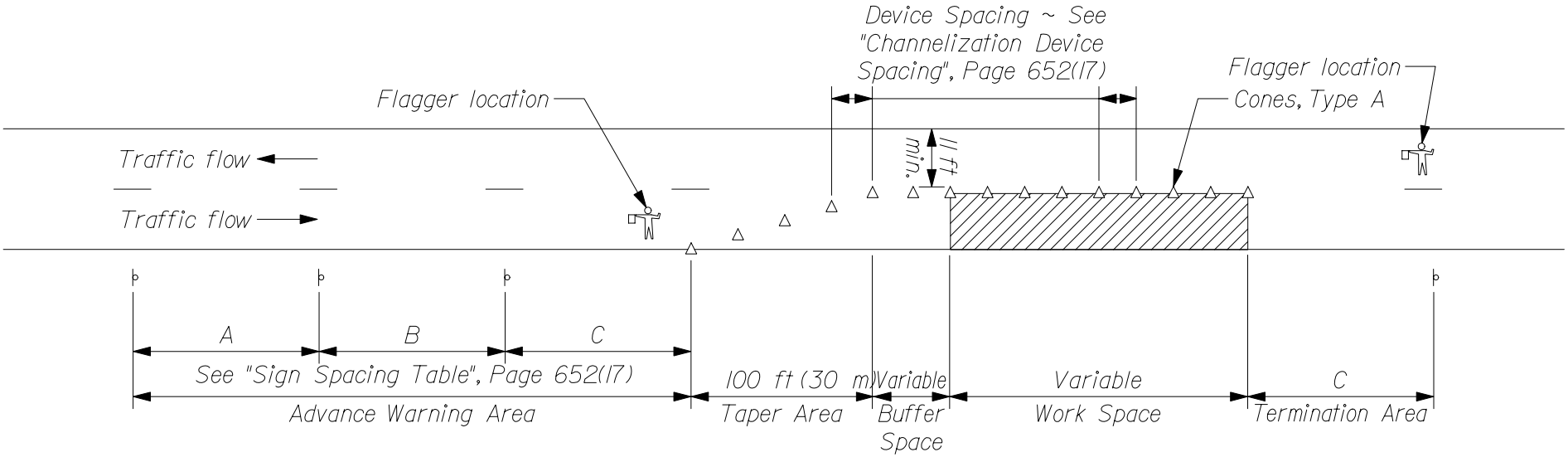

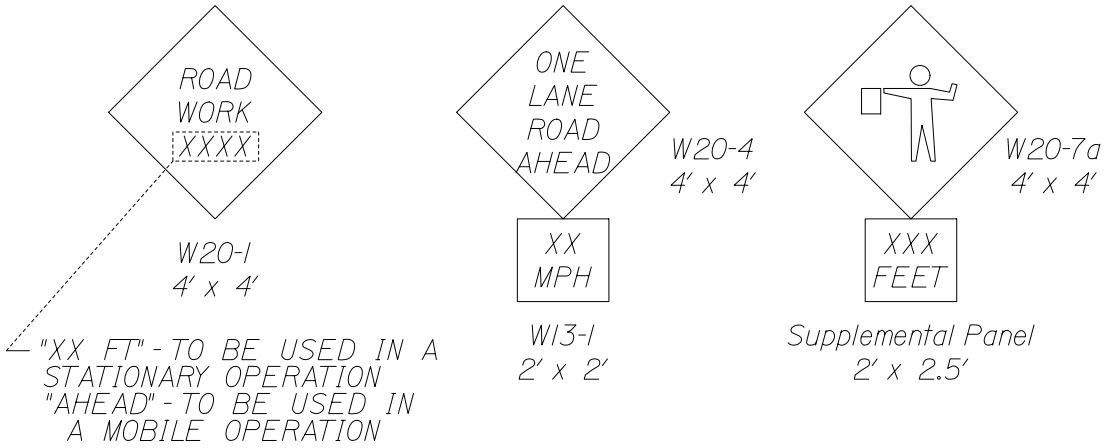

TYPICAL APPLICATION: TWO - WAY, TWO LANE ROADWAY, CLOSING ONE LANE USING FLAGGERS

TYPE OF TAPER	TAPER LENGTH (L)*
Merging Taper	at least L
Shifting Taper	at least 0.5L
Shoulder Taper	at least 0.33L
One-Lane, Two-Way Traffic Taper	100 ft (30 m) maximum
Downstream Taper	100 ft (30 m) per lane

* Formulas for L are as follows:

For speed limits of 40 mph (60 km/h) or less:

$L = \frac{WS^2}{60}$ $\quad (L = \frac{WS^2}{155})$

For speed limits of 45 mph (70 km/h) or greater:

$L = WS$ $\quad (L = \frac{WS}{1.6})$

* Formulas for L are as follows:

A minimum of 5 channelization devices shall be used in the taper.

CHANNELIZATION DEVICE SPACING

The spacing of channelization devices shall not exceed a distance equal to 1.0 times the speed limit in mph when used for taper channelization, and a distance in feet of 2.0 times the speed limit in mph when used for tangent channelization.

SIGN SPACING TABLE			
Road Type	Distance Between Signs**		
	A	B	C
Urban 30 mph (50 km/h) or less	100 (30)	100 (30)	100 (30)
Urban 35 mph (55 km/h) and greater	350 (100)	350 (100)	350 (100)
Rural	500 (150)	500 (150)	500 (150)
Expressway / Urban Parkway	2,640 (800)	1,500 (450)	1000 (300)

**Distances are shown in feet (meters).

GENERAL NOTES;

1. Final placement of signs and devices may be changed to fit field conditions as approved by the Resident.

SUGGESTED BUFFER ZONE LENGTHS

Speed (mph)	Length (feet)	Speed (mph)	Length (feet)
20	115	40	325
25	155	45	360
30	200	50	425
35	250	55	495

SPECIAL PROVISION
SECTION 652
MAINTENANCE OF TRAFFIC
(Traffic Control)

Failure by the contractor to follow the Contracts 652 Special Provisions and Standard Specification and/or The Manual on Uniform Traffic Control Devices (MUTCD) and/or The Contractors own Traffic Control Plan will result in a violation letter and result in a reduction in payment as shown in the schedule below. The Department's Resident or any other representative of The Department reserves the right to suspend the work at any time and request a meeting to discuss violations and remedies. The Department shall not be held responsible for any delay in the work due to any suspension under this item. Any reduction in payment under this Special Provision will be in addition to forfeiting payment of maintenance of traffic control devices for that day.

ORIGINAL CONTRACT AMOUNT				
From	**Up to and**	**Amount of Penalty Damages per Violation**		
More Than	**Including**	**1st**	**2nd**	**3rd & Subsequent**
$0	$1,000,000	$250	$500	$1,250
$1,000,000	$2,000,000	$500	$1,000	$2,500
$2,000,000	$4,000,000	$1,000	$2,000	$5,000
$4,000,000	and more	$2,000	$4,000	$10,000

April 17, 2007
Supersedes May 10, 2006

SPECIAL PROVISION
SECTION 652
MAINTENANCE OF TRAFFIC
Construction Sign Sheeting Material

Super high intensity fluorescent retroreflective sheeting, ASTM D 4956 - Type VII, Type VIII, or Type IX (prismatic), is required for all construction signs.

SPECIAL PROVISION
SECTION 656
Temporary Soil Erosion and Water Pollution Control

Standard Specification 656 of the Standard Specifications is deleted and replaced by this Special Provision.

The following information and requirements will constitute the Soil Erosion and Water Pollution Control Plan for this Project. The soil erosion and water pollution control measures associated with this work are as follows:

All work shall be done in accordance with the latest revision of the Maine Department of Transportation Best Management Practices for Erosion and Sediment Control (a.k.a. Best Management Practices manual or BMP Manual). The latest version is dated February 2008 and is available at:

http://www.maine.gov/mdot/environmental-office-homepage/surface-water-resources.php

Procedures specified shall be according to the BMP Manual unless stated otherwise.

1. The on-site person responsible for implementation of this plan, shall be the Contractor's Superintendent or other supervisory employee (the "Environmental Coordinator") with the authority to immediately remedy any deficient controls and shall provide the Resident with their numbers (telephone number, cellular phone and pager numbers, if applicable) where the Environmental Coordinator can be reached 24 hours a day.
2. All areas where soil is disturbed shall be permanently mulched on a daily basis and seeded on a weekly basis (if seeded by hand, it shall be done on a daily basis). All previously mulched areas shall be maintained and re-mulched on a daily basis if bare areas develop until an acceptable growth of grass has been obtained.
3. All disturbed ditches shall receive erosion control blanket or stone rip rap, as required, prior to leaving the site each day.
4. Winter stabilization BMPs shall be applied in accordance with the MDOT BMP Manual between November 1 and April 15 or during frozen ground conditions.
5. If the Work includes the handling or storage of petroleum products or Hazardous Materials including the on site fueling of Equipment, the Resident must be provided with a Spill Prevention Control and Countermeasure Plan (SPCCP) plan. At a minimum, the SPCCP shall include:
    - The name and emergency response numbers (telephone number, cellular phone and pager numbers, if applicable) of the Contractor's representative responsible for spill prevention;
    - General description and location of (1) handling, transfer, storage, and containment facilities of such products or Materials ("activities and facilities") and (2) potential receptors of such products or Materials including oceans, lakes, ponds, rivers, streams, wetlands, and sand and gravel aquifers ("sensitive resources") including the distances between said activities and facilities and said sensitive resources;

SPECIAL PROVISION
SECTION 656
Temporary Soil Erosion and Water Pollution Control

- Description of preventative measures to be used to minimize the possibility of a spill including Equipment and/or Materials to be used to prevent discharges including absorbent Materials,
- A contingency response plan to be implemented if a spill should occur including a list of emergency phone/pager numbers including the Contractor's representative, MDEP Spill Response, the Resident, and local police and fire authorities. For a related provision, see *Standard Specification, Section, 105.2.2 - Project Specific Emergency Planning*.

6. The Environmental Coordinator must inspect and maintain daily all controls for the duration of the project.
7. If the Project Resident directs new soil disturbance that requires temporary erosion and sedimentation control, all permits shall be obtained by the MaineDOT and a full SEWPCP will be required and paid for as Extra Work.

SPECIAL PROVISION 700 - MATERIALS

SECTION 702 - BITUMINOUS MATERIAL

702.01 Asphalt Cement Performance Graded Asphalt Binder shall conform to the requirements of AASHTO M 320 or AASHTO MP 19, whichever is indicated in the contract documents. For Performance-Graded Asphalt Binder (PGAB), the Contractor shall arrange for the Supplier to furnish the following items to the Department's Materials Testing Engineer.

a. A Quality-Control Plan for PGAB that conforms to the requirements of AASHTO R 26 "Certifying Suppliers of Performance-Graded Asphalt Binders" and

b. A CERTIFICATE OF ANALYSIS for all asphalt materials furnished for use on the project. The Certificate shall include the actual test results of the material in storage from which the shipments are being made. Certificates shall be supplied for each lot, batch, or blend of each type and grade of material. A new certificate shall be issued at least every 30 days or upon receiving or manufacture of a new material. The original of each Certificate of Analysis shall be mailed to the Departments Materials Testing Engineer.

The Contractor shall give the supplier sufficient advance notice of orders to permit testing. Material not represented by tests will not be accepted for use on the work.

Deliveries of asphalt materials shall be accompanied by a loading invoice, delivery ticket, or slip, as required under Section l08.1.3 f. The Loading Invoice shall include the applicable certificate number and shall include a printed or stamped statement such as the following:

> "THIS IS TO CERTIFY THAT THE ASPHALT MATERIAL REPRESENTED BY THIS LOADING INVOICE CONFORMS TO THE SPECIFICATIONS OF THE PURCHASER FOR THE MATERIAL TYPE AND GRADE STATED THEREON."

In the event an intermediate hauler of the asphalt material is involved, a copy of their own delivery slip shall be furnished, as well as a copy of the supplier's loading invoice. The hauler's delivery slip and the supplier's loading invoice shall be cross-referenced by use of their respective serial numbers.

702.04 Emulsified Asphalt Emulsified Asphalt shall conform to the requirements of AASHTO M 140. Cationic emulsified asphalt shall conform to the requirements of AASHTO M 208.

Use of all emulsified asphalt shall comply with all Department of Environmental Protection (DEP) regulations regarding maximum amount of oil distillate, seasonal limitations, etc.

For emulsified asphalts, the Contractor shall arrange for the Supplier to furnish the following item to the Department's Materials Testing Engineer.

A CERTIFICATE OF ANALYSIS for all asphalt emulsion materials furnished for use on the project. The Certificate shall include the actual test results of the material in storage from which the shipments are being made. Certificates shall be supplied for each lot or batch for each

grade/type of emulsion. A new certificate shall be issued at least every 30 days or upon receiving or manufacture of a new material. The original of each Certificate of Analysis shall be mailed to the Department's Materials Testing Engineer.

Deliveries of emulsion materials shall be accompanied by a loading invoice, delivery ticket, or slip, as required under Section l08.1.3 f. The Loading Invoice shall include the applicable certificate number and shall include a printed or stamped statement such as the following:

> "THIS IS TO CERTIFY THAT THE ASPHALT MATERIAL REPRESENTED BY THIS LOADING INVOICE CONFORMS TO THE SPECIFICATIONS OF THE PURCHASER FOR THE MATERIAL TYPE AND GRADE STATED THEREON."

In the event an intermediate hauler of the asphalt material is involved, a copy of their own delivery slip shall be furnished, as well as a copy of the supplier's loading invoice. The hauler's delivery slip and the supplier's loading invoice shall be cross-referenced by use of their respective serial numbers.

SECTION 703 - AGGREGATES

703.07 Aggregates for HMA Pavements Coarse aggregate and fine aggregate for hot mix asphalt pavements shall be of such gradation that when combined in the proper proportions, including filler, if required, the resultant blend will meet the composition of mixture for the type of pavement specified.

Coarse aggregate, that material retained on the No. 4 sieve, shall be crushed stone or crushed gravel and, unless otherwise stipulated, shall consist of clean, tough, durable fragments free from an excess of soft or disintegrated pieces and free from stone coated with dirt or other objectionable matter. Coarse aggregate, shall not exceed an absorption of 2.0 percent by weight as determined by AASHTO T 85.

Fine aggregate, material that passes the No. 4 sieve, shall consist of natural sand, manufactured sand, or a combination of these. It shall consist of hard, tough grains, free from injurious amounts of clay, loam, or other deleterious substances. Fine aggregate, shall not exceed an absorption of 2.3 percent by weight as determined by AASHTO T 84.

The composite blend, minus any recycled asphalt pavement used (RAP), shall have a Micro-Deval value of 18.0 percent or less as determined by AASHTO T 327. In the event the material exceeds the Micro-Deval limit, a Washington Degradation test shall be performed. The material shall be acceptable if it has a value of 30 or more as determined by Washington State DOT Test Method T 113, Method of Test for Determination of Degradation Value (January 2009 version) except that the reported degradation value will be the result of testing a single composite specimen from that portion of the sample that passes the ½ inch sieve and is retained on the No. 10 sieve, minus any reclaimed asphalt pavement used.

Aggregates shall also meet the following consensus properties, except that aggregates extracted from RAP will not be included in the sand equivalent test. The Department reserves the right to sample and test the composite aggregate for any of the following properties at any time:

TABLE 3: Aggregate Consensus Properties Criteria

Estimated Traffic, Million 18 kip ESALs	AASHTO T 335 Coarse Aggregate Angularity (minimum)	AASHTO T 304 Method A Uncompacted Void Content of Fine Aggregate (min)	ASTM D 4791 (8.4) Flat and Elongated Particles (maximum)	AASHTO T 176 Clay Content/ Sand Equivalent (minimum)
< 0.3	60/60	40	10	45
0.3 to < 3.0	75/60			
3.0 to < 10	85/80	45		
10 to < 30	95/90			
≥ 30	100/100			50

ASTM D 5821 - "85/80 denotes that 85 percent of the coarse aggregate has one fractured face and 80 percent has two fractured faces.

AASHTO T 304 - Criteria are presented as percent air voids in loosely compacted fine aggregate, (U).

ASTM D 4791 - Criteria are presented as maximum percent by weight of flat and elongated particles (5:1 ratio).

The entire HMA wearing course shall come from the same source of material and the same job mix formula, except when permission is obtained from the Department to change sources.

703.08 Recycled Asphalt Pavement Recycled asphalt pavement shall consist of salvaged asphalt materials from milled pavements or production waste that has been processed before use to meet the requirements of the job mix formula. It shall be free of winter sand, granular fill, construction debris, or other materials not generally considered asphalt pavement.

703.081 RAP for Asphalt Pavement Recycled Asphalt Pavement (RAP) may be introduced into hot-mix asphalt pavement at percentages approved by the Department according to the MaineDOT Policies and Procedures for HMA Sampling and Testing. If approved by the Department, the Contractor shall provide documentation stating the source, test results for average residual asphalt content, and stockpile gradations showing RAP materials have been sized to meet the maximum aggregate size requirements of each mix designation. The Department will obtain samples for verification and approval prior to its use.

The maximum allowable percent of RAP shall be determined by the asphalt content, the percent passing the 0.075 mm sieve, and Coarse Micro-Deval loss values as tested by the Department. The numerical average of the percent passing the 0.075 mm sieve values will be used for the approval. The maximum percentage of RAP allowable shall be the lowest percentage as determined according to Table 4 below:

TABLE 4: Maximum Percent RAP According to Test Results

Classification	Maximum RAP Percentage Allowed	Asphalt content standard deviation	Percent passing 0.075 mm sieve	Residual aggregate M-D loss value
Class III	10%	N/A	> 11.0	≤ 18
Class II	20%	≤ 0.5	≤ 11.0	
Class I	30%	≤ 0.3	≤ 8.0	

The Department will monitor RAP asphalt content and gradation during production by testing samples from the stockpile at approximately 15,000 T intervals (in terms of mix production). The allowable variance limits (from the numerical average values used for mix designs) for this testing are determined based upon the maximum allowable RAP percentage, and are shown below in Table 5.

TABLE 5: RAP Verification Limits

Classification	Maximum RAP Percentage Allowed	Asphalt content (compared to aim)	Percent passing 0.075 mm sieve (compared to aim)	Percent passing 0.075 mm sieve
Class III	10%	± 1.5	± 2.0	N/A
Class II	20%	± 1.0	± 1.5	≤ 11.0
Class I	30%	± 0.5	± 1.0	≤ 8.0

For specification purposes, RAP will be categorized as follows:

Class III – A maximum of 10.0 percent of Class III RAP may be used in any base, intermediate base, surface, or shim mixture. A maximum of 20.0 percent of Class III RAP may be used in hand-placed mixes for item 403.209.

Class II – A maximum of 20.0 percent Class II RAP in any base, binder, surface, or shim course.

Class I – A maximum of 20.0 percent Class I RAP may be used in any base, intermediate base, surface, or shim mixture without requiring a change to the specified asphalt binder. A maximum of 30.0 percent Class I RAP may be used in in any base or intermediate base mixture provided that a PG 58-28 asphalt binder is used. A maximum of 30.0 percent Class I RAP may be used in any surface or shim mixture provided that PG 58-34 or 52-34 asphalt binder is used. Mixtures exceeding 20.0 percent Class I RAP must be evaluated and approved by the Department.

The Contractor may use up to two different RAP sources in any one mix design. The total RAP percentage of the mix shall not exceed the maximum allowed for the highest classification RAP source used (i.e. if a Class I & Class III used, total RAP must not exceed 30.0%). The blended RAP material must meet all the requirements of the classification for which the RAP is entered (i.e. 10% Class III with 20% Class I, blend must meet Class I criteria). The Department may take belt cuts of the blended RAP to verify the material meets these requirements. If the

Contractor elects to use more than one RAP source in a design, the Contractor shall provide an acceptable point of sampling blended RAP material from the feed belt.

In the event that RAP source or properties change, the Contractor shall notify the Department of the change and submit new documentation stating the new source or properties a minimum of 72 hours prior to the change to allow for obtaining new samples and approval.

703.09 HMA Mixture Composition The coarse and fine aggregate shall meet the requirements of Section 703.07. The several aggregate fractions for mixtures shall be sized, graded, and combined in such proportions that the resulting composite blends, including RAP aggregate will meet the grading requirements of the following table:

Aggregate Gradation Control Points

Sieve Designation	Nominal Maximum Aggregate Size---Control Points (Percent Passing)					
	Type 25 mm	Type 19 mm	Type 12.5 mm	Type 9.5 mm	Type 9.5 mm Thin Lift Mixture (TLM)	Type 4.75 mm
	Percent By Weight Passing - Combined Aggregate					
37.5 mm	100					
25 mm	90-100	100				
19 mm	-90	90-100	100			
12.5 mm		-90	90-100	100	100	100
9.5 mm		-	-90	90-100	95-100	95-100
4.75 mm		-	-	-90	60-95	80-100
2.36 mm	19-45	23-49	28-58	32-67	40-65	40 - 80
1.18 mm		-	-	-	-	-
600 µm		-	-	-	-	-
300 µm		-	-	-	-	-
75 µm	2.0-6.0	2.0-6.0	2.0-6.0	2.0-7.0*	2.0-7.0*	2.0-7.0

* For 9.5 mm nominal maximum aggregate size mixtures, the maximum design aim for the percent passing the 75 µm sieve is 6.5%.

STANDARD DETAIL UPDATES

Standard Details and Standard Detail updates are available at:
http://www.maine.gov/mdot/contractor-consultant-information/ss_standard_details_updates.php

Detail #	Description	Revision Date
203(03)	Backslope Rounding	1/29/08
502(03)	Concrete Curb - Bituminous Wearing Surface	8/08/11
502(03)A	Concrete Curb - Concrete Wearing Surface	2/2/09
502(07)	Precast Concrete Deck Panels - Layout Plan	2/2/09
502(07)A	Precast Concrete Deck Panels - Layout Plan	2/2/09
502(08)	Precast Concrete Deck Panels - Panel Plan	2/2/09
502(09)	Precast Concrete Deck Panels - Blocking Detail	2/2/09
502(10)	Precast Concrete Deck Panels	2/2/09
502(11)	Precast Concrete Deck Panels	2/2/09
502(12)	Precast Concrete Deck Panels - Notes	10/28/09
502(12)A	Precast Concrete Deck Panels - Notes	2/2/09
504(15)	Diaphragms	5/19/11
504(21)	Tension Flange Connection for Diaphragm and Cross Frames	10-11-12
504(22)	Diaphragm & Crossframe Notes	10/11/12
504(23)	Hand-Hold Details	12/08/05
502(24)	Hand-Hold Details	10/11/12
507(04)	Steel Bridge Railing	2/05/03
507(04A)	Steel Bridge Railing	7/3/13
507(09)	Steel Bridge Railing	5/19/11
507(09)A	Steel Bridge Railing	5/19/11

526(06)	Permanent Concrete Barrier	2/2/09
526(08)	Permanent Concrete Barrier – Type IIIA	10/07/10
526(08)A	Permanent Concrete Barrier – Type IIIA	12/07/10
526(13)	Permanent Concrete Barrier – Type IIIB	2/2/09
526(14)	Permanent Concrete Barrier – Type IIIB	2/2/09
526(21)	Concrete Transition Barrier	2/2/09
526(29A)	Concrete Transition Barrier	5/1/13
526(29B)	Concrete Transition Barrier	5/1/13
526(29C)	Concrete Transition Barrier	5/1/13
526(33)	Concrete Transition Barrier	5/1/13
526(39)	Texas Classic Rail – Between Window	2/2/09
526(40)	Texas Classic Rail – Through Window	2/2/09
526(41)	Texas Classic Rail – Through Post	2/2/09
526(42)	Texas Classic Rail – Through Nose	2/2/09
535(01)	Precast Superstructure - Shear Key	10/12/06
535(02)	Precast Superstructure - Curb Key & Drip Notch	5/20/08
535(03)	Precast Superstructure - Shear Key	12/5/07
535(04)	Precast Superstructure - Shear Key	12/05/07
535(05)	Precast Superstructure - Post Tensioning	5/20/08
535(06)	Precast Superstructure - Sections	10/12/06
535(07)	Precast Superstructure - Precast Slab & Box	10/12/06
535(08)	Precast Superstructure - Sections	10/12/06
535(09)	Precast Superstructure - Sections	10/12/06
535(10)	Precast Superstructure - Sections	10/12/06
535(11)	Precast Superstructure - Sections	10/12/06

535(12)	Precast Superstructure - Sections	10/12/06
535(13)	Precast Superstructure - Sections	10/12/06
535(14)	Precast Superstructure - Stirrups	10/12/06
535(15)	Precast Superstructure - Plan	10/12/06
535(16)	Precast Superstructure - Reinforcing	10/12/06
535(17)	Precast Superstructure - Notes	12/05/07
604(01)	Catch Basins	11/16/05
604(05)	Type “A” & “B” Catch Basin Tops	11/16/05
604(06)	Type “C” Catch Basin Tops	11/16/05
604(07)	Manhole Top “D”	11/16/05
604(09)	Catch Basin Type “E”	11/16/05
604(18)	Utility Structures	03/18/14
606(02)	Multiple Mailbox Support	11/16/05
606(03)	Guardrail Standard Detail	9/19/12
606(07)	Reflectorized Beam Guardrail Delineator Details	11/16/05
606(20)	Guardrail - Type 3 - Single Rail - Bridge Mounted	2/2/09
606(21)	Guardrail - Type 3 - Single Rail - Bridge Mounted	2/2/09
606(22)	Guardrail - Type 3 - Single Rail - Bridge Mounted	2/2/09
606(23)	Guardrail - Type 3 - Single Rail - Bridge Mounted	2/2/09
609(03)	Curb Type 3	6/27/06
609(06)	Vertical Bridge Curb	2/12/09
609(07)	Curb Type 1	6/27/06
609(08)	Precast Concrete Transition Curb	2/2/09

610(02)	Stone Scour Protection	8/9/11
610(03)	Stone Scour Protection	5/19/11
610(04)	Stone Scour Protection	5/19/11
620(05)	Geotextile Placement for Protection of Slopes Adjacent to Stream & Tidal Areas	5/19/11
626(09)	Electrical Junction Box for Traffic Signals and Lighting	8/27/10
645(06)	H-Beam Posts – Highway Signing	7/21/04
645(09)	Installation of Type II Signs	7/21/04
801(01)	Drives on Sidewalk Sections	12/13/07
801(02)	Drives on Non-Sidewalk Sections	12/13/07

SUPPLEMENTAL SPECIFICATION

(Corrections, Additions, & Revisions to Standard Specifications - Revision of December 2002)

SECTION 101
CONTRACT INTERPRETATION

101.2 Definitions

Closeout Documentation Replace the sentence "A letter stating the amount….. DBE goals." with "DBE Goal Attainment Verification Form"

Add "Environmental Information Hazardous waste assessments, dredge material test results, boring logs, geophysical studies, and other records and reports of the environmental conditions. For a related provision, see Section 104.3.14 - Interpretation and Interpolation."

Add "Fabrication Engineer The Department's representative responsible for Quality Assurance of pre-fabricated products that are produced off-site."

Geotechnical Information Replace with the following: "Boring logs, soil reports, geotechnical design reports, ground penetrating radar evaluations, seismic refraction studies, and other records of subsurface conditions. For a related provision, see Section 104.3.14 - Interpretation and Interpolation."

SECTION 102
DELIVERY OF BIDS

102.7.1 Location and Time Add the following sentence "As a minimum, the Bidder will submit a Bid Package consisting of the Notice to Contractors, the completed Acknowledgement of Bid Amendments form, the completed Schedule of Items, 2 copies of the completed Agreement, Offer, & Award form, a Bid Bond or Bid Guarantee, and any other Certifications or Bid Requirements listed in the Bid Book."

102.11.1 Non-curable Bid Defects Replace E. with "E. The unit price and bid amount is not provided or a lump sum price is not provided or is illegible as determined by the Department."

SECTION 103
AWARD AND CONTRACTING

103.3.1 Notice and Information Gathering Change the first paragraph to read as follows: "After Bid Opening and as a condition for Award of a Contract, the Department may require an Apparent Successful Bidder to demonstrate to the Department's satisfaction that the Bidder is responsible and qualified to perform the Work."

SECTION 104
GENERAL RIGHTS AND RESPONSIBILITIES

104.3.14 Interpretation and Interpolation In the first sentence, change "…and Geotechnical Information." to "…Environmental Information, and Geotechnical Information."

SECTION 105
GENERAL SCOPE OF WORK

Delete the entire Section 105.6 and replace with the following:

105.6.1 Department Provided Services The Department will provide the Contractor with the description and coordinates of vertical and horizontal control points, set by the Department, within the Project Limits, for full construction Projects and other Projects where survey control is necessary. For Projects of 1,500 feet in length, or less: The Department will provide three points. For Projects between 1,500 and 5,000 feet in length: The Department will provide one set of two points at each end of the Project. For Projects in excess of 5,000 feet in length, the Department will provide one set of two points at each end of the Project, plus one additional set of two points for each mile of Project length. For non-full construction Projects and other Projects where survey control is not necessary, the Department will not set any control points and, therefore, will not provide description and coordinates of any control points. Upon request of the Contractor, the Department will provide the Department's survey data management software and Survey Manual to the Contractor, or its survey Subcontractor, for the exclusive use on the Department's Projects.

105.6.2 Contractor Provided Services Utilizing the survey information and points provided by the Department, described in Subsection 105.6.1, Department Provided Services, the Contractor shall provide all additional survey layout necessary to complete the Work. This may include, but not be limited to, reestablishing all points provided by the Department, establishing additional control points, running axis lines, providing layout and maintenance of all other lines, grades, or points, and survey quality control to ensure conformance with the Contract. The Contractor is also responsible for providing construction centerline, or close reference points, for all Utility Facilities relocations and adjustments as necessary to complete the Work. When the Work is to connect with existing Structures, the Contractor shall verify all dimensions before proceeding with the Work. The Contractor shall employ or retain competent engineering and/or surveying personnel to fulfill these responsibilities.

The Contractor must notify the Department of any errors or inconsistencies regarding the data and layout provided by the Department as provided by Section 104.3.3 - Duty to Notify Department If Ambiguities Discovered.

105.6.2.1 Survey Quality Control The Contractor is responsible for all construction survey quality control. Construction survey quality control is generally defined as, first, performing initial field survey layout of the Work and, second, performing an independent check of the initial layout using independent survey data to assure the accuracy of the initial layout; additional iterations of checks may be required if significant discrepancies are discovered in this process. Construction survey layout quality control also requires written documentation of the layout process such that the process can be followed and repeated, if necessary, by an independent survey crew.

105.6.3 Survey Quality Assurance It is the Department's prerogative to perform construction survey quality assurance. Construction survey quality assurance may, or may not, be performed by the Department. Construction survey quality assurance is generally defined as an independent check of the construction survey quality control.

The construction survey quality assurance process may involve physically checking the Contractor's construction survey layout using independent survey data, or may simply involve reviewing the construction survey quality control written documentation. If the Department elects to physically check the Contractor's survey layout, the Contractor's designated surveyor may be required to be present. The Department will provide a minimum notice of 48 hours to the Contractor, whenever possible, if the Contractor's designated surveyor's presence is required. Any errors discovered through the quality assurance process shall be corrected by the Contractor, at no additional cost to the Department.

105.6.4 Boundary Markers The Contractor shall preserve and protect from damage all monuments or other points that mark the boundaries of the Right-of-Way or abutting parcels that are outside the area that must be disturbed to perform the Work. The Contractor indemnifies and holds harmless the Department from all claims to reestablish the former location of all such monuments or points including claims arising from 14 MRSA § 7554-A. For a related provision, see Section 104.3.11 - Responsibility for Property of Others.

SECTION 106
QUALITY

106.4.3 Testing Change the first sentence in paragraph three from "…maintain records of all inspections and tests." to "…maintain original documentation of all inspections, tests, and calculations used to generate reports."

106.6 Acceptance Add the following to paragraph 1 of A: "This includes Sections 401 - Hot Mix Asphalt, 402 - Pavement Smoothness, and 502 - Structural Concrete - Method A - Air Content."

Add the following to the beginning of paragraph 3 of A: "For pay factors based on Quality Level Analysis, and"

106.7.1 Standard Deviation Method Add the following to F: "Note: In cases where the mean of the values is equal to either the USL or the LSL, then the PWL will be 50 regardless of the computed value of s."

Add the following to H: "Method C Hot Mix Asphalt: PF = [55 + (Quality Level *0.5)] * 0.01"

SECTION 107
TIME

107.3.1 General Add the following: "If a Holiday occurs on a Sunday, the following Monday shall be considered a Holiday. Sunday or Holiday work must be approved by the Department, except that the Contractor may work on Martin Luther King Day, President's Day, Patriot's Day, the Friday after Thanksgiving, and Columbus Day without the Department's approval."

107.7.2 Schedule of Liquidated Damages Replace the table of Liquidated Damages as follows:

From More Than	Up to and Including	Amount of Liquidated Damages per Calendar Day
$0	$100,000	$225
$100,000	$250,000	$350
$250,000	$500,000	$475
$500,000	$1,000,000	$675
$1,000,000	$2,000,000	$900
$2,000,000	$4,000,000	$1,000
$4,000,000	and more	$2,100

SECTION 108
PAYMENT

Remove Section 108.4 and replace with the following:

"108.4 Payment for Materials Obtained and Stored Acting upon a request from the Contractor and accompanied by bills or receipted bills, the Department will pay for all or part of the value of acceptable, non-perishable Materials that are to be incorporated in the Work, including Materials that are to be incorporated into the Work, not delivered on the Work site, and stored at places acceptable to the Department. Examples of such Materials include steel piles, stone masonry, curbing, timber and lumber, metal Culverts, stone and sand, gravel, and other Materials. The Department will not make payment on living or perishable Materials until acceptably planted in their final locations.

If payment for Materials is made to the Contractor based on bills, only, then the Contractor must provide receipted bills to the Department for these Materials within 14 days of the date the Contractor receives payment for the Materials. Failure of the Contractor to provide receipted bills for these Materials within 14 days of the dated the Contractor receives payment will result in the paid amount being withheld from the subsequent progress payment, or payments, until such time the receipted bills are received by the Department.

Materials paid for by the Department are the property of the Department, but the risk of loss shall remain with the Contractor. Payment for Materials does not constitute Acceptance of the Material. If Materials for which the Department has paid are later found to be unacceptable, then the Department may withhold amounts reflecting such unacceptable Materials from payments otherwise due the Contractor.

In the event of Default, the Department may use or cause to be used all paid-for Materials in any manner that is in the best interest of the Department."

SECTION 109
CHANGES

109.1.1 Changes Permitted Add the following to the end of the paragraph: "There will be no adjustment to Contract Time due to an increase or decrease in quantities, compared to those estimated, except as addressed through Contract Modification(s)."

109.1.2 Substantial Changes to Major Items Add the following to the end of the paragraph: "Contract Time adjustments may be made for substantial changes to Major Items when the change affects the Critical Path, as determined by the Department"

109.4.4 Investigation / Adjustment Third sentence, delete the words "subsections (A) - (E)"

109.5.1 Definitions - Types of Delays

B. Compensable Delay Replace (1) with the following; "a weather related Uncontrollable Event of such an unusually severe nature that a Federal Emergency Disaster is declared. The Contractor will only be entitled to an Equitable Adjustment if the Project falls within the geographic boundaries prescribed under the disaster declaration."

109.7.2 Basis of Payment Replace with the following: "Adjustments will be established by mutual Agreement based upon Unit or Lump Sum Prices. These agreed Unit or Lump Sum prices will be full compensation and no additions or mark-ups are allowed. If Agreement cannot be reached, the Contractor shall accept payment on a Force Account basis as provided in Section 109.7.5 - Force Account Work, as full and complete compensation for all Work relating to the Equitable Adjustment."

109.7.3 Compensable Items Delete this Section entirely.

109.7.4 Non-Compensable Items Replace with the following: "The Contractor is not entitled to compensation or reimbursement for any of the following items:

A. Total profit or home office overhead in excess of 15%,
B. ……."

109.7.5 Force Account Work

C. Equipment
Paragraph 2, delete sentence 1 which starts; "Equipment leased…."

Paragraph 6, change sentence 2 from "The Contractor may furnish…" to read "If requested by the Department, the Contractor will produce cost data to assist the Department in the establishment of such rental rate, including all records that are relevant to the Actual Costs including rental Receipts, acquisition costs, financing documents, lease Agreements, and maintenance and operational cost records."

Add the following paragraph; "Equipment leased by the Contractor for Force Account Work and actually used on the Project will be paid for at the actual invoice amount plus 10% markup for administrative costs."

Add the following section;

"F. Subcontractor Work When accomplishing Force Account Work that utilizes Subcontractors, the Contractor will be allowed a maximum markup of 5% for profit and overhead on the Subcontractor's portion of the Force Account Work. If the Department does not accept the Subcontractor quote, then the Subcontractor work will be subject to the Force Account provisions with a 5% markup for profit & overhead.."

SECTION 110
INDEMNIFICATION, BONDING, AND INSURANCE

Delete the entire Section 110.2.3 and replace with the following:

110.2.3 Bonding for Landscape Establishment Period The Contractor shall provide a signed, valid, and enforceable Performance, Warranty, or Maintenance Bond complying with the Contract, to the Department at Final Acceptance.

The bond shall be in the full amount for all Pay Items for work pursuant to Sec 621, Landscape, payable to the "Treasurer - State of Maine," and on the Department's forms, on exact copies thereof, or on forms that do not contain any significant variations from the Department's forms as solely determined by the Department.

The Contractor shall pay all premiums and take all other actions necessary to keep said bond in effect for the duration of the Landscape Establishment Period described in Special Provision 621.0036 - Establishment Period. If the Surety becomes financially insolvent, ceases to be licensed or approved to do business in the State of Maine, or stops operating in the United States, the Contractor shall file new bonds complying with this Section within 10 Days of the date the Contractor is notified or becomes aware of such change.

All Bonds shall be procured from a company organized and operating in the United States, licensed or approved to do business in the State of Maine by the State of Maine Department of Business Regulation, Bureau of Insurance, and listed on the latest Federal Department of the Treasury listing for "Companies Holding Certificates of Authority as Acceptable Sureties on Federal Bonds and as Acceptable Reinsuring Companies."

By issuing a bond, the Surety agrees to be bound by all terms of the Contract, including those related to payment, time for performance, quality, warranties, and the Department's self-help remedy provided in Section 112.1 - Default to the same extent as if all terms of the Contract are contained in the bond(s).

Regarding claims related to any obligations covered by the bond, the Surety shall provide, within 60 Days of Receipt of written notice thereof, full payment of the entire claim or written notice of all bases upon which it is denying or contesting payment. Failure of the Surety to provide such notice within the 60-day period constitutes the Surety's waiver of any right to deny or contest payment and the Surety's acknowledgment that the claim is valid and undisputed.

110 - Indemnification, Bonding and Insurance
Add the following to the end of Section 110, Indemnification, Bonding and Insurance:

Nothing in these Standard Specifications constitutes a waiver of any defense, immunity or limitation of liability that may be available to the Department, or its officers, agents or employees under the Maine Tort Claims Act (Title 14 M.R.S.A. 8101 et seq.), and shall not constitute a waiver of other privileges or immunities that may be available to the Department.

SECTION 202
REMOVING STRUCTURES AND OBSTRUCTIONS

202.02 Removing Buildings Make the following change to the last sentence in the final paragraph, change "…Code of Maine Regulations 401." to "…Department of Environmental Protection Maine Solid Waste Management Rules, 06-096 CMR Ch. 401, Landfill Siting, Design and Operation."

SECTION 203
EXCAVATION AND EMBANKMENT

203.01 Description Under b. Rock Excavation; add the following sentence: "The use of perchlorate is not allowed in blasting operations."

Delete the entire Section 203.041 and replace with the following:
"203.041 Salvage of Existing Hot Mix Asphalt Pavement All existing hot mix asphalt pavement designated to be removed under this contract must be salvaged for utilization. Existing hot mix asphalt pavement material shall not be deposited in any waste area or be placed below subgrade in any embankment.

Methods of utilization may be any of the following:

1. Used as a replacement for untreated aggregate surface course on entrances provided the material contains no particles greater than 50 mm [2 in] in any dimension. Payment will be made under Pay Item 411.09, Untreated Aggregate Surface Course or 411.10, Untreated Aggregate Surface Course, Truck Measure. Material shall be placed, shaped, compacted and stabilized as directed by the Resident.

2. Used as the top 3" of gravel. Recycled Asphalt Pavement (RAP) shall be process to 1½" minus and blending will not be allowed. When this method is utilized, a surcharge will not be required

3. Stockpiled at commercial or approved sites for commercial or MaineDOT use.

4. Other approved methods proposed by the Contractor, and approved by the Resident which will assure proper use of the existing hot mix asphalt pavement.

The cost of salvaging hot mix asphalt material will be included for payment under the applicable pay item, with no additional allowances made, which will be full compensation for removing, temporarily stockpiling, and rehandling, if necessary, and utilizing the material in entrances or other approved uses, or stockpiling at an approved site as described above. The material will also be measured and paid for under the applicable Pay Item if it is reused for aggregate in entrances, or other approved uses."

SECTION 502
STRUCTURAL CONCRETE

502.05 Composition and Proportioning; TABLE #1; NOTE #2; third sentence; Change "…alcohol based saline sealer…" to "alcohol based silane sealer…". Add NOTE #6 to Class S Concrete.

502.0502 Quality Assurance Method A - Rejection by Resident Change the first sentence to read: "For an individual sublot with test results failing to meet the criteria in Table #1, or if the calculated pay factor for Air Content is less than 0.80……"

502.0503 Quality Assurance Method B - Rejection by Resident Change the first sentence to read: "For material represented by a verification test with test results failing to meet the criteria in Table #1, the Department will……"

502.0505 Resolution of Disputed Acceptance Test Results Combine the second and third sentence to read: "Circumstances may arise, however, where the Department may ……"
502.10 Forms and False work
D. Removal of Forms and False work 1., First paragraph; first, second, and third sentence; replace "forms" with "forms and false work"

502.11 Placing Concrete
G. Concrete Wearing Surface and Structural Slabs on Precast Superstructures Last paragraph; third sentence; replace "The temperature of the concrete shall not exceed 24° C [75° F} at the time of placement." with "The temperature of the concrete shall not exceed 24° C [75° F} at the time the concrete is placed in its final position."

502.15 Curing Concrete First paragraph; replace the first sentence with the following; "All concrete surfaces shall be kept wet with clean, fresh water for a curing period of at least 7 days after concrete placing, with the exception of vertical surfaces as provided for in Section 502.10 (D) - Removal of Forms and False work."

Second paragraph; delete the first two sentences.
Third paragraph; delete the entire paragraph which starts "When the ambient temperature…."
Fourth paragraph; delete "approved" to now read "…continuously wet for the entire curing period…"

Fifth paragraph; second sentence; change "…as soon as it is possible to do so without damaging the concrete surface." to "…as soon as possible."

Seventh paragraph; first sentence; change "…until the end of the curing period." to "…until the end of the curing period, except as provided for in Section 502.10(D) - Removal of Forms and False work."

502.19 Basis of Payment First paragraph, second sentence; add "pier nose armor" to the list of items included in the contract price for concrete.

SECTION 503
REINFORCING STEEL

503.06 Placing and Fastening Change the second paragraph, first sentence from: "All tack welding shall be done in accordance with Section 504, Structural Steel." to "All tack welding shall be done in accordance with AWS D1.4 Structural Welding Code - Reinforcing Steel."

SECTION 504
STRUCTURAL STEEL

504.09 Facilities for Inspection Add the follow as the last paragraph: "Failure to comply with the above requirements will be consider to be a denial to allow access to work by the Contractor. The Department will reject any work done when access for inspection is denied."

504.18 Plates for Fabricated Members Change the second paragraph, first sentence from: "…ASTM A 898/A 898 M…" to "…ASTM A 898/A 898 M or ASTM A 435/A 435 M as applicable and…"

504.31 Shop Assembly Add the following as the last sentence: "The minimum assembly length shall include bearing centerlines of at least two substructure units."

504.64 Non Destructive Testing-Ancillary Bridge Products and Support Structures Change the third paragraph, first sentence from "One hundred percent…" to "Twenty five percent…"

SECTION 535
PRECAST, PRESTRESSED CONCRETE SUPERSTRUCTURE

535.02 Materials Change "Steel Strand for Concrete Reinforcement" to "Steel Strand." Add the following to the beginning of the third paragraph; "Concrete shall be Class P conforming to the requirements in this section. 28 day compressive strength shall be as stated on the plans. Coarse aggregate…."

535.05 Inspection Facilities Add the follow as the last paragraph: "If the above requirements are not met, the Contractor shall be considered to be in violation of Standard Specification 104.2.5 – Right to Inspect Work. All work occurring during a violation of this specification will be rejected."

535.26 Lateral Post-Tensioning Replace the first paragraph; "A final tension…" with "Overstressing strands for setting losses cannot be accomplished for chuck to chuck lengths of 7.6 m [25 ft] and less. In such instances, refer to the Plans for all materials and methods. Otherwise, post-tensioning shall be in accordance with PCI standards and shall provide the anchorage force noted in the Plans. The applied jacking force shall be no less than 100% of the design jacking force."

SECTION 603
PIPE CULVERTS AND STORM DRAINS

603.0311 Corrugated Polyethylene Pipe for Option III Replace the Minimum Mandrel Diameter Table with the following:

Nominal Size US Customary (in)	Minimum Mandrel Diameter (in)	Nominal Size Metric (mm)	Minimum Mandrel Diameter (mm)
12	11.23	300	280.73
15	14.04	375	350.91
18	16.84	450	421.09
24	22.46	600	561.45
30	28.07	750	701.81
36	33.69	900	842.18
42	39.30	1050	982.54
48	44.92	1200	1122.90

SECTION 604
MANHOLES, INLETS, AND CATCH BASINS

604.02 Materials Add the following:

"Tops and Traps	712.07
Corrugated Metal Units	712.08
Catch Basin and Manhole Steps	712.09"

SECTION 605
UNDERDRAINS

605.05 Underdrain Outlets Make the following change:

In the first paragraph, second sentence, delete the words "metal pipe".

SECTION 606
GUARDRAIL

606.02 Materials Delete the entire paragraph which reads "The sole patented supplier of multiple mailbox…." and replace with "Acceptable multiple mailbox assemblies shall be listed on the Department's Approved Products List and shall be NCHRP 350 tested and approved."

Delete the entire paragraph which reads "Retroreflective beam guardrail delineators…." and replace with "Reflectorized sheeting for Guardrail Delineators shall meet the requirements of Section 719.01 - Reflective Sheeting. Delineators shall be fabricated from high-impact, ultraviolet and weather resistant thermoplastic.

606.09 Basis of Payment First paragraph; delete the second and third sentence in their entirety and replace with "Butterfly-type guardrail reflectorized delineators shall be mounted on all W-beam guardrail at an interval of every 10 posts [62.5 ft] on tangents sections and every 5 posts [31.25 ft] on curved sections as directed by the Resident. On divided highways, the delineators shall be yellow on the left hand side and silver/white on the right hand side. On two-way roadways, the delineators shall be silver/white on the right hand side. All delineators shall have retroreflective sheeting applied to only the traffic facing side. Reflectorized guardrail delineators will not be paid for directly, but will be considered incidental to the guardrail items."

SECTION 609
CURB

609.04 Bituminous Curb f., Delete the requirement "Color Natural (White)"

SECTION 610
STONE FILL, RIPRAP, STONE BLANKET, AND STONE DITCH PROTECTION

Add the following paragraph to Section 610.02:
"Materials shall meet the requirements of the following Sections of Special Provision 703:

Stone Fill	703.25
Plain and Hand Laid Riprap	703.26
Stone Blanket	703.27
Heavy Riprap	703.28
Definitions	703.32"

Add the following paragraph to Section 610.032.a.
"Stone fill and stone blanket shall be placed on the slope in a well-knit, compact and uniform layer. The surface stones shall be chinked with smaller stone from the same source."

Add the following paragraph to Section 610.032.b:
"Riprap shall be placed on the slope in a well-knit, compact and uniform layer. The surface stones shall be chinked with smaller stone from the same source."

Add the following to Section 610.032: "Section 610.032.d. The grading of riprap, stone fill, stone blanket and stone ditch protection shall be determined by the Resident by visual inspection of the load before it is dumped into place, or, if ordered by the Resident, by dumping individual loads on a flat surface and sorting and measuring the individual rocks contained in the load. A separate, reference pile of stone with the required gradation will be placed by the Contractor at a convenient location where the Resident can see and judge by eye the suitability of the rock being placed during the duration of the project.

The Resident reserves the right to reject stone at the job site or stockpile, and in place. Stone rejected at the job site or in place shall be removed from the site at no additional cost to the Department."

SECTION 615
LOAM

615.02 Materials Make the following change:

Organic Content	Percent by Volume
Humus	"5% - 10%", as determined by Ignition Test

SECTION 618
SEEDING

618.01 Description Change the first sentence to read as follows: "This work shall consist of furnishing and applying seed ….." Also remove ",and cellulose fiber mulch" from 618.01(a).
618.03 Rates of Application In 618.03(a), remove the last sentence and replace with the following: "These rates shall apply to Seeding Method 2, 3, and Crown Vetch."

In 618.03(c) "1.8 kg [4 lb]/unit." to "1.95 kg [4 lb]/unit."

618.09 Construction Method In 618.09(a) 1, sentence two, replace "100 mm [4 in]" with "25 mm [1 in] (Method 1 areas) and 50 mm [2 in] (Method 2 areas)"

618.15 Temporary Seeding Change the Pay Unit from Unit to Kg [lb].

SECTION 620
GEOTEXTILES

620.03 Placement Section (c)

Title: Replace "Non-woven" in title with "Erosion Control".
First Paragraph: Replace first word "Non-woven" with "Woven monofilament".
Second Paragraph: Replace second word "Non-woven" with "Erosion Control".

620.07 Shipment, Storage, Protection and Repair of Fabric Section (a)

Replace the second sentence with the following: "Damaged geotextiles, as identified by the Resident, shall be repaired immediately."

620.09 Basis of Payment

Pay Item 620.58: Replace "Non-woven" with "Erosion Control"
Pay Item 620.59: Replace "Non-woven" with "Erosion Control"

SECTION 621
LANDSCAPING

621.0036 Establishment Period In paragraph 4 and 5, change "time of Final Acceptance" to "end of the period of establishment". In Paragraph 7, change "Final Acceptance date" to ""end of the period of establishment" and change "date of Final Acceptance" to "end of the period of establishment".

SECTION 626
HIGHWAY SIGNING

626.034 Concrete Foundations Add to the following to the end of the second paragraph: "Pre-cast and cast-in-place foundations shall be warranteed against leaning and corrosion for two years after the project is completed. If the lean is greater than 2 degrees from normal or the foundation is spalling within the first two years, the Contractor shall replace the foundation at no extra cost."

SECTION 627
PAVEMENT MARKINGS

627.10 Basis of Payment Add to the following to the end of the third paragraph: "If allowed by Special Provision, the Contractor may utilize Temporary Bi-Directional Yellow and White(As required) Delineators as temporary pavement marking lines and paid for at the contract lump sum price. Such payment will include as many applications as required and removal."

SECTION 637
DUST CONTROL

637.06 Basis of Payment Add the following after the second sentence of the third paragraph: "Failure by the Contractor to follow Standard Specification or Special Provision - Section 637 and/or the Contractor's own Soil Erosion and Pollution Control Plan concerning Dust Control and/or the Contractor's own Traffic Control Plan concerning Dust Control and/or visible evidence of excessive dust problems, as determined by the Resident, will result in a reduction in payment, computed by reducing the Lump Sum Total by 5% per occurrence per day. The Department's Resident or any other representative of the Department reserves the right to suspend the work at any time and request a meeting to discuss violations and remedies. The Department shall not be held responsible for any delay in the work due to any suspension under this item. Additional penalties may also be assessed in accordance with Special Provision 652 - Work Zone Traffic Control and Standard Specification 656 - Temporary Soil Erosion and Water Pollution Control."

SECTION 639
ENGINEERING FACILITIES

639.04 Field Offices Change the forth to last paragraph from: "The Contractor shall provide a fully functional desktop copier…" to "….desktop copier/scanner…"

Description Change "Floor Area" to "Floor Area (Outside Dimension)". Change Type B floor area from "15 (160)" to "20 (217)".

639.09 Telephone Paragraph 1 is amended as follows:
"The contractor shall provide **two** telephone lines and two telephones,…."

Add- "In addition the contractor will supply one computer broadband connection, modem lease and router. The router shall have wireless access and be 802.11n or 802.11g capable and wireless. The type of connection supplied will be contingent upon the availability of services (i.e. DSL or Cable Broadband). It shall be the contractor's option to provide dynamic or static IP addresses through the service. **The selected service will have a minimum downstream connection of 1.5 Mbps and 384 Kbps upstream.** The contractor shall be responsible for the installation charges and all reinstallation charges following suspended periods. Monthly service and maintenance charges shall be billed by the Internet Service Provider (ISP) directly to the contractor."

SECTION 652
MAINTENANCE OF TRAFFIC

652.2.3 Flashing Arrow Board Delete the existing 5 paragraphs and replace with the following:
Flashing Arrow Panels (FAP) must be of a type that has been submitted to AASHTO's National Transportation Product Evaluation Program (NTPEP) for evaluation and placed on the Maine Department of Transportations' Approved Products List of Portable Changeable Message Signs & Flashing Arrow Panels.

FAP units shall meet requirements of the current Manual on Uniform Traffic Control Devices (MUTCD) for Type "C" panels as described in Section 6F.56 - Temporary Traffic Control Devices. An FAP shall have matrix of a minimum of 15 low-glare, sealed beam, Par 46 elements capable of either flashing or sequential displays as well as the various operating modes as described in the MUTCD, Chapter 6-F. If an FAP consisting of a bulb matrix is used, each element should be recess-mounted or equipped with an upper hood of not less than 180 degrees. The color presented by the elements shall be yellow.

FAP elements shall be capable of at least a 50 percent dimming from full brilliance. Full brilliance should be used for daytime operation and the dimmed mode shall be used for nighttime operation. FAP shall be at least 2.4 M x 1.2 M [96" x 48"] and finished in non-reflective black. The FAP shall be interpretable for a distance not less than 1.6 km [1 mile].

Operating modes shall include, flashing arrow, sequential arrow, sequential chevron, flashing double arrow, and flashing caution. In the three arrow signals, the second light from the arrow point shall not operate.

The minimum element on-time shall be 50 percent for the flashing mode, with equal intervals of 25 percent for each sequential phase. The flashing rate shall be not less than 25 nor more than 40 flashes per minute. All on-board circuitry shall be solid state.

Primary power source shall be 12 volt solar with a battery back-up to provide continuous operation when failure of the primary power source occurs, up to 30 days with fully charged batteries. Batteries must be capable of being charged from an onboard 110 volt AC power source and the unit shall be equipped with a cable for this purpose.

Controller and battery compartments shall be enclosed in lockable, weather-tight boxes.
The FAP shall be mounted on a pneumatic-tired trailer or other suitable support for hauling to various locations, as directed. The minimum mounting height of an arrow panel should be 2.1 M [7 feet] from the roadway to the bottom of the panel.

The face of the trailer shall be delineated on a permanent basis by affixing retro-reflective material, known as conspicuity material, in a continuous line as seen by oncoming drivers.

A portable changeable message sign may be used to simulate an arrow panel display."

652.2.4 Other Devices Delete the last paragraph and add the following:
"652.2.5 Portable Changeable Message Sign Trailer mounted Portable Changeable Message Signs (PCMS) must be of a type that has been submitted to AASHTO's National Transportation Product Evaluation Program (NTPEP) for evaluation and placed on the Maine Department of Transportations' Approved Products List of Portable Changeable Message Signs & Flashing Arrow Panels. The PCMS unit shall meet or exceed the current specifications of the Manual on Uniform Traffic Control Devices (MUTCD), 6F.55.

The front face of the sign should be covered with a low-glare protective material. The color of the LED elements shall be amber on a black background. The PCMS should be visible from a distance of 0.8 km [0.5 mile] day and night and have a minimum 15º viewing angle. Characters must be legible from a distance of at least 200 M [650 feet].

The message panel should have adjustable display rates (minimum of 3 seconds per phase), so that the entire message can be read at least twice at the posted speed, the off-peak 85th-percentile speed prior to work starting, or the anticipated operating speed. Each message shall consist of either one or two phases. A phase shall consist of up to eight characters per line. The unit must be capable of displaying at least three lines of text with eight characters per line. Each character shall be 457 mm [18"] high. Each character module shall use at least a five wide and seven high pixel matrix. The text of the messages shall not scroll or travel horizontally or vertically across the face of the sign.

Units shall automatically adjust their brightness under varying light conditions to maintain legibility.

The control system shall include a display screen upon which messages can be reviewed before being displayed on the message sign. The control system shall be capable of maintaining memory when power is unavailable. Message must be changeable with either a notebook computer or an on-board keypad. The controller shall have the capability to store a minimum of 200 user-defined and 200 pre-programmed messages. Controller and battery compartments shall be enclosed in lockable, weather-tight boxes.

PCMS units shall have the capability of being made programmable by means of wireless communications. PCMS units shall also be fully capable of having an on-board radar system installed if required for a particular application.

PCMS' primary power source shall be solar with a battery back-up to provide continuous operation when failure of the primary power source occurs. Batteries must be capable of being charged from a 110 volt AC power source. The unit must also be capable of being operated solely from a 110 volt AC power source and be equipped with a cable for this purpose.

The PCMS shall be mounted on a trailer in such a way that the bottom of the message sign panel shall be a minimum of 2.1 M [7 ft] above the roadway in urban areas and 1.5 M [5 ft] above the roadway in rural areas when it is in the operating mode. PCMS trailers should be of a heavy duty type with a 51 mm [2"] ball hitch and a minimum of four leveling jacks (at each corner). The sign shall be capable of being rotated 360° relative to the trailer. The face of the trailer shall be delineated on a permanent basis by affixing retro-reflective material, known as conspicuity material, in a continuous line as seen by oncoming drivers."

652.3.3 Submittal of Traffic Control Plan In item e. change "A list of all certified flaggers…" to "A list of all the Contractor's certified flaggers…"

Change a. in the list of requirements to: "a. The name, telephone number, and other contact numbers (cellular phone, pager, if any) of the Contractor's Traffic Control Supervisor (the person with overall responsibility for following the TCP), who has received Work Zone Traffic Control Training commensurate with the level of responsibility shown in the requirements of the Contract, and who is empowered to immediately resolve any work zone traffic control deficiencies or issues. Provide documentation that the Traffic Control Supervisor has completed a Work Zone Traffic Control Training Course (AGC, ATSSA, or other industry-recognized training), and a Supervisory refresher training every 5 years thereafter. Submit the course name, training entity, and date of training.

Traffic Control Training Course curriculum must be based on the standards and guidelines of the MUTCD and must include, at a minimum, the following:

1. Parts of Temporary Traffic Control Zone
2. Appropriate use and spacing of signs
3. Use and spacing of channelizing devices
4. Flagging basics
5. Typical examples and applications

The Traffic Control Supervisor, or designee directly overseeing physical installation, adjustment, and dismantling of work zone traffic control, will ensure all personnel performing those activities are trained to execute the work in a safe and proper manner, in accordance with their level of decision-making and responsibility."

Add the follow to the list of requirements: "k. The plan for unexpected nighttime work along with a list of emergency nighttime equipment available on-site."

In the last paragraph add the following as the second sentence: "The Department will review and provide comments to the Contractor within 14 days of receipt of the TCP." Add the following as the last sentence: "The creation and modification of the TCP will be considered incidental to the related 652 items."

652.3.5 Installation of Traffic Control Devices In the first paragraph, first sentence; change "Signs shall be erected…" to "Portable signs shall be erected.." In the third sentence; change "Signs must be erected so that the sign face…" to "Post-mounted signs must also be erected so that the sign face…"

652.4 Flaggers Replace the first paragraph with the following; "The Contractor shall furnish flaggers as required by the TCP or as otherwise specified by the Resident. All flaggers must have successfully completed a flagger test approved by the Department and administered by a Department-approved Flagger-Certifier who is employing that flagger. All flaggers must carry an official certification card with them while flagging that has been issued by their employer. Flaggers shall wear safety apparel meeting ANSI 107-2004 Class 2 risk exposure that clearly identifies the wearer as a person, and is visible at a minimum distance of 300 m [1000 ft], and shall wear a hardhat with 360° retro-reflectivity. For nighttime conditions, Class 3 apparel, meeting ANSI 107-2004, shall be worn along with a hardhat with 360° retro-reflectivity. Retro-reflective or flashing SLOW/STOP paddles shall be used, and the flagger station shall be illuminated to assure visibility in accordance with 652.6.2."

Second paragraph, first sentence; change "…have sufficient distance to stop before entering the workspace." to "…have sufficient distance to stop at the intended stopping point." Third sentence; change "At a spot obstruction…" to "At a spot obstruction with adequate sight distance,…"

Fourth paragraph, delete and replace with "Flaggers shall be provided as a minimum, a 10 minute break, every 2 hours and a 30 minute or longer lunch period away from the work station. Flaggers may only receive 1 unpaid break per day; all other breaks must be paid. Sufficient certified flaggers shall be available onsite to provide for continuous flagging operations during break periods. If the flaggers are receiving the appropriate breaks, breaker flagger(s) shall be paid starting 2 hours after the work begins and ending 2 hours before the work ends. A maximum of 1 breaker per 6 flaggers will be paid. (1 breaker flagger for 2 to 6 flaggers, 2 breaker flaggers for 7 to 12 flaggers, etc)"

Add the following:
"652.5.1 Rumble Strip Crossing When lane shifts or lane closures require traffic to cross a permanent longitudinal rumble strip for 7 calendar days or less, the Contractor shall install warning signs that read "RUMBLE STRIP CROSSING" with a supplemental Motorcycle Plaque, (W8-15P).

When lane shifts or lane closures require traffic to cross a permanent longitudinal rumble strip for more than 7 calendar days, the Contractor shall pave in the rumble strips in the area that traffic will cross, unless otherwise directed by the Resident. Rumble strips shall be replaced prior to the end of the project, when it is no longer necessary to cross them."

652.6 Nightwork Delete this section entirely and replace with the following:
"652.6.1 Daylight Work Times Unless otherwise described in the Contract, the Contractor is allowed to commence work and end work daily according to the Sunrise/Sunset Table at: http://www.sunrisesunset.com/usa/Maine.asp . If the Project town is not listed, the closest town on the list will be used as agreed at the Preconstruction Meeting. Any work conducted before sunrise or after sunset will be considered Night Work.

652.6.2 Night Work When Night Work occurs (either scheduled or unscheduled), the Contractor shall provide and maintain lighting on all equipment and at all work stations.

The lighting facilities shall be capable of providing light of sufficient intensity to permit good workmanship, safety and proper inspection at all times. The lighting shall be cut off and arranged on stanchions at a height that will provide perimeter lighting for each piece of equipment and will not interfere with traffic, including commercial vehicles, approaching the work site from either direction.

The Contractor shall have available portable floodlights for special areas.

The Contractor shall utilize padding, shielding or other insulation of mechanical and electrical equipment, if necessary, to minimize noise, and shall provide sufficient fuel, spare lamps, generators, etc. to maintain lighting of the work site.

The Contractor shall submit, as a subset of the Traffic Control Plan, a lighting plan at the Preconstruction Conference, showing the type and location of lights to be used for night work. The Resident may require modifications be made to the lighting set up in actual field conditions.

Prior to beginning any Night Work, the Contractor shall furnish a light meter for the Residents use that is capable of measuring the range of light levels from 5 to 20 foot-candles.

Horizontal illumination, for activities on the ground, shall be measured with the photometer parallel to the road surface. For purposes of roadway lighting, the photometer is placed on the pavement. Vertical illumination, for overhead activities, shall be measured with the photometer perpendicular to the road surface. Measurements shall be taken at the height and location of the overhead activity.

Night Work lighting requirements:

Mobile Operations: For mobile-type operations, each piece of equipment (paver, roller, milling machine, etc) will carry indirect (i.e. balloon type) lights capable of producing at least 10 foot-candles of lighting around the work area of the equipment.

Fixed Operations: For fixed-type operations (flaggers, curb, bridge, pipes, etc.), direct (i.e. tower) lighting will be utilized capable of illuminating the work area with at least 10 foot-candles of light.

Hybrid Operations: For hybrid-type operations (guardrail, sweeping, Inslope excavation, etc.), either direct or indirect lighting may be utilized. The chosen lights must be capable of producing at least 10 foot-candles of light around the work area of the equipment
Inspection Operations: Areas required to be inspected by the Department will require a minimum of 5 foot-candles of lighting. This may be accomplished through direct or indirect means.

All workers shall wear safety apparel labeled as meeting the ANSI 107-2004 standard performance for Class 3 risk exposure.

The Contractor shall apply 2- inch wide retro-reflective tape, with alternating red and white segments, to outline the front back and sides of construction vehicles and equipment, to define their shape and size to the extent practicable. Pickup trucks and personal vehicles are exempt from this requirement. The Contractor shall furnish approved signs reading "Construction Vehicle - Keep Back" to be used on trucks hauling to the project when such signs are deemed necessary by the Resident. The signs shall be a minimum of 30 inches by 60 inches, Black and Orange, ASTM D 4956 - Type VII, Type VIII, or Type IX (prismatic).

All vehicles used on the project, including pickup trucks and personal vehicles, shall be equipped with amber flashing lights, visible from both front and rear, or by means of single, approved type, revolving, flashing or strobe lights mounted so as to be visible 360º. The vehicle flashing system shall be in continuous operation while the vehicle is on any part of the project.

The Resident or any other representative of the Department reserves the right to suspend the work at any time and request a meeting to discuss violations and remedies. The Department shall not be held responsible for any delay in the work due to any suspension under this item. Failure to follow the approved Lighting Plan will result in a Traffic Control violation.

Payment for lighting, vehicle mounted signs and other costs accrued because of night work will not be made directly but will be considered incidental to the related contract items."

652.8.2 Other Items Replace the first paragraph with the following: "The accepted quantities of flagger hours will be paid for at the contract unit price per hour for each flagging station occupied excluding lunch breaks, and for each approved breaker flagger. Overtime hours, as reported on the certified payrolls, will be paid an additional 30% of the bid price for 652.38. The computation and additional payment for overtime hours will occur during the project close-out process and will be paid as additional hours of 652.38 to the nearest ¼ hour. The contract unit price shall be full compensation for hiring, transporting, equipping, supervising, and the payment of flaggers and all overhead and incidentals necessary to complete the work."
Replace the last paragraph with the following: "There will be no payment made under any 652 pay items after the expiration of the adjusted total contract time."

SECTION 653
POLYSTYRENE PLASTIC INSULATION

653.05 Placing Backfill In the second sentence; change "…shall be not less than 150 mm [6 in] loose measure." to "…shall be not less than 250 mm [10 in] loose measure." In the third sentence; change "…crawler type bulldozer of not more than 390 kg/m^2 [80 lb/ft^2] ground contact pressure…" to "…crawler type bulldozer of not more than 4875 kg/m^2 [2000 lb/ft^2] ground contact pressure…"

653.06 Compaction In the last sentence; change "…not more than 390 kg/m^2 [80 lb/ft^2] ground contact…" to "…not more than 4875 kg/m^2 [2000 lb/ft^2] ground contact…"

SECTION 656
TEMPORARY SOIL EROSION AND WATER POLLUTION CONTROL

656.5.1 If Pay Item 656.75 Provided Replace the second paragraph with the following: "Failure by the Contractor to follow Standard Specification or Special Provision - Section 656 and/or the Contractor's own Soil Erosion and Water Pollution Control Plan (SEWPCP) will result in a violation letter and a reduction in payment as shown in the schedule below. The Department's Resident or any other representative of The Department reserves the right to suspend the work at any time and request a meeting to discuss violations and remedies. The Department shall not be held responsible for any delay in the work due to any suspension under this item.

ORIGINAL CONTRACT AMOUNT

From	Up to and	Amount of Penalty Damages per Violation		
More Than	Including	1st	2nd	3rd & Subsequent
$0	$1,000,000	$250	$500	$1,250
$1,000,000	$2,000,000	$500	$1,000	$2,500
$2,000,000	$4,000,000	$1,000	$2,000	$5,000
$4,000,000	and more	$2,000	$4,000	$10,000"

SECTION 701
STRUCTURAL CONCRETE RELATED MATERIALS

701.10 Fly Ash - Chemical Requirements Change all references from "ASTM C311" to "ASTM C114".

SECTION 703
AGGREGATES

703.05 Aggregate for Sand Leveling Change the percent passing the 9.5 mm [3/8 in] sieve from "85 – 10" to "85 – 100"

703.06 Aggregate for Base and Subbase Delete the first paragraph: "The material shall have…" and replace with "The material shall have a minimum degradation value of 15 as determined by Washington State DOT Test Method T113, Method of Test for Determination of Degradation Value (January 2009 version), except that the reported degradation value will be the result of testing a single specimen from that portion of a sample that passes the 12.5 mm [½ in] sieve and is retained on the 2.00 mm [No. 10] sieve, minus any reclaimed asphalt pavement used."

703.18 Common Borrow Replace the first paragraph with the following: "Common borrow shall consist of earth, suitable for embankment construction. It shall be free from frozen material, perishable rubbish, peat, and other unsuitable material including material currently or previously contaminated by chemical, radiological, or biological agents unless the material is from a DOT project and authorized by DEP for use."

703.22 Underdrain Backfill Material Change the first paragraph from "…for Underdrain Type B…" to "…for Underdrain Type B and C…"

Replace subsections 703.25 through 703.28 with the following:
"703.25 Stone Fill Stones for stone fill shall consist of hard, sound, durable rock that will not disintegrate by exposure to water or weather. Stone for stone fill shall be angular and rough. Rounded, subrounded, or long thin stones will not be allowed. Stone for stone fill may be obtained from quarries or by screening oversized rock from earth borrow pits. The maximum allowable length to thickness ratio will be 3:1. The minimum stone size (10 lbs) shall have an average dimension of 5 inches. The maximum stone size (500 lbs) shall have a maximum dimension of approximately 36 inches. Larger stones may be used if approved by the Resident. Fifty percent of the stones by volume shall have an average dimension of 12 inches (200 lbs).

703.26 Plain and Hand Laid Riprap Stone for riprap shall consist of hard, sound durable rock that will not disintegrate by exposure to water or weather. Stone for riprap shall be angular and rough. Rounded, subrounded or long thin stones will not be allowed. The maximum allowable length to width ratio will be 3:1. Stone for riprap may be obtained from quarries or by screening oversized rock from earth borrow pits. The minimum stone size (10 lbs) shall have an average dimension of 5 inches. The maximum stone size (200 lbs) shall have an average dimension of approximately 12 inches. Larger stones may be used if approved by the Resident. Fifty percent of the stones by volume shall have an average dimension greater than 9 inches (50 lbs).

703.27 Stone Blanket Stones for stone blanket shall consist of sound durable rock that will not disintegrate by exposure to water or weather. Stone for stone blanket shall be angular and rough. Rounded or subrounded stones will not be allowed. Stones may be obtained from quarries or by screening oversized rock from earth borrow pits. The minimum stone size (300 lbs) shall have minimum dimension of 14 inches, and the maximum stone size (3000 lbs) shall have a maximum dimension of approximately 66 inches. Fifty percent of the stones by volume shall have average dimension greater than 24 inches (1000 lbs).

703.28 Heavy Riprap Stone for heavy riprap shall consist of hard, sound, durable rock that will not disintegrate by exposure to water or weather. Stone for heavy riprap shall be angular and rough. Rounded, subrounded, or thin, flat stones will not be allowed. The maximum allowable length to width ratio will be 3:1. Stone for heavy riprap may be obtained from quarries or by screening oversized rock from earth borrow pits. The minimum stone size (500 lbs) shall have minimum dimension of 15 inches, and at least fifty percent of the stones by volume shall have an average dimension greater than 24 inches (1000 lbs)."

Add the following paragraph:
"703.32 Definitions (ASTM D 2488, Table 1).
Angular: Particles have sharp edges and relatively plane sides with unpolished surfaces
Subrounded: Particles have nearly plane sides but have well-rounded corners and edges
Rounded: Particles have smoothly curved sides and no edges"

SECTION 706
NON-METALLIC PIPE

706.06 Corrugated Polyethylene Pipe for Underdrain, Option I and Option III Culvert Pipe Change the first sentence from "…300 mm diameters to 900 mm" to "…300 mm diameters to 1200 mm" Delete, in its' entirety, the last sentence which begins "This pipe and resins…" and replace with the following; "Manufacturers of corrugated polyethylene pipe must participate in, and maintain compliance with, AASHTO's National Transportation Product Evaluation Program (www.ntpep.org) which audits producers of plastic pipe. A certificate of compliance must be provided with each shipment."

SECTION 708
PAINTS AND PERSERVATIVES

708.03 Pavement Marking Paint Change the first sentence from "…AASHTO M248" to "…the Maine DOT Maintenance Fast-Dry Water-Based Traffic Paint on file at the Traffic Section in Augusta". Delete, in its' entirety, the last sentence.

SECTION 709
REINFORCING STEEL AND WELDED STEEL WIRE FABIC

709.03 Steel Strand Change the second paragraph from "…shall be 12mm [½ inch] AASHTO M203M/M203 (ASTM A416/A416M)…" to "…shall be 15.24 mm [0.600 inch] diameter AASHTO M203 (ASTM A416)…"

SECTION 710
FENCE AND GUARDRAIL

710.03 Chain Link Fabric Add the following sentence: "Chain Link fabric for PVC coated shall conform to the requirements of AASHTO M181, Type IV-Class B."

710.04 Metal Beam Rail Replace with the following: "Galvanized steel rail elements shall conform to the requirements of AASHTO M 180, Class A, Type II.

When corrosion resistant steel is specified, rail shall conform to AASHTO M 180, Class A, Type IV. Beams of corrosion resistant steel shall not be painted or galvanized. They shall be so handled and stored that the traffic face of these beams, used in a continuous run of guardrail, shall not show a distinctive color differential.

When metal beam rail is to be installed on a curve having a radius of curvature of 150 ft. or less, the beam sections shall be fabricated on an arc to the required radius and permanently stamped or embossed with the designated radius.

The engineer may take one piece of guardrail, a backup plate, and end or buffer section from each 200 pieces in a lot, or from each lot if less than 200 pieces are included therein for determination of compliance with specification requirements.

If one piece fails to conform to the requirements of this specification, two other pieces shall be tested. If either of these pieces fails to conform to the requirements of this specification, the lot of material represented by these samples shall be rejected. A lot shall be considered that quantity of material offered for inspection at one time that bears the same heat and coating identification."

710.07 Guardrail Posts Section b. change "…AASHTO M183/M183M…" to "…AASHTO M 270M/M 270 Grade 250 (36)…"

SECTION 712
MISCELLANEOUS HIGHWAY MATERIALS

712.04 Stone Curbing and Edging Delete the existing and replace with the following: "Stone for curbing and edging shall be approved granite from acceptable sources. The stone shall be hard and durable, predominantly gray in color, free from seams that would be likely to impair its structural integrity, and of a smooth splitting character. Natural grain size and color variations characteristic of the source deposit will be permitted. Such natural variations may include bands or clusters of mineral crystallization provided they do not impair the structural integrity of the curb stone. The Contractor shall submit for approval the name of the quarry that is the proposed source of the granite for curb materials along with full scale color photos of the granite. Such submission shall be made sufficiently in advance of ordering so that the Resident may have an opportunity to judge the stone, both as to quality and appearance. Samples of curbing shall be submitted for approval only when requested by the Resident. The dimensions, shape, and other details shall be as shown on the plans."

712.06 Precast Concrete Units In the first paragraph, change "…ASTM C478M…" to "…AASHTO M199…" Delete the second paragraph and replace with the following; "Approved structural fibers may be used as a replacement of 6 x 6 #10 gauge welded wire fabric when used at an approved dosage rate for the construction of manhole and catch basin units. The material used shall be one of the products listed on the Maine Department of Transportation's Approved Product List of Structural Fiber Reinforcement." Delete the fifth paragraph and replace with the following; "The concrete mix design shall be approved by the Department. Concrete shall contain 6% air content, plus or minus 1½% tolerance when tested according to AASHTO T152. All concrete shall develop a minimum compressive strength of 28 MPa [4000 psi] in 28 days when tested according to AASHTO T22. The absorption of a specimen, when tested according to AASHTO T280, Test Method "A", shall not exceed nine percent of the dry mass."

Add the following:
"712.07 Tops, and Traps These metal units shall conform to the plan dimensions and to the following specification requirements for the designated materials.

Gray iron or ductile iron castings shall conform to the requirements of AASHTO M306 unless otherwise designated."

712.08 Corrugated Metal Units The units shall conform to plan dimensions and the metal to AASHTO M36/M36M. Bituminous coating, when specified, shall conform to AASHTO M190 Type A.

712.09 Catch Basin and Manhole Steps Steps for catch basins and for manholes shall conform to ASTM C478M [ASTM C478], Section 13 for either of the following material:

(a) Aluminum steps-ASTM B221M, [ASTM B211] Alloy 6061-T6 or 6005-T5.

(b) Reinforced plastic steps Steel reinforcing bar with injection molded plastic coating copolymer polypropylene. Polypropylene shall conform to ASTM D 4101.

712.23 Flashing Lights Flashing Lights shall be power operated or battery operated as specified.

(a) Power operated flashing lights shall consist of housing, adapters, lamps, sockets, reflectors, lens, hoods and other necessary equipment designed to give clearly visible signal indications within an angle of at least 45 degrees and from 3 to 90 m [10 to 300 ft] under all light and atmospheric conditions.

Two circuit flasher controllers with a two-circuit filter capable of providing alternate flashing operations at the rate of not less than 50 nor more than 60 flashes per minute shall be provided.

The lamps shall be 650 lumens, 120 volt traffic signal lamps with sockets constructed to properly focus and hold the lamp firmly in position.
The housing shall have a rotatable sun visor not less than 175 mm [7 in] in length designed to shield the lens.

Reflectors shall be of such design that light from a properly focused lamp will reflect the light rays parallel. Reflectors shall have a maximum diameter at the point of contact with the lens of approximately 200 mm [8 in].

The lens shall consist of a round one-piece convex amber material which, when mounted, shall have a visible diameter of approximately 200 mm [8 in]. They shall distribute light and not diffuse it. The distribution of the light shall be asymmetrical in a downward direction. The light distribution of the lens shall not be uniform, but shall consist of a small high intensity portion with narrow distribution for long distance throw and a larger low intensity portion with wide distribution for short distance throw. Lenses shall be marked to indicate the top and bottom of the lens.

(b) Battery operated flashing lights shall be self- illuminated by an electric lamp behind the lens. These lights shall also be externally illuminated by reflex-reflective elements built into the lens to enable it to be seen by reflex-reflection of the light from the headlights of oncoming traffic. The batteries must be entirely enclosed in a case. A locking device must secure the case. The light shall have a flash rate of not less than 50 nor more than 60 flashes per minute from minus 30 °C [minus 20 °F] to plus 65 °C [plus 150 °F]. The light shall have an on time of not less than 10 percent of the flash cycle. The light beam projected upon a surface perpendicular to the axis of the light beam shall produce a lighted rectangular projection whose minimum horizontal dimension shall be 5 degrees each side of the horizontal axis. The effective intensity shall not have an initial value greater than 15.0 candelas or drop below 4.0 candelas during the first 336 hours of continuous flashing.

The illuminated lens shall appear to be uniformly bright over its entire illuminated surface when viewed from any point within an angle of 9 degrees each side of the vertical axis and 5 degrees each side of the horizontal axis. The lens shall not be less than 175 mm [7 in] in diameter including a reflex-reflector ring of 13 mm [½ in] minimum width around the periphery. The lens shall be yellow in color and have a minimum relative luminous transmittance of 0.440 with a luminance of 2854° Kelvin. The lens shall be one-piece construction. The lens material shall be plastic and meet the luminous transmission requirements of this specification. The case containing the batteries and circuitry shall be constructed of a material capable of withstanding abuse equal to or greater than 1.21 mm thick steel [No. 18 U.S. Standard Gage Steel]. The housing and the lens frame, if of metal shall be properly cleaned, degreased and pretreated to promote adhesion. It shall be given one or more coats of enamel which, when dry shall completely obscure the metal. The enamel coating shall be of such quality that when the coated case is struck a light blow with a sharp tool, the paint will not chip or crack and if scratched with a knife will not powder. The case shall be so constructed and closed as to exclude moisture that would affect the proper operation of light. The case shall have a weep hole to allow the escape of moisture from condensation. Photoelectric controls, if provided, shall keep the light operating whenever the ambient light falls below 215 lx [20 foot candles]. Each light shall be plainly marked as to the manufacturer's name and model number.

If required by the Resident, certification as to conformance to these specifications shall be furnished based on results of tests made by an independent testing laboratory. All lights are subject to random inspection and testing. All necessary random samples shall be provided to the Resident upon request without cost to the Department. All such samples shall be returned to the Contractor upon completion of the tests.

712.32 Copper Tubing Copper tubing and fittings shall conform to the requirements of ASTM B88M Type A [ASTM B88, Type K] or better.

712.33 Non-metallic Pipe, Flexible Non-metallic pipe and pipe fittings shall be acceptable flexible pipe manufactured from virgin polyethylene polymer suitable for transmitting liquids intended for human or animal consumption.

712.34 Non-metallic Pipe, Rigid Non-metallic pipe shall be Schedule 40 polyvinylchloride (PVC) that meets the requirement of ASTM D1785. Fittings shall be of the same material.

712.341 Metallic Pipe Metallic pipe shall be ANSI, Standard B36.10, Schedule 40 steel pipe conforming to the requirements of ASTM A53 Types E or S, Grade B. End plates shall be steel conforming to ASTM A36/A36M.

Both the sleeve and end plates shall be hot dip galvanized. Pipe sleeve splices shall be welded splices with full penetration weld before galvanizing.

712.35 Epoxy Resin Epoxy resin for grouting or sealing shall consist of a mineral filled thixotropic, flexible epoxy resin having a pot life of approximately one hour at 10°C [50°F]. The grout shall be an approved product suitable for cementing steel dowels into the preformed holes of curb inlets and adjacent curbing. The sealant shall be an approved product, light gray in color and suitable for coating the surface.

712.36 Bituminous Curb The asphalt cement for bituminous curb shall be of the grade required for the wearing course, or shall be Viscosity Grade AC-20 meeting the current requirements of Subsection 702.01 Asphalt Cement. The aggregate shall conform to the requirements of Subsection 703.07. The coarse aggregate portion retained on the 2.36 mm [No. 8] sieve may be either crushed rock or crushed gravel.

The mineral constituents of the bituminous mixture shall be sized and graded and combined in a composite blend that will produce a stable durable curbing with an acceptable texture.

Bituminous material for curb shall meet the requirements of Section 403 - Hot Bituminous Pavement.

712.37 Precast Concrete Slab Portland cement concrete for precast slabs shall meet the requirements of Section 502 - Structural Concrete, Class A.

The slabs shall be precast to the dimension shown on the plans and cross section and in accordance with the Standard Detail plans for Concrete Sidewalk Slab. The surface shall be finished with a float finish in accordance with Subsection 502.14(c). Lift devices of sufficient strength to hold the slab while suspended from cables shall be cast into the top or back of the slab.

712.38 Stone Slab Stone slabs shall be of granite from an acceptable source, hard, durable, predominantly gray in color, free from seams which impair the structural integrity and be of smooth splitting character. Natural color variations characteristic of the deposit will be permitted. Exposed surfaces shall be free from drill holes or indications of drill holes. The granite slabs in any one section of backslope must be all the same finish.

The granite slabs shall be scabble dressed or sawed to an approximately true plane having no projections or depressions over 13 mm [½ in] under a 600 mm [2 ft] straightedge or over 25 mm [1 in] under a 1200 mm [4 ft] straightedge. The arris at the intersection of the top surface and exposed front face shall be pitched so that the arris line is uniform throughout the length of the installed slabs. The sides shall be square to the exposed face unless the slabs are to be set on a radius or other special condition which requires that the joints be cut to fit, but in any case shall be so finished that when the stones are placed side by side no space more than 20 mm [3/4 in] shall show in the joint for the full exposed height.

Liftpin holes in all sides will be allowed except on the exposed face.

SECTION 717
ROADSIDE IMPROVEMENT MATERIAL

717.03 C. Method #3 - Roadside Mixture #3 Change the seed proportions to the following:

Crown Vetch	25%
Perennial Lupine	25%
Red Clover	12.5%
Annual Rye	37.5%

717.05 Mulch Binder Change the third sentence to read as follows:

"Paper fiber mulch may be used as a binder at the rate of 2.3 kg/unit [5 lb/unit]."

SECTION 720
STRUCTURAL SUPPORTS FOR HIGHWAY SIGNS, LUMINAIRES, AND TRAFFIC SIGNALS

720.08 U-Channel Posts Change the first sentence from "…, U-Channel posts…" to "…, Rib Back U-Channel posts…"

SECTION 722
GEOTEXTILES

722.01 Stabilization/Reinforcement Geotextile Add the following to note #3; "The strengths specified in the columns labeled"<50%" and "≥ 50%" refer to the elongation at which the geotextile material was tested. For example; if a fabric is tested at 15% elongation then it must meet or exceed the minimum strength shown in the "<50%" column. Submittals must include the percent elongation at which the material was tested."

722.02 Drainage Geotextile Add the following to note #3; "The strengths specified in the columns labeled"<50%" and "≥ 50%" refer to the elongation at which the geotextile material was tested. For example; if a fabric is tested at 15% elongation then it must meet or exceed the minimum strength shown in the "<50%" column. Submittals must include the percent elongation at which the material was tested."

722.01 Erosion Control Geotextile Add the following note to Elongation in the Mechanical Property Table; "The strengths specified in the columns labeled"<50%" and "≥ 50%" refer to the elongation at which the geotextile material was tested. For example; if a fabric is tested at 15% elongation then it must meet or exceed the minimum strength shown in the "<50%" column. Submittals must include the percent elongation at which the material was tested."

Environmental Summary Sheet

Win: 20246.00 **Date Submitted: 3/27/14**
Town: Auburn
CPD Team Leader: Laurie Rowe
ENV Field Contact: John Maclaine

NEPA Complete: No FHWA $

☒ **Section 106**
No Federal Action
Section 106 Resources:

☒ **Section 4(f) and 6(f)**
Section 4(f)
Review Complete- No USDOT $
Section 6(f)
Not Applicable

☒ **Maine Department of Inland Fisheries and Wildlife Essential Habitat**

Not Applicable **Timing Window: Not Applicable**

☒ **Section 7**
Not Applicable- No Federal Action

☒ **Maine Department of Conservation/Public Lands, Submerged Land Lease**
Not Applicable

☒ **Maine Department of Environmental Protection**
Not Applicable
**Applicable Standards and Permits are included with the contract*

☒ **Army Corps of Engineers, Section 10 of the Rivers and Harbors Act and Section 404 of the Clean Water Act.**
Not Applicable
**Applicable Standards and Permits are included with the contract*

☒ **Stormwater Review**
N/A

☒ **Special Provisions Required**

Special Provision 105-Timing of Work Restriction	N/A☒	Applicable☐
Special Provision 656-Erosion Control Plan	N/A☐	Applicable☒
Special Provision 203-Dredge Spec	N/A☒	Applicable☐
General Note for Hazardous Waste	N/A☒	Applicable☐
Special Provision 203-Hazardous Waste	N/A☒	Applicable☐
Special Provision 105.9	N/A☒	Applicable☐

**All permits and approvals based on plans/scope as of: 12/12/13*