STATE OF MAINE
DEPARTMENT OF TRANSPORTATION

HANCOCK MAINTENANCE SALT SHED

WIN 20137.00

SPECIFICATIONS

Design: International Building Code 2012

DESIGN LOADING

Live Load ..... Impact of 30,000lb Vehicle
Ground Snow Load 60psf
Wind Load 105mph
Exposure C, Catagory I

MATERIALS

Reinforcing Steel ..... ASTM A615, Grade 60, Epoxy Coated
Structural Steel:
All Material (except as noted) ..... ASTM A709, Grade 36
Glulam Arch 24F-V5
Anchor Bolts ..... ASTM F1554, Grade 36

BASIC DESIGN STRESSES

Concrete ..... f 'c = 4,350 psi
Reinforcing Steel ..... f y = 60,000 psi

LIST OF DRAWINGS

Title Sheet 1
General Site Plan 2
Foundation Plan 3
Foundation Reinforcing Plan 4
North & South Sidewall Dimensional Details 5
North & South Sidewall Reinforcing Details 6
East End Wall Dimensional Details 7
East End Wall Reinforcing Details 8
West End Wall Dimensional Details 9
West End Wall Reinforcing Details 10
East End Wall Framing Details 11
West End Wall Framing Details 12
Electrical Plan 13
General Lot Plan 14

PROJECT LOCATION:	Thorsen Rd. 5ooft South from intersection of Main St, Washington Junction Rd & Thorsen Rd. Hancock, Maine
PROGRAM AREA:	Highway Maintenance Program
OUTLINE OF WORK:	Construction of Salt Storage Building

WIN 20137.00

STATE OF MAINE
DEPARTMENT OF TRANSPORTATION
APPROVED
COMMISSIONER: DATE 4/2/14
CHIEF ENGINEER: DATE 4-1-14

STATE OF MAINE ERIC J. CALDERWOOD No. 9099 LICENSED PROFESSIONAL ENGINEER

SIGNATURE
9099
P.E. NUMBER
JANUARY 2014
DATE

PROJECT INFORMATION

PROGRAM	HIGHWAY
PROJECT MANAGER	R. GRADIE
DESIGNER	O. KRAUSS
CONSULTANT	CALDERWOOD ENGINEERING
PROJECT RESIDENT	
CONTRACTOR	
PROJECT COMPLETION DATE	

HANCOCK MAINTENANCE SALT SHED

TITLE SHEET

SHEET NUMBER
1
OF 14

Filename:\Plans\001_Title.dgn Division: BRIDGE Username: common Date:3/14/2014

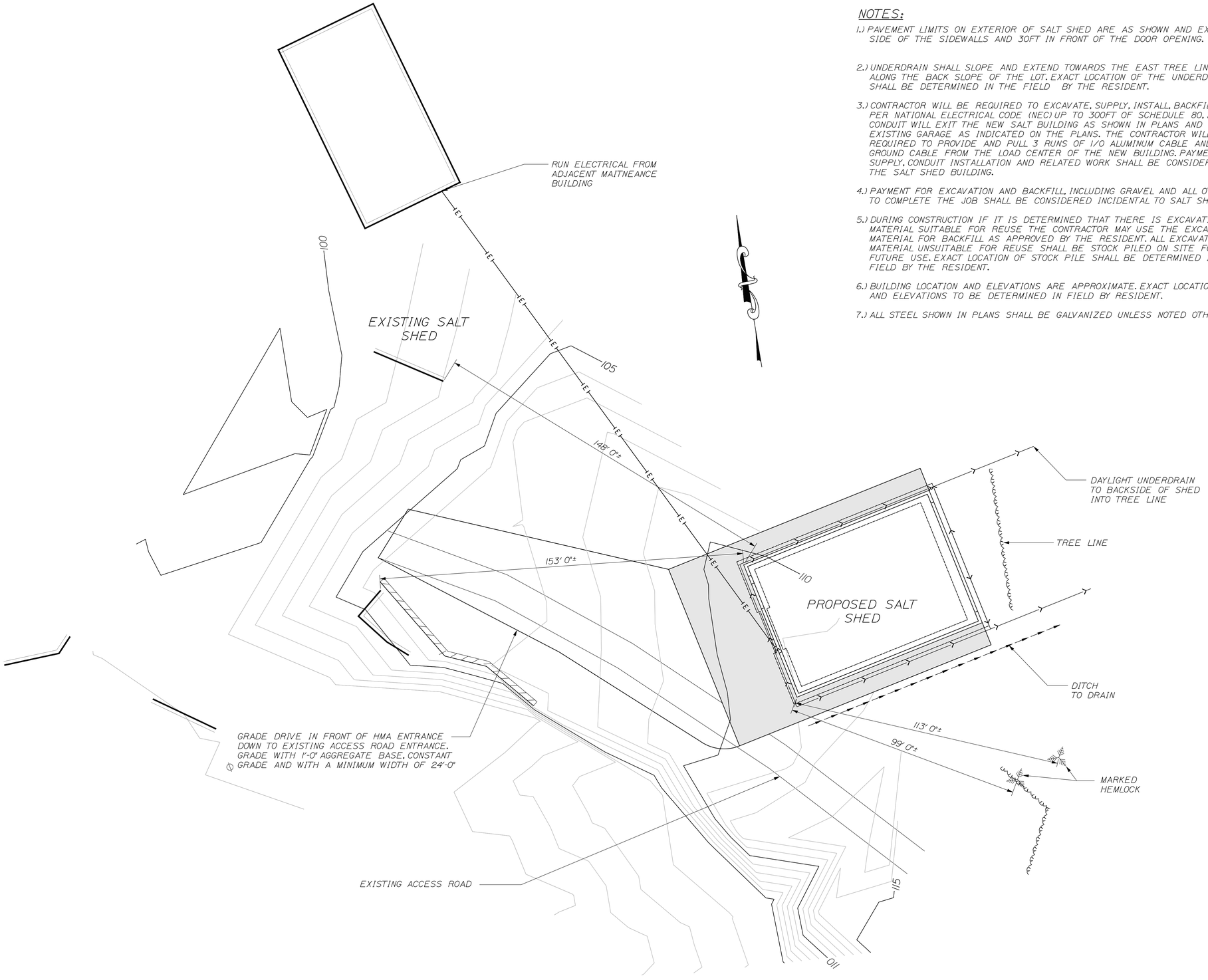

NOTES:

1.) PAVEMENT LIMITS ON EXTERIOR OF SALT SHED ARE AS SHOWN AND EXTEND 10FT ALONG EITHER SIDE OF THE SIDEWALLS AND 30FT IN FRONT OF THE DOOR OPENING.

2.) UNDERDRAIN SHALL SLOPE AND EXTEND TOWARDS THE EAST TREE LINE AND DAYLIGHT ALONG THE BACK SLOPE OF THE LOT. EXACT LOCATION OF THE UNDERDRAIN TERMINATION SHALL BE DETERMINED IN THE FIELD BY THE RESIDENT.

3.) CONTRACTOR WILL BE REQUIRED TO EXCAVATE, SUPPLY, INSTALL, BACKFILL AND COMPACT, PER NATIONAL ELECTRICAL CODE (NEC) UP TO 300FT OF SCHEDULE 80, 2"ϕ CONDUIT. THE CONDUIT WILL EXIT THE NEW SALT BUILDING AS SHOWN IN PLANS AND TRAVEL TO THE EXISTING GARAGE AS INDICATED ON THE PLANS. THE CONTRACTOR WILL BE REQUIRED TO PROVIDE AND PULL 3 RUNS OF 1/0 ALUMINUM CABLE AND 1 RUN OF #6 ALUMINUM GROUND CABLE FROM THE LOAD CENTER OF THE NEW BUILDING. PAYMENT FOR ELECTRICAL SUPPLY, CONDUIT INSTALLATION AND RELATED WORK SHALL BE CONSIDERED INCIDENTAL TO THE SALT SHED BUILDING.

4.) PAYMENT FOR EXCAVATION AND BACKFILL, INCLUDING GRAVEL AND ALL OTHER WORK NECESSARY TO COMPLETE THE JOB SHALL BE CONSIDERED INCIDENTAL TO SALT SHED BUILDING.

5.) DURING CONSTRUCTION IF IT IS DETERMINED THAT THERE IS EXCAVATION MATERIAL SUITABLE FOR REUSE THE CONTRACTOR MAY USE THE EXCAVATED MATERIAL FOR BACKFILL AS APPROVED BY THE RESIDENT. ALL EXCAVATED MATERIAL UNSUITABLE FOR REUSE SHALL BE STOCK PILED ON SITE FOR FUTURE USE. EXACT LOCATION OF STOCK PILE SHALL BE DETERMINED IN THE FIELD BY THE RESIDENT.

6.) BUILDING LOCATION AND ELEVATIONS ARE APPROXIMATE. EXACT LOCATION OF BUILDING AND ELEVATIONS TO BE DETERMINED IN FIELD BY RESIDENT.

7.) ALL STEEL SHOWN IN PLANS SHALL BE GALVANIZED UNLESS NOTED OTHERWISE.

CALDERWOOD ENGINEERING, ETC.
STRUCTURAL ENGINEERING • DETAILING SERVICES
222 RIVER RD, RICHMOND, ME 04357 PH/FX (207)737-2007/(207) 737-2008

PREPARED FOR:
STATE OF MAINE DOT
HANCOCK, ME SALT SHED
WIN 20137.00

	BY	DATE
DESIGN-DETAILED		JAN 2014
CHECKED-REVIEWED		
REVISIONS 1		
REVISIONS 2		
REVISIONS 3		
REVISIONS 4		
FIELD CHANGES		

9099
P.E. NUMBER
JANUARY 2014
DATE

HANCOCK MAINTENANCE SALT SHED

GENERAL SITE PLAN

SHEET NUMBER
2
OF 14

Filename: ...\Plans\002_Gen Plan.dgnWorkgroup: Structures Division Username: common Date:3/14/2014

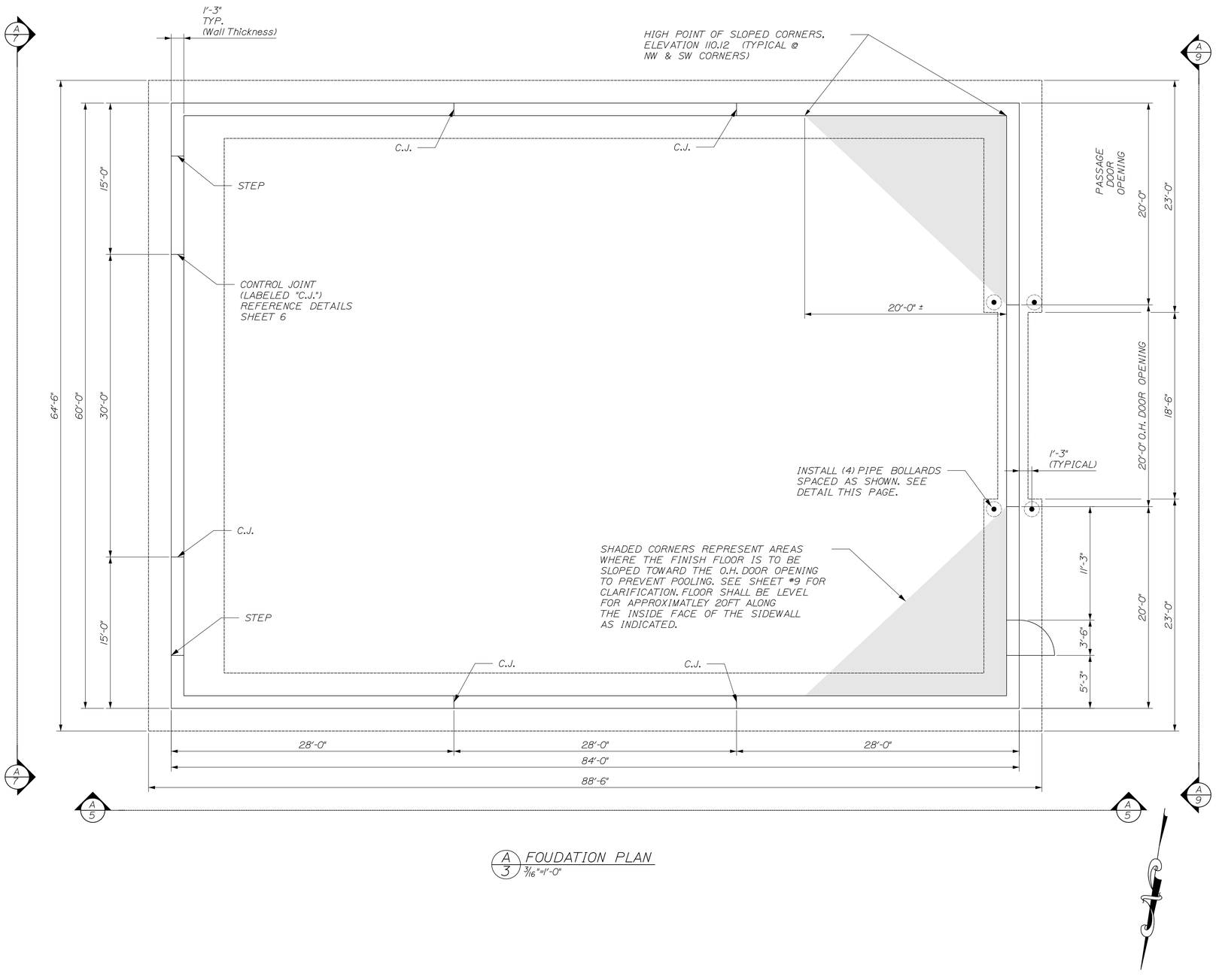

A 3 FOUDATION PLAN
3/16"=1'-0"

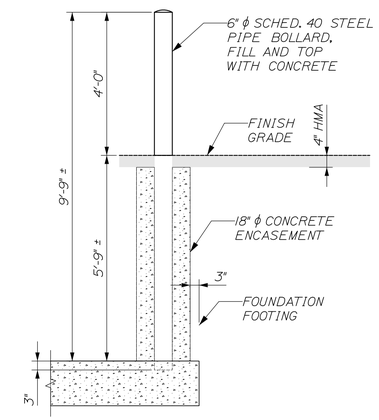

PIPE BOLLARD DETAIL
SCALE: 1/2" = 1'-0"

CALDERWOOD ENGINEERING, ETC.
STRUCTURAL ENGINEERING • DETAILING SERVICES
222 RIVER RD, RICHMOND, ME 04357 PH/FX (207)737-2007/(207) 737-2008

PREPARED FOR:
STATE OF MAINE DOT
HANCOCK, ME SALT SHED
WIN 20137.00

	BY	DATE
DESIGN-DETAILED		JAN 2014
CHECKED-REVIEWED		
REVISIONS 1		
REVISIONS 2		
REVISIONS 3		
REVISIONS 4		
FIELD CHANGES		

9099
P.E. NUMBER
JANUARY 2014
DATE

HANCOCK
MAINTENANCE SALT SHED
FOUNDATION PLAN

SHEET NUMBER
3
OF 14

Filename: ...\Plans\003_Foundation_Plan.dgn Plot Group: Structures Division Username: common Date:3/14/2014

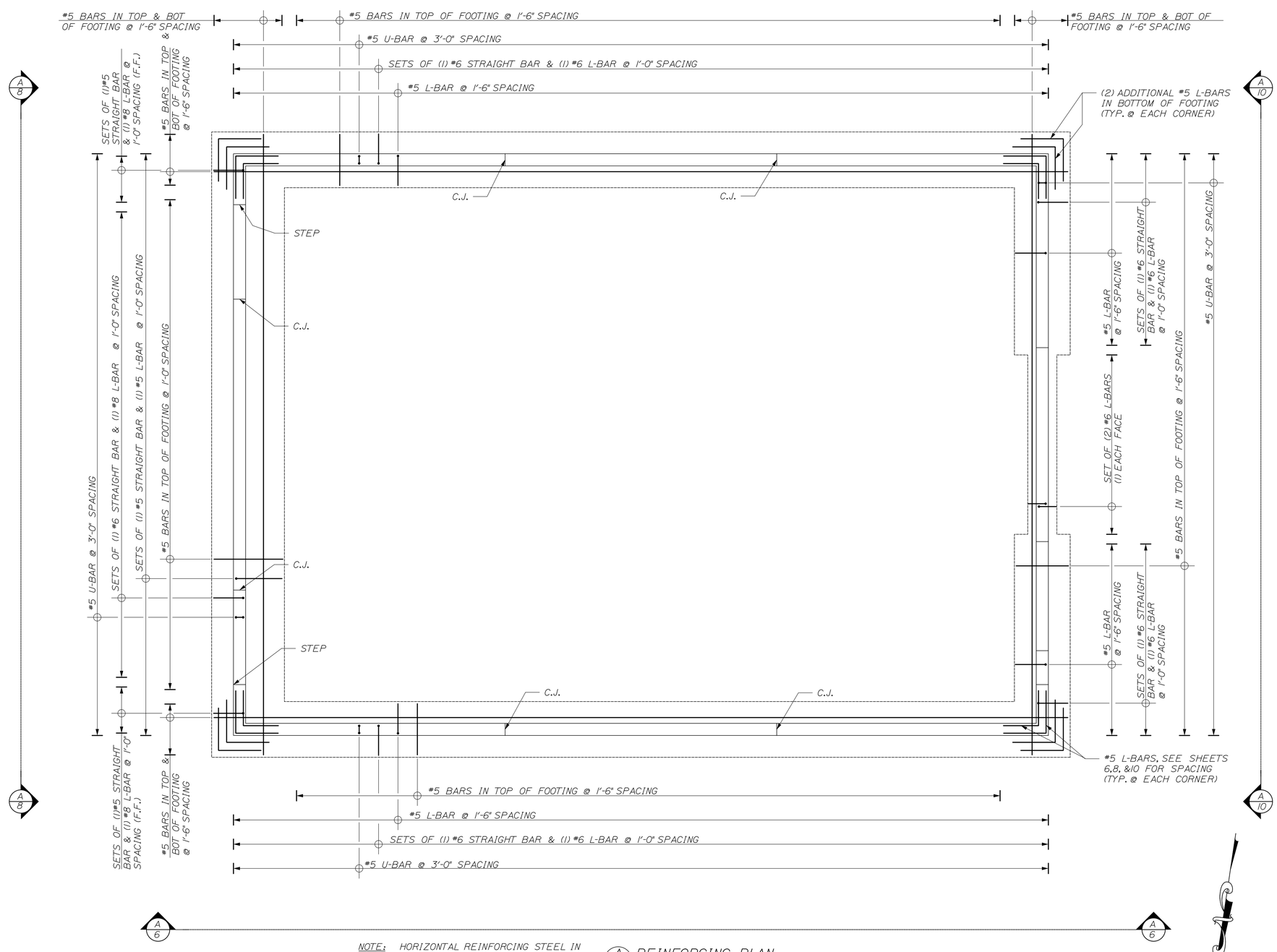

NOTE: HORIZONTAL REINFORCING STEEL IN FOUNDATION WALL NOT SHOWN. SEE SHEETS 6, 8, & 10 FOR DETAILS NOT SHOWN HERE.

A 4 REINFORCING PLAN
3/16"=1'-0"

CALDERWOOD ENGINEERING, ETC.
STRUCTURAL ENGINEERING • DETAILING SERVICES
222 RIVER RD, RICHMOND, ME 04357 PH/FX (207)737-2007/(207) 737-2008

PREPARED FOR:
STATE OF MAINE DOT

HANCOCK, ME SALT SHED
WIN 20137.00

	BY	DATE
DESIGN-DETAILED		
CHECKED-REVIEWED		
REVISIONS 1		
REVISIONS 2		
REVISIONS 3		
REVISIONS 4		
FIELD CHANGES		

P.E. NUMBER 9099
DATE JANUARY 2014

HANCOCK MAINTENANCE SALT SHED
FOUNDATION REINFORCING PLAN

SHEET NUMBER
4
OF 14

Filename: ...\Plans\004_Reinforce_Plan.dwg Workgroup: Structures Division Username: common Date:3/14/2014

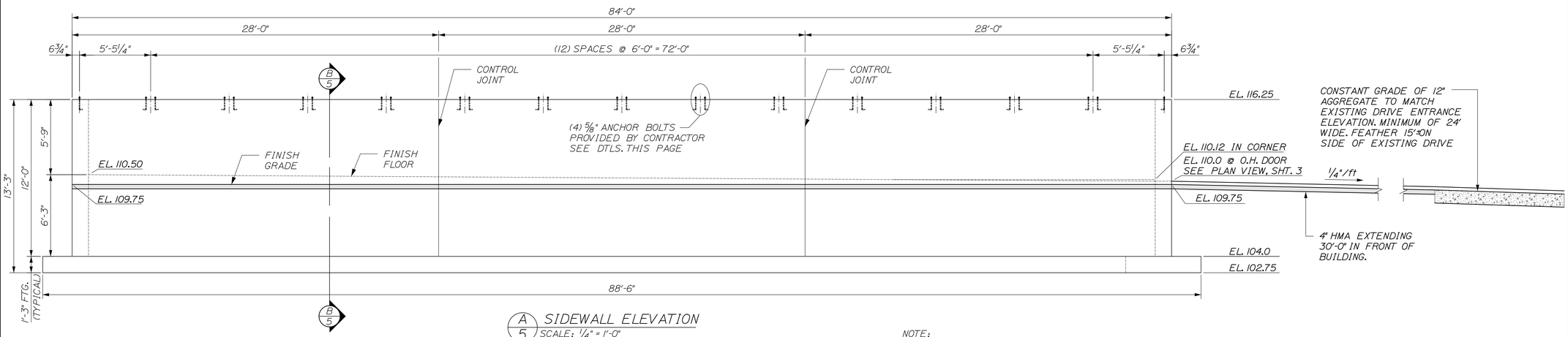

A/5 SIDEWALL ELEVATION
SCALE: ¼" = 1'-0"
TYPICAL FOR NORTH AND SOUTH SIDEWALLS
ARCHES NOT SHOWN

NOTE:
ACTUAL ANCHOR BOLT LAYOUT TO BE COORDINATED WITH THE LAMINATED ARCH MANUFACTURER. GENERAL CONTRACTOR IS RESPONSIBLE FOR CHECKING LAYOUT OF ANCHOR BOLTS WITH ARCH BASE PLATES TO ENSURE A PROPER FIT.

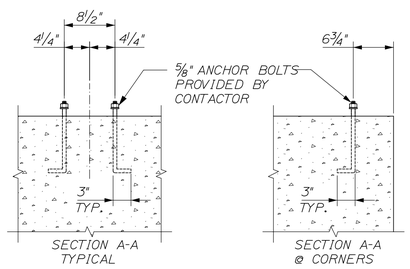

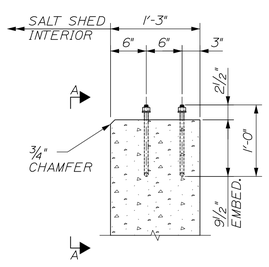

ANCHOR BOLT DETAIL
SCALE: 1" = 1'-0"

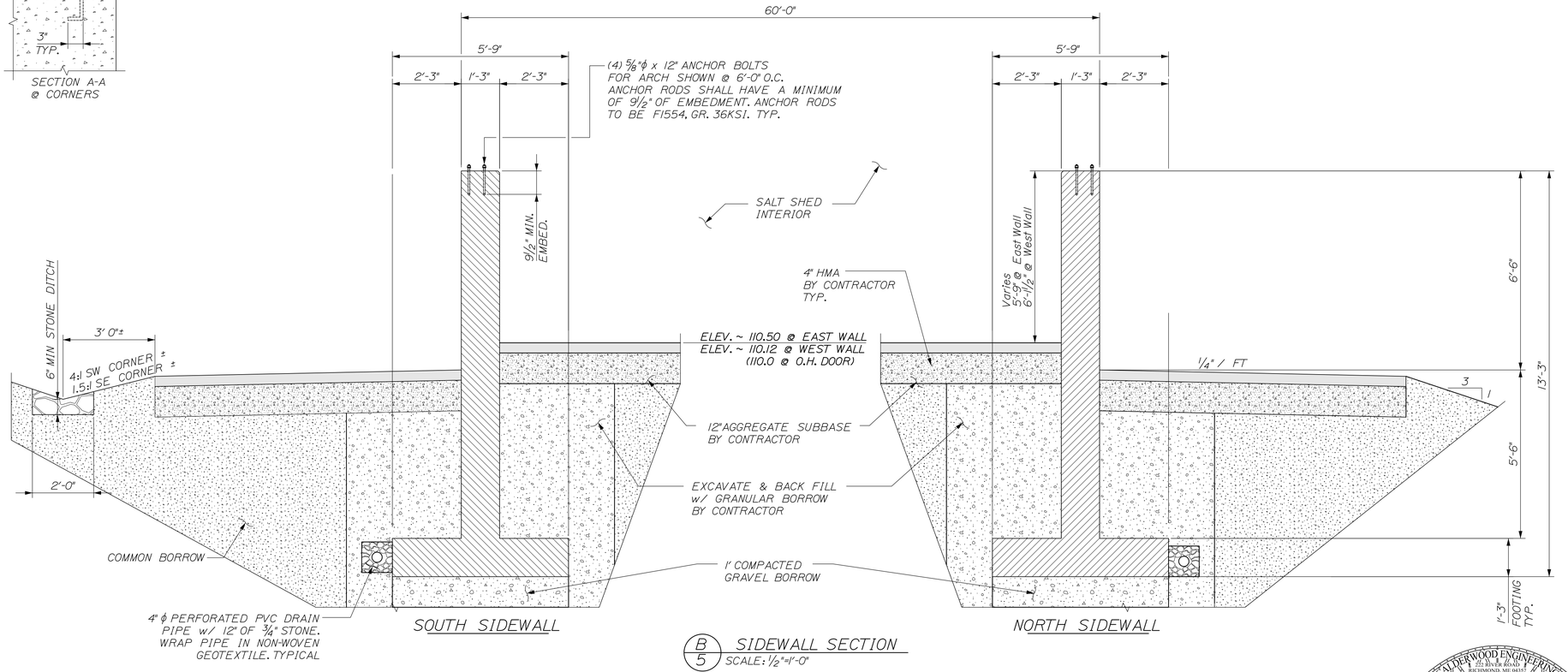

B/5 SIDEWALL SECTION
SCALE: ½"=1'-0"

CALDERWOOD ENGINEERING, ETC.
STRUCTURAL ENGINEERING • DETAILING SERVICES
222 RIVER RD, RICHMOND, ME 04357 PH/FX (207)737-2007/(207) 737-2008

PREPARED FOR:
STATE OF MAINE DOT

HANCOCK, ME SALT SHED
WIN 20137.00

DESIGN-DETAILED	BY	DATE
CHECKED-REVIEWED		
REVISIONS 1		
REVISIONS 2		
REVISIONS 3		
REVISIONS 4		
FIELD CHANGES		

9099
P.E. NUMBER
JANUARY 2014
DATE

HANCOCK MAINTENANCE SALT SHED

NORTH & SOUTH SIDEWALL DIMENSIONAL DETAILS

SHEET NUMBER
5
OF 14

Filename: ...\Plans\005_SideWall_Dtls.dwg Workgroup: Structures Division Username: common Date:3/14/2014

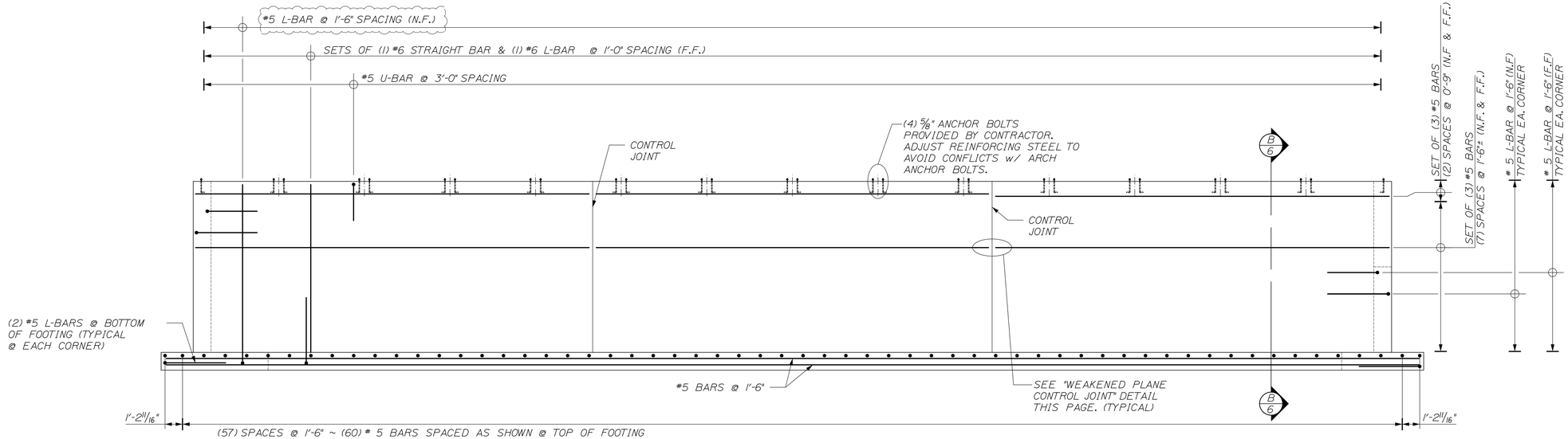

A/6 SIDEWALL REINFORCING
SCALE: 1/4" = 1'-0"
TYPICAL FOR NORTH AND SOUTH SIDEWALLS
ARCHES NOT SHOWN

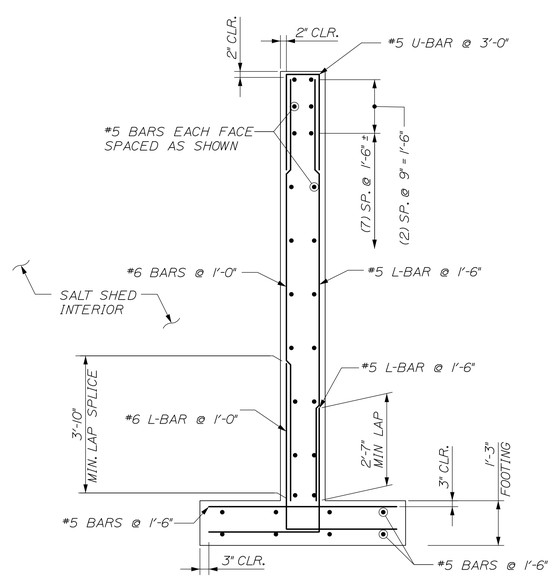

B/6 SIDEWALL REINFORCING SECTION
SCALE: 1/2" = 1'-0"

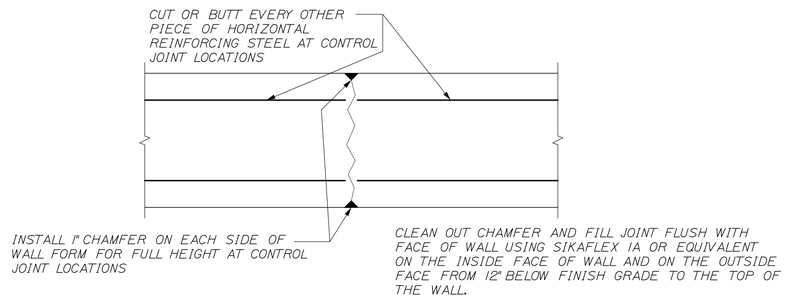

WEAKENED PLANE CONTROL JOINT
SCALE: 1 1/2" = 1'-0"

CALDERWOOD ENGINEERING, ETC.
STRUCTURAL ENGINEERING • DETAILING SERVICES
222 RIVER RD, RICHMOND, ME 04357 PH/FX (207)737-2007/(207) 737-2008

PREPARED FOR:
STATE OF MAINE DOT
HANCOCK, ME SALT SHED
WIN 20137.00

	BY	DATE
DESIGN-DETAILED		
CHECKED-REVIEWED		JAN 2014
REVISIONS 1		
REVISIONS 2		
REVISIONS 3		
REVISIONS 4		
FIELD CHANGES		

9099
P.E. NUMBER
JANUARY 2014
DATE

HANCOCK
MAINTENANCE SALT SHED

NORTH & SOUTH SIDEWALL
REINFORCING DETAILS

SHEET NUMBER
6
OF 14

CALDERWOOD ENGINEERING
222 RIVER ROAD
RICHMOND, ME 04357
PH. (207) 737-2007 FAX (207) 737-2008

Date:3/14/2014
Username: common
Workgroup: Structures Division
Filename: ...\V006_SideWall_Reinforce.dgn

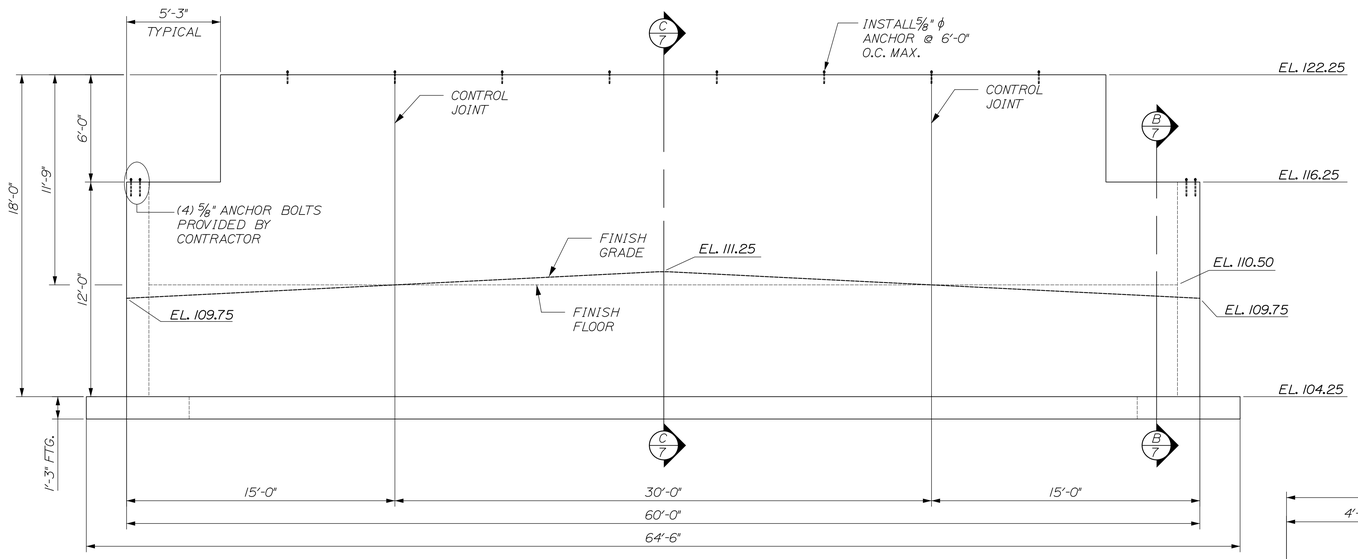

A/7 EAST END WALL ELEVATION
SCALE: 1/4" = 1'-0"

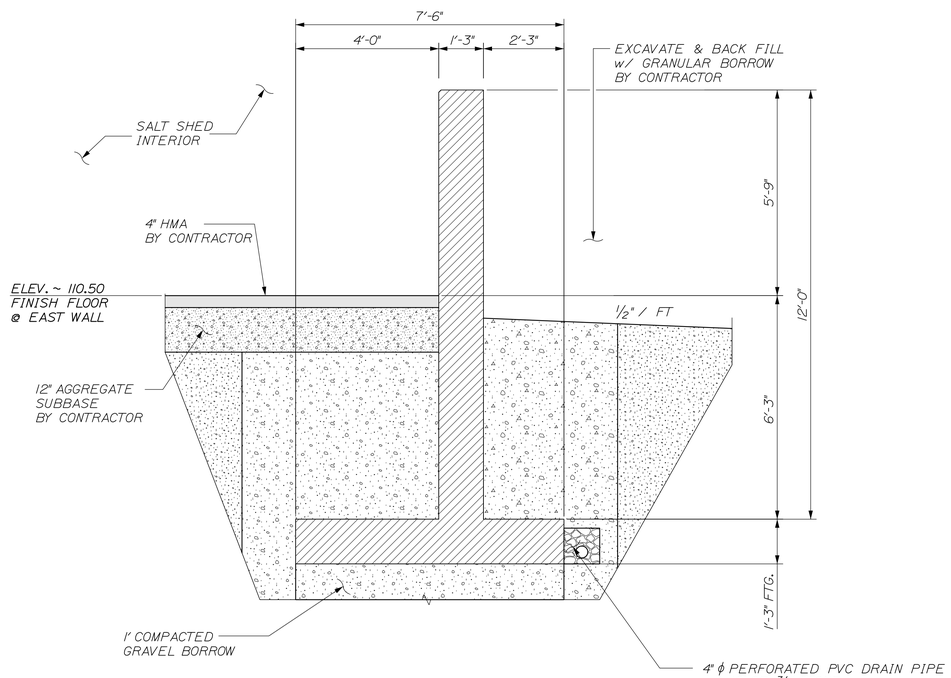

B/7 EAST END WALL SECTION
SCALE: 1/2"=1'-0"

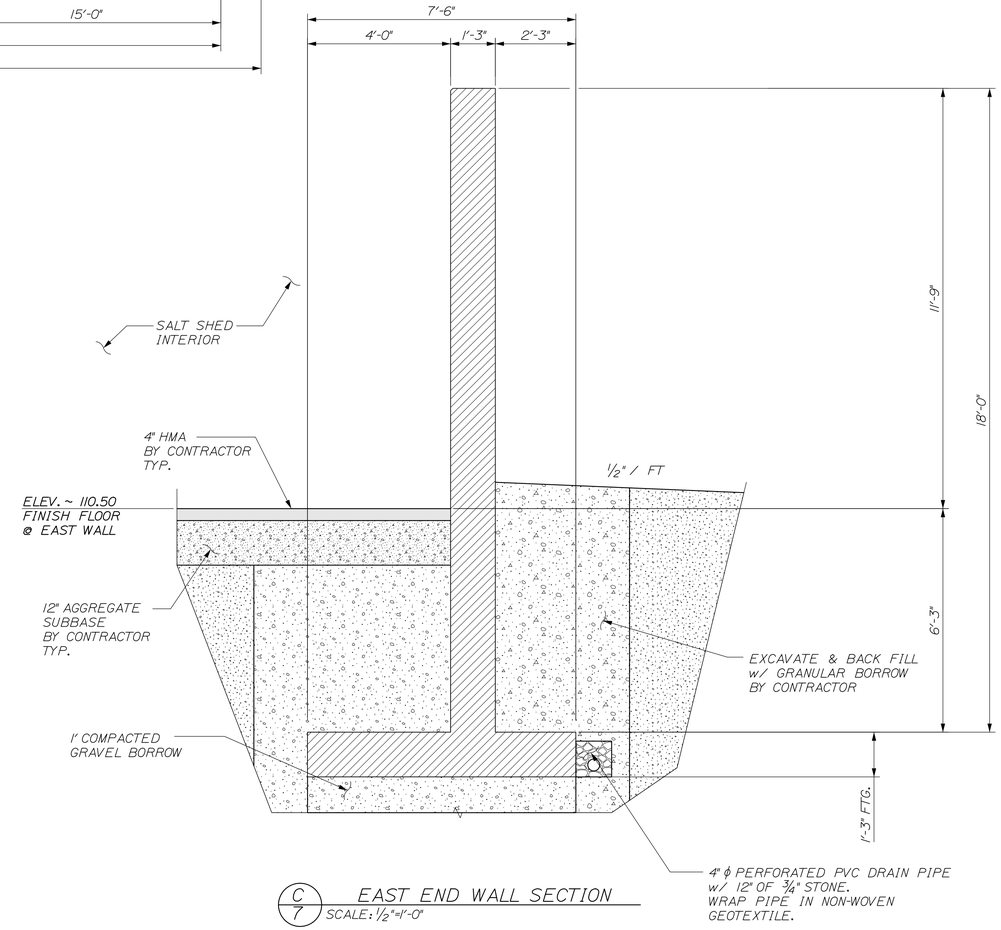

C/7 EAST END WALL SECTION
SCALE: 1/2"=1'-0"

CALDERWOOD ENGINEERING, ETC.
STRUCTURAL ENGINEERING • DETAILING SERVICES
222 RIVER RD, RICHMOND, ME 04357 PH/FX (207)737-2007/(207) 737-2008

PREPARED FOR:
STATE OF MAINE DOT

HANCOCK, ME SALT SHED
WIN 20137.00

	BY	DATE
DESIGN-DETAILED		JAN 2014
CHECKED-REVIEWED		
REVISIONS 1		
REVISIONS 2		
REVISIONS 3		
REVISIONS 4		
FIELD CHANGES		

9099
P.E. NUMBER
JANUARY 2014
DATE

HANCOCK MAINTENANCE SALT SHED

EAST END WALL DIMENSIONAL DETAILS

SHEET NUMBER
7
OF 14

Filename: ...\Plans\007_E_Wall_Dtls.dgn Workgroup: Structures Division Username: common Date:3/14/2014

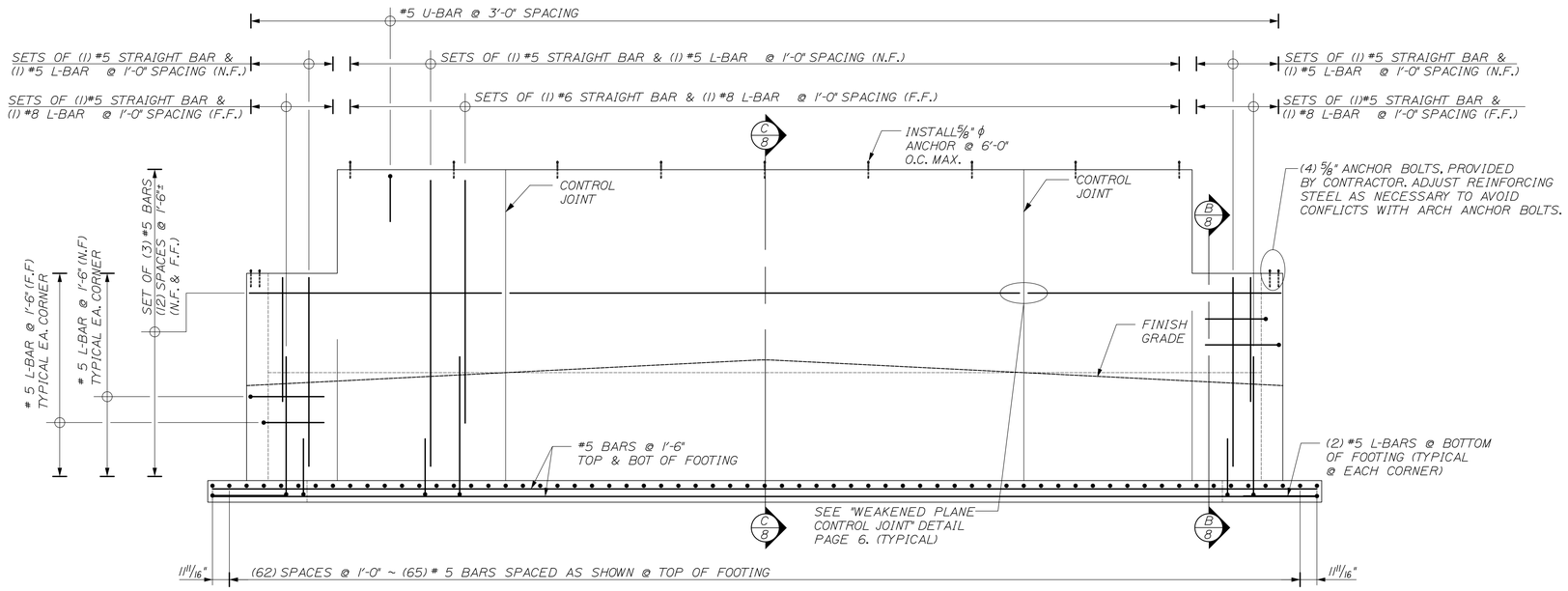

A/8 EAST END WALL REINFORCING
SCALE: 1/4" = 1'-0"

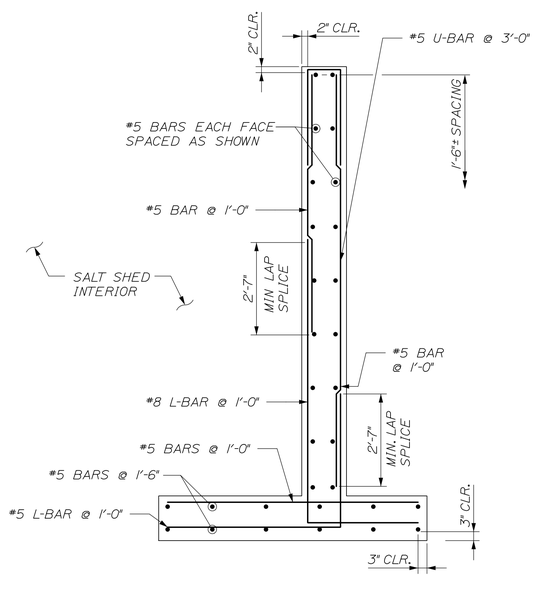

B/8 EAST END WALL REINFORCING SECTION
SCALE: 1/2" = 1'-0"

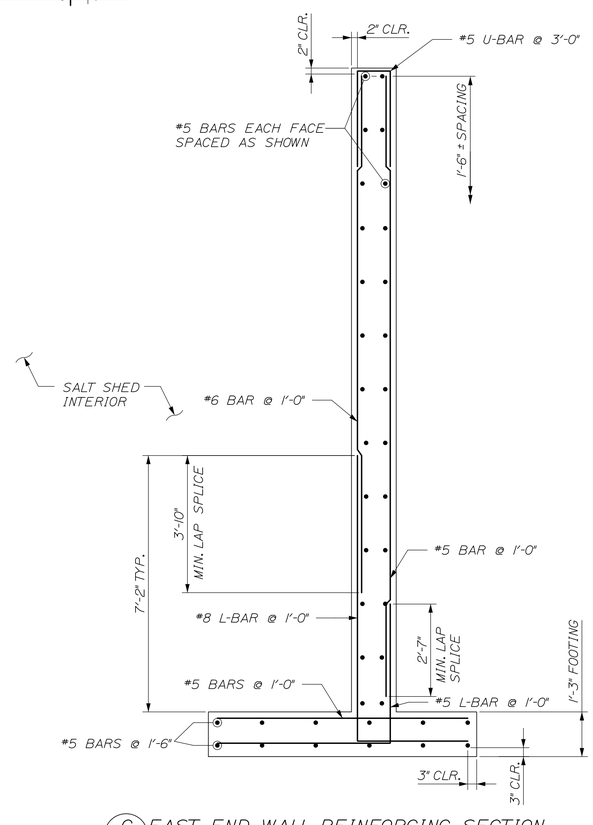

C/8 EAST END WALL REINFORCING SECTION
SCALE: 1/2" = 1'-0"

CALDERWOOD ENGINEERING, ETC.
STRUCTURAL ENGINEERING • DETAILING SERVICES
222 RIVER RD, RICHMOND, ME 04357 PH/FX (207)737-2007/(207) 737-2008

PREPARED FOR:
STATE OF MAINE DOT
HANCOCK, ME SALT SHED
WIN 20137.00

	BY	DATE
DESIGN-DETAILED		JAN 2014
CHECKED-REVIEWED		
REVISIONS 1		
REVISIONS 2		
REVISIONS 3		
REVISIONS 4		
FIELD CHANGES		

9099
P.E. NUMBER
JANUARY 2014
DATE

HANCOCK MAINTENANCE SALT SHED

EAST WALL REINFORCING DETAILS

SHEET NUMBER
8
OF 14

Filename: ...\Plans\008_E_Wall_Reinf.dgn Workgroup: Structures Division Username: common Date:3/14/2014

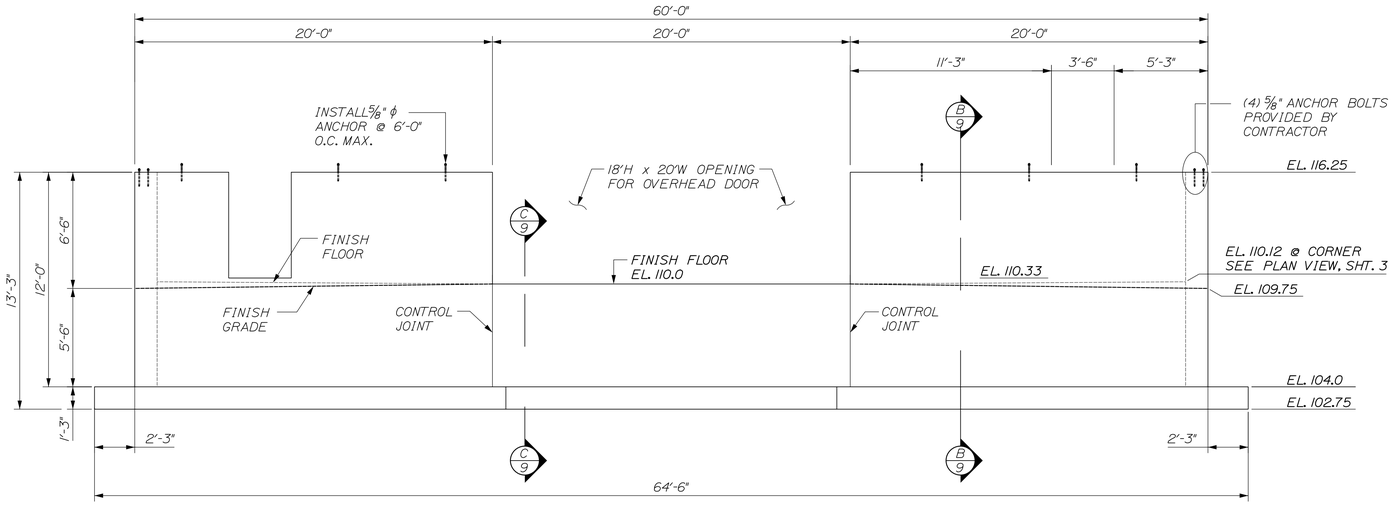

A/9 WEST END WALL ELEVATION
SCALE: 1/4" = 1'-0"

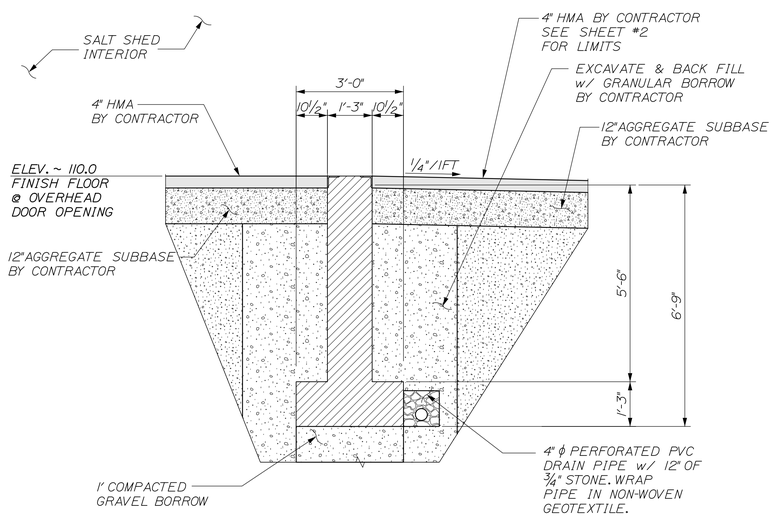

C/9 SECTION @ OVERHEAD DOOR
SCALE: 1/2"=1'-0"

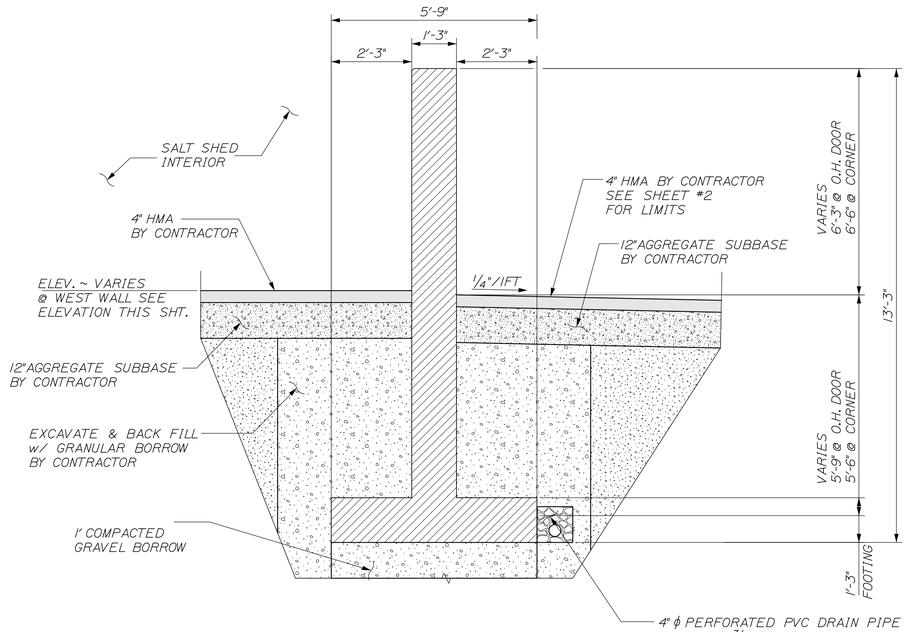

B/9 WEST END WALL SECTION
SCALE: 1/2"=1'-0"

CALDERWOOD ENGINEERING, ETC.
STRUCTURAL ENGINEERING • DETAILING SERVICES
222 RIVER RD, RICHMOND, ME 04357 PH/FX (207)737-2007/(207) 737-2008

PREPARED FOR:
STATE OF MAINE DOT

HANCOCK, ME SALT SHED
WIN 20137.00

	BY	DATE
DESIGN-DETAILED		
CHECKED-REVIEWED		JAN 2014
REVISIONS 1		
REVISIONS 2		
REVISIONS 3		
REVISIONS 4		
FIELD CHANGES		

9099
P.E. NUMBER
JANUARY 2014
DATE

HANCOCK MAINTENANCE SALT SHED

WEST END WALL DIMENSIONAL DETAILS

SHEET NUMBER
9
OF 14

Filename: ...\Plans\009_W_Wall_Dtls.dgn Workgroup: Structures Division Username: common Date:3/14/2014

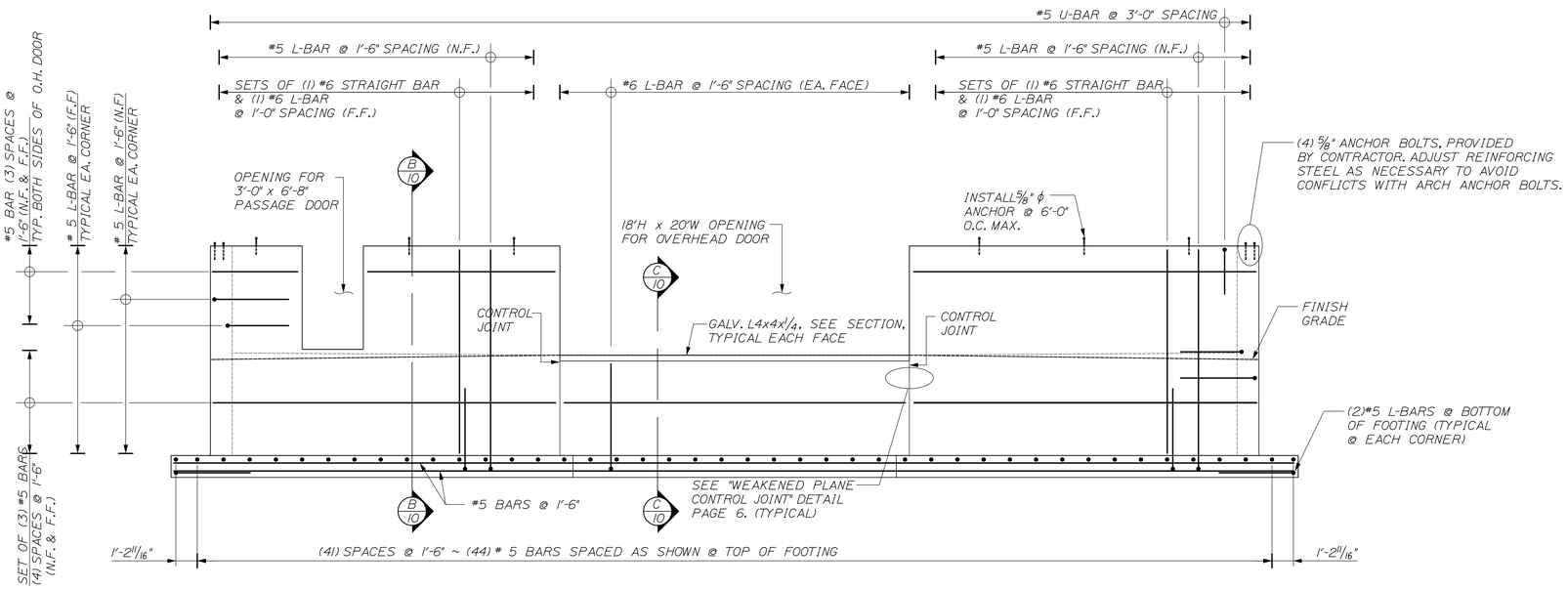

NOTE: CUT REINFORCING STEEL AS NECESSARY AT DOOR OPENINGS

A/10 WEST END WALL REINFORCING
SCALE: 1/4" = 1'-0"

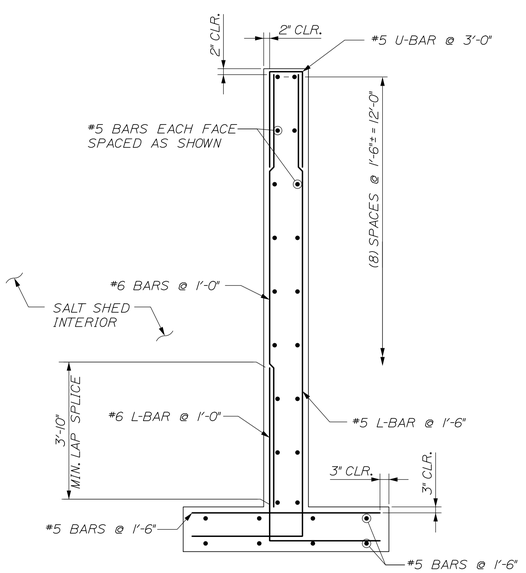

B/10 WEST END WALL REINFORCING SECTION
SCALE: 1/2" = 1'-0"

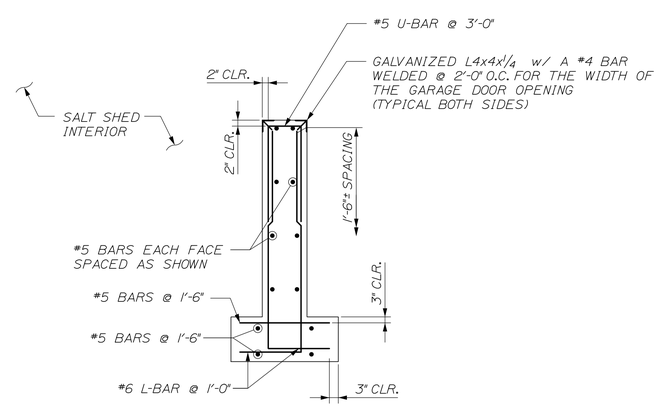

C/10 WEST END WALL REINFORCING SECTION
SCALE: 1/2" = 1'-0"

CALDERWOOD ENGINEERING, ETC.
STRUCTURAL ENGINEERING • DETAILING SERVICES
222 RIVER RD. RICHMOND, ME 04357 PH/FX (207)737-2007/(207) 737-2008

PREPARED FOR:
STATE OF MAINE DOT

HANCOCK, ME SALT SHED
WIN 20137.00

	BY	DATE
DESIGN-DETAILED		
CHECKED-REVIEWED		
REVISIONS 1		
REVISIONS 2		
REVISIONS 3		
REVISIONS 4		
FIELD CHANGES		

9099
P.E. NUMBER
JANUARY 2014
DATE

HANCOCK MAINTENANCE SALT SHED

WEST END WALL REINFORCING DETAILS

SHEET NUMBER
10
OF 14

Filename: ...\Plans\010_W_Wall_Reinforcing.dgn Workgroup: Structures Division Username: common Date:3/14/2014

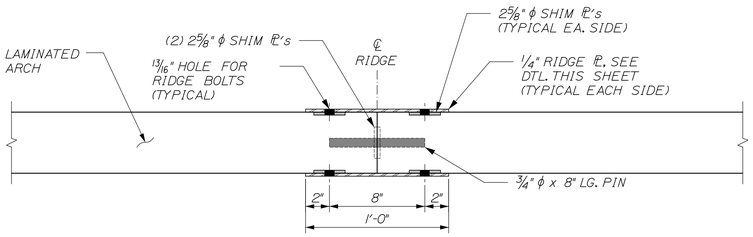

PLAN VIEW

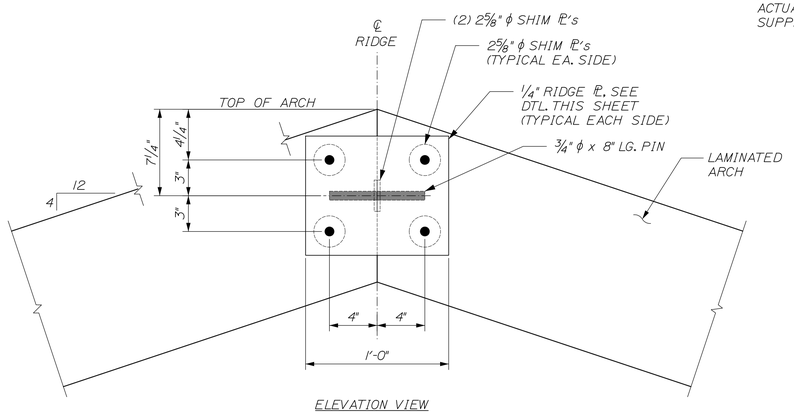

ELEVATION VIEW

RIDGE CONNECTION

SCALE: 2" = 1'-0"

NOTE:
DEPENDING ON SIZE AND TYPE OF ARCH SELECTED, LOCATION OF CONNECTION BOLTS AND AND PINS AT THE RIDGE MAY CHANGE.
ACTUAL RIDGE CONNECTION TO BE DESIGNED AND SUPPLIED BY ARCH MANUFACTURER.

METAL ROOFING NOTES:

1. THE SALT SHED IS TO BE ROOFED WITH THE EVERLAST DL-150 PRODUCT, OR AN EQUIVALENT PRODUCT. THIS PRODUCT USES DOUBLE-LOCK STANDING SEAM ROOF PANELS.

2. THE FINISH IS TO BE BARE GALVALUME.

3. THE PANELS ARE TO BE DELIVERED TO THE JOB SITE BY THE SUPPLIER IN STRAIGHT, UNFORMED PANELS. THE SUPPLIER WILL THEN FORM THE PANELS ON SITE TO THE SHAPE AND RADIUS OF THE ROOF. THE CONTRACTOR MAY BE REQUIRED TO PROVIDE ADDITIONAL MAN-POWER TO THE SUPPLIER TO AID IN MOVING THE PANELS.

4. NO BUTT SEAMS WILL BE ALLOWED ON THE ROOF. THE PANELS WILL BE FORMED FROM ONE (1) PIECE THAT BEGINS AT THE BOTTOM OF THE ROOF AND CONTINUES ALL THE WAY TO THE RIDGE.

5. NO EXPOSED FASTENERS WILL BE ALLOWED ON THE ROOF PANELS.

6. PANELS MUST BE INSTALLED IN A SEQUENTIAL PATTERN.

7. A 30# ROOFING FELT OR AN APPROVED EQUAL SHOULD BE INSTALLED OVER SUBSTRATE PRIOR TO INSTALLATION OF PANELS AND ALSO BETWEEN THE CONCRETE WALL AND THE GABLE ENDS.

8. PANELS MUST BE LOCKED IN THE FIELD BY A MECHANICAL SEAMER.

9. IF PANELS REQUIRE STORAGE BEFORE BEING INSTALLED, THEY SHOULD BE STORED IN A WELL-VENTILATED, DRY PLACE WHERE NO MOISTURE CAN COME IN CONTACT WITH THEM. IF STORED OUTSIDE, COVER WITH VENTED TARP OR WATERPROOF PAPER COVER (NOT PLASTIC). KEEP MATERIAL OFF THE GROUND.

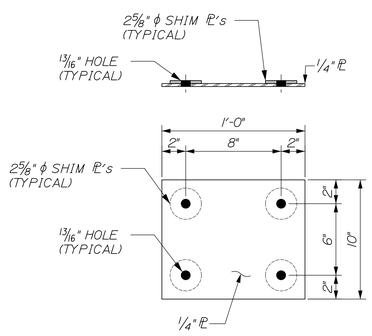

RIDGE CONNECTION PL

SCALE: 2" = 1'-0"

NOTE:
RIDGE CONNECTION PL SHOWN IS AN EXAMPLE. COORDINATE WITH ARCH MANUFACTURER FOR ACTUAL PLATE TO BE USED.

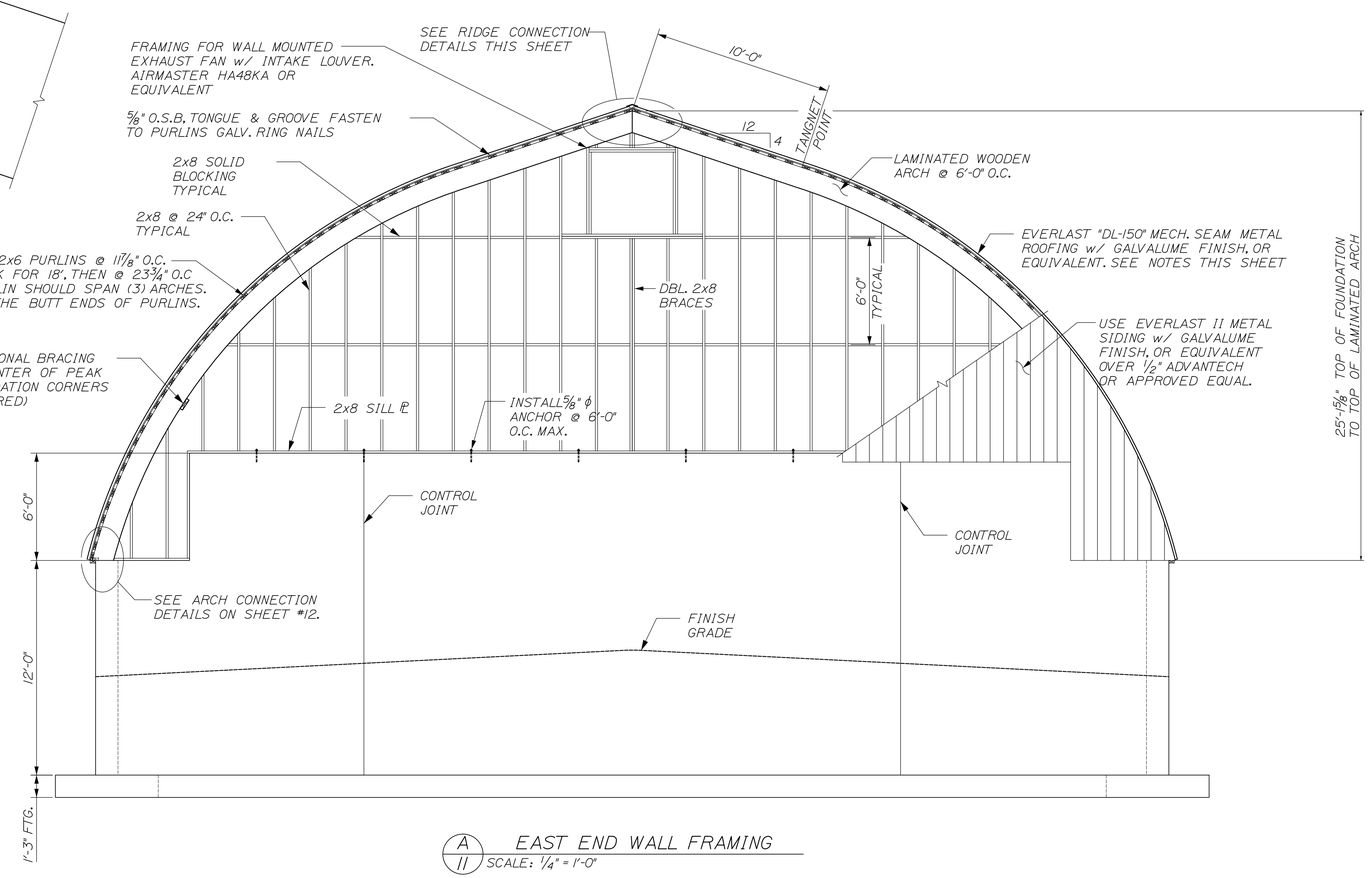

A / 11 EAST END WALL FRAMING

SCALE: 1/4" = 1'-0"

CALDERWOOD ENGINEERING, ETC.
STRUCTURAL ENGINEERING • DETAILING SERVICES
222 RIVER RD, RICHMOND, ME 04357 PH/FX (207)737-2007/(207) 737-2008

PREPARED FOR:
STATE OF MAINE DOT

HANCOCK, ME SALT SHED
WIN 20137.00

	BY	DATE
DESIGN-DETAILED		JAN 2014
CHECKED-REVIEWED		
REVISIONS 1		
REVISIONS 2		
REVISIONS 3		
REVISIONS 4		
FIELD CHANGES		

9099
P.E. NUMBER
JANUARY 2014
DATE

HANCOCK
MAINTENANCE SALT SHED

EAST END WALL
FRAMING DETAILS

SHEET NUMBER
11
OF 14

CALDERWOOD ENGINEERING
222 RIVER ROAD
RICHMOND, ME 04357
PH. (207) 737-2007 FAX (207) 737-2008

Filename: ...\Plans\011_E_Wall_Framing.dwg Layout: Structures Division Username: common Date:3/14/2014

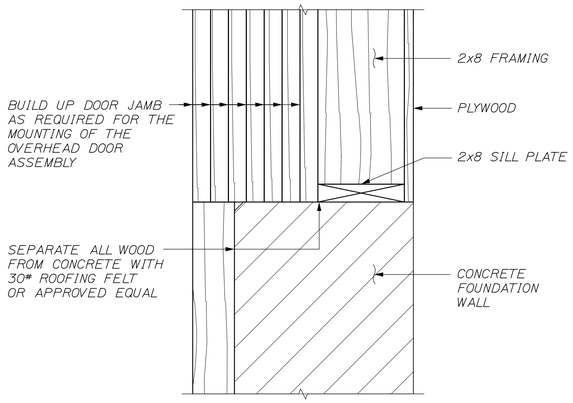

DOOR JAMB DETAIL
2" = 1'-0"

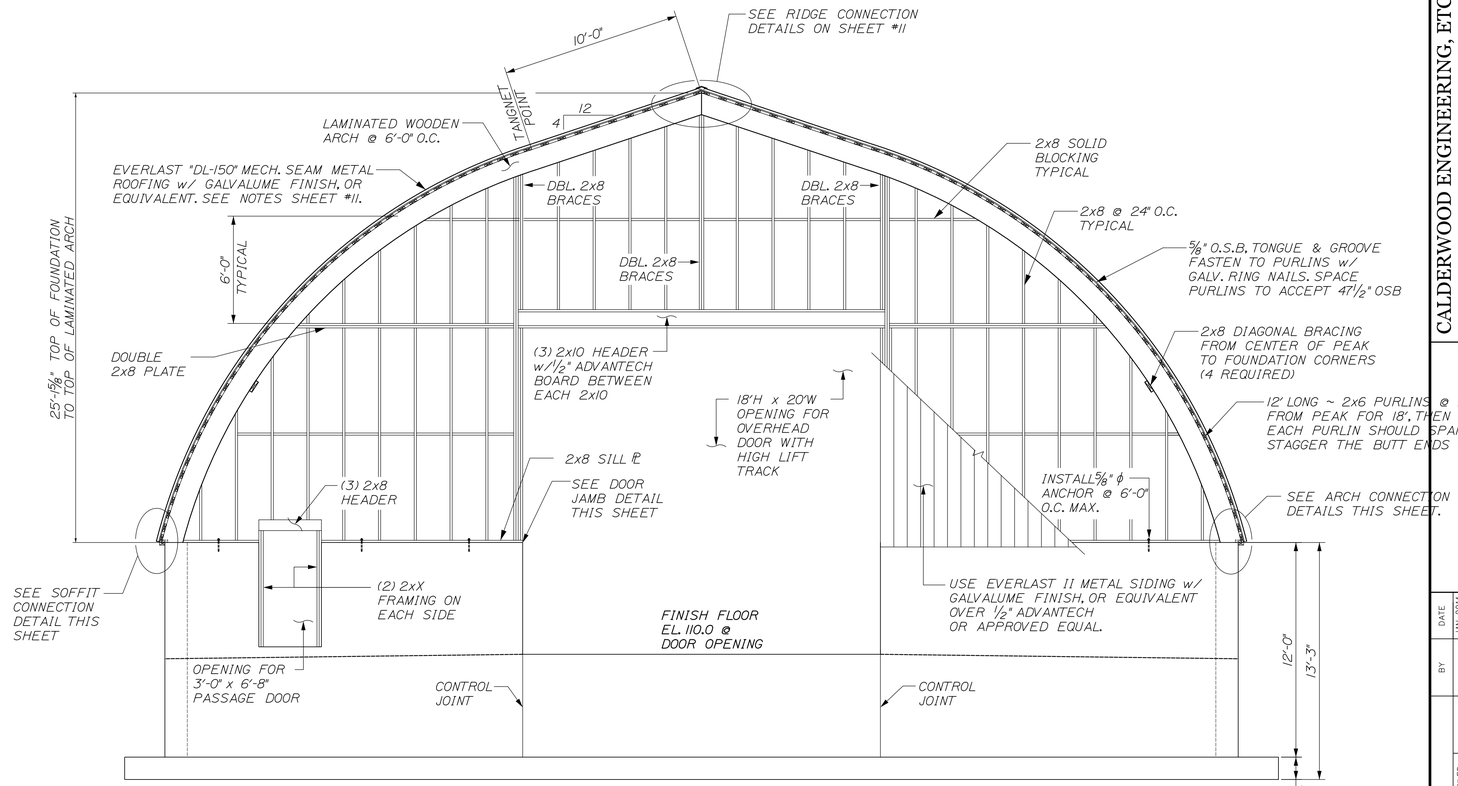

A/12 WEST END WALL FRAMING
SCALE: 1/4" = 1'-0"

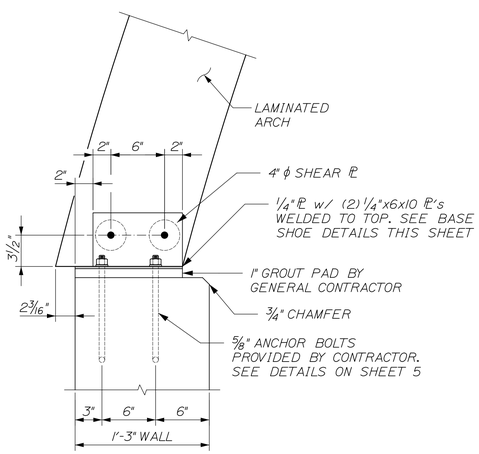

TYPICAL ARCH TO FOUNDATION CONNECTION
SCALE: 1/2" = 1'-0"

NOTE:
DEPENDING ON SIZE AND TYPE OF ARCH SELECTED, ANCHOR BOLT LAYOUT MAY CHANGE.
ACTUAL ANCHOR BOLT LAYOUT TO BE COORDINATED WITH THE LAMINATED ARCH MANUFACTURER.
GENERAL CONTRACTOR IS RESPONSIBLE FOR CHECKING LAYOUT OF ANCHOR BOLTS WITH ARCH BASE PLATES TO ENSURE A PROPER FIT.
BASE SHOES, SHEAR ℄'s, AND ARCH BOLTS TO BE DESIGNED AND SUPPLIED BY ARCH MANUFACTURER.

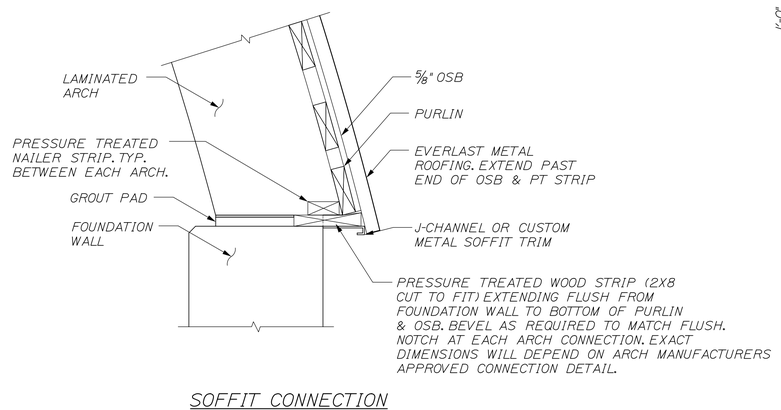

SOFFIT CONNECTION
1 1/2" = 1'-0"

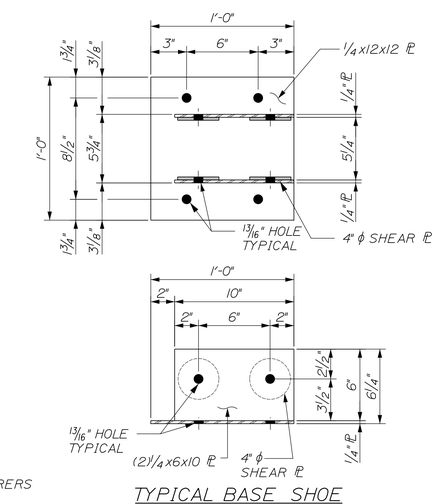

TYPICAL BASE SHOE
(EXAMPLE ONLY)
SCALE: 2" = 1'-0"

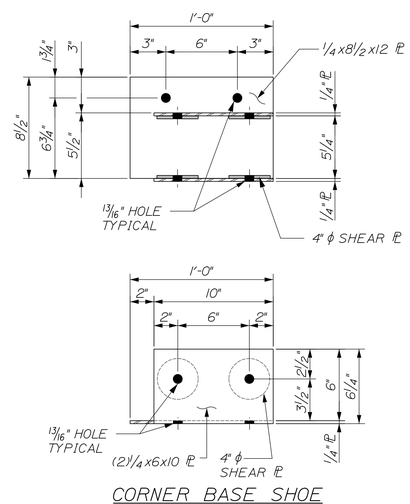

CORNER BASE SHOE
(EXAMPLE ONLY)
SCALE: 2" = 1'-0"

NOTE:
BASE SHOES SHOWN ARE EXAMPLES.
COORDINATE WITH ARCH MANUFACTURER FOR ACTUAL SHOES TO BE USED.

CALDERWOOD ENGINEERING, ETC.
STRUCTURAL ENGINEERING • DETAILING SERVICES
222 RIVER RD. RICHMOND, ME 04357 PH/FX (207)737-2007/(207) 737-2008

PREPARED FOR:
STATE OF MAINE DOT

HANCOCK, ME SALT SHED
WIN 20137.00

	BY	DATE
DESIGN-DETAILED		JAN 2014
CHECKED-REVIEWED		
REVISIONS 1		
REVISIONS 2		
REVISIONS 3		
REVISIONS 4		
FIELD CHANGES		

P.E. NUMBER 9099
JANUARY 2014
DATE

HANCOCK
MAINTENANCE SALT SHED

WEST END WALL
FRAMING DETAILS

SHEET NUMBER
12
OF 14

Filename: ...\Plans\012_W_Wall_Fram.dwg Workgroup: Structures Division Username: common Date:3/14/2014

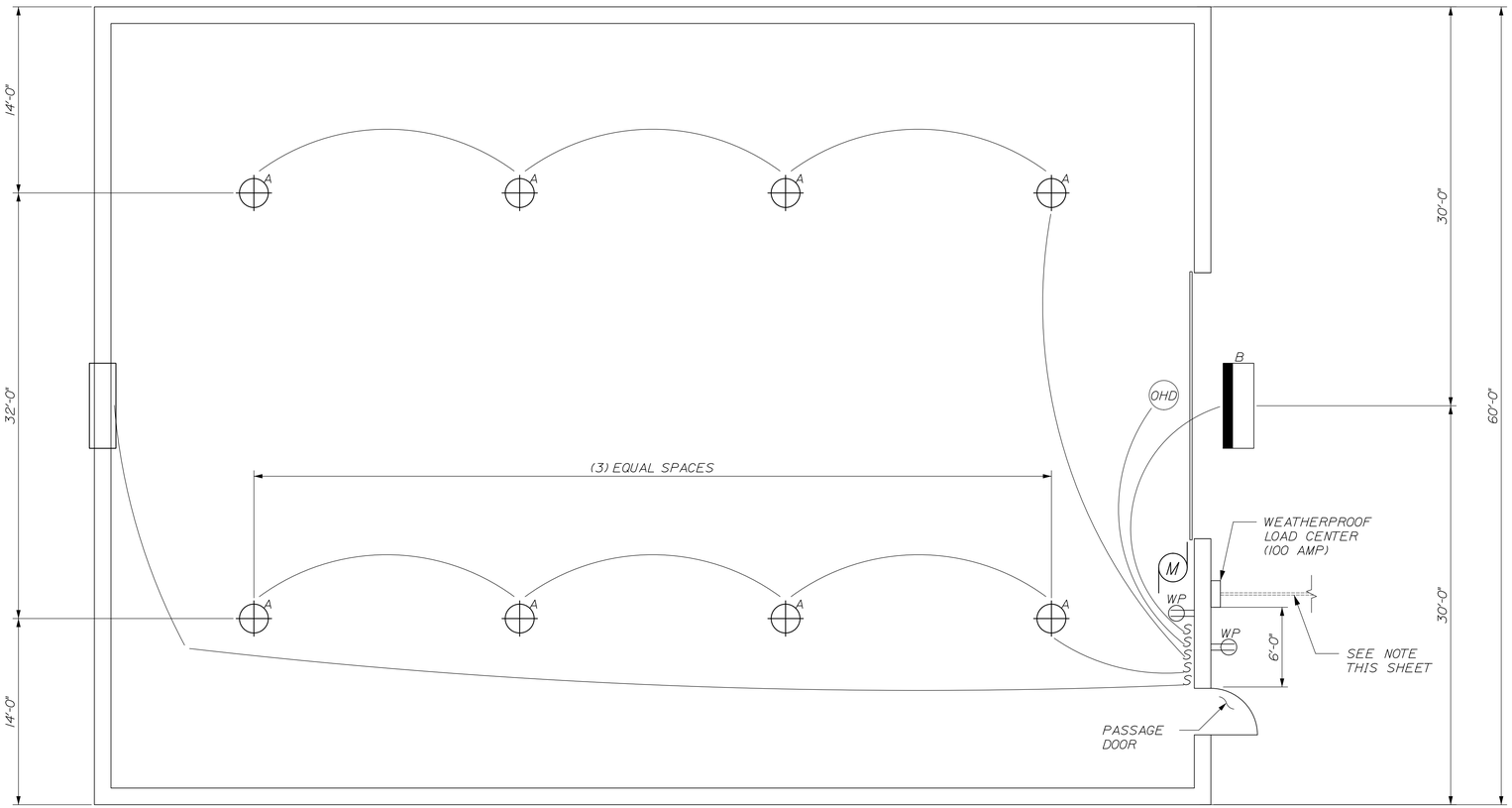

A/13 ELECTRICAL FLOOR PLAN
3/16"=1'-0"

ELECTRICAL LEGEND	
A	H.E. WILLIAMS, 5" DEEP, FULLY ENCLOSED INDUSTRIAL LIGHT FIXTURE. MODEL #92-8-454T5H-A-EB2/2-SSLATCH-SSMB W/ ATTACHED HUBBELL FIXTURE MOUNTED OCCUPANCY SENSORS
B	LED FLOOD LIGHT EQUIV. TO LITHONIA D-SERIES SIZE 3 W/ PHOTOCELL AND SWITCH.
S	WEATHERPROOF SWITCH
WP	GFCI RECEPTACLE W/ WEATHERPROOF COVER
M	OVERHEAD DOOR OPERATOR
	EXHAUST FAN

POWER TO BE INSTALLED UNDERGROUND IF POSIBLE. CONTRACTOR SHALL PRICE AS SUCH.

CONTRACTOR WILL BE REQUIRED TO EXCAVATE, SUPPLY, INSTALL, BACKFILL, AND COMPACT, PER NATIONAL ELECTRICAL CODE (NEC) AN ADDITIONAL 300 FT OF 2" UNDERGROUND CONDUIT. SEE SHEET 2 FOR DETAILS

CONDUIT SHALL BE INSTALLED BELOW GRADE. EACH END OF CONDUIT SHALL BE CAPPED AND PROTRUDE ABOVE FINISH GRADE BY 2 FEET.

FAN ON BACKWALL, OHD OPENER AND LIGHTS SHALL BE WIRED AND HOOKED UP FOR POWER AS INDICATED.

CALDERWOOD ENGINEERING, ETC.
STRUCTURAL ENGINEERING • DETAILING SERVICES
222 RIVER RD, RICHMOND, ME 04357 PH/FX (207)737-2007/(207) 737-2008

PREPARED FOR:
STATE OF MAINE DOT

HANCOCK, ME SALT SHED
WIN 20137.00

	BY	DATE
DESIGN-DETAILED		JAN 2014
CHECKED-REVIEWED		
REVISIONS 1		
REVISIONS 2		
REVISIONS 3		
REVISIONS 4		
FIELD CHANGES		

P.E. NUMBER 9099
JANUARY 2014
DATE

HANCOCK MAINTENANCE SALT SHED
ELECTRICAL PLAN

SHEET NUMBER
13
OF 14

CALDERWOOD ENGINEERING
222 RIVER ROAD
RICHMOND, ME 04357
PH (207)737-2007 FAX (207)737-2008

Filename: ...\Plans\013_Electrical_Plan.dgn Workgroup: Structures Division Username: common Date:3/14/2014

Filename: ...\Plans\014_Gen Site.dgn Workgroup: Structures Division Username: common Date:3/14/2014

GENERAL LOT LOCATION PLAN
N.T.S.

CALDERWOOD ENGINEERING, ETC.
STRUCTURAL ENGINEERING • DETAILING SERVICES
222 RIVER RD, RICHMOND, ME 04357 PH/FX (207)737-2007/(207) 737-2008

PREPARED FOR:
STATE OF MAINE DOT

HANCOCK, ME SALT SHED
WIN 20137.00

	BY	DATE
DESIGN-DETAILED		JAN 2014
CHECKED-REVIEWED		
REVISIONS 1		
REVISIONS 2		
REVISIONS 3		
REVISIONS 4		
FIELD CHANGES		

9099
P.E. NUMBER
JANUARY 2014
DATE

HANCOCK
MAINTENANCE SALT SHED

GENERAL LOT PLAN

SHEET NUMBER
14
OF 14

CALDERWOOD ENGINEERING
222 River Road
RICHMOND, ME 04357
PH. (207) 737-2007 FAX (207) 737-2008