STATE OF MAINE
DEPARTMENT OF TRANSPORTATION
16 STATE HOUSE STATION
AUGUSTA, MAINE 04333-0016

Paul R. LePage
GOVERNOR

David Bernhardt
COMMISSIONER

March 21, 2014
Subject: **Augusta Phase 2**
State Project No: 020118.20
Amendment No. 1

Dear Sir/Ms:

Make the following change to the Bid Documents:

In the Bid Book (page 28), "SPECIAL PROVISION, SECTION 102, BIDDING, (Mandatory Pre-Bid Meeting)", **ADD** the following after the last paragraph **"An additional inspection meeting will be held at 66 Industrial Drive on Wednesday, March 26 at 10:00 A.M. Contractors and subcontractors may attend the meeting."** Make this change in pen and ink.

Attached are the minutes to the mandatory Pre-Bid Meeting held on March 19, 2014 including the Sign-In Sheet.

In the Bid Book Table of Content Vol. 1 of 4 Page 55 after EL100D ELECTRICAL LIGHTING PLAN – AREA –D **INSERT** EL101C ELECTRICAL LIGHTING PLAN SECOND FLOOR AREA –C Make this change in pen and ink.

In the Bid Book Table of Content Vol. 2 of 4 Page 376 after EL100D ELECTRICAL LIGHTING PLAN – AREA –D **INSERT** EL101C ELECTRICAL LIGHTING PLAN SECOND FLOOR AREA –C Make this change in pen and ink.

In the Bid Book Table of Content Vol. 3 of 4 Page 752 after EL100D ELECTRICAL LIGHTING PLAN – AREA –D **INSERT** EL101C ELECTRICAL LIGHTING PLAN SECOND FLOOR AREA –C Make this change in pen and ink.

In the Bid Book Table of Content Vol. 4 of 4 Page 1199 after EL100D ELECTRICAL LIGHTING PLAN – AREA –D **INSERT** EL101C ELECTRICAL LIGHTING PLAN SECOND FLOOR AREA –C Make this change in pen and ink.

In the Bid Book Volume 1 of 4, Section 024119 Selective demolition page 214 and 215 **DELETE** Paragraph 3.2 A. in its entirety. **ADD** in its place the following: (make these changes in pen and ink)

3.2 UTILITY SERVICES AND MECHANICAL/ELECTRICAL SYSTEMS

A. Existing Services/Systems to Remain: All existing utility services will be discontinued and replaced as specified under respective spec sections.

B. Existing Services/Systems to Be Removed, Relocated, or Abandoned: Locate, identify, disconnect, and seal or cap off all utility services and mechanical/electrical systems.

1. HVAC
   a. Remove all HVAC heating, ventilating, air conditioning, and exhaust air systems complete with ductwork, wiring, LP gas piping, hangers, venting and all appurtences out to the building foundation

2. PLUMBING
   a. Remove all plumbing fixtures, waste and vent piping, water heating, domestic hot and cold water piping.
   b. Remove all under slab piping out to the foundation wall.
   c. Remove complete compressed air system, piping, hangers and all appurtences

3. FIRE PROTECTION
   a. Remove the entire fire sprinkler system including sprinkler entrance and hose drops. Remove all pipe hangers and all appurtences
   b. Remove all under slab piping out 10' beyond the new office foundation wall and cap water tight.

4. ELECTRICAL
   a. Remove all electrical panels including service entrance, meter housing, equipment disconnects, switches, light fixtures, conduit, boxes and hangers.
   b. Pull wires from conduits abandon under slabs or underground and cap below the slab.

In the Bid Book Volume 3 of 4 Section 230900 Instrumentation and Control for HVAC, page 34, Part 2.2 Acceptable Manufactures, **ADD** item a, 6. Schneider Electric (Maine Controls).

On plan sheets:

On plan Sheet G000 Titled COVER in the INDEX OF DRAWINGS after EL100D ELECTRICAL LIGHTING PLAN – AREA –D **INSERT** EL101C ELECTRICAL LIGHTING PLAN SECOND FLOOR AREA –C Make this change in pen and ink.

On plan Sheet G000 Titled COVER in the INDEX OF DRAWINGS after EL607 ELECTRICAL SCHEDULES **DELETE** EL608 - ELECTRICAL SCHEDULES. Make this change in pen and ink.

On plan Sheet G000 Titled COVER in the INDEX OF DRAWINGS, **DELETE** A205 ARCHITECTURAL – EXTERIOR ELEVATIONS **ADD** in its place A205 ARCHITECTURAL – DOT FLEET - EXTERIOR ELEVATIONS Make this change in pen and ink.

On plan sheet A103 Titled Architectural – Roof Plan Modify dimension per SKA-01 attached.

On plan sheet A201 Titled Architectural – Exterior Elevations coordinate elevations 2, 3, & 4 to indicate doors identified on drawings A101C and A601 per SKA-02 attached.

On plan sheet A202 Titled Architectural – Exterior Elevations coordinate elevation to indicate doors identified on drawings A101C and A602 per SKA-03 attached.

On plan sheet A203 Titled Architectural – Exterior Elevations coordinate elevation to indicate doors identified on drawings A101C and A603 per SKA-04 attached.

On plan sheet A203 Titled Architectural – Exterior Elevations **DELETE** Detail 12 Roof Edge trim Detail **ADD** in its place Detail 12 Roof Edge trim Detail per SKA-05 attached

On plan sheet A203 Titled Architectural – Exterior Elevations **DELETE** Detail 15 Panel trim Detail **ADD** in its place Detail 15 Panel Trim Detail and Detail 15A Panel Trim Detail per SKA-06 attached.

On plan sheet A311 Titled Architectural – Typical Section, at Section 1 Office Addition Wall Section **DELETE** top of section reference to Detail 2/A411 **ADD** in its place top of section reference to Detail 2/A411 per SKA-07 attached

On plan sheet A311 Titled Architectural – Typical Section, at Section 3 Coating BLDG Wall Section **DELETE** top of section reference to Detail 14/A411 **ADD** in its place top of section reference to **Detail** 14/A411 per SKA-08 attached

On plan sheet A311 Titled Architectural – Typical Section, at Section 4 Coating BLDG Wall Section at RLNG Door, TYP **DELETE** top of section reference to Detail 14/A411 **ADD** in its place top of section reference to Detail 14/A411 per SKA-09 attached.

On plan sheet A311 Titled Architectural – Typical Section, at Section 5 Main Building Overhang Section **DELETE** top of section **ADD** in its place top of section per SKA-010 attached.

On plan sheet A312 Titled Architectural – Wall Sections, at Section 1 Sign Shop Wall Section **DELETE** top of section ADD in its place top of section per SKA-011 attached

On plan sheet A313 Titled Architectural – Wall Sections at Entry wall section 3 **DELETE** top of section reference to Detail 18/A412 **ADD** in its place top of section 3 reference to Detail 18/A412 per SKA-12 attached

On plan sheet A411 Titled Architectural Section Details **DELETE** Detail Section 2 in its entirety **ADD** in its place Detail Section 2 per SKA-13 attached.

On plan sheet A411 Titled Architectural Section Details **DELETE** Detail Section 10 in its entirety **ADD** in its place Detail Section 10 per SKA-14 attached

On plan sheet A411 Titled Architectural Section Details **DELETE** Detail Section 11 in its entirety **ADD** in its place Detail Section 11 per SKA-15 attached

On plan sheet A411 Titled Architectural Section Details **DELETE** Detail Section 14 in its entirety **ADD** in its Place Detail Section 14 per SKA-16 attached

On plan sheet A411 Titled Architectural Section Details **DELETE** Detail Section 18 in its entirety **ADD** in its Place Detail Section 18 per SKA-17 attached

On plan sheet A412 Titled Architectural Section Details **DELETE** Detail Section 18 in its entirety **ADD** in its Place Detail Section 18 per SKA-18 attached

On plan Sheet SB100A Titled "STRUCTURAL - FOUNDATION PLAN – AREA-A" **ADD**: NOTE: 4. BOLLARDS LOCATED ON PLAN ON THE INTERIOR OF THE BUILDING SHALL BE SET ON TOP OF SLAB. PROVIDE 12-INCH SQUARE x ½-INCH THICK BASE PLATE. BOLLARDS (INTERIOR AND EXTERIOR) SHALL HAVE 3-INCH GROUT CROWN TOP. CROWN HEIGHT SHALL BE SET 4'-8" ABOVE FINISH FLOOR OR GRADE – REFER TO DETAIL A6/SB500 FOR ANCHORAGE TO SLAB.

On plan Sheet SB100B Titled "STRUCTURAL - FOUNDATION PLAN – AREA-B" **ADD**: NOTE: 4. BOLLARDS LOCATED ON PLAN ON THE INTERIOR OF THE BUILDING SHALL BE SET ON TOP OF SLAB. PROVIDE 12-INCH SQUARE x ½-INCH THICK BASE PLATE. BOLLARDS (INTERIOR AND EXTERIOR) SHALL HAVE 3-INCH GROUT CROWN TOP. CROWN HEIGHT SHALL BE SET 4'-8" ABOVE FINISH FLOOR OR GRADE – REFER TO DETAIL A6/SB500 FOR ANCHORAGE TO SLAB.

On plan Sheet SB100C Titled "STRUCTURAL - FOUNDATION PLAN – AREA-C" **ADD**: NOTE: 4. BOLLARDS LOCATED ON PLAN ON THE INTERIOR OF THE BUILDING SHALL BE SET ON TOP OF SLAB. PROVIDE 12-INCH SQUARE x ½-INCH THICK BASE PLATE. BOLLARDS (INTERIOR AND EXTERIOR) SHALL HAVE 3-INCH GROUT CROWN TOP. CROWN HEIGHT SHALL BE SET 4'-8" ABOVE FINISH FLOOR OR GRADE – REFER TO DETAIL A6/SB500 FOR ANCHORAGE TO SLAB.

On plan Sheet SB100C Titled “STRUCTURAL - FOUNDATION PLAN – AREA-C”
ADD: CLARIFICATION DETAIL A1/SB501 AT AUGER PIT FOUNDATION WALLS IN MECH-196. AMENDMENT-1 SKETCHES SKS-01 AND SKS-02

On plan Sheet SB100C Titled “STRUCTURAL - FOUNDATION PLAN – AREA-C”
ADD: DETAIL A8/SB500. AMENDMENT-1 SKETCHES SKS-03 AND SKS-04

On plan Sheet SB100D Titled “STRUCTURAL - FOUNDATION PLAN – AREA-D”
ADD: NOTE: 4. BOLLARDS LOCATED ON PLAN ON THE INTERIOR OF THE BUILDING SHALL BE SET ON TOP OF SLAB. PROVIDE 12-INCH SQUARE x ½-INCH THICK BASE PLATE. BOLLARDS (INTERIOR AND EXTERIOR) SHALL HAVE 3-INCH GROUT CROWN TOP. CROWN HEIGHT SHALL BE SET 4’-8” ABOVE FINISH FLOOR OR GRADE – REFER TO DETAIL A6/SB500 FOR ANCHORAGE TO SLAB.

On plan Sheet SB500 Titled “STRUCTURAL – FOUNDATION DETAILS”
ADD: DETAIL A8. AMENDMENT-1 SKETCH SKS-04

On plan Sheet SB501 Titled “STRUCTURAL – FOUNDATION DETAILS”
ADD: DETAIL A1. AMENDMENT-1 SKETCH SKS-02

On plan Sheet SF100 Titled “STRUCTURAL – CRANE FRAMING PLAN”
DELETE THE DIMENSION 10’-6”, LOCATED WITHIN COLUMN LINES 3 & 4 AND C.4 & D.
ADD: AMENDMENT-1 SKETCHES SKS-05 AND SKS-06

On plan Sheet SF100A Titled “STRUCTURAL - FRAMING PLAN – AREA-A”
DELETE THE NOTE “PRE-ENGINEERED METAL BUILDING BY OTHERS” in its Entirety.
ADD in its place: PRE-ENGINEERED METAL BUILDING DESIGN BY SECTION 133419 “METAL BUILDING SYSTEM”

On plan Sheet SF100B Titled “STRUCTURAL - FRAMING PLAN – AREA-B”
ADD: VEHICLE EXHAUST HOSE REEL SUPPORT FRAMING TO LOCATIONS 7/B, 7/B.95, 9/B, 9/C, 11/B AND 11/C. AMENDMENT-1 SKETCH SKS-07

On plan Sheet SF100C Titled “STRUCTURAL - FRAMING PLAN – AREA-C”
ADD: VEHICLE EXHAUST HOSE REEL SUPPORT FRAMING TO LOCATIONS 6.3/C.81, 6.3/D.61, 8.5/C.81 AND 8.5/D.61. AMENDMENT-1 SKETCH SKS-09

On plan Sheet SF100C Titled “STRUCTURAL - FRAMING PLAN – AREA-C”
ADD: SECTION MARKER FOR DETAIL A7/SF501 AMENDMENT-1 SKETCH SKS-10

On plan Sheet SF101 Titled “STRUCTURAL – ROOF FRAMING PLAN”
ADD: BLOCKING TIGHT TO UNDERSIDE OF ROOF DECK FOR 6-BAYS AT TOP OF W12X65 JAMB COLUMNS ALONG LINE-E BETWEEN LINES 2 AND 4.

PROVIDE CAP PLATES UNDERSIDE OF ASSUMED (E) ROOF PERIMETER BEAM AMENDMENT-1 SKETCHES SKS-12 AND SKS-13

On plan Sheet SF501 Titled "STRUCTURAL - DETAILS"
ADD: DETAIL A7 – DETAIL AMENDMENT-1 SKETCH SKS-11

On plan Sheet SF501 Titled "STRUCTURAL - DETAILS"
ADD: DETAIL F6 – TYPICAL VEHICLE EXHAUST HOSE REEL SUPPORT FRAMING DETAIL. AMENDMENT-1 SKETCH SKS-08

On plan Sheet SF501 Titled "STRUCTURAL - DETAILS"
DELETE THE NOTE ON SECTION A1 "CUT END OF (E) PLANK (BEYOND)" in its Entirety.
ADD in its place: "CUT END OF PLANK (BEYOND)"

On plan Sheet SF501 Titled "STRUCTURAL - DETAILS"
DELETE THE NOTE ON SECTIONS A1 AND A5 "(E) PLANK" in its Entirety.
ADD in its place: "PLANK"

On plan Sheet SF502 Titled "STRUCTURAL - DETAILS"
DELETE THE NOTE ON SECTION A1 "USE THIS DETAIL AT THE FOLLOWING COLUMN LOCATIONS: [LINE C.4 @ 3.8] [LINE 3.6 @ C.71, D.01, D.51]" in its Entirety.
ADD in its place: "USE THIS DETAIL AT THE FOLLOWING COLUMN LOCATIONS: [LINE C.4 @ 3.8] [LINE 3.6 @ C.71, D.01, D.51] SIMILAR AT: [LINE D.61 @ 6.3, 8.5] AND [LINE C.81 @ 6.3, 8.5]"

On plan Sheet SF502 Titled "STRUCTURAL – DETAILS"
DELETE: DETAIL A4 - TYPICAL DETAIL AT CRANE SUPPORT FRAMING
ADD: DETAIL A4. AMENDMENT-1 SKETCH SKS-14

On plan Sheet PL100C Titled Plumbing Part Plan First Floor – Area C, **REVISE** drawing per SKP-01 (Relocated Wet/Dry Vacuum System).

On plan Sheet PL301 Titled Compressed air/ Vacuum Part Plan and Details, **REVISE** drawing per SKP-02 (Relocated Wet/Dry Vacuum System).

On plan Sheet MH100B Titled Mechanical Part Plan First Floor – Area B, **REVISE** drawing per SKM-01 (Revised Heavy Vehicle Exhaust Duct/Hose Reels.)

On plan Sheet MH100C Titled Mechanical Part Plan First Floor – Area C, **REVISE** drawing per SKM-02 (Revised Light Vehicle Exhaust Duct/Hose Reels.

On plan Sheet EL101C Titled ELECTRICAL – LIGHTING – PLAN AREA – C
DELETE TITLE ELECTRICAL – LIGHTING – PLAN AREA – C, **ADD** in its place ELECTRICAL – LIGHTING – PLAN SECOND FLOOR - AREA – C

The following questions have been received:

Question: The plans for this project have a drawing (el101c) that is not listed on the cover sheet?

Response: See Amendment #1 for corrections.

Question: The coversheet lists EP609 as the last drawing of the set through EP608, is the last drawing in the download?

Response: See Amendment #1 for corrections.

Question: Who is responsible for moving all the existing equipment that is being reused from the existing shop to the project site?

Response: Install power and compressed air as depicted on the contract documents. The provided list of equipment shown on Sheet A101A, A101B, A101C and A101D, EP601 and EP602 indicates those pieces of equipment Maine DOT will be moving themselves to the property and hooking up with their own personnel between August 1 and September 1, 2014.

Question: What parts of the paint booth system are being relocated? What parts are the sheet metal contractor supposed to be supplying on site?

Response: Paint booth in its entirety will be relocated by the vendor under separate contract with the Maine DOT. Duct work requirements for the Paint booth will be answered in Amendment #2 .

Question: Could we get a list of existing equipment that we will be responsible for installing at the project site?

Response: All equipment to be relocated by the contractor from current facilities to this project site has been identified on the project documents. No further lists will be developed or provided.

Question: Are there site plans available or will they be issued for the portion of site work that the GC covers for phase II

Response: Per table of Contents, Item 003000, Item 4 references "Maine DOT State WIN #020118.00 (Available upon request through Maine Department of Transportation)" which are the site plans issued and bid as Phase 1 to this project. As stated, these

drawings are available through Maine DOT. No additional drawings for the required site work will be distributed. Contractor shall reference this available material for the Site work required within 10' of the proposed and existing building construction identified in this Phase 2 procurement.

Consider these changes and information prior to submitting your bid on April 2, 2014.

Sincerely,

George Macdougall

George M. A. Macdougall P.E.
Contracts & Specifications Engineer

Allied Engineering
Structural Mechanical Electrical Commissioning

PRE-BID MEETING SIGN IN SHEET

Date:

Project_____

Name	Representing	Phone FAX	Cell phone & E-mail
Don Avery	Sheridan	207 453-9311 P 207 453-2820 F	davery@sheridancorp.com
Adam Kapaldo	Nickerson & Oday	P 207-989-7400 F 207 989 7548	bboulier@nickoday.com
Dean Jordan	J M Brown CC	207 848 7790 207 848 7792	Dean@JMbrown CC .com
Mike Adams	Gannesson	207-621-8505 621-8508	mikeadams@gannestonconstruction.com
Karl Bacon	PM Const	282-7699	KBACON@PMCONSTRUCTION .COM
Tom Morton	Jewett Metal Buildings	604-6648	tom@jewettconstruction.com
Kevin Bowman	Bowman Constructors	348-2405	bids@bowmanconstructors.com
Mark M Peters	T. Buck	783-6223 783-3970	MARK@TBUCKCON.NET
Jeff Becker	Blane Casey	622-5620 622-9134	JBECKER@BLANECASEY.COM

Please return this sheet to Jim Hodsdon Allied engineering, Inc.

Allied Engineering
Structural Mechanical Electrical Commissioning

PRE-BID MEETING SIGN IN SHEET

Date:

Project_____

Name	Representing	Phone FAX	Cell phone & E-mail
Seth McGee	McGee Construction	582-8810 582-8847	207-776-8011 SmcGee@McGeeconstruction.com
Mickey Ling	Central Maine Disp.	592-9636 872-5882	207 592-9636 Mickey Ling
Jake Pellerin	JM Brown GC	848-7790 848-7792	207-649-5982 jake@jmbrowngc.com
Gerald Kelly	Twin City Sheet Metal	990-5605 941 9362	gkelly@twincitysheetmetal.com
Steve Marin	The Penobscot Co	236 6390, 6261	steve@thepencogc.com DFN@thepencogc.com
[illegible]	PDO Door	944-6193	944-6193
Tim Todd	R.I. Todd & Son Elec	496-1671	768-1346 Tim@RITODD.com
Blane Casey	Blane Casey Bldg Contr. Inc	622-5600 620-9134	bcasey@blanecasey.com
Carl Jackson	Automotive Garage Tools	346 4442	cjackson@agtme.com
John Kelley	MDOT	349-0967	John.Kelley@maine.gov

Please return this sheet to Jim Hodsdon Allied engineering, Inc.

Allied Engineering
Structural Mechanical Electrical Commissioning

PRE-BID MEETING MINUTES

PROJECT MEETING NUMBER: Mandatory Pre-bid meeting
MDOT WIN 20118.20 Meeting Date: 03/19/2014

AEI PROJECT NUMBER:13057

Project Name:66 Industrial Drive Phase 2

Project Location: Augusta Maine

N:\Projects\2013\13057 ~ BGS_MDOT Fleet Services Building\30 Bidding\Phase 2 PRE.BID MINUTES.doc

The Pre-Bid meeting for the above referenced project was conducted at the project site. See the attached sign in sheet for the individuals/firms in attendance.

1. PRE-BID MEETING

A. Introductions:

B. Project contact personnel:

Jim Hodsdon	**allied** *engineering, inc.*
Valerie Chiang	BGS
Don Hutchins	MDOT
Mike Burns	MDOT
John Kelley	MDOT

See attached sheet of attendees for contractors present.

C. Any thing stated at this meeting shall not be considered as a change in the scope unless it is included in and addenda.

D. **allied** engineering, inc is the authorized agent

E. Shop drawings must have a letter of transmittal

F. Project Clerk: MDOT will have a full time resident engineer on site

G. Owners representative: Valerie Chiang

H. Contractor

1. Contract and insurance certificates: per contract requirements

2. Builders risk by contractor: Per Contract documents
3. Pay down schedule will be required
4. Schedule of values will be required
5. Progress schedule will be required as a very essential part of this project
6. GC Responsibility / subcontractors
7. GC superintendent: resume may be required
8. Payment of material stored off site: per payment Procedures paragraph 1.5 E
9. Record drawings: must be maintained by superintendent
10. RFI Forms: see project manual

I. Progress meetings: at least monthly, with weekly progress meeting on site with resident engineer

J. Method of payment: Through resident engineer, and Project manager

K. Changes in contract: will be issued through the Engineer

L. Request for inspection: Per project closeout requirements

M. Acceptance

N. A brief description of the project was given:

O. General discussion:

1.	Valerie introduced the designers and MDOT staff present. She reviewed contract completion dates, commented on the importance of a timely completion, as well as coordination with other contractors such as the Phase 1 site contractor and the natural gas pipeline installation.
2.	Jim Hodsdon & Ryan Kanteres provided a more detailed description of the work: removal of all roof sheets and related insulation, removal of most wall sheets and insulation removal of existing office addition, new office addition, new coating addition and new sign shop as well as a new cold storage building on the back lot.
3.	There will be an additional opportunity for Contractors and subcontractors to visit the site on Wednesday March 26, @ 10:00AM
4.	Amendments will be issued 3/21/14, 3/25/14, and 3/28/14.

5.	We discussed the importance of the project schedule. MDOT needs to be operational to provide mandated road maintenance.
6.	It was noted the Review process for shop drawings will need to be smooth and expedited to meet the project schedule.
7.	It was noted the Metal building design loads must be followed as the foundation loads are based on loads shown on the drawings. Anchor bolt shops and metal building shops showing design loads will be required before the foundation rebar shops are reviewed.
8.	All RFI's must be sent to MDOT, using the form in the project manual volume 1 page 8.
9.	It was asked if the Cold storage building could be prefabricated: it was stated the current design is not based on a prefabricated structure.

Prepared By: _____
Jim Hodsdon
Title: Construction Administrator

Issued On: 03/21/14

Copies: Office File
Attachment list of Mandatory Pre- bid attendees
Amendment 1

160 Veranda Street
Portland, ME 04103

T 207.221.2260
F 207.221.2266
www.allied-eng.com

Allied Engineering
Structural Mechanical Electrical Commissioning

Attendance Sheet: **Pre-Bid Walkthrough 3-19-14**

AEI Project Name: MDOT Fleet Service Bldg Phase 2

AEI Project Number: 13-057

MDOT WIN # 020118.20

Name	Firm	Email Address	Phone Number
Don Avery	Sheridan	DAvery@sheridancorp.com	207-453-9311
Adam Kapaldo	Nickerson & O'Day	BBoulier@nickoday.com	207-989-7400
Dean Jordon	J. M. Brown Construction	Dean@jmbrownc.com	207-852-5518
Jake Pellerin	J. M. Brown Construction	Jake@jmbrownc.com	207-848-7790
Mike Adams	Ganneston	MikeAdams@gannestonconstruction.com	207-557-0963
Karl Bacon	PM Construction	KBacon@PMConstruction.com	207-282-7697
Tom Morton	Jewett Metal Buildings	Tom@jewettconstruction.com	207-604-6648
Keith Bowman	Bowman Constructors	bids@bowmconstructors.com	207-368-2405
Mark McPheters	T-Buck Construction	Mark@tbuckcon.net	207-783-6223
Jeff Becker	Blane Casey Building Contractor	JBecker@blanecasey.com	207-622-5600
Blane Casey	Blane Casey Building Contractor	BCasey@blanecasey.com	207-622-5600
Seth McGee	McGee Construction	SMcGee@mcgeeconstruction.com	207-582-8810
Mickey Wing	Central Maine Disposal	Mickey@centralmainedisposal.com	207-592-9636
Gerald Kelly	Town City Sheet Metal	Gkelly@towncitysheetmetal.com	207-990-5605
Steve Marin	The Penobscot Co.	Steve@thepencogc.com	207-236-6390
Tim Todd	RL Todd & Sons Inc.	Tim@rltodd.com	207-496-1671
Carl Jackson	Automotive Garage Tools	Cjackson@agtme.com	207-878-8811
John Hamlin	P. D. Q. Door	pdqjohn@myfairpoint.net	207-947-1899
John Kelly	Maine DOT	John.Kelly@maine.gov	207-215-7359

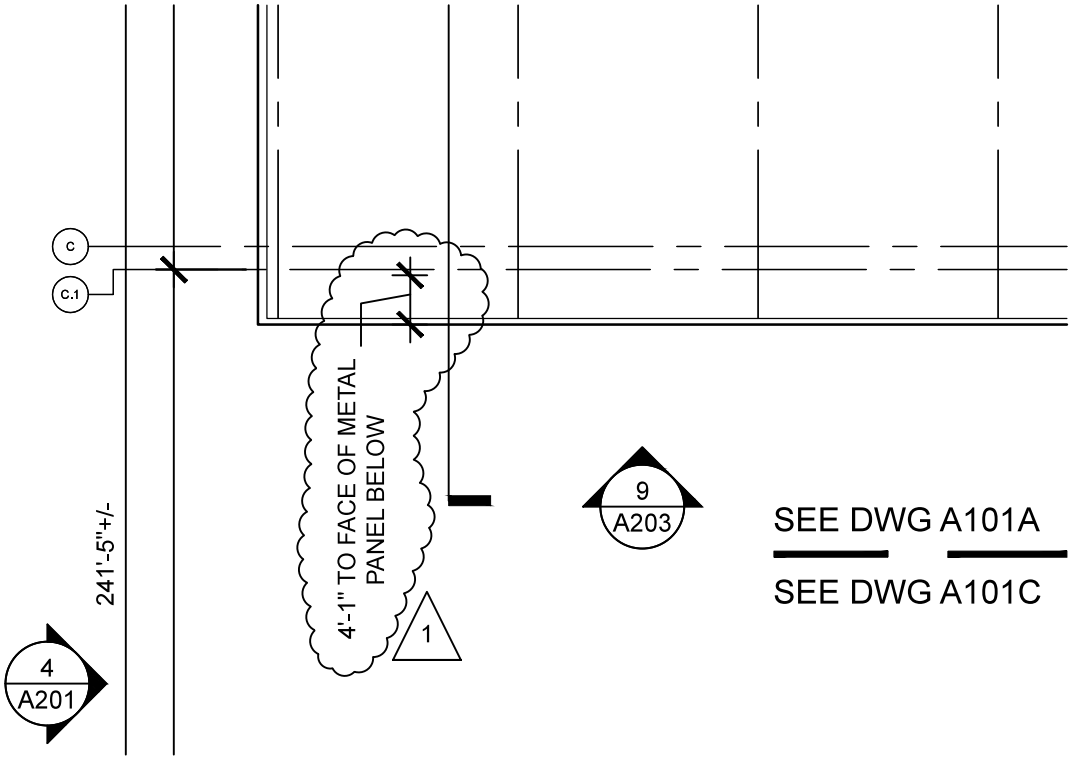

1-A103 Roof Plan

SCALE: 1/16" = 1'-0"

Allied Engineering
Structural Mechanical Electrical Commissioning
160 Veranda Street
Portland, Maine 04103
T: 207.221.2260
F: 207.221.2266
Web: www.allied-eng.com

DIMENSIONAL CLARIFICATION - SEE 1-A103

66 INDUSTRIAL DRIVE–PHASE 2

66 INDUSTRIAL DRIVE, AUGUSTA, MAINE
MAINE DEPARTMENT OF TRANSPORTATION

SCALE: AS NOTED | PROJ NO: 13057

DATE: 03/21/2014 | CAD FILE: A103.DWG

SKA-01

AMENDMENT #1

~~NOTE: SEE 3/A201 FOR METAL PANEL #3 FINISH PATTERN~~ 1

2-A201 East Elevation
SCALE: 1/16" = 1'-0"

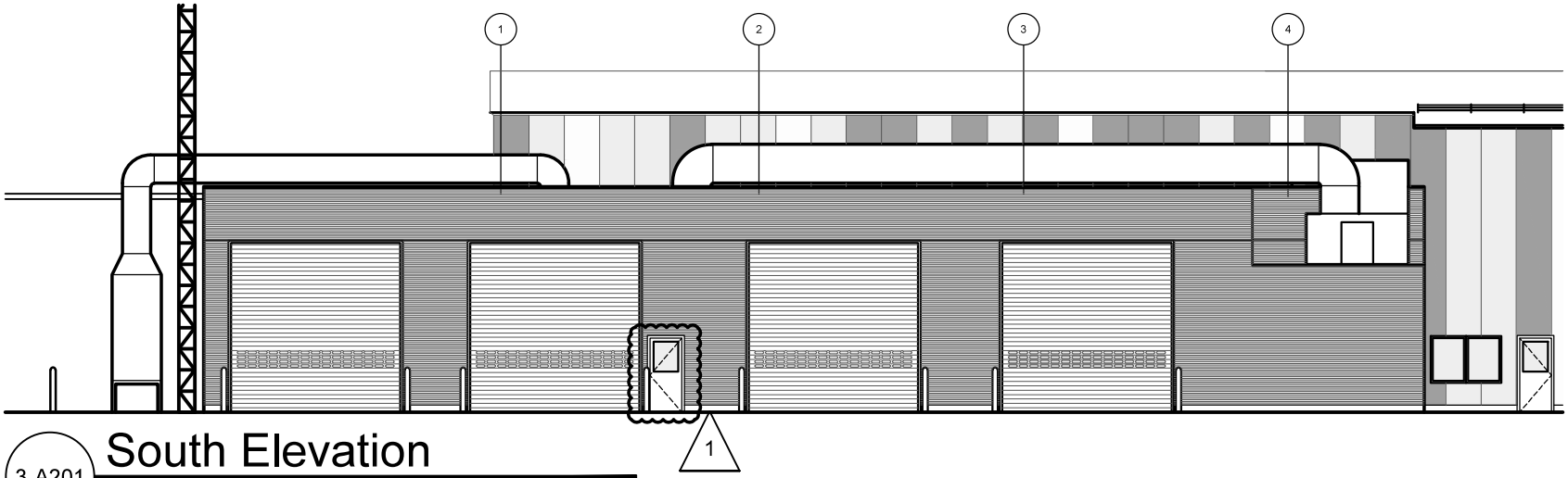

3-A201 South Elevation
SCALE: 1/16" = 1'-0"

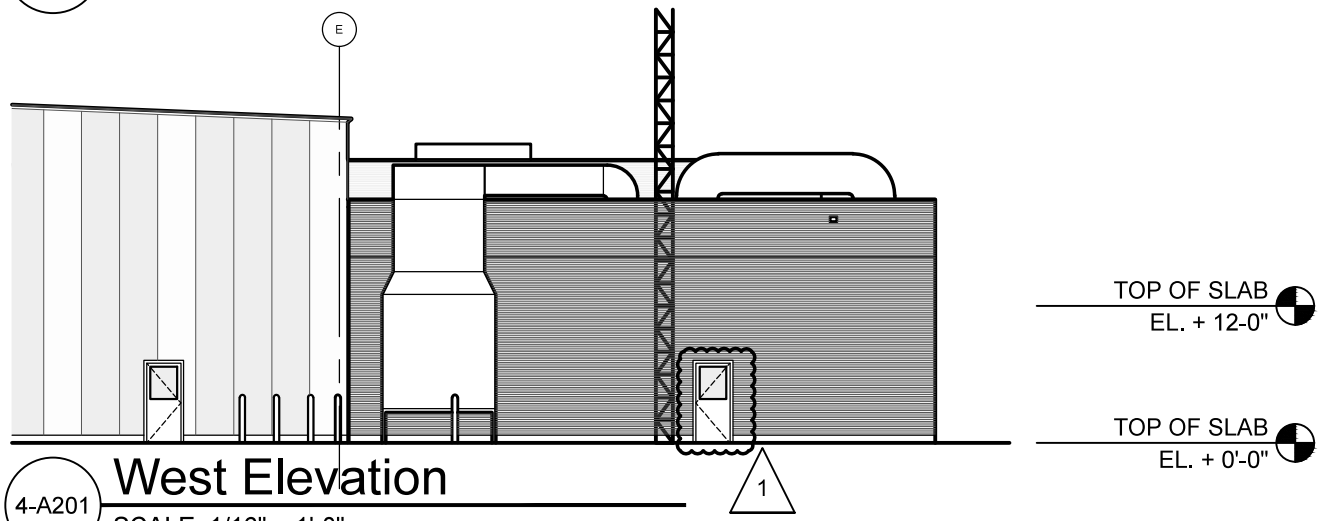

4-A201 West Elevation
SCALE: 1/16" = 1'-0"

Allied Engineering
Structural Mechanical Electrical Commissioning
160 Veranda Street
Portland, Maine 04103
T: 207.221.2260
F: 207.221.2266
Web: www.allied-eng.com

DOOR COORDINATION & NOTE DELETION - SEE A201

66 INDUSTRIAL DRIVE–PHASE 2
66 INDUSTRIAL DRIVE, AUGUSTA, MAINE
MAINE DEPARTMENT OF TRANSPORTATION

SCALE: AS NOTED | PROJ NO: 13057
DATE: 03/21/2014 | CAD FILE: A201.DWG

SKA-02

AMENDMENT #1

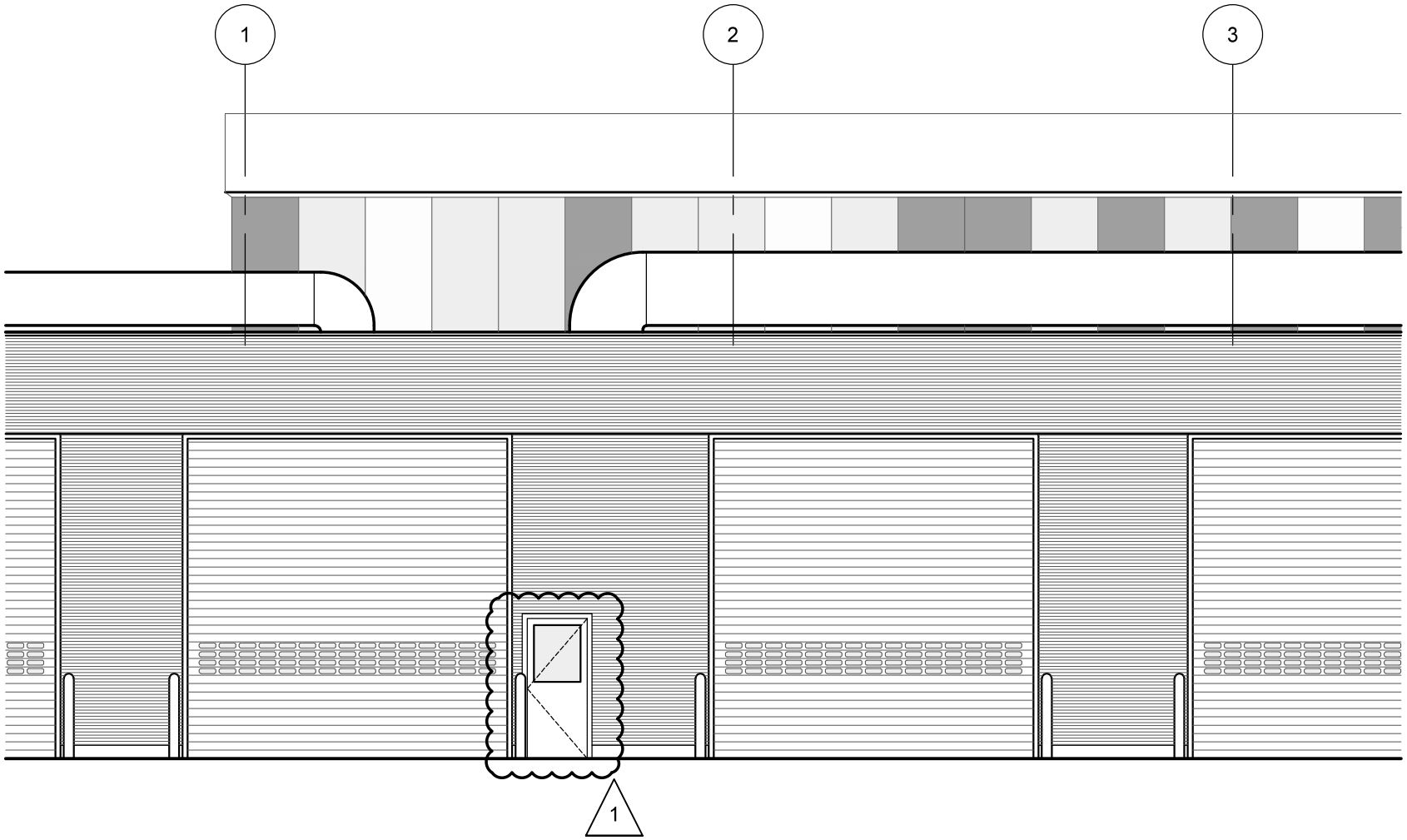

6-A202

South Elevation - Area C

SCALE: 1/8" = 1'-0"

Allied Engineering
Structural Mechanical Electrical Commissioning
160 Veranda Street
Portland, Maine 04103
T: 207.221.2260
F: 207.221.2266
Web: www.allied-eng.com

DOOR COORDINATION - SEE 6-A202

66 INDUSTRIAL DRIVE–PHASE 2
66 INDUSTRIAL DRIVE, AUGUSTA, MAINE
MAINE DEPARTMENT OF TRANSPORTATION

SCALE: AS NOTED | PROJ NO: 13057
DATE: 03/21/2014 | CAD FILE: A201.DWG

SKA-03

AMENDMENT #1

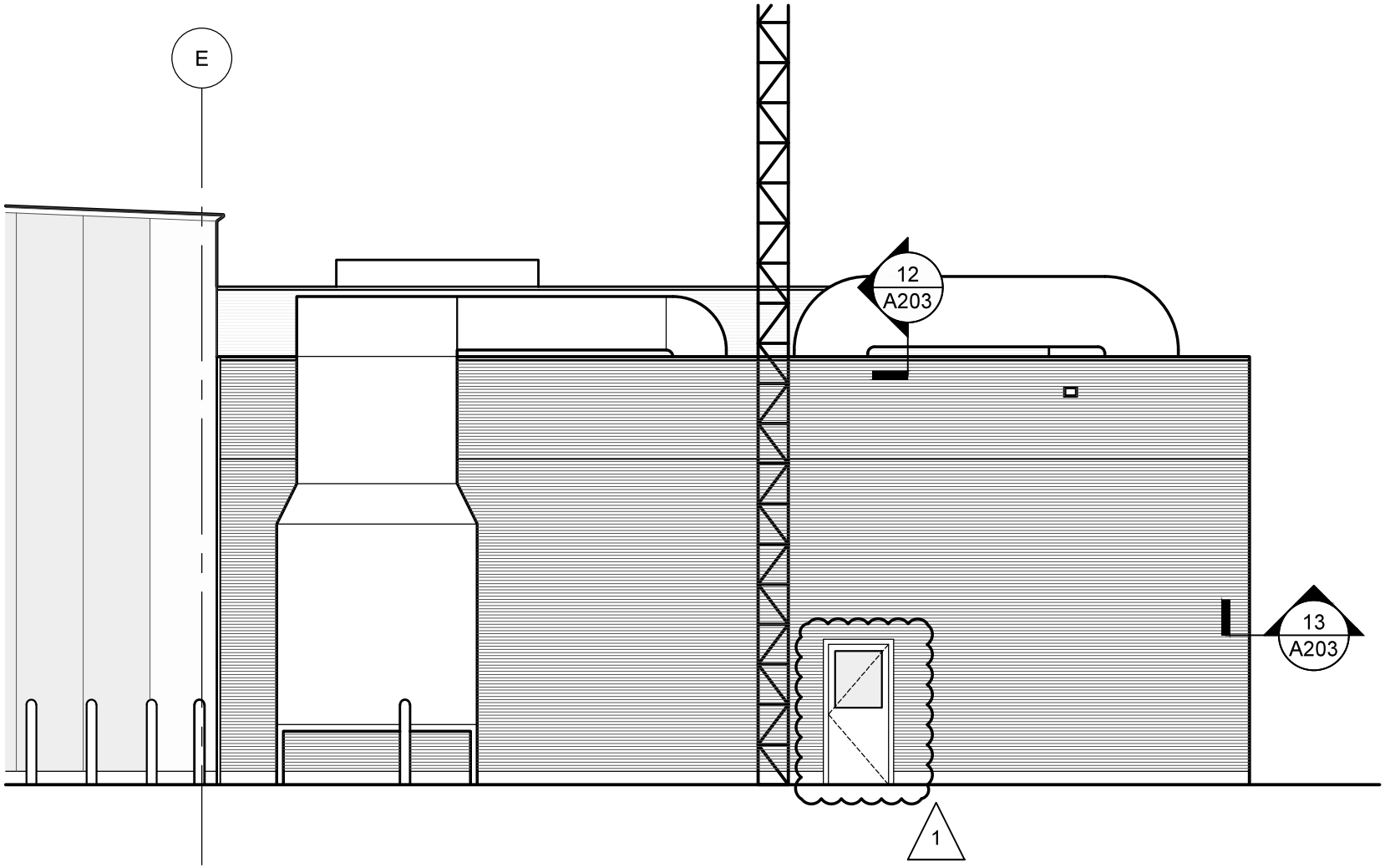

7-A203 West Elevation - Area C

SCALE: 1/8" = 1'-0"

Allied Engineering
Structural Mechanical Electrical Commissioning
160 Veranda Street
Portland, Maine 04103
T: 207.221.2260
F: 207.221.2266
Web: www.allied-eng.com

DOOR COORDINATION - SEE 7-A203

66 INDUSTRIAL DRIVE–PHASE 2
66 INDUSTRIAL DRIVE, AUGUSTA, MAINE
MAINE DEPARTMENT OF TRANSPORTATION

SCALE: AS NOTED | PROJ NO: 13057

DATE: 03/21/2014 | CAD FILE: A201.DWG

SKA-04

AMENDMENT #1

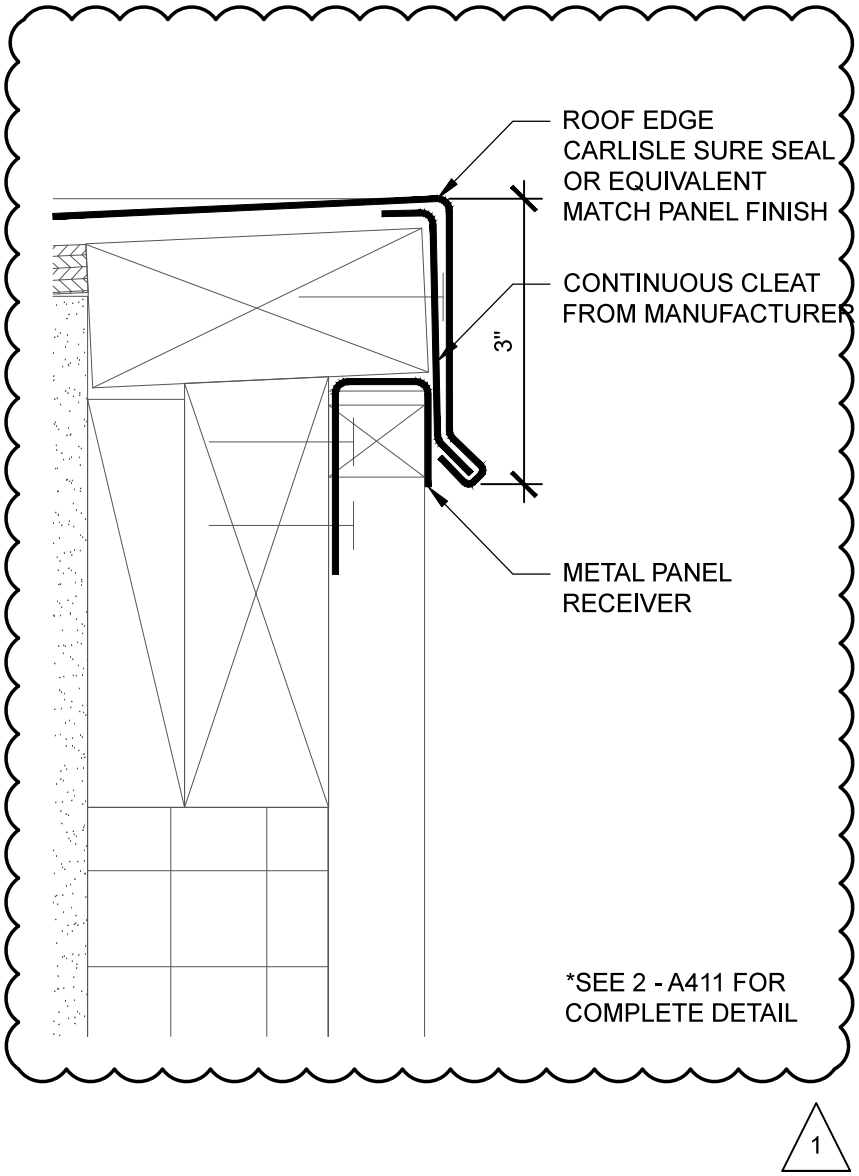

12-A203 Roof Edge Trim Detail

SCALE: 6" = 1'-0"

Allied Engineering
Structural Mechanical Electrical Commissioning
160 Veranda Street
Portland, Maine 04103
T: 207.221.2260
F: 207.221.2266
Web: www.allied-eng.com

ROOF EDGE CLARIFICATION - SEE 12-A203

66 INDUSTRIAL DRIVE–PHASE 2
66 INDUSTRIAL DRIVE, AUGUSTA, MAINE
MAINE DEPARTMENT OF TRANSPORTATION

SCALE: AS NOTED | PROJ NO: 13057
DATE: 03/21/2014 | CAD FILE: A201.DWG

SKA-05

AMENDMENT #1

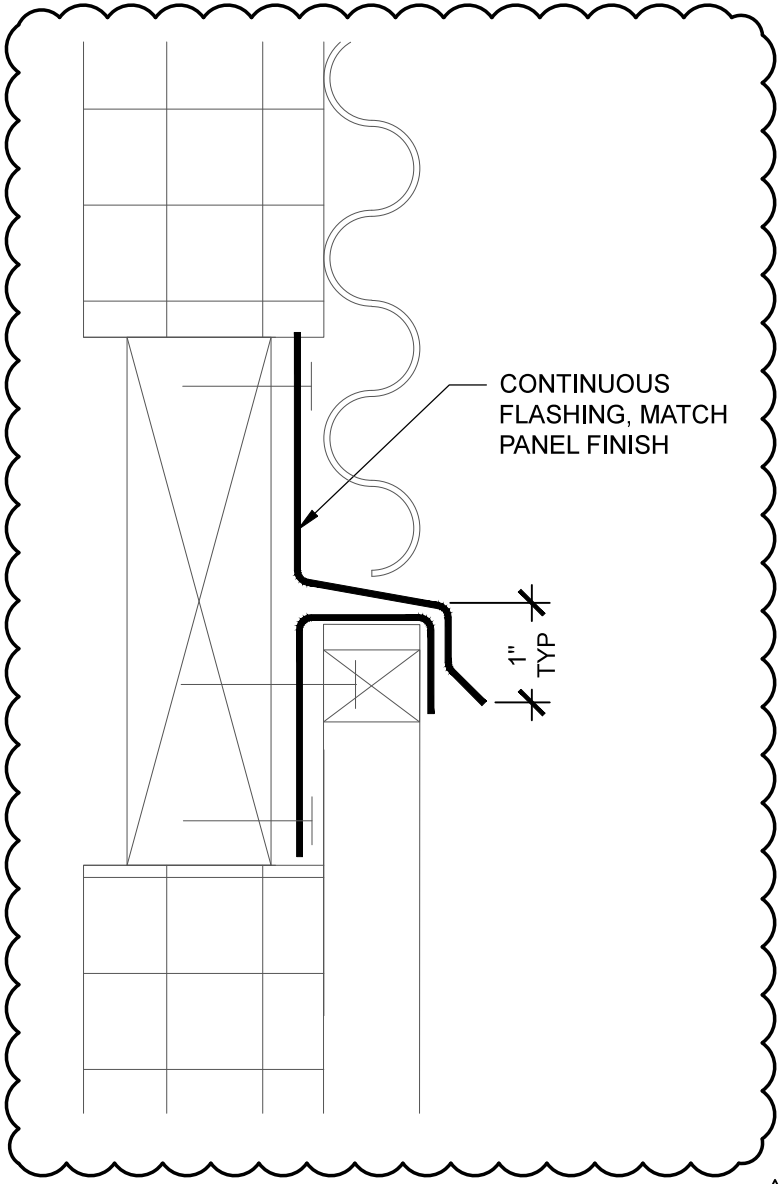

1

15-A203 Panel Trim Detail

SCALE: 6" = 1'-0"

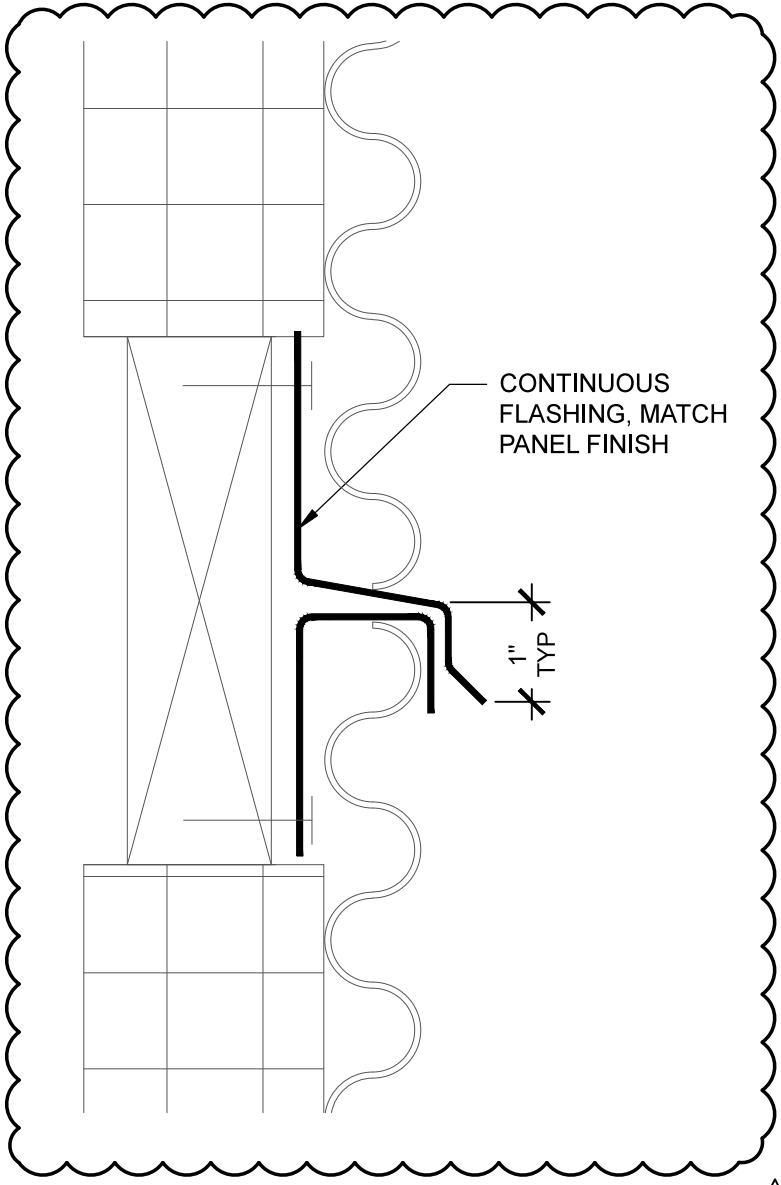

1

15A-A203 Panel Trim Detail

SCALE: 6" = 1'-0"

Allied Engineering
Structural Mechanical Electrical Commissioning
160 Veranda Street
Portland, Maine 04103
T: 207.221.2260
F: 207.221.2266
Web: www.allied-eng.com

FLASHING COORDINATION - SEE A203

66 INDUSTRIAL DRIVE–PHASE 2

66 INDUSTRIAL DRIVE, AUGUSTA, MAINE
MAINE DEPARTMENT OF TRANSPORTATION

SCALE: AS NOTED | PROJ NO: 13057

DATE: 03/21/2014 | CAD FILE: A201.DWG

SKA-06

AMENDMENT #1

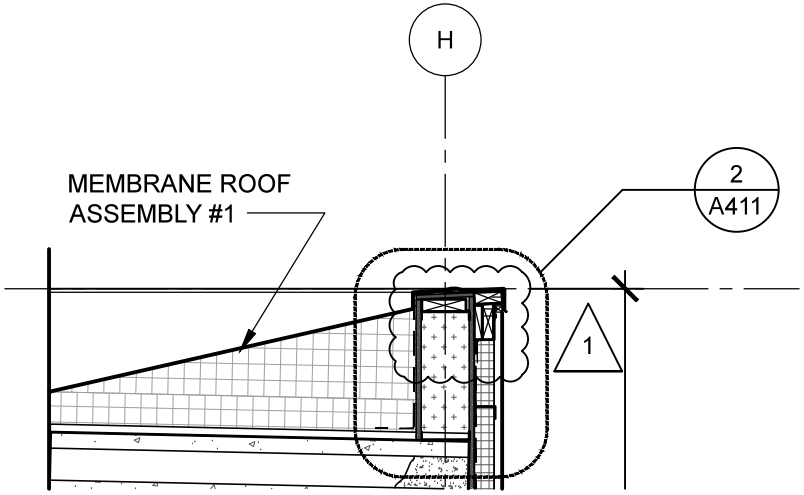

1-A311 Office Addition Wall Section, Typical

SCALE: 1/2" = 1'-0"

Allied Engineering
Structural Mechanical Electrical Commissioning
160 Veranda Street
Portland, Maine 04103
T: 207.221.2260
F: 207.221.2266
Web: www.allied-eng.com

ROOF EDGE MODIFICATION - SEE 1-A311

66 INDUSTRIAL DRIVE–PHASE 2

66 INDUSTRIAL DRIVE, AUGUSTA, MAINE
MAINE DEPARTMENT OF TRANSPORTATION

SCALE: AS NOTED | PROJ NO: 13057

DATE: 03/21/2014 | CAD FILE: A311.DWG

SKA-07

AMENDMENT #1

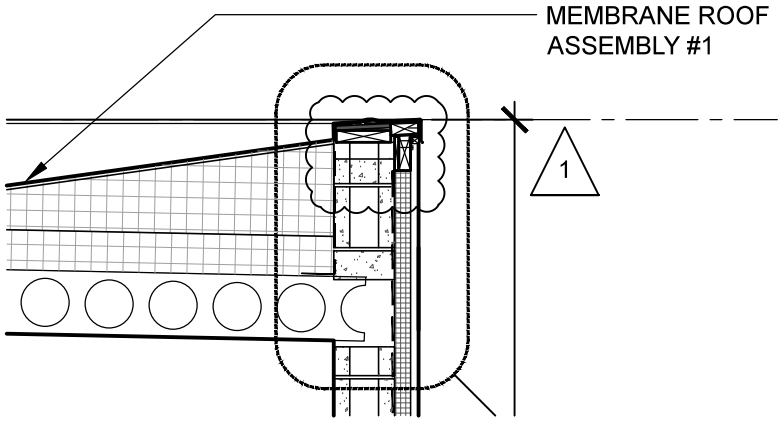

3-A311

Coatings BLDG Wall Section, TYP

SCALE: 1/2" = 1'-0"

Allied Engineering
Structural Mechanical Electrical Commissioning
160 Veranda Street
Portland, Maine 04103
T: 207.221.2260
F: 207.221.2266
Web: www.allied-eng.com

ROOF EDGE MODIFICATION - SEE 3-A311

66 INDUSTRIAL DRIVE–PHASE 2
66 INDUSTRIAL DRIVE, AUGUSTA, MAINE
MAINE DEPARTMENT OF TRANSPORTATION

SCALE: AS NOTED | PROJ NO: 13057
DATE: 03/21/2014 | CAD FILE: A311.DWG

SKA-08

AMENDMENT #1

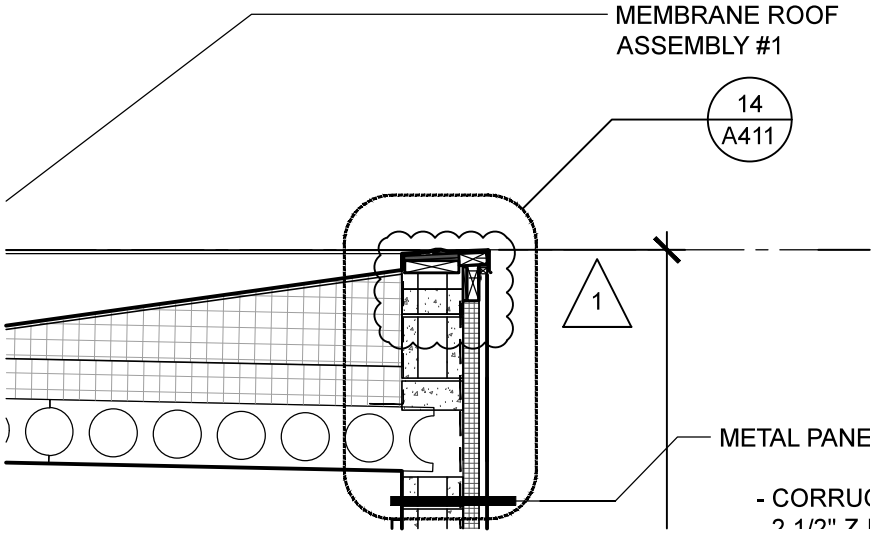

4-A311 Coating BLDG Wall Section at RLNG Door, TYP

SCALE: 1/2" = 1'-0"

Allied Engineering
Structural Mechanical Electrical Commissioning
160 Veranda Street
Portland, Maine 04103
T: 207.221.2260
F: 207.221.2266
Web: www.allied-eng.com

ROOF EDGE MODIFICATION - SEE 4-A311

66 INDUSTRIAL DRIVE–PHASE 2
66 INDUSTRIAL DRIVE, AUGUSTA, MAINE
MAINE DEPARTMENT OF TRANSPORTATION

SCALE: AS NOTED | PROJ NO: 13057
DATE: 03/21/2014 | CAD FILE: A311.DWG

SKA-09

AMENDMENT #1

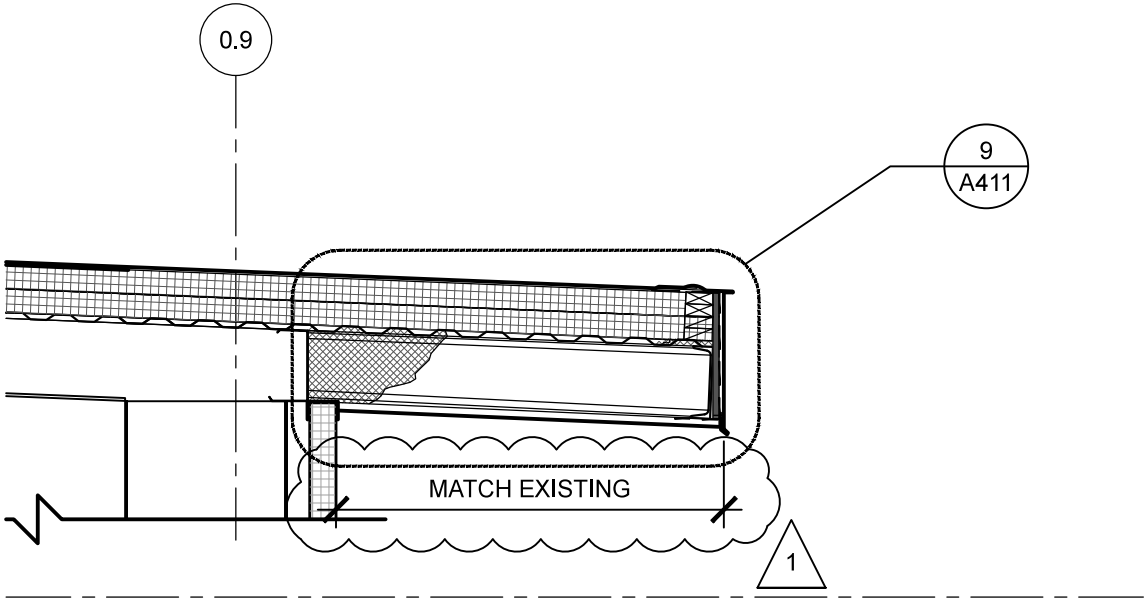

5-A311 Main Building Overhang Section, TYP

SCALE: 1/2" = 1'-0"

Allied Engineering
Structural Mechanical Electrical Commissioning
160 Veranda Street
Portland, Maine 04103
T: 207.221.2260
F: 207.221.2266
Web: www.allied-eng.com

DIMENSIONAL CLARIFICATION - SEE 5-A311

66 INDUSTRIAL DRIVE–PHASE 2

66 INDUSTRIAL DRIVE, AUGUSTA, MAINE
MAINE DEPARTMENT OF TRANSPORTATION

SCALE: AS NOTED | PROJ NO: 13057

DATE: 03/21/2014 | CAD FILE: A311.DWG

SKA-10

AMENDMENT #1

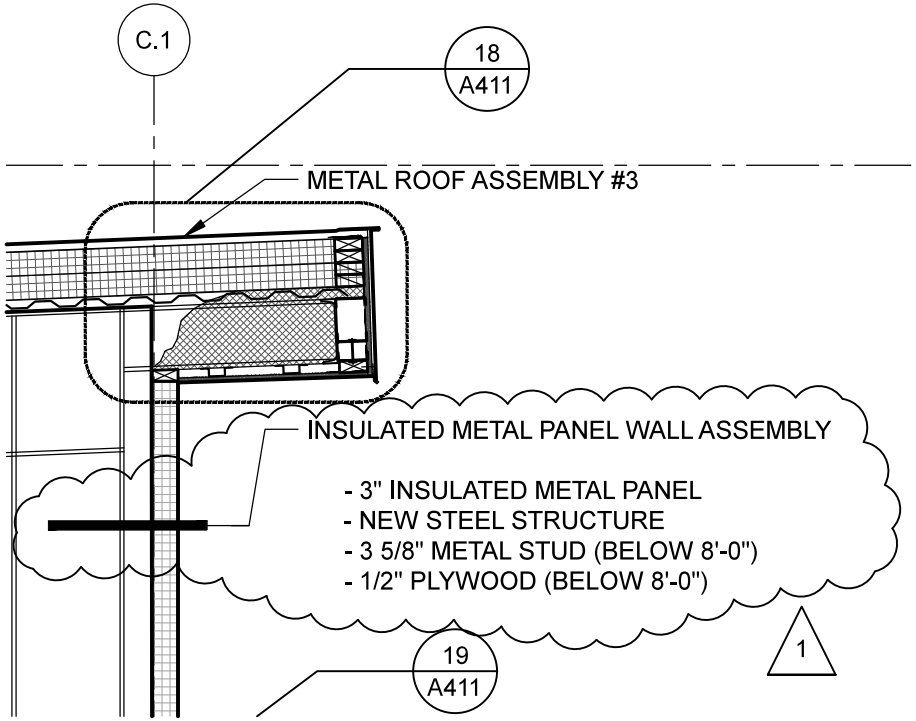

1-A312 Sign Shop Wall Section

SCALE: 1/2" = 1'-0"

Allied Engineering
Structural Mechanical Electrical Commissioning
160 Veranda Street
Portland, Maine 04103
T: 207.221.2260
F: 207.221.2266
Web: www.allied-eng.com

ASSEMBLY CLARIFICATION - SEE 1-A312

66 INDUSTRIAL DRIVE–PHASE 2

66 INDUSTRIAL DRIVE, AUGUSTA, MAINE
MAINE DEPARTMENT OF TRANSPORTATION

SCALE: AS NOTED | PROJ NO: 13057

DATE: 03/21/2014 | CAD FILE: A311.DWG

SKA-11

AMENDMENT #1

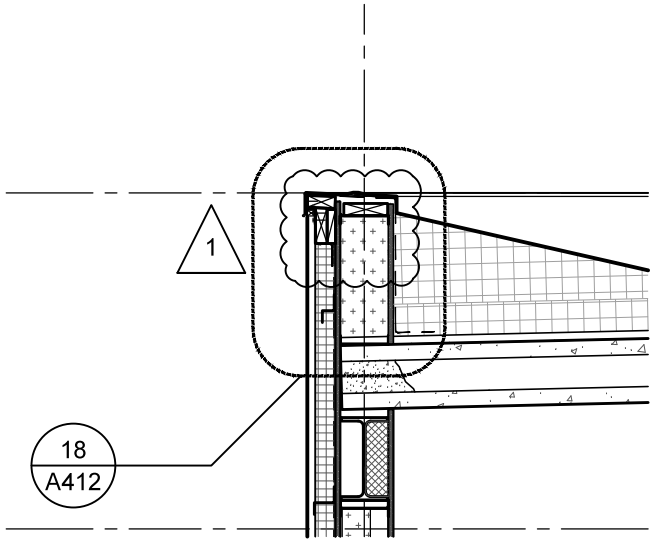

3-A313 Sign Shop Wall Section

SCALE: 1/2" = 1'-0"

Allied Engineering
Structural Mechanical Electrical Commissioning
160 Veranda Street
Portland, Maine 04103
T: 207.221.2260
F: 207.221.2266
Web: www.allied-eng.com

ROOF EDGE MODIFICATION - SEE 3-A313

66 INDUSTRIAL DRIVE–PHASE 2

66 INDUSTRIAL DRIVE, AUGUSTA, MAINE
MAINE DEPARTMENT OF TRANSPORTATION

SCALE: AS NOTED | PROJ NO: 13057

DATE: 03/21/2014 | CAD FILE: A311.DWG

SKA-12

AMENDMENT #1

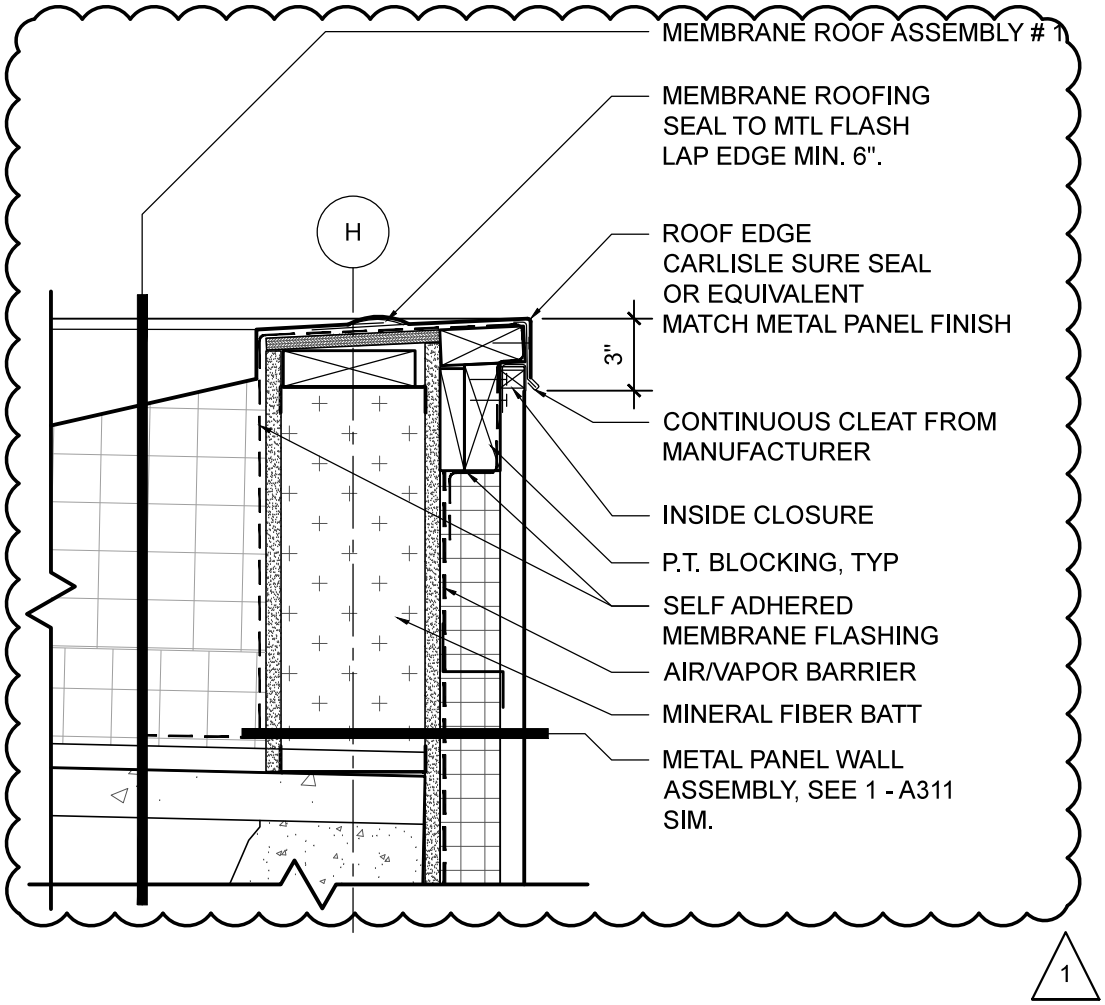

2-A411

Section Detail

SCALE: 1 1/2" = 1'-0"

Allied Engineering
Structural Mechanical Electrical Commissioning
160 Veranda Street
Portland, Maine 04103
T: 207.221.2260
F: 207.221.2266
Web: www.allied-eng.com

ROOF EDGE MODIFICATION - SEE 2-A411

66 INDUSTRIAL DRIVE–PHASE 2
66 INDUSTRIAL DRIVE, AUGUSTA, MAINE
MAINE DEPARTMENT OF TRANSPORTATION

SCALE: AS NOTED | PROJ NO: 13057
DATE: 03/21/2014 | CAD FILE: A411.DWG

SKA-13

AMENDMENT #1

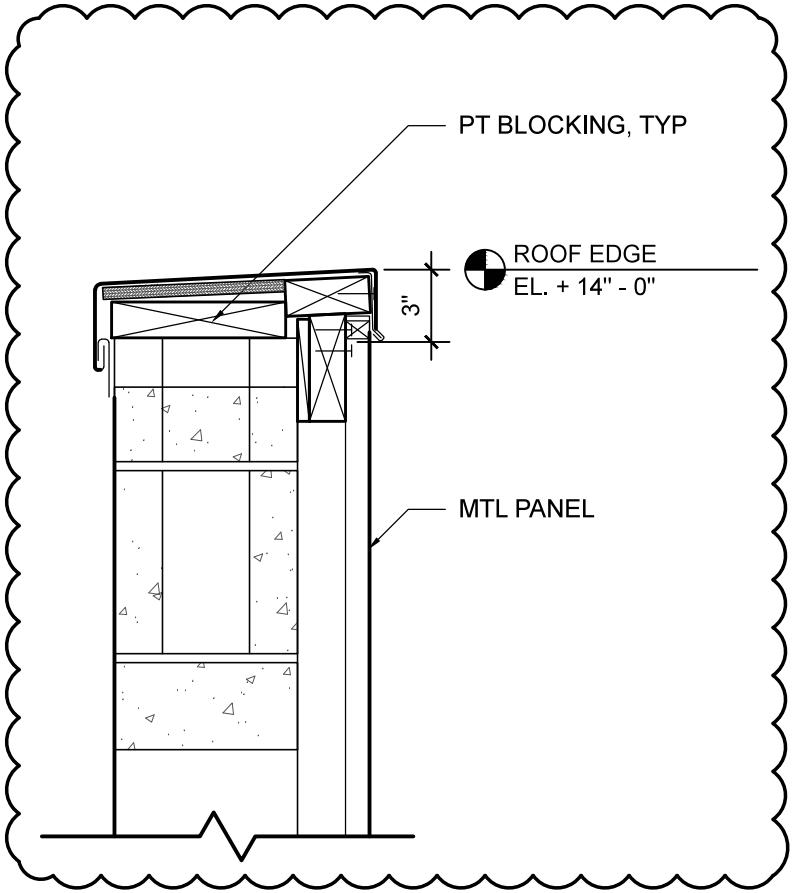

1

10-A411 Section Detail

SCALE: 1 1/2" = 1'-0"

Allied Engineering
Structural Mechanical Electrical Commissioning
160 Veranda Street
Portland, Maine 04103
T: 207.221.2260
F: 207.221.2266
Web: www.allied-eng.com

ROOF EDGE MODIFICATION - SEE 10-A411

66 INDUSTRIAL DRIVE–PHASE 2

66 INDUSTRIAL DRIVE, AUGUSTA, MAINE
MAINE DEPARTMENT OF TRANSPORTATION

SCALE: AS NOTED | PROJ NO: 13057

DATE: 03/21/2014 | CAD FILE: A411.DWG

SKA-14

AMENDMENT #1

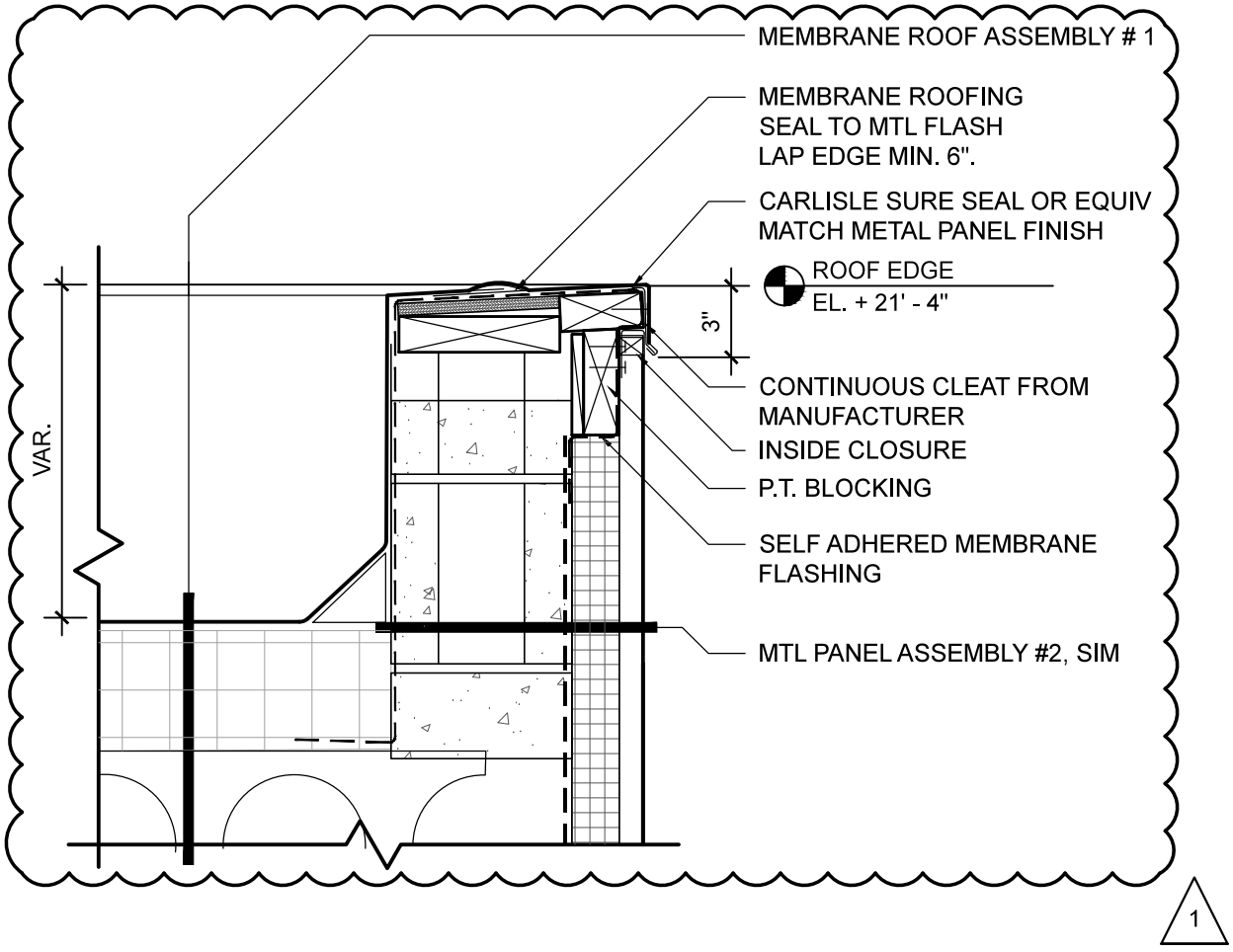

11-A411

Section Detail

SCALE: 1 1/2" = 1'-0"

Allied Engineering
Structural Mechanical Electrical Commissioning
160 Veranda Street
Portland, Maine 04103
T: 207.221.2260
F: 207.221.2266
Web: www.allied-eng.com

ROOF EDGE MODIFICATION - SEE 11-A411

66 INDUSTRIAL DRIVE–PHASE 2

66 INDUSTRIAL DRIVE, AUGUSTA, MAINE
MAINE DEPARTMENT OF TRANSPORTATION

SCALE: AS NOTED | PROJ NO: 13057

DATE: 03/21/2014 | CAD FILE: A411.DWG

SKA-15

AMENDMENT #1

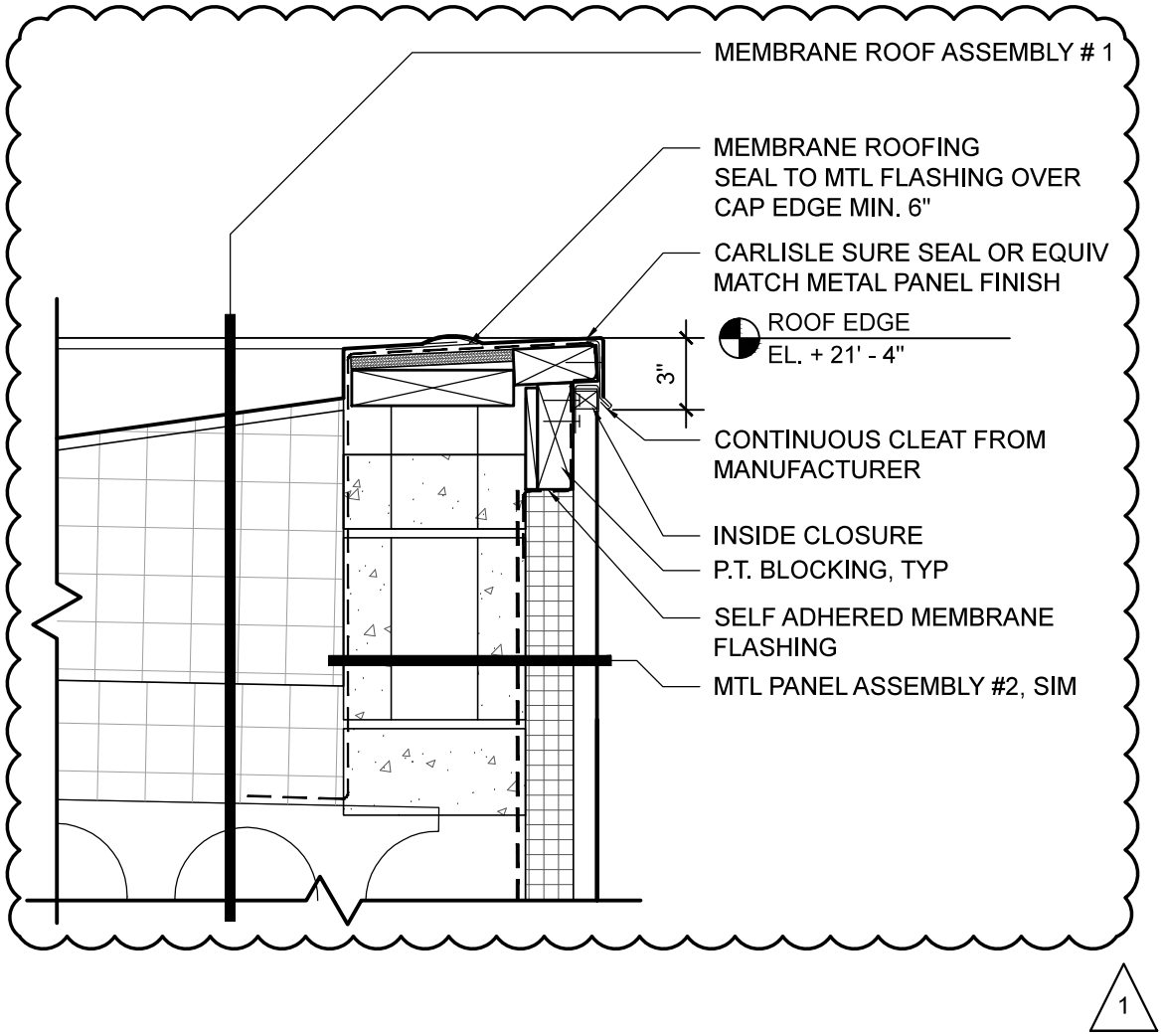

14-A411 **Section Detail**

SCALE: 1 1/2" = 1'-0"

Allied Engineering
Structural Mechanical Electrical Commissioning
160 Veranda Street
Portland, Maine 04103
T: 207.221.2260
F: 207.221.2266
Web: www.allied-eng.com

ROOF EDGE MODIFICATION - SEE 14-A411

66 INDUSTRIAL DRIVE–PHASE 2
66 INDUSTRIAL DRIVE, AUGUSTA, MAINE
MAINE DEPARTMENT OF TRANSPORTATION

SCALE: AS NOTED | PROJ NO: 13057
DATE: 03/21/2014 | CAD FILE: A411.DWG

SKA-16

AMENDMENT #1

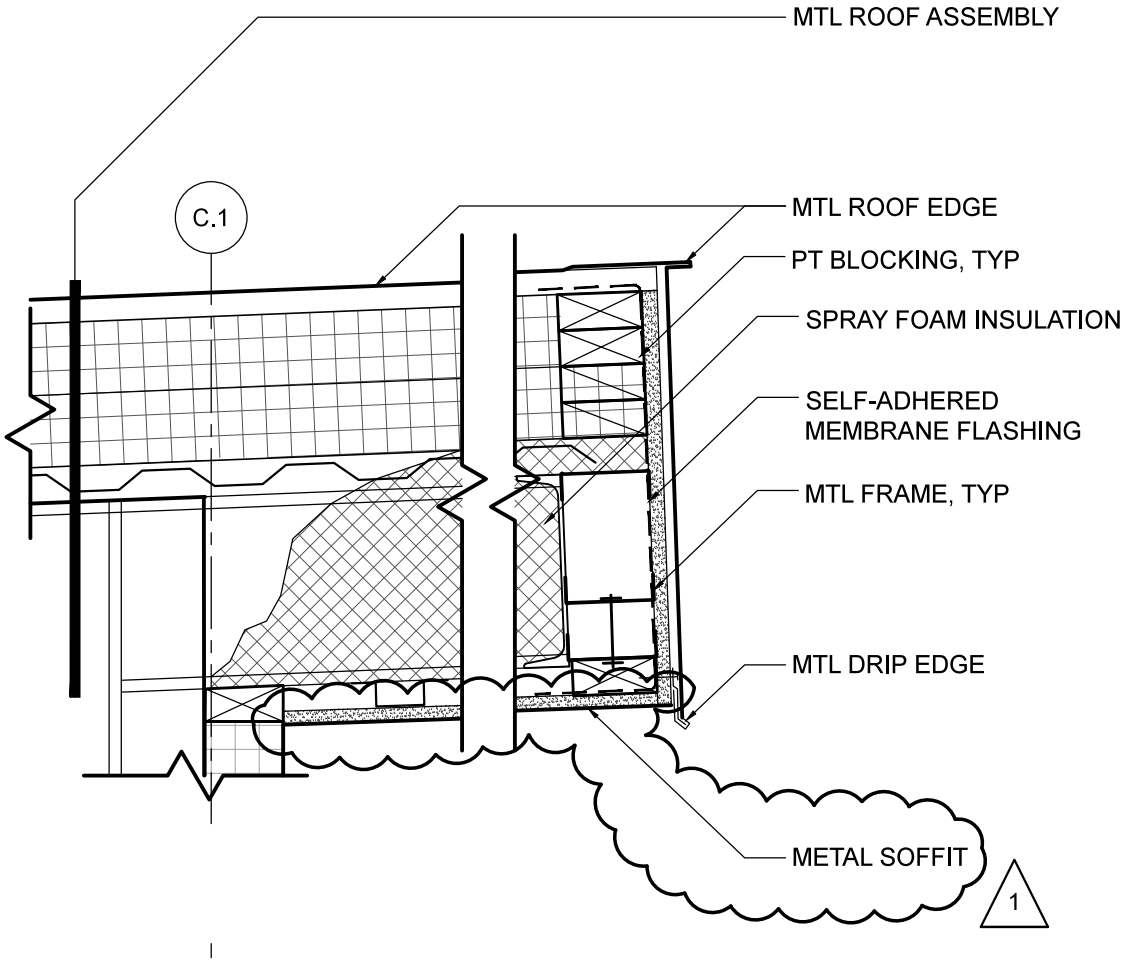

18-A411 Section Detail

SCALE: 1 1/2" = 1'-0"

Allied Engineering
Structural Mechanical Electrical Commissioning
160 Veranda Street
Portland, Maine 04103
T: 207.221.2260
F: 207.221.2266
Web: www.allied-eng.com

SOFFIT MATERIAL MODIFICATION - SEE 18-A411

66 INDUSTRIAL DRIVE–PHASE 2

66 INDUSTRIAL DRIVE, AUGUSTA, MAINE
MAINE DEPARTMENT OF TRANSPORTATION

SCALE: AS NOTED | PROJ NO: 13057

DATE: 03/21/2014 | CAD FILE: A411.DWG

SKA-17

AMENDMENT #1

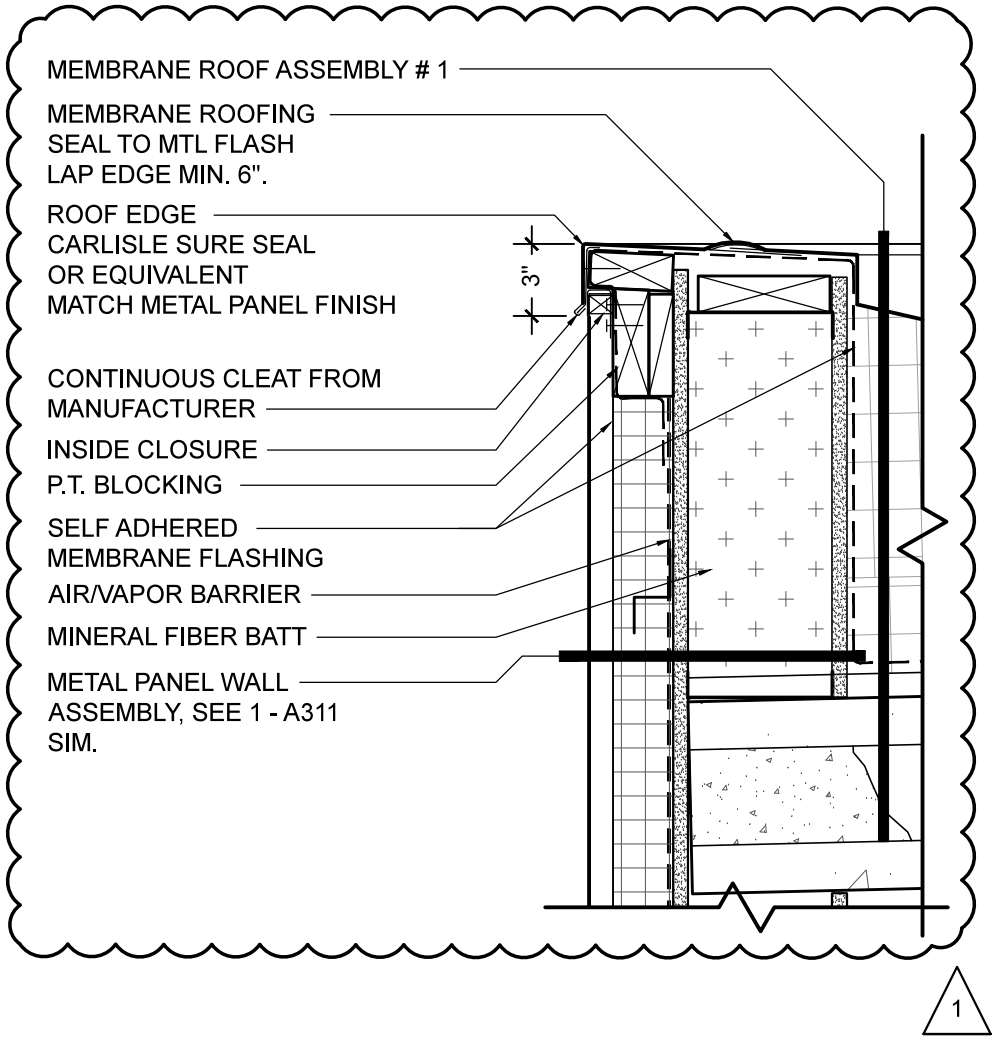

18 - A412

Section Detail

SCALE: 1 1/2" = 1'-0"

Allied Engineering
Structural Mechanical Electrical Commissioning
160 Veranda Street
Portland, Maine 04103
T: 207.221.2260
F: 207.221.2266
Web: www.allied-eng.com

ROOF EDGE MODIFICATION - SEE 18-A412

66 INDUSTRIAL DRIVE–PHASE 2
66 INDUSTRIAL DRIVE, AUGUSTA, MAINE
MAINE DEPARTMENT OF TRANSPORTATION

SCALE: AS NOTED | PROJ NO: 13057
DATE: 03/21/2014 | CAD FILE: A411.DWG

SKA-18

AMENDMENT #1

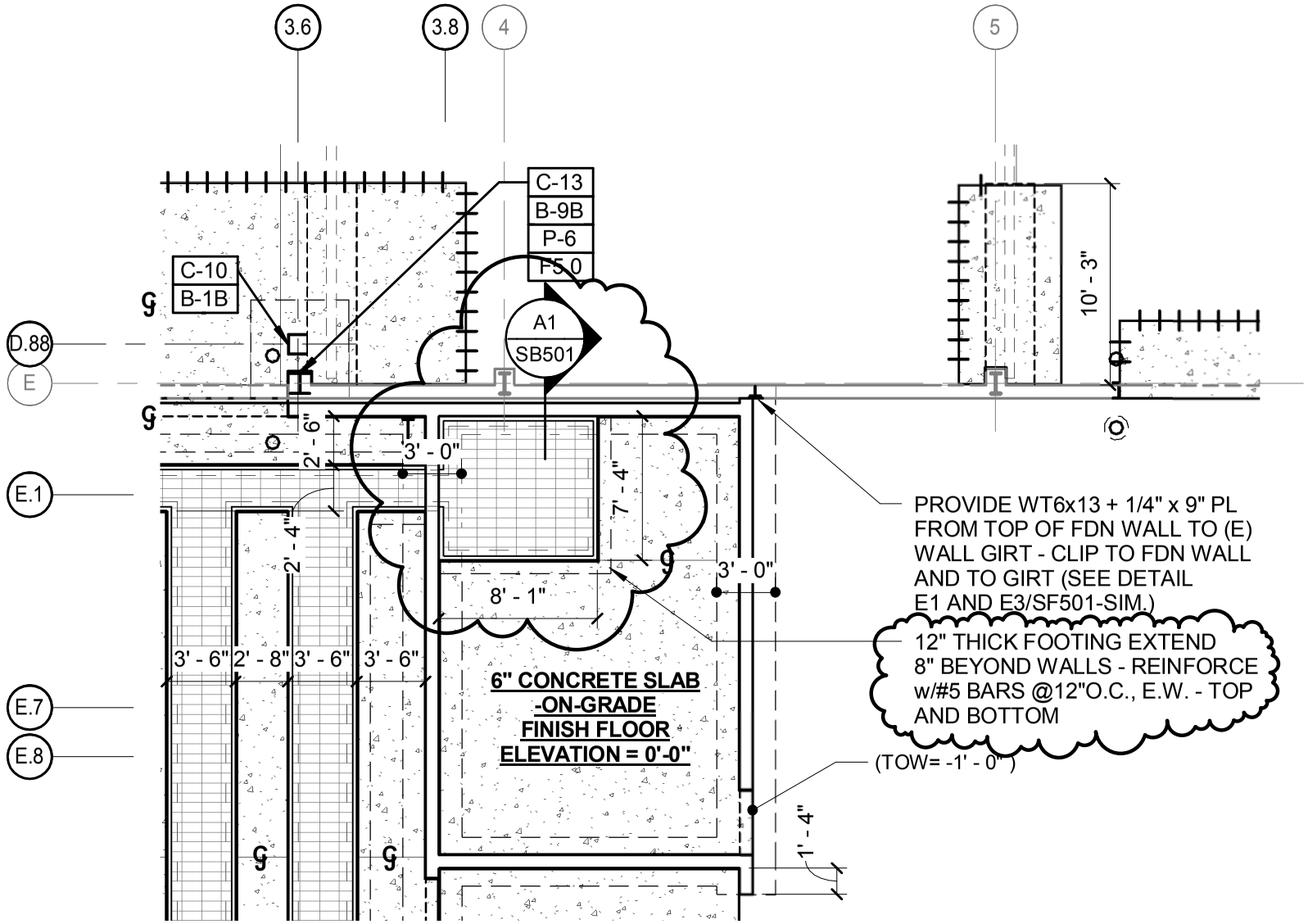

160 Veranda Street
Portland, Maine 04103
T: 207.221.2260
F: 207.221.2266
Web: www.allied-eng.com

Allied Engineering
Structural Mechanical Electrical Commissioning

FOUNDATION PLAN - AREA-C PART PLAN

66 INDUSTRIAL DRIVE - PHASE 2
66 INDUSTRIAL DRIVE, AUGUSTA, MAINE
MAINE DEPARTMENT OF TRANSPORTATION

SCALE: 1/8" = 1'-0"
PROJ NO: 13057
DATE: 03/21/2014
CAD FILE: 13057S.rvt

SKS-01
AMENDMENT #1

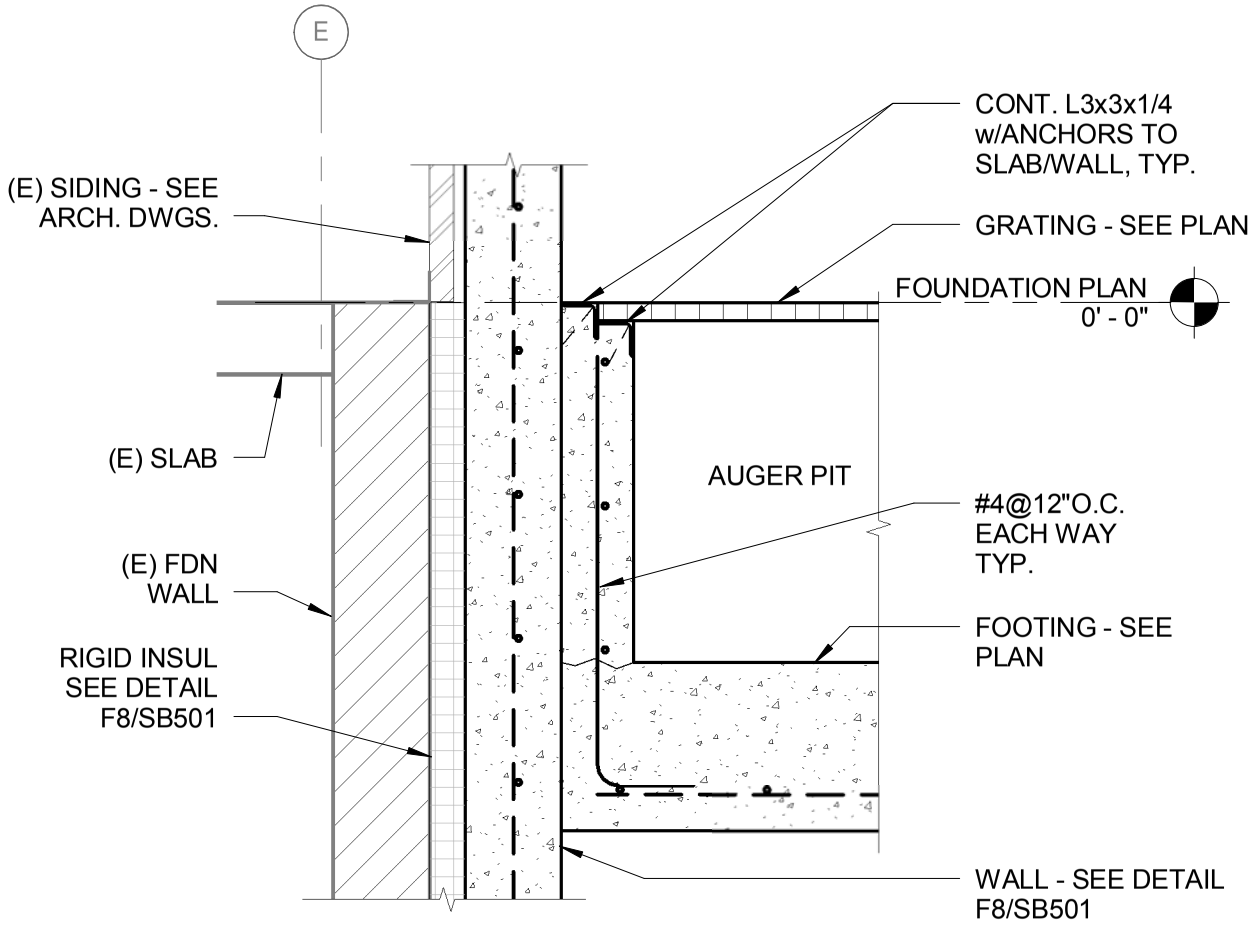

160 Veranda Street
Portland, Maine 04103
T: 207.221.2260
F: 207.221.2266
Web: www.allied-eng.com

Allied Engineering
Structural Mechanical Electrical Commissioning

DETAIL A1/SB501

66 INDUSTRIAL DRIVE - PHASE 2
66 INDUSTRIAL DRIVE, AUGUSTA, MAINE
MAINE DEPARTMENT OF TRANSPORTATION

SCALE: 3/4" = 1'-0"
PROJ NO: 13057
DATE: 03/21/2014
CAD FILE: 13057S.rvt

SKS-02
AMENDMENT #1

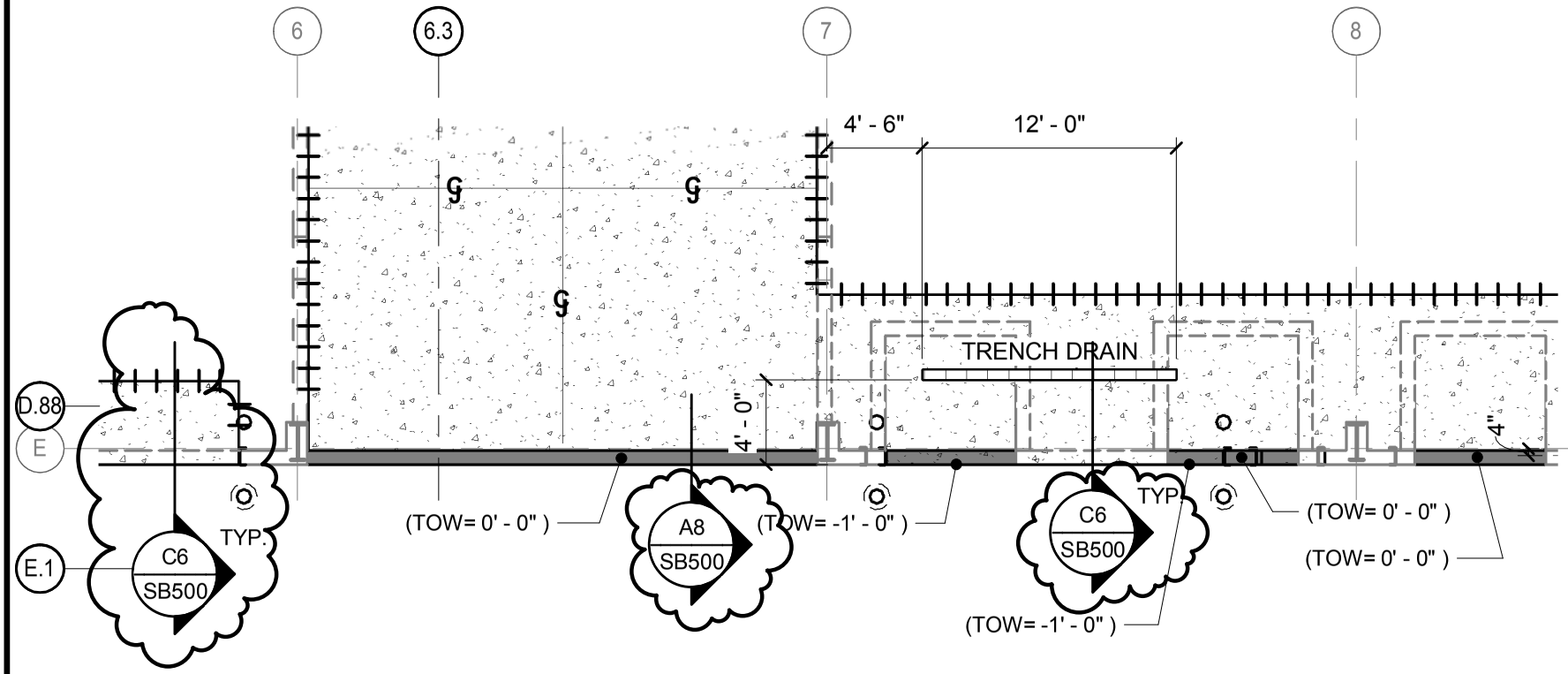

160 Veranda Street
Portland, Maine 04103
T: 207.221.2260
F: 207.221.2266
Web: www.allied-eng.com

Allied Engineering
Structural Mechanical Electrical Commissioning

FOUNDATION PLAN - AREA-C PART PLAN

66 INDUSTRIAL DRIVE - PHASE 2
66 INDUSTRIAL DRIVE, AUGUSTA, MAINE
MAINE DEPARTMENT OF TRANSPORTATION

SCALE: 1/8" = 1'-0"
PROJ NO: 13057
DATE: 03/21/2014
CAD FILE: 13057S.rvt

SKS-03
AMENDMENT #1

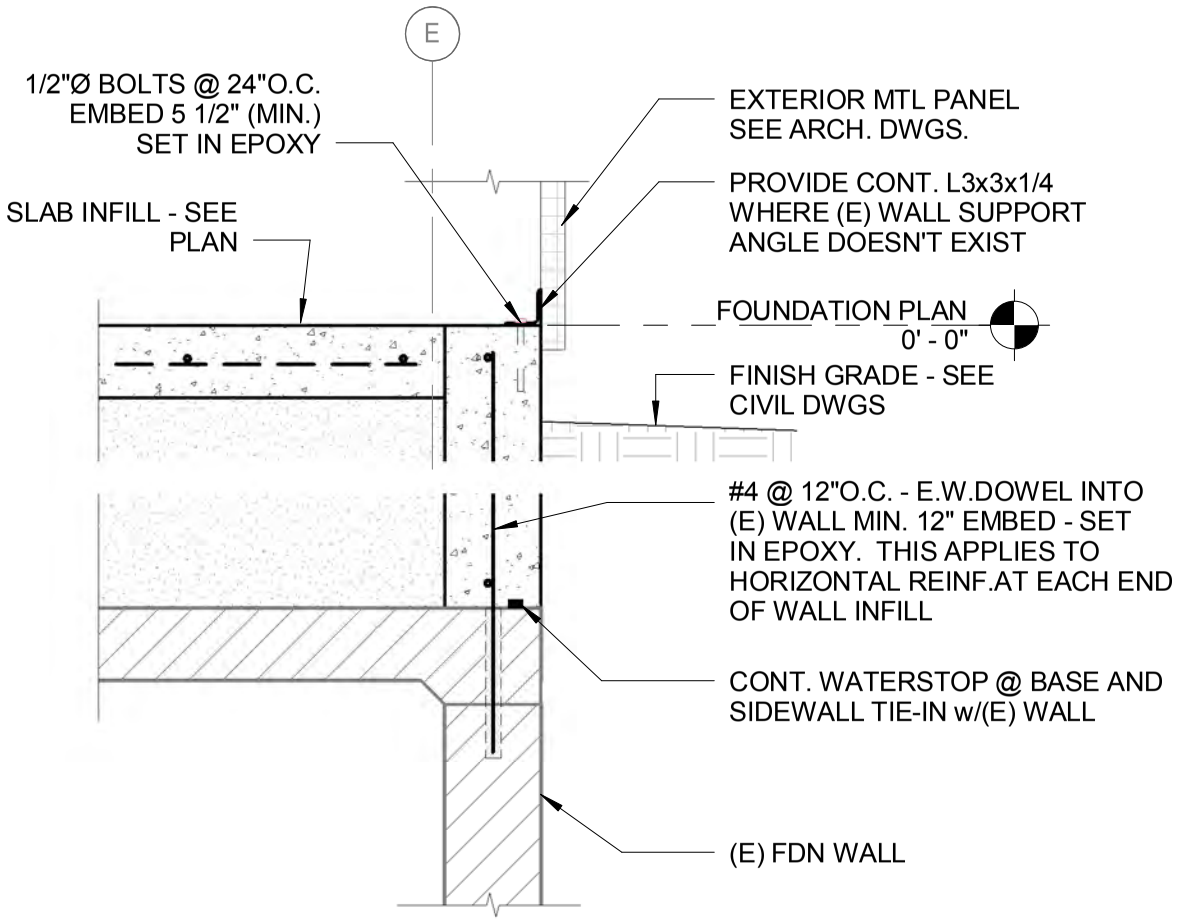

160 Veranda Street
Portland, Maine 04103
T: 207.221.2260
F: 207.221.2266
Web: www.allied-eng.com

Allied Engineering
Structural Mechanical Electrical Commissioning

DETAIL A8/SB500

66 INDUSTRIAL DRIVE - PHASE 2
66 INDUSTRIAL DRIVE, AUGUSTA, MAINE
MAINE DEPARTMENT OF TRANSPORTATION

SCALE: 3/4" = 1'-0"
PROJ NO: 13057
DATE: 03/21/2014
CAD FILE: 13057S.rvt

SKS-04
AMENDMENT #1

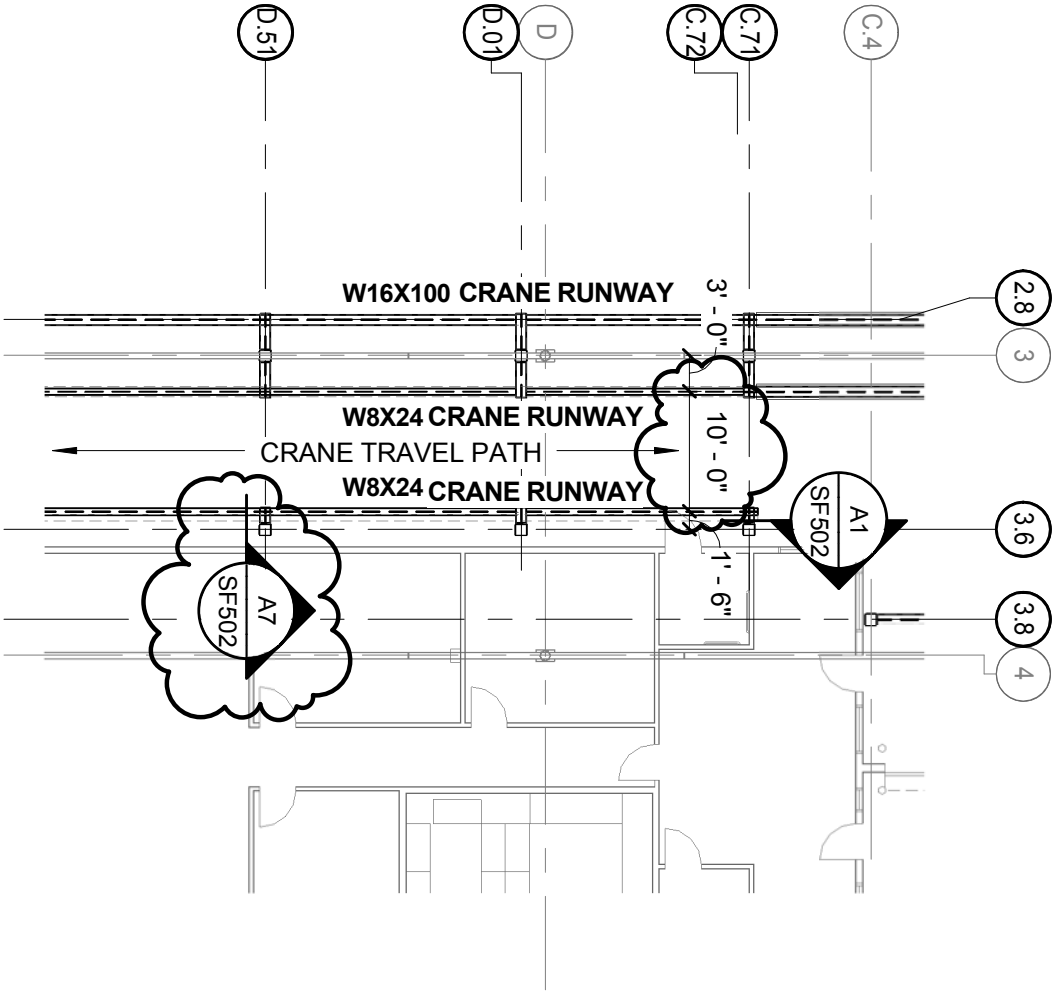

CRANE FRAMING PART PLAN	
66 INDUSTRIAL DRIVE - PHASE 2 66 INDUSTRIAL DRIVE, AUGUSTA, MAINE MAINE DEPARTMENT OF TRANSPORTATION	
SCALE: 1/16" = 1'-0"	PROJ NO: 13057
DATE: 03/21/2014	CAD FILE: 13057S.rvt

SKS-05
AMENDMENT #1

Allied Engineering
Structural Mechanical Electrical Commissioning

160 Veranda Street
Portland, Maine 04103
T: 207.221.2260
F: 207.221.2266
Web: www.allied-eng.com

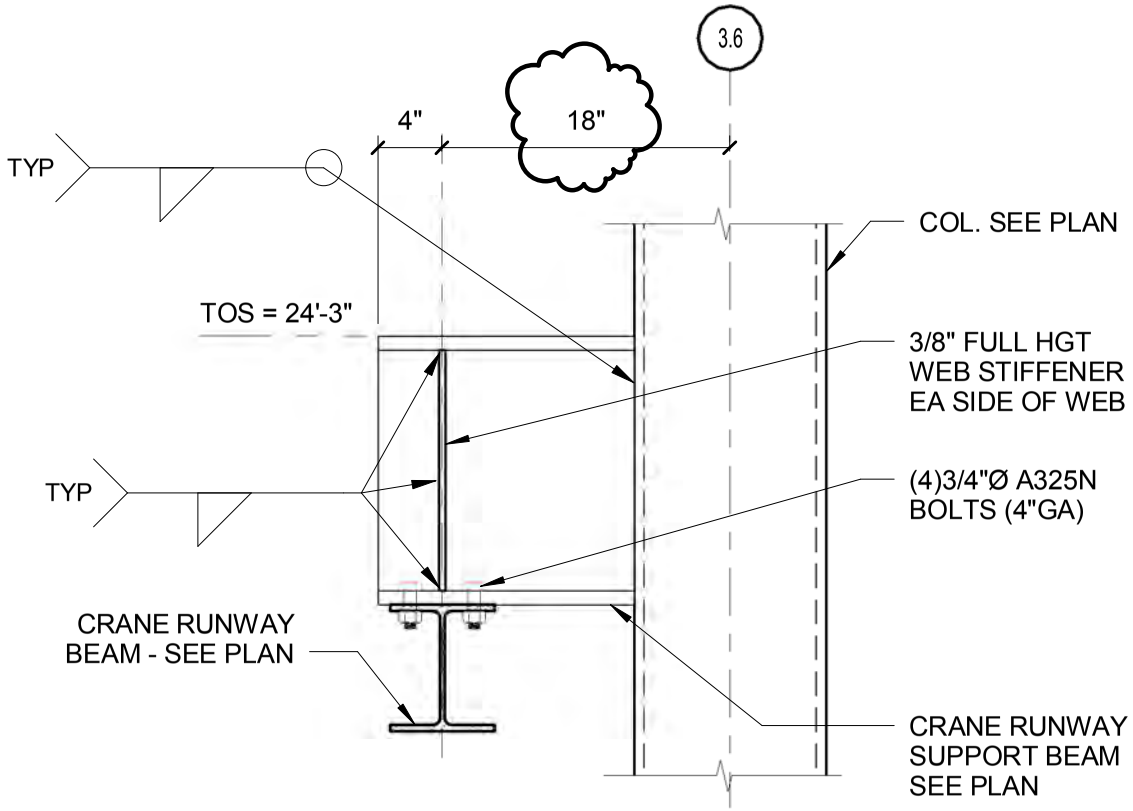

TYPICAL AT COLUMNS:
C.71, D.01 AND D.51

160 Veranda Street
Portland, Maine 04103
T: 207.221.2260
F: 207.221.2266
Web: www.allied-eng.com

Allied Engineering
Structural Mechanical Electrical Commissioning

DETAIL A7/SF502

66 INDUSTRIAL DRIVE - PHASE 2
66 INDUSTRIAL DRIVE, AUGUSTA, MAINE
MAINE DEPARTMENT OF TRANSPORTATION

SCALE: 1" = 1'-0"
PROJ NO: 13057
DATE: 03/21/2014
CAD FILE: 13057S.rvt

SKS-06
AMENDMENT #1

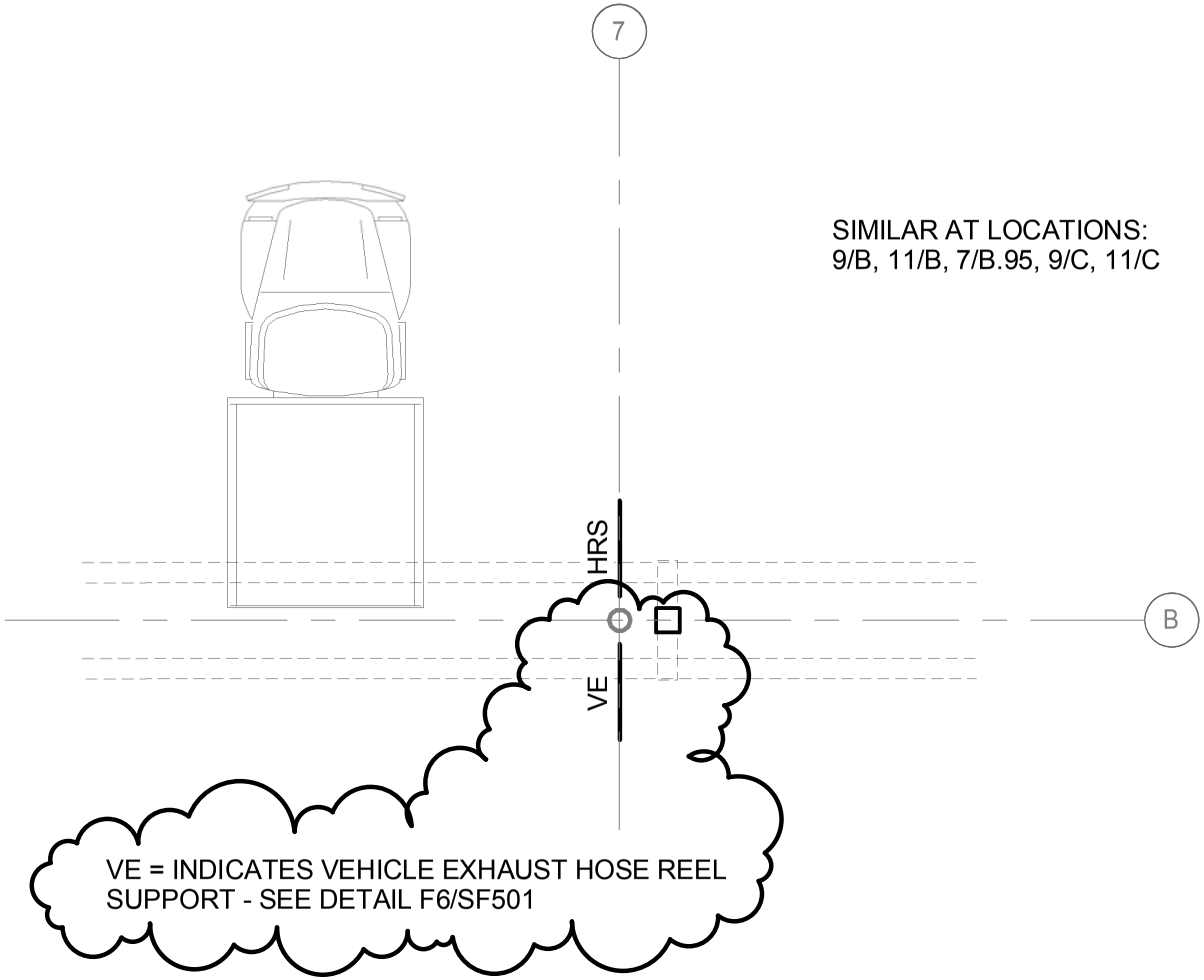

Allied Engineering
Structural Mechanical Electrical Commissioning
160 Veranda Street
Portland, Maine 04103
T: 207.221.2260
F: 207.221.2266
Web: www.allied-eng.com

FRAMING PLAN - AREA-B PART PLAN

66 INDUSTRIAL DRIVE - PHASE 2
66 INDUSTRIAL DRIVE, AUGUSTA, MAINE
MAINE DEPARTMENT OF TRANSPORTATION

SCALE: 1/8" = 1'-0"
PROJ NO: 13057
DATE: 03/21/2014
CAD FILE: 13057S.rvt

SKS-07
AMENDMENT #1

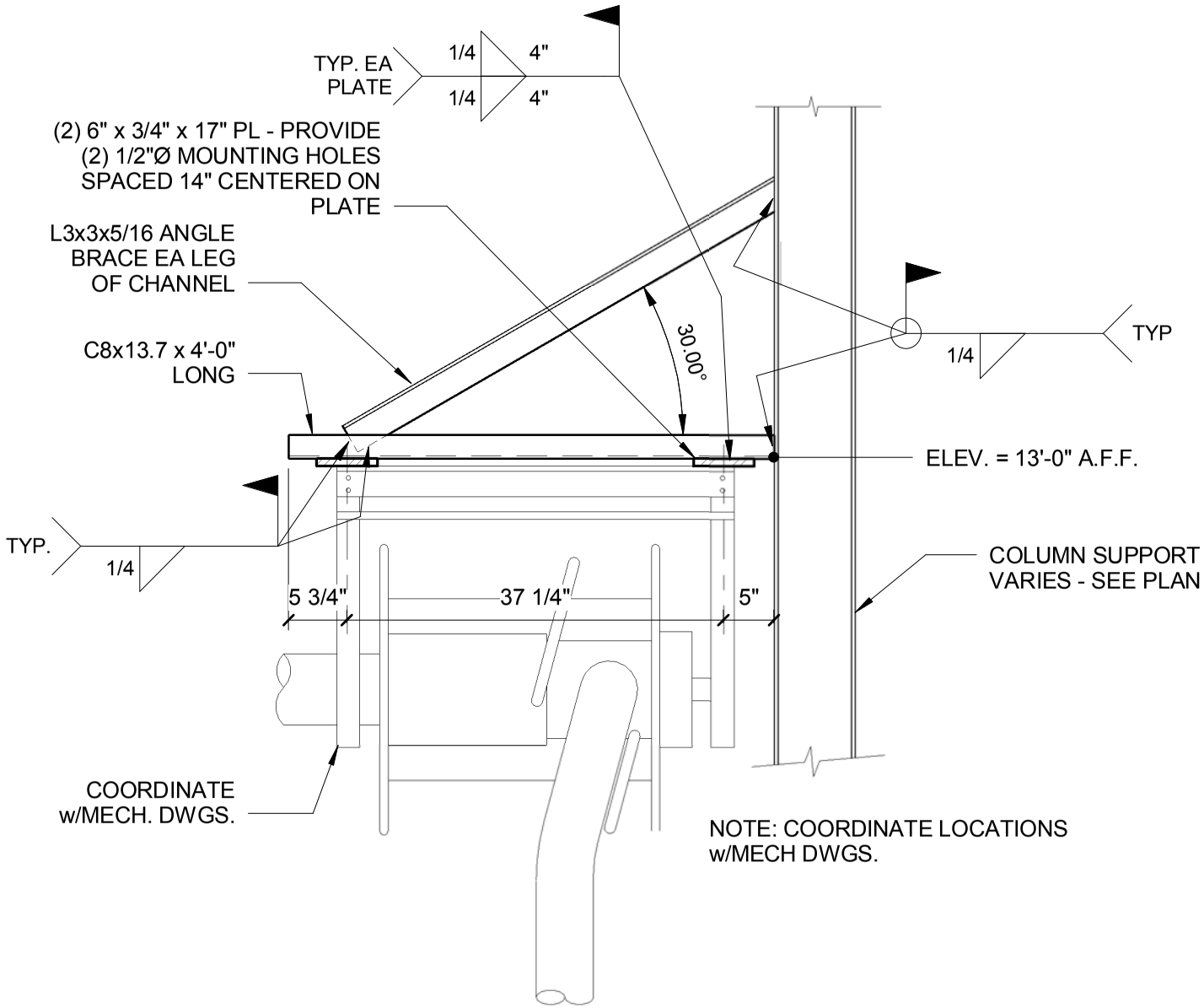

Allied Engineering
Structural Mechanical Electrical Commissioning
160 Veranda Street
Portland, Maine 04103
T: 207.221.2260
F: 207.221.2266
Web: www.allied-eng.com

DETAIL F6/SF501

66 INDUSTRIAL DRIVE - PHASE 2
66 INDUSTRIAL DRIVE, AUGUSTA, MAINE
MAINE DEPARTMENT OF TRANSPORTATION

SCALE: 3/4" = 1'-0"
PROJ NO: 13057
DATE: 03/21/2014
CAD FILE: 13057S.rvt

SKS-08
AMENDMENT #1

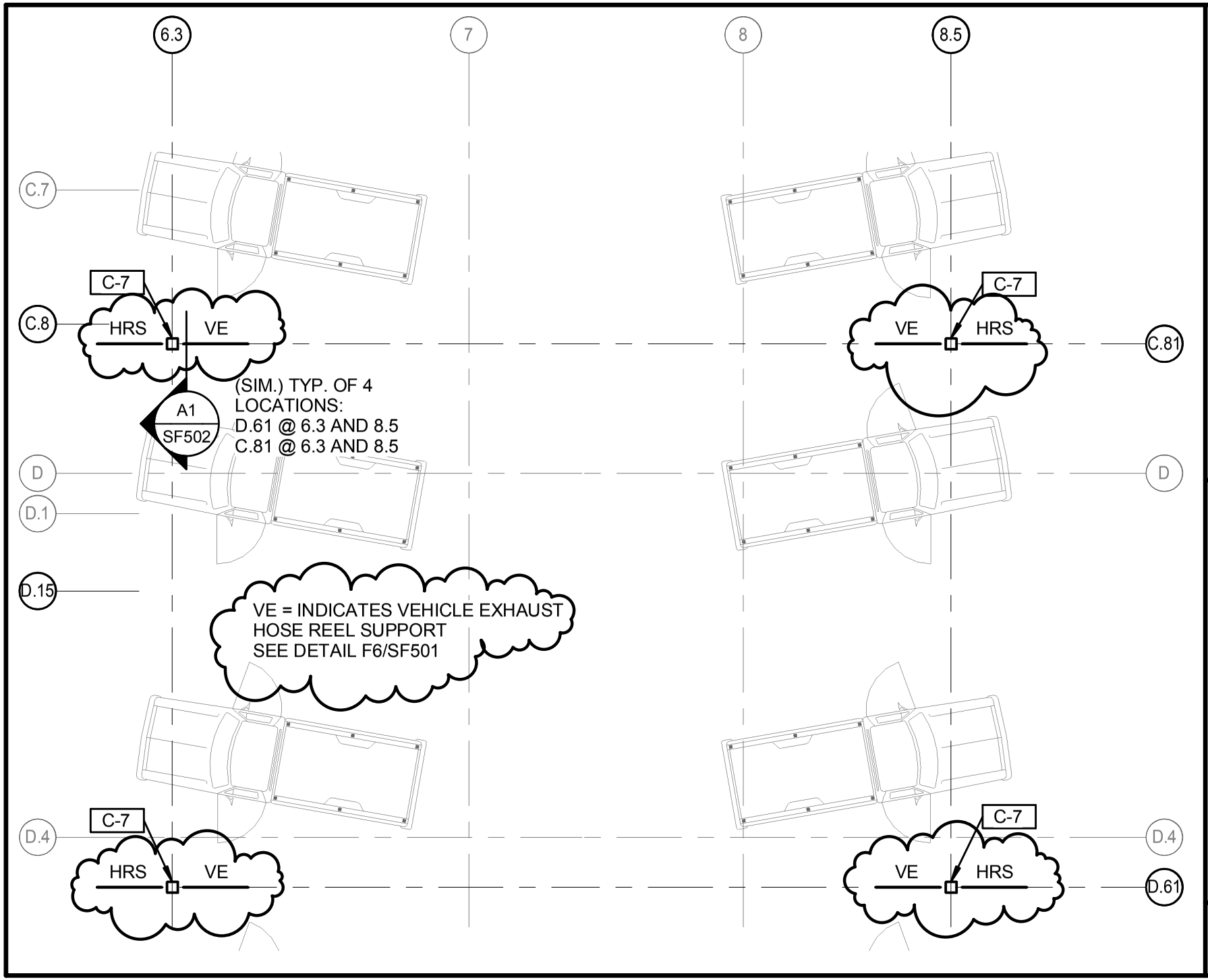

160 Veranda Street
Portland, Maine 04103
T: 207.221.2260
F: 207.221.2266
Web: www.allied-eng.com

Allied Engineering
Structural Mechanical Electrical Commissioning

FRAMING PLAN - AREA-C PART PLAN

66 INDUSTRIAL DRIVE - PHASE 2
66 INDUSTRIAL DRIVE, AUGUSTA, MAINE
MAINE DEPARTMENT OF TRANSPORTATION

SCALE: 1/8" = 1'-0"
PROJ NO: 13057
DATE: 03/21/2014
CAD FILE: 13057S.rvt

SKS-09
AMENDMENT #1

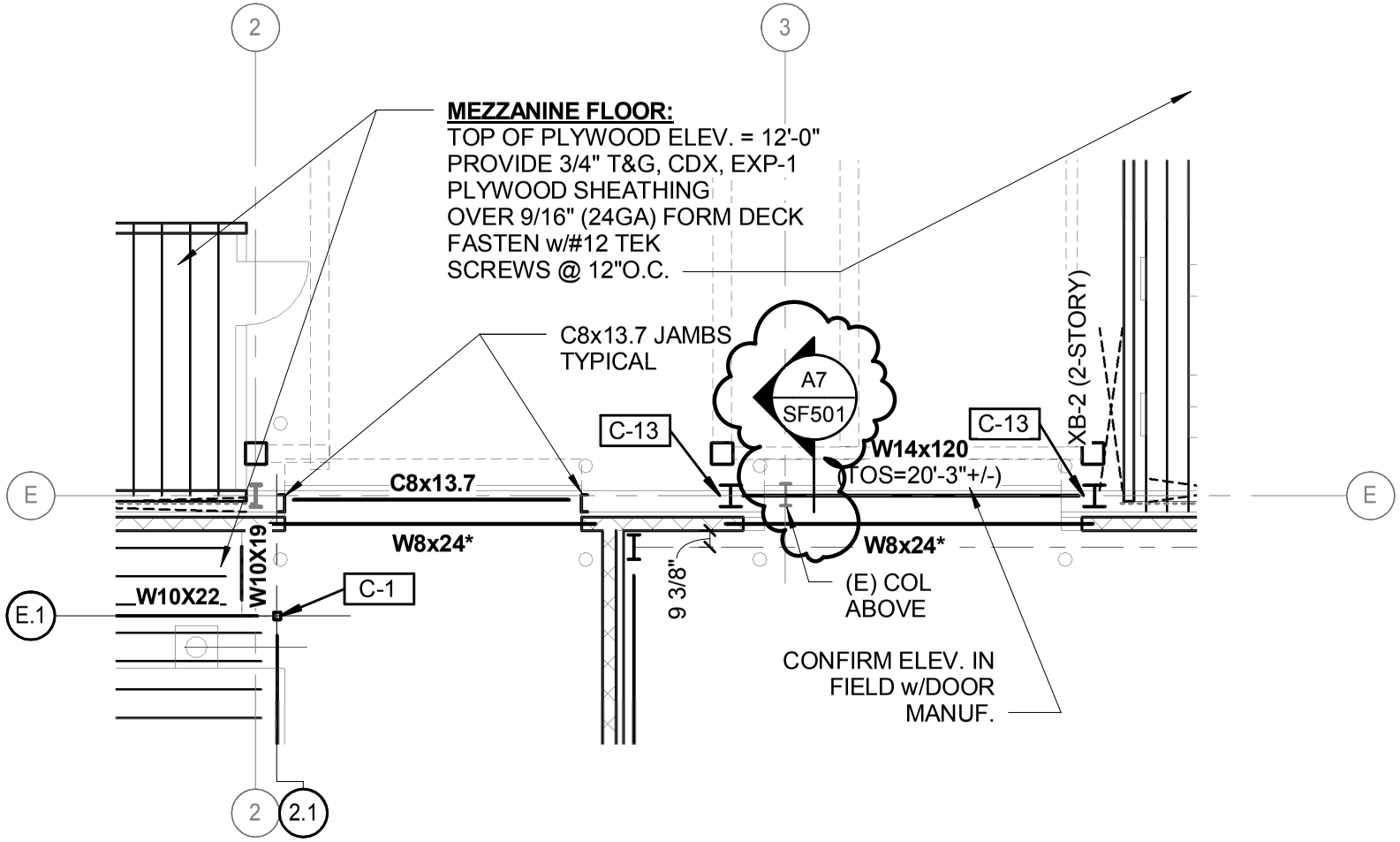

160 Veranda Street
Portland, Maine 04103
T: 207.221.2260
F: 207.221.2266
Web: www.allied-eng.com

Allied Engineering
Structural Mechanical Electrical Commissioning

FRAMING PLAN - AREA-C PART PLAN

66 INDUSTRIAL DRIVE - PHASE 2
66 INDUSTRIAL DRIVE, AUGUSTA, MAINE
MAINE DEPARTMENT OF TRANSPORTATION

SCALE: 1/8" = 1'-0"
PROJ NO: 13057
DATE: 03/21/2014
CAD FILE: 13057S.rvt

SKS-10
AMENDMENT #1

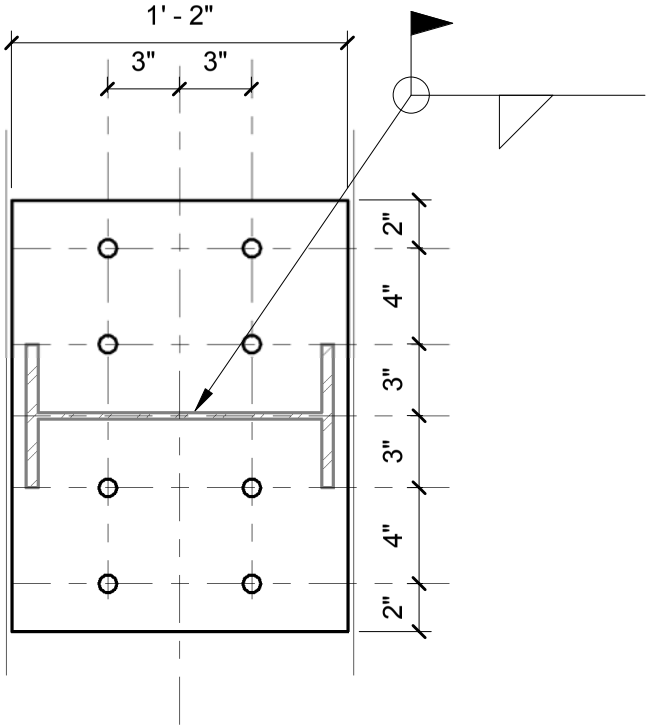

DETAIL - A

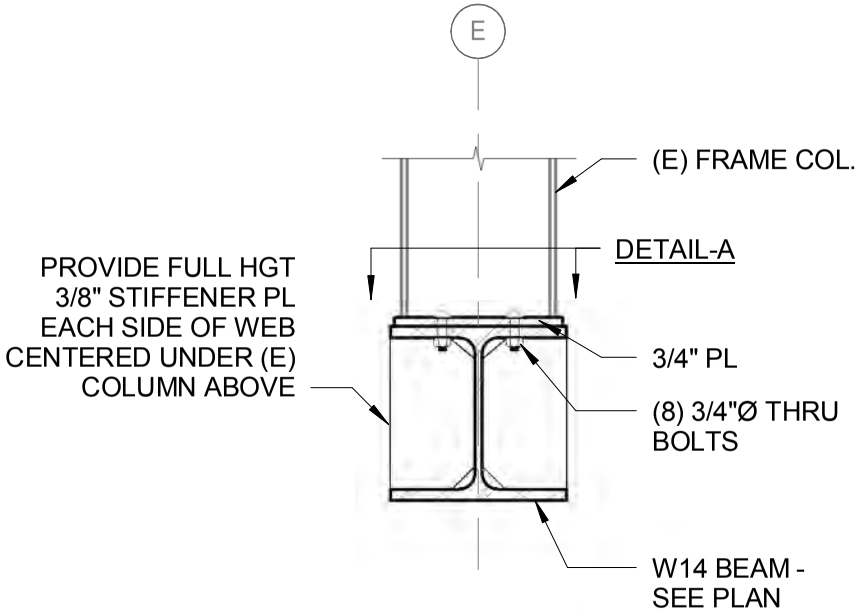

160 Veranda Street
Portland, Maine 04103
T: 207.221.2260
F: 207.221.2266
Web: www.allied-eng.com

Allied Engineering
Structural Mechanical Electrical Commissioning

DETAIL A7/SF501

66 INDUSTRIAL DRIVE - PHASE 2
66 INDUSTRIAL DRIVE, AUGUSTA, MAINE
MAINE DEPARTMENT OF TRANSPORTATION

SCALE: As indicated
PROJ NO: 13057
DATE: 03/21/2014
CAD FILE: 13057S.rvt

SKS-11
AMENDMENT #1

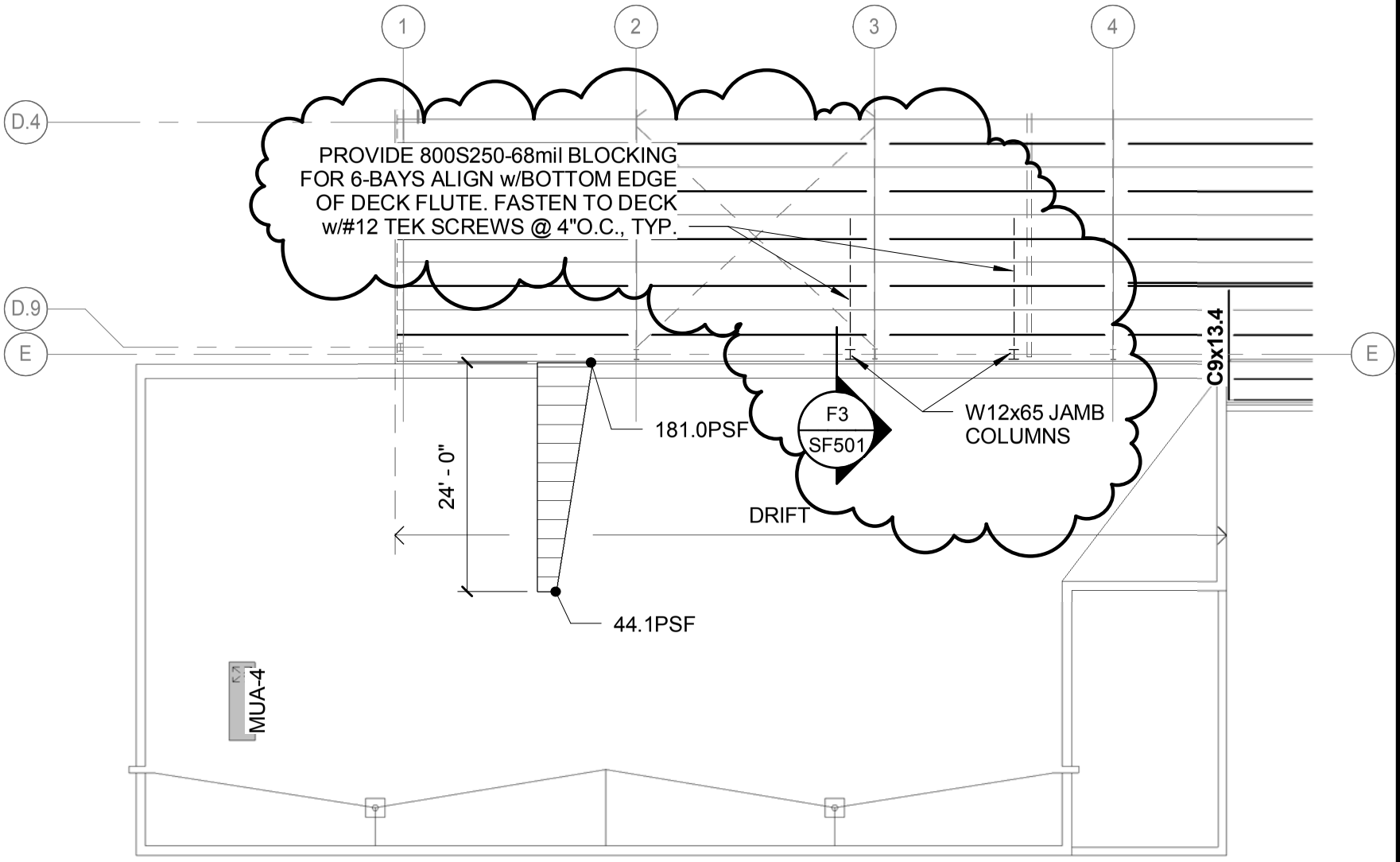

160 Veranda Street
Portland, Maine 04103
T: 207.221.2260
F: 207.221.2266
Web: www.allied-eng.com

Allied Engineering
Structural Mechanical Electrical Commissioning

ROOF FRAMING PART PLAN

66 INDUSTRIAL DRIVE - PHASE 2
66 INDUSTRIAL DRIVE, AUGUSTA, MAINE
MAINE DEPARTMENT OF TRANSPORTATION

SCALE: 1/16" = 1'-0"
PROJ NO: 13057
DATE: 03/21/2014
CAD FILE: 13057S.rvt

SKS-12
AMENDMENT #1

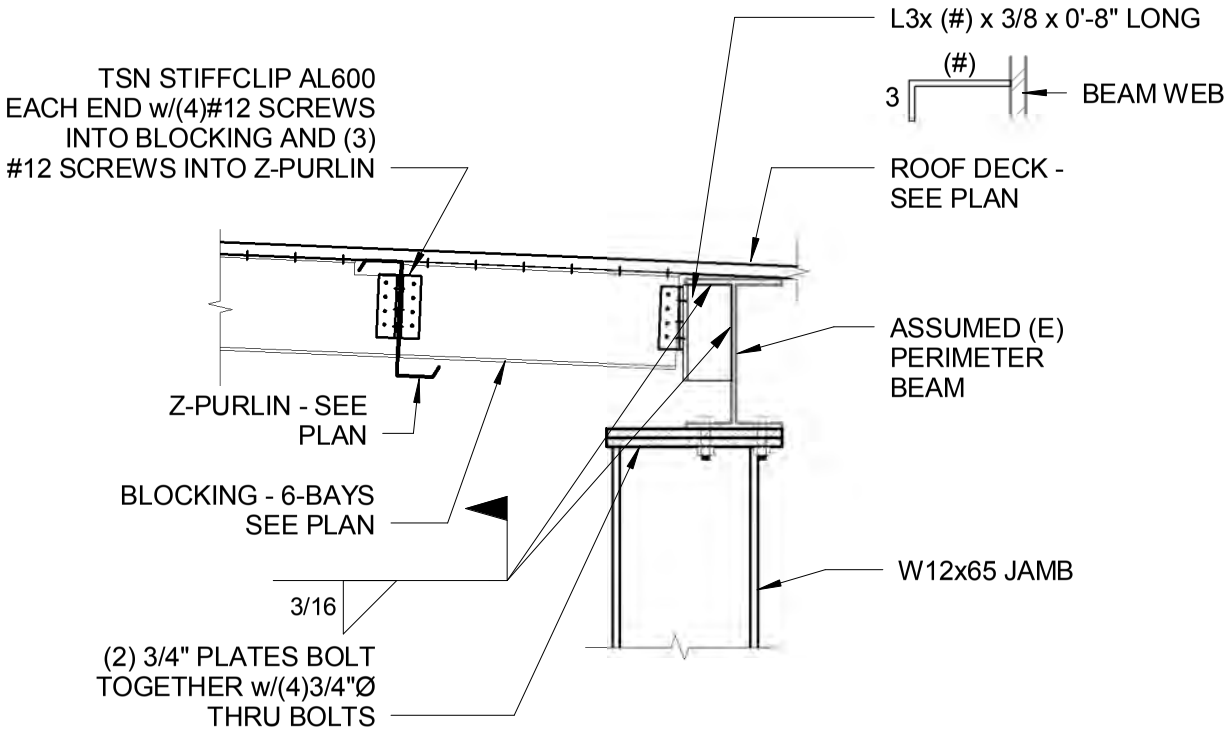

160 Veranda Street
Portland, Maine 04103
T: 207.221.2260
F: 207.221.2266
Web: www.allied-eng.com

Allied Engineering
Structural Mechanical Electrical Commissioning

DETAIL F3/SF501

66 INDUSTRIAL DRIVE - PHASE 2
66 INDUSTRIAL DRIVE, AUGUSTA, MAINE
MAINE DEPARTMENT OF TRANSPORTATION

SCALE: 3/4" = 1'-0"
PROJ NO: 13057
DATE: 03/21/2014
CAD FILE: 13057S.rvt

SKS-13
AMENDMENT #1

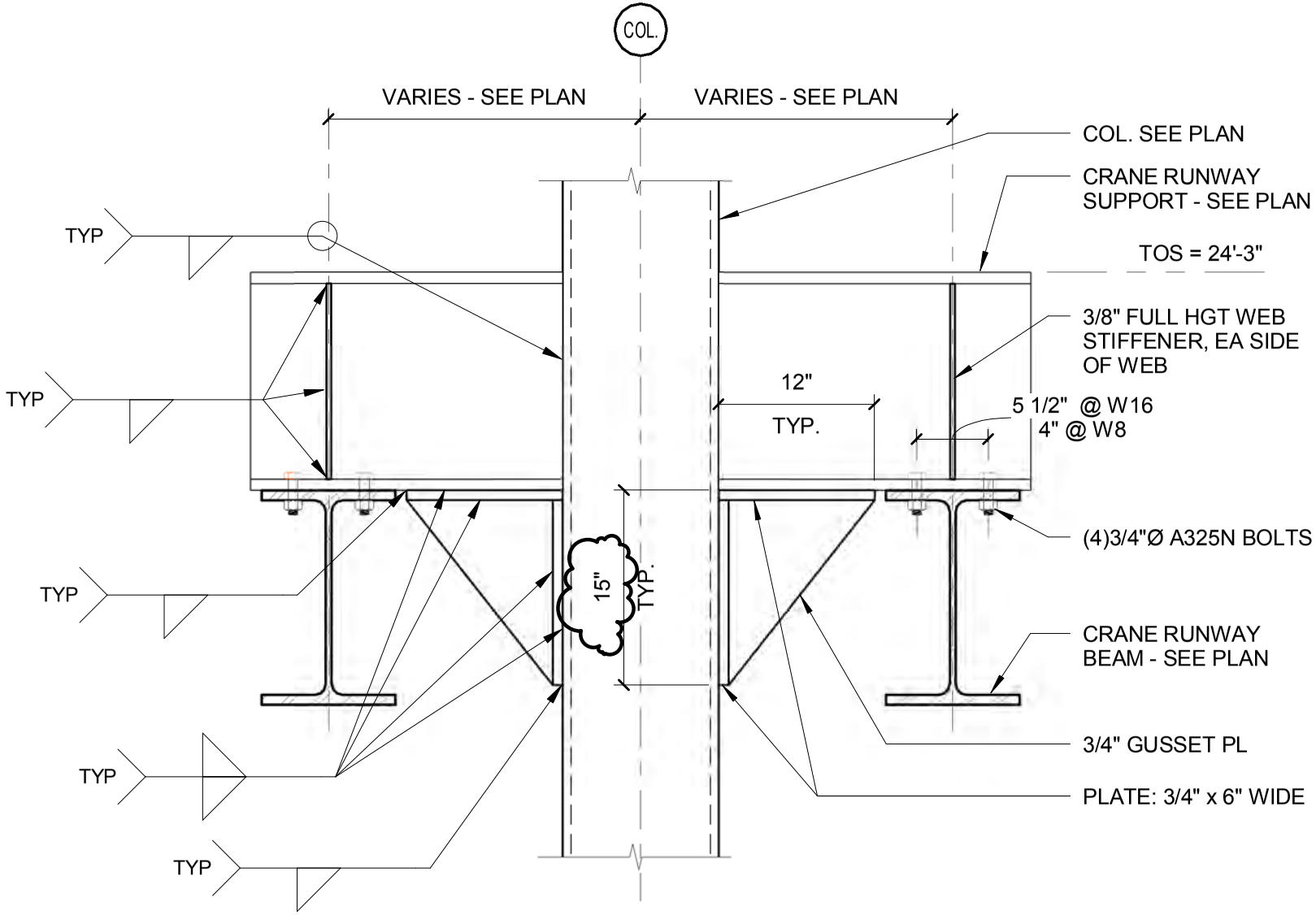

USE THIS DETAIL AT ALL CRANE COLUMN LOCATIONS EXCEPT FOR THE FOLLOWING:

[LINE D.88 @ 2.8, 3.6]
LINE 3.6 @ C.71, D.01, D.51]
[LINE C.4 @ 3.8]
LINE B.9 @ 6]
[LINE A.22 @ 6.2]

160 Veranda Street
Portland, Maine 04103
T: 207.221.2260
F: 207.221.2266
Web: www.allied-eng.com

Allied Engineering
Structural Mechanical Electrical Commissioning

DETAIL A4/SF502

66 INDUSTRIAL DRIVE - PHASE 2
66 INDUSTRIAL DRIVE, AUGUSTA, MAINE
MAINE DEPARTMENT OF TRANSPORTATION

SCALE: 1" = 1'-0"
PROJ NO: 13057
DATE: 03/21/2014
CAD FILE: 13057S.rvt

SKS-14
AMENDMENT #1

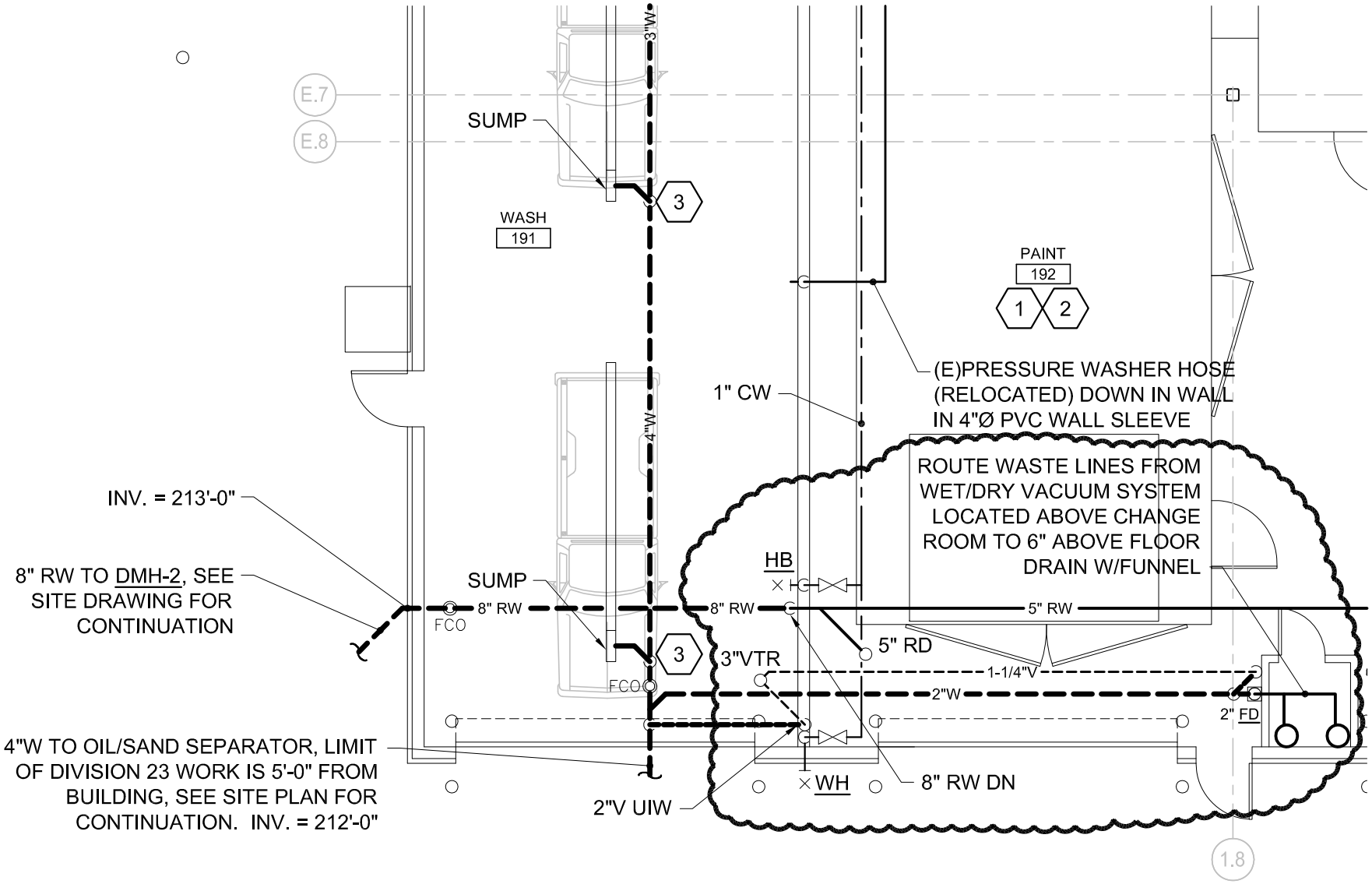

160 Veranda Street
Portland, Maine 04103
T: 207.221.2260
F: 207.221.2266
Web: www.allied-eng.com

Allied Engineering
Structural Mechanical Electrical Commissioning

RELOCATED WET/DRY VACUUM SYSTEM
~ C1 - SHEET PL100C

66 INDUSTRIAL DRIVE-PHASE 2
66 INDUSTRIAL DRIVE, AUGUSTA, MAINE
MAINE DEPARTMENT OF TRANSPORTATION

SCALE: 1/8" = 1'-0"
PROJ NO: 13057
DATE: 03/21/2014
CAD FILE: 13057P.DWG

SKP-01
AMENDMENT #1

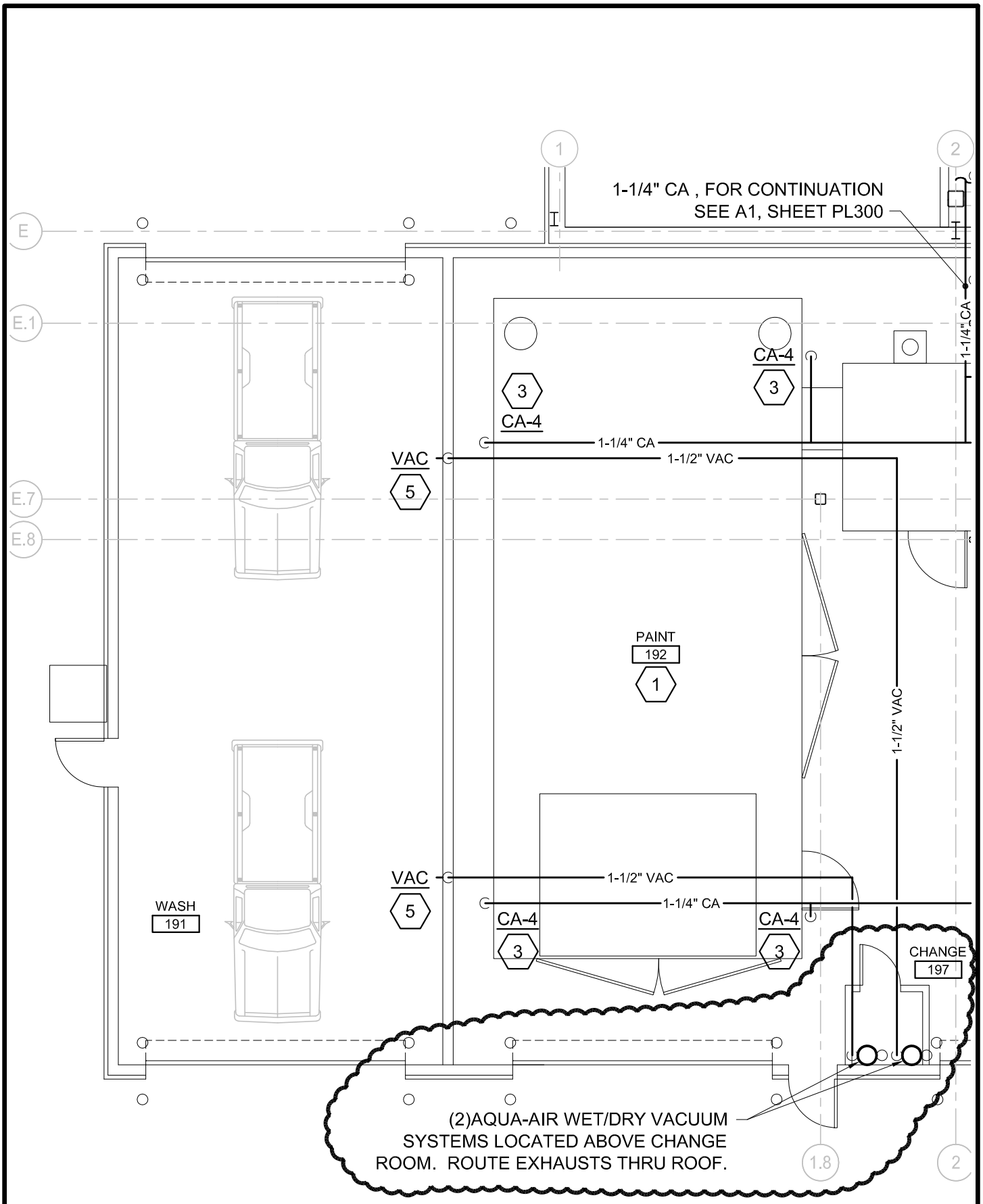

SKP-02
AMENDMENT #1

RELOCATED WET/DRY VACUUM SYSTEM
~ A3 - SHEET PL301

66 INDUSTRIAL DRIVE-PHASE 2
66 INDUSTRIAL DRIVE, AUGUSTA, MAINE
MAINE DEPARTMENT OF TRANSPORTATION

SCALE: 1/8" = 1'-0"	PROJ NO: 13057
DATE: 03/21/2014	CAD FILE: 13057P.DWG

Allied Engineering
Structural Mechanical Electrical Commissioning

160 Veranda Street
Portland, Maine 04103
T: 207.221.2260
F: 207.221.2266
Web: www.allied-eng.com

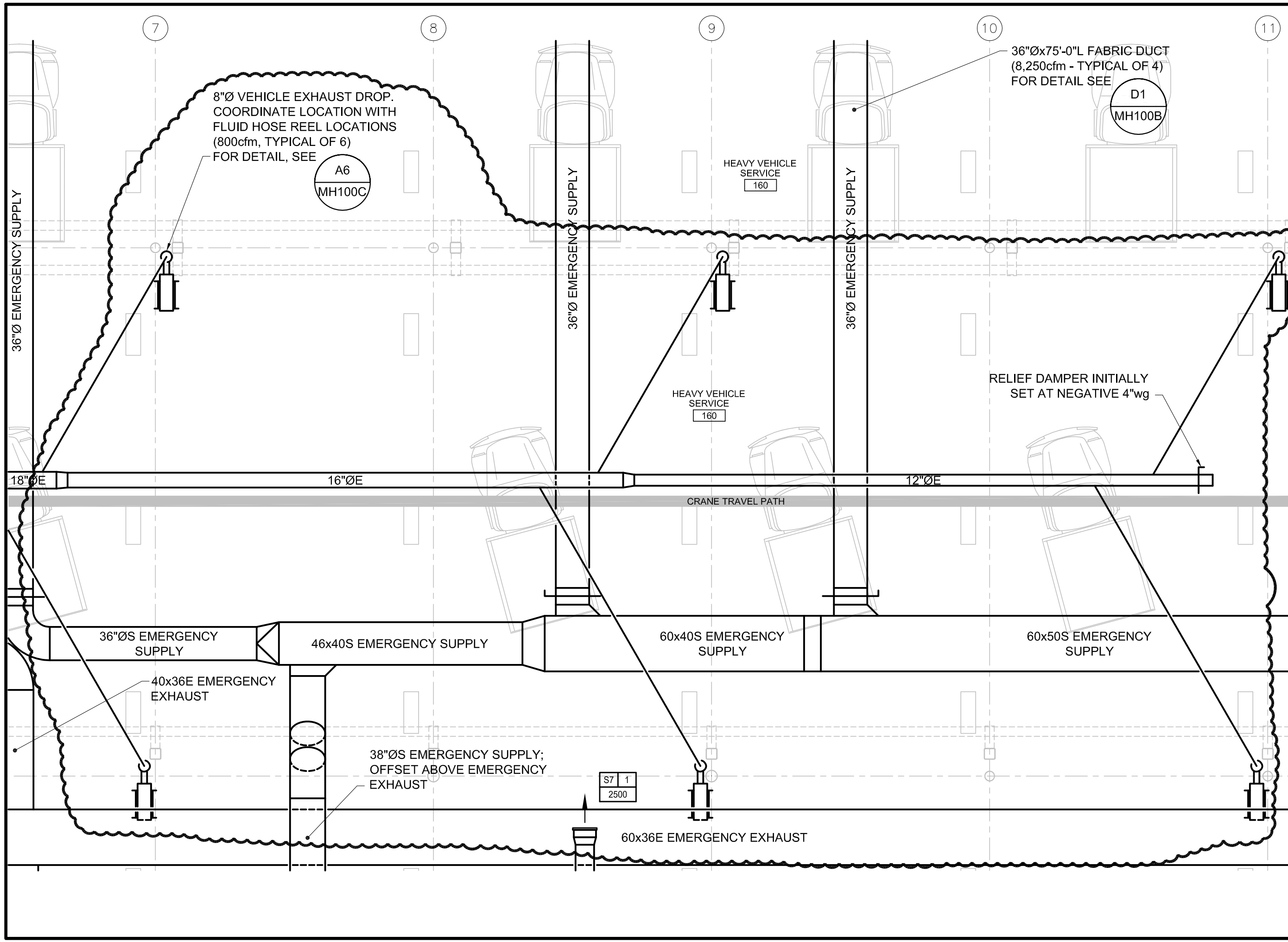

160 Veranda Street
Portland, Maine 04103
T: 207.221.2260
F: 207.221.2266
Web: www.allied-eng.com

Allied Engineering
Structural Mechanical Electrical Commissioning

REVISED HEAVY VEHICLE EXHAUST DUCT/HOSE REELS
~ C1 - SHEET MH100B

66 INDUSTRIAL DRIVE-PHASE 2
66 INDUSTRIAL DRIVE, AUGUSTA, MAINE
MAINE DEPARTMENT OF TRANSPORTATION

SKM-01
AMENDMENT #1

SCALE: 1/8" = 1'-0" | DATE: 03/21/2014 | PROJ NO: 13057 | CAD FILE: 13057M.DWG

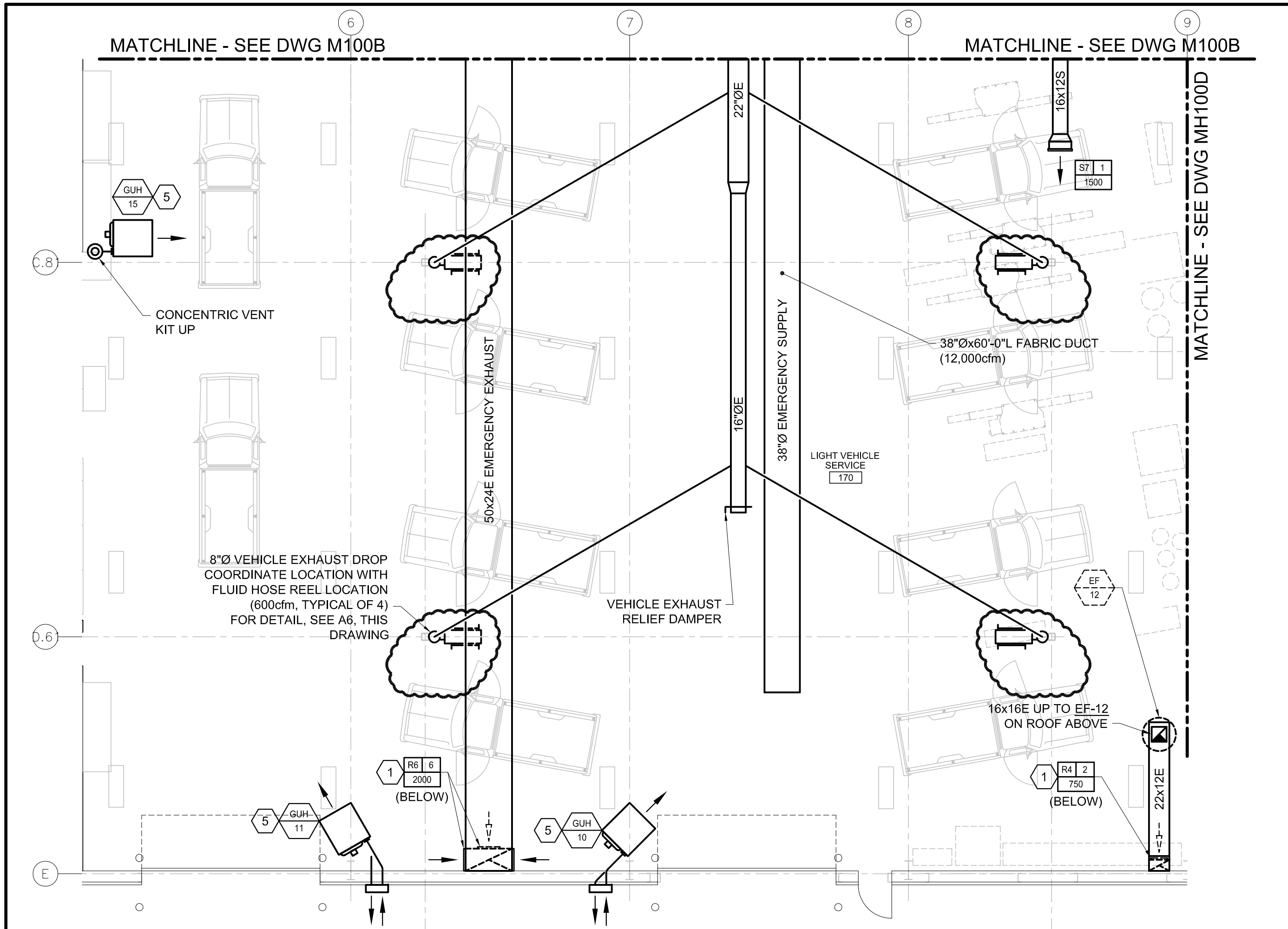

160 Veranda Street
Portland, Maine 04103
T: 207.221.2260
F: 207.221.2266
Web: www.allied-eng.com

Allied Engineering
Structural Mechanical Electrical Commissioning

REVISED LIGHT VEHICLE EXHAUST DUCT/HOSE REELS
~ A1 - SHEET MH100C

66 INDUSTRIAL DRIVE-PHASE 2
66 INDUSTRIAL DRIVE, AUGUSTA, MAINE
MAINE DEPARTMENT OF TRANSPORTATION

SKM-02
AMENDMENT #1

SCALE: 1/8" = 1'-0" | DATE: 03/21/2014 | PROJ NO: 13057 | CAD FILE: 13057M.DWG