# 66 INDUSTRIAL DRIVE
# PHASE 1

# 20118.00

# AUGUSTA

# 2014

**Updated** **1/19/12**

# STATE PROJECT

# BIDDING INSTRUCTIONS

FOR ALL PROJECTS:

1. Use pen and ink to complete all paper Bids.
2. As a minimum, the following must be received prior to the time of Bid opening:

For a Paper Bid:

a) a copy of the Notice to Contractors, b) the completed Acknowledgement of Bid Amendments form, c) the completed Schedule of Items, d) two copies of the completed and signed Contract Offer, Agreement & Award form, e) a Bid Guaranty, (if required), and f) any other certifications or Bid requirements listed in the Bid Documents as due by Bid opening.

For an Electronic Bid:

a) a completed Bid using Expedite® software and submitted via the Bid Express™ web-based service, b) an electronic Bid Guaranty (if required) or a faxed copy of a Bid Bond (with original to be delivered within 72 hours), and c) any other Certifications or Bid requirements listed in the Bid Documents as due by Bid opening.

3. Include prices for all items in the Schedule of Items (<u>excluding non-selected alternates</u>).
4. Bid Guaranty acceptable forms are:
   a) a properly completed and signed Bid Bond on the Department's prescribed form (or on a form that does not contain any significant variations from the Department's form as determined by the Department) for 5% of the Bid Amount or
   b) an Official Bank Check, Cashier's Check, Certified Check, U.S. Postal Money Order or Negotiable Certificate of Deposit in the amount stated in the Notice to Contractors or
   c) an electronic bid bond submitted with an electronic bid.

5. If a paper Bid is to be sent, "FedEx First Overnight" delivery is suggested as the package is delivered directly to the DOT Headquarters Building located at 16 Child Street in Augusta. Other means, such as U.S. Postal Service's Express Mail has proven not to be reliable.

IN ADDITION, FOR FEDERAL AID PROJECTS:

6. Complete the DBE Proposed Utilization form, and submit with your bid. If you are submitting your bid electronically, you must FAX the form to (207) 624-3431. This is a curable defect.

*If you need further information regarding Bid preparation, call the DOT Contracts Section at (207) 624-3410.*

*For complete bidding requirements, refer to Section 102 of the Maine Department of Transportation, Standard Specifications, Revision of December 2002.*

January 19, 2012
Supersedes September 09, 2011

# NOTICE

**The Maine Department of Transportation is attempting to improve the way Bid Amendments/Addendums are handled, and allow for an electronic downloading of bid packages from our website, while continuing to maintain an optional planholders list.**

**Prospective bidders, subcontractors or suppliers who wish to download a copy of the bid package and receive a courtesy notification of project specific bid amendments, must provide an email address to Diane Barnes or David Venner at the MDOT Contracts mailbox at: MDOT.contracts@maine.gov. Each bid package will require a separate request.**

**Additionally, interested parties will be responsible for reviewing and retrieving the Bid Amendments from our web site, and acknowledging receipt and incorporating those Bid Amendments in their bids using the Acknowledgement of Bid Amendment Form.**

**The downloading of bid packages from the MDOT website is not the same as providing an electronic bid to the Department. Electronic bids must be submitted via http://www.BIDX.com. For information on electronic bidding contact Patrick Corum at patrick.corum@maine.gov , Rebecca Snowden at rebecca.snowden@maine.gov or Diane Barnes at diane.barnes@maine.gov.**

# NOTICE

For security and other reasons, all Bid Packages which are mailed, shall be provided in double (one envelope inside the other) envelopes. The *Inner Envelope* shall have the following information provided on it:

Bid Enclosed - Do Not Open
PIN:
Town:
Date of Bid Opening:
Name of Contractor with mailing address and telephone number:

In Addition to the usual address information, the *Outer Envelope* should have written or typed on it:

Double Envelope: Bid Enclosed
PIN:
Town:
Date of Bid Opening:
Name of Contractor:
*This should not be much of a change for those of you who use Federal Express or similar services.*

Hand-carried Bids may be in one envelope as before, and should be marked with the following infrormation:

Bid Enclosed: Do Not Open
PIN:
Town:
Name of Contractor:

October 16, 2001

## STATE OF MAINE DEPARTMENT OF TRANSPORTATION

Bid Guaranty-Bid Bond Form

**KNOW ALL MEN BY THESE PRESENTS THAT**_____

_____, of the City/Town of _____and State of_____

as Principal, and _____as Surety, a

Corporation duly organized under the laws of the State of_____and having a usual place of

Business in _____and hereby held and firmly bound unto the Treasurer of

the State of Maine in the sum of_____,for payment which Principal and Surety bind

themselves, their heirs, executers, administrators, successors and assigns, jointly and severally.

The condition of this obligation is that the Principal has submitted to the Maine Department of Transportation, hereafter Department, a certain bid, attached hereto and incorporated as a part herein, to enter into a written contract for the construction of _____

_____

_____and if the Department shall accept said bid and the Principal shall execute and deliver a contract in the form attached hereto (properly completed in accordance with said bid) and shall furnish bonds for this faithful performance of said contract, and for the payment of all persons performing labor or furnishing material in connection therewith, and shall in all other respects perform the agreement created by the acceptance of said bid, then this obligation shall be null and void; otherwise it shall remain in full force, and effect.

Signed and sealed this_____day of _____20_____

WITNESS:

_____

_____

_____

WITNESS

_____

_____

_____

PRINCIPAL:

By_____

By:_____

By:_____

SURETY:

By_____

By:_____

Name of Local Agency: _____

SAMPLE

# NOTICE

Bidders:

Please use the attached "Request for Information" form when faxing questions and comments concerning specific Contracts that have been Advertised for Bid. Include additional numbered pages as required. Questions are to be faxed to the number listed in the Notice to Contractors. This is the only allowable mechanism for answering Project specific questions. Maine DOT will not be bound to any answers to Project specific questions received during the Bidding phase through other processes.

State of Maine
Department of Transportation

# REQUEST FOR INFORMATION

Date _____ Time _____

**Information Requested:** **PIN:** _____ **Town(s):** _____

_____

_____

_____

_____

_____

_____

_____

_____

_____

_____

_____

_____

**Request by:** _____ **Phone: (_____)**_____
**Bid Date:** _____ **Fax: (_____)**_____

**Complete top portion of form and transmit to the number listed in the Notice to Contractors**

**RFI No:** _____ **RFI received:** _____

**Response:**_____

_____

_____

_____

_____

_____

_____

_____

_____

_____

_____

Response By:_____ Date: _____

## Vendor Registration

Prospective Bidders must register as a vendor with the Department of Administrative & Financial Services if the vendor is awarded a contract. Vendors will not be able to receive payment without first being registered. Vendors/Contractors will find information and register through the following link –
http://www.maine.gov/purchases/venbid/index.shtml

# CONTRACTOR INFORMATION

**Contractor Name:** _____

**Mailing Address:** _____

**Vendor Customer Number:** _____

**Contact Information (Primary Contact):** _____

**Phone:** _____ **Cell Phone:** _____

**Fax:** _____

**Email:** _____

**Mailing Address (if different from above):** _____

_____

**The company has the following organizational structure:**

☐ **Sole Proprietorship** ☐ **Limited Liability Company**

☐ **Partnership** ☐ **Joint Venture**

☐ **Corporation** ☐ **Other:** _____

_____ _____

**(Date)** **(Signature)**

_____

**(Name and Title Printed)**

# STATE OF MAINE DEPARTMENT OF TRANSPORTATION
# NOTICE TO CONTRACTORS

Sealed Bids addressed to the Maine Department of Transportation, Augusta, Maine 04333 and endorsed on the wrapper "Bids for **66 Industrial Drive Phase 1 Site Package** in the city of **AUGUSTA**" will be received from contractors at the Reception Desk, Maine DOT Building, Capitol Street, Augusta, Maine, until 11:00 o'clock A.M. (prevailing time) on February 26, 2014 and at that time and place publicly opened and read. Bids will be accepted from all bidders. The lowest responsive bidder must have completed, or successfully complete, a Highway, or project specific prequalification to be considered for the award of this contract. **We now accept electronic bids for those bid packages posted on the bidx.com website. Electronic bids do not have to be accompanied by paper bids. Please note: the Department will accept a facsimile of the bid bond; however, the original bid bond must then be received at the MDOT Contract Section within 72 hours of the bid opening. Until further notice, dual bids (one paper, one electronic) will be accepted, with the paper copy taking precedence.**

Description: WIN 020118.00

Location: In Kennebec County, project is located at 66 Industrial Drive.

Outline of Work: Site work, grading, drainage and other incidental work.

**A mandatory pre-bid meeting is scheduled for Tuesday, February 11, 2014 at the site located at 66 Industrial Drive, Augusta, Maine starting at 10:00 A.M.**

For general information regarding Bidding and Contracting procedures, contact George Macdougall at (207) 624-3410. Our webpage at http://www.maine.gov/mdot/contractors/ contains a copy of the schedule of items, Plan Holders List, written portions of bid amendments (not drawings), and bid results. For Project-specific information fax all questions to **Valerie Chiang** at (207) 624-3431. Questions received after 12:00 noon of Monday prior to bid date will not be answered. Bidders shall not contact any other Departmental staff for clarification of Contract provisions, and the Department will not be responsible for any interpretations so obtained. TTY users call Maine Relay 711.

Plans, specifications and bid forms may be seen at the Maine DOT Building in Augusta, Maine and at the Department of Transportation's Regional Office in Augusta. They may be purchased from the Department between the hours of 8:00 a.m. to 4:30 p.m. by cash, credit card (Visa/Mastercard) or check payable to Treasurer, State of Maine sent to Maine Department of Transportation, Attn.: Mailroom, 16 State House Station, Augusta, Maine 04333-0016. They also may be purchased by telephone at (207) 624-3536 between the hours of 8:00 a.m. to 4:30 p.m. Full size plans $28.00 ($32.50 by mail). Half size plans $14.00 ($17.00 by mail), Bid Book $10 ($13 by mail), Single Sheets $2, payment in advance, all non-refundable.

Each Bid must be made upon blank forms provided by the Department and must be accompanied by a bid bond at 5% of the bid amount or an official bank check, cashier's check, certified check, certificate of deposit, or United States postal money order in the amount of $65,000 payable to Treasurer, State of Maine as a Bid guarantee. A Contract Performance Surety Bond and a Contract Payment Surety Bond, each in the amount of 100 percent of the Contract price, will be required of the successful Bidder.

This Contract is subject to all applicable State Laws.

All work shall be governed by "State of Maine, Department of Transportation, Standard Specifications, Revision of December 2002", price $10 [$13 by mail], and Standard Details, Revision of December 2002, price $20 [$25 by mail]. They also may be purchased by telephone at (207) 624-3536 between the hours of 8:00 a.m. to 4:30 p.m. Standard Detail updates can be found at http://www.maine.gov/mdot/contractors/publications/ .

The right is hereby reserved to the Maine DOT to reject any or all bids.

Augusta, Maine
February 5, 2014

STATE OF MAINE
Joyce
Noel Taylor
6997
LICENSED
PROFESSIONAL ENGINEER

Joyce Noel Taylor

JOYCE NOEL TAYLOR P. E.
CHIEF ENGINEER

Augusta
20118.00
66 Industrial Drive, Phase 1
April 14, 2011
Supersedes August 3, 2004

**SPECIAL PROVISION 102.7.3**
**ACKNOWLEDGMENT OF BID AMENDMENTS**

With this form, the Bidder acknowledges its responsibility to check for all Amendments to the Bid Package. For each Project under Advertisement, Amendments are located at http://www.maine.gov/mdot/contractors/ . It is the responsibility of the Bidder to determine if there are Amendments to the Project, to download them, to incorporate them into their Bid Package, and to reference the Amendment number and the date on the form below. The Maine DOT will not post Bid Amendments any later than noon the day before Bid opening without individually notifying all the planholders.

| Amendment Number | Date |
|---|---|
| | |
| | |
| | |
| | |
| | |
| | |
| | |
| | |
| | |
| | |

The Contractor, for itself, its successors and assigns, hereby acknowledges that it has received all of the above referenced Amendments to the Bid Package.

CONTRACTOR

_____ _____
Date Signature of authorized representative

_____
(Name and Title Printed)

CONTRACT ID: 020118.00 PROJECT(S): 020118.00

CONTRACTOR :_____

| LINE NO | ITEM DESCRIPTION | APPROX. QUANTITY AND UNITS | UNIT PRICE DOLLARS | UNIT PRICE CTS | BID AMOUNT DOLLARS | BID AMOUNT CTS |
|---|---|---|---|---|---|---|
| | SECTION 0001 PROJECT ITEMS | | | | | |
| 0010 | 201.11 CLEARING | 8.000 AC | | | | |
| 0020 | 202.20 REMOVING BITUMINOUS CONCRETE PAVEMENT | 8700.000 SY | | | | |
| 0030 | 202.2001 MISCELLANEOUS DEMOLITION | LUMP | LUMP | | | |
| 0040 | 203.20 COMMON EXCAVATION | 21600.000 CY | | | | |
| 0050 | 203.21 MASS ROCK EXCAVATION | 100.000 CY | | | | |
| 0060 | 203.211 TRENCH ROCK EXCAVATION | 100.000 CY | | | | |
| 0070 | 203.24 COMMON BORROW | 100.000 CY | | | | |
| 0080 | 203.25 GRANULAR BORROW | 850.000 CY | | | | |
| 0090 | 203.29 CRUSHED STONE | 325.000 CY | | | | |
| 0100 | 203.291 STRUCTUAL FILL | 2300.000 CY | | | | |

CONTRACT ID: 020118.00 PROJECT(S): 020118.00

CONTRACTOR :_____

| LINE NO | ITEM DESCRIPTION | APPROX. QUANTITY AND UNITS | UNIT PRICE DOLLARS | UNIT PRICE CTS | BID AMOUNT DOLLARS | BID AMOUNT CTS |
|---|---|---|---|---|---|---|
| 0110 | 304.10 AGGREGATE SUBBASE COURSE - GRAVEL | 25620.000 CY | | | | |
| 0120 | 403.207 HOT MIX ASPHALT 19.0 MM HMA | 2390.000 T | | | | |
| 0130 | 403.208 HOT MIX ASPHALT 12.5 MM HMA | 1210.000 T | | | | |
| 0140 | 603.045 4" FOUNDATION UNDERDRAIN | 1000.000 LF | | | | |
| 0150 | 603.05 6 INCH PVC PIPE | 45.000 LF | | | | |
| 0160 | 603.159 12 INCH CULVERT PIPE OPTION III | 640.000 LF | | | | |
| 0170 | 603.169 15 INCH CULVERT PIPE OPTION III | 521.000 LF | | | | |
| 0180 | 603.179 18 INCH CULVERT PIPE OPTION III | 423.000 LF | | | | |
| 0190 | 603.199 24 INCH CULVERT PIPE OPTION III | 584.000 LF | | | | |
| 0200 | 603.801 24" TRASH RACK | 1.000 EA | | | | |
| 0210 | 604.0956 8' DIAMETER CATCH BASIN | 1.000 EA | | | | |

CONTRACT ID: 020118.00 PROJECT(S): 020118.00

CONTRACTOR :_____

| LINE NO | ITEM DESCRIPTION | APPROX. QUANTITY AND UNITS | UNIT PRICE DOLLARS | UNIT PRICE CTS | BID AMOUNT DOLLARS | BID AMOUNT CTS |
|---|---|---|---|---|---|---|
| 0220 | 604.0971 6' DIAMETER CATCH BASIN | 5.000 EA | | | | |
| 0230 | 604.131 4' DIAMETER CATCH BASIN | 4.000 EA | | | | |
| 0240 | 604.15 4' DIAMETER MANHOLE | 1.000 EA | | | | |
| 0250 | 604.1541 6' DIAMETER OUTLET CONTROL STRUCTURE | 1.000 EA | | | | |
| 0260 | 605.091 6" WET POND UNDERDRAIN | 120.000 LF | | | | |
| 0270 | 607.151 FENCING | LUMP | LUMP | | | |
| 0280 | 608.082 REINFORCED CONCRETE DUMPSTER PAD AND ENCLOSURE | 1.000 EA | | | | |
| 0290 | 609.31 CURB TYPE 3 | 85.000 LF | | | | |
| 0300 | 610.08 PLAIN RIPRAP | 50.000 CY | | | | |
| 0310 | 615.0701 LOAM - PLAN QUANTITY | 1660.000 CY | | | | |
| 0320 | 616.08 SOD | 115.000 SY | | | | |

CONTRACT ID: 020118.00 PROJECT(S): 020118.00

CONTRACTOR :_____

| LINE NO | ITEM DESCRIPTION | APPROX. QUANTITY AND UNITS | UNIT PRICE DOLLARS | UNIT PRICE CTS | BID AMOUNT DOLLARS | BID AMOUNT CTS |
|---|---|---|---|---|---|---|
| 0330 | 618.1401 SEEDING METHOD NUMBER 2 - PLAN QUANTITY | 135.000 UN | | | | |
| 0340 | 619.12 MULCH | 135.000 UN | | | | |
| 0350 | 621.902 LANDSCAPING | LUMP | LUMP | | | |
| 0360 | 626.32 CONCRETE LIGHT POLE BASE | 14.000 EA | | | | |
| 0370 | 627.18 12 " SOLID WHITE PAVEMENT MARKING | 12.000 LF | | | | |
| 0380 | 627.71 4 INCH WHITE PAVEMENT MARKING LINE | 6330.000 LF | | | | |
| 0390 | 627.75 WHITE OR YELLOW PAVEMENT & CURB MARKING | 200.000 SF | | | | |
| 0400 | 645.292 REGULATORY, WARNING, CONFIRMATION AND ROUTE MARKER ASSEMBLY SIGNS | 30.000 SF | | | | |
| 0410 | 656.71 LEVEL LIP SPREADER / SEDIMENT FOREBAY | 50.000 CY | | | | |
| 0420 | 656.75 TEMPORARY SOIL EROSION AND WATER POLLUTION CONTROL | LUMP | LUMP | | | |
| 0430 | 659.10 MOBILIZATION | LUMP | LUMP | | | |

CONTRACT ID: 020118.00 PROJECT(S): 020118.00

CONTRACTOR :_____

| LINE NO | ITEM DESCRIPTION | APPROX. QUANTITY AND UNITS | UNIT PRICE DOLLARS | UNIT PRICE CTS | BID AMOUNT DOLLARS | BID AMOUNT CTS |
|---|---|---|---|---|---|---|
| 0440 | 801.093 2" DIAMETER FORCE MAIN | 152.000 LF | | | | |
| 0450 | 801.141 4" PVC SANITARY SEWER (SDR-35) | 20.000 LF | | | | |
| 0460 | 801.17 8" PVC SANITARY SEWER | 940.000 LF | | | | |
| 0470 | 801.54 UNDERDRAIN CLEANOUT | 2.000 EA | | | | |
| 0480 | 802.203 HOLDING TANK | 1.000 EA | | | | |
| 0490 | 802.204 OIL AND WATER SEPARATOR | 1.000 EA | | | | |
| 0500 | 803.01 TEST PITS | 4.000 EA | | | | |
| 0510 | 803.16 4' DIAMETER SEWER MANHOLE | 4.000 EA | | | | |
| 0520 | 803.174 6' DIAMETER PUMP STATION | 1.000 EA | | | | |
| 0530 | 822.3226 6" MJ FITTING | 1.000 EA | | | | |
| 0540 | 822.33 6" CLASS 52 DUCTILE IRON WATER MAIN | 140.000 LF | | | | |

CONTRACT ID: 020118.00 PROJECT(S): 020118.00

CONTRACTOR :_____

| LINE NO | ITEM DESCRIPTION | APPROX. QUANTITY AND UNITS | UNIT PRICE DOLLARS | UNIT PRICE CTS | BID AMOUNT DOLLARS | BID AMOUNT CTS |
|---|---|---|---|---|---|---|
| 0550 | 822.34 8" CLASS 52 DUCTILE IRON WATER MAIN | 820.000 LF | | | | |
| 0560 | 822.3406 8" MJ FITTING | 7.000 EA | | | | |
| 0570 | 823.3251 8" GATE VALVE WITH BOX | 3.000 EA | | | | |
| 0580 | 823.33 6" GATE VALVE WITH BOX | 3.000 EA | | | | |
| 0590 | 823.341 2" RISER WITH CONTROL VALVE AND VALVE BOX | 1.000 EA | | | | |
| 0600 | 824.30 HYDRANT | 2.000 EA | | | | |
| 0610 | 825.322 2" CURB STOP | 1.000 EA | | | | |
| 0620 | 825.432 2" WATERSERVICE | 20.000 LF | | | | |
| 0630 | 841.48 BOLLARDS | 10.000 EA | | | | |
| 0640 | 999.001 ALLOWENCE NO. 1 - UTILITY POLE | 1.000 UN | 5000 | 00000 | 5000 | .00 |
| 0650 | 999.002 ALLOWENCE NO. 2 - SANITARY TESTING AND INSPECTION | 1.000 UN | 1200 | 00000 | 1200 | .00 |

CONTRACT ID: 020118.00 PROJECT(S): 020118.00

CONTRACTOR :_____

| LINE NO | ITEM DESCRIPTION | APPROX. QUANTITY AND UNITS | UNIT PRICE DOLLARS | UNIT PRICE CTS | BID AMOUNT DOLLARS | BID AMOUNT CTS |
|---|---|---|---|---|---|---|
| 0660 | 999.003 ALLOWENCE NO. 3 - WATER ENTRANCE FLUSHING | 1.000 UN | 1450 | 00000 | 1450 | .00 |
| | SECTION 0001 TOTAL | | | | | |
| | TOTAL BID | | | | | |

# CONTRACT AGREEMENT, OFFER & AWARD

AGREEMENT made on the date last signed below, by and between the State of Maine, acting through and by its Department of Transportation (Department), an agency of state government with its principal administrative offices located at Child Street, Augusta, Maine, with a mailing address at 16 State House Station, Augusta, Maine 04333-0016, and _____ **(Contractor)** a corporation or other legal entity organized under the laws of the State of _____, with its principal place of business located at _____

_____

The Department and the Contractor, in consideration of the mutual promises set forth in this Agreement (the "Contract"), hereby agree as follows:

**A. The Work.**

The Contractor agrees to complete all Work as specified or indicated in the Contract including Extra Work in conformity with the Contract, **WIN No. 020118.00, for the Site Development at 66 Industrial Drive in the City of Augusta**, County of **Kennebec,** Maine. The Work includes construction, maintenance during construction, warranty as provided in the Contract, and other incidental work.

The Contractor shall be responsible for furnishing all supervision, labor, equipment, tools supplies, permanent materials and temporary materials required to perform the Work including construction quality control including inspection, testing and documentation, all required documentation at the conclusion of the project, warranting its work and performing all other work indicated in the Contract.

The Department shall have the right to alter the nature and extent of the Work as provided in the Contract; payment to be made as provided in the same.

**B. Time.**

The Contractor agrees to complete all Work, except warranty work, on or before **September 1, 2014.** Further, the Department may deduct from moneys otherwise due the Contractor, not as a penalty, but as Liquidated Damages in accordance with Sections 107.7 and 107.8 of the State of Maine Department of Transportation Standard Specifications, Revision of December 2002 and related Special Provisions.

**C. Price.**

The quantities given in the Schedule of Items of the Bid Package will be used as the basis for determining the original Contract amount and for determining the amounts of the required Performance Surety Bond and Payment Surety Bond, and that the amount of this offer is _____

_____

**$**_____ Performance Bond and Payment Bond each being 100% of the amount of this Contract.

**D. Contract.**

This Contract, which may be amended, modified, or supplemented in writing only, consists of the Contract documents as defined in the Plans, Standard Specifications, Revision of December 2002, Standard Details Revision of December 2002 as updated through advertisement, Supplemental Specifications, Special Provisions, Contract Agreement; and Contract Bonds. It is agreed and understood that this Contract will be governed by the documents listed above.

**E. Certifications.**

By signing below, the Contractor hereby certifies that to the best of the Contractor's knowledge and belief:

1. All of the statements, representations, covenants, and/or certifications required or set forth in the Bid and the Bid Documents, including those in the Contract are still complete and accurate as of the date of this Agreement.

2. The Contractor knows of no legal, contractual, or financial impediment to entering into this Contract.

3. The person signing below is legally authorized by the Contractor to sign this Contract on behalf of the Contractor and to legally bind the Contractor to the terms of the Contract.

## F. Offer.

The undersigned, having carefully examined the site of work, the Plans, Standard Specifications Revision of December 2002, Standard Details Revision of December 2002 as updated through advertisement, Supplemental Specifications, Special Provisions, Contract Agreement; and Contract Bonds contained herein for construction of: **WIN No. 020118.00, for the Site Development at 66 Industrial Drive in the City of Augusta**, County of **Kennebec**, State of Maine, on which bids will be received until the time specified in the "Notice to Contractors" do(es) hereby bid and offer to enter into this contract to supply all the materials, tools, equipment and labor to construct the whole of the Work in strict accordance with the terms and conditions of this Contract at the unit prices in the attached "Schedule of Items".

The Offeror agrees to perform the work required at the price specified above and in accordance with the bids provided in the attached "Schedule of Items" in strict accordance with the terms of this solicitation, and to provide the appropriate insurance and bonds if this offer is accepted by the Government in writing.

As Offeror also agrees:

First: To do any extra work, not covered by the attached "Schedule of Items", which may be ordered by the Resident, and to accept as full compensation the amount determined upon a "Force Account" basis as provided in the Standard Specifications, Revision of December 2002, and as addressed in the contract documents.

Second: That the bid bond at 5% of the bid amount or the official bank check, cashier's check, certificate of deposit or U. S. Postal Money Order in the amount given in the "Notice to Contractors", payable to the Treasurer of the State of Maine and accompanying this bid, shall be forfeited, as liquidated damages, if in case this bid is accepted, and the undersigned shall fail to abide by the terms and conditions of the offer and fail to furnish satisfactory insurance and Contract bonds under the conditions stipulated in the Specifications within 15 days of notice of intent to award the contract.

Third: To begin the Work as stated in Section 107.2 of the Standard Specifications Revision of December 2002 and complete the Work within the time limits given in the Special Provisions of this Contract.

Fourth: That this offer shall remain open for 30 calendar days after the date of opening of bids.

Fifth: The Bidder hereby certifies, to the best of its knowledge and belief that: the Bidder has not, either directly or indirectly, entered into any agreement, participated in any collusion, or otherwise taken any action in restraint of competitive bidding in connection with its bid, and its subsequent contract with the Department.

IN WITNESS WHEREOF, the Contractor, for itself, its successors and assigns, hereby execute two duplicate originals of this Agreement and thereby binds itself to all covenants, terms, and obligations contained in the Contract Documents.

CONTRACTOR

| | |
|---|---|
| _____ | _____ |
| Date | (Signature of Legally Authorized Representative of the Contractor) |
| _____ | _____ |
| Witness | (Name and Title Printed) |

**G. Award.**

Your offer is hereby accepted. This award consummates the Contract, and the documents referenced herein.

MAINE DEPARTMENT OF TRANSPORTATION

| | |
|---|---|
| _____ | _____ |
| Date | By: David Bernhardt, Commissioner |
| _____ | |
| Witness | |

# CONTRACT AGREEMENT, OFFER & AWARD

AGREEMENT made on the date last signed below, by and between the State of Maine, acting through and by its Department of Transportation (Department), an agency of state government with its principal administrative offices located at Child Street, Augusta, Maine, with a mailing address at 16 State House Station, Augusta, Maine 04333-0016, and _____ **(Contractor)** a corporation or other legal entity organized under the laws of the State of _____, with its principal place of business located at _____

_____

The Department and the Contractor, in consideration of the mutual promises set forth in this Agreement (the "Contract"), hereby agree as follows:

**A. The Work.**

The Contractor agrees to complete all Work as specified or indicated in the Contract including Extra Work in conformity with the Contract, **WIN No. 020118.00, for the Site Development at 66 Industrial Drive in the City of Augusta**, County of **Kennebec,** Maine. The Work includes construction, maintenance during construction, warranty as provided in the Contract, and other incidental work.

The Contractor shall be responsible for furnishing all supervision, labor, equipment, tools supplies, permanent materials and temporary materials required to perform the Work including construction quality control including inspection, testing and documentation, all required documentation at the conclusion of the project, warranting its work and performing all other work indicated in the Contract.

The Department shall have the right to alter the nature and extent of the Work as provided in the Contract; payment to be made as provided in the same.

**B. Time.**

The Contractor agrees to complete all Work, except warranty work, on or before **September 1, 2014.** Further, the Department may deduct from moneys otherwise due the Contractor, not as a penalty, but as Liquidated Damages in accordance with Sections 107.7 and 107.8 of the State of Maine Department of Transportation Standard Specifications, Revision of December 2002 and related Special Provisions.

**C. Price.**

The quantities given in the Schedule of Items of the Bid Package will be used as the basis for determining the original Contract amount and for determining the amounts of the required Performance Surety Bond and Payment Surety Bond, and that the amount of this offer is _____

_____

**$**_____ Performance Bond and Payment Bond each being 100% of the amount of this Contract.

**D. Contract.**

This Contract, which may be amended, modified, or supplemented in writing only, consists of the Contract documents as defined in the Plans, Standard Specifications, Revision of December 2002, Standard Details Revision of December 2002 as updated through advertisement, Supplemental Specifications, Special Provisions, Contract Agreement; and Contract Bonds. It is agreed and understood that this Contract will be governed by the documents listed above.

**E. Certifications.**

By signing below, the Contractor hereby certifies that to the best of the Contractor's knowledge and belief:

1. All of the statements, representations, covenants, and/or certifications required or set forth in the Bid and the Bid Documents, including those in the Contract are still complete and accurate as of the date of this Agreement.

2. The Contractor knows of no legal, contractual, or financial impediment to entering into this Contract.

3. The person signing below is legally authorized by the Contractor to sign this Contract on behalf of the Contractor and to legally bind the Contractor to the terms of the Contract.

## F. Offer.

The undersigned, having carefully examined the site of work, the Plans, Standard Specifications Revision of December 2002, Standard Details Revision of December 2002 as updated through advertisement, Supplemental Specifications, Special Provisions, Contract Agreement; and Contract Bonds contained herein for construction of: **WIN No. 020118.00, for the Site Development at 66 Industrial Drive in the City of Augusta**, County of **Kennebec**, State of Maine, on which bids will be received until the time specified in the "Notice to Contractors" do(es) hereby bid and offer to enter into this contract to supply all the materials, tools, equipment and labor to construct the whole of the Work in strict accordance with the terms and conditions of this Contract at the unit prices in the attached "Schedule of Items".

The Offeror agrees to perform the work required at the price specified above and in accordance with the bids provided in the attached "Schedule of Items" in strict accordance with the terms of this solicitation, and to provide the appropriate insurance and bonds if this offer is accepted by the Government in writing.

As Offeror also agrees:

First: To do any extra work, not covered by the attached "Schedule of Items", which may be ordered by the Resident, and to accept as full compensation the amount determined upon a "Force Account" basis as provided in the Standard Specifications, Revision of December 2002, and as addressed in the contract documents.

Second: That the bid bond at 5% of the bid amount or the official bank check, cashier's check, certificate of deposit or U. S. Postal Money Order in the amount given in the "Notice to Contractors", payable to the Treasurer of the State of Maine and accompanying this bid, shall be forfeited, as liquidated damages, if in case this bid is accepted, and the undersigned shall fail to abide by the terms and conditions of the offer and fail to furnish satisfactory insurance and Contract bonds under the conditions stipulated in the Specifications within 15 days of notice of intent to award the contract.

Third: To begin the Work as stated in Section 107.2 of the Standard Specifications Revision of December 2002 and complete the Work within the time limits given in the Special Provisions of this Contract.

Fourth: That this offer shall remain open for 30 calendar days after the date of opening of bids.

Fifth: The Bidder hereby certifies, to the best of its knowledge and belief that: the Bidder has not, either directly or indirectly, entered into any agreement, participated in any collusion, or otherwise taken any action in restraint of competitive bidding in connection with its bid, and its subsequent contract with the Department.

IN WITNESS WHEREOF, the Contractor, for itself, its successors and assigns, hereby execute two duplicate originals of this Agreement and thereby binds itself to all covenants, terms, and obligations contained in the Contract Documents.

CONTRACTOR

| | |
|---|---|
| _____ | _____ |
| Date | (Signature of Legally Authorized Representative of the Contractor) |
| _____ | _____ |
| Witness | (Name and Title Printed) |

**G. Award.**

Your offer is hereby accepted. This award consummates the Contract, and the documents referenced herein.

MAINE DEPARTMENT OF TRANSPORTATION

| | |
|---|---|
| _____ | _____ |
| Date | By: David Bernhardt, Commissioner |
| _____ | |
| Witness | |

# CONTRACT AGREEMENT, OFFER & AWARD

AGREEMENT made on the date last signed below, by and between the State of Maine, acting through and by its Department of Transportation (Department), an agency of state government with its principal administrative offices located at Child Street Augusta, Maine, with a mailing address at 16 State House Station, Augusta, Maine 04333-0016, and **(Name of the firm bidding the job)** a corporation or other legal entity organized under the laws of the State of Maine, with its principal place of business located at **(address of the firm bidding the job)**

The Department and the Contractor, in consideration of the mutual promises set forth in this Agreement (the "Contract"), hereby agree as follows:

SAMPLE

**A. The Work.**

The Contractor agrees to complete all Work as specified or indicated in the Contract including Extra Work in conformity with the Contract, PIN No.**1224.00**, for the **Hot Mix Asphalt Overlay** in the town/city of **South Nowhere,** County of **Washington**, Maine. The Work includes construction, maintenance during construction, warranty as provided in the Contract, and other incidental work.

The Contractor shall be responsible for furnishing all supervision, labor, equipment, tools supplies, permanent materials and temporary materials required to perform the Work including construction quality control including inspection, testing and documentation, all required documentation at the conclusion of the project, warranting its work and performing all other work indicated in the Contract.

The Department shall have the right to alter the nature and extent of the Work as provided in the Contract; payment to be made as provided in the same.

**B. Time.**

The Contractor agrees to complete all Work, except warranty work, on or before **November 15, 2006.** Further, the Department may deduct from moneys otherwise due the Contractor, not as a penalty, but as Liquidated Damages in accordance with Sections 107.7 and 107.8 of the State of Maine Department of Transportation Standard Specifications, Revision of December 2002 and related Special Provisions.

**C. Price.**

The quantities given in the Schedule of Items of the Bid Package will be used as the basis for determining the original Contract amount and for determining the amounts of the required Performance Surety Bond and Payment Surety Bond, and that the amount of this offer is **____(Place bid here in alphabetical form such as One Hundred and Two dollars and 10 cents)** **$_ (repeat bid here in numerical terms, such as $102.10)**_____ Performance Bond and Payment Bond each being 100% of the amount of this Contract.

**D. Contract.**

This Contract, which may be amended, modified, or supplemented in writing only, consists of the Contract documents as defined in the Plans, Standard Specifications, Revision of December 2002, Standard Details Revision of December 2002, Supplemental Specifications, Special Provisions, Contract Agreement; and Contract Bonds. It is agreed and understood that this Contract will be governed by the documents listed above.

**E. Certifications.**

By signing below, the Contractor hereby certifies that to the best of the Contractor's knowledge and belief:

1. All of the statements, representations, covenants, and/or certifications required or set forth in the Bid and the Bid Documents, including those in Appendix A to Division 100 of the Standard Specifications Revision of December 2002 (Federal Contract Provisions Supplement), and the Contract are still complete and accurate as of the date of this Agreement.

2. The Contractor knows of no legal, contractual, or financial impediment to entering into this Contract.

3. The person signing below is legally authorized by the Contractor to sign this Contract on behalf of the Contractor and to legally bind the Contractor to the terms of the Contract.

SAMPLE

**F. Offer.**

The undersigned, having carefully examined the site of work, the Plans, Standard Specifications, Revision of December 2002, Standard Details Revision of December 2002, Supplemental Specifications, Special Provisions, Contract Agreement; and Contract Bonds contained herein for construction of:

**PIN 1234.00 South Nowhere, Hot Mix Asphalt Overlay,**

State of Maine, on which bids will be received until the time specified in the "Notice to Contractors" do(es) hereby bid and offer to enter into this contract to supply all the materials, tools, equipment and labor to construct the whole of the Work in strict accordance with the terms and conditions of this Contract at the unit prices in the attached "Schedule of Items".

The Offeror agrees to perform the work required at the price specified above and in accordance with the bids provided in the attached "Schedule of Items" in strict accordance with the terms of this solicitation, and to provide the appropriate insurance and bonds if this offer is accepted by the Government in writing.

As Offeror also agrees:

First: To do any extra work, not covered by the attached "Schedule of Items", which may be ordered by the Resident, and to accept as full compensation the amount determined upon a "Force Account" basis as provided in the Standard Specifications, Revision of December 2002, and as addressed in the contract documents.

Second: That the bid bond at 5% of the bid amount or the official bank check, cashier's check, certificate of deposit or U. S. Postal Money Order in the amount given in the "Notice to Contractors", payable to the Treasurer of the State of Maine and accompanying this bid, shall be forfeited, as liquidated damages, if in case this bid is accepted, and the undersigned shall fail to abide by the terms and conditions of the offer and fail to furnish satisfactory insurance and Contract bonds under the conditions stipulated in the Specifications within 15 days of notice of intent to award the contract.

Third: To begin the Work as stated in Section 107.2 of the Standard Specifications Revision of 2002 and complete the Work within the time limits given in the Special Provisions of this Contract.

Fourth: The Contractor will be bound to the Disadvantaged Business Enterprise (DBE) Requirements contained in the attached Notice (Additional Instructions to Bidders) and submit a completed Contractor's Disadvantaged Business Enterprise Utilization Plan with their bid.

Fifth: That this offer shall remain open for 30 calendar days after the date of opening of bids.

SAMPLE

Sixth: The Bidder hereby certifies, to the best of its knowledge and belief that: the Bidder has not, either directly or indirectly, entered into any agreement, participated in any collusion, or otherwise taken any action in restraint of competitive bidding in connection with its bid, and its subsequent contract with the Department.

IN WITNESS WHEREOF, the Contractor, for itself, its successors and assigns, hereby execute two duplicate originals of this Agreement and thereby binds itself to all covenants, terms, and obligations contained in the Contract Documents.

CONTRACTOR

| | |
|---|---|
| _____ | **(Sign Here)** |
| Date | (Signature of Legally Authorized Representative of the Contractor) |
| ____(**Witness Sign Here)** | **(Print Name Here)** |
| Witness | (Name and Title Printed) |

SAMPLE

**G. Award.**

Your offer is hereby accepted. This award consummates the Contract, and the documents referenced herein.

MAINE DEPARTMENT OF TRANSPORTATION

| | |
|---|---|
| _____ | _____ |
| Date | By: David Bernhardt, Commissioner |

_____
(Witness)

BOND # _____

CONTRACT PERFORMANCE BOND
(Surety Company Form)

KNOW ALL MEN BY THESE PRESENTS: That _____ _____ **in the State of** _____, as principal, and……....., a corporation duly organized under the laws of the State of ..... and having a usual place of business ..... ....., as Surety, are held and firmly bound unto the Treasurer of the State of Maine in the sum of _____ **and 00/100 Dollars ($ )**, to be paid said Treasurer of the State of Maine or his successors in office, for which payment well and truly to be made, Principal and Surety bind themselves, their heirs, executors and administrators, successors and assigns, jointly and severally by these presents.

The condition of this obligation is such that if the Principal designated as Contractor in the Contract to construct Project Number _____ in the Municipality of _____ promptly and faithfully performs the Contract, then this obligation shall be null and void; otherwise it shall remain in full force and effect.

The Surety hereby waives notice of any alteration or extension of time made by the State of Maine.

Signed and sealed this ..... day of ....., 20….. .

| WITNESSES: | SIGNATURES: |
|---|---|
| | CONTRACTOR: |
| Signature..... | .....…..... |
| Print Name Legibly ..... | Print Name Legibly ...…..... |
| | SURETY: |
| Signature ..... | ....…..... |
| Print Name Legibly ..... | Print Name Legibly ..... |
| SURETY ADDRESS: | NAME OF LOCAL AGENCY: |
| ..... | ADDRESS ..... |
| ..... | ...……..... |
| ..... | .....……..... |
| TELEPHONE..... | .....……..... |

SAMPLE

BOND # _____

CONTRACT PAYMENT BOND
(Surety Company Form)

KNOW ALL MEN BY THESE PRESENTS: That _____ _____ **in the State of** _____, as principal, and.....….....
a corporation duly organized under the laws of the State of ..... and having a usual place of business in .....……., as Surety, are held and firmly bound unto the Treasurer of the State of Maine for the use and benefit of claimants as herein below defined, in the sum of _____ **and 00/100 Dollars ($ )** for the payment whereof Principal and Surety bind themselves, their heirs, executors and administrators, successors and assigns, jointly and severally by these presents.

The condition of this obligation is such that if the Principal designated as Contractor in the Contract to construct Project Number _____ in the Municipality of _____ promptly satisfies all claims and demands incurred for all labor and material, used or required by him in connection with the work contemplated by said Contract, and fully reimburses the obligee for all outlay and expense which the obligee may incur in making good any default of said Principal, then this obligation shall be null and void; otherwise it shall remain in full force and effect.

A claimant is defined as one having a direct contract with the Principal or with a Subcontractor of the Principal for labor, material or both, used or reasonably required for use in the performance of the contract.

Signed and sealed this ..... day of ...……......, 20 ... .

| | |
|---|---|
| WITNESS: | SIGNATURES: |
| | CONTRACTOR: |
| Signature……..... | .....…..... |
| Print Name Legibly .....…….. | Print Name Legibly ….....  |
| | SURETY: |
| Signature..... | ...…..... |
| Print Name Legibly ..... | Print Name Legibly ….....  |
| SURETY ADDRESS: | NAME OF LOCAL AGENCY: |
| ...…..... | ADDRESS ….....  |
| ..... | …….....  |
| TELEPHONE ..... | …….....  |

SAMPLE

# CONSTRUCTION NOTES

**Item # 403 .207 Hot Mix Asphalt 19.0 mm (Base)**

Base course shall be placed at 2 ½" depth.

**Item # 403.208  12.5 mm HMA (wearing)**

Wearing course shall be placed at 1 ½" depth.

# GENERAL NOTES

1) All joints between existing and proposed hot bituminous pavement shall be butted. Payment shall be incidental to related contract items.

2) All waste material not used on the project shall be disposed of in acceptable waste areas and reviewed by the Resident. Grading, seeding, and mulching of waste areas shall be considered incidental.

3) If foundation material is required under culverts, it shall meet the requirements for granular borrow - underwater backfill and will paid for as granular borrow.

4) Granular borrow used to backfill muck excavation or in low wet areas to 1' above water level or old ground shall meet requirements for granular borrow underwater backfill.

5) Any necessary cleaning of existing pavement prior to paving (or milling) shall be incidental to the related paving (or milling) items.

6) White pavement/curb marking (Item 627.75) shall be applied to bituminous curb ends at driveway openings as directed by the Resident.

7) Any damage to the property caused by the contractor's equipment, personnel, or operation shall be repaired to the satisfaction of the resident. All work, equipment, and materials required to make repairs shall be at the contractor's expense.

8) No separate payment for superintendent or foreman will be made for the supervision of equipment being paid for under the equipment rental items.

9) “Undetermined Locations” shall be determined by the Resident.

10) All work shall be done in accordance with the Maine Department of Transportation’s Best Management Practices for Erosion & Sedimentation Control, February, 2008.

March 14, 2007
Supersedes March 3, 1966

Non-federal Projects Only

# NOTICE TO CONTRACTORS - PREFERRED EMPLOYEES

Sec. 1303. Public Works; minimum wage

In the employment of laborers in the construction of public works, including state highways, by the State or by persons contracting for the construction, preference must first be given to citizens of the State who are qualified to perform the work to which the employment relates and, if they can not be obtained in sufficient numbers, then to citizens of the United States. Every contract for public works construction must contain a provision for employing citizens of this State or the United States. The hourly wage and benefit rate paid to laborers employed in the construction of public works, including state highways, may not be less than the fair minimum rate as determined in accordance with section 1308. Any contractor who knowingly and willfully violates this section is subject to a fine of not less than $250 per employee violation. Each day that any contractor employs a laborer at less than the wage and benefit minimum stipulated in this section constitutes a separate violation of this section. [1997, c. 757, §1 (amd).]

THIS DOCUMENT MUST BE CLEARLY POSTED AT THE PERTAINING STATE FUNDED PREVAILING WAGE CONSTRUCTION SITE

State of Maine
Department of Labor
Bureau of Labor Standards
Wage and Hour Division
Augusta, Maine 04333-0045
Telephone (207) 623-7906

Wage Determination - In accordance with 26 MRSA §1301 et. seq., this is a determination by the Bureau of Labor Standards, of the fair minimum wage rate to be paid laborers and workers employed on the below titled project.

Title of Project ------Site Work, Utility, Grading and Drainage-66 Industrial Drive

Location of Project –Augusta, Kennebec County

2014 Fair Minimum Wage Rates
Highway & Earthwork Kennebec County

| Occupation Title | Minimum Wage | Minimum Benefit | Total | Occupation Title | Minimum Wage | Minimum Benefit | Total |
|---|---|---|---|---|---|---|---|
| Asphalt Raker | $14.00 | $0.60 | $14.60 | Ironworker - Structural | $22.57 | $5.88 | $28.45 |
| Backhoe Loader Operator | $17.00 | $1.68 | $18.68 | Laborers (Incl.Helpers & Tenders) | $12.98 | $1.22 | $14.20 |
| Boom Truck (Truck Crane) Operator | $25.00 | $15.46 | $40.46 | Laborer - Skilled | $16.30 | $2.55 | $18.85 |
| Bulldozer Operator | $17.95 | $2.69 | $20.64 | Loader Operator - Front-End | $16.00 | $2.68 | $18.68 |
| Carpenter | $18.50 | $1.49 | $19.99 | Mechanic- Maintenance | $19.75 | $2.94 | $22.69 |
| Carpenter - Rough | $17.00 | $1.85 | $18.85 | Painter | $14.50 | $0.00 | $14.50 |
| Cement Mason/Finisher | $17.05 | $0.43 | $17.48 | Paver Operator | $18.13 | $2.79 | $20.92 |
| Concrete Pump Operator | $20.50 | $3.53 | $24.03 | Pipelayer | $35.72 | $21.35 | $57.07 |
| Crane Operator =>15 Tons) | $23:25 | $6.45 | $29.70 | Pump Installer | $21.00 | $2.77 | $23.77 |
| Crusher Plant Operator | $18.50 | $3.26 | $21.76 | Reclaimer Operator | $20.00 | $10.84 | $30.84 |
| Diver | $25.00 | $3.07 | $28.07 | Roller Operator - Earth | $19.36 | $22.45 | $41.81 |
| Driller - Rock | $18.00 | $5.01 | $23.01 | Roller Operator - Pavement | $17.00 | $5.35 | $22.35 |
| Driller - Well | $14.00 | $3.20 | $17.20 | Roofer | $16.00 | $1.40 | $17.40 |
| Electrician - Licensed | $24.50 | $5.86 | $30.36 | Screed/Wheelman | $18.40 | $5.37 | $23.77 |
| Excavator Operator | $17.91 | $2.16 | $20.07 | Truck Driver - Light | $16.00 | $3.05 | $19.05 |
| Fence Setter | $12.00 | $0.00 | $12.00 | Truck Driver - Medium | $14.00 | $0.57 | $14.57 |
| Flagger | $10.00 | $0.00 | $10.00 | Truck Driver - Heavy | $14.63 | $1.69 | $16.32 |
| Grader/Scraper Operator | $16.75 | $3.22 | $19.97 | Truck Driver - Tractor Trailer | $17.50 | $7.36 | $24.86 |
| Highway Worker/Guardrail Installer | $16.40 | $0.41 | $16.81 | Truck Driver - Mixer (Cement) | $11.42 | $2.90 | $14.32 |
| Hot Top Plant Operator | $21.75 | $10.34 | $32.09 | | | | |

The Laborer classifications include a wide range of work duties. Therefore, if any specific occupation to be employed on this project is not listed in this determination, call the Bureau of Labor Standards at the above number for further clarification.

Welders are classified in the trade to which the welding is incidental.

Apprentices - The minimum wage rate for registered apprentices are those set forth in the standards and policies of the Maine State Apprenticeship and Training Council for approved apprenticeship programs.

Posting of Schedule - Posting of this schedule is required in accordance with 26 MRSA §1301 et. seq., by any contractor holding a State contract for construction valued at $50,000 or more and any subcontractors to such a contractor.

Appeal - Any person affected by the determination of these rates may appeal to the Commissioner of Labor by filing a written notice with the Commissioner stating the specific grounds of the objection within ten (10) days from the filing of these rates with the Secretary of State.

Determination No: HI-017-2014

Filing Date: January 23, 2014

Expiration Date: 12-31-2014

A true copy

Attest: Pamela Taylor

Pamela D. Taylor
Director
Bureau of Labor Standards

BLS 424HI (R2014) (Highway & Earthwork Kennebec)

# SPECIAL PROVISIONS

## SPECIAL PROVISION SECTION 104
## GENERAL RIGHTS AND RESPONSIBILITIES

104.3.8A. Federal Wage Rates and Labor Laws  Delete the entire section 104.3.8A.

104.3.8B State Wage Rates and Labor Laws  The State wage rates enclosed apply to this project.

Augusta
20118.00
66 Industrial Drive, Phase 1
February 1, 2014

SPECIAL PROVISION

Section 104

GENERAL RIGHTS AND RESPONSIBILITIES

(Cooperation Between Contractors)

A Phase 2 contract is planned to be awarded for building construction and rehabilitation as described elsewhere in these documents. The Contractor shall cooperate with, work with and work around the Phase 2 Contractor and provide access to the Phase 2 project as necessary and as directed by the Resident.

Augusta
20118.00
66 Industrial Drive, Phase 1
February 1, 2014

SPECIAL PROVISION
SECTION 104
GENERAL RIGHTS AND RESPONSIBILITIES
(Paving Coordination)

The Contractor shall coordinate paving with the Phase 2 Contractor and the Department and be completed by July 10, 2014.

Augusta
20118.00
66 Industrial Drive, Phase 1
February 1, 2014

SPECIAL PROVISION
SECTION 104
GENERAL RIGHTS AND RESPONSIBILITIES

The Department plans to move into the Fleet Services Building beginning August 1, 2014. Primarily this consists of moving machinery and equipment into the building and setting it up. The Contractor shall provide continuous access after August 1, 2014 that is capable of supporting trucks, machinery and equipment to be moved.

# SPECIAL PROVISION
# SECTION 104.5.5
# GENERAL RIGHTS AND RESPONSIBILITIES
## Prompt Payment of Subcontractors

104.5.5

104.5.5 Prompt Payment of Subcontractors

A. Pay When Paid The Contractor shall pay Subcontractors for all Work satisfactorily performed and Invoiced by the Subcontractor no later than 30 Days from the date the Contractor receives payment from the Department for such Subcontractor's Work.

B. Payment Tracking Federal Projects On federally funded projects, the prime contractor, subcontractors and lower-tier subcontractors will track and confirm the delivery and receipt of all payments through the Elation System. They will be responsible for entering all payments to all sub and lower tier contractors. MaineDOT will run a query monthly to ensure that contractors are complying and generate an e-mail to contractors who have not responded to confirm receipt of MaineDOT payment or contractor payment to lower tier subcontractors.

C. Retainage The Contractor shall return to the Subcontractor all retainage withheld from the Subcontractor within 30 Days after the date the Subcontractor's Work is satisfactorily completed. If there is a Delay in such return of retainage, the Subcontractor may pursue all rights it may have under the claims procedure referenced in Section 104.5.6 - Subcontractor Claims for Payment.

SPECIAL PROVISION
SECTION 105
General Scope of Work
(Limitations of Operations)

The Contractor must notify the Department 24 hours prior to any change in work schedule.

The Contractor must notify the Department 48 hours prior to working any Saturdays.

Town: Augusta
PIN #: 20118.55
Date: 1/7/14

SPECIAL PROVISION
SECTION 105
General Scope of Work
(Environmental Requirements)

The northern long eared bat (*Myotis septentrionalis*) (hereafter referred to as 'NLE bat') was proposed for listing under the Federal Endangered Species Act (ESA) on October 2, 2013 (Federal Register Vol. 78, No. 191, pages 61046-61080). This species is expected to be listed as Endangered under the ESA around October 2014.

The following conditions must be met to minimize harm to the NLE bat.

I. Special Conditions:

1. **All clearing for the entire project must occur prior to October 1, 2014.**

# SPECIAL PROVISION
## SECTION 105
## LEGAL RELATIONS WITH AND RESPONSIBILITY TO PUBLIC
(NPDES)

105.8.2 Permit Requirements This Section is revised by the addition of the following paragraph:

"The Contractor is advised that the Environmental Protection Agency has issued a final National Pollutant Discharge Elimination System (NPDES) General Permit for storm water discharges from construction sites disturbing more than 2 ha [5 acres]. This permit requires:

- Storm Water Pollution Prevention Plan
- Submission of a Notification of Intent (NOI) at least 48 hours before construction commences
- Submission of a Notification of Termination (NOT) when a site has been finally stabilized and all storm water discharges from construction activities are eliminated.

If the project's land disturbances is 2 ha [5 acres] or more, the Department will prepare the plan and submit the NOI (and NOT). The Contractor shall prepare plans and submit NOI's (and NOT's) for regulated construction activities beyond the project limits (e.g., borrow pits).

The Contractor shall be familiar with and comply with these regulations."

# SPECIAL PROVISION
## SECTION 107
## Prosecution and Progress
## (Contract Time)

The contractor will be allowed to commence work provided that all required plans/submittals have been received and approved by the Department.

The specified Contract Completion Date is **September 1, 2014.** All Work must be Complete by the Contract Completion Date specified in the Contract, and any authorized extensions.

Completion of Physical Work occurs when the Work is complete and has undergone a successful final inspection. Liquidated Damages will cease upon the physical completion of the Work. Completion occurs when the Contractor has finished all Work pursuant to the Contract, the Work is complete and has undergone a successful final inspection and delivered documentation is complete and accepted. Completion does not mean substantial Completion. Completion also does not mean Completion of Physical Work.

# SPECIAL PROVISION
## SECTION 107
## TIME
(Scheduling of Work – Projected Payment Schedule)

Description The Contractor shall also provide the Department with a Quarterly Projected Payment Schedule that estimates the value of the Work as scheduled, including requests for payment of Delivered Materials. The Projected Payment Schedule must be in accordance with the Contractor's Schedule of Work and prices submitted by the Contractor's Bid. The Contractor shall submit the Projected Payment Schedule as a condition of Award.

Augusta
20118.00
66 Industrial Drive, Phase 1
February 1, 2014

SPECIAL PROVISION
SECTION 652
MAINTENANCE OF TRAFFIC

The Contractor shall plan operations so to maintain access to all abutting businesses and use of the cul-de-sac. The Contractor's equipment, vehicles, employee vehicles, materials shall be parked and stored outside of the right of way for Industrial Drive.

The Contractor shall erect a "Work Area Ahead" sign on Industrial Drive in a location as directed by the Resident.

April 17, 2007
Supersedes May 10, 2006

# SPECIAL PROVISION
# SECTION 652
## MAINTENANCE OF TRAFFIC
### Construction Sign Sheeting Material

Super high intensity fluorescent retroreflective sheeting, ASTM D 4956 - Type VII, Type VIII, or Type IX (prismatic), is required for all construction signs.

**SPECIAL PROVISION**
**SECTION 656**
Temporary Soil Erosion and Water Pollution Control

This project is in the Bond Brook watershed, which is listed as a Class A water, which is listed as a Distinct Population Segment for *Atlantic Salmon* and is therefore, considered **SENSITIVE** in accordance with the BMP Manual. The Contractor's SEWPCP shall comply with Section II.B., Guidelines for Sensitive Waterbodies in the BMP Manual.

The following is added to Section 656 regarding Project Specific Information and Requirements. All references to the Maine Department of Transportation Best Management Practices for Erosion and Sedimentation Control (a.k.a. Best Management Practices manual or BMP Manual) are a reference to the latest revision of said manual. The latest version is dated "February 2008" and is available at:

http://www.maine.gov/mdot/env/documents/pdf/bmp2008/BMP2008full.pdf

**Procedures specified shall be according to the BMP Manual unless stated otherwise.**

**Project Specific Information and Requirements**

The following information and requirements apply specifically to this Project. The temporary soil erosion and water pollution control measures associated with this work shall be addressed in the Soil Erosion and Water Pollution Control Plan (SEWPCP.)

1. **A preconstruction field review is mandatory for this project. The preconstruction field review shall take place before commencing any work that involves soil disturbance or potential impacts on water quality. Attendees shall include the Environmental Coordinator, the preparer of the SEWPCP, the Construction Manager, and a representative from the Department's ENV Water Resources Unit. The date and time shall be set by the Contractor in consultation with the Construction Manager and ENV Water Resources Unit representative.**
2. **CLEARING LIMIT LINES SHALL BE MINIMIZED.** Clearing shall be minimized as shown on the design plans and be completed no later than October 1, 2014.
3. Due to the project sensitivity, **CONSTRUCTION SHALL BE PHASED** to limit the amount of disturbed area. The Contractor's SEWPCP shall include specific provisions for phasing the work. Each section must be stabilized to the approval of the MaineDOT Resident and the Water Resources Unit before work can begin on any subsequent section.
4. **DRAINAGE WORK SHALL NOT COMMENCE UNTIL AFTER APRIL 1ST OF ANY YEAR DUE TO HIGH GROUNDWATER LEVELS AND NUMEROUS INTERMITTENT WETLAND SWALES.** This date shall only be adjustable upon

**SPECIAL PROVISION**
**SECTION 656**
Temporary Soil Erosion and Water Pollution Control

approval of both the Construction Manager and a representative from the Water Resources Unit.

5. Newly disturbed earth shall be mulched by the end of each workday. Mulch shall be maintained on a daily basis.

6. All disturbed ditches/slopes shall be stabilized by the end of each workday. Stabilization shall be maintained on a daily basis.

7. Erosion control blanket shall be installed in the bottoms of all ditches except where a stone lining is planned. Seed shall be applied prior to the placement of the blanket.

8. The SEWPCP shall describe the location and method of temporary erosion and sediment control for existing and proposed catch basins, outlet areas and culvert inlets and outlets.

9. **If water is flowing within the drainage system, the water shall be diverted to a stable area or conduit and work shall be conducted in the dry.** The Contractor's plan shall address when and where the diversions will be necessary.

10. Permanent slope stabilization measures shall be applied within one week of the last soil disturbance. Temporary slope stabilization is required on a daily basis.

11. Permanent seeding shall be done in accordance with *Special Provision, Section 618, Seeding* unless the Contract states otherwise.

12. Culvert inlet and outlet protection shall be installed within 48 hours of culvert installation, or prior to a storm event, whichever is sooner.

13. Temporary winter stabilization must be used between November 1st and April 1st or outside of that time period if the ground is frozen or snow covered. Temporary winter stabilization involves, at a minimum, covering all disturbed soils and seeded ground that is not Acceptable Work with an approved method. If temporary winter stabilization practices are used then spring procedures for permanent stabilization shall also be described in the SEWPCP. Use of these methods for over-winter temporary erosion control will be incidental to the contract and be paid for as part of Pay Item 656.75.

**SPECIAL PROVISION**
**SECTION 656**
Temporary Soil Erosion and Water Pollution Control

14. If a cofferdam sedimentation basin is used, it shall be located in an upland area where the water can settle and sink into the ground or be released slowly to the resource in a manner that will not cause erosion. The location of such a cofferdam sedimentation basin shall be addressed in the SEWPCP.
15. Prior to release to a natural resource, any impounded water that has been in contact with sediment, shall have a turbidity no greater than the receiving resource. Water not meeting release criteria shall be addressed in the SEWPCP. Discharging impounded water to a stream or downgradient wetland must take place in a manner that does not disturb the stream bottom or cause erosion.
16. Any concrete that is placed or spilled (including leakage from forms) as well as indirect contact via tools or equipment shall not be released to a natural resource. It shall be released to an upland area within the project site. At the discretion of the MDOT Resident and/or ENV staff, it shall be removed from the project site and disposed of in accordance with the Maine Hazardous Waste, Septage and Solid Waste Management Act, 38 MRSA Section 1301 et seq and the Maine Solid Waste Management Regulations, 06-096 CMR Chapters 400-425.
17. Dust control items other than those under Standard Specification 637, if applicable, shall be included in the plan.

# Allied Engineering

Structural Mechanical Electrical Commissioning

# 66 Industrial Drive / Phase 1

**State WIN # 020118.00**

66 Industrial Drive, Augusta, Maine

**Maine Department of Transportation**

## Issued for Bid

AEI 13-057

February 05, 2014

160 Veranda Street - Portland, ME 04103 - Ph. 207.221.2260 Fax 207.221.2266
www.allied-eng.com

## TABLE OF CONTENTS

Technical Specifications


Summary ____ 01 10 00
Allowances ____ 01 21 00
Temporary Facilities and Controls ____ 01 50 00
Closeout Procedures ____ 01 77 00

Demolition ..... 02 41 00

Cast In Place Concrete ..... 03 30 00

Traffic Signs ..... 10 14 01

Basic Electrical Requirements ____ 26 01 00
Underground Ducts and Raceways for Electrical Systems ____ 26 05 43

Site Clearing ..... 31 10 00
Grading ..... 31 22 00
Excavation ..... 31 23 16
Dewatering ..... 31 23 19
Trenching ..... 31 23 16.13
Rock Removal ..... 31 23 16.26
Fill ..... 31 23 23
Geotechnical Engineering Study .....
Slope Protection and Erosion Control ..... 31 25 00
Asphalt Paving ..... 32 12 16
Asphalt Escalator .....
SP 400 .....
Spec. Prov. 403 .....
Rip Rap ..... 31 37 00

Concrete Paving ..... 32 13 13
Painted Pavement Markings ..... 32 17 23.13

Chain Link Fences and Gates ..... 32 31 13
CLFMI Product Manual .....
Landscaping ..... 32 84 23.2

Manholes and Structures ..... 33 05 13
Site Water Utility Distribution Piping ..... 33 11 16
Greater Augusta Utility District Water and Sewer Construction Specifications and Procedures .....
Site Sanitary Utility Sewerage Piping ..... 33 31 11
Utility Septic Tanks ..... 33 36 00
Site Storm Utility Drainage Piping ..... 33 41 11
Subdrainage ..... 33 46 00

# SECTION 01 10 00

# SUMMARY

## PART 1 - GENERAL

### 1.01 RELATED DOCUMENTS

A. State of Maine Department of Transportation, “Standard Specifications,” Revision December 2002, and any revisions thereto, apply to this Section. If the Contractor discovers any ambiguity, error, omission, conflict, or discrepancy, Section 10 1. 3.6 Priority of Conflicting Contract Documents shall control.

1. Drawings and general provisions of the Contract, and Division 1 Specification Sections, apply to this Section.
2. Any supplements to any of the above specifications and or standards issued prior to issuance of this Project Manual, apply to this section.

### 1.02 SUMMARY

A. Section includes:

1. Project information.
2. Work covered by Contract Documents.
3. Phased construction.
4. Work by Owner.
5. Access to site.
6. Coordination with occupants.
7. Work restrictions.
8. Specification and drawing conventions.

B. Related Section:

1. Division 01 Section "Temporary Facilities and Controls" for limitations and procedures governing temporary use of Owner's facilities.
2. Divisions 02 through 49 Sections for specific requirements for unit prices

### 1.03 PROJECT INFORMATION

A. Project Identification: 66 Industrial Drive Phase 1

1. Project Location: 66 Industrial Drive, Augusta, Maine.

B. Owner: Maine Department of Transportation.

1.04 WORK COVERED BY CONTRACT DOCUMENTS

A. The Work of the Project is defined by the Contract Documents and consists of the following:

1. The project consists of: Site Demolition, earth work and utilities on the North ( Estes Parcel 5.305 Acre) site and South (Ruby parcel 43.67 acre) site as depicted on drawing and as defined in this project manual, and on the Bid form.
2. Phase 1 includes:
3. Demolition and earthwork extends up to the face of existing buildings.
4. Utility work extends to within 10 feet of existing and proposed buildings.

B. Phase 2 is not in this contract (NIC). It will be under a different bid that will be on going during the phase one project, it consists of the following:

1. Renovations to existing 60,000 SF pre-engineered metal building

   a. Concrete slab removal for footing placement, replacement and plumbing installations.
   b. Removal of metal siding and roofing, inclusive of building insulation wrap.
   c. Replacement of roofing and siding of existing pre-engineered metal building.
   d. Single and 2-story office construction.

2. Demolition of existing office space.
3. New 2 story 13,441 SF per floor office addition. Office building to be constructed using a braced steel frame superstructure supporting precast concrete plank floor and roof systems.
4. New 7,940 S.F. sign shop pre-engineered building addition.
5. New 5,440 S.F. coatings, paint and wash bay addition constructed using concrete masonry walls and precast concrete roof panels.
6. Work will include relocation of scheduled equipment from current Maine DOT fleet services.
7. Construction of a 7,084 SF wood framed Maine DOT Fleet Storage Building on the South lot
8. Utilities

   a. Electrical service entrances.
   b. Telephone Entrances
   c. Data entrances.
   d. Sewer entrance.
   e. Water / sprinkler entrance.
   f. Natural gas entrances.

9. Site work includes:

   a. Excavating and back filling at additions for foundations and utility tie-ins within 10 feet of building footprints.
   b. Grading within 10 feet of all additions
   c. Excavation and back fill for Maine DOT Fleet Storage Building on south lot.
   d. Paved floor in Maine DOT Fleet building

C. Type of Contract

1. Project will be constructed under a single prime contract.

## 1.05 ACCESS TO SITE

A. General: Contractor shall have limited use of Project site for construction operations during construction period. Contractor's use of Project site is limited only by Owner's right to perform work or to retain other contractors on portions of Project.

B. All site work and site utility work shall be coordinated to maintain power and water services to occupied building for the duration of the project. Coordinate any required cut-overs with the owner.

C. Coordinate construction activities to avoid conflicts and to ensure orderly progress of the Work. Such activities include, but are not limited to, the following phasing

1. Phase 1: Fleet services site work (this contract) as depicted on plans and in this project manual.
2. Phase 2 Fleet Services Building:

a. Renovations of the existing building and addition of a Sign shop, a Coating addition and an office addition as well as a DOT Fleet building on the south site.

1) Excavation and backfill of foundations for additions at North lot and New DOT Fleet building on the south lot are Not in contract

b. All site utilities will be connected to the existing facility and additions at a point 10’ from the existing or new foundation.

## 1.06 PROJECT SCHEDULE

A. The Contractor shall complete the work for each phase on or before dates scheduled below:

**1.** The Contractor shall complete the work on or before the date shown in the contract documents.”

## 1.07 WORK RESTRICTIONS

A. Work Restrictions, General: Comply with restrictions on construction operations.

1. Comply with limitations on use of public streets and other requirements of authorities having jurisdiction.

B. On-Site Work Hours: allowable work times will be in accordance with State of Maine Department of Transportation, “Standard Specifications,” Revision December 2002, Section 107 “TIME” and Supplemental Specification (Corrections, Additions, & Revisions to Standard Specifications - Revision of December 2002).

C. Nonsmoking Building: Smoking is not permitted within the building or within 25 feet (8 m) of entrances, operable windows, or outdoor air intakes.

1.08 SPECIFICATION AND DRAWING CONVENTIONS

A. Specification Content: The Specifications use certain conventions for the style of language and the intended meaning of certain terms, words, and phrases when used in particular situations. These conventions are as follows:

1. Imperative mood and streamlined language are generally used in the Specifications. The words "shall," "shall be," or "shall comply with," depending on the context, are implied where a colon (:) is used within a sentence or phrase.
2. Specification requirements are to be performed by Contractor unless specifically stated otherwise.

B. Division 01 General Requirements: Requirements of Sections in Division 01 apply to the Work of all Sections in the Specifications.

C. Drawing Coordination: Requirements for materials and products identified on the Drawings are described in detail in the Specifications. One or more of the following are used on the Drawings to identify materials and products:

1. Terminology: Materials and products are identified by the typical generic terms used in the individual Specifications Sections.
2. Abbreviations: Materials and products are identified by abbreviations published as part of the U.S. National CAD Standard and scheduled on Drawings.
3. Keynoting: Materials and products are identified by reference keynotes referencing Specification Section numbers found in this Project Manual.

PART 2 - PRODUCTS (Not Used)

PART 3 - EXECUTION (Not Used)

**END OF SECTION 01 10 00**

# SECTION 01 21 00

# ALLOWANCES

## PART 1 - GENERAL

### 1.01 RELATED DOCUMENTS

A. State of Maine Department of Transportation, "Standard Specifications," Revision December 2002, and any revisions thereto, apply to this Section. If the Contractor discovers any ambiguity, error, omission, conflict, or discrepancy, Section 10 1. 3.6 Priority of Conflicting Contract Documents shall control.

1. Drawings and general provisions of the Contract, and Division 1 Specification Sections, apply to this Section.
2. Any supplements to any of the above specifications and or standards issued prior to issuance of this Project Manual, apply to this section.

### 1.02 SUMMARY

A. Section includes administrative and procedural requirements governing allowances.

1. Certain items are specified in the Contract Documents by allowances. Allowances have been established in lieu of additional requirements and to defer selection of actual materials and equipment to a later date when direction will be provided to the Contractor. If necessary, additional requirements will be issued by Change Order.

B. Types of allowances include the following:

1. Lump-sum allowances.

### 1.03 SELECTION AND PURCHASE

A. At the earliest practical date after award of the Contract, advise Architect of the date when final selection and purchase of each product or system described by an allowance must be completed to avoid delaying the Work.

B. At Architect's request, obtain proposals for each allowance for use in making final selections. Include recommendations that are relevant to performing the Work.

C. Purchase products and systems selected by Architect from the designated supplier.

## 1.04 SUBMITTALS

A. Submit proposals for purchase of products or systems included in allowances, in the form specified for Change Orders.

B. Submit invoices or delivery slips to show actual quantities of materials delivered to the site for use in fulfillment of each allowance.

C. Submit time sheets and other documentation to show labor time and cost for installation of allowance items that include installation as part of the allowance.

D. Coordinate and process submittals for allowance items in same manner as for other portions of the Work.

## 1.05 COORDINATION

A. Coordinate allowance items with other portions of the Work. Furnish templates as required to coordinate installation.

## 1.06 LUMP-SUM UNIT-COST ALLOWANCES

A. Allowance shall include cost to Contractor of specific products and materials included under the allowance and shall include taxes, freight, and delivery to Project site.

## 1.07 ADJUSTMENT OF ALLOWANCES

A. Allowance Adjustment: To adjust allowance amounts, prepare a Change Order proposal based on the difference between purchase amount and the allowance, multiplied by final measurement of work-in-place where applicable. If applicable, include reasonable allowances for cutting losses, tolerances, mixing wastes, normal product imperfections, and similar margins.

1. Submit substantiation of a change in scope of work, if any, claimed in Change Orders related to unit-cost allowances.
2. Owner reserves the right to establish the quantity of work-in-place by independent quantity survey, measure, or count.
3. Do not include Contractor's or subcontractor's indirect expense in the Change Order cost amount unless it is clearly shown that the nature or extent of work has changed from what could have been foreseen from information in the Contract Documents.

PART 2 - PRODUCTS (Not Used)

PART 3 - EXECUTION

3.01 EXAMINATION

A. Examine products covered by an allowance promptly on delivery for damage or defects. Return damaged or defective products to manufacturer for replacement.

3.02 PREPARATION

A. Coordinate materials and their installation for each allowance with related materials and installations to ensure that each allowance item is completely integrated and interfaced with related work.

3.03 SCHEDULE OF ALLOWANCES

A. Item 999.001 Allowance No. 1 – $5,000: Carry in the base bid for relocation of utility pole at front entrance as specified in Division 26 Section “Common Work Results for Electrical."

B. Item 999.002Allowance No. 2 - $1,200: Carry in the base bid for sanitary sewer testing & inspections by Augusta Utility District.

C. Item 999.003 Allowance No.3 - $1,450: Carry in the base bid for water entrance flushing, testing & inspections by Augusta Utility District.

This Page Left Intentionally Blank

**END OF SECTION 01 21 00**

# SECTION 01 50 00

# TEMPORARY FACILITIES AND CONTROLS

## PART 1 - GENERAL

### 1.01 RELATED DOCUMENTS

A. State of Maine Department of Transportation, “Standard Specifications,” Revision December 2002, and any revisions thereto, apply to this Section. If the Contractor discovers any ambiguity, error, omission, conflict, or discrepancy, Section 10 1. 3.6 Priority of Conflicting Contract Documents shall control.

1. Drawings and general provisions of the Contract, and Division 1 Specification Sections, apply to this Section.
2. Any supplements to any of the above specifications and or standards issued prior to issuance of this Project Manual, apply to this section.

### 1.02 SUMMARY

A. Section includes requirements for temporary utilities, support facilities, erosion control, security and protection facilities.

B. Related Sections:

1. Division 01 Section "Summary" for work restrictions and limitations on utility interruptions.

### 1.03 USE CHARGES

A. General: Installation and removal of and use charges for temporary facilities shall be included in the Contract Sum unless otherwise indicated. Allow other entities to use temporary services and facilities without cost, including, but not limited to, Owners management team, testing agencies, and authorities having jurisdiction.

B. Water Service: Pay water service use charges for water used by all entities for construction operations.

C. Electric Power Service: Pay electric power service use charges for electricity used by all entities for construction operations.

### 1.04 INFORMATIONAL SUBMITTALS

A. Site Plan: Show temporary facilities, utility hookups, staging areas, and parking areas for construction personnel.

B. Erosion and Sedimentation Control Plan: submit as required elsewhere in specifications.

1.05 QUALITY ASSURANCE - deleted

1.06 PROJECT CONDITIONS - deleted

PART 2 - PRODUCTS

2.01 TEMPORARY FACILITIES

The owner will provide a field office for the Resident including electricity, telephone and internet service.

PART 3 - EXECUTION

3.01 INSTALLATION, GENERAL

A. Locate facilities where they will serve Project adequately and result in minimum interference with performance of the Work. Relocate and modify facilities as required by progress of the Work.

1. Locate facilities to limit site disturbance as specified in Division 01 Section "Summary."

B. Provide each facility ready for use when needed to avoid delay. Do not remove until facilities are no longer needed or are replaced by authorized use of completed permanent facilities.

3.02 TEMPORARY UTILITY INSTALLATION

A. General: Install temporary service or connect to existing service.

1. Arrange with utility company, Owner, and existing users for time when service can be interrupted, if necessary, to make connections for temporary services.

B. Water Service: Install water service and distribution piping in sizes and pressures adequate for construction.

C.

D. Sanitary Facilities: Provide temporary toilets, wash facilities, and drinking water for use of construction personnel. Comply with requirements of authorities having jurisdiction for type, number, location, operation, and maintenance of fixtures and facilities.

E. Heating: Provide temporary heating required by construction activities for curing or drying of completed installations or for protecting installed construction from adverse effects of low temperatures or high humidity. Select equipment that will not have a harmful effect on completed installations or elements being installed.

F. Electric Power Service: Provide electric power service and distribution system of sufficient size, capacity, and power characteristics required for construction operations.

G. Lighting: Provide temporary lighting with local switching that provides adequate illumination for construction operations, observations, inspections, and traffic conditions.

1. Install and operate temporary lighting that fulfills security and protection requirements without operating entire system.

## 3.03 SUPPORT FACILITIES INSTALLATION

A. General: Comply with the following:

1. Provide construction for temporary offices, shops, and sheds located within construction area or within 30 feet (9 m) of building lines that is noncombustible according to ASTM E 136. Comply with NFPA 241.
2. Maintain support facilities until removal is authorized by Owner.

B. Temporary Roads and Paved Areas: Construct and maintain temporary roads and paved areas adequate for construction operations. Locate temporary roads and paved areas within construction limits indicated on Drawings.

1. Provide dust-control treatment that is nonpolluting and non-tracking. Reapply treatment as required to minimize dust.

C. Temporary Use of Permanent Roads and Paved Areas: Locate temporary roads and paved areas in same location as permanent roads and paved areas. Construct and maintain temporary roads and paved areas adequate for construction operations. Extend temporary roads and paved areas, within construction limits indicated, as necessary for construction operations.

1. Coordinate elevations of temporary roads and paved areas with permanent roads and paved areas.
2. Prepare subgrade and install subbase and base for temporary roads and paved areas according to Division 31 Section "Earth Moving."
3. Recondition base after temporary use, including removing contaminated material, regrading, proof-rolling, compacting, and testing.
4. Delay installation of final course of permanent hot-mix asphalt pavement until immediately before Substantial Completion. Repair hot-mix asphalt base-course pavement before installation of final course according to Division 32 Section "Asphalt Paving."

D. Traffic Controls: Comply with requirements of authorities having jurisdiction.

1. Protect existing site improvements to remain including curbs, pavement, and utilities.
2. Maintain access for fire-fighting equipment and access to fire hydrants.

E. Parking: Provide temporary parking areas for construction personnel.

F. Dewatering Facilities and Drains: Maintain Project site, excavations, and construction free of water. Remove snow and ice as required to minimize accumulations.

G. Project Signs: Provide Project signs as indicated. Unauthorized signs are not permitted.

1. Provide Project identification signs as indicated on Drawings.
2. Temporary Signs: Provide other signs as indicated and as required to inform public and individuals seeking entrance to Project.

   a. Provide temporary, directional signs for construction personnel and visitors.

3. Maintain and touchup signs so they are legible at all times.

## 3.04 SECURITY AND PROTECTION FACILITIES INSTALLATION

A. Environmental Protection: Provide protection, operate temporary facilities, and conduct construction as required to comply with environmental regulations and that minimize possible air, waterway, and subsoil contamination or pollution or other undesirable effects.

1. Comply with work restrictions specified in Division 01 Section "Summary."

B. Temporary Erosion and Sedimentation Control:

1. Per State of Maine Department of Transportation, “Standard Specifications,” Revision December 2002, and any revisions thereto.

   a. Section 656 Temporary soil erosion and water pollution control

   b. MaineDOT Best Management Practices for Erosion and Sedimentation Controls, latest edition.

C. Tree and Plant Protection: Install temporary fencing located as indicated or outside the drip line of trees to protect vegetation from damage from construction operations. Protect tree root systems from damage, flooding, and erosion.

D. Barricades, Warning Signs, and Lights: Comply with requirements of authorities having jurisdiction for erecting structurally adequate barricades, including warning signs and lighting.

E. Temporary Fire Protection: Maintain temporary fire-protection protocol to protect against reasonably predictable and controllable fire losses.

1. Prohibit smoking in construction areas.
2. Supervise welding operations, combustion-type temporary heating units, and similar sources of fire ignition according to requirements of authorities having jurisdiction.
3. Develop and supervise an overall fire-prevention and -protection program for personnel at Project site. Review needs with local fire department and establish procedures to be followed. Instruct personnel in methods and procedures. Post warnings and information.

3.05 OPERATION, TERMINATION, AND REMOVAL

A. Supervision: Enforce strict discipline in use of temporary facilities. To minimize waste and abuse, limit availability of temporary facilities to essential and intended uses.

B. Maintenance: Maintain facilities in good operating condition until removal.

1. Maintain operation of temporary enclosures, heating, cooling, humidity control, ventilation, and similar facilities on a 24-hour basis where required to achieve indicated results and to avoid possibility of damage.

C. Temporary Facility Changeover: Do not change over from using temporary security and protection facilities to permanent facilities until Completion.

D. Termination and Removal: Remove each temporary facility when need for its service has ended, when it has been replaced by authorized use of a permanent facility. Complete or, if necessary, restore permanent construction that may have been delayed because of interference with temporary facility. Repair damaged Work, clean exposed surfaces, and replace construction that cannot be satisfactorily repaired.

1. Materials and facilities that constitute temporary facilities are property of Contractor

Remove temporary roads and paved areas not intended for or acceptable for integration into permanent construction. Where area is intended for landscape development, remove soil and aggregate fill that do not comply with requirements for fill or subsoil. Remove materials contaminated with road oil, asphalt and other petrochemical compounds, and other substances that might impair growth of plant materials or lawns. Repair or replace street paving, curbs, and sidewalks at temporary entrances, as required by authorities having jurisdiction.

**END OF SECTION 01 50 00**

# SECTION 01 77 00

# CLOSEOUT PROCEDURES

## PART 1 - GENERAL

### 1.01 RELATED DOCUMENTS

A. State of Maine Department of Transportation, "Standard Specifications," Revision December 2002, and any revisions thereto, apply to this Section. If the Contractor discovers any ambiguity, error, omission, conflict, or discrepancy, Section 10 1. 3.6 Priority of Conflicting Contract Documents shall control.

1. Drawings and general provisions of the Contract, and Division 1 Specification Sections, apply to this Section.
2. Any supplements to any of the above specifications and or standards issued prior to issuance of this Project Manual, apply to this section.

### 1.02 SUMMARY

A. This Section includes administrative and procedural requirements for contract closeout, including, but not limited to, the following:

1. Inspection procedures.
2. Project Record Documents.
3. Operation and maintenance manuals.
4. Warranties.
5. Instruction of Owner's personnel.
6. Final cleaning.
7. Evidence of payment and release of liens

B. Related Sections include the following:

1. Divisions 2 through 16 Sections for specific closeout and special cleaning requirements for products of those Sections.

### 1.03 FINAL CLEAN UP AND FINISHING

A. Preliminary Procedures: Before requesting inspection, complete the following. List items below that are incomplete in request.

1. Prepare a list of items to be completed and corrected (punch list), the value of items on the list, and reasons why the Work is not complete.
2. Submit specific warranties, workmanship bonds, maintenance service agreements, final certifications, and similar documents.
3. Prepare and submit Project Record Documents, operation and maintenance manuals.

4. Deliver tools, spare parts, extra materials, and similar items to location designated by Owner. Label with manufacturer's name and model number where applicable.
5. Make final changeover of permanent locks and deliver keys to Owner. Complete startup testing of systems.
6. Submit test/adjust/balance records.
7. Terminate and remove temporary facilities from Project site, along with mockups, construction tools, and similar elements.
8. Submit changeover information related to Owner's occupancy, use, operation, and maintenance.
9. Complete final cleaning requirements, including touchup painting.
10. Touch up and otherwise repair and restore marred exposed finishes to eliminate visual defects.

1.04 COMPLETION OF PHYSICAL WORK AND FINAL COMPLETION

A. The Contractor will notify the Department in writing that it considers the project complete. As soon as practical thereafter, the Department will inspect the Work. Before requesting final inspection the Contractor shall complete the following:

1. Instruct Owner's personnel in operation, adjustment, and maintenance of products, equipment, and systems.

B. Completion of Physical Work occurs when the Work is complete and has undergone a successful final inspection. Liquidated Damages will cease upon the physical completion of the Work

1.05 The Department will notify the Contractor in writing that the Physical Work is Complete and in Conformity with the Contract and that the Project will be finally accepted when all remaining documentation is received from the Contractor. For a related provision, see Section, see Standard Specification, Section 107.9 Project Closeout

1.06 PROJECT RECORD DOCUMENTS

A. General: Do not use Project Record Documents for construction purposes. Protect Project Record Documents from deterioration and loss. Provide access to Project Record Documents for Engineer's reference during normal working hours.

B. Record Drawings: Maintain and submit one set of blue- or black-line white prints of Contract Drawings and Shop Drawings.

1. Mark Record Prints to show the actual installation where installation varies from that shown originally. Require individual or entity who obtained record data, whether individual or entity is Installer, subcontractor, or similar entity, to prepare the marked-up Record Prints.

a. Give particular attention to information on concealed elements that cannot be readily identified and recorded later.
b. Accurately record information in an understandable drawing technique.
c. Record data as soon as possible after obtaining it. Record and check the markup before enclosing concealed installations.

d. Mark Contract Drawings or Shop Drawings, whichever is most capable of showing actual physical conditions, completely and accurately. Where Shop Drawings are marked, show cross-reference on Contract Drawings.

2. Mark record sets with erasable, red-colored pencil. Use other colors to distinguish between changes for different categories of the Work at the same location.
3. Mark important additional information that was either shown schematically or omitted from original Drawings.
4. Note Construction Change Directive numbers, Change Order numbers, alternate numbers, and similar identification where applicable.
5. Identify and date each Record Drawing; include the designation "AS-BUILT DRAWINGS" in a prominent location. Organize into manageable sets; bind each set with durable paper cover sheets. Include identification on cover sheets.

C. Record Product Data: Submit one copy of each Product Data submittal. Mark one set to indicate the actual product installation where installation varies substantially from that indicated in Product Data.

1. Give particular attention to information on concealed products and installations that cannot be readily identified and recorded later.
2. Include significant changes in the product delivered to Project site and changes in manufacturer's written instructions for installation.
3. Note related Change Orders, Record Drawings, where applicable.

D. Miscellaneous Record Submittals: Assemble miscellaneous records required by other Specification Sections for miscellaneous record keeping and submittal in connection with actual performance of the Work. Bind or file miscellaneous records and identify each, ready for continued use and reference.

## 1.07 OPERATION AND MAINTENANCE MANUALS

A. Assemble a complete set of operation and maintenance data indicating the operation and maintenance of each system, subsystem, and piece of equipment not part of a system. Include operation and maintenance data required in individual Specification Sections and as follows:

1. Operation Data:

a. Emergency instructions and procedures.
b. System, subsystem, and equipment descriptions, including operating standards.
c. Operating procedures, including startup, shutdown, seasonal, and weekend operations.
d. Description of controls and sequence of operations.
e. Piping diagrams.

2. Maintenance Data:

a. Manufacturer's information, including list of spare parts.
b. Name, address, and telephone number of Installer or supplier.
c. Maintenance procedures.
d. Maintenance and service schedules for preventive and routine maintenance.
e. Maintenance record forms.
f. Sources of spare parts and maintenance materials.
g. Copies of maintenance service agreements.

h. Copies of warranties and bonds.

B. Organize operation and maintenance manuals into suitable sets of manageable size. Bind and index data in heavy-duty, 3-ring, vinyl-covered, loose-leaf binders, in thickness necessary to accommodate contents, with pocket inside the covers to receive folded oversized sheets. Identify each binder on front and spine with the printed title "OPERATION AND MAINTENANCE MANUAL," Project name, and subject matter of contents.

## 1.08 WARRANTIES

A. Submittal Time: Submit written warranties prior to requesting final inspection.

B. Organize warranty documents into an orderly sequence based on the table of contents of the Project Manual.

1. Bind warranties and bonds in heavy-duty, 3-ring, vinyl-covered, loose-leaf binders, thickness as necessary to accommodate contents, and sized to receive 8-1/2-by-11-inch (115-by-280-mm) paper.
2. Provide heavy paper dividers with plastic-covered tabs for each separate warranty. Mark tab to identify the product or installation. Provide a typed description of the product or installation, including the name of the product and the name, address, and telephone number of Installer.
3. Identify each binder on the front and spine with the typed or printed title "WARRANTIES," Project name, and name of Contractor.

C. Provide additional copies of each warranty to include in operation and maintenance manuals.

# PART 2 - PRODUCTS

## 2.01 MATERIALS

A. Cleaning Agents: Use cleaning materials and agents recommended by manufacturer or fabricator of the surface to be cleaned. Do not use cleaning agents that are potentially hazardous to health or property or that might damage finished surfaces.

# PART 3 - EXECUTION

## 3.01 DEMONSTRATION AND TRAINING

A. Instruction: Instruct Owner's personnel to adjust, operate, and maintain systems, subsystems, and equipment not part of a system.

1. Provide instructors experienced in operation and maintenance procedures.
2. Provide instruction at mutually agreed-on times. For equipment that requires seasonal operation, provide similar instruction at the start of each season.
3. Schedule training with Owner with at least seven days' advance notice.
4. Coordinate instructors, including providing notification of dates, times, length of instruction, and course content.

B. Program Structure: Develop an instruction program that includes individual training modules for each system and equipment not part of a system, as required by individual Specification Sections. For each training module, develop a learning objective and teaching outline. Include instruction for the following:

1. System design and operational philosophy.
2. Review of documentation.
3. Operations.
4. Adjustments.
5. Troubleshooting.
6. Maintenance.
7. Repair.

## 3.02 FINAL CLEANING

A. General: Provide final cleaning. Conduct cleaning and waste-removal operations to comply with local laws and ordinances and Federal and local environmental and antipollution regulations.

B. Cleaning: Employ experienced workers or professional cleaners for final cleaning. Clean each surface or unit to condition expected in an average commercial building cleaning and maintenance program. Comply with manufacturer's written instructions.

1. Complete the following cleaning operations before requesting inspection for certification of Substantial Completion for entire Project or for a portion of Project:

   a. Clean Project site, yard, and grounds, in areas disturbed by construction activities, including landscape development areas, of rubbish, waste material, litter, and other foreign substances.
   b. Sweep paved areas broom clean. Remove petrochemical spills, stains, and other foreign deposits.
   c. Rake grounds that are neither planted nor paved to a smooth, even-textured surface.
   d. Remove tools, construction equipment, machinery, and surplus material from Project site.
   e. Remove snow and ice to provide safe access to building.
   f. Clean exposed exterior and interior hard-surfaced finishes to a dirt-free condition, free of stains, films, and similar foreign substances. Avoid disturbing natural weathering of exterior surfaces. Restore reflective surfaces to their original condition.
   g. Remove debris and surface dust from limited access spaces, including roofs, plenums, shafts, trenches, equipment vaults, manholes, attics, and similar spaces.
   h. Sweep concrete floors broom clean in unoccupied spaces.
   i. Remove labels that are not permanent.
   j. Touch up and otherwise repair and restore marred, exposed finishes and surfaces. Replace finishes and surfaces that cannot be satisfactorily repaired or restored or that already show evidence of repair or restoration.

      1) Do not paint over "UL" and similar labels, including mechanical and electrical nameplates.

   k. Wipe surfaces of mechanical and electrical equipment, and similar equipment. Remove excess lubrication, paint and mortar droppings, and other foreign substances.
   l. Replace parts subject to unusual operating conditions.

m. Clean plumbing fixtures to a sanitary condition, free of stains, including stains resulting from water exposure.
n. Replace disposable air filters and clean permanent air filters. Clean exposed surfaces of diffusers, registers, and grills.
o. Clean ducts, blowers, and coils if units were operated without filters during construction.
p. Clean light fixtures, lamps, globes, and reflectors to function with full efficiency. Replace burned-out bulbs, and those noticeably dimmed by hours of use, and defective and noisy starters in fluorescent and mercury vapor fixtures to comply with requirements for new fixtures.
q. Leave Project clean and ready for occupancy.

C. Comply with safety standards for cleaning. Do not burn waste materials. Do not bury debris or excess materials on Owner's property. Do not discharge volatile, harmful, or dangerous materials into drainage systems. Remove waste materials from Project site and dispose of lawfully.

PART 4 - END OF SECTION 01 77 00

This Page Intentionally Left Blank

# SECTION 02 41 00
# DEMOLITION

## PART 1 GENERAL

### 1.01 RELATED DOCUMENTS

A. State of Maine Department of Transportation, "Standard Specifications," Revision December 2002, and any revisions thereto, apply to this Section. If the Contractor discovers any ambiguity, error, omission, conflict, or discrepancy, Section 10 1. 3.6 Priority of Conflicting Contract Documents shall control.

1. Drawings and general provisions of the Contract, and Division 1 Specification Sections, apply to this Section.
2. Any supplements to any of the above specifications and or standards issued prior to issuance of this Project Manual, apply to this section.

### 1.02 SECTION INCLUDES

A. Abandonment and removal of existing utilities and utility structures.

B. See Section 311000, Site Clearing, for site clearing and removal of above- and below-grade improvements not part of building demolition.

### 1.03 RELATED REQUIREMENTS

A. Section 31 10 00 - Site Clearing: Vegetation and existing debris removal.

B. Section 31 22 00 - Grading: Topsoil removal.

C. Section 31 23 23 - Fill: Fill material for filling holes, pits, and excavations generated as a result of removal operations.

### 1.04 PRICE AND PAYMENT PROCEDURES

A. Measurement and payment will be as follows:

B. Pay Item 202.20 Remove Bituminous Concrete Pavement: Pay Unit – Square Yard.

C. Pay Item 202.2001 Miscellaneous Demolition: Pay Unit – Lump Sum.

D. Basis of Payment – The accepted quantity of Remove Bituminous Concrete Pavement will be paid for at the contract unit price per Square Yard. Provisions of Section 202 of the "State of Maine, Department of Transportation, Standard Specifications, Revisions of December, 2002" or Specification Section 02 41 00 of the contract documents, whichever is stricter, shall apply. The protection of existing trees/shrubs will be considered incidental to pay item 202.20.

E. Basis of Payment – The accepted quantity of Miscellaneous Demolition will be paid for at the contract unit price per Lump Sum. This Pay Item refers to the items slated for demolition as shown on Sheet C004 Demolition Plan, of the Plan Set. Items which require removal to satisfactorily complete construction of the proposed project, and which are not noted on Plan Sheet C004 Demolition Plan, are considered incidental to this Pay Item. Provisions of Section 202 of the "State of Maine, Department of Transportation, Standard Specifications, Revisions of December, 2002" or Specification Section 02 41 00 of the contract documents, whichever is stricter, shall apply. The protection of existing trees/shrubs will be considered incidental to pay item 202.2001.

1.05 REFERENCE STANDARDS

A. 29 CFR 1926 - U.S. Occupational Safety and Health Standards; current edition.

B. NFPA 241 - Standard for Safeguarding Construction, Alteration, and Demolition Operations; 2013.

1.06 SUBMITTALS

A. Project Record Documents: Accurately record actual locations of capped and active utilities and subsurface construction.

B. After demolition is complete, submit Bills of Lading for disposal of items that were transported, disposed of at licensed facilities.

1.07 PROJECT CONDITIONS

A. Minimize production of dust due to demolition operations; do not use water if that will result in ice, flooding, sedimentation of public waterways or storm sewers, or other pollution.

PART 2 PRODUCTS

2.01 MATERIALS

A. Fill Material: As specified in Section 31 23 23 - Fill.

PART 3 EXECUTION

3.01 SCOPE

A. Remove paving and curbs as required to accomplish new work.

B. Outside area of new construction, remove foundation walls and footings to a minimum of 2 feet below finished grade.

C. Remove concrete slabs on grade within site boundaries.

D. Remove manholes and manhole covers, curb inlets and catch basins.

E. Remove fences and gates.

F. Remove creosote-treated wood utility poles.

G. Fill excavations, open pits, and holes in ground areas generated as result of removals, using specified fill; compact fill as required so that required rough grade elevations do not subside within one year after completion.

3.02 GENERAL PROCEDURES AND PROJECT CONDITIONS

A. Comply with applicable codes and regulations for demolition operations and safety of adjacent structures and the public.
   1. Obtain required permits.
   2. Comply with applicable requirements of NFPA 241.
   3. Provide, erect, and maintain temporary barriers and security devices.
   4. Use physical barriers to prevent access to areas that could be hazardous to workers or the public.
   5. Conduct operations to minimize effects on and interference with adjacent structures and occupants.
   6. Do not close or obstruct roadways or sidewalks without permit.
   7. Conduct operations to minimize obstruction of public and private entrances and exits; do not obstruct required exits at any time; protect persons using entrances and exits from removal operations.
   8. Obtain written permission from owners of adjacent properties when demolition equipment will traverse, infringe upon or limit access to their property.

B. Do not begin removal until receipt of notification to proceed from Owner.

C. Protect existing structures and other elements that are not to be removed.
   1. Provide bracing and shoring.
   2. Prevent movement or settlement of adjacent structures.
   3. Stop work immediately if adjacent structures appear to be in danger.

D. Hazardous Materials: Comply with 29 CFR 1926 and state and local regulations.

E. Perform demolition in a manner that maximizes salvage and recycling of materials.
   1. Dismantle existing construction and separate materials.
   2. Set aside reusable, recyclable, and salvageable materials; store and deliver to collection point or point of reuse.

F. Partial Removal of Paving and Curbs: Neatly saw cut at right angle to surface.

3.03 EXISTING UTILITIES

A. Coordinate work with utility companies; notify before starting work and comply with their requirements; obtain required permits.

B. Protect existing utilities to remain from damage.

C. Do not disrupt public utilities without permit from authority having jurisdiction.

D. Do not close, shut off, or disrupt existing life safety systems that are in use without at least 7 days prior written notification to Owner.

E. Do not close, shut off, or disrupt existing utility branches or take-offs that are in use without at least 3 days prior written notification to Owner.

F. Locate and mark utilities to remain; mark using highly visible tags or flags, with identification of utility type; protect from damage due to subsequent construction, using substantial barricades if necessary.

G. Remove exposed piping, valves, meters, equipment, supports, and foundations of disconnected and abandoned utilities.

3.04 DEBRIS AND WASTE REMOVAL

A. Remove debris, junk, and trash from site.

B. Remove from site all materials not to be reused on site; do not burn or bury.

C. Disposal of items shall conform with local, state, and federal regulations. Provide Bills of Lading to Owner. All disposal fees shall be included in Contractors bid.

D. Leave site in clean condition, ready for subsequent work.

E. Clean up spillage and wind-blown debris from public and private lands.

**This Page Intentionally Left Blank**

**END OF SECTION 02 41 00**

# SECTION 03 30 00

# CAST-IN-PLACE CONCRETE

## PART 1 - GENERAL

### 1.01 RELATED DOCUMENTS

A. State of Maine Department of Transportation, “Standard Specifications,” Revision December 2002, and any revisions thereto, apply to this Section. If the Contractor discovers any ambiguity, error, omission, conflict, or discrepancy, Section 10 1. 3.6 Priority of Conflicting Contract Documents shall control.

1. Drawings and general provisions of the Contract, and Division 1 Specification Sections, apply to this Section.

2. Any supplements to any of the above specifications and or standards issued prior to issuance of this Project Manual, apply to this section.

### 1.02 SUMMARY

A. This Section describes Work consisting of furnishing and placing Portland Cement Concrete for structures and incidental construction in accordance with these specifications and Reference materials identified herein, including but not limited to, the following:
   1. Exterior Slabs-on-grade

B. Work shall be in conformity with the lines, grades, and dimensions shown on the Plans, or established, or for placing concrete fill for foundations where called for on the Plans. Method C as described in Section 502.1, Reference 1.04G, Method C for testing shall be utilizes and shall conform to the requirements of this specification section and Section 106 of Reference 1.04G.

C. Related Sections include the following:

   1. Division 1 – Waste Management
   2. Division 31 Section "Earthwork" for drainage fills under slabs-on-grade.
   3. State of Maine Department of Transportation, “Standard Specifications”, (Listed Reference 1.04G).
      a. Section 106 – Quality.
      b. Section 502 – Structural Concrete
      c. Section 503 – Reinforcing Steel
      d. Section 515 – Structural Coating for Concrete Surfaces
      e. Section 518 – Concrete Repair
      f. Division 700 – Materials

### 1.03 DEFINITIONS

A. Cementitious Materials: Portland cement alone or in combination with one or more of blended hydraulic cement, fly ash and other pozzolans, ground granulated blast-furnace slag, and silica fume.

1.04 REFERENCES

A. American Concrete Institute (ACI):

1. 117 - Specifications for Tolerances for Concrete Construction and Materials
2. 301 - Specifications for Structural Concrete for Buildings
3. 305R - Hot Weather Concreting
4. 306R - Cold Weather Concreting
5. 309R - Guide for Consolidation of Concrete
6. 315 - Manual of Standard Practice for Detailing Reinforced Concrete
7. 347 - Recommended Practice for Concrete Formwork
8. 318 - Building Code Requirements for Reinforced Concrete

B. American Society for Testing and Materials (ASTM):

1. A 185 - Welded Steel Wire Fabric for Concrete Reinforcement
2. A 615 - Deformed and Plain Billet-Steel Bars for Concrete Reinforcement
3. C 33 - Concrete Aggregate
4. C 39 - Compressive Strength of Cylindrical Concrete Specimens
5. C 94 - Ready-Mixed Cement
6. C 150 - Portland Cement
7. C 260 - Air-Entraining Admixtures for Concrete
8. C 309 - Liquid Membrane-Forming Compounds for Curing Concrete
9. C 494 - Chemical Admixtures for Concrete
10. C 1018 - Federal Specifications (FS):
11. TT-C-800 - Curing Compound, Concrete, for New and Existing Surfaces

C. Concrete Reinforcing Steel Institute (CRSI):

1. CRSI - Manual of Standard Practice and Recommended Practice for Placing Reinforcing Bars (MSP-latest edition)

D. American Welding Society (AWS)

E. Scaffolding and Shoring Institute (SSI):

1. Scaffolding and Shoring Safety Rules

F. State of Maine Department of Transportation, “Standard Specifications,” Revision December 2002, and any revisions thereto.

1.05 SUBMITTALS

A. Product Data: Provide for each type of manufactured material and product indicated.

B. Design Mixes: (Reference 1.04G, Section 502.05 Composition and Proportioning)

1. Concrete shall be composed of a homogeneous mixture of Portland Cement or Portland Cement with Fly Ash, Silica Fume, or Ground Granulated Blast Furnace Slag, fine aggregate, coarse aggregate, water and admixtures proportioned according to these Specifications.
2. All materials shall be approved by the Engineer of Record and the MaineDOT prior to use.
3. The Contractor shall submit a mix design that meets these specifications. Mix designs shall be submitted at least 30 days prior to the first scheduled placement.
4. No concrete shall be deposited on the project until the concrete mix has been approved by the Engineer of Record and the Maine DOT.
5. For each concrete mix, include the following:

    a. Description of individual coarse aggregate stockpiles, original source, bulk specific gravity, absorption, gradation, and alkali silica reactivity test results. A combined coarse aggregate blended gradation shall be provided.
    b. Description of fine aggregate, original source, bulk specific gravity, absorption, colorimetric, gradation and Fineness Modulus (FM).
    c. Description and amount of cement and pozzolanic material.
    d. Target Water/Cement ratio.
    e. Target water content by volume.
    f. Target strength.
    g. Target Air Content, slump and concrete temperature.
    h. Target Concrete Unit Weight.
    i. Type of dosages of air entraining and chemical admixtures.

6. Concrete mix designs shall contain no more than 30% fly ash or 50% slag pozzolan cement replacement, by weight.
7. All mixes shall be designed in accordance with the criteria of this specification section.
8. The Design proportions with the fine aggregates designated as a percent of the total aggregate must be stated in terms of aggregate in a saturated, surface dry condition and the batch weights will be adjusted by the Contractor for the actual moisture of the aggregate at the time of use.
9. No change in the sources or character of the mix ingredients may be made without notice to Engineer of Record and the MaineDOT.

C. Steel Reinforcement Shop Drawings: (Reference 1.04G, Section 503 – Reinforcing Steel)

1. Details of fabrication, bending, and placement, prepared according to ACI 315, "Details and Detailing of Concrete Reinforcement."
2. Splicing shall be in accordance with Table in Reference 1.04G, Section 503.07 – Splicing.
3. Include material, grade, bar schedules, stirrup spacing, bent bar diagrams, arrangement, and supports of concrete reinforcement. Include special reinforcement required for openings through concrete structures.
4. Welded splices will not be allowed.

D. Welding Certificates: Copies of certificates for welding procedures and personnel.

E. Material Test Reports: From a qualified testing agency indicating and interpreting test results for compliance of the following with requirements indicated, based on comprehensive testing of current materials.

F. Material Certificates: Signed by manufacturers certifying that each of the following items complies with requirements:

1. Cementitious materials and aggregates.
2. Steel reinforcement and reinforcement accessories.
3. Admixtures.
4. Waterstops.
5. Curing materials.
6. Floor and slab treatments.
7. Bonding agents.
8. Adhesives.
9. Vapor retarders.
10. Epoxy joint filler.
11. Joint-filler strips.
12. Repair materials.

G. Minutes of Preinstallation conference.

1.06 QUALITY ASSURANCE

A. Installer Qualifications: An experienced installer who has completed concrete Work similar in material, design, and extent to that indicated for this Project and whose work has resulted in construction with a record of successful in-service performance.

B. Manufacturer Qualifications: A firm experienced in manufacturing ready-mixed concrete products complying with ASTM C 94 requirements for production facilities and equipment.

1. Manufacturer must be certified according to the Department of Transportation's "Certificate of Ready Mixed Concrete Production Facilities".
2. Contractor shall provide all concrete material testing and concrete cylinder samples for this project.
3. Owner will be performing additional quality assurance (QA) sample testing on their own as well. Contractor shall coordinate schedule of installations with the Owner to allow ample time for the owner to schedule collection of their samples to allow for Owner QA testing.
4. Contractor should be required to have a field technician on site to add chemicals as required to meet specifications.

C. Source Limitations: Obtain each type or class of Cementitious material of the same brand from the same manufacturer's plant, each aggregate from one source, and each admixture from the same manufacturer.

D. Welding: Qualify procedures and personnel according to AWS D1.4, "Structural Welding Code--Reinforcing Steel."

E. ACI Publications: Comply with the following, unless more stringent provisions are indicated:

1. ACI 301, "Specification for Structural Concrete."
2. ACI 117, "Specifications for Tolerances for Concrete Construction and Materials."

F. Preinstallation Conference: The contractor shall conduct conference at Project.

1. Flatwork (interior and exterior slabs) Preinstallation Conference: Conduct conference at Project site to review all details and requirements for the batching, mixing, transporting, placing, finishing, and curing all interior and exterior flatwork operations. Require representatives of each entity directly concerned with flatwork operation to attend, including the following:

   a. Contractor and Contractor's superintendent.
   b. Ready-mix concrete producer.
   c. Flatwork subcontractors.
   d. Maine DOT representative.

1.07 TESTING EQUIPMENT

A. Testing Equipment: Contractor shall provide testing equipment and materials as specified for use by MaineDOT resident or their representative, exclusively. Equipment shall be made available one week prior to placing concrete and shall be provided at no additional cost to Owner. Contractor shall replace any equipment that becomes unusable due to normal wear and tear or which is stolen, damaged from other than the Resident's neglect or mistreatment.

B. Equipment shall include the following items:

1. Pressure Air Meter meeting the requirements of AASHTO T152 (Type B). The air meter shall be functional and bear the calibration certificate issued by a recognized lab and current within a year. Accessories shall include:

   a. 9 inch Masonry trowel.
   b. On metal scoop 9" long x 5" wide
   c. One tamping rod conforming to AASHTO T119
   d. One rubber mallet as described in AASHTO T152
   e. One Strike off bar, flat straight bar of steel

2. Two pocket dial thermometers 20 degrees F to +200 degrees F with a 1" diameter dial, pointed stem, unbreakable polycarbonate crystal, stainless steel case, stem and bezel. Accuracy to 1% over entire range.
3. Contractor's rubber tired wheelbarrow.
4. Two D-handle square end shovels 9 ½" wide.
5. Two pair heavy duty, long cuffed rubber gloves
6. Miscellaneous equipment:

   a. 16 ounce plastic squeeze bottle
   b. 5 gallon bucket
   c. Scrub brush
   d. Paper towels
   e. Folding rule
   f. Rubber syringes

7. Small rod – one taming rod conforming to AASHTO T277
8. 10' straight edge as required.

1.08 DELIVERY, STORAGE, AND HANDLING

A. Deliver, store, and handle steel reinforcement to prevent bending and damage.

PART 2 - PRODUCTS

2.01 FORM-FACING MATERIALS (Reference 1.04G, Section 502.10)

A. Smooth-Formed Finished Concrete: Form-facing panels that will provide continuous, true, and smooth concrete surfaces. Furnish in largest practicable sizes to minimize number of joints.

1. Exterior-grade plywood panels, suitable for concrete forms, complying with DOC PS 1, and as follows:

a. High-density overlay, Class 1, or better.
b. Medium-density overlay, Class 1, or better, mill-release agent treated and edge sealed.
c. Structural 1, B-B, or better, mill oiled and edge sealed.
d. B-B (Concrete Form), Class 1, or better, mill oiled and edge sealed.

2. Manufactured forming system: metal or other panel system with prior review and approval.

B. Rough-Formed Finished Concrete: Plywood, lumber, metal, or another approved material. Provide lumber dressed on at least two edges and one side for tight fit.

C. Chamfer Strips: Wood, metal, PVC, or rubber strips, 3/4 by 3/4 inch, minimum.

D. Form-Release Agent: Commercially formulated form-release agent that will not bond with, stain, or adversely affect concrete surfaces and will not impair subsequent treatments of concrete surfaces.

1. Formulate form-release agent with rust inhibitor for steel form-facing materials.

E. Form Ties: Factory-fabricated, removable or snap-off metal or glass-fiber-reinforced plastic form ties designed to resist lateral pressure of fresh concrete on forms and to prevent spalling of concrete on removal.

1. Furnish units that will leave no corrodible metal closer than 1 inch (25 mm) to the plane of the exposed concrete surface.

2.02 STEEL REINFORCEMENT (Reference 1.04G, Section 503 – Reinforcing Steel)

A. Reinforcing Bars: ASTM A 615/A 615M, Grade 60, deformed.

1. Bars shall be clean and free from rust, scale or coatings that will reduce bond. Reinforcing steel shall be capable of bending 180 degrees and rebending to original shape without fracture.

B. Plain-Steel Wire: ASTM A 82, as drawn.

2.03 REINFORCEMENT ACCESSORIES

A. Bar Supports: Bolsters, chairs, spacers, and other devices for spacing, supporting, and fastening reinforcing bars and welded wire fabric in place. Manufacture bar supports according to CRSI's "Manual of Standard Practice" from steel wire, plastic, or fiber-reinforced concrete of greater compressive strength than concrete.

B. Joint Dowel Bars: Plain-steel bars, ASTM A 615/A 615M, Grade 60. Cut bars true to length with ends square and free of burrs.

2.04 CONCRETE MATERIALS

A. Portland Cement: ASTM C 150, Type II. (Reference 1.04G, Section 701.01)

B. Aggregate:

1. Fine Aggregate Size: Reference 1.04G, Section 703.01, AASHTO T21, AASHTO T11 and T127, and ASTM C40.
2. Coarse Aggregate Size: ¾"; Reference 1.04G, Section 703.02, ASTM D4791, AASHTO T85, and AASHTO T11 and T127.

C. Water: Potable and complying with ASTM C 94. Reference 1.04G, Section 701.02.

D. Fly Ash: Reference 1.04G, Section 701.10, shall conform to chemical and physical properties identified in AASHTO M295, Class F.

E. Silica Fume: Reference 1.04G, Section 701.12, silica fume material for us in Portland Cement shall be one of the products listed on the MaineDOT approved products list.

F. Ground Granulated Blast Furnace Slag: Reference 1.04G, Section 701.13, shall conform to chemical and physical properties for mineral admixtures identified in AASHTO M302, Grade 120.

2.05 ADMIXTURES

A. General: Admixtures certified by manufacturer to contain not more than 0.1 percent water-soluble chloride ions by mass of cementitious material and to be compatible with other admixtures and cementitious materials. Do not use admixtures containing calcium chloride.

B. Air-Entraining Admixture: Reference 1.04G, Section 701.03, AASHTO M154. Sika AER by the Sika Chemical Corp. or approved equal. Products must be on MaineDOT Approved Product List.

C. Water-Reducing Admixture: Reference 1.04G, Section 701.04, AASHTO M194, Type A. Eucon W12-75 by the Euclid Chemical Corp. "Pozzolith 200N by Master Builders "Plastocrete 161" by the Sika Chemical Corp. or approved equal. Products must be on MaineDOT Approved Product List.

D. Set Retarding Admixtures: Reference 1.04G, Section 701.05, AASHTO M194, Type B or D. Products must be on MaineDOT Approved Product List.

1. Non –corrosive accelerator shall have long-term test data proving its non-corrosive effect on reinforcing steel.

## 2.06 WATERSTOPS

A. Self-Expanding Strip Waterstops: Manufactured rectangular or trapezoidal strip, sodium bentonite or other hydrophylic material for adhesive bonding to concrete. Parastop II by Paramount Technical Products, Inc. or approved equal.

B. Polyvinylchloride: Reference 1.04G, Section 701.07, conforms with US Army Corp of Engineers Specification CRD C-572.

## 2.07 CURING MATERIALS

A. Absorptive Cover: AASHTO M 182, Class 2, burlap cloth made from jute or kenaf, weighing approximately 9 oz./sq. yd. when dry.

B. Moisture-Retaining Cover: ASTM C 171, polyethylene film or white burlap-polyethylene sheet.

C. Water: Potable.

D. Deicer Protection (Exterior Concrete): Saltgard as manufactured by Pro So Co, Inc., or approved equal. Products must be on MaineDOT Approved Product List.

## 2.08 LIQUID FLOOR TREATMENTS

A. VOC Content: Liquid floor treatments shall have a VOC content of 200 g/L or less when calculated according to 40 CFR 59, Subpart D (EPA Method 24).

B. Penetrating Liquid Floor Treatment: Clear, chemically reactive, waterborne solution of inorganic silicate or siliconate materials and proprietary components; odorless; that penetrates, hardens, and densifies concrete surfaces.

1. Products: Subject to compliance with requirements, available products that may be incorporated into the Work include, but are not limited to, the following:

a. ChemMasters; Chemisil Plus.
b. ChemTec Int'l; ChemTec One.
c. Conspec by Dayton Superior; Intraseal.
d. Curecrete Distribution Inc.; Ashford Formula.
e. Dayton Superior Corporation; Day-Chem Sure Hard (J-17).
f. Edoco by Dayton Superior; Titan Hard.
g. Euclid Chemical Company (The), an RPM company; Euco Diamond Hard.
h. Kaufman Products, Inc.; SureHard.
i. Meadows, W. R., Inc.; LIQUI-HARD.

## 2.09 RELATED MATERIALS

A. Perimeter Isolation Joint: 2 lb. density, cross linked polyethylene with removable strip-off equal to ISO-STRIP as manufactured for Century Floors, Topsham, Maine.

B. Epoxy Joint Filler: Two-component, semirigid, 100 percent solids, epoxy resin with a Shore A hardness of 80 per ASTM D 2240. Products must be on MaineDOT Approved Product List.

C. Bonding Agent: ASTM C 1059, Type II, non-redispersible, acrylic emulsion or styrene butadiene.

D. Epoxy-Bonding Adhesive: A two-component, solvent-free, moisture-insensitive structural epoxy adhesive in compliance with ASTM C 881, Type I and Type II, Grade 2, Class B and C, and shall be Sikadur 32, Hi-Mod by Sika Corp. or approved equal. Products must be on MaineDOT Approved Product List.

E. Doweling Adhesive: A two-component, vinylester blend resin equal to HI HY150 adhesive as manufactured by Hilti Fastening Systems, Tulsa, Oklahoma or approved equal. Products must be on MaineDOT Approved Product List.

F. Deicer Protection (Exterior Concrete): Saltgard as manufactured by Pro So Co, Inc., or approved equal.

G. Floor Control: Control joints shall be saw cut or 1/4" wide soft-cut.

H. Non-Shrink Grout: Premixed compound with non-metallic aggregate, cement, water-reducing and plasticizing agents capable of minimum compression strength of 2,400 lbs. Non-shrink grout shall be "Eucon N-S" (non-metallic) by the Euclid Chemical Co., "Masterflow 713" (non-metallic) by Master Builders, Five Star Grout by U.S. Grout Corp., or approved equal. Products must be on MaineDOT Approved Product List.

## 2.10 REPAIR MATERIALS

A. Slurry: Slurry shall consist of the same proportions of cement to fine aggregates used in the regular concrete mix (coarse aggregate only omitted) and shall be well mixed with such amount of water as will produce a thick consistency.

B. Dry Pack: Dry pack for cosmetic concrete repairs only shall consist of one part cement to 2-1/2 parts fine aggregate (screen out all materials retained on No. 4 sieve), mixed with a minimum amount of water, in small amounts. The consistency shall be such that when a ball of the mixture is compressed in the hand it will maintain its shape, showing finger marks, but without showing any surface water.

## 2.11 CONCRETE MIXTURES, GENERAL

A. The Contractor shall submit a mix design that meets these specifications. Mix designs shall be submitted at least 30 days prior to the first scheduled placement.

1. No concrete shall be deposited on the project until the concrete mix has been approved by the Engineer of Record and the MaineDOT.

B. Cementitious Materials: Limit percentage, by weight, of cementitious materials other than portland cement in concrete as follows:

1. Fly Ash: 25 percent.
2. Combined Fly Ash and Pozzolan: 25 percent.
3. Ground Granulated Blast-Furnace Slag: 50 percent.
4. Silica Fume: 10 percent.
5. Combined Fly Ash, Pozzolans, and Silica Fume: 35 percent with fly ash or pozzolans not exceeding 25 percent and silica fume not exceeding 10 percent.

C. Limit water-soluble, chloride-ion content in hardened concrete to 0.15 percent by weight of cement.

D. Admixtures: Use admixtures according to manufacturer's written instructions.

1. Use water-reducing, high-range water-reducing, or plasticizing admixture in concrete, as required, for placement and workability.
2. Use water-reducing and retarding admixture when required by high temperatures, low humidity, or other adverse placement conditions.
3. Use water-reducing admixture in pumped concrete and concrete with a water-cementitious materials ratio below 0.50.
4. Use corrosion-inhibiting admixture in concrete mixtures where indicated.

## 2.12 CONCRETE MIXES

A. Prepare design mixes for each type and strength of concrete determined by MaineDOT, Section 502.05.

1. Proportion normal-weight concrete according to ACI 211.1 and ACI 301.

B. Use a qualified independent testing agency for preparing and reporting proposed mix designs for the laboratory trial mix basis.

C. Exterior Slabs-on-Grade: Proportion normal-weight concrete mixture as follows:

1. Minimum Compressive Strength: 4000 psi at 28 days.
2. Minimum Cementitious Materials Content: 520 lb/cu. yd..
3. Slump Limit: 5 inches, plus or minus 1 inch.
4. Maximum Aggregate Size: 3/4”
5. Air Content: 5.5 percent, plus or minus 1.5 percent at point of delivery for 1-1/2-inch nominal maximum aggregate size.

D. All concrete shall contain the specified water-reducing admixture. All slabs placed below 50 degrees F shall contain the specified non-corrosive accelerator. All exterior concrete shall contain an approved air-entraining admixture.

E. All exterior concrete shall have an air content of five percent to seven percent.

F. All exterior concrete subjected to freezing and thawing shall have a maximum water-cement ratio of 0.53. All concrete subjected to deicers shall have a maximum water-cement ratio of 0.45.

G. All mix design, batching, placing, finishing, curing, joint sealing and patching of color conditioned concrete shall be in strict accordance with the manufacturers recommendations

H. Cementitious Materials: For concrete exposed to deicers, limit percentage, by weight, of cementitious materials other than portland cement according to ACI 301 requirements.

I. Admixtures: Use admixtures according to manufacturer's written instructions.

1. Use water-reducing admixture in concrete, as required, for placement and workability.
2. Use water-reducing and retarding admixture when required by high temperatures, low humidity, or other adverse placement conditions.

2.13 FABRICATING REINFORCEMENT

A. Fabricate steel reinforcement according to CRSI's "Manual of Standard Practice."

2.14 CONCRETE MIXING

A. Ready-Mixed Concrete: Measure, batch, mix, and deliver concrete according to ASTM C 94, and furnish batch ticket information.

PART 3 - EXECUTION

3.01 FORMWORK

A. Design, erect, shore, brace, and maintain formwork, according to ACI 301 and Reference 1.04G, Section 502.10, to support vertical, lateral, static, and dynamic loads, and construction loads that might be applied, until concrete structure can support such loads.

1. Construct formwork so concrete members and structures are of size, shape, alignment, elevation, and position indicated, within tolerance limits of ACI 117. Excessive deflection of forms after concrete is poured shall be sufficient cause for rejection of that portion of concrete and formwork. Excessive deflection will be considered to be that which will produce visible and noticeable waves in the finished concrete.
2. Construct forms so that walls will key into each other at ends unless poured monolithically.
3. Shoring designs shall be prepared under the direct supervision of a licensed Professional Engineer in State of Maine. Designs and calculations sealed by the Maine licensed professional engineer shall be submitted for review prior to on-site erection.

B. Limit concrete surface irregularities, designated by ACI 347R as abrupt or gradual, as follows:

1. Class A, 1/8 inch. (Exposed concrete)
2. Class B, 1/4 inch. (Non-exposed concrete)

C. Construct forms tight enough to prevent loss of concrete mortar.

D. All possible care shall be taken in the formwork to produce surfaces free from honeycomb or other defects.

E. Fabricate forms for easy removal without hammering or prying against concrete surfaces. Provide crush or wrecking plates where stripping may damage cast concrete surfaces. Provide top forms for inclined surfaces steeper than 1.5 horizontal to 1 vertical. Kerf wood inserts for forming keyways, reglets, recesses, and the like, for easy removal.

1. Do not use rust-stained steel form-facing material.

F. Set edge forms, bulkheads, and intermediate screed strips for slabs to achieve required elevations and slopes in finished concrete surfaces. Provide and secure units to support screed strips; use strike-off templates or compacting-type screeds.

G. Schedule the work and notify other trades in time so that provisions for their work in the formwork can be made without delaying progress of the project. Verify that all sleeves, pipes, etc., for electrical, plumbing, heating and ventilation, or other work are installed.

H. Chamfer exterior corners and edges of permanently exposed concrete, where indicated on drawings.

I. Form openings, chases, offsets, sinkages, keyways, reglets, blocking, screeds, and bulkheads required in the Work. Determine sizes and locations from trades providing such items.

J. Clean forms and adjacent surfaces to receive concrete. Remove chips, wood, sawdust, dirt, and other debris just before placing concrete.

K. Bolts, rods or other approved devices shall be used for internal ties. They shall be so arranged that when the forms are removed, no metal shall be within 1" of any surface.

L. Retighten forms and bracing before placing concrete, as required, to prevent mortar leaks and maintain proper alignment.

M. Coat contact surfaces of forms with form-release agent, according to manufacturer's written instructions, before placing reinforcement.

## 3.02 EMBEDDED ITEMS

A. Place and secure anchorage devices and other embedded items required for adjoining work that is attached to or supported by cast-in-place concrete. Use Setting Drawings, templates, diagrams, instructions, and directions furnished with items to be embedded.

1. Secure information about and provide for all openings, offsets, recessed nailing blocks, channel chases, anchors, ties, inserts, etc., in the formwork before concrete is poured.
2. Install anchor bolts, accurately located, to elevations required.

a. The setting of all anchor bolts and the grouting for all structural steel base plates shall be included as part of this contract. Bolts and base plates will be furnished

under Section 05500 - Metal Fabrications, and Section 13125 – Metal Building Systems.

b. All column base plates, equipment bases, and other locations noted in the structural drawings shall be grouted with the specified non-shrink grout. All exposed grout shall be the specified non-metallic type.

## 3.03 REMOVING AND REUSING FORMS

A. General: Formwork that does not support weight of concrete may be removed after cumulatively curing at not less than 50 deg F for 24 hours after placing concrete provided concrete is hard enough to not be damaged by form-removal operations and provided curing and protection operations are maintained.

B. Clean and repair surfaces of forms to be reused in the Work. Split, frayed, delaminated, or otherwise damaged form-facing material will not be acceptable for exposed surfaces. Apply new form-release agent.

C. When forms are reused, clean surfaces, remove fins and laitance, and tighten to close joints. Align and secure joints to avoid offsets. Do not use patched forms for exposed concrete surfaces unless approved by Engineer.

## 3.04 SHORES AND RESHORES

A. Comply with ACI 318, ACI 301, and recommendations in ACI 347R for design, installation, and removal of shoring and reshoring.

B. Plan sequence of removal of shores and reshore to avoid damage to concrete. Locate and provide adequate reshoring to support construction without excessive stress or deflection.4

C. Construction of false work supporting concrete structures shall be composed of members having ample structural section to resist all loads imposed upon them with deformations less than span length/360.

D. Shoring designs shall be prepared under the direct supervision of a licensed Professional Engineer in State of Maine. Designs and calculations sealed by the Maine licensed professional engineer shall be submitted for review prior to on-site erection.

## 3.05 STEEL REINFORCEMENT

A. General: Comply with CRSI's "Manual of Standard Practice" for placing reinforcement.

1. All steel bars and wire shall be of size, gauge and length indicated, accurately bent or formed to shapes detailed or scheduled by experienced shops using methods that will not injure the materials.
2. Steel reinforcing shall not be bent in a manner that will injure the material or the embedding concrete. Bars with kinks or bends not shown on the plans shall not be used. Heating of reinforcement for bending will not be permitted. Bars shall be bent once only (no rebending or straightening allowed) unless shown as such on the drawings.

3. All details of reinforcement not shown or indicated on the drawings or specifically called for in the specifications shall conform to ACI 315.
4. Lap all bars at splices, corners and intersections a minimum based on requirements in Reference 1.04G, Section 503.07, Minimum Lap Splice table
5. All intersecting concrete walls shall be tied with #4L bars 3'-0" long, bent 18" x 18" spaced 12" on center, outside face only unless otherwise indicated.
6. Splices of reinforcement shall not be made at points of maximum stress. Stagger splices of adjacent bars where possible. All splices and laps at corners and intersections shall be tied with wire at each end.
7. Where obstructions (pipes, conduit, ducts, etc.) prevent the intended placement of reinforcing, provide additional reinforcing as directed by the Resident Engineer or his Representative around the obstruction to match that reinforcing interrupted.
8. Provide additional stirrups, ties, trim bars, etc., as directed around all openings, sleeves, pipes, and conduits, which pass through structural elements.
9. Do not cut or puncture vapor retarder. Repair damage and reseal vapor retarder before placing concrete.

B. Clean reinforcement of loose rust and mill scale, earth, ice, and other foreign materials. Accurately position, support, and secure reinforcement against displacement. Locate and support reinforcement with bar supports to maintain minimum concrete cover. Do not tack weld crossing reinforcing bars.

1. Coverage of bars (including stirrups and column ties) shall, unless otherwise shown, be as follows:

| | |
|---|---|
| Footings: | 3" soil face, 2" top |
| Slabs (on grade): | 2" soil face, 1-1/2" top face |
| Slabs (elevated): | 1" top and bottom |
| Beam and Column (piers) | : 1-1/2" |
| Walls: | 2" clear to form at exterior |

2. Misplaced Reinforcing: If any reinforcing bars are found to be misplaced after concrete has been placed, the Engineer shall be notified immediately and no correction or cutting shall be made without his direction. Misplaced bars shall not be bent or kinked. Any redesign and/or reinforcing required because of misplaced bars shall be at the Contractor's expense.
3. All reinforcing shall be kept separate from soil, pipe, conduit ducts, etc., by approved non-metallic separators.
4. Reinforcement shall not have welded joints unless indicated on the drawings or unless prior approval has been given by the Engineer. Welding shall conform to the requirements of the American Welding Society Structural Welding Code for reinforcing steel D1.4. Field welding shall be performed by AWS certified welders.
5. Shop- or field-weld reinforcement according to AWS D1.4, where indicated.

C. Set wire ties with ends directed into concrete, not toward exposed concrete surfaces.

D. Install welded wire fabric in longest practicable lengths on bar supports spaced to minimize sagging. Lap edges and ends of adjoining sheets at least one mesh spacing. Offset laps of adjoining sheet widths to prevent continuous laps in either direction. Lace overlaps with wire.

E. Rebar at all intersection shall be wire tied.

3.06 JOINTS

A. General: Construct joints true to line with faces perpendicular to surface plane of concrete.

B. Construction Joints: Reference 1.04G, Section 502.11 (E): Install so strength and appearance of concrete are not impaired, at locations indicated or as approved by Engineer.

1. Place joints perpendicular to main reinforcement. Continue reinforcement across construction joints, unless otherwise indicated.
2. Space vertical joints in walls as indicated.

a. Wall control "V" joints shall have a depth of 1/8 times the thickness of the wall and be 1/2" wide at surface. "V" joints shall be placed as shown or as directed by the Engineer.

3. Use epoxy-bonding adhesive at locations where fresh concrete is placed against hardened or partially hardened concrete surfaces.

C. Contraction Joints in Slabs-on-Grade: Form weakened-plane contraction joints, sectioning concrete into areas as indicated. Construct contraction joints for a depth equal to at least one-fourth of concrete thickness, or 3/4" minimum for soft-cut as follows:

1. Sawed Joints: Form contraction joints with power saws equipped with shatterproof abrasive or diamond-rimmed blades. Cut 1/4" (maximum) wide joints into concrete when cutting action will not tear, abrade, or otherwise damage surface and before concrete develops random contraction cracks.

a. Floor slab control joints shall be placed as shown on the foundation plan. Unless otherwise noted, control joints shall be spaced at intervals not to exceed 12'-0" on center in both directions.

D. Isolation Joints in Slabs-on-Grade: After removing formwork, install joint-filler strips at slab junctions with vertical surfaces, such as column pedestals, foundation walls, and other locations, as indicated.

1. Terminate full-width joint-filler strips not less than 1/2 inch or more than 1 inch below finished concrete surface where joint sealants, specified in Division 7 Section "Joint Sealants," are indicated.
2. Install joint-filler strips in lengths as long as practicable. Where more than one length is required, lace or clip sections together.

E. Dowel Joints: Install dowel sleeves and dowels or dowel bar and support assemblies at joints where indicated.

1. All intersecting slab construction joints acting as control joints shall be doweled according to the following schedule unless otherwise indicated. Dowels shall be smooth, steel grade 60 with saw cut ends. Grease, wrap or cap one end.

Dowel Schedule

| | Dowel Dia. | Length | Spacing |
|---|---|---|---|
| 5" Slab | 5/8" | 14" | 12" |
| 6" Slab | 3/4" | 14" | 12" |
| 8" Slab | 1" | 14" | 12" |

3.07 WATERSTOPS

A. Self-Expanding Strip Waterstops: Install in construction joints and at other locations indicated, according to manufacturer's written instructions, bonding or mechanically fastening and firmly pressing into place. Install in longest lengths practicable.

1. Remove all protrusions and indentations 2" or over in all areas.
2. Lay waterstop flat against concrete surface and nail every 1" to 6" with case hardened washered nails.
3. Overlap all joints a minimum of 2".

3.08 MIXING CONCRETE

A. General: The concrete shall be mixed in the quantities required for immediate use, and any which has developed initial set or exceed the time limit of ASTM C 94 shall not be used. No re-tempering of mortar or concrete shall be allowed under any circumstances. Concrete shall be proportioned, mixed and placed only in the presence of the Engineer or his Authorized Representative. The Contractor shall give ample notice to the Engineer before mixing is commenced. Aggregate size will be adjusted to suit conditions of work. Pumping of concrete shall be permitted only after approval by the Engineer of the Pumping Contractor and the pumping equipment and method to be employed. The Engineer shall be notified of dates when pumping of concrete shall be performed to permit his on-the-job inspection of the operations.

B. Final proportions shall be in accordance with approved mix designs. Adjustments to approved proportions, for whatever reason, shall be approved by the Engineer.

C. Batching of concrete mix shall be by a MDOT approved plant meeting AASHTO M-157.

3.09 DELIVERY (Reference 1.04G, Section 502.0701 – Delivery)

A. Delivery and discharge of concrete from the mixer shall be completed within maximum 1 ½ hours from time when cement is added to the aggregate.

1. Exception: in hot weather when mix temperatures exceed 70 degrees F or under other conditions contributing to quick stiffening of the concrete, delivery and discharge from the mixer shall be completed within 1 hour from the time the cement is added to the aggregate. The Resident engineer may approve use of retarding admixtures, increasing the required 1 hour limitation for discharge back up to 1 ½ hours.

B. Concrete temperatures before placement shall not exceed 85 degrees F.

3.10 CONCRETE PLACEMENT (Reference 1.04G, Section 502.11)

A. Before placing concrete, verify that installation of formwork, reinforcement, and embedded items is complete and that required inspections have been performed.

B. Remove loose dirt, mud, standing water, and foreign matter from excavations or from cavities.

C. Thoroughly clean reinforcement and other embedded items free from loose rust and other matter. Assure reinforcing is held securely in place.

D. Thoroughly wet wood forms (except coated plywood), bottom and sides of trenches, base underslab, and adjacent concrete or masonry at least one hour in advance of placing concrete; securely close cleanout and inspection ports; repeat wetting as necessary to keep forms damp.

E. Equipment shall be maintained clean and of sufficient quantity and capacity to efficiently execute the work required.

F. Do not add water to concrete during delivery, at Project site, or during placement, unless approved by Engineer.

G. Before placing concrete, water may be added at Project site, subject to limitations of ACI 301.

H. Deposit concrete continuously or in layers of such thickness that no new concrete will be placed on concrete that has hardened enough to cause seams or planes of weakness. If a section cannot be placed continuously, provide construction joints as specified. Deposit concrete to avoid segregation.

I. Deposit concrete in forms in horizontal layers no deeper than 24 inches and in a manner to avoid inclined construction joints. Place each layer while preceding layer is still plastic, to avoid cold joints.

1. Consolidate placed concrete with mechanical vibrating equipment. Use equipment and procedures for consolidating concrete recommended by ACI 309R.

a. Concrete shall be vibrated into final position in forms with an internal type vibrating machine. The vibration shall have a frequency of not less than 8,000 vibrations per minute. The mechanical vibrating equipment shall be satisfactory to the Engineer.
b. The vibration shall be of sufficient intensity and duration to cause flow or settlement of the concrete and complete consolidation. Over vibration, especially of mixtures that are too wet, may cause segregation and will be avoided. A sufficient number of vibrators shall be provided to permit consolidation of each batch before the next batch is delivered and without delaying the delivery.
c. The vibrations shall be applied directly to the concrete, and vibration through the forms shall not be permitted. Vibration shall be applied at the point of deposit and in the area of freshly deposited concrete. The concrete shall be placed in layers of uniform thickness

d. Dropping of concrete a distance of more than 6 feet unless confined by closed chutes or pipes will not be permitted. The concrete shall be deposited at or as near as possible to its final position.

2. Do not use vibrators to transport concrete inside forms. Insert and withdraw vibrators vertically at uniformly spaced locations no farther than the visible effectiveness of the vibrator. Place vibrators to rapidly penetrate placed layer and at least 6 inches into preceding layer. Do not insert vibrators into lower layers of concrete that have begun to lose plasticity. At each insertion, limit duration of vibration to time necessary to consolidate concrete and complete embedment of reinforcement and other embedded items without causing mix constituents to segregate.
3. When conditions make puddling difficult, or where the reinforcement is congested, batches of mortar containing the same proportions of cement to sand used in the concrete shall be deposited in the forms. The operation of filling with the regularly specified mix shall be carried on at such a rate that the mix is at all times plastic and flows readily into the spaces between the bars.
4. In thin walls or inaccessible portions of the forms where rodding is impractical, the concrete shall be worked into place by tapping or hammering forms adjacent to the freshly deposited concrete.
5. The Contractor's attention is called to the importance of making the concrete dense, and he shall provide sufficient labor to the entire satisfaction of the Engineer to thoroughly consolidate the concrete, avoid air pockets and voids in exposed sections, and leave smooth, uniform surfaces after forms are removed.
6. Should any honeycombed concrete be disclosed upon removal of forms, the Contractor shall immediately cut out the said honeycombed portions back to solid concrete and shall fill the opening thus formed with a concrete of the same proportions as that specified for the section of work in which the fault occurs.
7. When placing fresh concrete upon hardened concrete, the latter shall be thoroughly roughened and cleaned of all loose material, scum or latency. The bonding compound shall be applied and the new concrete placed while the bonding compound is still tacky.
8. Joints in the concrete work shall be made only in places and the manner specified by the Engineer.
9. The Contractor's attention is called to the importance of properly and carefully placing concrete around reinforcement, as the reinforcing metal must not be exposed; and in cases where reinforcing metal becomes exposed on the surface, that portion of work must be removed and re-laid as the covering of same by plastering with cement mortar will not be allowed. All reinforcing rods or other reinforcing material shall be lightly tapped so that they will retain their original position.
10. Wet sticking of dowels and/or anchor bolts shall not be performed.
11. No concrete shall be retempered except as allowed in ASTM C 94 nor shall set concrete be used as aggregate.

J. Deposit and consolidate concrete for floors and slabs in a continuous operation, within limits of construction joints, until placement of a panel or section is complete.

1. Consolidate concrete during placement operations so concrete is thoroughly worked around reinforcement and other embedded items and into corners.
2. Maintain reinforcement in position on chairs during concrete placement.

a. Reinforcement, unless otherwise indicated, shall be placed one-half the thickness of the slab.

3. Screed slab surfaces with a straightedge and strike off to correct elevations.
4. Slope surfaces uniformly to drains where required.
5. Begin initial floating using bull floats or darbies to form a uniform and open-textured surface plane, free of humps or hollows, before excess moisture or bleedwater appears on the surface. Do not further disturb slab surfaces before starting finishing operations.
6. In addition to steel bar reinforcement, slabs shall be reinforced with fibrous concrete reinforcement which is to be added when the concrete is being batched in strict accordance with the manufacturer's recommendations.
7. Slabs shall be monolithically placed with control joints. Sawed control joints will be located as indicated on the drawings and/or as directed by the Engineer. Floors shall be cleaned of objects before saw cutting begins. A true, continuous saw cut is what is expected as a finish result.

K. Cold-Weather Placement: Comply with ACI 306.1 and Reference 1.04G, Section 502.08. Protect concrete work from physical damage or reduced strength that could be caused by frost, freezing actions, or low temperatures.

1. When air temperature has fallen to or is expected to fall below 40 deg F, discontinue placing concrete until atmospheric temperature is as high as 35 deg. F in the shade and rising.
2. At the direction of the Resident Engineer, the water shall be heated to a temperature not exceeding 180 deg. F.
3. If the Atmospheric temperature is below 25 deg. F, the aggregate shall also be heated when directed by the Resident.
4. When either the water or aggregate is heated to above 120 deg. F, they are to be combined first in the mixer before cement is added.
5. Materials containing frost or lumps of frozen material shall not be used.
6. The temperature of mixed concrete shall be as follows when placed in forms.

   a. Less than 12” forms: 55 – 70 deg. F
   b. Between 12” and 36”: 50 – 70 deg F
   c. Between 36” and 72”: 45 - 70deg F
   d. Greater than 72”: 40 deg. F

7. Do not use frozen materials or materials containing ice or snow. Do not place concrete on frozen subgrade or on subgrade containing frozen materials.
8. Do not use calcium chloride, salt, or other materials containing antifreeze agents or chemical accelerators, unless otherwise specified and approved in mix designs.
9. Contractor shall have on the job, ready to install, adequate equipment for heating the materials and the freshly placed concrete and for enclosing the work in accordance with the requirements specified herein.
10. Permission given to place concrete under the conditions mentioned above and as described in the Contractor’s QC Plan shall not relieve the Contractor of responsibility for obtaining satisfactory results. The Contractor shall be wholly responsible for the protection of concrete during cold weather and any concrete injured by frost action or overheating shall be removed/replaced at the Contractor’s expense.

L. Hot-Weather Placement: Place concrete according to recommendations in ACI 305R and as follows, when hot-weather conditions exist:

1. Cool ingredients before mixing to maintain concrete temperature below 90 deg F at time of placement. Chilled mixing water or chopped ice may be used to control temperature, provided water equivalent of ice is calculated to total amount of mixing water. Using liquid nitrogen to cool concrete is Contractor's option.
2. Cover steel reinforcement with water-soaked burlap so steel temperature will not exceed ambient air temperature immediately before embedding in concrete.
3. Fog-spray forms, steel reinforcement, and subgrade just before placing concrete. Keep subgrade moisture uniform without standing water, soft spots, or dry areas.

M. Protection:

1. Concrete just placed shall be protected from rain in an approved manner until the concrete has set, or if a slab, the curing compound has dried.
2. Concrete, when placed in the forms, shall have a temperature of not less than 50 degrees F nor more than 90 degrees F. Freshly placed concrete and the surrounding air shall be maintained at a temperature of 50 degrees F or greater for a period of seven days after placing. If high early strength concrete is used, the aforementioned time period may be reduced to three days. The methods of protection and curing shall be such as to prevent evaporation of moisture from the concrete and injury to the surface.
3. Should it later develop that any concrete work has become injured in any way by freezing or otherwise, the defective concrete shall be repaired or replaced as directed by the Engineer at no added expense to the Owner. Repair materials shall include all reinforcement grouts, dry pack, admixtures, epoxy and aggregates as may be necessary

N. Deicer Protection:

1. Apply deicer protection to all exterior slabs on grade, and related work 30 days after concrete placement in strict accordance with manufacturer=s written recommendations.

## 3.11 FINISHING FORMED SURFACES

A. Rough-Formed Finish: As-cast concrete texture imparted by form-facing material with tie holes and defective areas repaired and patched. Remove fins and other projections exceeding ACI 347R limits for class of surface specified.

B. Smooth-Formed Finish: As-cast concrete texture imparted by form-facing material, arranged in an orderly and symmetrical manner with a minimum of seams. Repair and patch tie holes and defective areas. Remove fins and other projections exceeding 1/8 inch in height.

1. Apply to concrete surfaces exposed to public view.

C. Rubbed Finish: Apply the following to smooth-formed finished concrete:

1. Smooth-Rubbed Finish: Not later than one day after form removal, moisten concrete surfaces and rub with carborundum brick or another abrasive until producing a uniform color and texture. Do not apply cement grout other than that created by the rubbing process.

D. Related Unformed Surfaces: At tops of walls, horizontal offsets, and similar unformed surfaces adjacent to formed surfaces, strike off smooth and finish with a texture matching adjacent

formed surfaces. Continue final surface treatment of formed surfaces uniformly across adjacent unformed surfaces, unless otherwise indicated.

## 3.12 FINISHING FLOORS AND SLABS

A. General: Comply with recommendations in ACI 302.1R for screeding, restraightening, and finishing operations for concrete surfaces. Do not wet concrete surfaces.

1. All interior concrete floor slabs shall be finished true and smooth by steel troweling or finishing machine. All exterior slabs shall be broom finished.
2. When a section of the concrete floor is completed, it shall be left entirely undisturbed until the concrete is thoroughly hardened.
3. Adequate provisions will be made to eliminate the possibility of accidental encroachment upon the newly concreted area.

B. Float Finish: Consolidate surface with power-driven floats or by hand floating if area is small or inaccessible to power driven floats. Restraighten, cut down high spots, and fill low spots. Repeat float passes and restraightening until surface is left with a uniform, smooth, granular texture.

1. Apply float finish to surfaces indicated, to surfaces to receive trowel finish.

C. Trowel Finish: After applying float finish, apply first trowel finish and consolidate concrete by hand or power-driven trowel. Continue troweling passes and restraighten until surface is free of trowel marks and uniform in texture and appearance. Grind smooth any surface defects that would telegraph through applied coatings or floor coverings.

1. Apply a trowel finish to surfaces indicated and to floor and slab surfaces exposed to view.
2. Finish surfaces to the following tolerances, measured within 24 hours according to ASTM E 1155/E 1155M for a randomly trafficked floor surface:

   a. Tolerances will be in accordance with ACI Publication #117 - Class AX. Depression in floor between high spots shall not be greater than 3/16" in 10'-0" ± 1/16", and the measurement will be taken by the straight edge method no later than the day after the concrete floor has been placed.
   b. Specified overall values of flatness, F(F) 20; and levelness, F(L) 17

D. Broom Finish: Apply a broom finish to exterior concrete platforms.

1. Immediately after float finishing, slightly roughen trafficked surface by brooming with fiber-bristle broom perpendicular to main traffic route. Coordinate required final finish with Engineer before application.

## 3.13 MISCELLANEOUS CONCRETE ITEMS

A. Filling In: Fill in holes and openings left in concrete structures, unless otherwise indicated, after work of other trades is in place. Mix, place, and cure concrete, as specified, to blend with in-place construction. Provide other miscellaneous concrete filling indicated or required to complete Work.

## 3.14 CONCRETE PROTECTION AND CURING

A. General: Protect freshly placed concrete from premature drying and excessive cold or hot temperatures. Comply with State of Maine Department of Transportation, "Standard Specifications," Revision 2002 section 502.15.

## 3.15 JOINT FILLING

A. Prepare, clean, and install joint filler according to manufacturer's written instructions.

1. Defer joint filling until the completion of the project. Do not fill joints until construction traffic has permanently ceased.

B. Remove dirt, debris, saw cuttings, curing compounds, and sealers from joints; leave contact faces of joint clean and dry.

C. Install semirigid epoxy joint filler full depth in saw-cut joints and at least 2 inches deep in formed joints. Overfill joint and trim joint filler flush with top of joint after hardening.

D. Install isolation joints around columns in accordance with the drawings and manufacturer's recommendations.

E. Install perimeter isolation joints in accordance with the drawings and manufacturer's recommendations.

## 3.16 CONCRETE SURFACE REPAIRS

A. Defective Concrete: Repair and patch defective areas when approved by Engineer. Remove and replace concrete that cannot be repaired and patched to Engineer approval.

B. Patching Mortar: Mix dry-pack patching mortar, consisting of one part portland cement to two and one-half parts fine aggregate passing a No. 16 sieve, using only enough water for handling and placing.

C. Repairing Formed Surfaces: Surface defects include color and texture irregularities, cracks, spalls, air bubbles, honeycombs, rock pockets, fins and other projections on the surface, and stains and other discolorations that cannot be removed by cleaning.

1. Immediately after form removal, cut out honeycombs, rock pockets, and voids more than 1/2 inch in any dimension in solid concrete but not less than 1 inch in depth. Make edges of cuts perpendicular to concrete surface. Clean, dampen with water, and brush-coat holes and voids with bonding agent. Fill and compact with patching mortar before bonding agent has dried. Fill form-tie voids with patching mortar or cone plugs secured in place with bonding agent.
2. Repair defects on surfaces exposed to view by blending white portland cement and standard portland cement so that, when dry, patching mortar will match surrounding color. Patch a test area at inconspicuous locations to verify mixture and color match before proceeding with patching. Compact mortar in place and strike off slightly higher than surrounding surface.

3. Repair defects on concealed formed surfaces that affect concrete's durability and structural performance as determined by Engineer.

D. Repairing Unformed Surfaces: Test unformed surfaces, such as floors and slabs, for finish and verify surface tolerances specified for each surface. Correct low and high areas. Test surfaces sloped to drain for trueness of slope and smoothness; use a sloped template.

1. Repair finished surfaces containing defects. Surface defects include spalls, popouts, honeycombs, rock pockets, crazing and cracks in excess of 0.01 inch wide or that penetrate to reinforcement or completely through unreinforced sections regardless of width, and other objectionable conditions.
2. After concrete has cured at least 14 days, correct high areas by grinding.
3. Correct localized low areas during or immediately after completing surface finishing operations by cutting out low areas and replacing with patching mortar. Finish repaired areas to blend into adjacent concrete.
4. Correct other low areas scheduled to remain exposed with a repair topping. Cut out low areas to ensure a minimum repair topping depth of 1/4 inch to match adjacent floor elevations. Prepare, mix, and apply repair topping and primer according to manufacturer's written instructions to produce a smooth, uniform, plane, and level surface.
5. Repair defective areas, except random cracks and single holes 1 inch or less in diameter, by cutting out and replacing with fresh concrete. Remove defective areas with clean, square cuts and expose steel reinforcement with at least 3/4 inch clearance all around. Dampen concrete surfaces in contact with patching concrete and apply bonding agent. Mix patching concrete of same materials and mix as original concrete except without coarse aggregate. Place, compact, and finish to blend with adjacent finished concrete. Cure in same manner as adjacent concrete.
6. Repair random cracks and single holes 1 inch or less in diameter with patching mortar. Groove top of cracks and cut out holes to sound concrete and clean off dust, dirt, and loose particles. Dampen cleaned concrete surfaces and apply bonding agent. Place patching mortar before bonding agent has dried. Compact patching mortar and finish to match adjacent concrete. Keep patched area continuously moist for at least 72 hours.

E. Repair materials and installation not specified above may be used, subject to Engineer's approval.

3.17 FIELD QUALITY CONTROL (Reference 1.04G, Section 502.0501 – Quality Control)

A. Testing Agency: Contractor will engage a qualified independent testing and inspecting agency to sample materials, perform tests, and submit test reports during concrete placement. Sampling and testing for quality control may include those specified in this Article.

1. The contractor shall be responsible to notify MDOT a minimum of 48 hours prior to all required quality control testing.
2. The MaineDOT will be performing progress sampling of all the site concrete with their own personnel and lab facilities.

B. Testing Services: Testing of composite samples of fresh concrete obtained according to ASTM C 172 shall be performed according to the following requirements:

1. Contractor's Independent Testing Agency:

   a. No work shall proceed until Independent Testing Agency through the Contractor, submits a QC plan and that plan has been approved by the Owner. QC plan shall address the following:

      1) Mix designs
      2) Aggregate Production
      3) Quality Components
      4) Stockpile Management
      5) Proportioning, including added water
      6) Mix transportation, including time from batching to completion of delivery
      7) Initial and as delivered mix properties, including temperature, air content, consistency and water/cement ratios.
      8) Process quality control testing
      9) Placement and consolidation
      10) Permeability
      11) Compressive strength
      12) Finishing and curing
      13) Hot and cold weather concrete procedures, including curing and form removal

   b. All concrete sampling shall be taken at point of discharge of the chute or pump line.
   c. Cylinder Test Samples: set of four (4) test cylinders shall be made for each 100 cubic yards, or fraction thereof, of each class of concrete placed each day. Cylinders shall be made and cured by the Testing Agency in accordance with ASTM C 31. The properly marked cylinders shall be picked up by the approved testing agency and tested in accordance with ASTM C 39. The test results will be sent directly to the Engineer with location and date marked. In addition to the date cast, the date and time the cylinders are picked up for transportation to the lab shall be shown.
   d. Air content shall be checked at least twice each day on air-entrained concrete in accordance with ASTM C 173 or ASTM C 231.
   e. Description of the manner in which cylinders were stored for the first 24 hours and the succeeding 27 days shall also be indicated.
   f. Contractor shall provide a Certificate of Compliance and maintain on-site records for each truckload of concrete at the time of placement, which shall include the following:

      1) Contract name and Number
      2) Manufacturing Plan (Batching Facility)
      3) Name of Contractor (Prime)
      4) Date
      5) Time batched/discharged
      6) Truck No.
      7) Quantity (Quality batched this load)
      8) Designation of concrete type or producer's design mix number
      9) Cement brand/type and shipment certification number
      10) Temperature of concrete at discharge
      11) Target weights (cubic yard) and actual batch weights of:

a) Cement
b) Pozzolanic additives, including fly ash, slag cement and microsilica
c) Coarse aggregate
d) Fine aggregate
e) Water (including free moisture in aggregates and water added at the project)
f) Admixtures brand and quantity (fl. oz./cy)

12) Air entrainment admixtures
13) On-site slump tests
14) Water reducing admixtures
15) Other admixtures
16) Placement location

g. Quality Control Testing is by Contractor through independent Quality Control firm.

h. MaineDOT will be performing their own quality assurance testing at random intervals on the batch deliveries. Any discrepancies discovered through either the Independent testing or Owner QC process shall be addressed per Reference 1.04G, Section 502.0505 – Resolution of Disputed Acceptance Test Results.

i. Measure floor and slab flatness and levelness according to ASTM E 1155 (ASTM E 1155M) within 24 hours of finishing.

C. When strength of field-cured cylinders is less than 80 percent of companion laboratory-cured cylinders, Contractor shall evaluate operations and provide corrective procedures for protecting and curing in-place concrete.

D. Strength of each concrete mix will be satisfactory if every average of any three consecutive compressive-strength tests equals or exceeds specified compressive strength and no compressive-strength test value falls below specified compressive strength by more than 500 psi.

E. Test results shall be reported in writing to Engineer, concrete manufacturer, and Contractor within 48 hours of testing. Reports of compressive-strength tests shall contain Project identification name and number, date of concrete placement, name of concrete testing and inspecting agency, location of concrete batch in Work, design compressive strength at 28 days, concrete mix proportions and materials, compressive breaking strength, and type of break for both 7-and 28-day tests.

F. Nondestructive Testing: Impact hammer, sonoscope, or other nondestructive device may be permitted by Engineer but will not be used as sole basis for approval or rejection of concrete.

G. Additional Tests: Contractor's Independent Quality Control and testing subcontractor shall make additional tests of concrete when test results indicate that slump, air entrainment, compressive strengths, or other requirements have not been met, as directed by Resident Engineer. Contractor's Independent Quality Control and testing subcontractor may conduct tests to determine adequacy of concrete by cored cylinders complying with ASTM C 42 or by other methods as directed by Resident Engineer.

PART 4 - PAYMENT PROCEDURES

4.01 APPLICATIONS FOR PAYMENT

A. Each Application for Payment following the initial Application for Payment shall be consistent with previous applications and payments. Payment shall be based on percentage of work completed and cost of materials and equipment.

1. Entries shall match data on the schedule of values and Contractor's construction schedule. Use updated schedules if revisions were made.
2. Include amounts for work completed following previous Application for Payment, whether or not payment has been received. Include only amounts for work completed at time of Application for Payment.
3. Include amounts of Change Orders and Construction Change Directives issued before last day of construction period covered by application.

B. Stored Materials: Include in Application for Payment amounts applied for materials or equipment purchased or fabricated and stored, but not yet installed. Differentiate between items stored on-site and items stored off-site.

1. Provide certificate of insurance, evidence of transfer of title to Owner, and consent of surety to payment, for stored materials.
2. Provide supporting documentation that verifies amount requested, such as paid invoices. Match amount requested with amounts indicated on documentation; do not include overhead and profit on stored materials.
3. Provide summary documentation for stored materials indicating the following:

a. Value of materials previously stored and remaining stored as of date of previous Applications for Payment.
b. Value of previously stored materials put in place after date of previous Application for Payment and on or before date of current Application for Payment.
c. Value of materials stored since date of previous Application for Payment and remaining stored as of date of current Application for Payment.

**END OF SECTION 03 30 00**

# SECTION 10 14 01

# TRAFFIC SIGNS

## PART 1 GENERAL

### 1.01 RELATED DOCUMENTS

A. State of Maine Department of Transportation, “Standard Specifications,” Revision December 2002, and any revisions thereto, apply to this Section. If the Contractor discovers any ambiguity, error, omission, conflict, or discrepancy, Section 10 1. 3.6 Priority of Conflicting Contract Documents shall control.

1. Drawings and general provisions of the Contract, and Division 1 Specification Sections, apply to this Section.
2. Any supplements to any of the above specifications and or standards issued prior to issuance of this Project Manual, apply to this section.

### 1.02 SECTION INCLUDES

A. Installation of traffic control signs.

### 1.03 PRICE AND PAYMENT PROCEDURES

A. Measurement and payment will be as follows:

B. Pay Item 645.292 Regulatory, Warning, Confirmation, and Route Marker Assembly Signs Type II: Pay Unit - Square Foot.

C. Basis of Payment – The accepted quantity of Traffic Signs will be paid for at the contract unit price per Square Foot. Provisions of Section 645 of the “State of Maine, Department of Transportation, Standard Specifications, Revisions of December, 2002” or Specification Section 10 14 01 of the contract documents, whichever is stricter, shall apply.

### 1.04 REFERENCES

A. US Department of Transportation, Federal Highway Administration's "Manual on Uniform Traffic Control Devices" (MUTCD), latest edition.

B. Construction Drawings

## PART 2 PRODUCTS

### 2.01 SIGNS - MUTCD classification is shown in parentheses

A. "STOP" Signs: 30-inches x 30-inches, Octagon, white legend and border on red background (R1-1)

B. "ACCESSIBLE PARKING SYMBOL" Signs: 12-inches x 18-inches, green legend and border, white symbol on blue box, and white background (R7-8)

C. Miscellaneous Signs: See Construction Drawings

### 2.02 POSTS

A. "U" channel galvanized steel posts with galvanized sign-mounting hardware for each sign.

Posts shall have a weight of 2-pounds per lineal foot.

B. Bollards used for sign post protection shall be 4” diameter schedule 40 galvanized steel painted OSHA yellow, filled with concrete, (refer to construction documents for applicability).

2.03 ACCESSORIES

PART 3 EXECUTION

3.01 PREPARATION

A. Contractor to field verify all underground utilities prior to sign installation. Primary utilities of concern, due to shallow depths, are lawn sprinkler systems, electric, telephone, fiber optic, cable and natural gas.

B. Cost related to repair of damaged surface and subsurface facilities shall be paid for by the Contractor at no additional expense to the Owner.

3.02 INSTALLATION

A. Set posts at location shown on plans.

B. Signs shall be parallel with adjacent curb or perpendicular to primary viewing sightline as appropriate.

C. Set posts vertical and plumb with bottom of sign at 7'-0" above finish grade in pedestrian and parking areas. Bottom of signs shall be 5’-0" above finish grade in other areas, unless otherwise indicated on the Construction Drawings. Mount signs in accordance with manufacturer's instructions. Minimum post embedment shall be 4’-6”.

**END OF SECTION 10 14 01**

# SECTION 26 01 00

# BASIC ELECTRICAL REQUIREMENTS

## PART 1 - GENERAL

### 1.01 RELATED DOCUMENTS

A. State of Maine Department of Transportation, "Standard Specifications," Revision December 2002, and any revisions thereto, apply to this Section. If the Contractor discovers any ambiguity, error, omission, conflict, or discrepancy, Section 10 1. 3.6 Priority of Conflicting Contract Documents shall control.

1. Drawings and general provisions of the Contract, and Division 1 Specification Sections, apply to this Section.
2. Any supplements to any of the above specifications and or standards issued prior to issuance of this Project Manual, apply to this section.

### 1.02 SUMMARY

A. Section Includes:

1. General requirements applicable to all Division 26 sections.
2. Allowances for Utility Construction Charges

### 1.03 ALLOWANCES FOR UTILITY CONSTRUCTION CHARGES

A. Provide a $5,000 allowance as specified in Division 01 for electric utility company utility construction charges associated with relocating the existing utility pole.

### 1.04 GENERAL REQUIREMENTS APPLICABLE TO ALL DIVISION 26 SECTIONS

A. Regulatory Requirements:

1. Conform to the requirements of all laws and regulations applicable to the work.
2. Conform to the requirements of Federal State and Municipal Building Codes.
3. Cooperate with all authorities having jurisdiction.
4. Compliance with laws and regulations governing the work on this project does not relieve the Contractor from compliance with more restrictive requirements contained in these specifications.
5. If the Contract Documents are found to be at variance with any law or regulation, the Contractor shall notify the Architect/Engineer promptly in writing. The Contractor shall assume full responsibility for any work contrary to law or regulation, and shall bear all costs for the corrections thereof.
6. Minimum Requirements: The more stringent of the 2011 National Electrical Code (NEC) or the edition enforced by the local Authority Having Jurisdiction, Underwriters Laboratories, Inc. (UL), the National Fire Codes, and National Fire Protection Association (NFPA) are a minimum requirement for work under this section. Design drawings and other specification sections shall govern in those instances where requirements are greater than those required by code.

B. REFERENCES

1. The publications listed below form a part of this specification to the extent referenced. The publications are referenced in the text by the basic designation only.

   a. National Fire Protection Association (NFPA).
   b. National Electrical Code (NEC)
   c. National Electrical Safety Code (NESC)
   d. Underwriters Laboratories, Inc. (UL)
   e. American National Standards Institute (ANSI)
   f. National Electrical Manufacturers Association (NEMA)
   g. Institute of Electrical and Electronic Engineers (IEEE)
   h. American Society for Testing Materials Specifications (ASTM)
   i. National Bureau of Standards Handbook (NBS)
   j. Occupational Safety and Health Administration (OSHA)
   k. Americans with Disabilities Act (ADA)
   l. Insulated Power Cable Engineers Association Specifications (IPCEA)

C. Permits, Fees, and Inspections:

1. Secure and pay for all permits, fees, licenses, inspections, etc., required for the work under Division 26.
2. Schedule and pay for all legally required inspections and cooperate with inspecting officers.
3. Provide Certificates of Inspection and Approval from all regulatory authorities having jurisdiction over the work in Division 26.

D. The Contractor shall study all drawings and specifications and acquaint itself with the existing conditions and the requirements of the plans and specifications. No claim will be recognized for extra compensation due to the failure of the Contractor to familiarize itself with the conditions and extent of the proposed work.

## 1.05 COORDINATION

A. Coordinate the work of Division 26 with other Divisions, the Owner, and utility companies.

B. Coordinate arrangement, mounting, and support of electrical equipment:

1. To allow right of way for piping and conduit installed at required slope.
2. So connecting raceways, cables, wireways, cable trays, and busways will be clear of obstructions and of the working and access space of future construction and equipment.

C. Coordinate installation of required supporting devices and set sleeves in cast-in-place concrete, masonry walls, and other structural components as they are constructed.

## PART 2 - PRODUCTS – Not Used

## PART 3 - EXECUTION – Not Used

**END OF SECTION 26 01 00**

# SECTION 26 05 43

# UNDERGROUND DUCTS AND RACEWAYS FOR ELECTRICAL SYSTEMS

## PART 1 - GENERAL

### 1.01 RELATED DOCUMENTS

A. State of Maine Department of Transportation, "Standard Specifications," Revision December 2002, and any revisions thereto, apply to this Section. If the Contractor discovers any ambiguity, error, omission, conflict, or discrepancy, Section 10 1. 3.6 Priority of Conflicting Contract Documents shall control.

1. Drawings and general provisions of the Contract, and Division 1 Specification Sections, apply to this Section.
2. Any supplements to any of the above specifications and or standards issued prior to issuance of this Project Manual, apply to this section.

### 1.02 SUMMARY

A. This Section includes the following:

1. Conduit, ducts, and duct accessories for direct-buried and concrete-encased duct banks, and in single duct runs.
2. Handholes and boxes.
3. Manholes.

### 1.03 DEFINITION

A. RNC: Rigid nonmetallic conduit.

### 1.04 ACTION SUBMITTALS

A. Product Data: For the following:

1. Duct-bank materials, including separators and miscellaneous components.
2. Ducts and conduits and their accessories, including elbows, end bells, bends, fittings, and solvent cement.
3. Accessories for manholes, handholes, boxes.
4. Warning tape.

B. Shop Drawings for Precast or Factory-Fabricated Underground Utility Structures: Include plans, elevations, sections, details, attachments to other work, and accessories, including the following:

1. Duct entry provisions, including locations and duct sizes.
2. Reinforcement details.
3. Frame and cover design and manhole frame support rings.
4. Ladder details.

5. Grounding details.
6. Dimensioned locations of cable rack inserts, pulling-in and lifting irons, and sumps.
7. Joint details.

C. Shop Drawings for Factory-Fabricated Handholes and Boxes Other Than Precast Concrete: Include dimensioned plans, sections, and elevations, and fabrication and installation details, including the following:

1. Duct entry provisions, including locations and duct sizes.
2. Cover design.
3. Grounding details.

## 1.05 INFORMATIONAL SUBMITTALS

A. Duct-Bank Coordination Drawings: Show duct profiles and coordination with other utilities and underground structures.

1. Include plans and sections, drawn to scale, and show bends and locations of expansion fittings.
2. Drawings shall be signed and sealed by a qualified professional engineer.

B. Product Certificates: For concrete and steel used in precast concrete manholes and handholes, as required by ASTM C 858.

C. Qualification Data: For professional engineer and testing agency.

D. Source quality-control test reports.

E. Field quality-control test reports.

## 1.06 QUALITY ASSURANCE

A. Testing Agency Qualifications: Qualified according to ASTM E 329 for testing indicated.

B. Comply with ANSI C2.

C. Comply with NFPA 70.

## 1.07 DELIVERY, STORAGE, AND HANDLING

A. Deliver ducts to Project site with ends capped. Store nonmetallic ducts with supports to prevent bending, warping, and deforming.

B. Store precast concrete and other factory-fabricated underground utility structures at Project site as recommended by manufacturer to prevent physical damage. Arrange so identification markings are visible.

C. Lift and support precast concrete units only at designated lifting or supporting points.

## 1.08 PROJECT CONDITIONS

A. Interruption of Existing Electrical Service: Do not interrupt electrical service to facilities occupied by Owner or others unless permitted under the following conditions and then only after arranging to provide temporary electrical service according to requirements indicated:

1. Notify Owner no fewer than five days in advance of proposed interruption of electrical service.
2. Do not proceed with interruption of electrical service without Owner's written permission.

## 1.09 COORDINATION

A. Coordinate layout and installation of ducts, manholes, handholes, and boxes with final arrangement of other utilities, site grading, and surface features as determined in the field.

B. Coordinate elevations of ducts and duct-bank entrances into manholes, handholes, and boxes with final locations and profiles of ducts and duct banks as determined by coordination with other utilities, underground obstructions, and surface features. Revise locations and elevations from those indicated as required to suit field conditions and to ensure that duct runs drain to manholes and handholes, and as approved by Architect.

# PART 2 - PRODUCTS

## 2.01 CONDUIT

A. Rigid Steel Conduit: Galvanized. Comply with ANSI C80.1.

B. RNC: NEMA TC 2, Type EPC-40-PVC and Type EPC-80-PVC, UL 651, with matching fittings by same manufacturer as the conduit, complying with NEMA TC 3 and UL 514B.

## 2.02 PRECAST CONCRETE HANDHOLES AND BOXES

A. Available Manufacturers: Subject to compliance with requirements, manufacturers offering products that may be incorporated into the Work include, but are not limited to, the following:

1. Carder Concrete Products.
2. Christy Concrete Products.
3. Elmhurst-Chicago Stone Co.
4. Oldcastle Precast Group.
5. Riverton Concrete Products; a division of Cretex Companies, Inc.
6. Utility Concrete Products, LLC.
7. Utility Vault Co.
8. Wausau Tile, Inc.

B. Comply with ASTM C 858 for design and manufacturing processes.

C. Description: Factory-fabricated, reinforced-concrete, monolithically poured walls and bottom unless open-bottom enclosures are indicated. Frame and cover shall form top of enclosure and shall have load rating consistent with that of handhole or box.

1. Frame and Cover: Weatherproof cast-iron frame, with cast-iron cover with recessed cover hook eyes and tamper-resistant, captive, cover-securing bolts.
2. Cover Finish: Nonskid finish shall have a minimum coefficient of friction of 0.50.
3. Cover Legend: Molded lettering, As indicated for each service.
4. Configuration: Units shall be designed for flush burial and have open bottom, unless otherwise indicated.
5. Extensions: Designed to mate with bottom of enclosure. Same material as enclosure.

    a. Extension shall provide increased depth of 12 inches (300 mm).

6. Handholes 12 inches wide by 24 inches long (300 mm wide by 600 mm long) and larger shall have inserts for cable racks and pulling-in irons installed before concrete is poured.

## 2.03 HANDHOLES AND BOXES OTHER THAN PRECAST CONCRETE

A. Description: Comply with SCTE 77.

1. Color: Gray.
2. Configuration: Units shall be designed for flush burial and have open bottom, unless otherwise indicated.
3. Cover: Weatherproof, secured by tamper-resistant locking devices and having structural load rating consistent with enclosure.
4. Cover Finish: Nonskid finish shall have a minimum coefficient of friction of 0.50.
5. Cover Legend: Molded lettering, As indicated for each service.
6. Handholes 12 inches wide by 24 inches long (300 mm wide by 600 mm long) and larger shall have factory-installed inserts for cable racks and pulling-in irons.

B. Polymer Concrete Handholes and Boxes with Polymer Concrete Cover: Molded of sand and aggregate, bound together with a polymer resin, and reinforced with steel or fiberglass or a combination of the two.

1. Available Manufacturers: Subject to compliance with requirements, manufacturers offering products that may be incorporated into the Work include, but are not limited to, the following:

    a. Armorcast Products Company.
    b. Carson Industries LLC.
    c. CDR Systems Corporation.
    d. NewBasis.

## 2.04 PRECAST MANHOLES

A. Available Manufacturers: Subject to compliance with requirements, manufacturers offering products that may be incorporated into the Work include, but are not limited to, the following:

1. Carder Concrete Products.
2. Christy Concrete Products.
3. Elmhurst-Chicago Stone Co.
4. Oldcastle Precast Group.
5. Riverton Concrete Products; a division of Cretex Companies, Inc.
6. Utility Concrete Products, LLC.
7. Utility Vault Co.
8. Wausau Tile, Inc.

B. Comply with ASTM C 858, with structural design loading as specified in Part 3 "Underground Enclosure Application" Article and with interlocking mating sections, complete with accessories, hardware, and features.

1. Windows: Precast openings in walls, arranged to match dimensions and elevations of approaching ducts and duct banks plus an additional 12 inches (300 mm) vertically and horizontally to accommodate alignment variations.

   a. Windows shall be located no less than 6 inches (150 mm) from interior surfaces of walls, floors, or roofs of manholes, but close enough to corners to facilitate racking of cables on walls.
   b. Window opening shall have cast-in-place, welded wire fabric reinforcement for field cutting and bending to tie in to concrete envelopes of duct banks.
   c. Window openings shall be framed with at least two additional No. 4 steel reinforcing bars in concrete around each opening.

C. Concrete Knockout Panels: 1-1/2 to 2 inches (38 to 50 mm) thick, for future conduit entrance and sleeve for ground rod.

D. Joint Sealant: Asphaltic-butyl material with adhesion, cohesion, flexibility, and durability properties necessary to withstand maximum hydrostatic pressures at the installation location with the ground-water level at grade.

## 2.05 UTILITY STRUCTURE ACCESSORIES

A. Available Manufacturers: Subject to compliance with requirements, manufacturers offering products that may be incorporated into the Work include, but are not limited to, the following:

1. Bilco Company (The).
2. Campbell Foundry Company.
3. McKinley Iron Works, Inc.
4. NewBasis.
5. Oldcastle Precast Group.
6. Riverton Concrete Products; a division of Cretex Companies, Inc..
7. Strongwell Corporation; Lenoir City Division.
8. Underground Devices, Inc.
9. Utility Concrete Products, LLC.

B. Manhole Frames, Covers, and Chimney Components: Comply with structural design loading specified for manhole.

1. Frame and Cover: Weatherproof, gray cast iron complying with ASTM A 48/A 48M, Class 30B with milled cover-to-frame bearing surfaces; diameter, 26 inches (660 mm).

   a. Cover Finish: Nonskid finish shall have a minimum coefficient of friction of 0.50.
   b. Special Covers: Recess in face of cover designed to accept finish material in paved areas.

2. Cover Legend: Cast in. Selected to suit system.

a. Legend: "ELECTRIC-LV" for duct systems with power wires and cables for systems operating at 600 V and less.
b. Legend: "ELECTRIC-HV" for duct systems with medium-voltage cables.
c. Legend: "SIGNAL" for communications, data, and telephone duct systems.

3. Manhole Chimney Components: Precast concrete rings with dimensions matched to those of roof opening.

a. Mortar for Chimney Ring and Frame and Cover Joints: Comply with ASTM C 270, Type M, except for quantities less than 2.0 cu. ft. (60 L) where packaged mix complying with ASTM C 387, Type M, may be used.

C. Manhole Sump Frame and Grate: ASTM A 48/A 48M, Class 30B, gray cast iron.

D. Pulling Eyes in Concrete Walls: Eyebolt with reinforcing-bar fastening insert, 2-inch- (50-mm-) diameter eye, and 1-by-4-inch (25-by-100-mm) bolt.

1. Working Load Embedded in 6-Inch (150-mm), 4000-psi (27.6-MPa) Concrete: 13,000-lbf (58-kN) minimum tension.

E. Pulling-In and Lifting Irons in Concrete Floors: 7/8-inch- (22-mm-) diameter, hot-dip galvanized, bent steel rod; stress relieved after forming; and fastened to reinforcing rod. Exposed triangular opening.

1. Ultimate Yield Strength: 40,000-lbf (180-kN) shear and 60,000-lbf (270-kN) tension.

F. Bolting Inserts for Concrete Utility Structure Cable Racks and Other Attachments: Flared, threaded inserts of noncorrosive, chemical-resistant, nonconductive thermoplastic material; 1/2-inch (13-mm) ID by 2-3/4 inches (69 mm) deep, flared to 1-1/4 inches (32 mm) minimum at base.

1. Tested Ultimate Pullout Strength: 12,000 lbf (53 kN) minimum.

G. Expansion Anchors for Installation after Concrete Is Cast: Zinc-plated, carbon-steel-wedge type with stainless-steel expander clip with 1/2-inch (13-mm) bolt, 5300-lbf (24-kN) rated pullout strength, and minimum 6800-lbf (30-kN) rated shear strength.

H. Cable Rack Assembly: Steel, hot-dip galvanized, except insulators.

1. Stanchions: T-section or channel; 2-1/4-inch (57-mm) nominal size; punched with 14 holes on 1-1/2-inch (38-mm) centers for cable-arm attachment.
2. Arms: 1-1/2 inches (38 mm) wide, lengths ranging from 3 inches (75 mm) with 450-lb (204-kg) minimum capacity to 18 inches (460 mm) with 250-lb (114-kg) minimum capacity. Arms shall have slots along full length for cable ties and be arranged for secure mounting in horizontal position at any vertical location on stanchions.
3. Insulators: High-glaze, wet-process porcelain arranged for mounting on cable arms.

I. Cable Rack Assembly: Nonmetallic. Components fabricated from nonconductive, fiberglass-reinforced polymer.

1. Stanchions: Nominal 36 inches (900 mm) high by 4 inches (100 mm) wide, with minimum of 9 holes for arm attachment.
2. Arms: Arranged for secure, drop-in attachment in horizontal position at any location on cable stanchions, and capable of being locked in position. Arms shall be available in lengths ranging from 3 inches (75 mm) with 450-lb (204-kg) minimum capacity to 20 inches (508

mm) with 250-lb (114-kg) minimum capacity. Top of arm shall be nominally 4 inches (100 mm) wide, and arm shall have slots along full length for cable ties.

J. Duct-Sealing Compound: Nonhardening, safe for contact with human skin, not deleterious to cable insulation, and workable at temperatures as low as 35 deg F (2 deg C). Capable of withstanding temperature of 300 deg F (150 deg C) without slump and adhering to clean surfaces of plastic ducts, metallic conduits, conduit coatings, concrete, masonry, lead, cable sheaths, cable jackets, insulation materials, and common metals.

K. Fixed Manhole Ladders: Arranged for attachment to wall of manhole. Ladder and mounting brackets and braces shall be fabricated from hot-dip galvanized steel.

L. Cover Hooks: Heavy duty, designed for lifts 60 lbf (270 N) and greater. Two required.

## 2.06 SOURCE QUALITY CONTROL

A. Test and inspect precast concrete utility structures according to ASTM C 1037.

B. Nonconcrete Handhole and Pull-Box Prototype Test: Test prototypes of manholes and boxes for compliance with SCTE 77. Strength tests shall be for specified tier ratings of products supplied.

1. Tests of materials shall be performed by an independent testing agency.
2. Strength tests of complete boxes and covers shall be by either an independent testing agency or the manufacturer. A qualified registered professional engineer shall certify tests by manufacturer.
3. Testing machine pressure gages shall have current calibration certification complying with ISO 9000 and ISO 10012, and traceable to NIST standards.

# PART 3 - EXECUTION

## 3.01 GENERAL

A. Comply with utility company specifications and requirements for ducts, raceways, and enclosures for use by utility companies.

## 3.02 UNDERGROUND DUCT APPLICATION

A. Ducts for Electrical Cables Over 600 V: RNC, NEMA Type EPC-40-PVC, in concrete-encased duct bank, unless otherwise indicated.

B. Ducts for Electrical Feeders 600 V and Less: RNC, NEMA Type EPC-40-PVC for normal feeders and EPC-80-PVC for emergency feeders, in direct-buried duct bank where not under paved driveways or roadways, unless otherwise indicated. Duct banks shall be concrete encased where installed under paved driveways or roadways.

C. Ducts for Electrical Branch Circuits: RNC, NEMA Type EPC-40-PVC, in direct-buried duct bank, unless otherwise indicated.

D. Underground Ducts for Telephone, Communications, or Data Utility Service Cables: RNC, NEMA Type EPC-40-PVC, in concrete-encased duct bank, unless otherwise indicated.

E. Underground Ducts Crossing Paved Paths, Walks, Driveways, and Roadways: RNC, NEMA Type EPC-40-PVC, encased in reinforced concrete.

## 3.03 UNDERGROUND ENCLOSURE APPLICATION

A. Handholes and Boxes for 600 V and Less, Including Telephone, Communications, and Data Wiring:

1. Units in Roadways and Other Deliberate Traffic Paths: Precast concrete. AASHTO HB 17, H-20 structural load rating.
2. Units in Driveway, Parking Lot, and Off-Roadway Locations, Subject to Occasional, Nondeliberate Loading by Heavy Vehicles: Precast concrete, AASHTO HB 17, H-20 structural load rating.
3. Units in Sidewalk and Similar Applications with a Safety Factor for Nondeliberate Loading by Vehicles: Polymer concrete units, SCTE 77, Tier 8 structural load rating.

B. Manholes: Precast or cast-in-place concrete.

1. Units Located in Roadways and Other Deliberate Traffic Paths by Heavy or Medium Vehicles: H-20 structural load rating according to AASHTO HB 17.
2. Units Not Located in Deliberate Traffic Paths by Heavy or Medium Vehicles: H-10 load rating according to AASHTO HB 17.

## 3.04 EARTHWORK

A. Excavation and Backfill: Comply with Division 31, but do not use heavy-duty, hydraulic-operated, compaction equipment.

B. Restore surface features at areas disturbed by excavation and reestablish original grades, unless otherwise indicated. Replace removed sod immediately after backfilling is completed.

C. Restore areas disturbed by trenching, storing of dirt, cable laying, and other work. Restore vegetation and include necessary topsoiling, fertilizing, liming, seeding, sodding, sprigging, and mulching. Comply with Division 32.

D. Cut and patch existing pavement in the path of underground ducts and utility structures according to Division 01.

## 3.05 DUCT INSTALLATION

A. Slope: Pitch ducts a minimum slope of 1:300 down toward manholes and handholes and away from buildings and equipment. Slope ducts from a high point in runs between two manholes to drain in both directions.

B. Curves and Bends: Use 5-degree angle couplings for small changes in direction. Use manufactured long sweep bends with a minimum radius of 48 inches (1220 mm), both horizontally and vertically, at other locations, unless otherwise indicated.

C. Joints: Use solvent-cemented joints in ducts and fittings and make watertight according to manufacturer's written instructions. Stagger couplings so those of adjacent ducts do not lie in same plane.

D. Duct Entrances to Manholes and Concrete and Polymer Concrete Handholes: Use end bells, spaced approximately 10 inches (250 mm) o.c. for 5-inch (125-mm) ducts, and vary proportionately for other duct sizes.

1. Begin change from regular spacing to end-bell spacing 10 feet (3 m) from the end bell without reducing duct line slope and without forming a trap in the line.
2. Direct-Buried Duct Banks: Install an expansion and deflection fitting in each conduit in the area of disturbed earth adjacent to manhole or handhole.
3. Grout end bells into structure walls from both sides to provide watertight entrances.

E. Sealing: Seal spare ducts at terminations. Use sealing compound and plugs to withstand at least 15-psig (1.03-MPa) hydrostatic pressure.

F. Pulling Cord: Install 100-lbf- (445-N-) test nylon cord in ducts, including spares.

G. Concrete-Encased Ducts: Support ducts on duct separators.

1. Separator Installation: Space separators close enough to prevent sagging and deforming of ducts, with not less than 5 spacers per 20 feet (6 m) of duct. Secure separators to earth and to ducts to prevent floating during concreting. Stagger separators approximately 6 inches (150 mm) between tiers. Tie entire assembly together using fabric straps; do not use tie wires or reinforcing steel that may form conductive or magnetic loops around ducts or duct groups.
2. Concreting Sequence: Pour each run of envelope between manholes or other terminations in one continuous operation.

    a. Start at one end and finish at the other, allowing for expansion and contraction of ducts as their temperature changes during and after the pour. Use expansion fittings installed according to manufacturer's written recommendations, or use other specific measures to prevent expansion-contraction damage.
    b. If more than one pour is necessary, terminate each pour in a vertical plane and install 3/4-inch (19-mm) reinforcing rod dowels extending 18 inches (450 mm) into concrete on both sides of joint near corners of envelope.

3. Pouring Concrete: Spade concrete carefully during pours to prevent voids under and between conduits and at exterior surface of envelope. Do not allow a heavy mass of concrete to fall directly onto ducts. Use a plank to direct concrete down sides of bank assembly to trench bottom. Allow concrete to flow to center of bank and rise up in middle, uniformly filling all open spaces. Do not use power-driven agitating equipment unless specifically designed for duct-bank application.
4. Reinforcement: Reinforce concrete-encased duct banks where they cross disturbed earth and where indicated. Arrange reinforcing rods and ties without forming conductive or magnetic loops around ducts or duct groups.
5. Forms: Use walls of trench to form side walls of duct bank where soil is self-supporting and concrete envelope can be poured without soil inclusions; otherwise, use forms.
6. Depth: Install top of duct bank at least 24 inches (600 mm) below finished grade in areas not subject to deliberate traffic, and at least 30 inches (750 mm) below finished grade in deliberate traffic paths for vehicles, unless otherwise indicated.
7. Stub-Ups: Use manufactured rigid steel conduit elbows for stub-ups at poles and equipment and at building entrances through the floor.

    a. Couple steel conduits to ducts with adapters designed for this purpose, and encase coupling with 3 inches (75 mm) of concrete.

b. Stub-Ups to Equipment: For equipment mounted on outdoor concrete bases, extend steel conduit horizontally a minimum of 60 inches (1500 mm) from edge of base. Install insulated grounding bushings on terminations at equipment.

8. Warning Tape: Bury warning tape approximately 12 inches (300 mm) above all concrete-encased ducts and duct banks. Align tape parallel to and within 3 inches (75 mm) of the centerline of duct bank. Provide an additional warning tape for each 12-inch (300-mm) increment of duct-bank width over a nominal 18 inches (450 mm). Space additional tapes 12 inches (300 mm) apart, horizontally.

H. Direct-Buried Duct Banks:

1. Support ducts on duct separators coordinated with duct size, duct spacing, and outdoor temperature.
2. Space separators close enough to prevent sagging and deforming of ducts, with not less than 5 spacers per 20 feet (6 m) of duct. Secure separators to earth and to ducts to prevent displacement during backfill and yet permit linear duct movement due to expansion and contraction as temperature changes. Stagger spacers approximately 6 inches (150 mm) between tiers.
3. Excavate trench bottom to provide firm and uniform support for duct bank. Prepare trench bottoms as specified in Division 31 for pipes less than 6 inches (150 mm) in nominal diameter.
4. Install backfill as specified in Division 31.
5. After installing first tier of ducts, backfill and compact. Start at tie-in point and work toward end of duct run, leaving ducts at end of run free to move with expansion and contraction as temperature changes during this process. Repeat procedure after placing each tier. After placing last tier, hand-place backfill to 4 inches (100 mm) over ducts and hand tamp. Firmly tamp backfill around ducts to provide maximum supporting strength. Use hand tamper only. After placing controlled backfill over final tier, make final duct connections at end of run and complete backfilling with normal compaction as specified in Division 31.
6. Depth: Install top of duct bank at least 36 inches (900 mm) below finished grade, unless otherwise indicated.
7. Set elevation of bottom of duct bank below the frost line.
8. Install manufactured rigid steel conduit elbows for stub-ups at poles and equipment and at building entrances through the floor.

a. Couple steel conduits to ducts with adapters designed for this purpose, and encase coupling with 3 inches (75 mm) of concrete.
b. For equipment mounted on outdoor concrete bases, extend steel conduit horizontally a minimum of 60 inches (1500 mm) from edge of equipment pad or foundation. Install insulated grounding bushings on terminations at equipment.

## 3.06 INSTALLATION OF CONCRETE MANHOLES, HANDHOLES, AND BOXES

A. Cast-in-Place Manhole Installation:

1. Finish interior surfaces with a smooth-troweled finish.
2. Windows for Future Duct Connections: Form and pour concrete knockout panels 1-1/2 to 2 inches (38 to 50 mm) thick, arranged as indicated.
3. Cast-in-place concrete, formwork, and reinforcement are specified in Division 03.

B. Precast Concrete Handhole and Manhole Installation:

1. Comply with ASTM C 891, unless otherwise indicated.
2. Install units level and plumb and with orientation and depth coordinated with connecting ducts to minimize bends and deflections required for proper entrances.
3. Unless otherwise indicated, support units on a level bed of crushed stone or gravel, graded from 1-inch (25-mm) sieve to No. 4 (4.75-mm) sieve and compacted to same density as adjacent undisturbed earth.

C. Elevations:

1. Manhole Roof: Install with rooftop at least 15 inches (380 mm) below finished grade.
2. Manhole Frame: In paved areas and trafficways, set frames flush with finished grade. Set other manhole frames 1 inch (25 mm) above finished grade.
3. Install handholes with bottom below the frost line.
4. Handhole Covers: In paved areas and trafficways, set surface flush with finished grade. Set covers of other handholes 1 inch (25 mm) above finished grade.
5. Where indicated, cast handhole cover frame integrally with handhole structure.

D. Drainage: Install drains in bottom of manholes where indicated. Coordinate with drainage provisions indicated.

E. Manhole Access: Circular opening in manhole roof; sized to match cover size.

1. Manholes with Fixed Ladders: Offset access opening from manhole centerlines to align with ladder.
2. Install chimney, constructed of precast concrete collars and rings to support frame and cover and to connect cover with manhole roof opening. Provide moisture-tight masonry joints and waterproof grouting for cast-iron frame to chimney.

F. Waterproofing: Apply waterproofing to exterior surfaces of manholes after concrete has cured at least three days. Waterproofing materials and installation are specified in Division 07. After ducts have been connected and grouted, and before backfilling, waterproof joints and connections and touch up abrasions and scars. Waterproof exterior of manhole chimneys after mortar has cured at least three days.

G. Hardware: Install removable hardware, including pulling eyes, cable stanchions, cable arms, and insulators, as required for installation and support of cables and conductors and as indicated.

H. Fixed Manhole Ladders: Arrange to provide for safe entry with maximum clearance from cables and other items in manholes.

I. Field-Installed Bolting Anchors in Manholes and Concrete Handholes: Do not drill deeper than 3-7/8 inches (98 mm) for manholes and 2 inches (50 mm) for handholes, for anchor bolts installed in the field. Use a minimum of two anchors for each cable stanchion.

J. Warning Sign: Install "Confined Space Hazard" warning sign on the inside surface of each manhole cover.

## 3.07 INSTALLATION OF HANDHOLES AND BOXES OTHER THAN PRECAST CONCRETE

A. Install handholes and boxes level and plumb and with orientation and depth coordinated with connecting ducts to minimize bends and deflections required for proper entrances. Use box extension if required to match depths of ducts, and seal joint between box and extension as recommended by the manufacturer.

B. Unless otherwise indicated, support units on a level bed of crushed stone or gravel, graded from 1/2-inch (12.7-mm) sieve to No. 4 (4.75-mm) sieve and compacted to same density as adjacent undisturbed earth.

C. Elevation: In paved areas and trafficways, set so cover surface will be flush with finished grade. Set covers of other handholes 1 inch (25 mm) above finished grade.

D. Install handholes and boxes with bottom below the frost line, below grade.

E. Install removable hardware, including pulling eyes, cable stanchions, cable arms, and insulators, as required for installation and support of cables and conductors and as indicated. Select arm lengths to be long enough to provide spare space for future cables, but short enough to preserve adequate working clearances in the enclosure.

F. Field-cut openings for ducts and conduits according to enclosure manufacturer's written instructions. Cut wall of enclosure with a tool designed for material to be cut. Size holes for terminating fittings to be used, and seal around penetrations after fittings are installed.

G. For enclosures installed in asphalt paving and subject to occasional, nondeliberate, heavy-vehicle loading, form and pour a concrete ring encircling, and in contact with, enclosure and with top surface screeded to top of box cover frame. Bottom of ring shall rest on compacted earth.

1. Concrete: 3000 psi (20 kPa), 28-day strength, complying with Division 03, with a troweled finish.
2. Dimensions: 10 inches wide by 12 inches deep (250 mm wide by 300 mm deep).

## 3.08 FIELD QUALITY CONTROL

A. Perform the following tests and inspections and prepare test reports:

1. Demonstrate capability and compliance with requirements on completion of installation of underground ducts and utility structures.
2. Pull aluminum or wood test mandrel through duct to prove joint integrity and test for out-of-round duct. Provide mandrel equal to 80 percent fill of duct. If obstructions are indicated, remove obstructions and retest.

B. Correct deficiencies and retest as specified above to demonstrate compliance.

## 3.09 CLEANING

A. Pull leather-washer-type duct cleaner, with graduated washer sizes, through full length of ducts. Follow with rubber duct swab for final cleaning and to assist in spreading lubricant throughout ducts.

B. Clean internal surfaces of manholes, including sump. Remove foreign material.

PART 4 - PAYMENT PROCEDURES

4.01 APPLICATIONS FOR PAYMENT

A. Each Application for Payment following the initial Application for Payment shall be consistent with previous applications and payments. Payment shall be based on percentage of work completed and cost of materials and equipment.

1. Entries shall match data on the schedule of values and Contractor's construction schedule. Use updated schedules if revisions were made.
2. Include amounts for work completed following previous Application for Payment, whether or not payment has been received. Include only amounts for work completed at time of Application for Payment.
3. Include amounts of Change Orders and Construction Change Directives issued before last day of construction period covered by application.

B. Stored Materials: Include in Application for Payment amounts applied for materials or equipment purchased or fabricated and stored, but not yet installed. Differentiate between items stored on-site and items stored off-site.

1. Provide certificate of insurance, evidence of transfer of title to Owner, and consent of surety to payment, for stored materials.
2. Provide supporting documentation that verifies amount requested, such as paid invoices. Match amount requested with amounts indicated on documentation; do not include overhead and profit on stored materials.
3. Provide summary documentation for stored materials indicating the following:

a. Value of materials previously stored and remaining stored as of date of previous Applications for Payment.
b. Value of previously stored materials put in place after date of previous Application for Payment and on or before date of current Application for Payment.
c. Value of materials stored since date of previous Application for Payment and remaining stored as of date of current Application for Payment.

This Page Intentionally Left Blank

**END OF SECTION 26 05 43**

# SECTION 31 10 00

# SITE CLEARING

## PART 1 GENERAL

### 1.01 RELATED DOCUMENTS

A. State of Maine Department of Transportation, "Standard Specifications," Revision December 2002, and any revisions thereto, apply to this Section. If the Contractor discovers any ambiguity, error, omission, conflict, or discrepancy, Section 10 1. 3.6 Priority of Conflicting Contract Documents shall control.

1. Drawings and general provisions of the Contract, and Division 1 Specification Sections, apply to this Section.
2. Any supplements to any of the above specifications and or standards issued prior to issuance of this Project Manual, apply to this section.

### 1.02 SECTION INCLUDES

A. Clearing and protection of vegetation.

B. Removal of existing debris.

### 1.03 PRICE AND PAYMENT PROCEDURES

A. Measurement and payment will be as follows:

B. Pay Item 201.11 CLEARING: Pay Unit - ACRE.

C. Basis of Payment – The accepted quantity of CLEARING will be paid for at the contract unit price per ACRE. Provisions of Section 201 of the "State of Maine, Department of Transportation, Standard Specifications, Revisions of December, 2002" or Specification Section 31 10 00 of the contract documents, whichever is stricter, shall apply. The protection of existing trees/shrubs will be considered incidental to pay item 201.11.

### 1.04 QUALITY ASSURANCE

A. Clearing Firm: Company specializing in the type of work required.

## PART 3 EXECUTION

### 3.01 SITE CLEARING

A. Minimize production of dust due to clearing operations; do not use water if that will result in ice, flooding, sedimentation of public waterways or storm sewers, or other pollution.

### 3.02 EXISTING UTILITIES AND BUILT ELEMENTS

A. Coordinate work with utility companies; notify before starting work and comply with their requirements; obtain required permits.

B. Protect existing utilities to remain from damage.

C. Do not disrupt public utilities without permit from authority having jurisdiction.

D. Protect existing structures and other elements that are not to be removed.

3.03 VEGETATION

A. Scope: Remove trees, shrubs, brush, and stumps in areas to be covered by building structure, paving, lawns, and planting beds.

B. Do not begin clearing until vegetation to be relocated has been removed.

C. Install substantial, highly visible fences at least 3 feet high to prevent inadvertent damage to vegetation to remain:
   1. At vegetation removal limits.
   2. Around trees to remain within vegetation removal limits; locate no closer to tree than at the drip line.
   3. Around other vegetation to remain within vegetation removal limits.

D. In areas where vegetation must be removed but no construction will occur other than pervious paving, remove vegetation with minimum disturbance of the subsoil.

E. Vegetation Removed: Do not burn, bury, landfill, or leave on site, except as indicated.
   1. Chip, grind, crush, or shred vegetation for mulching, composting, or other purposes; preference should be given to on-site uses.
   2. Trees: Sell if marketable; if not, treat as specified for other vegetation removed; remove stumps and roots to depth of 18 inches.
   3. Existing Stumps: Treat as specified for other vegetation removed; remove stumps and roots to depth of 18 inches.
   4. Sod: Re-use on site if possible; otherwise sell if marketable, and if not, treat as specified for other vegetation removed.
   5. Fill holes left by removal of stumps and roots, using suitable fill material, with top surface neat in appearance and smooth enough not to constitute a hazard to pedestrians.

F. Restoration: If vegetation outside removal limits or within specified protective fences is damaged or destroyed due to subsequent construction operations, replace at no cost to Owner.

3.04 DEBRIS

A. Remove debris, junk, and trash from site.

B. Leave site in clean condition, ready for subsequent work.

C. Clean up spillage and wind-blown debris from public and private lands.

**END OF SECTION 31 10 00**

# SECTION 31 22 00

# GRADING

## PART 1 GENERAL

### 1.01 RELATED DOCUMENTS

A. State of Maine Department of Transportation, "Standard Specifications," Revision December 2002, and any revisions thereto, apply to this Section. If the Contractor discovers any ambiguity, error, omission, conflict, or discrepancy, Section 10 1. 3.6 Priority of Conflicting Contract Documents shall control.

1. Drawings and general provisions of the Contract, and Division 1 Specification Sections, apply to this Section.
2. Any supplements to any of the above specifications and or standards issued prior to issuance of this Project Manual, apply to this section.

### 1.02 SECTION INCLUDES

A. Removal of topsoil.

B. Rough grading the site.

C. Finish grading.

### 1.03 RELATED REQUIREMENTS

A. Section 31 10 00 - Site Clearing.

B. Section 31 23 16 - Excavation.

C. Section 31 23 23 - Fill: Filling and compaction.

D. Section 31 23 16.13 - Trenching: Trenching and backfilling for utilities.

E. Section 31 23 16.26 - Rock Removal.

### 1.04 SUBMITTALS

A. Project Record Documents: Accurately record actual locations of utilities remaining by horizontal dimensions, elevations or inverts, and slope gradients.

### 1.05 QUALITY ASSURANCE

A. Perform Work in accordance with State of Maine, Department of Transportation standards.

### 1.06 PROJECT CONDITIONS

A. Protect above- and below-grade utilities that remain.

B. Protect plants, lawns, rock outcroppings, and other features to remain as a portion of final landscaping.

C. Protect bench marks, survey control points, existing structures, fences, sidewalks, paving, and curbs from grading equipment and vehicular traffic.

## PART 2 PRODUCTS

2.01 MATERIALS

A. Topsoil: See Section 31 23 23 2.01.H.

B. Other Fill Materials: See Section 31 23 23.

PART 3 EXECUTION

3.01 EXAMINATION

A. Verify that survey benchmark and intended elevations for the Work are as indicated.

3.02 PREPARATION

A. Identify required lines, levels, contours, and datum.

B. Stake and flag locations of known utilities.

C. Locate, identify, and protect from damage above- and below-grade utilities to remain.

3.03 ROUGH GRADING

A. Remove topsoil from areas to be further excavated, re-landscaped, or re-graded, without mixing with foreign materials.

B. Do not remove topsoil when wet.

C. Remove subsoil from areas to be further excavated, re-landscaped, or re-graded.

D. Do not remove wet subsoil, unless it is subsequently processed to obtain optimum moisture content.

E. When excavating through roots, perform work by hand and cut roots with sharp axe.

F. See Section 31 23 23 for filling procedures.

G. Stability: Replace damaged or displaced subsoil to same requirements as for specified fill.

3.04 SOIL REMOVAL

A. Stockpile excavated topsoil on site.

B. Stockpile excavated subsoil on site.

C. Stockpiles: Use areas designated on site; pile depth not to exceed 8 feet; protect from erosion.

3.05 FINISH GRADING

A. Before Finish Grading:
   1. Verify building and trench backfilling have been inspected.
   2. Verify subgrade has been contoured and compacted.

B. Remove debris, roots, branches, stones, in excess of 1/2 inch in size. Remove soil contaminated with petroleum products.

C. Where topsoil is to be placed, scarify surface to depth of 4 inches.

D. In areas where vehicles or equipment have compacted soil, scarify surface to depth of 4 inches.

E. Place topsoil in areas indicated.

F. Place topsoil during dry weather.

G. Remove roots, weeds, rocks, and foreign material while spreading.

H. Near plants spread topsoil manually to prevent damage.

I. Fine grade topsoil to eliminate uneven areas and low spots. Maintain profiles and contour of subgrade.

J. Lightly compact placed topsoil.

3.06 TOLERANCES

A. Top Surface of Subgrade: Plus or minus 1/10 foot from required elevation.

B. Top Surface of Finish Grade: Plus or minus 1/2 inch.

3.07 REPAIR AND RESTORATION

A. Existing Facilities, Utilities, and Site Features to Remain: If damaged due to this work, repair or replace to original condition at no cost to Owner.

B. Trees to Remain: If damaged due to this work, trim broken branches and repair bark wounds; if root damage has occurred, obtain instructions from Engineer as to remedy. Perform work at no cost to Owner.

C. Other Existing Vegetation to Remain: If damaged due to this work, replace with vegetation of equivalent species and size at no cost to Owner.

3.08 FIELD QUALITY CONTROL

A. See Section 31 23 23 for compaction density testing.

3.09 CLEANING

A. Remove unused stockpiled topsoil and subsoil. Grade stockpile area to prevent standing water.

B. Leave site clean and raked, ready to receive landscaping.

C. Protect newly graded areas from traffic and erosion and keep free of trash and debris.

D. Repair and re-establish grades in settled, eroded and rutted areas within specified tolerances.

E. Slope fill surfaces to shed water.

**This Page Intentionally Left Blank**

**END OF SECTION 31 22 00**

# SECTION 31 23 16

# EXCAVATION

## PART 1 GENERAL

### 1.01 RELATED DOCUMENTS

A. State of Maine Department of Transportation, "Standard Specifications," Revision December 2002, and any revisions thereto, apply to this Section. If the Contractor discovers any ambiguity, error, omission, conflict, or discrepancy, Section 10 1. 3.6 Priority of Conflicting Contract Documents shall control.

1. Drawings and general provisions of the Contract, and Division 1 Specification Sections, apply to this Section.
2. Any supplements to any of the above specifications and or standards issued prior to issuance of this Project Manual, apply to this section.

### 1.02 SECTION INCLUDES

A. Excavating for building volume below grade, footings, slabs-on-grade, paving, site structures, and utilities within the building.

### 1.03 PRICE AND PAYMENT PROCEDURES

A. Measurement and payment will be as follows:

B. Pay Item 203.20 Common Excavation: Pay Unit - Cubic Yard.

C. Pay Item 803.01 Test Pit: Pay Unit – Each

D. Basis of Payment: Provisions of Section 203 of the "State of Maine, Department of Transportation, Standard Specifications, Revisions of December, 2002" or Specification Section 31 23 16 of the contract documents, whichever is stricter, shall apply.

The accepted quantity of Common Excavation will be paid for at the contract unit price per Cubic Yard.

The accepted quantity of Test PIT will be paid for at the contract unit price per Each.

### 1.04 RELATED REQUIREMENTS

A. Geotechnical Engineering Study (Soils Report) by S.W. Cole Engineering, Inc. dated November 7, 2013: Geotechnical Engineering Services, MaineDOT BGS Fleet Services, 66 Industrial Drive, Augusta, Maine.

B. Section 31 22 00 - Grading: Soil removal from surface of site.

C. Section 31 23 23 - Fill: Fill materials, filling, and compacting.

D. Section 31 23 16.13 - Trenching: Excavating for utility trenches outside the building to utility main connections.

E. Section 31 23 16.26 - Rock Removal: Removal of rock during excavating.

### 1.05 PROJECT CONDITIONS

A. Verify that survey benchmark and intended elevations for the Work are as indicated.

PART 2 PRODUCTS - NOT USED

PART 3 EXECUTION

3.01 EXAMINATION

A. Verify that survey benchmark and intended elevations for the work are as indicated.

3.02 PREPARATION

A. Identify required lines, levels, contours, and datum locations.

B. Perform all work in accordance with the recommendations and requirements of the Geotechnical Engineering Study (soils report) by S.W. Cole Engineering, Inc. dated November 7, 2012.

C. Comply with the requirements contained within this specification section, the contract drawings, and the recommendations contained within the Geotechnical Engineering Study (soils report). In the event of conflicting requirements, the more stringent standard shall apply.

D. See Section 31 22 00 for additional requirements.

3.03 EXCAVATING

A. Underpin adjacent structures that could be damaged by excavating work.

B. Excavate to accommodate new structures and construction operations.

C. Notify Site Engineer and Geotechnical Engineer of unexpected subsurface conditions and discontinue affected Work in area until notified to resume work.

D. Excavate materials encountered when establishing required subgrade elevations in accordance with (MaineDOT) Specification Section (203.04 and 203.05)

E. Conform to elevations, contours, dimensions, line and grade shown on the Drawings.

F. When excavation through roots is necessary, perform work by hand and cut roots with a sharp axe.

G. Slope banks of excavations deeper than 4 feet to angle of repose or less until shored. All excavations shall be consistent with OSHA regulations.

H. Do not interfere with 45 degree bearing splay of foundations.

I. Do not excavate wet subsoil.

J. Remove all existing fill soils from beneath foundations.

K. Cut utility trenches wide enough to allow inspection of installed utilities.

L. Hand trim excavations. Remove loose matter.

M. Remove lumped subsoil, boulders, solid mortared stone masonry, concrete masonry and rock up to 2 cu yd measured by volume. See Section 31 23 16.26 for removal of larger material.

N. Relic foundations shall be removed to a depth of at least 2 feet below proposed finished grades in paved areas. Removal of relic foundations is incidental to the contract and will not be paid for under rock excavation.

O. Correct areas that are over-excavated and load-bearing surfaces that are disturbed at no cost to Owner; see Section 31 23 23.

P. Grade top perimeter of excavation to prevent surface water from draining into excavation.

Q. Remove excavated material that is unsuitable for re-use from site.

R. Surplus Material:

1. Make arrangements to provide suitable disposal areas off-site.

2. Deposit and grade material to the satisfaction of the owner of the property on which the material is deposited.

3. Obtain any necessary permits for disposal.

4. Provide suitable watertight vehicles to haul soft or wet materials over streets or pavements to prevent deposits on same.

5. Keep crosswalks, streets, and pavements clean and free of debris.

6. Clean up materials dropped from vehicles as often as directed by Owner.

3.04 FIELD QUALITY CONTROL

A. Provide for visual inspection of load-bearing excavated surfaces before placement of foundations.

3.05 PROTECTION

A. Prevent displacement of banks and keep loose soil from falling into excavation; maintain soil stability.

B. Protect bottom of excavations and soil adjacent to and beneath foundation from freezing.

**This page left intentionally blank**

**END OF SECTION 31 23 16**

# SECTION 31 23 19

# DEWATERING

## PART 1 GENERAL

### 1.01 RELATED DOCUMENTS

A. State of Maine Department of Transportation, "Standard Specifications," Revision December 2002, and any revisions thereto, apply to this Section. If the Contractor discovers any ambiguity, error, omission, conflict, or discrepancy, Section 10 1. 3.6 Priority of Conflicting Contract Documents shall control.

1. Drawings and general provisions of the Contract, and Division 1 Specification Sections, apply to this Section.
2. Any supplements to any of the above specifications and or standards issued prior to issuance of this Project Manual, apply to this section.

### 1.02 SECTION INCLUDES

A. Furnish, operate and maintain dewatering equipment for control, collection, and disposal of ground and surface water entering trenches and excavations.

### 1.03 RELATED SECTIONS

A. Section 31 23 16 - Excavation

B. Section 31 23 23 - Fill

C. Section 31 23 16.13 - Trenching.

D. Section 31 10 00 - Site Clearing

E. Section 31 25 00 - Slope Protection and Erosion Control.

F. Geotechnical Engineering Study (Soils Report) by Fessenden Geo-Environmental Services Dated November 2013: Geotechnical report; bore hole locations and findings of subsurface materials.

### 1.04 DESIGN REQUIREMENTS

A. Design dewatering facilities including drains, piping and pumping.

B. Control groundwater in foundation excavations to two feet below the foundation grade as required in the Geotechnical report for the project.

### 1.05 PRICE AND PAYMENT PROCEDURES

A. Measurement and payment will be as follows:

B. Basis of Payment – Dewatering shall be considered incidental to the work being performed and no separate payment will be made.

### 1.06 SUBMITTALS

A. Prior to start of excavation and trenching, submit dewatering design and methods to Owner for review.

PART 2 PRODUCTS

2.01 EQUIPMENT

A. Provide pumps, drains, piping and other facilities necessary to keep excavations and trenches free of water including spare units available for immediate use in the event of equipment failure.

PART 3 EXECUTION

3.01 PROTECTION

A. Protect watercourses, sewer systems and adjacent properties from siltation by use of sediment ponds or other measures acceptable to Owner.

B. Keep excavations clear of groundwater, surface water, seepage, sewage and stormwater.

3.02 INSTALLATION

A. Install, construct and maintain equipment and facilities required for work of this section.

B. Dispose of water removed from Work in a suitable manner which will not interfere with other work, cause erosion, damage pavements, other surfaces or property and is acceptable to Owner:

C. Remove dewatering equipment and facilities when no longer required.

D. Backfill excavations in accordance with 31 23 16 and 31 23 16.13.

E. Repair damage resulting from dewatering operations.

F. Dewatering costs shall be included in bid and no separate payment shall be made.

**END OF SECTION 31 23 19**

# SECTION 31 23 16.13

# TRENCHING

## PART 1 GENERAL

### 1.01 RELATED DOCUMENTS

A. State of Maine Department of Transportation, "Standard Specifications," Revision December 2002, and any revisions thereto, apply to this Section. If the Contractor discovers any ambiguity, error, omission, conflict, or discrepancy, Section 10 1. 3.6 Priority of Conflicting Contract Documents shall control.

1. Drawings and general provisions of the Contract, and Division 1 Specification Sections, apply to this Section.
2. Any supplements to any of the above specifications and or standards issued prior to issuance of this Project Manual, apply to this section.

### 1.02 SECTION INCLUDES

A. Excavating trenches and backfill for utilities, including underslab utilities.

B. Excavating for manholes, catch basins and other structures.

C. Compacted bedding and compacted backfilling over utilities to subgrade elevations.

D. Compacted base and compacted backfilling for manholes, catch basins and other structures to subgrade elevations.

E. Compaction requirements.

F. Dust control.

### 1.03 RELATED REQUIREMENTS

A. Geotechnical Engineering Study by S.W. Cole Engineering, Inc. dated November 7, 2013: Geotechnical Engineering Services, MaineDOT BGS Fleet Services, 66 Industrial Drive, Augusta, Maine.

B. Section 31 22 00 - Grading: Site grading.

C. Section 31 23 16 - Excavation: Building and foundation excavating.

D. Section 31 23 23 - Fill: Backfilling at building and foundations.

E. Section 31 23 16.26 - Rock Removal: Removal of rock during excavating.

### 1.04 DEFINITIONS

A. Finish Grade Elevations: Indicated on drawings.

B. Subgrade Elevations: Indicated on drawings or the bottom of aggregate subbase gravel in paved areas, the bottom of aggregate base gravel in sidewalk areas, the bottom of loam in seeded areas, or to bottom of structural fill in slab areas.

### 1.05 REFERENCES

A. AASHTO T 180 - Standard Specification for Moisture-Density Relations of Soils Using a 4.54

kg (10-lb) Rammer and a 457 mm (18 in.) Drop; American Association of State Highway and Transportation Officials; 2010.

B. ASTM C136 - Standard Test Method for Sieve Analysis of Fine and Coarse Aggregates; 2006.

C. ASTM D698 - Standard Test Methods for Laboratory Compaction Characteristics of Soil Using Standard Effort (12,400 ft-lbf/ft3 (600 kN-m/m3)); 2012.

D. ASTM D1556 - Standard Test Method for Density and Unit Weight of Soil in Place by the Sand-Cone Method; 2007.

E. ASTM D1557 - Standard Test Methods for Laboratory Compaction Characteristics of Soil Using Modified Effort (56,000 ft-lbf/ft3 (2,700 kN m/m3)); 2012.

F. ASTM D2167 - Standard Test Method for Density and Unit Weight of Soil in Place by the Rubber Balloon Method; 2008.

G. ASTM D2487 - Standard Practice for Classification of Soils for Engineering Purposes (Unified Soil Classification System); 2011.

H. ASTM D 2922 - Standard Test Methods for Density of Soil and Soil-Aggregate in Place by Nuclear Methods (Shallow Depth); 2005.

I. ASTM D3017 - Standard Test Method for Water Content of Soil and Rock in Place by Nuclear Methods (Shallow Depth); 2005.

J. ASTM D4318 - Standard Test Methods for Liquid Limit, Plastic Limit, and Plasticity Index of Soils; 2010.

1.06 SUBMITTALS

A. Samples: 75 lb sample of each type of fill; submit in air-tight containers to testing laboratory.

B. Materials Sources: Submit name and location of imported materials source.

C. Fill Composition Test Reports: Results of laboratory tests (gradation and proctor) on proposed and actual materials used.

D. Compaction Density Test Reports.

1.07 DELIVERY, STORAGE, AND HANDLING

A. When necessary, store materials on site in advance of need.

B. When fill materials need to be stored on site, locate stockpiles where designated.
   1. Separate differing materials with dividers or stockpile separately to prevent intermixing.
   2. Prevent contamination.
   3. Protect stockpiles from erosion and deterioration of materials.

C. Protect excavations by shoring, bracing, sheet piling, underpinning or other methods required to prevent cave-in or loose soil from falling into excavation.

D. Protect above or below grade utilities which are to remain. Repair any damage caused by construction of this project at no cost to Owner.

E. Underpin adjacent structures which may be damaged by excavation work, including service utilities and pipe chases.

F. Protect excavations and soil adjacent to and beneath foundations from frost.

G. Grade excavation top perimeter to prevent surface water runoff into excavations.

H. Maintenance of existing flows:
   1. Keep existing sewers and drains in operation.
   2. If existing sewers and drains are disturbed, provide for maintenance of such flows until work is completed.
   3. Do not allow raw sewage to flow on ground surface or stand in excavation.

I. The Contractor will be responsible for obtaining the necessary street opening permits from the MaineDOT and/or City of Augusta, and complying with the terms and conditions of said permit. The MaineDOT and/or City of Augusta will not waive the permit fees for this project and the Contractor is required to pay for applicable fees. Applicable fees are to be included in bid.

PART 2 PRODUCTS

2.01 FILL MATERIALS

A. Type 'B' Underdrain Sand: MDOT 703.22 Granular material meeting the requirements of MDOT 703.22 Type 'B' underdrain backfill, with the following limits:
   1. 1 inch sieve: 95 to 100 percent passing by weight
   2. 1/2 inch sieve: 75 to 100 percent passing by weight
   3. No. 4 sieve: 50 to 100 percent passing by weight
   4. No. 20 sieve: 15 to 80 percent passing by weight
   5. No. 50 sieve: 0 to 15 percent passing by weight
   6. No. 200 sieve: 0 to 5 percent passing by weight
   7. Type B backfill shall not contain organic matter and shall not contain particles of rock which will not pass the 1-1/2 inch square mesh sieve.

B. Type 'C' Underdrain stone: MDOT 703.22; Crushed Stone meeting the requirements of MDOT 703.22 Underdrain Backfill Type 'C' meeting the following requirements:
   1. 1 inch sieve: 100 percent passing by weight
   2. 3/4 inch sieve: 90 to 100 percent passing by weight
   3. 3/8 inch sieve: 0 to 75 percent passing by weight
   4. No. 4 sieve: 0 to 25 percent passing by weight
   5. No. 10 sieve: 0 to 5 percent passing by weight

C. Sand Bedding and Backfill; free of silt, clay, loam, friable or soluble materials, and organic matter. Graded in accordance with the following limits:
   1. 3/8 inch sieve: 100 percent passing by weight
   2. No. 4 sieve: 95 to 100 percent passing by weight
   3. No. 200 sieve: 0 to 5 percent passing by weight.

2.02 ACCESSORIES

A. Non-Woven Geotextile Fabric: Non-biodegradable, Mirafi 160N or equivalent.

B. Woven Geotextile Fabric: Non-biodegradable, Mirafi 500X or equivalent.

B. Water for sprinkling: Fresh and free from oil, acid and injurious alkali or vegetable matter.

C. Calcium chloride: ASTM D98 commercial grade except as waived by the Owner.

2.03 SOURCE QUALITY CONTROL

A. If tests indicate materials do not meet specified requirements, change material and retest. Materials not meeting specified requirements, if used prior to acceptance, shall be removed and replaced at no cost to Owner.

PART 3 EXECUTION

3.01 EXAMINATION

A. Verify that survey bench marks and intended elevations for the work are as indicated.

B. Identify required lines, levels, contours, and datum locations.

C. See Section 31 22 00 for additional requirements.

D. Examine the areas and conditions under which excavating and filling is to be performed and notify Owner in writing of conditions detrimental to proper and timely completion of work.

E. Correct unsatisfactory conditions in a manner acceptable to Owner prior to proceeding with work.

F. Maintain in operating condition existing utilities, active utilities and drainage systems encountered in utility installation.

G. Locate, identify, and protect utilities that remain and protect from damage.

H. Notify utility company to remove and relocate utilities.

I. Protect bench marks, survey control points, existing structures, fences, sidewalks, paving, and curbs from excavating equipment and vehicular traffic.

J. Protect plants, lawns, rock outcroppings, and other features to remain.

3.02 INSPECTION

A. Verify stockpiled fill to be used is approved.

B. Verify areas to be backfilled are free of organics, debris, snow, ice or water, and surfaces are not frozen.

3.03 GENERAL REQUIREMENTS

A. See Section 31 23 16 for additional requirements.

B. Provide trenching and backfilling for storm drain, water service, sewerage pipes, conduits and structures. Water and sewerage lines separation shall be minimum 10 feet horizontally and 18 inches vertically. Lay all piping in open trench. Maintain access to fire hydrants by fire-fighting equipment.

C. Sheet and brace trenches and remove water as necessary to fully protect workmen and adjacent facilities, in keeping with local regulations or, in the absence thereof, with the provisions of the "Manual of Accident Prevention in Construction," of the Associated General Contractors of America, Inc. Under no circumstances lay pipe or install appurtenances in water. Keep the trench free from water until pipe joint material has hardened. Sheeting left in place shall be cut off not less than 2 feet below finished grade. Sheeting shall not be removed until the trench is substantially backfilled.

D. Excavation under this contract shall be unclassified.

E. Grade the bottom of the trenches evenly to ensure uniform bearing for full length of all pipes. Excavate all rock, cemented gravel, old masonry, or other hard material to at least 6 inches below the pipe at all points. Refill such space and all other cuts below grade with sand bedding or fine gravel firmly compacted.

F. Should soil conditions necessitate special supports for piping and/or appurtenances, including

the removal of unsuitable material and refilling with sand bedding or fine gravel, such work shall be performed as necessary.

G. Backfill trenches only after piping has been inspected, tested and the locations of pipe and appurtenances have been recorded. Backfill by hand around pipe and for a depth of 1 foot above the pipe. Use earth without rock fragments or large stones and tamp as specified in layers not exceeding 6 inches in thickness, taking care not to disturb the pipe or damage the pipe coating. Compact the remainder of the backfill as specified with a rammer of suitable weight, or with an approved mechanical tamper, provided that under pavements, walks and other surfacing, the backfill shall be tamped as specified. Exclude all cinders, rubbish and scrap metal from trenches in which metal pipes are laid. Special care shall be used to properly tamp backfill under lower half of sewer pipe.

3.04 PREPARATION

A. Identify known underground utilities. Stake and flag locations.

B. Identify and flag surface and aerial utilities.

C. Notify utility companies of work to be done.

D. When necessary, compact subgrade surfaces to density requirements for embankment, aggregate base, and aggregate subbase materials.

E. Cut out soft areas of subgrade not capable of compaction in place. Backfill with Type 'B' underdrain sand backfill and compact to density equal to requirements for subsequent backfill material.

F. Until ready to backfill, maintain excavations and prevent loose soil from falling into excavation.

3.05 TRENCHING

A. Notify Site Engineer and Geotechnical Engineer of unexpected subsurface conditions and discontinue affected Work in area until notified to resume work.

B. Slope banks of excavations deeper than 4 feet to angle of repose or less until shored. All excavations shall be consistent with OSHA requirements.

C. Do not interfere with 45 degree bearing splay of foundations.

D. Excavate subsoil required for piping and appurtenances.

E. Cut trenches wide enough to allow inspection of installed utilities.

F. Relic topsoil, if encountered in utility trenches shall be removed from beneath pipes and pipe bedding.

G. Hand trim excavations. Remove loose matter.

H. Remove large stones and other hard matter that could damage piping or impede consistent backfilling or compaction.

I. Remove lumped subsoil, boulders, and rock up to 2 cu yd measured by volume. See Section 31 23 16.26 for removal of larger material.

J. Remove excavated material that is unsuitable for re-use from site.

K. Stockpile excavated material to be re-used in area designated on site in accordance with Section 31 22 00.

L. Correct unauthorized excavation with Sand Bedding, (Type B Underdrain Sand or Type C Underdrain Stone) or as directed by Owner.

M. Fill over-excavated areas under pipe bearing surfaces with Sand Bedding, (Type B Underdrain Sand or Type C Underdrain Stone) or as directed by Owner.

N. Do not store excavated material adjacent to excavations where they could surcharge sideslopes.

O. Remove excess excavated material from site.

P. Surplus Material:
   1. Make arrangements to provide suitable disposal areas off-site.
   2. Deposit and grade material to the satisfaction of the owner of the property on which the material is deposited.
   3. Obtain any necessary permits for disposal.
   4. Provide suitable watertight vehicles to haul soft or wet materials over streets or pavements to prevent deposits on same.
   5. Keep crosswalks, streets, and pavements clean and free of debris.
   6. Clean up materials dropped from vehicles as often as directed by Owner.

3.06 PREPARATION FOR UTILITY PLACEMENT

A. Cut out soft areas of subgrade not capable of compaction in place. Backfill with Type B Underdrain Sand or Type C Underdrain Stone or as directed by Owner.

B. Compact subgrade to density equal to or greater than requirements for subsequent fill material.

C. Until ready to backfill, maintain excavations and prevent loose soil from falling into excavation.

3.07 ELECTRICAL/TELEPHONE

A. Refer to the Handbook of Standard Requirements for Electric Service and Meter Installation for installation requirements for primary electric service, secondary electric service, telephone service and cable services. Pull ropes shall be installed in all conduits.

3.08 REPAIRS TO EXISTING PIPES, CONDUIT AND WATER LINES

A. Remove damaged or broken portions of pipe or conduit and replace with a pipe or conduit of the same size and material, unless otherwise directed by Owner, designed to serve same function as existing pipe or conduit.

B. Make connections for repair with flexible couplings to satisfaction of Owner.

C. Maintain inventory of suitable repair materials on site.

D. Make repairs immediately following discovery of damage.

E. Do not backfill until repairs have been completed to satisfaction of Owner.

F. Repairs to water mains and services will be by the water utility. Coordination and payment for repairs shall be the responsibility of the Contractor.

3.09 BACKFILLING

A. Backfill to contours and elevations indicated using unfrozen materials.

B. Place and compact bedding material to grade of underside of pipe in trench bottom as soon as excavation reaches grade.

C. Compact bedding material to provide firm laying base.

D. Underslab utilities shall be installed on sand bedding material and backfilled with sand backfill.

E. After pipe is laid to grade, place bedding material uniformly on each side of pipe up to spring line while carefully compacting bedding material under haunches of pipe.

F. Support pipe and conduit during placement and compaction of bedding fill.

G. Place and compact base material to grade of underside of appurtenant structures in bottom of excavation as soon as excavation reaches grade.

H. Compact base material for appurtenant structures to provide a firm laying base.

I. Place and compact backfill materials in continuous layers not exceeding 12 inches in area of paving, slabs-on-grade, and similar construction. Lift thickness not to exceed 16 inches in lawn or field areas.

J. Install geotextile fabric in accordance with manufacturer's recommendations and where shown on Drawings.

K. Employ a placement method that does not disturb or damage other work.

L. Systematically fill to allow maximum time for natural settlement. Do not fill over porous, wet, frozen or spongy subgrade surfaces.

M. Maintain optimum moisture content of fill materials to attain required compaction density.

N. Slope grade away from building minimum 2 inches in 10 ft, unless noted otherwise. Make gradual grade changes. Blend slope into level areas.

O. Correct areas that are over-excavated.
   1. Thrust bearing surfaces: Fill with concrete.
   2. Other areas: Use common borrow in lawn areas or granular borrow in paved/building areas, flush to required elevation, compacted to minimum 95 percent of maximum dry density.

P. Leave stockpile areas completely free of excess fill materials.

Q. Upon completion of backfilling in paved areas, sweep undisturbed pavement.

R. Upon request of Owner implement the following dust control measures during the interim period between backfilling and capping of the trench:
   1. Apply water and calcium chloride as directed by Owner.
   2. Spread calcium chloride uniformly over designated areas.
   3. Apply water with equipment having a tank with pressure pump and nozzle equipped spray bar acceptable to Owner.

S. Compaction Density Unless Otherwise Specified or Indicated:
   1. Under paving, slabs-on-grade, and similar construction: 95 percent of maximum dry density.
   2. At other locations: 90 percent of maximum dry density.

T. Reshape and re-compact fills subjected to vehicular traffic.

3.10 TOLERANCES

A. Top Surface of General Backfilling: Plus or minus 1 inch from required elevations.

3.11 FIELD QUALITY CONTROL

A. Compaction density testing will be performed on compacted fill in accordance with ASTM

D1556, ASTM D2167, ASTM D2922, or ASTM D3017.

B. Results will be evaluated in relation to compaction curve determined by testing uncompacted material in accordance with ASTM D698 ("standard Proctor"), ASTM D1557 ("modified Proctor"), or AASHTO T 180.

C. If tests indicate work does not meet specified requirements, remove work, replace and retest at no cost to Owner.

D. Frequency of Tests: 1 test for each 200 feet of trench for the first and every other lift of compacted trench backfill not including pipe bedding.

3.12 CLEANING

A. Leave unused materials in a neat, compact stockpile.

B. Remove unused stockpiled materials, leave area in a clean and neat condition. Grade stockpile area to prevent standing surface water.

C. Leave borrow areas in a clean and neat condition. Grade to prevent standing surface water.

**END OF SECTION 31 23 16.13**

# SECTION 31 23 16.26

# ROCK REMOVAL

## PART 1 GENERAL

### 1.01 RELATED DOCUMENTS

A. State of Maine Department of Transportation, "Standard Specifications," Revision December 2002, and any revisions thereto, apply to this Section. If the Contractor discovers any ambiguity, error, omission, conflict, or discrepancy, Section 10 1. 3.6 Priority of Conflicting Contract Documents shall control.

1. Drawings and general provisions of the Contract, and Division 1 Specification Sections, apply to this Section.

2. Any supplements to any of the above specifications and or standards issued prior to issuance of this Project Manual, apply to this section.

### 1.02 SECTION INCLUDES

A. Furnish the labor, materials and equipment necessary to identify, remove, and properly dispose all bedrock within the proposed excavation limits in accordance with the requirements of this Section, including the following:

1. Rock Removal - All rock blasting and rock removal using drill and blast techniques, including blasting for rock cuts, foundations, drainage features and utilities. The blasting shall be performed in accordance with the requirements of this Section. The Contractor shall employ controlled blasting procedures in order to maintain ground vibrations and airblast overpressures below the maximum levels specified in this Section and to minimize stressing and fracturing of the rock beyond the limits of the excavations, footing elevation subgrades, and utility trenches shown on the Drawings. The Contractor's proposed blasting methods, procedures, sequence and data to show compliance with these specifications shall be described in a blasting plan submitted prior to blasting operations and meeting the requirements of paragraph 3.04 of this Section.
2. Condition Surveys - The Contractor shall perform pre-blast condition surveys of all structures and improvements of adjoining properties within at least 500 feet of any blast as described in paragraph 3.03.A. If a complaint of alleged blasting related damage is made by a nearby property owner during construction, perform additional condition surveys as described in paragraph 3.03.B.
3. Test Blasts - At the commencement of production blasting and presplit blasting, the Contractor shall conduct the first blast events as test blast events using small charges to establish a site specific relationship between charge, weight, distance and response in accordance with the requirements of paragraph 3.06.F.2.
4. Blast Monitoring - A monitoring program of blasting vibrations shall be performed by the Contractor during construction in accordance with the requirements of paragraph 3.09. All blast monitoring performed by the Contractor shall be readily available for review by the Engineer and Owner. A minimum of three (3) seismographs shall be used to monitor blast vibrations and air blast overpressure levels.
5. Blasting Records - A blasting log summarizing the details of the round as shot, weather conditions, blast proximity to nearby structures, location of monitoring instruments and measured vibration data shall be maintained and reported in accordance with the requirements of paragraph 3.08.

B. Disposal of blasted rock and cleaning of exposed bedrock surfaces shall be completed by the Contractor in a location and manner approved by the Owner.

1.03 RELATED REQUIREMENTS

A. Section 31 23 23 - Fill: Fill materials.

B. Section 31 23 16.13 - Trenching for site utilities

1.04 PRICE AND PAYMENT PROCEDURES

A. Mass Rock Removal: By the cubic yard measured before disintegration. Includes preparation of rock for removal, explosive and mechanical disintegration of rock (mechanical disintegration of rock shall consist of the use of a hoe ram/hammer for removal), removal from position, loading and removing from site. For over excavation, payment will not be made for over excavated work nor for replacement materials. Mass rock shall include the removal of material from the surface of ledge to the subgrade elevation. Subgrade shall be defined as the bottom of the aggregate subbase gravel in paved areas, the bottom of aggregate base gravel in sidewalk areas, the bottom of the loam in seeded areas, or to 1 foot below finished floor elevation.

B. Trench Rock Removal: By the cubic yard measured before disintegration. Includes preparation of rock for removal, explosive and mechanical disintegration of rock ( mechanical disintegration of rock shall consist of the use of a hoe ram/hammer for removal), removal from position, loading and removing from site. For over excavation, payment will not be made for over excavated work nor for replacement materials. Trench rock shall include the removal of ledge below subgrade elevation to six inches below invert elevations of pipe and footings.

C. The contractor shall include the following quantities of Rock Removal in their base bid:
   1. Pay Item 203.21 Mass Rock: 100 cubic yards
   2. Pay Item 203.211 Trench Rock: 100 cubic yards

D. During the execution of the contract, the Contract Amount shall be adjusted for actual yardage of rock removal authorized by the Owner in excess or below the quantities depicted above based upon the following:
   1. For quantities in excess of those presented above, the Contract Amount shall be adjusted by the addition of the excess quantity of rock removal based upon the unit price of $35 per cubic yard for mass rock excavation and $80 per cubic yard for trench rock excavation.
   2. For quantities which result in a total excavation below those presented above, the Contract Amount shall be adjusted by a credit to the Owner at the unit price of $30 per cubic yard for mass rock excavation and $75 per cubic yard for trench rock excavation.

1.05 REFERENCES

A. NFPA 495 - Explosive Materials Code; National Fire Protection Association; 2006.

B. Geotechnical Engineering Study (Soils Report) by S.W. Cole Engineering, Inc. dated November 7, 2013: Geotechnical Engineering Services, MaineDOT BGS Fleet Services, 66 Industrial Drive, Augusta, Maine.

1.06 DEFINITIONS

A. Rock: Solid formations of sedimentary, igneous or metamorphic material within the design lines of the excavation with a volume in excess of 2 cubic yard which cannot be loosened or broken by means of mechanical ripping. Frozen materials are not classified as rock.

B. Trench Rock: Solid mineral material with a volume in excess of 2 cubic yard or solid material that cannot be removed with an excavator without drilling or blasting. Rock removable by

ripping or by hammer shall not be designated as trench rock.

C. Blasting: The use of explosive materials with procedures and techniques to limit ground vibration, flyrock, permanent ground displacement, air concussion, and overbreak, so as to prevent damage to existing structures, services and utilities.

D. Non-Blasting Methods: Methods consisting of line drilling, broaching, hydraulic splitting, use of expansive agents or other mechanical means of rock removal and shall be used where rock removal is required within 5 feet of sensitive structures.

E. Controlled Blasting: The controlled use of explosives and blasting accessories in carefully spaced and aligned drill holes to produce a smooth, free surface, or shear plane, in the rock along the specified backslope. Acceptable controlled blasting techniques include presplitting, cushion blasting, line drilling, and smooth-wall blasting. Controlled blasting is used to protect adjacent structures, minimize damage to the rock backslope, and provide long term stability.

F. Close-In Blasting: Controlled Blasting for rock removal within 30 feet of sensitive structures identified by the Engineer or Owner.

G. Presplit Blasting: Presplit blasting refers to the blasting to produce stress relief involving a single row of blastholes, drilled along a neat excavation line, where detonation of explosives in the hole causes shearing of the web of rock between the blastholes. Presplit blastholes are fired in advance of the production blastholes.

H. Blasting Operation: All activities related to Blasting including collering and drilling of holes; preparing, fixing, and firing of explosive charges; handling of misfires; and the removal and disposal of blasted material.

I. Flyrock: The throw of fragmented material in response to the firing of explosive charges.

J. Air Concussion/Air Blast Overpressure: The propagation of pressure waves through the atmosphere imparted by firing explosive charges.

K. Peak Particle Velocity: Peak Particle Velocity (PPV) shall mean the greatest of three peak velocity components (millimeters per second units) measured at any point, with the three components being measured in the vertical and mutually perpendicular horizontal directions.

L. Overbreak: The fragmentation or removal of material beyond the design limits of the Blasting excavation as shown on the Drawings. Overbreak is considered a non-paid excavation.

## 1.07 SUBMITTALS

A. Submittals Due With Bid
   1. Excavation Method: Submit proposed method of excavation. If the proposed excavation method would require a different shape, or excavation method from that shown on the drawings or described.
   2. Experience: Submit blaster's experience with the proposed excavation method. Documentation shall include but not be limited to descriptions of completed work involving close-in blasting adjacent to sensitive structures and controlled blasting near existing structures, equipment and utilities which required minimizing charge weight per delay, vibrations and dynamic ground motion.

B. Advance Submittals and Notifications
   1. Qualifications: Qualifications in accordance with the provisions of paragraph 1.07 shall be submitted for the Blasting Contractor conducting blasting operations and for the independent Seismologist or Blasting Consultant performing pre-blast surveys and

vibration monitoring.

a. Blasting Contractor - Within two weeks after award of bid, written evidence of the names, licensing, experience and qualifications of the blasters who shall be responsible for and perform the loading and firing of each shot shall be submitted to the Owner. If different, the name and qualifications of the person responsible for designing and directing the blasting operation shall also be submitted.
b. Seismologist or Blasting Consultant - Within two weeks after award of bid the name and resume of qualifications of the independent Seismologist or Blasting Consultant proposed for use in conducting pre-blast condition surveys and monitoring blast vibrations shall be submitted to the Owner. A sample of a previous condition survey and vibration analysis or report shall be included with the qualifications.

2. Permits and Registrations: Copies of the following permits, certifications and registrations shall be submitted within two weeks after award of bid: the applicable State and local blasting permit for the project; Bureau of Alcohol, Tobacco, Firearms and Explosives License; Federal Department of Transportation Explosive Transportation License; and Commercial Drivers Licenses (CDL) showing Hazmat certifications for truck drivers transporting explosives.
3. Appropriate Regulations: Within two weeks after award of bid, submit copies of all appropriate regulations pertaining to blasting-related activities. These regulations shall include, but not be limited to the codes, standards and regulations listed in paragraph 1.08.
4. Blasting Plan: At least three weeks prior to commencing drilling and blasting operations, submit a blasting plan providing complete details of proposed blasting and construction operations in accordance with the blasting plan requirements described in paragraph 3.04.
5. Blasting Schedule: Submit a blasting schedule in accordance with the requirements of paragraph 3.05 at least two weeks prior to commencing blasting operations.
6. Certificate of Insurance: Prior to commencing any drilling and blasting operations, submit a Certificate of Insurance in accordance with the requirements of paragraph 1.10.
7. Preblast Meeting: The submittals pertaining to blasting methods and monitoring will be discussed at a Preblast Meeting to be held at the site. At the Preblast Meeting an overall blasting procedure will be determined. The Preblast Meeting will be scheduled to occur at least two weeks prior to commencement of drilling and blasting operations. Owner will schedule the meeting so that Owner, stakeholders and adjacent property owners can attend.

C. Submittals and Notifications During Blasting Operations

1. Notification of Individual Blasts: During construction coordinate the blasting schedule with Owner and provide notifications in accordance with the requirements of paragraph 3.05.B.
2. Blasting Log: A blasting log summarizing details of the round as shot, weather conditions, proximity of the blast location to nearest structures, exact locations of monitoring instruments, and the results of blast monitoring at each instrument location shall be maintained daily for every blast. Specific information to be included on the log is described in paragraph 3.08. The blasting log shall be available for inspection on-site and shall be submitted in writing to Owner within 24 hours following each blast.
3. Explosive Inventory Logs: A record of explosives deliveries and usages shall be maintained and shall be made available to Owner upon request.
4. Blast Monitoring Reports: Blast monitoring data obtained by the independent Seismologist or Blasting Consultant shall be available for inspection on-site and shall be submitted in writing to Owner (as part of the blasting log) within 24 hours following each blast. In the event of a ground vibration or air blast limit is exceeded, the blasting contractor shall notify the Owner by telephone immediately following the blast.

1.08 QUALITY ASSURANCE

A. The Blasting Contractor shall be a company specializing in explosives for disintegration of rock. The Blasting Contractor shall have all appropriate licenses and registrations necessary to conduct the work, including, but not limited to, those described in paragraph 1.06.B.2. The blaster and/or foreman responsible for the loading and firing of each shot, as well as the person responsible for designing and directing the blasting operation, shall have at least five years documented experience with similar work responsibilities. The person responsible for detonating explosives in all blasting operations shall have a valid Maine blaster's registration and handler's registration. If controlled blasting, close-in blasting or non-blasting methods are required, these individuals shall have at least five years of documented experience in controlled blasting, close-in blasting, and/or non-blasting techniques as warranted.

B. Seismologist or Blasting Consultant: The Contractor shall be required to retain an independent Seismologist or Blasting Consultant to perform condition surveys prior to an during blasting operations, and to monitor, record, analyze, and report the seismic vibrations and airblast pressures being caused by blasting activities. The Seismologist or Blasting Consultant shall have at least five years of documented experience conducting condition surveys for blasting operations and shall be experienced in the subject of vibrations emanating from construction activities. The Seismologist or Blasting Consultant shall not be an employee of the Contractor, subcontractor, explosives manufacturer, or explosives distributor. The Seismologist or Blasting Consultant shall be present at the site of the blasting during all blasts. The Seismologist or Blasting Consultant shall provide and use all necessary equipment to observe and record vibrations to ascertain that acceptable levels of vibrations are not exceeded. The Seismologist or Blasting Consultant shall monitor, report findings, and submit recommendations to Owner in accordance with the requirements of this Specification.

1.09 REGULATORY REQUIREMENTS

A. Comply without limitation to the provisions of all applicable codes, standards and regulations including, but not limited to, the following:
   1. National Fire Protection Association (NFPA): 495 Code for the Manufacture, Transporation, Storage and Use of Explosive Materials.
   2. "Manual of Accident Prevention in Construction" issued by the Associated General Contractors of America, Inc.
   3. State of Maine Statute Title 25, Part 6, Chapter 318, Subchapter 1, Explosives (Heading: PL 1999, c. 652, Section 9 (new)), December 31, 2006.
   4. Occupational Safety and Health Act (OSHA) of 1970 (Public Law 91-596 of the United States, 29 USC Section 651 et. seq.).
   5. Occupational Safety and Health Act (OSHA) of 1970, Code of Federal Regulations, Title 29 - Labor, Part 1926 - Safety and Health Regulations for Construction, Subpart U - Blasting and the Use of Explosives.
   6. Code of Federal Regulations, Title 49 - Transportation (USDOT), Part 172 - Hazardous Materials Table, Special Provisions, Hazardous Materials Communications, Emergency Response Information, and Training Requirements.
   7. Code of Federal Regulations, Title 27 - Bureau of Alcohol, Tobacco, Firearms and Explosives (ATFE), Department of Justice, Part 555 - Commerce in Explosives (Safe Explosives Act, Title XI, Subtitle C of Public Law 107-296, i.e., "The Orange Book").
   8. Applicable provisions of laws, rules, ordinances, and regulations of Federal, State and the local government concerning the transportation, onsite storage, handling and use of explosives.

B. In case of conflict between regulations or between regulations and the requirements of this

Specification, the Contractor shall comply with the strictest applicable codes, regulations or Specifications.

C. Conform to applicable code for explosive disintegration of rock and to NFPA 495 for handling explosive materials.

D. Obtain permits from authorities having jurisdiction before explosives are brought to site or drilling is started.

E. Due to the proximity of surface water bodies, the Contractor shall exercise special precautions to minimize the production of nitrite and ammonia from blasting operations. The Contractor shall use water-resistant explosives. The Contractor shall not use chlorate or perchlorate explosives. The Contractor shall use best management practices while loading explosives, including prompt clean-up of any spilled explosive products. Blastholes containing standing water prior to explosive loading must have the standing water removed prior to loading.

1.10 SAFETY PRECAUTIONS AND WARNING SIGNALS

A. During the blasting operation the Contractor shall be responsible for control of access in and around the general blasting area.

B. All persons within 500 feet of the blasting area shall be notified of "warning" and "all clear" signals through notices left in mailboxes and signs posted in the area.

C. During the progress and approach of a thunderstorm, the handling or use of explosives shall be discontinued and all personnel shall be moved to a place of safety until the danger has passed. The Contractor is strongly advised to use a lightning detector when appropriate.

D. Prior to a blast, equipment, traffic and all other persons located within 500 feet of the blast perimeter shall be evacuated from the work area or moved to a place of safety to ensure work area safety and shall not be released until the blasting foreman issues the "all clear" signal.

E. A series of air horn warnings shall be issued to warn of an imminent blast as follows: 3 horn signals at 5 minutes prior to blast; 2 horn signals at 1 minute prior to blast; 1 horn signal after the blast to signal "all clear" conditions once the shot has been checked for any misfires.

F. Explosives shall be stored, handled and employed in accordance with Federal, State and local regulations and in accordance with NFPA 495, except where stricter requirements are contained elsewhere herein, such requirements shall govern.

G. No explosives, caps, detonators, and fuses shall be stored on the site during non-working hours.

H. Notify each public utility company having structures in the proximity to the work site, of the impending use of explosives and give sufficient advance notice to enable the companies to take such steps as they deem necessary to protect their property from injury.

1.11 RESPONSIBILITY FOR BLASTING OPERATIONS

A. Review of the Contractor's blasting submittals by Owner will not relieve the Contractor of its responsibility for: the accuracy, adequacy, and safety of the blasting; exercising proper supervision and field judgement; preventing damage to structures; and producing results in accordance with this Specification and the regulations and ordinances of federal, state and local governments. The Contractor shall be solely and completely responsible for the safety of all persons and property during the performance of its work. The Contractor shall take whatever measures it deems necessary, in addition to the requirements herein, to protect the safety of persons and property, both at the construction site and away from the site. The Contractor shall have full and complete responsibility for the handling, discharging, or settling of any and all

damage or annoyance claimes resulting from the blasting activities on the project. Any monitoring and/or review of the Contractor's procedures and performance conducted by Owner shall not relieve the Contractor of its responsibility for safety at and away from the site, or for preventing damage to adjacent structures or property. Per the State of Maine Explosives Statute (Section 2473 Permits; Requirements - 2. Financial Responsibility), the Contractor shall carry liability insurance (XCU) in an amount no less than $2,000,000. A certificate of insurance documenting the coverage and naming Owner, Owner's representative, Engineer and their consultants as additional insured shall be submitted prior to commencing any drilling and blasting operations.

1.12 INDEMNITY

A. Notwithstanding full compliance with these specifications, approval of blasting plan, and successful limitation to maximum peak particle velocity and air blast overpressure as specified herein, the Contractor shall be solely responsible for any damage, direct or indirect, arising from blasting and shall hold harmless Owner, Owner's representative, Engineer and their consultants from any costs, liens, charges, claims or suits, including the costs of defense arising from any direct or indirect damage, including environmental damage, real or alleged from blasting.

PART 2 PRODUCTS

2.01 MATERIALS

A. Explosives: Use water-resistant, packaged explosives. Do not used chlorate or perchlorate explosives. Type of water-resistant packaged explosives shall be that recommended by explosives firm and required by authorities having jurisdiction. All explosives and accessories shall be used and assembled in accordance with manufacturer's recommendations.

B. Delay Device: Type recommended by explosives firm.

C. Blast Mat Materials: Type recommended by explosives firm.

D. Stemming: Inert material consisting of angular crushed rock having an average diameter of 0.05 times the diameter of the blast hole. Drill cuttings may be used in presplit blastholes only, provided the contractor places earth 3 feet high above the presplit line after loading. Drill cuttings may not be used for stemming in production blastholes.

E. Seismographs: Type, manufacturer and serial numbers of seismographs proposed to be used, including calibration records, and proposed locations and coupling methods (see paragraph 3.09).

PART 3 EXECUTION

3.01 EXAMINATION

A. Verify site conditions and note subsurface irregularities affecting work of this section.

3.02 PREPARATION

A. Identify required lines, levels, contours, and datum.

3.03 CONDITIONS SURVEYS

A. Preblast condition surveys: The preblast survey shall document the conditions of existing buildings within at least 500 feet of the limit of blasting work. The preblast survey shall be completed by the independent Seismologist or Blasting Consultant. The survey shall include documentation of interior subgrade and above grade accessible walls, ceilings, floors, roof, and visible exterior as viewed from the grade level. It shall detail the existing structural, cosmetic,

plumbing and electrical condition and shall include all walls, and not be limited to areas in buildings showing existing damage. Where significant cracks or damage exist, or for defects too complicated to describe in words, photographs shall be taken. A good quality videotape survey with appropriate audio description of locations, conditions, and defects can be used. Notes and sketches may be made to highlight or enhance the photographic documentation. The condition report shall present engineering notes and photographs or video records. The report shall also summarize the condition of each building and define areas of concern, including deteriorated structures or utilities, structures housing sensitive equipment (e.g. computers and sensing equipment), and/or manufacturing processes that are sensitive to vibrations.

B. Condition Surveys During Construction: If a nearby property owner submits a complaint regarding alleged blasting related damages during construction, the independent Seismologist or Blasting Consultant shall conduct a second condition survey of the property within 48 hours of receiving the complaint to identify any changes in the property conditions. This survey shall be conducted with same level of detail, care and diligence as the pre-blast condition survey.

3.04 BLASTING PLAN

A. Submit a drilling pattern and loading plan, referred herein as a blasting plan, in accordance with the schedule described in paragraph 1.06.B.5. The blasting plan shall be submitted for review and shall contain details of the proposed rock excavation and blasting operations. No drilling or blasting shall take place until approval is received. The blasting plan shall include the following:
   1. The sequence and schedule of blasting rounds, including the general approach for developing each bedrock excavation area.
   2. A diagrammatic description of the typical controlled or close-in blasting pattern to be used, including presplitting pattern if presplitting is required.
   3. Diameter, spacing, burden, depth and orientation of each drill hole relative to the "free face" along with details of the delay pattern.
   4. A diagrammatic description of the loading plan for a typical production hole and if presplitting is required on the project, for a typical presplit hole. This description shall include:
      a. Diameter, spacing, burden depth and orientation of each drill hole.
      b. Type and nomenclature of detonators and delay pattern.
      c. Type, nomenclature and weight per cartridge of explosives to be used, and weight and distribution of charge to be used within each hole, as well as total weight of explosive charge on each delay, and the total weight for the blast round.
      d. Type and distribution of stemming to be used in each hole.
   5. Estimation of ground vibration levels at nearest adjacent structures.
   6. Methods of matting the blast area to prevent flyrock and excessive air blast pressure.
   7. A description of the blasting warning signals, blasting warning signal signs, and procedures to be used to clear personnel from the site area. The description shall include the use of posted guards to ensure no persons enter the blasting zone prior to the all-clear signal.
   8. A procedure for mitigating misfires.
   9. An emergency response plan.
   10. A procedure describing the procedures employed to clean-up spilled explosive products.
   11. Written evidence of the licensing, experience, and qualifications of the blaster who will be directly responsible for the loading and firing of each shot.
   12. A listing of instrumentation which the Contractor and the independent Seismologist or Blasting Consultant proposes to use to monitor vibrations and, together with performance specifications and users manual supplied by the manufacturers, and a recent calibration (within the previous 12 months).
   13. A description of the criteria to be used for locating vibration monitoring instrumentation

for each blast.

14. A copy of the blasting permit obtained to conduct blasting on the site (if required).

B. The blasting plan shall form the basis for all blasting operations on the project. If, in the judgement of the Owner, Engineer or the Contractor, changes in the plan appear to be necessary, drilling or blasting operations shall be suspended and a revised plan shall be submitted reflecting the proposed changes.

3.05 BLASTING SCHEDULE

A. Prepare and submit a projected project blasting schedule at least 10 business days prior to commencing blasting operations. The schedule shall, at a minimum, include the following:
   1. Name, address and phone number of blaster, including mobile phone (if applicable).
   2. Identification of specific blasting areas.
   3. Planned dates and times of blasts.
   4. Methods to restrict access in the blast area and warning whistle announcements.

B. During construction, coordinate the blasting schedule with Owner on a weekly basis. A minimum of 24 hours prior to a planned detonation, the Contractor shall notify the Owner of the planned time of the blast (+ or - one hour), location where the blasting is to be done, and the amount of explosives to be used. At least 24 hours prior to any blast, inform by telephone all property owners who have requested to be so informed, of the impending blast stating the time of the blast (+ or - one hour).

3.06 EXCAVATION METHODS

A. General: Rock excavation shall be accomplished by blasting, cutting, wedging, barring, hammering, mechanical ripping, or a combination thereof. Select and be responsible for methods and procedures to be used except as hereinafter provided.

B. Scaling and Doweling: The rock slopes shall be thoroughly scaled to the satisfaction of the Owner. All rock that is on the cut face that is loose, hanging or which creates a potentially dangerous situation shall be removed or stabilized to Owner's satisfaction during or upon completion of the excavation of each lift. In the event that more than one excavation lift is required, drilling of the next lift will not be allowed until this work has been completed. If in-place stabilization is required, as determined by Owner, rock doweling or other approved stabilization techniques will be used. Stabilization necessitated, in the opinion of the Owner, by Contractor's blasting operations, shall be performed at Contractor's expense. Such stabilization may include, but not necessarily limited to, laying back the slope, rock bolting or shotcreting.

C. Rock Excavation Limits and Overblast Mitigation: All necessary precautions shall be taken in blasting operations to preserve the rock outside the lines of excavation in the soundest possible condition. Blasting shall be done only to the lines and grades shown on the Drawings. Where overbreak occurs at slopes, footing locations or other project structures, the overblasted rock shall be completely removed. The over-excavated area shall be stabilized as described in paragraph 3.06.B, or backfilled with controlled low-strength material (CLSM: flowable fill) or Drainage Stone in accordance with the requirements of Division 31 Section "Fill".

D. Excavations for Buried Utilities: In utility trenches, excavate as indicated on the Drawings.

E. Cleaning of Rock Surfaces: The Contractor shall, in areas designated by Owner, clean rock surfaces exposed during excavation to permit a thorough inspection and assessment of the rock by Owner. Cleaning of rock surfaces shall consist of the removal of all organic materials, soil, and loose rock. Cleaning may be done with high pressure air jets, water jets, brooms or by any other method acceptable to Owner.

F. Blasting Procedures:
   1. Hours of Blasting: Blasting shall be limited to the hours of 9:00 AM to 4:00 PM, Monday through Friday. No blasting will be permitted on weekends or legal holidays unless specifically approved.
   2. Test Blast: At the commencement of production and presplit blasting, conduct the first production and presplit blast events as test blasts using small charges to establish a site specific relationship between charge weight, distance and response. Develop site specific scaled distance relationships from the test blast round to determine the allowable charge weight of explosives to be detonated per delay which will result in a minimum of overbreak, a minimum of shattering or loosening of rock beyond the excavation limits, and which will produce sound and reasonably uniform surfaces in the completed excavations. The scaled distance (Ds) shall be the distance from the charge to the recording seismograph (D), divided by the square root of the explosive charge (W^0.5). Following the presplit test blast, the Contractor shall expose the presplit rock cut face so Owner's representative can observe the condition of the rock face and determine if the Contractor's presplit blasting methods are satisfactory. If the presplit methods are not satisfactory, Contractor will suspend presplit blasting until a revised presplit blasting plan showing the Contractor's design changes is reviewed and approved by Owner's representative.
   3. Blasthole Diameter: Blasthole diameters for production blasting and controlled blasting shall not exceed 3.5 inches. Blasthole diameters for presplit blasting shall not exceed 2.5 inches.
   4. Controlled Blasting: Controlled blasting refers to the controlled use of explosives and blasting accessories in carefully spaced and aligned drill holes, to produce a smooth, free surface, or shear plane, in the rock along specified backslope. For blasting within 75 feet of existing structures and permanent rock cut slopes controlled blasting techniques shall be required along the excavation perimeter to protect nearby structures, obtain a stable rock frace, and provide long term stability. Acceptable controlled blasting techniques include presplitting, cushion blasting, line drilling, and smooth-wall blasting. Presplitting is required for all permanent rock cut slopes equal to or greater than 5 feet in height. Rock cut slopes where presplitting is required are shown on the Drawings.
   5. Close-In Blasting of Solid Rock Removal by Non-Blasting Methods: The removal of rock within 30 feet of sensitive structures shall be accomplished using close-in blasting or non-blasting methods. Close-in blasting shall consist of controlled blasting in accordance with methods and monitoring approved by Owner. Non-blasting methods shall consist of line drilling, broaching, hydraulic splitting, use of expansive agents or other mechanical means of rock removal and shall be used where rock removal is required within 5 feet of sensitive structures.
   6. Presplit Blasting: Presplit blasting refers to the blasting to produce stress relief involving a single row of blast holes, drilled along a neat excavation line, where detonation of explosives in the hole causing shearing of the web of rock between the blast holes. Presplit blast holes are fired in advance of the production blast holes.
      a. Unless otherwise permitted by Engineer, Contractor shall completely remove all overburden soil and loose or decomposed rock along the top of the excavation for a distance of at least 30 feet beyond the edge of the production hole drilling limits or to the end of the cut, before drilling presplit holes. Potentially dangerous boulders or other material located beyond the excavation limits shall be removed as designated by Engineer.
      b. Contractor shall control drilling operations by the use of proper equipment and technique to insure that no presplit blast hole shall deviate from the plane of the planned slope by more than 9 inches either parallel or normal to the slope. Presplit

holes exceeding these limits shall not be paid for unless, in the Engineers opinion, satisfactory slopes are being maintained. Presplit holes shall be drilled within 3 inches of the staked collar location. If more than 5 % of the presplit holes are outside the 3 inch tolerance, they will be filled with crushed stone, stemmed and redrilled. All drilling equipment used to drill the presplit holes shall have electro-mechanical or electronic devices affixed to that equipment to accurately determine the angle at which the drill steel enters the rock. Presplit hole drilling will not be permitted if these devices are either missing or inoperative.

c. Presplit hole locations shall extend a minimum of 30 feet beyond the limits of the production holes to be detonated, or to the end of the cut as applicable. The length of the presplit holes for any individual lift shall not exceed 30 feet unless the Contractor can demonstrate to the Engineer that the tolerances can be adhered to and a uniform slope will be maintained. When the cut height will require more than one lift, a maximum 24 inch offset between lifts shall be permitted to allow for drill equipment clearances. Drilling 24 inches below ditch bottom will be allowed to facilitate removal of the toe berm.

d. The maximum diameter of explosive used in presplit holes shall not be greater than 1/2 the diameter of the presplit hole. Bulk ammonium nitrate and fuel oil (ANFO) shall not be allowed to be loaded in presplit holes. Only standard explosives manufactured especially for presplitting shall be used in presplit holes. The bottom charge of a presplit hole may be larger than the line charges but shall not be large enough to cause overbreak. The top charge of the presplitting hole shall be placed far enough below the collar, and reduced sufficiently, to avoid overbreaking and heaving.

e. The upper portion of all presplit holes, from the topmost charge to the hole collar, shall be stemmed. Stemming materials shall be a dry angular granular material such as crushed stone passing the 3/8 inch seive. Drill cuttings may be used as stemming in presplit holes only if Contractor places a 3 foot height of earth over the presplit holes.

f. Contractor may either fire the presplit holes before drilling production blast holes or fire the slope face and production holes at the same time, provided the presplit holes are fired a minimum of 25 milliseconds (ms) before the nearest production hole is fired. Presplit holes can be delayed to reduce ground vibrations and noise, providing the hole-to-hole delay is no more than 25 ms.

g. The presplit slope face shall not deviate more than 12 inches from a plane passing through adjacent drill holes except where the character of the rock is such that, as determined by the Engineer, irregularities are unavoidable. The 12 inch tolerance shall be measured perpendicular to the plane of the slope.

7. Fly Rock Control: Before the firing of any blast, the rock to be blasted shall be covered with blasting mats. Mats shall be placed for every blast over the entire loaded area and shall restrict all fly rock from leavign the perimeter of the blast area covered by blasting mats. If blasted rock is permitted to escape the blasting mats, all blast-related activities shall be stopped. The Contractor shall prepare a report describing why rock was allowed to be ejected, and how such events will be prevented in the future. In order to proceed with any further blast related activity, written permission shall be obtained. These provisions do not relieve the Contractor from all responsibility for the safety of his own personnel, the safety of the general public, as well as damage to structures.

8. Overbreak Control at Perimter Areas: When blasting at the perimeter of the excavations, care shall be taken at the excavation limits to minimize overbreak and fracturing of remaining rock. If necessary, presplitting or cushion blasting shall be utilized at such locations.

3.07 VIBRATIONS AND AIR BLAST LIMITS

A. Ground Vibration: Ground vibration from all blasting operations shall be measured in terms of peak particle velocity (inches per second), in any of the three mutually perpendicular components of particle velocity, and frequency (Hertz).
   1. Existing Structures: The permissible maximum ground vibration at temporary and permanent structures existing on and offsite shall not exceed 2 inches per second maximum peak particle velocity (PPV) for frequencies 40 Hz or greater, and shall not exceed 0.75 inches per second for frequencies below 40 Hz.
   2. New Concrete: Vibration limits for blasting within 6 m (20 feet) of new concrete are as follows:

| | Age of Concrete | Maximum PPV (mm/s) |
|---|---|---|
| a. | Age of Concrete | Maximum PPV (mm/s) |
| b. | Less than 3 days | No blasting allowed |
| c. | After 3 days | 25 |
| d. | After 5 days | 45 |
| e. | After 7 days | 50 |

   3. Underground Utilities: The maximum PPV of ground vibrations for underground utilities shall not exceed 2 inches per second. Buried pipelines and other utilities owned by private utility companies are sometimes subject to lower limiting values imposed by Owner. The Contractor shall verify the maximum allowable PPV of ground vibrations allowed by the individual utilities.
   4. Deteriorated structures or utilities, structures housing sensitive equipment and/or manufacturing processes that are sensittive to vibrations may required lower PPV limits than those indicated above. If information obtained from the pre-blast surveys indicates lower limits are required at certain structures, the independent Seismologist or Blasting Consultant will identify the lower limits applicable to a specific structure, and the blasting contractor shall incorporate such provisions in the features of the blasting plan applicable to this site area.

B. Airblast Overpressure: The peak airblast overpressure at any inhabited building will not be allowed to exceed 133 decibels (linear; dBL) when measured by an instrument with a high pass system and a lower frequency limit of 2 Hz. The equivalent maximum allowable airblast overpressure is 0.013 psi.

C. In the event the Contractor's blasting round results in ground vibrations or airblast overpressures approaching the stated limits, the Owner may require the Contractor to modify the blasting operations to reduce ground vibrations and overpressures. In the event the Contractor's blasting round results in ground vibrations or airblast overpressures exceeding the stated limits at structures or locations, the Contractor shall cease all blasting activities and submit a written report to Owner. This report shall discuss the corrective action to be taken on the next shot and the next shot shall not be loaded until the Owner acknowledges in writing, that a design change is being attempted.

## 3.08 BLASTING RECORDS

A. A blasting log summarizing details of every blast round as shot shall be maintained daily. The blasting log shall include detailed information concerning the specific drilling and loading for each blast and the results of blast monitoring by the independent Seismologist or Blasting Consultant. Blast monitoring requirements are described in Section 3.09. The blasting log must be available for inspection on-site, and shall be submitted in writing within 24 hours following each blast. Specific information to be included in the log includes:
   1. Name of blasting company, name of blaster, and blaster's signature responsible for the blast.
   2. Location, date and time of the blast.
   3. Weather conditions including such factors as wind direction, temperature and cloud cover.

4. Number and spacing of drill holes; burden and row spacing; and stemming type and length.
5. Diameter and depth of drill holes.
6. Type of material blasted.
7. Type of explosives used (trade name and manufacturer).
8. Total weight of explosives used.
9. Maximum weight of explosives used per delay period of 8 milliseconds or greater.
10. Maximum number of holes per delay period of 8 milliseconds or greater.
11. Method of firing and overhead diagram of delay pattern.
12. Type of detonators used and delay periods used (trade name and manufacturer).
13. Types and sizes of blasting mats used.
14. Distance and direction to nearest structure.
15. Scaled distance of nearest structure.
16. The exact location and approximate elevation of each seismograph and the distance from each seismograph to the blast.
17. Vibration and airblast overpressure data from each seismograph, including a strip chart (or other permanent record of velocity/time waveform) with the calibration and monitoring record marked with the date, time and location of the blast, including: resultant PPV (in/s); longitudinal, vertical, and transverse PPV (in/s); frequency (Hz); and peak airblast overpressure (dBL).
18. The name and signature of the person operating each seismograph.
19. The name of the person and firm analyzing the seismograph record.

3.09 BLAST MONITORING

A. Blast monitoring and analysis shall be conducted by the independent Seismologist or Blasting Consultant. A minimum of Three (3) seismograph instruments shall be used to monitor vibrations and airblast overpressures for each blast. Seismograph locations for each blast shall comply with the criteria described in the blasting plan.

B. All vibration monitoring instruments used on the project shall comply with the following requirements:
   1. Velocity range: 0.005 to 10.0 inches per second.
   2. Seismic frequency range: 2 to 250 Hz, within zero to -3 dB of an ideal flat.
   3. Acoustic frequency range: 2 to 250 Hz flat, -3 dB at 2 Hz + or - 1 dB.
   4. Airblast range: 100 to 140 dB (linear).
   5. Measure, display, and provide a permanent time history record of the event, including both ground vibration and airblast overpressure.
   6. Measure the three mutually perpendicular components of particle velocity in directions vertical, radial, and perpendicular to the vibration source.
   7. The seismograph shall display and provide a record of: the date and time of the event; the Blasting Contractor's name; the locatio of the seismograph and of the blast; trigger levels; verification the instrument was set for "continuous" and not "manual" readings; instrument serial number; and the date of the most recent calibration.
   8. The seismograph shall be calibrated as often as necessary, but at least once every 12 months and must be performed to a standard traceable to the National Institute of Standards and Technology.

C. Blast monitoring data obtained by the independent Seismologist or Blasting Consultant shall be available for inspection on-site, and shall be submitted in writing and in electronic format as part of the blasting log (paragraph 3.08) within 24 hours following each blast.

**This page left intentionally blank**

**END OF SECTION 31 23 16.26**

# SECTION 31 23 23

# FILL

## PART 1 GENERAL

### 1.01 RELATED DOCUMENTS

A. State of Maine Department of Transportation, "Standard Specifications," Revision December 2002, and any revisions thereto, apply to this Section. If the Contractor discovers any ambiguity, error, omission, conflict, or discrepancy, Section 10 1. 3.6 Priority of Conflicting Contract Documents shall control.

1. Drawings and general provisions of the Contract, and Division 1 Specification Sections, apply to this Section.
2. Any supplements to any of the above specifications and or standards issued prior to issuance of this Project Manual, apply to this section.

### 1.02 SECTION INCLUDES

A. Filling holes, pits, and excavations generated as a result of removal (demolition) operations.

B. Construct embankments with excavated subsoil and borrow.

C. Prepare subsoil and borrow to receive subbase and base gravels and topsoil materials.

D. Place, grade, and compact subbase and base gravels to receive pavement.

E. Compaction requirements.

F. Dust control.

### 1.03 RELATED REQUIREMENTS

A. Geotechnical Engineering Study (Soils Report) by S.W. Cole Engineering, Inc. dated November 7, 2013.

B. Section 31 22 00 - Grading: Removal and handling of soil to be re-used.

C. Section 31 22 00 - Grading: Site grading.

D. Section 31 23 16 - Excavation: Removal and handling of soil to be re-used.

E. Section 31 23 16.13 - Trenching: Excavating for utility trenches outside the building to utility main connections.

F. Section 31 23 16.26 - Rock Removal: Removal of rock during excavating.

### 1.04 PRICE AND PAYMENT PROCEDURES

A. Measurement and payment will be as follows:

B. Pay Item 203.24 Common Borrow: Pay Unit – Cubic Yard.

C. Pay Item 203.25 Granular Borrow: Pay Unit – Cubic Yard.

D. Pay Item 203.29 Crushed Stone: Pay Unit – Cubic Yard.

E. Pay Item 203.291 Structural Fill: Pay Unit – Cubic Yard.

F. Pay Item 304.10 Aggregate Subbase Course Gravel - Type D: Pay Unit - Cubic Yard.

G. Pay Item 656.71 Level Lip Spreader/Sediment Forebay: Pay Unit – Cubic Yard.

H. Pay Item 616.08 Sod: Pay Unit – Square Yard.

I. Basis of Payment: Provisions of Section 304 of the "State of Maine, Department of Transportation, Standard Specifications, Revisions of December, 2002" or Specification Section 31 23 23 of the contract documents, whichever is stricter, shall apply. The accepted quantity of Subbase Course Gravel – Type D will be paid for at the contract unit price per Cubic Yard.

The accepted quantity of Common Borrow will be paid for at the contract unit price per Cubic Yard. Common Borrow shall be used in fill situations unless otherwise noted.

The accepted quantity of Granular Borrow will be paid for at the contract unit price per Cubic Yard. Granular Borrow shall be used for pond berm construction unless otherwise noted.

The accepted quantity of Crushed Stone will be paid for at the contract unit price per Cubic Yard. Crushed Stone shall be used in pond construction unless otherwise noted.

The accepted quantity of Structural Fill will be paid for at the contract unit price per Cubic Yard.

The accepted quantity of Level Lip Spreader will be paid for at the contract unit price per Cubic Yard. Pay item 656.71 shall also include sediment forebay stone berms. The geotextile membrane shall be incidental to Item 656.71 and no separate payment will be made.

Provisions of Section 616 of the "State of Maine, Department of Transportation, Standard Specifications, Revisions of December, 2002" shall apply. The accepted quantity of Sod will be paid for at the contract unit price per Square Yard complete and in place.

1.05 REFERENCE STANDARDS

A. AASHTO T 180 - Standard Specification for Moisture-Density Relations of Soils Using a 4.54 kg (10-lb) Rammer and a 457 mm (18 in.) Drop; American Association of State Highway and Transportation Officials; 2010.

B. ASTM C136 - Standard Test Method for Sieve Analysis of Fine and Coarse Aggregates; 2006.

C. ASTM D698 - Standard Test Methods for Laboratory Compaction Characteristics of Soil Using Standard Effort (12,400 ft-lbf/ft3 (600 kN-m/m3)); 2012.

D. ASTM D1556 - Standard Test Method for Density and Unit Weight of Soil in Place by the Sand-Cone Method; 2007.

E. ASTM D1557 - Standard Test Methods for Laboratory Compaction Characteristics of Soil Using Modified Effort (56,000 ft-lbf/ft3 (2,700 kN m/m3)); 2012.

F. ASTM D2167 - Standard Test Method for Density and Unit Weight of Soil in Place by the Rubber Balloon Method; 2008.

G. ASTM D2487 - Standard Practice for Classification of Soils for Engineering Purposes (Unified Soil Classification System); 2011.

H. ASTM D 2922 - Standard Test Methods for Density of Soil and Soil-Aggregate in Place by Nuclear Methods (Shallow Depth); 2005.

I. ASTM D3017 - Standard Test Method for Water Content of Soil and Rock in Place by Nuclear Methods (Shallow Depth); 2005.

J. ASTM D4318 - Standard Test Methods for Liquid Limit, Plastic Limit, and Plasticity Index of

Soils; 2010.

1.06 SUBMITTALS

A. Submittals shall be provided by the contractor at least 2 weeks in advance of imported fill use.

B. Samples: 75 lb sample of each type of fill; submit in air-tight containers to testing laboratory.

C. Materials Sources: Submit name of imported materials source.

Fill Composition Test Reports: Results of laboratory tests on proposed and actual materials used. The results from the following tests shall be submitted:
1. Moisture and density relationship: ASTM D 1557 or D 698 as required by the Geotechnical Engineering Study (soils report).
2. Mechanical Analysis AASHTO T-88.
3. Mechanical Analysis AASHTO T-88.

1.07 DELIVERY, STORAGE, AND HANDLING

A. When necessary, store materials on site in advance of need.

B. When fill materials need to be stored on site, locate stockpiles where indicated.
1. Separate differing materials with dividers or stockpile separately to prevent intermixing.
2. Prevent contamination.
3. Protect stockpiles from erosion and deterioration of materials.

PART 2 PRODUCTS

2.01 FILL MATERIALS

A. Subsoil: Reused meeting the requirements of Common Borrow.

B. Common Borrow: MDOT 703.18; Earth suitable for embankment construction, free from frozen material, perishable rubbish, peat, organics and other unsuitable material, with sufficient moisture content to provide the required compaction and stable embankment, moisture content shall not exceed 4 percent above optimum. Determine optimum moisture content in accordance with ASTM D698 (cohesive soils) or D1557 (granular soils).

C. Granular Borrow: MDOT 703.19; Mixture of sand, gravel, and silt or reclaimed asphalt, concrete, brick, crushed rock that is crushed and blended with sand, free from vegetable matter, lumps or balls of clay and other deleterious substances. The gradation of that portion passing a 3 inch sieve shall meet the following requirements:
1. No. 40 sieve: 0 to 70 percent passing by weight.
2. No. 200 sieve: 0 to 10 percent passing by weight.
3. Granular borrow shall contain no particles or fragments with a maximum dimension in excess of one-half of the compacted thickness of the layer being placed. Granular Borrow shall not contain particles of rock which will not pass the 6 inch square mesh sieve.

D. Aggregate Subbase: MDOT 703.06 Type 'D' gravel, of hard durable particles free from vegetable matter, lumps or balls of clay and other deleterious substances. The gradation of that part that passes a 3 inch sieve shall meet the following requirements:
1. 1/4 inch sieve: 25 to 70 percent passing by weight
2. No. 40 sieve: 0 to 30 percent passing by weight
3. No. 200 sieve: 0 to 7 percent passing by weight
4. Type D aggregate shall not contain particles of rock which will not pass the 6" square mesh sieve.

E. Structural Fill: Clean granular material free from organic matter, contaminants, frozen material, and other deleterious substances. Maximum particle sizes should not exceed two thirds of the proposed loose lift thickness. The material shall meet the following gradation.
   1. 3 inch sieve: 100 percent passing by weight
   2. 1/4 inch sieve: 25-75 percent passing by weight
   3. #40 sieve: 0-30 percent passing by weight
   4. #200 sieve: 0-5 percent passing by weight

F. Type B Underdrain Backfill (MaineDOT Section 703.22): Granular material shall be free of organic matter and shall meet the following gradation.
   1. 1 inch sieve: 95-100 percent passing by weight
   2. ½ inch sieve: 75-100 percent passing by weight
   3. No. 4 inch sieve: 50-100 percent passing by weight
   4. No. 20 sieve: 15-80 percent passing by weight
   5. No. 50 sieve: 0-15 percent passing by weight
   6. No. 200 sieve: 0-5.0 percent passing by weight

G. Type C Underdrain Backfill (MaineDOT Section 703.22): The material shall meet the following gradation.
   1. 1 inch sieve: 100 percent passing by weight
   2. ¾ inch sieve: 90-100 percent passing by weight
   3. 3/8 inch sieve: 0-75 percent passing by weight
   4. No. 4 sieve: 0-25 percent passing by weight
   5. No. 10 sieve: 0-5 percent passing by weight

H. Topsoil: Either stripped from site or imported, friable loam: free of subsoil, large clods, lumps, roots, grass, excessive amounts of weeds, stone and foreign matter 2" or greater and smaller stones in excessive quantities as determined by the Owner. Material shall conform to the requirements of MaineDOT Standard Specifications Section 615.02.

2.02 ACCESSORIES

A. Woven Geotextile Fabric: Non-biodegradable, Mirafi 500x or 600x or approved equivalent, as noted on the plans.

B. Non-Woven Geotextile Fabric: Non-biodegradable, Mirafi 160n or approved equivalent.

C. Water for sprinkling: Fresh and free from oil, acid, and injurious alkali or vegetable matter.

D. Calcium chloride: ASTM D98 commercial grade except as waived by Owner.

2.03 SOURCE QUALITY CONTROL

A. Where fill materials are specified by reference to a specific standard, test and analyze samples for compliance before delivery to site.

B. If tests indicate materials do not meet specified requirements, change material and retest at no cost to owner.

C. Provide materials of each type from same source throughout the Work.

PART 3 EXECUTION

3.01 EXAMINATION

A. Verify that survey bench marks and intended elevations for the Work are as indicated.

B. Identify required lines, levels, contours, and datum locations.

C. See Section 31 22 00 for additional requirements.

D. Examine the areas and conditions under which excavating and filling is to be performed and notify owner in writing of conditions detrimental to proper and timely completion of work.

E. Correct unsatisfactory conditions in a manner acceptable to owner prior to proceeding with work.

F. Verify subdrainage, dampproofing, or waterproofing installation has been inspected.

G. Verify structural ability of unsupported walls to support imposed loads by the fill.

H. Verify underground tanks are anchored to their own foundations to avoid flotation after backfilling.

I. Comply with the requirements contained within this specification section, the contract drawings, and the recommendations contained within the Geotechnical Engineering Study (soils report). In the event of conflicting requirements, the more stringent standard shall apply

3.02 PREPARATION

A. Proofroll subgrade surface to identify soft spots.

B. Cut out soft areas of subgrade not capable of compaction in place. Backfill with structural fill or equivalent above the groundwater table, or crushed stone or equivalent below the groundwater table.

C. Identify known underground utilities. Stake and flag locations. Locate and protect utilities to remain.

D. Identify and flag surface and aerial utilities.

E. Notify utility companies of work to be done.

F. Compact subgrade to density equal to or greater than requirements for subsequent fill material.

G. Until ready to fill, maintain excavations and prevent loose soil from falling into excavation.

3.03 FILLING

A. Fill to contours and elevations indicated using unfrozen materials.

B. Topsoil and pavement shall be removed from proposed fill and pavement areas.

C. Proofroll subgrade using a 10 ton vibratory roller-compactor unless otherwise noted, any areas that continue to yield after 3 to 5 passes of the compaction equipment shall be over excavated and replaced with clean granular fill in dry non-freezing conditions and structural fill in other conditions.

D. Pavement subgrade shall consist of structural fill compacted to at least 95 percent of its maximum dry density as determined by ASTM D-1557.

E. Landscape subgrade shall consist of common fill compacted to at least 90 percent of its maximum dry density as determined by ASTM D-1557.

F. Place and compact fill materials in continuous layers not exceeding 12 inches loose depth upon compacted material.

G. Fill up to subgrade elevations unless otherwise indicated.

H. Employ a placement method that does not disturb or damage other work.

I. Systematically fill to allow maximum time for natural settlement. Do not fill over porous, wet, frozen or spongy subgrade surfaces.

J. Maintain optimum moisture content of fill materials to attain required compaction density.

K. Slope grade away from building minimum 2 inches in 10 ft, unless noted otherwise. Make gradual grade changes. Blend slope into level areas.

L. Correct areas that are over-excavated.
   1. Pavement areas: Use structural fill above the groundwater table, and crushed stone below the groundwater table. Fill flush to required elevation, compacted to 95 percent of maximum dry density.
   2. Other areas: Use granular fill, flush to required elevation, compacted to minimum 95 percent of maximum dry density. Use crushed stone as necessary to backfill wet areas of over excavation.

M. Compaction Density Unless Otherwise Specified or Indicated:
   1. Under paving, slabs-on-grade, and similar construction: 95 percent of maximum dry density.
   2. At other locations: 90 percent of maximum dry density.

N. Reshape and re-compact fills subjected to vehicular traffic.

O. Leave stockpile areas completely free of excess fill materials.

P. Frost:
   1. Do not excavate to full indicated depth when freezing temperatures may be expected unless fill material or structures can be constructed immediately after the excavation has been completed. Protect the excavation from frost if placing of fill or structure is delayed.
   2. Fill shall not be placed over frozen soil. Soil that is frozen shall be removed prior to placement of compacted fill. Remove all frozen uncompacted soil prior to placing additional fill for compaction.

Q. Native soils can undergo substantial strength loss when subjected to construction traffic and excavation activities, particularly during periods of precipitation and shallow groundwater levels. Care must be exercised to minimize disturbance of the bearing soils. Should the subgrade become yielding or difficult to work, disturbed areas shall be excavated and backfilled in accordance with Section 3.04 L.

R. Clean granular soil meeting the structural fill gradation shall be provided to a depth of 5.0 feet below the top of entrance slabs and sidewalks in contact with the structure. The thickness of structural fill shall extend horizontally from the structure outward to a point at least one foot beyond the width of the slab or sidewalk, or for a distance of 12 feet, whichever is less. The structural fill shall have a gradual transition up to the bottom of the adjacent subbase at a 1V to 3H slope or flatter.

## 3.04 CONSTRUCTION OF AGGREGATE BASE AND SUBBASE COURSE

A. Place and compact aggregate base and subbase course materials in continuous layers not exceeding 12 inches loose depth upon compacted material, unless noted otherwise.

B. Employ a placement method so not to disturb or damage structures and utilities.

C. Spread well mixed materials having no pockets of either fine or coarse material.

D. Do not segregate large or fine particles.

E. Compact by mechanical means to obtain 95 percent of maximum dry density as determined in accordance with ASTM D-1557. Base course material shall be compacted with a minimum of two passes with self propelled vibratory compaction equipment.

F. Maintain surface, compaction and stability until pavement course has been placed.

G. Conform to elevations, contours, dimensions, line and grade shown on the Drawings.

3.05 DUST CONTROL

A. Upon request of Owner, implement the following dust control measures:
   1. Apply water and calcium chloride as directed by Owner.
   2. Spread calcium chloride uniformly over designated area.
   3. Apply water with equipment having a tank with pressure pump and nozzle equipped spray bar acceptable to Owner.

3.06 TOLERANCES

A. Top surface of base and subbase course: Plus or minus 3/8 inch.

3.07 FIELD QUALITY CONTROL

A. Provide for visual inspection of load-bearing excavated surfaces before placement of foundations.

B. Compaction density testing will be performed by the Owner on compacted fill in accordance with ASTM D1556, ASTM D2167, ASTM D2922, or ASTM D3017.

C. Results will be evaluated in relation to compaction curve determined by testing uncompacted material in accordance with ASTM D698 ("standard Proctor"), ASTM D1557 ("modified Proctor"), or AASHTO T 180.

D. If tests indicate work does not meet specified requirements, remove work, replace and retest at no cost to Owner.

E. Frequency of Tests:
   1. Building subgrade areas, including 10 feet outside exterior building lines: In fill areas, not less than one compaction test on each lift for every 2,500 square feet. Proofroll cut areas.
   2. Areas of construction exclusive of building subgrade: In fill areas, not less than one compaction test on each lift for every 10,000 square feet. Proofroll cut areas.

3.08 CLEANING

A. Remove unused stockpiled materials, leave area in a clean and neat condition. Grade stockpile area to prevent standing surface water.

B. Leave borrow areas in a clean and neat condition. Grade to prevent standing surface water.

3.09 ATTACHMENT

A. Geotechnical Engineering Study (Soils Report)

**This page left intentionally blank**

**END OF SECTION 31 23 23**

# REPORT

November 7, 2013
13-0520 S

## Geotechnical Engineering Services

MaineDOT BGS Fleet Services
66 Industrial Drive
Augusta, Maine

PREPARED FOR:
Allied Engineering, Inc.
Attention: William P. Faucher, P.E., LEED AP, RRC
160 Veranda St.
Portland, Maine 04103

PREPARED BY:
S. W. Cole Engineering, Inc.
555 Eastern Avenue
Augusta, Maine 04330
(207) 626-0600

S.W.COLE ENGINEERING, INC.

- *Geotechnical Engineering*
- *Construction Materials Testing*
- *GeoEnvironmental Services*
- *Ecological Services*

www.swcole.com

## TABLE OF CONTENTS

1.0 INTRODUCTION ..... 1
1.1 Scope and Purpose ..... 1
1.2 Proposed Construction ..... 1
2.0 EXPLORATION AND TESTING ..... 2
2.1 Explorations ..... 2
2.2 Testing ..... 3
3.0 SITE AND SUBSURFACE CONDITIONS ..... 3
3.1 Site Conditions ..... 3
3.2 Soil Conditions ..... 3
3.3 Groundwater Conditions ..... 4
3.4 Frost and Seismic Considerations ..... 4
4.0 EVALUATION AND RECOMMENDATIONS ..... 5
4.1 Foundation Options and Discussion ..... 5
4.2 Settlement and Stability Analyses ..... 6
4.2.1 Settlement Analysis ..... 6
4.2.2 Slope Stability Analysis ..... 6
4.3 Site and Subgrade Preparation ..... 7
4.3.1 General Site ..... 7
4.3.2 Buried Utilities ..... 7
4.4 Excavation and Dewatering ..... 7
4.5 Foundation Design ..... 8
4.6 Slab-on-Grade Floors ..... 9
4.7 Foundation Drainage ..... 9
4.8 Entrances, Sidewalks and Exterior Slabs ..... 10
4.9 Embankment Construction ..... 10
4.10 Fill Materials and Compaction ..... 11
4.11 Pavements ..... 12
4.12 Stormwater Management Areas ..... 13
4.13 Weather Considerations ..... 14
4.14 Design Review and Construction Testing ..... 14
5.0 CLOSURE ..... 15

| | |
|---|---|
| Attachment A | Limitations |
| Sheet 1 | Exploration Location Plan |
| Sheets 2 through 25 | Exploration Logs |
| Sheet 26 | Key to the Notes and Symbols |
| Sheets 27 and 28 | Laboratory Test Results |
| Sheet 29 | Foundation Underdrain Detail |

13-0520 S

November 7, 2013

Allied Engineering, Inc.
Attention: William P. Faucher, P.E., LEED AP, RRC
160 Veranda St.
Portland, Maine 04103

Subject: Geotechnical Engineering Services
MaineDOT BGS Fleet Services
66 Industrial Drive
Augusta, Maine

Dear Bill:

In accordance with our Agreement dated September 17, 2013, S. W. Cole Engineering, Inc. (S.W.COLE) has made a subsurface investigation and geotechnical evaluation for the Maine Department of Transportation (MaineDOT) Bureau of General Services (BGS) Fleet Services project at 66 Industrial Drive in Augusta, Maine. The contents of this report are subject to the limitations set forth in Attachment A.

## 1.0 INTRODUCTION

### 1.1 Scope and Purpose

The purpose of our services was to obtain subsurface information at the site in order to provide geotechnical recommendations for foundations, earthwork and pavements associated with the proposed construction. Our scope of services included coordination and observation of 15 test borings and ten test pits, soils laboratory testing, a geotechnical analysis of the subsurface findings and preparation of this report.

### 1.2 Proposed Construction

We understand MaineDOT is planning to renovate an existing building and develop an approximately 40 acre site for the relocation of MaineDOT and BGS Fleet Services, MaineDOT Region 2 Offices, BGS Surplus Property and OIT Radio Operations. Based

on the provided plans, we understand the proposed development will consist of renovations and three new additions to an existing 61,500 square foot (SF) warehouse building and the construction of a new approximately 49,500 SF building in an undeveloped parcel located south of the existing building. Based on our site observations, the undeveloped parcel is currently heavily forested with several lower lying wet areas. Details regarding the proposed finish floor elevations (FFE's) and structural loading were not available at the time of this report. However, we anticipate the proposed additions to the existing building will match the existing structure and the proposed new building FFE will be within about 1-foot of the proposed exterior finish grade elevation of 211 feet. Based on the existing and proposed site grading, we anticipate tapered fills of up to 4 feet and cuts up to 4 feet will be needed to achieve the proposed building additions and new building grades. We anticipate the new building and the additions will likely be steel-famed with masonry exterior.

Additionally, we understand a paved access drive, paved and gravel-surfaced parking and laydown areas as well as stormwater management areas are proposed around the structures. We understand proposed site grading indicates fills of up to 5 feet and cuts of up to 4 feet could be required to achieve site grades. We understand stormwater management areas are proposed on the southern and southeasterly edges of the site with invert depths at about elevations 193 and 200 feet, respectively, requiring cuts of up to 14 feet.

Proposed and existing site features are shown on the "Exploration Location Plan," attached as Sheet 1.

## 2.0 EXPLORATION AND TESTING

### 2.1 Explorations

Fifteen test borings (B-1 through B-15) were made at the site on September 30 and October 1, 2013 by Great Works Test Boring (GWTB) of Gorham, Maine working under subcontract to S.W.COLE. Ten test pits (TP-1 through TP-10) were made at the site on October 2, 2013 by Landworks Excavation, LLC of Winthrop, Maine working under subcontract to S.W.COLE. The exploration locations were selected and located in the field by S.W.COLE using a mapping grade GPS unit. Borings B-1 through B-7 and Test Pit TP-10 were made for the proposed building additions and existing paved areas and

Borings B-8 through B-15 and Test Pits TP-1 through TP-9 were made for the proposed new development. The approximate exploration locations are shown on the "Exploration Location Plan" attached as Sheet 1.

Logs of the explorations are attached as Sheets 2 through 25 and a key to the notes and symbols used on the logs is attached as Sheet 26. Elevations shown on the exploration logs were estimated based on interpolation between existing contours shown on Sheet 1.

### 2.2 Testing

The test borings were made using auger and cased, rotary-wash drilling techniques. Soil sampling was generally performed at 5-foot intervals using a split spoon sampler and Standard Penetration Testing (SPT) methods. Where softer cohesive soils were encountered, Shelby Tube samples were obtained using a piston sampler and Vane Shear Testing (VST) was performed to evaluate in-situ soil strength. SPT and VST results are shown on the attached logs.

Soil samples obtained from the test borings were returned to our laboratory for classification and testing. Laboratory testing was performed on selected samples recovered from the explorations. The results of one grain size analysis and a one-dimensional consolidation test are attached as Sheets 27 and 28, respectively.

## 3.0 SITE AND SUBSURFACE CONDITIONS

### 3.1 Site Conditions

The proposed site consists of an existing building and development at 66 Industrial Drive and a 40 acre, heavily wooded and undeveloped property on the southern side of the existing development. The ground surface is hummocky with several lower lying wet areas and appears to have been logged in the past.

### 3.2 Soil Conditions

Building Additions and Existing Pavements: Explorations within the existing developed area generally encountered a surface layer of asphalt pavement or topsoil overlying loose to medium dense, brown silty sand with varying amounts of gravel to depths of about 1.5 to 4.0 feet followed by medium stiff to stiff, brown clayey silt to about 6 to

11 feet becoming medium stiff to soft, gray silty clay to about 38 feet followed by loose, gray sand with some silt and silty clay seams.

New Building: Explorations within the proposed new building area generally encountered a surface layer of forest duff overlying loose, brown silt with varying amounts of sand and clay to depths of about 3.0 to 5.5 feet followed by stiff to medium stiff, brown clayey silt to about 8.5 to 11 feet becoming medium stiff to soft, gray silty clay to about 36 to 43.5 feet followed by granular soils. Where sampled, the granular soils were observed to consist of dense gray silty sand and gravel with cobbles (glacial till).

Paved and Gravel Surfaced Areas: Explorations within the proposed paved and gravel surfaced areas generally encountered a surface layer of forest duff overlying brown sand with varying amounts of silt to depths of about 2 to 6 feet followed by gray silt with varying amounts of sand and clay.

Stormwater Management Areas: Explorations within the stormwater management areas generally encountered a surface layer of forest duff overlying brown silt with varying amounts of sand to depths of about 10.0 to 12.5 feet followed by gray silty clay.

Please refer to the attached exploration logs for more detailed subsurface information.

### 3.3 Groundwater Conditions

At the time of our explorations, groundwater was observed in B-5 through B-13 and B-15 at depths of 6.5 to 11 feet. Considering the low permeability of the underlying clayey soils, we anticipate the surficial soils will be saturated on a seasonal basis with a groundwater table near the ground surface. It should be anticipated that seasonal groundwater levels will fluctuate, especially in response to periods of snowmelt and heavy precipitation.

### 3.4 Frost and Seismic Considerations

The 25-year Air Freezing Index for the Augusta, Maine area is about 1,400 Fahrenheit degree-days, which corresponds to a frost penetration depth on the order of 5.0 feet.

Based on the findings at the test borings, we interpret the site soils to correspond to Seismic Site Class E in accordance with IBC 2012 (N-value and Shear Strength methods). Further, information obtained during our subsurface explorations indicates liquefaction of soils is not a design consideration.

## 4.0 EVALUATION AND RECOMMENDATIONS

### 4.1 Foundation Options and Discussion

Based on the subsurface findings and our understanding of the proposed construction, it is our opinion the proposed construction appears feasible from a geotechnical standpoint. We offer the following considerations for foundations, utilities, and reuse of site soils:

- Foundations: We anticipate the proposed structure can be supported on shallow spread footing foundations provided the subgrade soils are not disturbed and properly prepared.

  The proposed building additions and new structure are underlain by relatively compressible gray silty clay and will require tapered fills of up to 4 feet to achieve finish grade. Our settlement analysis indicates post-construction settlement could result in up to 1 inch of settlement beneath the new building and proposed additions. Differential settlements across the buildings are estimated to be about ½ inch or less.

  The site has soil limitations that must be considered during design and construction. The native soils are moisture sensitive and subject to strength loss during construction. A smooth-edged bucket should be used to excavate to foundation subgrade.

- Buried Utility Considerations: Based on the subsurface findings, we anticipate utilities located in cut areas and some deeper trench bottoms may encounter the underlying compressible gray silty clays. For this condition, we recommend pipes be supported on at least 12 inches of crushed stone wrapped in geotextile fabric and manholes and buried structures be supported on at least 2 feet of

crushed stone wrapped in geotextile fabric. Excavation to subgrade in the native clays should be made using a smooth-edged bucket.

- Reuse of Site Soils: The native soils are generally unsuitable for reuse as backfill for the building and paved areas. Imported Granular Borrow will be required to raise building and pavement area grades. Imported Structural Fill will be required for foundation backfill and slab base material.

These and other geotechnical recommendations should be taken into consideration during design and construction.

## 4.2 Settlement and Stability Analyses

### 4.2.1 Settlement Analysis

The gray silty clays underlying the site are compressible and will consolidate under the weight of new fills and building loads resulting in post-construction settlement. We have completed an analysis of post-construction settlement considering laboratory consolidation test results and anticipated site grading. For the proposed building and new additions, we estimate total consolidation-related, post-construction settlement could approach 1 inch with differential post-construction settlement approaching a ½ inch. We anticipate this settlement will occur over a period of decades.

### 4.2.2 Slope Stability Analysis

We performed global stability analyses through the proposed wet ponds where a 14-foot deep cut will be needed to achieve grade. The stability calculations were made using a two-dimensional stability model and SLOPE/W computer software. Our global stability analyses utilized a method of slices assuming moment equilibrium, and were based on: 1) our current understanding of the project; 2) visual observations of the site and laboratory testing; 3) information obtained at the explorations and 4) existing and proposed site topography shown on Sheet 1.

Our analyses indicate the safety factor against a deep rotational failure for the proposed wet ponds to be greater than 2.0 for static conditions and 1.3 for seismic conditions. Safety factors of 1.3 are considered acceptable for transient loading conditions. Safety factors of at least 1.5 are considered acceptable for general site slopes for long-term

conditions. Based on our analysis, the factors of safety against a deep rotational failure are at or above the acceptable thresholds for the proposed construction.

## 4.3 Site and Subgrade Preparation

### 4.3.1 General Site

Site preparation should begin with the construction of an erosion control system to minimize siltation into drainage-ways and areas outside the construction limits. The soils that will be exposed are susceptible to erosion. As much vegetation as possible should be allowed to remain undisturbed adjacent to the construction site and when applicable, construction should occur in phases to reduce areas of disturbance and lessen the potential for erosion. Temporary erosion and sediment control such as mulch, erosion control mats, seeding, and sod should be used in soil areas to be exposed for extended periods of time.

Topsoil, stumps and roots, should be removed from the proposed construction areas. Actual grubbing depths to remove topsoil and organics will depend on the contractor's construction methods. A greater grubbing depth may be needed during wet weather periods and in wet areas.

### 4.3.2 Buried Utilities

Based on the subsurface findings and our understanding of the proposed construction, we anticipate deeper buried utilities may encounter soft gray clay at the base of trench excavations. We anticipate medium stiff to soft, gray silty clay or unstable trench bottoms will be encountered in cut areas. We recommend utilities in cut areas be underlain with at least 12-inches of crushed stone wrapped in non-woven geotextile fabric such as Mirafi 160N and structures be founded on at least 2 feet of crushed stone wrapped in Mirafi 160N. Excavations to subgrade in soft gray clay and native brown clayey silts should be completed with a smooth-edged bucket.

## 4.4 Excavation and Dewatering

Excavation work will encounter areas of materials susceptible to strength loss when subjected to construction traffic and excavation activities, particularly during periods of precipitation. Care must be exercised during construction to minimize disturbance of the native soils. Should subgrade soils become soft, yielding or difficult to work, the

subgrade should be over-excavated and backfilled with compacted Structural Fill. Excavation into native soils should be completed with a smooth-edged bucket to lessen subgrade disturbance and low-pressure tracked equipment will be needed until site grades are raised about 3 feet.

The contractor should anticipate the need for dewatering in excavations particularly following periods of precipitation and snow melt. Based on the relatively low permeability of the underlying silty and clayey soils, we anticipate ditching with gravity drainage and sumping and pumping should be adequate to control groundwater seepage in shallow excavations. Deep excavations into native soils may require sheet-piling for groundwater cut-off and excavation support. In all cases, excavations must be properly shored and/or sloped in accordance with OSHA regulations to prevent sloughing and caving of the sidewalls during construction.

## 4.5 Foundation Design

Based on the subsurface findings and our understanding of the proposed construction, we anticipate building footings will be founded on stiff, brown native silty clay transitioning to compacted granular borrow underlain by stiff native clays. For foundations founded on properly prepared subgrades, we recommend the following geotechnical parameters for design of spread footings and foundations:

| Geotechnical Parameters for Spread Footings and Foundation Walls | |
|---|---|
| Design Frost Depth | 5.0 feet |
| Seismic Site Class (IBC 2009, N-value and Vane Shear methods) | E |
| Net Allowable Soil Bearing Pressure | 1.5 ksf or less |
| Unit Weight of Backfill (Structural Fill) | 125 pcf |
| Friction Angle of Backfill (Structural Fill) | 30 deg |
| At-Rest Lateral Earth Pressure Coefficient (Structural Fill) | 0.5 |
| Base Friction Factor (concrete on Granular Borrow) | 0.35 |

We recommend unheated portions of the proposed building be founded on 12 inches of Structural Fill followed by 3 inches of extruded polystyrene insulation with a minimum compressive strength of 40 psi overlying at least 12 inches of compacted Structural Fill underlain by stiff native clays or prepared subgrades.

Wall footings should be at least 18 inches wide and column footings at least 36 inches in least lateral dimension.

## 4.6 Slab-on-Grade Floors

We recommend on-grade concrete floors be supported on a minimum of 12 inches of compacted Structural Fill underlain by compacted granular fills or undisturbed stiff native soils overlying a non-woven geotextile fabric, such as Mirafi 160N or equivalent. On-grade floor slabs founded on properly prepared subgrades may be designed considering a modulus of subgrade reaction of 120 pci. The structural engineer or concrete consultant must design steel reinforcing and joint spacing appropriate to slab thickness and function.

We recommend consideration of a sub-slab vapor retarder, particularly in areas of the building where the concrete slab will be covered with an impermeable surface treatment or floor covering that may be sensitive to moisture vapors, to reduce the potential for floor covering damage from moisture. The vapor retarder shall have a permeance that is less than the floor cover that is applied to the slab. The vapor retarder must have sufficient durability to withstand direct contact with the sub-slab base material and construction activity. The vapor retarder material shall be placed according to the manufacturer's recommended method, including the taping and lapping of all joints and wall connections. The architect and/or flooring consultant should select the vapor retarder products compatible with flooring and adhesive materials.

The floor slab should be appropriately cured using moisture retention methods after casting. Typical floor slab curing methods should be used for at least 7 days. The architect or flooring consultant should assign curing methods consistent with current applicable American Concrete Institute (ACI) procedures with consideration of curing method compatibility to proposed flooring and adhesive materials.

## 4.7 Foundation Drainage

We recommend underdrains be provided near footing grade along the exterior side of perimeter wall footings. We recommend SDR-35 underdrain pipe with perforations of ¼ to ½ inch oriented downward enveloped with at least 6 inches of ¾ inch Crushed Stone drainage aggregate that is wrapped in a non-woven geotextile filter fabric, such as Mirafi 160N or equivalent. The underdrains must have positive gravity outlets protected from

freezing. Exterior foundation backfill should be sealed with a surficial layer of clayey or loamy soil in areas that are not to be paved or occupied by entrance slabs. This is to reduce direct surface water infiltration into the backfill. Ideally, surface grades should be sloped away from the building to shed surface water. General "Foundation Underdrain Detail" is shown on Sheet 29.

## 4.8 Entrances, Sidewalks and Exterior Slabs

Entrances, Sidewalks and Exterior Slabs should be designed to mitigate potentially adverse frost action. We recommend Structural Fill be provided to a depth of at least 5.0 feet below exterior finished grades for entrance slabs and sidewalks abutting building areas. The Structural Fill should extend outward from the building at least 5.0 feet thereafter sloping up to adjacent sidewalk or pavement gravels at a 3(H):1(V) incline. This frost transition will help reduce the potential for abrupt differential movement due to frost action. Details regarding the frost transition zone of Structural Fill below entrance slabs are shown on Sheet 29.

## 4.9 Embankment Construction

We understand several cuts and fills will be needed to achieve finish grade for site fill areas. Embankments constructed on existing soil slopes steeper than 4(H):1(V) should be keyed into the existing ground surface with continuous level benches. We recommend a 10-foot wide bench be cut into the native soil at the toe of slope for fill embankments. A 1-foot thick (minimum) drainage blanket of granular fill should be placed over the initial bench prior to placing embankment fill. Embankments constructed on existing soil slopes flatter than 4(H):1(V) may be constructed without continuous benching.

Soil slopes will be susceptible to surface erosion, slumping and sloughing, particularly during heavy rain and freeze/thaw events. We recommend slope faces be covered with topsoil and seed. Topsoil and seed should be installed, as soon as practicable, to create a vegetated mat over the entire surface of the slope. Slopes that are 2.5(H):1(V) and steeper should be covered with an erosion control fabric. In areas where surface water is concentrated and discharged over the slope, we recommend covering the slope with rip-rap placed over a layer of crushed gravel and a woven filter fabric.

## 4.10 Fill Materials and Compaction

Based on our experience and the subsurface findings, we recommend the use of the following fill materials for construction:

Granular Borrow: A mixture of sand, silt, and gravel or crushed concrete, brick and blasted bedrock that is crushed and blended with sand to create a compactable fill meeting the following gradation:

| GRANULAR BORROW (MAINEDOT 703.22) | |
|---|---|
| Sieve Size | Percent Finer by Weight |
| 6 inch | 100 |
| No. 40 | 0 to 70 |
| No. 200 | 0 to 10 |

Granular Borrow is recommended for use as:

- Backfill to raise site grades up to the bottom of foundations, and paved and gravel area subbase
- Material to construct new embankment fills

Structural Fill: Clean, non-frost susceptible, sand, and gravel free of organics and other deleterious materials meeting the following gradation:

| STRUCTURAL FILL / MAINEDOT 703.06 TYPE C BASE (MODIFIED) | |
|---|---|
| Sieve Size | Percent Finer by Weight |
| 3 inch | 100 |
| ¼ inch | 25 to 75 |
| No. 40 | 0 to 30 |
| No. 200 | 0 to 5 |
| MaineDOT 703.06 Type C Modified to 3-inch max Aggregate | |

Structural Fill is recommended for use as:

- Backfill against foundations and retaining walls
- Backfill within frost transition zone below building entrance slabs
- Fill within frost zone below exterior slabs
- Base gravel below on-grade floor slabs

- Backfill for repair of soft or yielding areas above water table
- Drainage blanket below toe of embankment

Crushed Stone: Crushed, washed, hard, durable rock meeting the gradation requirements for MaineDOT 703.22 Underdrain Backfill Material Type 'C'.

Crushed Stone is recommended for use as:

- 12-inch working mat below buried pipes
- 24-inch working mat below buried structures, manholes and vaults
- Backfill for repair of soft or yielding areas below the water table
- Drainage aggregate around underdrains

Placement and Compaction: Fill should be placed in horizontal lifts and be compacted. Lift thickness should typically range from 6 to 12 inches, but is dependent upon the size and type of equipment such that the desired density is achieved throughout the lift thickness within 3 to 5 passes of the compaction equipment.

We recommend granular fills placed below the building and paved areas be compacted to at least 95 percent of its maximum dry density as determined by ASTM D-1557. Foundation backfill should be compacted to at least 95 percent of ASTM D-1557. Fill within landscape areas should be compacted to at least 90 percent of ASTM D-1557. Crushed stone should be compacted to 100 percent of its dry-rodded unit weight as determined by ASTM C-29.

## 4.11 Pavements

Paved areas will include standard duty (car parking areas) and heavy duty (access drive, truck parking, and truck routes). We recommend the following pavement structures utilizing materials presented in the 2002 Maine Department of Transportation Standard Specifications:

| FLEXIBLE (ASPHALT) PAVEMENTS | | |
|---|---|---|
| **Pavement Layer** | **Standard Duty (Car Parking)** | **Heavy Duty (Access Drives)** |
| HMA Wearing Course, MaineDOT 9.5 mm Superpave or Grade C | 1¼ inch | 1¼ inch |
| HMA Binder Course, MaineDOT 19.0 mm Superpave or Grade B | 2¼ inches | 2¾ inches |
| Crushed Gravel Base, MaineDOT 703.06 Type A | 6 inches | 9 inches |
| Granular Subbase, MaineDOT 703.06 Type D | 12 inches | 15 inches |
| Woven Geotextile Fabric (Mirafi 500X or equivalent) | | |

The base and subbase materials should meet the above specifications and should be compacted to at least 95 percent of their maximum dry density as determined by ASTM D-1557. We recommend granular fills placed below the base and subbase materials be compacted to at least 95 percent of its maximum dry density as determined by ASTM D-1557. Due to the moisture sensitive native subgrade soils and presence of high groundwater, we recommend the use of a woven geotextile fabric, such as Mirafi 500X or equivalent, below paved areas on native silty or clayey soils. The bituminous pavement should be compacted to 92 to 97 percent of its theoretical maximum density as determined by ASTM D-2041. A tack coat should be used between successive lifts of bituminous pavement.

## 4.12 Stormwater Management Areas

Two stormwater management areas are proposed to be constructed on the southerly and southeasterly sides of the proposed development area. Based on existing and proposed grading the stormwater management areas will require cuts of about 4 to 14 feet. We anticipate these excavations will generally encounter stiff, brown silty clay with deeper cuts encountering the medium stiff to soft, gray silty clay. We anticipate the design team will likely desire to use the excavated stiff, brown silty clay as fill for stormwater management berms. These materials may be reused for this purpose provided that they are at a moisture content that is workable for meeting project compaction requirements. Some drying of the native silty clay should be anticipated prior to and during berm construction. Use of these materials will be difficult during periods of wet weather or in winter conditions.

The berm soil should be a material free from organics, frozen matter and other deleterious substances. The berm fill should be compacted to at least 95 percent of its maximum dry density as determined by ASTM D-698. The fill should be compacted at or slightly wet of optimum moisture. The 3(H):1(V) slopes planned for the ponds are susceptible to surface erosion, particularly during heavy rain and freeze/thaw events. Topsoil and seed should be installed, as soon as practicable, to create a vegetated mat over the entire surface of the slope. We recommend consideration of a sand blanket be placed on clayey soils for silt control and turbidity mitigation. We anticipate that erosion control mesh will be used to reinforce the surface soils for the 2.5(H):1(V) and steeper slopes. The erosion control mesh used should be a UV resistant synthetic product.

## 4.13 Weather Considerations

The site soils are sensitive to moisture and frost. As such, these soils can become disturbed during wet and freezing conditions resulting in loss of strength. In all cases, sitework and construction activities should take appropriate measures to protect exposed subgrades. The site soils may require drying and thawing before activities may continue. The contractor should anticipate the need for moisture conditioning of fills to facilitate compaction during dry or wet weather.

Construction activity during wet and cold weather should be undertaken in a manner that considers construction schedule relative to frozen soils. If foundation construction takes place during cold/freezing weather conditions, subgrades, foundations and floor slabs must be protected from freezing conditions. Concrete and fills must not be placed on frozen soil and once placed, the fills and soil beneath structures must be protected from freezing.

## 4.14 Design Review and Construction Testing

S.W.COLE should be retained to review the final design and specifications to determine that our earthwork and foundation recommendations have been properly interpreted and implemented. Additionally, S.W.COLE should be retained to provide supplemental engineering and testing services during the excavation and foundation phases of the project. S.W.COLE should be on-site to observe subgrades prior to fill or concrete placement.

A soils and concrete testing program should be implemented during construction to observe compliance with the design concepts, plans, and specifications. S.W.COLE is available to provide field and laboratory testing services for soil, concrete, steel, masonry, spray-applied fire-proofing, and asphalt construction materials. We would be pleased to provide a scope of services and budget for Special Inspections and Field and Laboratory Testing at the appropriate time.

**5.0 CLOSURE**

It has been a pleasure to be of assistance to you with this phase of your project. We look forward to working with you during the construction phase of the project.

Sincerely,

**S. W. Cole Engineering, Inc.**

Michael A. St. Pierre, P.E.
Geotechnical Engineer

MAS:rec

## Attachment A
## Limitations

This report has been prepared for the exclusive use of Allied Engineering, Inc. for specific application to the MaineDOT BGS Fleet Services project at 66 Industrial Drive in Augusta, Maine. S. W. Cole Engineering, Inc. (S.W.COLE) has endeavored to conduct our services in accordance with generally accepted soil and foundation engineering practices. No warranty, expressed or implied, is made.

The soil profiles described in the report are intended to convey general trends in subsurface conditions. The boundaries between strata are approximate and are based upon interpretation of exploration data and samples.

The analyses performed during this investigation and recommendations presented in this report are based in part upon the data obtained from subsurface explorations made at the site. Variations in subsurface conditions may occur between explorations and may not become evident until construction. If variations in subsurface conditions become evident after submission of this report, it will be necessary to evaluate their nature and to review the recommendations of this report.

Observations have been made during exploration work to assess site groundwater levels. Fluctuations in water levels will occur due to variations in rainfall, temperature, and other factors.

S.W.COLE's scope of services has not included the investigation, detection, or prevention of any Biological Pollutants at the project site or in any existing or proposed structure at the site. The term "Biological Pollutants" includes, but is not limited to, molds, fungi, spores, bacteria, and viruses, and the byproducts of any such biological organisms.

Recommendations contained in this report are based substantially upon information provided by others regarding the proposed project. In the event that any changes are made in the design, nature, or location of the proposed project, S.W.COLE should review such changes as they relate to analyses associated with this report. Recommendations contained in this report shall not be considered valid unless the changes are reviewed by S.W.COLE.

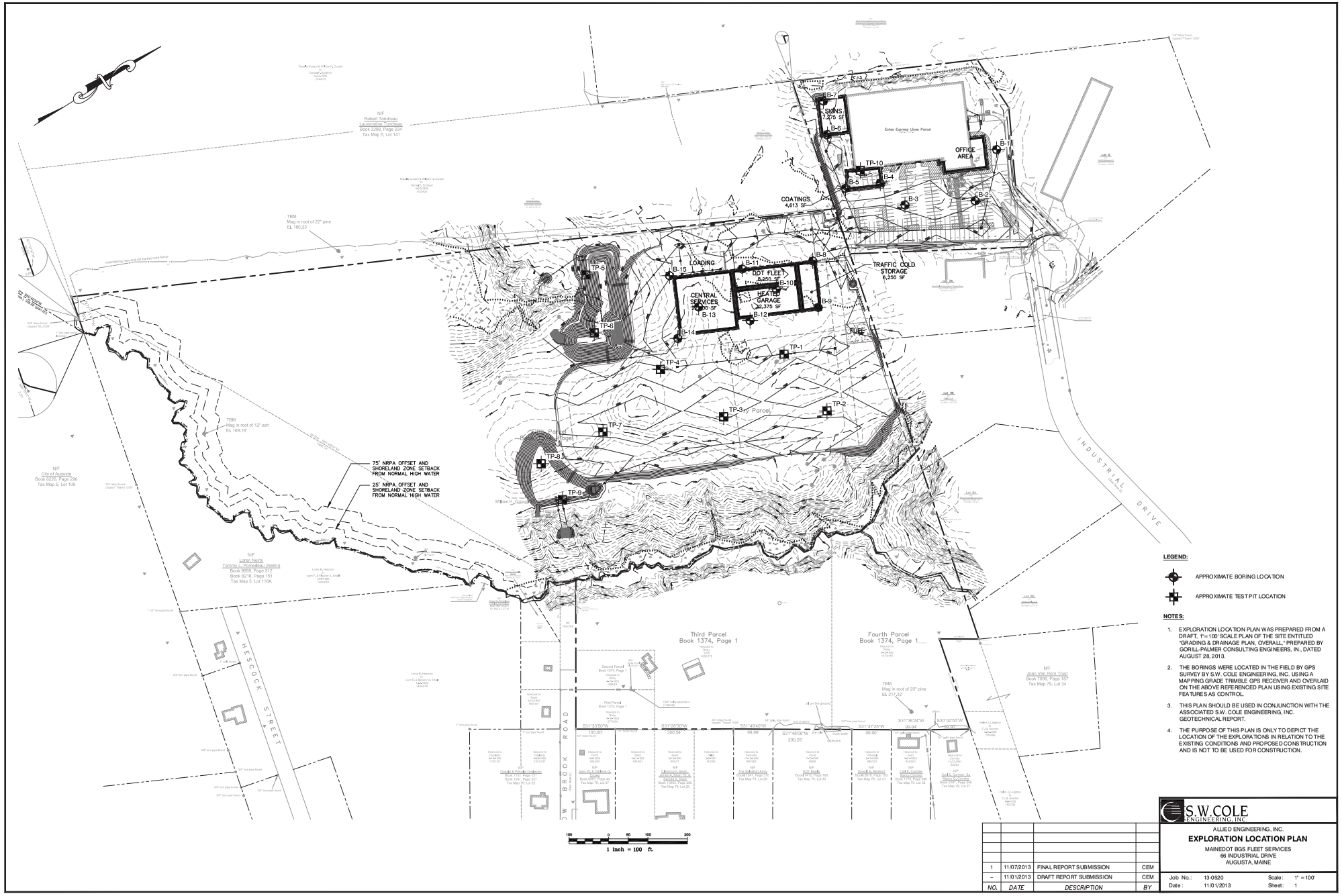


**LEGEND:**

APPROXIMATE BORING LOCATION

APPROXIMATE TEST PIT LOCATION

**NOTES:**

1. EXPLORATION LOCATION PLAN WAS PREPARED FROM A DRAFT, 1"=100' SCALE PLAN OF THE SITE ENTITLED "GRADING & DRAINAGE PLAN, OVERALL" PREPARED BY GORILL-PALMER CONSULTING ENGINEERS, IN., DATED AUGUST 28, 2013.
2. THE BORINGS WERE LOCATED IN THE FIELD BY GPS SURVEY BY S.W. COLE ENGINEERING, INC. USING A MAPPING GRADE TRIMBLE GPS RECEIVER AND OVERLAID ON THE ABOVE REFERENCED PLAN USING EXISTING SITE FEATURES AS CONTROL.
3. THIS PLAN SHOULD BE USED IN CONJUNCTION WITH THE ASSOCIATED S.W. COLE ENGINEERING, INC. GEOTECHNICAL REPORT.
4. THE PURPOSE OF THIS PLAN IS ONLY TO DEPICT THE LOCATION OF THE EXPLORATIONS IN RELATION TO THE EXISTING CONDITIONS AND PROPOSED CONSTRUCTION AND IS NOT TO BE USED FOR CONSTRUCTION.

| NO. | DATE | DESCRIPTION | BY |
|---|---|---|---|
| 1 | 11.07/2013 | FINAL REPORT SUBMISSION | CEM |
| – | 11.01/2013 | DRAFT REPORT SUBMISSION | CEM |

S.W.COLE ENGINEERING, INC.

ALLIED ENGINEERING, INC.

**EXPLORATION LOCATION PLAN**

MAINEDOT BGS FLEET SERVICES
66 INDUSTRIAL DRIVE
AUGUSTA, MAINE

Job No.: 13-0520 Scale: 1" = 100'
Date: 11.01/2013 Sheet: 1

S.W.COLE ENGINEERING, INC.

# BORING LOG

| | |
|---|---|
| BORING NO.: | **B-1** |
| SHEET: | 1 OF 1 |
| PROJECT NO.: | 13-0520 |
| DATE START: | 10/1/2013 |
| DATE FINISH: | 10/1/2013 |
| ELEVATION: | |
| SWC REP.: | A.STRUGATSKIY |

PROJECT / CLIENT: PROPOSED MAINEDOT BGS FLEET SERVICES / ALLIED ENGINEERING, INC.
LOCATION: 66 INDUSTRIAL DRIVE / AUGUSTA, ME
DRILLING CO. : GREAT WORKS TEST BORING DRILLER: JEFF LEE

| | TYPE | SIZE I.D. | HAMMER WT. | HAMMER FALL |
|---|---|---|---|---|
| CASING: | SSA | 2 1/4" O.D. | - | - |
| SAMPLER: | SS | 1 5/8" | 140 LBS | 30" |
| CORE BARREL: | | | | |

WATER LEVEL INFORMATION
NO FREE WATER OBSERVED

| CASING BLOWS PER FOOT | SAMPLE NO. | PEN. | REC. | DEPTH @ BOT | SAMPLER BLOWS PER 6" 0-6 | 6-12 | 12-18 | 18-24 | DEPTH | STRATA & TEST DATA |
|---|---|---|---|---|---|---|---|---|---|---|
| | | | | | | | | | | BROWN SAND AND GRAVEL, TRACE SILT (FILL) |
| | 1D | 24" | 2" | 2.0' | 4 | 5 | 7 | 4 | 1.6' | ~ MEDIUM DENSE ~ |
| | | | | | | | | | | BROWN CLAYEY SILT, SOME FINE SAND |
| | 2D | 24" | 8" | 4.0' | 3 | 3 | 4 | 6 | 4.0' | ~ MEDIUM STIFF ~ |
| | | | | | | | | | | BOTTOM OF EXPLORATION AT 4.0 FEET |

SAMPLES:
D = SPLIT SPOON
C = 2" SHELBY TUBE
S = 3" SHELBY TUBE
U = 3.5" SHELBY TUBE

SOIL CLASSIFIED BY:
[ ] DRILLER - VISUALLY
[X] SOIL TECH. - VISUALLY
[ ] LABORATORY TEST

REMARKS:
STRATIFICATION LINES REPRESENT THE APPROXIMATE BOUNDARY BETWEEN SOIL TYPES AND THE TRANSITION MAY BE GRADUAL.

2

BORING NO.: B-1

S.W.COLE ENGINEERING, INC.

# BORING LOG

| | |
|---|---|
| BORING NO.: | **B-2** |
| SHEET: | 1 OF 1 |
| PROJECT NO.: | 13-0520 |
| DATE START: | 10/1/2013 |
| DATE FINISH: | 10/1/2013 |
| ELEVATION: | |
| SWC REP.: | A.STRUGATSKIY |

PROJECT / CLIENT: PROPOSED MAINEDOT BGS FLEET SERVICES / ALLIED ENGINEERING, INC.
LOCATION: 66 INDUSTRIAL DRIVE / AUGUSTA, ME
DRILLING CO. : GREAT WORKS TEST BORING DRILLER: JEFF LEE

| | TYPE | SIZE I.D. | HAMMER WT. | HAMMER FALL |
|---|---|---|---|---|
| CASING: | HW | 4" | 140 LBS | 30" |
| SAMPLER: | SS | 1 5/8" | 140 LBS | 30" |
| CORE BARREL: | | | | |

WATER LEVEL INFORMATION
NO FREE WATER OBSERVED

| CASING BLOWS PER FOOT | SAMPLE NO. | PEN. | REC. | DEPTH @ BOT | SAMPLER BLOWS PER 6" 0-6 | 6-12 | 12-18 | 18-24 | DEPTH | STRATA & TEST DATA |
|---|---|---|---|---|---|---|---|---|---|---|
| | | | | | | | | | 0.2' | ASPHALT |
| | | | | | | | | | | BROWN GRAVEL WITH SAND AND COBBLES, SOME SILT (FILL) |
| | | | | | | | | | 2.2' | ~ MEDIUM DENSE ~ |
| | 1D | 24" | 18" | 3.5' | 9 | 7 | 4 | 5 | 3.5' | BROWN CLAYEY SILT, SOME FINE SAND ~ STIFF ~ |
| | | | | | | | | | | BOTTOM OF EXPLORATION AT 3.5 FEET |

SAMPLES:
D = SPLIT SPOON
C = 2" SHELBY TUBE
S = 3" SHELBY TUBE
U = 3.5" SHELBY TUBE

SOIL CLASSIFIED BY:

| | |
|---|---|
| | DRILLER - VISUALLY |
| X | SOIL TECH. - VISUALLY |
| | LABORATORY TEST |

REMARKS:

STRATIFICATION LINES REPRESENT THE APPROXIMATE BOUNDARY BETWEEN SOIL TYPES AND THE TRANSITION MAY BE GRADUAL.

3

BORING NO.: B-2

S.W.COLE ENGINEERING, INC.

# BORING LOG

| | |
|---|---|
| BORING NO.: | **B-3** |
| SHEET: | 1 OF 1 |
| PROJECT NO.: | 13-0520 |
| DATE START: | 10/1/2013 |
| DATE FINISH: | 10/1/2013 |
| ELEVATION: | |
| SWC REP.: | A.STRUGATSKIY |

PROJECT / CLIENT: PROPOSED MAINEDOT BGS FLEET SERVICES / ALLIED ENGINEERING, INC.
LOCATION: 66 INDUSTRIAL DRIVE / AUGUSTA, ME
DRILLING CO. : GREAT WORKS TEST BORING DRILLER: JEFF LEE

| | TYPE | SIZE I.D. | HAMMER WT. | HAMMER FALL |
|---|---|---|---|---|
| CASING: | HW | 4" | 140 LBS | 30" |
| SAMPLER: | SS | 1 5/8" | 140 LBS | 30" |
| CORE BARREL: | | | | |

WATER LEVEL INFORMATION
NO FREE WATER OBSERVED

| CASING BLOWS PER FOOT | SAMPLE NO. | PEN. | REC. | DEPTH @ BOT | SAMPLER BLOWS PER 6" 0-6 | 6-12 | 12-18 | 18-24 | DEPTH | STRATA & TEST DATA |
|---|---|---|---|---|---|---|---|---|---|---|
| | | | | | | | | | 0.2' | ASPHALT |
| | | | | | | | | | 1.8' | BROWN GRAVEL WITH SAND, SOME SILT (FILL) ~ DENSE ~ |
| | 1D | 24" | 16" | 2.2' | 7 | 24 | 11 | 8 | | BROWN SILTY SAND, WITH SILT LAYERS |
| | | | | | | | | | 3.5' | ~ MEDIUM DENSE ~ |
| | 2D | 24" | 18" | 4.2' | 5 | 7 | 6 | 5 | 4.2' | BROWN CLAYEY SILT, SOME FINE SAND ~ STIFF ~ |
| | | | | | | | | | | BOTTOM OF EXPLORATION AT 4.2 FEET |

SAMPLES:
D = SPLIT SPOON
C = 2" SHELBY TUBE
S = 3" SHELBY TUBE
U = 3.5" SHELBY TUBE

SOIL CLASSIFIED BY:
[ ] DRILLER - VISUALLY
[X] SOIL TECH. - VISUALLY
[ ] LABORATORY TEST

REMARKS:
STRATIFICATION LINES REPRESENT THE APPROXIMATE BOUNDARY BETWEEN SOIL TYPES AND THE TRANSITION MAY BE GRADUAL.

4

BORING NO.: B-3

S.W.COLE ENGINEERING, INC.

# BORING LOG

| | |
|---|---|
| BORING NO.: | **B-4** |
| SHEET: | 1 OF 2 |
| PROJECT NO.: | 13-0520 |
| DATE START: | 9/30/2013 |
| DATE FINISH: | 9/30/2013 |
| ELEVATION: | |
| SWC REP.: | A.STRUGATSKIY |

PROJECT / CLIENT: PROPOSED MAINEDOT BGS FLEET SERVICES / ALLIED ENGINEERING, INC.
LOCATION: 66 INDUSTRIAL DRIVE / AUGUSTA, ME
DRILLING CO. : GREAT WORKS TEST BORING DRILLER: JEFF LEE

| | TYPE | SIZE I.D. | HAMMER WT. | HAMMER FALL |
|---|---|---|---|---|
| CASING: | HW | 4" | 140 LBS | 30" |
| SAMPLER: | SS | 1 5/8" | 140 LBS | 30" |
| CORE BARREL: | | | | |

WATER LEVEL INFORMATION
WATER OBSCURED BY USE OF DRILLING FLUID

| CASING BLOWS PER FOOT | SAMPLE NO. | PEN. | REC. | DEPTH @ BOT | SAMPLER BLOWS PER 6" 0-6 | 6-12 | 12-18 | 18-24 | DEPTH | STRATA & TEST DATA |
|---|---|---|---|---|---|---|---|---|---|---|
| | | | | | | | | | 0.2' | ASPHALT |
| | | | | | | | | | | BROWN SAND AND GRAVEL, SOME SILT (FILL) |
| | 1D | 24" | 3" | 2.2' | 9 | 14 | 11 | 11 | 2.5' | ~ MEDIUM DENSE ~ |
| | | | | | | | | | | BLUE-GRAY CLAYEY SILT, WITH ORGANICS (REWORKED NATIVE) |
| | | | | | | | | | | ~ SOFT ~ |
| | | | | | | | | | 6.0' | |
| | 2D | 24" | 24" | 7.0' | 1 | 2 | 2 | 5 | | |
| | | | | | | | | | | BLUE/GRAY SILTY CLAY |
| | | | | | | | | | | ~ SOFT ~ |
| | 3D | 24" | 24" | 12.0' | WOH/24" | | | | | WITH OCCASIONAL THIN SAND SEAMS |
| | 1S | 24" | 22" | 17.0' | | | | | | |
| | 1V | 9" | - | 17.8' | 3 1/2"X7" ACKER VANE | | | | | $S_v$ = 0.61 ksf / 0.11 ksf |
| | 1V' | 9" | - | 18.5' | 3 1/2"X7" ACKER VANE | | | | | $S_v$ = 0.68 ksf / 0.10 ksf ~ MEDIUM STIFF ~ |
| | | | | | | | | | 25.0' | |
| | 2V | 9" | - | 25.8' | 3 1/2"X7" ACKER VANE | | | | | $S_v$ = 0.60 ksf / 0.10 ksf |
| | 2V' | 9" | - | 26.5' | 3 1/2"X7" ACKER VANE | | | | | $S_v$ = 0.77 ksf / 0.15 ksf |
| | | | | | | | | | | BLUE/GRAY SILTY CLAY WITH FINE SAND SEAMS |
| | | | | | | | | | | ~ MEDIUM STIFF ~ |
| | 2S | 24" | 20" | 32.0' | | | | | | |
| | 3V | 9" | - | 32.8' | 3 1/2"X7" ACKER VANE | | | | | $S_v$ = 0.87 ksf / 0.13 ksf |
| | 3V' | 9" | - | 33.5' | 3 1/2"X7" ACKER VANE | | | | | $S_v$ = 0.90 ksf / 0.16 ksf |
| | 4D | 24" | 14" | 37.0' | WOR/24" | | | | | |
| | | | | | | | | | 38.0' | |
| | | | | | | | | | | GRAY FINE SAND, SOME SILT, WITH SILTY CLAY SEAMS |
| | | | | | | | | | | ~ LOOSE ~ |

SAMPLES:
D = SPLIT SPOON
C = 2" SHELBY TUBE
S = 3" SHELBY TUBE
U = 3.5" SHELBY TUBE

SOIL CLASSIFIED BY:

| | |
|---|---|
| | DRILLER - VISUALLY |
| X | SOIL TECH. - VISUALLY |
| | LABORATORY TEST |

REMARKS:

STRATIFICATION LINES REPRESENT THE APPROXIMATE BOUNDARY BETWEEN SOIL TYPES AND THE TRANSITION MAY BE GRADUAL.

5

BORING NO.: **B-4**

S.W.COLE ENGINEERING, INC.

# BORING LOG

| | |
|---|---|
| BORING NO.: | **B-4** |
| SHEET: | 2 OF 2 |
| PROJECT NO.: | 13-0520 |
| DATE START: | 9/30/2013 |
| DATE FINISH: | 9/30/2013 |
| ELEVATION: | |
| SWC REP.: | A.STRUGATSKIY |

PROJECT / CLIENT: PROPOSED MAINEDOT BGS FLEET SERVICES / ALLIED ENGINEERING, INC.
LOCATION: 66 INDUSTRIAL DRIVE / AUGUSTA, ME
DRILLING CO. : GREAT WORKS TEST BORING DRILLER: JEFF LEE

| | TYPE | SIZE I.D. | HAMMER WT. | HAMMER FALL |
|---|---|---|---|---|
| CASING: | HW | 4" | 140 LBS | 30" |
| SAMPLER: | SS | 1 5/8" | 140 LBS | 30" |
| CORE BARREL: | | | | |

WATER LEVEL INFORMATION
WATER OBSCURED BY USE OF DRILLING FLUID

| CASING BLOWS PER FOOT | SAMPLE NO. | PEN. | REC. | DEPTH @ BOT | SAMPLER BLOWS PER 6" 0-6 | 6-12 | 12-18 | 18-24 | DEPTH | STRATA & TEST DATA |
|---|---|---|---|---|---|---|---|---|---|---|
| | | | | | | | | | | GRAY FINE SAND, SOME SILT, WITH SILTY CLAY SEAMS |
| | 5D | 24" | 12" | 42.0' | 3 | 2 | 3 | 1 | 42.0' | ~ LOOSE ~ |
| | | | | | | | | | | BOTTOM OF EXPLORATION AT 42.0 FEET |

SAMPLES:
D = SPLIT SPOON
C = 2" SHELBY TUBE
S = 3" SHELBY TUBE
U = 3.5" SHELBY TUBE

SOIL CLASSIFIED BY:
[ ] DRILLER - VISUALLY
[X] SOIL TECH. - VISUALLY
[ ] LABORATORY TEST

REMARKS:
STRATIFICATION LINES REPRESENT THE APPROXIMATE BOUNDARY BETWEEN SOIL TYPES AND THE TRANSITION MAY BE GRADUAL.

S.W.COLE ENGINEERING, INC.

# BORING LOG

| | |
|---|---|
| BORING NO.: | **B-5** |
| SHEET: | 1 OF 1 |
| PROJECT NO.: | 13-0520 |
| DATE START: | 9/30/2013 |
| DATE FINISH: | 9/30/2013 |
| ELEVATION: | |
| SWC REP.: | A.STRUGATSKIY |

PROJECT / CLIENT: PROPOSED MAINEDOT BGS FLEET SERVICES / ALLIED ENGINEERING, INC.
LOCATION: 66 INDUSTRIAL DRIVE / AUGUSTA, ME
DRILLING CO. : GREAT WORKS TEST BORING DRILLER: JEFF LEE

| | TYPE | SIZE I.D. | HAMMER WT. | HAMMER FALL |
|---|---|---|---|---|
| CASING: | HW | 4" | 140 LBS | 30" |
| SAMPLER: | SS | 1 5/8" | 140 LBS | 30" |
| CORE BARREL: | | | | |

WATER LEVEL INFORMATION
WATER AT 6.5' BELOW GROUND SURFACE

| CASING BLOWS PER FOOT | SAMPLE NO. | PEN. | REC. | DEPTH @ BOT | SAMPLER BLOWS PER 6" 0-6 | 6-12 | 12-18 | 18-24 | DEPTH | STRATA & TEST DATA |
|---|---|---|---|---|---|---|---|---|---|---|
| | | | | | | | | | 0.2' | ASPHALT |
| | 1D | 24" | 6" | 2.2' | 4 | 5 | 7 | 5 | 3.0' | BROWN SILTY SAND AND GRAVEL (FILL) ~ MEDIUM DENSE ~ |
| | 2D | 24" | 24" | 7.0' | 4 | 6 | 6 | 7 | 8.0' | BROWN CLAYEY SILT, MOTTLED ~ STIFF ~ $q_p$ = 3.5 ksf |
| | 3D | 24" | 24" | 12.0' | 1 | 2 | 2 | 3 | 13.0' | BROWN SILTY CLAY, WITH SILTY SAND SEAMS ~ SOFT ~ $q_p$ = 0.5 - 1.0 ksf |
| | 4D | 24" | 24" | 17.0' | WOH/24" | | | | 17.0' | GRAY SILTY CLAY ~ VERY SOFT ~ |
| | | | | | | | | | | BOTTOM OF EXPLORATION AT 17.0 FEET |

SAMPLES:
D = SPLIT SPOON
C = 2" SHELBY TUBE
S = 3" SHELBY TUBE
U = 3.5" SHELBY TUBE

SOIL CLASSIFIED BY:
[ ] DRILLER - VISUALLY
[X] SOIL TECH. - VISUALLY
[ ] LABORATORY TEST

REMARKS:
STRATIFICATION LINES REPRESENT THE APPROXIMATE BOUNDARY BETWEEN SOIL TYPES AND THE TRANSITION MAY BE GRADUAL.

7

BORING NO.: **B-5**

S.W.COLE ENGINEERING, INC.

# BORING LOG

| | |
|---|---|
| BORING NO.: | **B-6** |
| SHEET: | 1 OF 1 |
| PROJECT NO.: | 13-0520 |
| DATE START: | 9/30/2013 |
| DATE FINISH: | 9/30/2013 |
| ELEVATION: | |
| SWC REP.: | A.STRUGATSKIY |

PROJECT / CLIENT: PROPOSED MAINEDOT BGS FLEET SERVICES / ALLIED ENGINEERING, INC.
LOCATION: 66 INDUSTRIAL DRIVE / AUGUSTA, ME
DRILLING CO. : GREAT WORKS TEST BORING DRILLER: JEFF LEE

| | TYPE | SIZE I.D. | HAMMER WT. | HAMMER FALL |
|---|---|---|---|---|
| CASING: | HW | 4" | 140 LBS | 30" |
| SAMPLER: | SS | 1 5/8" | 140 LBS | 30" |
| CORE BARREL: | | | | |

WATER LEVEL INFORMATION
WATER AT 8' BELOW GROUND SURFACE

| CASING BLOWS PER FOOT | SAMPLE NO. | PEN. | REC. | DEPTH @ BOT | SAMPLER BLOWS PER 6" 0-6 | 6-12 | 12-18 | 18-24 | DEPTH | STRATA & TEST DATA |
|---|---|---|---|---|---|---|---|---|---|---|
| | | | | | | | | | 0.4' | TOPSOIL |
| | 1D | 24" | 12" | 2.0' | WOH/12" | | 2 | 3 | | BROWN SILTY SAND (FILL) ~ LOOSE ~ |
| | | | | | | | | | 4.0' | |
| | 2D | 24" | 24" | 7.0' | 3 | 4 | 5 | 7 | | BROWN CLAYEY SILT, MOTTLED ~ STIFF ~ |
| | | | | | | | | | 11.0' | |
| | 3D | 24" | 24" | 12.0' | WOH/24" | | | | 12.0' | GRAY SILTY CLAY, ~ VERY SOFT ~ |
| | | | | | | | | | | BOTTO OF EXPLORATION AT 12.0 FEET |

SAMPLES:
D = SPLIT SPOON
C = 2" SHELBY TUBE
S = 3" SHELBY TUBE
U = 3.5" SHELBY TUBE

SOIL CLASSIFIED BY:
[ ] DRILLER - VISUALLY
[X] SOIL TECH. - VISUALLY
[ ] LABORATORY TEST

REMARKS:
STRATIFICATION LINES REPRESENT THE APPROXIMATE BOUNDARY BETWEEN SOIL TYPES AND THE TRANSITION MAY BE GRADUAL.

8

BORING NO.: B-6

S.W.COLE ENGINEERING, INC.

# BORING LOG

| | |
|---|---|
| BORING NO.: | **B-7** |
| SHEET: | 1 OF 2 |
| PROJECT NO.: | 13-0520 |
| DATE START: | 9/30/2013 |
| DATE FINISH: | 9/30/2013 |
| ELEVATION: | |
| SWC REP.: | A.STRUGATSKIY |

PROJECT / CLIENT: PROPOSED MAINEDOT BGS FLEET SERVICES / ALLIED ENGINEERING, INC.
LOCATION: 66 INDUSTRIAL DRIVE / AUGUSTA, ME
DRILLING CO. : GREAT WORKS TEST BORING DRILLER: JEFF LEE

| | TYPE | SIZE I.D. | HAMMER WT. | HAMMER FALL |
|---|---|---|---|---|
| CASING: | HW | 4" | 140 LBS | 30" |
| SAMPLER: | SS | 1 5/8" | 140 LBS | 30" |
| CORE BARREL: | | | | |

WATER LEVEL INFORMATION
WATER AT 8' BELOW GROUND SURFACE

| CASING BLOWS PER FOOT | SAMPLE NO. | PEN. | REC. | DEPTH @ BOT | SAMPLER BLOWS PER 6" 0-6 | 6-12 | 12-18 | 18-24 | DEPTH | STRATA & TEST DATA |
|---|---|---|---|---|---|---|---|---|---|---|
| | | | | | | | | | 0.4' | TOPSOIL |
| | 1D | 24" | 19" | 2.0' | 1 | 2 | 5 | 5 | | BROWN SAND, SOME SILT (FILL)<br>~ LOOSE ~ |
| | | | | | | | | | 3.5' | |
| | 2D | 24" | 24" | 7.0' | 3 | 7 | 8 | 11 | | $q_p$ = 5.4 ksf<br>$q_p$ = 3.4 ksf<br>BROWN CLAYEY SILT, TRACE SAND<br>~ STIFF TO VERY SOFT ~ |
| | 3D | 24" | 24" | 12.0' | WOH/24" | | | | 11.5' | $q_p$ = 0.5 ksf |
| | | | | | | | | | | GRAY SILTY CALY<br>~ VERY SOFT ~ |
| | | | | | | | | | | HYDRAULIC PUSH ROD PROBE (12-38')<br>(PROBABLE SILTY CLAY) |
| | | | | | | | | | 38.0' | |
| | | | | | | | | | | ADVANCED BY HAMMER DRIVEN ROD PROBE (38-39.0') 30 BLOWS<br>(39-40.0') 22 BLOWS |

SAMPLES:
D = SPLIT SPOON
C = 2" SHELBY TUBE
S = 3" SHELBY TUBE
U = 3.5" SHELBY TUBE

SOIL CLASSIFIED BY:
[ ] DRILLER - VISUALLY
[X] SOIL TECH. - VISUALLY
[ ] LABORATORY TEST

REMARKS:
STRATIFICATION LINES REPRESENT THE APPROXIMATE BOUNDARY BETWEEN SOIL TYPES AND THE TRANSITION MAY BE GRADUAL.

S.W.COLE ENGINEERING, INC.

# BORING LOG

| | |
|---|---|
| BORING NO.: | **B-7** |
| SHEET: | 2 OF 2 |
| PROJECT NO.: | 13-0520 |
| DATE START: | 9/30/2013 |
| DATE FINISH: | 9/30/2013 |
| ELEVATION: | |
| SWC REP.: | A.STRUGATSKIY |

PROJECT / CLIENT: PROPOSED MAINEDOT BGS FLEET SERVICES / ALLIED ENGINEERING, INC.
LOCATION: 66 INDUSTRIAL DRIVE / AUGUSTA, ME
DRILLING CO. : GREAT WORKS TEST BORING DRILLER: JEFF LEE

| | TYPE | SIZE I.D. | HAMMER WT. | HAMMER FALL |
|---|---|---|---|---|
| CASING: | HW | 4" | 140 LBS | 30" |
| SAMPLER: | SS | 1 5/8" | 140 LBS | 30" |
| CORE BARREL: | | | | |

WATER LEVEL INFORMATION
WATER AT 8' BELOW GROUND SURFACE

| CASING BLOWS PER FOOT | SAMPLE NO. | PEN. | REC. | DEPTH @ BOT | SAMPLER BLOWS PER 6" 0-6 | 6-12 | 12-18 | 18-24 | DEPTH | STRATA & TEST DATA |
|---|---|---|---|---|---|---|---|---|---|---|
| | | | | | | | | | | ADVANCED BY HAMMER DRIVEN ROD PROBE (40-41.0') 22 BLOWS |
| | | | | | | | | | | (41-42.0') 24 BLOWS |
| | | | | | | | | | | (42-43.0') 21 BLOWS |
| | | | | | | | | | 44.0' | (43-44.0') 20 BLOWS |
| | | | | | | | | | | (PROBABLE SANDS) |
| | | | | | | | | | | BOTTOM OF EXPLORATION AT 44.0 FEET |

SAMPLES:
D = SPLIT SPOON
C = 2" SHELBY TUBE
S = 3" SHELBY TUBE
U = 3.5" SHELBY TUBE

SOIL CLASSIFIED BY:
[ ] DRILLER - VISUALLY
[X] SOIL TECH. - VISUALLY
[ ] LABORATORY TEST

REMARKS:
STRATIFICATION LINES REPRESENT THE APPROXIMATE BOUNDARY BETWEEN SOIL TYPES AND THE TRANSITION MAY BE GRADUAL.

S.W.COLE ENGINEERING, INC.

# BORING LOG

| | |
|---|---|
| BORING NO.: | **B-8** |
| SHEET: | 1 OF 1 |
| PROJECT NO.: | 13-0520 |
| DATE START: | 9/30/2013 |
| DATE FINISH: | 9/30/2013 |
| ELEVATION: | |
| SWC REP.: | A.STRUGATSKIY |

PROJECT / CLIENT: PROPOSED MAINEDOT BGS FLEET SERVICES / ALLIED ENGINEERING, INC.
LOCATION: 66 INDUSTRIAL DRIVE / AUGUSTA, ME
DRILLING CO. : GREAT WORKS TEST BORING DRILLER: JEFF LEE

| | TYPE | SIZE I.D. | HAMMER WT. | HAMMER FALL |
|---|---|---|---|---|
| CASING: | HW | 4" | 140 LBS | 30" |
| SAMPLER: | SS | 1 5/8" | 140 LBS | 30" |
| CORE BARREL: | | | | |

WATER LEVEL INFORMATION
WATER AT 11.0' BELOW GROUND SURFACE

| CASING BLOWS PER FOOT | SAMPLE NO. | PEN. | REC. | DEPTH @ BOT | SAMPLER BLOWS PER 6" 0-6 | 6-12 | 12-18 | 18-24 | DEPTH | STRATA & TEST DATA |
|---|---|---|---|---|---|---|---|---|---|---|
| | | | | | | | | | 0.4' | FOREST DUFF |
| | 1D | 24" | 18" | 2.0' | 1/12" | | 3 | 7 | | BROWN CLAYEY SILT, SOME SAND ~ MEDIUM STIFF ~ |
| | | | | | | | | | 4.0' | |
| | 2D | 24" | 24" | 7.0' | 5 | 6 | 7 | 7 | | $q_p$ = 3 - 3.5 ksf ~ STIFF ~ BROWN CLAYEY SILT, TRACE SAND ~ MEDIUM STIFF ~ |
| | | | | | | | | | 11.0' | |
| | 3D | 24" | 24" | 12.0' | 1 | 1 | 2 | 2 | | $q_p$ = 0.5 - 1.0 ksf GRAY SILTY CLAY ~ SOFT ~ |
| | | | | | | | | | | HYDRAULIC PUSH ROD PROBE (12-38.5') (PROBABLE SILTY CLAY) |
| | | | | | | | | | 38.5' | ADVANCED BY HAMMER DRIVEN ROD PROBE 25 BLOWS / 0" |
| | | | | | | | | | | BOTTOM OF EXPLORATION AT 38.5 FEET (PROBABLE GLACIAL TILL) |

SAMPLES:
D = SPLIT SPOON
C = 2" SHELBY TUBE
S = 3" SHELBY TUBE
U = 3.5" SHELBY TUBE

SOIL CLASSIFIED BY:

| | |
|---|---|
| | DRILLER - VISUALLY |
| X | SOIL TECH. - VISUALLY |
| | LABORATORY TEST |

REMARKS:

STRATIFICATION LINES REPRESENT THE APPROXIMATE BOUNDARY BETWEEN SOIL TYPES AND THE TRANSITION MAY BE GRADUAL.

11

BORING NO.: **B-8**

S.W.COLE ENGINEERING, INC.

# BORING LOG

| | |
|---|---|
| BORING NO.: | **B-9** |
| SHEET: | 1 OF 1 |
| PROJECT NO.: | 13-0520 |
| DATE START: | 10/1/2013 |
| DATE FINISH: | 10/1/2013 |
| ELEVATION: | |
| SWC REP.: | A.STRUGATSKIY |

PROJECT / CLIENT: PROPOSED MAINEDOT BGS FLEET SERVICES / ALLIED ENGINEERING, INC.
LOCATION: 66 INDUSTRIAL DRIVE / AUGUSTA, ME
DRILLING CO. : GREAT WORKS TEST BORING DRILLER: JEFF LEE

| | TYPE | SIZE I.D. | HAMMER WT. | HAMMER FALL |
|---|---|---|---|---|
| CASING: | HW | 4" | 140 LBS | 30" |
| SAMPLER: | SS | 1 5/8" | 140 LBS | 30" |
| CORE BARREL: | | | | |

WATER LEVEL INFORMATION
WATER AT 10.0' BELOW GROUND SURFACE

| CASING BLOWS PER FOOT | SAMPLE NO. | PEN. | REC. | DEPTH @ BOT | SAMPLER BLOWS PER 6" 0-6 | 6-12 | 12-18 | 18-24 | DEPTH | STRATA & TEST DATA |
|---|---|---|---|---|---|---|---|---|---|---|
| | | | | | | | | | 0.5' | FOREST DUFF |
| | 1D | 24" | 14" | 2.0' | 1 | 1 | 3 | 3 | | BROWN CLAYEY SILT, SOME SAND ~ MEDIUM STIFF ~ |
| | | | | | | | | | 3.5' | |
| | 2D | 24" | 24" | 7.0' | 4 | 6 | 7 | 8 | | $q_p$ = 5.0 - 6.0 ksf; $q_p$ = 3.0 ksf — BROWN CLAYEY SILT ~ STIFF ~ |
| | | | | | | | | | 9.0' | |
| | 3D | 24" | 24" | 12.0' | WOH/12" | | 2 | 2 | 12.0' | $q_p$ = 1.5 ksf; $q_p$ = 0.5 ksf — BROWN CLAY AND SILT, WITH THIN SAND SEAMS ~ SOFT ~ |
| | | | | | | | | | | HYDRAULIC PUSH ROD PROBE (12-36') (PROBABLE SILTY CLAY) |
| | | | | | | | | | 36.1' | ADVANCED BY HAMMER DRIVEN ROD PROBE (36.0-36.1') 50 BLOWS |
| | | | | | | | | | | ROD PROBE REFUSAL AT 36.1' (PROBABLE GLACIAL TILL) |

SAMPLES:
D = SPLIT SPOON
C = 2" SHELBY TUBE
S = 3" SHELBY TUBE
U = 3.5" SHELBY TUBE

SOIL CLASSIFIED BY:
[ ] DRILLER - VISUALLY
[X] SOIL TECH. - VISUALLY
[ ] LABORATORY TEST

REMARKS:
STRATIFICATION LINES REPRESENT THE APPROXIMATE BOUNDARY BETWEEN SOIL TYPES AND THE TRANSITION MAY BE GRADUAL.

S.W.COLE ENGINEERING, INC.

# BORING LOG

| | |
|---|---|
| BORING NO.: | **B-10** |
| SHEET: | 1 OF 1 |
| PROJECT NO.: | 13-0520 |
| DATE START: | 10/1/2013 |
| DATE FINISH: | 10/1/2013 |
| ELEVATION: | |
| SWC REP.: | A.STRUGATSKIY |

PROJECT / CLIENT: PROPOSED MAINEDOT BGS FLEET SERVICES / ALLIED ENGINEERING, INC.
LOCATION: 66 INDUSTRIAL DRIVE / AUGUSTA, ME
DRILLING CO. : GREAT WORKS TEST BORING DRILLER: JEFF LEE

| | TYPE | SIZE I.D. | HAMMER WT. | HAMMER FALL |
|---|---|---|---|---|
| CASING: | HW | 4" | 140 LBS | 30" |
| SAMPLER: | SS | 1 5/8" | 140 LBS | 30" |
| CORE BARREL: | | | | |

WATER LEVEL INFORMATION
WATER AT 10.0' BELOW GROUND SURFACE

| CASING BLOWS PER FOOT | SAMPLE NO. | PEN. | REC. | DEPTH @ BOT | SAMPLER BLOWS PER 6" 0-6 | 6-12 | 12-18 | 18-24 | DEPTH | STRATA & TEST DATA |
|---|---|---|---|---|---|---|---|---|---|---|
| | | | | | | | | | 0.5' | FOREST DUFF |
| | 1D | 24" | 20" | 2.0' | WOH/12" | | 4 | 4 | | BROWN SILT, SOME SAND AND CLAY ~ LOOSE ~ |
| | | | | | | | | | 4.0' | |
| | 2D | 24" | 24" | 7.0' | 4 | 5 | 7 | 9 | | $q_p$ = 5.0 ksf, $q_p$ = 6.0 ksf — BROWN CLAYEY SILT ~ STIFF ~ |
| | | | | | | | | | 10.0' | |
| | 3D | 24" | 24" | 12.0' | WOH/24" | | | | 12.0' | $q_p$ = 1.0 - 2.0 ksf — BROWN SILT AND CLAY ~ VERY SOFT ~ |
| | | | | | | | | | | BOTTOM OF EXPLORATION AT 12.0 FEET |

SAMPLES:
D = SPLIT SPOON
C = 2" SHELBY TUBE
S = 3" SHELBY TUBE
U = 3.5" SHELBY TUBE

SOIL CLASSIFIED BY:
[ ] DRILLER - VISUALLY
[X] SOIL TECH. - VISUALLY
[ ] LABORATORY TEST

REMARKS:
STRATIFICATION LINES REPRESENT THE APPROXIMATE BOUNDARY BETWEEN SOIL TYPES AND THE TRANSITION MAY BE GRADUAL.

13

BORING NO.: B-10

S.W.COLE ENGINEERING, INC.

# BORING LOG

| | |
|---|---|
| BORING NO.: | **B-11** |
| SHEET: | 1 OF 1 |
| PROJECT NO.: | 13-0520 |
| DATE START: | 9/30/2013 |
| DATE FINISH: | 9/30/2013 |
| ELEVATION: | |
| SWC REP.: | A.STRUGATSKIY |

PROJECT / CLIENT: PROPOSED MAINEDOT BGS FLEET SERVICES / ALLIED ENGINEERING, INC.
LOCATION: 66 INDUSTRIAL DRIVE / AUGUSTA, ME
DRILLING CO. : GREAT WORKS TEST BORING DRILLER: JEFF LEE

| | TYPE | SIZE I.D. | HAMMER WT. | HAMMER FALL |
|---|---|---|---|---|
| CASING: | HW | 4" | 140 LBS | 30" |
| SAMPLER: | SS | 1 5/8" | 140 LBS | 30" |
| CORE BARREL: | | | | |

WATER LEVEL INFORMATION
WATER AT 9.5' BELOW GROUND SURFACE

| CASING BLOWS PER FOOT | SAMPLE NO. | PEN. | REC. | DEPTH @ BOT | SAMPLER BLOWS PER 6" 0-6 | 6-12 | 12-18 | 18-24 | DEPTH | STRATA & TEST DATA |
|---|---|---|---|---|---|---|---|---|---|---|
| | | | | | | | | | 0.5' | FOREST DUFF |
| | 1D | 24" | 18" | 2.0' | WOH/12" | | 2 | 2 | | BROWN SANDY SILT ~ SOFT ~ |
| | | | | | | | | | 4.0' | |
| | 2D | 24" | 24" | 7.0' | 3 | 6 | 4 | 7 | | BROWN CLAYEY SILT $q_p$ = 3.5 ksf ~ STIFF ~ |
| | | | | | | | | | 10.5' | |
| | 3D | 24" | 24" | 12.0' | WOH/24" | | | | 12.0' | GRAY CLAYEY SILT ~ VERY SOFT ~ |
| | | | | | | | | | | BOTTOM OF EXPLORATION AT 12.0 FEET |

SAMPLES:
D = SPLIT SPOON
C = 2" SHELBY TUBE
S = 3" SHELBY TUBE
U = 3.5" SHELBY TUBE

SOIL CLASSIFIED BY:
[ ] DRILLER - VISUALLY
[X] SOIL TECH. - VISUALLY
[ ] LABORATORY TEST

REMARKS:
STRATIFICATION LINES REPRESENT THE APPROXIMATE BOUNDARY BETWEEN SOIL TYPES AND THE TRANSITION MAY BE GRADUAL.

S.W.COLE ENGINEERING, INC.

# BORING LOG

| | |
|---|---|
| BORING NO.: | **B-12** |
| SHEET: | 1 OF 1 |
| PROJECT NO.: | 13-0520 |
| DATE START: | 10/1/2013 |
| DATE FINISH: | 10/1/2013 |
| ELEVATION: | |
| SWC REP.: | A.STRUGATSKIY |

PROJECT / CLIENT: PROPOSED MAINEDOT BGS FLEET SERVICES / ALLIED ENGINEERING, INC.
LOCATION: 66 INDUSTRIAL DRIVE / AUGUSTA, ME
DRILLING CO. : GREAT WORKS TEST BORING DRILLER: JEFF LEE

| | TYPE | SIZE I.D. | HAMMER WT. | HAMMER FALL |
|---|---|---|---|---|
| CASING: | HW | 4" | 140 LBS | 30" |
| SAMPLER: | SS | 1 5/8" | 140 LBS | 30" |
| CORE BARREL: | | | | |

WATER LEVEL INFORMATION
WATER AT 10.0' BELOW GROUND SURFACE

| CASING BLOWS PER FOOT | SAMPLE NO. | PEN. | REC. | DEPTH @ BOT | SAMPLER BLOWS PER 6" 0-6 | 6-12 | 12-18 | 18-24 | DEPTH | STRATA & TEST DATA |
|---|---|---|---|---|---|---|---|---|---|---|
| | | | | | | | | | 0.8' | TOPSOIL |
| | 1D | 24" | 18" | 2.0' | 1/18" | | | 5 | 3.0' | BROWN CLAYEY SILT, TRACE SAND<br>~ VERY SOFT ~ |
| | 2D | 24" | 24" | 7.0' | 4 | 5 | 7 | 9 | 9.0' | BROWN CLAYEY SILT<br>~ STIFF ~<br>$q_p$ = 2.0 ksf<br>$q_p$ = 4.0 ksf<br>$q_p$ = 3.0 ksf |
| | 3D | 24" | 24" | 12.0' | 3 | 3 | 4 | 4 | 14.0' | GRAY SILT AND CLAY<br>~ MEDIUM STIFF ~<br>$q_p$ = 2.0 ksf |
| | 4D | 24" | 24" | 17.0' | WOH/24" | | | | 17.0' | GRAY SILTY CLAY<br>~ VERY SOFT ~ |
| | | | | | | | | | | BOTTOM OF EXPLORATION AT 17.0 FEET |

SAMPLES:
D = SPLIT SPOON
C = 2" SHELBY TUBE
S = 3" SHELBY TUBE
U = 3.5" SHELBY TUBE

SOIL CLASSIFIED BY:

| | |
|---|---|
| | DRILLER - VISUALLY |
| X | SOIL TECH. - VISUALLY |
| | LABORATORY TEST |

REMARKS:

STRATIFICATION LINES REPRESENT THE APPROXIMATE BOUNDARY BETWEEN SOIL TYPES AND THE TRANSITION MAY BE GRADUAL.

S.W.COLE ENGINEERING, INC.

# BORING LOG

| | |
|---|---|
| BORING NO.: | **B-13** |
| SHEET: | 1 OF 1 |
| PROJECT NO.: | 13-0520 |
| DATE START: | 9/30/2013 |
| DATE FINISH: | 9/30/2013 |
| ELEVATION: | |
| SWC REP.: | A.STRUGATSKIY |

PROJECT / CLIENT: PROPOSED MAINEDOT BGS FLEET SERVICES / ALLIED ENGINEERING, INC.
LOCATION: 66 INDUSTRIAL DRIVE / AUGUSTA, ME
DRILLING CO. : GREAT WORKS TEST BORING DRILLER: JEFF LEE

| | TYPE | SIZE I.D. | HAMMER WT. | HAMMER FALL |
|---|---|---|---|---|
| CASING: | HW | 4" | 140 LBS | 30" |
| SAMPLER: | SS | 1 5/8" | 140 LBS | 30" |
| CORE BARREL: | | | | |

WATER LEVEL INFORMATION
WATER AT 10.0' BELOW GROUND SURFACE

| CASING BLOWS PER FOOT | SAMPLE NO. | PEN. | REC. | DEPTH @ BOT | SAMPLER BLOWS PER 6" 0-6 | 6-12 | 12-18 | 18-24 | DEPTH | STRATA & TEST DATA |
|---|---|---|---|---|---|---|---|---|---|---|
| | | | | | | | | | 0.4' | FOREST DUFF |
| | 1D | 24" | 16" | 2.0' | 1/12" | | 1 | 3 | 1.5' | BROWN SILT AND FINE SAND, WITH ROOTS, ~ VERY LOOSE ~ |
| | | | | | | | | | 4.0' | BROWN SILTY SAND ~ VERY LOOSE ~ |
| | 2D | 24" | 24" | 7.0' | 4 | 5 | 8 | 8 | 9.0' | BROWN CLAYEY SILT ~ STIFF ~ |
| | 3D | 24" | 24" | 12.0' | 1 | 2 | 2 | 3 | 12.0' | GRAY SILTY CLAY ~ MEDIUM STIFF TO SOFT ~ |
| | | | | | | | | | | BOTTO OF EXPLORATION AT 12.0 FEET |

SAMPLES:
D = SPLIT SPOON
C = 2" SHELBY TUBE
S = 3" SHELBY TUBE
U = 3.5" SHELBY TUBE

SOIL CLASSIFIED BY:

| | |
|---|---|
| | DRILLER - VISUALLY |
| X | SOIL TECH. - VISUALLY |
| | LABORATORY TEST |

REMARKS:

STRATIFICATION LINES REPRESENT THE APPROXIMATE BOUNDARY BETWEEN SOIL TYPES AND THE TRANSITION MAY BE GRADUAL.

S.W.COLE ENGINEERING, INC.

# BORING LOG

| | |
|---|---|
| BORING NO.: | **B-14** |
| SHEET: | 1 OF 2 |
| PROJECT NO.: | 13-0520 |
| DATE START: | 10/1/2013 |
| DATE FINISH: | 10/1/2013 |
| ELEVATION: | |
| SWC REP.: | A.STRUGATSKIY |

PROJECT / CLIENT: PROPOSED MAINEDOT BGS FLEET SERVICES / ALLIED ENGINEERING, INC.
LOCATION: 66 INDUSTRIAL DRIVE / AUGUSTA, ME
DRILLING CO. : GREAT WORKS TEST BORING DRILLER: JEFF LEE

| | TYPE | SIZE I.D. | HAMMER WT. | HAMMER FALL |
|---|---|---|---|---|
| CASING: | HW | 4" | 140 LBS | 30" |
| SAMPLER: | SS | 1 5/8" | 140 LBS | 30" |
| CORE BARREL: | | | | |

WATER LEVEL INFORMATION
WATER OBSCURED BY USE OF DRILLING FLUID

| CASING BLOWS PER FOOT | SAMPLE NO. | PEN. | REC. | DEPTH @ BOT | SAMPLER BLOWS PER 6" 0-6 | 6-12 | 12-18 | 18-24 | DEPTH | STRATA & TEST DATA |
|---|---|---|---|---|---|---|---|---|---|---|
| | | | | | | | | | 0.6' | FOREST DUFF |
| | 1D | 24" | 16" | 2.0' | WOH/18" | | | 3 | | BROWN SILTY SAND ~ VERY LOOSE ~ |
| | | | | | | | | | 5.5' | |
| | 2D | 24" | 24" | 7.0' | 3 | 6 | 6 | 6 | | BROWN CLAYEY SILT ~ STIFF ~ |
| | | | | | | | | | 10.0' | |
| | 3D | 24" | 24" | 12.0' | WOH | 1 | 2 | 2 | | ~ SOFT TO MEDIUM STIFF ~ GRAY SILTY CLAY |
| | 1S | 24" | 16" | 17.0' | | | | | | |
| | 1V | 9" | - | 17.8' | 3 1/2"X7" ACKER VANE | | | | | $S_v$ = 0.83 ksf / 0.12 ksf ~ MEDIUM STIFF ~ |
| | 1V' | 9" | - | 18.5' | 3 1/2"X7" ACKER VANE | | | | 19.0' | UNABLE TO PUSH |
| | 2V | 9" | - | 20.8' | 3 1/2"X7" ACKER VANE | | | | | $S_v$ = 0.98 ksf / 0.13 ksf |
| | 2V' | 9" | - | 21.5' | 3 1/2"X7" ACKER VANE | | | | | $S_v$ = 1.09 ksf / 0.20 ksf GRAY SILTY CLAY WITH FINE SAND SEAMS ~ MEDIUM STIFF TO STIFF ~ |
| | 2S | 24" | 22" | 27.0' | | | | | | |
| | 3V | 9" | - | 27.8' | 3 1/2"X7" ACKER VANE | | | | | $S_v$ = 100 FT-LBS (NO ROTATION) |
| | 4D | 24" | 24" | 32.0' | 1 | 1 | 1 | 2 | | |
| | | | | | | | | | 34.0' | |
| | 5D | 24" | 24" | 37.0' | WOH/18" | | | 3 | | GRAY SILTY CLAY ~ MEDIUM STIFF ~ |
| | | | | | | | | | 39.0' | |
| | | | | | | | | | 40.0' | GRAY SILTY SAND AND GRAVEL, (GLACIAL TILL) |

SAMPLES:
D = SPLIT SPOON
C = 2" SHELBY TUBE
S = 3" SHELBY TUBE
U = 3.5" SHELBY TUBE

SOIL CLASSIFIED BY:

| | |
|---|---|
| | DRILLER - VISUALLY |
| X | SOIL TECH. - VISUALLY |
| | LABORATORY TEST |

REMARKS: CONTINUED…

STRATIFICATION LINES REPRESENT THE APPROXIMATE BOUNDARY BETWEEN SOIL TYPES AND THE TRANSITION MAY BE GRADUAL.

S.W.COLE ENGINEERING, INC.

# BORING LOG

| | |
|---|---|
| BORING NO.: | **B-14** |
| SHEET: | 2 OF 2 |
| PROJECT NO.: | 13-0520 |
| DATE START: | 10/1/2013 |
| DATE FINISH: | 10/1/2013 |
| ELEVATION: | |
| SWC REP.: | A.STRUGATSKIY |

PROJECT / CLIENT: PROPOSED MAINEDOT BGS FLEET SERVICES / ALLIED ENGINEERING, INC.
LOCATION: 66 INDUSTRIAL DRIVE / AUGUSTA, ME
DRILLING CO. : GREAT WORKS TEST BORING DRILLER: JEFF LEE

| | TYPE | SIZE I.D. | HAMMER WT. | HAMMER FALL |
|---|---|---|---|---|
| CASING: | HW | 4" | 140 LBS | 30" |
| SAMPLER: | SS | 1 5/8" | 140 LBS | 30" |
| CORE BARREL: | | | | |

WATER LEVEL INFORMATION
WATER OBSCURED BY USE OF DRILLING FLUID

| CASING BLOWS PER FOOT | SAMPLE NO. | PEN. | REC. | DEPTH @ BOT | SAMPLER BLOWS PER 6" 0-6 | 6-12 | 12-18 | 18-24 | DEPTH | STRATA & TEST DATA |
|---|---|---|---|---|---|---|---|---|---|---|
| | | | | | | | | | | GRAY SILTY SAND AND GRAVEL, (GLACIAL TILL) |
| | 6D | 24" | 22" | 42.0' | 16 | 18 | 16 | 20 | 42.0' | ~ DENSE ~ |
| | | | | | | | | | | BOTTOM OF EXPLORATION AT 42.0 FEET |

SAMPLES:
D = SPLIT SPOON
C = 2" SHELBY TUBE
S = 3" SHELBY TUBE
U = 3.5" SHELBY TUBE

SOIL CLASSIFIED BY:
[ ] DRILLER - VISUALLY
[X] SOIL TECH. - VISUALLY
[ ] LABORATORY TEST

REMARKS:
STRATIFICATION LINES REPRESENT THE APPROXIMATE BOUNDARY BETWEEN SOIL TYPES AND THE TRANSITION MAY BE GRADUAL.

S.W.COLE ENGINEERING, INC.

# BORING LOG

| | |
|---|---|
| BORING NO.: | **B-15** |
| SHEET: | 1 OF 2 |
| PROJECT NO.: | 13-0520 |
| DATE START: | 10/1/2013 |
| DATE FINISH: | 10/1/2013 |
| ELEVATION: | |
| SWC REP.: | A.STRUGATSKIY |

PROJECT / CLIENT: PROPOSED MAINEDOT BGS FLEET SERVICES / ALLIED ENGINEERING, INC.
LOCATION: 66 INDUSTRIAL DRIVE / AUGUSTA, ME
DRILLING CO. : GREAT WORKS TEST BORING DRILLER: JEFF LEE

| | TYPE | SIZE I.D. | HAMMER WT. | HAMMER FALL |
|---|---|---|---|---|
| CASING: | HW | 4" | 140 LBS | 30" |
| SAMPLER: | SS | 1 5/8" | 140 LBS | 30" |
| CORE BARREL: | | | | |

WATER LEVEL INFORMATION
WATER AT 10.0' BELOW GROUND SURFACE

| CASING BLOWS PER FOOT | SAMPLE NO. | PEN. | REC. | DEPTH @ BOT | SAMPLER BLOWS PER 6" 0-6 | 6-12 | 12-18 | 18-24 | DEPTH | STRATA & TEST DATA |
|---|---|---|---|---|---|---|---|---|---|---|
| | | | | | | | | | 0.4' | FOREST DUFF |
| | 1D | 24" | 2" | 2.0' | 1 | 1 | 2 | 3 | | BROWN SILTY SAND |
| | | | | | | | | | 3.0' | ~ VERY LOOSE ~ |
| | 2D | 24" | 24" | 7.0' | 3 | 5 | 5 | 8 | | BROWN CLAYEY SILT<br>$q_p$ = 3.5 - 4.0 ksf ~ STIFF ~ |
| | | | | | | | | | 8.5' | |
| | 3D | 24" | 24" | 12.0' | WOH/24" | | | | | GRAY SILTY CLAY<br>~ SOFT ~ |
| | | | | | | | | | | HYDRAULIC PUSH ROD PROBE (12-43.5')<br>(PROBABLE SILTY CLAY) |
| | | | | | | | | | 40.0' | |

SAMPLES:
D = SPLIT SPOON
C = 2" SHELBY TUBE
S = 3" SHELBY TUBE
U = 3.5" SHELBY TUBE

SOIL CLASSIFIED BY:
[ ] DRILLER - VISUALLY
[X] SOIL TECH. - VISUALLY
[ ] LABORATORY TEST

REMARKS: CONTINUED…

STRATIFICATION LINES REPRESENT THE APPROXIMATE BOUNDARY BETWEEN SOIL TYPES AND THE TRANSITION MAY BE GRADUAL.

S.W.COLE ENGINEERING, INC.

# BORING LOG

| | |
|---|---|
| BORING NO.: | **B-15** |
| SHEET: | 2 OF 2 |
| PROJECT NO.: | 13-0520 |
| DATE START: | 10/1/2013 |
| DATE FINISH: | 10/1/2013 |
| ELEVATION: | |
| SWC REP.: | A.STRUGATSKIY |

PROJECT / CLIENT: PROPOSED MAINEDOT BGS FLEET SERVICES / ALLIED ENGINEERING, INC.
LOCATION: 66 INDUSTRIAL DRIVE / AUGUSTA, ME
DRILLING CO. : GREAT WORKS TEST BORING DRILLER: JEFF LEE

| | TYPE | SIZE I.D. | HAMMER WT. | HAMMER FALL |
|---|---|---|---|---|
| CASING: | HW | 4" | 140 LBS | 30" |
| SAMPLER: | SS | 1 5/8" | 140 LBS | 30" |
| CORE BARREL: | | | | |

WATER LEVEL INFORMATION
WATER AT 10.0' BELOW GROUND SURFACE

| CASING BLOWS PER FOOT | SAMPLE NO. | PEN. | REC. | DEPTH @ BOT | SAMPLER BLOWS PER 6" 0-6 | 6-12 | 12-18 | 18-24 | DEPTH | STRATA & TEST DATA |
|---|---|---|---|---|---|---|---|---|---|---|
| | | | | | | | | | | (PROBABLE SILTY CLAY) |
| | | | | | | | | | 43.5' | ADVANCED BY HAMMER DRIVEN ROD PROBE (43.5-44.5') 41 BLOWS |
| | | | | | | | | | | (44.5-45.5') 40 BLOWS |
| | | | | | | | | | 46.5' | (45.5-46.5') 39 BLOWS (PROBABLE GLACIAL TILL) |
| | | | | | | | | | | BOTTOM OF EXPLORATION AT 46.5 FEET |

SAMPLES:
D = SPLIT SPOON
C = 2" SHELBY TUBE
S = 3" SHELBY TUBE
U = 3.5" SHELBY TUBE

SOIL CLASSIFIED BY:

| | |
|---|---|
| | DRILLER - VISUALLY |
| X | SOIL TECH. - VISUALLY |
| | LABORATORY TEST |

REMARKS:

STRATIFICATION LINES REPRESENT THE APPROXIMATE BOUNDARY BETWEEN SOIL TYPES AND THE TRANSITION MAY BE GRADUAL.

S.W.COLE ENGINEERING, INC.

# TEST PIT LOGS

PROJECT/CLIENT: PROPOSED MAINEDOT FLEET SERVICES / ALLIED ENGINEERING, INC.
LOCATION: 66 INDUSTRIAL DRIVE / AUGUSTA, ME
BACKHOE FIRM: LANDWORKS EXCAVATION, LLC
OPERATOR: PAUL BERNIER
PROJECT NO.: 13-0520
SWC REP.: AAS

## TEST PIT TP-1

DATE: 10/2/2013 SURFACE ELEVATION: LOCATION: SEE SHEET 1

| SAMPLE NO. | SAMPLE DEPTH | DEPTH (FT) | STRATUM DESCRIPTION | TEST RESULTS |
|---|---|---|---|---|
| | | 0.5' | FOREST DUFF | |
| | | 1.7' | BROWN SAND AND SILT | |
| | | 6.4' | GRAY CLAYEY SILT, SOME FINE SAND | |
| | | | BOTTOM OF EXPLORATION AT 6.4 FEET | |

COMPLETION DEPTH: 6.4' DEPTH TO WATER: NOT ENCOUNTERED

## TEST PIT TP-2

DATE: 10/2/2013 SURFACE ELEVATION: LOCATION: SEE SHEET 1

| SAMPLE NO. | SAMPLE DEPTH | DEPTH (FT) | STRATUM DESCRIPTION | TEST RESULTS |
|---|---|---|---|---|
| | | 0.5' | FOREST DUFF | |
| | | 1.2' | BROWN SILTY SAND | |
| | | 5.0' | BROWN FINE SAND, TRACE SILT | |
| | | 6.0' | GRAY SANDY SILT | |
| | | | BOTTOM OF EXPLORATION AT 6.0 FEET | |

COMPLETION DEPTH: 6.0' DEPTH TO WATER: 2.7'

S.W.COLE ENGINEERING, INC.

# TEST PIT LOGS

PROJECT/CLIENT: PROPOSED MAINEDOT FLEET SERVICES / ALLIED ENGINEERING, INC.
PROJECT NO.: 13-0520
LOCATION: 66 INDUSTRIAL DRIVE / AUGUSTA, ME
SWC REP.: AAS
BACKHOE FIRM: LANDWORKS EXCAVATION, LLC
OPERATOR: PAUL BERNIER

## TEST PIT TP-3

DATE: 10/2/2013 SURFACE ELEVATION: LOCATION: SEE SHEET 1

| SAMPLE NO. | SAMPLE DEPTH | DEPTH (FT) | STRATUM DESCRIPTION | TEST RESULTS |
|---|---|---|---|---|
| | | 0.4' | FOREST DUFF | |
| | | 1.4' | BROWN SILTY SAND | |
| | | 5.5' | TAN FINE SAND, TRACE SILT | |
| | | 6.4' | GRAY SANDY SILT | |
| | | | BOTTOM OF EXPLORATION AT 6.4 FEET | |

COMPLETION DEPTH: 6.4' DEPTH TO WATER: 6.0'

## TEST PIT TP-4

DATE: 10/2/2013 SURFACE ELEVATION: LOCATION: SEE SHEET 1

| SAMPLE NO. | SAMPLE DEPTH | DEPTH (FT) | STRATUM DESCRIPTION | TEST RESULTS |
|---|---|---|---|---|
| | | 0.5' | FOREST DUFF | |
| | | 1.4' | BROWN SILTY SAND | |
| | | 5.8' | TAN FINE SAND, TRACE SILT | |
| | | | BOTTOM OF EXPLORATION AT 5.8 FEET | |

COMPLETION DEPTH: 5.8' DEPTH TO WATER: NOT ENCOUNTERED

S.W.COLE ENGINEERING, INC.

# TEST PIT LOGS

PROJECT/CLIENT: PROPOSED MAINEDOT FLEET SERVICES / ALLIED ENGINEERING, INC.
PROJECT NO.: 13-0520
LOCATION: 66 INDUSTRIAL DRIVE / AUGUSTA, ME
SWC REP.: AAS
BACKHOE FIRM: LANDWORKS EXCAVATION, LLC
OPERATOR: PAUL BERNIER

## TEST PIT TP-5

DATE: 10/2/2013 SURFACE ELEVATION: LOCATION: SEE SHEET 1

| SAMPLE NO. | SAMPLE DEPTH | DEPTH (FT) | STRATUM DESCRIPTION | TEST RESULTS |
|---|---|---|---|---|
| | | 0.4' | FOREST DUFF | |
| | | 1.5' | BROWN SILTY SAND | |
| | | 6.0' | TAN FINE SAND, TRACE SILT | |
| | | 10.0' | TAN SANDY SILT | |
| | | 13.0' | GRAY SILTY CLAY | |
| | | | BOTTOM OF EXPLORATION AT 13.0 FEET | |

COMPLETION DEPTH: 13.0' DEPTH TO WATER: 5.0'

## TEST PIT TP-6

DATE: 10/2/2013 SURFACE ELEVATION: LOCATION:

| SAMPLE NO. | SAMPLE DEPTH | DEPTH (FT) | STRATUM DESCRIPTION | TEST RESULTS |
|---|---|---|---|---|
| | | 0.4' | FOREST DUFF | |
| | | 1.5' | BROWN SILTY SAND | |
| | | 8.0' | TAN FINE SAND, TRACE SILT | |
| | | 11.5' | TAN SANDY SILT | |
| | | 12.0' | BLUE SILTY CLAY, WITH ORGANIC ODOR | |
| | | | BOTTOM OF EXPLORATION AT 12.0 FEET | |

COMPLETION DEPTH: 12.0' DEPTH TO WATER: 4.5'

S.W.COLE ENGINEERING, INC.

# TEST PIT LOGS

PROJECT/CLIENT: PROPOSED MAINEDOT FLEET SERVICES / ALLIED ENGINEERING, INC.
PROJECT NO.: 13-0520
LOCATION: 66 INDUSTRIAL DRIVE / AUGUSTA, ME
SWC REP.: AAS
BACKHOE FIRM: LANDWORKS EXCAVATION, LLC
OPERATOR: PAUL BERNIER

## TEST PIT TP-7

DATE: 10/2/2013 SURFACE ELEVATION: LOCATION: SEE SHEET 1

| SAMPLE NO. | SAMPLE DEPTH | DEPTH (FT) | STRATUM DESCRIPTION | TEST RESULTS |
|---|---|---|---|---|
| | | 0.4' | FOREST DUFF | |
| | | 1.7' | BROWN SILTY SAND | |
| | | 6.0' | TAN FINE SAND, TRACE SILT | |
| | | 6.5' | TAN SILTY FINE SAND | |
| | | | BOTTOM OF EXPLORATION AT 6.5 FEET | |

COMPLETION DEPTH: 6.5' DEPTH TO WATER: NOT ENCOUNTERED

## TEST PIT TP-8

DATE: 10/2/2013 SURFACE ELEVATION: LOCATION:

| SAMPLE NO. | SAMPLE DEPTH | DEPTH (FT) | STRATUM DESCRIPTION | TEST RESULTS |
|---|---|---|---|---|
| | | 0.4' | FOREST DUFF | |
| | | 1.5' | BROWN SILTY SAND | |
| | | 8.0' | TAN FINE SAND, TRACE SILT | |
| | | 12.5' | TAN SANDY SILT | |
| | | 13.0' | BLUE SILTY CLAY, WITH ORGANIC ODOR | |
| | | | BOTTOM OF EXPLORATION AT 13.0 FEET | |

COMPLETION DEPTH: 12.0' DEPTH TO WATER: 9.0'

S.W.COLE ENGINEERING, INC.

# TEST PIT LOGS

PROJECT/CLIENT: PROPOSED MAINEDOT FLEET SERVICES / ALLIED ENGINEERING, INC.
LOCATION: 66 INDUSTRIAL DRIVE / AUGUSTA, ME
BACKHOE FIRM: LANDWORKS EXCAVATION, LLC
OPERATOR: PAUL BERNIER

PROJECT NO.: 13-0520
SWC REP.: AAS

## TEST PIT TP-9

DATE: 10/2/2013 SURFACE ELEVATION: LOCATION: SEE SHEET 1

| SAMPLE NO. | SAMPLE DEPTH | DEPTH (FT) | STRATUM DESCRIPTION | TEST RESULTS |
|---|---|---|---|---|
| | | 0.4' | FOREST DUFF | |
| | | 2.0' | BROWN SILTY SAND | |
| | | 6.0' | TAN FINE SAND, TRACE SILT | |
| | | 12.0' | GRAY/BLUE SILTY CLAY | |
| | | | BOTTOM OF EXPLORATION AT 12.0 FEET | |

COMPLETION DEPTH: 12.0' DEPTH TO WATER: 5.0'

## TEST PIT TP-10

DATE: 10/2/2013 SURFACE ELEVATION: LOCATION: SEE SHEET 1

| SAMPLE NO. | SAMPLE DEPTH | DEPTH (FT) | STRATUM DESCRIPTION | TEST RESULTS |
|---|---|---|---|---|
| | | 2.0' | DRAINAGE STONE (12" MINUS) | |
| | | 3.5' | (PLASTIC MEMBRANE) SILTY SAND (FILL) | |
| | | (5.5') | SILTY SAND WITH ROOTS AND MINOR ORGANICS (FILL) | |
| | | 6.5' | (TOP OF FOOTING AT 5.5') | |
| | | 7.0' | GRAY SANDY SILT WITH CLAY (BOTTOM OF FOOTING AT 6.5') | |
| | | | BOTTOM OF EXPLORATION AT 7.0 FEET | |

COMPLETION DEPTH: 7.0' DEPTH TO WATER: 6.7'

# KEY TO THE NOTES & SYMBOLS
## Test Boring and Test Pit Explorations

All stratification lines represent the approximate boundary between soil types and the transition may be gradual.

**Key to Symbols Used:**

| | | |
|---|---|---|
| w | - | water content, percent (dry weight basis) |
| $q_u$ | - | unconfined compressive strength, kips/sq. ft. - based on laboratory unconfined compressive test |
| $S_v$ | - | field vane shear strength, kips/sq. ft. |
| $L_v$ | - | lab vane shear strength, kips/sq. ft. |
| $q_p$ | - | unconfined compressive strength, kips/sq. ft. based on pocket penetrometer test |
| O | - | organic content, percent (dry weight basis) |
| $W_L$ | - | liquid limit - Atterberg test |
| $W_P$ | - | plastic limit - Atterberg test |
| WOH | - | advance by weight of hammer |
| WOM | - | advance by weight of man |
| WOR | - | advance by weight of rods |
| HYD | - | advance by force of hydraulic piston on drill |
| RQD | - | Rock Quality Designator - an index of the quality of a rock mass. RQD is computed from recovered core samples. |
| $\gamma_T$ | - | total soil weight |
| $\gamma_B$ | - | buoyant soil weight |
| f | - | fines content (percent by weight passing U.S. No. 200 Sieve) |

**Description of Proportions:**

0 to 5% TRACE
5 to 12% SOME
12 to 35% "Y"
35+% AND

***REFUSAL:*** **Test Boring Explorations** - Refusal depth indicates that depth at which, in the drill foreman's opinion, sufficient resistance to the advance of the casing, auger, probe rod or sampler was encountered to render further advance impossible or impracticable by the procedures and equipment being used.

***REFUSAL:*** **Test Pit Explorations** - Refusal depth indicates that depth at which sufficient resistance to the advance of the backhoe bucket was encountered to render further advance impossible or impracticable by the procedures and equipment being used.

Although refusal may indicate the encountering of the bedrock surface, it may indicate the striking of large cobbles, boulders, very dense or cemented soil, or other buried natural or man-made objects or it may indicate the encountering of a harder zone after penetrating a considerable depth through a weathered or disintegrated zone of the bedrock.

# Report of Gradation

ASTM C-117 & C-136

| | | | |
|---|---|---|---|
| Project Name | AUGUSTA ME - PROPOSED 66 INDUSTRIAL DRIVE DEVELOPMENT - GEOTECHNICAL ENGINEERING SERVICES | Project Number | 13-0520 |
| Client | ALLIED ENGINEERING, INC. | Lab ID | 7904A |
| Exploration | **B-1, B-3, B-4 & B** | Date Received | 10/9/2013 |
| Material Source | **1D, 0 - 2.2'** | Date Completed | 10/11/2013 |
| | | Tested By | BRANDON CHAPUT |

| STANDARD DESIGNATION (mm/µm) | SIEVE SIZE | AMOUNT PASSING (%) | |
|---|---|---|---|
| 50 mm | **2"** | **100** | |
| 38.1 mm | **1-1/2"** | **100** | |
| 25.0 mm | **1"** | **93** | |
| 19.0 mm | **3/4"** | **87** | |
| 12.5 mm | **1/2"** | **78** | |
| 9.5 mm | **3/8"** | **70** | |
| 6.3 mm | **1/4"** | **64** | |
| 4.75 mm | **No. 4** | **60** | 39.9% Gravel |
| 2.00 mm | **No. 10** | **44** | |
| 850 um | **No. 20** | **28** | |
| 425 um | **No. 40** | **17** | 56.2% Sand |
| 250 um | **No. 60** | **11** | |
| 150 um | **No. 100** | **8** | |
| 75 um | **No. 200** | **3.9** | 3.9% Fines |

**SAND AND GRAVEL, TRACE SILT**

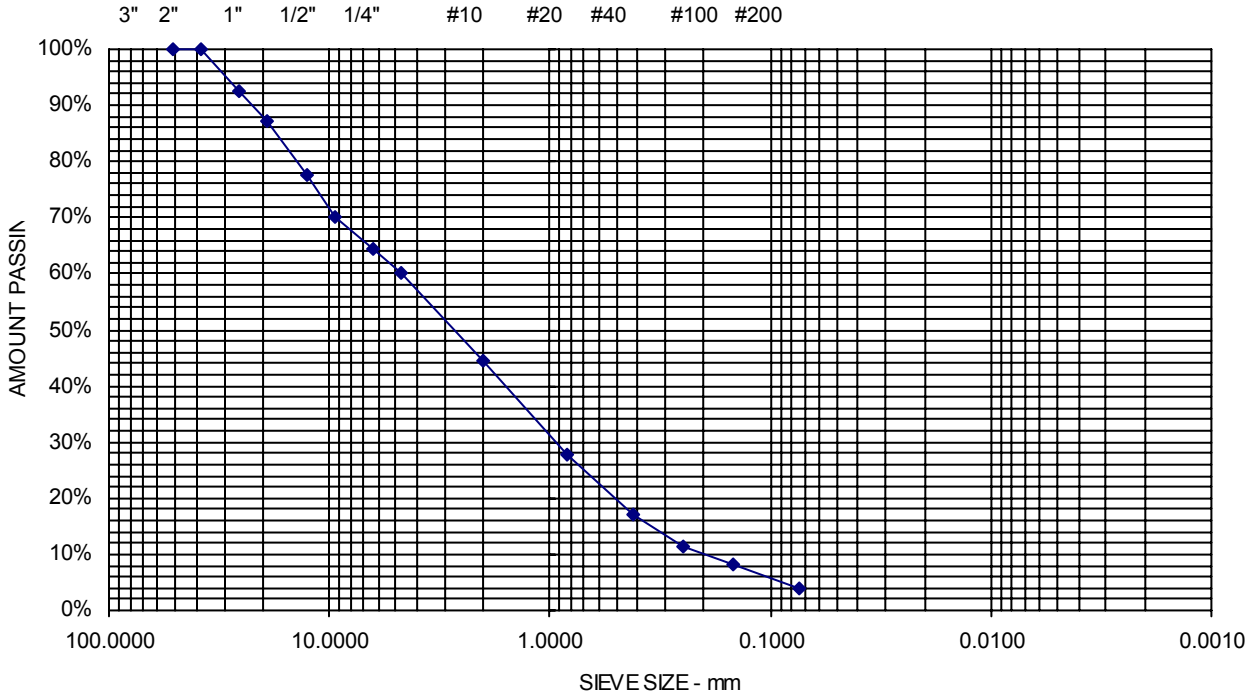


Comments:

**Sheet 27**

S.W.COLE ENGINEERING, INC.

# Consolidation Test

ASTM D-2435

| | | | |
|---|---|---|---|
| Project Name | MaineDOT BGS Fleet Services | Project Number | 13-0520 |
| Client | Allied Engineering, Inc. | Lab ID | 16765B |
| | | Date | 10/17/2013 |
| Boring | B-14 | Date Complete | 11/4/2013 |
| Sample | 1S | | |
| Depth | 15'-17' | | |

| | |
|---|---|
| $P_C$ (ksf) = | 5.0 |
| $C_C$ = | 0.23 |
| $C_R$ = | 0.02 |
| w = | 31.5% |
| $W_L$ = | - |
| $W_P$ = | - |

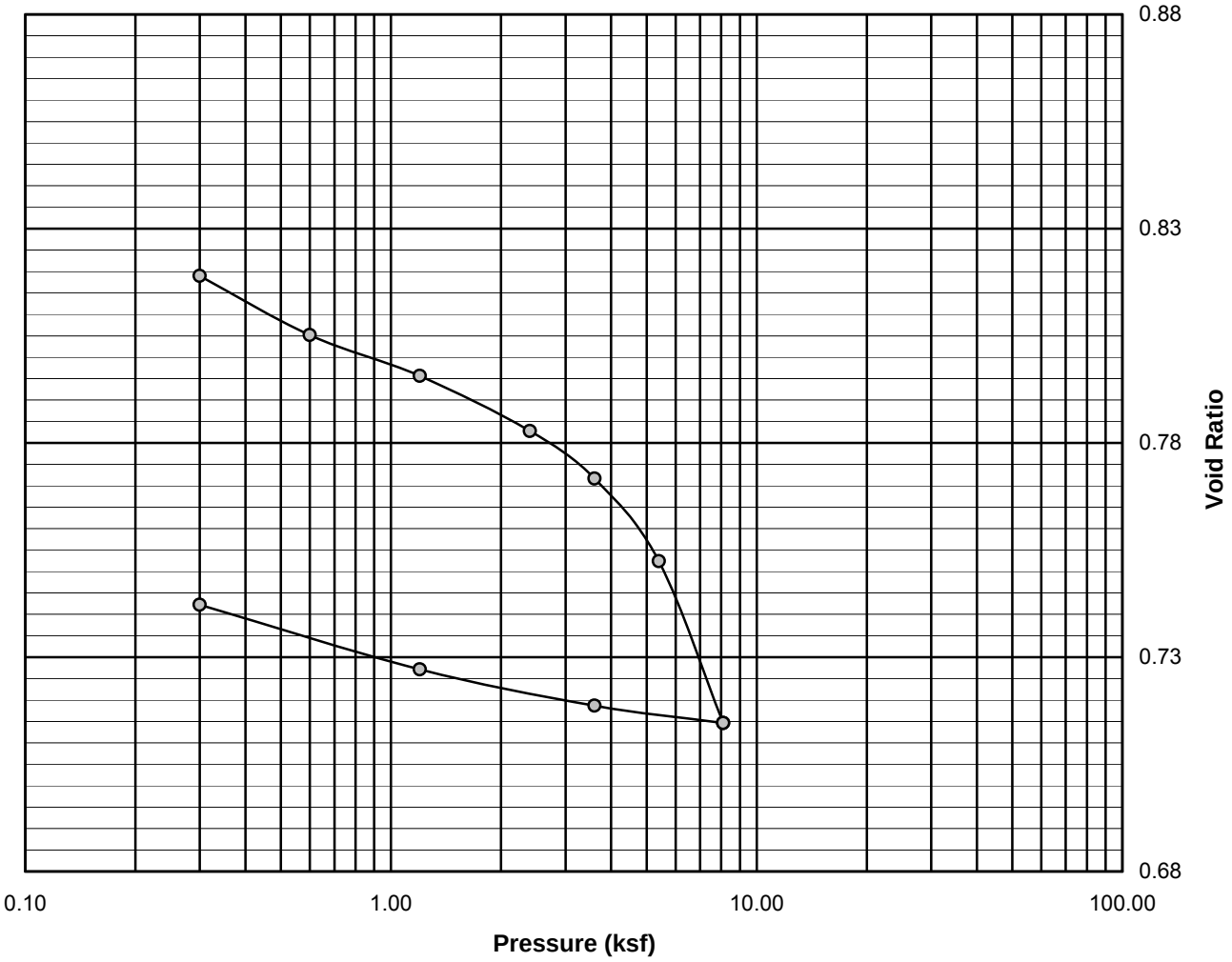


Comments:

Reviewed By

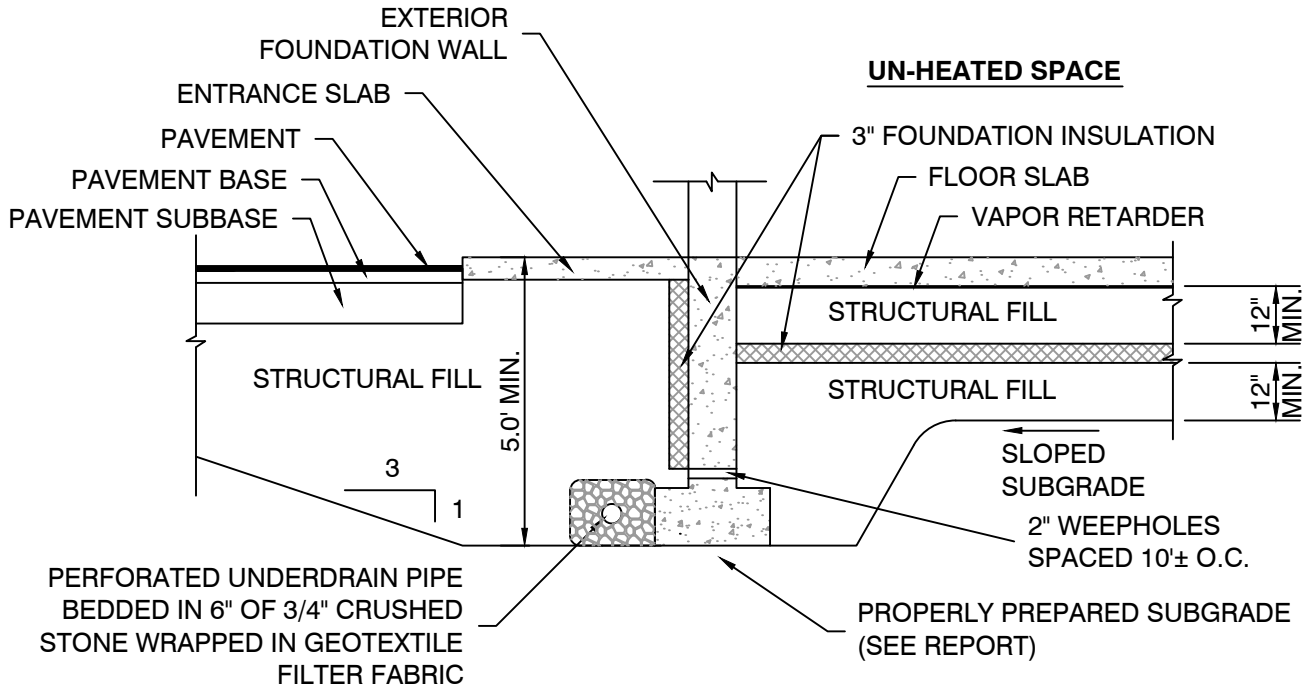


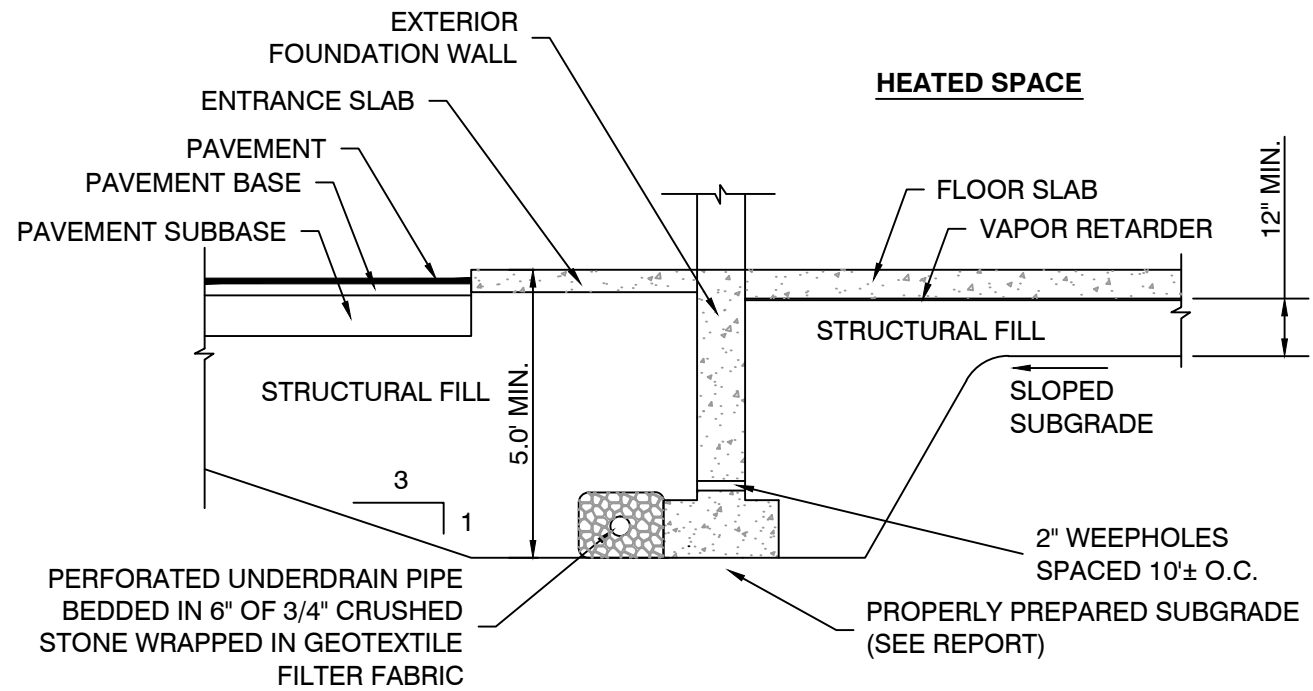


NOTE:

1. UNDERDRAIN INSTALLATION AND MATERIAL GRADATION RECOMMENDATIONS ARE CONTAINED WITHIN THIS REPORT.

2. DETAIL IS PROVIDED FOR ILLUSTRATIVE PURPOSES ONLY, NOT FOR CONSTRUCTION.

S.W.COLE ENGINEERING, INC.

ALLIED ENGINEERING, INC.

**UNDERDRAIN DETAIL**

MAINEDOT BGS FLEET SERVICES
66 INDUSTRIAL DRIVE
AUGUSTA, MAINE

| | | | |
|---|---|---|---|
| Job No.: | 13-0520 | Scale: | Not to Scale |
| Date : | 11/07/2013 | Sheet: | 29 |



R:\2013\13-0520\CAD\Drawings\13-0520 Sheet 29 UD Final.dwg, 11/7/2013 2:04:37 PM, 1:1, CEM, S.W. Cole Engineering, Inc.

# SECTION 31 25 00

# SLOPE PROTECTION AND EROSION CONTROL

## PART 1 GENERAL

### 1.01 RELATED DOCUMENTS

A. State of Maine Department of Transportation, "Standard Specifications," Revision December 2002, and any revisions thereto, apply to this Section. If the Contractor discovers any ambiguity, error, omission, conflict, or discrepancy, Section 10 1. 3.6 Priority of Conflicting Contract Documents shall control.

1. Drawings and general provisions of the Contract, and Division 1 Specification Sections, apply to this Section.
2. Any supplements to any of the above specifications and or standards issued prior to issuance of this Project Manual, apply to this section.

### 1.02 SECTION INCLUDES

A. Prevention of erosion due to construction activities.

B. Prevention of sedimentation of waterways, open drainage ways, and storm and sanitary sewers due to construction activities.

C. Restoration of areas eroded due to insufficient preventive measures.

D. Compensation of Owner for fines levied by authorities having jurisdiction due to non-compliance by Contractor.

### 1.03 RELATED SECTIONS

A. Section 31 10 00 - Site Clearing: Limits on clearing; disposition of vegetative clearing debris.

B. Section 31 22 00 - Grading: Temporary and permanent grade changes for erosion control.

### 1.04 PRICE AND PAYMENT PROCEDURES

A. Measurement and payment will be as follows:

B. PAY ITEM 656.75 Temporary Soil Erosion and Water Pollution Control: Pay Unit - Lump Sum.

C. Basis of Payment – The accepted quantity of Temporary Soil Erosion and Water Pollution Control will be paid for at the contract unit price per Lump Sum. Provisions of Section 656 of the "State of Maine, Department of Transportation, Standard Specifications, Revisions of December, 2002" or Specification Section 31 25 00 of the contract documents, whichever is stricter, shall apply. Contractor shall comply with the Erosion and Sedimentation Control Report prepared for this project.

### 1.05 REFERENCES

A. ASTM D 4355 - Standard Test Method for Deterioration of Geotextiles by Exposure to Light, Moisture, and Heat in a Xenon Arc Type Apparatus; 2005.

B. ASTM D 4491 - Standard Test Methods for Water Permeability of Geotextiles by Permittivity; 1999a (Reapproved 2004).

C. ASTM D 4533 - Standard Test Method for Trapezoid Tearing Strength of Geotextiles; 2004.

D. ASTM D 4632 - Standard Test Method for Grab Breaking Load and Elongation of Geotextiles; 1991 (Reapproved 2003).

E. ASTM D 4751 - Standard Test Method for Determining Apparent Opening Size of a Geotextile; 2004.

F. ASTM D 4873 - Standard Guide for Identification, Storage, and Handling of Geosynthetic Rolls and Samples; 2002.

G. EPA (NPDES) - National Pollutant Discharge Elimination System (NPDES), Construction General Permit; current edition; http://cfpub.epa.gov/npdes/stormwater/cgp.cfm.

H. FHWA FLP-94-005 - Best Management Practices for Erosion and Sediment Control; Federal Highway Administration; 1995.

I. USDA TR-55 - Urban Hydrology for Small Watersheds; USDA Natural Resources Conservation Service; 1986.

J. State of Maine Department of Transportation "Standard Specifications" Latest Revision.

1.06 PERFORMANCE REQUIREMENTS

A. Comply with all requirements of U.S. Environmental Protection Agency for erosion and sedimentation control, as specified for the National Pollutant Discharge Elimination System (NPDES), Phases I and II, under requirements for the 2003 Construction General Permit (CGP).

B. Conform to Maine Department of Environmental Protection publication "Maine Erosion and Sediment Control BMPS"

C. Comply with the Erosion and Sedimentation Control Report prepared for the project.

D. Maintain erosion control installations in a functional condition at all times. Inspect after each rainfall and at least daily during prolonged rainfall. Immediately correct deficiencies.

E. It shall be the Contractrors responsibility to review and comply with the erosion and sediment control drawings that have been included in the site construction drawings, prepared by the engineer.

F. Develop and follow an Erosion and Sedimentation Prevention Plan and submit periodic inspection reports.

G. Do not begin clearing, grading, or other work involving disturbance of ground surface cover until applicable permits have been obtained; furnish all documentation required to obtain applicable permits.

H. Timing: Put preventive measures in place as soon as possible after disturbance of surface cover and before precipitation occurs.

I. Storm Water Runoff: Control increased storm water runoff due to disturbance of surface cover due to construction activities for this project.
   1. Prevent runoff into storm and sanitary sewer systems, including open drainage channels, in excess of actual capacity or amount allowed by authorities having jurisdiction, whichever is less.
   2. Anticipate runoff volume due to the most extreme short term and 24-hour rainfall events that might occur in 10 years.

J. Erosion On Site: Minimize wind, water, and vehicular erosion of soil on project site due to

construction activities for this project.
1. Control movement of sediment and soil from temporary stockpiles of soil.
2. Prevent development of ruts due to equipment and vehicular traffic.
3. If erosion occurs due to non-compliance with these requirements, restore eroded areas at no cost to Owner.

K. Erosion Off Site: Prevent erosion of soil and deposition of sediment on other properties caused by water leaving the project site due to construction activities for this project.
1. Prevent windblown soil from leaving the project site.
2. Prevent tracking of mud onto public roads outside site.
3. Prevent mud and sediment from flowing onto sidewalks and pavements.
4. If erosion occurs due to non-compliance with these requirements, restore eroded areas at no cost to Owner.

L. Sedimentation of Waterways On Site: Prevent sedimentation of waterways on the project site, including rivers, streams, lakes, ponds, open drainage ways, storm sewers, and sanitary sewers.
1. If sedimentation occurs, install or correct preventive measures immediately at no cost to Owner; remove deposited sediments; comply with requirements of authorities having jurisdiction.
2. If sediment basins are used as temporary preventive measures, pump dry and remove deposited sediment after each storm.

M. Sedimentation of Waterways Off Site: Prevent sedimentation of waterways off the project site, including rivers, streams, lakes, ponds, open drainage ways, storm sewers, and sanitary sewers.
1. If sedimentation occurs, install or correct preventive measures immediately at no cost to Owner; remove deposited sediments; comply with requirements of authorities having jurisdiction.

N. Open Water: Prevent standing water that could become stagnant.

O. Maintenance: Maintain temporary preventive measures until permanent measures have been established.

1.07 SUBMITTALS

A. Inspection Reports: Submit report of each inspection; identify each preventive measure, indicate condition, and specify maintenance or repair required and accomplished.

PART 2 PRODUCTS

2.01 MATERIALS

A. Contractor shall provide all materials necessary to perform the work, including but not limited to:

B. Silt Fence: MDOT Section 656.03

C. Erosion Control Mesh: MDOT Section 717.06

D. Hay Bales: Baled Hay approximately 14"x18"x30" securely tied to form a firm bale.

E. Stone Check Dams: 2" to 3" crushed stone

F. Woven Geotextile Fabric: Mirafi 500x or approved equivalent.

G. Non-Woven Geotextile Fabric: Mirafi 160N or approved equivalent.

H. Stone for Stabilized Construction Entrance: Crushed Stone meeting the following requirements:
1. 3 inch sieve: 100 percent passing by weight

2. 2 inch sieve: 0 to 20 percent passing by weight.
3. 3/4 inch sieve: 0 to 5 percent passing by weight.

I. Erosion Control Mix: Erosion Control Mix meeting the following requirements:
1. Organic matter content is between 80 and 100 percent, dry weight basis.
2. Particle size by weight is 100 percent passing a 6" screen and a minimum of 70 percent, maximum of 85 percent, passing a 3/4" screen.
3. The organic matter shall be fibrous and elongated.
4. Large portions of silts, clays, or fine sands are not acceptable in the mix.
5. Soluble salts content is less than 4.0 mmhos/cm.
6. The pH shall fall between 5.0 and 8.0.

PART 3 EXECUTION

3.01 EXAMINATION

A. Examine site and identify existing features that contribute to erosion resistance; maintain such existing features to greatest extent possible.

3.02 PREPARATION

A. Schedule work so that soil surfaces are left exposed for the minimum amount of time.

3.03 SCOPE OF PREVENTIVE MEASURES

A. In all cases, if permanent erosion resistant measures have been installed temporary preventive measures are not required.

B. Construction Entrances: Traffic-bearing aggregate surface.
1. Width: As required; 25 feet, minimum.
2. Length: 50 feet, minimum.
3. Provide at each construction entrance from public right-of-way.
4. Where necessary to prevent tracking of mud onto right-of-way, provide wheel washing area out of direct traffic lane, with drain into sediment trap or basin.

C. Linear Sediment Barriers: Made of silt fence or erosion control mix.
1. Provide linear sediment barriers:
a. Along downhill perimeter edge of disturbed areas, including soil stockpiles.

D. Storm Drain Curb Inlet Sediment Trap: Protect each curb inlet using one of the following measures:
1. Filter fabric wrapped around hollow concrete blocks blocking entire inlet face area; use one piece of fabric wrapped at least 1-1/2 times around concrete blocks and secured to prevent dislodging; orient cores of blocks so runoff passes into inlet.

E. Storm Drain Drop Inlet Sediment Traps: As detailed on drawings.

F. Soil Stockpiles: Protect using one of the following measures:
1. Cover with polyethylene film, or similar tarp, secured by placing soil on outer edges.
2. Cover with mulch at least 4 inches thickness of pine needles, sawdust, bark, wood chips, erosion control mix, shredded leaves, or 6 inches of straw or hay.

G. Mulching: Use only for areas that may be subjected to erosion for less than 6 months.

H. Temporary Seeding: Use where temporary vegetated cover is required.

3.04 MAINTENANCE

A. Maintain erosion control installations in a functional condition at all times. Inspect preventive measures weekly, within 24 hours before and after the end of any storm that produces 0.5 inches or more rainfall at the project site, and daily during prolonged rainfall.

B. Repair deficiencies immediately.

C. Clean out temporary sediment control structures as noted in the Erosion and Sedimentation Control Report for this project and relocate soil on site.

D. Place sediment in appropriate locations on site; do not remove from site.

3.05 CLEAN UP

A. Remove and properly dispose temporary measures after permanent measures have been installed.

B. Clean out temporary sediment control structures that are to remain as permanent measures.

C. Where removal of temporary measures would leave exposed soil, shape surface to an acceptable grade and finish to match adjacent ground surfaces.

D. Clean sediment from catch basin sumps within the project work limits.

**This Page Intentionally Left Blank**

**END OF SECTION 31 25 00**

# SECTION 32 12 16

# ASPHALT PAVING

## PART 1 GENERAL

### 1.01 RELATED DOCUMENTS

A. State of Maine Department of Transportation, "Standard Specifications," Revision December 2002, and any revisions thereto, apply to this Section. If the Contractor discovers any ambiguity, error, omission, conflict, or discrepancy, Section 10 1. 3.6 Priority of Conflicting Contract Documents shall control.

1. Drawings and general provisions of the Contract, and Division 1 Specification Sections, apply to this Section.

2. Any supplements to any of the above specifications and or standards issued prior to issuance of this Project Manual, apply to this section.

### 1.02 SECTION INCLUDES

A. Hot bituminous concrete paving.

### 1.03 RELATED REQUIREMENTS

A. Section 31 22 00 - Grading: Preparation of site for paving and base.

B. Section 31 23 23 - Fill: Compacted subgrade for paving.

C. Section 31 23 16.13 - Trenching for Site Utilities

### 1.04 PRICE AND PAYMENT PROCEDURES

A. Measurement and payment will be as follows:

B. Pay Item 403.207 Hot Mix Asphalt 19.0 mm: Pay Unit - Ton.

C. Pay Item 403.208 Hot Mix Asphalt 12.5 mm: Pay Unit - Ton.

D. Pay Item 609.31 Type 3 Bituminous Curb: Pay Unit - Linear Foot.

E. Basis of Payment – The accepted quantity of Hot Mix Asphalt will be paid for at the contract unit price per Ton. Payment is subject to Special Provision Section 108 attached to this Section. Special Provisions 401 and 403 attached to this Section also apply to the Hot Mix Asphalt Items. Provisions of Section 403 of the "State of Maine, Department of Transportation, Standard Specifications, Revisions of December, 2002" or Specification Section 32 12 16 of the contract documents, whichever is stricter, shall apply. Bituminous tack coat and saw cutting will be considered incidental to Section 403 items and no separate payment will be made.

F. Basis of Payment – The accepted quantity of Type 3 Bituminous Curb will be paid for at the contract unit price per Linear Foot. Provisions of Section 609.04 of the "State of Maine, Department of Transportation, Standard Specifications, Revisions of December, 2002" and the detail provided in the plan set, shall apply. Bituminous tack coat will be considered incidental to Section 609 items and no separate payment will be made.

### 1.05 REFERENCE STANDARDS

A. State of Maine Department of Transportation Standard Specifications Highways and Bridges,

Latest revision (for Hot Mix Asphalt (HMA) pavement designations), hereafter designated as MDOT Specifications.

B. ASTM D946 - Standard Specification for Penetration-Graded Asphalt Cement for Use in Pavement Construction; 2009a.

1.06 QUALITY ASSURANCE

A. Perform Work in accordance with MDOT Section 403.

B. Mixing Plant: Conform to MDOT Section 401.

C. Obtain materials from same source throughout.

1.07 REGULATORY REQUIREMENTS

A. Conform to applicable code for paving work on public property.

1.08 FIELD CONDITIONS

A. Weather and seasonal limitations as required by MDOT Section 401.07 shall apply to this Section.

1.09 TESTS

A. Submit proposed mix design of each class of mix for review and approval to the MaineDOT prior to commencement of work.
   1. Mix design must be for current year.

PART 2 PRODUCTS

2.01 MATERIALS

A. Asphalt Cement: MDOT Section 702.

B. Hot Bituminous Pavement: MDOT Section 401.02 through 401.06

C. Mineral Filler: MDOT Section 703.

D. Emulsified Bituminous Sealing Compound: MDOT Section 702.12

E. Joint Mortar: MDOT Section 705.02

F. Tack Coat Emulsified asphalt for tack coat shall conform to MDOT Section 702

PART 3 EXECUTION

3.01 EXAMINATION

A. Verify that compacted subgrade is dry and ready to support paving and imposed loads.

B. Verify gradients and elevations of base are correct.

C. Beginning of installation means acceptance of substrate.

3.02 PREPARATION AND PLACEMENT

A. Tack coat shall be applied to any existing pavement at a rate of approximately 0.025 gal/sq yd, and on milled pavement approximately 0.05 gal/sq yd, prior to placing new course. All joints between existing and new pavement shall be tacked.

B. Prepare and place plant mix hot bituminous pavement in accordance with MDOT Sections 401 and 403.

1. An approved release agent is required to ensure the mixture does not adhere to hand tools, rollers, pavers and truck bodies. the use of petroleum base fuel oils will not be permitted.
2. The Owner will pay for the work specified in subsection 401.11 for the HMA used, except that cleaning objectionable material from the pavement and furnishing and applying item 409.15 bituminous material to joints and contact surfaces is incidental.

C. Refer to special provisions in MaineDOT standards.

3.03 PREPARATION - TACK COAT

A. Apply tack coat in accordance with manufacturer's instructions.

3.04 PLACING ASPHALT PAVEMENT

A. Install Work in accordance with State of Maine Highways standards.

B. Place asphalt within 24 hours of applying primer or tack coat.

C. Compact pavement by rolling to specified density. Do not displace or extrude pavement from position. Hand compact in areas inaccessible to rolling equipment.

D. Perform rolling with consecutive passes to achieve even and smooth finish without roller marks.

3.05 TOLERANCES

A. Flatness: Conform to requirements of MDOT Section 401.20

B. Compacted Thickness: Conform to requirements of MDOT Section 401.17.

C. Variation from True Elevation: Conform to requirements of MDOT Section 403.

3.06 FIELD QUALITY CONTROL

A. Owner shall provide field inspection and testing. Owner shall take samples and perform tests in accordance with MDOT Specifications.

B. If tests indicate work does not meet specified requirements, remove work, replace and retest at no cost to the Owner

3.07 PROTECTION

A. Immediately after placement, protect pavement from mechanical injury for 5 days

3.08 ATTACHMENTS

A. Special Provision Section 108 – Asphalt Escalator

B. Special Provision Section 401 - Hot Mix Asphalt

C. Special Provision Section 403 - Hot Mix Asphalt

**This page left intentionally blank**

**END OF SECTION 32 12 16**

# SPECIAL PROVISION
## SECTION 108
## PAYMENT
(Asphalt Escalator)

108.4.1 Price Adjustment for Hot Mix Asphalt: For all contracts with hot mix asphalt in excess of 500 tons total, a price adjustment for performance graded binder will be made for the following pay items:

Item 403.102 Mot Mix Asphalt – Special Areas
Item 403.206 Hot Mix Asphalt - 25 mm
Item 403.207 Hot Mix Asphalt - 19 mm
Item 403.2071 Hot Mix Asphalt - 19 mm (Polymer Modified)
Item 403.2072 Hot Mix Asphalt - 19 mm (Asphalt Rich Base)
Item 403.2073 Warm Mix Asphalt - 19 mm
Item 403.208 Hot Mix Asphalt - 12.5 mm
Item 403.2081 Hot Mix Asphalt - 12.5 mm (Polymer Modified)
Item 403.20813 Warm Mix Asphalt - 12.5 mm (Polymer Modified)
Item 403.2083 Warm Mix Asphalt - 12.5 mm
Item 403.209 Hot Mix Asphalt - 9.5 mm (sidewalks, drives, & incidentals)
Item 403.210 Hot Mix Asphalt - 9.5 mm
Item 403.2101 Hot Mix Asphalt - 9.5 mm (Polymer Modified)
Item 403.2102 Hot Mix Asphalt - 9.5 mm (Asphalt Rich Base)
Item 403.2103 Warm Mix Asphalt - 9.5 mm
Item 403.2104 Hot Mix Asphalt - 9.5 mm (3/4” Surface)
Item 403.211 Hot Mix Asphalt – Shim
Item 403.2111 Hot Mix Asphalt – Shim (Polymer Modified)
Item 403.2113 Warm Mix Asphalt - Shim
Item 403.212 Hot Mix Asphalt - 4.75 mm (Shim)
Item 403.2123 Warm Mix Asphalt - 4.75 mm (Shim)
Item 403.213 Hot Mix Asphalt - 12.5 mm (base and intermediate course)
Item 403.2131 Hot Mix Asphalt - 12.5 mm (base and intermediate course Polymer Modified)
Item 403.2132 Hot Mix Asphalt - 12.5 mm (Asphalt Rich Base and intermediate course)
Item 403.2133 Warm Mix Asphalt - 12.5 mm (base and intermediate course)
Item 403.214 Hot Mix Asphalt - 4.75 mm (Surface)
Item 403.2143 Warm Mix Asphalt - 4.75 mm (Surface)
Item 403.301 Hot Mix Asphalt (Asphalt Rubber Gap-Graded)
Item 404.70 Colored Hot Mix Asphalt – 9.5mm (Surface)
Item 404.72 Colored Hot Mix Asphalt – 9.5mm (Islands, sidewalks, & incidentals)
Item 461.13 Maintenance Surface Treatment

Price adjustments will be based on the variance in costs for the performance graded binder component of hot mix asphalt. They will be determined as follows:

The quantity of hot mix asphalt for each pay item will be multiplied by the performance graded binder percentages given in the table below times the difference in price between the base price and the period price of asphalt cement. Adjustments will be made upward or downward, as prices increase or decrease.

| | | | |
|---|---|---|---|
| Item 403.102–6.2% | | | |
| Item 403.206–4.8% | | | |
| Item 403.207–5.2% | Item 403.2071–5.2% | Item 403.2072–5.8% | Item 403.2073–5.2% |
| Item 403.208–5.6% | Item 403.2081–5.6% | Item 403.20813–5.6% | Item 403.2083–5.6% |
| Item 403.209–6.2% | | | |
| Item 403.210–6.2% | Item 403.2101–6.2% | Item 403.2102–6.8% | Item 403.2103–6.2% |
| Item 403.2104–6.2% | | | |
| Item 403.211–6.2% | Item 403.2111–6.2% | | Item 403.2113–6.2% |
| Item 403.212–6.8% | | | Item 403.2123–6.8% |
| Item 403.213–5.6% | Item 403.2131–5.6% | Item 403.2132–6.2% | Item 403.2133–5.6% |
| Item 403.214–6.8% | | | Item 403.2143–6.8% |
| Item 403.301–6.2% | | | |
| Item 404.70–6.2% | | | |
| Item 404.72–6.2% | | | |
| Item 461.13–6.4% | | | |

Hot Mix Asphalt**:** The quantity of hot mix asphalt will be determined from the quantity shown on the progress estimate for each pay period.

Base Price: The base price of performance graded binder to be used is the price per standard ton current with the bid opening date. This price is determined by using the average New England Selling Price (Excluding the Connecticut market area), as listed in the Asphalt Weekly Monitor.

Period Price: The period price of performance graded binder will be determined by the Department by using the average New England Selling Price (Excluding the Connecticut market area), listed in the Asphalt Weekly Monitor current with the paving date. The maximum Period Price for paving after the adjusted Contract Completion Date will be the Period Price on the adjusted Contract Completion Date.

# SPECIAL PROVISION 400 - PAVEMENTS

## SECTION 401 - HOT MIX ASPHALT PAVEMENT

401.01 Description The Contractor shall furnish a uniformly blended, homogeneous mixture placed as one or more courses of Hot Mix Asphalt Pavement (HMA) on an approved base in accordance with the contract documents and in reasonably close conformity with the lines, grades, thickness, and typical cross sections shown on the plans or established by the Resident. The Department will accept this work under Quality Assurance provisions, in accordance with these specifications and the requirements of Section 106 – Quality, the provisions of AASHTO M 323 except where otherwise noted in sections 401 and 703 of these specifications, and the MaineDOT Policies and Procedures for HMA Sampling and Testing.

401.02 Materials Materials shall meet the requirements specified in Section 700 - Materials:

| | |
|---|---|
| Asphalt Cement | 702.01 |
| Aggregates for HMA Pavement | 703.07 |
| RAP for HMA Pavement | 703.08 |
| HMA Mixture Composition | 703.09 |

401.03 Composition of Mixtures The Contractor shall compose the Hot Mix Asphalt Pavement with aggregate, Performance Graded Asphalt Binder (PGAB), and mineral filler if required. HMA shall be designed and tested according to AASHTO R35 and the volumetric criteria in Table 1. The Contractor shall size, uniformly grade, and combine the aggregate fractions in proportions that provide a mixture meeting the grading requirements of the Job Mix Formula (JMF).

The Contractor shall submit for Department approval a JMF to the Central Laboratory in Bangor for each mixture to be supplied. The Department may approve 1 active design per nominal maximum size, per traffic level, per plant, plus a 9.5mm "fine" mix for shimming and where required, a non-RAP design for bridge decks. The Department shall then have 15 calendar days in which to process a new design before approval. The JMF shall establish a single percentage of aggregate passing each sieve size within the limits shown in section 703.09. The mixture shall be designed and produced, including all production tolerances, to comply with the allowable control points for the particular type of mixture as outlined in 703.09. The JMF shall state the original source, gradation, and percentage to be used of each portion of the aggregate including RAP when utilized, and mineral filler if required. It shall also state the proposed PGAB content, the name and location of the refiner, the supplier, the source of PGAB submitted for approval, the type of PGAB modification if applicable, and the location of the terminal if applicable.

In addition, the Contractor shall provide the following information with the proposed JMF:

- Properly completed JMF indicating all mix properties (Gmm, VMA, VFB, etc.)
- Stockpile Gradation Summary
- Design Aggregate Structure Consensus Property Summary
- Design Aggregate Structure Trial Blend Gradation Plots (0.45 power chart)
- Trial Blend Test Results for at least three different asphalt contents
- Design Aggregate Structure for at least three trial blends
- Test results for the selected aggregate blend at a minimum of three binder contents
- Specific Gravity and temperature/viscosity charts for the PGAB to be used
- Recommended mixing and compaction temperatures from the PGAB supplier
- Material Safety Data Sheets (MSDS) For PGAB
- Asphalt Content vs. Air Voids trial blend curve
- Test report for Contractor's Verification sample

Summary of RAP test results (if used), including count, average and standard deviation of binder content and gradation

At the time of JMF submittal, the Contractor shall identify and make available the stockpiles of all proposed aggregates at the plant site. There must be a minimum of 150 ton for stone stockpiles, 75 ton for sand stockpiles, and 50 ton of blend sand before the Department will sample. The Department shall obtain samples for laboratory testing. The Contractor shall also make available to the Department the PGAB proposed for use in the mix in sufficient quantity to test the properties of the asphalt and to produce samples for testing of the mixture. Before the start of paving, the Contractor and the Department shall split a production sample for evaluation. The Contractor shall test its split of the sample and determine if the results meet the requirements of the Department's written policy for mix design verification (See MaineDOT Policies and Procedures for HMA Sampling and Testing available at the Central Laboratory in Bangor). If the results are found to be acceptable, the Contractor will forward their results to the Department's Lab, which will test the Department's split of the sample. The results of the two split samples will be compared and shared between the Department and the Contractor. If the Department finds the mixture acceptable, an approved JMF will be forwarded to the Contractor and paving may commence. The first day's production shall be monitored, and the approval may be withdrawn if the mixture exhibits undesirable characteristics such as checking, shoving or displacement.

The Contractor shall be allowed to submit aim changes within 24 hours of receipt of the first Acceptance test result. Should all of the Acceptance samples of a Lot be obtained prior to the receipt of the first Acceptance result, the Department will not allow the aim changes to be applied to that Lot. Adjustments will be allowed of up to 2% on the percent passing the 2.36 mm sieve through the 0.075 mm and 3% on the percent passing the 4.75 mm or larger sieves. Adjustments will be allowed on the %PGAB of up to 0.2%. Adjustments will be allowed on GMM of up to 0.010.

The Contractor shall submit a new JMF for approval each time a change in material source or materials properties is proposed. The same approval process shall be followed. The cold feed percentage of any aggregate may be adjusted up to 10 percentage points from the amount listed on the JMF, however no aggregate listed on the JMF shall be eliminated. The cold feed percentage for RAP may be reduced up to 10 percentage points from the amount listed on the JMF and shall not exceed the percentage of RAP approved in the JMF or for the specific application under any circumstances.

TABLE 1: VOLUMETRIC DESIGN CRITERIA

| Design ESAL's (Millions) | Required Density (Percent of $G_{mm}$) | | | Voids in the Mineral Aggregate (VMA)(Minimum Percent) | | | | | Voids Filled with Binder (VFB) (Minimum %) | Fines/Eff. Binder Ratio |
|---|---|---|---|---|---|---|---|---|---|---|
| | | | | Nominal Maximum Aggregate Size (mm) | | | | | | |
| | $N_{initial}$ | $N_{design}$ | $N_{max}$ | 25 | 19 | 12.5 | 9.5 | 4.75 | | |
| <0.3 | ≤91.5 | 96.0 | ≤98.0 | 13.0 | 14.0 | 15.0 | 16.0 | 16.0 | 70-80 | 0.6-1.2 |
| 0.3 to <3 | ≤90.5 | | | | | | | | 65-80 | |
| 3 to <10 | ≤89.0 | | | | | | | | 65-80* | |
| 10 to <30 | | | | | | | | | | |
| ≥ 30 | | | | | | | | | | |

*For 9.5 mm nominal maximum aggregate size mixtures, the maximum VFB is 82.
*For 4.75 mm nominal maximum aggregate size mixtures, the maximum VFB is 84.

401.031 Warm Mix Technology The Contractor may place Hot Mix Asphalt Pavement produced with an accepted WMA technology if approved by the Department. Methods or technologies shall generally be at the Contractors option, but will be limited to proven, Agency and Industry accepted practice. Mixture production,

placement and volumetric testing details, including temperatures, shall be included in the project specific QCP, and submitted to the Department for approval prior to any work.

401.04 Temperature Requirements After the JMF is established, the temperatures of the mixture shall conform to the following tolerances:

In the truck at the mixing plant – allowable range 275 to 325°F
At the Paver – allowable range 275 to 325°F

The JMF and the mix subsequently produced shall meet the requirements of Tables 1 and Section 703.07.

401.05 Performance Graded Asphalt Binder Unless otherwise noted in Special Provision 403 - Hot Mix Asphalt Pavement, the Contractor may utilize either a 64-28 or 58-28 PGAB. The Contractor must stipulate which PGAB grading will be used to construct the entire HMA pavement structure prior to starting work. For mixtures containing greater than 20 percent but no more than 30 percent RAP the PGAB shall be PG 58-34 (or PG 52-34 when approved by the Department). The PGAB shall meet the applicable requirements of AASHTO M320 - Standard Specification for PGAB. Polymer-modified PGAB shall meet the applicable requirements of AASHTO MP 19. The Contractor shall provide the Department with an approved copy of the Quality Control Plan for PGAB in accordance with AASHTO R 26 Certifying Suppliers of PGAB.
The Contractor shall request approval from the Department for a change in PGAB supplier or source by submitting documentation stating the new supplier or source a minimum of 24 hours prior to the change. In the event that the PGAB supplier or source is changed, the Contractor shall make efforts to minimize the occurrence of PGAB co-mingling.

401.06 Weather and Seasonal Limitations The State is divided into two paving zones as follows:

a. Zone 1 Areas north of US Route 2 from Gilead to Bangor and north of Route 9 from Bangor to Calais.
b. Zone 2 Areas south of Zone 1 including the US Route 2 and Route 9 boundaries.

The Contractor may place Hot Mix Asphalt Pavement for use other than a traveled way wearing course in either Zone between the dates of April 15th and November 15th, provided that the air temperature as determined by an approved thermometer (placed in the shade at the paving location) is 40°F or higher.
The Contractor may place Hot Mix Asphalt Pavement produced with an accepted WMA technology for any base, intermediate base, or shim course in either Zone between the dates of April 15th and November 15th, provided that the air temperature as determined by an approved thermometer (placed in the shade at the paving location) is 35°F or higher, and the area to be paved is not frozen. The Hot Mix Asphalt Pavement produced with an approved WMA technology shall meet the requirements of section 401.04 - Temperature Requirements, unless otherwise approved by the Department.

The Contractor may place Hot Mix Asphalt Pavement as traveled way wearing course in Zone 1 between the dates of May 1st and the Saturday following October 1st and in Zone 2 between the dates of April 15$^{th}$ and the Saturday following October 15$^{th}$, provided the air temperature determined as above is 50°F or higher. For the purposes of this Section, the traveled way includes truck lanes, ramps, approach roads and auxiliary lanes. The atmospheric temperature for all courses on bridge decks shall be 50°F or higher.

Hot Mix Asphalt Pavement used for curb, driveways, sidewalks, islands, or other incidentals is not subject to seasonal limitations, except that conditions shall be satisfactory for proper handling and finishing of the mixture. All mixtures used for curb, driveways, sidewalks, islands, or other incidentals shall conform to section 401.04 - Temperature Requirements. Unless otherwise specified, the Contractor shall not place Hot Mix Asphalt Pavement on a wet or frozen surface and the air temperature shall be 40°F or higher.

On all sections of overlay with wearing courses less than 1 in thick, the wearing course for the travelway and adjacent shoulders shall be placed between the dates of May 15th and the Saturday following September 15th.

On all sections of overlay with wearing courses less than 1 inch thick, the wearing course for the travelway and adjacent shoulders shall be placed between the dates of June 1st and the Saturday following September 1st if the work is to be performed, either by contract requirement, or Contractor option, during conditions defined as "night work".

401.07 Hot Mix Asphalt Plant

401.071 General Requirements HMA plants shall conform to AASHTO M156.

a. Truck Scales When the hot mix asphalt is to be weighed on scales meeting the requirements of Section 108 - Payment, the scales shall be inspected and sealed by the State Sealer as often as the Department deems necessary to verify their accuracy.

Plant scales shall be checked prior to the start of the paving season, and each time a plant is moved to a new location. Subsequent checks will be made as determined by the Resident. The Contractor will have at least ten 20 Kg [50 pound] masses for scale testing.

401.072 Automation of Batching Batch plants shall be automated for weighing, recycling, and monitoring the system. In the case of a malfunction of the printing system, the requirements of Section 401.074 c. of this specification will apply.

The batch plant shall accurately proportion the various materials in the proper order by weight. The entire batching and mixing cycle shall be continuous and shall not require any manual operations. The batch plant shall use auxiliary interlock circuits to trigger an audible alarm whenever an error exceeding the acceptable tolerance occurs. Along with the alarm, the printer shall print an asterisk on the delivery slip in the same row containing the out-of-tolerance weight. The automatic proportioning system shall be capable of consistently delivering material within the full range of batch sizes. When RAP is being used, the plant must be capable of automatically compensating for the moisture content of the RAP.

All plants shall be equipped with an approved digital recording device. The delivery slip load ticket shall contain information required under Section 108.1.3 - Provisions Relating to Certain Measurements, Mass and paragraphs a, b, and c of Section 401.073

401.073 Automatic Ticket Printer System on Automatic HMA Plant An approved automatic ticket printer system shall be used with all approved automatic HMA plants. The requirements for delivery slips for payment of materials measured by weight, as given in the following Sections, shall be waived: 108.1.3 a., 108.1.3 b., 108.1.3 c., and 108.1.3 d. The automatic printed ticket will be considered as the Weight Certificate.

The requirements of Section 108.1.3 f. - Delivery Slips, shall be met by the weigh slip or ticket, printed by the automatic system, which accompanies each truckload, except for the following changes:

a. The quantity information required shall be individual weights of each batch or total net weight of each truckload.
b. Signatures (legible initials acceptable) of Weighmaster (required only in the event of a malfunction as described in 401.074 c.).
c. The MaineDOT designation for the JMF.

401.074 Weight Checks on Automatic HMA Plant At least twice during each 5 days of production either of the following checks will be performed:

a. A loaded truck may be intercepted and weighed on a platform scale that has been sealed by the State Sealer of Weights and Measures within the past 12 months. The inspector will notify the producer to take corrective action on any discrepancy over 1.0%. The producer may continue to operate for 48 hours under the following conditions.

1. If the discrepancy does not exceed 1.5%; payment will still be governed by the printed ticket.
2. If the discrepancy exceeds 1.5%, the plant will be allowed to operate as long as payment is determined by truck platform scale net weight.

If, after 48 hours the discrepancy has not been addressed and reduced below 1.0%, than plant operations will cease. Plant operation may resume after the discrepancy has been brought within 1.0%.

b. Where platform scales are not readily available, a check will be made to verify the accuracy and sensitivity of each scale within the normal weighing range and to assure that the interlocking devices and automatic printer system are functioning properly.

c. In the event of a malfunction of the automatic printer system, production may be continued without the use of platform truck scales for a period not to exceed the next two working days, providing total weights of each batch are recorded on weight tickets and certified by a Licensed Public Weighmaster.

401.08 Hauling Equipment Trucks for hauling Hot Mix Asphalt Pavement shall have tight, clean, and smooth metal dump bodies, which have been thinly coated with a small amount of approved release agent to prevent the mixture from adhering to the bodies. Solvent based agents developed to strip asphalts from aggregates will not be allowed as release agents.

All truck dump bodies shall have a cover of canvas or other water repellent material capable of heat retention, which completely covers the mixture. The cover shall be securely fastened on the truck, unless unloading.

All truck bodies shall have an opening on both sides, which will accommodate a thermometer stem. The opening shall be located near the midpoint of the body, at least 12 in above the bed.

401.09 Pavers Pavers shall be self-contained, self-propelled units with an activated screed (heated if necessary) capable of placing courses of Hot Mix Asphalt Pavement in full lane widths specified in the contract on the main line, shoulder, or similar construction.

On projects with no price adjustment for smoothness, pavers shall be of sufficient class and size to place Hot Mix Asphalt Pavement over the full width of the mainline travel way with a 10 ft minimum main screed with activated extensions.

The Contractor shall place Hot Mix Asphalt Pavement on the main line with a paver using an automatic grade and slope controlled screed, unless otherwise authorized by the Department. The controls shall automatically adjust the screed and increase or decrease the layer thickness to compensate for irregularities in the preceding course. The controls shall maintain the proper transverse slope and be readily adjustable so that transitions and superelevated curves can be properly paved. The controls shall operate from a fixed or moving reference such as a grade wire or ski type device (floating beam) with a minimum length of 30 ft, a non-contact grade control with a minimum span of 24 ft, except that a 40 ft reference shall be used on Expressway projects.

The Contractor shall operate the paver in such a manner as to produce a visually uniform surface texture and a thickness within the requirements of Section 401.101 - Surface Tolerances. The paver shall have a receiving hopper with sufficient capacity for a uniform spreading operation and a distribution system to place the mixture uniformly, without segregation in front of the screed. The screed assembly shall produce a finished surface of the required evenness and texture without tearing, shoving, or gouging the mixture. Pavers with extendible screeds shall have auger extensions and tunnel extenders as per the manufacturer's recommendations, a copy of which shall be available if requested.

The Contractor shall have the paver at the project site sufficiently before the start of paving operations to be inspected and approved by the Department. The Contractor shall repair or replace any paver found worn or defective, either before or during placement, to the satisfaction of the Department. Pavers that produce an unevenly textured or non-uniform mat will be repaired or replaced before continuing to place HMA on MaineDOT projects.

On a daily basis, the Contractor shall perform density testing across the mat being placed, prior to being compacted by equipment at 12 in intervals. If the density values vary by more than 2.0% from the mean, the Contractor shall make adjustments to the screed until the inconsistencies are remedied. Failure to replace or repair defective placement equipment may result in a letter of suspension of work and notification of a quality control violation resulting in possible monetary penalties as governed by Section 106 - Quality

<u>401.10 Rollers</u> Rollers shall be static steel, pneumatic tire, oscillatory, or approved vibrator type. Rollers shall be in good mechanical condition, capable of starting and stopping smoothly, and be free from backlash when reversing direction. Rollers shall be equipped and operated in such a way as to prevent the picking up of hot mixed material by the roller surface. The use of rollers, which result in crushing of the aggregate or in displacement of the HMA will not be permitted. Any Hot Mix Asphalt Pavement that becomes loose, broken, contaminated, shows an excess or deficiency of Performance Graded Asphalt Binder, or is in any other way defective shall be removed and replaced at no additional cost with fresh Hot Mix Asphalt Pavement, which shall be immediately compacted to conform to the adjacent area.

The Contractor shall repair or replace any roller found to be worn or defective, either before or during placement, to the satisfaction of the Department. Rollers that produce grooved, unevenly textured or non-uniform mat will be repaired or replaced before continuing to place HMA on MaineDOT projects. The type of rollers to be used and their relative position in the compaction sequence shall generally be the Contractor's option, provided specification densities are attained and with the following requirements:

a. On variable-depth courses, the first lift of pavement over gravel, reclaimed pavement, on irregular or milled surfaces, or on bridges, at least one roller shall be 16 ton pneumatic-tired. Unless otherwise allowed by the Resident, pneumatic-tired rollers shall be equipped with skirting to minimize the pickup of HMA materials from the paved surface. When required by the Resident, the roller shall be ballasted to 20 ton.

b. Compaction with a vibratory or steel wheel roller shall precede pneumatic-tired rolling, unless otherwise authorized by the Department.

c. Vibratory rollers shall not be operated in the vibratory mode when checking or cracking of the mat occurs, or on bridge decks.

d. Any method, which results in cracking or checking of the mat, will be discontinued and corrective action taken.

e. The use of an oscillating steel roller shall be required to compact all mixtures placed on bridge decks.

The maximum operating speed for a steel wheel or pneumatic roller shall not exceed the manufacturer's recommendations, a copy of which shall be available if requested.

401.101 Surface Tolerances The Department will check surface tolerance utilizing the following methods :

a.) A 16 ft straightedge or string line placed directly on the surface, parallel to the centerline of pavement.
b.) A 10 ft straightedge or string line placed directly on the surface, transverse to the centerline of pavement.

The Contractor shall correct variations exceeding ¼ in by removing defective work and replacing it with new material as directed by the Department. The Contractor shall furnish a 10 foot straightedge for the Departments use.

401.11 Preparation of Existing Surface The Contractor shall thoroughly clean the surface upon which Hot Mix Asphalt Pavement is to be placed of all objectionable material. When the surface of the existing base or pavement is irregular, the Contractor shall bring it to uniform grade and cross section. All surfaces shall have a tack coat applied prior to placing any new HMA course. Tack coat shall conform to the requirements of Section 409 – Bituminous Tack Coat, Section 702 – Bituminous Material, and all applicable sections of the contract.

401.12 Hot Mix Asphalt Documentation The Contractor and the Department shall agree on the amount of Hot Mix Asphalt Pavement that has been placed each day. All delivery slips shall conform to the requirements of 401.073.

401.13 Preparation of Aggregates The Contractor shall dry and heat the aggregates for the HMA to the required temperature. The Contractor shall properly adjust flames to avoid physical damage to the aggregate and to avoid depositing soot on the aggregate.

401.14 Mixing The Contractor shall combine the dried aggregate in the mixer in the amount of each fraction of aggregate required to meet the JMF. The Contractor shall measure the amount of PGAB and introduce it into the mixer in the amount specified by the JMF.

The Contractor shall produce the HMA at the temperature established by the JMF.

The Contractor shall dry the aggregate sufficiently so that the HMA will not flush, foam excessively, or displace excessively under the action of the rollers. The Contractor shall introduce the aggregate into the mixer at a temperature of not more than 25°F above the temperature at which the viscosity of the PGAB being used is 0.150 Pa·s.

The Contractor shall store and introduce into the mixer the Performance Graded Asphalt Binder at a uniformly maintained temperature at which the viscosity of the PGAB is between 0.150 Pa·s and 0.300 Pa·s. The aggregate shall be coated completely and uniformly with a thorough distribution of the PGAB. The Contractor shall determine the wet mixing time for each plant and for each type of aggregate used. The resultant material shall be a uniformly blended, homogeneous HMA mixture.

401.15 Spreading and Finishing On areas where irregularities or unavoidable obstacles make the use of mechanical spreading and finishing equipment impracticable, the Contractor shall spread, rake, and lute the HMA with hand tools to provide the required compacted thickness. Solvent based agents developed to strip asphalts from aggregates will not be allowed as release agents.

On roadways with adjoining lanes carrying traffic, the Contractor shall place each course over the full width of the traveled way section being paved that day, unless otherwise noted by the Department in Section 403 - Hot Mix Asphalt Pavement.

In addition, hot mix asphalt pavement placed on bridges shall also conform to Section 508.04 and the following requirements.

a. The bottom course shall be placed with an approved rubber mounted paver of such type and operated in such a manner that the membrane waterproofing will not be damaged in any way.

b. The top course shall not be placed until the bottom course has cooled sufficiently to provide stability.

c. The Contractor will not be required to cut sample cores from the compacted pavement on the bridge deck, unless otherwise directed by Special Provision.

d. After the top course has been placed, the shoulder areas shall be sealed 3 ft wide with two applications of an emulsified bituminous sealer meeting the requirements of Section 612.03 – Sealing and Section 702.12 - Emulsified Bituminous Sealing Compound. The first application shall be pre-mixed with fine, sharp sand, similar to mortar sand, as needed to fill all voids in the mix in the area being sealed. The second application may be applied without sand. The sealer shall be carried to the curb at the gutter line in sufficient quantity to leave a bead or fillet of material at the face of the curb. The area to be sealed shall be clean, dry and the surface shall be at ambient temperature.

e. The furnishing and applying of the required quantity of sealer for the bridge shoulder areas shall be incidental to placing the hot mix asphalt pavement.

f. The atmospheric temperature for all courses placed on bridge decks shall be 50°F or higher.

<u>401.16 Compaction</u> Immediately after the Hot Mix Asphalt Pavement has been spread, struck off, and any surface irregularities adjusted, the Contractor shall thoroughly and uniformly compact the HMA by rolling.

The Contractor shall roll the surface when the mixture is in the proper condition and when the rolling does not cause undue displacement, cracking, or shoving. The Contractor shall prevent adhesion of the HMA to the rollers or vibrating compactors without the use of fuel oil or other petroleum based release agents. Solvents designed to strip asphalt binders from aggregates will not be permitted as release agents on equipment, tools, or pavement surfaces.

The Contractor shall immediately correct any displacement occurring as a result of the reversing of the direction of a roller or from other causes to the satisfaction of the Department. Any operation other than placement of variable depth shim course that results in breakdown of the aggregate shall be discontinued. Any new pavement that shows obvious cracking, checking, or displacement shall be removed and replaced for the full lane width as directed by the Resident at no cost to the Department.

Along forms, curbs, headers, walls, and other places not accessible to the rollers, the Contractor shall thoroughly compact the HMA with mechanical vibrating compactors. The Contractor shall only use hand tamping in areas inaccessible to all other compaction equipment. On depressed areas, the Contractor may use a trench roller or cleated compression strips under a roller to transmit compression to the depressed area.

Any HMA that becomes unacceptable due to cooling, cracking, checking, segregation or deformation as a result of an interruption in mix delivery shall be removed and replaced, with material that meets contract specifications at no cost to the Department.

401.17 Joints The Contractor shall construct wearing course transverse and longitudinal joints in such a manner that minimum tolerances shown in Section 401.101 - Surface Tolerances are met when measured with a straightedge.

The paver shall maintain a uniform head of HMA during transverse and longitudinal joint construction.

The HMA shall be free of segregation and meet temperature requirements outlined in section 401.04. Transverse joints of the wearing course shall be straight and neatly trimmed. The Contractor may form a vertical face exposing the full depth of the course by inserting a header, by breaking the bond with the underlying course, or by cutting back with hand tools. The Department may allow feathered or "lap" joints on lower base courses or when matching existing base type pavements.

Longitudinal joints shall be generally straight to the line of travel, and constructed in a manner that best ensure joint integrity. Methods or activities that prove detrimental to the construction of straight, sound longitudinal joints will be discontinued.

The Contractor shall apply a coating of emulsified asphalt immediately before paving all joints to the vertical face and 3 in of the adjacent portion of any pavement being overlaid except those formed by pavers operating in echelon. The Contractor shall use an approved spray apparatus designed for covering a narrow surface. The Department may approve application by a brush for small surfaces, or in the event of a malfunction of the spray apparatus, but for a period of not more than one working day.

Where pavement under this contract joins an existing pavement, or when the Department directs, the Contractor shall cut the existing pavement along a smooth line, producing a neat, even, vertical joint. The Department will not permit broken or raveled edges. The cost of all work necessary for the preparation of joints is incidental to related contract pay items.

401.18 Quality Control Method A, B & C The Contractor shall operate in accordance with the approved Quality Control Plan (QCP) to assure a product meeting the contract requirements. The QCP shall meet the requirements of Section 106.6 - Acceptance and this Section. The Contractor shall not begin paving operations until the Department approves the QCP in writing.

Prior to placing any mix, the Department and the Contractor shall hold a Pre-paving conference to discuss the paving schedule, source of mix, type and amount of equipment to be used, sequence of paving pattern, rate of mix supply, random sampling, project lots and sublots and traffic control. A copy of the QC random numbers to be used on the project shall be provided to The Resident. The Departments' random numbers for Acceptance testing shall be generated and on file with the Resident and the Project Manager. All personnel of the Department and the Contractor who have significant information relevant to the paving items shall attend, including the responsible onsite paving supervisor for the Contractor. The Resident will prepare minutes of the conference and distribute them to all attendees. Any requests to revise the minutes must be made to the Resident within 7 Days of Receipt. These minutes will constitute the final record of the Pre-paving conference.

The QCP shall address any items that affect the quality of the Hot Mix Asphalt Pavement including, but not limited to, the following:

a. JMF(s)
b. Hot mix asphalt plant details
c. Stockpile Management (to include provisions for a minimum 2 day stockpile)
d. Make and type of paver(s)
e. Make and type of rollers including weight, weight per inch of steel wheels, and average contact pressure for pneumatic tired rollers
f. Name of QCP Administrator, and certification number
g. Name of Process Control Technician(s) and certification number(s)
h. Name of Quality Control Technicians(s) and certification number(s)
i. Mixing & transportation including process for ensuring that truck bodies are clean and free of debris or contamination that could adversely affect the finished pavement
j. Testing Plan
k. Laydown operations including longitudinal joint construction, procedures for avoiding paving in inclement weather, type of release agent to be used on trucks tools and rollers, compaction of shoulders, tacking of all joints, methods to ensure that segregation is minimized, procedures to determine the maximum rolling and paving speeds based on best engineering practices as well as past experience in achieving the best possible smoothness of the pavement. Solvent based agents developed to strip asphalts from aggregates will not be allowed as release agents.
l. Examples of Quality Control forms including a daily plant report, daily paving report, and delivery slip template for any plant to be utilized.
m. Silo management and details (can show storage for use on project of up to 36 hours)
n. Provisions for varying mix temperature due to extraordinary conditions or production limitations. If a warm-mix technology is utilized, a proposed target production temperature range (not to exceed 50°F) will be provided for each mix design.
o. Name and responsibilities of the Responsible onsite Paving Supervisor.
p. Method for calibration/verification of Density Gauge
q. A note that all testing will be done in accordance with AASHTO and the MaineDOT Policies and Procedures for HMA Sampling and Testing.
r. A detailed description of RAP processing, stockpiling and introduction into the plant as well as a note detailing conditions under which the percent of RAP will vary from that specified on the JMF.
s. A detailed procedure outlining when production will be halted due to QC or Acceptance testing results.
t. A plan to address the change in PGAB source or supplier and the potential co-mingling of differing PGAB's.
u. A procedure to take immediate possession of acceptance samples once released by MaineDOT and deliver said samples to the designated acceptance laboratory.
v. Provisions for how the QCP will be communicated to the Contractor's field personnel

The QCP shall include the following technicians together with following minimum requirements:

a. QCP Administrator - A qualified individual shall administer the QCP. The QCP Administrator must be a full-time employee of or a consultant engaged by the Contractor or paving subcontractor. The QCP Administrator shall have full authority to institute any and all actions necessary for the successful operation of the QCP. The QCP Administrator (or its designee in the QCP Administrator's absence) shall be available to communicate with the Department at all times. The QCP Administrator shall be certified as a Quality Assurance Technologist certified by the New England Transportation Technician Certification Program (NETTCP).

b. Process Control Technician(s) (PCT) shall utilize test results and other quality control practices to assure the quality of aggregates and other mix components and control proportioning to meet the JMF(s). The PCT shall inspect all equipment used in mixing to assure it is operating properly and that mixing conforms to the mix design(s) and other Contract requirements, and that delivery slips and plant recordation accurately reflects the mix being produced with all the required information. The QCP shall detail how these duties and responsibilities are to be accomplished and documented, and whether more than one PCT is required. The Plan shall include the criteria to be utilized by the PCT to correct or reject unsatisfactory materials. The PCT shall be certified as a Plant Technician by the NETTCP.

c. Quality Control Technician(s) (QCT) shall perform and utilize quality control tests at the job site to assure that delivered materials meet the requirements of the JMF(s). The QCT shall inspect all equipment utilized in transporting, laydown, and compacting to assure it is operating properly and that all laydown and compaction conform to the Contract requirements. The QCP shall detail how these duties and responsibilities are to be accomplished and documented, and whether more than one QCT is required. The QCP shall include the criteria utilized by the QCT to correct or reject unsatisfactory materials. The QCT shall be certified as a Paving Inspector by the NETTCP.

The QCP shall detail the coordination of the activities of the Plan Administrator, the PCT and the QCT. The Project Superintendent shall be named in the QCP, and the responsibilities for successful implementation of the QCP shall be outlined.

The Contractor shall sample, test, and evaluate Hot Mix Asphalt Pavement in accordance with the following minimum frequencies:

TABLE 2 : MINIMUM QUALITY CONTROL FREQUENCIES

| Test or Action | Frequency | Test Method |
|---|---|---|
| Temperature of mix | 6 per day at street and plant | - |
| Temperature of mat | 4 per day | - |
| %TMD (Surface) | 1 per 125 ton<br>(As noted in QC Plan) | ASTM D2950 |
| %TMD (Base) | 1 per 250 ton<br>(As noted in QC Plan) | AASHTO T269 |
| Fines / Effective Binder | 1 per 500 ton | AASHTO T 312* |
| Gradation | 1 per 500 ton | AASHTO T30 |
| PGAB content | 1 per 500 ton | AASHTO T164 or T308 |
| Voids at $N_{design}$ | 1 per 500 ton | AASHTO T 312* |
| Voids in Mineral Aggregate at $N_{design}$ | 1 per 500 ton | AASHTO T 312* |
| Rice Specific Gravity | 1 per 500 ton | AASHTO T209 |
| Coarse Aggregate Angularity | 1 per 5000 ton | ASTM D5821 |
| Flat and Elongated Particles | 1 Per 5000 ton | ASTM D4791 |
| Fine Aggregate Angularity | 1 Per 5000 ton | AASHTO T304 |

*Method A and B only

The Contractor may utilize innovative equipment or techniques not addressed by the Contract documents to produce or monitor the production of the mix, subject to approval by the Department.

The Contractor shall submit all Hot Mix Asphalt Pavement plant test reports, inspection reports and updated pay factors in writing, signed by the appropriate technician and present them to the Department by 1:00 P.M. on the next working day, except when otherwise noted in the QCP due to local restrictions. The Contractor shall also retain splits of the previous 5 QC tests, with QC results enclosed for random selection and testing by The Department during QA inspections of the HMA production facility. Test results of splits that do not meet the Dispute Resolution Variance Limits in Table 10 shall trigger an investigation by the MaineDOT Independent Assurance Unit, and may result in that lab losing NETTCP certification and the ability to request a dispute [Section 401.223 - Process for Dispute Resolution (Methods A , B and C only)].

The Contractor shall make density test results, including randomly sampled densities, available to the Department onsite. Summaries of each day's results, including a daily paving report, shall be recorded and signed by the QCT and presented to the Department by 1:00 p.m. the next working day.

The Contractor shall have a testing lab at the plant site, equipped with all testing equipment necessary to complete the tests in Table 2. The Contractor shall locate an approved Gyratory Compactor at the plant testing lab or within 30 minutes of the plant site.

The Contractor shall fill all holes in the pavement resulting from cutting cores by the Contractor or the Department with a properly compacted, acceptable mixture no later than the following working day. Before filling, the Contractor shall carefully clean the holes and apply a coating of emulsified asphalt. On surface courses, cores shall not be cut except for Verification of the Nuclear Density Gauge, at a rate not to exceed 3 per day or 2 per 1000 Mg [1000 ton] placed.

The Contractor shall monitor plant production using running average of three control charts as specified in Section 106 - Quality. Control limits shall be as noted in Table 3 below. The UCL and LCL, shall not exceed the allowable gradation control points for the particular type of mixture as outlined in Table 1 of section 703.09

TABLE 3: Control Limits

| Property | UCL and LCL |
|---|---|
| Passing 4.75 mm and larger sieves | Target +/-4.0 |
| Passing 2.36 mm sieve | Target +/-2.5 |
| Passing .075 mm sieve | Target +/-1.2 |
| PGAB Content* | Target +/-0.3 |
| Voids in the Mineral Aggregate | LCL = LSL + 0.2 |
| % Voids at $N_{design}$ | JMF Target +/-1.3 |

*Based on AASHTO T 308

The Contractor shall cease paving operations whenever one of the following occurs on a lot in progress:

a. Method A: The Pay Factor for VMA, Voids @ $N_d$, Percent PGAB, composite gradation, VFB, fines to effective binder or density using all Acceptance or all Quality Control tests for the current lot is less than 0.85.
b. Method B: The Pay Factor for VMA, Voids @ $N_d$, Percent PGAB, composite gradation, VFB, fines to effective binder or density using all Acceptance or all Quality Control tests for the current lot is less than 0.90.
c. Method C: The Pay Factor for VMA, Voids @ $N_{d,}$ Percent PGAB, percent passing the nominal maximum sieve, percent passing 2.36 mm sieve, percent passing 0.300 mm sieve, percent passing 0.075 mm sieve or density using all Acceptance or all available Quality Control tests for the current lot is less than 0.85.

d. The Coarse Aggregate Angularity or Fine Aggregate Angularity value falls below the requirements of Table 3: Aggregate Consensus Properties Criteria in Section 703.07 for the design traffic level.
e. Each of the first 2 control tests for a Method A or B lot fall outside the upper or lower limits for VMA, Voids @ Nd, or Percent PGAB; or under Method C, each of the first 2 control tests for the lot fall outside the upper or lower limits for the nominal maximum, 2.36 mm, 0.300 mm or 0.075 mm sieves, or percent PGAB.
f. The Flat and Elongated Particles value exceeds 10% by ASTM D4791.
g. There is any visible damage to the aggregate due to over-densification other than on variable depth shim courses.
h. The Contractor fails to follow the approved QCP.

The Contractor shall notify the Resident in writing as to the reason for shutdown, as well as the proposed corrective action, by the end of the work day. Failure to do so will be treated as a second incident under 106.4.6 QCP Non-compliance. The Department will consider corrective action acceptable if the pay factor for the failing property increases, based on samples already in transit, or a verification sample is tested and the property falls within the specification limits.

In cases where the corrective action can be accomplished immediately, such as batch weight or cold feed changes, the Contractor may elect to resume production once the corrective action is completed. Additional QC testing shall be performed to verify the effectiveness of the corrective action. Subsequent occurrences of shutdown for the same property in a Lot in progress will require paving operations to cease. Paving operations shall not resume until the Contactor and the Department determines that material meeting the Contract requirements will be produced. The Department may allow the Contractor to resume production based upon a passing QC sample, with a split of the sample being sent to the Department for verification testing. If the submitted verification sample test results fall outside the specification limits, the Contractor shall cease production until a verification sample is submitted to the Department has been tested by the Department and found to be within specification limits.

If the Contractor's control chart shows the process to be out of control (defined as a single point outside of the control limits on the running average of three chart) on any property listed in Table 3: Control Limits, the Contractor shall notify the Resident in writing of any proposed corrective action by 1:00 PM the next working day.

The Department retains the exclusive right, with the exception of the first day's production of a new JMF, to determine whether the resumption of production involves a significant change to the production process. If the Department so determines, then the current lot will be terminated, a pay factor established, and a new lot will begin.

<u>401.19 Quality Control Method D</u> For Items covered under Method D, the Contractor shall submit a modified QC Plan detailing, how the mix is to be placed, what equipment is to be used, and what HMA plant is to be used. All mix designs (JMF) shall be approved and verified by MaineDOT prior to use. Certified QC personnel shall not be required. The Contractor shall certify the mix and the test results for each item by a Certificate of Compliance.

<u>401.20 Acceptance Method A, B & C</u> These methods utilizes Quality Level Analysis and pay factor specifications. For Hot Mix Asphalt Pavement designated for acceptance under Quality Assurance provisions, the Department will sample once per sublot on a statistically random basis, test, and evaluate in accordance with the following Acceptance Criteria:

TABLE 4: ACCEPTANCE CRITERIA

| PROPERTIES | POINT OF SAMPLING | TEST METHOD |
|---|---|---|
| Gradation | Paver Hopper | AASHTO T30 |
| PGAB Content | Paver Hopper | AASHTO T308 |
| %TMD (Surface) | Mat behind all Rollers | AASHTO T269 |
| %TMD (Base or Binder) | Mat behind all Rollers | AASHTO T269 |
| Air Voids at $N_d$ | Paver Hopper | AASHTO T 312 |
| %VMA at $N_d$ | Paver Hopper | AASHTO T 312 |
| Fines to Effective Binder | Paver Hopper | AASHTO T 312 |
| %VFB | Paver Hopper | AASHTO T 312 |

In the event the Department terminates a Lot prematurely but fails to obtain the required number of acceptance samples to calculate the volumetric property pay factor under the test method specified in the contract, the pay factor shall be calculated using the number of samples actually obtained from the contract. Should the number of acceptance samples taken total less than three, the resulting pay factor shall be 1.0 for volumetric properties. A minimum of three cores will be used for a density pay factor using the contract's specified Acceptance method, if applicable, for quantities placed to date.

Should the Contractor request a termination of the Lot in progress prior to three acceptance samples being obtained, and the Department agrees to terminate the Lot, then the pay factor for mixture properties shall be 0.80. A minimum of three cores will be used to determine a density pay factor using the contract's specified Acceptance method, if applicable, for quantities placed to date.

Lot Size For purposes of evaluating all acceptance test properties, a lot shall consist of the total quantity represented by each item listed under the lot size heading.

Sublot size - Refer to section 401.201, 401.202, and 401.203 for minimum size and number of sublots. The quantity represented by each sample will constitute a sublot.

If there is less than one-half of a sublot remaining at the end, then it shall be combined with the previous sublot. If there is more than one-half sublot remaining at the end, then it shall constitute the last sublot and shall be represented by test results. If it becomes apparent partway through a Lot that, due to an underrun, there will be insufficient mix quantity to obtain the minimum number of sublots needed, the Resident may adjust the size of the remaining sublots and select new sample locations based on the estimated quantity of material remaining in the Lot.

Acceptance Testing The Department will obtain samples of Hot Mix Asphalt Pavement in conformance with AASHTO T168 Sampling Bituminous Paving Mixtures, and the MaineDOT Policies and Procedures for HMA Sampling and Testing, which will then be transported by the Contractor to the designated MaineDOT Laboratory within 48 hours (except when otherwise noted in the project specific QCP due to local restrictions), as directed by MaineDOT in approved transport containers to be provided by the Department, unless otherwise directed by the Resident. Failure to deliver an acceptance sample to the designated acceptance laboratory will be considered the second incident under 106.4.6–QCP Non-Compliance.

The Department will take the sample randomly within each sublot. Target values shall be as specified in the JMF. The Department will use Table 5 for calculating pay factors for gradation, PGAB Content, Air Voids at $N_{design}$, VMA, Fines to Effective Binder and VFB. The Department will withhold reporting of the test results for the Acceptance sample until 7:00 AM, on the second working day of receipt of the sample, or after receipt of the Contractors results of the Acceptance sample split. Upon conclusion of each lot, where there is a minimum of four sublots, results shall be examined for statistical outliers, as stated in Section 106.7.2 - Statistical Outliers.

Isolated Areas During the course of inspection, should it appear that there is an isolated area that is not representative of the lot based on a lack of observed compactive effort, excessive segregation, a change in process or any other questionable practice, that area may be isolated and tested separately. An area so isolated that has a calculated pay factor below 0.80 for Method A and C or below 0.86 for Method B, based on three random tests shall be removed and replaced at the expense of the Contractor for the full lane width and a length not to be less than 150 ft.

Pavement Density The Department will measure pavement density using core samples tested according to AASHTO T-166. The Department will randomly determine core locations. The Contractor shall cut 6 inch diameter cores at no additional cost to the Department by the end of the working day following the day the pavement is placed, and immediately give them to the Department. Cores for Acceptance testing shall be cut such that the nearest edge is never within 9 inches of any joint. The cores will be placed in a transport container provided by the Department and transported by the Contractor to the designated MaineDOT Lab as directed by the Department. Pre-testing of the cores will not be allowed. At the time of sampling, the Contractor and the Department shall mutually determine if a core is damaged. If it is determined that the core(s) is damaged, the Contractor shall cut new core(s) at the same offset and within 3 ft of the initial sample. At the time the core is cut, the Contractor and the Department will mutually determine if saw cutting of the core is needed, and will mark the core at the point where sawing is needed. The core may be saw cut by the Contractor in the Department's presence onsite, or in an MaineDOT Lab by The Department, without disturbing the layer being tested to remove lower layers of Hot Mix Asphalt Pavement, gravel, or RAP. No recuts are allowed at a test location after the core has been tested. Upon conclusion of each lot, density results shall be examined for statistical outliers as stated in Section 106.7.2.

On all sections of overlay with wearing courses designed to be 3/4 in or less in thickness, there shall be no pay adjustment for density otherwise noted in Section 403 - Hot Mix Asphalt Pavement. For overlays designed to be 3/4 in or less in thickness, density shall be obtained by the same rolling train and methods as used on mainline travelway surface courses with a pay adjustments for density, unless otherwise directed by the Department.

There shall be no pay adjustment for density on shoulders unless otherwise noted in Section 403 - Hot Mix Asphalt Pavement. Density for shoulders shall be obtained by the same rolling train and methods as used on mainline travelway, unless otherwise directed by the Department. Efforts to obtain optimum compaction will not be waived by the Department unless it is apparent during construction that local conditions make densification to this point detrimental to the finished pavement surface course.

401.201 Method A Lot Size will be the entire production per JMF for the project, or if so agreed at the Pre-paving Conference, equal lots of up to 4500 tons, with unanticipated over-runs of up to 1500 ton rolled into the last lot. Sublot sizes shall be 750 ton for mixture properties, 500 ton for base or binder densities and 250 ton for surface densities. The minimum number of sublots for mixture properties shall be 4, and the minimum number of sublots for density shall be five.

TABLE 5: METHOD A ACCEPTANCE LIMITS

| | |
|---|---|
| Percent Passing 4.75 mm and larger sieves | USL and LSL |
| Percent Passing 2.36 mm to 1.18 mm sieves | Target +/-7% |
| Percent Passing 0.60 mm | Target +/-4% |
| Percent Passing 0.30 mm to 0.075 mm sieve | Target +/-3% |
| PGAB Content | Target +/-2% |
| Air Voids | Target +/-0.4% |
| Fines to Effective Binder | 4.0% +/-1.5% |
| Voids in the Mineral Aggregate | 0.9 +/-0.3 |
| Voids Filled with Binder | LSL Only from Table 1 |
| % TMD (In-place Density) | Table 1 values plus a 4% production tolerance for USL only |
| Percent Passing 4.75 mm and larger sieves | 95.0% +/- 2.5% |

401.202 Method B Lot Size will be the entire production per JMF for the project and shall be divided into 3 equal sublots for Mixture Properties and 3 equal sublots for density.

TABLE 6: METHOD B ACCEPTANCE LIMITS

| Property | USL and LSL |
|---|---|
| Percent Passing 4.75 mm and larger sieves | Target +/-7 |
| Percent Passing 2.36 mm to 1.18 mm sieves | Target +/-5 |
| Percent Passing 0.60 mm | Target +/-4 |
| Percent Passing 0.30 mm to 0.075 mm sieve | Target +/-3 |
| PGAB Content | Target +/-0.5 |
| Air Voids | 4.0% +/-2.0 |
| Fines to Effective Binder | 0.9 +/-0.3 |
| Voids in the Mineral Aggregate | LSL from Table 1 |
| Voids Filled with Binder | Table1 plus a 4% production tolerance for USL. |
| % TMD (In-place Density) | 95.0% +/- 2.5% |

401.203 Method C Lot Size will be the entire production per JMF for the project, or if so agreed at the Pre-paving Conference, equal lots of up to 4500 tons, with unanticipated over-runs of up to 1500 ton rolled into the last lot. Sublot sizes shall be 750 ton for mixture properties, 500 ton for base or binder densities and 250 ton for surface densities. The minimum number of sublots for mixture properties shall be 4, and the minimum number of sublots for density shall be five.

TABLE 7: METHOD C ACCEPTANCE LIMITS

| Property | USL and LSL |
|---|---|
| Passing 4.75 mm and larger sieves | Target +/-7% |
| Passing 2.36 mm to 1.18 mm sieves | Target +/-5% |
| Passing 0.60 mm | Target +/-4% |
| Passing 0.30 mm to 0.075 mm sieve | Target +/-2% |
| PGAB Content | Target +/-0.4% |
| Air Voids | 4.0% +/-1.5% |
| Fines to Effective Binder | 0.9 +/-0.3 |
| Voids in the Mineral Aggregate | LSL Only from Table 1 |
| Voids Filled with Binder | Table 1 values plus a 4% production tolerance for USL only |
| % TMD (In place density) | 95.0% +/- 2.5% |

401.204 Method D For hot mix asphalt items designated as Method D in Section 403 - Hot Mix Asphalt Pavement, one sample will be taken from the paver hopper or the truck body per 250 ton per pay item. The mix will be tested for gradation and PGAB content. Disputes will not be allowed. If the mix is within the tolerances listed in Table 8: Method D Acceptance Limits, the Department will pay the contract unit price. Contractor shall cut two 6 in cores, which shall be tested for percent TMD per AASHTO T-269 unless otherwise noted in Section 403 - Hot Mix Asphalt Pavement. If the average for the two tests falls below 92.5% the disincentive shall apply. If the test results for each 250 ton increment are outside these limits, the following deductions (Table 8B) shall apply to the HMA quantity represented by the test.

TABLE 8: METHOD D ACCEPTANCE LIMITS

| Property | USL and LSL |
|---|---|
| Percent Passing 4.75 mm and larger sieves | Target +/-7 |
| Percent Passing 2.36 mm to 1.18 mm sieves | Target +/-5 |
| Percent Passing 0.60 mm | Target +/-4 |
| Percent Passing 0.30 mm to 0.075 mm sieve | Target +/-3 |
| PGAB Content | Target +/-0.5 |
| % TMD (In-place Density) | 95.0% +/- 2.5% |

TABLE 8B Method “D” Price Adjustments

| PGAB Content | -5% |
|---|---|
| 2.36 mm sieve | -2% |
| 0.30 mm sieve | -1% |
| 0.075 mm sieve | -2% |
| Density | -10% |

401.21 Method of Measurement The Department will measure Hot Mix Asphalt Pavement by the ton in accordance with Section 108.1 - Measurement of Quantities for Payment.

401.22 Basis of Payment The Department will pay for the work, in place and accepted, in accordance with the applicable sections of this Section, for each type of HMA specified.

The Department will pay for the work specified in Section 401.11, for the HMA used, except that cleaning objectionable material from the pavement and furnishing and applying bituminous material to joints and contact surfaces is incidental. Payment for this work under the appropriate pay items shall be full compensation for all labor, equipment, materials, and incidentals necessary to meet all related contract requirements, including design

of the JMF, implementation of the QCP, obtaining core samples, transporting cores and samples, filling core holes, applying emulsified asphalt to joints, and providing testing facilities and equipment.
The Department will make a pay adjustment for quality as specified below.

401.221 Pay Adjustment The Department will sample, test, and evaluate Hot Mix Asphalt Pavement in accordance with Section 106 - Quality and Section 401.20 - Acceptance, of this Specification.

In addition, for 9.5 mm NMAS mixtures the following pay adjustment shall also apply:

The average percent passing for the 0.075 mm sieve shall be evaluated for each Lot. If the average is greater than 6.5%, a pay adjustment according to Table 8C below shall apply in addition to the other pay adjustments for the given method of testing.

TABLE 8C: 0.075 mm SIEVE PAY ADJUSTMENT

| AVERAGE PERCENT PASSING 0.075 MM SIEVE | PAY ADJUSTMENT |
|---|---|
| 6.6% - 7.0% | -5% Pay Adjustment |
| > 7.0% | -10% Pay Adjustment |

The Department shall notify the Contractor whenever the average of at least three samples in a given Lot is greater than 6.5%.

401.222 Pay Factor (PF) The Department will use the following criteria for pay adjustment using the pay adjustment factors under Section 106.7 - Quality Level Analysis:

Density If the pay factor for Density falls below 0.80 for Method A or C or 0.86 for Method B, all of the cores will be randomly re-cut by Sublot. A new pay factor will be calculated that combines all initial and retest results. If the resulting pay factor is below 0.80 for Method A or C or below 0.86 for Method B, the entire Lot shall be removed and replaced with material meeting the specifications at no additional cost to the Department, except that the Department may, when it appears that there is a distinct pattern of defective material, isolate any defective material by investigating each mix sample sublot and require removal of defective mix sample sublots only, leaving any acceptable material in place if it is found to be free of defective material. Pay factors equal to or greater than the reject level will be paid accordingly.

Gradation For HMA evaluated under Acceptance Method A or B, the Department will determine a composite pay factor (CPF) using applicable price adjustment factors “f“ from Table 9: Table of Gradation Composite “f” Factors, and Acceptance limits from Table 5: Method A Acceptance Limits, for Method A or Table 6: Method B Acceptance Limits, for Method B. The Department will not make price adjustments for gradation on Methods A and B except for 9.5mm NMAS mixtures as outlined in Table 4A. Gradations for Methods A and B shall be monitored as shutdown criteria.

TABLE 9: TABLE OF GRADATION COMPOSITE " f " FACTORS (Methods A and B)

| Constituent | | "f" Factor | | | |
|---|---|---|---|---|---|
| | | 19 mm | 12.5 mm | 9.5 mm | 4.75 mm |
| Gradation | 25 mm | - | - | - | - |
| | 19 mm | 4 | - | - | - |
| | 12.5 mm | | 4 | 4 | - |
| | 9.50 mm | | | | 4 |
| | 2.36 mm | 6 | 6 | 6 | 8 |
| | 1.18 mm | | | | |
| | 0.60 mm | 2 | 2 | 2 | 2 |
| | 0.30 mm | 2 | 2 | 2 | 2 |
| | 0.075 mm | 6 | 6 | 6 | 8 |

For HMA evaluated under Acceptance Method C, the Department will determine a pay factor using acceptance limits from Table **7**: Method C Acceptance Limits.

VMA, Air Voids, VFB and Fines to Effective Binder The Department will determine a pay factor (PF) using the applicable Acceptance Limits.

The following variables will be used for pay adjustment:

PA = Pay Adjustment
Q = Quantity represented by PF in ton
P = Contract price per ton
PF = Pay Factor

Pay Adjustment Method A

The Department will use the following criteria for pay adjustment: density, Performance Graded Asphalt Binder content, voids @$N_d$, VMA, VFB, $F/B_{eff}$, and the screen sizes listed in Table 9 for the type of HMA represented in the JMF. If any single pay factor for PGAB Content, VMA, or Air Voids falls below 0.80, then the composite pay factor for PGAB Content, VMA, and Air Voids shall be 0.55.

Density: For mixes having a density requirement, the Department will determine a pay factor using Table 5: Method A Acceptance Limits:

PA = (density PF- 1.0)(Q)(P)x0.50

PGAB Content, VMA and Air Voids: The Department will determine a pay adjustment using Table 5: Method A Acceptance Limits as follows:

PA = (voids @ $N_d$ PF- 1.0)(Q)(P)x0.20 + (VMA @ $N_d$ PF- 1.0)(Q)(P)x0.20 + (PGAB PF- 1.0)(Q)(P)x0.10

VFB and Fines to Effective Binder The Department will determine a pay factor (PF) using Table 5: Method A Acceptance Limits. The Department will not make price adjustments for VFB or Fines to Effective Binder, but will monitor them as shutdown criteria.

## Pay Adjustment Method B

The Department will use the following criteria for pay adjustment: density, Performance Graded Asphalt Binder content, voids @$N_d$, VMA, VFB, F/$B_{eff}$, and the screen sizes listed in Table 9 for the type of HMA represented in the JMF. If any single pay factor for PGAB Content, VMA, or Air Voids falls below 0.86, then the composite pay factor for PGAB Content, VMA, and Air Voids shall be 0.70.

Density: For mixes having a density requirement, the Department will determine a pay factor using Table 6: Method B Acceptance Limits:

PA = (density PF- 1.0)(Q)(P)x0.50

PGAB Content, VMA and Air Voids: The Department will determine a pay adjustment using Table 6: Method B Acceptance Limits as follows:

PA = (voids @ $N_d$ PF- 1.0)(Q)(P)x0.20 + (VMA @ $N_d$ PF- 1.0)(Q)(P)x0.20 + (PGAB PF- 1.0)(Q)(P)x0.10

VFB and Fines to Effective Binder The Department will determine a pay factor (PF) using Table 6: Method B Acceptance Limits. The Department will not make price adjustments for VFB or Fines to Effective Binder, but will monitor them as shutdown criteria.

## Pay Adjustment Method C

The Department will use density, Performance Graded Asphalt Binder content, and the percent passing the nominal maximum, 2.36 mm, 0.300 mm and 0.075 mm sieves for the type of HMA represented in the JMF. If the PGAB content falls below 0.80, then the PGAB pay factor shall be 0.55.

Density: For mixes having a density requirement, the Department will determine a pay factor using Table 7: Method C Acceptance Limits:

PA = (density PF- 1.0)(Q)(P)x0.50

PGAB Content and Gradation The Department will determine a pay factor using Table **7**: Method C Acceptance Limits. The Department will calculate the price adjustment for Mixture Properties as follows:

PA = (% Passing Nom. Max PF-1.0)(Q)(P)X0.05+(% passing 2.36 mm PF-1.0)(Q)(P)X0.05+(%passing 0.30 mm PF-1.0)(Q)(P)X0.05+(%passing 0.075 mm PF-1.0)(Q)(P)X0.10+(PGAB PF-1.0)(Q)(P)X0.25

VMA, Air Voids, VFB and Fines to Effective Binder The Department will determine a pay factor (PF) using Table 7: Method C Acceptance Limits. The Department will not make price adjustments for VMA, Air Voids, VFB or Fines to Effective Binder, but will monitor them as shutdown criteria.

## Pay Adjustment Method D

The Department will use density, Performance Graded Asphalt Binder content, and the screen sizes listed in Table 8b for the type of HMA represented in the JMF. If test results do not meet the Table 8 requirements, deducts as shown in Table 8b shall be applied to the quantity of mix represented by the test.

401.223 Process for Dispute Resolution (Methods A B & C only)

a. Dispute Resolution sampling At the time of Hot-Mix Asphalt sampling, the Department will obtain a split sample of each Acceptance test random sample for possible dispute resolution testing. The Contractor shall also obtain a split sample of the HMA at this same time. If the Contractor wishes to retain the option of requesting dispute testing of the initial Acceptance sample, the Contractor will test their split of the

Acceptance sample and shall report their results to the Resident, with a copy to the QA Engineer by 7:00 AM, on the second working day from time of QA sampling, otherwise dispute resolution will not be initiated. The Department's dispute resolution split sample will be properly labeled and stored for a period of at least two weeks, or until the sample is tested.

b. Disputing Acceptance results The Contractor may dispute the Department's Acceptance results and request (Methods A, B, & C) that the dispute resolution split sample be tested by notifying the Department's Resident and the QA Engineer in writing within two working days after receiving the results of the Acceptance test. The following shall be provided in the request:

- Acceptance sample reference number
- The specific test result(s) or property(ies) being disputed, and
- The complete, signed report of the Contractor's testing (In a lab certified by the NETTCP and MaineDOT) of their split of the Acceptance sample indicating that the variances in Table10: Dispute Resolution Variance Limits, for the specific test result(s) or property(ies) were exceeded.

c. Disputable items

For Methods A and B: The Contractor may dispute any or all of the following test results when the difference between the Department's value and the Contractor's value for that test equals or exceeds the corresponding allowable variation in Table 10: Dispute Resolution Variance Limits, PGAB content, $G_{mb}$, and $G_{mm}$. In addition, if the allowable variation for the $G_{mb}$ or $G_{mm}$ is not met or exceeded, the Contractor may dispute either or both of the following material properties provided the difference between results for them equals or exceeds the corresponding allowable variation in Table 10: Voids at $N_{design}$, and VMA. The Contractor may dispute the 0.075 mm sieve test result when a 9.5 mm NMAS mixture is used.

For Method C only: The results for PGAB content and the screen sizes used for pay adjustment may be disputed.

d. Outcome The value of any disputed result or property reported for the initial Acceptance sample shall stand if the value reported for the dispute resolution sample is not closer to the value the Contractor reported for their split sample than to the value reported for the initial Acceptance sample. If the value reported for the dispute resolution falls precisely half-way between the other two values the value reported for the dispute resolution will replace the original acceptance value. Otherwise, the value reported for the dispute resolution sample will replace the value reported for the initial Acceptance sample, and will be used to re-calculate any other affected results or properties.

TABLE 10: DISPUTE RESOLUTION VARIANCE LIMITS

| | |
|---|---|
| PGAB Content | +/-0.4% |
| $G_{mb}$ | +/-0.030 |
| $G_{mm}$ | +/-0.020 |
| Voids @ $N_d$ | +/-0.8% |
| VMA | +/-0.8% |
| Passing 4.75 mm and larger sieves | +/- 4.0% |
| Passing 2.36 mm to 0.60 mm sieves | +/- 3.0% |
| Passing 0.30 mm to 0.15 | +/- 2.0 % |
| 0.075 mm sieve | +/- 1.0% |

## SECTION 402 - PAVEMENT SMOOTHNESS

402.00 Smoothness Projects Projects to have their pavement smoothness analyzed in accordance with this Specification will be so noted in Special Provision 403 - Hot Mix Asphalt Pavement

402.01 Pavement Smoothness The final pavement surface shall be evaluated for smoothness using a Class I or Class II profiler as defined by ASTM E950 (94). Smoothness measurements will be expressed in terms of the International Roughness Index (IRI) as defined by the World Bank, in units of inches/mile.

402.02 Lot Size Lot size for smoothness will be 3000 lane-feet. A sublot will consist of 20 50 lane-feet. Partial lots will be included in the previous lot if less than one-half the size of a normal lot. If equal to or greater than one-half the normal lot size, it will be tested as a separate lot.

402.03 Acceptance Testing The Department will conduct Acceptance testing following completion of the surface course. Sections to be excluded from testing include the following:

Bridge decks and joints (no smoothness measurements will be taken within 100 ft of bridge joints)
Acceleration and deceleration lanes
Shoulders and ramps
Side streets and roads
Within 100 ft of transverse joints at the beginning and end of the project
Within 100 ft of railroad crossings
Urban areas with speed limits of 30 mph or lower

Each lot shall have 2 measurements made in each wheel path. The average of the 4 measurements will determine the smoothness for that lot.

The smoothness measurements will be statistically evaluated for pay factors as described in Subsection 106.7 - Quality Level Analysis, using the specification limits shown below.

ACCEPTANCE LIMITS

| Level | USL |
|---|---|
| I | 60 in/mile |
| II | 70 in/mile |
| III | 80 in/mile |

Computation of Smoothness Pay Adjustment:

PA = (PF-1.0)(Q)(P)
where:
Q = Quantity of surface course in the Lot (excluding shoulders, side streets, bridge decks, ramps, acceleration and deceleration lanes)
PF = smoothness pay factor for the Lot
P = Contract unit price for surface pavement
PA = pay adjustment

402.04 Unacceptable Work In the event that any Lot is found to have a pay factor less than 0.80, the Contractor shall take whatever remedial action is required to correct the pavement surface in that Lot at no additional expense to the Department. Such remedial action may include but is not limited to removal and replacement of the unacceptable pavement. In the event remedial action is necessary, the Contractor shall submit a written plan to the Resident outlining the scope of the remedial work. The Resident must approve this plan before the remedial work can begin. Following remedial work, the Lot shall be retested, and will be subject to the specification limits listed above. The resulting pay factor, if within the acceptable range, will be used in the final pay adjustment. The Contractor shall pay the cost of retesting the pavement following corrective action. Localized surface tolerance defects will be subject to the provisions outlined in Section 401.101 Surface Tolerances.

Payment will be made under:

| Pay Item | Pay Unit |
|---|---|
| 402.10 Incentive/Disincentive - Pavement Smoothness | Lump Sum |

## SECTION 403 - HOT MIX ASPHALT PAVEMENT

403.01 Description This work shall consist of constructing one or more courses of Hot Mix Asphalt pavement on an approved base in accordance with these specifications, and in reasonably close conformity with the lines, grades, thickness and typical cross sections shown on the plans or established.

The HMA pavement shall be composed of a mixture of aggregate, filler if required, and asphalt material.

403.02 General The materials and their use shall conform to the requirements of Section 401 - Hot Mix Asphalt Pavement.

403.03 Construction The construction requirements shall be as specified in Section 401 - Hot Mix Asphalt Pavement.

403.04 Method of Measurement Hot mix asphalt pavement will be measured as specified in Section 401.21-Method of Measurement.

403.05 Basis of Payment The accepted quantities of hot mix asphalt pavement will be paid for at the contract unit price per ton for the mixtures, including hot mix asphalt material complete in place.

Method A, Method B, Method C and Method D shall be used for acceptance as specified in Section 401 - Hot Mix Asphalt Pavements. (See Complementary Notes, Section 403 - Hot Mix Asphalt Pavement, for Method location).

Payment will be made under:

| | Pay Item | Pay Unit |
|---|---|---|
| 403.102 | Hot Mix Asphalt Pavement for Special Areas | Ton |
| 403.206 | Hot Mix Asphalt, 25 mm Nominal Maximum Size | Ton |
| 403.207 | Hot Mix Asphalt, 19.0 mm Nominal Maximum Size | Ton |
| 403.2071 | Hot Mix Asphalt , 19.0 mm Nominal Maximum Size (Polymer Modified) | Ton |
| 403.2072 | Asphalt Rich Hot Mix Asphalt, 19.0 mm Nominal Maximum Size (Asphalt Rich Base and Intermediate course) | Ton |
| 403.2073 | Warm Mix Asphalt, 19.0 mm Nominal Maximum Size | Ton |
| 403.208 | Hot Mix Asphalt, 12.5 mm Nominal Maximum Size | Ton |
| 403.2081 | Hot Mix Asphalt - 12.5 mm Nominal Maximum Size (Polymer Modified) | Ton |
| 403.20813 | Warm Mix Asphalt - 12.5 mm Nominal Maximum Size (Polymer Modified) | Ton |
| 403.2083 | Warm Mix Asphalt, 12.5 mm Nominal Maximum Size | Ton |
| 403.209 | Hot Mix Asphalt, 9.5 mm Nominal Maximum Size (sidewalks, drives, islands & incidentals) | Ton |
| 403.210 | Hot Mix Asphalt, 9.5 mm Nominal Maximum Size | Ton |
| 403.2101 | Hot Mix Asphalt, 9.5 mm Nominal Maximum Size (Polymer Modified) | Ton |
| 403.2102 | Asphalt Rich Hot Mix Asphalt, 9.5 mm Nominal Maximum Size (Asphalt Rich Intermediate course) | Ton |
| 403.2103 | Warm Mix Asphalt, 9.5 mm Nominal Maximum Size | Ton |
| 403.2104 | Hot Mix Asphalt, 9.5 mm Nominal Maximum Size (Thin Lift Surface Treatment) | Ton |
| 403.211 | Hot Mix Asphalt, 9.5 mm Nominal Maximum Size (Shimming) | Ton |
| 403.2111 | Hot Mix Asphalt, 9.5 mm Nominal Maximum Size (Shimming, Polymer Modified)) | Ton |
| 403.2113 | Warm Mix Asphalt, 9.5 mm Nominal Maximum Size (Shimming) | Ton |
| 403.212 | Hot Mix Asphalt, 4.75 mm Nominal Maximum Size | Ton |
| 403.2123 | Warm Mix Asphalt, 4.75 mm Nominal Maximum Size | Ton |
| 403.213 | Hot Mix Asphalt, 12.5 mm Nominal Maximum Size (Base and Intermediate Base course) | Ton |
| 403.2131 | Hot Mix Asphalt, 12.5 mm Nominal Maximum Size (Base and Intermediate Base course, Polymer Modified) | Ton |
| 403.2132 | Asphalt Rich Hot Mix Asphalt, 12.5 mm Nominal Maximum Size (Base and Intermediate Base course) | Ton |
| 403.2133 | Warm Mix Asphalt, 12.5 mm Nominal Maximum Size (Base and Intermediate Base course) | Ton |
| 403.214 | Hot Mix Asphalt, 4.75 Nominal Maximum Size (5/8” Surface Treatment) | Ton |
| 403.2143 | Warm Mix Asphalt, 4.75 Nominal Maximum Size (5/8” Surface Treatment) | Ton |

# SPECIAL PROVISION
# SECTION 403
# HOT MIX ASPHALT

| Desc. Of Course | Grad Design. | Item Number | Bit Cont. % of Mix | Total Thick | No. Of Layers | Comp. Notes |
|---|---|---|---|---|---|---|
| **4" HMA Overlay Areas** | | | | | | |
| **MaineDOT Fleet Services - Augusta** | | | | | | |
| Wearing | 12.5 mm | 403.208 | N/A | 1 ½" | 1 | 1,2,5,10,17 |
| Base | 19.0 mm | 403.207 | N/A | 2 ½" | 1 | 1,2,4,10,17 |

## COMPLEMENTARY NOTES

1. All work under this contract shall conform to the most recent Special Provision 400 – Hot Mix Asphalt Pavement; with the following revisions.
2. The incentive/disincentive provisions for density shall not apply. Rollers shall meet the requirements of this special provision.
4. The design traffic level for mix placed shall be 0.3 to <3 million ESALS. The design, verification, Quality Control, and Acceptance tests for this mix will be performed at **50 gyrations**.
5. The aggregate qualities shall meet the design traffic level of 3 to <10 million ESALS for mix placed under this contract. The design, verification, Quality Control, and Acceptance tests for this mix will be performed at **75 gyrations**.
10. Section 106.6 Acceptance, (2) Method D - For hot mix asphalt items designated as Method D in Special Provision Section 403 - Hot Mix Asphalt, one sample will be taken from the paver hopper or the truck body per **250** ton, per pay item. The mix will be tested for gradation and PGAB content. Disputes will not be allowed. If the mix is within the tolerances listed in Table 9, below the Department will pay the contract unit price.

Table 9

| Property | USL and LSL Method D |
|---|---|
| Percent Passing 4.75 mm [No. 4] and larger sieves | Target ± 7 |
| Percent Passing 2.36 mm [No. 8] to 1.18 mm [No. 16] sieves | Target ± 5 |
| Percent Passing 0.60 mm [No. 30] | Target ± 4 |
| Percent Passing 0.30 mm {No. 50] to 0.075 mm [No. 200] sieve | Target ± 3 |
| PGAB Content | Target ± 0.5 |
| In –Place Density | See Note 17. |

If the test results for each **250** ton increment are outside these limits the following deductions (Table 9b) shall apply to the HMA quantity represented by the test. A second consecutive failing test shall result in cessation of production.

TABLE 9b

| | |
|---|---|
| PGAB Content | -5% |
| 2.36 mm sieve | -2% |
| 0.30 mm sieve | -1% |
| 0.075 mm sieve | -2% |

17. Compaction of the new Hot Mix Asphalt Pavement will be obtained using a minimal roller train consisting of a **10 ton** vibratory, **12 ton** pneumatic, and a **10 ton** finish roller for roadway work. Density testing of the mixture will be performed by the QCT using a density meter (according to ASTM D 2950). The mixture will be rolled until the density readings show less than 1 pcf change for the final roller passes. This density will be used as the target TMD for the mixture. The remaining mixture shall be compacted to a minimum density of 95% of the target density as determined in the control section. As a minimum, the QCT shall take and record a density reading for every 50 ton placed. The Contractor shall make density test results, including randomly sampled densities, available to the Department's representative onsite. Summaries of each day's results, including a daily paving report, summarizing the mixture type, mixture temperature, equipment used, environmental conditions, and number of roller passes, shall be recorded and signed by the QCT and presented to the Department's representative by the end of the working day. An approved release agent is required to ensure the mixture dose not adhere to hand tools, rollers, pavers, and truck bodies. The use of petroleum based fuel oils, or asphalt stripping solvents will not be permitted. The Department may require cores for informational purposes.

Tack Coat

A tack coat of emulsified asphalt, RS-1, Item 409.15 shall be applied to any existing pavement at a rate of approximately 0.025 gal/yd², and on milled pavement approximately 0.05 gal/yd² prior to placing a new course. A fog coat of emulsified asphalt shall be applied between shim /base courses and the surface course, at a rate not to exceed 0.025 gal/yd². Cleaning objectionable material from the pavement and furnishing and applying Item 409.15 bituminous material to joints and contact surfaces is incidental.

# SECTION 31 37 00

# RIPRAP

## PART 1 GENERAL

### 1.01 RELATED DOCUMENTS

A. State of Maine Department of Transportation, "Standard Specifications," Revision December 2002, and any revisions thereto, apply to this Section. If the Contractor discovers any ambiguity, error, omission, conflict, or discrepancy, Section 10 1. 3.6 Priority of Conflicting Contract Documents shall control.

1. Drawings and general provisions of the Contract, and Division 1 Specification Sections, apply to this Section.
2. Any supplements to any of the above specifications and or standards issued prior to issuance of this Project Manual, apply to this section.

### 1.02 SECTION INCLUDES

A. Riprap for site work.

### 1.03 PRICE AND PAYMENT PROCEDURES

A. Measurement and payment will be as follows:

B. PAY ITEM 610.08 Plain Riprap: Pay Unit - Cubic Yard.

C. Basis of Payment – The accepted quantity of Riprap will be paid for at the contract unit price per Cubic Yard. This payment will be full compensation for furnishing all riprap stones, excavating, filter fabric, placing, testing and all other labor, equipment and tools necessary to complete the work. Provisions of Section 610 of the "State of Maine, Department of Transportation, Standard Specifications, Revisions of December, 2002" or Specification Section 31 37 00 of the contract documents, whichever is stricter, shall apply. Crushed stone and filter fabric shall be incidental to the cost of this item.

### 1.04 RELATED REQUIREMENTS

A. Section 31 23 23 - Fill: Aggregate requirements.

### 1.05 QUALITY ASSURANCE

A. Perform Work in accordance with State of Maine Department of Transportation Standard Specifications, latest edition. (MaineDOT Specifications).

## PART 2 PRODUCTS

### 2.01 MATERIALS

A. Plain Riprap: See MaineDOT Specifications Section 703.26-Plain Riprap.

B. Woven Geotextile Fabric - See Section 31 23 23 Fill for fabric requirements.

## PART 3 EXECUTION

### 3.01 PLACEMENT

A. Place geotextile fabric over substrate, lap edges and key in ends.

B. Comply with MaineDOT Specification Section 610 and as indicated on Drawings.

**END OF SECTION 31 37 00**

# SECTION 32 13 13
# CONCRETE PAVING

PART 1 GENERAL

1.01 RELATED DOCUMENTS

A. State of Maine Department of Transportation, "Standard Specifications," Revision December 2002, and any revisions thereto, apply to this Section. If the Contractor discovers any ambiguity, error, omission, conflict, or discrepancy, Section 10 1. 3.6 Priority of Conflicting Contract Documents shall control.

1. Drawings and general provisions of the Contract, and Division 1 Specification Sections, apply to this Section.

2. Any supplements to any of the above specifications and or standards issued prior to issuance of this Project Manual, apply to this section.

1.02 SECTION INCLUDES

A. Dumpster Pad and Fenced Enclosure.

1.03 RELATED REQUIREMENTS

A. Section 31 22 00 - Grading: Preparation of site for paving and base.

B. Section 31 23 23 - Fill: Compacted subbase for paving.

C. Section 03 30 00 - Cast-in-Place Concrete.

1.04 PRICE AND PAYMENT PROCEDURES

A. Measurement and payment will be as follows:

B. Pay Item 608.082 Reinforced Concrete Dumpster Pad and Enclosure: Pay Unit - Each.

C. Basis of Payment – The accepted quantity of Reinforced Concrete Dumpster Pad and Enclosure will be paid for at the contract unit price per Each. Payment shall include Concrete pad, reinforcing, excavation, crushed stone, backfilling, fencing, and any additional appurtenances installed per the detail within the plan set.

1.05 REFERENCE STANDARDS

A. State of Maine Department of Transportation Standard Specifications Highways and Bridges, latest revision, hereafter designated as MDOT Specifications.

B. ACI 301 - Specifications for Structural Concrete for Buildings; American Concrete Institute International; 2010.

C. ACI 305R - Hot Weather Concreting; American Concrete Institute International; 2010.

D. ACI 306R - Cold Weather Concreting; American Concrete Institute International; 2010.

E. ASTM D1751 - Standard Specification for Preformed Expansion Joint Filler for Concrete Paving and Structural Construction (nonextruding and Resilient Bituminous Types); 2004 (Reapproved 2008).

F. ASTM D1752 - Standard Specification for Preformed Sponge Rubber Cork and Recycled PVC Expansion Joint Fillers for Concrete Paving and Structural Construction; 2004a (Reapproved 2008).

1.06 QUALITY ASSURANCE

A. Perform work in accordance with MDOT Specifications Section 608.

B. Obtain materials from same source throughout.

1.07 REGULATORY REQUIREMENTS

A. Conform to applicable code for paving work on public property.

1.08 ENVIRONMENTAL REQUIREMENTS

A. Weather and seasonal limitations as required by MDOT Specifications shall apply to this Section.

1.09 TESTS

A. Submit proposed mix design of each class of mix for review prior to commencement of work.

PART 2 PRODUCTS

2.01 FORM MATERIALS

A. Form Materials: Conform to ACI 301.

B. Joint Filler: Preformed; non-extruding bituminous type (ASTM D1751) or sponge rubber or cork (ASTM D1752).

2.02 CONCRETE MATERIALS

A. Obtain cementitious materials from same source throughout.

B. Concrete Materials: As specified in Section 03 30 00.

PART 3 EXECUTION

3.01 EXAMINATION

A. Verify compacted subgrade is acceptable and ready to support paving and imposed loads.

B. Verify gradients and elevations of base are correct.

C. Beginning of installation means acceptance of substrate.

3.02 PREPARATION

A. Moisten base to minimize absorption of water from fresh concrete.

3.03 FORMING

A. Place and secure forms to correct location, dimension, profile, and gradient.

3.04 REINFORCEMENT

A. Place reinforcement as indicated.

3.05 COLD AND HOT WEATHER CONCRETING

A. Follow recommendations of ACI 305R when concreting during hot weather.

B. Follow recommendations of ACI 306R when concreting during cold weather.

C. Do not place concrete when base surface temperature is less than 40 degrees F, or surface is wet or frozen.

3.06 PLACING CONCRETE

A. Ensure reinforcement, inserts, embedded parts, formed joints are not disturbed during concrete placement.

3.07 CONCRETE DUMPSTER PAD

A. Portland Cement Concrete Dumpster Pad: Conform to requirements of MDOT Section 608.03 with the exception that finish shall be a broom finish with 2" trowelled edge.

3.08 TOLERANCES

A. Maximum Variation of Surface Flatness: 1/4 inch in 10 ft.

3.09 FIELD QUALITY CONTROL

A. Owner shall provide field inspection and testing. Owner shall take samples and perform tests in accordance with MDOT Specifications.

B. If tests indicate work does not meet specified requirements, remove work, replace and retest at no cost to the Owner.

**This Page Intentionally Left Blank**

**END OF SECTION**

# SECTION 32 17 23.13

# PAINTED PAVEMENT MARKINGS

## PART 1 GENERAL

### 1.01 RELATED DOCUMENTS

A. State of Maine Department of Transportation, "Standard Specifications," Revision December 2002, and any revisions thereto, apply to this Section. If the Contractor discovers any ambiguity, error, omission, conflict, or discrepancy, Section 10 1. 3.6 Priority of Conflicting Contract Documents shall control.

1. Drawings and general provisions of the Contract, and Division 1 Specification Sections, apply to this Section.

2. Any supplements to any of the above specifications and or standards issued prior to issuance of this Project Manual, apply to this section.

### 1.02 SECTION INCLUDES

A. The extent of pavement marking is shown on the drawings.

B. Work includes, but is not limited to, the following:
   1. Parking stall divider lines.
   2. Wheelchair legends.
   3. "Stop" legends.
   4. Diagonal striping.

### 1.03 RELATED REQUIREMENTS

A. Section 32 12 16 - Asphalt Paving.

### 1.04 PRICE AND PAYMENT PROCEDURES

A. Measurement and payment will be as follows:

B. Pay Item 627.18 12" Solid White Pavement Marking: Pay Unit - Linear Foot.

C. Pay Item 627.71 4" White Pavement Marking Line: Pay Unit – Linear Foot.

D. Pay Item 627.75 White or Yellow Pavement and Curb Marking: Pay Unit – Square Foot.

E. Basis of Payment – The accepted quantity of 627.18 and 627.71will be paid for at the contract unit price per Linear Foot; Item 627.75 will be paid for at the contract unit price per Square Foot. Provisions of Section 627 of the "State of Maine, Department of Transportation, Standard Specifications, Revisions of December, 2002" or Specification Section 321723.13 of the contract documents, whichever is stricter, shall apply. Removal of existing pavement markings that conflict with the proposed markings shall be considered incidental to the other contract items.

### 1.05 REFERENCE STANDARDS

A. MPI (APL) - Master Painters Institute Approved Products List; Master Painters and Decorators Association; current edition, www.paintinfo.com.

B. State of Maine Department of Transportation Standard specifications Highways and Bridges,

latest revision, hereafter designated as MDOT Specifications.

C. ASTM D 93, D 562, D 711, D 821, D 1210, D 1475, D 1640, D 2243, D 2369, D 2486, D 3723, D 3960, E 70, and G 53.

D. DOT Code of Federal Regulations, Hazardous Materials and regulations board, Reference 49CFR, ICC Regulations.

E. Federal Specification TT-P-115E, Type III (Type I if V.O.C. compliance required), colors 33538 and 37038.

F. FHWA MUTCD - Manual on Uniform Traffic Control Devices for Streets and Highways; U.S. Department of Transportation, Federal Highway Administration; http://mutcd.fhwa.dot.gov; current edition.

1.06 QUALITY ASSURANCE

A. Perform work in accordance with MDOT Specifications 627.

1.07 SUBMITTALS

A. Shop Drawings: Indicate sizes, shapes, patterns, colors of marking, manufacturers and types of paints.

1.08 DELIVERY, STORAGE, AND HANDLING

A. Deliver paint in containers of at least 5 gallons accompanied by batch certificate.

B. Store products in manufacturer's unopened packaging until ready for installation.

C. Store and dispose of solvent-based materials, and materials used with solvent-based materials, in accordance with requirements of local authorities having jurisdiction.

D. Deliver all materials to the job site with all labels intact and legible at time of installation.

E. Store materials off ground under cover. Protect from damage or deterioration.

F. Handle materials so as to prevent damage to surface, edges, ends, and factory applied finishes of items. Damaged material shall be rejected and replaced.

1.09 FIELD CONDITIONS

A. Do not install products under environmental conditions outside manufacturer's absolute limits.

1.10 GUARANTEE

A. Contractor shall guarantee entire installation for one year from turnover date.

PART 2 PRODUCTS

2.01 MATERIALS

A. Subject to compliance with requirements, provide ready-mixed one component water borne traffic line paint. Materials shall be listed on the Department of General Services Office of Procurement Qualified Products List.

B. Paints shall contain all necessary co-solvents, dispersants, wetting agents, preservatives, and all other additives, so that paint shall retain viscosity. Halogenated solvents and glass beads shall not be permitted.

C. Volatile Organic Compound (VOC) content shall not exceed 250 grams maximum per liter of paint as determined in accordance with ASTM D 3960 test, excluding water and exempt

solvents.

D. Line and Zone Marking Paint: MPI No. 97 Latex Traffic Marking Paint; color(s) as indicated.

E. Temporary Marking Tape: Preformed, reflective, pressure sensitive adhesive tape in color(s) required; Contractor is responsible for selection of material of sufficient durability as to perform satisfactorily during period for which its use is required.

PART 3 EXECUTION

3.01 EXAMINATION

A. Do not begin installation until substrates have been properly prepared.

B. Installer shall examine the substrates and conditions under which materials are to be installed, and notify the Owner in writing of conditions detrimental to the completion of the work. Do not proceed with the work until traffic lines are completed and properly dry.

C. Coordinate provisions for installation with work of other trades.

D. All parking area marking and painting to be protected by appropriate traffic barriers, lighted if necessary, so located as to prohibit parking and traffic until permission for such is given by the Owner.

3.02 PREPARATION

A. Prepare surfaces using the methods recommended by the manufacturer for achieving the best result for the substrate under the project conditions.

B. Clean surfaces thoroughly prior to installation.
   1. Remove dust, dirt, and other granular surface deposits by sweeping, blowing with compressed air, rinsing with water, or a combination of these methods.

C. Where oil or grease are present, scrub affected areas with several applications of trisodium phosphate solution or other approved detergent or degreaser, and rinse thoroughly after each application; after cleaning, seal oil-soaked areas with cut shellac to prevent bleeding through the new paint.

D. Establish survey control points to determine locations and dimensions of markings; provide templates to control paint application by type and color at necessary intervals.

E. Temporary Pavement Markings: When required or directed by Engineer, apply temporary markings of the color(s), width(s) and length(s) as indicated or directed.
   1. After temporary marking has served its purpose, remove temporary marking by carefully controlled sandblasting, approved grinding equipment, or other approved method so that surface to which the marking was applied will not be damaged.
   2. At Contractor's option, temporary marking tape may used in lieu of temporary painted marking; remove unsatisfactory tape and replace with painted markings at no additional cost to Owner.

3.03 INSTALLATION

A. Begin pavement marking as soon as practicable after surface has been cleaned and dried.

B. Install pavement marking in accordance with approved shop drawings and applicable codes and standards.

C. Traffic paint shall be installed in two coats. The first coat shall be installed at 1/2 the recommended coverage rate after paving is in place; the second coat shall be installed at full

recommended rate 30 days later.

D. Apply in accordance with manufacturer's instructions using an experienced technician that is thoroughly familiar with equipment, materials, and marking layouts.

E. Comply with FHWA MUTCD manual (http://mutcd.fhwa.dot.gov) for details not shown.

F. Apply markings in locations determined by measurement from survey control points; preserve control points until after markings have been accepted.

G. Apply uniformly painted markings of color(s), lengths, and widths as indicated on the drawings with true, sharp edges and ends.

H. Symbols: Use a suitable template that will provide a pavement marking with true, sharp edges and ends, of the design and size indicated.

3.04 COMPLETION

A. During the progress of the work, the premises shall be kept free of debris and waste resulting from the work in this section. Upon completion, all surplus material and debris shall be removed from the site.

B. At completion of work, touch up minor damage to prefinished surfaces to the satisfaction of the Owner. Replace materials damaged or stained during installation.

3.05 DRYING, PROTECTION, AND REPLACEMENT

A. Protect newly painted markings so that paint is not picked up by tires, smeared, or tracked.

B. Provide barricades, warning signs, and flags as necessary to prevent traffic crossing newly painted markings.

C. Allow paint to dry at least the minimum time specified by the applicable paint standard and not less than that recommended by the manufacturer.

D. Remove and replace markings that are applied at less than minimum material rates; deviate from true alignment; exceed length and width tolerances; or show light spots, smears, or other deficiencies or irregularities.

E. Remove markings in manner to avoid damage to the surface to which the marking was applied, using carefully controlled sand blasting, approved grinding equipment, or other approved method.

F. Replace removed markings at no additional cost to Owner.

**END OF SECTION 32 17 23.13**

# SECTION 32 31 13
# CHAIN LINK FENCES AND GATES

## PART 1 GENERAL

### 1.01 RELATED DOCUMENTS

A. State of Maine Department of Transportation, "Standard Specifications," Revision December 2002, and any revisions thereto, apply to this Section. If the Contractor discovers any ambiguity, error, omission, conflict, or discrepancy, Section 10 1. 3.6 Priority of Conflicting Contract Documents shall control.

1. Drawings and general provisions of the Contract, and Division 1 Specification Sections, apply to this Section.
2. Any supplements to any of the above specifications and or standards issued prior to issuance of this Project Manual, apply to this section.

### 1.02 SECTION INCLUDES

A. Fence framework, fabric, and accessories.

B. Excavation for post bases; concrete foundation for posts.

C. Electrically operated horizontal slide gates

### 1.03 PRICE AND PAYMENT PROCEDURES

A. Measurement and payment will be as follows:

B. Pay Item 607.151 Fencing – Lump Sum.

C. Basis of Payment – The accepted quantity of Fencing will be paid for at the contract unit price per Lump Sum. Fencing, Gates, Electric gate operators, Excavations for posts, Fence installation, Backfilling, Concrete, and all other appurtenances necessary to satisfactorily complete the work shall be considered incidental and no further payment will be made. The fencing and gate system shall be complete and ready for the Electrical Contractor to connect power to the gate operating mechanisms. The Provisions of Specification Section 32 31 13 of the contract documents shall apply.

### 1.04 REFERENCE STANDARDS

A. ASTM A123/A123M - Standard Specification for Zinc (Hot-Dip Galvanized) Coatings on Iron and Steel Products; 2012.

B. ASTM A153/A153M - Standard Specification for Zinc Coating (Hot-Dip) on Iron and Steel Hardware; 2009.

C. ASTM A392 - Standard Specification for Zinc-Coated Steel Chain-Link Fence Fabric; 2011a.

D. ASTM A428/A428M - Standard Test Method for Weight (Mass) of Coating on Aluminum-Coated Iron or Steel Articles; 2010.

E. ASTM A491 - Standard Specification for Aluminum-Coated Steel Chain-Link Fence Fabric; 2011.

F. ASTM F567 - Standard Practice for Installation of Chain-Link Fence; 2011.

G. ASTM F626 Specifications for Fence Fittings.

H. ASTM F1043 - Standard Specification for Strength and Protective Coatings on Steel Industrial Chain Link Fence Framework; 2011.

I. ASTM F1184 Specification for Industrial and Commercial Horizontal Slide Gates.

J. ASTM F2200 Specification for Automated Vehicular Gate Construction.

K. ASTM F1083 - Standard Specification for Pipe, Steel, Hot-Dipped Zinc-Coated (Galvanized) Welded, for Fence Structures; 2010.

L. CLFMI CLF PM0610 - Product Manual; Chain Link Fence Manufacturers Institute; 2012.

1.05 SUBMITTALS

A. Shop Drawings: Indicate plan layout, elevation of fence and gates, spacing of components, post foundation dimensions, hardware anchorage, and schedule of components.

PART 2 PRODUCTS

2.01 MATERIALS AND COMPONENTS

A. Materials and Components: Conform to CLFMI Product Manual.

B. Fabric Size: CLFMI Standard Industrial, Heavy Residential service.

C. Intermediate Posts: Type I round.

D. Terminal, Corner, Rail, Brace, and Gate Posts: Type I round.

E. Gates: Electrically operated Horizontal Slide Gates.

2.02 ACCESSORIES

A. Caps: Cast steel galvanized; sized to post diameter, set screw retainer.

B. Fittings: Sleeves, bands, clips, rail ends, tension bars, fasteners and fittings; steel.

2.03 FINISHES

A. Hardware: Hot-dip galvanized to weight required by ASTM A153/A153M.

B. Accessories: Same finish as framing.

2.04 GATES

A. Cantilever Slide Gates: In compliance with ASTM F1184 Type II

1. Class 1 - External Roller Design: Horizontal top and bottom steel pipe "track" members to be 2.375 in. OD, vertical and internal members1.900 in. OD in compliance with ASTM F1043 Group 1A, ASTM F1083 sch 40 pipe. Gate frame to be fabricated by welding, vertical and horizontal members located no greater than 8 ft. apart. The length of back frame support section shall be a minimum of 40% of the opening. Welded joints are to be protected by applying zinc-rich paint in accordance with ASTM Practice A780. Gates shall be designed to open or close by applying an initial pull force no greater than 40 lbs. Match chain link fabric to that of the fence system. Provide positive locking latch fabricated from galvinised pressed steel. Galvanized steel drop bars shall be provided with double gates. Gateposts, 4.000 in. OD ASTM F1043 Group 1A, ASTM F1083 sch 40 pipe. Provide safety protective guards for the top and bottom external rollers.

2. Class 2 - Internal Roller Design: ASTM F1043 Group 1A, ASTM F1083 sch 40 pipe. Gate frame to be fabricated by welding, vertical and horizontal members located no greater than 8 ft. apart. The length of back frame support section shall be a minimum of 40% of the opening. Class 2 cantilever slide gates to comply with the performance deflection criteria listed in ASTM F1184. Gates shall be designed to open or close by applying an initial pull force no greater than 40 lbs. Internal truck assemblies shall be designed to handle the forces required for gate size opening and height. Match chain link fabric to that of the fence system. Provide positive locking latch fabricated from galvinised pressed steel. Galvanized steel drop bars shall be provided with double gates. Gateposts, 4.000 in. OD ASTM F1043 Group 1A, ASTM F1083 sch 40 pipe. Provide safety protective guards for the top and bottom external rollers.

B. Electrically operated gates and accessories shall be manufactured and installed to comply with the safety requirements of ASTM F2200 and UL 325.

PART 3 EXECUTION

3.01 INSTALLATION

A. Install framework, fabric, accessories and gates in accordance with ASTM F567.

B. Place fabric on outside of posts and rails.

C. Set intermediate, terminal, and gate posts plumb, in concrete footings with top of footing 2 inches above finish grade. Slope top of concrete for water runoff.

D. Line Post Footing Depth Below Finish Grade: ASTM F567.

E. Corner, Gate and Terminal Post Footing Depth Below Finish Grade: 5 feet.

F. Brace each gate and corner post to adjacent line post with horizontal center brace rail and diagonal truss rods. Install brace rail one bay from end and gate posts.

G. Provide top rail through line post tops and splice with 6 inch long rail sleeves.

H. Do not stretch fabric until concrete foundation has cured 28 days.

I. Stretch fabric between terminal posts or at intervals of 100 feet maximum, whichever is less.

J. Position bottom of fabric 2 inches above finished grade.

K. Fasten fabric to top rail, line posts, braces, and bottom tension wire with tie wire at maximum 15 inches on centers.

L. Attach fabric to end, corner, and gate posts with tension bars and tension bar clips.

M. Install bottom tension wire stretched taut between terminal posts.

N. Do not attach the hinged side of gate to building wall; provide gate posts.

O. Install gate with fabric to match fence. Install hardware.

P. Provide concrete center drop to footing depth and drop rod retainers at center of double gate openings.

Q. Horizontal Slide Gates: Installation varies by design and manufacturer, install according to manufacturers instructions and in accordance with ASTM F567. Gates shall be plumb in the closed position, installed to slide with an initial pull force no greater than 40 lbs. Double gate drop bar receivers to be installed in a concrete footing minimum 6 in. diameter, 24 in. deep. Roller guards and guide posts must be installed on Type I external roller cantilever slide gate in compliance with ASTM F1184. Ground clearance shall be 3 in., grade permitting. Electrically operated gates and accessories shall be manufactured and installed in compliance with ASTM F2200 and UL 325.

R. Clean Up: The area of the fence line shall be left neat and free of any debris caused by the installation of the fence.

3.02 TOLERANCES

A. Maximum Variation From Plumb: 1/4 inch.

B. Maximum Offset From True Position: 1 inch.

C. Components shall not infringe adjacent property lines.

3.03 ATTACHMENT

A. CLFMI CLF PM0610 - Product Manual; Chain Link Fence Manufacturers Institute; 2012.

**This Page Intentionally Left Blank**

**END OF SECTION**

CHAIN LINK FENCE
MANUFACTURERS INSTITUTE

# CHAIN LINK FENCE MANUFACTURERS INSTITUTE

# PRODUCT MANUAL

CLF-PM0610
(Revised January, 2012)

Copyright (C) 2012 All Rights Reserved

Chain Link Fence Manufacturers Institute
10015 Old Columbia Rd, Suite B145
Columbia, MD 21046
www.chainlinkinfo.org

# Chain Link Fence Manufacturers Institute
# Product Manual

**CLF-PM0610**
(revised January, 2012)

## Table of Contents


How to Use the Product Manual 1
Description of Terms 2
Table 1 - Breaking Strength of Steel Wire 3
Table 2 -Thickness of ASTM F668 Fabric Polymer Coating 3
Table 3 - Standard Mesh Sizes and Gauges for Chain Link Fabric 4
Table 4 - Small Mesh Sizes and Wire Gauges for Metallic Coated Chain Link Fabric 5
Table 5 - Small Mesh Sizes for Wire Gauges for Polymer Coated Chain Link Fabric 6
Table 6 - Galvanized Steel Post Dimensions and Strength Characteristics 7
Table 7 - Guide for Selection of ASTM F 1043 Line Post 8
Drawings
- Typical Fence Section - Top Rail/Trussed Brace Rail with Bottom Tension Wire 9
- Typical Fence Section - Trussed Brace Rail w/Top & Bottom Tension Wire 10
- Typical Fence Elevation – Top Rail/Trussed Brace Rail w/ Bottom Tension Wire 11
- Typical Fence Elevation – Trussed Brace Rail; 3 Stands Barbed Wire w/ Top & Bottom Tension Wire 12
- Typical Fence Elevation –Top Rail/Trussed Brace Rail 3 Stands Barbed Wire & Bottom Tension Wire 13
- Typical Swing Gate – Three Strands Barbed Wire (OPTIONAL) 14
- Typical Double Swing Gate – Three Strands Barbed Wire (OPTIONAL) 15
- Single Cantilevered Sliding Gate – Round Posts w/ Barbed Wire (6' thru 22' openings) 16
- Single Cantilevered Sliding Gate – Round Posts w/ Barbed Wire (10' thru 30') 17



Copyright 2012. All rights reserved


Chain Link Fence Manufacturers Institute
10015 Old Columbia Road Suite B215
Columbia, MD 21046
www.chainlinkinfo.org

## CHAIN LINK FENCE MANUFACTUTERS INSTITUTE PRODUCT MANUAL

(CLFMI-PM 2445)

The purpose of this manual is to provide chain link fence technical information for general knowledge, system design or the development of a commercial/industrial/security chain link fence specification.

HOW TO USE THE CLFMI PRODUCT MANUAL

a. Familiarize yourself with the content of the CLFMI product manual.
b. The product manual includes drawings of the four standard chain link fence designs plus swing gate, cantilever slide gate and fitting/assembly details.
c. Review the different chain link fabric configurations and gauges to ensure the best selection of the mesh size and wire gauge for the application.
d. Prior to designing a security fence system review the CLFMI "Security Fencing Recommendations SFR2445".
e. Select the type of fabric for the application; galvanized (ASTM A392), aluminum coated (ASTM A491), zinc -5% mischmetal alloy (ASTM F1345) or polymer coated (ASTMF668).
f. Review the framework Dimensions and Strength Characteristics Table # 6 and Guide for Selection of Line Post, Table # 7 to select the post that best suits the application, (ASTM F1043 and ASTM F1083). Make sure to take into consideration wind load particularly if the fence is 8 ft. high or greater using 1 in. mesh or less. Use the CLFMI "Chain Link Fence Wind Load Guide for the Selection of Line Post and Line Post Spacing WLG2445" for a fence requiring a structural framework design due to wind load.
g. For polymer coated fabric or systems choose an ASTM color from ASTM F934.
h. Thoroughly review and understand the chain link ASTM standards; those reference above as well as; chain link terminology (F552), fittings and tie wire (F626), barbed wire (A121 and F665), barbed tape (F1910 and F1911) tension/coil spring wire (A824 and F1644), swing gates (F900), horizontal slide gates (F1184), automated vehicular gates (F2200), and chain link installation (F567).
i. The CLFMI manual includes a CSI formatted chain link fence specification, "Commercial, Industrial and Security Chain Link Fence and Gates, Section 32 31 13" for use in designing and specifying a chain link fence system.
j. For light industrial/commercial applications select framework from ASTM F1043 Table 4 "Summary of Requirements for Light Industrial/Commercial Fence Framework".
k. All phases of chain link fence installation are covered in detail within the Specification 32 31 13, Part 3.

DESCRIPTION OF TERMS

A short list of descriptive terms: (See ASTM F552, "Standard Terminology Relating to Chain Link Fencing" for a complete list.)

a. Chain link fabric – A fencing material consisting of wire helically wound and interwoven in such a manner as to provide a continuous mesh without knots or ties except in the form of knuckling or twisting at the top and bottom of the mesh to form the fabric selvage.
b. Selvage-The top and bottom edge finish on woven chain link formed by joining adjacent pairs of wire pickets. The selvage may be knuckled or twisted.
c. Knuckled selvage* refers to bending the adjacent pairs of wire back into a tight loop.
d. Twisted selvage* refers to twisting the adjacent pairs of wire together in a close helix of 1 ½ machine turns, which is equivalent to three full twists.
e. Mesh size – The minimum clear distance between the wires forming the parallel sides of the mesh.
f. Terminal post – A post to which the chain link fabric is terminated using specific fittings; end post, corner post, gate post and pull post (a terminal post used to accommodate a grade or placed at intervals on long stretches of fence).
g. Line post- Intermediate posts set no greater than 10 feet on center between the terminal posts.
h. See drawing Typical Fence Section for details of various fence fittings; tension bar, truss rod, tension band, brace band, rail end and barb arm.

**KNUCKLE SELVAGE***

**TWIST SELVAGE***

*Adapted, with permission from the Annual Book of Standards, copyright ASTM International, 100 Barr Harbor Drive, West Conshohocken, PA 19248

**TABLE 1 BREAKING STRENGTH OF STEEL WIRE**

| | | |
|---|---|---|
| 6 gauge -0.192" | [4.88 mm] | 2170 lbf [9650 N] |
| 9 gauge- 0.148" | [3.76 mm] | 1290 lbf [5740 N] |
| 11 gauge- 0.120" | [3.05 mm] | 850 lbf [3780 N] |
| 11 ½ gauge- 0.113" | [2.87 mm] | 750 lbf [3340 N] |
| 12 gauge- 0.105" | [2.67 mm] | 650 lbf [2890 N] |
| 14 gauge- 0.080" | [2.03 mm] | 380 lbf [1690 N] |

**TABLE 2 THICKNESS OF COATING FOR ASTM F668 POLYMER COATED FABRIC**

| Minimum/Maximum | Class 1 & Class 2a | Class 2b |
|---|---|---|
| Minimum @ any point | 0.015 in. [0.38 mm] | 0.006 in. [0.15 mm] |
| Maximum @ any point | 0.025 in. [0.64 mm] | 0.010 in. [0.25 mm] |

**TABLE 3 STANDARD 1" & LARGER MESH SIZES AND GAUGES FOR CHAIN LINK FABRIC**
ASTM A392 galvanized, ASTM A491 aluminum coated, ASTM F1345 zinc-5%aluminum-mischmetal alloy, ASTM F668 polymer coated

| Size of mesh | Gauge* | Nominal Diameter | Recommended Usage |
|---|---|---|---|
| 2 1/8" [54 mm] | 11 ½ | 0.113" [2.87 mm] | Residential |
| 2" [50 mm] | 11 | 0.120" [3.05 mm] | Residential/light commercial |
| 2" [50 mm] | 9 | 0.148" [3.76 mm] | Residential /commercial/ind. |
| 2" [50 mm] | 6 | 0.192" [4.88 mm] | Commercial/ind./security |
| 1 ¾" [44 mm] | 11 | 0.120" [3.05 mm] | Tennis court |
| 1 ¾" [44 mm] | 9 | 0.148" [3.76 mm] | Heavy commercial/industrial |
| 1 ¾" [44 mm] | 6 | 0.192" [4.88 mm] | Security |
| 1 ¼" [32 mm] | 11 | 0.120" [3.05 mm] | Residential/swimming pool |
| 1 ¼" [32 mm] | 9 | 0.148" [3.76 mm] | Heavy industrial /Security |
| 1" [25 mm] | 11 | 0.120" [3.05 mm] | Industrial |
| 1" [25 mm] | 9 | 0.148" [3.76 mm] | Heavy industrial/ Security |

*polymer coated core wire gauge is specified fabric wire gauge not the coated finished diameter/gauge

**Figure 1. Mesh Dimensions for small security chain link fabric****

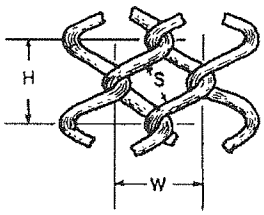


| Mesh Size S | Height H | Width W |
|---|---|---|
| 3/8 in. [9 mm] | 3/4 in. [19 mm] | 3/4 in. [19 mm] |
| 1/2 in. [13 mm] | 15/16 in. [24 mm] | 15/16 in. [24 mm] |
| 5/8in. [16 mm] | 1 1/8 in. [29 mm] | 1 1/8 in. [29 mm] |

** Figure 1 adapted with permission from the Annual Book of ASTM Standards, copyright ASTM International, 100 Barr Harbor Drive, West Conshohocken, PA 19248

**TABLE 4 SMALL MESH SIZES AND WIRE GAUGES FOR METALLIC COATED CHAIN LINK FABRIC**

ASTM A392 galvanized, ASTM A491 aluminum coated, ASTM F1345 zinc-5%aluminum-mischmetal alloy

| Size of mesh | Gauge | Nominal Diameter | Recommended Usage |
|---|---|---|---|
| 5/8" [16 mm] | 11 1/2 | 0.113" [2.87 mm] | Security / anti-climb |
| 5/8" [16 mm] | 11 | 0.120 [3.05 mm] | Security / anti-climb |
| 5/8" [16 mm] | 9 | 0.148 [3.76 mm] | Security /anti-climb |
| 1/2" [12.7 mm] | 11 1/2 | 0.113 [2.87 mm] | Security/anti-climb |
| 1/2" [12.7 mm] | 11 | 0.120 [3.05 mm] | Security/anti-climb |
| 1/2" [12.7 mm] | 9 | 0.148 [3.76 mm] | Security/anti-climb |
| 3/8" [10 mm] | 11 1/2 | 0.113 [2.87 mm] | Security /anti-climb |
| 3/8" [10 mm] | 11 | 0.120 [3.05 mm] | Security /anti-climb |

**TABLE 5 SMALL MESH SIZES AND WIRE GAUGES FOR POLYMER COATED CHAIN LINK FABRIC ASTM F668**

| Size of mesh | *Core Wire Gauge | Nominal Diameter | Recommended Usage |
|---|---|---|---|
| 5/8" [16 mm] | 14 | 0.080" [2.03 mm] | Industrial/anti-climb |
| 5/8" [16 mm] | 12 | 0.105" [2.67 mm] | Light security/anti-climb |
| 5/8" [16 mm] | 11 | 0.120" [3.05 mm] | Security / anti-climb |
| 5/8" [16 mm] | 9 | 0.148" [3.76 mm] | High Security /anti-climb |
| 1/2" [12.7 mm] | 14 | 0.080" [2.03 mm] | Light security/anti-climb |
| 1/2" [12.7 mm] | 12 | 0.105" [2.67 mm] | Security/anti-climb |
| 1/2" [12.7 mm] | 11 | 0.120" [3.05 mm] | High Security/anti-climb |
| 1/2" [12.7 mm] | 9 | 0.148" [3.76 mm] | Max. Security/anti-climb |
| 3/8" [10 mm] | 14 | 0.080" [2.03 mm] | Security/anti-climb |
| 3/8" [10 mm] | 12 | 0.105" [2.67 mm] | Security/anti-climb |
| 3/8" [10 mm] | 11 | 0.120" [3.05 mm] | High Security /anti-climb |

*polymer coated wire gauge is specified by the core wire gauge not the finished coated diameter

TABLE 6 GALVANIZED STEEL POST DIMENSIONS AND STRENGTH CHARACTERISITCS

ASTM F1043 Group IA Regular Strength Grade ASTM F1083 30,000 psi yield steel schedule 40 pipe

| Trade Reference | Decimal O.D. Equivalent | | Pipe wall Thickness | | Weight | | Section Modulus | | x | Min. Yield Strength | | = | Max Bending Moment | Calculated Load (lbs) 10' Free Supported | Cantilever 4' | Cantilever 6' |
|---|---|---|---|---|---|---|---|---|---|---|---|---|---|---|---|---|
| O.D. | inches | (mm) | inches | (mm) | lb./ft. | (kg/m) | inches³ | (mm³) | x | psi | (MPa) | = | Lb.In. | | | |
| 1 3/8" | 1.315 | 33.40 | 0.133 | 3.38 | 1.68 | 2.5 | 0.1328 | 3.37 | x | 30000 | 205 | = | 3985 | 133 | 83 | 55 |
| 1 5/8" | 1.660 | 42.16 | 0.140 | 3.56 | 2.27 | 3.38 | 0.2346 | 5.96 | x | 30000 | 205 | = | 7038 | 235 | 147 | 98 |
| 1 7/8" | 1.900 | 48.26 | 0.145 | 3.68 | 2.72 | 4.05 | 0.3262 | 8.29 | x | 30000 | 205 | = | 9786 | 326 | 204 | 136 |
| 2 3/8" | 2.375 | 60.33 | 0.154 | 3.91 | 3.65 | 5.43 | 0.5606 | 14.24 | x | 30000 | 205 | = | 16819 | 561 | 350 | 234 |
| 2 7/8" | 2.875 | 73.03 | 0.203 | 5.16 | 5.80 | 8.62 | 1.0640 | 27.03 | x | 30000 | 205 | = | 31921 | 1064 | 665 | 443 |
| 3 1/2" | 3.500 | 88.90 | 0.216 | 5.49 | 7.58 | 11.28 | 1.7241 | 43.79 | x | 30000 | 205 | = | 51723 | 1724 | 1078 | 718 |
| 4" | 4.000 | 101.60 | 0.226 | 5.74 | 9.12 | 13.56 | 2.3939 | 60.80 | x | 30000 | 205 | = | 71816 | 2394 | 1496 | 997 |
| 4 1/2" | 4.500 | 114.30 | 0.237 | 6.02 | 10.80 | 16.05 | 3.2145 | 81.65 | x | 30000 | 205 | | 96435 | 3214 | 2009 | 1399 |
| 5 9/16" | 5.563 | 141.30 | 0.258 | 6.55 | 14.63 | 21.77 | 5.4511 | 138.46 | x | 30000 | 205 | = | 163533 | 5451 | 3407 | 2271 |
| 6 5/8" | 6.625 | 168.28 | 0.280 | 7.11 | 18.99 | 28.23 | 8.4958 | 215.79 | x | 30000 | 205 | = | 254873 | 8496 | 5310 | 3540 |
| 8 5/8" | 8.625 | 219.08 | 0.322 | 8.18 | 28.58 | 42.49 | 16.8091 | 426.95 | x | 30000 | 205 | = | 504274 | 16809 | 10506 | 7004 |

ASTM F1043 Group IA Intermediate Strength Grade ASTM F1083 50,000 psi yield steel schedule 40 pipe

| Trade Reference | Decimal O.D. Equivalent | | Pipe wall Thickness | | Weight | | Section Modulus | | x | Min. Yield Strength | | = | Max Bending Moment | Calculated Load (lbs) 10' Free Supported | Cantilever 6' | Cantilever 15' |
|---|---|---|---|---|---|---|---|---|---|---|---|---|---|---|---|---|
| O.D. | inches | (mm) | inches | (mm) | lb./ft. | (kg/m) | inches³ | (mm³) | x | psi | (MPa) | = | Lb.In. | | | |
| 6 5/8" | 6.625 | 168.28 | 0.280 | 7.11 | 18.99 | 28.23 | 8.4958 | 215.79 | x | 50000 | 345 | = | 424789 | 14160 | 5900 | 2360 |
| 8 5/8" | 8.625 | 219.08 | 0.322 | 8.18 | 28.58 | 42.49 | 16.8091 | 426.95 | x | 50000 | 345 | = | 840457 | 28015 | 11673 | 4669 |

ASTM F1043 Group IA High Strength 83000 Grade ASTM F1083 83,000 psi yield steel schedule 40 pipe

| Trade Reference | Decimal O.D. Equivalent | | Pipe wall Thickness | | Weight | | Section Modulus | | x | Min. Yield Strength | | = | Max Bending Moment | Calculated Load (lbs) 10' Free Supported | Cantilever 6' | Cantilever 15' |
|---|---|---|---|---|---|---|---|---|---|---|---|---|---|---|---|---|
| O.D. | inches | (mm) | inches | (mm) | lb./ft. | (kg/m) | inches³ | (mm³) | x | psi | (MPa) | = | Lb.In. | | | |
| 1 5/8" | 1.660 | 42.16 | 0.140 | 3.56 | 2.27 | 3.38 | 0.2346 | 5.96 | x | 83000 | 572 | = | 19471 | 649 | 270 | 108 |
| 1 7/8" | 1.900 | 48.26 | 0.145 | 3.68 | 2.72 | 4.05 | 0.3262 | 8.29 | x | 83000 | 572 | = | 27075 | 903 | 376 | 150 |
| 2 3/8" | 2.375 | 60.33 | 0.154 | 3.91 | 3.65 | 5.43 | 0.5606 | 14.24 | x | 83000 | 572 | = | 46532 | 1551 | 646 | 258 |
| 2 7/8" | 2.875 | 73.03 | 0.203 | 5.16 | 5.80 | 8.62 | 1.0640 | 27.03 | x | 83000 | 572 | = | 88315 | 2944 | 1227 | 491 |
| 3 1/2" | 3.500 | 88.90 | 0.216 | 5.49 | 7.58 | 11.28 | 1.7241 | 43.79 | x | 83000 | 572 | = | 143100 | 4770 | 1987 | 795 |
| 4" | 4.000 | 101.60 | 0.226 | 5.74 | 9.12 | 13.56 | 2.3939 | 60.80 | x | 83000 | 572 | = | 198691 | 6623 | 2760 | 1104 |

ASTM F1043 Group IC Electric Resistant Welded 50,000/60,000 psi yield steel pipe

| Trade Reference | Decimal O.D. Equivalent | | Pipe wall Thickness | | Weight | | Section Modulus | | x | Min. Yield Strength | | = | Max Bending Moment | Calculated Load (lbs) 10' Free Supported | Cantilever 4' | Cantilever 6' |
|---|---|---|---|---|---|---|---|---|---|---|---|---|---|---|---|---|
| O.D. | inches | (mm) | inches | (mm) | lb./ft. | (kg/m) | inches³ | (mm³) | x | psi | (Mpa) | = | Lb.In. | | | |
| 1 5/8" | 1.660 | 42.16 | 0.111 | 2.82 | 1.84 | 2.74 | 0.1962 | 4.98 | x | 50000 | 345 | = | 9810 | 327 | 204 | 136 |
| 1 7/8" | 1.900 | 48.26 | 0.120 | 3.05 | 2.28 | 3.39 | 0.2810 | 7.14 | x | 50000 | 345 | = | 14050 | 468 | 293 | 195 |
| 2 3/8" | 2.375 | 60.33 | 0.130 | 3.30 | 3.12 | 4.64 | 0.4881 | 12.40 | x | 50000 | 345 | = | 24405 | 814 | 508 | 339 |
| 2 7/8" | 2.875 | 73.03 | 0.160 | 4.06 | 4.64 | 6.91 | 0.8778 | 22.30 | x | 50000 | 345 | = | 43890 | 1463 | 914 | 610 |
| 3 1/2" | 3.500 | 88.90 | 0.160 | 4.06 | 5.71 | 8.50 | 1.3408 | 34.06 | x | 50000 | 345 | = | 67042 | 2235 | 1397 | 931 |
| 4" | 4.000 | 101.60 | 0.160 | 4.06 | 6.57 | 9.78 | 1.7820 | 45.26 | x | 50000 | 345 | = | 89098 | 2970 | 1856 | 1237 |
| 4 1/2" | 4.500 | 114.30 | 0.220 | 5.59 | 10.07 | 14.98 | 3.0184 | 76.67 | X | 60000 | 414 | = | 181104 | 6037 | 3773 | 2515 |
| 5" | 5.000 | 127.00 | 0.180 | 4.57 | 9.27 | 13.79 | 3.1706 | 80.53 | X | 60000 | 414 | = | 190236 | 6341 | 3963 | 2642 |

ASTM F1043 Group II Rolled Formed C line post 50,000/60,000 psi yield steel (strength shown is about the major axis)

| Dimensions Inches | Dimensions Metric (mm) | Material Thickness Inches | (mm) | Weight lb./ft. | (kg/m) | Section Modulus inches³ | (mm³) | Min. Yield Strength psi | (Mpa) | Max. Bending Moment Lb.In. | Cantilever Load 4' | 6' |
|---|---|---|---|---|---|---|---|---|---|---|---|---|
| 1.875 x 1.625 | 47.6 x 41.2 | 0.121 | 3.10 | 2.40 | 3.39 | 0.395 | 10.03 | 50000 | 345 | 19750 | 411 | 274 |
| 2.250 x 1.700 | 57.2 x 43.2 | 0.121 | 3.10 | 2.78 | 4.13 | 0.506 | 12.85 | 50000 | 345 | 25300 | 527 | 351 |
| 3.250 x 2.500 | 82.5 x 63.5 | 0.130 | 3.30 | 4.50 | 6.70 | 1.083 | 27.51 | 60000 | 414 | 64980 | 1354 | 903 |

ASTM F1043 Group III Hot Rolled H-Beam line post 50,000 psi yield steel (strength shown is about the major axis)

| Dimensions Inches | Dimensions Metric (mm) | Material Thickness Inches | (mm) | Weight lb./ft. | (kg/m) | Section Modulus inches³ | (mm³) | Min. Yield Strength psi | (Mpa) | Max. Bending Moment Lb.In. | Cantilever Load 4' | 6' |
|---|---|---|---|---|---|---|---|---|---|---|---|---|
| 2.250 x 1.700 | 57.2 x 43.2 | 0.125 | 3.18 | 3.26 | 4.85 | 0.661 | 16.76 | 50000 | 345 | 33050 | 689 | 459 |

**TABLE 7 GUIDE FOR SELECTION OF ASTM F1043/F1083 LINE POST**

| Fence Fabric Height | Group IA ASTM F1083 Sch. 40 Pipe | Group IC Elec. Resistance Welded Pipe | Group II Rolled Formed C-Section | | Group III Hot Rolled H-Section |
|---|---|---|---|---|---|
| | Min/Max O.D. | Min/Max O.D. | Min. | Max. | |
| up to 6' 0" | 1.900 - 3.500" | 1.900 - 3.500" | 1.875" x1.625 | 2.250" x1.700 | 2.25 x 1.70" |
| over 6' 0" to 8' 0" | 2.375 - 4.000" | 2.375 - 4.000" | 2.250" x1.700 | 3.250" x2.500 | 2.25 x 1.70" |
| over 8 ' 0" to 10' 0" | 2.875 - 6.625" | 2.875 - 5.000" | 2.250 x1.700 | 3.250" x2.500 | 2.25 x 1.70" |
| over 10' 0" to 12' 0" | 3.500 - 6.625" | 3.500 - 5.000" | 3.250" x2.500 | N/A | N/A |
| over 12' 0" to 14' 0" | 4.000 - 6.625" | 4.000 - 5.000" | N/A | | N/A |

Post size ranges based on mesh size, wire gauge, location, icing, wind speed, wind load
Consult the CLFMI "Chain Link Fence Wind Load Guide for the Selection of Line Post and Line Post Spacing (WLG 2445)"
Pipe terminal posts are generally one size larger in outside diameter than the line posts
Group IV alternative products are available; require manufacturer to provide documentation, dimensions, strength calculations and compliance certification to ASTM F1043.

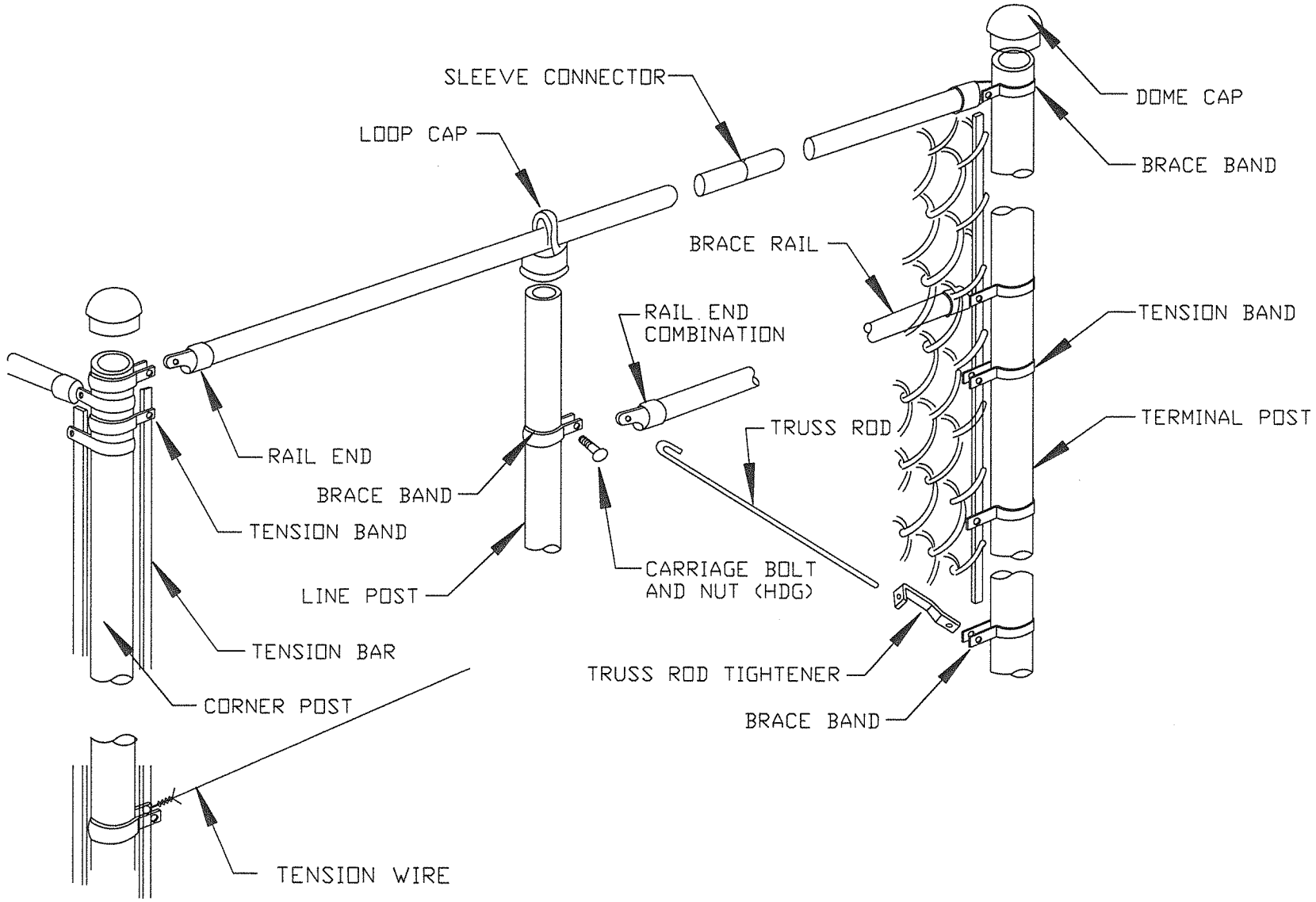


Chain Link Fence Manufacturers Institute
10015 Old Columbia Rd. Suite B 215
Columbia, MD. 21046

# TYPICAL FENCE SECTION

TOP RAIL / TRUSSED BRACE RAIL WITH BOTTOM TENSION WIRE

DETAILS

COMPILED BY: ART

DATE 02-11-10

CLFMI

DETAILS

SCALE: 1/4"=1'

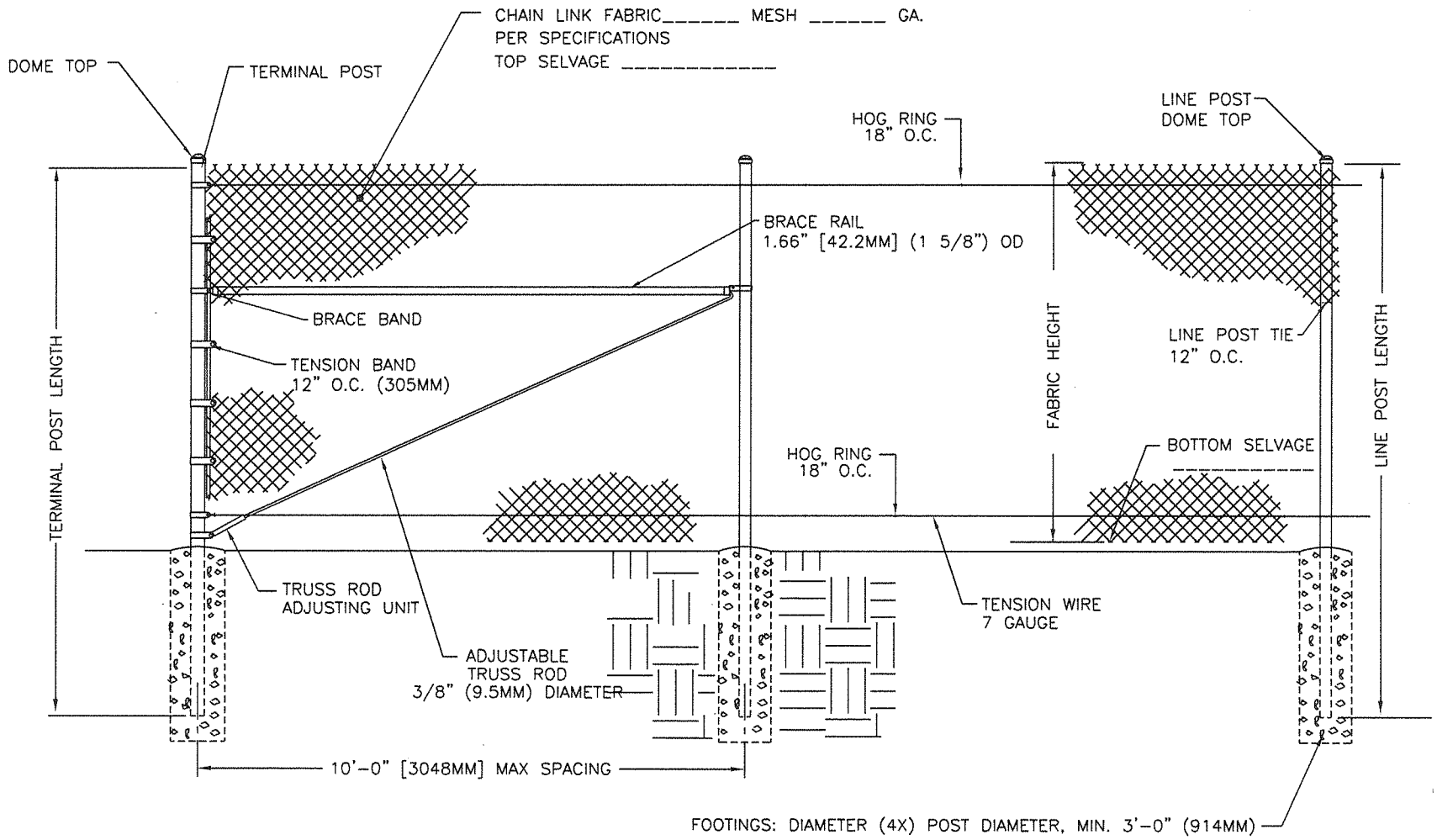


Chain Link Fence Manufacturers Institute
10015 Old Columbia Rd. Suite B 215
Columbia, MD. 21046

# TYPICAL FENCE SECTION

TYPICAL FENCE ELEVATION
TRUSSED BRACE RAIL
W/ TOP & BOTTOM TENSION WIRE

BY: ART

DATE: 02/11/10

CLFMI
CLO

SCALE: 1:40

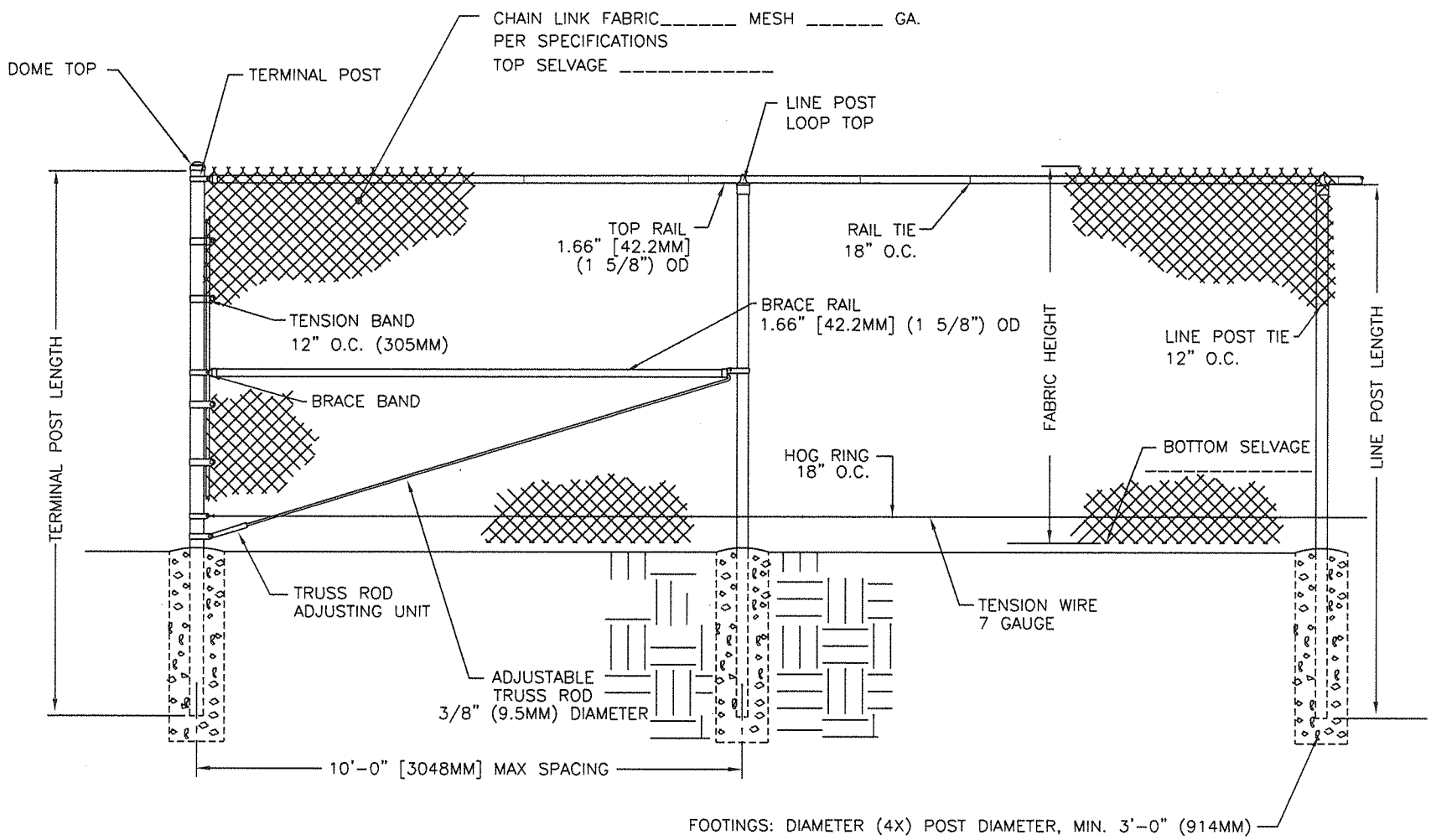


Chain Link Fence Manufacturers Institute
10015 Old Columbia Rd. Suite B 215
Columbia, MD. 21046

# TYPICAL FENCE SECTION

TYPICAL FENCE ELEVATION
TOP RAIL / TRUSSED BRACE RAIL
WITH BOTTOM TENSION WIRE

BY: ART

DATE: 02/11/10

CLFMI

CLT

SCALE: 1:40

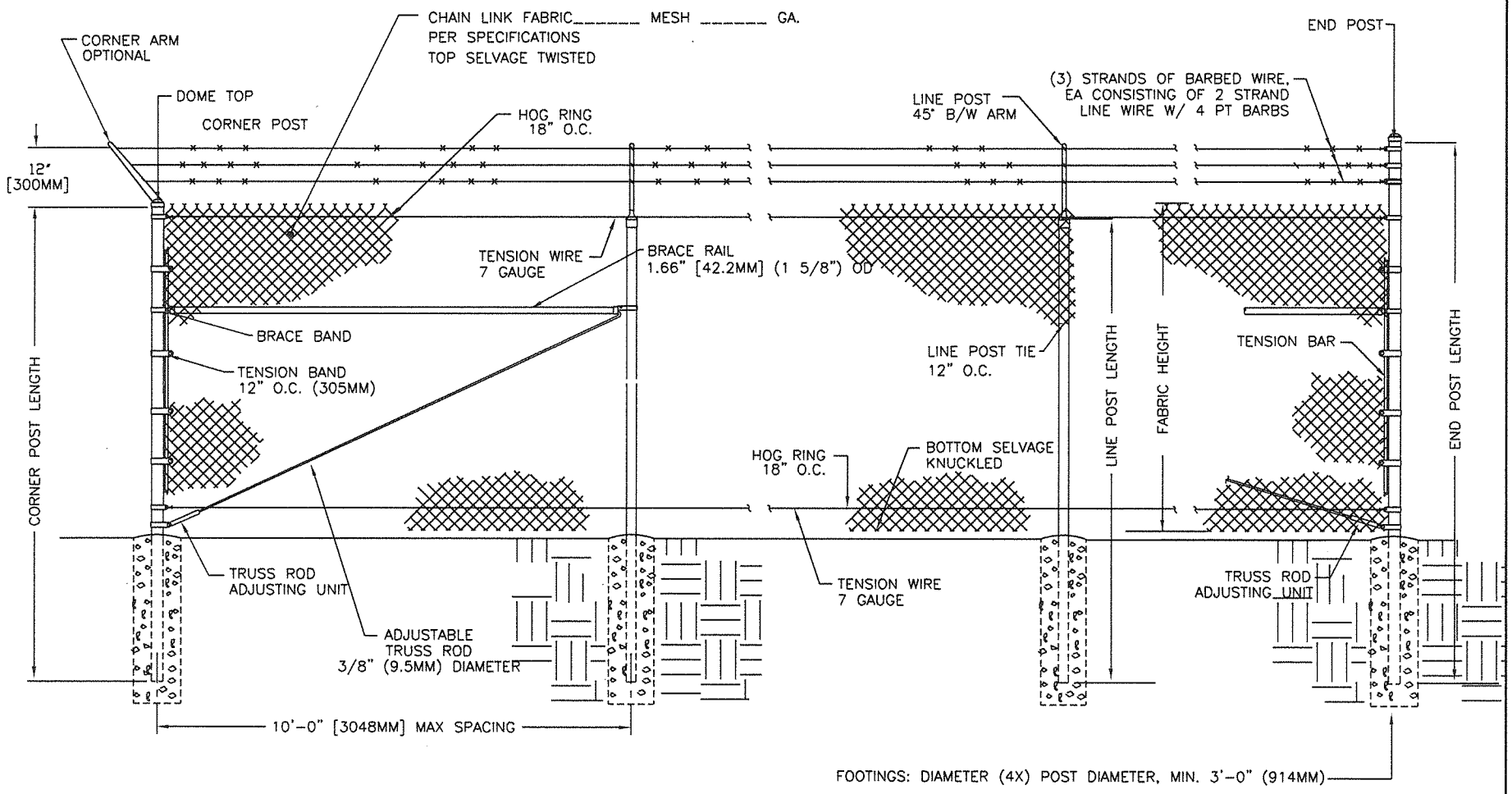


Chain Link Fence Manufacturers Institute
10015 Old Columbia Rd. Suite B 215
Columbia, MD. 21046

# TYPICAL FENCE SECTION

TYPICAL FENCE ELEVATION
TRUSSED BRACE RAIL
3 STRANDS BARBED WIRE
W/ TOP & BOTTOM TENSION WIRE

BY: ART

DATE: 08/11/10

CLFMI
CLOA

SCALE: 1:40

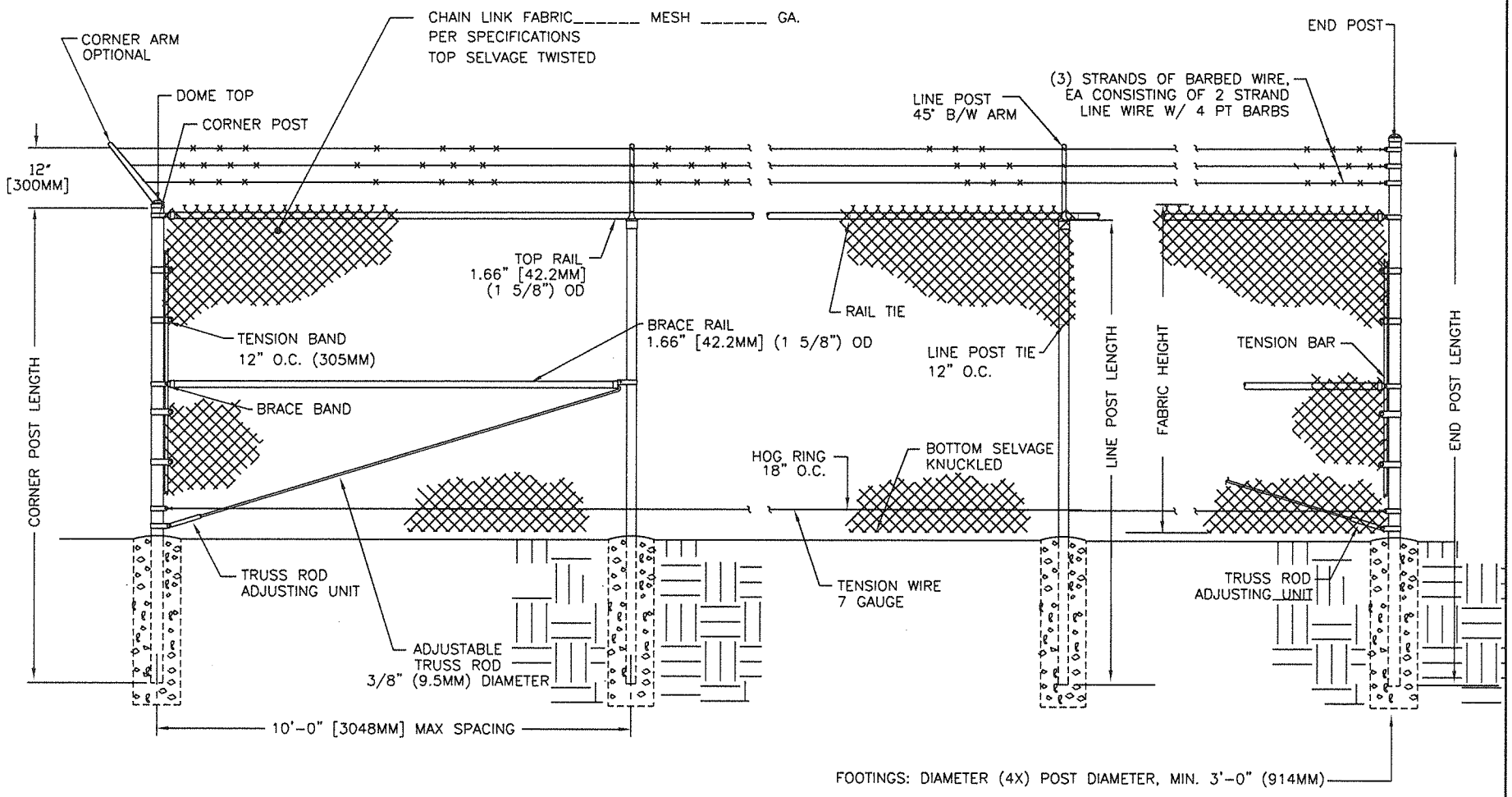


Chain Link Fence Manufacturers Institute
10015 Old Columbia Rd. Suite B 215
Columbia, MD. 21046

# TYPICAL FENCE SECTION

TYPICAL FENCE ELEVATION
TOP RAIL / TRUSSED BRACE RAIL
3 STRANDS BARBED WIRE
WITH BOTTOM TENSION WIRE

BY: ART

DATE: 02/11/10

CLFMI
CLTA

SCALE: 1:40

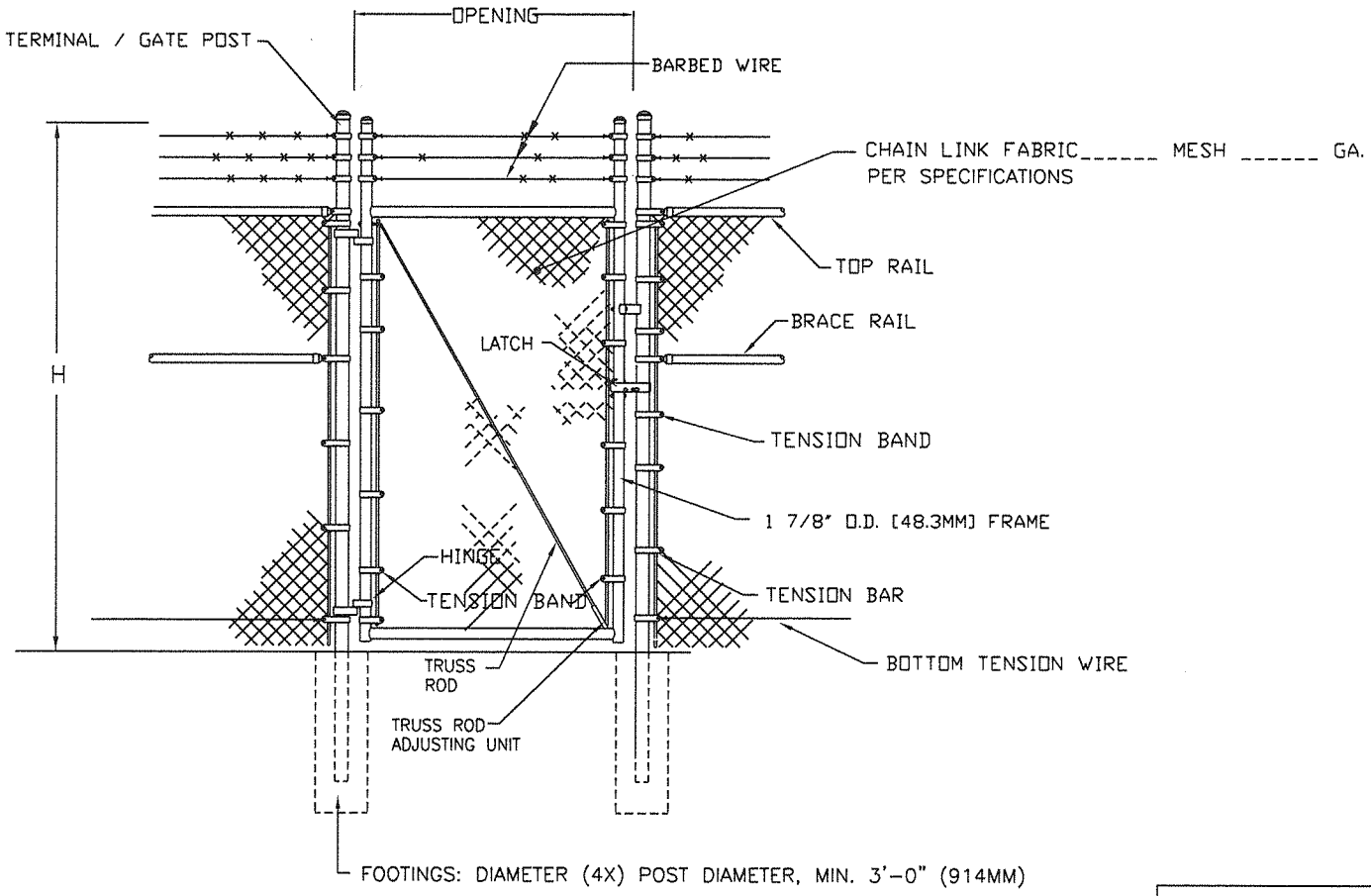


NOTE:

1. VERTICAL AND HORIZONTAL MEMBERS MAXIMUM 8' O.C.

## GATE PLAN

| NOM HEIGHT (H) |
|---|
| 6'-0" OR 6+1=7' |
| 7'-0" OR 7+1=8' |
| 8'-0" OR 8+1=9' |

Chain Link Fence Manufacturers Institute
10015 Old Columbia Rd. Suite B 215
Columbia, MD. 21046

# TYPICAL SINGLE SWING GATE

3 STRANDS BARBED WIRE
(OPTIONAL)

BY: ART

DATE: 02/11/10

CLFMI
CLGA-1

SCALE: 1:40

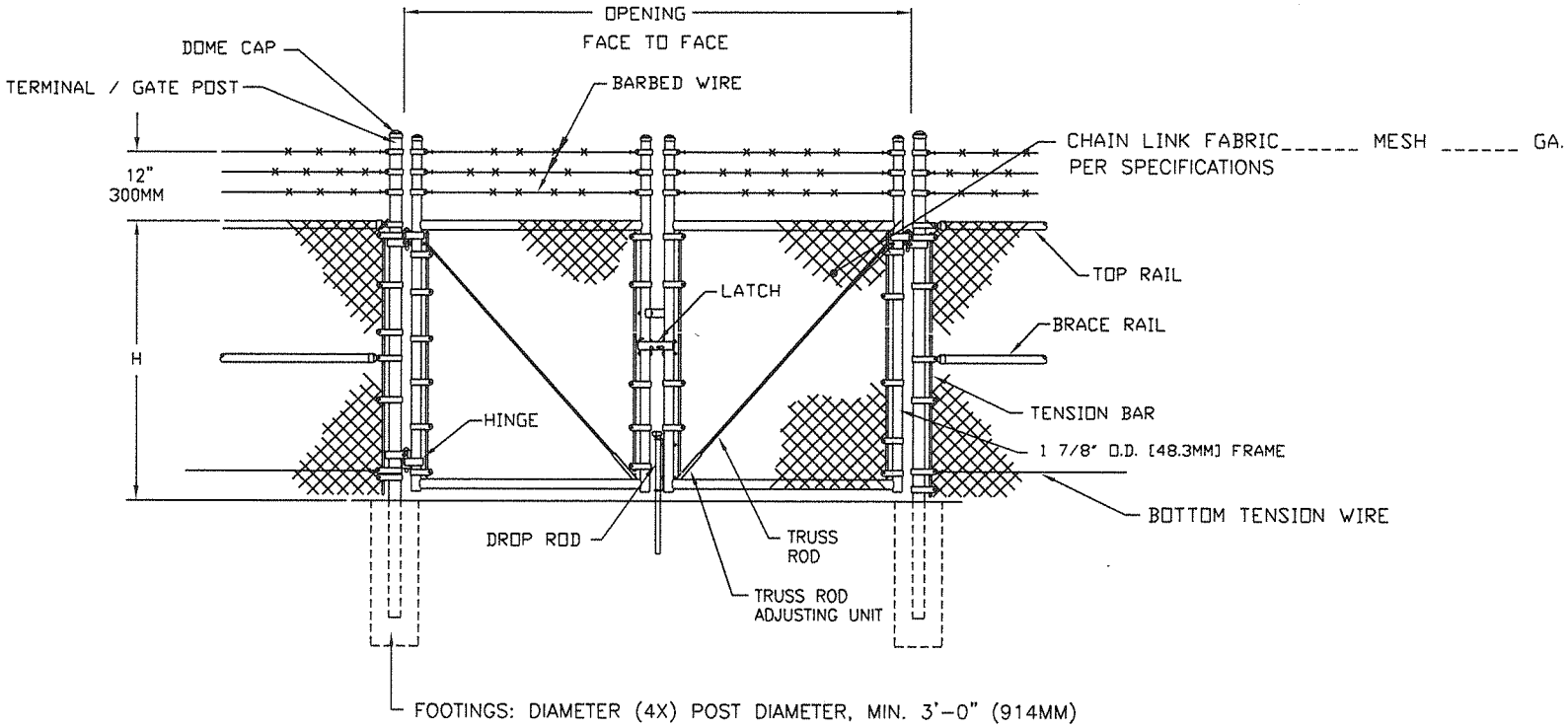


NOTE:

1. VERTICAL AND HORIZONTAL MEMBERS MAXIMUM 8' O.C.

| NOM HEIGHT (H) |
|---|
| 6'-0" OR 6+1=7' |
| 7'-0" OR 7+1=8' |
| 8'-0" OR 8+1=9' |

GATE PLAN

Chain Link Fence Manufacturers Institute
10015 Old Columbia Rd. Suite B 215
Columbia, MD. 21046

TYPICAL DOUBLE SWING GATE

3 STRANDS BARBED WIRE
(OPTIONAL)

BY: ART

DATE: 02/11/10

CLFMI
CLGA-2

SCALE: 1:40

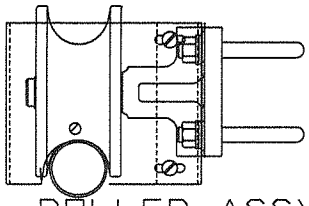

ROLLER ASSY.
WITH ROLL-R-GUARD
(TOP)

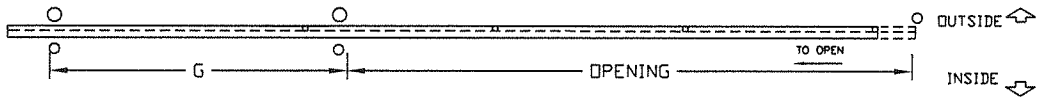


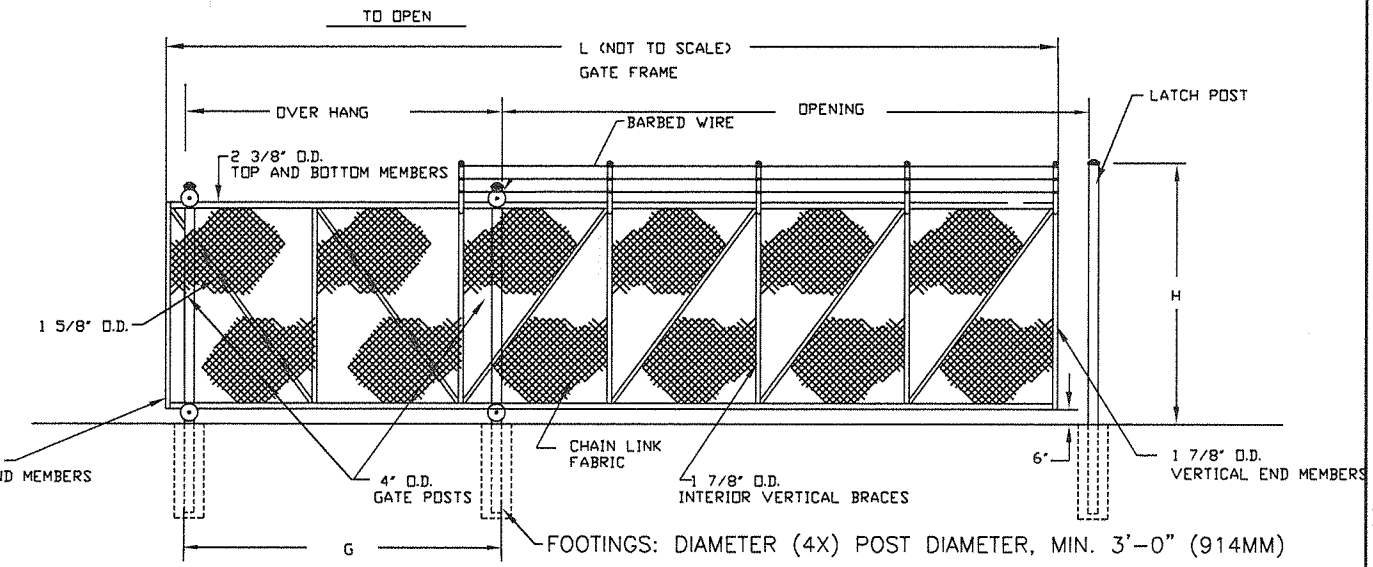


ELEVATION
ROLLER COVERS, GUARD, AND SAFETY POSTS

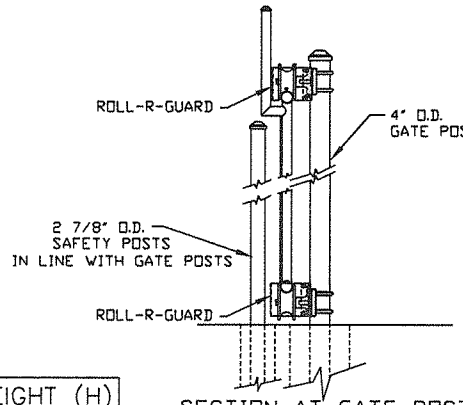


SECTION AT GATE POSTS
WITH ROLLER COVERS/GUARDS
AND SAFETY POSTS

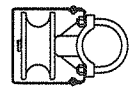

ROLLER ASSY.
WITH ROLL-R-GUARD
(BOTTOM)

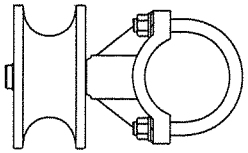

ROLLER ASSY.
(GUARD NOT SHOWN)

| NOM HEIGHT (H) |
|---|
| 6'-0" OR 6+1=7' |
| 7'-0" OR 7+1=8' |
| 8'-0" OR 8+1=9' |

Chain Link Fence Manufacturers Institute
10018 Old Columbia Rd. Suite B 215
Columbia, MD. 21046

SINGLE CANTILEVERED SLIDING GATE

ROUND POSTS W/BARBED WIRE
(6' THRU 22' OPENINGS)

COMPILED BY: ART

DATE 02-11-10

CLFMI
TYPE II CLASS 1
EXTERNAL ROLLERS

SCALE: 1/4"=1'

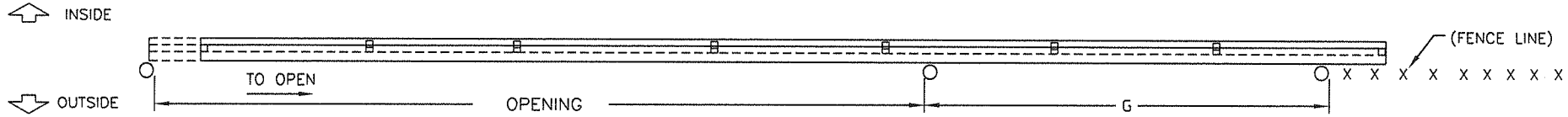


GATE PLAN

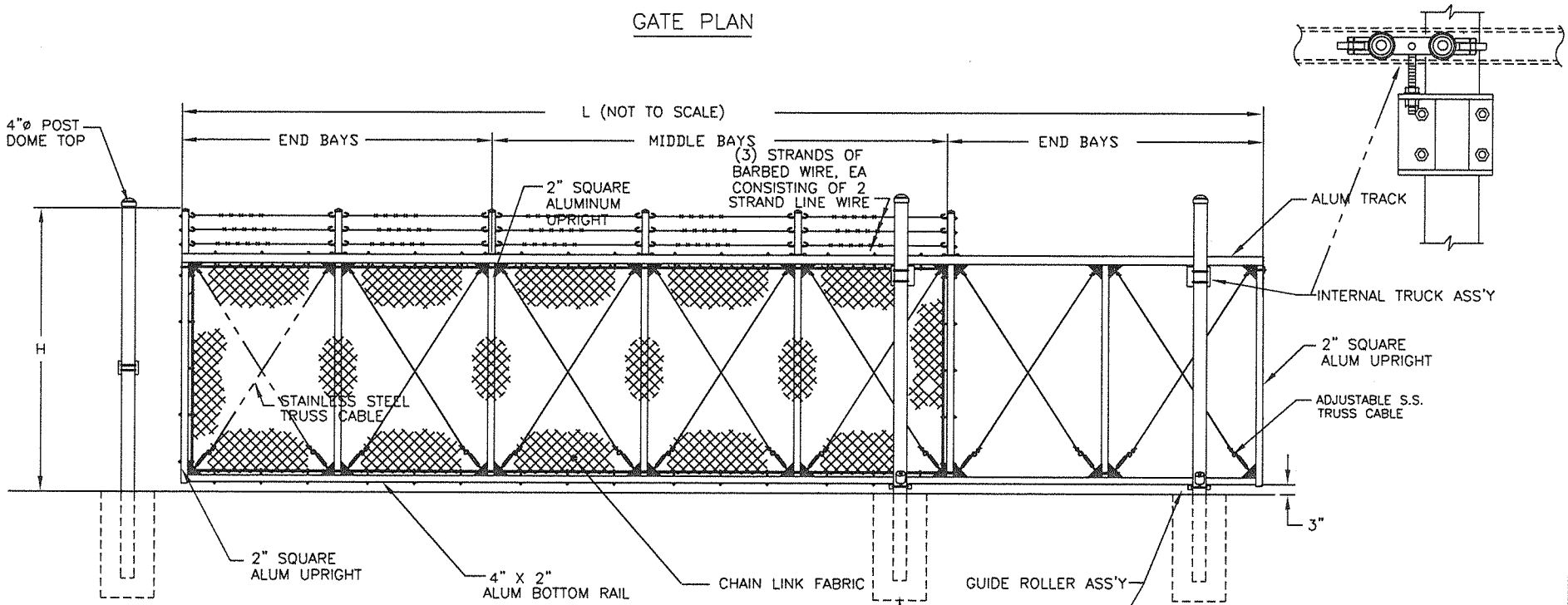


| NOM HEIGHT (H) |
|---|
| 6'-0" OR 6+1=7' |
| 7'-0" OR 7+1=8' |
| 8'-0" OR 8+1=9' |

FOOTINGS: DIAMETER (4X) POST DIAMETER, MIN. 3'-0" (914MM)

GATE ELEVATION – 7 BAYS SHOWN

NOTE:

1. MINIMUM BACKFRAME 40% OF OPENING.
2. VERTICAL AND HORIZONTAL MEMBERS MAXIMUM 8' O.C.

Chain Link Fence Manufacturers Institute
10015 Old Columbia Rd. Suite B 215
Columbia, MD. 21046

SINGLE CANTILEVERED SLIDING GATE

ROUND POSTS, W/BARBED WIRE
(10' THRU 30' OPENINGS)

BY: ART
DATE: 02-11-10

CLFMI

ASTM F 1184 TYPE II CLASS 2
INTERNAL ROLLERS

# SECTION 32 84 23.2
# LANDSCAPING

PART 1. GENERAL

1.01 RELATED DOCUMENTS

A. State of Maine Department of Transportation, "Standard Specifications," Revision December 2002, and any revisions thereto, apply to this Section. If the Contractor discovers any ambiguity, error, omission, conflict, or discrepancy, Section 10 1. 3.6 Priority of Conflicting Contract Documents shall control.

1. Drawings and general provisions of the Contract, and Division 1 Specification Sections, apply to this Section.
2. Any supplements to any of the above specifications and or standards issued prior to issuance of this Project Manual, apply to this section.

1.02 RELATED WORK SPECIFIED ELSEWHERE

A. The general provisions and documents of the Contract, including General and Special Conditions, apply to the work specified in this Section.

B. Construction Drawings

1.03 SCOPE

A. Work under this Section shall include all labor, materials, services, equipment and accessories necessary to furnish and install trees, shrubs, and turf in accordance with the specifications and applicable Drawings.

1.04 PRICE AND PAYMENT PROCEDURES

A. Measurement and payment will be as follows:

B. Pay Item 615.0701 Loam, Plan Quantity – Cubic Yard.

C. Pay Item 618.1401 Seeding Method #2, Plan Quantity – Unit.

D. Pay Item 619.120 Mulch – Unit.

E. Pay Item 621.902 Landscaping – Lump Sum.

F. Basis of Payment – The accepted quantity of Loam will be paid for at the contract unit price per Cubic Yard, Plan Quantity, Seed, and Mulch will be paid for at the contract unit price per Unit, Plan Quantity. Water, Fertilizer, and all other appurtenances necessary to satisfactorily complete the work shall be considered incidental and no further payment will be made.

G. Basis of Payment – The accepted quantity of Landscaping will be paid for at the contract unit price per Lump Sum. The size and quantity of plants shown on the landscape plan contained within the plan set shall be provided and installed in compliance the provisions of the plan and Specification Section 32 84 23.2 of the contract documents. Water, Bark Mulch, Fertilizer, and all other appurtenances necessary to satisfactorily complete the work shall be considered incidental and no further payment will be made.

1.05 CERTIFICATION OF ACCEPTABILITY

A. Inspection of the work covered by this Section to determine completion of the work involved will be made at the conclusion of the Maintenance Period upon written notice requesting such inspection submitted by the Landscape Contractor at least ten (10) days prior to the anticipated date. The condition of turf and plantings will be noted and determination made by the Landscape Architect whether maintenance shall continue.

1.06 STANDARDS

A. Provide plants which are true to name. Tag one of each bundle or Lot with the name and size of plants and shall conform to ANSI Z260.1 - Nursery Stock, latest edition, of the American Association of Nurserymen, Inc.

B. Workmanship: Perform work in accordance with the best standards of practice for Landscape work and under the continual supervision of a competent foreman capable of interpreting the Drawings and Specifications.

C. Submit documentation to Landscape Architect of Record within twenty-five (25) days after award of contract stating that plant material is available. Any and all substitutions due to unavailability must be requested in writing prior to confirmation of ordering.

D. Plants shall be subject to review and approval of Landscape Architect of Record at place of growth or upon delivery to the site for conformity to specifications. Such approval shall not impair the right of review and rejections during progress of the work. Submit written request for review of plant material at place of growth to Landscape Architect of Record or notify Landscape Architect of Record a minimum of 48 hours before scheduled installation. All plant material to be inspected shall be set in place for inspection before installation. Written request shall state the place of growth and quantity of plants to be reviewed. Landscape Architect of Record reserves the right to refuse review at this time if, in his judgment, sufficient quantity of plants is not available for review. Review shall be for character and form.

1.07 GUARANTEE

A. Plantings shall be guaranteed for one (1) full year after certification of acceptability by the Landscape Architect and shall be alive and in satisfactory growth at the end of the guarantee period, except for damage resulting from causes beyond the responsibility of the Contractor. The Contractor shall provide the Owner with a written guarantee upon certification of acceptability. For plant material in question at the end of the guarantee, the Landscape Architect, Owner and Contractor shall determine a reasonable extension of the guarantee period.

B. Lawns shall be warranted after installation and for 30 days following acceptance of site by Owner.

1.08 TESTS AND CERTIFICATIONS

A. Tests specified in this Section shall be paid for by the Contractor. Certifications required must be submitted to the Landscape Architect or Owner's Representative for approval before use of materials on the site.

B. The Contractor shall be required to take representative soil samples of the topsoil to be provided from several locations (on-site) in the area(s) under consideration for testing. Imported topsoil shall also require test results prior to placement. Tests shall be made by a State Commercial Soil Testing Laboratory using methods approved by the Association of Official Agricultural Chemist or the State Agricultural Experiment Station, or by the University of Maine at Orono. Testing shall include chemical balance (pH) as well as organic content. The required pH level shall be between 6.6-7.3% and the organic content shall be between 6.5-8%.

C. The Contractor shall provide testing data for composted soil amendment if required to supplement the required minimum organic content.

PART 2. PRODUCTS

2.01 MATERIALS

A. Topsoil - The Contractor shall furnish and place topsoil to give the specified depths. The Contractor shall furnish and place 18 inches of loam in all shrub beds, and 6 inches under all

turf areas. Topsoil mix shall be placed in all tree and shrub pits as shown on the Drawings. Natural loam topsoil shall be of uniform quality, free from hard clods, still clay, hard pan sods, rocks, stones, weeds, brush, roots, twigs, litter and environmental contaminants. The Owner and/or Landscape Architect reserve the right to reject on or after delivery any materials which do not, in his or her opinion, meet these Specifications.

B. Additives
   1. Humus - Ground or shredded peat that has been stockpiled at least one year prior to use, or commercial bagged peat.
   2. Manure - Well-rotted unleached stable manure with no more that 25% straw, shavings, or sawdust content. A mixture of one (1) cubic yard of peat humus or peat moss and 100 lbs. of commercial dehydrated-bagged manure such as Bovung or Spurigon may be used.
   3. Mulch for Plants - Well-rotted (black) shredded pine bark as approved by the Landscape Architect.
   4. Lime - Commercial ground lime with no less than 85% total carbonates, 50% passing a 100 mesh sieve and 90% passing a 200 mesh sieve as approved by the Landscape Architect. Coarser material will be accepted provided that specific rates of application increased proportionately.
   5. Compost soil amendment - Acceptable compost for “compost manufactured topsoil” shall conform to EPA Chapter 40 CFR 503 (pathogen, metals and vector attraction reduction) as well as applicable state regulations.

C. Commercial Fertilizer
   1. Seeding - 19-26-5 dust free homogenous granular material such as Scotts Pro-Turf Starter Fertilizer or an approved equal (application rate as recommended by manufacturer).
   2. Sodding - 10-6-4 with 50% nitrogen derived from ureaform, such as Agway Turfwood Special Premium or an approved equal (application rate as recommended by manufacturer).
   3. Superphosphate - 0-20-0 in unopened bags with manufacturer analysis printed on the bag.

D. Pre-Emergent Weed Control - Provide a mixture with active ingredients consisting of “a-a-a-trifluoro-2, 6-dinitro-n, n-dipropyl-p-toluidine” (1.75% of total mixture) and active ingredients (98.25% of total mixture. Maunfacturer: “Green Gold” by Lebanon Chemical Corp. or equal.

E. Weed Barrier Fabric - Provide black polypropylene sheet 27 mils thick, 4 oz./sq.yd., grab tensile strength per ASTM D-4632; 90LB (machine direction) 50 lbs. (cross machine direction). Provide DeWitt “Weed Barrier” or approved equal.

F. Plant Materials - Furnish plants shown and specified on the Drawings and listed in the plant materials list. Discrepancies between the number of plants shown on the Drawings and the number listed in the plant list shall not be grounds for additional renumeration for the Contractor. Plants shall be nursery grown, typical of their species or variety and have a normal habit of growth. Any plant with broken, damaged, or badly bruised branches, trunks, or root balls shall be rejected.
   1. Sizes: Plants larger than specified in the plant list may be used if approved by the Landscape Architect but use of such plants shall not increase the contract price. If the use of the larger plants is approved, the spread of roots or ball of earth shall be increased in proportion to the size of the plants.
   2. Substitutions: In the event that trees, shrubs or other plant material specified in the plant list are impossible or unreasonably difficult to obtain, the Contractor shall immediately notify the Landscape Architect (Standards 1.4 c) to discuss appropriate substitutions. No substitutions of plant material may be made without the approval of the Landscape Architect.

G. Sod - Sod shall be well-established turf (not less than two years old) of even thickness (machine cut to a pad thickness of ¾ inch (±1/4 inch) excluding top growth and thatch) consisting of a Bluegrass blend, 90% Bluegrass and 10% Fescue. Provide only sod capable of vigorous growth and development when planted (viable, not dormant). Sod shall be provided from supplier acceptable to Landscape Architect and Owner.

PART 3.EXECUTION

3.01 PRE-PLANT WEED CONTROL

A. If live perennial weeds exist on site at the beginning of work, spray with a non-selective systemic contact herbicide, as recommended and applied by an approved licensed landscape pest control advisor and applicator. Leave sprayed plants intact for at least fifteen days to allow systemic kill or as directed by advisor.

B. Maintain site weed free until final acceptance by Owner utilizing mechanical, manual and/or chemical treatment.

3.02 PRE-EMERGENT WEED CONTROL

A. Apply pre-emergent to mulch in planting areas to prohibit weed growth.If weeds appear in treated areas during the first year, the landscape Contractor shall return to remove all weeds at no cost to Owner.

3.03 WEED BARRIER FABRIC

A. Apply to planting beds below mulch. Do not install weed barrier fabric in areas to receive ground cover planting.

3.04 PLANTING OF TREES AND SHRUBS

A. Plants must be located by the Contractor and approved by the Landscape Architect before pits are dug. The Contractor shall notify the Landscape Architect at least 48 hours prior to scheduling installation of plant material. Locations as shown on the Drawings may be varied due to existing conditions.

B. Preparation of Soil - Manure, peat humus and superphosphate additives shall be incorporated into topsoil by placing the additives over topsoil piles and turning piles at least 3 times or until thoroughly mixed. (Refer to planting detail). In locations with high clay content, apply gypsum additives to break down the clay.

3.05 STAKING AND GUYING

A. Trees shall be staked at the time of planting as shown on the typical section of Tree Planting Detail.

3.06 PRUNING AND MULCHING

A. Remove all dead wood and/or suckers and all broken or badly bruised branches. Remove and replace improperly pruned or misformed stock. All pruning shall conform to standards established by the National Arborist Association.

B. Immediately after planting operations are completed, cover all tree and shrub pits with three (3) inch layer of specified mulch. Mulch shall be used only as tree collars and around shrubbery, but not to extend greater than 12 inches beyond the drip line of shrubbery unless specifically approved by Project Architect. Do not install mulch on slopes exceeding 10:1 (horizontal: vertical).

3.07 WATERING

A. The Contractor shall be responsible for thoroughly watering all plant material upon installation.

B. Watering shall be monitored on a daily basis when temperatures exceed 70 degrees. The depth of moisture in all tree and shrub plantings shall be adequate to prevent wilting.

C. Watering (as required) of plant material shall continue for the duration of the maintenance period until certification of acceptability.

3.08 SODDING

A. Conduct planting operations under favorable weather conditions. Do not install sod if dormant or ground is frozen.

B. Compost Manufactured Topsoil - The soil (source material) shall be free of lumps, plants, weeds, roots and other debris over 2 inches in any dimension and free of stones over inch in any dimension. The organic compost shall be uniformly incorporated into the loam source by rolling and tumbling, by a front-end loader or by processing in a mixing plant. The material shall be mixed sufficiently to produce a homogenous soil, free of lumps and clods. In addition to the requirements for the compost amendment, the Contractor shall provide documentation that the recommended rate of fertilizer, per the testing analysis, has been applied to lawn areas prior to seeding.

C. Prior to placing loam, scarify subgrade areas to a minimum depth of four (4) inches; remove all rocks over two (2) inches and debris; and set grade stakes as necessary. Place topsoil evenly over all areas to be loamed to a minimum thickness of six (6) inches. Hand rake to remove clods, lumps, brush, roots, and stones over ¾ inch in diameter. Hand roll to show depressions and uneven grades. Regrade as necessary to obtain smooth, even grades. Surplus topsoil shall become the property of the Contractor and shall be removed off the site.

D. Apply additives (lime, fertilizer, compost etc.) as per the recommendation of the testing lab. Apply additives and harrow into top two (2) inches of the seedbed.

E. Repair damage resulting from erosion, gullies, washouts or other similar causes if such damage occurs before certification of acceptability of turf and planting by the Landscape Architect.

F. Sod - After all grading has been completed, the soil shall be irrigated within 12-24 hours before laying the sod. Sod shall not be laid on soil that is dry and powdery.

G. The first row of sod shall be laid in a straight line with subsequent rows placed parallel to and tightly against each other. Lateral joints shall be staggered to promote a uniform growth and strength. Care shall be exercised to insure that the sod is not stretched or overlapped and that all joints are butted tight in order to prevent voids which cause air drying of the roots.

H. Anchor sod on slopes to prevent slippage. Do not exceed 3:1 slopes.

I. The Contractor shall water sod immediately after installation to prevent drying during progress of the work. It shall then be thoroughly irrigated to a depth sufficient that the underside of the new sod pad and soil immediately below the sod is thoroughly wet.

J. Rolling of the sod shall be required to properly join sod to the bed after the sod is installed and twenty-four (24) to forty-eight (48) hours after initial watering. The Contractor shall roll the required area with a roller which weights seventy-five (75) to one hundred (100) pounds per square foot of roller width. The completed sod surface shall be true to finish grades as shown on plans and even and firm at all points.

K. Watering
   1. First and Second Week - The Contractor shall provide all labor and arrange for all watering necessary for establishment of the turf. In the absence of adequate rainfall, watering shall be performed daily or as often as necessary during the first and second week and in sufficient quantities to maintain moist soil to a depth of at least four (4) inches. Watering should be done during the heat of the day to help prevent wilting.
   2. Watering shall continue to be the responsibility of the Contractor until such time as the Owner or project Landscape Architect has certified acceptance of lawn areas.

3.09 MAINTENANCE

A. General - Maintenance shall begin immediately after each portion of lawn and each plant is planted and shall continue in accordance with the following:
   1. Lawns: The Contractor shall be responsible for maintaining sod to include watering and mowing until a Certification of Acceptability is received. The contractor shall be responsible to replace any areas of sod that are burned or do not conform to these specifications. The Contractor shall be responsible for the first two (2) mowings.
   2. New Plantings: Protect and maintain new planting until the end of the lawn maintenance period, or, if installed after the lawn maintenance period, until installation of planting is certified acceptable by the Landscape Architect. Maintenance shall include watering, spraying and dusting for insect and fungal control, mulching, tightening and repairing guys, replacement of sick or dead plants, resetting plants to proper grades or upright position, and restoration of planting saucer, and all other care needed for proper growth and maintenance of the plants. Planting completed after the lawn preparation shall provide proper protection to lawn areas. Any damage resulting from planting operations shall be promptly repaired.
   3. Spraying and Dusting: During the maintenance and guarantee periods, the Contractor shall do all seasonal spraying and/or dusting of trees and shrubs as required.
   4. Protection: Planting areas and plants shall be protected against trespassing and damage of any kind. If any plants become damaged or injuries occur, they shall be treated or replaced as directed.
   5. Damage: Damage resulting from erosion, gullies, washouts, or other causes shall be repaired by filling with topsoil, tamping, re-fertilizing, and sodding by the Contractor at his own expense if such damage occurs prior to certification of acceptability of turf and plantings by the Landscape Architect.
   6. Responsibility: The Contractor's responsibility for maintenance shall cease at the time of certification of acceptability by the Landscape Architect. During the guarantee period, the Contractor shall be held responsible for making replacements, but no maintenance shall be required, other than spraying and dusting.

3.10 REPLACEMENT

A. At the end of the guarantee period (1 year from certification of acceptability), inspection will be made by the Landscape Architect upon written notice requesting such inspection submitted by the Contractor at least ten (10) days before the anticipated date. Failure by the contractor to notify the project landscape architect or owner before expiration of guarantee period does not relieve the responsibility to replace plant material that is determined to be of poor quality. Any plant required under this Contract that is dead or not in satisfactory condition, as determined by the Landscape Architect, shall be removed from the site. These, and any other plants missing due to the negligence of the Contractor, shall be replaced with plants of the same type and size as originally specified. Replanting shall be done as soon as conditions permit, but during the normal planting season. Plant items in accordance with these specifications.

3.11 CLEAN-UP

A. The Landscape Contractor shall remove all debris, construction equipment, excess fill, rocks, and other excess material caused by his work, from the site upon completion of his portion of the work.

END OF SECTION

# SECTION 33 05 13

# MANHOLES AND STRUCTURES

## PART 1 GENERAL

### 1.01 RELATED DOCUMENTS

A. State of Maine Department of Transportation, "Standard Specifications," Revision December 2002, and any revisions thereto, apply to this Section. If the Contractor discovers any ambiguity, error, omission, conflict, or discrepancy, Section 10 1. 3.6 Priority of Conflicting Contract Documents shall control.

1. Drawings and general provisions of the Contract, and Division 1 Specification Sections, apply to this Section.
2. Any supplements to any of the above specifications and or standards issued prior to issuance of this Project Manual, apply to this section.

### 1.02 SECTION INCLUDES

A. Modular precast concrete manhole sections with tongue-and-groove joints with masonry transition to lid frame, covers, anchorage, and accessories.

B. Modular precast catch basins with frames and grates.

C. Pump Station wet well.

D. Light Pole Bases.

E. Bollards.

F. Accessories: tongue and groove joint sealant, manhole steps, sewer brick, pipe to manhole joints, water quality inlets.

### 1.03 RELATED REQUIREMENTS

A. Section 03 30 00 – Cast in Place Concrete.

B. Section 31 23 16 - Excavation.

C. Section 31 23 16.13 - Trenching.

D. Section 33 31 11 - Site Sanitary Utility Sewerage Piping.

E. Section 33 41 11 - Site Storm Utility Drainage Piping

F. Section 33 36 00 – Utility Septic Tanks – Additional Pump Station Requirements

### 1.04 PRICE AND PAYMENT PROCEDURES

A. Measurement and payment will be as follows:

B. Pay Item 604.131 4' Diameter Catch Basin: Pay Unit - Each.

C. Pay Item 604.15 Manhole: Pay Unit – Each.

D. Pay Item 604.1541 72" Diameter Outlet Control Structure: Pay Unit – Each.

E. Pay Item 604.0971 6' Diameter Catch Basin: Pay Unit – Each.

F. Pay Item 604.0956 8' Diameter Catch Basin: Pay Unit – Each.

G. Pay Item 803.16 4’ Sewer Manhole: Pay Unit – Each.

H. Pay Item 803.174 6’ Diameter Pump Station: Pay Unit – Each.

I. Pay Item 626.32 Concrete Light Pole Bases: Pay Item - Each

J. Pay Item 841.48 Bollard: Pay Unit – Each.

K. Basis of Payment – The accepted quantity of Manholes and Catch Basins will be paid for at the contract unit price per Each. Provisions of Section 604 of the “State of Maine, Department of Transportation, Standard Specifications, Revisions of December, 2002” or Specification Section 33 05 13 of the contract documents, whichever is stricter, shall apply. Excavation, Backfill, Couplings, Sealant, Connections of Pipe, Crushed Stone, Sand, Sediment Removal, Frames, Grates, Covers, Steps, Sedimentation Hoods, Basin Underdrain, and all other appurtenances necessary to satisfactorily complete the work shall be considered incidental to the cost of supplying and installing the structures.

N. Basis of Payment – The accepted quantity of 6’ Diameter Pump Station will be paid for at the contract unit price per Each. Access Grate, Pumps, piping, guide rails, floats, pump controls, alarm, strobe, control post, Excavation, Backfill, Couplings, Sealant, Connections of Pipe, Crushed Stone, and all other appurtenances necessary to satisfactorily complete the work shall be considered incidental to the cost of supplying and installing the structures.

O. The accepted quantity of Concrete Light Pole Bases will be paid for at the contract unit price per Each complete in place. Payment shall include Anchor Bolts, concrete, reinforcement, excavation, backfilling, and any additional appurtenances installed per the detail within the plan set.

P. Basis of Payment - The accepted quantity of Bollard will be paid for at the contract unit price per Each complete in place. Payment shall include Bollard, concrete, excavation, backfilling, and any additional appurtenances installed per the detail within the plan set.

## 1.05 REFERENCE STANDARDS

A. Greater Augusta Utility District (GAUD) Water and Sewer Construction Specifications and Procedures, Latest Revision.

B. ASTM C478 - Standard Specification for Precast Reinforced Concrete Manhole Sections; 2012.

C. ASTM C478M - Standard Specification for Precast Reinforced Concrete Manhole Sections [Metric]; 2012.

D. ASTM C923 - Standard Specification for Resilient Connectors Between Reinforced Concrete Manhole Structures, Pipes, and Laterals; 2008.

E. ASTM C923M - Standard Specification for Resilient Connectors Between Reinforced Concrete Manhole Structures, Pipes, and Laterals [Metric]; 2008b.

## 1.06 SUBMITTALS

A. Shop Drawings: Indicate manhole/catch basin locations, elevations, piping sizes and elevations of penetrations.

B. Product Data: Provide manhole covers, component construction, catch basin frames and grates, pipe to manhole connectors, manhole steps, manhole joint sealant, features, configuration, and dimensions.

## 1.07 QUALITY ASSURANCE

A. Manufacturer: Company specializing in manufacturing products specified in this section with minimum three years documented experience.

PART 2 PRODUCTS

2.01 MATERIALS

A. Manhole, Pump Station Wet Well, and Catch Basin Sections: Reinforced precast concrete in accordance with ASTM C 478 (ASTM C 478M), with resilient connectors complying with ASTM C 923 (ASTM C 923M).
   1. Use concrete that will attain a 28-day compressive strength of not less than 4,000 psi.
   2. Reinforcing: H-20 loading.
   3. Horizontal Joints:
      a. Tongue and Groove formed of concrete to receive a flexible plastic gasket.
      b. Joints to be watertight.
      c. Cast to allow installation to be vertical and in true alignment.
   4. Provide two tapered lifting holes 180 degrees apart in each section for handling and placing.
   5. Base section: Cast holes for pipes to provide invert elevations as required by drawings.
   6. Pipe to structure joints:
      a. Flexible sleeves, rubber quality, ASTM C-443 and C-361 cast into base.
      b. If pre-manufactured adaptor cannot be installed, use rubber concrete adaptor designed to provide a watertight seal between pipe and structure.

B. Mortar and Grout:
   1. Masonry below grade and in contact with earth: Type S

C. Concrete Masonry Units: ANSI/ASTM C-139

D. Manhole Brick: ANSI/ASTM C 32, Grade MS.

E. Sewer Brick: ANSI/ASTM C 32, Grade SS

F. Masonry Mortar: ANSI/ASTM C 270, Type M.

G. Manhole Frames and Covers: Grey cast iron ANSI/ASTM A 48, Class 30 B.
   1. Furnish covers with cast in legend on roadway face as indicated.

H. Manhole Steps: Polypropylene steps meeting the requirements of ASTM C-478 and AASHTO M-199. Polypropylene conforms to ASTM-D4101. Grade 60, 1/2 inch diameter reinforcing bar meeting the requirements of ASTM A-615.

I. Catch Basin Frames and Gratings: Grey cast iron, ANSI/ASTM A 48, Class 30 B.

J. Other Precast Structures:
   1. Use concrete that will attain a 28-day compressive strength of not less than 4,000 psi.
   2. Manufactured in accordance with ASTM C-478.
   3. Reinforcing: H-20 loading.
   4. Horizontal Joints:
      a. Tongue and Groove formed of concrete to receive a flexible plastic gasket.
      b. Joints to be watertight.
      c. Cast to allow installation to be vertical and in true alignment.
   5. Pipe to Structure Joints:
      a. Flexible sleeves, rubber quality, ASTM C-433 and C-361 cast into base.
      b. If pre-manufactured adaptor cannot be installed, use rubber-concrete adaptor designed to provide a watertight seal between pipe and structure.

PART 3 EXECUTION

3.01 EXAMINATION

A. Verify items provided by other sections of Work are properly sized and located.

B. Verify that built-in items are in proper location, and ready for roughing into Work.

C. Verify excavation for manholes, catch basins and other structures is correct.

3.02 PREPARATION

A. Coordinate placement of inlet and outlet pipe or duct sleeves required by other sections.

3.03 PRECAST CONCRETE STRUCTURES

A. Precast Concrete Structures: Place precast concrete sections as shown on drawings. Where structures occur in pavement, set tops of frames and covers flush with finish surface. Elsewhere set tops 3" above finish surface, unless otherwise indicated.
   1. Use epoxy bonding compound where manhole steps are mortared into structure walls.
   2. Provide rubber joint gasket complying with ASTM C-443.
   3. Place base section level on layer of crushed stone as shown on plan set details.
   4. Fix inlet and outlet stubs into sleeves with stainless steel pipe clamp.
   5. Place barrel sections, cones or tops of the appropriate combination of heights to meet grades required by Drawings or existing conditions.
   6. Seal horizontal joints as recommended by manufacturer.
   7. Apply lubricant to inside tongue and rubber gaskets immediately prior to joining sections.
   8. Fill lifting holes with non-shrink mortar.
   9. Place frame and grate on top or otherwise prevent accidental entry by unauthorized persons until ready for adjustment to grade.
   10. Repair damaged coating of frames and covers with coal-tar-pitch varnish.
   11. The top 6 feet of the exterior surface of the sewer manhole and pump station shall be wrapped with a minimum of 4 layers of 6 mil high grade polyethylene.

3.04 MASONRY WORK

A. Laying Brick:
   1. Use clean bricks.
   2. Lay Brick by methods consistent with the trade acceptable to Owner.
   3. Lay in a full bed of mortar and joint without subsequent grouting, flushing, or filling, and thoroughly bond.
   4. Bring casting rim to grade with brick and coat outside with mortar; minimum thickness 3/8 inch with troweled waterproof surface.

3.05 FIELD QUALITY CONTROL

A. Perform field inspection and testing in accordance with the requirements of the servicing utility.

B. Provide copies of test report to owner and servicing utility, documenting results and compliance with requirements in advance of requesting a certificate of occupancy.

C. If tests indicate Work does not meet specified requirements, remove Work, replace and retest at no cost to Owner.

**END OF SECTION 33 05 13**

# SECTION 33 11 16

# SITE WATER UTILITY DISTRIBUTION PIPING

## PART 1 GENERAL

### 1.01 RELATED DOCUMENTS

A. State of Maine Department of Transportation, "Standard Specifications," Revision December 2002, and any revisions thereto, apply to this Section. If the Contractor discovers any ambiguity, error, omission, conflict, or discrepancy, Section 10 1. 3.6 Priority of Conflicting Contract Documents shall control.

1. Drawings and general provisions of the Contract, and Division 1 Specification Sections, apply to this Section.
2. Any supplements to any of the above specifications and or standards issued prior to issuance of this Project Manual, apply to this section.

### 1.02 SECTION INCLUDES

A. Pipe and fittings for site water lines.

B. Valves.

### 1.03 RELATED REQUIREMENTS

A. Section 31 23 16 - Excavation: Excavating of trenches.

B. Section 31 23 23 - Fill: Bedding and backfilling.

C. Section 31 23 16.13 - Trenching: Excavating, bedding, and backfilling.

### 1.04 PRICE AND PAYMENT PROCEDURES

A. Measurement and payment will be as follows:

B. Pay Item 822.33 6" Class 52 Ductile Iron Water Main: Pay Unit - Linear Foot.

C. Pay Item 822.3226 6" MJ Fittings: Pay Unit - Each.

D. Pay Item 822.34 8" Class 52 Ductile Iron Water Main: Pay Unit - Linear Foot.

E. Pay Item 822.3406 8" MJ Fittings: Pay Unit - Each.

F. Pay Item 823.3251 8" Gate Valve with box: Pay Unit - Each.

G. Pay Item 823.33 6" Gate Valve with box: Pay Unit - Each.

H. Pay Item 823.341 2" Riser with control valve and valve box - Each

I. Pay Item 824.30 Hydrant: Pay Unit - Each.

J. Pay Item 825.322 2" Curb Stop: Pay Unit - Each.

K. Pay Item 825.432 2" Water Service: Pay Unit - Linear Foot.

L. Basis of Payment – The accepted quantity of Class 52 Ductile Iron Water Main and Water Service will be paid for at the contract unit price per Linear Foot complete in place. Trench Excavation, Backfill, Crushed Stone, Sand, and all other appurtenances necessary to

satisfactorily complete the work shall be considered incidental and no further payment will be made. The Provisions of the Greater Augusta Utility District Water and Sewer Construction Specifications and Procedures, Latest Revision or Specification Section 33 11 16 of the contract documents, whichever is stricter, shall apply.

M. Basis of Payment – The accepted quantity of MJ Fittings, Valves, Riser, Curb Stop, and Hydrant will be paid for at the contract unit price per Each installed and in place per the details contained in the plan set including all appurtenances. The Provisions of the Greater Augusta Utility District Water and Sewer Construction Specifications and Procedures, Latest Revision or Specification Section 33 11 16 of the contract documents, whichever is stricter, shall apply.

1.05 REFERENCES

A. Greater Augusta Utility District (GAUD) Water and Sewer Construction Specifications and Procedures, Latest Revision

A. ASTM D3035 - Standard Specification for Polyethylene (PE) Plastic Pipe (DR-PR) Based on Controlled Outside Diameter; 2012.

B. AWWA C104/A21.4 - Cement-Mortar Lining for Ductile-Iron Pipe and Fittings for Water; American Water Works Association; 2008 (ANSI/AWWA C104/A21.4).

C. AWWA C111/A21.11 - Rubber-Gasket Joints for Ductile-Iron Pressure Pipe and Fittings; American Water Works Association; 2007 (ANSI/AWWA C111/A21.11).

D. AWWA C151/A21.51 - Ductile-Iron Pipe, Centrifugally Cast, for Water; American Water Works Association; 2009 (ANSI/AWWA C151/A21.51).

E. AWWA C509 - Resilient-Seated Gate Valves for Water Supply Service; American Water Works Association; 2009 (ANSI/AWWA C509).

F. AWWA C600 - Installation of Ductile-Iron Water Mains and Their Appurtenances; American Water Works Association; 2010 (ANSI/AWWA C600).

G. AWWA C901 - Polyethylene (PE) Pressure Pipe and Tubing, 1/2 In. (13 mm) Through 3 In. (76 mm), for Water Service; American Water Works Association; 2008.

H. UL 246 - Hydrants for Fire-Protection Service; Underwriters Laboratories Inc.; Current Edition, Including All Revisions.

1.06 SUBMITTALS

A. Product Data: Provide data on pipe materials, pipe fittings, valves and accessories.

B. Manufacturer's Certificate: Certify that products meet or exceed specified requirements.

C. Project Record Documents: Record actual locations of piping mains, valves, connections, and invert elevations. Identify and describe unexpected variations to subsoil conditions or discovery of uncharted utilities.

1.07 DELIVERY, STORAGE, AND HANDLING

A. Unload materials so as to avoid shock or damage. Handle and store all pipe in such a manner as to avoid deterioration or other injury thereto. Place no pipe within pipe of larger size. Store pipe and fittings on sills above storm drainage level and ready for delivery for laying after trenches are excavated.

PART 2 PRODUCTS

2.01 MATERIALS

2.02 WATER PIPE

A. Polyethylene Pipe: ASTM D3035, for 100 psig pressure rating:
   1. Fittings: AWWA C901, molded or fabricated.
   2. Joints: Compression.

B. Trace Wire: Magnetic detectable conductor, clear plastic covering, imprinted with "Water Service" in large letters. Minimum 8 Gauge wire or approved equivalent.

2.03 BEDDING AND COVER MATERIALS

A. Bedding: As specified in Section 31 23 16.13.

B. Cover: As specified in Section 31 23 16.13.

PART 3 EXECUTION

3.01 EXAMINATION

A. Verify that building service connection, water main size, location, and invert are as indicated.

3.02 PREPARATION

A. Cut pipe ends square, ream pipe and tube ends to full pipe diameter, remove burrs.

B. Remove scale and dirt on inside and outside before assembly.

C. Prepare pipe connections to equipment with flanges or unions.

3.03 TRENCHING

A. See Section 31 23 16.13 for additional requirements.

B. Backfill around sides and to top of pipe with cover fill, tamp in place and compact, then complete backfilling.

3.04 INSTALLATION - PIPE

A. Service line from existing well shall be furnished and installed to serve the project. The project contract work shall connect to existing water service and shall include all water lines and appurtenances as shown on the drawings, except as indicated otherwise.

B. Pipe Laying - General:
   1. The interior of all pipe shall be clean and joint surfaces wiped clean and dry before the pipe is lowered into trench. Lower each pipe, fitting and valve into the trench carefully and lay true to line and without objectionable breaks in grade. The depth of cover below finished grade shall be not less than 5'-6" and the standard cover shall be 6'-0"
   2. Provide uniform bearing for all pipes in trenches. Do not allow trench water or dirt to enter the pipe after laying. Insert a watertight plug in the open end of the piping while laying of pipe is not in progress.
   3. Do not lay pipe closer than 10 feet to a sewer. At cross-overs with sewers, no joint in the water line shall be closer than 6 feet from the cross-over point. A minimum vertical distance of 18 inches between the outside of the water main and the outside of the sewer shall be maintained when the water main is either above or below the sewer. Provide valves, plugs or caps, as required, where pipe ends are left for future connections.

C. All pipes shall be laid with standard provisions for expansion and contraction and in accordance with manufacturers recommendations. All pipe with slip type joints shall be restrained at elbows

and tees by thrust blocks or rods and clamps.

D. Install suitable fittings at all changes in direction, dead ends and branch connections, provided that double strap saddles, in lieu of tees, may be used for service taps

E. Route pipe in straight line.

F. Install pipe to allow for expansion and contraction without stressing pipe or joints.

G. Connect to building water outlets.

3.06 FIELD QUALITY CONTROL

A. Disinfect water mains in accordance with the requirements of the Maine Department of Health and Human Services Drinking Water Program.

B. Pressure test water piping to 100 psi.

C. If tests indicate Work does not meet specified requirements, remove Work, replace and retest at no cost to Owner.

3.07 ATTACHMENTS

A. Greater Augusta Utility District Water and Sewer Construction Specifications and Procedures, Latest Revision

**END OF SECTION 33 11 16**

# Greater Augusta Utility District

## Water and Sewer Construction Specifications and Procedures

**Latest Revision: May 13, 2008**

12 Williams Street
Augusta, Maine 04330
Phone: (207) 622-3701 www.augustawater.org Fax: (207) 622-4539

# Table of Contents

Section I: General Information _____ 3 - 8
ENGINEERING REQUIREMENTS
GENERAL ..... 3
WATER MAINS AND APPURTENANCES ..... 3
SANITARY SEWERS ..... 3
PRESSURE SEWERS AND FORCE MAINS ..... 4
STORM DRAINS ..... 4
DETENTION BASINS ..... 6
EASEMENTS AND LAND ACQUISTION ..... 6
AS-BUILT DRAWINGS ..... 7
SEPARATION OF WATER AND SEWERS ..... 7

Section II: Work Associated with Water Main Construction _____ 9 – 16
DESIGN CRITERIA ..... 9
DESCRIPTION OF WORK ..... 10
DUTIES OF THE DISTRICT ..... 10
DUTIES OF THE CONTRACTOR ..... 10
MATERIALS ..... 11
EXCAVATION ..... 12
PIPE LAYING ..... 13
BACKFILLING ..... 13
FILLING AND TESTING ..... 14
PRESSURE AND LEAKAGE TESTING ..... 14
DISINFECTION ..... 15
BACTERIOLOGICAL SAMPLING AND TESTING ..... 16

Section III: Water Main Materials & Installation Specifications _____ 17 - 44

Section IV: Water Main Installation Documents _____ 45 - 48

Section V: Work Associated with Sewer Construction _____ 49 - 81
DESCRIPTION OF WORK ..... 49
CONSTRUCTION PROCEDURES REQUIRED FOR SEWER ..... 50
INSURANCE REQUIREMENTS ..... 50
CLEARING, EXCAVATION, BACKFILL AND MISCELLANEOUS ..... 52
GRAVITY SEWERS (Sanitary & Storm) ..... 56
FORCE MAINS ..... 59
MANHOLES ..... 61
CATCH BASINS ..... 63
SERVICE CONNECTIONS ..... 64
RESURFACING ..... 64
PUMP STATION SPECIFICATIONS ..... 65
CONCRETE ..... 78
RIPRAP ..... 78
DUST CONTROL ..... 78
PIPE CLEANING ..... 78
LOAM, FERTILIZER AND SEED ..... 79
MAINTENANCE OF TRAFFIC ..... 79
STREET OPENINGS IN CITY OF AUGUSTA ..... 81
STREET OPENINGS IN STATE HIGHWAYS ..... 81

Section VI: Standard Installation Details _____ 82 - 113

# Section I: General Information

1. ENGINEERING REQUIREMENTS

   a. GENERAL

   The applicant, upon submission of a project to construct a water and/or sewerage system for the public use and/or dedication to the Greater Augusta Utility District shall provide one (1) set of plans and specifications to the District. The plans shall show plan and profile of the proposed water or sewer main, pump station plans and details (if applicable), right-of-way boundaries, other utilities, ledge profile or test borings and any other physical or topological features relevant to the project. Other requirements are as follows:

   1. All drawings shall be drawn with the title designating the name of the project, location, and the names of the person(s) preparing the drawings and the date prepared, including the latest revision date. Drawings, specifications and engineer's reports shall be stamped and signed by a duly qualified Registered Professional Engineer.

   2. An 8 l/2 x 11 photocopy of the U.S.G.S. quad sheet showing the location of the proposed activity and the outline of the area in which the activity is located.

   3. An 8 l/2 x 11 section of the City of Augusta property map on which the site of the proposed activity is outlined.

   4. Final design plans approved by the District for construction must be submitted to the District in AutoCAD compatible format a minimum of one week prior to the start of construction.

   5. The District may under special circumstances consider alternative designs to those specified here.

   b. WATER MAINS AND APPURTENANCES

   1. Plan sheet shall be 24" x 36".
   2. Scale: 1" = 40' or 20' horizontal and 1" = 4' vertical. Other scales may be considered upon request.
   3. Profile – Elevations for existing ground elevation and finish grade shall be at centerline of pipe. Plan and profile shall be on same drawing.
   4. Location of all existing or proposed underground utilities shall be shown in plan and in profile where utility crosses water main.
   5. Stationing of water main and appurtenances shall correspond with the roadway centerline stationing and shall be stated as station and offset from centerline left or right.
   6. Minimum of five and one-half feet of cover to finish grade elevation is required over the top of all water mains, hydrant branches, services etc.

   c. SANITARY SEWERS

   1. For design purposes it shall be assumed that each single family home shall contribute 250 GPD and each apartment unit shall contribute 175 GPD to the sanitary sewer. Design flows for all other types of development shall be determined on an individual basis.

   2. Plan sheet shall be 24" x 36".

3. Scale: 1"= 40' or 20' horizontal and 1" = 4' vertical. Other scales may be considered upon request.

4. Number and Station each manhole.

5. Profile – Elevations for existing ground elevation and finish grade shall be at centerline of pipe. Plan and profile shall be on same drawing.

6. Station 0+00 shall be at the low point in each system (for example Pump Station, Lowest MH or Outfall,) and stationing shall be along centerline of pipe.

7. Location of all existing or proposed underground utilities shall be shown in plan and in profile where utility crosses sewer.

8. Sanitary manholes shall be installed at all changes in grade and /or alignment of the pipe. Maximum distance between manholes shall be 350 feet.

9. Minimum of five feet of cover is required over the tops of all gravity sewers.

10. Paved aprons around all manhole frames and covers is required when sewer is installed in the shoulder of the road.

11. Service connections shall be at a manhole when possible.

12. Bench mark shall be shown on all drawings

13. All sanitary sewer extensions will need Maine DEP approval. GAUD will deliver plans to DEP after receiving GAUD approval.

d. <u>PRESSURE SEWERS AND FORCE MAINS</u>

1. Minimum of six feet of cover will be required over the tops of all force mains and pressure sewers.

2. A cleanout manhole will be required at the end of all Pressure Sewers. See Detail.

3. All pressure sewer lead connections at the pressure main shall be in a precast valve box. See Detail.

e. <u>STORM DRAINS</u>

1. Plan sheet shall be 24" x 36".

2. Scale: 1" = 40' or 20' horizontal and 1" = 4' vertical. Other scales may be considered upon request.

3. Number and Station each catch basin.

4. Profile – Elevations for existing ground elevation and finish grade shall be centerline of pipe. Plan and Profile shall be on same drawing.

5. Station 0+00 shall be at the low point in each system (Lowest CB, Outfall, etc.) and stationing shall be along centerline of pipe.

6. Location of all existing or proposed underground utilities shall be shown in plan and in profile where utility crosses storm drain.

7. For design purposes it shall be assumed that the maximum inlet flow for a standard frame and grate shall be 1.5 cfs. Multiple grates or oversized grates must be provided for inlet flows in excess of 1.5 cfs.

8. When Storm Drain pipes cross over or under water pipes and there is less than two feet of clearance between the pipes the Contractor shall install 2 inch thick x width of sewer trench x 8 feet long insulation between the two pipes.

9. Drain manholes or catch basins shall be installed at all changes in grade and/or alignment of the pipe. Maximum distance between catch basins or drain manholes shall be 350 feet.

10. Drain manholes shall be either supplied with channels connecting all inlet pipes with the exit pipe or provided with a two-foot sump.

11. Minimum of four feet of cover is required over the tops of all storm drains.

12. DRAINAGE CHANNELS/SWALES

Drainage channels may be utilized to convey storm water through a project area if designed for the peak flow generated by a 25-year storm (24-hour event as shown in Appendix B of TR-55). The size of the channel must be adequate to convey this storm event without exceeding 80 percent of the channel depth.

a. If channels are utilized for relocation of existing streams or constructed in existing streambeds, provide them with an interior stone lined channel to carry the normal dry weather flow of the existing stream (as defined by calculation or field measurement). Developer must obtain all State and Federal permits required to relocate all existing streambeds.

b. Design drainage channels with a stable bottom and slope that will resist erosion.

c. Use grass-lined channels if velocities during the design storm event is less than 6 feet per second (fps). If channels have a design velocity greater than 6 fps, provide them with stone riprap on the bottom and side slopes at a depth of 90 percent of the channel height.

d. Ensure that all stone riprap used in channels has a minimum D50 stone of six inches and is provided with a 6-12 inch filter layer of three-fourths inch stone.

e. In channel construction use stone that is angular in shape. Rounded stones shall not exceed 10 percent of the number of stones in the channel.

f. Design channel side slopes for a drop of no more than one vertical foot to three horizontal feet. In the event that steeper slopes are required due to project constraints, the slopes must be stabilized with riprap.

g. If using gabion stone walls in the design of stone lined channels, follow the manufacturer's design criteria.

h. Ensure that all stone riprap has a minimum D50 stone of six inches minimum and is supported by calculation as to D50 stone size.

13. Benchmark shall be shown on all drawings.

f. DETENTION BASINS

Detention basins must be of a size and shape as to fit into the project site in accordance with established performance criteria yet not causing disruption of area aesthetics.

1. Design basins with grassed bottoms and side slopes.

2. Design Side slopes with a vertical drop of one vertical foot per three horizontal feet. Steeper slopes will not be allowed without adequate justification, satisfactory to the District. Steeper slopes may require slope stabilization at the discretion of the District.

3. Provide all basins with a flow channel designed to accommodate the two-year storm peak runoff flow from the tributary area. The low-flow channel must be stone-lined in accordance with previous criteria.

4. Ensure that basin outlet structures are designed to maintain predevelopment peak outflow rated for the 2, 10 and 25 year storm events at the predevelopment level. The use of non-restricted pipes of varying size and at varying elevation is the recommended control strategy. Outlet weirs are acceptable if constructed of durable, maintenance free material. Restricted outlet or orifice type outlets may be allowed in some cases.

5. Provide all detention basins with a stone-lined overflow spillway design to pass the 100-year storm event, peak discharge with a minimum of six inches of freeboard in the channel. (The stone-lined channel must be designed as previously outlined.)

Other types of detention facilities, such as in-line storage or underground storage will be considered on a case by case basis. These facilities must meet the performance criteria for detention basins.

All detention basins to be maintained by the District shall have a minimum twelve-foot wide by eighteen inches deep gravel based roadway from the public roadway to the basin. A turn around at the basin may be required and a fence around the basin may be required.

g. EASEMENTS AND LAND ACQUISITION

1. The District will require clear title to any land on which water or sewer pump stations to be owned and operated by the District are installed and also for detention ponds. Size requirements will be evaluated on a case by case basis.

2. Drainage easements will be required for all inlets and outlets of pipe on private property.

3. Easements will be required for all water mains, sewer lines and appurtenances except where installed within the public way of the State or the Municipality. Such easements shall not be less than forty (40) feet in width. Combined water and sewer easements shall be not less than forty (40) feet in width with both pipes located per the requirements of separation. The District reserves the right to require additional easement width if construction and maintenance activities require it. All appurtenances to be maintained by the District (blow-offs, hydrants, structures, discharge pipes etc,), if not within the pipeline easement limits, shall be provided with an easement centered around the appurtenance, of a width determined by the District.

4. The required easements may either be shown on the Subdivision Plot Plan or a separate Mylar for easements only, which must be recorded in the Kennebec County Registry of Deeds. Master Mylars (2 master mylars shall be supplied for each drawing being recorded) should be supplied to GAUD and this office will take the drawing to the Registry for recording. Cost of registering the drawing(s) will be borne by the owner and/or developer.

h. AS BUILT DRAWING

At the completion of all water, sanitary and storm sewer construction projects as-built drawings at a scale of 1" = 40' or 20' horizontally and 1"= 4' vertically or other approved scale shall be supplied to the District on reproducible mylar. Drawing shall show all pertinent information shown on the construction drawing plus ties to all valves, fittings, services and service leads, location of any ledge encountered during the installation, and rim and invert elevations. As-Built drawings shall also be supplied to the District in AutoCAD compatible format.

For individual sewer services installed by a contractor for a property owner, the contractor / owner shall submit a sketch of the service on the form provided with the Sewer Connection Application permit. Sketch shall include a minimum of two (2) lateral measurement "swing ties", as close to 90 degrees opposed as practical, prior to backfilling pipeline, from permanent fixtures such as house corners, telephone poles, fire hydrants, catch basins, manholes etc. to all fittings, couplings, tees, etc. for purposes of future location. Permanent fixtures shall be identified such as house numbers or description, pole numbers etc. Failure to submit sketch is a violation against the permit and could result in the District denying the use of the sewer service and / or any new water service not being activated to the property.

i. SEPARATION OF WATER AND SEWER LINES

1. Parallel Installation:

A. Normal conditions – Water mains shall be laid at least 10 feet horizontally from any sanitary sewer, storm sewer, or sewer manhole whenever possible; the distance shall be measured edge-to-edge.

B. Unusual conditions – When local conditions (such as ledge, bridges, etc.) prevent a horizontal separation of 10 feet, a water main may be laid closer to a sanitary or storm sewer provided that:

I. The bottom of the water main is at least 18 inches above the top of the sewer and a minimum of 5 feet edge-to-edge horizontally is provided.

II. Where the vertical separation cannot be obtained, the sewer shall be constructed of materials and with joints that are equivalent to water main standards of construction and shall be pressure tested to assure water tightness prior to backfilling.

III. The Department of Human Services agrees that local conditions warrant less than 10 feet horizontal separation and approves the plans and specifications for the work.

2. Crossings:

A. Normal conditions – Water mains crossing house sewers, storm sewer, or sanitary sewers shall be laid to provide a vertical separation of at least 18 inches between the bottom of the water main and the top of the sewer, whenever possible.

B. Unusual conditions – When local conditions prevent a vertical separation as described in 1.i.B.I. the following construction shall be used:

   a. Sewers passing over or under water mains shall be constructed of the materials described in 1.i.B.II above.

   b. Water mains passing under sewers shall, in addition, be protected by providing:

      i. A vertical separation of at least 18 inches between the bottom of the sewer and the top of the water main.

      ii. Adequate structural support for the sewers to prevent excessive deflection of joints and settling on and breaking the water mains.

      iii. That one full length of water pipe (min. 18 feet) be centered at the point of crossing so that the joints will be equidistant and as far as possible from the sewer.

3. The following minimum separations from water mains, water services and hydrants shall be observed at all times unless directed by GAU personnel:

<u>Horizontal Separation from Water Mains</u>
a. Sanitary Sewers – refer to requirements outlined above
b. Storm Drains – 3’ face to face for mains; 1’ at contact points for CBs and DMHs
c. Gas mains – 6’ face to face
d. Underground electric and telephone – 6’ face to face
e. Utility poles – 6’ face to face

<u>Vertical Separation from Water Mains</u>
a. Sanitary Sewers – refer to requirements outlined above
b. Storm Drains – 6” over and under
c. All other crossings – 12” minimum

<u>Horizontal Separation from Water Services</u>
a. Sanitary Sewers - refer to requirements outlined above
b. Storm drains – 3’ face to face; 2’ at contact points for CBs and DMHs
c. Gas mains – 6’ face to face
d. Underground electric and telephone – 6’ face to face
e. Property lines – 10’
f. Utility poles – 6’ face to face
g. Curb stops for multiple services – 18”

<u>Horizontal Separation from Hydrants</u>
a. Gas mains – 4’ face to face from hydrant branches
b. Underground electric and telephone – 3’ behind hydrant; 6’ face to face from branch

# Section II: Work Associated with Water Main Construction

## 1 - DESIGN CRITERIA

### 1.1 Pipe Size and Type:

i. All distribution mains 4" and larger shall be ductile iron per material specifications except under special site conditions where the District may specify a different pipe material. All main distribution pipe lines shall be of a size to adequately serve the needs of the proposed development and any potential extension thereof, but in any event shall not be less than eight (8) inches in diameter except as may be permitted by the District.

ii. The minimum size of the pipe where public fire protection is to be provided or required shall be eight (8) inches in diameter. Dead-ends shall be minimized by looping all mains where practical. Where dead-ends are necessary they shall be terminated with a fire hydrant or blow-off assembly. The nominal pipe diameter of water mains without fire protection shall not be less than four (4) inches unless pre-approved by the District.

iii. The District may request that the size of the main be increased beyond the required size for the project if necessary to facilitate the future expansion of the system beyond the scope of the developer's project. In such case, the District will pay to the developer the difference in cost of the materials between the two sizes.

iv. The minimum service line size shall be 1" inside diameter. The District will calculate and/or verify all service line, meter and backflow prevention device sizes based on the proposed plumbing fixtures in each building.

Depth of Cover:

Water pipe shall be laid with a minimum cover of five and one-half (5 ½) feet as measured from established finished grade to the top of the pipe and a maximum cover of seven (7) feet to the top of the pipe. The contractor shall establish adequate elevation control to ensure that upon final grading the appropriate cover over water lines has been maintained. It shall be the Contractor's responsibility and expense to verify the cover at any location questioned by the District. Any potential changes in alignment or grade of roadways shall be considered in the original utility design. Any deviation from the required cover must be approved by the District.

Gate Valve Locations:

Gate valves shall be located at all pipe junctions and street intersections in such a manner as to control and isolate flows in all segments of the system. A minimum of two (2) valves are required at tees. A valve will be required beyond the last service if the main can be extended in the future. In all other areas, gate valves will be required every 1000 feet, except as otherwise may be determined by the District. The District shall make the final determination as to the number of valves required and their location.

Hydrants:

The design engineer shall consult with the fire department having jurisdiction during the design process as to the number of fire hydrants that may be required for public fire protection and their probable location if the project is within the public way. All hydrants within the public way will be considered as public fire hydrants and will be owned and maintained by the District after the initial installation and acceptance by the District. All proposed public fire hydrants within a project must receive written approval of their addition to existing public fire protection from the municipality having jurisdiction. Such written approval shall be addressed to and submitted to the District prior to project approval by the

District. All hydrant installations located within the public way shall be paid for by the owner / developer and must meet the specifications of the District.

Private hydrants (those installed on private property for the sole purpose of the owner / developer) shall be owned and maintained by the owner / developer. It is highly recommended that private hydrants meet the specifications of the District for simplicity of maintenance should the owner / developer contract with the District for maintenance. All private hydrants connected to mains owned and maintained by the District will be considered as an individual fire protection service and be billed accordingly.

Air Release Valves:

Air release valve assemblies shall be installed at all high points of the new main as determined by the District. The size and design of the valve and piping will be determined by the District.

## 2 - DESCRIPTION OF WORK:

The work to be done consists of trenching, laying ductile iron water mains, services, hydrants and other necessary appurtenances, backfilling the trench, and properly completing the work of water main construction at locations called for in accordance with plans approved by and at a time required by the Greater Augusta Utility District (hereinafter called the "District"), all according to the District's Specifications and Procedures.

## 3 - DUTIES OF THE DISTRICT:

The District will furnish and perform the following services at the Contractor's expense:

3.1 The District will locate for the contractor terminal points or connection points of the work and will also locate for the contractor any of its facilities lying in close proximity to the work which would in any way be a hazard to the contractor's operations. (Generally no charge for this work).

3.2 The District will review all required contractor submittals of plans, specifications, and materials specifications. (Generally no charge for this work, except for re-submittals)

3.3 The District will provide on site inspection and approval of materials and installation procedures, including leak repairs. Filling will **always** be done by the District. The contractor will be billed on a direct time and materials basis for such work.

3.4 The District will operate **all** valves which may be found desirable or necessary to be used for any purpose. The contractor will be billed on a direct time and materials basis for such work.

3.5 The District will generally conduct all pressure testing and disinfecting operations in accordance with AWWA standards. See sections 10.1 and 11.1. The contractor will be billed on a direct time and materials basis for such work.

3.6 The District will conduct all required bacteriological tests on water samples from the completed new mains and appurtenances. All tests will be paid for by the contractor on a direct time and materials basis.

## 4 - DUTIES OF THE CONTRACTOR:

The contractor will:

4.1 Submit for District approval a set of plans showing plan and profile of the proposed main,

right-of-way boundaries, other utilities, limits of paving (existing and/or proposed), ledge profile or test borings and any other physical or topographic feature relevant to the installation and maintenance of the water main. All plans must be submitted to the District per the requirements of Section I, 1, a and b unless otherwise specifically requested by the District. All final approved plans must be submitted in AutoCAD format prior to construction.

4.2 Install the water mains so as to supply the District, upon completion, with a satisfactory, watertight pipeline, laid to the proper grade and alignment as shown on the plans and in accordance with these Specifications and Procedures. Submit a copy of scaled "as built" drawings upon completion of the job per requirements of Section I, 1, h.

4.3 For water mains and appurtenances to be owned and maintained by the District, the contractor / developer shall turn said water mains and appurtenances over to the District free and clear of liens, damage claims or law suits. In addition, the contractor shall provide the District with easements for all water mains and appurtenances that will be within the public right-of-way of newly constructed streets and roadways. Said easements shall be granted to the District prior to the acceptance of said streets by the authority having jurisdiction and shall be in the form specified by the District.

4.4 Obtain all street opening permits from cities, towns, or MDOT, as may be applicable, covering any pipelines and appurtenances to be laid in the public way and shall be responsible for fees levied by any of these agencies which are applicable to the work covered by this specification.

4.5 Establish line and grade for the pipeline and right-of-way boundaries where the pipeline is to be laid in the right-of-way outside of a public way.

4.6 Purchase all materials in accordance with the District's Materials and Installation Specifications.

4.7 Furnish all labor, materials and equipment in order to construct water mains, services, hydrants and appurtenances as may be required to complete the work in accordance with said plans and specifications.

4.8 Record a minimum of two (2) lateral measurement “swing ties”, as close to 90 degrees opposed as practical, prior to backfilling pipeline from permanent fixtures such as house corners, telephone poles, fire hydrants, catch basins, manholes etc. to all valves, fittings, couplings, tees, corporations etc. for purposes of future location. Permanent fixtures shall be identified such as house numbers or description, pole numbers etc. These ties must be legibly recorded in sketch form or recorded within the as-built drawings and submitted to the District prior to final project acceptance.

4.9 Furnish all borrow material (sand, gravel, etc.) to bed pipe and completely backfill trench in accordance with Section 8. All water mains containing water must be provided with five and one-half (5 ½) feet of cover to the top of pipe prior to November 15.

4.10 Shall guarantee the workmanship of the pipeline and appurtenances for one (1) year from the date of acceptance by the District and any charges incurred during that year shall be billed to the Contractor.

5 - MATERIALS:

5.1 See "Materials and Installation Specifications” for materials generally associated with water main installation. Additional materials that may be required will be evaluated on

a case by case basis as the need arises.

5.2 Materials which do not meet the District's specifications will not be accepted.

## 6 - EXCAVATION:

### 6.1 PERMITS AND REPAVING

The contractor shall make application and pay for all necessary street or highway opening permits necessary for the pursuit of the work. No opening shall be made by the contractor until the appropriate permit has been obtained, and when such opening shall be made it shall be done in strict accordance with the terms of the permit. The contractor shall pre-mark the area of excavation and contact Dig-Safe a minimum of 3 business days prior to the scheduled excavation. The contractor shall also contact all utilities that **are not** members of Dig-Safe with the same minimum 3 business day notice.

### 6.2 CUTTING OF PAVEMENT

Pavement shall be cut by a method approved by the authority having jurisdiction.

### 6.3 RIGHT-OF-WAY

For water mains to be owned and maintained by the District, a minimum 40 foot right-of-way, centered over the water main(s), shall be included in the easement transferring ownership of said water main(s) to the District and obtained by the Developer/Contractor prior to installation of said water main.

### 6.4 TRENCHING

The trench shall be dug so that the pipe can be laid to the alignment and depth required and shall be excavated in advance only to the extent necessary for the proper pursuit of the work. The trench shall be kept dewatered, such that no drainage water shall enter the open end of the pipe and said open end of the pipe shall be temporarily plugged off at night and over the weekends, or whenever the work is suspended, or in cases where unstable material could cause a cave-in to enter into the exposed end of the pipe. The trench width shall be in accordance with the District's "Typical Trench Detail". The bottom of the trench shall be smooth and even and should be as nearly undisturbed as possible. The pipe shall be blocked approximately 18" behind the bell such that the pipe barrel is 4 to 6" off the trench bottom to permit bedding material to be worked in and compacted under the pipe invert. For pipe installation in ledge or boulder areas, the blocking shall be arranged to provide a minimum 6" clearance between the barrel invert and any ledge or boulders. All bedding material placed under and around the pipe shall be compacted by mechanical means, as approved by the District, so as to give it a solid base, precluding future settlement. When the bottom of the trench at subgrade is found to be unstable or to include cinders, refuse, vegetable, organic or any such undesirable material, such materials shall be removed and replaced with suitable material (bankrun gravel - 4" minus, screened gravel - 4" minus, crushed gravel or crushed stone) prior to the pipe being placed. Such replacement material shall be placed in maximum 12" lifts and compacted by approved mechanical means.

### 6.5 BLASTING

Blasting for excavation shall be done at the sole discretion of the contractor. Damage caused to existing water mains and services by blasting shall be repaired by the District and paid for by the contractor.

### 6.6 METHOD OF EXCAVATING

Excavating may be done by any acceptable and method of excavation, by machine or otherwise as may be desired by the contractor. Excavation adjacent to nearby water mains or service laterals shall be done by hand to protect these from damage.

### 6.7 INTERRUPTION OF SERVICE

When, as the result of the contractors scheduled work, the District must shut down part of its system affecting its customers or fire protection, the contractor shall provide the District with a minimum 48 hours notice prior to conducting such work. No valve, hydrant or other facility of the Greater Augusta Utility District shall be operated by the contractor or his agents. The District will, upon 24 hours advance notice, furnish men and equipment for such activity as necessary, at the contractor's cost.

## 7 - PIPE LAYING:

### 7.1 ALIGNMENT AND GRADE

Pipelines, fittings, valves and other accessories shall be laid to the alignment, grade and location as shown on the plans as approved by the District. All valve stems shall be plumb with the vertical plane and all fittings, likewise shall be oriented such that their center lines shall be at the proper grade and alignment. The main shall be provided with a minimum 5 1/2 feet of cover from finish grade as measured to the top of pipe. Any deviation from line and/or grade caused by the encountering of obstructions such as other utilities shall be done so only after the approval of the District. See "Specification - Ductile Iron Pipe" and "Specification - Ductile Iron Fittings, Including Bends, Reducers, Off-sets, Tees and Sleeves" for general installation instructions regarding these items.

### 7.2 HANDLING OF MATERIAL INTO TRENCH

Proper implements, tools and facilities, satisfactory to the District, shall be provided and used by the contractor for the safe and convenient handling of all materials. Pipe fittings and accessories shall be carefully lowered into the trench, piece by piece, by means of crane, slings and other suitable tools and equipment, in a manner such as to prevent damage to the materials or to its protective coatings and linings. No chain or slings shall be passed through any pipe, valve, or fittings. Under no circumstances shall piping materials be dropped or dumped into the trench.

## 8 - BACKFILLING:

### 8.1 BACKFILL - GENERAL

All backfill material to be placed in maximum 12" lifts and compacted to 95% proctor under and around pipe. Compaction densities from the top of pipe to the top of the trench shall also be 95% proctor unless otherwise specified by authorities having jurisdiction. Do not place frozen materials in backfill or place backfill (and pipes) upon frozen material. Remove all frozen material or allow to thaw and then compact prior to placing new backfill material.

### 8.2 BACKFILLING PIPE TRENCH

Start backfilling and proceed until complete as soon as practicable after the pipes have been laid, and structures such as thrust blocks have had sufficient time to cure.

The contractor shall be required to backfill the entire trench as part of the scope of work. Upon testing of pipe, if such deficiencies as leaking joints exist, the contractor shall excavate, expose and

repair leaking joints and then backfill the trench to the original specifications - all at his own expense.

a) Material Placement: Do not place stone or rock fragment larger than 2" in backfilling under and around the pipe (bedding) nor drop large masses of backfill material into the trench in such a manner as to endanger the pipeline. Wet material by sprinkling when necessary to ensure proper compaction by tamping or rolling, etc. However, no compaction shall be done when material is too wet as determined by the District. At such times, suspend the work until previously placed materials have dried out.

b) Tamping and Rolling: Before compaction, deposit and spread material in uniform parallel layers not exceeding 12" thickness prior to compaction. Before the next layer is placed, uniformly tamp by mechanical means to obtain a thoroughly compacted mass of the specified density. Additional care shall be taken to ensure all material under the pipe and close to the trench sidewalls is thoroughly compacted. When the trench width and depth to which backfill has been placed make it feasible, and it can be done effectively without damage to the pipe, backfill may be compacted by use of vibratory rollers or other approved methods.

8.3 BACKFILL MATERIAL

Backfill material used from bottom of trench to 1 foot above top of pipe shall be a well graded gravel or sand material with maximum stone or rock fragment size of 2". This material shall be similar to an MDOT Type A aggregate. Backfill material used from 1 foot above the top of pipe to the top of trench (bottom of base) shall be similar to an MDOT Type D aggregate with maximum stone or rock fragment size of 6" or common borrow with a maximum rock fragment size of 12” out of paved areas, unless otherwise specified by authorities having jurisdiction. In no case shall materials containing organic or vegetable matter, refuse, cinders or similar friable materials be used as backfill. Exclude pieces of bituminous pavement from backfill unless use is expressly permitted.

## 9 - FILLING AND TESTING:

9.1 **The District will operate all valves and facilities necessary to fill and flush the water main(s) and appurtenances. The contractor will be billed on a direct time and materials basis for such work.** The District requires a minimum 48 hours advance notice be given prior to such work.

## 10 - PRESSURE AND LEAKAGE TESTING

10.1 **The District will conduct all pressure and leakage testing in accordance with AWWA standards and bill the contractor on a direct time and materials basis for such work.** The District reserves the right to require the contractor to conduct all pressure and leakage testing by certified individuals in accordance with District’s standards and specifications and the following information is included for such purposes. The contractor shall provide all necessary tools, equipment, and materials to conduct all required testing.

10.2 The pressure and leakage test shall be conducted as follows:

10.2.1 Decrease pressure in the main to be tested approximately 20 psi. Observe test gauge to ensure the pressure doesn’t rise due to an existing valve or tapping valve leaking by. This is done to ensure that no undisinfected water from the installed main enters the existing main while performing the actual test.

10.2.2 A pressure test pump shall be connected to the new main at the testing point. The pressure will be slowly increased to 150 psig and allowed to stabilize (+/- 2.5 psig) for a minimum of 15 minutes.

10.2.3 A reservoir of potable water shall be connected to the test pump and the initial level of water recorded.

10.2.4 The pump pressure shall be maintained at 150 psig for a minimum of 1 hour with all makeup water withdrawn from the reservoir.

10.2.5 After one hour, the water level in the reservoir will be measured and the volume of water drawn down from the reservoir calculated and compared with the following allowable leakage:

$$\text{Allowable Leakage (ounces per hour)} = \frac{\text{Pipe Length (feet)} \times \text{Nominal Diameter (inches)} \text{ x } 128}{10{,}900}$$

10.2.6 If any test discloses leakage greater than that specified above, the contractor, at his own expense, shall locate the leak and make repairs as necessary until the leakage is within the specified allowance. Written certification of leakage and pressure testing shall be submitted to the District upon completion.

11 - DISINFECTION:

11.1 **The District will conduct all disinfecting procedures of water mains and appurtenances in accordance with AWWA standards and bill the contractor on a direct time and materials basis.** The District reserves the right to require the contractor to conduct all disinfecting procedures by certified individuals in accordance with District's standards and specifications and the following information is included for such purposes. The contractor shall provide all necessary tools, equipment, and materials to conduct all required testing.

Upon satisfactory completion of the pressure and leakage test, all new water mains, hydrants, services and branches larger than 2" diameter shall be flushed and disinfected prior to being placed in service in accordance with AWWA continuous feed method.

11.2 The contractor shall hire certified individuals to chlorinate the new main and appurtenances in accordance with the continuous feed method specified in Section 5.2 of AWWA Standard C651 (latest revision), using a 5% to 15% sodium hypochlorite solution or properly mixed concentration of calcium hypochlorite solution.

11.2.1 The chlorinated solution shall be injected into the new main within 10 feet on the connection to the existing main with potable water at a minimum concentration of 50 ppm (100 ppm maximum) of free chlorine. District personnel will operate all valves required to set disinfection flow rates, etc. The contractor will be charged on a direct time and materials basis for such work. The District requires a minimum 48 hours advance notice for this purpose. All discharge and flushing locations shall be monitored to ensure a minimum concentration of 25 ppm free chlorine throughout the new main including hydrants, branches longer than 10 feet, and services larger than 2" diameter.

11.2.2 After a 24 hour detention period, the new main, hydrants, branches and large services shall be flushed (valve operation by the District) until all heavy chlorinated

water has been removed. The contractor shall furnish all necessary materials to perform the flushing and/or dechlorination. The discharge of water to the environment with chlorine concentrations greater than the ambient distribution system chlorine residual is prohibited. The highly chlorinated water must be dechlorinated before being discharged to the environment. The method of dechlorination is at the discretion of the contractor as long as the procedure does not cause harm to the environment.

Written certification of disinfection must be submitted to the District for our records once completed.

12 - BACTERIOLOGICAL SAMPLING AND TESTING:

12.1 After the final flushing, and with a minimum 24 hours advance notice, the District will take one set of bacteriological tests on the completed new mains and appurtenances; and any additional tests required as the result of improper disinfection. All tests will be paid for by the contractor on a direct time and materials basis.

12.2 The new main(s) shall not be activated and placed into service until successful bacteriological testing and completion of the "Certificate of Title and Project Acceptance."

# Section III: Water Main Materials & Installation Specifications

Table of Contents

BRASS COMPRESSION UNIONS 18
BRASS FITTINGS WITH IRON PIPE THREAD 19
M.I.P. BRASS NIPPLES 20
CORPORATION STOPS 21
CURB STOPS 22
SERVICE BOXES 23
COPPER SERVICE LINE TUBING 24
POLYETHYLENE SERVICE LINE TUBING 25
DUCTILE IRON FITTINGS: BENDS, REDUCERS ETC. 26 – 27
THRUST RESTRAINT REQUIREMENTS 28
DUCTILE IRON RETAINER GLANDS 29
RETAINER GLANDS FOR PVC PIPE 30
DUCTILE IRON PIPE 31 – 32
POLYVINYL CHLORIDE (PVC) PRESSURE PIPE 33 – 34
RESILIENT SEAT WEDGE (GATE) VALVES 35
BUTTERFLY VALVES 36 – 37
HORIZONTAL SWING CHECK VALVES 38
FIRE HYDRANTS 39
DUCTILE IRON COUPLINGS 40
DUCTILE IRON TAPPING SLEEVES 41
M.J. TAPPING SLEEVE VALVES 42
REPAIR CLAMPS 43
VALVE BOXES, EXTENSIONS & COVERS 44

Review Date: January 2008
Approved By: MAM

# GREATER AUGUSTA UTILITY DISTRICT SPECIFICATION
# BRASS COMPRESSION UNIONS, COUPLINGS, M.I.P. & F.I.P. ADAPTERS

## 1.0 SPECIFICATIONS:

1.1 This specification covers all brass compression unions in sizes ranging from ¾" to 2" diameter, inclusive.

1.2 All compression unions with iron pipe thread end connections shall have such thread for the full depth of the threaded ends in accordance with AWWA C-800.

1.3 Outlet connections shall be copper pipe compression unless otherwise specifically specified. The District prefers compression connections in which the brass compression nut "shoulders" tight against the body when fully made up. Compression connections utilizing set screws or split clamps **are not** permitted.

1.4 All compression unions shall have heavy brass walls constructed of 85-5-5-5 ASTM B62 brass for strength and durability.

1.5 Rated working pressure shall be 150 psig minimum.

1.6 Acceptable brass compression union manufacturers are Mueller Company (Series 110 compression connection), Ford Meter Box Company (Quick Joint), A.Y. McDonald Mfg. Co. (McQuik, “Q” series) and Cambridge Brass (CB Compression series). All other submittals must be pre-approved by the District in writing.

## 2.0 GENERAL INSTALLATION INSTRUCTIONS:

2.1 Brass compression unions shall be firmly supported on wooden blocking unless the trench bottom is firm.

2.2 All compression nuts shall be made up in accordance with the manufacturers specifications unless otherwise specified by the District.

2.3 Fittings shall be installed in accordance with standard practice. Soft set pipe thread compound shall be used on all threaded connections to ensure a drip tight seal. Pipe thread compound shall be compatible with potable water.

2.4 Prior to backfilling, the brass compression unions shall be placed under a static head pressure test unless otherwise waived by the District.

2.5 A minimum of 2 lateral measurement “swing ties” shall be taken to all buried compression unions prior to backfilling in accordance with Section II, 4, 4.8.

Review Date: January 2008
Approved By: MAM

GREATER AUGUSTA UTILITY DISTRICT SPECIFICATION
BRASS FITTINGS WITH IRON PIPE THREAD

1.0 SPECIFICATIONS:

1.1 All domestic brass service fittings with iron pipe threads shall be constructed of 81-3-7-9 ASTM B584 semi-red brass machined from solid castings.

1.2 All import brass service fittings with iron pipe threads shall be constructed of 85-5-5-5 ASTM B62 red brass.

1.3 Threaded bar stock fittings with iron pipe threads made from free cutting brass rod, bar, or shapes shall be constructed in accordance with ASTM B16 specifications.

1.4 All fittings shall be rated for 150 psig meeting or exceeding ANSI B16.15. Each fitting shall be air or water pressure tested to the pressure class rating prior to shipment to ensure consistent high quality.

1.5 Acceptable products are Lee Brass cast threaded fittings as manufactured by the Lee Brass Company of Anniston, Alabama or a pre-approved equivalent.

2.0 GENERAL INSTALLATION INSTRUCTIONS:

2.1 Fittings shall be installed in accordance with standard practice. Soft set pipe thread compound shall be used on all threaded connections to ensure a drip tight seal. Pipe thread compound shall be compatible with potable water.

Review Date: January 2008
Approved By: MAM

GREATER AUGUSTA UTILITY DISTRICT SPECIFICATION
M.I.P. BRASS NIPPLES

1.0 SPECIFICATIONS:

1.1 All brass nipples shall be manufactured in accordance with ASTM B584 or ASTM B62 specifications as applicable. The minimum working pressure rating shall be 150 psig in accordance with ANSI B16.15.

2.0 GENERAL INSTALLATION INSTRUCTIONS:

2.2 Brass nipples shall be installed in accordance with standard industry practice. Soft set pipe thread compound shall be used on all threaded connections to ensure a drip-tight seal. Pipe thread compound shall be compatible with potable water.

2.3 Never place a pipe wrench on the threaded ends when tightening a brass nipple.

Review Date: January 2008
Approved By: MAM

GREATER AUGUSTA UTILITY DISTRICT SPECIFICATION
CORPORATION STOPS

1.0 SPECIFICATIONS:

1.1 All corporation valves shall be of the 1/4 turn ball valve design and meet or exceed the latest revision of ANSI/AWWA Standard C-800.

1.2 Corporation stops shall have "CC or AWWA taper" threads on the inlet unless otherwise specifically specified.

1.3 Outlet connections shall be copper pipe compression unless otherwise specifically specified. The District prefers compression connections in which the brass compression nut "shoulders" tight against the corporation valve body when fully made up. Compression connections utilizing set screws or split clamps **are not** permitted.

1.4 The corporation body and components shall be of heavy brass constructed of 85-5-5-5 ASTM B62 brass for strength and durability. The ball mechanism shall be constructed of Teflon coated brass and provide a full port opening.

1.5 The valve stem shall be provided with double Buna-N rubber O-rings to insure a permanent watertight seal. The ball seats shall also be molded Buna-N rubber.

1.6 Rated working pressure shall be 250 psig minimum.

1.7 Acceptable corporations are the Mueller 300 B-25008, the Ford FB 1000-Q, McDonald 4701BQ and the Cambridge Brass 301 series in CB Compression. All other submittals must be pre-approved by the District in writing.

2.0 GENERAL INSTALLATION INSTRUCTIONS:

2.1 The District only permits 1" diameter direct tapped corporations into cast iron and ductile iron mains. The use of larger tapping nipples and ball valves will be evaluated on a case by case basis.

2.2 Corporation taps shall be located within 0 and 10 degrees up from horizontal on the main.

2.3 Corporations shall be "screwed" into ductile iron pipe water mains such that no more than 4 threads are exposed.

2.4 A minimum of 2 lateral measurement “swing ties” shall be taken to all buried corporation stops prior to backfilling in accordance with Section II, 4, 4.8.

Review Date: January 2008
Approved By: MAM

GREATER AUGUSTA UTILITY DISTRICT SPECIFICATION
CURB STOPS

1.0 SPECIFICATIONS:

1.1 All curb stop valves shall be of the 1/4 turn ball valve design and meet or exceed the latest revision of ANSI/AWWA Standard C-800.

1.2 Curb stop bodies for iron pipe ball valve sizes 1 1/4" to 2" shall have full depth F.I.P. thread ends on both ends. This is an optional item occasionally used by the District.

1.3 Outlet connections for sizes ¾" to 2" shall be copper pipe compression unless otherwise specifically specified. The District prefers compression connections in which the brass compression nut "shoulders" tight against the ball valve body when fully made up. Compression connections utilizing set screws or split clamps **are not** permitted.

1.4 The curb stop valve body and components shall be of heavy brass constructed of 85-5-5-5 ASTM B62 brass for strength and durability. The ball mechanism shall be constructed of Teflon coated brass and provide a full port opening.

1.5 The valve stem shall be provided with double Buna-N rubber O-rings to insure a permanent watertight seal. The ball seats shall also be molded Buna-N rubber.

1.6 The curb stop valve shall not have a drain (waste hole).

1.7 Rated working pressure shall be 250 psig minimum.

1.8 Acceptable curb stop valves are the Mueller 300 B-25209, the Ford B44-Q, McDonald 6100Q and the Cambridge Brass 202 series in CB Compression. All other submittals must be pre-approved by the District in writing.

1.9 All curb stop valves shall be **"open left"**

2.0 GENERAL INSTALLATION INSTRUCTIONS:

2.1 Curb stop ball valves shall be firmly supported on wooden blocking, set plumb and positioned such that the operator key is vertical prior to backfilling.

2.2 All curb stop ball valves shall be provided with S.S. rods and service boxes (see Service Box Specification) unless otherwise specified by the District.

2.3 Prior to backfilling, the curb stop ball valve shall be placed under a static head pressure test unless otherwise waived by the District.

2.4 A minimum of 2 lateral measurement "swing ties" shall be taken to all curb stops prior to backfilling in accordance with Section II, 4, 4.8.

Review Date: January 2008
Approved By: MAM

GREATER AUGUSTA UTILITY DISTRICT SPECIFICATION
SERVICE BOXES

1.0 SPECIFICATIONS:

1.1 Reference "TYPICAL SERVICE BOX DETAIL" sheet in the Typical Standard Details section of this specification package.

1.2 Service Box Specifications

- Shall be 1.0" I.D. black A-36 steel pipe with top having N.P.I. threads for 1.0" screw on cover.
- Shall be Arch Pattern Style with 5 ½' -6 ½' slide type adjustable riser.
- All boxes shall be heavily coated with asphalt-base coal tar type corrosion resistor.

1.3 Service Box Cover Specifications

- Cast iron construction with N.P.I. female threads to accept service box (1.2 above).
- Shall be tapped with a 1" rope thread with a solid brass plug with pentagon operating head.
- Shall have the word "WATER" integrally cast into the cover.

1.4 Service Box Foot-Piece Specifications

- The standard foot-piece shall be heavy duty (Ford style or equal) cast iron design.
- The large heavy foot-piece shall have an arch that will fit over 2" ball-valve curb stops and used on all curb stops sizes 1 ¼" – 2".

1.5 Service Rod Specifications

- Shall be 36" long, 1/2" diameter # 304 stainless steel and provided with yoke as integral part of the rod.
- Shall be provided with a brass cotter pin to secure the S.S. rod to the curb stop ball valve.
- The rod "wrench flat" shall have a minimum thickness of 1/4" tapered to 1/16" and width of 1/2".

1.6 Service Box Extension Specifications

- Shall be black A-36 steel pipe sized to fit over service box as outlined in Section 1.2 above and be provided with N.P.I. threads to accept standard cover as outlined in Section 1.3 above.
- Shall be provided with 2 set screws to attach to service box.
- Shall be provided in lengths from 3" to 24".
- All extensions shall be heavily coated with asphalt-base coal tar type corrosion resistor.

2.0 GENERAL INSTALLATION INSTRUCTIONS:

2.1 Service box bases shall be placed on the same blocking that supports the curb stop ball valve and set plumb with the vertical plane in all directions.

2.2 Service box tops shall be set 3" below finish grade, magnetized and painted florescent blue (standard water works color) prior to burial.

2.3 A minimum of 2 lateral measurement "swing ties" shall be taken to all service boxes, in accordance with Section II, 4, 4.8.

Review Date: January 2008
Approved By: MAM

GREATER AUGUSTA UTILITY DISTRICT SPECIFICATION
COPPER SERVICE LINE TUBING

1.0 SPECIFICATIONS:

1.1 Type K copper tubing for service lines shall meet or exceed the latest revision of AWWA Standard C-800.

1.2 Underground service line malleable tubing shall be seamless Type K copper exclusively and conform to ASTM Standard B-88.

1.3 3/4", 1" and 1 1/4" diameter Type K copper tubing shall be available in 100' long coils. 1 ½ " diameter Type K copper tubing shall be available in 60' long coils and 2" diameter Type K copper shall be available in 40' long coils.

2.0 GENERAL INSTALLATION INSTRUCTIONS:

2.1 Extreme care shall be taken during installation to ensure that copper tubing is not crimped, gouged or otherwise detrimentally damaged.

2.2 The Contractor shall minimize the use of couplings by using the longest continuous coils available as specified above in 1.3 for the specific job unless otherwise approved by the District.

2.3 Soldering of underground copper tubing joints is **not** permitted. All unions of underground copper tubing shall be done so using brass compression type couplings (see specification for "Brass Compression Unions, Couplings, M.I.P. & F.I.P. Adapters"). Flared couplings are not permitted.

2.4 Copper tubing ends shall be de-burred and re-rounded prior to installing fittings to ensure strong, water-tight connections.

2.5 Bedding material for copper service line tubing shall be sand, free from fines, clays, loam or rocks in excess of 2". Gravel with maximum 2" nominal diameter stones shall also be permitted. Bedding material shall extend to 12" above service line tubing.

2.6 The District will size all service lines during the plan review process.

Review Date: January 2008
Approved By: MAM

# GREATER AUGUSTA UTILITY DISTRICT SPECIFICATION
# POLYETHYLENE SERVICE LINE TUBING

## 1.0 SPECIFICATIONS:

1.1 All polyethylene plastic service line tubing (Copper Tube Size - CTS) shall meet or exceed the latest revision of AWWA Standard C-900. The use of polyethylene pipe (Iron Pipe Size - IPS) will be evaluated on a case by case basis and usage must receive prior written approval from the District.

1.2 Polyethylene plastic tubing shall be pressure rated for a minimum of 200 psig at 73.4 Degrees F.

1.3 High quality stainless steel insert stiffeners shall be used at all compression connections for the installation of valves, couplings and similar type fittings. All compression type fittings shall be brass as specified in the appropriate section. The use of plastic compression fittings and plastic or brass friction insert fittings with S.S. clamps are prohibited.

1.4 An exception to 1.3 above would be the use of fusion welded joints, valves, and fittings. The use of fusion welded joints must be pre-approved in writing by the District.

## 2.0 GENERAL INSTALLATION INSTRUCTIONS:

2.1 The contractor shall take extreme caution in the field to minimize the exposure of polyethylene plastic tubing to the harmful effects of degrading ultra violet light prior to burial.

2.2 All polyethylene plastic service lines shall be buried with a metallic "tracer" cable acceptable to the District, preferably copper, to aid in their future location unless otherwise not required by the District. The tracer cable shall be located approximately 3 ft. above the service line and shall rise up to finish grade along side the service box.

2.3 The District shall size all service lines during the plan review process.

2.4 All polyethylene lines shall be installed in a loose "snake" pattern to allow for movement due to thermal expansion and settlement.

2.5 Bedding material for polyethylene service line tubing shall be sand, free from fines, clays, loam or rocks in excess of 2”. Bedding material shall extend to 12” above service line tubing.

Review Date: January 2008
Approved By: MAM

GREATER AUGUSTA UTILITY DISTRICT SPECIFICATION
DUCTILE IRON FITTINGS: BENDS, REDUCERS, PLUGS, CAPS, OFFSETS, TEES

## 1.0 SPECIFICATIONS:

1.1 Mechanical joint compact fittings shall be ductile iron class 350 (350 psig rated working pressure) in accordance with ANSI/AWWA C-153/A-21.53-00 (or latest revision) for fittings 3" through 24" and ANSI/AWWA C-104/A-21.40-95 (latest revision) double cement lining.

1.2 Flanged joint fittings shall be ductile iron class 250 (250 psig rated working pressure) in accordance with ANSI/AWWA C110/A21.10-98 (latest revision) for fittings 3 thru 24" and ANSI/AWWA C-104/A-21.40-95 (latest revision) double cement lining.

1.3 The District **does not** permit the use of push-on type fittings with or without retaining type gaskets.

1.4 Interior seal coated with a minimum of 2 mils dry film thickness in accordance with AWWA C104.

1.5 Exterior petroleum asphaltic coated with a minimum of 2 mils dry film thickness. The finished coating shall be continuous, smooth, neither brittle when cold or sticky when exposed to the sun, and strongly adherent to the fitting.

1.6 Mechanical joint and flanged joint nuts and bolts shall be high strength, low alloy steel per AWWA C-111, 11-7.5 and ANSI 21.11 unless otherwise specified.

1.7 All fittings shall be of standard grade 70-50-05 ductile iron construction with the following minimum characteristics: 70,000 psi minimum tensile strength; 50,000 psi minimum yield strength; 5 % minimum elongation. Test results shall be made available upon request. Cast iron fittings are **not** permitted.

1.8 All fittings shall be supplied with appropriate number of standard MJ glands, gaskets and T-bolts as "standard accessories" unless otherwise specifically declined by the District at the time of order. Such "standard accessories" shall be shipped as a packaged unit and not as individual or loose items.

1.9 Acceptable ductile iron fitting manufacturers include: Griffin, Star, Tyler, Union and U.S. Pipe. Due to past experience, the District prohibits the use of all fittings manufactured by Sigma, Nappco and their affiliates.

## 2.0 GENERAL INSTALLATION INSTRUCTIONS:

2.1 All fittings shall be inspected prior to installation to ensure the gasket seats are free of excess coating. Excess coating, if present, shall be manually removed so as to ensure proper seal of gasket, however, all bare metallic surfaces created as the result of removing the excess coating shall be re-coated with similar material to prohibit corrosion.

2.2 The District accepts only the use of "compact" fittings as specified in 1.1 above for all fittings 3" to 24". The contractor must seek prior written from the District approval for the use of "standard" size fittings in the 3" to 24" range.

SPECIFICATION – DUCTILE IRON FITTINGS: Cont.

2.3 Fittings shall be placed, supported and installed in strict accordance with the manufacturers instructions and as directed by the District. All bolted joints shall be torqued as follows:

- Mechanical Joint 4"-24" Diameter Pipe
  - 3/4" bolts; Torque = 75 to 90 ft.-lbs.
- Flanged Joint 4"-24" Diameter Pipe.
  - 5/8" bolts; Torque = 40 to 60 ft.-lbs.
  - 3/4" bolts; Torque = 60 to 90 ft.-lbs.
  - 7/8" bolts; Torque = 70 to 100 ft.-lbs.
  - 1" bolts; Torque = 70 to 100 ft.-lbs.
  - 1 1/4" bolts; Torque = 90 to 100 ft.-lbs.

2.4 After bolts are inserted and made finger tight, tighten diametrically opposite nuts progressively and uniformly around joint with properly calibrated torque wrench to the values as specified above. **A properly sized and calibrated torque wrench is an explicit requirement of the District.**

2.5 Coat all bolt threads for flanged connections with never-seize or an approved equal product.

2.6 All ductile iron fittings shall be restrained by means of wedge action retaining glands (see "Ductile Iron Retainer Glands" and “Thrust Restraint Requirements”) with a minimum 16-foot continuous length of ductile-iron pipe entering and exiting the fitting whenever possible unless entering or exiting another fitting or valve. The use of threaded rods will be evaluated on a case by case basis and must receive prior written approval from the District. The size and location of the rods will be determined by the District or its’ inspector prior to installation.

2.7 A minimum of 2 lateral measurement “swing ties” shall be taken to all ductile iron fittings prior to backfilling in accordance with Section II, 4, 4.8.

Review Date: January 2008
Approved By: MAM

GREATER AUGUSTA UTILITY DISTRICT SPECIFICATION
THRUST RESTRAINT REQUIREMENTS

Thrust restraint shall be provided on all bends, tees, valves, and dead ends for pipe diameter sizes 3" and greater. Thrust restraint shall be accomplished utilizing a combination of wedge-action retainer glands and concrete bearing thrust blocks wherever thrust forces are an issue. Each component (wedge action retainer glands and concrete thrust blocks) shall be designed to independently restrain the entire thrust force of the specific item to be restrained. Each component shall be designed to withstand a test pressure of **150 pounds per square inch (psi).** Wedge action retainer glands shall be as specified in the "DUCTILE IRON RETAINER GLANDS" section of the materials specifications. Wedge action retainer glands depend on soil friction on the skin of the pipe to restrain, therefore, it is imperative that a full length of pipe (greater than 16' ) enter and exit all fittings and appropriate backfill material is thoroughly compacted around pipe. Some larger diameter fittings and valves may require a longer restrained length than can be obtained from a single full length of pipe, therefore, subsequent push-on joints will need to be restrained as directed by the District or its Inspector. Concrete bearing thrust blocks shall be designed as to the amount of bearing area required to restrain the resultant thrust force of the fitting. Soil bearing strength for design purposes shall be 1500 lbs/sq.ft. unless otherwise specified by a soils engineer. Pounds of thrust on fittings can be found in the table below. Concrete bearing thrust blocks must be cast against undisturbed soil. If casting against undisturbed soil is not possible, than backfill material behind thrust block shall be crushed stone or a well graded gravel compacted to a minimum 95% modified proctor density. Cast-in-place concrete thrust blocks shall be formed up to obtain the appropriate bearing area prior to placing concrete. **Under no circumstances shall concrete be cast around (encase) mechanical joint glands or bolts.** The use of an approved pre-cast concrete thrust block of appropriate design shall be an acceptable alternative to cast-in-place. The use of gravity concrete thrust blocks will be evaluated on a case by case basis and must be pre-approved by the District after reviewing design of such.

**Resultant Thrust At Fittings**
**At 150 psi Water Pressure**

| | Total Pounds | | | | |
|---|---|---|---|---|---|
| **Nom. Pipe Dia. (in.)** | **Dead End** | **90 Deg. Bend** | **45 Deg. Bend** | **22 ½ Deg. Bend** | **11 ¼ Deg. Bend** |
| 3" | 1,848 | 2,613 | 1,414 | 721 | 361 |
| 4" | 2,715 | 3,838 | 2,077 | 1,059 | 532 |
| 6" | 5,608 | 7,932 | 4,293 | 2,188 | 1,100 |
| 8" | 9,649 | 13,645 | 7,384 | 3,765 | 1,891 |
| 10" | 14,515 | 20,527 | 11,109 | 5,664 | 2,845 |
| 12" | 20,527 | 29,029 | 15,711 | 8,010 | 4,024 |
| 16" | 35,668 | 50,442 | 27,298 | 9,278 | 6,991 |
| 20" | 54,966 | 77,733 | 42,069 | 21,447 | 10,775 |
| 24" | 78,418 | 110,901 | 60,019 | 30,597 | 15,373 |

Notes:

Thrust forces on a valve and along the branch line of a tee is the same as thrust on a "Dead End".

Review Date: January 2008
Approved By: MAM

GREATER AUGUSTA UTILITY DISTRICT SPECIFICATION
DUCTILE IRON RETAINER GLANDS

1.0 SPECIFICATIONS:

1.1 Mechanical joint valves and fittings shall be restrained with wedge action type retainer glands only. Acceptable wedge action retainer glands are the “Mega-Lug” retainer gland as manufactured by EBBA Iron Sales, Inc. of Eastland, Texas, the Uni-Flange “Series 1400” as manufactured by Uni-Flange, a subsidiary of The Ford Meter Box Co., Inc. of Wabash, Indiana and the RomaGrip pipe restrainer as manufactured by Romac Industries of Bothell, WA.

1.2 Flanged joint valves and fittings shall be restrained with flange adapters in lieu of threaded or welded flanges on plain end ductile iron pipe when so specified.

- Flange adapters shall be cast from 60-42-10 ductile iron per ASTM 536-77 and shall have bolt holes to meet ANSI B16.1. Flange adapters shall be 125 lb. faced. These flange adapters shall contain set screws made from ductile iron. The screws shall have a Rockwell hardness of C40-45 converted from Brinnell. Safety factor shall be minimum of 2:1.

1.3 All restrained joint devices shall include a gasket, t-bolts and set screws/foot pads as "standard accessories." Such “standard accessories” shall be shipped as a packaged unit and not as individual or loose items.

2.0 GENERAL INSTALLATION INSTRUCTIONS:

2.1 All restrained joint devices shall be installed in strict adherence to the manufacturer’s instructions. Torque wrenches must be used in the tightening of t-bolts, set screws/ foot pads and flange bolts in all cases.

2.2 The contractor shall thoroughly inspect all restrained joint devices for stress cracks and similar physical defects or mechanical damage prior to their installation.

2.3 All set screw / foot pads around the retainer gland shall be tightened until the foot pad rests against the pipe prior to fully tightening the foot pad onto the pipe to the correct torque.

Review Date: January 2008
Approved By: MAM

GREATER AUGUSTA UTILITY DISTRICT SPECIFICATION
RETAINER GLANDS FOR PVC PIPE

1.0 SPECIFICATIONS:

1.1 Mechanical joint ductile iron valves and fittings on PVC C905 pipe shall be restrained with wedge action type retainer glands manufactured specifically for PVC pipe only. Acceptable wedge action retainer glands are the “Mega-Lug Series 2000PV” retainer gland as manufactured by EBBA Iron Sales, Inc. of Eastland, Texas, the Uni-Flange “Series 1500 C” as manufactured by Uni-Flange, a subsidiary of The Ford Meter Box Co., Inc. of Wabash, Indiana or the “PVC RomaGrip” retainer gland as manufactured by Romac Industries of Bothell, WA.

1.2 All restrained joint devices shall include a gasket, t-bolts and set screws/foot pads as "standard accessories." Such “standard accessories” shall be shipped as a packaged unit and not as individual or loose items.

2.0 GENERAL INSTALLATION INSTRUCTIONS:

2.4 All restrained joint devices shall be installed in strict adherence to the manufacturers instructions. Torque wrenches must be used in the tightening of t-bolts, set screws/ foot pads and flange bolts in all cases.

2.5 The contractor shall thoroughly inspect all restrained joint devices for stress cracks and similar physical defects or mechanical damage prior to their installation.

Review Date: January 2008
Approved By: MAM

# GREATER AUGUSTA UTILITY DISTRICT SPECIFICATION
# DUCTILE IRON PIPE

## 1.0 SPECIFICATION:

1.1 Ductile iron pipe shall meet the requirements of AWWA Standard C-151/A21.51-96 (or latest revision) and be double cement lined and sealed coated to meet AWWA Standard C-104 (latest revision). Joints shall meet the requirements of AWWA C-111 (latest revision).

1.2 Interior seal coat shall be at least 2 mils thick and meet the specification 1.1 as stated above.

1.3 Exterior of pipe shall be petroleum asphaltic coated with a minimum of 2 mils dry film thickness. The finished coating shall be continuous, smooth, neither brittle when cold or sticky when exposed to the sun, and strongly adherent to the pipe.

1.4 Class 52 wall thickness, 4" diameter through 10" diameter inclusive.

1.5 Class 51 wall thickness, 12" & 16" diameter.

1.6 Class 50 wall thickness, 20" diameter and larger.

1.7 Nominal laying length shall average no less than 18 ft. per pipe. The District prefers the nominal laying length of 20 ft. per pipe.

1.8 Approximately 20 percent of the pipe shall be specified as "gauge full length" and **clearly** marked indicating such.

1.9 Mechanical joint pipe shall be furnished with standard gland, gasket and Cor-Ten bolts and nuts as "standard accessories."

1.10 Push-on joint pipe shall be furnished with gasket and gasket lubricants as "standard accessories."

1.11 Special order pipe shall be specified as to the standard accessories required.

## 2.0 GENERAL INSTALLATION INSTRUCTIONS:

2.1 Push-on joint pipe shall be assembled in strict accordance with the manufacturers instructions as described below.

a) Thoroughly clean the groove and bell socket and insert the gasket, making sure that it faces the proper direction and that it is correctly seated.

b) After cleaning dirt or foreign material from the plain end, apply lubricant in accordance with the pipe manufacturers recommendations. The lubricant is supplied in sterile cans and every effort shall be made to keep it sterile.

c) Be sure that the plain end is beveled; square or sharp edges may damage or dislodge the gasket and cause a leak. When pipe is cut in the field, bevel the plain end with a heavy file, grinder or pipe saw to remove all sharp edges. Push the plain end into the bell of the pipe. Keep the joint straight while pushing. Make deflection after the joint is assembled.

SPECIFICATION – DUCTILE IRON PIPE – Cont.

d) Small pipe can be pushed into the bell socket with a long bar. Large pipe (generally 12" diameter or greater) require additional power, such as a pipe jack, lever puller or backhoe. The pipe supplier may provide a pipe jack or lever puller on a rental basis. A timber header should be used between the pipe and jack or backhoe bucket to avoid damage to the pipe.

2.2 Mechanical joint pipe shall be assembled in strict accordance with manufactures instructions as described below:

a) Wipe clean the socket and the plain end. The plain end, socket, and gasket shall be washed with a soap solution to improve gasket seating. Place the gland on the plain end with the lip extension toward the plain end, followed by the gasket with the narrow edge of the gasket toward the plain end.

b) Insert the pipe into the socket and press the gasket firmly and evenly into the gasket recess. Keep the joint straight during assembly. Make deflection after joint assembly but before tightening bolts.

c) Push the gland toward the socket and center it around the pipe with the gland lip against the gasket. Insert bolts and hand-tighten nuts.

d) Tighten the bolts to the normal range of bolt torque (75-90 ft.- lbs. for 4" to 24" diameter pipe) while at all times maintaining approximately the same distance between the gland and the face of the flange at all points around the socket. This can be accomplished by partially tightening the bottom bolt first, then the top bolt, next the bolts at either side, finally the remaining bolts. Repeat the process until all bolts are within the appropriate range of torque. Generally 3 to 4 repetitions are required.

2.3 For other types of pipe joints that may be specified for "specialty" type jobs, specific instructions will be given as needed.

2.4 Pipe cleanliness. Foreign material shall be prevented from entering the pipe while it is being placed in the trench. No debris, tools, clothing, or other material (or people) shall be placed in the pipe at any time.

2.5 Pipe placement. As each length of pipe is placed in the trench, the joint shall be assembled and the pipe brought to correct line and grade. The pipe shall be held in place via blocking behind the bell prior to backfilling.

2.6 Direction of bells. It is common practice to lay pipe with the bells facing the direction in which work is progressing.

2.7 Temporary pipe plugs. At times when work is not in progress, the open end of the pipe shall be closed by means of a watertight plug or other means acceptable to the District. When practical, the plug shall remain in place until the trench is pumped completely dry. Care must be taken to prevent pipe floatation should the trench fill with water.

2.8 Pipe deflection. When it is necessary to deflect pipe from a straight line in either the horizontal or vertical plane, the amount of deflection shall not exceed 75% of the maximum allowable deflection as specified by the manufacturer. For example, for 12" DIPCL push-on pipe, the manufacturers maximum allowable deflection is 5 degrees or 21" for a 20' length of pipe. Therefore, the District will permit 75% of 21" or 15" maximum deflection per joint. Please keep in mind that deflections are cumulative in the horizontal and vertical plane.

2.9 Polyethylene encasement. Polyethylene encasement of DIPCL water mains shall only be done when specifically specified by the District.

Review Date: January 2008
Approved By: MAM

GREATER AUGUSTA UTILITY DISTRICT SPECIFICATION
POLYVINYL CHLORIDE (PVC) PRESSURE PIPE C905

1.0 SPECIFICATION:

1.1 Polyvinyl Chloride (PVC) pressure pipe shall meet all the requirements of AWWA Standard C905-97 (or latest revision) and have a Dimension Ratio (DR) of 18 and a Pressure Rating (PR) of 235 psi for diameters 14" through 24" and be provided with an outside diameter the equivalent of cast iron pipe. The use of Polyvinyl Chloride (PVC) will be reviewed on a case by case basis and must receive written approval from the District.

1.2 Each piece of pipe shall be provided with a factory installed elastomeric gasket meeting the Standards of ASTM F477 (latest revision). Gaskets shall not be removed from the pipe joint.

1.3 Dimensions and tolerances for each nominal pipe size shall be in accordance with Table 2 Dimensions for PVC Transmission Pipe with CI Outside Diameter of Section 3 Pipe Requirements in AWWA C905-97 (or latest revision).

1.4 Pipe shall be furnished in standard laying lengths of 20 feet unless otherwise noted. Each pipe shall have an integral bell formed on the pipe end and be designed to be at least as strong as the pipe wall.

1.5 Each length of pipe furnished shall bear identification markings that will remain legible after normal handling, storage and installation. Markings shall be applied in a manner that will not weaken or damage the pipe. Markings shall be applied at intervals of not more than 5 feet on the pipe. Marking requirements shall be in conformance with Section 6.1 Marking of AWWA C905-97.

1.6 Pipe shall be bundled in pallets for ease of handling and storage. Pipe bundles shall be packaged to provide structural support to insure that the weight of upper units shall not cause deformation to pipe in lower units. No pipe bundles shall be accepted which show evidence of degradation from ultraviolet radiation on exposed pipe as may be caused from extended unprotected storage conditions.

2.0 GENERAL INSTALLATION INSTRUCTIONS:

2.1 PVC Pressure Pipe shall be assembled in strict accordance with the manufacturers instructions and per the AWWA Standard C605-94 (or latest revision) and as briefly described below.

a) Proper care shall be used to prevent damage in handling, moving and placing the pipe. Pipe shall be hoisted with mechanical equipment using a cloth belt sling or continuous fiber rope which avoids scratching the pipe. A chain is not permitted. Pipe shall not be dropped or dumped into the trench.

b) Thoroughly inspect the bell end of the pipe to insure the gasket is properly seated in the bell groove and not damaged. Clean entire joint to insure there is no debris, sand or silt in which to cause the gasket to not properly seal.

c) Inspect and clean spigot end of pipe. Wipe with a clean dry cloth around entire circumference from the end to at least one inch beyond the reference mark.

d) Lubricate the spigot end of the pipe using only lubricant supplied and approved by the pipe manufacturer. Do not allow the lubricated spigot end of the pipe to come in contact with anything before assembly. Do not lubricate the gasket or ring groove as this may result in displacement during assembly.

SPECIFICATION – POLYVINYL CHLORIDE (PVC) PRESSURE PIPE – Cont.

e) Assemble the joint only to the reference mark provided on the spigot end.

f) Insert the beveled spigot end into the bell so that it is in contact with the elastomeric gasket. Pipe must be aligned properly with previous pipe before assembling joint. Bell end of pipe must be protected with wood blocking while pushing lengths together. Care must be taken while pushing joints together that previously completed joints in the line will not be closed up or over-assembled. Previous lengths of pipe should either be braced or sufficiently backfilled to prevent any over-assembling. Apply a steady and constant force to the pipe until the reference mark is even with the bell end.

g) Once the joint is assembled, the District will allow a maximum of 1 degree of angular deflection to be taken in the joint. This will produce an offset in a 20 foot long section of approximately 4 1/4 inches. Joint deflection is achieved only after the joint is assembled in straight alignment and to the reference mark. It is important to note that horizontal and vertical angular deflections are cumulative.

h) Prior to backfilling, check to see that the reference mark is even with the end of the bell.

2.11 Pipe cleanliness. Foreign material shall be prevented from entering the pipe while it is being placed in the trench. No debris, tools, clothing, or other material (or people) shall be placed in the pipe at any time.

2.12 Pipe placement. As each length of pipe is placed in the trench, the joint shall be assembled and the pipe brought to correct line and grade. The pipe shall be firmly supported along its entire length by the prepared bedding material prior to backfilling.

2.13 Direction of bells. It is common practice to lay pipe with the bells facing the direction in which work is progressing.

2.14 Temporary pipe plugs. At times when work is not in progress, the open end of the pipe shall be closed by means of a watertight plug or other means acceptable to the District. When practical, the plug shall remain in place until the trench is pumped completely dry. Care must be taken to prevent pipe floatation should the trench fill with water.

2.15 Mechanical Joint Ductile Iron Fittings. Only MJ DI fittings meeting the District's specifications may be used with C905 PVC pipe. Proper layout of the fittings must be accomplished in a sufficient manner as to insure that nearly a full section of pipe (min. 18 feet for PVC) enter and exit all fittings and valves to provide the necessary skin friction on the pipe walls required by the wedge-action retainer glands. Only wedge-action retainer glands designed specifically for C905 PVC shall be used. See "RETAINER GLANDS FOR PVC PIPE" for details.

2.16 Taps. All taps 1" – 2" in diameter performed on PVC pipe shall utilize a double stainless steel strap ductile iron service saddle of appropriate size to properly fit the pipe. Service saddles shall be provided with AWWA (CC) threads to accept an appropriately sized corporation. All taps 3" and larger on PVC pipe shall utilize mechanical joint ductile iron tapping sleeves. See "DUCTILE IRON TAPPING SLEEVES" for details.

2.17 Copper Tracer Wire. All PVC pipe must be provided with a minimum No. 6 AWG insulated copper wire laid along the top of the pipe and secured by means acceptable to the District. Tracer wire must be continuous as to not break conductivity. If wire must be cut and/or reconnected, splice wires with a minimum 6" overlap and use 2 u-bolt cable connecters that will not degrade conductivity. Tracer wire must be brought up and secured inside all valve gate boxes to within 3" of ground surface for connection to an electronic pipe locator.

Review Date: January 2008
Approved By: MAM

GREATER AUGUSTA UTILITY DISTRICT SPECIFICATION
RESILIENT SEAT WEDGE (GATE) VALVES

## 1.0 SPECIFICATION:

1.1 The District currently utilizes the American Flow Control Model 2500 and the U. S. Metroseal Model 250 resilient seat wedge (gate) valve for 4" through 16" diameter sizes inclusive. **Valves constructed of cast iron are not permitted.** Valve configurations include both mechanical joint and flanged type connections. The use of any valves others than those mentioned above will require prior written approval from the District.

1.2 All bolts shall be type 18-8 high strength stainless steel.

1.3 The valve stem shall be "open-right."

1.4 The valve shall be furnished with standard 2" AWWA operating nut color-coded ("red") as to valve opening.

## 2.0 GENERAL INSTALLATION INSTRUCTIONS:

2.1 Prior to installation, the valve shall be physically operated to confirm operation of valve per section 1.3 above.

2.2 During installation, the valve body shall be set on wooden blocking, the supporting material of which has been thoroughly compacted. Valve body shall be set plumb and positioned such that the operating nut is vertical prior to backfilling.

2.3 All joint bolts shall be torqued using a calibrated torque wrench in accordance with the manufacturer's specifications.

2.4 Great care shall be taken to ensure that the fusion-bonded epoxy coated exterior is not damaged. Any damaged areas shall be repaired by the contractor in accordance with the manufacturers recommendation at the sole expense of the contractor.

2.5 All valves shall be restrained by means of wedge action retaining glands (see "Ductile Iron Retainer Glands" and "Thrust Restraint Requirements") with a minimum 16-foot continuous length of ductile-iron pipe entering and exiting the valve whenever possible unless entering or exiting another fitting. The use of threaded rods will be evaluated on a case by case basis and must receive prior written approval from the District. The size and location of the rods will be determined by the District or its' inspector prior to installation.

2.6 All resilient seat wedge (gate) valves shall be provided with valve boxes (see Valve Boxes, Extensions and Covers specification) to the surface unless specifically requested not to by the District.

2.7 A minimum of 2 lateral measurement "swing ties" shall be taken to all valves prior to backfilling in accordance with Section II, 4, 4.8.

Review Date: January 2008
Approved By: MAM

GREATER AUGUSTA UTILITY DISTRICT SPECIFICATION
BUTTERFLY VALVES

1.0 SPECIFICATION:

1.1 This specification includes mechanical joint and flanged butterfly valves from 16" through 24" diameter inclusive. All butterfly valves shall be of the rubber seated tight closing type. They shall meet or exceed AWWA Standard C504 (latest revision).

1.2 All valves must use full AWWA C504 Class 150B valve shaft diameter, and full Class 250 underground service operator torque rating throughout entire travel, to provide capability for operation in emergency service.

1.3 All butterfly valves shall be **"open right"**.

1.4 All butterfly valve manufacturers shall have a minimum of five (5) years experience in the manufacture of butterfly valves for the size and type of service as specified herein.

1.5 The valve body shall be ASTM - A48, Class 40 or A126, Class B high tensile cast iron. The body shall have integral hubs for housing shaft bearings and seals.

- Mechanical joint ends shall conform to AWWA C-111.
- Flanged ends with short body laying length per AWWA C-504, and with flanges designed for installation between ANSI B16.1 Class 125 cast iron flanges.

1.6 The butterfly valve disc shall be of the "off-set" design to provide a full 360 degree seating surface uninterrupted by shaft holes. The disc shall be constructed of ASTM A56, grade 65-45-12 ductile iron. There shall be no external ribs to the flow. Non-metallic discs are not acceptable.

1.7 The resilient seat shall be Buna-N or natural rubber designed to provide tight shutoff at the specified pressures. The rubber seat can be on the disc edge or in the valve body but in either case, must be retained by positive mechanical means with corrosion-resistant hardware. Seats must be capable of mechanical adjustment in either direction without the use of special tools. The should be capable of complete replacement in the field without chipping, grinding, or burning out the old seat or its retaining mechanism. The rubber mating surface in all cases must be 300 series stainless steel (minimum).

1.8 All valve shafts shall be of single piece "through" type construction. The shafts shall be composed of round stock, 18-8 stainless steel, type 304 material. Valve shafts shall be securely attached to the disc by means of dowel pins composed of 18-8 stainless steel. Shaft bearings shall be contained in the valve body integral hubs. The bearings shall be of the self-lubricated sleeve type.

1.9 The valve assembly shall be furnished with a single two-way thrust bearing designed to center the disc in the body at all times and adsorb thrust forces. The drive end shaft shall be of the cartridge type with O-rings to provide positive sealing.

1.10 All valves shall be tested per AWWA C-504, including hydrostatic, performance, and leakage tests.

SPECIFICATION – BUTTERFLY VALVES – Cont.

1.11 Valves shall have all internal and external surfaces shop coated with a high performance, one-part, heat-curable thermosetting epoxy coating which provides superior corrosion resistance protection for metal parts (Federal Specification TT-V-51C) except for furnished bearing surfaces. The coating material shall be a suitable, non-toxic epoxy resin consisting of 100% solids. It is impervious to and imparts no taste to potable water. The coating is formulated from materials deemed acceptable in the Food and Drug Administration Document Title 21 of the Federal Regulations on food additives, Section 175.300 entitled "Resinous and Polymeric Coatings." The coating thickness shall be a minimum of 9 mils in thickness.

1.12 The valve actuator shall be integrally mounted on the valve mounting flange and shall be of the self-locking traveling nut type in complete accordance with AWWA C-504 requirements. The housing, housing cover, and shaft shall be sealed or gasketed to prevent water entry to a 25 ft. head pressure.

- Buried service valve actuators (mechanical joint) shall be furnished with standard 2" AWWA operating nuts. Operator design must permit repositioning of the actuator in 90 degree increments, and must permit adjustment of the valve disc seating.

- Flanged valves shall be supplied with all the necessary gaskets, nuts and bolts required to install the valves. Flanged valves shall be supplied with either the standard 2" AWWA operating nut or a handwheel with integrally cast 2" nut which is pinned to the input shaft. The size of the handwheel shall meet AWWA C-504 rim pull limitations.

2.0 GENERAL INSTALLATION INSTRUCTIONS:

2.1 All butterfly valves shall be installed in accordance with the manufacturers specifications and instructions and as directed by the District.

2.2 Valves delivered to the job site shall be stored undercover and on pallets unless otherwise approved in writing by the District.

2.3 Restraint for mechanical joint valves shall be in accordance with the “Thrust Restraint Requirements” section of these specifications.

2.4 A minimum of 2 lateral measurement “swing ties” shall be taken to all new butterfly valve installations in accordance with Section II, 4, 4.8.

Review Date: January 2008
Approved By: MAM

GREATER AUGUSTA UTILITY DISTRICT SPECIFICATION
HORIZONTAL SWING CHECK VALVES

1.0 SPECIFICATION:

1.1 Horizontal swing check valves shall meet or exceed the requirements of AWWA Standard C-508. Construction shall consist of a cast iron body, bronze mounted, single gate for non-shock working pressure of 150 psig and tested at double the working pressure.

1.2 Check valve ends shall be flanged (generally) or mechanical joint as specified.

1.3 All check valves shall be supplied with the appropriate ring gaskets, nuts, and bolts as "standard accessories" required for installation. The gaskets, nuts, and bolts shall comply with the specifications for "Ductile Iron Fittings."

1.4 When there is no flow through the main, the swing gate shall hang lightly against the seat.

1.5 The valve shall be constructed such that all components may be adjusted/ removed by lifting off the top access cover without removing the valve from the line.

1.6 Check valves shall be supplied with the same internal and external epoxy coatings as specified for "Butterfly Valves."

1.7 Check valves shall be suitable for mounting horizontally or vertically, depending on the direction of water flow.

1.8 Check valves shall have stainless steel hinge pins. The hinge pins shall operate in babbitt style support bearings.

1.9 Check valves shall be outside weight and lever unless otherwise specified.

2.0 GENERAL INSTALLATION INSTRUCTIONS:

2.1 Check valve applications will generally be for interior use via flanged end connections. The District will specify maximum laying length limits when applicable.

2.2 Check valve gross weights shall be provided as part of the standard submittal package (i.e. manufacturers spec. sheets, etc.).

2.3 The contractor shall be provide, at no additional cost to the District, temporary supports under large check valves until such permanent supports such as cast-in-place concrete cradles can be placed and made ready for service.

2.4 A minimum of 2 lateral measurement “swing ties” shall be taken to all buried check valves prior to backfilling in accordance with Section II, 4, 4.8.

Review Date: January 2008
Approved By: MAM

# GREATER AUGUSTA UTILITY DISTRICT SPECIFICATION
## FIRE HYDRANTS

### 1.0 SPECIFICATION:

1.1 The District, in an effort to minimize the quantity and diversity of repair parts, maintenance tools, etc. has standardized around the Waterous WB-67-250. Approved equal products may be submitted for review. The hydrant shall be supplied with a 1 5/8" pentagon style top nut, 5 1/4" main valve **open right**, 6" MJ shoe, 6'-6" bury, two 2 1/2" NST and one 4 1/2" NST connection ports. The shoe and lower valve shall be coated inside and out with fusion bonded epoxy paint. The shoe shall be attached to the lower barrel with stainless steel nuts and bolts. All drain ports shall be plugged at the factory.

### 2.0 GENERAL INSTALLATION INSTRUCTIONS:

2.1 All hydrants shall be installed in accordance with the “Hydrant Installation Detail” unless otherwise specified. Hydrants shall be installed plumb and true in the vertical plane in all directions. Finish grade around hydrant shall be 2” below breakaway flange of hydrant.

2.2 Color code painting of the hydrant shall be done by the District once the installation is complete.

2.3 The distances between the hydrant, the hydrant valve and the distribution main shall be recorded and submitted to the District. If the hydrant branch is other than perpendicular to the distribution main, then a legible sketch shall be recorded accurately showing all distances and angles from the distribution main to the hydrant.

Review Date: January 2008
Approved By: MAM

# GREATER AUGUSTA UTILITY DISTRICT SPECIFICATION
## DUCTILE IRON COUPLINGS (SLEEVES)

### 1.0 SPECIFICATION:

1.1 Mechanical joint style straight and transition type couplings shall be constructed entirely of ductile iron (center body ring and end rings).

1.2 Center rings shall be grade 65-45-12 ductile iron meeting or exceeding ASTM Standard A536-80. All areas of the center ring shall receive a heavy shop coat of primer and epoxy paint at the factory.

1.3 End rings shall be grade 68-45-12 ductile iron meeting or exceeding ASTM Standard A536-80. End rings shall be color coded as to the outside diameter range of pipe: Red, steel size PVC; Black, cast iron, ductile iron & CL150 asbestos cement; Yellow, CL 200 asbestos cement.

1.4 Gaskets shall be virgin SBR compounded for water service. Gasket material shall meet or exceed ASTM Standard D2000 3 BA715.

1.5 Bolts and nuts shall be high strength, low alloy steel trackhead type bolts. National coarse rolled thread and heavy hex nuts with black finish. The steel shall meet AWWA C111-80 composition specifications.

1.6 Acceptable products are the Romac 501 style coupling as manufactured by Romac Industries, Inc. and the Ford style FC1 and FC2A as manufactured by the Ford Meter Box Co. Inc. All other submittals must pre-approved by the District in writing.

### 2.0 GENERAL INSTALLATION INSTRUCTIONS:

2.1 Couplings shall be installed in strict accordance with the manufacturers instructions. All nuts shall be tightened in an alternating star pattern with a properly calibrated torque wrench as specified.

2.2 Off-set marks shall be made on coupling pipe at all times to allow for the coupling to be centered over the joint between the two sections of main being coupled.

2.3 A minimum of 2 lateral measurement “swing ties” shall be taken to all buried couplings prior to backfilling in accordance with Section II, 4, 4.8.

Review Date: January 2008
Approved By: MAM

GREATER AUGUSTA UTILITY DISTRICT SPECIFICATION
DUCTILE IRON TAPPING SLEEVES

1.0 SPECIFICATION:

1.1 Tapping sleeve shall be a mechanical joint, split sleeve with outlet flange conforming to AWWA C-110 Sect. 10-14 with drilling recessed for tapping valve.

1.2 The sleeve must be of ductile iron construction and include a 3/4" F.I.P. threaded test plug so that sleeve and valve can be pressure tested before the tap is made.

1.3 Sleeves up to 12" x 12" shall be rated for a minimum working pressure of 200 psig.

1.4 The side rubber gaskets shall be rectangular in cross-section and fit into grooved channels in the casting. These gaskets shall extend the entire length of the sleeve and shall not require cutting or trimming to match MJ end gaskets.

1.5 Sleeves shall be furnished with standard accessories including: glands, gaskets for both ductile and oversized pit-cast pipe, and Cor-Ten T-bolts and nuts or equivalent. All flange bolts shall be 316 stainless steel.

1.6 Interior and exterior to be bituminous coated with a minimum 2 mils dry film thickness.

1.7 For resilient seat tapping wedge valves, in order to avoid damage to the valve sealing surface, use recommended cutters with the following maximum dimensions:

| **Valve Size:** | 4" | 6" | 8" | 10" | 12" |
|---|---|---|---|---|---|
| **Cutter Size:** | 3.75" | 5.75" | 7.75" | 9.75" | 11.75" |

1.8 Stainless steel tapping sleeves (non-mechanical joint) are **not** permitted.

2.0 GENERAL INSTALLATION INSTRUCTIONS:

2.1 Mechanical joint tapping sleeves shall be installed in strict accordance with the manufacturers instructions.

2.2 Once installed, the tapping sleeve shall be pressure tested prior to making the tap.

2.3 The tapping sleeve shall be installed such that the flanged face of the sleeve is plumb with the vertical plane. The contractor shall use a level to check for plumbness and make adjustments as necessary.

Review Date: January 2008
Approved By: MAM

GREATER AUGUSTA UTILITY DISTRICT SPECIFICATION
MJ TAPPING SLEEVE VALVES

1.0 SPECIFICATION:

1.1 Mechanical joint tapping sleeve valves shall be resilient seat wedge (gate) type valves conforming to Resilient Seat Wedge Valve specifications. As is the case with tapping sleeve valves, one valve end will be flanged and the other end mechanical joint.

2.0 GENERAL INSTALLATION INSTRUCTIONS:

2.1 The tapping sleeve valve shall be installed in full compliance with the manufacturers specifications. The valve face must be plumb with the vertical plane.

2.2 All MJ Tapping Sleeve Valves shall be provided with valve boxes (see Valve Boxes, Extensions & Covers specification) to the ground surface unless specifically requested not to by the District.

2.3 A minimum of 2 lateral measurement “swing ties” shall be taken to all MJ Tapping Sleeve Valves prior to backfilling in accordance to Section II, 4, 4.8.

Review Date: January 2008
Approved By: MAM

GREATER AUGUSTA UTILITY DISTRICT SPECIFICATION
REPAIR CLAMPS

1.0 SPECIFICATION:

1.1 Repair clamps shall have a carbon steel body adhering to ASTM A 285 Grade A or ASTM A 283 Grade C or full circumference 18-8 type 304 Stainless Steel band. The body finish for the carbon steel body shall be fusion bonded epoxy with an average 12 mil thickness. The gasket shall be Nitrile (Buna-N), 100% circumferential waffle-type gasket with stainless steel bridging plates that afford a permanent seal.

1.2 Acceptable products are the Smith-Blair 267 and 268 Full-Circle Repair Clamps in sizes 4” to 12” as manufactured by Smith-Blair, of Texarkana, Arkansas.

1.3 All repair clamps shall be delivered to the District complete within a sealed box. Repair clamps delivered unboxed shall be rejected and returned to the Supplier at their cost.

2.0 GENERAL INSTALLATION INSTRUCTIONS:

2.1 Prepare pipe surface, ensuring that the damaged pipe is free from loose surface deposits, mud, scale, rust, etc.

2.2 Place a reference mark on the pipe to check for proper positioning of the clamp over the damaged area during installation.

2.3 Install half housings around the pipe, ensuring that the leading edges of the gaskets are fed into the mating side of the opposite half housing. Note: For 10” & 12” sizes, install top half housing first and then offer up the bottom housing ensuring that both gasket sections are mated within it.

2.4 Push half housings together by hand locating captive clamp bolts in the bolt holes. Fit the washers and loosely tighten the nuts. Note: For 10” & 12” sizes, do not disassemble nuts & washers. Simply loosen off the nuts to allow the bolt heads to be swung over and located in the top housing slot holes.

2.5 Position clamp over the damaged area and seat firmly in place. Rotate the clamp as necessary to allow access to the nuts for tightening.

2.6 Commence bolt up. Tighten bolts per manufacturers recommendations starting at the center of the clamp and working to the outside. Torque bolts to manufacturers specifications per the size clamp used.

Review Date: January 2008
Approved By: MAM

GREATER AUGUSTA UTILITY DISTRICT SPECIFICATION
VALVE BOXES, EXTENSION & COVERS

## 1.0 SPECIFICATION:

1.1 Valve boxes shall be heavy cast iron, two piece, sliding type with a top flange and a minimum inside shaft diameter of 5".

1.2 The bottom section shall be 36" long and provided with a belled (buffalo) base in accordance with the “Typical Valve Box Detail”. Longer bottom sections may be required in lengths of 48” or 57”, based on depth of valve.

1.3 The top section shall be 26" long and designed to slide over the base section. See "TYPICAL VALVE BOX DETAIL". Longer top sections may be required in lengths of 36” or 54”, based on depth of valve.

1.4 The cover shall be a heavy 2" drop type, non-tilting cast iron unit that is recessed in the box top to prevent plow breakage. The cover shall be provided with two pick holes for easy removal and have the word "WATER" clearly cast into the cover.

1.5 Valve box extensions shall be slide type top extensions designed to be installed inside of a standard valve box top as detailed in 1.3 above. Valve box extensions shall be able to accept a standard valve box cover as detailed in 1.4 above.

1.6 All valve box components shall be generously coated with a corrosion resistant bituminous coating.

1.7 The District only accepts valves boxes, extensions & covers manufactured within North America.

## 2.0 GENERAL INSTALLATION INSTRUCTIONS:

2.1 Valve boxes shall be installed concentric to the operating nut and plumb with the vertical plane. The belled base section shall be placed on blocking in such a way that no additional loading is transferred to the valve. Valve boxes shall have a minimum overlap of 6” between the bottom and top sections. In no cases shall valve boxes be stacked or contain more than one base section, one top section and one extension.

2.2 Longer valve box bottoms and/or tops will be specified as required for water mains at depths that exceed the limitations of the above specified valve box.

2.3 Valve boxes located in paved areas shall be left 1" below finish grade or even with the top of the base pavement and paved over when the finish pavement is applied unless otherwise specified.

2.4 Valve boxes located in non-paved gravel shoulders shall be left 4" below finish grade and covered with gravel unless otherwise specified.

2.5 Valve boxes located in other non-paved areas shall be left 3" below finish grade and covered with earth unless otherwise specified.

2.6 Valve boxes shall be left clean from debris on the inside to allow unobstructed access to the valve operating nut.

## Section IV: Water Main Installation Documents

**Certificate of Title and Project Acceptance …….. 46**

**Water Main Extension Agreement ……47**

# CERTIFICATE OF TITLE AND PROJECT ACCEPTANCE

KNOW ALL MEN BY THESE PRESENTS: that a corporation doing business as _____ of _____, and State of _____, hereinafter called "DEVELOPER" and a corporation doing business as _____ of _____, County of _____, and State of _____, hereinafter called "CONTRACTOR" in consideration of One Dollar ($1.00) and other valuable considerations paid by GREATER AUGUSTA UTILITY DISTRICT (the "DISTRICT"), a quasi-municipal corporation with a principal office in Augusta, Maine, the receipt of which consideration is hereby acknowledged, does hereby, GREANT, SELL, TRANSFER, AND DELIVER unto the said DISTRICT, its successors and assigns, the following personal property:

New _____ water main extension in _____ in _____, Maine
_____ new _____ inch water services installed from the new mains.
_____ public fire hydrants.

TO HAVE AND TO HOLD, all of the said personal property to the said GREATER AUGUSTA UTILITY DISTRICT, its successors and assigns to its and their own use and behold forever.

AND, the Developer/Contractor hereby covenants with the said DISTRICT, its successors and assigns, that it is the lawful owner of all the said personal property, that it is free from all encumbrances; that Developer/Contractor has good right to sell the same as aforesaid; and that it will WARRANT AND DEFEND the same unto the DISTRICT, its successors and assigns against the lawful claims and demands of all persons.

AND, the said GREATER AUGUSTA UTILITY DISTRICT, having inspected the installation of the said personal property, and having received certification verifying satisfactory results with regards to testing of said installation, finds that it substantially complies with the terms of the AGREEMENT between the District, the Developer and the Contractor dated as of the _____ day of _____.

This date shall mark the commencement of all warranties and guarantees required by the Contract Documents and such warranties and guarantees shall be fully effective, notwithstanding the fact that the District has inspected such property.

IN WITNESS WHEREOF, the parties hereto have caused this Certificate of Title and Project Acceptance to be executed by their duly authorized officials.

(SEAL)

DEVELOPER

By_____

_____ Its_____
Witness

(SEAL)

CONTRACTOR

By_____

_____ Its_____
Witness

(SEAL)

GREATER AUGUSTA UTILITY DISTRICT

By_____

_____ Its_____
Witness

# GREATER AUGUSTA UTILITY DISTRICT

# WATER MAIN EXTENSION AGREEMENT

*MEMORANDUM OF AGREEMENT* made this _____ day of _____, 20___, by and between the Greater Augusta Utility District, a quasi-municipal corporation duly established under the laws of the State of Maine, hereinafter referred to as the "District" and _____, hereinafter referred to as the "Applicant".

*WITNESSETH:* Whereas the Applicant desires to have the District extend its water facilities on _____ in _____, Maine as follows:

Install _____ DICL water main in _____
Install _____ domestic water services
Install _____ public fire hydrants

*NOW THEREFORE,* it is agreed between the Applicant and the District as follows:

1. The Applicant shall submit an adjustable deposit of $ _____ to the District, which is the estimated total cost of the extension and includes materials, labor, equipment, permits, inspection, testing and sub-contractor fees. All construction within the public R.O.W. shall be done by the District, or the Applicant's contractor, at the Applicants expense and District's full inspection. The full amount of the adjustable deposit shall be paid to the District upon execution of this Agreement. The estimated cost (does) (does not) include an allowance for ledge removal.

2. Within 60 days following determination of the final costs incurred for the extension, including the water main and District portion of the service line, the amount advanced (adjustable deposit) shall be adjusted to the actual cost of construction, by the District's return to the Applicant of any excess amount, or by additional payment of the Applicant to the District to cover any deficiency.

3. Should the water main extension cross property other than that owned by the Applicant, including the public R.O.W., prior to reaching the Applicant's property, and customers located on property other than the Applicant's property are connected to the watermain extension within ten (10) years following connection of the Applicant (normally the first connection), then those customers shall be required to make a contribution to the Applicant. The customer contribution shall be calculated in accordance with the requirements of Maine Public Utilities Commission (MPUC) Rule, Chapter 650, Section 4, Paragraph D.

4. The documents which comprise the entire agreement between the District and the Applicant consist of the following attachments:

   - This Water Main Extension Agreement
   - Chapter 650 of the MPUC Rules and Regulations

5. This agreement is subject to the Rules and Regulations of the MPUC governing water main extensions (Chapter 650). In the event of a conflict between this agreement and the rules

and regulations of the MPUC, then the rules and regulations of the MPUC shall govern. The parties understand that the provisions of this agreement are subject to alteration by a decision or rule of the MPUC.

6. Disputes arising under this agreement or under the rules and regulations of the MPUC governing water main extensions may be referred pursuant to said rules and regulations to the MPUC for resolution.

7. The ownership of the water main extension service connections constructed under this agreement shall at all times remain the property of the District and the Applicant does not accrue any equity or value in said water mains and service connections.

8. The Greater Augusta Utility District shall have the right to further extend its water main beyond this extension or to tap and take-off from this extension laterally for any purpose including customer services connections, hydrant installations, etc.

9. This agreement shall be binding on the heirs, executors, administrators, successors or assigns, of the contracting parties.

Executed in duplicate by the parties hereto, upon the day and year above written.

**APPLICANT** **GREATER AUGUSTA UTILITY DISTRICT**

By:_____ _____

By: General Manager
Greater Augusta Utility District

Its:_____

Date:_____ Date:_____

Address for giving notice: _____

Personally appeared the above named Applicant, _____, and acknowledged the foregoing instrument to be his/her free act and deed.

Before me,

By:_____
Notary Public

# Section V: Work Associated with Sewer Construction

1. DESCRIPTION OF THE WORK

All the work shall conform to these specifications and to the accompanying plans drawn by a professional engineer, based on plans and other information submitted by the Subdivider or Developer on file with the District.

The contractor shall furnish all labor, materials and equipment in order to construct gravity sewers, pressure mains, storm sewers, manholes, connections, catch basins and such other structures or features as may be required to complete the work in accordance with said plan and specifications.

Construction work shall start on a date and place mutually agreed upon between the District and the Contractor and only after the District has received approval of the extension from DEP. Work shall be continued with regularity until its completion. Sufficient labor and equipment shall be supplied to maintain a rate of progress satisfactory to the District. The District will assess the Project a Permit Fee, Service Availability Fee and Inspection Fee. The actual costs for these fees will be determined at the time the final plans are submitted.

Whenever the words “as directed”, “as permitted”, “as required” or words of like effect are used it shall be understood that the direction, permission or requirements of the District is intended and similarly the words “approved”, “acceptable”, “satisfactory”, or words of like import shall mean approved by or acceptable or satisfactory to the District.

Whenever the words “or equal” or words of like import are used it shall be understood that this means “equal” in the opinion of the District.

The Contractor shall employ at his own expense a competent surveyor or engineer, who shall stake out the lines and grades for all pipes, structures, and other portions of the work and establish all necessary controls. All reference marks shall be verified by an instrument at frequent intervals and the Contractor shall be responsible for the accuracy of all lines and grades relative to the project.

All gravity sewers and storm sewers shall be laid with laser beam unless other means are approved by the District.

Whenever the Developer, Subdivider, or Contractor is not present on any part of the work, a competent assistant shall be placed in charge with full authority to act for the Developer, Subdivider, or Contractor.

2. CONSTRUCTION PROCEDURES REQUIRED FOR SEWER

a. Plans must be approved by the District.

b. Sanitary plans may need to be approved by DEP. If so, the District will deliver the plans to DEP after its' approval.

c. All required easements and land title transfers to the Greater Augusta Utility District must be completed prior to final acceptance by the District.

d. Developer shall pay up front, before construction begins, the construction inspection fee. All sewer and storm drain related work shall be inspected by a representative of the Greater Augusta Utility District.

e. All new sewer and storm drain related work shall be tested as specified in these specifications.

f. As built drawings will be required at the completion of the project or each phase of project per Section I, 1, h.

g. The contractor and/or Developer shall guarantee all materials and equipment furnished and work performed for a period of one (1) year from the date of SUBSTANTIAL COMPLETION. The Contractor and/or Developer warrants and guarantees for a period of one (1) year from date of SUBSTANTIAL COMPLETION of the system that the completed system is free from all defects due to faulty materials or workmanship and the contractor and/or Developer shall promptly make such corrections as may be necessary by reason of such defects including the repairs of any damage to other parts of the system resulting from such defects. The District will give notice of observed defects with reasonable promptness. In the repairs, adjustments, or other work that may be made necessary by such defects, the District may do so and charge the Contractor and/or Developer the cost thereby incurred. The performance Bond shall remain in full force and effect through the guarantee period.

h. All construction work shall be in full compliance with the regulations of OSHA.

i. Contractor shall notify DIG SAFE and all non-member utilities three business days prior to starting construction work on project.

3. INSURANCE REQUIREMENTS

Before work is started under the contract the Contractor will be required to file with the District a Certificate of Insurance, executed by an insurance company or companies satisfactory to the District and licensed by the State of Maine Department of Business Regulation, Bureau of Insurance to do business in the State of Maine, stating that the Contractor carries insurance in accordance with the following requirements and stipulations:

a. Workers' Compensation Insurance. With respect to all the operations the Contractor performs and all those performed for him by subcontractors, the Contractor or the Subcontractor shall carry Workers' Compensation Insurance or shall qualify as a self-insurer with the State of Maine Workers' Compensation Commission, all in accordance with the requirements of the laws of the State of Maine.

b. Contractor's Public Liability and Property Damage Insurance. With respect to the operations he performs and also those performed for him by subcontractors, the Contractor shall carry regular Contractor's Public Liability Insurance and Contractor's Protective Public Liability Insurance, each covering bodily injury liability of not less than 1,000,000 dollars for damage arising out of bodily injuries to or death of one person and subject to that limit for each person, a total of 1,000,000 dollars damage arising out of bodily injuries to or death of 2 or more persons in any one accident or occurrence and covering property damage liability of not less than 1,000,000 dollars for all damages arising out of injury or destruction of property in one accident.

c. Automobile Liability Insurance. The Contractor shall carry Automobile Liability Insurance covering the operation of all motor vehicles, including those hired or borrowed, used in connection with the contract, covering bodily injury liability of not less than 300,000 dollars for all damages arising out of bodily injuries to or death of one person and subject to that limit for each person, a total of 300,000 dollars for all damages arising out of bodily injuries to or death of two or more persons in any one accident or occurrence and covering property liability for a limit of not less than 300,000 dollars for all damages arising out of injury to or destruction of property in one accident or occurrence.

d. Contractual Liability Insurance. The Contractor shall carry Contractual Liability Insurance covering the liability he has assumed under the contract to indemnify and save harmless the District, its officers and employees with respect to bodily injuries to or death of any persons or injury to or destruction of property. The limits for such insurance shall be not less than those specified for Contractor's Public Liability Insurance in paragraph (b) above.

e. Blasting. All blasting must be in complete compliance with the Municipality having jurisdiction. When explosives are to be used in the progression of the work, the insurance required under paragraphs (b), (c) and (d) above shall also contain provisions for protection, in the amounts stated, against damage claims due to such use of explosives.

f. Each policy shall be signed by the President and Secretary of the insurance company and shall be countersigned by a licensed resident agent in the State of Maine as an authorized representative of the company.

g. Termination or Change of Insurance. Each insurance policy shall be endorsed to provide that the insurance company shall notify the District at least 30 days in advance of cancellation of or any change in the policy. No change shall be made without prior written approval of the District.

The Contractor shall keep all the required insurances in continuous effect until 31 days after the date of final acceptance of the project or until such earlier time as may be established by the District.

h. Claims. Each insurance policy shall state that the insurance company shall agree to investigate and defend the insured against all claims for damages, even if groundless.

i. Compliance with the requirements of the section may be met by procurement of insurance covering all work under contract with the District or may be met by procurement of separate insurance for each individual contract. In either case a Certificate of Insurance must be filed for each contract to show evidence that all required insurance has been obtained.

4. CLEARING, EXCAVATION, BACKFILL AND MISCELLANEOUS FOR SEWERS AND STORM DRAINS

a. General

The work covered by this section comprises the furnishing of all materials, labor, and equipment required to perform all operations in connection with the clearing, grubbing, topsoil removal, pavement removal, excavating, trenching, site grading, removal of unsuitable materials, and backfilling for all piping, manholes, catch basins, and other such structures, as may be required.

The trench grade referred to in the specifications is defined as being six inches (6”) below the bottom of the barrel of the sewer coupling unless otherwise specified.

b. Trees

All trees adjacent to the project, including tree roots, shall be carefully protected from damage.

c. General Excavation

All excavations shall be made to such depth and width as will provide suitable room for building the structures they are to contain for sheeting, shoring, pumping and draining, and for removing peat, silt, or other materials which the District may deem unsuitable for foundation. The width of the excavation shall be kept as small as practicable to carry on the work.

d. Trench Excavation

Trench excavation shall be made by open cut sufficient to accommodate the pipe or structure at the depths indicated on the plans. Excavations shall be made to such a point as to allow a minimum of six inches (6”) of bedding material to be placed beneath the bottom of all barrels, bells or couplings of all pipes installed. The banks of the excavation shall be properly braced and sheeted. The maximum clear width of trench at the top of the pipe shall not be more than the outside diameter of the pipe plus two feet. The bottom of the trench shall be accurately graded to provide a uniform layer of bedding material for each section of pipe. Trench excavation shall include the satisfactory removal and disposal of all surplus material.

e. Rock Excavation

Rock excavation shall be to the minimum depths previously specified for bedding material. In all excavations for sewers, ledge or boulders shall be removed from insides of trenches to a plane eight inches (8”) outside the inside wall of the pipe, unless permission to do otherwise is expressly given by the District.

Where rock is encountered in excavation it shall be removed by blasting methods, unless directed otherwise by the District. The Contractor is to check with all existing utilities adjacent to blasting area for acceptable time period for blasting prior to each blast.

Blasting operations shall be in complete compliance with all OSHA requirements. The proper signing procedures warning oncoming traffic of blasting shall be strictly enforced.

All rock blasts shall be covered with suitable cover and proper precautions shall be taken to avoid damage.

Where sewers, water, steam, telephone, electrical or other utility ducts or lines, manholes or other structures have been exposed during excavation, such structures shall be adequately protected from damage before proceeding with the blasting. The Contractor at the Contractor's expense shall promptly repair any structures damaged by blasting.

Selected fill material shall be furnished to replace the excavated ledge.

f. Experimental Excavation

The Contractor, at the direction of the District, shall make excavations and backfill at such locations as directed, without furnishing or laying pipe in same. These excavations are, in general, to be used as test holes to locate existing pipelines, structures, other underground utilities, etc., for properly carrying out the work.

g. Trenching Machinery

Excavating machinery shall be of such kind and used in such a way and only in such locations as not to injure road surfaces, fences, poles, trees, shrubs, buildings, walks, conduits, posts, pipes, etc.

The only machinery allowed on any paved areas shall be rubber tired except for the backhoe digging the main sewer trench.

h. Water in Trenches

The excavations are to be kept free from water, and pumps, well points or other suitable methods are to be used when necessary, and shifted frequently to avoid drainage from too long a distance. All water pumped or bailed from the excavation is to be conveyed to a suitable point of discharge, in a manner satisfactory to the District. Pump wells in proper locations and sufficiently removed from the line of work and at sufficient depth shall be constructed and maintained as required. Wells are to be securely refilled upon the completion of the work. Disposal of excavation water shall not enter any District Storm Drain without the permission of the District. No excavation water will be allowed into the Sanitary sewer under any conditions.

No pipe or masonry is to be laid in water and water is not to be allowed to rise onto or flow over any pipe or masonry until such time as approved by the District.

i. Backfilling Around Structures

The Contractor shall not place backfill against any structures without obtaining the express permission of the District. Unsuitable material (such as excessive moisture content, large rocks, and ledge.) will not be acceptable for backfill. Approved backfill material shall be deposited in twelve inch (12") horizontal layers, thoroughly compacted by adequate mechanical means to the satisfaction of the District.

j. Backfilling Trenches

The Contractor shall first place and consolidate a six inch (6”) layer of approved screened stone on all trench bottoms. After the pipe has been laid, additional screened stone shall be placed and consolidated to the top of the pipe. The trench shall then be carefully backfilled with cover sand deposited in six inch (6”) layers, thoroughly consolidated by mechanical tampers, until the pipe has at least twelve (12) inches of cover sand over the top of the pipe. The use of all screened stone to 6” over the pipe is also acceptable.

The remainder of the trench shall be backfilled as follows:

In Roads, Walks, Drives, Etc.

The area between a line 12 inches over the top of the pipe and a

line twenty-four (24) inches below the top of the trench or bottom of pavement shall be carefully backfilled in not over twelve (12) inch layers using suitable material taken from the excavation or approved bank run sand or gravel hauled in for the purpose.

Cross Country Areas

The area between a line 12 inches over the top of the pipe and a

line below the topsoil shall be carefully backfilled in not over twelve(12) inch layers using suitable material taken from the excavation or approved bank run gravel or sand hauled for the purpose.

No mud, frozen earth, or stone larger than ten (10) inches in diameter is to be used for backfilling.

All trench backfill above the top of the pipe shall be consolidated by a vibratory compaction system, proposed by the Contractor subject to approval of the District. The approval by the District of the proposed method of compaction for the backfill shall in no way be construed as relieving the Contractor of responsibility for settlement of trenches, and any settlement which may occur shall be repaired by the Contractor at his own expense. Regardless of the method of compaction the backfill from the top of the pipe must be consolidated to a minimum density of 95 percent of the maximum density determined by ASTM Method D1557 (Modified Proctor). The remaining twenty-four (24) inches to the top of the trench shall be filled with 21” of road gravel and 3” of surface gravel. The gravel shall be placed, graded and tamped in 6-inch layers to the finished surface.

After the completion of all backfilling operations, the Contractor shall grade the site to the lines, grades and elevations shown on the Contract Drawings, taking into account any subsequent topsoil and paving requirements.

k. Material below Trench Grade

The Contractor shall furnish and place selected fill material or screened rock below trench grade, as directed and to such depths as determined by the District. These materials shall be used only when existing material below trench grade is unsuitable for properly placing bedding material and laying pipe.

l. Selected Material

Any selected material required for filling above trench grade, in addition to surplus earth from trench excavation, shall be placed by the Contractor. Selected material shall be clean granular material free from loam, sod, roots, or other organic material

and from stones larger than 6-inches in diameter and shall conform to the following table:

| Sieve Designation | Percentage by Weight Passing Square Mesh Sieve |
|---|---|
| 6" | 100% |
| No. 40 | 0-70% |
| No. 200 | 0-10% |

m. Screened Stone

All screened stone shall be clean granular material free from loam, sod, roots, or other organic material and shall conform to the following table:

| Screen Size Square Openings | Percentage by Weight Passing Square Mesh Sieve |
|---|---|
| 1" | 100% |
| ¾" | 90-100% |
| ½" | 20-55% |
| No.4 | 0-5% |

n. Road Gravel

All road gravel shall be clean granular material free from vegetable matter, roots, or other organic material and shall conform to the following table:

| Screen Size Square Openings | Percentage by Weight Passing Square Mesh Sieve |
|---|---|
| 3" | 100% |
| ½" | 35-75% |
| ¼" | 25-60% |
| No. 40 | 5-25% |
| No. 200 | 0-5% |

o. Surface Gravel

All surface gravel shall be clean granular material free from vegetable matter, roots, or other organic material and shall conform to the following table:

| Sieve Designation | Percentage by Weight Passing Square Mesh Sieve |
|---|---|
| 1 inch | 95-100% |
| ¾" inch | 90-100% |
| No. 4 | 40-65% |
| No. 10 | 10-45% |
| No. 200 | 0-5% |

p. Cover Sand

The fine granular material required for cover above the screened rock to a point twelve (12) inches over the top of the sewer pipe shall contain no stones over ¾-inch diameter and shall be of such gradation to be free draining and readily compactible.

q. Sheeting and Bracing and Shoring

The Contractor shall furnish, install complete, and maintain timber or steel sheeting and bracing where such sheeting and bracing is required to prevent disturbance, damage or settlement of adjacent pipelines, structures and all other existing facilities. Sheeting and bracing to be of adequate size and strength for the conditions encountered and shall be driven to true alignment in a workmanlike manner. Timber sheeting shall be straight and sound and shall be tongued and grooved where semi-fluid material is encountered. Minimum thickness of wood sheeting shall be a nominal three inches. All sheeting and bracing shall be removed unless ordered by the District to be left in place. All sheeting and bracing ordered left in place shall be cut off at least 2 feet below the ground surface unless otherwise ordered by the District.

r. Clean Up

All surplus material shall be removed and disposed of as specified after refilling of trenches. The removal of surplus material, cleaning up of trench surfaces along streets and premises shall closely follow the pipe laying. If cleaning operations are not carried out the District will suspend pipe laying until the clean-up is satisfactory. Where hardened surfaces or roadways, driveways, or walls are dug up or interfered with, special attention is to be given to the refill and the consolidation before its resurfacing and it shall be done and redone as may be required to make the premises safe at all times and to give the required result.

The Contractor shall continually provide street sweeping on roadways used by his vehicles in order to reduce dust, siltation and nuisance problems.

5. GRAVITY SEWERS (Sanitary & Storm)

a. General

Sewers shall be furnished and installed at locations shown on plan, and to the line and grade indicated on plan. All piping shall be complete, including fittings, connections to existing structures, and other miscellaneous items of work. Gravity sanitary sewers with more than twelve feet of cover shall be ductile iron.

b. Pipe

1. PVC-SDR-35

Pipe shall conform to ASTM D 3034 for sizes 4” – 15” and ASTM F679 for sizes 18” – 27”. PVC resin compound shall conform to ASTM D 1784 and rubber gaskets shall conform to ASTM D 3212 and F 477. Standard laying lengths shall be 13 ft. The pipe shall be colored green to identify it for sewer applications.

2. Ductile Iron Pipe

Pipe shall be manufactured in accordance with the requirements of ANSI / AWWA C151 / A21.51 Ductile Iron Pipe, Centrifugally Cast, for Water and Other Liquids. Pipe shall be manufactured in accordance with the requirements of ANSI / AWWA C111 / A21.11 Rubber Gasket Joints for Ductile Iron Pressure Pipe and Fittings. Pipe thickness shall be designed in accordance with the requirements of ANSI / AWWA C150 / A21.50 Thickness Design of Ductile Iron Pipe and shall be based on laying conditions and internal pressure as specified in the project plans. Pipe shall have cement mortar lining and seal coating, unless otherwise specified, in accordance with the requirements of ANSI / AWWA C104 / A21.4 Cement Mortar Lining for Ductile Iron Pipe.

3. Concrete Pipe

Concrete pipe shall be Class IV reinforced concrete pipe meeting ASTM Designation C-76.

4. Corrugated Polyethylene Storm Sewer Pipe

Pipe shall have a smooth interior and annular exterior corrugations. Sizes 4" – 10" shall meet AASHTO M252, Type S. Sizes 12" – 60" shall meet AASHTO M294, Type S or ASTM F2306. Manning's "n" value for use in design shall be 0.012. Virgin material for pipe and fitting production shall ne high density polyethylene conforming with the minimum requirements of cell classification 424420C for 4" – 10" diameters, or 435400C for 12" – 60" diameters, as defined and described in the latest version of ASTM D3350, except that carbon black content should not exceed 4%. The 12" – 60" virgin pipe material shall comply with the notched constant ligament-stress (NCLS) test as specified in Section 9.5 and 5.1 of AASHTO M294 and ASTM F2306, respectively.

c. Service Fittings

Contractor shall furnish and install wyes or teewyes as required in the pipe lines. These will be used for service connections. Wyes and teewyes, shall be made of the same material as the main line pipe.

d. Chimneys

Chimneys shall be located where directed by the District, and constructed in accordance with the details shown on the plans. Concrete encasement shall be 3,000 pounds class. Ends of chimney shall be capped with standard caps.

e. Pipe Installation

Excavations shall be made to a point at least 6 inches below the pipe to accommodate the bedding material as previously specified.

All excavations are to be kept dry while pipe is being laid and until each joint and pipe has been observed by the District, and approval given to commence backfilling operations. Pipe shall be laid in strict accordance with the pipe manufacturer's published recommendations. Any pipe which is not laid to grade and alignment shall be relaid to the satisfaction of the District.

All Gravity sewers and storm sewers shall be laid with laser beam unless other means are approved by the District.

No pipe laying will be allowed to begin at any point other than a manhole or other appurtenance without the expressed consent of the District.

If a new sewer extension is tying into an existing system, a plug shall be kept installed in the new line until all new construction is accepted and or approved by the Greater Augusta Utility District and all piping and manholes have been cleaned and tested.

f. Pipe Testing

1. General

All gravity sewers shall be tested for water tightness. Testing shall be by internal tests. Where groundwater is high the District may elect to accept infiltration measurements in lieu of exfiltration tests.

The Contractor shall furnish at his own expense, the necessary facilities for making the test including the furnishing and placing of bulkheads, furnishing and placing of water and other necessary materials, labor and equipment.

A section under these specifications shall mean a length of sewer between any two manholes.

2. Low Pressure Air Test For Gravity Sewers

The Contractor shall test the gravity sewers with a low-pressure air test. It shall be conducted in compliance with the following:

After completing backfill of a section of wastewater line, the Contractor shall, at his own expense, conduct a Line Acceptance Test using low pressure air. The test shall be performed using the below stated equipment, according to stated procedures and under the supervision of the District.

3. Equipment

The equipment to be used for the line acceptance test will be Cherne Air-Loc Equipment, as manufactured by Cherne Industrial, Inc. of Edina, Minnesota or approved equal. Equipment used shall meet the following minimum requirements:

a. Pneumatic plugs shall have a sealing length equal to or greater than the diameter of the pipe to be tested.

b. Pneumatic plugs shall resist internal pressures without requiring external bracing or blocking.

c. All air used shall pass through a single control panel.

d. Three individual hoses shall be used for the following connections:

1. From control panel to pneumatic plugs for inflation.

2. From control panel to sealed line for introducing the low pressure air.

3. From sealed line to control panel for continually monitoring the air pressure rise in the sealed line.

4. Procedures

All pneumatic plugs shall be seal tested before being used in the actual test installation. One length of pipe shall be laid on the ground and sealed at both ends with the pneumatic plugs to be checked. Air shall be introduced into the plugs to 25 psig. The plugs shall hold against this pressure without bracing and without movement of the plugs out of the pipe.

After a manhole to manhole reach of pipe has been backfilled and cleaned, and the pneumatic plugs are checked by the above procedure, the plugs shall be placed in the line at each manhole and inflated to 25 psig. Low pressure air shall be introduced into this sealed line until the internal air pressure reaches 4 psig greater than the average back pressure of any ground water that may be over the pipe. At least two minutes shall be allowed for the air pressure to stabilize.

After the stabilization period (4.0 psig minimum pressure in the pipe), the air hose from the control panel to the air supply shall be disconnected. The portion of line being tested shall be termed "Acceptable" if the time required in minutes for the pressure to decrease from 4.0 to 3.5 psig (greater than the average back pressure of any ground water that may be over the pipe) shall not be less than the time shown for the given diameters in the following table:

| Pipe Dia. In Inches | Minutes |
|---|---|
| 4 | 4.0 |
| 6 | 4.0 |
| 8 | 5.0 |
| 10 | 8.0 |
| 12 | 11.5 |
| 15 | 17.0 |
| 18 | 25.0 |
| 21 | 35.0 |
| 24 | 45.0 |
| 30 | 60.0 |

The Contractor shall furnish all labor, materials and equipment for making infiltration and leakage tests.

THE ATTENTION OF THE CONTRACTOR IS DIRECTED TO THE STRICT REQUIREMENTS RELATIVE TO MAXIMUM RATES OF THE INFILTRATION AND TO THE IMPORTANCE OF THESE SPECIFICATIONS RELATIVE TO TIGHT JOINTS REQUIRED. SEWERS NOT MEETING THE ABOVE REQUIREMENTS SHALL BE REPAIRED AS NECESSARY AT THE CONTRACTOR'S EXPENSE.

6. FORCE MAINS

a. General

The work of this section includes furnishing all labor, materials and equipment required to furnish and install the pipe specified herein for a force main from the Pumping Stations to the gravity sewers.

b. Pipe

1. PVC Pipe

PVC Ring-tite shall be minimum of 200 p.s.i. SDR-21 pressure pipe meeting the requirements of ASTM Designation D2241, D1784, and D1869.

Provisions must be made for contraction and expansion at each joint with a rubber ring and integral bell as part of each joint. Pipe and fittings must be assembled with a nontoxic lubricant, manufactured by the pipe manufacturer.

2. Ductile Iron Pipe

Pipe shall be manufactured in accordance with the requirements of ANSI / AWWA C151 / A21.51 Ductile Iron Pipe, Centrifugally Cast, for Water and Other Liquids. Pipe shall be manufactured in accordance with the requirements of ANSI / AWWA C111 / A21.11 Rubber Gasket Joints for Ductile Iron Pressure Pipe and Fittings. Pipe thickness shall be designed in accordance with the requirements of ANSI / AWWA C150 / A21.50 Thickness Design of Ductile Iron Pipe and shall be based on laying conditions and internal pressure as specified in the project plans. Pipe shall have cement mortar lining and seal coating, unless otherwise specified, in accordance with the requirements of ANSI / AWWA C104 / A21.4 Cement Mortar Lining for Ductile Iron Pipe.

3. HDPE Pipe

Polyethylene pipe shall be made from high density, extra high molecular weight compound equaling a PE 3408 designation and shall conform to ASTM-1248 and ASTM-3350; with a cell classification of 34543C. Minimum SDR of 9.0

4. Tracer Wire

All non-conductive pipe materials used for force sewer mains shall be provided with a minimum No. 6 AWG insulated copper or approved equal tracer wire laid along the top of the pipe and secured by means acceptable to the District. Tracer wire must be continuous as to not break conductivity. If wire must be cut and/or reconnected, splice wires with a minimum 6” overlap and use 2 u-bolt cable connecters that will not degrade conductivity. Tracer wire must be brought up to within 3” of ground surface and secured at all manholes or other access points for connection to an electronic pipe locator.

c. Bracing and Blocking

See Thrust Restraint Requirements under Section III of the Water Main Specifications.

d. Pipe Testing

1. General

All force mains throughout the entire length of lines shall be tested for water tightness. Testing shall be by internal pressure tests.

The Contractor shall furnish, at his own expense, the necessary facilities for making the test including the furnishing and placing of bulkheads, furnishing and placing of water and other necessary materials, labor and equipment.

2. Internal Pressure Test for Force Mains

All force mains shall be tested per the testing requirements of Section II, 10, "Pressure and Leakage Testing"

7. MANHOLES

a. General

The Contractor shall furnish, construct and install all manholes, complete, including the excavation, precast reinforced concrete base, barrel sections, cone section at the top of the chimney, cast in place concrete slabs for drop manholes, manhole steps, frame and cover, backfill and all accessories to complete the manholes as shown of the Drawings and as specified.

b. Materials

Brick – shall be Grade H (hard) brick conforming to the Federal Specifications for Building Brick (common) Designations SS-B-656 and amendments thereto, new and of first quality, solid, sound, hard burned throughout of uniform color, and equal in quality to samples which shall have been approved by the District.

Precast Concrete Chimney – The precast concrete sections shall conform to ASTM C478, Standard Specifications for "Precast Reinforced Concrete Manhole Sections".

Manhole Steps – Manhole steps shall be aluminum and shall conform to ASTM B221, Alloy 6061-T6 or steel reinforced polypropylene.

Precast Concrete Grade Rings – Grade Rings shall be precast reinforced concrete with a minimum 4,000 psi after 28 days.

Frame and Cover

1. Manhole covers and frames shall be Etheridge No. E265S or equal.
2. Set to final grade as shown on the Drawings and as specified. Provide adequate temporary covers to prevent accidental entry until final placement of frame and cover is made.
3. Set manhole frames and covers to final grade only after pavement base course has been applied, or after final grading of gravel roads.

Mortar – Mortar, except as otherwise specified, shall consist of one part Portland Cement Type II, and one part Mortar Cement, and four parts Mortar Sand. Sand shall be approved by the District.

c. Installation

a. Manhole Concrete Barrel Sections & Bases
Manholes of precast reinforced concrete sections and bases shall be furnished with steps 12" o.c.; with a minimum 5-inch wall thickness for all barrel sections; and with a wall thickness varying from minimum 5-inches at the bottom to 8-inches at the top of all cone sections.

All joints shall be sealed with a double strip of self-sealing butyl rubber based flexible joint sealant in rope form. Lifting holes in all sections shall be filled solid with an approved non-shrink grout, both

inside and out. Exterior surface of all concrete manholes shall be painted with two coats of Bituplastic No. 28 or an approved equal.

The top six feet of the exterior surface of the manhole structure shall be wrapped with a minimum of 4 layers of U.V. resistant, 6 mil high grade polyethylene.

The top uppermost reinforced concrete section shall be set at a grade that will allow minimum of 2 courses and a maximum of 5 courses of brick and mortar before setting the cast iron frame and cover.

The Contractor shall furnish and faithfully use suitable slings, hooks, cable, or such other means as necessary, for proper handling of reinforced barrel sections and bases. No cracked, damaged or defective sections will be allowed in the work. Each section must be inspected and approved by the District immediately prior to final placement. Any sections not approved for use in this work shall be removed from the site and satisfactorily disposed.

d. Tables and Inverts

Tables and inverts shall be as shown on plans and shall be constructed of brick, concrete or fiberglass. Inverts shall have the exact shape of the sewers which are connected, and any change in size or direction shall be gradual and even.

e. Protection of the Work

Adequate precautions shall be taken during freezing weather to protect the masonry from damage by frost. No water shall be allowed to rise in excavations for manholes until all mortar and cement has set sufficiently. Upon completion, all debris shall be removed from each manhole.

f. Watertight Work Required

The entire work of constructing manholes must be carried on in a manner to insure watertight work. Any leak in manholes shall be caulked and completely repaired from the exterior of the manhole or the entire work shall be removed and rebuilt. All pipe openings shall have an approved neoprene boot meeting ASTM C-443 to insure a watertight seal between the pipe and manhole.

g. Manhole Testing

All manholes shall be tested as to water tightness as follows:

VACUUM TESTING OF MANHOLES

1. Each manhole shall be tested immediately after assembly and prior to backfilling.

2. All lift holes shall be plugged with an approved non-shrink grout.

3. All pipes entering the manhole shall be plugged, taking care to securely brace the plug from being drawn into the manhole.

4. The test head shall be placed at the inside of the top of the cone section and the seal inflated in accordance with the manufacturers recommendations.

5. A vacuum of 10 inches of Hg shall be drawn and the vacuum pump shut off. With the valves closed, the time shall be measured for the vacuum to drop to 9

inches. The manhole shall be considered to have passed the test if the time for the loss of 1 inch of Hg vacuum is as follows:

| Depth of Manhole (feet) | Time (min.) |
|---|---|
| 0 – 10 | 3.0 |
| 10 – 15 | 3.5 |
| 15 – 20 | 4.0 |
| 20 – 25 | 4.5 |
| >25 | 5.0 |

6. If the manhole fails the initial test, necessary repairs shall be made with a non-shrink grout while the vacuum is still being drawn. Retesting shall proceed until a satisfactory test is obtained.

## 8. CATCH BASINS

### a. General

Work included: The work included under this section is the excavation for and backfilling of the widened trench at catch basin locations, together with the furnishing and installing of all materials for catch basins as shown on the Drawings. When catch basins are installed adjacent to curbs the District prefers the precast top to be an eccentric flat top.

The work includes furnishing the precast reinforced concrete cone at the top of the chimney, the precast concrete chimney, the precast catch basin base, and all accessories to complete the catch basins shown on the Drawings and as specified.

### b. Materials

The precast reinforced concrete sections shall conform to ASTM Designation C478. All pipe connections to either catch basins or drain manholes shall have an approved neoprene boot meeting ASTM C-443.

Precast concrete blocks of proper radius shall conform to ASTM Specification C-139.

Mortar, except as otherwise specified, shall consist of one part Portland Cement Type II and one part mortar cement and four parts mortar sand. Mortar sand shall be approved by the District.

Cast Iron catch basin frames and grates shall be Etheridge Type M or equal.

Brick shall be Grade H (hard) brick conforming to the Federal Specifications for Building Brick (common) Designations SS-B-656 and amendments thereto, new and of first quality, solid, sound, hard burned throughout of uniform color, and equal in quality to samples which shall have been approved by the District.

Precast Concrete Grade Rings – Grade Rings shall be precast reinforced concrete with a minimum 4,000 psi after 28 days.

All concrete shall meet the requirements of Section V, 12 – Concrete.

c. Installation

The precast base and chimney shall be installed together with precast concentric concrete cone or flat top.

All joints shall be sealed with a minimum of one strip of self-sealing butyl rubber based flexible joint sealant in rope form. Lifting holes in all sections shall be filled solid with an approved non-shrink grout, both inside and out. .

The top six feet of the exterior surface of the catch basin structure shall be wrapped with a minimum of 4 layers of U.V. resistant, 6 mil high grade polyethylene.

9. SERVICE CONNECTIONS

a. General

Service connection pipe shall be furnished and installed as required. Connections shall be complete including excavation and backfill, pipe, fittings, connections and

other miscellaneous items of work. All fittings and service leads shall be installed at the same time the main sewer line is installed.

b. Materials

Pipe shall be either 4 or 6 inches in diameter as approved by the District and the same material as the main sewer. All pipe and fittings shall be connected by standard couplings and gaskets furnished by the manufacturer. All elbows used for service connections shall be bends or sweeps.

c. Installation

All work in regards to joints, laying, etc. shall be as specified under Section V, 5 above. Pipe shall be installed at a slope of at least ¼ inch per foot unless otherwise approved by the District. The end of each service lead shall be properly capped to prevent any objectionable material from entering the pipe. The end of the pipe shall not be covered until its location has been inspected by the District. Contractor shall furnish and install a 2” x 4” wood strip at the end of the connection, extending from the pipe to a point 2 feet above the finish surface of the ground. All sewer service lines shall be buried with a metallic "tracer" tape acceptable to the District to aid in their future location. The tracer tape shall be labeled “sewer” and be located approximately 3 ft. above the service line and shall extend from the connection of the service to the main, to the foundation wall.

10. RESURFACING

a. General

The work shall consist of furnishing and installing temporary surfacing, complete in place, where existing paved surfaces are removed or damaged during the process of any part of the construction.

Temporary surfacing shall closely follow the completion of laying sewers and shall not be delayed until the completion of the entire Contract.

b. Preparation

All trenches in paved areas shall be backfilled as required under Section V, 4. The edges of all pavements along the line of the trench shall be cut back from exposed edges thereof, a sufficient distance to form a clean, sharp, straight edge essentially parallel to the centerline of the trench. The minimum lateral cut back to be allowed will be 6-inches. Cut back pavement shall be carefully removed to minimize any disturbance to foundation materials. The exposed surface of the foundation material shall then be rolled with a power tandem roller, weighing not less than 240 pounds per inch width of thread, wetting the surface as necessary to obtain a firm, even surface.

Any depressions or uneven areas shall be regraded and re-rolled until the surface is tight and parallel to the existing surface.

c. Temporary Surfacing

Temporary surfacing shall consist of 1 ½" hot bituminous base mix (MDOT Grade B) placed over trenches and other areas where directed. When hot mix is not available 3" of cold patch shall be used. Road Gravel at top of trench shall be removed to allow for placing temporary surfacing.

Contractor shall maintain temporary surfacing in good condition until the final surface is placed. Trenches shall be inspected daily for holes and settlements. Holes and settlements shall be promptly repaired with bituminous mixture. Hot mix shall be used when available; otherwise, cold mix.

d. Final Surfacing

Final surfacing shall be as specified by the authority having jurisdiction.

## 11 PUMP STATION SPECIFICATIONS

a. General

1. Extent of Work

The work specified and/or referred to under this Section includes all materials, labor, tools and equipment necessary to: furnish and install one submersible pump station with all equipment as indicated on the drawings and specified herein. The contractor shall fully coordinate all related field operations with the Pump Station Manufacturer. Coordination shall include: verifying dimensions of equipment furnished; interfacing with and connection of all exterior piping and utilities in the field; connecting external power to the pump station; and all other miscellaneous components as required for a complete, properly operating pumping facility. The pumping station manufacturer shall provide factory trained qualified personnel to assemble the pumping station in the field as the Contractor is placing it in the excavation.

2. Manufacturer's Qualifications

One (1) Manufacturer shall furnish the pumping station and all equipment contained within them as a complete packaged system. Alternate systems based on a built-in-place, field erected pumping stations utilizing precast or cast-in-place concrete shall not be accepted. The factory built pumping station shall be a standard product in regular production by the Manufacturer who shall have five years minimum, successful experience in the design and assembly of products similar to that specified herein. The Manufacturer shall have also

satisfactorily furnished a minimum of ten units of the type described herein within the last five years. The Manufacturer shall be reputable and thoroughly qualified in the manufacture, assembly and installation of the products and equipment specified herein.

3. Shop Drawings

Shop drawings for all products and equipment specified and/or referred to herein shall be submitted to the Owner's Engineer and the District for review prior to their manufacture and/or shipment. The Pump Station Manufacturer shall forward submittals for the prefabricated pumping station to the Owner's Engineer and the District for approval prior to production. Submittals shall contain complete detailed shop drawings and literature on all equipment, including descriptions, diagrams, parts and listing of construction material as required indicating full conformance with the specifications. Partial submittals of shop drawings or equipment data will not be reviewed or approved. Shop drawings and equipment data shall be complete with respect to dimensions, materials of construction, design/performance criteria, wiring diagrams, component parts, etc., to enable the Owner's Engineer and the District to conduct a complete review of all equipment specified. Submittals shall be comprehensive and must fully address and contain:

- Structural design calculations and floatation calculations.
- Schematic electrical wiring diagrams, piping layouts, and descriptive literature on each item of equipment to be furnished as specified for a complete installation.
- Certified performance or test data as may be prescribed for the select equipment components specified in the following sections.
- A comprehensive painting/finish schedule shall also be submitted, summarizing paints, damp proofing and waterproofing materials and/or special coatings to be utilized.
- Each submittal set shall be fully indexed and shall be bound in a three-ring vinyl binder.
- At the time of submission the Contractor shall, in writing, call the Owner's Engineer and the District's attention to any deviations from the requirements of these specifications that are contained in the submittal documents. Deviations or omissions in the submittal drawings and related data shall not relieve the Contractor from his responsibility for providing the specified requirements unless the Engineer has given written approval for the deviations or missions identified.

4. Guarantee

All products and / or equipment incorporated into the precast pump station and valve pit shall be guaranteed for a period of one (1) year from startup or 18 months after installation, whichever occurs first.

b. Products

1. Precast Concrete Structure

Precast concrete structure shall be constructed to the general lengths, widths and heights shown on the Contract Drawings. Special attention shall be given to equipment clearances and/or control dimensions noted on the Drawings and/or elsewhere herein. The structure shall be designed to adequately and safely support all live and dead loads to which the structure will be subjected, and to withstand all conditions which may be encountered. Design calculations shall verify that the structure have been designed to withstand the burial

depth, groundwater hydrostatic pressures, and seismic forces based on the information provided, and also the dead and live loads anticipated for the structure. The structure shall have adequate wall, floor, and rook thickness and steel reinforcement for the depth and conditions of burial shown of the Drawings. Design computations for uplift forces shall contain a minimum factor of safety of 1.15. Station to be cast with a monolithic extended base slab. Lock joint or Press-Seal Gasket Corp shall form all wall penetrations utilizing resilient rubber pipe connectors. Each precast module shall be provided with formed male and female joints in insure accurate joint surfaces and tolerance for a watertight seal. The pump station structures shall be fabricated and cast at the Manufacturer's facility in full accordance with approved structural designs and shop drawings. The Pumping Station Manufacturer shall have a facility of sufficient size to permit assembly of all structural components and interior mechanical equipment, with an environmentally controlled building. All work associated with fabricating, assembling and testing the pumping station shall be performed within the building except as otherwise noted herein, or allowed by the Owner. The building shall keep the structures protected from the elements and be maintained at an ambient temperature of at least 45° F. Concrete used in the manufacture of the various structural components of the precast concrete structures shall meet the following requirements:

- Cement shall be High Early Strength Portland Cement, Type II or Type III, conforming to ASTM C-150.
- Fine aggregate shall consist of natural sand conforming to ASTM specification C-33.
- Coarse aggregate shall consist of well-graded crushed stone conforming to ASTM specification C-33.
- Air entrainment shall be 4.5% plus or minus 1%.
- A super plasticizer may be used and if so, used per manufacturers recommendations.
- No concrete shall be placed when the ambient temperature in the building is less than 50° F.
- The concrete used for the structural components shall attain a minimum 28-day compressive strength of 5,000 psi.
- The pump station manufacturer to have on staff a PCI Certified Technician.
- As a minimum, six 4 x 8 concrete test cylinders shall be made for each production day from the same concrete batch used in actual components. Two cylinders shall be tested at time of product stripping, two at seven days cured in environment similar to the actual component, and two at 28 days cured in 100% humidity. Results shall be furnished to the Engineer. Test cylinders shall be cured in the same manner as the actual components are cured.

Reinforcing steel used in the manufacture of the various structural components of the precast concrete components shall meet the following requirements:

- Steel shall be a new billet steel, deformed steel bar conforming to ASTM A-615 (latest revision) Grade 60. Welded steel wire fabric reinforcing shall conform to ASTM A-185 (latest revision)
- Minimum cover of reinforcement shall be one inch.

2. Pump Station Pumps

Furnish and install 2 submersible non-clog wastewater pumps. Each pump shall be equipped with a submersible electric motor, connected for operation on 460 volts, 3 phase, 60 hertz, 4 wire, grounded neutral service, with the required length of submersible cable (SUBCAB) suitable for submersible pump applications as shown on the contract electrical drawings. The power cable shall be sized according to NEC and ICEA standards and also meet with P-MSHA Approval. The pump shall be supplied with a mating ductile iron discharge connection. Each pump shall be fitted with adequate feet of stainless steel cable. The working load of the lifting system shall be 50% greater than the pump unit weight.

**B. PUMP DESIGN**

The pumps shall be automatically and firmly connected to the discharge connection, guided by no less than two guide bars extending from the top of the station to the discharge connection. There shall be no need for personnel to enter the wet-well. Sealing of the pumping unit to the discharge connection shall be accomplished by a machined metal-to-metal watertight contact. **Sealing of the discharge interface with a diaphragm, O-ring or profile gasket will not be acceptable**. No portion of the pump shall bear directly on the sump floor.

**C. PUMP CONSTRUCTION**

Major pump components shall be of grey cast iron, ASTM A-48, Class 35B, with smooth surfaces devoid of blow holes or other irregularities. All exposed nuts or bolts shall be of stainless steel construction. All metal surfaces coming into contact with the pumpage, other than stainless steel or brass, shall be protected by a factory applied spray coating of acrylic dispersion zinc phosphate primer with a polyester resin paint finish on the exterior of the pump.

Sealing design shall incorporate **metal-to-metal contact** between machined surfaces. Critical mating surfaces where watertight sealing is required shall be machined and fitted with Nitrile or Viton rubber O-rings. Fittings will be the result of controlled compression of rubber O-rings in two planes and O-ring contact of four sides without the requirement of a specific torque limit.

Rectangular cross-sectioned gaskets requiring specific torque limits to achieve compression shall not be considered as adequate or equal. No secondary sealing compounds, elliptical O-rings, grease or other devices shall be used.

**D. COOLING SYSTEM**

Each unit shall be provided with an integral motor cooling system. A motor cooling jacket shall encircle the stator housing, providing for dissipation of motor heat regardless of the type of pump installation. An impeller, integral to the cooling system and driven by the pump shaft, shall provide the necessary circulation of the cooling liquid trough the jacket. The cooling liquid shall pass about the stator housing in the closed loop system in turbulent flow providing for superior heat transfer. The cooling system shall have one fill port and one drain port integral to the cooling jacket. The cooling system shall provide for continuous pump operation in liquid or ambient temperatures of up to 104°F. (40°C.). Operational restrictions at temperatures below 104°F are not acceptable. Fans, blowers or auxiliary cooling systems that are mounted external to the pump motor are not acceptable.

**E. MOTOR**

The pump motor shall be a NEMA B design, induction type with a squirrel cage rotor, shell type design, housed in an air filled, watertight chamber. The stator windings shall be

insulated with moisture resistant Class H insulation rated for 180$^{o}$C (356$^{o}$F). The stator shall be insulated by the trickle impregnation method using Class H monomer-free polyester resin resulting in a winding fill factor of at least 95%. The motor shall be inverter duty rated in accordance with NEMA MG1, Part 31.The stator shall be heat-shrink fitted into the cast iron stator housing. The use of multiple step dip and bake-type stator insulation process is not acceptable. The use of pins, bolts, screws or other fastening devices used to locate or hold the stator and that penetrate the stator housing are not acceptable. The motor shall be designed for continuous duty while handling pumped media of up to 104°F. The motor shall be capable of withstanding at least 15 evenly spaced starts per hour. The rotor bars and short circuit rings shall be made of aluminum. Three thermal switches shall be embedded in the stator end coils, one per phase winding, to monitor the stator temperature. These thermal switches shall be used in conjunction with and supplemental to external motor overload protection and shall be connected to the motor control panel. The junction chamber shall be sealed off from the stator housing and shall contain a terminal board for connection of power and pilot sensor cables using threaded compression type terminals. The use of wire nuts or crimp-type connectors is not acceptable. The same manufacturer shall produce the motor and the pump. The motor service factor (combined effect of voltage, frequency and specific gravity) shall be 1.15 (1.0 service factor when operated on VFD equipment and inverter duty rated). The motor shall have a voltage tolerance of +/- 10%. The motor shall be designed for continuous operation in up to a 40°C. ambient and shall have a NEMA Class B maximum operating temperature rise of 80° C. A motor performance chart shall be provided upon request exhibiting curves for motor torque, current, power factor, input/output kW and efficiency. The chart shall also include data on motor starting and no-load characteristics.

Motor horsepower shall be sufficient so that the pump is non-overloading throughout its entire performance curve, from shut-off to run-out.

**F. BEARINGS**

The integral pump/motor shaft shall rotate on two bearings. The motor bearings shall be sealed and permanently grease lubricated with high temperature grease. The upper motor bearing shall be a single ball type bearing to handle radial loads. The lower bearing shall be a two row angular contact ball bearing to handle the thrust and radial forces. The minimum $L_{10}$ bearing life shall be 50,000 hours at any usable portion of the pump curve.

**G. MECHANICAL SEALS**

Each pump shall be provided with a positively driven dual, tandem mechanical shaft seal system consisting of two seal sets, each having an independent spring. The lower primary seal, located between the pump and seal chamber, shall contain one stationary and one positively driven rotating corrosion resistant **tungsten-carbide** ring. The upper secondary seal, located between the seal chamber and the seal inspection chamber, shall contain one stationary and one positively driven rotating corrosion resistant **tungsten-carbide** seal ring All seal rings shall be individual solid sintered rings. Each seal interface shall be held in place by its own spring system. The seals shall not depend upon direction of rotation for sealing. Mounting of the lower seal on the impeller hub is not acceptable. Shaft seals without positively driven rotating members or conventional double mechanical seals containing either a common single or double spring acting between the upper and lower seal faces are not acceptable. The seal springs shall be isolated from the pumped media to prevent materials from packing around them, limiting their performance.

Each pump shall be provided with a lubricant chamber for the shaft sealing system. The lubricant chamber shall be designed to prevent overfilling and shall provide capacity for lubricant expansion. The seal lubricant chamber shall have one drain and one inspection plug that are accessible from the exterior of the motor unit. The seal system shall not rely upon the pumped media for lubrication.

The area about the exterior of the lower mechanical seal in the cast iron housing shall have cast in an integral concentric spiral groove. This groove shall protect the seals by causing abrasive particulate entering the seal cavity to be forced out away from the seal due to centrifugal action.

A separate seal leakage chamber shall be provided so that any leakage that may occur past the upper, secondary mechanical seal will be captured prior to entry into the motor stator housing. Such seal leakage shall not contaminate the motor lower bearing. The leakage chamber shall be equipped with a float type switch that will signal if the chamber should reach 50% capacity.

**H. PUMP SHAFT**

The pump and motor shaft shall be a single piece unit. The pump shaft is an extension of the motor shaft. Shafts using mechanical couplings shall not be acceptable. The shaft shall be AISI type 431 stainless steel. Shaft sleeves will not be acceptable.

**I. IMPELLER**

The impeller shall be of gray cast iron, ASTM A-48 Class 35B, dynamically balanced, semi-open, multi-vane, back swept, screw-shaped, non-clog design. The impeller leading edges shall be mechanically self-cleaned automatically upon each rotation as they pass across a spiral groove located on the volute suction. The screw-shaped leading edges of the impeller shall be hardened to Rc 45 and shall be capable of handling solids, fibrous materials, heavy sludge and other matter normally found in wastewater. The screw shape of the impeller inlet shall provide an inducing effect for the handling of up to 5% sludge and rag-laden wastewater. The impeller to volute clearance shall be readily adjustable by the means of a single trim screw. The impellers shall be locked to the shaft, held by an impeller bolt and shall be coated with alkyd resin primer.

**J. VOLUTE/SUCTION COVER**

The pump volute shall be a single piece gray cast iron, ASTM A-48, Class 35B, non-concentric design with smooth passages of sufficient size to pass any solids that may enter the impeller. Minimum inlet and discharge size shall be as specified. The volute shall have integral spiral-shaped, sharp-edged grooves that are cast into the suction cover. The spiral grooves shall provide the sharp edges across which each impeller vane leading edge shall cross during rotation so to remain unobstructed. The internal volute bottom shall provide effective sealing between the multi-vane semi-open impeller and the volute.

**K. PROTECTION**

Each pump motor stator shall incorporate three thermal switches, one per stator phase winding and be connected in series, to monitor the temperature of the motor. Should the thermal switches open, the motor shall stop and activate an alarm. A float switch shall be installed in the seal leakage chamber and will activate if leakage into the chamber reaches 50% chamber capacity, signaling the need to schedule an inspection.

The thermal switches and float switch shall be connected to a Mini CAS control and status-monitoring unit. The Mini CAS unit shall be designed to be mounted in the pump control panel.

**L. MIX-FLUSH VALVE**

At least one pump in each sump shall be equipped with an automatically operating valve that will provide a mixing action within the sump at the start-up of the pumping cycle.

This valve shall be mounted directly on the pump volute and shall direct a portion of the pump age into the sump to flush and re-suspend solids and grease by the turbulent action of its-discharge. The turbulent action caused by the flow shall also provide some sump

aeration benefits. The valve shall be mounted on the pump volute so that it can be removed from the sump along with the pump during normal and routine maintenance checks and shall be positioned on the volute to provide for non-clogging operation. The valve shall be equipped with an adjustable, wear-resistant discharge nozzle, which shall be used to direct flow from the valve to optimize mixing action within the sump.

The valve shall not require any external power source or control to operate, neither electric nor pneumatic. The use of the external power source is not acceptable. The valve shall be suitable for use in Class I, Division 1 hazardous locations.

The valve shall open at the beginning of each pumping cycle and shall automatically close during pump operation after a pre-selected time of operation. The valve shall operate automatically by differential pressure across the valve and shall be actuated through a self-contained hydraulic system, which uses an environmentally safe fluid. A method of adjusting the valve operating time shall be provided.

**M. ACCESS HATCH**

1. Access Hatch

A FDRND 300 PSF Rated Channel Style Hatch, as manufactured for ITT Flygt Corp., Trumbull, CT. (or equal) as noted on the contract drawing shall be supplied for access to the top of the pump station.

Material shall be 6061-T6 aluminum for bars, angles and extrusions. Diamond plate (1/4" thick) shall be 5086 aluminum.

Design of access hatch shall conform to O.S.H.A. standard 1910.23.

Unit shall be designed for 300 PSF. Channel frame and bearing must be cast into and supported by concrete. Hatch shall be designed using a maximum design stress of 17,300 psi as per the Aluminum Association, Inc. "Specifications for Aluminum Structures", with a safety of 2.2 applied to a minimum allowable tensile strength. Engineering calculations shall be supplied upon request.

Hatch door shall be supplied with a heavy duty, stainless steel pneu-spring, for ease of operation when opening cover. Cover shall be counterbalanced; so one person can easily open the hatch cover. Spring design shall accommodate ease of maintenance.

Hatch door shall be equipped with a grade 316 stainless steel hold open arm. Door shall loc open in the 90-degree position. Each hold open arm shall have red vinyl grip handle. Hold open arm shall be fastened to the frame with ½" grade 316 stainless steel bolts.

Channel frame shall be of extruded aluminum, with a continuous 1-1/4" anchor flange. Frame shall be a minimum of ¼" thick, with a minimum cross section of 7.5".

Each "FDRN-HD" style hatch shall be supplied with a 1-1/2" threaded drain coupler on the underside of the channel frame for pipe connection.

Hinges shall be heavy-duty design. Material shall be a brass alloy with a 65,000-psi tensile strength. Each hinge shall have a 3/8" grade 316 stainless steel pins. Hinges shall be bolted to the angle frame and diamond plate, with 316 stainless steel bolts and ny-lock nuts.

Each hatch shall be supplied with a grade 316 stainless steel slam lock, with keyway protected by threaded aluminum plug. Plug shall be flush with top of the ¼" diamond plate. Slam lock shall be fastened with four grade 316 stainless steel bolts and washers.

Each hatch shall be equipped with an aluminum lift handle. The lift handle shall be flush with the top of the ¼" diamond plate.

2. Hatch Safety Grate

The hatch shall be provided with a hinged aluminum "Safe Hatch" designed to combine covering of the hole per OSHA Standard 1910.23 and shall include fall through protection and controlled confined space entry.

Safety grates shall be as manufactured for ITT/Flygt Corp, shall be made of 6061-T6 aluminum with a minimum ultimate strength of 38,000 psi and minimum yield strength of 35,000 psi, as per ASTM B221. Grate design shall use safety factors as defined in the Specifications for Aluminum Structures, by the Aluminum Association Inc., 5$^{th}$ edition, December 1986 for Bridge Type Structures.

Aluminum grating shall be designed to withstand a minimum live load of 300 pounds per square foot. Deflection shall not exceed 1/150$^{th}$ of the span.

Aluminum grate opening shall be 5-inch by 5-inch, which will allow for visual inspection of the pit and level adjustment, once the access hatch is open.

Each grate shall be provided with a permanent hinging system, which will lock the grate in the 90-degree position once opened.

Design of the system must assure fall through protection is in place after the door has been closed, thereby protecting the next operator.

Each grate shall have an opening arm, with a red vinyl grip handle, which will allow opening of the grate, while providing the grate as a barrier between the operator and opening of the grate, while providing the grate as a barrier between the operator and the pit. The opening arm shall also be equipped with a controlled confined space entry-locking device (lock provided by owner). This locking device will prevent unauthorized entry to the confined space. The grating system will allow anyone to make visual inspection and level adjustments without entering the confined space.

Grate shall be painted with OSHA type safety orange paint.

Welding shall be in accordance with ANSI/AWS D1.2-90 Structural Welding Code for Aluminum.

## 2.03 OPERATIONS AND MAINTENANCE (O & M) MANUALS

A. The Manufacturer shall furnish three (3) Operations and Maintenance Instruction Manuals

B. O & M Manuals shall be prepared with clear instructions which will enable the Owner's personnel to operate and maintain the overall pump station and all equipment associated with each individual system installed within the station.

C. The manuals shall be prepared specifically for this installation. General literature from the equipment manufacturer, which is not specifically applicable to the operation and maintenance of the installed items, shall not be acceptable.

D. The manuals shall be bound in a three-ring vinyl binder with a heavy gauge clear vinyl overlay on the front cover and spine, which is insertable from the top. A title sheet tabulating project information including name and location of project; manufacturer's and consulting engineers' name and address; shall be placed in these pockets. Manuals shall contain an index, which list and locates all enclosed literature and drawings.

E. The manuals shall be comprehensive and as a minimum contain:

1. Descriptions and operating instructions for all system components within the station.
2. Instructions relevant to all modes of equipment operation.
3. Service and trouble-shooting instructions as may be available from select manufacturers of equipment supplied.
4. Procedures for the adjustment of equipment at initial start-up, during routine preventative maintenance, and following replacement or repair.
5. Instructions for testing and calibration of electronic components as may be required to determine proper performance.
6. As-Built Mechanical drawings and dimensional information showing the actual layout and location of all major equipment components within the structure.

7. As-Built Electrical schematic drawings of all wiring as supplied with the station. Motor controls, alarm system circuitry, electrical appliances, interconnections, etc. as well as all electrical components within the station to be fully identified and described.
8. Finish Schedule, listing all paints and / or special coatings utilized on the various components.

## STANDARD CONTROL PANEL SPECIFICATION

**SCOPE:**

A control system shall be supplied by the pump manufacturer containing all of the mechanical and electrical equipment necessary to provide for the operation of the submersible pump or pumps as depicted on the drawings.

**ENCLOSURE:**

The control panel enclosure shall be Nema 4X 304 stainless steel. The enclosure door shall be gasketed with a rubber composition material around the perimeter and shall be installed with a retainer to assure a positive weatherproof seal. The door shall open a minimum of 180 degrees. A padlock hasp shall be provided.

A polished inner door shall be mounted on a continuous aircraft aluminum hinge and shall contain cutouts for the protrusion of the circuit breakers and provide protection of personnel from internal live voltages. All pump controllers, control switches, pilot indicators, elapsed time meters and other operational devices shall be mounted on the inner door. The inner door shall open a minimum of 150 degrees to allow for access to the equipment for maintenance. A ¾" break shall be formed around the perimeter of the inner door to provide rigidity.

A back plate shall be manufactured from 12-gauge sheet steel and shall be finished with a primer coat and two (2) coats of baked on white enamel. All hardware shall be mounted using stainless steel machine thread screws. Sheet metal or self-tapping screws shall not be acceptable. All installed devices will be permanently identified with engraved legends.

**POWER DISTRIBUTION:**

The panel power distribution shall include all necessary components and be wired with stranded copper conductors rated at 90 degrees C. Conductor terminations shall be as recommended by the device manufacturer.

The power system shall contain incoming power terminals, motor circuit breakers control circuit breaker and convenience outlet breaker. All circuit breakers shall be heavy-duty thermal magnetic or motor circuit protector similar and equal to Square D type FAL. Each breaker shall be sized to adequately meet the operating conditions of the load and have a minimum interrupting capacity of 10,000 amps at 230 volts and 18,000 amps at 460 volts. Breakers shall be indicating type, providing “on/off/tripped” positions on the handle. They shall be quick-make quick-break on manual and automatic operation and have inverse time characteristics. Breakers shall be designed so that tripping of one pole automatically trips all poles.

Motor starters shall be open frame, across the line NEMA rated with individual overload protection on each phase. Motor starter contacts and coil shall be replaceable from the front of the starter without removal of the starter from its mounted position. Overload heaters shall be block type, utilizing melting alloy spindles, sized for the full load amperage of the motor. Adjustable overloads, definite purpose contactors, fractional size starters and horsepower rated contactors or starters shall not be acceptable.

A lightning transit protector shall be provided. The device shall be a solid-state device with a response time of less than 5 nanoseconds with a withstanding surge capacity of 6500 amperes. Units shall be instant recovery, long life and have no holdover currents.

The following shall be supplied as standard equipment:

a. 12-pin plug in phase/voltage monitor with two (2) sets of double pole double throw contacts.
b. Nema 4 rated Hand Off Auto switches.
c. Pump Run/Failure pilot lights as required.
d. Elapsed Time meters for each pump.
e. 50-watt condensation heater and thermostat.
f. Control Power transformer minimum of 2kvA.
g. GFCI Duplex convenience outlet on inner door.
h. Laminated wiring schematic adhered to the inside surface of the outer door.

**PUMP PROTECTIVE DEVICES:**

Each pump shall be protected by a solid-state relay to monitor motor winding temperature and seal leakage. The relays shall have and 11 pin octal base and shall be flanged for mounting on the inner door. The relay shall be powered by 24VAC, 28VDC or 120VAC supply. LED indicators shall be provided on the relay for power on, overtemp and seal fail conditions. An overtemp-reset pushbutton shall be mounted on the relay. The sensor input circuitry shall contain both hardware and software filters to provide noise immunity, as well as sensor input short circuit protection. The relay shall be MiniCas 120, model 14-407129 by ITT Flygt.

**PUMP CONTROLLER:**

GENERAL:

The pump controller shall consist of all the components, hardware and software to provide a trouble-free pumping station. The system shall be designed and specifically produced for the surveillance of the pump station. The system shall provide for interface to other RTU’s and SCADA systems for remote control and data collection. The RTU shall control the pumps as a

stand-alone unit in the event of a communications loss. The controller shall be an FMC as manufactured by ITT Flygt or pre-approved equal.

OPERATION:

Pump controller shall provide continuous monitoring of the wet well level via submersible pressure transducer. The pump controller shall start and stop pump based upon wet well level and operator programmed set points. The controller shall have provision for a float switch backup in event of transducer failure. The pump controller shall alternate pump cycles to ensure equal run times. The pump controller shall monitor pump protection features to provide alarms in event of impending pump failure. It shall also monitor pump performance data to provide operations personnel the ability to evaluate station performance.

HARDWARE:

The pump controller shall be programmed via built-in operator interface. The interface shall consist of pushbuttons in combination with a 2-line LCD backlit display in English. The front panel shall also include LED indicators for controller operation, communication status, alarm status, pump operation status, and individual critical alarms.

The front panel operator interface shall be rated IP65 (applicable to Nema 4 standard).

The pump controller shall contain a 486CPU, 32 bit 66 MHz processor, with a primary memory of 8 Megabytes D-RAM and a flash memory of 4 Megabytes. The memory shall be protected by a 3.6 VDC NiMH battery and have a watchdog function.

The pump controller shall provide 16 digital inputs, 8 digital outputs (6 relay normally open, 2 solid state normally open), and 4 analog inputs. The inputs/outputs shall meet the following:

a. All inputs/outputs shall be optically isolated.
b. Digital inputs shall be 11-30vdc, selectable logic.
c. Digital outputs shall have a max load of 2A at 250VAC/DC (relay) or have an output capacity of 100mA at 250VAC/DC (solid state).
d. Analog inputs shall be 4-20mADC with 12bit resolution and inaccuracy of 0.1%

In addition to the input/output features listed, the controller shall be expandable up to a total of 600 physical I/O points.

The pump controller shall operate from a supply voltage of 24VDC (-15% to +20%), and have a current consumption of 1A (no load). The controller shall be protected internally with a fuse rated at 2A.

The pump controller shall include 3 communications ports. One port shall be RS-232 and dedicated to service functions (local programming of controller with laptop). The other two ports shall be RS-232/485 capable, and available for use as communication interface to dialup modem, leased line modem, GSM modem, or radio. A PCMCIA slot shall also be provided for installation of internal modem.

The pump controller shall be UL listed.

The submersible transducer shall be a two wire device operating on 10-30VDC supply with a 4-20mADC level signal. The transducer shall have a temperature range of -20 to 80 degrees C and have an inaccuracy of plus or minus 0.1% of total range. The transducer shall be cable suspended and not dependent upon position. The sensor shall be ceramic, with a 316 stainless

steel sensor housing, Vitron o-ring and polyurethane vented cable. The transducer shall be LS 100, manufactured by ITT Flygt or pre-approved equal.

FUNCTIONS:

The pump controller shall operate the pumps in accordance with operator-programmed set points. The controller shall also be capable of remote start-stop functions via network. The following information shall be observed on the front panel display:

a. Cross-section areas of the wet well
b. Start-stop pump levels
c. Alarm levels for low, high and overflow
d. Nominal capacities of the pumps
e. Current flow and accumulated flow
f. Pumped volume for two days
g. Number of starts for each pump
h. Run time for each pump
i. Amp draws for each pump

The pump controller shall provide for local display, acknowledgement and remote notification of alarm conditions. The controller shall log up to 1000 alarm events. Alarm capabilities shall include:

a. Wet Well High Level
b. Wet Well Low Level
c. Wet Well Overflow
d. Pump Over current
e. Pump Undercurrent
f. Pump Fail to Start
g. Pump Over temperature
h. Pump Seal Fail
i. Pump Service Alarm (when pump run time exceeds preset service interval)
j. Intrusion Alarm
k. Personnel Alarm (adjustable time-delay alarm if not acknowledged by on-site personnel)
l. Communications Failure
m. Test Alarm (periodic test alarm for communications)

The pump controller shall be capable, via network, of blocking up to five upstream stations should local conditions prevent pumping operations.

The pump controller shall provide flow calculations based on the geometry of the wet well. Five cross-sectional areas shall be used for inflow calculation, which shall be updated every pumping cycle. Pump capacity shall be calculated from wet well discharge time and inflow. Pumped volume (total) shall be calculated from current pump capacity.

The controller shall calculate station overflow. A level sensor shall be installed at the overflow point, and the controller shall register overflow time, number of overflows and accumulated volume.

The controller shall provide a sump cleaning function. At preset intervals the pumps shall be allowed lower the wet well level to the bottom of the volute in order to remove built up solid debris in the sump. The controller shall also allow periodic timed pump cycles in low inflow stations to prevent the wet well from becoming septic.

The pump controller shall be capable of receiving an input from a rain gauge or tipping bucket. The controller shall log this data for piping analysis by operations personnel.

The pump controller shall calculate energy consumption from preset voltage level and motor current readings.

The pump controller shall contain a real-time clock and shall time and date stamp all logged data. The controller shall store logged data for a period of up to 30 days.

COMMUNICATIONS:

The pump controller shall be able to communicate via leased phone line, dialed phone line, GSM, radio or LAN.

The pump controller shall be capable of communicating via AquaCom, MODBUS or Comli protocols. The controller shall also be capable of sending SMS messages.

HMI SOFTWARE:

The pump controller shall communicate to HMI software that is Windows based with intuitive menu-type navigation. The software shall include templates to facilitate future system expansion by operations personnel. The software shall also be customizable to portray the system in realistic detail. The software shall provide the ability to observe station operating conditions, remote control of pumps and other station equipment, observe and change set points, monitor

and acknowledge alarms, log system historical data and generate reports and trend charts. The HMI software shall be AquaView by ITT Flygt or pre-approved equal.

Historical data trend charts shall be based on 1-30 minute time periods and shall include the following:

a. Wet well levels
b. Motor Currents
c. Calculated capacity of wet well
d. Inflow
e. Pumped Volume
f. Overflow

In addition to the available historical data, the following daily reports shall be provided:

a. Pump run times
b. Number of pump starts
c. Average value of pump capacity
d. Pumped volume
e. Number of overflow events
f. Overflow duration
g. Overflow volume
h. Station blocked events (time and date stamped)
i. Energy consumption

**LOCAL ALARM:**

A top mounted flashing red alarm light shall be provided. The alarm light shall be weatherproof and shatterproof with a minimum 4-inch diameter and 40 watt lamp.

An alarm horn shall be provided with an alarm silence button. The alarm horn shall be mounted on the left side of the enclosure with a weatherproof back box. The horn shall provide a signal of not less that 90db at 10 feet.

The alarm light and horn shall be used to signal those alarms indicated on the drawings.

**MISCELLANEOUS:**

A final as-built drawing encapsulated in Mylar shall be attached to the inside surface of the outer door. A list of all legends shall be included.

The control panel shall be UL508A listed.

12. CONCRETE

Concrete for inverts, thrust blocks, concrete encasement, concrete fill, etc. shall be minimum 3,000 psi @ 28 days.

13. RIPRAP

Description: This work shall consist of constructing a riprap as shown on the plans and in reasonably close conformity to the lines and grades as detailed or directed by the Engineer.

Material: Riprap shall consist of stones weighing from 10 pounds to 200 pounds except that when available, suitable stones weighing more than 200 pounds may be used. Approximately 50 percent of the stones by volume shall exceed a unit weight of 50 pounds.

Construction Requirements: Riprap shall be placed upon a slope properly graded and compacted as called for. Plain riprap shall be placed full depth in one operation without special handwork, shall be approximately true to the required slope line and grade and shall be uniform in appearance.

14. DUST CONROL

Dust control shall be exercised throughout the entire project by using brooms, water, calcium or any combination thereof to control all dust generated during the process of construction.

15. PIPE CLEANING

At the conclusion of the work, the Contractor shall thoroughly clean the sewers by flushing with water and flushing ball or other means to remove dirt, stones and other material. Prior to acceptance, all pipe lines shall be inspected for cleanliness and to be sure no sandbags, broken pipe or other obstruction exist.
The work area, property adjacent to the project and all grounds occupied by the Contractor in connection with the work shall be cleaned of all rubbish, excess material, temporary structures and equipment and the ground graded and restored to match the surrounding terrain.

## 16. LOAM, FERTILIZER AND SEED

### a. General

The loaming, fertilizing and seeding shall consist of furnishing, placing, grading, seeding and fertilizing in all disturbed areas, except where pavement or gravel is installed, and where indicated on the drawings or as directed by the Engineer.

### b. Loam

Loam shall be rototilled topsoil free of stones, large clods, roots of trees or shrubs or other foreign matter. Muck, peat or other excessively acid soils will not be used.

### c. Grass Seed

Grass seed shall be fresh, clean, new crop seed. Seed shall be delivered to the work site with each container bearing the dealer's guaranteed analysis. Grass seed shall have minimum percentages of germination and of purity as listed below:

| Kind of Grass | Proportion by Weight | Purity | Germination |
|---|---|---|---|
| Annual Ryegrass | 10-25% | 97% | 90% |
| Kentucky 31 Fescue | 15-25% | 97% | 85% |
| Perennial Ryegrass | 5-25% | 97% | 90% |
| Chewings Fescue | 10-20% | 95% | 90% |
| Creeping Red Fescue | 0-10% | 95% | 85% |
| Kentucky Bluegrass | 8-30% | 5% | 80% |

NOTE: Weeds and inert materials shall not exceed 2%.

### d. Construction

The loam is to be spread and raked to a depth of at least three inches. Fertilizer shall be spread, graded at a minimum rate of 30 pounds per 1,000 square feet. Lime shall be spread at a minimum rate of 20 pounds per 1,000 square feet. After spreading the seed at a rate of three pounds per 1,000 square feet, the area shall be lightly raked and rolled.

The Contractor shall be responsible for the protection and maintenance of the seeded area until a satisfactory uniform stand of grass has been established. Where seed fails to germinate, resulting in bare spots, the Contractor shall reseed, at his own expense, until satisfactory to the Engineer.

## 17. MAINTENANCE OF TRAFFIC

### a. General

Work included: Work under this section shall consist of maintaining traffic on the roads, streets or highways on which the work is being carried out. The work shall be carried out in accordance with the following paragraph:

The Contractor will be responsible for conducting the work in accordance with the requirements of the permits and any penalties due to the failure of the Contractor to comply with the permit.

b. Detours and Road Accessibility

The contractor shall contact the responsible heads of the Fire, Police, and other appropriate governing bodies of the municipality in order to obtain necessary permits and determine the requirements of said departments with respect to traffic control, alternate vehicular access routes, and the like. Wherever detours are permitted the size, construction and location of signs shall conform with local and state requirements and/or standards. Detour routes shall be adequately posted to assist the motorist to return to his route of travel. Where the roadway under construction is the only means of vehicular access to a particular area, the Contractor shall provide continual access to the area for residents and emergency vehicles.

c. Working Procedures

The contractor shall be responsible for continuous traffic control as directed by the State, City and the District. The methods of traffic control shall conform to State regulations and requirements and to the "Manual on Uniform Traffic Control Devices for Street and Highways". In general, the Contractor shall maintain continuous two-way traffic during working and non-working hours. In the event that two-way traffic cannot be maintained (i.e. highway crossings, etc.) the Contractor shall provide traffic officers to maintain traffic flow. Flagmen shall be provided at all times that work is being conducted within the limits of the highway.

A responsible representative of the Contractor shall be available during all periods of time that the Contractor is not actually working on the project. These periods of time shall include nights, weekends, holidays and other times the work may be suspended.

The representative shall have the authority and the means to repair and maintain the roadway, signs and lighting during the above periods of time, and the telephone number where he can be reached shall be given to the Local Police Department and the District.

The Contractor shall be responsible for barricades and warning signs with flashing lights, as may be required, to be furnished and installed subject to the approval of the District. Work areas signs shall be provided at local work sites. The size, legend and position of the various construction signs are shown in Plates C-MDOT-11, 12 and 13 and shall be in conformance with the Manual of Uniform Traffic Control Devices. All construction signs shall have a black legend with an orange background. The "Sewer Construction Ahead" sign and "End Construction" sign are to be placed 1500 feet from each end of the project and the "Sewer Construction Ahead" sign shall also be placed at each major intersection. All current work areas shall be provided with reflectorized signs overnight to facilitate traffic and maintain safety. A "Blasting Area" within three hundred feet of any traveled way shall be marked by approved signs with information similar to the following: "BLASTING AREA, TURN OFF RADIO TRANSMITTERS" and the reverse side "END OF BLASTING AREA".

d. No interference with Traffic

The Contractor shall conduct his work so as not to interfere with traffic, both vehicular and pedestrian. Traffic originating or having business along the section of the road under construction shall be provided with a passable and adequate road. To

accomplish this may necessitate the bridging over or the construction of structures in sections or the providing of short detours around them. The work shall be progressed in such a manner that the access to private or business driveways adjacent to the improvements will be interfered with as little as possible.

Where feasible, bridging over the trenches or completed work of other acceptable methods shall be used for this purpose. The Contractor shall furnish adequate protection to the public by installing and maintaining adequate warning signs, flags, lights, paths, railings, barricades, watchmen and signalmen where necessary or called for by the District.

At least one-way traffic shall be maintained at all times. All traffic controls shall be in accordance with the latest edition of the Manual on Uniform Traffic Control Devices for Streets and Highways, as issued by the Federal Highway Administration.

All equipment and material will be stored off the traveled-way and if on the shoulders, properly delineated at night.

All work in the traveled-way and shoulder shall be completed by sunset of each working day. At the close of each weeks work or before any holiday all open trenches will be completely backfilled and equipment and materials removed from the traveled-way and shoulders for the coming weekend or holiday.

No detours of any sort shall be used during the period of construction without prior permission from the proper authorities.

Failure to meet the requirements of this item will result in immediate suspension of work of the project until the requirements can be met.

18, STREET OPENINGS IN CITIES AND TOWNS

The Contractor shall obtain and pay all Street Opening Permits for any City or Town in the District's service area prior to starting actual construction in any roadway.

The District may assist the Contractor in obtaining the necessary permits.

19, STREET OPENINGS IN STATE HIGHWAYS

The Contractor shall obtain and pay all State Highway Opening Permits prior to starting actual construction in any State Highway.

The District may assist the Contractor in obtaining the necessary permits. Pavement replacement in the State Highways will be done by the State of Maine Department of Transportation or by other arrangements made by Contractor and approved by the District.

# Section VI: Standard Installation Details

## Water Index

RESIDENTIAL SERVICE ENTRANCE DETAIL ……. 83
TRAILER OR SLAB SERVICE ENTRANCE DETAIL …… 84
MULTI-METER RESIDENTIAL SERVICE ENTRANCE DETAIL ……. 85
COMMERCIAL SERVICE ENTRANCE DETAIL ……. 86
COMMERCIAL SERVICE ENTRANCE SLAB ON GRADE …….. 87
COMMERCIAL FIRE SERVICE ENTRANCE W/DOMESTIC FEED ……... 88
TYPICAL TRENCH DETAIL ……... 89
6” FIRE SERVICE THRUST RESTRAINT DETAIL ……. 90
FITTING & THRUST BLOCK DETAIL …… 91
VALVE BOX DETAIL …… 92
SERVICE BOX DETAIL ……... 93
CATCH BASIN INSULATION DETAIL …… 94
STORM DRAIN-WATERMAIN PARALLEL RUNS INSULATION DETAIL …….. 95
STORM DRAIN-WATERMAIN INTERSECTING RUNS INSULATION DETAIL …… 96
HYDRANT INSTALLATION DETAIL …….. 97
TEE DETAIL …… 98
END OF MAIN DETAIL …….. 99
SERVICE BOX DETAIL IN PAVED AREAS ……... 100
AIR RELEASE INSTALLATION DETAIL ……. 101

## Sewer Index

TYPICAL TRENCH SECTION …… 102
STANDARD PRECAST MANHOLE …… 103
STANDARD PRECAST DROP MANHOLE …… 104
TYPICAL MANHOLE, INVERT & BRICK CHANNEL …….. 105
TYPICAL CONCRETE ENCASEMENT …… 106
PRECAST CATCH BASIN …… 107
NEW SEWER CONNECTION …….. 108
NEW SEWER CONNECTION – CHIMNEYS ……. 109
FORCE MAIN TERMINUS ……. 110
PRECAST CLEANOUT MANHOLE ……. 111
FORCE MAIN SERVICE VALVE BOX ……... 112
AIR RELEASE MANHOLE …… 113

The pump controller shall be capable of receiving an input from a rain gauge or tipping bucket. The controller shall log this data for piping analysis by operations personnel.

The pump controller shall calculate energy consumption from preset voltage level and motor current readings.

The pump controller shall contain a real-time clock and shall time and date stamp all logged data. The controller shall store logged data for a period of up to 30 days.

COMMUNICATIONS:

The pump controller shall be able to communicate via leased phone line, dialed phone line, GSM, radio or LAN.

The pump controller shall be capable of communicating via AquaCom, MODBUS or Comli protocols. The controller shall also be capable of sending SMS messages.

HMI SOFTWARE:

The pump controller shall communicate to HMI software that is Windows based with intuitive menu-type navigation. The software shall include templates to facilitate future system expansion by operations personnel. The software shall also be customizable to portray the system in realistic detail. The software shall provide the ability to observe station operating conditions, remote control of pumps and other station equipment, observe and change set points, monitor

and acknowledge alarms, log system historical data and generate reports and trend charts. The HMI software shall be AquaView by ITT Flygt or pre-approved equal.

Historical data trend charts shall be based on 1-30 minute time periods and shall include the following:

a. Wet well levels
b. Motor Currents
c. Calculated capacity of wet well
d. Inflow
e. Pumped Volume
f. Overflow

In addition to the available historical data, the following daily reports shall be provided:

a. Pump run times
b. Number of pump starts
c. Average value of pump capacity
d. Pumped volume
e. Number of overflow events
f. Overflow duration
g. Overflow volume
h. Station blocked events (time and date stamped)
i. Energy consumption

**LOCAL ALARM:**

A top mounted flashing red alarm light shall be provided. The alarm light shall be weatherproof and shatterproof with a minimum 4-inch diameter and 40 watt lamp.

An alarm horn shall be provided with an alarm silence button. The alarm horn shall be mounted on the left side of the enclosure with a weatherproof back box. The horn shall provide a signal of not less that 90db at 10 feet.

The alarm light and horn shall be used to signal those alarms indicated on the drawings.

**MISCELLANEOUS:**

A final as-built drawing encapsulated in Mylar shall be attached to the inside surface of the outer door. A list of all legends shall be included.

The control panel shall be UL508A listed.

12. CONCRETE

Concrete for inverts, thrust blocks, concrete encasement, concrete fill, etc. shall be minimum 3,000 psi @ 28 days.

13. RIPRAP

Description: This work shall consist of constructing a riprap as shown on the plans and in reasonably close conformity to the lines and grades as detailed or directed by the Engineer.

Material: Riprap shall consist of stones weighing from 10 pounds to 200 pounds except that when available, suitable stones weighing more than 200 pounds may be used. Approximately 50 percent of the stones by volume shall exceed a unit weight of 50 pounds.

Construction Requirements: Riprap shall be placed upon a slope properly graded and compacted as called for. Plain riprap shall be placed full depth in one operation without special handwork, shall be approximately true to the required slope line and grade and shall be uniform in appearance.

14. DUST CONROL

Dust control shall be exercised throughout the entire project by using brooms, water, calcium or any combination thereof to control all dust generated during the process of construction.

15. PIPE CLEANING

At the conclusion of the work, the Contractor shall thoroughly clean the sewers by flushing with water and flushing ball or other means to remove dirt, stones and other material. Prior to acceptance, all pipe lines shall be inspected for cleanliness and to be sure no sandbags, broken pipe or other obstruction exist.
The work area, property adjacent to the project and all grounds occupied by the Contractor in connection with the work shall be cleaned of all rubbish, excess material, temporary structures and equipment and the ground graded and restored to match the surrounding terrain.

## 16. LOAM, FERTILIZER AND SEED

### a. General

The loaming, fertilizing and seeding shall consist of furnishing, placing, grading, seeding and fertilizing in all disturbed areas, except where pavement or gravel is installed, and where indicated on the drawings or as directed by the Engineer.

### b. Loam

Loam shall be rototilled topsoil free of stones, large clods, roots of trees or shrubs or other foreign matter. Muck, peat or other excessively acid soils will not be used.

### c. Grass Seed

Grass seed shall be fresh, clean, new crop seed. Seed shall be delivered to the work site with each container bearing the dealer's guaranteed analysis. Grass seed shall have minimum percentages of germination and of purity as listed below:

| Kind of Grass | Proportion by Weight | Purity | Germination |
|---|---|---|---|
| Annual Ryegrass | 10-25% | 97% | 90% |
| Kentucky 31 Fescue | 15-25% | 97% | 85% |
| Perennial Ryegrass | 5-25% | 97% | 90% |
| Chewings Fescue | 10-20% | 95% | 90% |
| Creeping Red Fescue | 0-10% | 95% | 85% |
| Kentucky Bluegrass | 8-30% | 5% | 80% |

NOTE: Weeds and inert materials shall not exceed 2%.

### d. Construction

The loam is to be spread and raked to a depth of at least three inches. Fertilizer shall be spread, graded at a minimum rate of 30 pounds per 1,000 square feet. Lime shall be spread at a minimum rate of 20 pounds per 1,000 square feet. After spreading the seed at a rate of three pounds per 1,000 square feet, the area shall be lightly raked and rolled.

The Contractor shall be responsible for the protection and maintenance of the seeded area until a satisfactory uniform stand of grass has been established. Where seed fails to germinate, resulting in bare spots, the Contractor shall reseed, at his own expense, until satisfactory to the Engineer.

## 17. MAINTENANCE OF TRAFFIC

### a. General

Work included: Work under this section shall consist of maintaining traffic on the roads, streets or highways on which the work is being carried out. The work shall be carried out in accordance with the following paragraph:

The Contractor will be responsible for conducting the work in accordance with the requirements of the permits and any penalties due to the failure of the Contractor to comply with the permit.

b. Detours and Road Accessibility

The contractor shall contact the responsible heads of the Fire, Police, and other appropriate governing bodies of the municipality in order to obtain necessary permits and determine the requirements of said departments with respect to traffic control, alternate vehicular access routes, and the like. Wherever detours are permitted the size, construction and location of signs shall conform with local and state requirements and/or standards. Detour routes shall be adequately posted to assist the motorist to return to his route of travel. Where the roadway under construction is the only means of vehicular access to a particular area, the Contractor shall provide continual access to the area for residents and emergency vehicles.

c. Working Procedures

The contractor shall be responsible for continuous traffic control as directed by the State, City and the District. The methods of traffic control shall conform to State regulations and requirements and to the "Manual on Uniform Traffic Control Devices for Street and Highways". In general, the Contractor shall maintain continuous two-way traffic during working and non-working hours. In the event that two-way traffic cannot be maintained (i.e. highway crossings, etc.) the Contractor shall provide traffic officers to maintain traffic flow. Flagmen shall be provided at all times that work is being conducted within the limits of the highway.

A responsible representative of the Contractor shall be available during all periods of time that the Contractor is not actually working on the project. These periods of time shall include nights, weekends, holidays and other times the work may be suspended.

The representative shall have the authority and the means to repair and maintain the roadway, signs and lighting during the above periods of time, and the telephone number where he can be reached shall be given to the Local Police Department and the District.

The Contractor shall be responsible for barricades and warning signs with flashing lights, as may be required, to be furnished and installed subject to the approval of the District. Work areas signs shall be provided at local work sites. The size, legend and position of the various construction signs are shown in Plates C-MDOT-11, 12 and 13 and shall be in conformance with the Manual of Uniform Traffic Control Devices. All construction signs shall have a black legend with an orange background. The "Sewer Construction Ahead" sign and "End Construction" sign are to be placed 1500 feet from each end of the project and the "Sewer Construction Ahead" sign shall also be placed at each major intersection. All current work areas shall be provided with reflectorized signs overnight to facilitate traffic and maintain safety. A "Blasting Area" within three hundred feet of any traveled way shall be marked by approved signs with information similar to the following: "BLASTING AREA, TURN OFF RADIO TRANSMITTERS" and the reverse side "END OF BLASTING AREA".

d. No interference with Traffic

The Contractor shall conduct his work so as not to interfere with traffic, both vehicular and pedestrian. Traffic originating or having business along the section of the road under construction shall be provided with a passable and adequate road. To

accomplish this may necessitate the bridging over or the construction of structures in sections or the providing of short detours around them. The work shall be progressed in such a manner that the access to private or business driveways adjacent to the improvements will be interfered with as little as possible.

Where feasible, bridging over the trenches or completed work of other acceptable methods shall be used for this purpose. The Contractor shall furnish adequate protection to the public by installing and maintaining adequate warning signs, flags, lights, paths, railings, barricades, watchmen and signalmen where necessary or called for by the District.

At least one-way traffic shall be maintained at all times. All traffic controls shall be in accordance with the latest edition of the Manual on Uniform Traffic Control Devices for Streets and Highways, as issued by the Federal Highway Administration.

All equipment and material will be stored off the traveled-way and if on the shoulders, properly delineated at night.

All work in the traveled-way and shoulder shall be completed by sunset of each working day. At the close of each weeks work or before any holiday all open trenches will be completely backfilled and equipment and materials removed from the traveled-way and shoulders for the coming weekend or holiday.

No detours of any sort shall be used during the period of construction without prior permission from the proper authorities.

Failure to meet the requirements of this item will result in immediate suspension of work of the project until the requirements can be met.

18, STREET OPENINGS IN CITIES AND TOWNS

The Contractor shall obtain and pay all Street Opening Permits for any City or Town in the District's service area prior to starting actual construction in any roadway.

The District may assist the Contractor in obtaining the necessary permits.

19, STREET OPENINGS IN STATE HIGHWAYS

The Contractor shall obtain and pay all State Highway Opening Permits prior to starting actual construction in any State Highway.

The District may assist the Contractor in obtaining the necessary permits. Pavement replacement in the State Highways will be done by the State of Maine Department of Transportation or by other arrangements made by Contractor and approved by the District.

# Section VI: Standard Installation Details

## Water Index

RESIDENTIAL SERVICE ENTRANCE DETAIL ..... 83
TRAILER OR SLAB SERVICE ENTRANCE DETAIL ..... 84
MULTI-METER RESIDENTIAL SERVICE ENTRANCE DETAIL ..... 85
COMMERCIAL SERVICE ENTRANCE DETAIL ..... 86
COMMERCIAL SERVICE ENTRANCE SLAB ON GRADE ..... 87
COMMERCIAL FIRE SERVICE ENTRANCE W/DOMESTIC FEED ..... 88
TYPICAL TRENCH DETAIL ..... 89
6" FIRE SERVICE THRUST RESTRAINT DETAIL ..... 90
FITTING & THRUST BLOCK DETAIL ..... 91
VALVE BOX DETAIL ..... 92
SERVICE BOX DETAIL ..... 93
CATCH BASIN INSULATION DETAIL ..... 94
STORM DRAIN-WATERMAIN PARALLEL RUNS INSULATION DETAIL ..... 95
STORM DRAIN-WATERMAIN INTERSECTING RUNS INSULATION DETAIL ..... 96
HYDRANT INSTALLATION DETAIL ..... 97
TEE DETAIL ..... 98
END OF MAIN DETAIL ..... 99
SERVICE BOX DETAIL IN PAVED AREAS ..... 100
AIR RELEASE INSTALLATION DETAIL ..... 101

## Sewer Index

TYPICAL TRENCH SECTION ..... 102
STANDARD PRECAST MANHOLE ..... 103
STANDARD PRECAST DROP MANHOLE ..... 104
TYPICAL MANHOLE, INVERT & BRICK CHANNEL ..... 105
TYPICAL CONCRETE ENCASEMENT ..... 106
PRECAST CATCH BASIN ..... 107
NEW SEWER CONNECTION ..... 108
NEW SEWER CONNECTION – CHIMNEYS ..... 109
FORCE MAIN TERMINUS ..... 110
PRECAST CLEANOUT MANHOLE ..... 111
FORCE MAIN SERVICE VALVE BOX ..... 112
AIR RELEASE MANHOLE ..... 113

# RESIDENTIAL SERVICE ENTRANCE DETAIL

## 5/8", 3/4" & 1" METERS

### GREATER AUGUSTA UTILITY DISTRICT

**REVISED JAN. 2008 NTS**

## NOTES:

1. The Greater Augusta Utility District, (G.A.U.), recommends the use of 1 inch copper to the hot water tank and 3/4" copper hot and cold feed lines to the bathrooms and kitchen where the static pressure is less than 40 psig.

   Where the static pressure is between 55 and 40 psig, the above pipe sizes could all be changed to a minimum of 3/4 inch.

   Where the static pressure is 55 psig or greater, the line feeding the hot water tank should be a minimum of 3/4 inches while all feed lines after (downstream) of the hot water tank may be reduced to a minimum of 1/2 inches where runs to fixtures are not excessive.

2. The owner must provide a clean, dry, accessable and warm (continually above 45 degrees F) location for the meter installation.

   G.A.U. must install a 22 gauge wire from meter to radio read unit on exterior wall. This should be accomplished during construction, before interior insulation/ drywall is installed.

3. Provide a solid piece of copper between ball or gate valves of the same size as service line entering building or size service line has been reduced to.

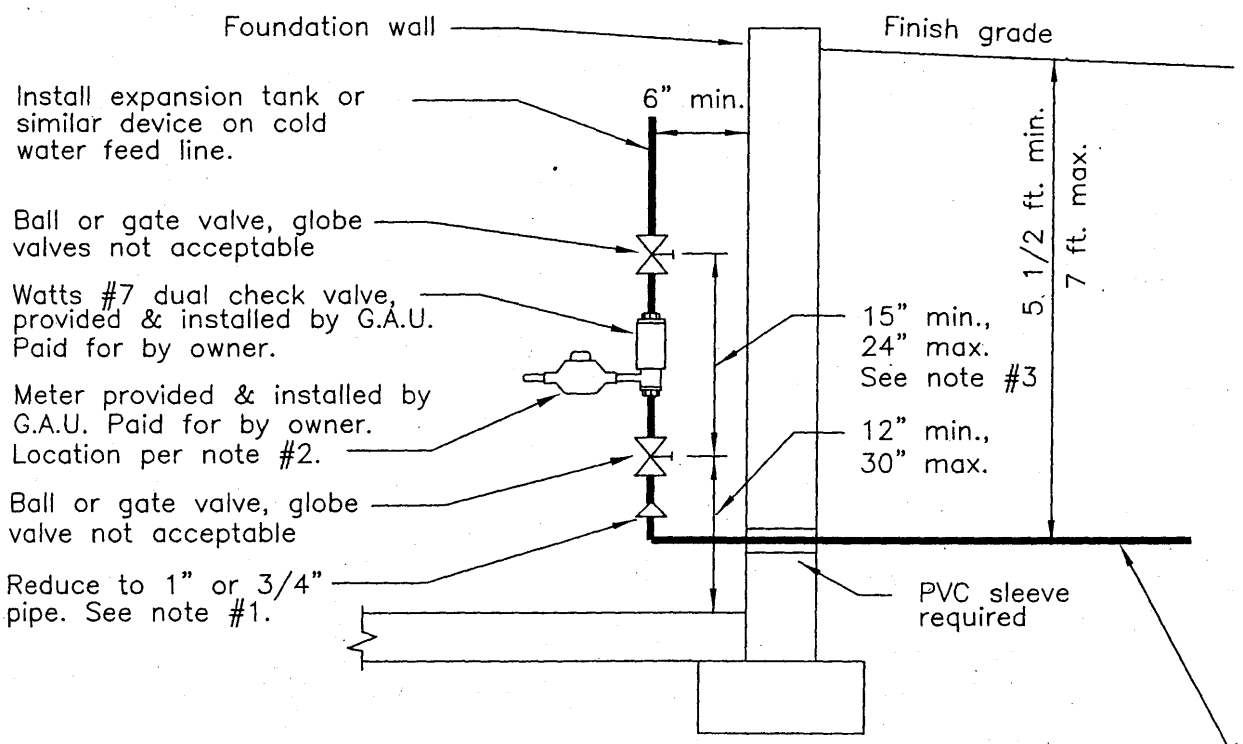


Service line from street, size & materials to be approved by G.A.U. Only TYPE "K" copper tubing or 200 psig rated CTS polyethylene tubing are acceptable for service lines. Sand to be used for backfill. Metalic tracer cable to be installed 3' above CTS PE if utilized.

# TRAILER OR SLAB SERVICE ENTRANCE DETAIL

## GREATER AUGUSTA UTILITY DISTRICT

**REVISED JAN. 2008 NTS**

NOTES:

1. Heat trace and insulate service from approximately 2'–6" below slab to the top of the sleeve which abuts the base of the trailer.
2. Locate meter within 18 inches of outside skirting. Provide access door for installing and inspecting the meter.
3. Alternate meter location – inside trailer. For this, provide valves for meter as shown for inside installation, see RESIDENTIAL SERVICE ENTRANCE – 5/8", 3/4" & 1" METERS.
4. Provide a solid piece of copper between ball or gate valves of the same size as service line entering building or size service line has been reduced to.

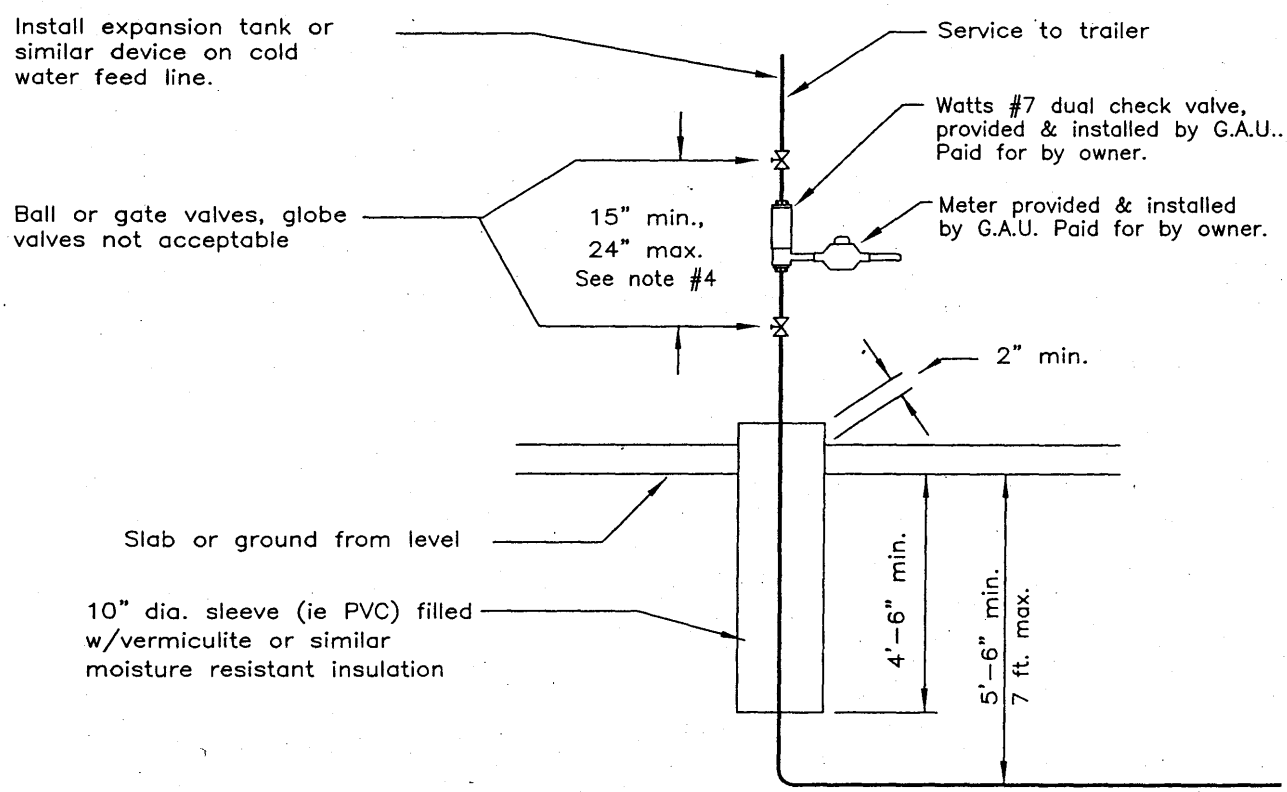


Service line from street, size & materials to be approved by G.A.U. Only TYPE "K" copper tubing or 200 psig rated CTS polyethylene tubing are acceptable for service lines. Sand to be used for backfill. Metalic tracer cable to be installed 3' above CTS PE if utilized.

# RESIDENTIAL SERVICE ENTRANCE DETAIL
# MULTI-METER ARRANGEMENT
## 5/8", 3/4" & 1" METERS
### GREATER AUGUSTA UTILITY DISTRICT
REVISED JAN. 2008 NTS

## NOTES:

1. The Greater Augusta Utility District, (G.A.U.), recommends the use of 1 inch copper to the hot water tank and 3/4" copper hot and cold feed lines to the bathrooms and kitchen where the static pressure is less than 40 psig.

   Where the static pressure is between 55 and 40 psig, the above pipe sizes could all be changed to a minimum of 3/4 inch.

   Where the static pressure is 55 psig or greater, the line feeding the hot water tank should be a minimum of 3/4 inches while all feed lines after (downstream) of the hot water tank may be reduced to a minimum of 1/2 inches where runs to fixtures are not excessive.

2. The owner must provide a clean, dry, accessable and warm (continually above 45 degrees F) location for the meter installation.

   G.A.U. must install a 22 gauge wire from meter to radio read unit on exterior wall. This should be accomplished during construction, before interior insulation/ drywall is installed.

3. Provide a solid piece of copper between ball or gate valves of the same size as service line entering building or size service line has been reduced to.

4. This detail for multi–unit residential with 4 units or less. For multi–unit residential with more than 4 units, check valves shall be provided and installed by owner downstream of second valve.

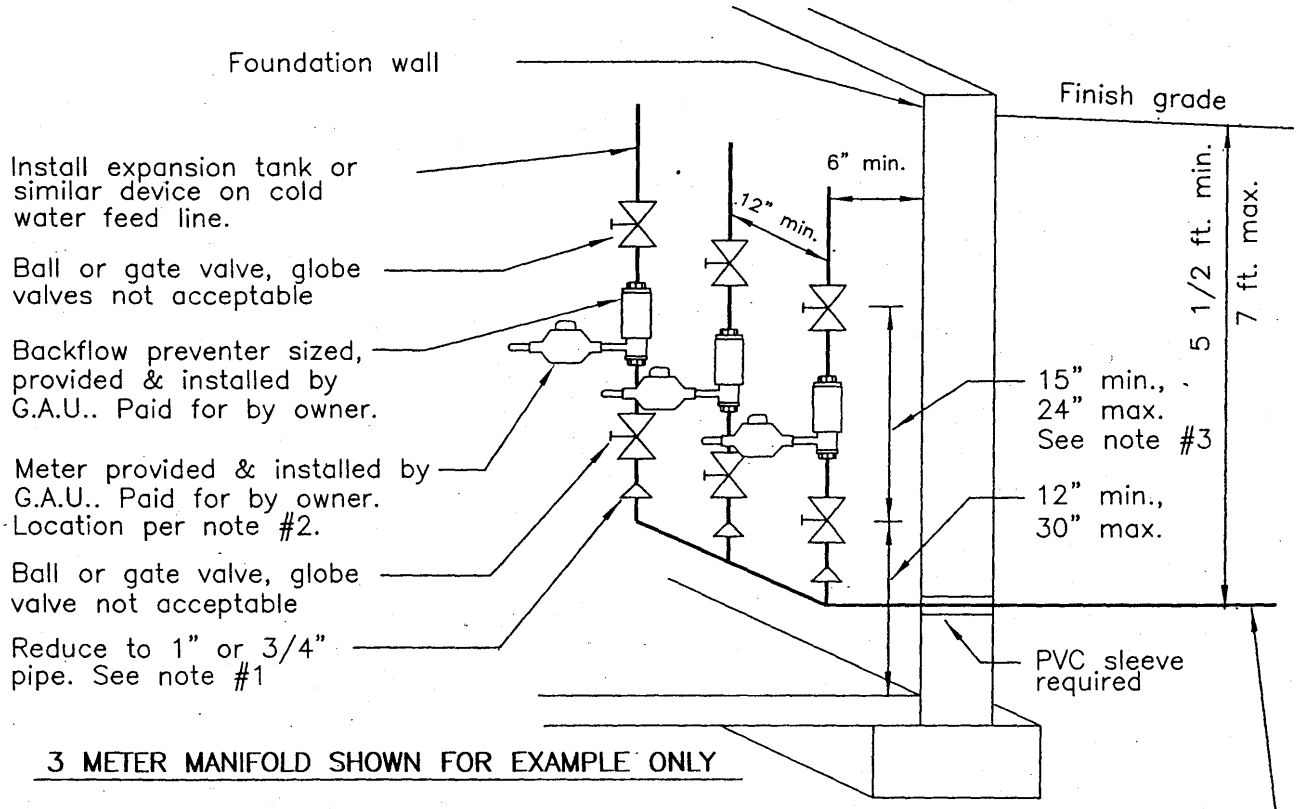


3 METER MANIFOLD SHOWN FOR EXAMPLE ONLY

Service line from street, size & materials to be approved by G.A.U. Only TYPE "K" copper tubing or 200 psig rated CTS polyethylene tubing are acceptable for service lines. Sand to be used for backfill. Metalic tracer cable to be installed 3' above CTS PE if utilized.

# COMMERCIAL SERVICE ENTRANCE DETAIL

## 5/8", 3/4" & 1" METERS

### GREATER AUGUSTA UTILITY DISTRICT

**REVISED JAN. 2008 NTS**

## NOTES:

1. The Greater Augusta Utiltiy District, (G.A.U.), recommends the use of 1 inch copper to the hot water tank and 3/4" copper hot and cold feed lines to the bathrooms and kitchen where the static pressure is less than 40 psig.

   Where the static pressure is between 55 and 40 psig, the above pipe sizes could all be changed to a minimum of 3/4 inch.

   Where the static pressure is 55 psig or greater, the line feeding the hot water tank should be a minimum of 3/4 inches while all feed lines after (downstream) of the hot water tank may be reduced to a minimum of 1/2 inches where runs to fixtures are not excessive.

2. The owner must provide a clean, dry, accessable and warm (continually above 45 degrees F) location for the meter installation.

   G.A.U. must install a 22 gauge wire from meter to radio read unit on exterior wall. This should be accomplished during construction, before interior insulation/ drywall is installed.

3. Provide a solid piece of copper between ball or gate valves of the same size as service line entering building or size service line has been reduced to.

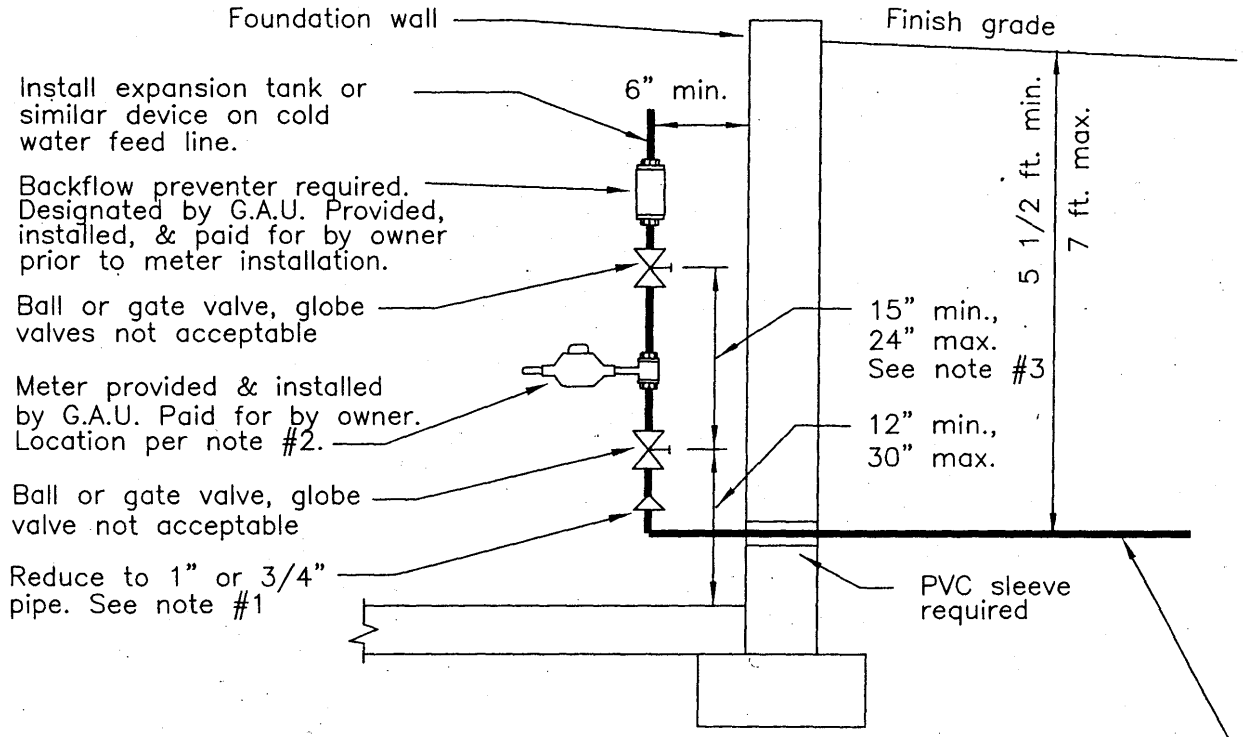


Service line from street, size & materials to be approved by G.A.U. Only TYPE "K" copper tubing or 200 psig rated CTS polyethylene tubing are acceptable for service lines. Sand to be used for backfill. Metalic tracer cable to be installed 3' above CTS PE if utilized.

# COMMERCIAL SERVICE ENTRANCE DETAIL
# SLAB ON GRADE
## 5/8", 3/4" & 1" METERS
### GREATER AUGUSTA UTILITY DISTRICT
REVISED JAN. 2008 NTS

NOTES:

1. The Greater Augusta Utility District, (G.A.U.), recommends the use of 1 inch copper to the hot water tank and 3/4" copper hot and cold feed lines to the bathrooms and kitchen where the static pressure is less than 40 psig.

   Where the static pressure is between 55 and 40 psig, the above pipe sizes could all be changed to a minimum of 3/4 inch.

   Where the static pressure is 55 psig or greater, the line feeding the hot water tank should be a minimum of 3/4 inches while all feed lines after (downstream) of the hot water tank may be reduced to a minimum of 1/2 inches where runs to fixtures are not excessive.

2. The owner must provide a clean, dry, accessable and warm (continually above 45 degrees F) location for the meter installation.

   G.A.U. must install a 22 gauge wire from meter to radio read unit on exterior wall. This should be accomplished during construction, before interior insulation/ finished wall is installed.

3. Provide a solid piece of copper between ball or gate valves of the same size as service line entering building or size service line has been reduced to.

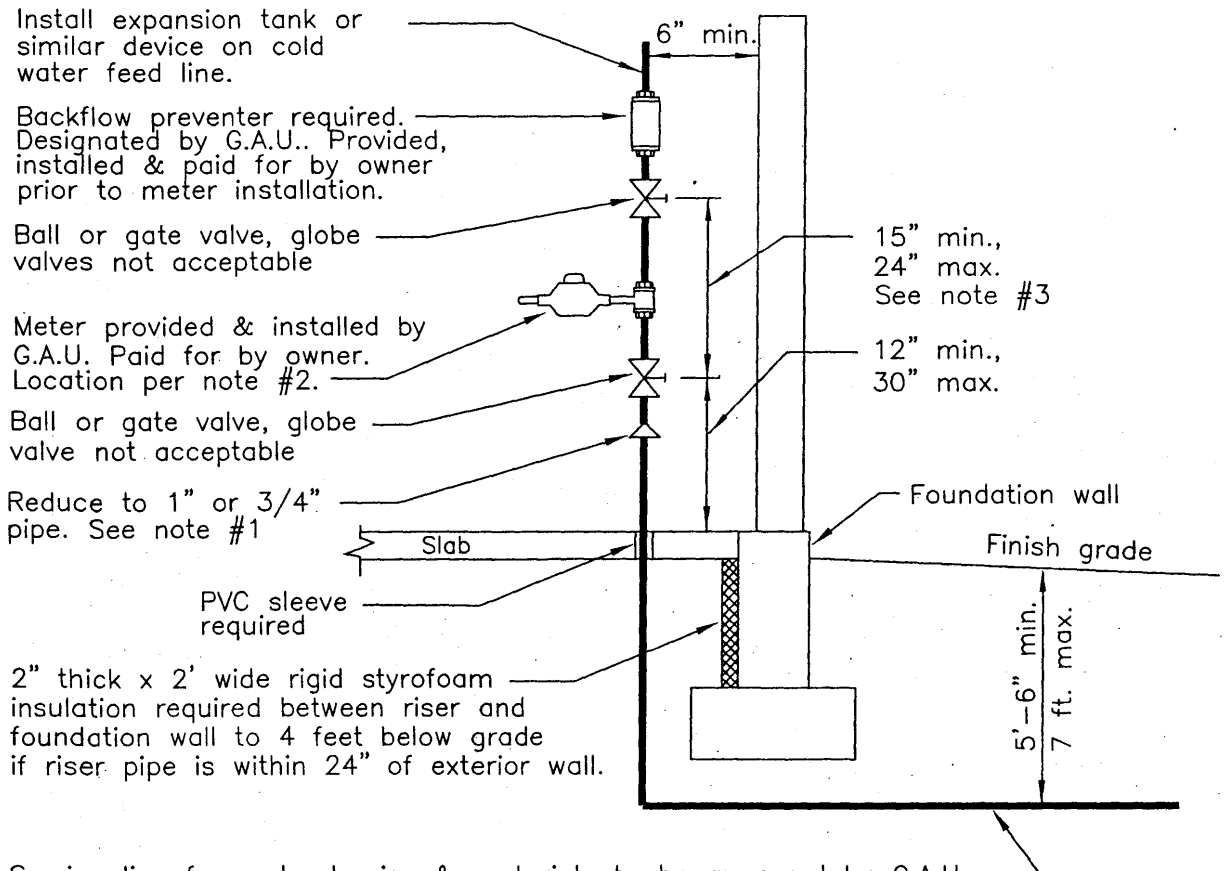


Service line from street, size & materials to be approved by G.A.U. Only TYPE "K" copper tubing or 200 psig rated CTS polyethylene tubing are acceptable for service lines. Sand to be used for backfill. Metalic tracer cable to be installed 3' above CTS PE if utilized.

# COMMERCIAL FIRE SERVICE ENTRANCE WITH DOMESTIC FEED

## GREATER AUGUSTA UTILITY DISTRICT

**REVISED JAN. 2008 NTS**

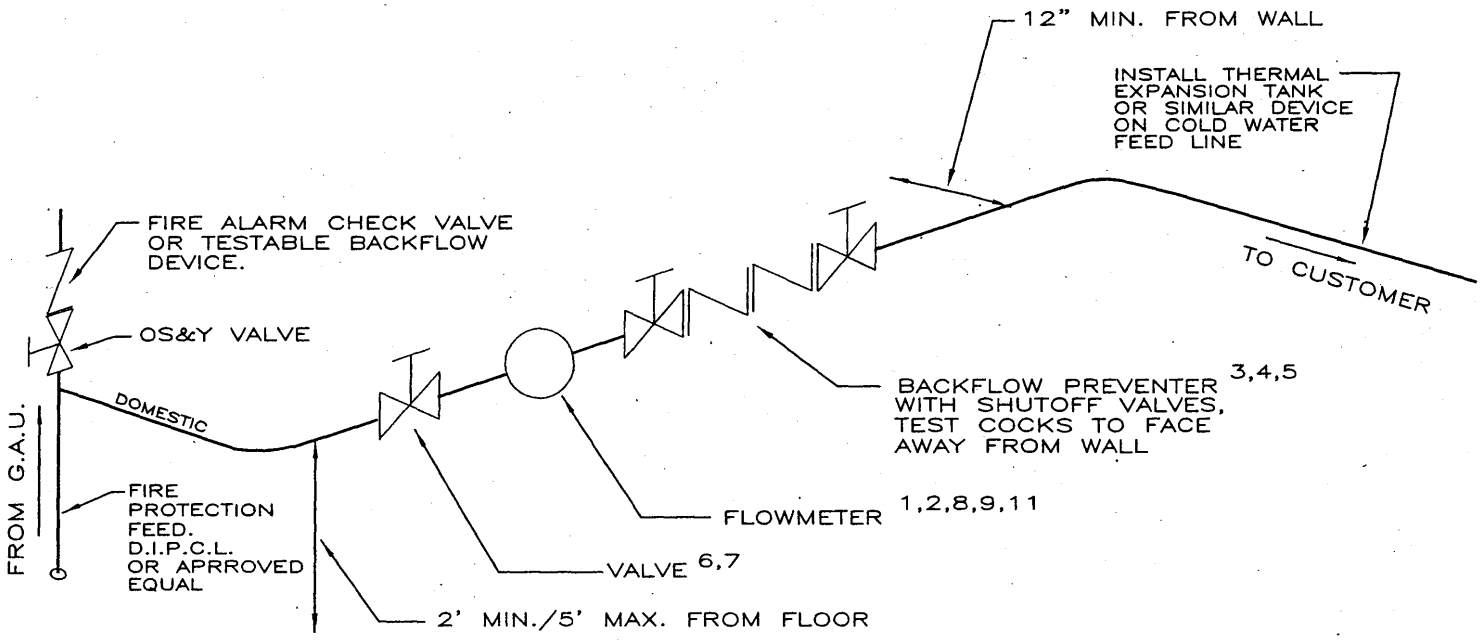


## NOTES:

1. FLOWMETER TO BE SIZED, SELECTED, AND PLACED BY G.A.U. METER FLANGES, GASKETS, AND BOLTS, IF REQUIRED, PROVIDED BY G.A.U. & PAID FOR BY OWNER. METER TO BE LOCATED IN A WARM, DRY, ACCESSIBLE LOCATION.
2. FOR TURBO METERS: A MINIMUM OF FIVE(5) PIPE DIAMETERS STRAIGHT RUN SHALL BE PROVIDED BEFORE METER, AND A MINIMUM OF TWO(2) PIPE DIAMETERS STRAIGHT RUN SHALL BE PROVIDED AFTER THE METER.
3. BACKFLOW PREVENTER SHALL BE OF THE SIZE AND TYPE RECOMMENDED BY G.A.U. AND SHALL BE IN ACCORDANCE WITH STATE OF MAINE CROSS CONNECTION REGULATIONS. SEE SECTION V, ITEM E, PARAGRAPH 8 OF THE DISTRICT'S CROSS CONNECTION PROGRAM RELATIVE TO THE PROVISION OF A BYPASS TO THE BACKFLOW PREVENTER.
4. BACKFLOW PREVENTERS TO BE INSTALLED IN THE VERTICAL POSITION MUST BE PRE-APPROVED BY THE DISTRICT.
5. RPZ'S MUST BE TESTED SEMI-ANNUALLY, REQUIRING THAT THE WATER BE SHUT OFF FOR UP TO 20 MINUTES. IF LOSS OF WATER FOR THIS TIME FRAME IS UNACCEPTABLE, A SECOND PARALLEL RPZ SHOULD BE INSTALLED TO ALLOW FOR UNINTERUPTED WATER SERVICE.
6. ALL VALVES SHALL BE GATE OR BALL VALVES. GLOBE VALVES ARE NOT ACCEPTABLE.
7. NO VALVES WILL BE ALLOWED BETWEEN FLOOR AND METER OTHER THAN THE ONE SHOWN.
8. THE DISTRICT REQUIRES ALL NEW AND/OR RENOVATED MULTI-TENANT BUILDINGS BE INDIVIDUALLY METERED. THE INSTALLATION OF THE INDIVIDUAL METERS SHALL BE INSTALLED IN A COMMON LOCATION, WITH KEYED ACCESS FROM THE EXTERIOR OF THE BUILDING. THE UTILITY WILL PERMIT A SINGLE MASTER METER AT THE OWNER'S WRITTEN REQUEST, PROVIDED THE OWNER AGREES TO PAY FOR ALL WATER CHARGES AND CONSUMPTION.
9. G.A.U. MUST INSTALL A 22 GAUGE WIRE FROM THE METER TO A RADIO READ UNIT ON AN EXTERIOR WALL. THIS SHOULD BE ACCOMPLISHED DURING CONSTRUCTION, BEFORE INTERIOR INSULATION/FINISHED WALL IS INSTALLED.
10. G.A.U. WILL ADVISE TO THE LOCATION OF SUCH APPURTENANCES AS PRESSURE REDUCING VALVES, BOOSTER PUMPS, ETC. WHEN THEIR USE IS APPLICABLE.
11. COST OF METER, APPURTENANCES AND INSTALLATION SHALL BE BORNE BY THE OWNER / DEVELOPER.

# TYPICAL TRENCH DETAIL

**GREATER AUGUSTA UTILITY DISTRICT**

**REVISED JAN. 2008 NTS**

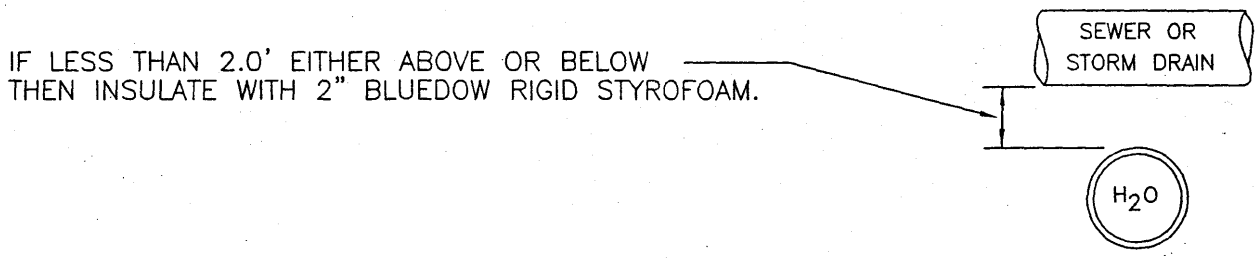


NOTE 1: MATERIAL TYPE AND PLACEMENT REQUIREMENTS TO BE IN ACCORDANCE WITH AUTHORITY HAVING JURISDICTION IN PAVED AREAS. GRAVEL, LOAM & OR SEED IN ACCORDANCE WITH AUTHORITY HAVING JURISDICTION IN NON-PAVED AREAS.

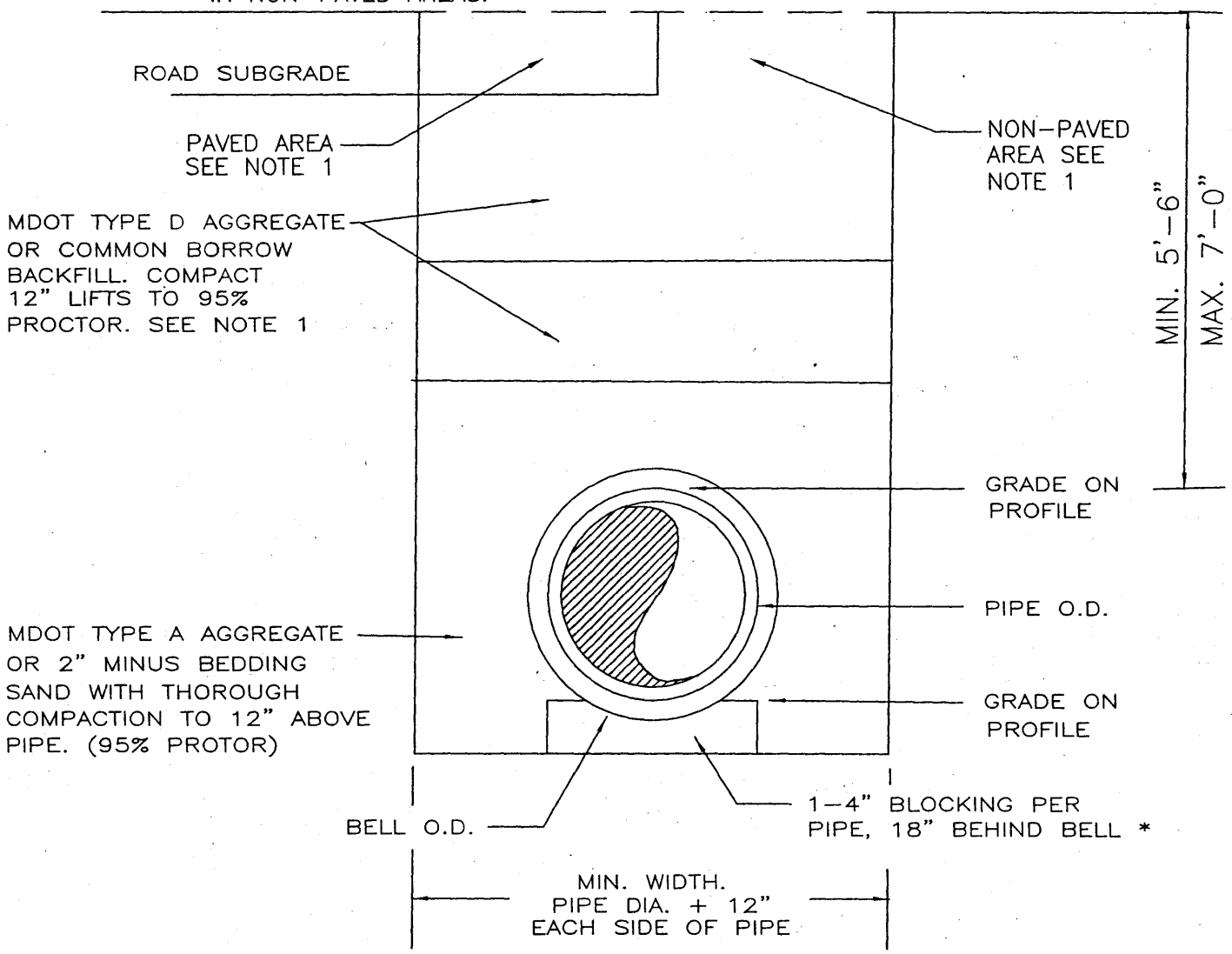


* 6" BLOCKING REQUIRED IN LEDGE OR BOULDER EXCAVATION AREA.

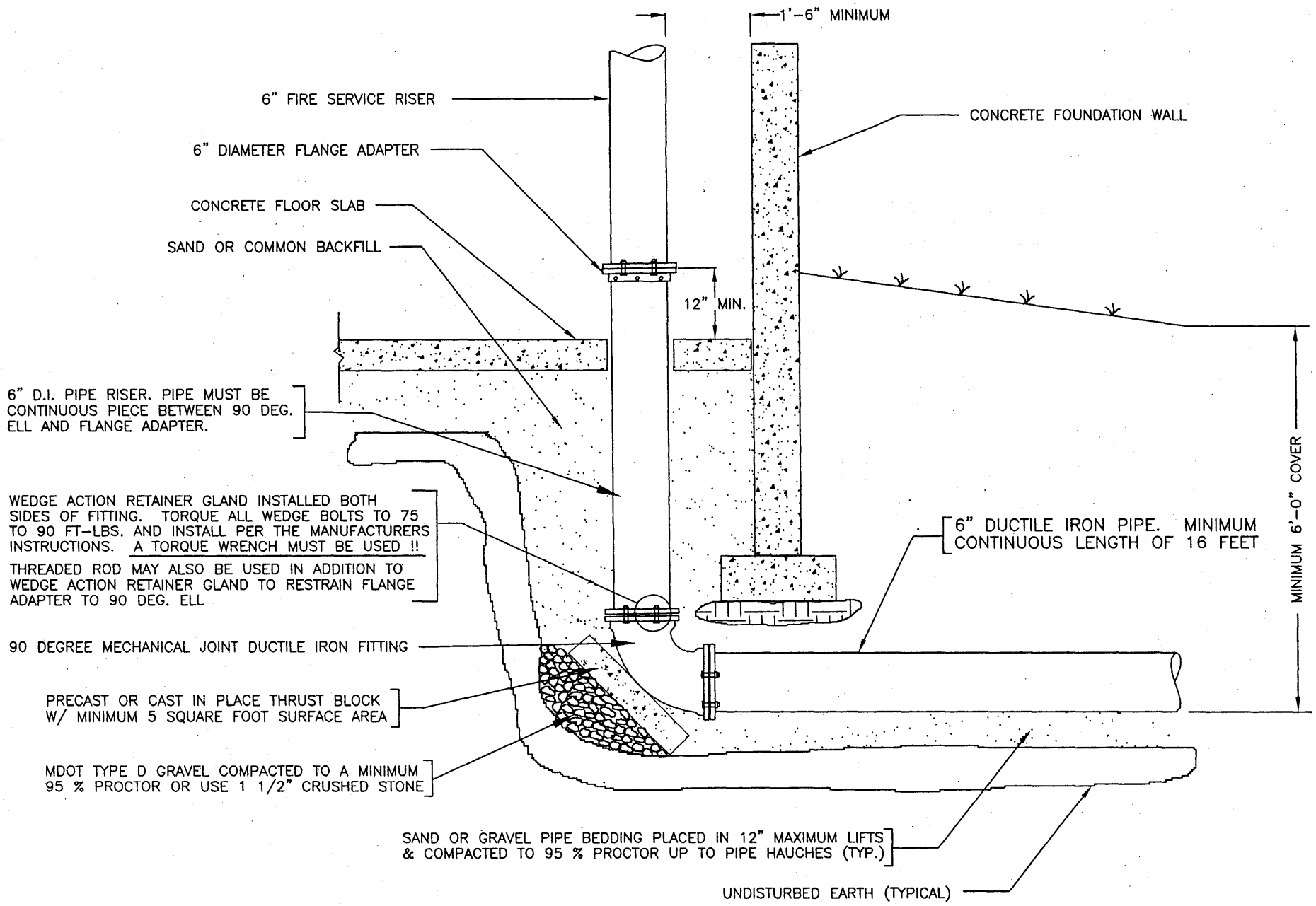


# 6" FIRE SERVICE THRUST RESTRAINT DETAIL

**GREATER AUGUSTA UTILITY DISTRICT**

**REVISED JAN. 2008 NTS**

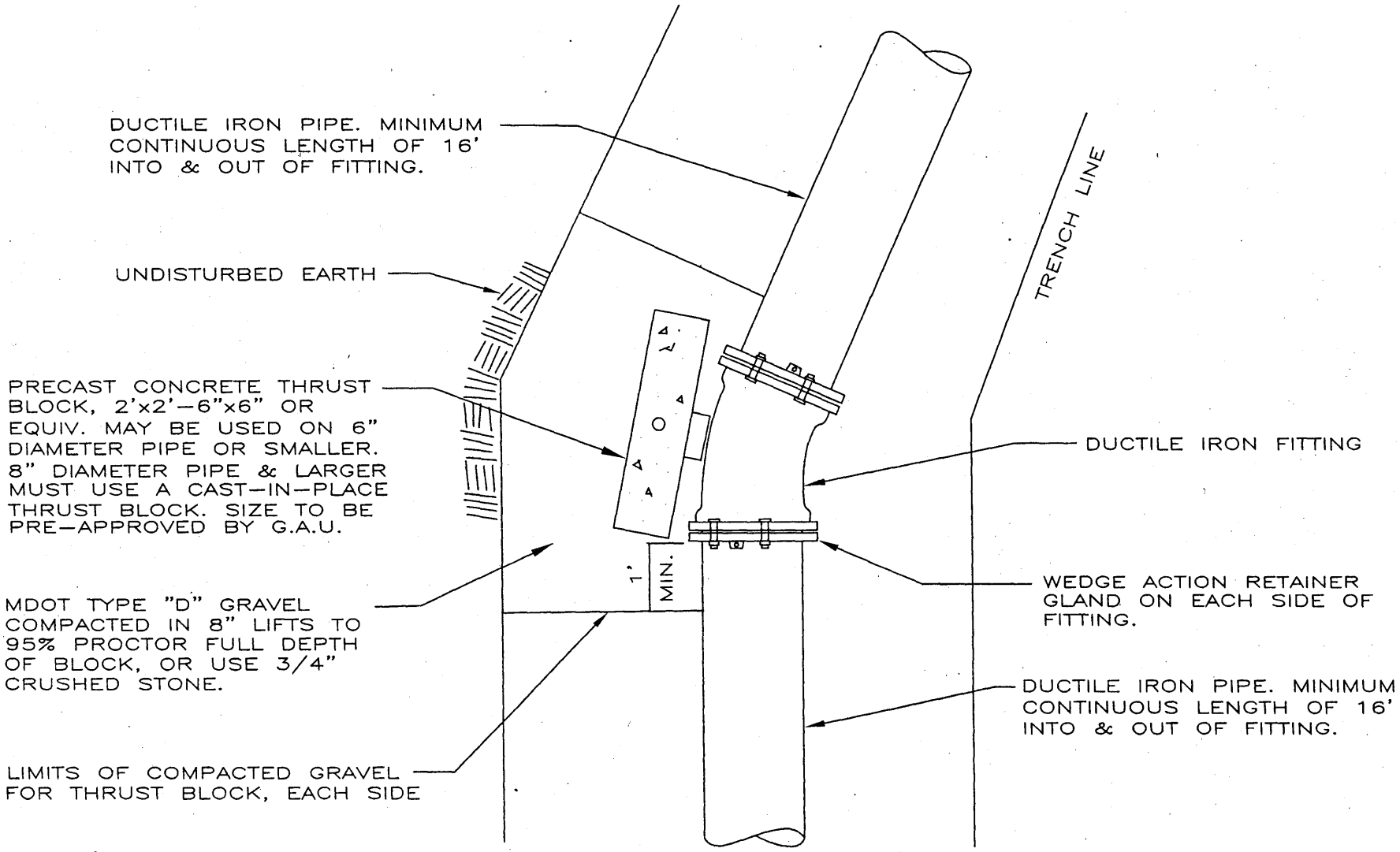


NOTE:
ALL CAST–IN–PLACE CONCRETE THRUST BLOCKS MUST BE SIZED PER THE THRUST RESTRAINT REQUIREMENTS OF SECTION III OF THE DISTRICT'S SPECIFICATION PACKAGE. CAST–IN–PLACE CONCRETE THRUST BLOCKS MUST BE FORMED UP WITH A SUITABLE MATERIAL SUCH AS PLYWOOD, PARTICLE BOARD ETC. AS TO NOT ALLOW CONCRETE TO ENCOMPASS THE FITTING.

# FITTING & THRUST BLOCK DETAIL

## GREATER AUGUSTA UTILITY DISTRICT

**REVISED JAN. 2008 NTS**

# TYPICAL VALVE BOX DETAIL

## GREATER AUGUSTA UTILITY DISTRICT

REVISED JAN. 2008 NTS

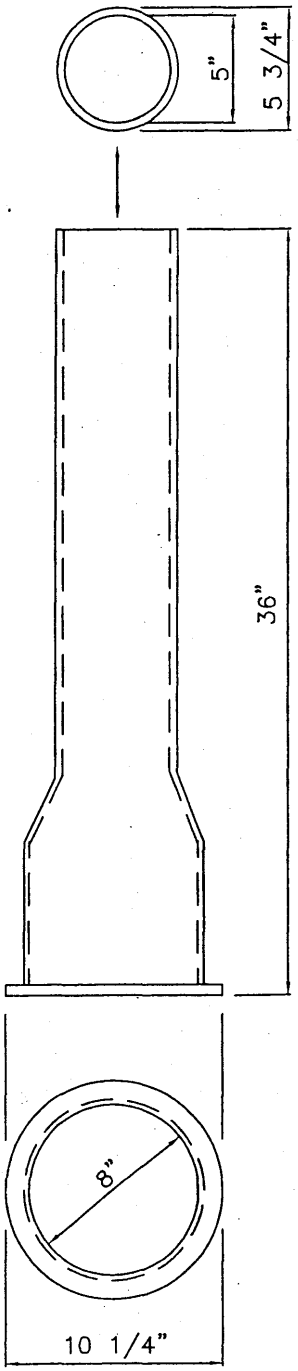


BASE SECTION *

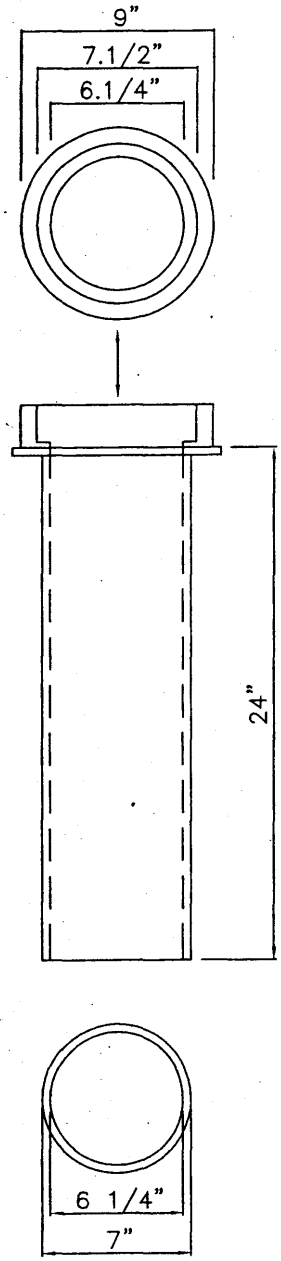


TOP SECTION *

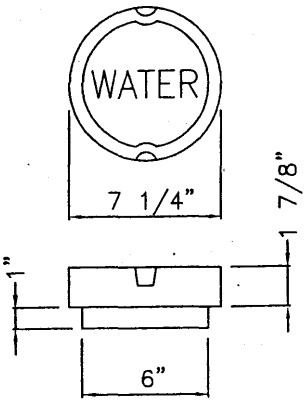


DROP STYLE COVER

NOTE: COVER MUST BE MARKED "WATER"

* PARTS FOR STANDARD 5'-0" VALVE BOX COMPLETE, LONGER PARTS AVAILABLE IF NECESSARY

# TYPICAL SERVICE BOX DETAIL

## GREATER AUGUSTA UTILITY DISTRICT

**REVISED JAN. 2008 NTS**

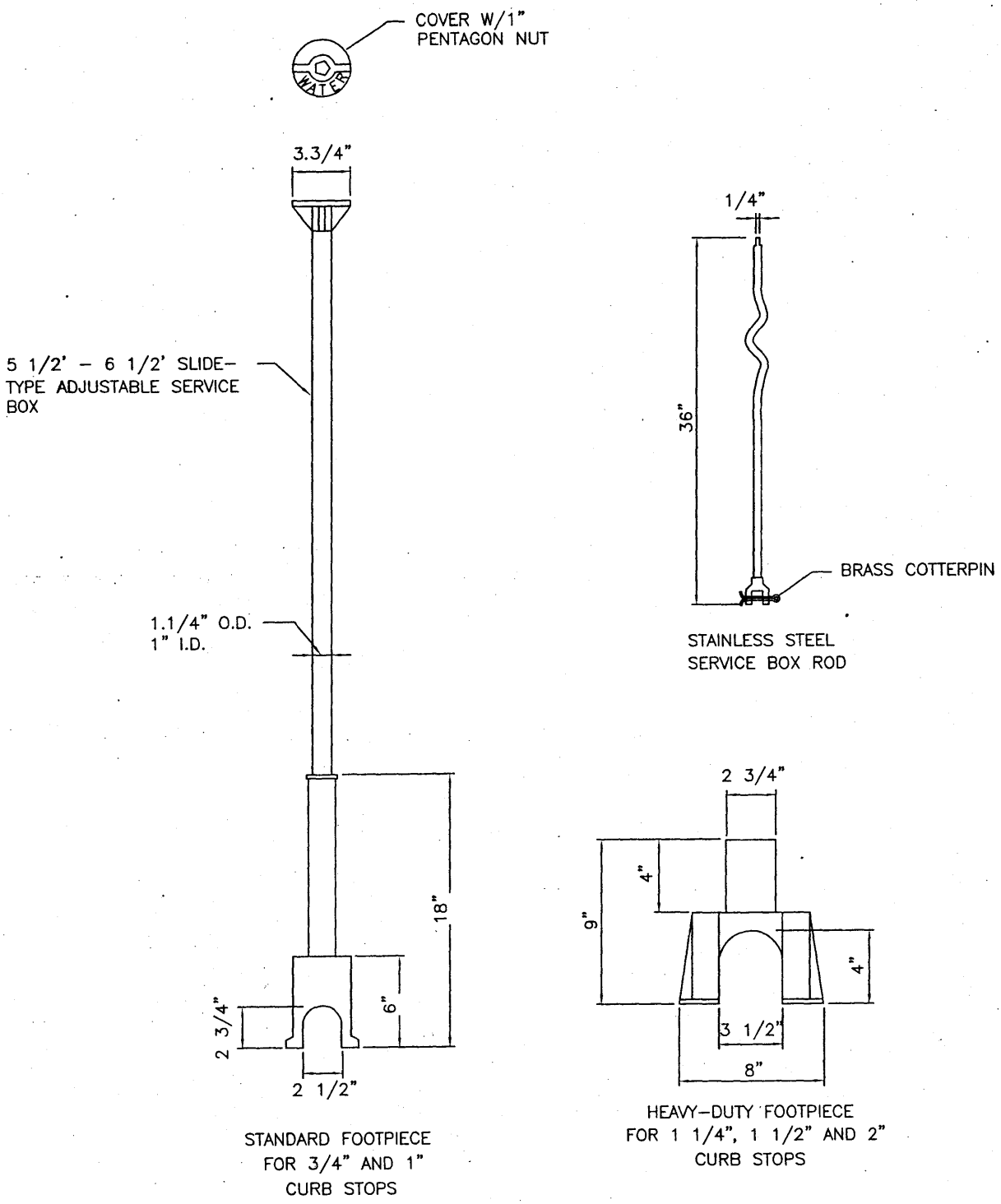

# CATCH BASIN INSULATION DETAIL

## GREATER AUGUSTA UTILITY DISTRICT

**REVISED JAN. 2008 NTS**

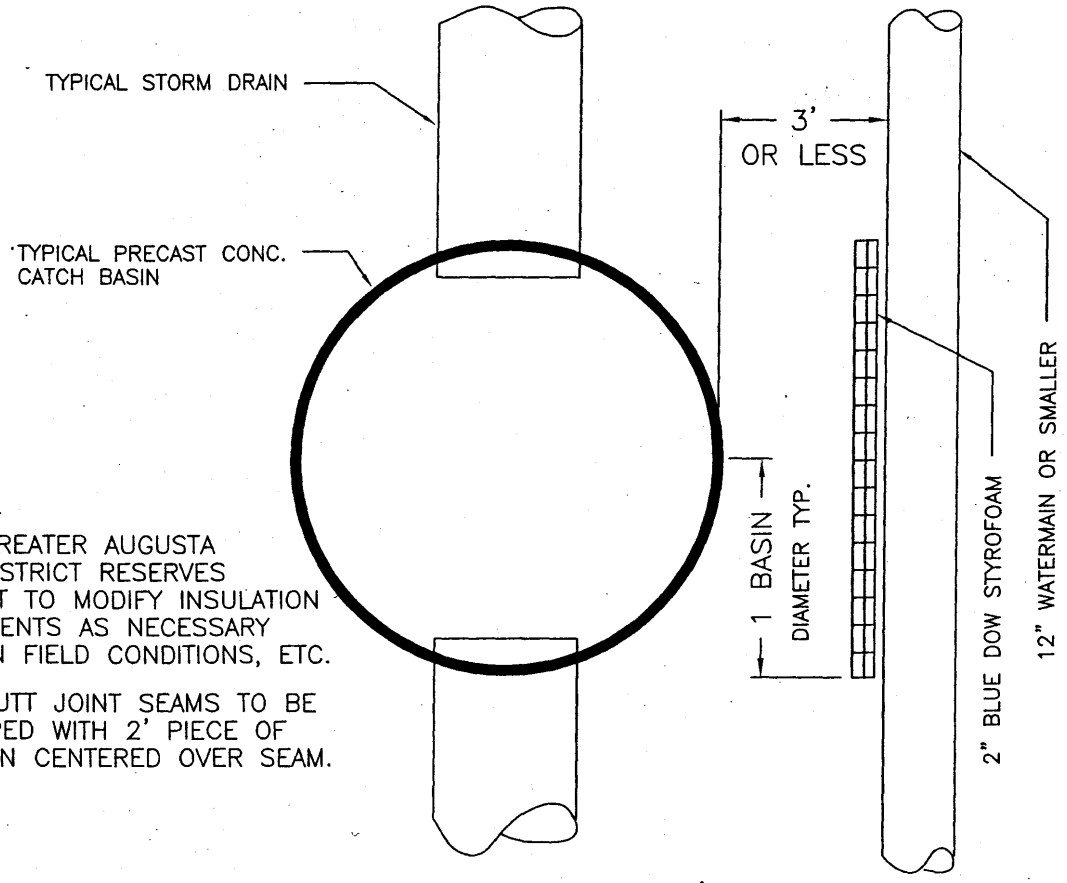


PLAN VIEW

NOTES

1. THE GREATER AUGUSTA UTILITY DISTRICT RESERVES THE RIGHT TO MODIFY INSULATION REQUIREMENTS AS NECESSARY BASED ON FIELD CONDITIONS, ETC.

2. ALL BUTT JOINT SEAMS TO BE OVERLAPPED WITH 2' PIECE OF INSULATION CENTERED OVER SEAM.

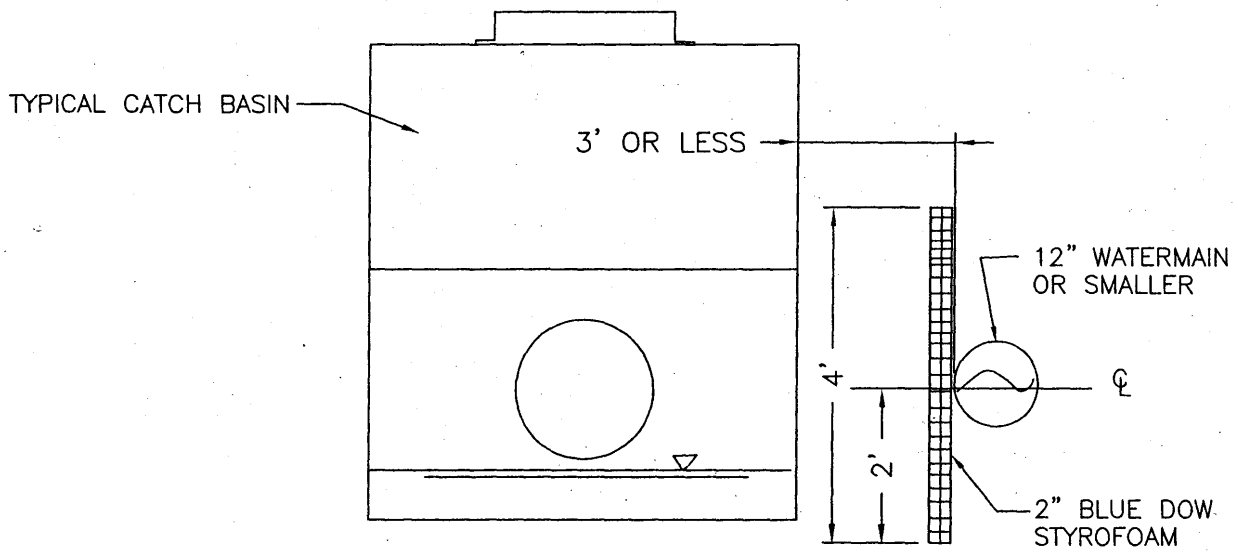


ELEVATION VIEW

# STORM DRAIN/WATER MAIN PARALLEL RUNS ELEVATION VIEW

## GREATER AUGUSTA UTILITY DISTRICT

**REVISED JAN. 2008 NTS**

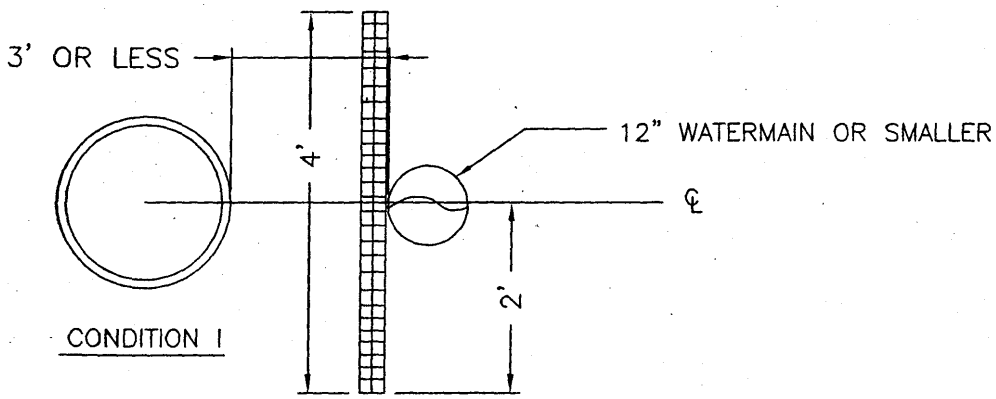


CONDITION I

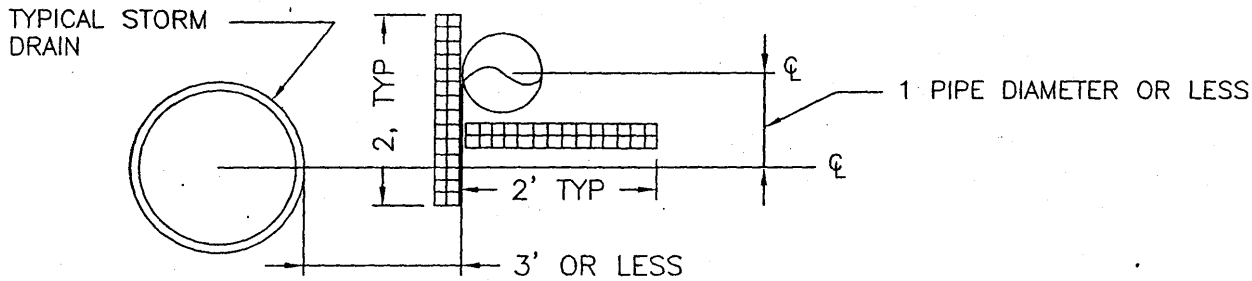


CONDITION II

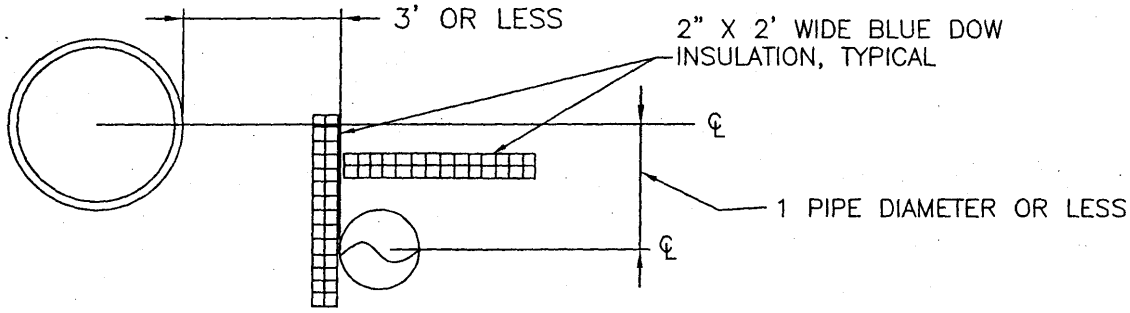


CONDITION III

## NOTES:

1. THE GREATER AUGUSTA UTILITY DISTRICT RESERVERS THE RIGHT TO MODIFY INSULATION REQUIREMENTS AS NECESSARY BASED ON FIELD CONDITIONS, ETC.

2. INSULATION TO BE RUN HORIZONTALLY AS LONG AS CONDITIONS I, II, OR III ABOVE EXIST. ALL BUTT JOINT SEAMS TO BE OVERLAPPED W/2' PIECE OF INSULATION CENTERED OVER SEAM.

# STORM DRAIN/WATER MAIN INTERSECTING RUNS ELEVATION VIEW

## GREATER AUGUSTA UTILITY DISTRICT

**REVISED JAN. 2008 NTS**

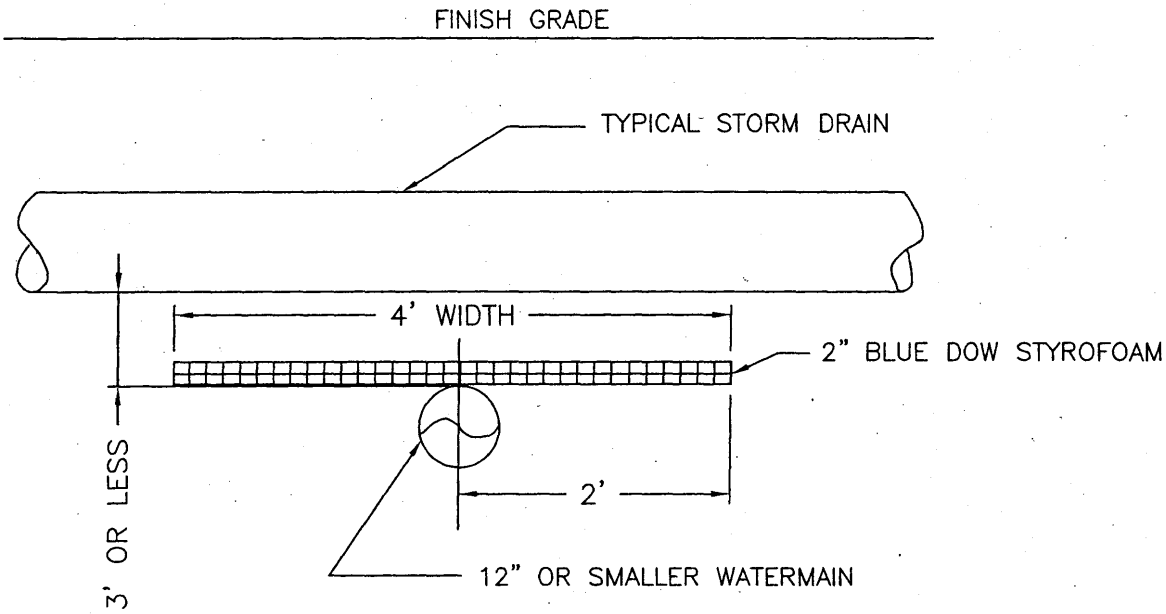


CONDITION I

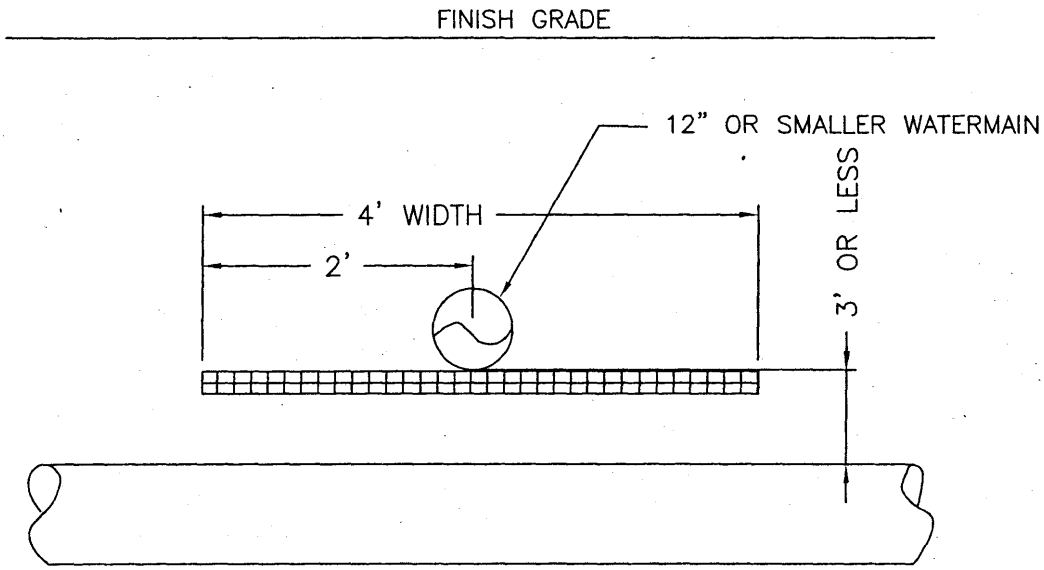


CONDITION II

NOTES:

1. THE GREATER AUGUSTA UTILITY DISTRICT RESERVES THE RIGHT TO MODIFY INSULATION REQUIREMENTS AS NECESSARY BASED ON FIELD CONDITIONS, ETC.

2. THE LENGTH OR WIDTH OF INSULATION SHALL EXTEND 1 STORM DRAIN PIPE DIAMETER BEYOND THE EDGE OF STORM DRAIN PIPE IN EACH DIRECTION OR A MINIMUM OF 2' BEYOND THE CENTERLINE OF STORM DRAIN PIPE, WHICHEVER IS GREATER.

3. ALL BUTT JOINT SEAMS TO BE OVERLAPPED WITH A 2' PIECE OF INSULATION CENTERED OVER SEAM.

# TYPICAL HYDRANT INSTALLATION

## GREATER AUGUSTA UTILITY DISTRICT

**REVISED JAN. 2008 NTS**

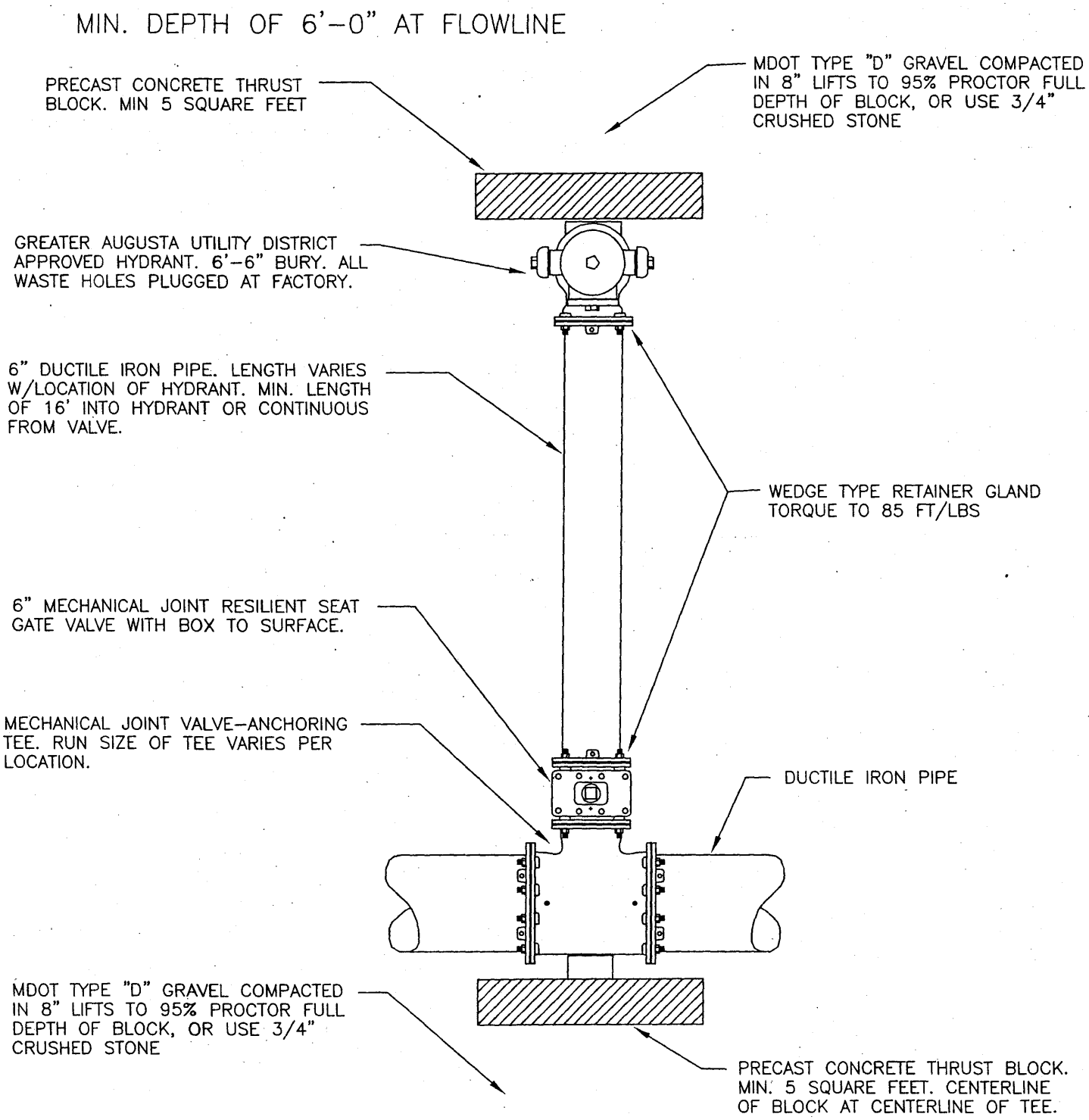


97401

# TYPICAL TEE DETAIL

## GREATER AUGUSTA UTILITY DISTRICT

**REVISED JAN. 2008 NTS**

ALL PIPE SHOULD HAVE A MINIMUM DEPTH OF 5.5' TO TOP OF PIPE FROM FINISH GRADE

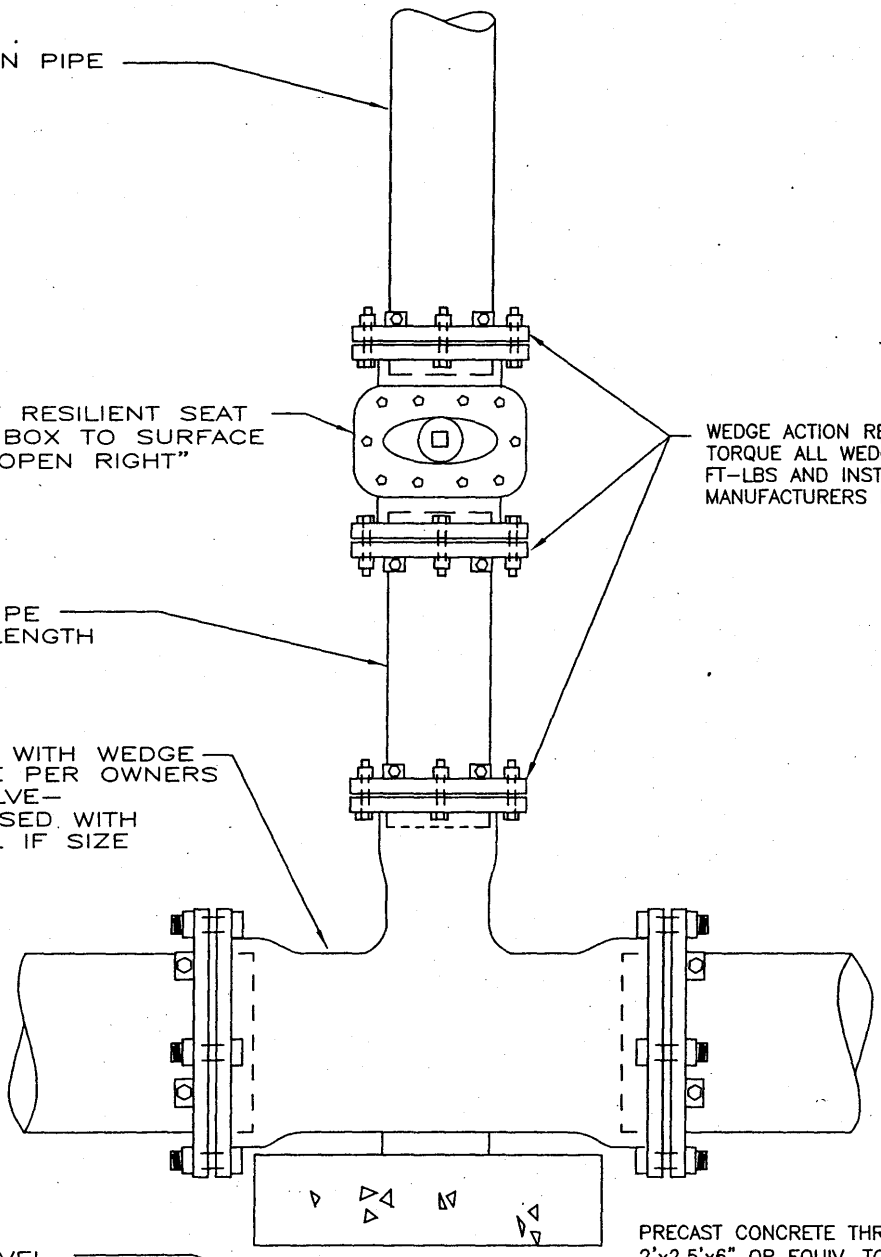

# TYPICAL END OF MAIN DETAIL

## GREATER AUGUSTA UTILITY DISTRICT

REVISED JAN. 2008 NTS

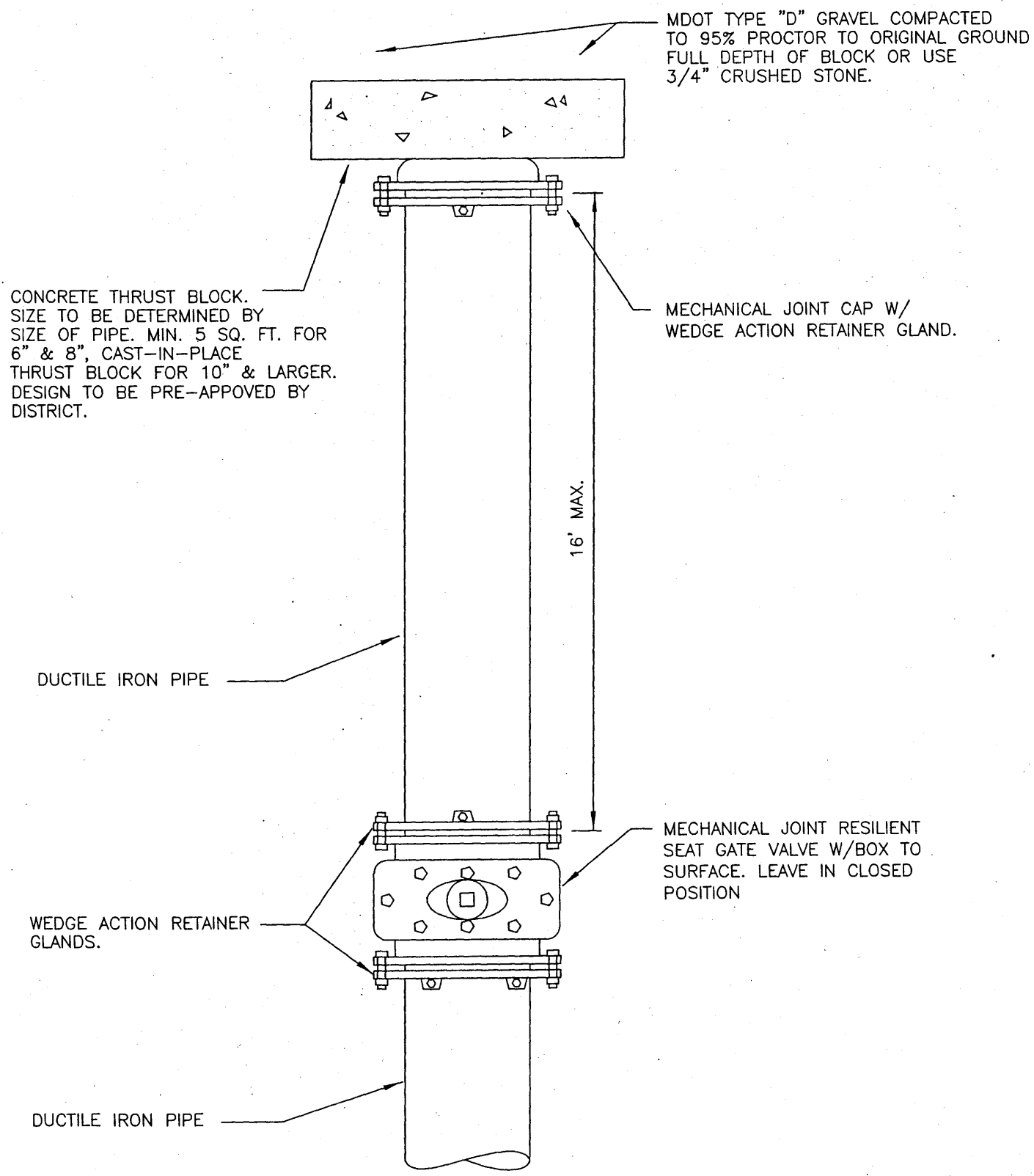

# TYPICAL SERVICE BOX DETAIL IN PAVED AREAS

## GREATER AUGUSTA UTILITY DISTRICT

**REVISED JAN. 2008 NTS**

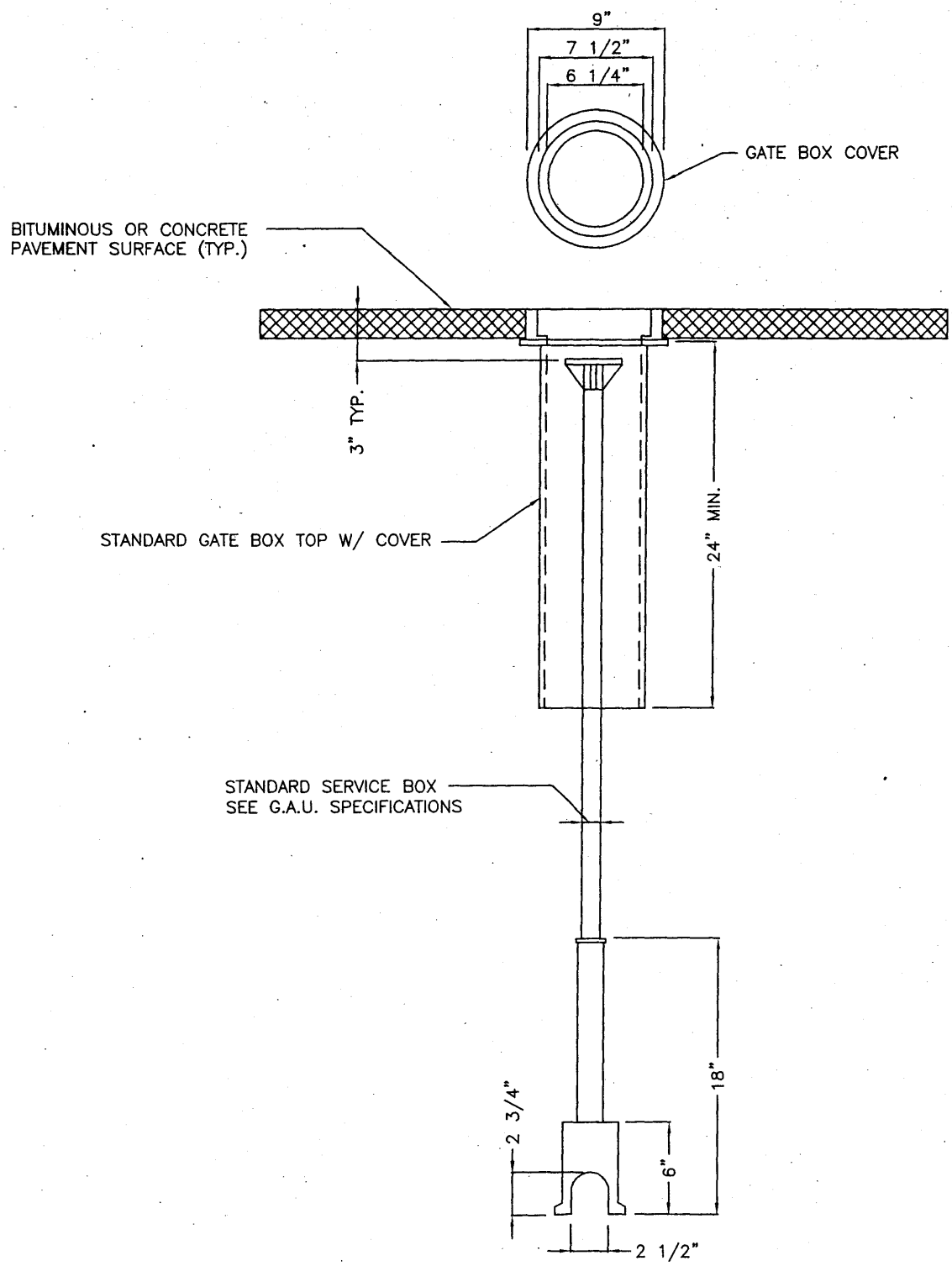


STANDARD FOOTPIECE FOR 3/4" AND 1" CURB STOPS

# TYPICAL AIR RELEASE DETAIL

**GREATER AUGUSTA UTILITY DISTRICT**

**REVISED JAN. 2008 NTS**

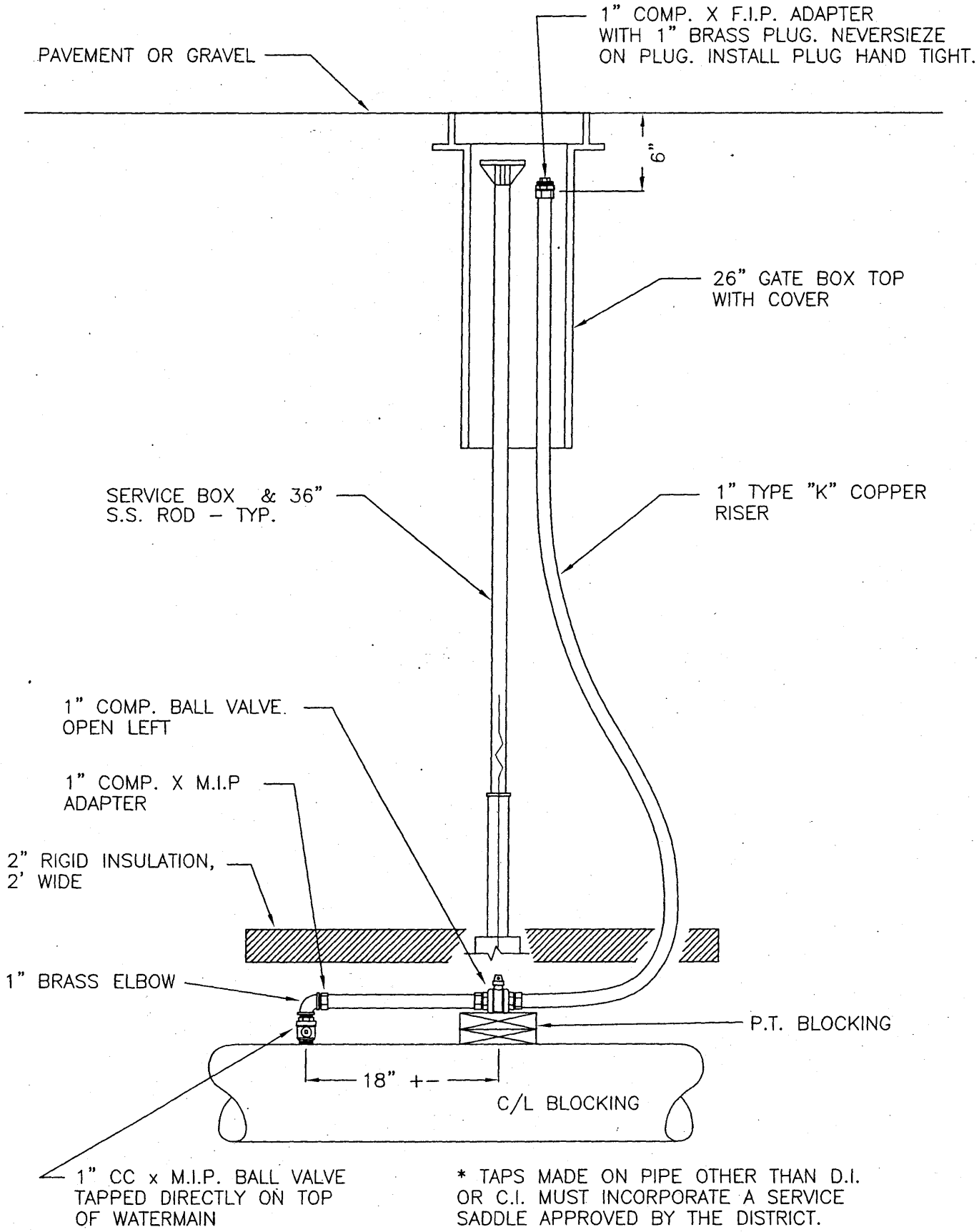


* TAPS MADE ON PIPE OTHER THAN D.I. OR C.I. MUST INCORPORATE A SERVICE SADDLE APPROVED BY THE DISTRICT.

# TYPICAL TRENCH DETAIL - SEWER

## GREATER AUGUSTA UTILITY DISTRICT

**REVISED JAN. 2008 NTS**

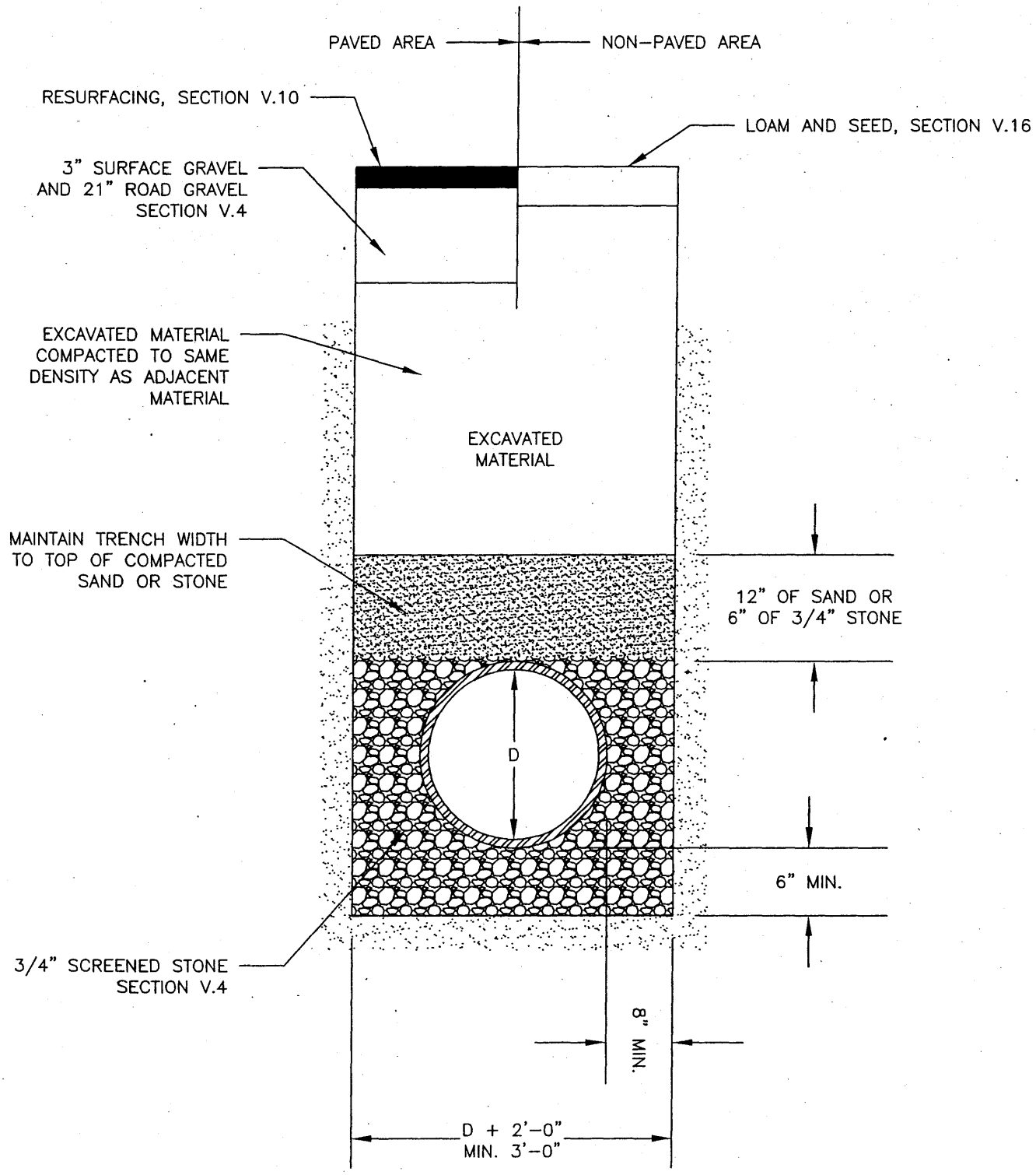

# STANDARD PRECAST MANHOLE

## GREATER AUGUSTA UTILITY DISTRICT

**REVISED JAN. 2008 NTS**

SECTION V.7

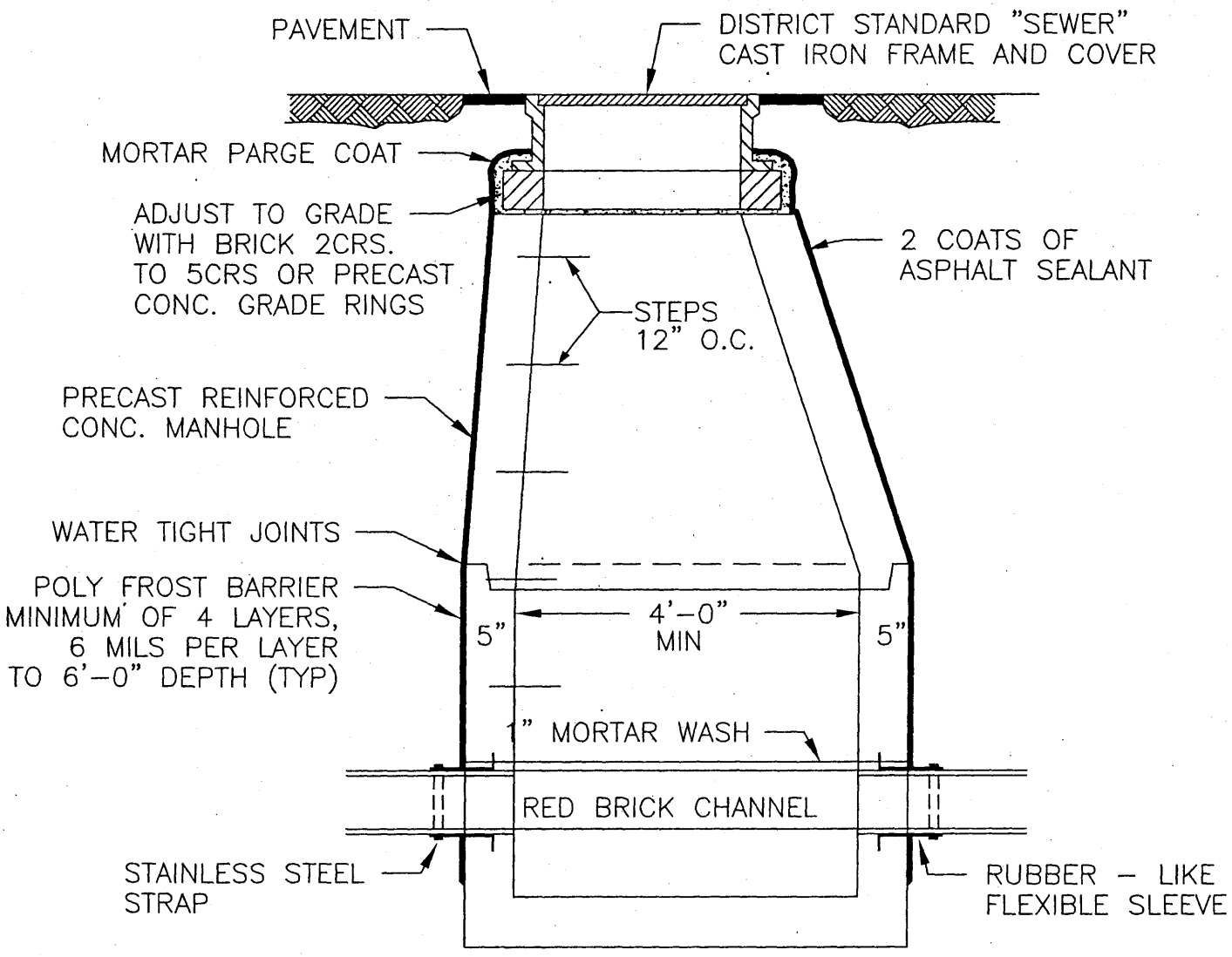

# STANDARD PRECAST DROP MANHOLE

## GREATER AUGUSTA UTILITY DISTRICT

**REVISED JAN. 2008 NTS**

SECTION V.7

FOR SUPERSTRUCTURE SEE STANDARD MANHOLE

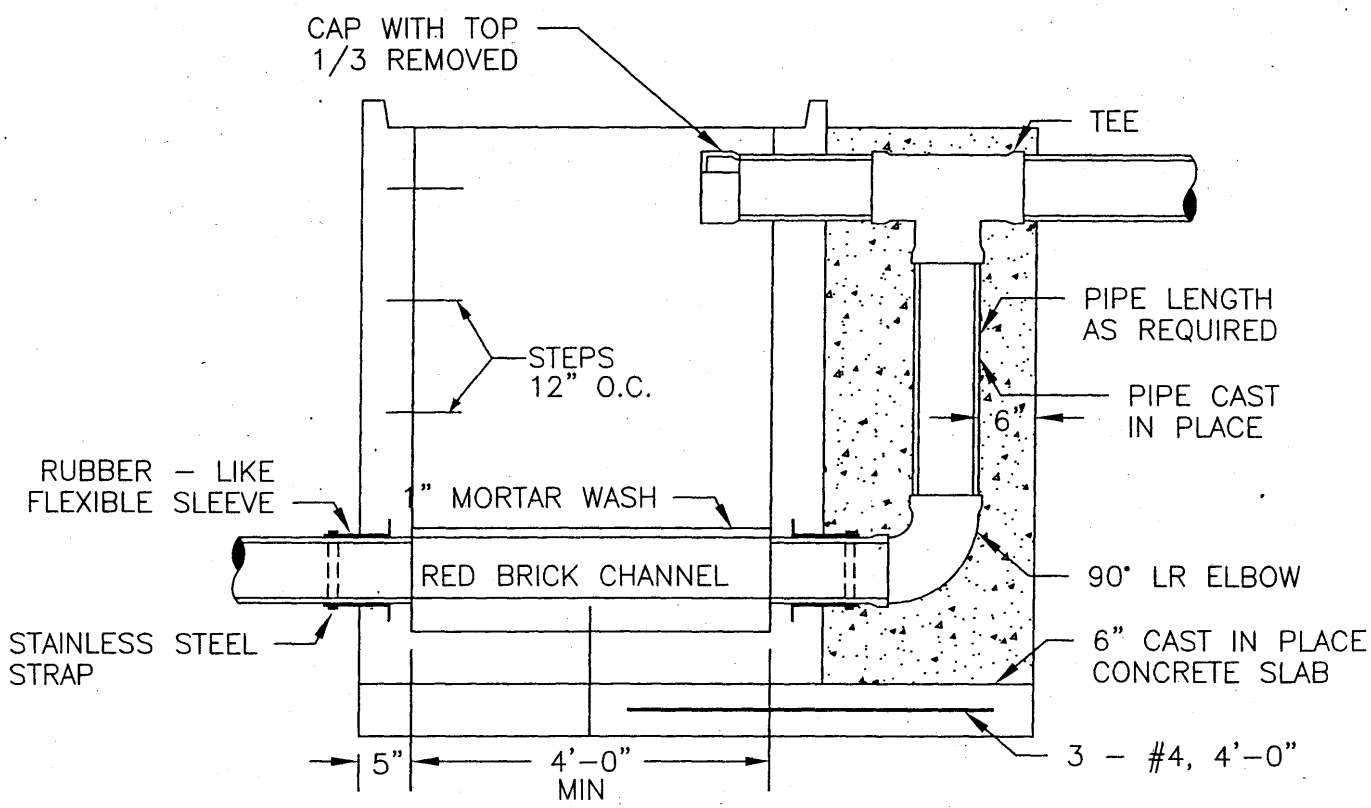

# STANDARD INVERT & BRICK CHANNEL

## GREATER AUGUSTA UTILITY DISTRICT

**REVISED JAN. 2008 NTS**

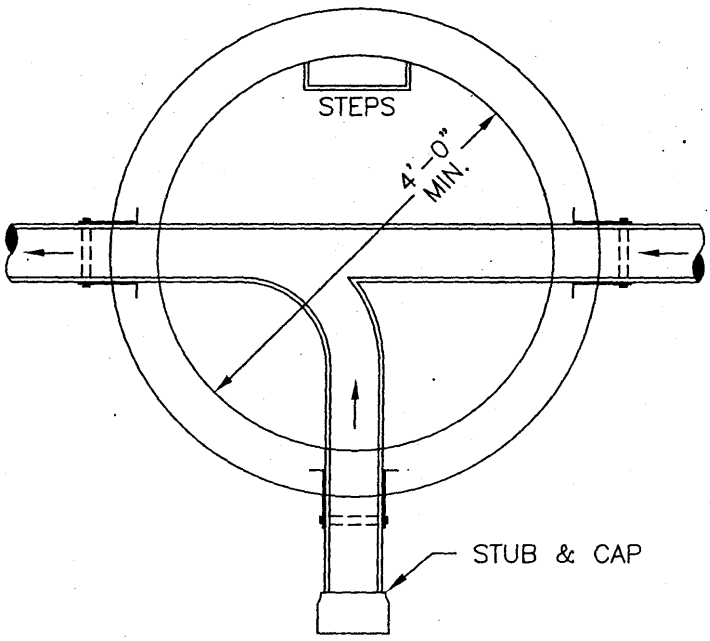


MANHOLE AND INVERT

NOT TO SCALE

SECTION V.7

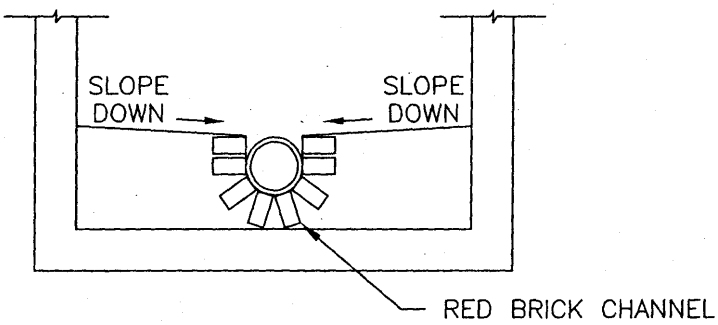


BRICK CHANNEL

NOT TO SCALE

SECTION V.7

# CONCRETE ENCASEMENT

**GREATER AUGUSTA UTILITY DISTRICT**

**REVISED JAN. 2008 NTS**

SECTION V.12

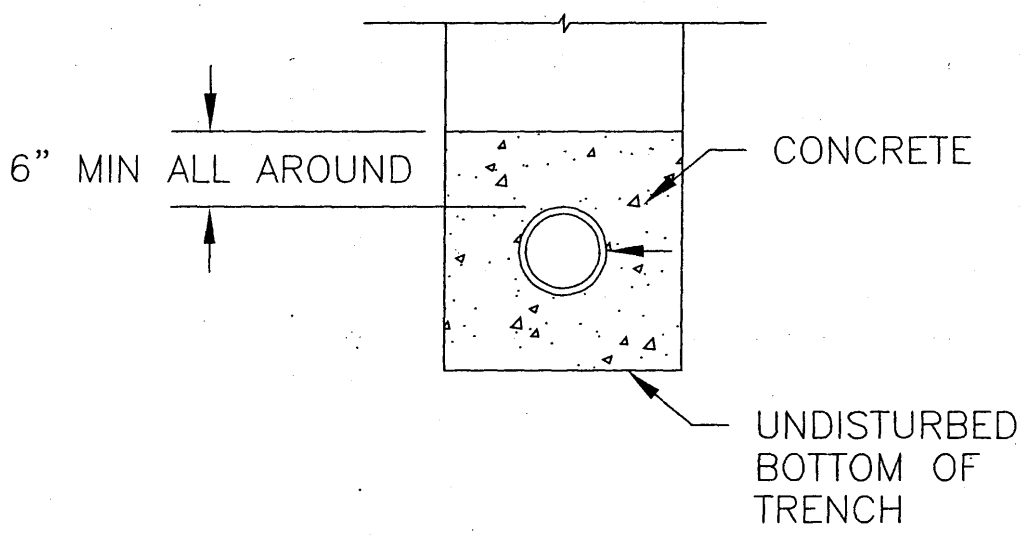

# PRECAST CATCH BASIN

## GREATER AUGUSTA UTILITY DISTRICT

**REVISED JAN. 2008 NTS**

SECTION V.8

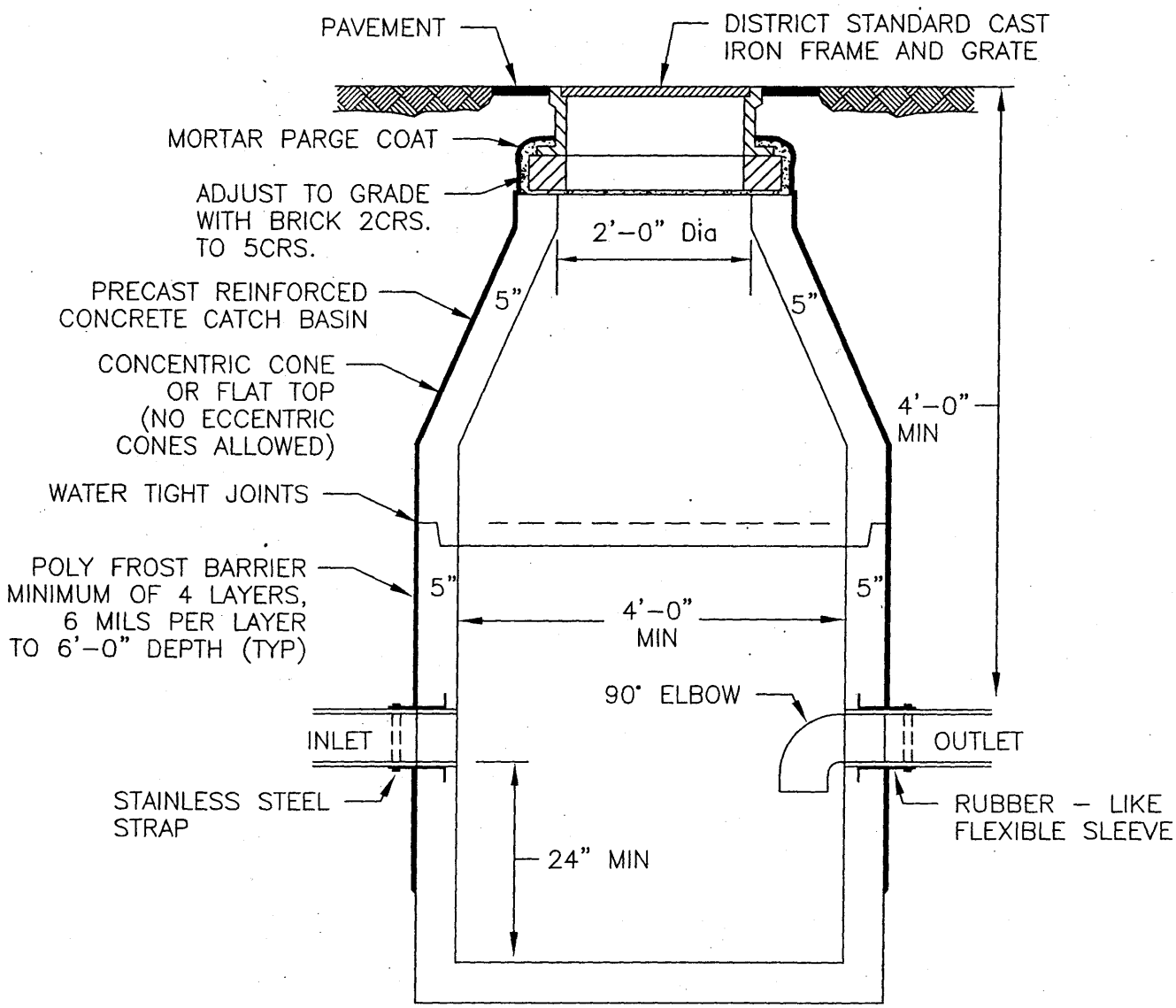

# NEW SEWER CONNECTION

## GREATER AUGUSTA UTILITY DISTRICT

**REVISED JAN. 2008 NTS**

SECTION V.9

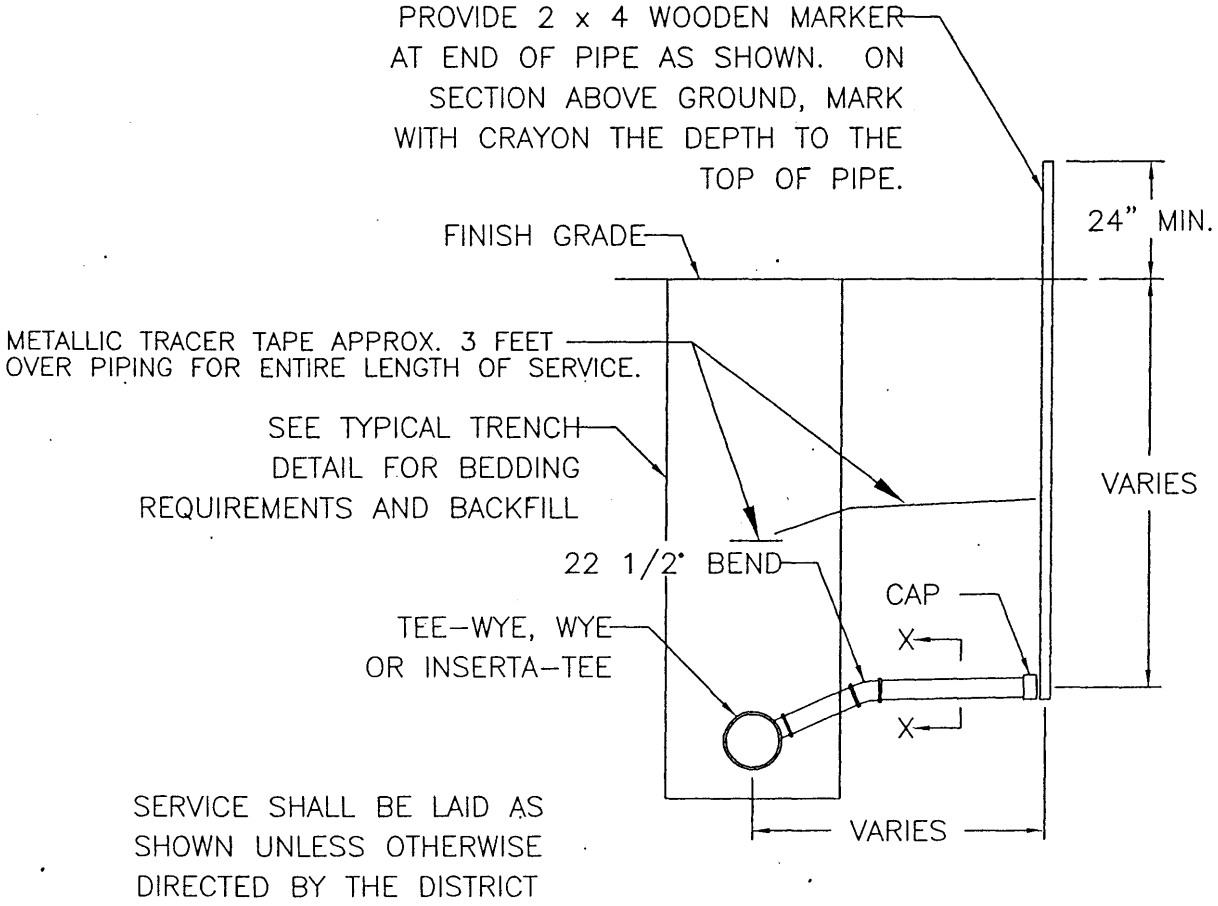


SEWER CONNECTION

SCALE: NONE

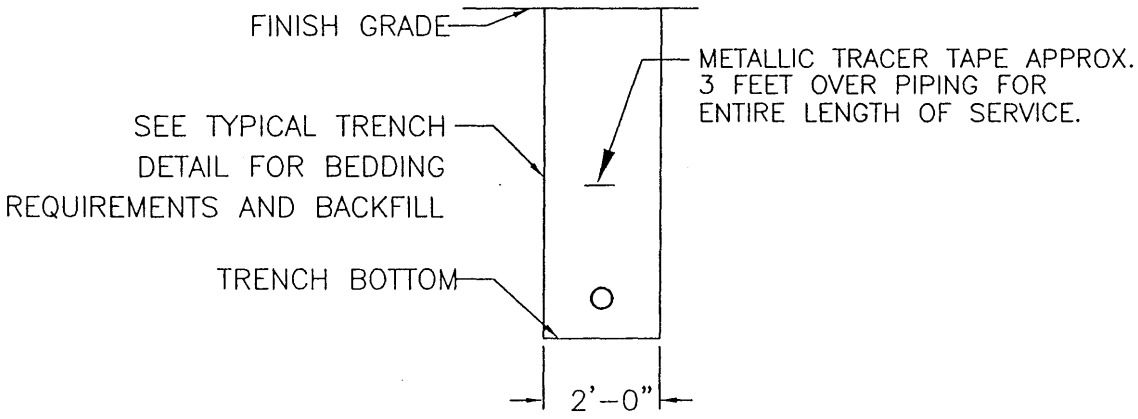


SECTION X-X

SCALE: NONE

# NEW SEWER CONNECTION - CHIMNEYS

**GREATER AUGUSTA UTILITY DISTRICT**

**REVISED JAN. 2008 NTS**

SECTION V.9

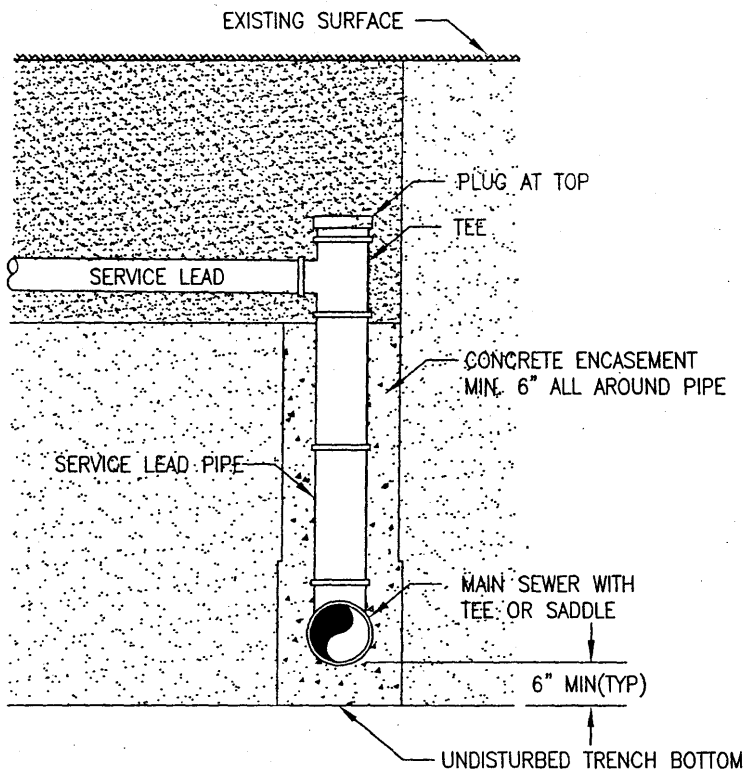


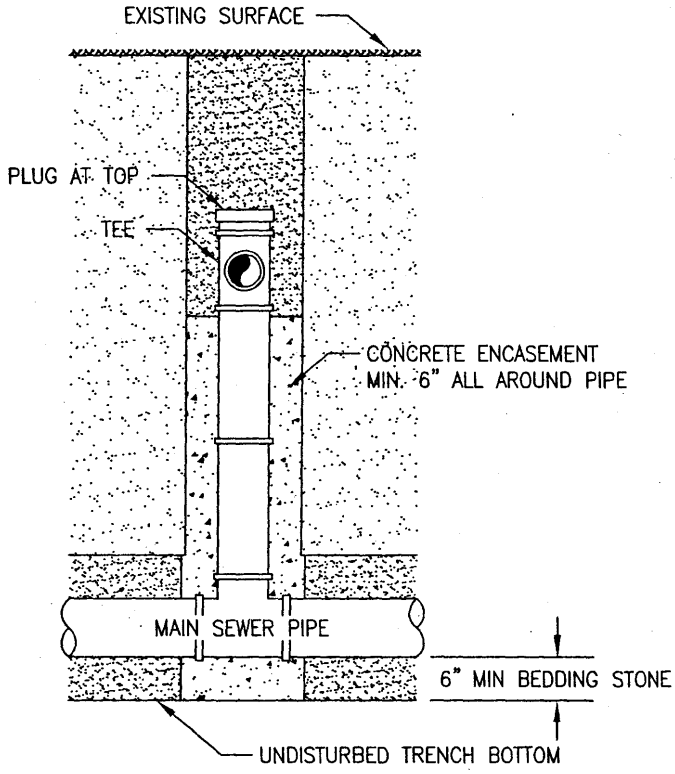

# FORCE MAIN TERMINUS
## GREATER AUGUSTA UTILITY DISTRICT
**REVISED JAN. 2008 NTS**

SECTION V.6

NOTE: ELEV. B TO BE 1" HIGHER THAN ELEV. A
ELEV. C TO BE A MIN. OF 8" BELOW ELEV. B

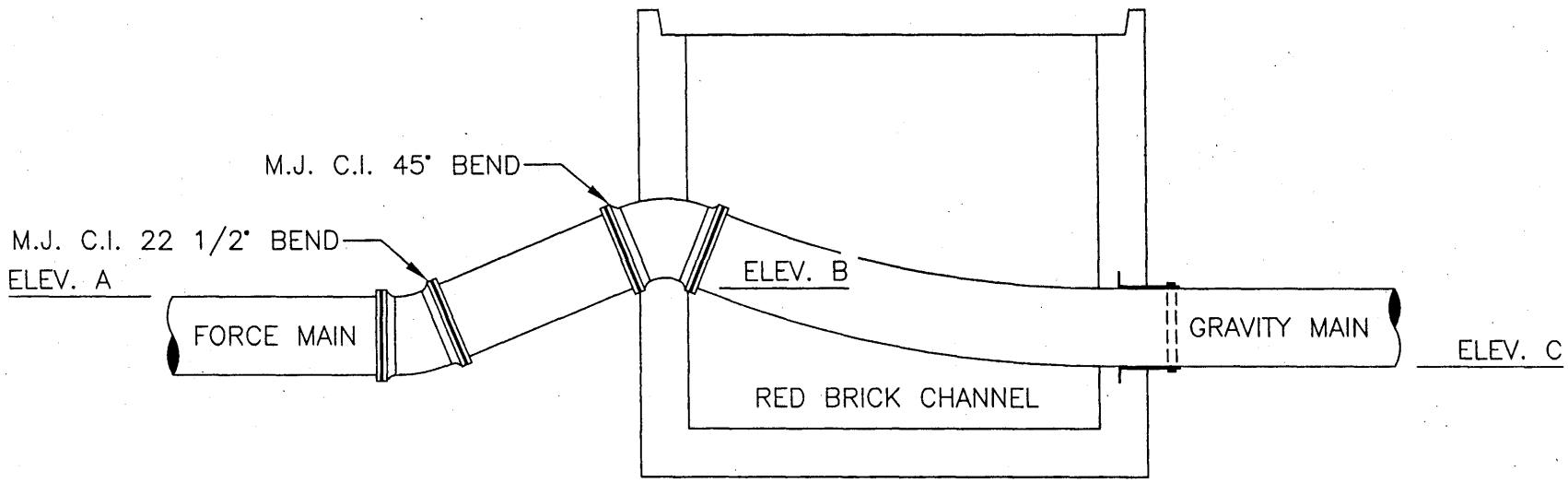

# PRECAST CLEANOUT MANHOLE - 4' DIA.

## GREATER AUGUSTA UTILITY DISTRICT

**REVISED JAN. 2008 NTS**

SECTION V.6

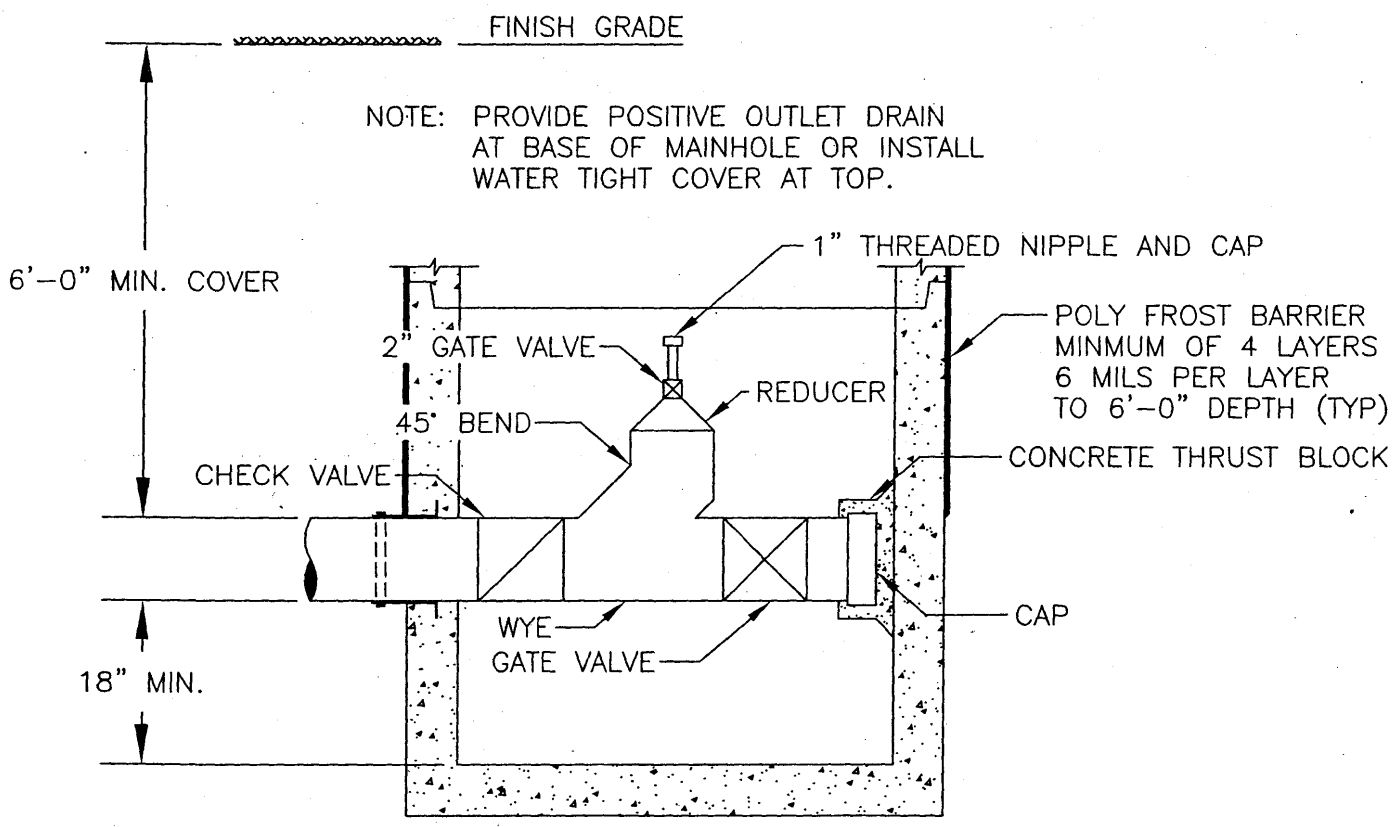

# FORCE MAIN SERVICE VALVE BOX

## GREATER AUGUSTA UTILITY DISTRICT

**REVISED JAN. 2008 NTS**

SECTION V.6

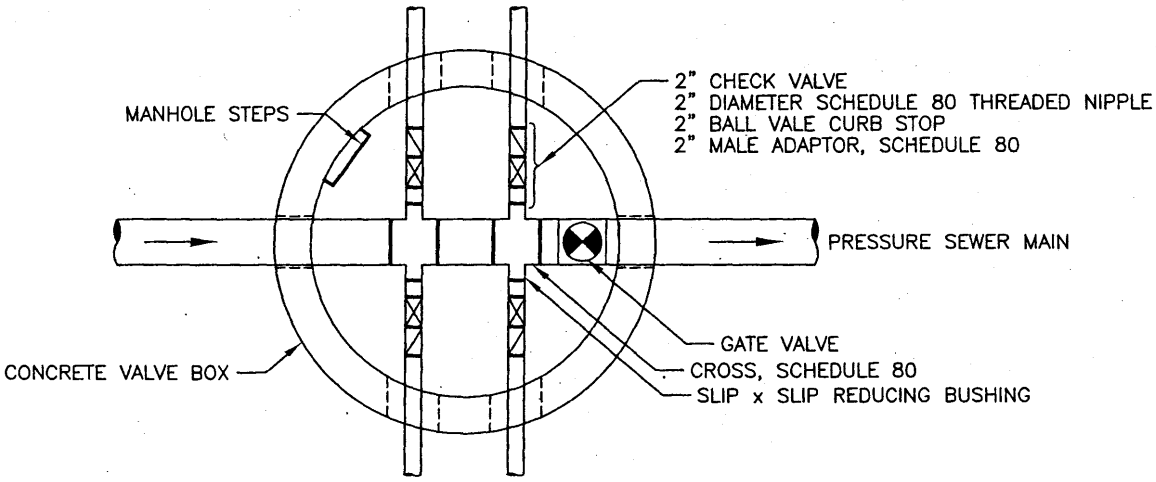


PLAN

NOT TO SCALE

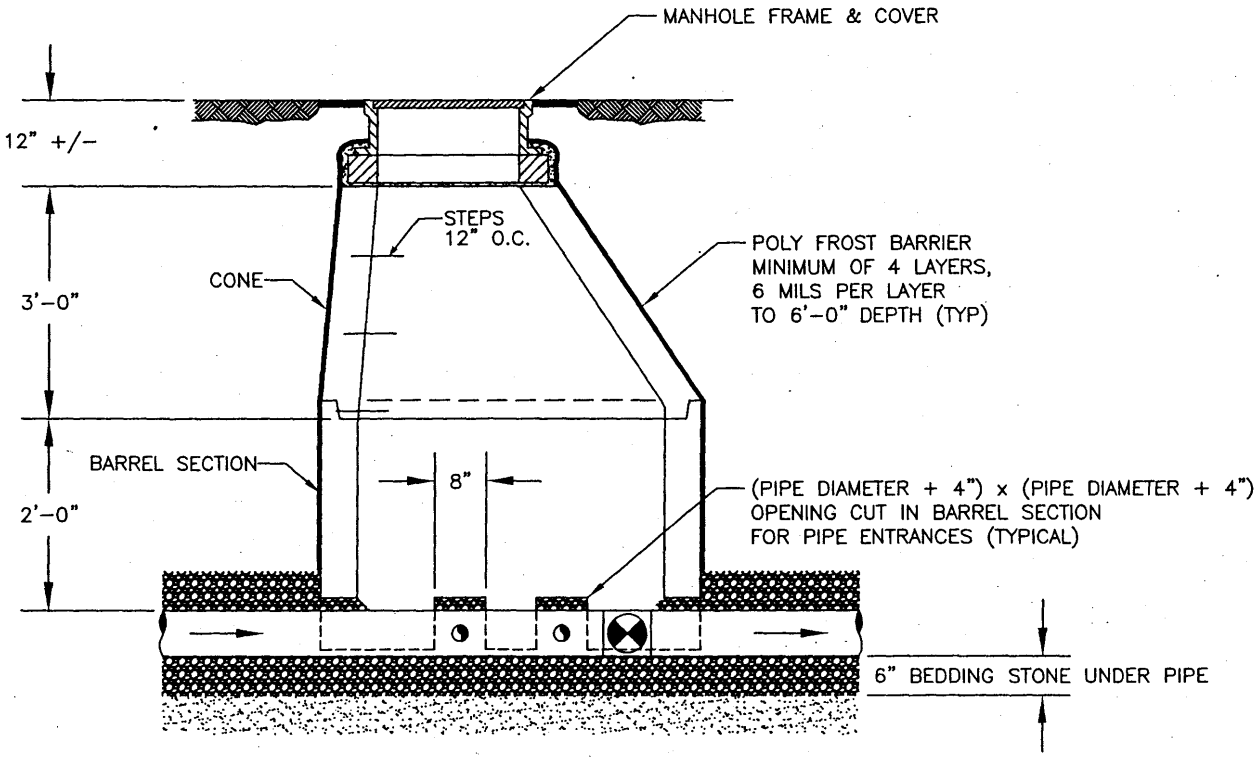

# AIR RELEASE MANHOLE
## GREATER AUGUSTA UTILITY DISTRICT
**REVISED JAN. 2008 NTS**

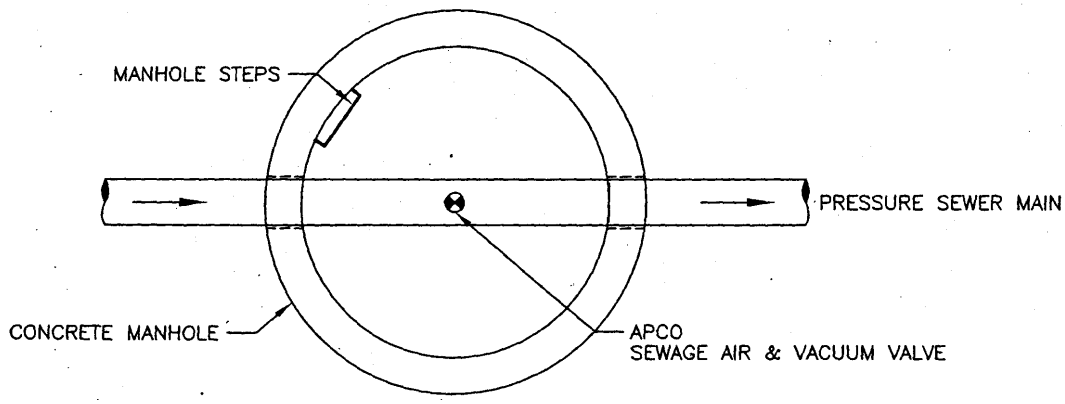


PLAN

NOT TO SCALE

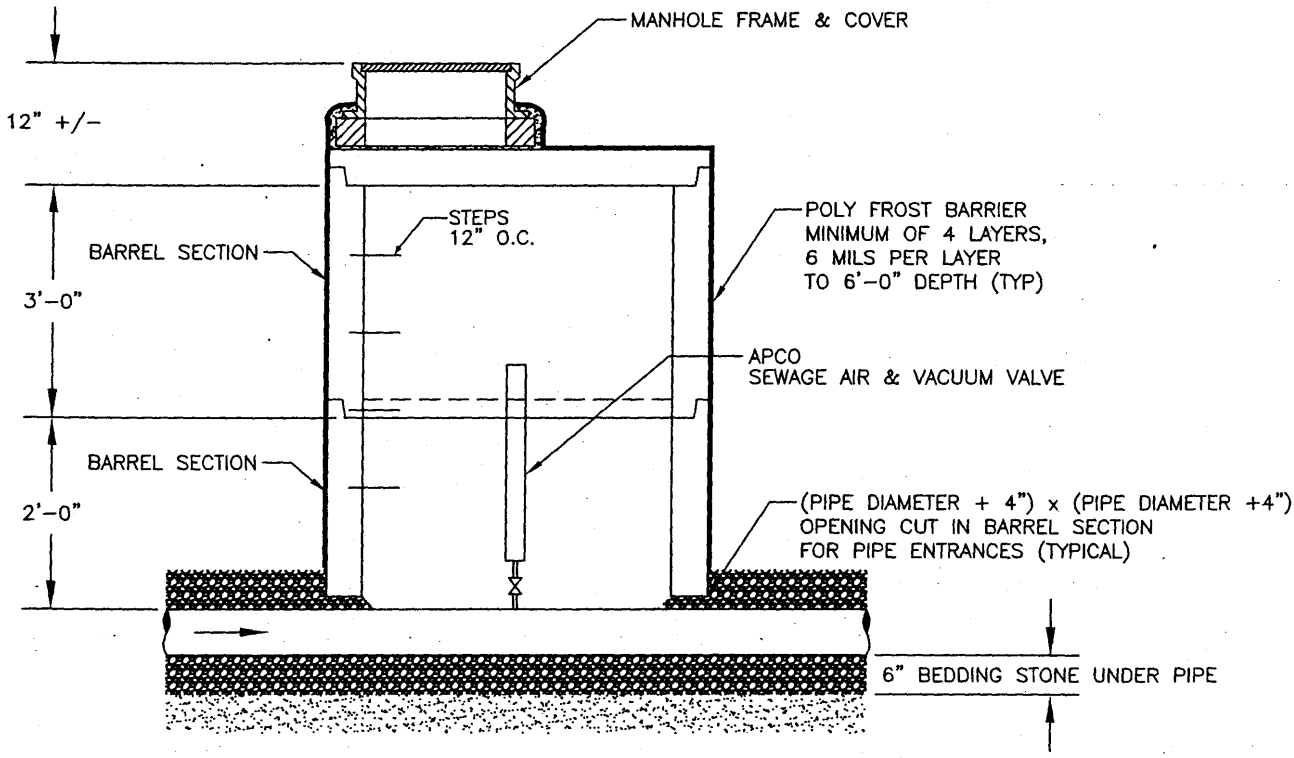

# SECTION 33 31 11

# SITE SANITARY UTILITY SEWERAGE PIPING

## PART 1 GENERAL

### 1.01 RELATED DOCUMENTS

A. State of Maine Department of Transportation, "Standard Specifications," Revision December 2002, and any revisions thereto, apply to this Section. If the Contractor discovers any ambiguity, error, omission, conflict, or discrepancy, Section 10 1. 3.6 Priority of Conflicting Contract Documents shall control.

1. Drawings and general provisions of the Contract, and Division 1 Specification Sections, apply to this Section.
2. Any supplements to any of the above specifications and or standards issued prior to issuance of this Project Manual, apply to this section.

### 1.02 SECTION INCLUDES

A. Sanitary sewerage drainage piping, fittings, and accessories.

### 1.03 RELATED REQUIREMENTS

A. Section 31 23 16 - Excavation: Excavating of trenches.

B. Section 31 23 16.13 - Trenching: Excavating, bedding, and backfilling.

C. Section 31 23 23 - Fill: Bedding and backfilling.

D. Section 31 23 16.13 - Trenching: Excavating, bedding, and backfilling.

E. Section 33 05 13 - Manholes and Structures.

### 1.04 PRICE AND PAYMENT PROCEDURES

A. Measurement and payment will be as follows:

B. Pay Item 801.093 2" Force Main: Pay Unit – Linear Foot.

C. Pay Item 801.141 4" PVC Sanitary Sewer (SDR): Pay Unit – Linear Foot.

D. Pay Item 801.17 8" PVC Sanitary Sewer: Pay Unit – Linear Foot.

E. Basis of Payment – Basis of Payment – The accepted quantity of Force Main and Sanitary Sewer will be paid for at the contract unit price per Linear Foot complete in place. Trench Excavation, Backfill, Crushed Stone, Sand, and all other appurtenances necessary to satisfactorily complete the work shall be considered incidental and no further payment will be made. The Provisions of the Greater Augusta Utility District Water and Sewer Construction Specifications and Procedures, Latest Revision or Specification Section 33 31 11 of the contract documents, whichever is stricter, shall apply.

### 1.05 REFERENCE STANDARDS

A. Greater Augusta Utility District (GAUD) Water and Sewer Construction Specifications and Procedures, Latest Revision.

B. ASTM A74 - Standard Specification for Cast Iron Soil Pipe and Fittings; 2009.

C. ASTM A746 - Standard Specification for Ductile Iron Gravity Sewer Pipe; 2009.

D. ASTM D1785 - Standard Specification for Poly(Vinyl Chloride) (PVC) Plastic Pipe, Schedules 40, 80, and 120; 2012.

E. ASTM D 2241 - Standard Specification for Poly(Vinyl Chloride) (PVC) Pressure-Rated Pipe (SDR Series)

F. ASTM D2321 - Standard Practice for Underground Installation of Thermoplastic Pipe for Sewers and Other Gravity-Flow Applications; 2011.

G. ASTM D2729 - Standard Specification for Poly(Vinyl Chloride) (PVC) Sewer Pipe and Fittings; 2011.

H. ASTM D3034 - Standard Specification for Type PSM Poly(Vinyl Chloride) (PVC) Sewer Pipe and Fittings; 2008.

I. ASTM F 1417 - Standard Test Method for Installation Acceptance of Plastic Gravity Sewer Lines Using Low-Pressure Air.

J. AWWA C111/A21.11 - American National Standard for Rubber Gasket Joints For Cast Iron and Ductile Iron Pressure Pipe and Fittings; 2007. (ANSI/AWWA C111/A21.11)

1.06 SUBMITTALS

A. Product Data: Provide data indicating pipe, pipe accessories.

B. Gravity and force main sewer testing results.

C. Project Record Documents:
   1. Record location of pipe runs, connections, cleanouts, and invert elevations.
   2. Identify and describe unexpected variations to subsoil conditions or discovery of uncharted utilities.

1.07 REGULATORY REQUIREMENTS

A. Perform work in accordance with the Greater Augusta Utility District specifications and this specification, in the event of a conflict, the stricter requirement applies.

B. Maintain a minimum 5 foot separation between any private sewer piping and other utilities to facilitate maintenance and repairs.

PART 2 PRODUCTS

2.01 SEWER PIPE MATERIALS

A. Pipe shall be continually marked with manufacturer's name, pipe size, cell classification, SDR rating, and ASTM classification.

B. Pipe joints shall be integrally molded bell ends in accordance with ASTM D 3034 Table 2, with factory supplied elastomeric gaskets and lubricant.

C. Polyvinyl Chloride Pressure Sewer less than 4" diameter: ASTM D 2241, ASTM D 1784, and ASTM D 1869. Strength requirement 200 psi SDR 21.

D. Fittings: Same material as pipe molded or formed to suit pipe size and end design, in required tee, bends, elbows, cleanouts, reducers, traps and other configurations required.

2.02 PIPE ACCESSORIES

A. Trace Wire: Magnetic detectable conductor, clear plastic covering, imprinted with "Sewer

Service" in large letters. Minimum 8 gauge wire or approved equivalent.

2.03 BEDDING AND COVER MATERIALS

A. Pipe Bedding Material: As specified in Section 31 23 16.13.

B. Pipe Cover Material: As specified in Section 31 23 16.13.

PART 3 EXECUTION

3.01 TRENCHING

A. See Section 31 23 16.13 for additional requirements.

B. Hand trim excavation for accurate placement of pipe to elevations indicated.

C. Backfill around sides and to top of pipe with cover fill, tamp in place and compact, then complete backfilling.

3.02 INSTALLATION - PIPE

A. Verify that trench cut is ready to receive work and excavations, dimensions, and elevations are as indicated on layout drawings.

B. Install pipe, fittings, and accessories in accordance with manufacturer's instructions. Seal watertight.
   1. Plastic Pipe: Also comply with ASTM D2321.

C. Lay pipe to slope gradients noted on layout drawings; with maximum variation from true slope of 1/8 inch in 10 feet.

D. Connect to building sanitary sewer outlet.

E. Make all required connections to existing sewers. Carry out such work in accordance with local standards. Observe care to prevent debris from entering sewers. Check the invert elevations of existing sewers to which connections are to be made, and if appreciable difference from elevations noted on the drawings, or if they involve any difficulty in obtaining necessary drainage, notify the Engineer immediately so that appropriate corrective action may be taken.

F. Commence at the lowest point in the system and lay the pipe with the bell end upgrade. Test pipe for soundness and clean interior and joint surfaces before lowering the pipe into the trench. Lay pipe in straight lines and on uniform grades between points where changes in alignment or grade are shown. Bed the pipe barrel uniformly.

G. Comply fully with manufacturer's instructions for sewer pipe jointing, using sealing or lubricating compounds supplied by the manufacturer, and apply proper pressure to seal the spigot in the bell.

H. As soon as the joint material has set, pack fine earth carefully around the joints, and around and over the pipe. Carry this backfill operation to a depth of at least twelve inches above the top of the pipe. Care shall be used in tamping backfill under lower parts of the pipe to give proper support, especially in shallow trenches.

I. Flush all sanitary sewers, including building connections, with water in sufficient volume to obtain free flow through each line. Remove any obstructions and correct any defects discovered.

J. Install trace wire 6 inches above top of pipe; coordinate with Section 31 23 16.13.

K. Test all sewer piping in accordance with GAUD specifications prior to being activated. All test results shall be submitted to GAUD within 1 week of testing.

3.03 FIELD QUALITY CONTROL

A. Provide copies of test report to owner and servicing utility, documenting results and compliance with requirements in advance of requesting a certificate of occupancy.

B. If tests indicate Work does not meet specified requirements, remove Work, replace and retest at no cost to Owner.

C. Pressure Test (Gravity Sewer): Test in accordance with ASTM F 1417.

D. Pressure Test Force Main: Use Hydrostatic test as follows:
   1. Fill section of pipe with water and expel all air.
   2. Pressurize to 1.5 times the normal operating pressure but not less than 60 psi.
   3. Measure leakage over a 2-hour test period.
   4. Acceptable leakage: less than 10 gallons per day per inch diameter per mile of pipe tested.

3.04 PROTECTION

A. Protect pipe and bedding cover from damage or displacement until backfilling operation is in progress.

**END OF SECTION 33 31 11**

# SECTION 33 36 00

# UTILITY SEPTIC TANKS

## PART 1 GENERAL

### 1.01 RELATED DOCUMENTS

A. State of Maine Department of Transportation, "Standard Specifications," Revision December 2002, and any revisions thereto, apply to this Section. If the Contractor discovers any ambiguity, error, omission, conflict, or discrepancy, Section 10 1. 3.6 Priority of Conflicting Contract Documents shall control.

1. Drawings and general provisions of the Contract, and Division 1 Specification Sections, apply to this Section.
2. Any supplements to any of the above specifications and or standards issued prior to issuance of this Project Manual, apply to this section.

### 1.02 SECTION INCLUDES

A. Holding Tank

B. Pump station

C. Oil/Water Separator

### 1.03 RELATED REQUIREMENTS

A. Section 31 22 00 - Grading: Soil cover over tank

B. Section 31 23 16 - Excavation: General requirements connecting piping.

C. Section 31 23 16.13 - Trenching: General requirements for connecting piping including compaction testing.

D. Section 31 23 23 - Fill: General requirements for backfilling piping trenches including compaction testing.

### 1.04 PRICE AND PAYMENT PROCEDURES

A. Measurement and payment will be as follows:

B. Pay Item 802.203 Holding Tank: Pay Unit - Each.

C. Pay Item 802.204 Oil/Water Separator: Pay Unit – Each.

D. Pay Item Pump Station – See Specification Section 33 05 13

E. Basis of Payment – The accepted quantity of Holding Tank and Oil/Water Separator will be paid for at the contract unit price per Each. Provisions of Section 604 of the "State of Maine, Department of Transportation, Standard Specifications, Revisions of December, 2002" or Specification Section 33 36 00 of the contract documents, whichever is stricter, shall apply. Excavation, Backfill, Couplings, Sealant, Connections of Pipe, Crushed Stone, Sand, Sediment Removal, Frames, Grates, Covers, Steps, Risers, and all other appurtenances necessary to satisfactorily complete the work shall be considered incidental to the cost of supplying and installing the structures.

1.05 REFERENCE STANDARDS

A. ASTM A74 - Standard Specification for Cast Iron Soil Pipe and Fittings; 2009.

B. ASTM D2729 - Standard Specification for Poly(Vinyl Chloride) (PVC) Sewer Pipe and Fittings; 2011.

C. ASTM D3034 - Standard Specification for Type PSM Poly(Vinyl Chloride) (PVC) Sewer Pipe and Fittings; 2008.

1.06 SUBMITTALS

A. Product Data: Provide data on tank accessories and tank.

B. Provide data on control panel, floats, alarms, etc.

C. Project Record Documents: Accurately record actual locations and inverts of buried pipe, components, and connections.

PART 2 PRODUCTS

2.01 HOLDING TANK

A. Holding Tank: Reinforced precast concrete construction, 4,000 psi 28 day minimum strength, concrete partitioned chambers, concrete lid with lift rings, vent, inlet inspection hole, inlet turned down minimum 12 inches below effluent level.

B. Tank risers and covers designed for H-20 loading.

C. Double action float and High water alarm.

D. Tank Capacity: 2,000 gallon.

E. Control panel, alarms, floats, to be commercial grade hardwired units, installed inside the building. Coordinate location with Architect.

2.02 PUMP STATION

A. Pump Station: Reinforced precast concrete construction, 4,000 psi 28 day minimum strength designed for H-20 loading.

B. Pump: Liberty LSG202M-3, 2 HP 208/230 volt single phase. Or engineer approved equivalent.

C. Control panel, alarms, flashing strobe, floats, to be commercial grade hardwired units.

D. The control panel, alarm, and flashing strobe shall be mounted to a 6”x6” pressure treated post adjacent to the pump station. All components shall be weatherproof. The strobe shall have 360 degree visibility. The lowest point of the attached components shall be 5 feet above finished grade. All components shall be hardwired. All controls shall be in a locking cabinet.

E The 6”x6” pressure treated post shall rated for ground contact and be backfilled with MDOT Type B Underdrain Gravel, well compacted. The bottom of the post shall be 5 feet below finished grade.

F. Pump Station cover and access grate designed for H-20 loading.

2.03 OIL/WATER SEPARATOR

A. Oil/Water Separator: Reinforced precast concrete construction, 4,000 psi 28 day minimum strength, concrete partitioned chambers, concrete lid with lift rings, vent, inlet inspection hole, inlet turned down minimum 12 inches below effluent level.

B. Tank risers and covers designed for H-20 loading.

C. Tank Capacity: 1,500 gallon.

2.04 CONNECTING PIPE MATERIALS

A. See Section 33 31 11 Site Sanitary Utility sewerage piping.

2.05 BEDDING AND BACKFILL MATERIALS

A. Provide bedding and backfill materials as specified in Section 31 23 23 and as follows:

B. Tank Bedding Material: Crushed Stone.

C. Tank Backfill Material: Type B underdrain fill.

PART 3 EXECUTION

3.01 EXAMINATION

A. Verify that building sanitary sewer connection, size, location and invert are as indicated.

3.02 EXCAVATING AND TRENCHING

A. See Section 31 23 16 and Section 31 23 23 for general requirements.

3.03 TANK INSTALLATION

A. Hand trim excavation for accurate placement of tank to elevations indicated.

B. Place bedding material level in 8” lifts, compact to 95 percent.

C. Install holding tank and related components on bedding in accordance with manufacturer's instructions.

D. Backfill around sides of tank, tamp in place and compacted to 95 percent.

3.04 PUMP STATION INSTALLATION

A. Hand trim excavation for accurate placement of station to elevations indicated.

B. Place bedding material level in 8” lifts, compact to 95 percent.

C. Install pump station and related components on bedding in accordance with manufacturer's instructions.

D. Backfill around sides of pump station, tamp in place and compacted to 95 percent.

3.04 INSTALLATION - ELECTRICAL

A. Install electrical service for pumps, alarms, etc. within conduit from the building to the appurtenance. Comply with applicable electrical codes.

B. Connect electrical service to electric panel as appropriate, hardwire all services. Comply with applicable electrical codes.

**This Page Intentionally Left Blank**

**END OF SECTION 33 36 00**

# SECTION 33 41 11

# SITE STORM UTILITY DRAINAGE PIPING

## PART 1 GENERAL

### 1.01 RELATED DOCUMENTS

A. State of Maine Department of Transportation, "Standard Specifications," Revision December 2002, and any revisions thereto, apply to this Section. If the Contractor discovers any ambiguity, error, omission, conflict, or discrepancy, Section 10 1. 3.6 Priority of Conflicting Contract Documents shall control.

1. Drawings and general provisions of the Contract, and Division 1 Specification Sections, apply to this Section.
2. Any supplements to any of the above specifications and or standards issued prior to issuance of this Project Manual, apply to this section.

### 1.02 SECTION INCLUDES

A. Storm drainage piping, fittings, and accessories.

B. Foundation drainage piping and accessories.

### 1.03 RELATED REQUIREMENTS

A. Section 31 23 16 - Excavation: Excavating of trenches.

B. Section 31 23 16.13 - Trenching: Excavating, bedding, and backfilling.

C. Section 31 23 23 - Fill: Bedding and backfilling.

D. Section 31 23 16.13 - Trenching: Excavating, bedding, and backfilling.

E. Section 33 05 13 - Manholes and Structures.

### 1.04 PRICE AND PAYMENT PROCEDURES

A. Measurement and payment will be as follows:

B. Pay Item 603.05 6" PVC Pipe: Pay Unit - Linear Foot.

C. Pay Item 603.159 12" Culvert Pipe Option III: Pay Unit - Linear Foot.

D. Pay Item 603.169 15" Culvert Pipe Option III: Pay Unit - Linear Foot.

E. Pay Item 603.179 18" Culvert Pipe Option III: Pay Unit - Linear Foot.

F. Pay Item 603.199 24" Culvert Pipe Option III: Pay Unit - Linear Foot.

G. Pay Item 603.801 24" Trash Rack: Pay Unit - Each

H. Pay Item 605.091 6" Wet Pond Underdrain: Pay Unit – Linear Foot.

I. Pay Item 801.54 Underdrain Cleanout: Pay Unit - Each

J. Basis of Payment – The accepted quantity of Pipe and Underdrain will be paid for at the

contract unit price per Linear Foot complete in place. Trench Excavation, Backfill, Couplings, Connections of Pipe, Crushed Stone, Sand, and all other appurtenances necessary to satisfactorily complete the work shall be considered incidental and no further payment will be made with the following exceptions. Impermeable membrane at 6" wet pond underdrain shall be considered incidental to Item 605.091 and no further payment will be made. The Provisions of Sections 603 and 605 of the "State of Maine, Department of Transportation, Standard Specifications, Revisions of December, 2002" or Specification Section 33 41 11 of the contract documents, whichever is stricter, shall apply.

K. Basis of Payment – The accepted quantity of Trash Racks will be paid for at the contract unit price per Each installed and in place per the details contained in the plan set including all appurtenances.

L. Basis of Payment – The accepted quantity of Valves and Cleanouts will be paid for at the contract unit price per Each installed and in place per the details contained in the plan set including all appurtenances. Valve operating wrenches and handle extensions shall be supplied to the Owner at no additional cost.

1.05 REFERENCE STANDARDS

A. AASHTO M252 - Standard Specification For Corrugated Polyethylene Pipe, 75 mm to 250mm; 2009.

B. AASHTO M254 - Standard Specification For Corrugated Polyethylene Pipe, 300 mm to 1,500mm; 2009.

C. ASTM C76 - Standard Specification for Reinforced Concrete Culvert, Storm Drain, and Sewer Pipe; 2012a.

D. ASTM C443 - Standard Specification for Joints for Concrete Pipe and Manholes, Using Rubber Gaskets; 2012.

E. ASTM D1785 - Standard Specification for Poly(Vinyl Chloride) (PVC) Plastic Pipe, Schedules 40, 80, and 120; 2012.

F. ASTM D2321 - Standard Practice for Underground Installation of Thermoplastic Pipe for Sewers and Other Gravity-Flow Applications; 2011.

G. ASTM D2729 - Standard Specification for Poly(Vinyl Chloride) (PVC) Sewer Pipe and Fittings; 2011.

H. ASTM D3034 - Standard Specification for Type PSM Poly(Vinyl Chloride) (PVC) Sewer Pipe and Fittings; 2008.

1.06 SUBMITTALS

A. Product Data: Provide data indicating pipe, pipe accessories.

B. Project Record Documents:
   1. Record location of pipe runs, connections, catch basins, cleanouts, and invert elevations.
   2. Identify and describe unexpected variations to subsoil conditions or discovery of uncharted utilities.

1.07 PROJECT CONDITIONS

A. Coordinate the Work with termination of storm sewer connection outside building, trenching, connection to foundation drainage system.

PART 2 PRODUCTS

2.01 STORM DRAIN PIPE MATERIALS

A. Reinforced Concrete Pipe: ANSI/ASTM C76, IV, with modified tongue-and-groove compression gasket joints complying with ANSI/ASTM C443.

B. Reinforced Concrete Pipe Joint Device: ASTM C 443 rubber compression gasket joint.

C. Corrugated Polyethylene Pipe (PE): Pipe complying with AASHTO M294 and MP7, and ASTM D3550. Interior of pipes shall be smooth, and shall have an "n" value of not less than .010. Pipes shall be joined with gasketed bell and spigot joints complying with AASHTO M252 and M294. Gaskets shall comply with ASTM F477 and ASTM D1149. Provide minimum coverage per manufacturers specifications.
   1. Acceptable Manufacturers of Corrugated Polyethylene Pipe: Hancor "Sure Lok", ADS N-12 Prolink, or equal.

D. Plastic Pipe: ASTM D3034, Type PSM, Poly(Vinyl Chloride) (PVC) material; inside nominal diameter of specified inches, bell and spigot style solvent sealed joint end.

E. Building foundation drain: 4" dia. SDR-35 perforated underdrain pipe.

2.02 PIPE ACCESSORIES

A. Fittings: Same material as pipe molded or formed to suit pipe size and end design, in required tee, bends, elbows, cleanouts, reducers, traps and other configurations required.

PART 3 EXECUTION

3.01 TRENCHING

A. See Section 31 23 16.13 for additional requirements.

B. Backfill around sides and to top of pipe with cover fill, tamp in place and compact, then complete backfilling.

3.02 INSTALLATION - PIPE

A. Verify that trench cut is ready to receive work and excavations, dimensions, and elevations are as indicated on layout drawings.

B. Install pipe, fittings, and accessories in accordance with manufacturer's instructions. Seal watertight.
   1. Plastic Pipe: Also comply with ASTM D2321.

C. Lay pipe to slope gradients noted on layout drawings; with maximum variation from true slope of 1/8 inch in 10 feet.

D. Connect to building storm drainage system, foundation drainage system.

3.03 INSTALLATION - CATCH BASINS, TRENCH DRAINS AND CLEANOUTS

A. See Section 33 05 13 "Manholes and Structures"

3.04 FIELD QUALITY CONTROL

A. Perform field inspection and testing in accordance with requirements of local authorities having jurisdiction.

B. If tests indicate Work does not meet specified requirements, remove Work, replace and retest at no cost to Owner.

3.05 PROTECTION

A. Protect pipe and bedding cover from damage or displacement until backfilling operation is in progress.

**END OF SECTION 33 41 11**

# SECTION 33 46 00

# SUBDRAINAGE

## PART 1 GENERAL

### 1.01 RELATED DOCUMENTS

A. State of Maine Department of Transportation, "Standard Specifications," Revision December 2002, and any revisions thereto, apply to this Section. If the Contractor discovers any ambiguity, error, omission, conflict, or discrepancy, Section 10 1. 3.6 Priority of Conflicting Contract Documents shall control.

1. Drawings and general provisions of the Contract, and Division 1 Specification Sections, apply to this Section.

2. Any supplements to any of the above specifications and or standards issued prior to issuance of this Project Manual, apply to this section.

### 1.02 SECTION INCLUDES

A. Building Perimeter and Under-Slab Drainage Systems.

B. Filter aggregate and fabric and bedding.

### 1.03 RELATED REQUIREMENTS

A. Geotechnical Engineering Study (Soils Report) by S.W. Cole Engineering, Inc. dated November 7, 2013.

B. Section 31 23 16 - Excavation: Excavating for subdrainage system piping and surrounding filter aggregate.

C. Section 31 23 23 - Fill: Backfilling over filter aggregate, up to subgrade elevation.

### 1.04 PRICE AND PAYMENT PROCEDURES

A. Measurement and payment will be as follows:

B. Pay Item 603.045 4" Foundation Underdrain: Pay Unit – Linear Foot

C. Basis of Payment – The accepted quantity of Underdrain will be paid for at the contract unit price per Linear Foot complete in place. Trench Excavation, Backfill, Couplings, Connections of Pipe, Crushed Stone, Sand, and all other appurtenances necessary to satisfactorily complete the work shall be considered incidental and no further payment will be made. The Provisions of Sections 603 and 605 of the "State of Maine, Department of Transportation, Standard Specifications, Revisions of December, 2002" or Specification Section 33 46 00 of the contract documents, whichever is stricter, shall apply.

### 1.05 REFERENCE STANDARDS

A. ASTM D2729 - Standard Specification for Poly(Vinyl Chloride) (PVC) Sewer Pipe and Fittings; 2011.

### 1.06 SUBMITTALS

A. Product Data: Provide data on pipe drainage products, pipe accessories.

B. Manufacturer's Certificate: Certify that products meet or exceed specified requirements.

C. Project Record Documents: Record location of pipe runs, connections, cleanouts and principal invert elevations.

1.07 REGULATORY REQUIREMENTS

A. Conform to applicable code for materials and installation of the work of this section.

PART 2 PRODUCTS

2.01 PIPE MATERIALS

A. Polyvinyl Chloride Pipe: ASTM D2729; plain end, 4 inch inside diameter; with required fittings.

B. Use perforated pipe at subdrainage system; unperforated through sleeved walls.

2.02 AGGREGATE AND BEDDING

A. See Section 31 23 23 - Fill for Type C underdrain stone.

2.03 ACCESSORIES

A. Pipe Couplings: Solid plastic.

B. Geotextile Fabric: See Section 31 23 23 - Fill for non-woven geotextile.

PART 3 EXECUTION

3.01 EXAMINATION

A. Verify that excavated base is ready to receive work and excavations, dimensions, and elevations are as indicated on layout Drawings.

3.02 PREPARATION

A. Hand trim excavations to required elevations. Correct over-excavation with Type C Underdrain stone.

B. Remove large stones or other hard matter that could damage drainage piping or impede consistent backfilling or compaction.

3.03 INSTALLATION

A. Install and join pipe and pipe fittings in accordance with pipe manufacturer's instructions.

B. Place 6 inches of Type C Underdrain Stone over non-woven geotextile.

C. Place pipe with perforations facing down. Mechanically join pipe ends.

D. Install pipe couplings.

E. Install Type C Underdrain Stone at sides, over joint covers and top of pipe. Provide top cover and sides a compacted thickness of 6 inches.

F. Wrap filter fabric over levelled top surface of aggregate cover prior to subsequent backfilling operations.

G. Place aggregate in maximum 4 inch lifts, consolidating each lift.

H. Refer to Section 31 23 23 for compaction requirements. Do not displace or damage pipe when compacting.

I. Connect to storm sewer system with unperforated pipe.

3.04 FIELD QUALITY CONTROL

A. Request inspection prior to and immediately after placing aggregate cover over pipe.

3.05 PROTECTION

A. Protect pipe and aggregate cover from damage or displacement until backfilling operation begins.

**This Page Intentionally Left Blank**

**END OF SECTION 33 46 00**

October 29, 2013
Supersedes October 08, 2013

# STANDARD DETAIL UPDATES

Standard Details and Standard Detail updates are available at:
http://www.maine.gov/mdot/contractor-consultant-information/ss_standard_details_updates.php

| Detail # | Description | Revision Date |
|---|---|---|
| 203(03) | Backslope Rounding | 1/29/08 |
| 502(03) | Concrete Curb - Bituminous Wearing Surface | 8/08/11 |
| 502(03)A | Concrete Curb - Concrete Wearing Surface | 2/2/09 |
| 502(07) | Precast Concrete Deck Panels - Layout Plan | 2/2/09 |
| 502(07)A | Precast Concrete Deck Panels - Layout Plan | 2/2/09 |
| 502(08) | Precast Concrete Deck Panels - Panel Plan | 2/2/09 |
| 502(09) | Precast Concrete Deck Panels - Blocking Detail | 2/2/09 |
| 502(10) | Precast Concrete Deck Panels | 2/2/09 |
| 502(11) | Precast Concrete Deck Panels | 2/2/09 |
| 502(12) | Precast Concrete Deck Panels - Notes | 10/28/09 |
| 502(12)A | Precast Concrete Deck Panels - Notes | 2/2/09 |
| 504(15) | Diaphragms | 5/19/11 |
| 504(21) | Tension Flange Connection for Diaphragm and Cross Frames | 10-11-12 |
| 504(22) | Diaphragm & Crossframe Notes | 10/11/12 |
| 504(23) | Hand-Hold Details | 12/08/05 |
| 502(24) | Hand-Hold Details | 10/11/12 |
| 507(04) | Steel Bridge Railing | 2/05/03 |
| 507(04A) | Steel Bridge Railing | 7/3/13 |
| 507(09) | Steel Bridge Railing | 5/19/11 |
| 507(09)A | Steel Bridge Railing | 5/19/11 |

| | | |
|---|---|---|
| 526(06) | Permanent Concrete Barrier | 2/2/09 |
| 526(08) | Permanent Concrete Barrier – Type IIIA | 10/07/10 |
| 526(08)A | Permanent Concrete Barrier – Type IIIA | 12/07/10 |
| 526(13) | Permanent Concrete Barrier – Type IIIB | 2/2/09 |
| 526(14) | Permanent Concrete Barrier – Type IIIB | 2/2/09 |
| 526(21) | Concrete Transition Barrier | 2/2/09 |
| 526(29A) | Concrete Transition Barrier | 5/1/13 |
| 526(29B) | Concrete Transition Barrier | 5/1/13 |
| 526(29C) | Concrete Transition Barrier | 5/1/13 |
| 526(33) | Concrete Transition Barrier | 5/1/13 |
| 526(39) | Texas Classic Rail – Between Window | 2/2/09 |
| 526(40) | Texas Classic Rail – Through Window | 2/2/09 |
| 526(41) | Texas Classic Rail – Through Post | 2/2/09 |
| 526(42) | Texas Classic Rail – Through Nose | 2/2/09 |
| 535(01) | Precast Superstructure - Shear Key | 10/12/06 |
| 535(02) | Precast Superstructure - Curb Key & Drip Notch | 5/20/08 |
| 535(03) | Precast Superstructure - Shear Key | 12/5/07 |
| 535(04) | Precast Superstructure - Shear Key | 12/05/07 |
| 535(05) | Precast Superstructure - Post Tensioning | 5/20/08 |
| 535(06) | Precast Superstructure - Sections | 10/12/06 |
| 535(07) | Precast Superstructure - Precast Slab & Box | 10/12/06 |
| 535(08) | Precast Superstructure - Sections | 10/12/06 |
| 535(09) | Precast Superstructure - Sections | 10/12/06 |
| 535(10) | Precast Superstructure - Sections | 10/12/06 |
| 535(11) | Precast Superstructure - Sections | 10/12/06 |

| | | |
|---|---|---|
| 535(12) | Precast Superstructure - Sections | 10/12/06 |
| 535(13) | Precast Superstructure - Sections | 10/12/06 |
| 535(14) | Precast Superstructure - Stirrups | 10/12/06 |
| 535(15) | Precast Superstructure - Plan | 10/12/06 |
| 535(16) | Precast Superstructure - Reinforcing | 10/12/06 |
| 535(17) | Precast Superstructure - Notes | 12/05/07 |
| 604(01) | Catch Basins | 11/16/05 |
| 604(05) | Type “A” & “B” Catch Basin Tops | 11/16/05 |
| 604(06) | Type “C” Catch Basin Tops | 11/16/05 |
| 604(07) | Manhole Top “D” | 11/16/05 |
| 604(09) | Catch Basin Type “E” | 11/16/05 |
| 604(18) | Utility Structures | 11/29/13 |
| 606(02) | Multiple Mailbox Support | 11/16/05 |
| 606(03) | Guardrail Standard Detail | 9/19/12 |
| 606(07) | Reflectorized Beam Guardrail Delineator Details | 11/16/05 |
| 606(20) | Guardrail - Type 3 - Single Rail - Bridge Mounted | 2/2/09 |
| 606(21) | Guardrail - Type 3 - Single Rail - Bridge Mounted | 2/2/09 |
| 606(22) | Guardrail - Type 3 - Single Rail - Bridge Mounted | 2/2/09 |
| 606(23) | Guardrail - Type 3 - Single Rail - Bridge Mounted | 2/2/09 |
| 609(03) | Curb Type 3 | 6/27/06 |
| 609(06) | Vertical Bridge Curb | 2/12/09 |
| 609(07) | Curb Type 1 | 6/27/06 |
| 609(08) | Precast Concrete Transition Curb | 2/2/09 |

| | | |
|---|---|---|
| 610(02) | Stone Scour Protection | 8/9/11 |
| 610(03) | Stone Scour Protection | 5/19/11 |
| 610(04) | Stone Scour Protection | 5/19/11 |
| 620(05) | Geotextile Placement for Protection of Slopes Adjacent to Stream & Tidal Areas | 5/19/11 |
| 626(09) | Electrical Junction Box for Traffic Signals and Lighting | 8/27/10 |
| 645(06) | H-Beam Posts – Highway Signing | 7/21/04 |
| 645(09) | Installation of Type II Signs | 7/21/04 |
| 801(01) | Drives on Sidewalk Sections | 12/13/07 |
| 801(02) | Drives on Non-Sidewalk Sections | 12/13/07 |

# SUPPLEMENTAL SPECIFICATION

(Corrections, Additions, & Revisions to Standard Specifications - Revision of December 2002)

## SECTION 101
## CONTRACT INTERPRETATION

101.2 Definitions

Closeout Documentation Replace the sentence "A letter stating the amount….. DBE goals." with "DBE Goal Attainment Verification Form"

Add "Environmental Information Hazardous waste assessments, dredge material test results, boring logs, geophysical studies, and other records and reports of the environmental conditions. For a related provision, see Section 104.3.14 - Interpretation and Interpolation."

Add "Fabrication Engineer The Department's representative responsible for Quality Assurance of pre-fabricated products that are produced off-site."

Geotechnical Information Replace with the following: "Boring logs, soil reports, geotechnical design reports, ground penetrating radar evaluations, seismic refraction studies, and other records of subsurface conditions. For a related provision, see Section 104.3.14 - Interpretation and Interpolation."

## SECTION 102
## DELIVERY OF BIDS

102.7.1 Location and Time Add the following sentence "As a minimum, the Bidder will submit a Bid Package consisting of the Notice to Contractors, the completed Acknowledgement of Bid Amendments form, the completed Schedule of Items, 2 copies of the completed Agreement, Offer, & Award form, a Bid Bond or Bid Guarantee, and any other Certifications or Bid Requirements listed in the Bid Book."

102.11.1 Non-curable Bid Defects Replace E. with "E. The unit price and bid amount is not provided or a lump sum price is not provided or is illegible as determined by the Department."

## SECTION 103
## AWARD AND CONTRACTING

103.3.1 Notice and Information Gathering Change the first paragraph to read as follows: "After Bid Opening and as a condition for Award of a Contract, the Department may require an Apparent Successful Bidder to demonstrate to the Department's satisfaction that the Bidder is responsible and qualified to perform the Work."

## SECTION 104
## GENERAL RIGHTS AND RESPONSIBILITIES

104.3.14 Interpretation and Interpolation In the first sentence, change "…and Geotechnical Information." to "…Environmental Information, and Geotechnical Information."

# SECTION 105
# GENERAL SCOPE OF WORK

Delete the entire Section 105.6 and replace with the following:

105.6.1 Department Provided Services The Department will provide the Contractor with the description and coordinates of vertical and horizontal control points, set by the Department, within the Project Limits, for full construction Projects and other Projects where survey control is necessary. For Projects of 1,500 feet in length, or less: The Department will provide three points. For Projects between 1,500 and 5,000 feet in length: The Department will provide one set of two points at each end of the Project. For Projects in excess of 5,000 feet in length, the Department will provide one set of two points at each end of the Project, plus one additional set of two points for each mile of Project length. For non-full construction Projects and other Projects where survey control is not necessary, the Department will not set any control points and, therefore, will not provide description and coordinates of any control points. Upon request of the Contractor, the Department will provide the Department's survey data management software and Survey Manual to the Contractor, or its survey Subcontractor, for the exclusive use on the Department's Projects.

105.6.2 Contractor Provided Services Utilizing the survey information and points provided by the Department, described in Subsection 105.6.1, Department Provided Services, the Contractor shall provide all additional survey layout necessary to complete the Work. This may include, but not be limited to, reestablishing all points provided by the Department, establishing additional control points, running axis lines, providing layout and maintenance of all other lines, grades, or points, and survey quality control to ensure conformance with the Contract. The Contractor is also responsible for providing construction centerline, or close reference points, for all Utility Facilities relocations and adjustments as necessary to complete the Work. When the Work is to connect with existing Structures, the Contractor shall verify all dimensions before proceeding with the Work. The Contractor shall employ or retain competent engineering and/or surveying personnel to fulfill these responsibilities.

The Contractor must notify the Department of any errors or inconsistencies regarding the data and layout provided by the Department as provided by Section 104.3.3 - Duty to Notify Department If Ambiguities Discovered.

105.6.2.1 Survey Quality Control The Contractor is responsible for all construction survey quality control. Construction survey quality control is generally defined as, first, performing initial field survey layout of the Work and, second, performing an independent check of the initial layout using independent survey data to assure the accuracy of the initial layout; additional iterations of checks may be required if significant discrepancies are discovered in this process. Construction survey layout quality control also requires written documentation of the layout process such that the process can be followed and repeated, if necessary, by an independent survey crew.

105.6.3 Survey Quality Assurance It is the Department's prerogative to perform construction survey quality assurance. Construction survey quality assurance may, or may not, be performed by the Department. Construction survey quality assurance is generally defined as an independent check of the construction survey quality control. The construction survey

quality assurance process may involve physically checking the Contractor's construction survey layout using independent survey data, or may simply involve reviewing the construction survey quality control written documentation. If the Department elects to physically check the Contractor's survey layout, the Contractor's designated surveyor may be required to be present. The Department will provide a minimum notice of 48 hours to the Contractor, whenever possible, if the Contractor's designated surveyor's presence is required. Any errors discovered through the quality assurance process shall be corrected by the Contractor, at no additional cost to the Department.

105.6.4 Boundary Markers The Contractor shall preserve and protect from damage all monuments or other points that mark the boundaries of the Right-of-Way or abutting parcels that are outside the area that must be disturbed to perform the Work. The Contractor indemnifies and holds harmless the Department from all claims to reestablish the former location of all such monuments or points including claims arising from 14 MRSA § 7554-A. For a related provision, see Section 104.3.11 - Responsibility for Property of Others.

## SECTION 106
## QUALITY

106.4.3 Testing Change the first sentence in paragraph three from "…maintain records of all inspections and tests." to "…maintain original documentation of all inspections, tests, and calculations used to generate reports."

106.6 Acceptance Add the following to paragraph 1 of A: "This includes Sections 401 - Hot Mix Asphalt, 402 - Pavement Smoothness, and 502 - Structural Concrete - Method A - Air Content."

Add the following to the beginning of paragraph 3 of A: "For pay factors based on Quality Level Analysis, and"

106.7.1 Standard Deviation Method Add the following to F: "Note: In cases where the mean of the values is equal to either the USL or the LSL, then the PWL will be 50 regardless of the computed value of s."

Add the following to H: "Method C Hot Mix Asphalt: PF = [55 + (Quality Level *0.5)] * 0.01"

## SECTION 107
## TIME

107.3.1 General Add the following: "If a Holiday occurs on a Sunday, the following Monday shall be considered a Holiday. Sunday or Holiday work must be approved by the Department, except that the Contractor may work on Martin Luther King Day, President's Day, Patriot's Day, the Friday after Thanksgiving, and Columbus Day without the Department's approval."

107.7.2 Schedule of Liquidated Damages Replace the table of Liquidated Damages as follows:

| From More Than | Up to and Including | Amount of Liquidated Damages per Calendar Day |
|---|---|---|
| $0 | $100,000 | $225 |

| | | |
|---|---|---|
| $100,000 | $250,000 | $350 |
| $250,000 | $500,000 | $475 |
| $500,000 | $1,000,000 | $675 |
| $1,000,000 | $2,000,000 | $900 |
| $2,000,000 | $4,000,000 | $1,000 |
| $4,000,000 | and more | $2,100 |

## SECTION 108
## PAYMENT

Remove Section 108.4 and replace with the following:

"108.4 Payment for Materials Obtained and Stored Acting upon a request from the Contractor and accompanied by bills or receipted bills, the Department will pay for all or part of the value of acceptable, non-perishable Materials that are to be incorporated in the Work, including Materials that are to be incorporated into the Work, not delivered on the Work site, and stored at places acceptable to the Department. Examples of such Materials include steel piles, stone masonry, curbing, timber and lumber, metal Culverts, stone and sand, gravel, and other Materials. The Department will not make payment on living or perishable Materials until acceptably planted in their final locations.

If payment for Materials is made to the Contractor based on bills, only, then the Contractor must provide receipted bills to the Department for these Materials within 14 days of the date the Contractor receives payment for the Materials. Failure of the Contractor to provide receipted bills for these Materials within 14 days of the dated the Contractor receives payment will result in the paid amount being withheld from the subsequent progress payment, or payments, until such time the receipted bills are received by the Department.

Materials paid for by the Department are the property of the Department, but the risk of loss shall remain with the Contractor. Payment for Materials does not constitute Acceptance of the Material. If Materials for which the Department has paid are later found to be unacceptable, then the Department may withhold amounts reflecting such unacceptable Materials from payments otherwise due the Contractor.

In the event of Default, the Department may use or cause to be used all paid-for Materials in any manner that is in the best interest of the Department."

## SECTION 109
## CHANGES

109.1.1 Changes Permitted Add the following to the end of the paragraph: "There will be no adjustment to Contract Time due to an increase or decrease in quantities, compared to those estimated, except as addressed through Contract Modification(s)."

109.1.2 Substantial Changes to Major Items Add the following to the end of the paragraph: "Contract Time adjustments may be made for substantial changes to Major Items when the change affects the Critical Path, as determined by the Department"

109.4.4 Investigation / Adjustment Third sentence, delete the words "subsections (A) - (E)"

109.5.1 Definitions - Types of Delays

B. Compensable Delay Replace (1) with the following; "a weather related Uncontrollable Event of such an unusually severe nature that a Federal Emergency Disaster is declared. The Contractor will only be entitled to an Equitable Adjustment if the Project falls within the geographic boundaries prescribed under the disaster declaration."

109.7.2 Basis of Payment Replace with the following: "Adjustments will be established by mutual Agreement based upon Unit or Lump Sum Prices. These agreed Unit or Lump Sum prices will be full compensation and no additions or mark-ups are allowed. If Agreement cannot be reached, the Contractor shall accept payment on a Force Account basis as provided in Section 109.7.5 - Force Account Work, as full and complete compensation for all Work relating to the Equitable Adjustment."

109.7.3 Compensable Items Delete this Section entirely.

109.7.4 Non-Compensable Items Replace with the following: "The Contractor is not entitled to compensation or reimbursement for any of the following items:

A. Total profit or home office overhead in excess of 15%,
B. ……."

109.7.5 Force Account Work

C. Equipment
Paragraph 2, delete sentence 1 which starts; "Equipment leased…."

Paragraph 6, change sentence 2 from "The Contractor may furnish…" to read "If requested by the Department, the Contractor will produce cost data to assist the Department in the establishment of such rental rate, including all records that are relevant to the Actual Costs including rental Receipts, acquisition costs, financing documents, lease Agreements, and maintenance and operational cost records."
Add the following paragraph; "Equipment leased by the Contractor for Force Account Work and actually used on the Project will be paid for at the actual invoice amount plus 10% markup for administrative costs."

Add the following section;

"F. Subcontractor Work When accomplishing Force Account Work that utilizes Subcontractors, the Contractor will be allowed a maximum markup of 5% for profit and overhead on the Subcontractor's portion of the Force Account Work. If the Department does not accept the Subcontractor quote, then the Subcontractor work will be subject to the Force Account provisions with a 5% markup for profit & overhead.."

## SECTION 110
## INDEMNIFICATION, BONDING, AND INSURANCE

Delete the entire Section 110.2.3 and replace with the following:

110.2.3 Bonding for Landscape Establishment Period The Contractor shall provide a signed, valid, and enforceable Performance, Warranty, or Maintenance Bond complying with the Contract, to the Department at Final Acceptance.

The bond shall be in the full amount for all Pay Items for work pursuant to Sec 621, Landscape, payable to the "Treasurer - State of Maine," and on the Department's forms, on exact copies thereof, or on forms that do not contain any significant variations from the Department's forms as solely determined by the Department.

The Contractor shall pay all premiums and take all other actions necessary to keep said bond in effect for the duration of the Landscape Establishment Period described in Special Provision 621.0036 - Establishment Period. If the Surety becomes financially insolvent, ceases to be licensed or approved to do business in the State of Maine, or stops operating in the United States, the Contractor shall file new bonds complying with this Section within 10 Days of the date the Contractor is notified or becomes aware of such change.

All Bonds shall be procured from a company organized and operating in the United States, licensed or approved to do business in the State of Maine by the State of Maine Department of Business Regulation, Bureau of Insurance, and listed on the latest Federal Department of the Treasury listing for "Companies Holding Certificates of Authority as Acceptable Sureties on Federal Bonds and as Acceptable Reinsuring Companies."

By issuing a bond, the Surety agrees to be bound by all terms of the Contract, including those related to payment, time for performance, quality, warranties, and the Department's self-help remedy provided in Section 112.1 - Default to the same extent as if all terms of the Contract are contained in the bond(s).

Regarding claims related to any obligations covered by the bond, the Surety shall provide, within 60 Days of Receipt of written notice thereof, full payment of the entire claim or written notice of all bases upon which it is denying or contesting payment. Failure of the Surety to provide such notice within the 60-day period constitutes the Surety's waiver of any right to deny or contest payment and the Surety's acknowledgment that the claim is valid and undisputed.

## SECTION 202
## REMOVING STRUCTURES AND OBSTRUCTIONS

202.02 Removing Buildings Make the following change to the last sentence in the final paragraph, change "…Code of Maine Regulations 401." to "…Department of Environmental Protection Maine Solid Waste Management Rules, 06-096 CMR Ch. 401, Landfill Siting, Design and Operation."

## SECTION 203
## EXCAVATION AND EMBANKMENT

203.01 Description Under b. Rock Excavation; add the following sentence: "The use of perchlorate is not allowed in blasting operations."

Delete the entire Section 203.041 and replace with the following:
"203.041 Salvage of Existing Hot Mix Asphalt Pavement All existing hot mix asphalt pavement designated to be removed under this contract must be salvaged for utilization. Existing hot mix asphalt pavement material shall not be deposited in any waste area or be placed below subgrade in any embankment.

Methods of utilization may be any of the following:

1. Used as a replacement for untreated aggregate surface course on entrances provided the material contains no particles greater than 50 mm [2 in] in any dimension. Payment will be made under Pay Item 411.09, Untreated Aggregate Surface Course or 411.10, Untreated Aggregate Surface Course, Truck Measure. Material shall be placed, shaped, compacted and stabilized as directed by the Resident.

2. Used as the top 3" of gravel. Recycled Asphalt Pavement (RAP) shall be process to 1½" minus and blending will not be allowed. When this method is utilized, a surcharge will not be required

3. Stockpiled at commercial or approved sites for commercial or MaineDOT use.

4. Other approved methods proposed by the Contractor, and approved by the Resident which will assure proper use of the existing hot mix asphalt pavement.

The cost of salvaging hot mix asphalt material will be included for payment under the applicable pay item, with no additional allowances made, which will be full compensation for removing, temporarily stockpiling, and rehandling, if necessary, and utilizing the material in entrances or other approved uses, or stockpiling at an approved site as described above. The material will also be measured and paid for under the applicable Pay Item if it is reused for aggregate in entrances, or other approved uses."

## SECTION 502
## STRUCTURAL CONCRETE

502.05 Composition and Proportioning; TABLE #1; NOTE #2; third sentence; Change "…alcohol based saline sealer…" to "alcohol based silane sealer…". Add NOTE #6 to Class S Concrete.

502.0502 Quality Assurance Method A - Rejection by Resident Change the first sentence to read: "For an individual sublot with test results failing to meet the criteria in Table #1, or if the calculated pay factor for Air Content is less than 0.80……"

502.0503 Quality Assurance Method B - Rejection by Resident Change the first sentence to read: "For material represented by a verification test with test results failing to meet the criteria in Table #1, the Department will……"

502.0505 Resolution of Disputed Acceptance Test Results Combine the second and third sentence to read: "Circumstances may arise, however, where the Department may ……"
502.10 Forms and False work
D. Removal of Forms and False work 1., First paragraph; first, second, and third sentence; replace "forms" with "forms and false work"

502.11 Placing Concrete
G. Concrete Wearing Surface and Structural Slabs on Precast Superstructures Last paragraph; third sentence; replace "The temperature of the concrete shall not exceed 24° C [75° F} at the time of placement." with "The temperature of the concrete shall not exceed 24° C [75° F} at the time the concrete is placed in its final position."

502.15 Curing Concrete First paragraph; replace the first sentence with the following; "All concrete surfaces shall be kept wet with clean, fresh water for a curing period of at least 7 days after concrete placing, with the exception of vertical surfaces as provided for in Section 502.10 (D) - Removal of Forms and False work."

Second paragraph; delete the first two sentences.
Third paragraph; delete the entire paragraph which starts "When the ambient temperature…."
Fourth paragraph; delete "approved" to now read "…continuously wet for the entire curing period…"

Fifth paragraph; second sentence; change "…as soon as it is possible to do so without damaging the concrete surface." to "…as soon as possible."

Seventh paragraph; first sentence; change "…until the end of the curing period." to "…until the end of the curing period, except as provided for in Section 502.10(D) - Removal of Forms and False work."

502.19 Basis of Payment First paragraph, second sentence; add "pier nose armor" to the list of items included in the contract price for concrete.

## SECTION 503
## REINFORCING STEEL

503.06 Placing and Fastening Change the second paragraph, first sentence from: "All tack welding shall be done in accordance with Section 504, Structural Steel." to "All tack welding shall be done in accordance with AWS D1.4 Structural Welding Code - Reinforcing Steel."

## SECTION 504
## STRUCTURAL STEEL

504.09 Facilities for Inspection Add the follow as the last paragraph: "Failure to comply with the above requirements will be consider to be a denial to allow access to work by the Contractor. The Department will reject any work done when access for inspection is denied."

504.18 Plates for Fabricated Members Change the second paragraph, first sentence from: "…ASTM A 898/A 898 M…" to "…ASTM A 898/A 898 M or ASTM A 435/A 435 M as applicable and…"

504.31 Shop Assembly Add the following as the last sentence: "The minimum assembly length shall include bearing centerlines of at least two substructure units."

504.64 Non Destructive Testing-Ancillary Bridge Products and Support Structures Change the third paragraph, first sentence from "One hundred percent…" to "Twenty five percent…"

## SECTION 535
## PRECAST, PRESTRESSED CONCRETE SUPERSTRUCTURE

535.02 Materials Change "Steel Strand for Concrete Reinforcement" to "Steel Strand." Add the following to the beginning of the third paragraph; "Concrete shall be Class P conforming to the requirements in this section. 28 day compressive strength shall be as stated on the plans. Coarse aggregate…."

535.05 Inspection Facilities Add the follow as the last paragraph: "If the above requirements are not met, the Contractor shall be considered to be in violation of Standard Specification 104.2.5 – Right to Inspect Work. All work occurring during a violation of this specification will be rejected."

535.26 Lateral Post-Tensioning Replace the first paragraph; "A final tension…" with "Overstressing strands for setting losses cannot be accomplished for chuck to chuck lengths of 7.6 m [25 ft] and less. In such instances, refer to the Plans for all materials and methods. Otherwise, post-tensioning shall be in accordance with PCI standards and shall provide the anchorage force noted in the Plans. The applied jacking force shall be no less than 100% of the design jacking force."

## SECTION 603
## PIPE CULVERTS AND STORM DRAINS

603.0311 Corrugated Polyethylene Pipe for Option III Replace the Minimum Mandrel Diameter Table with the following:

| Nominal Size US Customary (in) | Minimum Mandrel Diameter (in) | Nominal Size Metric (mm) | Minimum Mandrel Diameter (mm) |
|---|---|---|---|
| 12 | 11.23 | 300 | 280.73 |
| 15 | 14.04 | 375 | 350.91 |
| 18 | 16.84 | 450 | 421.09 |
| 24 | 22.46 | 600 | 561.45 |
| 30 | 28.07 | 750 | 701.81 |
| 36 | 33.69 | 900 | 842.18 |
| 42 | 39.30 | 1050 | 982.54 |
| 48 | 44.92 | 1200 | 1122.90 |

## SECTION 604
## MANHOLES, INLETS, AND CATCH BASINS

604.02 Materials Add the following:

"Tops and Traps 712.07

| | |
|---|---|
| Corrugated Metal Units | 712.08 |
| Catch Basin and Manhole Steps | 712.09” |

## SECTION 605
## UNDERDRAINS

605.05 Underdrain Outlets Make the following change:

In the first paragraph, second sentence, delete the words “metal pipe”.

## SECTION 606
## GUARDRAIL

606.02 Materials Delete the entire paragraph which reads “The sole patented supplier of multiple mailbox….” and replace with “Acceptable multiple mailbox assemblies shall be listed on the Department’s Approved Products List and shall be NCHRP 350 tested and approved.” Delete the entire paragraph which reads “Retroreflective beam guardrail delineators….” and replace with “Reflectorized sheeting for Guardrail Delineators shall meet the requirements of Section 719.01 - Reflective Sheeting. Delineators shall be fabricated from high-impact, ultraviolet and weather resistant thermoplastic.

606.09 Basis of Payment First paragraph; delete the second and third sentence in their entirety and replace with “Butterfly-type guardrail reflectorized delineators shall be mounted on all W-beam guardrail at an interval of every 10 posts [62.5 ft] on tangents sections and every 5 posts [31.25 ft] on curved sections as directed by the Resident. On divided highways, the delineators shall be yellow on the left hand side and silver/white on the right hand side. On two-way roadways, the delineators shall be silver/white on the right hand side. All delineators shall have retroreflective sheeting applied to only the traffic facing side. Reflectorized guardrail delineators will not be paid for directly, but will be considered incidental to the guardrail items.”

## SECTION 609
## CURB

609.04 Bituminous Curb f., Delete the requirement “Color Natural (White)”

## SECTION 610
## STONE FILL, RIPRAP, STONE BLANKET, AND STONE DITCH PROTECTION

Add the following paragraph to Section 610.02:
“Materials shall meet the requirements of the following Sections of Special Provision 703:

| | |
|---|---|
| Stone Fill | 703.25 |
| Plain and Hand Laid Riprap | 703.26 |
| Stone Blanket | 703.27 |
| Heavy Riprap | 703.28 |

Definitions 703.32"

Add the following paragraph to Section 610.032.a.
"Stone fill and stone blanket shall be placed on the slope in a well-knit, compact and uniform layer. The surface stones shall be chinked with smaller stone from the same source."

Add the following paragraph to Section 610.032.b:
"Riprap shall be placed on the slope in a well-knit, compact and uniform layer. The surface stones shall be chinked with smaller stone from the same source."

Add the following to Section 610.032: "Section 610.032.d. The grading of riprap, stone fill, stone blanket and stone ditch protection shall be determined by the Resident by visual inspection of the load before it is dumped into place, or, if ordered by the Resident, by dumping individual loads on a flat surface and sorting and measuring the individual rocks contained in the load. A separate, reference pile of stone with the required gradation will be placed by the Contractor at a convenient location where the Resident can see and judge by eye the suitability of the rock being placed during the duration of the project. The Resident reserves the right to reject stone at the job site or stockpile, and in place. Stone rejected at the job site or in place shall be removed from the site at no additional cost to the Department."

## SECTION 615
## LOAM

615.02 Materials Make the following change:

| Organic Content | Percent by Volume |
|---|---|
| Humus | "5% - 10%", as determined by Ignition Test |

## SECTION 618
## SEEDING

618.01 Description Change the first sentence to read as follows: "This work shall consist of furnishing and applying seed ….." Also remove ",and cellulose fiber mulch" from 618.01(a).
618.03 Rates of Application In 618.03(a), remove the last sentence and replace with the following: "These rates shall apply to Seeding Method 2, 3, and Crown Vetch."

In 618.03(c) "1.8 kg [4 lb]/unit." to "1.95 kg [4 lb]/unit."

618.09 Construction Method In 618.09(a) 1, sentence two, replace "100 mm [4 in]" with "25 mm [1 in] (Method 1 areas) and 50 mm [2 in] (Method 2 areas)"

618.15 Temporary Seeding Change the Pay Unit from Unit to Kg [lb].

## SECTION 620
## GEOTEXTILES

620.03 Placement Section (c)
Title: Replace "Non-woven" in title with "Erosion Control".

First Paragraph: Replace first word "Non-woven" with "Woven monofilament".
Second Paragraph: Replace second word "Non-woven" with "Erosion Control".

620.07 Shipment, Storage, Protection and Repair of Fabric Section (a)
Replace the second sentence with the following: "Damaged geotextiles, as identified by the Resident, shall be repaired immediately."

620.09 Basis of Payment
Pay Item 620.58: Replace "Non-woven" with "Erosion Control"
Pay Item 620.59: Replace "Non-woven" with "Erosion Control"

## SECTION 621
## LANDSCAPING

621.0036 Establishment Period In paragraph 4 and 5, change "time of Final Acceptance" to "end of the period of establishment". In Paragraph 7, change "Final Acceptance date" to ""end of the period of establishment" and change "date of Final Acceptance" to "end of the period of establishment".

## SECTION 626
## HIGHWAY SIGNING

626.034 Concrete Foundations Add to the following to the end of the second paragraph: "Pre-cast and cast-in-place foundations shall be warranteed against leaning and corrosion for two years after the project is completed. If the lean is greater than 2 degrees from normal or the foundation is spalling within the first two years, the Contractor shall replace the foundation at no extra cost."

## SECTION 627
## PAVEMENT MARKINGS

627.10 Basis of Payment Add to the following to the end of the third paragraph: "If allowed by Special Provision, the Contractor may utilize Temporary Bi-Directional Yellow and White(As required) Delineators as temporary pavement marking lines and paid for at the contract lump sum price. Such payment will include as many applications as required and removal."

## SECTION 637
## DUST CONTROL

637.06 Basis of Payment Add the following after the second sentence of the third paragraph: "Failure by the Contractor to follow Standard Specification or Special Provision - Section 637 and/or the Contractor's own Soil Erosion and Pollution Control Plan concerning Dust Control and/or the Contractor's own Traffic Control Plan concerning Dust Control and/or visible evidence of excessive dust problems, as determined by the Resident, will result in a reduction in payment, computed by reducing the Lump Sum Total by 5% per occurrence per day. The Department's Resident or any other representative of the Department reserves the right to

suspend the work at any time and request a meeting to discuss violations and remedies. The Department shall not be held responsible for any delay in the work due to any suspension under this item. Additional penalties may also be assessed in accordance with Special Provision 652 - Work Zone Traffic Control and Standard Specification 656 - Temporary Soil Erosion and Water Pollution Control."

## SECTION 639
## ENGINEERING FACILITIES

639.04 Field Offices Change the forth to last paragraph from: "The Contractor shall provide a fully functional desktop copier…" to "….desktop copier/scanner…"

Description Change "Floor Area" to "Floor Area (Outside Dimension)". Change Type B floor area from "15 (160)" to "20 (217)".

639.09 Telephone Paragraph 1 is amended as follows:
"The contractor shall provide **two** telephone lines and two telephones,…."

Add- "In addition the contractor will supply one computer broadband connection, modem lease and router. The router shall have wireless access and be 802.11n or 802.11g capable and wireless. The type of connection supplied will be contingent upon the availability of services (i.e. DSL or Cable Broadband). It shall be the contractor's option to provide dynamic or static IP addresses through the service. **The selected service will have a minimum downstream connection of 1.5 Mbps and 384 Kbps upstream.** The contractor shall be responsible for the installation charges and all reinstallation charges following suspended periods. Monthly service and maintenance charges shall be billed by the Internet Service Provider (ISP) directly to the contractor."

## SECTION 652
## MAINTENANCE OF TRAFFIC

652.2.3 Flashing Arrow Board Delete the existing 5 paragraphs and replace with the following: Flashing Arrow Panels (FAP) must be of a type that has been submitted to AASHTO's National Transportation Product Evaluation Program (NTPEP) for evaluation and placed on the Maine Department of Transportations' Approved Products List of Portable Changeable Message Signs & Flashing Arrow Panels.

FAP units shall meet requirements of the current Manual on Uniform Traffic Control Devices (MUTCD) for Type "C" panels as described in Section 6F.56 - Temporary Traffic Control Devices. An FAP shall have matrix of a minimum of 15 low-glare, sealed beam, Par 46 elements capable of either flashing or sequential displays as well as the various operating modes as described in the MUTCD, Chapter 6-F. If an FAP consisting of a bulb matrix is used, each element should be recess-mounted or equipped with an upper hood of not less than 180 degrees. The color presented by the elements shall be yellow.

FAP elements shall be capable of at least a 50 percent dimming from full brilliance. Full brilliance should be used for daytime operation and the dimmed mode shall be used for nighttime operation. FAP shall be at least 2.4 M x 1.2 M [96" x 48"] and finished in non-

reflective black. The FAP shall be interpretable for a distance not less than 1.6 km [1 mile].

Operating modes shall include, flashing arrow, sequential arrow, sequential chevron, flashing double arrow, and flashing caution. In the three arrow signals, the second light from the arrow point shall not operate.

The minimum element on-time shall be 50 percent for the flashing mode, with equal intervals of 25 percent for each sequential phase. The flashing rate shall be not less than 25 nor more than 40 flashes per minute. All on-board circuitry shall be solid state.

Primary power source shall be 12 volt solar with a battery back-up to provide continuous operation when failure of the primary power source occurs, up to 30 days with fully charged batteries. Batteries must be capable of being charged from an onboard 110 volt AC power source and the unit shall be equipped with a cable for this purpose.

Controller and battery compartments shall be enclosed in lockable, weather-tight boxes.
The FAP shall be mounted on a pneumatic-tired trailer or other suitable support for hauling to various locations, as directed. The minimum mounting height of an arrow panel should be 2.1 M [7 feet] from the roadway to the bottom of the panel.

The face of the trailer shall be delineated on a permanent basis by affixing retro-reflective material, known as conspicuity material, in a continuous line as seen by oncoming drivers.

A portable changeable message sign may be used to simulate an arrow panel display."

652.2.4 Other Devices Delete the last paragraph and add the following:
"652.2.5 Portable Changeable Message Sign Trailer mounted Portable Changeable Message Signs (PCMS) must be of a type that has been submitted to AASHTO's National Transportation Product Evaluation Program (NTPEP) for evaluation and placed on the Maine Department of Transportations' Approved Products List of Portable Changeable Message Signs & Flashing Arrow Panels. The PCMS unit shall meet or exceed the current specifications of the Manual on Uniform Traffic Control Devices (MUTCD), 6F.55.

The front face of the sign should be covered with a low-glare protective material. The color of the LED elements shall be amber on a black background. The PCMS should be visible from a distance of 0.8 km [0.5 mile] day and night and have a minimum 15º viewing angle. Characters must be legible from a distance of at least 200 M [650 feet].

The message panel should have adjustable display rates (minimum of 3 seconds per phase), so that the entire message can be read at least twice at the posted speed, the off-peak 85th-percentile speed prior to work starting, or the anticipated operating speed. Each message shall consist of either one or two phases. A phase shall consist of up to eight characters per line. The unit must be capable of displaying at least three lines of text with eight characters per line. Each character shall be 457 mm [18"] high. Each character module shall use at least a five wide and seven high pixel matrix. The text of the messages shall not scroll or travel horizontally or vertically across the face of the sign.

Units shall automatically adjust their brightness under varying light conditions to maintain legibility.

The control system shall include a display screen upon which messages can be reviewed before being displayed on the message sign. The control system shall be capable of maintaining memory when power is unavailable. Message must be changeable with either a notebook computer or an on-board keypad. The controller shall have the capability to store a minimum of 200 user-defined and 200 pre-programmed messages. Controller and battery compartments shall be enclosed in lockable, weather-tight boxes.

PCMS units shall have the capability of being made programmable by means of wireless communications. PCMS units shall also be fully capable of having an on-board radar system installed if required for a particular application.

PCMS' primary power source shall be solar with a battery back-up to provide continuous operation when failure of the primary power source occurs. Batteries must be capable of being charged from a 110 volt AC power source. The unit must also be capable of being operated solely from a 110 volt AC power source and be equipped with a cable for this purpose.

The PCMS shall be mounted on a trailer in such a way that the bottom of the message sign panel shall be a minimum of 2.1 M [7 ft] above the roadway in urban areas and 1.5 M [5 ft] above the roadway in rural areas when it is in the operating mode. PCMS trailers should be of a heavy duty type with a 51 mm [2"] ball hitch and a minimum of four leveling jacks (at each corner). The sign shall be capable of being rotated 360° relative to the trailer. The face of the trailer shall be delineated on a permanent basis by affixing retro-reflective material, known as conspicuity material, in a continuous line as seen by oncoming drivers."

652.3.3 Submittal of Traffic Control Plan In item e. change "A list of all certified flaggers…" to "A list of all the Contractor's certified flaggers…"

Change a. in the list of requirements to: "a. The name, telephone number, and other contact numbers (cellular phone, pager, if any) of the Contractor's Traffic Control Supervisor (the person with overall responsibility for following the TCP), who has received Work Zone Traffic Control Training commensurate with the level of responsibility shown in the requirements of the Contract, and who is empowered to immediately resolve any work zone traffic control deficiencies or issues. Provide documentation that the Traffic Control Supervisor has completed a Work Zone Traffic Control Training Course (AGC, ATSSA, or other industry-recognized training), and a Supervisory refresher training every 5 years thereafter. Submit the course name, training entity, and date of training.

Traffic Control Training Course curriculum must be based on the standards and guidelines of the MUTCD and must include, at a minimum, the following:

1. Parts of Temporary Traffic Control Zone
2. Appropriate use and spacing of signs
3. Use and spacing of channelizing devices
4. Flagging basics
5. Typical examples and applications

The Traffic Control Supervisor, or designee directly overseeing physical installation, adjustment, and dismantling of work zone traffic control, will ensure all personnel performing

those activities are trained to execute the work in a safe and proper manner, in accordance with their level of decision-making and responsibility."
Add the follow to the list of requirements: "k. The plan for unexpected nighttime work along with a list of emergency nighttime equipment available on-site."
In the last paragraph add the following as the second sentence: "The Department will review and provide comments to the Contractor within 14 days of receipt of the TCP." Add the following as the last sentence: "The creation and modification of the TCP will be considered incidental to the related 652 items."

652.3.5 Installation of Traffic Control Devices In the first paragraph, first sentence; change "Signs shall be erected…" to "Portable signs shall be erected.." In the third sentence; change "Signs must be erected so that the sign face…" to "Post-mounted signs must also be erected so that the sign face…"

652.4 Flaggers Replace the first paragraph with the following; "The Contractor shall furnish flaggers as required by the TCP or as otherwise specified by the Resident. All flaggers must have successfully completed a flagger test approved by the Department and administered by a Department-approved Flagger-Certifier who is employing that flagger. All flaggers must carry an official certification card with them while flagging that has been issued by their employer. Flaggers shall wear safety apparel meeting ANSI 107-2004 Class 2 risk exposure that clearly identifies the wearer as a person, and is visible at a minimum distance of 300 m [1000 ft], and shall wear a hardhat with 360° retro-reflectivity. For nighttime conditions, Class 3 apparel, meeting ANSI 107-2004, shall be worn along with a hardhat with 360° retro-reflectivity. Retro-reflective or flashing SLOW/STOP paddles shall be used, and the flagger station shall be illuminated to assure visibility in accordance with 652.6.2."

Second paragraph, first sentence; change "…have sufficient distance to stop before entering the workspace." to "…have sufficient distance to stop at the intended stopping point." Third sentence; change "At a spot obstruction…" to "At a spot obstruction with adequate sight distance,…"

Fourth paragraph, delete and replace with "Flaggers shall be provided as a minimum, a 10 minute break, every 2 hours and a 30 minute or longer lunch period away from the work station. Flaggers may only receive 1 unpaid break per day; all other breaks must be paid. Sufficient certified flaggers shall be available onsite to provide for continuous flagging operations during break periods. If the flaggers are receiving the appropriate breaks, breaker flagger(s) shall be paid starting 2 hours after the work begins and ending 2 hours before the work ends. A maximum of 1 breaker per 6 flaggers will be paid. (1 breaker flagger for 2 to 6 flaggers, 2 breaker flaggers for 7 to 12 flaggers, etc)"

Add the following:
"652.5.1 Rumble Strip Crossing When lane shifts or lane closures require traffic to cross a permanent longitudinal rumble strip for 7 calendar days or less, the Contractor shall install warning signs that read "RUMBLE STRIP CROSSING" with a supplemental Motorcycle Plaque, (W8-15P).

When lane shifts or lane closures require traffic to cross a permanent longitudinal rumble strip for more than 7 calendar days, the Contractor shall pave in the rumble strips in the area that

traffic will cross, unless otherwise directed by the Resident. Rumble strips shall be replaced prior to the end of the project, when it is no longer necessary to cross them."

652.6 Nightwork Delete this section entirely and replace with the following:
"652.6.1 Daylight Work Times Unless otherwise described in the Contract, the Contractor is allowed to commence work and end work daily according to the Sunrise/Sunset Table at: http://www.sunrisesunset.com/usa/Maine.asp . If the Project town is not listed, the closest town on the list will be used as agreed at the Preconstruction Meeting. Any work conducted before sunrise or after sunset will be considered Night Work.

652.6.2 Night Work When Night Work occurs (either scheduled or unscheduled), the Contractor shall provide and maintain lighting on all equipment and at all work stations.

The lighting facilities shall be capable of providing light of sufficient intensity to permit good workmanship, safety and proper inspection at all times. The lighting shall be cut off and arranged on stanchions at a height that will provide perimeter lighting for each piece of equipment and will not interfere with traffic, including commercial vehicles, approaching the work site from either direction.

The Contractor shall have available portable floodlights for special areas.

The Contractor shall utilize padding, shielding or other insulation of mechanical and electrical equipment, if necessary, to minimize noise, and shall provide sufficient fuel, spare lamps, generators, etc. to maintain lighting of the work site.

The Contractor shall submit, as a subset of the Traffic Control Plan, a lighting plan at the Preconstruction Conference, showing the type and location of lights to be used for night work. The Resident may require modifications be made to the lighting set up in actual field conditions.

Prior to beginning any Night Work, the Contractor shall furnish a light meter for the Residents use that is capable of measuring the range of light levels from 5 to 20 foot-candles.

Horizontal illumination, for activities on the ground, shall be measured with the photometer parallel to the road surface. For purposes of roadway lighting, the photometer is placed on the pavement. Vertical illumination, for overhead activities, shall be measured with the photometer perpendicular to the road surface. Measurements shall be taken at the height and location of the overhead activity.

Night Work lighting requirements:

Mobile Operations: For mobile-type operations, each piece of equipment (paver, roller, milling machine, etc) will carry indirect (i.e. balloon type) lights capable of producing at least 10 foot-candles of lighting around the work area of the equipment.

Fixed Operations: For fixed-type operations (flaggers, curb, bridge, pipes, etc.), direct (i.e. tower) lighting will be utilized capable of illuminating the work area with at least 10 foot-candles of light.

Hybrid Operations: For hybrid-type operations (guardrail, sweeping, Inslope excavation, etc.), either direct or indirect lighting may be utilized. The chosen lights must be capable of producing at least 10 foot-candles of light around the work area of the equipment
Inspection Operations: Areas required to be inspected by the Department will require a minimum of 5 foot-candles of lighting. This may be accomplished through direct or indirect means.

All workers shall wear safety apparel labeled as meeting the ANSI 107-2004 standard performance for Class 3 risk exposure.

The Contractor shall apply 2- inch wide retro-reflective tape, with alternating red and white segments, to outline the front back and sides of construction vehicles and equipment, to define their shape and size to the extent practicable. Pickup trucks and personal vehicles are exempt from this requirement. The Contractor shall furnish approved signs reading "Construction Vehicle - Keep Back" to be used on trucks hauling to the project when such signs are deemed necessary by the Resident. The signs shall be a minimum of 30 inches by 60 inches, Black and Orange, ASTM D 4956 - Type VII, Type VIII, or Type IX (prismatic).

All vehicles used on the project, including pickup trucks and personal vehicles, shall be equipped with amber flashing lights, visible from both front and rear, or by means of single, approved type, revolving, flashing or strobe lights mounted so as to be visible 360º. The vehicle flashing system shall be in continuous operation while the vehicle is on any part of the project.

The Resident or any other representative of the Department reserves the right to suspend the work at any time and request a meeting to discuss violations and remedies. The Department shall not be held responsible for any delay in the work due to any suspension under this item. Failure to follow the approved Lighting Plan will result in a Traffic Control violation.

Payment for lighting, vehicle mounted signs and other costs accrued because of night work will not be made directly but will be considered incidental to the related contract items."

652.8.2 Other Items Replace the first paragraph with the following: "The accepted quantities of flagger hours will be paid for at the contract unit price per hour for each flagging station occupied excluding lunch breaks, and for each approved breaker flagger. Overtime hours, as reported on the certified payrolls, will be paid an additional 30% of the bid price for 652.38. The computation and additional payment for overtime hours will occur during the project close-out process and will be paid as additional hours of 652.38 to the nearest ¼ hour. The contract unit price shall be full compensation for hiring, transporting, equipping, supervising, and the payment of flaggers and all overhead and incidentals necessary to complete the work."
Replace the last paragraph with the following: "There will be no payment made under any 652 pay items after the expiration of the adjusted total contract time."

## SECTION 653
## POLYSTYRENE PLASTIC INSULATION

653.05 Placing Backfill In the second sentence; change "…shall be not less than 150 mm [6 in] loose measure." to "…shall be not less than 250 mm [10 in] loose measure." In the third sentence; change "…crawler type bulldozer of not more than 390 kg/m$^2$ [80 lb/ft$^2$] ground contact pressure…" to "…crawler type bulldozer of not more than 4875 kg/m$^2$ [2000 lb/ft$^2$] ground contact pressure…"

653.06 Compaction In the last sentence; change "…not more than 390 kg/m$^2$ [80 lb/ft$^2$] ground contact…" to "…not more than 4875 kg/m$^2$ [2000 lb/ft$^2$] ground contact…"

## SECTION 656
## TEMPORARY SOIL EROSION AND WATER POLLUTION CONTROL

656.5.1 If Pay Item 656.75 Provided Replace the second paragraph with the following: "Failure by the Contractor to follow Standard Specification or Special Provision - Section 656 and/or the Contractor's own Soil Erosion and Water Pollution Control Plan (SEWPCP) will result in a violation letter and a reduction in payment as shown in the schedule below. The Department's Resident or any other representative of The Department reserves the right to suspend the work at any time and request a meeting to discuss violations and remedies. The Department shall not be held responsible for any delay in the work due to any suspension under this item.

**ORIGINAL CONTRACT AMOUNT**

| From | Up to and | Amount of Penalty Damages per Violation | | |
|---|---|---|---|---|
| More Than | Including | 1st | 2nd | 3rd & Subsequent |
| $0 | $1,000,000 | $250 | $500 | $1,250 |
| $1,000,000 | $2,000,000 | $500 | $1,000 | $2,500 |
| $2,000,000 | $4,000,000 | $1,000 | $2,000 | $5,000 |
| $4,000,000 | and more | $2,000 | $4,000 | $10,000" |

## SECTION 701
## STRUCTURAL CONCRETE RELATED MATERIALS

701.10 Fly Ash - Chemical Requirements Change all references from "ASTM C311" to "ASTM C114".

## SECTION 703
## AGGREGATES

703.05 Aggregate for Sand Leveling Change the percent passing the 9.5 mm [3/8 in] sieve from "85 – 10" to "85 – 100"

703.06 Aggregate for Base and Subbase Delete the first paragraph: "The material shall have…" and replace with "The material shall have a minimum degradation value of 15 as determined by Washington State DOT Test Method T113, Method of Test for Determination of Degradation Value (January 2009 version), except that the reported degradation value will be the result of testing a single specimen from that portion of a sample that passes the 12.5 mm [½ in] sieve and is retained on the 2.00 mm [No. 10] sieve, minus any reclaimed asphalt pavement used."

703.07 Aggregates for HMA Pavements Delete the forth paragraph: "The composite blend shall have…" and replace with "The composite blend, minus any reclaimed asphalt pavement used, shall have a Micro-Deval value of 18.0 or less as determined by AASHTO T 327. In the event the material exceeds the Micro Deval limit, a Washington Degradation test shall be performed. The material shall be acceptable if it has a value of 30 or more as determined by Washington State DOT Test Method T 113, Method of Test for Determination of Degradation Value (January 2009 version) except that the reported degradation value will be the result of testing a single composite specimen from that portion of the sample that passes the 12.5mm [1/2 inch] sieve and is retained on the 2.00mm [No 10] sieve, minus any reclaimed asphalt pavement used."

703.09 HMA Mixture Composition The coarse and fine aggregate shall meet the requirements of Section 703.07. The several aggregate fractions for mixtures shall be sized, graded, and combined in such proportions that the resulting composite blends will meet the grading requirements of the following table.

AGGREGATE GRADATION CONTROL POINTS

| SIEVE SIZE | Nominal Maximum Aggregate Size---Control Points (Percent Passing) | | | | |
|---|---|---|---|---|---|
| | TYPE 25 mm | TYPE 19 mm | TYPE 12.5 mm | TYPE 9.5 mm | TYPE 4.75 mm |
| | PERCENT BY WEIGHT PASSING - COMBINED AGGREGATE | | | | |
| 37.5 mm | 100 | | | | |
| 25 mm | 90-100 | 100 | | | |
| 19 mm | -90 | 90-100 | 100 | | |
| 12.5 mm | | -90 | 90-100 | 100 | 100 |
| 9.5 mm | | - | -90 | 90-100 | 95-100 |
| 4.75 mm | | - | - | -90 | 80-100 |
| 2.36 mm | 19-45 | 23-49 | 28-58 | 32-67 | 40 - 80 |
| 1.18 mm | | - | - | - | - |
| 600 µm | | - | - | - | - |
| 300 µm | | - | - | - | - |
| 75 µm | 1-7 | 2-8 | 2-10 | 2-10 | 2-10 |

Gradation Classification---- The combined aggregate gradation shall be classified as coarse-graded when it passes below the Primary Control Sieve (PCS) control point as defined in the following table. All other gradations shall be classified as fine-graded.

**GRADATION CLASSIFICATION**

| PCS Control Point for Mixture Nominal Maximum Aggregate Size (% passing) | | | | |
|---|---|---|---|---|
| Nominal Maximum Aggregate Size | TYPE 25 mm | TYPE 19 mm | TYPE 12.5 mm | TYPE 9.5 mm |
| Primary Control Sieve | 4.75 mm | 4.75 mm | 2.36 mm | 2.36 mm |
| PCS Control Point (% passing) | 40 | 47 | 39 | 47 |

If a Grading "D" mixture is allowed per Special Provision Section 403, it shall meet the following gradation and the aggregate requirements of Section 703.07.

| Sieve Designation | Percentage by Weight Passing Square Mesh Sieves |
|---|---|
| ½ inch | 100 |
| ⅜ inch | 93-100 |
| No. 4 | 60-80 |
| No. 8 | 46-65 |
| No. 16 | 25-55 |
| No. 30 | 16-40 |
| No. 50 | 10-30 |
| No. 100 | 6-22 |
| No. 200 | 3.0-8.0 |

703.18 Common Borrow Replace the first paragraph with the following: "Common borrow shall consist of earth, suitable for embankment construction. It shall be free from frozen material, perishable rubbish, peat, and other unsuitable material including material currently or previously contaminated by chemical, radiological, or biological agents unless the material is from a DOT project and authorized by DEP for use."

703.22 Underdrain Backfill Material Change the first paragraph from "…for Underdrain Type B…" to "…for Underdrain Type B and C…"

Replace subsections 703.25 through 703.28 with the following:
"703.25 Stone Fill Stones for stone fill shall consist of hard, sound, durable rock that will not disintegrate by exposure to water or weather. Stone for stone fill shall be angular and rough. Rounded, subrounded, or long thin stones will not be allowed. Stone for stone fill may be obtained from quarries or by screening oversized rock from earth borrow pits. The maximum allowable length to thickness ratio will be 3:1. The minimum stone size (10 lbs) shall have an average dimension of 5 inches. The maximum stone size (500 lbs) shall have a maximum dimension of approximately 36 inches. Larger stones may be used if approved by the Resident. Fifty percent of the stones by volume shall have an average dimension of 12 inches (200 lbs).

703.26 Plain and Hand Laid Riprap Stone for riprap shall consist of hard, sound durable rock that will not disintegrate by exposure to water or weather. Stone for riprap shall be angular and rough. Rounded, subrounded or long thin stones will not be allowed. The maximum allowable length to width ratio will be 3:1. Stone for riprap may be obtained from quarries or by screening oversized rock from earth borrow pits. The minimum stone size (10 lbs) shall have an average dimension of 5 inches. The maximum stone size (200 lbs) shall have an average dimension of approximately 12 inches. Larger stones may be used if approved by the Resident. Fifty percent of the stones by volume shall have an average dimension greater than 9 inches (50 lbs).

703.27 Stone Blanket Stones for stone blanket shall consist of sound durable rock that will not disintegrate by exposure to water or weather. Stone for stone blanket shall be angular and rough. Rounded or subrounded stones will not be allowed. Stones may be obtained from

quarries or by screening oversized rock from earth borrow pits. The minimum stone size (300 lbs) shall have minimum dimension of 14 inches, and the maximum stone size (3000 lbs) shall have a maximum dimension of approximately 66 inches. Fifty percent of the stones by volume shall have average dimension greater than 24 inches (1000 lbs).

703.28 Heavy Riprap Stone for heavy riprap shall consist of hard, sound, durable rock that will not disintegrate by exposure to water or weather. Stone for heavy riprap shall be angular and rough. Rounded, subrounded, or thin, flat stones will not be allowed. The maximum allowable length to width ratio will be 3:1. Stone for heavy riprap may be obtained from quarries or by screening oversized rock from earth borrow pits. The minimum stone size (500 lbs) shall have minimum dimension of 15 inches, and at least fifty percent of the stones by volume shall have an average dimension greater than 24 inches (1000 lbs)."

Add the following paragraph:
"703.32 Definitions (ASTM D 2488, Table 1).
Angular: Particles have sharp edges and relatively plane sides with unpolished surfaces
Subrounded: Particles have nearly plane sides but have well-rounded corners and edges
Rounded: Particles have smoothly curved sides and no edges"

## SECTION 706
## NON-METALLIC PIPE

706.06 Corrugated Polyethylene Pipe for Underdrain, Option I and Option III Culvert Pipe Change the first sentence from "…300 mm diameters to 900 mm" to "…300 mm diameters to 1200 mm" Delete, in its' entirety, the last sentence which begins "This pipe and resins…" and replace with the following; "Manufacturers of corrugated polyethylene pipe must participate in, and maintain compliance with, AASHTO's National Transportation Product Evaluation Program (www.ntpep.org) which audits producers of plastic pipe. A certificate of compliance must be provided with each shipment."

## SECTION 708
## PAINTS AND PERSERVATIVES

708.03 Pavement Marking Paint Change the first sentence from "…AASHTO M248" to "…the Maine DOT Maintenance Fast-Dry Water-Based Traffic Paint on file at the Traffic Section in Augusta". Delete, in its' entirety, the last sentence.

## SECTION 709
## REINFORCING STEEL AND WELDED STEEL WIRE FABIC

709.03 Steel Strand Change the second paragraph from "…shall be 12mm [½ inch] AASHTO M203M/M203 (ASTM A416/A416M)…" to "…shall be 15.24 mm [0.600 inch] diameter AASHTO M203 (ASTM A416)…"

## SECTION 710
## FENCE AND GUARDRAIL

710.03 Chain Link Fabric Add the following sentence: "Chain Link fabric for PVC coated shall conform to the requirements of AASHTO M181, Type IV-Class B."

710.04 Metal Beam Rail Replace with the following: "Galvanized steel rail elements shall conform to the requirements of AASHTO M 180, Class A, Type II.

When corrosion resistant steel is specified, rail shall conform to AASHTO M 180, Class A, Type IV. Beams of corrosion resistant steel shall not be painted or galvanized. They shall be so handled and stored that the traffic face of these beams, used in a continuous run of guardrail, shall not show a distinctive color differential.

When metal beam rail is to be installed on a curve having a radius of curvature of 150 ft. or less, the beam sections shall be fabricated on an arc to the required radius and permanently stamped or embossed with the designated radius.

The engineer may take one piece of guardrail, a backup plate, and end or buffer section from each 200 pieces in a lot, or from each lot if less than 200 pieces are included therein for determination of compliance with specification requirements. If one piece fails to conform to the requirements of this specification, two other pieces shall be tested. If either of these pieces fails to conform to the requirements of this specification, the lot of material represented by these samples shall be rejected. A lot shall be considered that quantity of material offered for inspection at one time that bears the same heat and coating identification."

710.07 Guardrail Posts Section b. change "…AASHTO M183/M183M…" to "…AASHTO M 270M/M 270 Grade 250 (36)…"

## SECTION 712
## MISCELLANEOUS HIGHWAY MATERIALS

712.04 Stone Curbing and Edging Delete the existing and replace with the following: "Stone for curbing and edging shall be approved granite from acceptable sources. The stone shall be hard and durable, predominantly gray in color, free from seams that would be likely to impair its structural integrity, and of a smooth splitting character. Natural grain size and color variations characteristic of the source deposit will be permitted. Such natural variations may include bands or clusters of mineral crystallization provided they do not impair the structural integrity of the curb stone. The Contractor shall submit for approval the name of the quarry that is the proposed source of the granite for curb materials along with full scale color photos of the granite. Such submission shall be made sufficiently in advance of ordering so that the Resident may have an opportunity to judge the stone, both as to quality and appearance. Samples of curbing shall be submitted for approval only when requested by the Resident. The dimensions, shape, and other details shall be as shown on the plans."

712.06 Precast Concrete Units In the first paragraph, change "…ASTM C478M…" to "…AASHTO M199…" Delete the second paragraph and replace with the following; "Approved structural fibers may be used as a replacement of 6 x 6 #10 gauge welded wire fabric when used at an approved dosage rate for the construction of manhole and catch basin units. The material used shall be one of the products listed on the Maine Department of Transportation's Approved Product List of Structural Fiber Reinforcement." Delete the fifth paragraph and replace with the following; "The concrete mix design shall be approved by the Department. Concrete shall contain 6% air content, plus or minus 1½% tolerance when tested according to AASHTO T152. All concrete shall develop a minimum compressive strength of 28 MPa [4000 psi] in 28 days when tested according to AASHTO T22. The absorption of a

specimen, when tested according to AASHTO T280, Test Method "A", shall not exceed nine percent of the dry mass."

Add the following:
"712.07 Tops, and Traps These metal units shall conform to the plan dimensions and to the following specification requirements for the designated materials.

Gray iron or ductile iron castings shall conform to the requirements of AASHTO M306 unless otherwise designated."

712.08 Corrugated Metal Units The units shall conform to plan dimensions and the metal to AASHTO M36/M36M. Bituminous coating, when specified, shall conform to AASHTO M190 Type A.

712.09 Catch Basin and Manhole Steps Steps for catch basins and for manholes shall conform to ASTM C478M [ASTM C478], Section 13 for either of the following material:

(a) Aluminum steps-ASTM B221M, [ASTM B211] Alloy 6061-T6 or 6005-T5.

(b) Reinforced plastic steps Steel reinforcing bar with injection molded plastic coating copolymer polypropylene. Polypropylene shall conform to ASTM D 4101.

712.23 Flashing Lights Flashing Lights shall be power operated or battery operated as specified.

(a) Power operated flashing lights shall consist of housing, adapters, lamps, sockets, reflectors, lens, hoods and other necessary equipment designed to give clearly visible signal indications within an angle of at least 45 degrees and from 3 to 90 m [10 to 300 ft] under all light and atmospheric conditions.

Two circuit flasher controllers with a two-circuit filter capable of providing alternate flashing operations at the rate of not less than 50 nor more than 60 flashes per minute shall be provided.

The lamps shall be 650 lumens, 120 volt traffic signal lamps with sockets constructed to properly focus and hold the lamp firmly in position.
The housing shall have a rotatable sun visor not less than 175 mm [7 in] in length designed to shield the lens.

Reflectors shall be of such design that light from a properly focused lamp will reflect the light rays parallel. Reflectors shall have a maximum diameter at the point of contact with the lens of approximately 200 mm [8 in].

The lens shall consist of a round one-piece convex amber material which, when mounted, shall have a visible diameter of approximately 200 mm [8 in]. They shall distribute light and not diffuse it. The distribution of the light shall be asymmetrical in a downward direction. The light distribution of the lens shall not be uniform, but shall consist of a small high intensity portion with narrow distribution for long distance throw and a larger

low intensity portion with wide distribution for short distance throw. Lenses shall be marked to indicate the top and bottom of the lens.

(b) Battery operated flashing lights shall be self- illuminated by an electric lamp behind the lens. These lights shall also be externally illuminated by reflex-reflective elements built into the lens to enable it to be seen by reflex-reflection of the light from the headlights of oncoming traffic. The batteries must be entirely enclosed in a case. A locking device must secure the case. The light shall have a flash rate of not less than 50 nor more than 60 flashes per minute from minus 30 °C [minus 20 °F] to plus 65 °C [plus 150 °F]. The light shall have an on time of not less than 10 percent of the flash cycle. The light beam projected upon a surface perpendicular to the axis of the light beam shall produce a lighted rectangular projection whose minimum horizontal dimension shall be 5 degrees each side of the horizontal axis. The effective intensity shall not have an initial value greater than 15.0 candelas or drop below 4.0 candelas during the first 336 hours of continuous flashing. The illuminated lens shall appear to be uniformly bright over its entire illuminated surface when viewed from any point within an angle of 9 degrees each side of the vertical axis and 5 degrees each side of the horizontal axis. The lens shall not be less than 175 mm [7 in] in diameter including a reflex-reflector ring of 13 mm [½ in] minimum width around the periphery. The lens shall be yellow in color and have a minimum relative luminous transmittance of 0.440 with a luminance of 2854° Kelvin. The lens shall be one-piece construction. The lens material shall be plastic and meet the luminous transmission requirements of this specification. The case containing the batteries and circuitry shall be constructed of a material capable of withstanding abuse equal to or greater than 1.21 mm thick steel [No. 18 U.S. Standard Gage Steel]. The housing and the lens frame, if of metal shall be properly cleaned, degreased and pretreated to promote adhesion. It shall be given one or more coats of enamel which, when dry shall completely obscure the metal. The enamel coating shall be of such quality that when the coated case is struck a light blow with a sharp tool, the paint will not chip or crack and if scratched with a knife will not powder. The case shall be so constructed and closed as to exclude moisture that would affect the proper operation of light. The case shall have a weep hole to allow the escape of moisture from condensation. Photoelectric controls, if provided, shall keep the light operating whenever the ambient light falls below 215 lx [20 foot candles]. Each light shall be plainly marked as to the manufacturer's name and model number.

If required by the Resident, certification as to conformance to these specifications shall be furnished based on results of tests made by an independent testing laboratory. All lights are subject to random inspection and testing. All necessary random samples shall be provided to the Resident upon request without cost to the Department. All such samples shall be returned to the Contractor upon completion of the tests.

712.32 Copper Tubing Copper tubing and fittings shall conform to the requirements of ASTM B88M Type A [ASTM B88, Type K] or better.

712.33 Non-metallic Pipe, Flexible Non-metallic pipe and pipe fittings shall be acceptable flexible pipe manufactured from virgin polyethylene polymer suitable for transmitting liquids intended for human or animal consumption.

712.34 Non-metallic Pipe, Rigid Non-metallic pipe shall be Schedule 40 polyvinylchloride (PVC) that meets the requirement of ASTM D1785. Fittings shall be of the same material.

712.341 Metallic Pipe Metallic pipe shall be ANSI, Standard B36.10, Schedule 40 steel pipe conforming to the requirements of ASTM A53 Types E or S, Grade B. End plates shall be steel conforming to ASTM A36/A36M.

Both the sleeve and end plates shall be hot dip galvanized. Pipe sleeve splices shall be welded splices with full penetration weld before galvanizing.

712.35 Epoxy Resin Epoxy resin for grouting or sealing shall consist of a mineral filled thixotropic, flexible epoxy resin having a pot life of approximately one hour at 10°C [50°F]. The grout shall be an approved product suitable for cementing steel dowels into the preformed holes of curb inlets and adjacent curbing. The sealant shall be an approved product, light gray in color and suitable for coating the surface.

712.36 Bituminous Curb The asphalt cement for bituminous curb shall be of the grade required for the wearing course, or shall be Viscosity Grade AC-20 meeting the current requirements of Subsection 702.01 Asphalt Cement. The aggregate shall conform to the requirements of Subsection 703.07. The coarse aggregate portion retained on the 2.36 mm [No. 8] sieve may be either crushed rock or crushed gravel.

The mineral constituents of the bituminous mixture shall be sized and graded and combined in a composite blend that will produce a stable durable curbing with an acceptable texture.

Bituminous material for curb shall meet the requirements of Section 403 - Hot Bituminous Pavement.

712.37 Precast Concrete Slab Portland cement concrete for precast slabs shall meet the requirements of Section 502 - Structural Concrete, Class A.

The slabs shall be precast to the dimension shown on the plans and cross section and in accordance with the Standard Detail plans for Concrete Sidewalk Slab. The surface shall be finished with a float finish in accordance with Subsection 502.14(c). Lift devices of sufficient strength to hold the slab while suspended from cables shall be cast into the top or back of the slab.

712.38 Stone Slab Stone slabs shall be of granite from an acceptable source, hard, durable, predominantly gray in color, free from seams which impair the structural integrity and be of smooth splitting character. Natural color variations characteristic of the deposit will be permitted. Exposed surfaces shall be free from drill holes or indications of drill holes. The granite slabs in any one section of backslope must be all the same finish.

The granite slabs shall be scabble dressed or sawed to an approximately true plane having no projections or depressions over 13 mm [½ in] under a 600 mm [2 ft] straightedge or over 25 mm [1 in] under a 1200 mm [4 ft] straightedge. The arris at the intersection of the top surface and exposed front face shall be pitched so that the arris line is uniform throughout the length of the installed slabs. The sides shall be square to the exposed face unless the slabs are to be set

on a radius or other special condition which requires that the joints be cut to fit, but in any case shall be so finished that when the stones are placed side by side no space more than 20 mm [3/4 in] shall show in the joint for the full exposed height.

Liftpin holes in all sides will be allowed except on the exposed face.

## SECTION 717
## ROADSIDE IMPROVEMENT MATERIAL

717.03 C. Method #3 - Roadside Mixture #3 Change the seed proportions to the following:

| | |
|---|---|
| Crown Vetch | 25% |
| Perennial Lupine | 25% |
| Red Clover | 12.5% |
| Annual Rye | 37.5% |

717.05 Mulch Binder Change the third sentence to read as follows:

"Paper fiber mulch may be used as a binder at the rate of 2.3 kg/unit [5 lb/unit]."

## SECTION 720
## STRUCTURAL SUPPORTS FOR HIGHWAY SIGNS, LUMINAIRES, AND TRAFFIC SIGNALS

720.08 U-Channel Posts Change the first sentence from "…, U-Channel posts…" to "…, Rib Back U-Channel posts…"

## SECTION 722
## GEOTEXTILES

722.01 Stabilization/Reinforcement Geotextile Add the following to note #3; "The strengths specified in the columns labeled"<50%" and "≥ 50%" refer to the elongation at which the geotextile material was tested. For example; if a fabric is tested at 15% elongation then it must meet or exceed the minimum strength shown in the "<50%" column. Submittals must include the percent elongation at which the material was tested."

722.02 Drainage Geotextile Add the following to note #3; "The strengths specified in the columns labeled"<50%" and "≥ 50%" refer to the elongation at which the geotextile material was tested. For example; if a fabric is tested at 15% elongation then it must meet or exceed the minimum strength shown in the "<50%" column. Submittals must include the percent elongation at which the material was tested."

722.01 Erosion Control Geotextile Add the following note to Elongation in the Mechanical Property Table; "The strengths specified in the columns labeled"<50%" and "≥ 50%" refer to the elongation at which the geotextile material was tested. For example; if a fabric is tested at 15% elongation then it must meet or exceed the minimum strength shown in the "<50%" column. Submittals must include the percent elongation at which the material was tested."

# Environmental Summary Sheet

**Pin:** **20118.55** **Date Submitted: 1/29/14**
**Town:** **Augusta**
**CPD Team Leader:** David Gardner
**ENV Field Contact: Val Derosier**

**NEPA Complete: N/A**

☒ **Section 106** No Historic Properties

☒ **Section 4(f) and 6(f) N/A** No 4(f) resources

☒ **Maine Department of Inland Fisheries and Wildlife Essential Habitat**

**Not Applicable** **Timing Window: Not Applicable**

☒ **Section 7**
**No Effect**
**Species of Concern: Northern Long Eared Bat**

**Comments/References: <u>All clearing prior to 10/1/14</u>**
**Special Provision 105 is included with the contract*

☒ **Maine Department of Conservation/Public Lands, Submerged Land Lease**
Not Applicable

☒ **Maine Land Use Regulation Commission**
N/A
**Applicable Standards and Permits are included with the contract*

☒ **Maine Department of Environmental Protection**
<u>Individual/Site Location of Development</u>
**Applicable Standards and Permits are included with the contract*

☒ **Army Corps of Engineers, Section 10 of the Rivers and Harbors Act and Section 404 of the Clean Water Act.**
**Category 2**
**Applicable Standards and Permits are included with the contract*

☒ **Stormwater Review**
**Chapter 500**

☒ **Special Provisions Required**

| | | |
|---|---|---|
| **Special Provision 105-Timing of Work Restriction** | N/A☐ | Applicable☒ |
| **Special Provision 656-Erosion Control Plan** | N/A☐ | Applicable☒ |
| **Special Provision 203-Dredge Spec** | N/A☒ | Applicable☐ |
| **General Note for Hazardous Waste** | N/A☒ | Applicable☐ |
| **Special Provision 203-Hazardous Waste** | N/A☒ | Applicable☐ |
| **Special Provision 105.9** | N/A☒ | Applicable☐ |

STATE OF MAINE
DEPARTMENT OF ENVIRONMENTAL PROTECTION
17 STATE HOUSE STATION AUGUSTA, MAINE 04333-0017

DEPARTMENT ORDER

IN THE MATTER OF

| | |
|---|---|
| MAINE DEPARTMENT OF TRANSPORTATION | ) SITE LOCATION OF DEVELOPMENT ACT |
| Augusta, Kennebec County | ) GENERAL PERMIT |
| FLEET SERVICE CENTER | ) NATURAL RESOURCES PROTECTION ACT |
| L-26076-TG-A-N (approval) | ) FRESHWATER WETLANDS |
| L-26076-TP-B-N (approval) | ) WATER QUALITY CERTIFICATION |
| | ) FINDINGS OF FACT AND ORDER |

In consideration of the Notice of Intent, dated September 6, 2013, with supportive data and other related materials on file for coverage under the General Permit for the Maine Department of Transportation, issued by the Department on February 19, 2013, and pursuant to the provisions of 38 M.R.S.A. Sections 480-A et seq. and Section 401 of the Federal Water Pollution Control Act, the Department of Environmental Protection has considered the application of the MAINE DEPARTMENT OF TRANSPORTATION with the supportive data, agency review comments, and other related materials on file and FINDS THE FOLLOWING FACTS:

1. PROJECT DESCRIPTION:

A. History of Project: In Department Order #L-17197-25-A-N, dated April 7, 1992, the Department approved existing development and the proposed expansion of commercial development on Lot 5/6 of a municipally approved 43-acre industrial park referred to as J & D Business and Industrial Park, which included the construction of Industrial Drive. The existing development on Lot 5/6 of the commercial subdivision included a 59,310-square foot warehouse/distribution center and a 64,743-square foot storage area for the parking of trucks and moving vans. The proposed expansion included an 85,500-square foot addition, 80,000 square feet of additional outside truck and van storage area, a 10,000-gallon above-ground diesel fuel tank, and a stormwater detention basin. In Department Order #L-17197-25-B-B, dated January 18, 2008, the Department approved after-the-fact the division of Lot 5/6 into Lots 5 and 6, as well as additional expansion. The additional expansion included four separate storage buildings, totaling 61,000 square feet in size and a 73,425-square foot paved access area on Lot 6 and a stormwater management basin on Lot 5.

In Department Order #L-17197-25-C-T, dated November 15, 2013, the Department approved the transfer of #L-17197-25-B-B as it pertains to Lot 6, to the applicant. The proposed project will be located on Lot 6 as well as on an adjacent parcel known as the Ruby lot.

B. Summary: The applicant proposes to develop eight to nine acres of a 50-acre parcel in order to relocate and consolidate the State of Maine fleet services. The development includes a total of 201 parking spaces, a small fueling area, a 250-foot by 350-foot auction yard area with cement pad, which includes a 15-foot by 40-foot covered area for palleted items, a fifty-foot by 125-foot area for cold storage, a 50-foot by 165-

foot building to house MDOT fleet operations, a 75-foot by 165-foot heated coatings building, a 150-foot by 150-foot building for central services, equipment laydown space, a 16,000-square foot area for tractor-trailer size deliveries and maneuvers, and two wet ponds for stormwater control. The proposed project will fill 57,172 square feet of forested freshwater wetlands. Construction details are shown on a set of plans, with a latest revision date of October 17, 2013, and prepared by Gorrill-Palmer Consulting Engineers, Inc. The project site is located at 66 Industrial Drive in the City of Augusta.

C. Current Use of the Site: The proposed development is located on two adjoining lots which are depicted as Lot 208 on the City of Augusta Tax Map 5 (formerly Lot 6 on the aforementioned commercial subdivision plan) and Lot 26 on the City of Augusta Tax Map 79. Lot 26 is undeveloped; a portion of the lot on the east side of Bond Brook will be split off and sold to the property owners at 19 Meadow Brook Road. Lot 26 is described in a deed, dated September 12, 2013 and recorded on Page 17 in Book 11424 at the Kennebec County Registry of Deeds. Lot 208 is developed with a commercial building, parking spaces and other infrastructure, and is described in a quitclaim deed with covenant, dated September 12, 2013, and recorded on Page 262 in Book 11524 at the Kennebec County Registry of Deeds.

## 2. GENERAL PERMIT CONDITIONS

The applicant has indicated that it intends to comply with the terms and condition of the General Permit for the Maine Department of Transportation. The applicant is authorized to construct the facility in accordance with the applicant's Notice of Intent, accepted for processing on September 6, 2013, and in accordance with the terms and conditions of the General Permit for the Maine Department of Transportation issued on February 19, 2013.

If constructed and operated in accordance with the General Permit for the Maine Department of Transportation, the project will not adversely affect the natural environment, will be built on suitable soil types, will meet the standards for erosion control and stormwater management, will not pose an unreasonable risk of discharge to a significant ground water aquifer, will not unreasonably cause or increase the flooding of the area or adjacent properties, nor create an unreasonable flood hazard to any structure, and any blasting, if it occurs, will be conducted in accordance with the standards of 38 M.R.S.A § 490-Z(14). In addition, the applicant has made adequate provision for utilities and the development will not have an unreasonable adverse effect on existing or proposed utilities in the municipality or areas served by those services.

## 3. EXISTING SCENIC, AESTHETIC, RECREATIONAL OR NAVIGATIONAL USES:

In accordance with Chapter 315, Assessing and Mitigating Impacts to Scenic and Aesthetic Uses, the applicant submitted a copy of the Department's Visual Evaluation Field Survey Checklist as Appendix A to the application along with a description of the property and the proposed project. The applicant also submitted several photographs of the proposed project site including an aerial photograph of the project site. Department staff visited the project site on September 16, 2013.

The proposed project is located in and adjacent to forested freshwater wetlands, which are not a scenic resource visited by the general public, in part, for the use, observation, enjoyment and appreciation of its natural and cultural visual qualities.

The proposed project was evaluated using the Department's Visual Impact Assessment Matrix and was found to have an acceptable potential visual impact rating. Based on the information submitted in the application, the visual impact rating, and the site visit, the Department determined that the location and scale of the proposed activity is compatible with the existing visual quality and landscape characteristics found within the viewshed of the scenic resource in the project area.

The Department finds that the proposed activity will not unreasonably interfere with existing scenic, aesthetic, recreational or navigational uses of the protected natural resource.

4. SOIL EROSION:

The project will be performed in accordance with erosion control measures conforming to the 2008 edition of the *State of Maine Department of Transportation Standard Specifications for Highways and Bridges* and the *Department of Transportation's Best Management Practices for Erosion and Sediment Control*.

The Department finds that the activity will not cause unreasonable erosion of soil or sediment, nor unreasonably inhibit the natural transfer of soil from the terrestrial to the marine or freshwater environment.

5. HABITAT CONSIDERATIONS:

The project will impact freshwater forested wetlands that are dominated by balsam fir with a sensitive fern understory, and characterized by pit and mound topography. Two amphibian breeding areas exist within an old timber harvesting road. The amphibian breeding areas were surveyed by the applicant and found not to meet the significance criteria of the Natural Resources Protection Act. According to the applicant's wetlands functional assessment, wildlife habitat is a primary function of the onsite wetlands.

Two unnamed tributaries to Bond Brook also occur on the parcel. The first tributary is located more than 75 feet from the proposed development and originates in the vicinity of a stormwater management pond immediately to the west of the proposed auction yard and continues for approximately 400 feet before exiting the property at the western boundary. The second unnamed tributary flows across the entire parcel in a southwest direction and is also more than 75 feet away from the proposed development.

The Maine Department of Inland Fisheries and Wildlife (MDIFW) reviewed the proposed project and stated that there are no Essential or Significant Wildlife Habitats at the project site. MDIFW stated that it anticipates minimal impacts to wildlife and fisheries as a result of this project.

The Department finds that the activity will not unreasonably harm any significant wildlife habitat, freshwater wetland plant habitat, threatened or endangered plant habitat, aquatic

or adjacent upland habitat, travel corridor, freshwater, estuarine or marine fisheries or other aquatic life.

6. WATER QUALITY CONSIDERATIONS:

The Department does not anticipate that the proposed project will violate any state water quality law, including those governing the classification of the State's waters.

7. WETLANDS AND WATERBODIES PROTECTION RULES:

The applicant proposes to directly alter 57,172 square feet of forested freshwater wetlands, which includes two amphibian breeding areas, to construct the proposed project. The applicant does not propose to disturb soil within 75 feet of either unnamed tributary to Bond Brook.

The Wetland Protection Rules interpret and elaborate on the Natural Resources Protection Act (NRPA) criteria for obtaining a permit. The rules guide the Department in its determination of whether a project's impacts would be unreasonable. A proposed project would generally be found to be unreasonable if it would cause a loss in wetland area, functions and values and there is a practicable alternative to the project that would be less damaging to the environment. Each application for a NRPA permit that involves a freshwater wetland alteration must provide an analysis of alternatives in order to demonstrate that a practicable alternative does not exist.

A. Avoidance. No activity may be permitted if there is a practicable alternative to the project that would be less damaging to the environment. The applicant submitted an alternatives analysis for the proposed project. The purpose of the project is to relocate and combine, in one location, the heavy equipment and vehicle maintenance operations of the applicant and the Bureau of General Services to improve efficiency and cost effectiveness. The applicant expects to save approximately $1.4 million per year as a result of the consolidation. Currently, the State's fleet services are in multiple locations in the Augusta area where there is no room for expansion. Avoidance of all wetlands on the parcel is not possible as the wetlands and amphibian breeding areas are clustered at the only available access point into the parcel. Other sites that do not contain wetlands were considered, but the applicant determined that those sites are not practicable due to small lot size and/or the lack of proximity to the city proper. The applicant determined that the proposed project avoids wetland alteration to the greatest practicable extent while still meeting the project purpose.

B. Minimal Alteration. The amount of freshwater wetlands to be altered must be kept to the minimum amount necessary for meeting the overall purpose of the project. The applicant minimized impacts by locating the development away from wetlands where practicable. The applicant considered condensing the development in order to minimize impacts further, but this was not practicable due to the space requirements for buildings and parking areas that are necessary to meet operational needs. Originally, the applicant proposed to purchase an adjacent parcel to the west with plans for this development to be more westerly than the current proposal. However, the applicant decided not to buy the parcel after determining that the development would impact five additional vernal pools and additional forested freshwater wetlands. The project footprint was designed to avoid

and maintain a 75-foot setback from the two unnamed tributaries to Bond Brook. The applicant determined that the proposed project has the least amount of impact to the freshwater wetlands.

C. Compensation. The applicant submitted a functions and values assessment of the freshwater wetlands to be altered, dated September 2013. According to the assessment, the primary function of the wetland areas to be altered is wildlife habitat. Other wetlands on the parcel not affected by the project have the functions of groundwater discharge, base flow augmentation, flood flow alteration and nutrient/sediment/toxicant retention.

In accordance with Chapter 310 Section 5(C), the applicant proposes to compensate for lost wetland functions and values by preserving a 94-acre parcel off Cross Hill Road in Augusta, as shown on Figure 1 of the mitigation plan, dated September 5, 2013. The parcel, which is known as the Coitrone/Simmons compensation parcel, is located on the opposite side of the Kennebec River and the east side of the City of Augusta. The applicant entered into an agreement with State of Maine, Department of Defense, Military Bureau (DODMB) to provide funding jointly to the State of Maine Department of Inland Fisheries and Wildlife (MDIFW) for the purchase of the 94-acre parcel. DODMB also requested approval from the Department to alter freshwater wetlands. The review of that application is currently pending (Department #L-16144-T6-E-N/L-16144-26-D-A). The jointly funded purchase will provide compensation for both this project and one proposed by the DODMB by protecting the wetlands in perpetuity through a Memorandum of Interagency Agreement for Purchase between the applicant and the Department of Inland Fisheries and Wildlife, dated November 27, 2013, a copy of which was provided to the Department and found adequate.

The Coitrone/Simmons compensation parcel was purchased by MDIFW on December 11, 2013, and contains freshwater wetlands with the primary functions of groundwater recharge/discharge, production export and wildlife habitat. MDIFW stated that the parcel contains wetlands that are exceptional in regard to wildlife values. The total acreage of freshwater wetlands on the parcel is 14.38 acres (6.63 acres of forested wetlands and 7.75 acres of non-forested wetlands).

MDIFW is the owner of other lands adjacent to the Coitrone/Simmons compensation parcel, which are designated as the Alonzo H. Garcelon Wildlife Management Area. The Coitrone/Simmons compensation parcel will be combined with the Alonzo H. Garcelon Wildlife Management Area. MDOT and MDIFW have agreed that any unused mitigation credit remaining after satisfying the environmental obligations created by the proposed construction off Industrial Drive and the DODMB project shall belong to MDOT. MDIFW has agreed to manage the Coitrone/Simmons compensation parcel to ensure the perpetual protection of the premises from future development in accordance with its wildlife management plan for the Alonzo H. Garcelon Wildlife Management Area that includes forestry habitat management guidelines for vernal pools. The applicant submitted a copy of a Memorandum of Interagency Agreement between the MDOT and MDIFW and an addendum to the Wildlife Management Area (WMA) Plan for the Alonzo H. Garcelon WMA. Both of these documents describe the use of the compensation parcel. The applicant submitted a Memorandum of Interagency

Agreement that will protect the property in perpetuity in accordance with Chapter 310(6)(F).

The Department finds that the applicant has avoided and minimized freshwater wetland impacts to the greatest extent practicable, and that the proposed project represents the least environmentally damaging alternative that meets the overall purpose of the project, provided that prior to project construction, the applicant submits a copy of the recorded Memorandum of Interagency Agreement to the Department prior to construction.

8. OTHER CONSIDERATIONS:

The Department did not identify any other issues involving existing scenic, aesthetic, or navigational uses, soil erosion, habitat or fisheries, the natural transfer of soil, natural flow of water, water quality, or flooding.

BASED on the above findings of fact, and subject to the conditions listed below, the Department makes the following conclusions pursuant to 38 M.R.S.A. Sections 480-A et seq. and Section 401 of the Federal Water Pollution Control Act:

A. The proposed activity will not unreasonably interfere with existing scenic, aesthetic, recreational, or navigational uses.

B. The proposed activity will not cause unreasonable erosion of soil or sediment.

C. The proposed activity will not unreasonably inhibit the natural transfer of soil from the terrestrial to the marine or freshwater environment.

D. The proposed activity will not unreasonably harm any significant wildlife habitat, freshwater wetland plant habitat, threatened or endangered plant habitat, aquatic or adjacent upland habitat, travel corridor, freshwater, estuarine, or marine fisheries or other aquatic life, provided that prior to the start of construction the applicant submits a copy of the recorded Memorandum of Interagency Agreement to the Department for the Coitrone/Simmons compensation parcel ensuring that the parcel is protected in perpetuity.

E. The proposed activity will not unreasonably interfere with the natural flow of any surface or subsurface waters.

F. The proposed activity will not violate any state water quality law including those governing the classifications of the State's waters.

G. The proposed activity will not unreasonably cause or increase the flooding of the alteration area or adjacent properties.

H. The proposed activity is not on or adjacent to a sand dune.

I. The proposed activity is not on an outstanding river segment as noted in Title 38 M.R.S.A. Section 480-P.

THEREFORE, the Department APPROVES the above noted application of the MAINE DEPARTMENT OF TRANSPORTATION to develop an area for fleet services as described in Finding 1, SUBJECT TO THE ATTACHED CONDITIONS, and all applicable standards and regulations:

1. Standard Conditions of Approval, a copy attached.

2. The applicant shall take all necessary measures to ensure that its activities or those of its agents do not result in measurable erosion of soil on the site during the construction of the project covered by this approval.

3. Severability. The invalidity or unenforceability of any provision, or part thereof, of this License shall not affect the remainder of the provision or any other provisions. This License shall be construed and enforced in all respects as if such invalid or unenforceable provision or part thereof had been omitted.

4. Prior to the start of construction, the applicant shall submit a copy of the recorded Memorandum of Interagency Agreement between MDOT and MDIFW for the Coitrone/Simmons compensation parcel ensuring that the parcel is protected in perpetuity.

THIS APPROVAL DOES NOT CONSTITUTE OR SUBSTITUTE FOR ANY OTHER REQUIRED STATE, FEDERAL OR LOCAL APPROVALS NOR DOES IT VERIFY COMPLIANCE WITH ANY APPLICABLE SHORELAND ZONING ORDINANCES.

DONE AND DATED IN AUGUSTA, MAINE, THIS 29th DAY OF January, 2014.

DEPARTMENT OF ENVIRONMENTAL PROTECTION

Filed
JAN 29 2014
State of Maine
Board of Environmental Protection

BY: Michael Kuhn
For: Patricia W. Aho, Commissioner

PLEASE NOTE THE ATTACHED SHEET FOR GUIDANCE ON APPEAL PROCEDURES…

AL/L26076ANBN/ATS#76598, 76597

# Natural Resources Protection Act (NRPA) Standard Conditions

THE FOLLOWING STANDARD CONDITIONS SHALL APPLY TO ALL PERMITS GRANTED UNDER THE NATURAL RESOURCE PROTECTION ACT, TITLE 38, M.R.S.A. SECTION 480-A ET.SEQ. UNLESS OTHERWISE SPECIFICALLY STATED IN THE PERMIT.

A. Approval of Variations From Plans. The granting of this permit is dependent upon and limited to the proposals and plans contained in the application and supporting documents submitted and affirmed to by the applicant. Any variation from these plans, proposals, and supporting documents is subject to review and approval prior to implementation.

B. Compliance With All Applicable Laws. The applicant shall secure and comply with all applicable federal, state, and local licenses, permits, authorizations, conditions, agreements, and orders prior to or during construction and operation, as appropriate.

C. Erosion Control. The applicant shall take all necessary measures to ensure that his activities or those of his agents do not result in measurable erosion of soils on the site during the construction and operation of the project covered by this Approval.

D. Compliance With Conditions. Should the project be found, at any time, not to be in compliance with any of the Conditions of this Approval, or should the applicant construct or operate this development in any way other the specified in the Application or Supporting Documents, as modified by the Conditions of this Approval, then the terms of this Approval shall be considered to have been violated.

E. Time frame for approvals. If construction or operation of the activity is not begun within four years, this permit shall lapse and the applicant shall reapply to the Board for a new permit. The applicant may not begin construction or operation of the activity until a new permit is granted. Reapplications for permits may include information submitted in the initial application by reference. This approval, if construction is begun within the four-year time frame, is valid for seven years. If construction is not completed within the seven-year time frame, the applicant must reapply for, and receive, approval prior to continuing construction.

F. No Construction Equipment Below High Water. No construction equipment used in the undertaking of an approved activity is allowed below the mean high water line unless otherwise specified by this permit.

G. Permit Included In Contract Bids. A copy of this permit must be included in or attached to all contract bid specifications for the approved activity.

H. Permit Shown To Contractor. Work done by a contractor pursuant to this permit shall not begin before the contractor has been shown by the applicant a copy of this permit.

Revised (12/2011/DEP LW0428)

# DEP INFORMATION SHEET
## Appealing a Department Licensing Decision

**Dated: March 2012** **Contact: (207) 287-2811**


**SUMMARY**

There are two methods available to an aggrieved person seeking to appeal a licensing decision made by the Department of Environmental Protection's ("DEP") Commissioner: (1) in an administrative process before the Board of Environmental Protection ("Board"); or (2) in a judicial process before Maine's Superior Court. An aggrieved person seeking review of a licensing decision over which the Board had original jurisdiction may seek judicial review in Maine's Superior Court.

A judicial appeal of final action by the Commissioner or the Board regarding an application for an expedited wind energy development (35-A M.R.S.A. § 3451(4)) or a general permit for an offshore wind energy demonstration project (38 M.R.S.A. § 480-HH(1)) or a general permit for a tidal energy demonstration project (38 M.R.S.A. § 636-A) must be taken to the Supreme Judicial Court sitting as the Law Court.

This INFORMATION SHEET, in conjunction with a review of the statutory and regulatory provisions referred to herein, can help a person to understand his or her rights and obligations in filing an administrative or judicial appeal.


### I. ADMINISTRATIVE APPEALS TO THE BOARD

#### LEGAL REFERENCES

The laws concerning the DEP's *Organization and Powers*, 38 M.R.S.A. §§ 341-D(4) & 346, the *Maine Administrative Procedure Act*, 5 M.R.S.A. § 11001, and the DEP's *Rules Concerning the Processing of Applications and Other Administrative Matters* ("Chapter 2"), 06-096 CMR 2 (April 1, 2003).

#### HOW LONG YOU HAVE TO SUBMIT AN APPEAL TO THE BOARD

The Board must receive a written appeal within 30 days of the date on which the Commissioner's decision was filed with the Board. Appeals filed after 30 calendar days of the date on which the Commissioner's decision was filed with the Board will be rejected.

#### HOW TO SUBMIT AN APPEAL TO THE BOARD

Signed original appeal documents must be sent to: Chair, Board of Environmental Protection, c/o Department of Environmental Protection, 17 State House Station, Augusta, ME 04333-0017; faxes are acceptable for purposes of meeting the deadline when followed by the Board's receipt of mailed original documents within five (5) working days. Receipt on a particular day must be by 5:00 PM at DEP's offices in Augusta; materials received after 5:00 PM are not considered received until the following day. The person appealing a licensing decision must also send the DEP's Commissioner a copy of the appeal documents and if the person appealing is not the applicant in the license proceeding at issue the applicant must also be sent a copy of the appeal documents. All of the information listed in the next section must be submitted at the time the appeal is filed. Only the extraordinary circumstances described at the end of that section will justify evidence not in the DEP's record at the time of decision being added to the record for consideration by the Board as part of an appeal.

## WHAT YOUR APPEAL PAPERWORK MUST CONTAIN

Appeal materials must contain the following information at the time submitted:

1. *Aggrieved Status.* The appeal must explain how the person filing the appeal has standing to maintain an appeal. This requires an explanation of how the person filing the appeal may suffer a particularized injury as a result of the Commissioner's decision.
2. *The findings, conclusions or conditions objected to or believed to be in error.* Specific references and facts regarding the appellant's issues with the decision must be provided in the notice of appeal.
3. *The basis of the objections or challenge.* If possible, specific regulations, statutes or other facts should be referenced. This may include citing omissions of relevant requirements, and errors believed to have been made in interpretations, conclusions, and relevant requirements.
4. *The remedy sought.* This can range from reversal of the Commissioner's decision on the license or permit to changes in specific permit conditions.
5. *All the matters to be contested.* The Board will limit its consideration to those arguments specifically raised in the written notice of appeal.
6. *Request for hearing.* The Board will hear presentations on appeals at its regularly scheduled meetings, unless a public hearing on the appeal is requested and granted. A request for public hearing on an appeal must be filed as part of the notice of appeal.
7. *New or additional evidence to be offered.* The Board may allow new or additional evidence, referred to as supplemental evidence, to be considered by the Board in an appeal only when the evidence is relevant and material and that the person seeking to add information to the record can show due diligence in bringing the evidence to the DEP's attention at the earliest possible time in the licensing process or that the evidence itself is newly discovered and could not have been presented earlier in the process. Specific requirements for additional evidence are found in Chapter 2.

## OTHER CONSIDERATIONS IN APPEALING A DECISION TO THE BOARD

1. *Be familiar with all relevant material in the DEP record.* A license application file is public information, subject to any applicable statutory exceptions, made easily accessible by DEP. Upon request, the DEP will make the material available during normal working hours, provide space to review the file, and provide opportunity for photocopying materials. There is a charge for copies or copying services.
2. *Be familiar with the regulations and laws under which the application was processed, and the procedural rules governing your appeal.* DEP staff will provide this information on request and answer questions regarding applicable requirements.
3. *The filing of an appeal does not operate as a stay to any decision.* If a license has been granted and it has been appealed the license normally remains in effect pending the processing of the appeal. A license holder may proceed with a project pending the outcome of an appeal but the license holder runs the risk of the decision being reversed or modified as a result of the appeal.

## WHAT TO EXPECT ONCE YOU FILE A TIMELY APPEAL WITH THE BOARD

The Board will formally acknowledge receipt of an appeal, including the name of the DEP project manager assigned to the specific appeal. The notice of appeal, any materials accepted by the Board Chair as supplementary evidence, and any materials submitted in response to the appeal will be sent to Board members with a recommendation from DEP staff. Persons filing appeals and interested persons are notified in advance of the date set for Board consideration of an appeal or request for public hearing. With or without holding a public hearing, the Board may affirm, amend, or reverse a Commissioner decision or remand the matter to the Commissioner for further proceedings. The Board will notify the appellant, a license holder, and interested persons of its decision.

## II. JUDICIAL APPEALS

Maine law generally allows aggrieved persons to appeal final Commissioner or Board licensing decisions to Maine's Superior Court, see 38 M.R.S.A. § 346(1); 06-096 CMR 2; 5 M.R.S.A. § 11001; & M.R. Civ. P 80C. A party's appeal must be filed with the Superior Court within 30 days of receipt of notice of the Board's or the Commissioner's decision. For any other person, an appeal must be filed within 40 days of the date the decision was rendered. Failure to file a timely appeal will result in the Board's or the Commissioner's decision becoming final.

An appeal to court of a license decision regarding an expedited wind energy development, a general permit for an offshore wind energy demonstration project, or a general permit for a tidal energy demonstration project may only be taken directly to the Maine Supreme Judicial Court. See 38 M.R.S.A. § 346(4).

Maine's Administrative Procedure Act, DEP statutes governing a particular matter, and the Maine Rules of Civil Procedure must be consulted for the substantive and procedural details applicable to judicial appeals.

### ADDITIONAL INFORMATION

If you have questions or need additional information on the appeal process, for administrative appeals contact the Board's Executive Analyst at (207) 287-2452 or for judicial appeals contact the court clerk's office in which your appeal will be filed.

**Note: The DEP provides this INFORMATION SHEET for general guidance only; it is not intended for use as a legal reference. Maine law governs an appellant's rights.**

**DEPARTMENT OF THE ARMY**
NEW ENGLAND DISTRICT, CORPS OF ENGINEERS
696 VIRGINIA ROAD
CONCORD, MASSACHUSETTS 01742-2751

REPLY TO ATTENTION OF

## MAINE GENERAL PERMIT (GP)
## AUTHORIZATION LETTER AND SCREENING SUMMARY

**OFFICE OF ENVIRONMENTAL SERVICES**
**MAINE DEPT. OF TRANSPORTATIONT**
**16 STATE HOUSE STATION**
**AUGUSTA, MAINE 04333**

**CORPS PERMIT #** NAE-2013-01790
**CORPS PGP ID#** 13-309
**STATE ID#** L-26076-TG-B-N

**DESCRIPTION OF WORK:**
**Fill approximately 57,172 s.f. (1.3 acres) of freshwater wetlands adjacent to unnamed tributaries to Bond Brook at Augusta, Maine in order to develop a consolidated fleet services facility. This work is shown on the attached plans entitled "RELOCATION OF MAINE DOT FLEET SERVICES, 66 INDUSTRIAL DRIVE, AUGUSTA, MAINE" in six sheets dated "OCTOBER 17, 2013".**

**DOT WIN: 20118.55**

**LAT/LONG COORDINATES :** 44.3539633° N -69.8066452° W **USGS QUAD:** AUGUSTA, ME

### I. CORPS DETERMINATION:

Based on our review of the information you provided, we have determined that your project will have only minimal individual and cumulative impacts on waters and wetlands of the United States. **Your work is therefore authorized by the U.S. Army Corps of Engineers under the enclosed Federal Permit, the Maine General Permit (GP).** Accordingly, we do not plan to take any further action on this project.

You must perform the activity authorized herein in compliance with all the terms and conditions of the GP [including any attached Additional Conditions and any conditions placed on the State 401 Water Quality Certification including any required mitigation]. Please review the enclosed GP carefully, including the GP conditions beginning on page 5, to familiarize yourself with its contents. You are responsible for complying with all of the GP requirements; therefore you should be certain that whoever does the work fully understands all of the conditions. You may wish to discuss the conditions of this authorization with your contractor to ensure the contractor can accomplish the work in a manner that conforms to all requirements.

If you change the plans or construction methods for work within our jurisdiction, please contact us immediately to discuss modification of this authorization. This office must approve any changes before you undertake them.

Condition 41 of the GP (page 18) provides one year for completion of work that has commenced or is under contract to commence prior to the expiration of the GP on October 12, 2015. You will need to apply for reauthorization for any work within Corps jurisdiction that is not completed by October 12, 2016.

This authorization presumes the work shown on your plans noted above is in waters of the U.S. Should you desire to appeal our jurisdiction, please submit a request for an approved jurisdictional determination in writing to the undersigned.

No work may be started unless and until all other required local, State and Federal licenses and permits have been obtained. **This includes but is not limited to a Flood Hazard Development Permit issued by the town if necessary.**

### II. STATE ACTIONS: PENDING [ X ], ISSUED[ ], DENIED [ ] DATE:

APPLICATION TYPE: PBR:___, TIER 1:___, TIER 2 :___, TIER 3: X, LURC: ___ DMR LEASE: ___ NA: ___

### III. FEDERAL ACTIONS:

JOINT PROCESSING MEETING: 9/12/13 LEVEL OF REVIEW: CATEGORY 1:___ CATEGORY 2: X

AUTHORITY (Based on a review of plans and/or State/Federal applications): SEC 10___, 404 X 10/404___, 103___

EXCLUSIONS: The exclusionary criteria identified in the general permit do not apply to this project.

**FEDERAL RESOURCE AGENCY OBJECTIONS:** EPA NO, USF&WS NO, NMFS NO

If you have any questions on this matter, please contact my staff at 207-623-8367 at our Manchester, Maine Project Office. In order for us to better serve you, we would appreciate your completing our Customer Service Survey located at http://per2.nwp.usace.army.mil/survey.html

Jay L. Clement

**JAY L. CLEMENT**
**SENIOR PROJECT MANAGER**
**MAINE PROJECT OFFICE**

12-16-2013

**FRANK J. DEL GIUDICE** **DATE**
**CHIEF, PERMITS & ENFORCEMENT BRANCH**
**REGULATORY DIVISION**

US Army Corps
of Engineers ®
New England District

**PLEASE NOTE THE FOLLOWING GENERAL CONDITIONS FOR**
**DEPARTMENT OF THE ARMY**
**GENERAL PERMIT**
**NO. NAE-2013-01790**

1. This authorization requires you to 1) notify us before beginning work so we may inspect the project, and 2) submit a Compliance Certification Form. You must complete and return the enclosed Work Start Notification Form(s) to this office at least two weeks before the anticipated starting date. You must complete and return the enclosed Compliance Certification Form within one month following the completion of the authorized work and any required mitigation (but not mitigation monitoring, which requires separate submittals).

2. The permittee shall assure that a copy of this permit is at the work site whenever work is being performed and that all personnel performing work at the site of the work authorized by this permit are fully aware of the terms and conditions of the permit. This permit, including its drawings and any appendices and other attachments, shall be made a part of any and all contracts and sub-contracts for work which affects areas of Corps of Engineers' jurisdiction at the site of the work authorized by this permit. This shall be done by including the entire permit in the specifications for the work. If the permit is issued after construction specifications but before receipt of bids or quotes, the entire permit shall be included as an addendum to the specifications. The term "entire permit" includes permit amendments. Although the permittee may assign various aspects of the work to different contractors or sub-contractors, all contractors and sub-contractors shall be obligated by contract to comply with all environmental protection provisions of the entire permit, and no contract or sub-contract shall require or allow unauthorized work in areas of Corps of Engineers jurisdiction.

3. Adequate sedimentation and erosion control devices, such as geotextile silt fences or other devices capable of filtering the fines involved, shall be installed and properly maintained to minimize impacts during construction. These devices must be removed upon completion of work and stabilization of disturbed areas. The sediment collected by these devices must also be removed and placed upland, in a manner that will prevent its later erosion and transport to a waterway or wetland.

4. All exposed soils resulting from the construction will be promptly seeded and mulched in order to achieve vegetative stabilization.

5. To address state and federal requirements for compensatory mitigation, the permittee shall preserve in perpetuity approximately 94 acres of mixed uplands, wetlands, and vernal pools off Cross Hill Road, adjacent to the Alanzo H. Garcelon Wildlife Management Area, at Augusta, Maine. This area is shown on the attached plan entitled "BOUNDARY SURVEY OF THE MOST SOUTHERLY LINE OF LAND TO BE PURCHASED FROM COITRONE/SIMMONS" in one sheet dated "11-05-2013". After purchase, the property shall be conveyed to the Maine Dept. of Inland Fisheries & Wildlife to be incorporated into the adjacent wildlife management area. The land title conveyance shall be forwarded to the Corps and the Maine DEP within 30 days of the acquisition closing. The site shall be acquired and conveyed within one year of the first impacts to regulated resources unless the Corps provides a written extension.

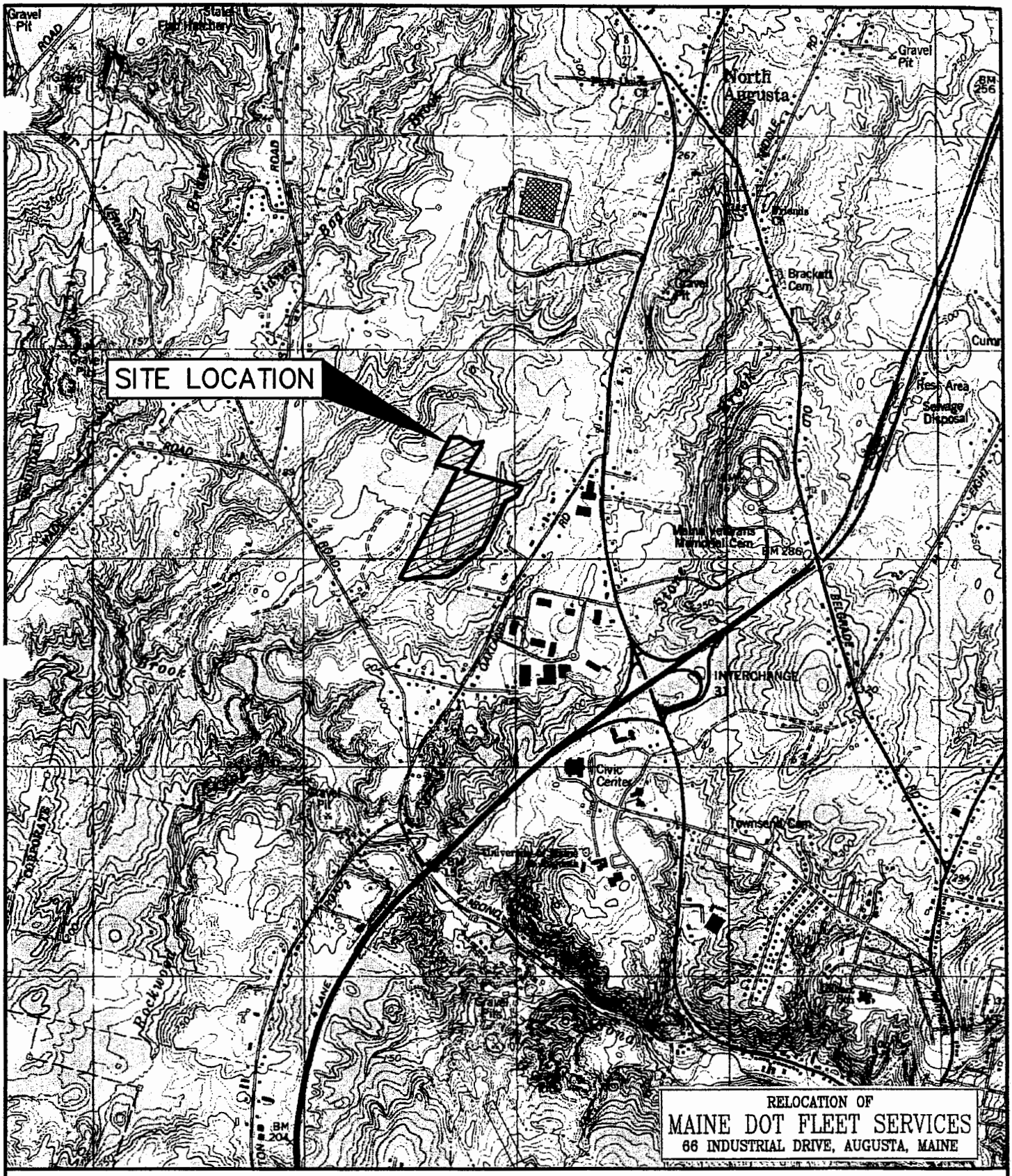


# U.S.G.S. Location Map

Maine DOT BGS Fleet Services - Augusta, Maine

U.S.G.S. Augusta, Maine -7.5 Minute Series (Topographic)

| | | | |
|---|---|---|---|
| Design: WCH | Date: SEPT 2013 | Gorrill-Palmer Consulting Engineers, Inc. | Figure |
| Draft: CG | Job No.: 2798 | *Engineering Excellence since 1998* | 1 |
| Checked: WCH | Scale: 1"=2000'± | | |
| File Name: 2798-LOCATION.dwg | | | |

PO Box 1237
15 Shaker Road
Gray, ME 04039
207-657-6910
FAX: 207-657-6912
E-Mail: mailbox@gorrillpalmer.com

N/F
STATE OF MAINE
BOOK 10759, PAGE 176, 01-14-2013
SEE PLAN REFERENCE #2

N/F
STATE OF MAINE
BOOK 10759, PAGE 170, 01-14-2013
SEE PLAN REFERENCE #2

N/F
STATE OF MAINE
BOOK 10734, PAGE 1, 12-20-2012
SEE PLAN REFERENCE #3

N/F
STATE OF MAINE
BOOK 10718, PAGE 40, 04-13-2012
SEE PLAN REFERENCE #1

94 ACRES +/-
AREA TAKEN FROM OTHER
INFORMATION AND TO BE CONSIDERED APPROXIMATE

N/F
STATE OF MAINE
BOOK 1314, PAGE 346, 06-05-1976

N/F
AUGUSTA CONGREGATION
OF JEHOVAHS WITNESSES
BOOK 1083, PAGE 117, 04-10-2012

N/F
NORMAN O. MOORE JR.
LIVING TRUST
BOOK 8079, PAGE 173, 08-14-2004

CROSS HILL ROAD

ROUTE #3

MAGNETIC NORTH

## NOTES

1) OWNER OF RECORD TIMOTHY J COTRONE
SOURCE DEED BOOK 10014, PAGE 170, DATED 12-13-1978
SOURCE DEED BOOK 10014, PAGE 171, DATED 12-13-1978
SOURCE DEED BOOK 10014, PAGE 172, DATED 12-13-1978
SOURCE DEED BOOK 10014, PAGE 173, DATED 12-13-1978
SOURCE DEED BOOK 10014, PAGE 174, DATED 12-13-1978
SOURCE DEED BOOK 10014, PAGE 175, DATED 12-13-1978

2) OWNER OF RECORD DARLENE E. SIMMONS
SOURCE DEED BOOK 10014, PAGE 176, DATED 12-13-1978
SOURCE DEED BOOK 10014, PAGE 177, DATED 12-13-1978
SOURCE DEED BOOK 10014, PAGE 178, DATED 12-13-1978
SOURCE DEED BOOK 10014, PAGE 179, DATED 12-13-1978

3) OWNER OF RECORD TIMOTHY J COTRONE AND DARLENE E. SIMMONS
SOURCE DEED BOOK 10014, PAGE 171, DATED 12-13-1978

## PLAN REFERENCE

1) PLAN OF SURVEY OF CHARLES MACNAMARA PROPERTY, NORTH BELFAST AVENUE, AUGUSTA, MAINE DATED SEPT.-OCT. 1914 BY CLINTON R. WAITE INC. RECORDED IN THE K.C.R.D. PLAN BOOK 1911, PAGE 23

2) SKETCH PLAN FOR THE DEPARTMENT OF INLAND FISHERIES AND WILDLIFE, OFF CHURCH HILL ROAD, AUGUSTA, MAINE, DATED 11-17-2011 BY MORIN LAND SURVEYING, RECORDED IN THE K.C.R.D. PLAN BOOK 1201, PAGE 8.

## LEGEND

- o = 5/8" IRON REBAR WITH I.D. CAP #1187 SET
- ● = 5/8" IRON REBAR FOUND
- o = ANGLE IRON FOUND
- ooooo = STONEWALL
- = BARBED WIRE FENCE
- K.C.R.D = KENNEBEC COUNTY REGISTRY OF DEEDS
- - - - - = LINE NOT SURVEYED (INFORMATION FOR PICTORIAL PURPOSES ONLY)

KENNEBEC SS REGISTRY OF DEEDS
RECORDED .....
AT .....
FILE NO ..... REGISTER

GRAPHIC SCALE
( IN FEET )
1 inch = 200 ft.

## PRELIMINARY

TO THE BEST OF MY KNOWLEDGE
THIS SURVEY COMPLIES WITH THE MAINE STATE BOARD OF LICENSURE FOR PROFESSIONAL LAND SURVEYORS STANDARDS OF PRACTICE. 32 MRSA §§ 13930 EFFECTIVE DATE APRIL 1, 2001.
EXCEPTIONS: NO SURVEY REPORT OTHER THAN THE INFORMATION SHOWN ON THIS PLAN.

THIS PLAN IS PRELIMINARY WITHOUT AN ENGRAVED SEAL.
*Morin Land Surveying*
MICHAEL J. MORIN P.L.S. # 1187

| | |
|---|---|
| PROJECT / LOCATION | DEPARTMENT OF INLAND FISHERIES AND WILDLIFE, 270 LYONS ROAD SIDNEY, MAINE 04330 |
| PROJECT CONTROL | CROSS HILL ROAD |
| TOWN | AUGUSTA |
| COUNTY | KENNEBEC |
| STATE | MAINE |
| SHEET TITLE | BOUNDARY SURVEY OF THE EAST SIDELINE, LINE OF LAND TO BE PURCHASED FROM COTRONE / SIMMONS |
| SCALE | 1" = 200' |
| DATE | 11-05-2013 |
| FILE No. | A12007A |
| FLD BOOK No. | 99 |
| PLAN No. | 439 |
| | BS |

MORIN LAND SURVEYING
Augusta, Maine (207) 623-3443

| NO. | REVISED | DATE |
|---|---|---|
| | | |

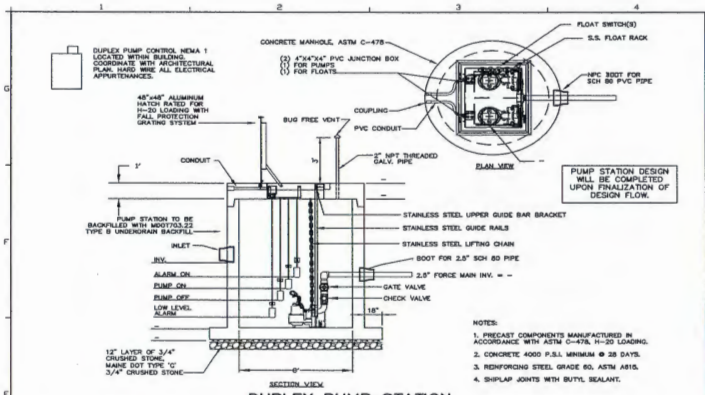


## DUPLEX PUMP STATION

NOT TO SCALE

| PUMP STATION | SHEET LOCATION | | PUMP STATION SETTING DATA | | | | | PUMP CONTROL SETTING DATA | | | | PUMP OPERATING CONDITIONS | | | | |
|---|---|---|---|---|---|---|---|---|---|---|---|---|---|---|---|---|
| DESCRIPTION | UTILITY PLAN SHEET | PROFILE SHEET | TOP OF COVER SLAB | BOTTOM OF BASE SLAB | 8" EFF. SEWER INVERT | Ø FORCE MAIN OUTLET | LOW LEVEL ALARM | PUMP OFF | PUMP ON | ALARM ON | NUMBER OF PUMPS | PUMP DISCHARGE | PUMP RATE | TOTAL DYNAMIC HEAD | PUMP H.P. |
| MAINE DOT/BGS FLEET SERVICES | – | – | – | – | – | – | – | – | – | – | 2 | 2" | – | – | – |

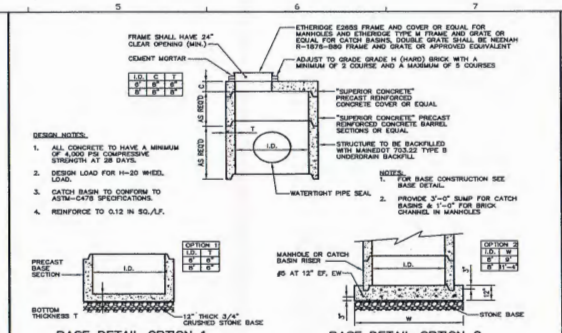


## LARGE DIAMETER STORM DRAIN MANHOLE AND CATCH BASIN WITH FLAT TOP

NOT TO SCALE

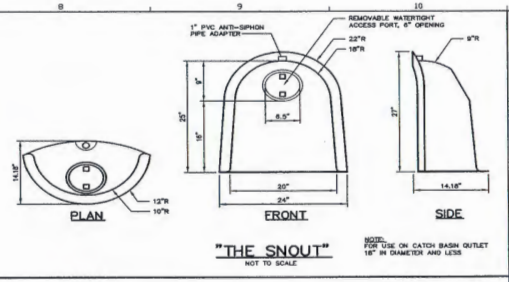


## "THE SNOUT"

NOT TO SCALE

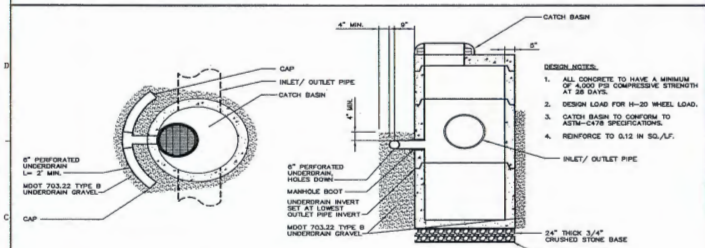


## CATCH BASIN UNDERDRAIN

NOT TO SCALE

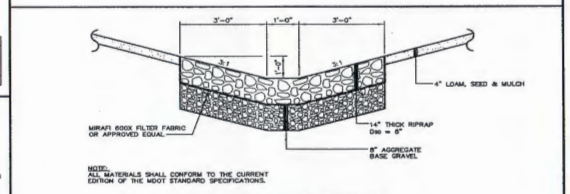


## RIP RAP SWALE

NOT TO SCALE

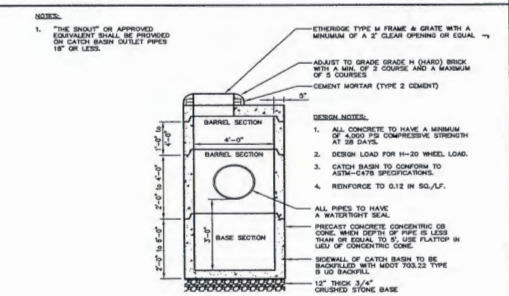


## 4'–0" PRECAST CATCH BASIN

NOT TO SCALE

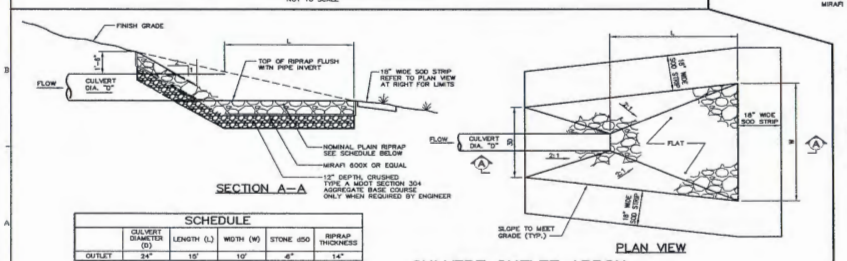


| SCHEDULE | | | | | |
|---|---|---|---|---|---|
| | CULVERT DIAMETER (D) | LENGTH (L) | WIDTH (W) | STONE d50 | RIPRAP THICKNESS |
| OUTLET | 24" | 15' | 10' | 6" | 14" |

## CULVERT OUTLET APRON

NOT TO SCALE

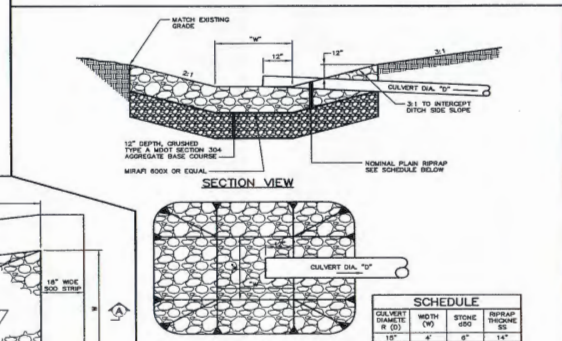


| SCHEDULE | | | |
|---|---|---|---|
| CULVERT DIAMETER (D) | WIDTH (W) | STONE d50 | RIPRAP THICKNESS SS |
| 15" | 4' | 6" | 14" |
| 18" | 4' | 6" | 14" |
| 24" | 4' | 6" | 14" |

## CULVERT INLET APRON

NOT TO SCALE

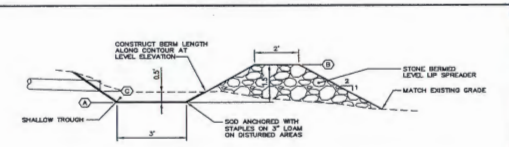


| LEVEL LIP SPREADER SCHEDULE | | | | |
|---|---|---|---|---|
| | | Ⓐ | Ⓑ | Ⓒ |
| LEVEL LIP | BERM WIDTH | BOTTOM ELEVATION | TOP BERM ELEVATION | PIPE INVERT |
| 1 | 15' | 195 | 196.50 | 195.50 |

| BERM STONE SIZE | |
|---|---|
| SIEVE DESIGNATION (US CUSTOMARY) | PERCENT BY WEIGHT PASSING |
| 12 IN | 100 |
| 8 IN | 84–100 |
| 3 IN | 65–83 |
| 1 IN | 42–55 |
| NO. 4 | 8–12 |

## STONE BERM LEVEL LIP SPREADER

NOT TO SCALE

NOT FOR CONSTRUCTION
MAJOR DEVELOPMENT APPLICATION

Gorrill–Palmer Consulting Engineers, Inc.
PO Box 1237 Engineering Excellence Since 1998
15 Shaker Road
Gray, ME 04039
207–657–6910
FAX: 207–657–6912
E-Mail: mailbox@gorrillpalmer.com

Allied Engineering
Structural Mechanical Electrical Commissioning
160 Veranda Street
Portland, Maine 04103
207.231.2348
207.231.2358
www.allied-eng.com
Allied Project No: 1,300 / Cost Elec

STATE OF MAINE
DEPARTMENT OF TRANSPORTATION

| DATE | |
|---|---|
| FED PIN NO: | |
| PIN NO: | 020118.00 |

WILLIAM C. HARGELL No. 8618 10/11/13 PROFESSIONAL ENGINEER

| PROJECT INFORMATION | | SIGNATURE | DATE |
|---|---|---|---|
| PROGRAM | | – | |
| PROJECT MANAGER | ALLIED ENG., INC. | ARCH. LIN. NUMBER | |
| DESIGNER | CORRILL–PALMER | | |
| CONSULTANT | | | |
| PROJECT RESIDENT | | | |
| CONTRACTOR | | | |
| PROJECT COMPLETION DATE | – | | OCTOBER 17, 2013 |

"RELOCATION OF MAINE DOT FLEET SERVICES
66 INDUSTRIAL DRIVE, AUGUSTA, MAINE

DRAINAGE/UTILITY DETAILS

SHEET NUMBER
C502

U:\2798_Allied Engineering_Maine\DOT Fleet Services\Z - CAD\dwg\2798-DETAILS.dwg Oct 09, 2013 - 11:02am

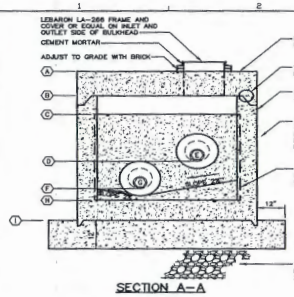


SECTION A-A

## OUTLET CONTROL STRUCTURE 1 (OCS1)

SEE SCHEDULE A
NOT TO SCALE

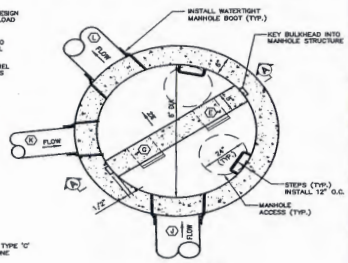


PLAN VIEW

## 6' OUTLET CONTROL STRUCTURE 1 (OCS1)

SEE SCHEDULE A
NOT TO SCALE

### SCHEDULE A

| | ITEM DESCRIPTION | DIMENSION/ ELEVATION OCS 1 |
|---|---|---|
| A | TOP OF STRUCTURE | 205.00 |
| B | UNDERSIDE TOP SLAB | 204.33 |
| C | TOP CONCRETE BULKHEAD | 203.63 |
| D | ORIFICE INVERT | 201.50 |
| E | ORIFICE DIAMETER | 8" |
| F | ORIFICE INVERT | 200.35 |
| G | ORIFICE DIAMETER | 7.75" |
| H | MANHOLE INVERT | 195.40 |
| I | BOTTOM OF STRUCTURE | 194.40 |
| J | PIPE DIAMETER | 24" |
| | INVERT IN | 195.50 |
| K | PIPE DIAMETER | 6" |
| | INVERT IN | 195.50 |
| L | PIPE DIAMETER | 24" |
| | INVERT OUT | 195.40 |

### SCHEDULE B ORIFICE

| | ITEM DESCRIPTION | DIMENSION /ELEVATION OCS 1 |
|---|---|---|
| A | FLANGE O.D. | 19" |
| B | BOLT CIRCLE | 17" |
| C | NOMINAL PIPE DIAMETER | 12" |
| D | BOLT HOLE DIAMETER | 1" |
| E | ECCENTRIC ORIFICE DIAMETER | 8" |
| G | ECCENTRIC ORIFICE DIAMETER | 7.75" |

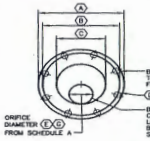


## ORIFICE DETAIL 1

SEE SCHEDULE B
NOT TO SCALE

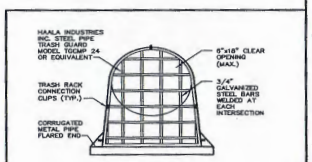


FRONT VIEW

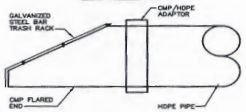


SIDE VIEW

## TRASH RACK

NOT TO SCALE

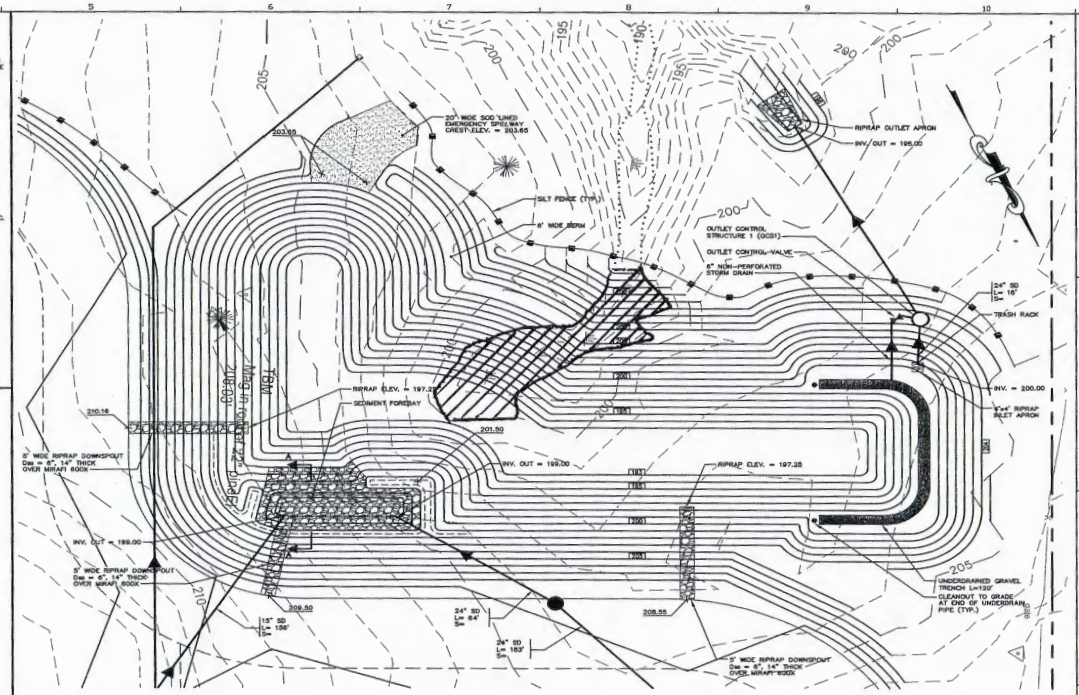


## WET POND PROJECT DETAILS

1"=20'

STATE OF MAINE
DEPARTMENT OF TRANSPORTATION

| | DATE |
|---|---|
| | |

FED FIN NO:
FIN NO: 023118.00

STATE OF MAINE WILLIAM C. HASKELL No. 6818 NATIONAL BOARDS PROFESSIONAL ENGINEER

| PROJECT INFORMATION | | SIGNATURE |
|---|---|---|
| PROGRAM | | |
| PROJECT MANAGER | ALLIED ENG., INC. | ARCH. LIN. NUMBER |
| DESIGNER | | |
| CONSULTANT | GORRILL-PALMER | DATE OCTOBER 17, 2013 |
| PROJECT RESIDENT | | |
| CONTRACTOR | | |
| PROJECT COMPLETION DATE | - | |

RELOCATION OF
MAINE DOT FLEET SERVICES
68 INDUSTRIAL DRIVE, AUGUSTA, MAINE

WET POND PLAN AND DETAILS

SHEET NUMBER
C505

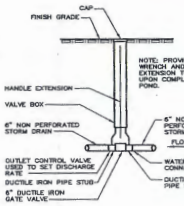


## OUTLET VALVE

NOT TO SCALE

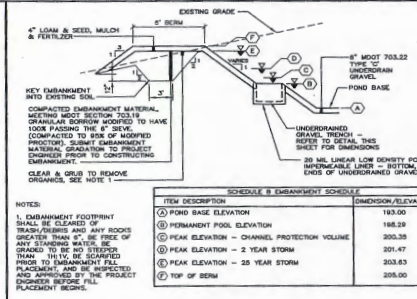


NOTES:

1. EMBANKMENT FOOTPRINT SHALL BE CLEARED OF TRASH/DEBRIS AND ANY ROCKS GREATER THAN 6", BE FREE OF ANY STANDING WATER, BE GRADED TO BE NO STEEPER THAN 1H:1V, BE SCARIFIED PRIOR TO EMBANKMENT FILL PLACEMENT, AND BE INSPECTED AND APPROVED BY THE PROJECT ENGINEER BEFORE FILL PLACEMENT BEGINS.

SCHEDULE B EMBANKMENT SCHEDULE

| ITEM DESCRIPTION | DIMENSION/ELEVATION |
|---|---|
| (A) POND BASE ELEVATION | 193.00 |
| (B) PERMANENT POOL ELEVATION | 198.29 |
| (C) PEAK ELEVATION - CHANNEL PROTECTION VOLUME | 200.35 |
| (D) PEAK ELEVATION - 2 YEAR STORM | 201.47 |
| (E) PEAK ELEVATION - 25 YEAR STORM | 203.63 |
| (F) TOP OF BERM | 205.00 |

## TYPICAL WET POND CROSS SECTION

NOT TO SCALE

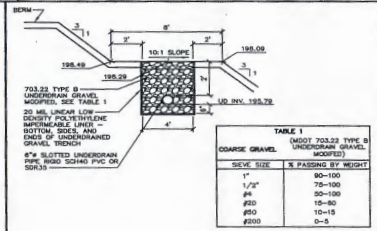


TABLE 1
(MDOT 703.22 TYPE B UNDERDRAIN GRAVEL MODIFIED)

| COARSE GRAVEL SIEVE SIZE | % PASSING BY WEIGHT |
|---|---|
| 1" | 90-100 |
| 1/2" | 75-100 |
| #4 | 50-100 |
| #20 | 15-50 |
| #50 | 10-15 |
| #200 | 0-5 |

## UNDERDRAINED GRAVEL TRENCH

NOT TO SCALE

MOEP REQUIRED

CONSTRUCTION OVERSIGHT

THE APPLICANT WILL RETAIN THE SERVICES OF A PROFESSIONAL ENGINEER TO INSPECT THE CONSTRUCTION AND STABILIZATION OF ALL STORMWATER MANAGEMENT STRUCTURES. IF NECESSARY, THE INSPECTING ENGINEER WILL INTERPRET THE POND'S CONSTRUCTION PLAN FOR THE CONTRACTOR. ONCE ALL STORMWATER MANAGEMENT STRUCTURES ARE CONSTRUCTED, THE APPLICANT'S INSPECTING ENGINEER WILL NOTIFY THE D.E.P. DEPARTMENT IN WRITING WITHIN 30 DAYS TO STATE THAT THE POND HAS BEEN COMPLETED. ACCOMPANYING THE ENGINEER'S NOTIFICATION MUST BE A LOG OF THE ENGINEER'S INSPECTIONS GIVING THE DATE OF EACH INSPECTION, THE TIME OF EACH INSPECTION, AND THE ITEMS INSPECTED ON EACH VISIT, AND INCLUDE ANY TESTING DATA OR SIEVE ANALYSIS DATA OF EVERY MINERAL SOIL AND SOIL MEDIA SPECIFIED IN THE PLANS AND USED ON SITE.

METHODS

INSPECTION BY A PROFESSIONAL ENGINEER WILL CONSIST OF WEEKLY VISITS TO THE SITE TO INSPECT THE INSTALLATION OF EACH POND'S EMBANKMENT CONSTRUCTION, STORMWATER INLET, UNDERDRAINED GRAVEL OUTLET, GRAVEL, OUTLET FILTER MATERIAL MAKEUP AND PLACEMENT, OUTLET CONTROL STRUCTURE, CLAY LINER (IF APPLICABLE), AND EMERGENCY SPILLWAY CONSTRUCTION FROM INITIAL GROUND DISTURBANCE TO FINAL STABILIZATION OF THE POND. AN INSPECTION OF THE UNDERDRAINED GRAVEL OUTLET SHALL ALSO BE PERFORMED ONE YEAR AFTER THE FINAL STABILIZATION OF THE POND.

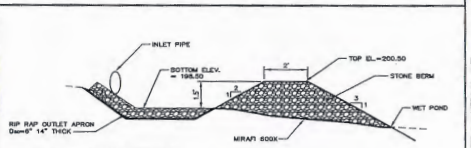


BERM STONE SIZE

| SIEVE DESIGNATION (US CUSTOMARY) | PERCENT BY WEIGHT PASSING |
|---|---|
| 12 IN | 100 |
| 6 IN | 84-100 |
| 3 IN | 66-83 |
| 1 IN | 42-55 |
| NO. 4 | 8-12 |

## SEDIMENT FOREBAY SECTION A-A

NOT TO SCALE

NOT FOR CONSTRUCTION
MAJOR DEVELOPMENT APPLICATION


Gorrill-Palmer Consulting Engineers, Inc.
Engineering Excellence Since 1998
PO Box 1237
15 Shaker Road
Gray, ME 04039
207-657-6910
FAX: 207-657-6912
E-Mail: mailbox@gorrillpalmer.com

Allied Engineering
Structural Mechanical Electrical Commissioning
169 Veranda Street
Portland, Maine 04103
207.221.2349
207.221.2364
www.allied-eng.com


Allied Project No: 13057 Cad File:

U:\2798_Allied Engineering_MaineDOT Fleet Services\Z - CAD\dwg\2798-DETAIL-PONDS.dwg Oct 09, 2013 - 11:03am

| Table 1 Loamy Coarse Sand | |
|---|---|
| SIEVE SIZE | % PASSING BY WEIGHT |
| #10 | 85–100 |
| #20 | 70–100 |
| #60 | 15–40 |
| #200 | 8–15 |
| #200 CLAY SIZE | <2.0 |

| Table 2 MEDOT Specifications for Underdrain Type B (MEDOT #703.22) | |
|---|---|
| SIEVE SIZE | % PASSING BY WEIGHT |
| 1" | 90–100 |
| 1/2" | 75–100 |
| #4 | 50–100 |
| #20 | 15–80 |
| #50 | 0–15 |
| #200 | 0–5 |

| Table 3 Sandy Loam Topsoil | |
|---|---|
| SIEVE SIZE | % PASSING BY WEIGHT |
| #4 | 75–95 |
| #10 | 60–90 |
| #40 | 35–85 |
| #200 | 20–70 |
| #200 CLAY SIZE | <2.0 |

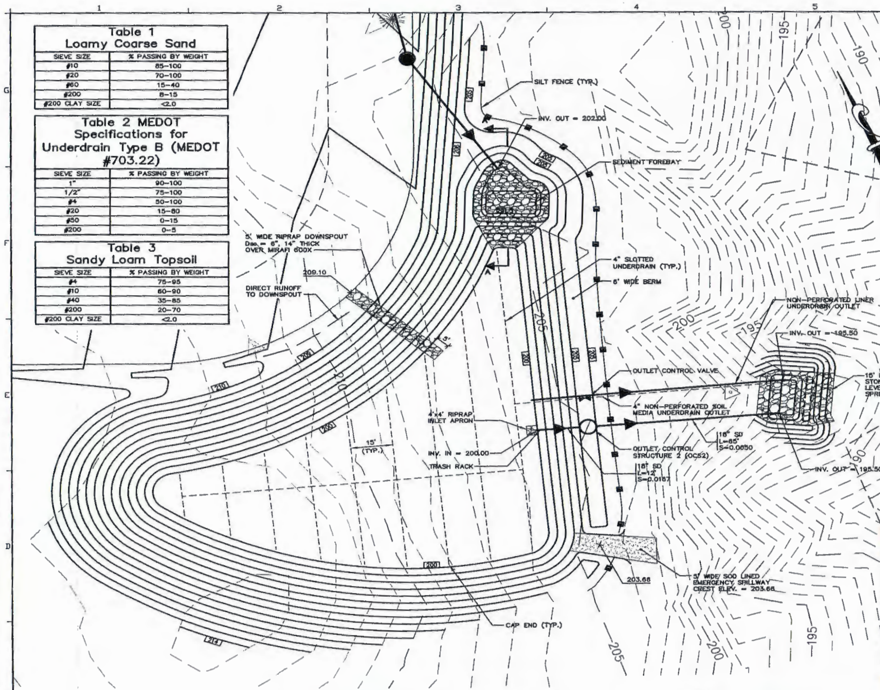


## GRASSED UNDERDRAIN PROJECT DETAILS

1"=20'

1 inch = 20 ft.

**NOTE:**
TWO UNDERDRAIN SYSTEMS ARE REQUIRED FOR THE VEGETATED UNDERDRAIN. ONE SYSTEM DRAINS THE SOIL MEDIA, AND ONE SYSTEM DRAINS THE LINER. THE LINER UNDERDRAIN IS NOT SHOWN ON THE PLAN VIEW FOR CLARITY PURPOSES. SEE GRASSED UNDERDRAIN DETAIL.

NOTES:

1. EMBANKMENT FOOTPRINT SHALL BE CLEARED OF TRASH/DEBRIS AND ANY ROCKS GREATER THAN 6", BE FREE OF ANY STANDING WATER, BE GRADED TO BE NO STEEPER THAN 1H:1V, BE SCARIFIED PRIOR TO EMBANKMENT FILL PLACEMENT, AND BE INSPECTED AND APPROVED BY THE PROJECT ENGINEER BEFORE FILL PLACEMENT BEGINS.

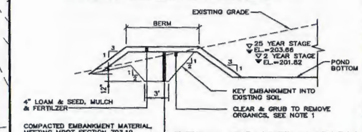


## BERM CONSTRUCTION

NOT TO SCALE

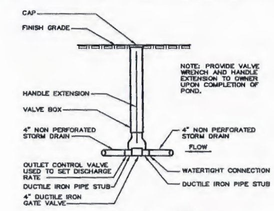


## OUTLET VALVE

NOT TO SCALE

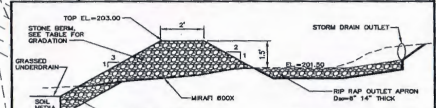


## SEDIMENT FOREBAY SECTION A–A

NOT TO SCALE

| BERM STONE SIZE | |
|---|---|
| SIEVE DESIGNATION (US CUSTOMARY) | PERCENT BY WEIGHT PASSING |
| 12 IN | 100 |
| 6 IN | 84–100 |
| 3 IN | 68–83 |
| 1 IN | 42–55 |
| NO. 4 | 8–12 |

MDEP REQUIRED

CONSTRUCTION OVERSIGHT

THE APPLICANT WILL RETAIN THE SERVICES OF A PROFESSIONAL ENGINEER TO INSPECT THE CONSTRUCTION AND STABILIZATION OF ALL STORMWATER MANAGEMENT STRUCTURES. IF NECESSARY, THE INSPECTING ENGINEER WILL INTERPRET THE POND'S CONSTRUCTION PLAN FOR THE CONTRACTOR. ONCE ALL STORMWATER MANAGEMENT STRUCTURES ARE CONSTRUCTED AND STABILIZED, THE INSPECTING ENGINEER WILL NOTIFY THE DEPARTMENT IN WRITING WITHIN 30 DAYS TO STATE THAT THE POND HAS BEEN COMPLETED. ACCOMPANYING THE ENGINEER'S NOTIFICATION MUST BE A LOG OF THE ENGINEER'S INSPECTIONS GIVING THE DATE OF EACH INSPECTION, THE TIME OF EACH INSPECTION, AND THE ITEMS INSPECTED ON EACH VISIT, AND INCLUDE ANY TESTING DATA OR SIEVE ANALYSIS DATA OF EVERY MINERAL SOIL AND SOIL MEDIA SPECIFIED IN THE PLANS AND USED ON SITE.

UNDERDRAINED FILTER BASINS

CONSTRUCTION SEQUENCE: THE SOIL FILTER MEDIA AND VEGETATION MUST NOT BE INSTALLED UNTIL THE AREA THAT DRAINS TO THE FILTER HAS BEEN PERMANENTLY STABILIZED WITH PAVEMENT OR OTHER STRUCTURE, 90% VEGETATION COVER, OR OTHER PERMANENT STABILIZATION UNLESS THE RUNOFF FROM THE CONTRIBUTING DRAINAGE AREA IS DIVERTED AROUND THE FILTER UNTIL STABILIZATION IS COMPLETED.
COMPACTION OF SOIL FILTER: FILTER SOIL MEDIA AND UNDERDRAIN BEDDING MATERIAL MUST BE COMPACTED TO BETWEEN 90% AND 92% STANDARD PROCTOR. THE BED SHOULD BE INSTALLED IN AT LEAST 2 LIFTS OF 9 INCHES TO PREVENT POCKETS OF LOOSE MEDIA.
CONSTRUCTION OVERSIGHT: INSPECTION BY A PROFESSIONAL ENGINEER WILL OCCUR AT A MINIMUM:
- AFTER THE PRELIMINARY CONSTRUCTION OF THE FILTER GRADES AND ONCE THE UNDERDRAIN PIPES ARE INSTALLED BUT NOT BACKFILLED,
- AFTER THE DRAINAGE LAYER IS CONSTRUCTED AND PRIOR TO THE INSTALLATION OF THE FILTER MEDIA,
- AFTER THE FILTER MEDIA HAS BEEN INSTALLED AND SEEDED.
- AFTER ONE YEAR TO INSPECT HEALTH OF THE VEGETATION AND MAKE CORRECTIONS, AND
- ALL THE MATERIAL USED FOR THE CONSTRUCTION OF THE FILTER BASIN MUST BE CONFIRMED AS SUITABLE BY THE DESIGN ENGINEER. TESTING MUST BE DONE BY A CERTIFIED LABORATORY TO SHOW THAT THEY ARE PASSING DEP SPECIFICATIONS.

TESTING AND SUBMITTALS: THE CONTRACTOR SHALL IDENTIFY THE LOCATION OF THE SOURCE OF EACH COMPONENT OF THE FILTER MEDIA. ALL RESULTS OF FIELD AND LABORATORY TESTING SHALL BE SUBMITTED TO THE PROJECT ENGINEER FOR CONFIRMATION. THE CONTRACTOR SHALL:
- SELECT SAMPLES FOR SAMPLING OF EACH TYPE OF MATERIAL TO BE BLENDED FOR THE MIXED FILTER MEDIA AND SAMPLES OF THE UNDERDRAIN BEDDING MATERIAL. SAMPLES MUST BE A COMPOSITE OF THREE DIFFERENT LOCATIONS (GRABS) FROM THE STOCKPILE OR PIT FACE. SAMPLE SIZE REQUIRED WILL BE DETERMINED BY THE TESTING LABORATORY.
- PERFORM A SIEVE ANALYSIS CONFORMING TO STM C136 (STANDARD TEST METHOD FOR SIEVE ANALYSIS OF FINE AND COURSE AGGREGATES 1996A) ON EACH TYPE OF THE SAMPLE MATERIAL. THE RESULTING SOIL FILTER MEDIA MIXTURE MUST HAVE 8% TO 12% BY WEIGHT PASSING THE #200 SIEVE, A CLAY CONTENT OF LESS THAN 2% (DETERMINED HYDROMETER GRAIN SIZE ANALYSIS) AND HAVE 10% DRY WEIGHT OF ORGANIC MATTER.
- PERFORM A PERMEABILITY TEST ON THE SOIL FILTER MEDIA MIXTURE CONFORMING TO ASTM D2434 WITH THE MIXTURE COMPACTED TO 90–92% OF MAXIMUM DRY DENSITY BASED ON ASTM D698.

## GRASSED UNDERDRAIN NOTES:

SOIL SPECIFICATIONS:

1. THE SOIL FILTER MEDIA SHALL BE A LAYERED SYSTEM CONSISTING OF THE FOLLOWING FROM THE BOTTOM:
   A. 12" OF LOAMY COARSE SAND, SEE TABLE 1.
   B. 2" LAYER OF TOPSOIL (SEE "C" BELOW) ROTOTILLED INTO THE LOAMY COARSE SAND LAYER.
   C. 6" OF NON-CLAYEY, LOAMY TOPSOIL SUCH AS USDA SANDY LOAM TOPSOIL WITH 5–8% HUMIFIED ORGANIC MATTER.
   SUPERHUMUS OR EQUIVALENT MAY BE ADDED TO THE TOPSOIL TO INCREASE ORGANIC CONTENT, SEE TABLE 3.

2. SOIL FILTER MEDIA MIXTURE SHALL HAVE A PERMEABILITY OF 2.4 IN./HR. TO 4 IN./HR UPON COMPACTION BETWEEN 90% AND 92% STANDARD PROCTOR (ASTM D698).

SUBMITTALS:

1. SUBMIT RESULTS OF FIELD AND LABORATORY TESTING TO PROJECT ENGINEER.
2. SUBMIT 75 lb. SAMPLE OF EACH TYPE OF MATERIAL: SUBMIT IN AIR TIGHT CONTAINERS TO PROJECT ENGINEER.
3. THE FOLLOWING MATERIAL SHALL BE SUBMITTED:
   A. SAND.
   B. UNDERDRAIN BEDDING MATERIAL.
4. PERFORM A SIEVE ANALYSIS CONFORMING TO ASTM C136 – STANDARD TEST METHOD FOR SIEVE ANALYSIS OF FINE AND COARSE AGGREGATES; 1996a ON EACH TYPE OF THE SAMPLE MATERIAL AND SUBMIT RESULTS TO PROJECT ENGINEER.
5. PERFORM A PERMEABILITY TEST ON THE SOIL FILTER MEDIA MIXTURE CONFORMING TO ASTM D2434 WITH THE MIXTURE COMPACTED TO 90% TO 92% OF MAXIMUM DRY DENSITY BASED ON ASTM D698. SUBMIT RESULTS TO THE PROJECT ENGINEER.
6. PERFORM ONE COMPACTION DENSITY TEST ON THE IN PLACE SOIL FILTER FOR EVERY 2,000 SQUARE FEET OF FILTER SURFACE AREA. TEST SHALL CONFORM TO ASTM D 2922 – STANDARD TEST METHODS FOR DENSITY OF SOIL AND SOIL-AGGREGATE IN PLACE BY NUCLEAR METHODS (SHALLOW DEPTH); 1996. SUBMIT RESULTS TO THE PROJECT ENGINEER.

CONSTRUCTION:

1. SOIL FILTER MEDIA AND UNDERDRAIN BEDDING MATERIAL SHALL BE COMPACTED TO BETWEEN 90% AND 92% STANDARD PROCTOR.
2. SLOTTED UNDERDRAIN PIPE SHALL BE SLOTTED 4" SCHEDULE 40 OR SDR 35 PVC PIPE. SPACED 15 FEET ON CENTER MAXIMUM.
3. TRIBUTARY AREAS SHALL BE STABILIZED PRIOR TO INSTALLATION OF THE SOIL FILTER MEDIA MIXTURE AND UNDERDRAIN. STABILIZED IS DEFINED AS PAVED IF IN A PARKING AREA OR ROADWAY, AND 90% GRASS CATCH IF IN A VEGETATED AREA.
4. OUTFLOW OF THE VEGETATED UNDERDRAIN SHALL BE CONTROLLED BY A 4" DUCTILE IRON GATE VALVE WITH VALVE WRENCH AND EXTENSION (AVAILABLE FROM E.J. PRESCOTT OR EQUIVALENT). A THREE PIECE VALVE BOX (AVAILABLE FROM E.J. PRESCOTT OR EQUIVALENT) SHALL BE INSTALLED OVER THE VALVE.
5. ALL EQUIPMENT USED WITHIN THE LIMITS OF THE VEGETATED UNDERDRAIN SHALL BE LOW GROUND PRESSURE VEHICLES (LESS THAN 2.0 PSI) WHEN FULLY LOADED.
6. UPON COMPLETION OF THE INSTALLATION OF THE SOIL FILTER MEDIA AND THE ESTABLISHMENT OF A 90% CATCH OF GRASS OVER THE FILTER MEDIA, THE CONTRACTOR SHALL FLOOD THE VEGETATED UNDERDRAIN TO THE DESIGN ELEVATION WITH CLEAN WATER AND ADJUST THE VALVE TO OBTAIN A 24 HOUR TO 32 HOUR RELEASE TIME.

| SCHEDULE A | | |
|---|---|---|
| ⬡ | ITEM DESCRIPTION | GRASSED UNDERDRAIN DIMENSION/ ELEVATION |
| A | CHANNEL PROTECTION VOLUME STAGE | 201.28 |
| B | TOP SOIL FILTER | 200.00 |
| C | TOP UNDERDRAIN BEDDING STONE | 198.50 |
| D | PIPE INVERT: 4" PERF. UD | 197.83 |
| E | BOTTOM UNDERDRAIN BEDDING | 197.50 |
| F | LINER UNDERDRAIN INVERT | 196.83 |

| GRASS VEGETATION | |
|---|---|
| CREEPING RED FESCUE | 20 LBS/ACRE |
| TALL FESCUE | 20 LBS/ACRE |
| BIRDSFOOT TREFOIL | 8 LBS/ACRE |

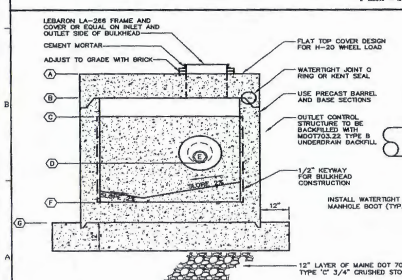


SECTION A–A
OUTLET CONTROL STRUCTURE 2 (OCS2)
SEE SCHEDULE B
NOT TO SCALE

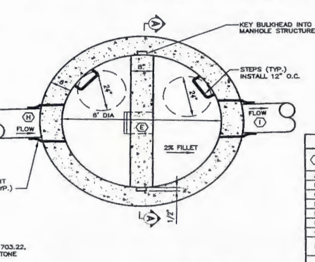


PLAN VIEW
6' OUTLET CONTROL STRUCTURE 2 (OCS2)
SEE SCHEDULE B
NOT TO SCALE

| SCHEDULE A | | |
|---|---|---|
| ⬡ | ITEM DESCRIPTION | DIMENSION/ ELEVATION OCS 2 |
| A | TOP OF STRUCTURE | 205.00 |
| B | UNDERSIDE TOP SLAB | 204.33 |
| C | TOP CONCRETE BULKHEAD | 203.66 |
| D | ORIFICE INVERT | 201.28 |
| E | ORIFICE DIAMETER | 1" |
| F | MANHOLE INVERT | 195.82 |
| G | BOTTOM OF STRUCTURE | 194.82 |
| H | PIPE DIAMETER | 18" |
| | INVERT IN | 199.80 |
| I | PIPE DIAMETER | 18" |
| | INVERT OUT | 195.82 |

NOT FOR CONSTRUCTION
MAJOR DEVELOPMENT APPLICATION

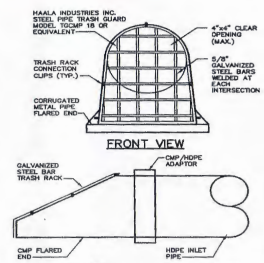


## TRASH RACK

NOT TO SCALE

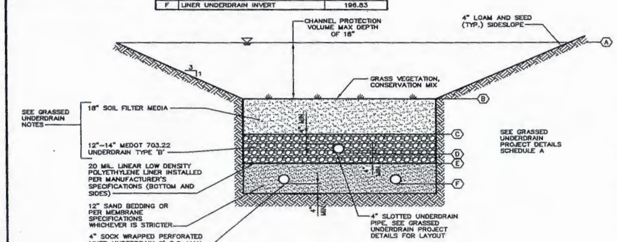


## GRASSED UNDERDRAIN DETAIL

NOT TO SCALE


Gorrill-Palmer Consulting Engineers, Inc.
Engineering Excellence Since 1998
PO Box 1237
15 Shaker Road
Gray, ME 04039
207-657-6910
FAX: 207-657-6912
E-Mail: mailbox@gorrillpalmer.com

Allied Engineering
Structural Mechanical Electrical Commissioning
160 Veranda Street
Portland, Maine 04103


Allied Project No: 11057 Cad File:

STATE OF MAINE
DEPARTMENT OF TRANSPORTATION

| DATE |
|---|
| |

FED PIN NO:
PIN NO: 020118.00

WILLIAM C. HASKELL No. 5618 10/9/13 LICENSED PROFESSIONAL ENGINEER

| PROJECT INFORMATION | | SIGNATURE |
|---|---|---|
| PROGRAM | | |
| PROJECT MANAGER | | – |
| DESIGNER | ALLIED ENG., INC. | ARCH. LIN. NUMBER |
| CONSULTANT | GORRILL-PALMER | |
| PROJECT RESIDENT | | DATE OCTOBER 17, 2013 |
| CONTRACTOR | | |
| PROJECT COMPLETION DATE | – | |

RELOCATION OF
MAINE DOT FLEET SERVICES
66 INDUSTRIAL DRIVE, AUGUSTA, MAINE

GRASSED UNDERDRAIN PLAN AND DETAILS

SHEET NUMBER
C506

U:\2798_Allied Engineering_MaineDOT Fleet Services\Z - CAD\dwg\2798-DETAIL-PONDS.dwg Oct 09, 2013 - 11:03am

U:\2199_Allied Engineering_MaineDOT Fleet Services\E - CAD\dwg\2799-SP.dwg Oct 09, 2013 - 11:22am

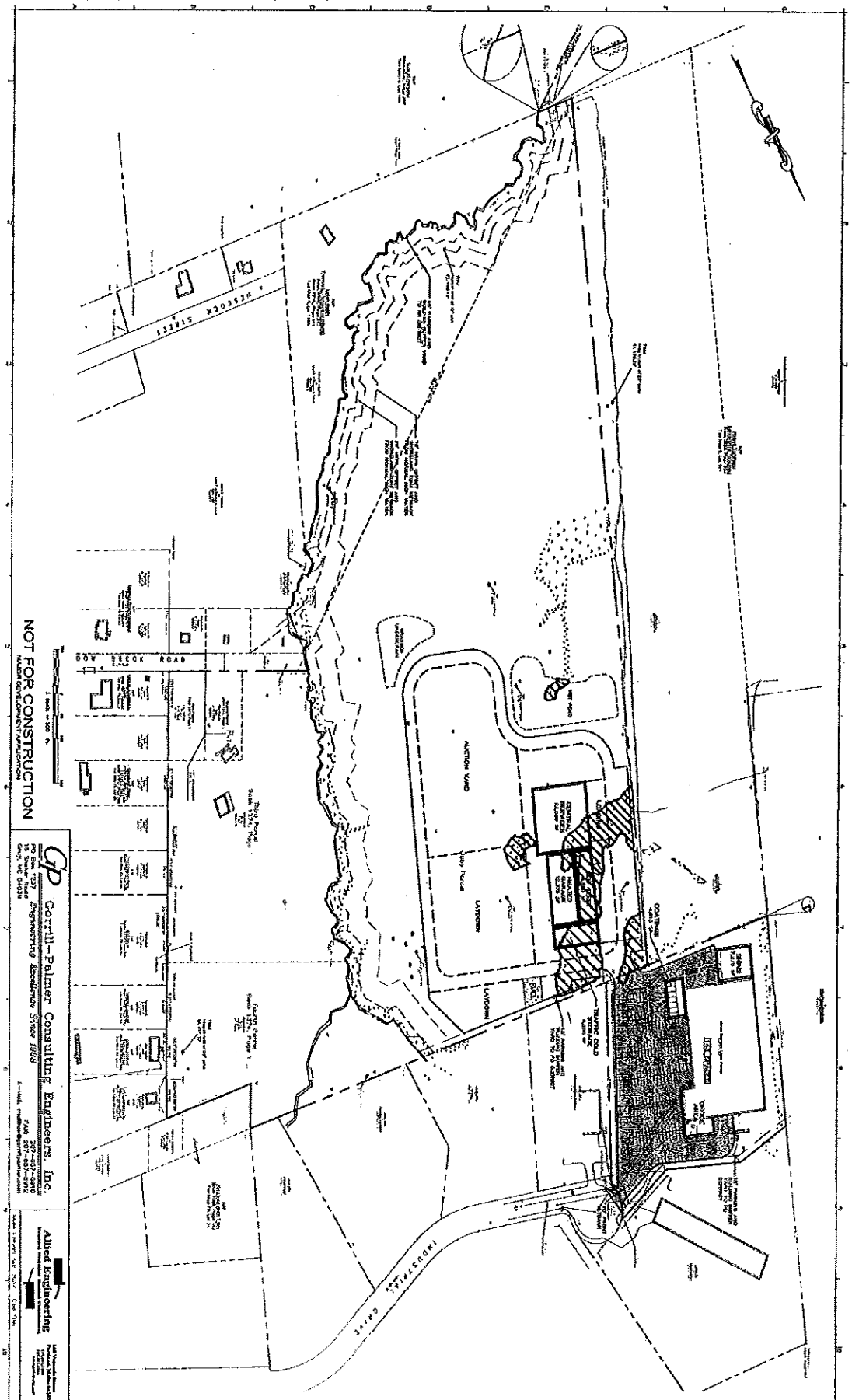


| | | | |
|---|---|---|---|
| SHEET NUMBER C100 | RELOCATION OF MAINE DOT FLEET SERVICES 66 INDUSTRIAL DRIVE, AUGUSTA, MAINE | PROJECT INFORMATION | STATE OF MAINE DEPARTMENT OF TRANSPORTATION |
| | SITE PLAN - OVERALL | PROGRAM / PROJECT MANAGER / DESIGNER: ALLIED ENG., INC. / CONSULTANT: CORRILL-PALMER / PROJECT ENGINEER / CONTRACTOR / PROJECT COMPLETION DATE: - | SIGNATURE - / ARCH. LIN. NUMBER / DATE OCTOBER 17, 2013 | DATE / FED FIN NO: / FIN NO: 020115.00 |

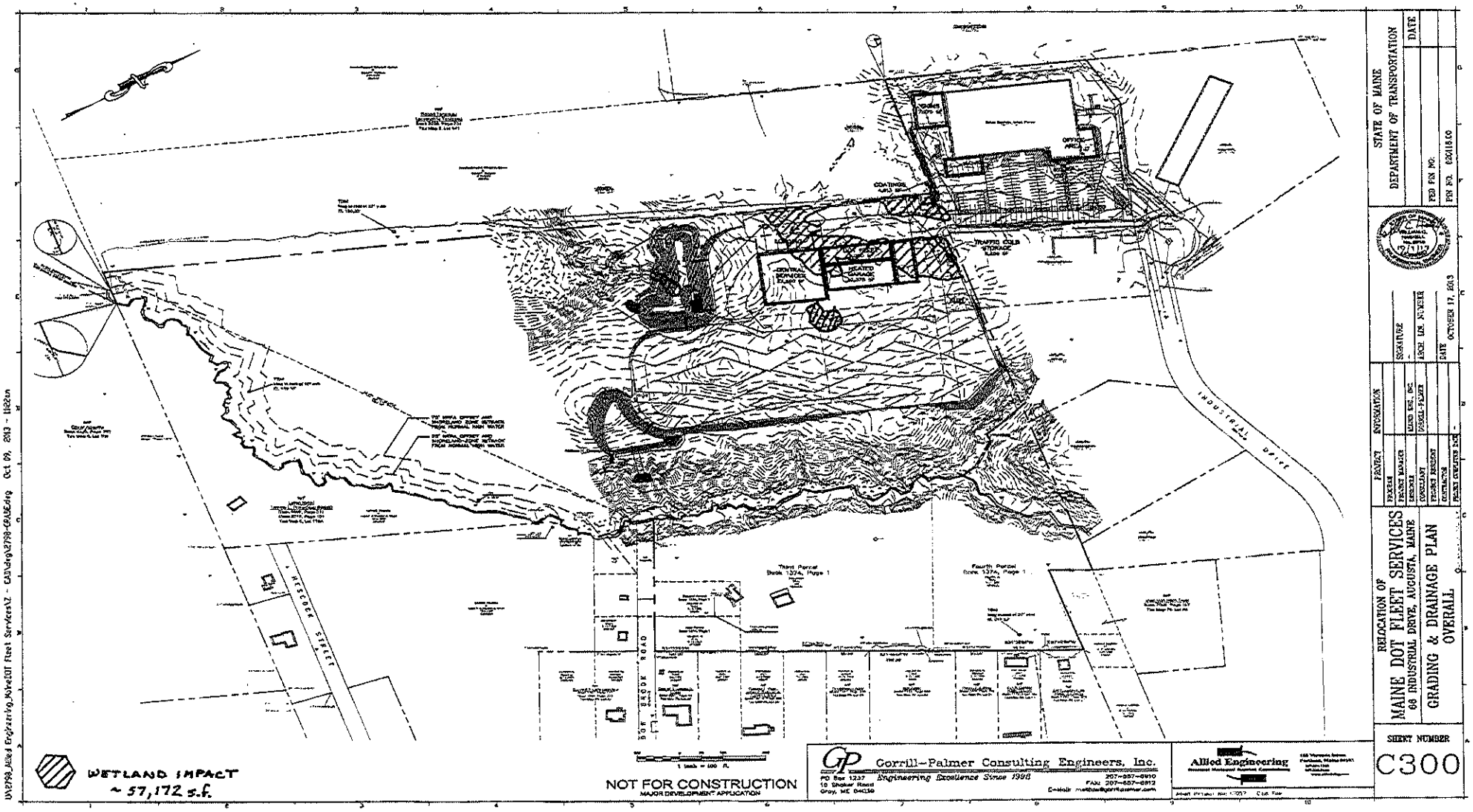
WETLAND IMPACT
~ 57,172 s.f.
NOT FOR CONSTRUCTION
MAJOR DEVELOPMENT APPLICATION
Corrill-Palmer Consulting Engineers, Inc.
Engineering Excellence Since 1988
Allied Engineering
STATE OF MAINE
DEPARTMENT OF TRANSPORTATION
RELOCATION OF
MAINE DOT FLEET SERVICES
68 INDUSTRIAL DRIVE, AUGUSTA, MAINE
GRADING & DRAINAGE PLAN
OVERALL
SHEET NUMBER
C300
OCTOBER 17, 2013
INDUSTRIAL DRIVE
HESCOCK STREET
SOW BROOK ROAD

STATE OF MAINE
DEPARTMENT OF ENVIRONMENTAL PROTECTION
17 STATE HOUSE STATION AUGUSTA, MAINE 04333-0017

DEPARTMENT ORDER

IN THE MATTER OF

| | |
|---|---|
| MAINE DEPARTMENT | ) SITE LOCATION OF DEVELOPMENT ACT |
| OF TRANSPORTATION | ) |
| Augusta, Kennebec County | ) |
| TRANSFER OF LOTS 5 & 6 | ) TRANSFER |
| L-17197-25-C-T (approval) | ) FINDINGS OF FACT AND ORDER |

Pursuant to the provisions of 38 M.R.S.A. Sections 481 et seq. and Department Rules (Chapter 2, dated April 1, 2003) concerning the processing of applications, the Department of Environmental Protection has considered the application of the MAINE DEPARTMENT OF TRANSPORTATION with the supportive data, agency review comments, and other related materials on file and FINDS THE FOLLOWING FACTS:

1. In Department Order #L-17197-25-A-N, dated April 7, 1992, the Department approved existing development and the proposed expansion of commercial development on Lot 5/6 of a locally approved 43-acre industrial park referred to as J & D Business and Industrial Park, which included the construction of Industrial Drive. The existing development on Lot 5/6 of the commercial subdivision included a 59,310-square foot warehouse/distribution center and a 64,743-square foot storage area for the parking of trucks and moving vans. The proposed expansion included an 85,500-square foot addition, 80,000 square feet of additional outside truck and van storage area, a 10,000-gallon above-ground diesel fuel tank, and a stormwater detention basin. In Department Order L-17197-25-B-B, dated January 18, 2008, the Department approved after-the-fact the division of Lot 5/6 into Lots 5 and 6, as well as additional expansion. The additional expansion included four separate storage buildings, totaling 61,000 square feet in size and a 73,425 square foot paved access area on Lot 6 and a stormwater management basin on Lot 5. The subject portion of the commercial subdivision is located at the end of Industrial Drive in the City of Augusta.

2. The applicant is applying to transfer Department Order #L-17197-25-B-B as it pertains to Lot 6, currently held by Estes Express Lines.

3. The applicant submitted the following information in support of this transfer request:

   A. Transfer application, dated October 1, 2013, and signed by Judy Gates, Director of the Environmental Office, on behalf of the Maine Department of Transportation, including a quit claim deed with covenant, dated September 12, 2013, and signed by Angela J. Maidment, Vice President of Corporate Real Estate on behalf of Estes Express Lines.

   B. Financial Capacity: The total cost of the project is estimated to be $10.5 million. It will be constructed using general funds approved by the Maine State Legislature as stipulated in the Maine Department of Transportation 2013-2015 Work Plan.

C. Technical Ability: The applicant has successfully operated its Fleet Services for many years. The applicant has retained the services of Allied Engineers, a professional engineering firm, to manage the design and engineering of the project. Other members of the project team include subcontracting consultants, Simons Architect and Gorrill Palmer. The applicant provided supporting information on the architectural and engineering qualifications of the consultants.

BASED on the above findings of fact, the Department CONCLUDES that the MAINE DEPARTMENT OF TRANSPORTATION has provided adequate evidence of financial capacity and technical ability to comply with all conditions of Department Order #L-17197-25-B-B and to satisfy all applicable statutory and regulatory criteria.

THEREFORE, the Department APPROVES the above noted application of MAINE DEPARTMENT OF TRANSPORTATION to transfer Department Order #L-17197-25-B-B SUBJECT TO THE FOLLOWING CONDITIONS and all applicable standards:

1. The Standard Conditions of Approval, a copy attached.

2. Severability. The invalidity or unenforceability of any provision, or part thereof, of this License shall not affect the remainder of the provision or any other provisions. This License shall be construed and enforced in all respects as if such invalid or unenforceable provision or part thereof had been omitted.

3. All other Findings of Fact, Conclusions and Conditions remain as approved in Department Order #L-17197-25- B-B and are incorporated herein.

THIS APPROVAL DOES NOT CONSTITUTE OR SUBSTITUTE FOR ANY OTHER REQUIRED STATE, FEDERAL OR LOCAL APPROVALS NOR DOES IT VERIFY COMPLIANCE WITH ANY APPLICABLE SHORELAND ZONING ORDINANCES.

DONE AND DATED IN AUGUSTA, MAINE, THIS 15 DAY OF November, 2013.

DEPARTMENT OF ENVIRONMENTAL PROTECTION

BY: Patricia W. Aho
For: Patricia W. Aho, Commissioner

Filed
NOV 15 2013
State of Maine
Board of Environmental Protection

PLEASE NOTE THE ATTACHED SHEET FOR GUIDANCE ON APPEAL PROCEDURES…

AL/L17197CT/ATS#76730

# Department of Environmental Protection

## SITE LOCATION OF DEVELOPMENT (SITE) STANDARD CONDITIONS

**STRICT CONFORMANCE WITH THE STANDARD AND SPECIAL CONDITIONS OF THIS APPROVAL IS NECESSARY FOR THE PROJECT TO MEET THE STATUTORY CRITERIA FOR APPROVAL.**

A. **Approval of Variations from Plans.** The granting of this approval is dependent upon and limited to the proposals and plans contained in the application and supporting documents submitted and affirmed to by the applicant. Any variation from these plans, proposals, and supporting documents is subject to review and approval prior to implementation. Further subdivision of proposed lots by the applicant or future owners is specifically prohibited without prior approval of the Board, and the applicant shall include deed restrictions to that effect.

B. **Compliance with All Applicable Laws.** The applicant shall secure and comply with all applicable federal, state, and local licenses, permits, authorizations, conditions, agreements, and orders prior to or during construction and operation, as appropriate.

C. **Compliance with All Terms and Conditions of Approval.** The applicant shall submit all reports and information requested by the Board or the Department demonstrating that the applicant has complied or will comply with all preconstruction terms and conditions of this approval. All preconstruction terms and conditions must be met before construction begins.

D. **Advertising.** Advertising relating to matters included in this application shall refer to this approval only if it notes that the approval has been granted WITH CONDITIONS, and indicates where copies of those conditions may be obtained.

E. **Transfer of Development.** Unless otherwise provided in this approval, the applicant shall not sell, lease, assign or otherwise transfer the development or any portion thereof without prior written approval of the Board where the purpose or consequence of the transfer is to transfer any of the obligations of the developer as incorporated in this approval. Such approval shall be granted only if the applicant or transferee demonstrates to the Board that the transferee has the technical capacity and financial ability to comply with conditions of this approval and the proposals and plans contained in the application and supporting documents submitted by the applicant.

F. **Time frame for approvals.** If the construction or operation of the activity is not begun within four years, this approval shall lapse and the applicant shall reapply to the Board for a new approval. The applicant may not begin construction or operation of the development until a new approval is granted. A reapplication for approval may include information submitted in the initial application by reference. This approval, if construction is begun within the four-year time frame, is valid for seven years. If construction is not completed within the seven-year time frame, the applicant must reapply for, and receive, approval prior to continuing construction.

G. **Approval Included in Contract Bids.** A copy of this approval must be included in or attached to all contract bid specifications for the development.

H. **Approval Shown to Contractors.** Work done by a contractor pursuant to this approval shall not begin before the contractor has been shown by the developer a copy of this approval.

**(2/81)/Revised November 1, 1979/ December 27, 2011/DEPLW 0429**

# DEP INFORMATION SHEET

## Appealing a Department Licensing Decision

**Dated: March 2012** **Contact: (207) 287-2811**


**SUMMARY**

There are two methods available to an aggrieved person seeking to appeal a licensing decision made by the Department of Environmental Protection's ("DEP") Commissioner: (1) in an administrative process before the Board of Environmental Protection ("Board"); or (2) in a judicial process before Maine's Superior Court. An aggrieved person seeking review of a licensing decision over which the Board had original jurisdiction may seek judicial review in Maine's Superior Court.

A judicial appeal of final action by the Commissioner or the Board regarding an application for an expedited wind energy development (35-A M.R.S.A. § 3451(4)) or a general permit for an offshore wind energy demonstration project (38 M.R.S.A. § 480-HH(1)) or a general permit for a tidal energy demonstration project (38 M.R.S.A. § 636-A) must be taken to the Supreme Judicial Court sitting as the Law Court.

This INFORMATION SHEET, in conjunction with a review of the statutory and regulatory provisions referred to herein, can help a person to understand his or her rights and obligations in filing an administrative or judicial appeal.


### I. ADMINISTRATIVE APPEALS TO THE BOARD

#### LEGAL REFERENCES

The laws concerning the DEP's *Organization and Powers*, 38 M.R.S.A. §§ 341-D(4) & 346, the *Maine Administrative Procedure Act*, 5 M.R.S.A. § 11001, and the DEP's *Rules Concerning the Processing of Applications and Other Administrative Matters* ("Chapter 2"), 06-096 CMR 2 (April 1, 2003).

#### HOW LONG YOU HAVE TO SUBMIT AN APPEAL TO THE BOARD

The Board must receive a written appeal within 30 days of the date on which the Commissioner's decision was filed with the Board. Appeals filed after 30 calendar days of the date on which the Commissioner's decision was filed with the Board will be rejected.

#### HOW TO SUBMIT AN APPEAL TO THE BOARD

Signed original appeal documents must be sent to: Chair, Board of Environmental Protection, c/o Department of Environmental Protection, 17 State House Station, Augusta, ME 04333-0017; faxes are acceptable for purposes of meeting the deadline when followed by the Board's receipt of mailed original documents within five (5) working days. Receipt on a particular day must be by 5:00 PM at DEP's offices in Augusta; materials received after 5:00 PM are not considered received until the following day. The person appealing a licensing decision must also send the DEP's Commissioner a copy of the appeal documents and if the person appealing is not the applicant in the license proceeding at issue the applicant must also be sent a copy of the appeal documents. All of the information listed in the next section must be submitted at the time the appeal is filed. Only the extraordinary circumstances described at the end of that section will justify evidence not in the DEP's record at the time of decision being added to the record for consideration by the Board as part of an appeal.

## WHAT YOUR APPEAL PAPERWORK MUST CONTAIN

Appeal materials must contain the following information at the time submitted:

1. *Aggrieved Status.* The appeal must explain how the person filing the appeal has standing to maintain an appeal. This requires an explanation of how the person filing the appeal may suffer a particularized injury as a result of the Commissioner's decision.
2. *The findings, conclusions or conditions objected to or believed to be in error.* Specific references and facts regarding the appellant's issues with the decision must be provided in the notice of appeal.
3. *The basis of the objections or challenge.* If possible, specific regulations, statutes or other facts should be referenced. This may include citing omissions of relevant requirements, and errors believed to have been made in interpretations, conclusions, and relevant requirements.
4. *The remedy sought.* This can range from reversal of the Commissioner's decision on the license or permit to changes in specific permit conditions.
5. *All the matters to be contested.* The Board will limit its consideration to those arguments specifically raised in the written notice of appeal.
6. *Request for hearing.* The Board will hear presentations on appeals at its regularly scheduled meetings, unless a public hearing on the appeal is requested and granted. A request for public hearing on an appeal must be filed as part of the notice of appeal.
7. *New or additional evidence to be offered.* The Board may allow new or additional evidence, referred to as supplemental evidence, to be considered by the Board in an appeal only when the evidence is relevant and material and that the person seeking to add information to the record can show due diligence in bringing the evidence to the DEP's attention at the earliest possible time in the licensing process or that the evidence itself is newly discovered and could not have been presented earlier in the process. Specific requirements for additional evidence are found in Chapter 2.

## OTHER CONSIDERATIONS IN APPEALING A DECISION TO THE BOARD

1. *Be familiar with all relevant material in the DEP record.* A license application file is public information, subject to any applicable statutory exceptions, made easily accessible by DEP. Upon request, the DEP will make the material available during normal working hours, provide space to review the file, and provide opportunity for photocopying materials. There is a charge for copies or copying services.
2. *Be familiar with the regulations and laws under which the application was processed, and the procedural rules governing your appeal.* DEP staff will provide this information on request and answer questions regarding applicable requirements.
3. *The filing of an appeal does not operate as a stay to any decision.* If a license has been granted and it has been appealed the license normally remains in effect pending the processing of the appeal. A license holder may proceed with a project pending the outcome of an appeal but the license holder runs the risk of the decision being reversed or modified as a result of the appeal.

## WHAT TO EXPECT ONCE YOU FILE A TIMELY APPEAL WITH THE BOARD

The Board will formally acknowledge receipt of an appeal, including the name of the DEP project manager assigned to the specific appeal. The notice of appeal, any materials accepted by the Board Chair as supplementary evidence, and any materials submitted in response to the appeal will be sent to Board members with a recommendation from DEP staff. Persons filing appeals and interested persons are notified in advance of the date set for Board consideration of an appeal or request for public hearing. With or without holding a public hearing, the Board may affirm, amend, or reverse a Commissioner decision or remand the matter to the Commissioner for further proceedings. The Board will notify the appellant, a license holder, and interested persons of its decision.

## II. JUDICIAL APPEALS

Maine law generally allows aggrieved persons to appeal final Commissioner or Board licensing decisions to Maine's Superior Court, see 38 M.R.S.A. § 346(1); 06-096 CMR 2; 5 M.R.S.A. § 11001; & M.R. Civ. P 80C. A party's appeal must be filed with the Superior Court within 30 days of receipt of notice of the Board's or the Commissioner's decision. For any other person, an appeal must be filed within 40 days of the date the decision was rendered. Failure to file a timely appeal will result in the Board's or the Commissioner's decision becoming final.

An appeal to court of a license decision regarding an expedited wind energy development, a general permit for an offshore wind energy demonstration project, or a general permit for a tidal energy demonstration project may only be taken directly to the Maine Supreme Judicial Court. See 38 M.R.S.A. § 346(4).

Maine's Administrative Procedure Act, DEP statutes governing a particular matter, and the Maine Rules of Civil Procedure must be consulted for the substantive and procedural details applicable to judicial appeals.

### ADDITIONAL INFORMATION

If you have questions or need additional information on the appeal process, for administrative appeals contact the Board's Executive Analyst at (207) 287-2452 or for judicial appeals contact the court clerk's office in which your appeal will be filed.

**Note: The DEP provides this INFORMATION SHEET for general guidance only; it is not intended for use as a legal reference. Maine law governs an appellant's rights.**