STATE OF MAINE
DEPARTMENT OF TRANSPORTATION

KITTERY
YORK COUNTY
KITTERY OVERPASS BRIDGE
OVER
STATE ROUTE 236

PROJECT LENGTH 0.11 mi.
BRIDGE REPLACEMENT
BRIDGE NO. 3860

SPECIFICATIONS

Design: Load and Resistance Factor Design per AASHTO LRFD Bridge Design Specifications, Sixth Edition 2012.

DESIGN LOADING

Live Load ..... HL - 93 Modified for Strength I

TRAFFIC DATA

US ROUTE 1 BYPASS

Current (2012) AADT	7740
Future (2032) AADT	10420
DHV - % of AADT	10
Design Hour Volume	1042
Heavy Trucks (% of AADT)	14
Heavy Trucks (% of DHV)	14
Directional Distribution (% of DHV)	58
18 kip Equivalent P 2.0	674
18 kip Equivalent P 2.5	642
Design Speed (mph)	45

STATE ROUTE 236

Current (2012) AADT	19860
Future (2032) AADT	26740
DHV - % of AADT	10
Design Hour Volume	2674
Heavy Trucks (% of AADT)	3
Heavy Trucks (% of DHV)	3
Directional Distribution (% of DHV)	64
18 kip Equivalent P 2.0	-
18 kip Equivalent P 2.5	-
Design Speed (mph)	25

MATERIALS

Concrete:

C.I.P. Curbs, Transition Barriers, Medians	Class "LP"
Precast	Class "P"
PCMG Wall Subfooting	Class "Fill"
C.I.P. Footings & All Other	Class "A"
Reinforcing Steel	ASTM A 1055/A 1055M, Grade 60
Reinforcing Steel (Footing Only)	ASTM A 615/A 615M, Grade 60
Prestressing Strands	15.2mm Dia. Carbon Fiber Composite Cable Guaranteed Ultimate Tensile Capacity of 60.70 kips

BASIC DESIGN STRESSES

Closure Pour Concrete	f 'c = 4350 psi
Cast-in-Place Abutments (Footings)	f 'c = 3000 psi
Precast Concrete Abutments	f 'c = 4350 psi
Precast Approach Slabs	f 'c = 4350 psi
Precast Concrete NEXT Beams	f 'c = 8 ksi
	f 'ci = 6 ksi
Reinforcing Steel	f y = 60,000 psi
Prestressing Strands (Carbon Fiber)	fu = 339,000 psi

LIST OF DRAWINGS

Title Sheet 1
Estimated Quantities and Notes 2
General Plan 3
Profiles 4-5
Boring Location Plan and Boring Logs 6
Boring Logs 7-8
Interpretive Subsurface Profile 9
Curbing and Striping Plan 10
Typical Sections 11-12
Cross Sections (Route 236) 13-18
Cross Sections (US Route 1 Bypass) 19-34
Cross Section (SB US Route 1 Bypass On-ramp) 35-39
Precast Abutment Details 40-42
Wingwall Details 43
Miscellaneous Details 44
Framing Plan and Proposed Bridge Section 45
Beam Details 46-47
Detour Signing Plan 48
Right of Way Map 49

MAINTENANCE OF TRAFFIC

State Route 236: Open to vehicular traffic during construction. Short term closures will be required during bridge demolition.

US Route 1 Bypass: Bridge closed and traffic detoured onto adjacent ramps and roadway.

UTILITIES

Central Maine Power Company
Fairpoint Communications

PROJECT LOCATION:	Kittery Overpass Bridge (#3860), on US Route 1 Bypass, over Route 236, located 1.1 miles north of the Sarah Mildred Long Bridge Latitude: 43°06'05"N Longitude: 70°44'43"W
PROGRAM AREA:	Bridge
OUTLINE OF WORK:	Bridge replacement with approach work.

WIN 19283.00

STATE OF MAINE
DEPARTMENT OF TRANSPORTATION
APPROVED
COMMISSIONER: DATE 11/26/13
CHIEF ENGINEER: DATE 11-26-13

STATE OF MAINE THOMAS T. HUDSPETH No. 10072 REGISTERED PROFESSIONAL ENGINEER
SIGNATURE
P.E. NUMBER 10075
DATE 11-21-2013

PROJECT INFORMATION

PROGRAM	BRIDGE PROGRAM
PROJECT MANAGER	L. TIMBERLAKE
DESIGNER	T. KENDRICK
CONSULTANT	MacFARLAND JOHNSON
PROJECT RESIDENT	
CONTRACTOR	
PROJECT COMPLETION DATE	

KITTERY
KITTERY OVERPASS

TITLE SHEET

SHEET NUMBER
1
OF 49

Filename: ...\Drawings\001_Title.dgn Division: Username: Date:11/21/2013

ESTIMATED QUANTITIES

ITEM NO.	ITEM DESCRIPTION	QUANTITY	UNIT
202.11	REMOVE PORTLAND CEMENT CONCRETE PAVEMENT	2700	SY
202.15	REMOVING EXISTING MANHOLE OR CATCH BASIN	4	EA
202.19	REMOVING EXISTING BRIDGE (950 CY)	1	LS
203.20	COMMON EXCAVATION	4400	CY
203.21	ROCK EXCAVATION	100	CY
203.25	GRANULAR BORROW	560	CY
206.07	STRUCTURAL ROCK EXCAVATION - DRAINAGE AND MINOR STRUCTURES	4	CY
206.082	STRUCTURAL EARTH EXCAVATION - MAJOR STRUCTURES	1100	CY
206.092	STRUCTURAL ROCK EXCAVATION - MAJOR STRUCTURES	340	CY
304.10	AGGREGATE SUBBASE COURSE - GRAVEL	5750	CY
403.207	HOT MIX ASPHALT 19.0 MM NOMINAL MAXIMUM SIZE	1100	T
403.2081	12.5 MM POLYMER MODIFIED HOT MIX ASPHALT	580	T
403.209	HOT MIX ASPHALT - 9.5 MM (SIDEWALKS, DRIVES, & INCIDENTALS)	53	T
403.213	HOT MIX ASPHALT 12.5 MM NOMINAL MAXIMUM SIZE, BASE	900	T
403.2131	12.5 MM POLYMER MODIFIED HMA BASE	42	T
409.15	BITUMINOUS TACK COAT - APPLIED	340	G
502.21	STRUCTURAL CONCRETE ABUTMENTS & RETAINING WALLS	240	CY
502.211	STRUCTURAL CONCRETE ABUTMENTS & RETAINING WALLS, CLASS A	55	CY
502.49	STRUCTURAL CONCRETE CURBS AND SIDEWALK (14 CY)	1	LS
502.492	STRUCTURAL CONCRETE CURB AND SIDEWALKS, CLASS A	32	CY
503.12	REINFORCING STEEL, FABRICATED AND DELIVERED	11300	LB
503.13	REINFORCING STEEL, PLACING	11300	LB
507.0821	STEEL BRIDGE RAILING, 3 BAR (108 LF)	1	LS
508.13	MEMBRANE WATERPROOFING (160 SY)	1	LS
508.14	HIGH PERFORMANCE WATERPROOFING MEMBRANE (510 SY)	1	LS
512.081	FRENCH DRAINS (170 LF)	1	LS
514.06	CURING BOX FOR CONCRETE CYLINDERS	1	EA
515.21	PROTECTIVE COATING FOR CONCRETE SURFACES (80 SY)	1	LS
515.23	ANTIGRAFITTI PAINT (4230 SF)	1	LS
520.232	EXPANSION DEVICE - ASPHALTIC PLUG JOINT	150	LF
523.52	BEARING INSTALLATION	32	EA
523.5402	LAMINATED ELASTOMERIC BEARINGS, EXPANSION	32	EA
526.301	TEMPORARY CONCRETE BARRIER, TYPE 1 (600 FEET)	1	LS
526.34	PERMANENT CONCRETE TRANSITION BARRIER	4	EA
527.34	WORK ZONE CRASH CUSHIONS	4	UN
534.76	PRECAST ABUTMENT (330 CY)	1	LS
534.7601	PRECAST APPROACH SLAB (54CY)	1	LS
535.61	PRESTRESSED STRUCTURAL CONCRETE I-GIRDERS (208 CY)	1	LS
603.1552	12" RCP CLASS IV	48	LF
603.748	REMOVE CONCRETE HEADWALL	1	EA
604.072	CATCH BASIN TYPE AI-C	4	EA
604.18	ADJUSTING MANHOLE OR CATCH BASIN TO GRADE	4	EA
606.1721	BRIDGE TRANSITION - TYPE 1	4	EA
606.23	GUARDRAIL TYPE 3C - SINGLE RAIL	570	LF
606.2602	TERMINAL END - TRAILING END	1	EA
606.353	REFLECTORIZED FLEXIBLE GUARDRAIL MARKER	8	EA
606.79	GUARDRAIL 350 FLARED TERMINAL	3	EA
606.792	GUARDRAIL 350 MEDIAN TERMINAL UNIT	1	EA
607.185	CHAIN LINK SNOW FENCE	98	LF
609.11	CURB TYPE 1	520	LF
609.1111	SPECIAL GRANITE BACK CURB - 39"	24	LF
609.34	CURB TYPE 5	1950	LF
609.4	RESET CURB TYPE 5	530	LF
613.319	EROSION CONTROL BLANKET	2100	SY
615.07	LOAM	120	CY
618.1401	SEEDING METHOD NUMBER 2 - PLAN QUANTITY	19	UN
619.1201	MULCH - PLAN QUANTITY	19	UN
619.1401	EROSION CONTROL MIX	240	CY
620.58	EROSION CONTROL GEOTEXTILE	2350	SY
621.037	EVERGREEN TREES 5'-6' GR. A B&B	12	EA
621.401	DWARF EVERGREEN SHRUBS 2' - 2'-6" GR. A	12	EA
627.733	4" WHITE OR YELLOW PAINTED PAVE MRK LINE	4700	LF
629.05	HAND LABOR, STRAIGHT TIME	20	HR
631.10	AIR COMPRESSOR (INCLUDING OPERATOR)	20	HR

ESTIMATED QUANTITIES

ITEM NO.	ITEM DESCRIPTION	QUANTITY	UNIT
631.11	AIR TOOL (INCLUDING OPERATOR)	20	HR
631.12	ALL-PURPOSE EXCAVATOR (INCLUDING OPERATOR)	20	HR
631.171	TRUCK-SMALL (INCLUDING OPERATOR)	20	HR
631.172	TRUCK-LARGE (INCLUDING OPERATOR)	20	HR
631.21	ROAD BROOM (INCL OPER & HAULER)	20	HR
631.22	FRONT END LOADER (INCLUDING OPERATOR)	20	HR
634.161	BRIDGE & HIGHWAY LIGHTING INCLUDING WIRE	1	LS
635.14	PREFABRICATED CONCRETE MODULAR GRAVITY WALL	1595	SF
637.071	DUST CONTROL	1	LS
639.18	FIELD OFFICE TYPE A	1	EA
645.106	DEMOUNT REGULATORY, WARNING, CONFIRMATION, AND ROUTE MARKER ASSEMBLY SIGN	2	EA
645.116	REINSTALL REGULATORY, WARNING, CONFIRMATION, AND ROUTE MARKER ASSEMBLY SIGN	2	EA
645.271	REGULATORY, WARNING, CONFIRMATION, AND ROUTE MARKER SIGNS TYPE 1	60	SF
652.3	FLASHING ARROW BOARD	2	EA
652.312	TYPE III BARICADES	10	EA
652.33	DRUM	100	EA
652.34	CONE	200	EA
652.35	CONSTRUCTION SIGNS	630	SF
652.361	MAINTENANCE OF TRAFFIC CONTROL DEVICES (120 DAYS)	1	LS
652.38	FLAGGERS	300	HR
652.41	PORTABLE CHANGEABLE MESSAGE SIGN	4	EA
656.75	TEMPORARY SOIL EROSION & WATER POLLUTION CONTROL	1	LS
659.10	MOBILIZATION	1	LS

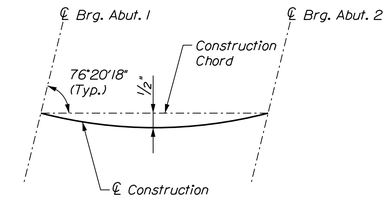

CONSTRUCTION CHORD LAYOUT

GENERAL CONSTRUCTION NOTES

1. During construction, Us Route 1 By-pass will be closed to traffic for a time period specified in the Special Provisions.

2. For easements, construction limits and right-of-way lines, refer to Right-of-Way Map.

3. The clearing limits as shown on the plans are approximate. The exact limits will be established in the field by the Resident. Payment for clearing will be considered incidental to Contract items.

4. Do not excavate for Aggregate Subbase Course where existing material is suitable as determined by the Resident.

5. In areas where the Resident directs the Contractor not to excavate to the subgrade line shown on the plans, payment for removing existing pavement, grubbing, shaping, ditching and compacting the existing subbase layers of new subbase 6 inches or less thick will be made under appropriate equipment rental items.

6. Place loam 2 inches deep on all new or reconstructed sideslopes or as directed by the Resident.

7. Erosion Control Mix may be substituted in those areas normally receiving loam and seed as directed by the Resident. Placement shall be in accordance with Standard Specifications Section 619., Mulch. Payment will be made under Item No. 619.1401, erosion Control Mix.

8. An NCHRP350 compliant guardrail end treatment shall be installed concurrently with the placement of each section of beam guardrail. Treatment type shall be submitted to the Resident for approval prior to fabrication.

9. Extended-use Erosion Control Blanket, seeded gutters, riprap downspouts and other gutters lined with Stone Ditch Protection shall be constructed after paving and shoulder work is completed, where it is apparent that runoff will cause continual erosion. Payment will be made under the appropriate Contract items.

10. Protective Coating for Concrete Surfaces shall be applied to the following areas:

    All exposed surfaces of concrete curbs and median.
    Fascias down to the NEXT beam.
    All exposed surfaces of Concrete Transition Barriers.

11. Antigraffiti coating shall be applied to the exposed faces of all abutments, return walls and PCMG walls.

12. Project information referred to below may be accessed at the following MaineDOT web address: http://www.maine.gov/mdot/comprehensive-list-projects/project-information.php.

13. The project geotechnical report titled: Report on Subsurface and Foundation Investigation, Replacement Bridge for Route 236 Overpass Carrying US Route 1 By-pass over Route 236, Kittery, Maine Nov. 22, 2013, may be accessed at the MaineDOT web address.

14. Geotechnical information furnished or referred to in this plan set is for the Bidders and the Contractor. No assurance is given that the information or interpretations will be representative of actual subsurface conditions at the construction site. MaineDOT will not be responsible for the Bidder's or Contractor's interpretations of, or conclusions drawn from, the geotechnical information. The boring logs contained in the plan set present factual and interpretive subsurface information collected at discreet locations. Data provided may not be representative of the subsurface conditions between the boring locations.

15. Quantities included for pay items measured and paid for by lump sum are estimated quantities and are provided by MaineDOT for informational purposes only. Lump sum pay items will be paid for at the Contract Bid amount, with no addition or reduction in payment to the Contractor if the actual final quantities are different from the MaineDOT provided estimated quantities, except as follows:

    a. If a Lump Sum pay item is eliminated, the requirements of Standard Specifications Section 109.2, Elimination of Items, will take precedence.

    b. If other Contract Documents specifically allow a change in payment for a Lump Sum pay item, those requirements will be followed.

    c. If a design change results in changes to estimated quantities for Lump Sum pay items, price adjustments will be made in accordance with Standard Specifications Section 109.7, Equitable Adjustments to Compensation.

16. The Contractor shall submit a Bridge Demolition Plan to the Resident at least 10 business days prior to the start of demolition work. The plan shall outline the methods and equipment to be used to remove and dispose of all materials included in the existing bridge. No work related to the removal of the bridge shall be undertaken by the Contractor until MaineDOT has reviewed the Bridge Demolition Plan for appropriateness and completeness. Payment for all work neccessary for developing, submitting and finalizing the Demolition Paln will be considered incidental to the bridge removal pay item.

17. The existing superstructure shall be removed in its entirety. Abutments shall be removed to 2 feet below the subgrade of US Route 1 By-pass, except that portions of the abutments interfering with the new structure shall also be removed. Payment will be made under the bridge removal pay item.

18. Reinforcing Steel Schedules will be the responsibility of the Contractor. Refer to Subsection 503.03 of the Standard Specifications for more information. Payment for all work associated with developing reinforcing steel schedules will be considered incidental to the related contract items. Reinforcing steel schedules shall be submitted to the Resident for approval prior to rebar fabrication.

19. Bending details and hooks for reinforcing steel shall conform to the recommendations of the current revision of ACI Standards 315 and 318.

20. Minimum splice lengths for plain reinforcing steel not otherwise shown shall be as given the table in Subsection 503.07 of the Standard Specifications.

21. Bridge Rail and Chain Link Snow Fence shall be color galvanized in accordance with Special Provision 507 & 607 respectively.

22. All utility facilities shall be adjusted by the respective utilities.

23. The existing bridge plans may be accessed at the MaineDOT address. The plans are reproductions of the original drawings as prepared for the contractor of the bridge. It is very unlikely that the plans will show any contractor field changes or alterations which may have been made to the bridge during its lifespan.

24. Two reflectorized flexible guardrail markers (Item 606.353) will be installed at each guardrail end.

25. Precast substructure fabrication tolerances shall be as follows:
    Length: ±1/4"
    Width (Overall): ±1/4"
    Depth (Overall): ±1/4"
    Variation from Specified
        End Squareness or Skew: ±1/2"
    Local Smoothness of any surface
        without Architectural Finish: ±1/4" in 10'
    Location of Blockout for Voids: ±1"

26. A document titled: CFCC Handling Manual for the Kittery Overpass Bridge may be accessed at the MaineDOT web address. The manual provides information on the proper storage, handling, and use of Carbon Fiber Composite Cabling (CFCC).

27. THE USE OF CFCC PRESTRESSING STRANDS ON THIS PROJECT IS MANDATORY, AND VALUE ENGINEERING COST PROPOSALS FOR ALTERNATE STRAND MATERIALS WILL NOT BE CONSIDERED.

McFarland Johnson

STATE OF MAINE
DEPARTMENT OF TRANSPORTATION

NHP-1928(300)

WIN 19283.00

BRIDGE NO. 3860

BRIDGE PLANS

		BY	DATE
PROJ. MANAGER	L. TIMBERLAKE		
DESIGN-DETAILED	D. Kull	P. Dustin	11/13
CHECKED-REVIEWED	T. Kendrick		11/13
DESIGN2-DETAILED2			
DESIGN3-DETAILED3			
REVISIONS 1			
REVISIONS 2			
REVISIONS 3			
REVISIONS 4			
FIELD CHANGES			

SIGNATURE

P.E. NUMBER

DATE

KITTERY OVERPASS BRIDGE
STATE ROUTE 236
KITTERY YORK COUNTY

ESTIMIATED QUANTITIES AND NOTES

SHEET NUMBER
2
OF 49

Filename: ...\002_Quantities_Notes.dgn Division: Username: Date:1/2/2014

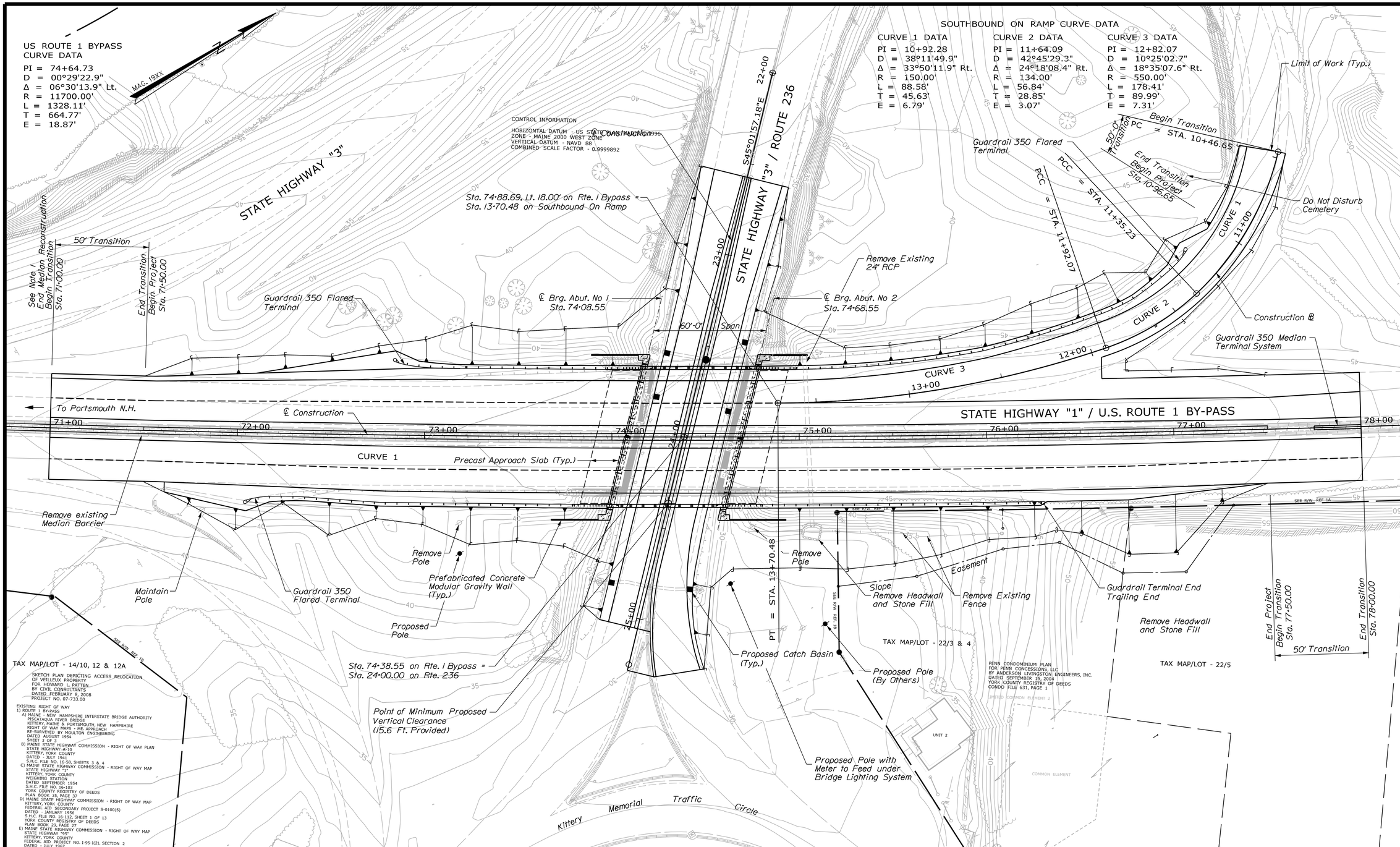

PLAN

25 0 25 50

Scale in Feet

NOTE

1. For median reconstruction limits see Curbing and Striping Plan.

McFarland Johnson

STATE OF MAINE
DEPARTMENT OF TRANSPORTATION

NHP-1928(300)

WIN 19283.00

BRIDGE NO. 3860

BRIDGE PLANS

		BY	DATE
PROJ. MANAGER	L. TIMBERLAKE		
DESIGN-DETAILED	D. Kull	P. Dustin	11/13
CHECKED-REVIEWED	T. Kendrick		11/13
DESIGN2-DETAILED2			
DESIGN3-DETAILED3			
REVISIONS 1			
REVISIONS 2			
REVISIONS 3			
REVISIONS 4			
FIELD CHANGES			

SIGNATURE

P.E. NUMBER

DATE

KITTERY OVERPASS BRIDGE
STATE ROUTE 236
KITTERY YORK COUNTY

GENERAL PLAN

SHEET NUMBER

3

OF 49

Filename: ...\Drawings\003_General_plan.dgn Division: Username: Date:12/17/2013

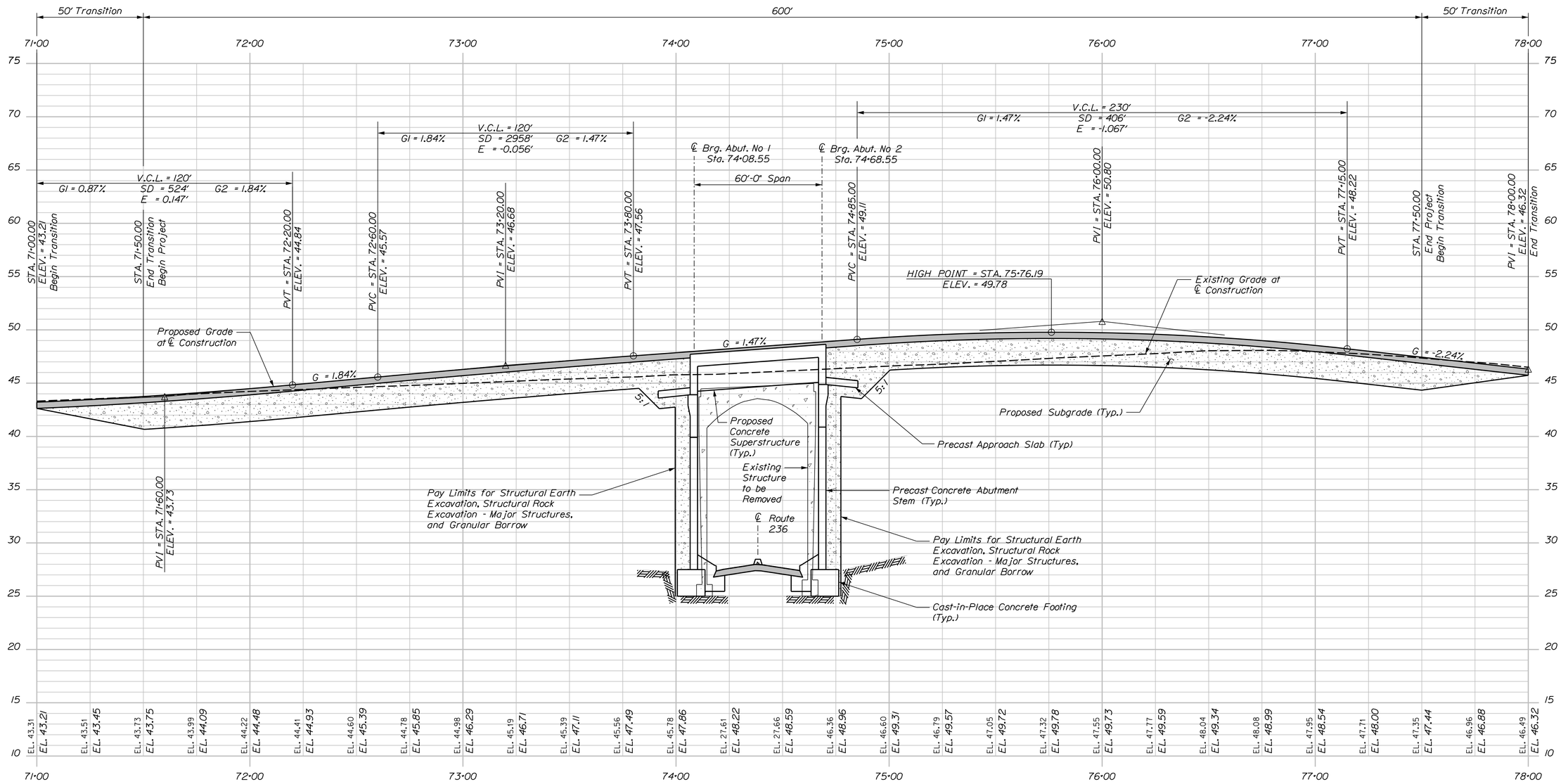

PROFILE - US ROUTE 1 BYPASS

HORIZ. 25 0 25 50

VERT. 5 0 5 10

SCALE

Date:12/17/2013

Username:

Division:

Filename: ...\Draw\Drawings\004_Profile.dgn

McFarland Johnson

STATE OF MAINE
DEPARTMENT OF TRANSPORTATION

NHP-1928(300)

WIN 19283.00

BRIDGE NO. 3860

BRIDGE PLANS

		BY	DATE
PROJ. MANAGER	L. TIMBERLAKE		
DESIGN-DETAILED	D. Kull	P. Duston	11/13
CHECKED-REVIEWED	T. Kendrick		11/13
DESIGN2-DETAILED2			
DESIGN3-DETAILED3			
REVISIONS 1			
REVISIONS 2			
REVISIONS 3			
REVISIONS 4			
FIELD CHANGES			

SIGNATURE

P.E. NUMBER

DATE

KITTERY OVERPASS BRIDGE
STATE ROUTE 236
KITTERY YORK COUNTY

PROFILE (1 OF 2)

SHEET NUMBER

4

OF 49

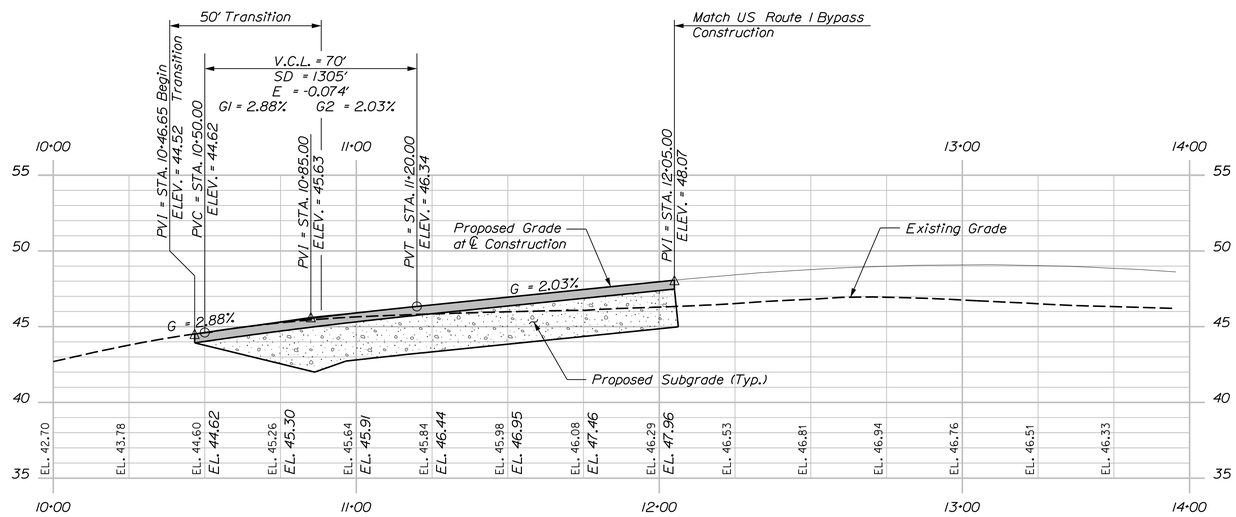

PROFILE - US ROUTE 1 BYPASS SB ON RAMP

HORIZ. 25 0 25 50

VERT. 5 0 5 10

SCALE

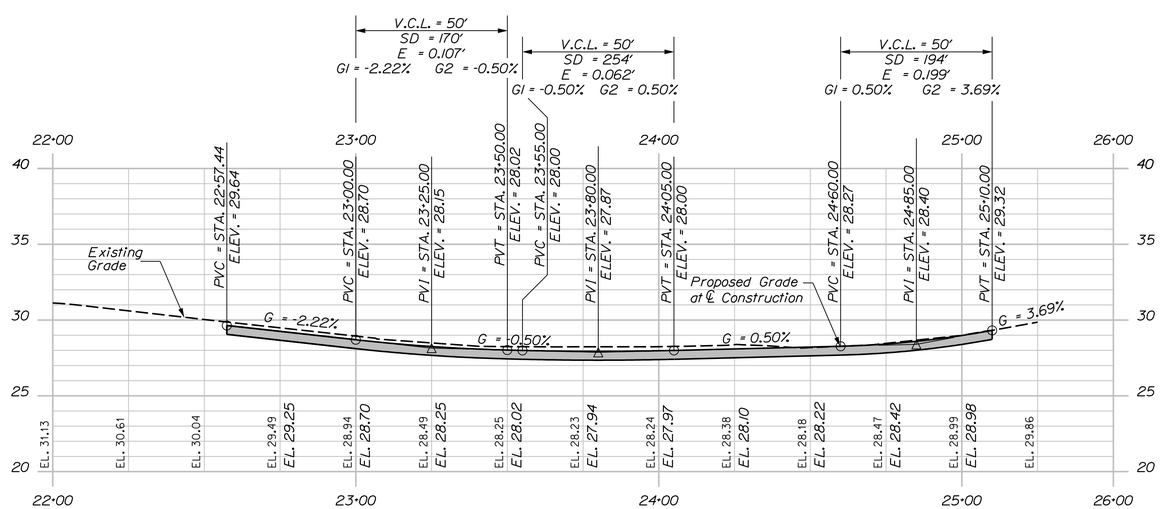

PROFILE - STATE ROUTE 236

HORIZ. 25 0 25 50

VERT. 5 0 5 10

SCALE

Date:12/17/2013

Username:

Division:

Filename: ...\Drow\Drawings\004_Profile.dgn

McFarland Johnson

STATE OF MAINE
DEPARTMENT OF TRANSPORTATION

NHP-1928(300)

WIN 19283.00

BRIDGE NO. 3860

BRIDGE PLANS

PROJ. MANAGER	L. TIMBERLAKE	BY	DATE
DESIGN-DETAILED	D. Kull	P. Dustin	11/13
CHECKED-REVIEWED	T. Kendrick		11/13
DESIGN2-DETAILED2			
DESIGN3-DETAILED3			
REVISIONS 1			
REVISIONS 2			
REVISIONS 3			
REVISIONS 4			
FIELD CHANGES			

SIGNATURE

P.E. NUMBER

DATE

KITTERY OVERPASS BRIDGE
STATE ROUTE 236
KITTERY YORK COUNTY

PROFILE (2 OF 2)

SHEET NUMBER

5

OF 49

Filename: ...\Draw\Drawings\006_BLP&ISP1.dgn Division: Username: Date:12/17/2013

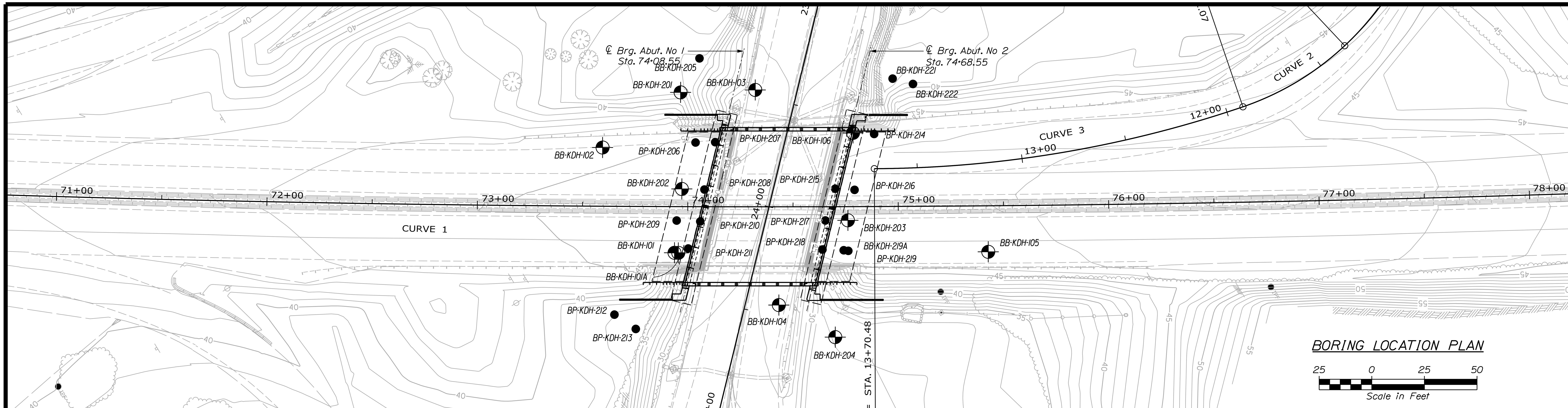

BORING LOCATION PLAN

25 0 25 50
Scale in Feet

LEGEND

Test Boring

Auger Probe

Maine Department of Transportation — Soil/Rock Exploration Log — US CUSTOMARY UNITS

Project: US Route 1 Bypass over Route 236 Bridge	Location: Kittery, Maine	Boring No.: BB-KDH-101	PIN: 19283.00
Driller: Maine Test Borings	Elevation (ft.) 45.3	Auger ID/OD: --	
Operator: B. Enos	Datum: NAVD 88	Sampler: Split Spoon-1.375 in. ID	
Logged By: M. Snow	Rig Type: Mobile B53 Truck	Hammer Wt./Fall: NW-300/24; S-140/30	
Date Start/Finish: 1-4-12 / 1-4-12	Drilling Method: NW Drive	Core Barrel: NQ-2.0 in. ID	
Boring Location: E885367, N97821 (See Plan)	Casing ID/OD: NW-3.0 in. ID	Water Level*: 11.2	
Hammer Efficiency Factor: 0.6	Hammer Type: Automatic ☐ Hydraulic ☐ Rope & Cathead ☒		

Definitions:
D = Split Spoon Sample
MD = Unsuccessful Split Spoon Sample attempt
U = Thin Wall Tube Sample
MU = Unsuccessful Thin Wall Tube Sample attempt
V = Insitu Vane Shear Test
MV = Unsuccessful Insitu Vane Shear Test attempt
R = Rock Core Sample
SSA = Solid Stem Auger
HSA = Hollow Stem Auger
RC = Roller Cone
WOH = weight of 140lb. hammer
WOR = weight of rods
WO1P = Weight of one person
S_u = Insitu Field Vane Shear Strength (psf)
T_v = Pocket Torvane Shear Strength (psf)
q_p = Unconfined Compressive Strength (ksf)
N-uncorrected = Raw field SPT N-value
Hammer Efficiency Factor = Annual Calibration Value
N_{60} = SPT N-uncorrected corrected for hammer efficiency
N_{60} = (Hammer Efficiency Factor/60%)*N-uncorrected
$S_{u(lab)}$ = Lab Vane Shear Strength (psf)
WC = water content, percent
LL = Liquid Limit
PL = Plastic Limit
PI = Plasticity Index
G = Grain Size Analysis
C = Consolidation Test

Depth (ft.)	Sample No.	Pen./Rec. (in.)	Sample Depth (ft.)	Blows (/6 in.) Shear Strength (psf) or RQD (%)	N-uncorrected	N60	Casing Blows	Elevation (ft.)	Visual Description and Remarks	Laboratory Testing Results/ AASHTO and Unified Class
0							SSA	44.30	-BITUMINOUS CONCRETE- 1.0	
								43.70	-PORTLAND CEMENT CONCRETE- 1.6	
	1D	24/10	2.0 - 4.0	3/9/12/15	21	21			Brown, dry, medium dense, fine to medium SAND, some gravel, little coarse sand, trace silt -FILL-(SP)	
5	2D	24/10	5.0 - 7.0	3/5/4/5	9	9	6		Brown, moist, loose, fine to coarse SAND, some gravel, little silt -FILL-(SW)	G#230402 A-1-b, SW
							8			
							8			
							20			
							19			
10	3D	22/6	10.0 - 11.8	7/6/4/30(4")	10	10	11		Brown, wet, loose, fine to medium SAND, little coarse sand, silt and gravel, greater silt content from 11.6 to 11.8 ft -FILL-(SW)	
							NQ Core	33.50	11.8	
	R1	36/36	12.0 - 15.0	RQD = 61%					Top of Bedrock at El. 33.5 Gray, aphanitic SLATE. Hard, fresh to slightly weathered, occasional moderately weathered joints. Joints dipping at low to steep angles, very close to close, tight to open, planar to stepped, smooth to rough, highly fractured zone from approximately 14.8 to 15.0 ft. Rock Mass Quality=Fair Recovery=100% -KITTERY FORMATION- R1 Core Times (min:sec): 12.0-13.0' (4:00), 13.0-14.0' (2:00), 14.0-15.0' (2:00)	UC qp=41,002 psi
15	R2	24/24	15.0 - 17.0	RQD = 79%					Gray, aphanitic SLATE. Hard, fresh to slightly weathered, occasional moderately weathered joints. Primary joints low angle with steep secondary joints. One vertical joint at approximately 16.5 ft. Oxidation on some joint surfaces, very close to close, tight to open, planar to stepped, smooth to rough. Rock Mass Quality=Good Recovery=100% -KITTERY FORMATION- R2 Core Times (min:sec): 15.0-16.0' (3:00), 16.0-17.0' (2:00)	UC qp=30,720 psi
	R3	35/35	17.0 - 19.9	RQD = 23%					Gray, aphanitic SLATE. Hard, fresh to slightly weathered. Joints dipping at low and vertical angles, very close to close (highly fractured), planar to stepped, smooth to rough, tight to open. Rock Mass Quality=Very Poor Recovery=100% -KITTERY FORMATION- R3 Core Times (min:sec): 17.0-18.0' (3:00), 18.0-19.0' (2:00), 19.0-19.9' (2:00)	
	R4	25/25	19.9 - 22.0	RQD = 32%						
20										
	R5	48/46	22.0 - 26.0	RQD = 65%						
25										

Remarks:

1. As-drilled coordinates of test borings determined by MaineDOT and provided in NAD 83(96) ME2000 West Zone coordinate system.
2. Hammer consisted of rope and cathead and safety hammer.
3. UC=unconfined compressive strength; modulus; psi=pounds per square in.
4. No elevated PID readings were detected during sample screening operations.

Stratification lines represent approximate boundaries between soil types; transitions may be gradual.

* Water level readings have been made at times and under conditions stated. Groundwater fluctuations may occur due to conditions other than those present at the time measurements were made.

Page 1 of 2 — Boring No.: BB-KDH-101

Maine Department of Transportation — Soil/Rock Exploration Log — US CUSTOMARY UNITS

Project: US Route 1 Bypass over Route 236 Bridge	Location: Kittery, Maine	Boring No.: BB-KDH-101	PIN: 19283.00
Driller: Maine Test Borings	Elevation (ft.) 45.3	Auger ID/OD: --	
Operator: B. Enos	Datum: NAVD 88	Sampler: Split Spoon-1.375 in. ID	
Logged By: M. Snow	Rig Type: Mobile B53 Truck	Hammer Wt./Fall: NW-300/24; S-140/30	
Date Start/Finish: 1-4-12 / 1-4-12	Drilling Method: NW Drive	Core Barrel: NQ-2.0 in. ID	
Boring Location: E885367, N97821 (See Plan)	Casing ID/OD: NW-3.0 in. ID	Water Level*: 11.2	
Hammer Efficiency Factor: 0.6	Hammer Type: Automatic ☐ Hydraulic ☐ Rope & Cathead ☒		

Definitions: (as above)

Depth (ft.)	Sample No.	Pen./Rec. (in.)	Sample Depth (ft.)	Blows (/6 in.) Shear Strength (psf) or RQD (%)	N-uncorrected	N60	Casing Blows	Elevation (ft.)	Visual Description and Remarks	Laboratory Testing Results/ AASHTO and Unified Class
25							NQ Core	19.30	Gray, aphanitic SLATE. Hard, fresh to slightly weathered. Primary joints dipping at low to moderate angles, very close to close, planar to stepped, smooth to rough, tight to open. Secondary vertical joints. Oxidized joint surfaces. Rock Mass Quality=Poor Recovery=100% -KITTERY FORMATION- R4 Core Times (min:sec): 19.9-21.0' (2:00), 21.0-21.0' (3:00) Gray, aphanitic SLATE. Moderately hard, fresh to slightly weathered. Joints dipping at low and steep angles, planar to stepped, smooth to rough, tight to open. Oxidation on some joint surfaces, occasional calcite coatings on joint surfaces. Rock Mass Quality=Fair Recovery=96% -KITTERY FORMATION- R5 Core Times (min:sec): 22.0-23.0' (3:00), 23.0-24.0' (2:00), 24.0-25.0' (3:00), 25.0-26.0' (2:00) 26.0 Bottom of Exploration at 26.0 feet below ground surface.	
30										
35										
40										
45										
50										

Remarks:

1. As-drilled coordinates of test borings determined by MaineDOT and provided in NAD 83(96) ME2000 West Zone coordinate system.
2. Hammer consisted of rope and cathead and safety hammer.
3. UC=unconfined compressive strength; modulus; psi=pounds per square in.
4. No elevated PID readings were detected during sample screening operations.

Stratification lines represent approximate boundaries between soil types; transitions may be gradual.

* Water level readings have been made at times and under conditions stated. Groundwater fluctuations may occur due to conditions other than those present at the time measurements were made.

Page 2 of 2 — Boring No.: BB-KDH-101

Maine Department of Transportation — Soil/Rock Exploration Log — US CUSTOMARY UNITS

Project: US Route 1 Bypass over Route 236 Bridge	Location: Kittery, Maine	Boring No.: BB-KDH-101A	PIN: 19283.00
Driller: Maine Test Borings	Elevation (ft.) 45.3	Auger ID/OD: 2.5 in.	
Operator: B. Enos	Datum: NAVD 88	Sampler: Split Spoon-1.375 in. ID	
Logged By: M. Snow	Rig Type: Mobile B53 Truck	Hammer Wt./Fall: NW-300/24; S-140/30	
Date Start/Finish: 1-4-12 / 1-4-12	Drilling Method: SSA Drive	Core Barrel: --	
Boring Location: E885368, N97822 (See Plan)	Casing ID/OD: --	Water Level*: Dry	
Hammer Efficiency Factor: 0.6	Hammer Type: Automatic ☐ Hydraulic ☐ Rope & Cathead ☒		

Definitions: (as above)

Depth (ft.)	Sample No.	Pen./Rec. (in.)	Sample Depth (ft.)	Blows (/6 in.) Shear Strength (psf) or RQD (%)	N-uncorrected	N60	Casing Blows	Elevation (ft.)	Visual Description and Remarks	Laboratory Testing Results/ AASHTO and Unified Class
0							SSA	44.30	-BITUMINOUS CONCRETE- 1.0	
								43.70	-PORTLAND CEMENT CONCRETE- 1.6	
	1D	12/3	2.0 - 3.0	3/19/5(0.0)				42.30	Brown, dry, dense, fine to medium SAND, trace coarse sand, trace silt, little gravel (concrete pieces) -FILL-(SP) 3.0 Bottom of Exploration at 3.0 feet below ground surface. Note: Resistance at 3.0 ft (probable concrete), moved boring location approximately 2.0 ft south. See BB-KDH-101 test boring log.	
5										
10										
15										
20										
25										

Remarks:

1. As-drilled coordinates of test borings determined by MaineDOT and provided in NAD 83(96) ME2000 West Zone coordinate system.
2. Hammer consisted of rope and cathead and safety hammer.
3. No elevated PID readings were detected during sample screening operations.

Stratification lines represent approximate boundaries between soil types; transitions may be gradual.

* Water level readings have been made at times and under conditions stated. Groundwater fluctuations may occur due to conditions other than those present at the time measurements were made.

Page 1 of 1 — Boring No.: BB-KDH-101A

Maine Department of Transportation — Soil/Rock Exploration Log — US CUSTOMARY UNITS

Project: US Route 1 Bypass over Route 236 Bridge	Location: Kittery, Maine	Boring No.: BB-KDH-102	PIN: 19283.00
Driller: Maine Test Borings	Elevation (ft.) 44.8	Auger ID/OD: 2.5 ID	
Operator: B. Enos	Datum: NAVD 88	Sampler: Split Spoon-2.375/1.375 in. ID	
Logged By: M. Snow	Rig Type: Mobile B53 Truck	Hammer Wt./Fall: S-140/30	
Date Start/Finish: 1-3-12 / 1-3-12	Drilling Method: HSA Drive	Core Barrel: --	
Boring Location: E885306, N97818 (See Plan)	Casing ID/OD: --	Water Level*: Dry	
Hammer Efficiency Factor: 0.6	Hammer Type: Automatic ☐ Hydraulic ☐ Rope & Cathead ☒		

Definitions: (as above)

Depth (ft.)	Sample No.	Pen./Rec. (in.)	Sample Depth (ft.)	Blows (/6 in.) Shear Strength (psf) or RQD (%)	N-uncorrected	N60	Casing Blows	Elevation (ft.)	Visual Description and Remarks	Laboratory Testing Results/ AASHTO and Unified Class
0	1D*	24/18	0.5 - 2.5	31/28/21/19	49	49		44.30	-BITUMINOUS CONCRETE- 0.5	
								43.80	Black, dry, dense, gravel size asphalt pieces 1.0	
								43.50	Gray, crushed stone - 0.75 in. stone size 1.3	
	2D*	24/12	2.5 - 4.5	17/11/7/5	18	18			Brown, moist, dense, fine to coarse SAND, some silt and gravel, grading to little gravel at 3 to 3.5 ft -FILL-(SM)	G#230403 A-1-b, SM
	3D	24/5	4.5 - 6.5	6/15/15/7	30	30			Brown, moist, dense, fine to coarse SAND, some gravel, trace silt -FILL-(SW)	
5										
	4D	24/7	6.5 - 8.5	7/7/6/5	13	13			Brown, moist, fine to coarse SAND, some gravel, trace silt -FILL-(SW)	
	5D	10/11	8.5 - 9.3	9/50(4")				35.20	Brown, moist, fine to medium SAND, some silt, little coarse sand, some gravel grading to little gravel at 8.5 to 8.9 ft -FILL-(SP-SM) Note: Auger refusal on probable bedrock at 9.6 ft. 9.6 Bottom of Exploration at 9.6 feet below ground surface.	
10										
15										
20										
25										

Remarks:

1. *Indicates sample obtained with 3-in. OD split spoon driven with 140 lb. hammer.
2. As-drilled coordinates of test borings determined by MaineDOT and provided in NAD 83(96) ME2000 West Zone coordinate system.
3. Hammer consisted of rope and cathead and safety hammer.
4. No elevated PID readings were detected during sample screening operations.

Stratification lines represent approximate boundaries between soil types; transitions may be gradual.

* Water level readings have been made at times and under conditions stated. Groundwater fluctuations may occur due to conditions other than those present at the time measurements were made.

Page 1 of 1 — Boring No.: BB-KDH-102

STATE OF MAINE
DEPARTMENT OF TRANSPORTATION

NHP-1928(300)

WIN 19283.00

BRIDGE PLANS

BRIDGE NO. 3860

		BY	DATE
PROJ. MANAGER	L. TIMBERLAKE		
DESIGN-DETAILED	D. Kull	P. Dustin	11/13
CHECKED-REVIEWED	T. Kendrick		11/13
DESIGN2-DETAILED2			
DESIGN3-DETAILED3			
REVISIONS 1			
REVISIONS 2			
REVISIONS 3			
REVISIONS 4			
FIELD CHANGES			

SIGNATURE

P.E. NUMBER

DATE

KITTERY OVERPASS BRIDGE
STATE ROUTE 236
KITTERY YORK COUNTY

BORING LOCATION PLAN AND BORING LOGS

Date:12/17/2013

Username:

Division:

Filename: ...\Drawings\007_Boring_Logs.dgn

Maine Department of Transportation
Soil/Rock Exploration Log
US CUSTOMARY UNITS

Project: US Route 1 Bypass over Route 236 Bridge
Location: Kittery, Maine

Boring No.: BB-KDH-103
PIN: 19283.00

Driller:	Maine Test Borings	Elevation (ft.)	27.6	Auger ID/OD:	--
Operator:	B. Enos	Datum:	NAVD 88	Sampler:	Split Spoon-2.375 in. ID
Logged By:	M. Snow	Rig Type:	Mobile B53 Truck	Hammer Wt./Fall:	NW-300/24; S-140/30
Date Start/Finish:	1-5-12 / 1-5-12	Drilling Method:	NW Drive	Core Barrel:	NQ-2.0 in. ID
Boring Location:	E885321, N97894 (See Plan)	Casing ID/OD:	NW-3.0 in. ID	Water Level*:	None Observed
Hammer Efficiency Factor: 0.6		Hammer Type:	Automatic ☐ Hydraulic ☐ Rope & Cathead ☒		

Definitions:
D = Split Spoon Sample
MD = Unsuccessful Split Spoon Sample attempt
U = Thin Wall Tube Sample
MU = Unsuccessful Thin Wall Tube Sample attempt
V = Insitu Vane Shear Test
MV = Unsuccessful Insitu Vane Shear Test attempt
R = Rock Core Sample
SSA = Solid Stem Auger
HSA = Hollow Stem Auger
RC = Roller Cone
WOH = weight of 140lb. hammer
WOR = weight of rods
WO1P = Weight of one person
S_u = Insitu Field Vane Shear Strength (psf)
T_v = Pocket Torvane Shear Strength (psf)
q_p = Unconfined Compressive Strength (ksf)
N-uncorrected = Raw field SPT N-value
Hammer Efficiency Factor = Annual Calibration Value
N_{60} = SPT N-uncorrected corrected for hammer efficiency
N_{60} = (Hammer Efficiency Factor/60%)*N-uncorrected
$S_{u(lab)}$ = Lab Vane Shear Strength (psf)
WC = water content, percent
LL = Liquid Limit
PL = Plastic Limit
PI = Plasticity Index
G = Grain Size Analysis
C = Consolidation Test

Sample Information

Depth (ft.)	Sample No.	Pen./Rec. (in.)	Sample Depth (ft.)	Blows (/6 in.) Shear Strength (psf) or RQD (%)	N-uncorrected	N_{60}	Casing Blows	Elevation (ft.)
0	1D*	18/14	0.5 - 2.0	26/20/14	34	34		27.10 / 26.90
	2D*	23/17	2.0 - 3.9	13/20/45/57	65	65		25.10
								24.10
5								22.60
	R1	12/12	5.2 - 6.2	RQD = 0%			NQ Core	
	R2	12/12	6.2 - 7.2	RQD = 0%				
	R3	34/34	7.2 - 10.0	RQD = 24%				
10								17.60
15								
20								
25								

Visual Description and Remarks:

-BITUMINOUS CONCRETE- 0.5

0.75 to 2 in. crushed stone 0.7

Brown, dry, dense, fine to coarse SAND, little gravel, little to trace silt
-FILL-(SW)

Brown, dry, dense, fine to coarse SAND, some gravel, trace silt
-FILL-(SW) 2.5

Brown, wet, dense, fine to coarse SAND, some silt, trace gravel
-FILL-(SP) 3.5

Blasted rock pieces, little fine to coarse sand, trace silt
-BLAST ROCK-
Note: Auger refusal at 5.0 ft. 5.0

Top of Bedrock at El. 22.6
Gray, aphanitic SLATE, moderately hard, slightly weathered, highly fractured, low angle and steep to vertical joints, planar to undulating, smooth to rough, open.
Rock Mass Quality=Very Poor
Recovery=100%
-KITTERY FORMATION-
R1 Core Times (min:sec):
5.2-6.2' (2:00)
Gray, aphanitic SLATE, moderately hard, slightly weathered, highly fractured, low angle and vertical joints, planar to undulating, smooth to rough, open.
Rock Mass Quality=Very Poor
Recovery=100%
-KITTERY FORMATION-
R2 Core Times (min:sec):
6.2-7.2' (4:00)
Gray, aphanitic SLATE, moderately hard, slightly to moderately severely weathered, highly fractured zone from approximately 9.5 to 10.0 ft. Joints dipping at low to steep angles with secondary vertical joints, planar to undulating, smooth to rough, tight to open, oxidation on some joint surfaces.
Rock Mass Quality=Very Poor
Recovery=100%
-KITTERY FORMATION-
R3 Core Times (min:sec):
7.2-8.2' (3:00), 8.2-9.2' (3:00), 9.2-10.0' (3:00) 10.0

Bottom of Exploration at 10.0 feet below ground surface.

Laboratory Testing Results/AASHTO and Unified Class: —

Remarks:

1. *Indicates sample obtained with 3-in. OD split spoon driven with 140 lb. hammer.
2. As-drilled coordinates of test borings determined by MaineDOT and provided in NAD 83(96) ME2000 West Zone coordinate system.
3. Hammer consisted of rope and cathead and safety hammer.
4. No elevated PID readings were detected during sample screening operations.
5. Water was introduced during the drilling process, therefore actual groundwater conditions were not observed at the time of drilling.

Stratification lines represent approximate boundaries between soil types; transitions may be gradual.

* Water level readings have been made at times and under conditions stated. Groundwater fluctuations may occur due to conditions other than those present at the time measurements were made.

Page 1 of 1

Boring No.: BB-KDH-103

Maine Department of Transportation
Soil/Rock Exploration Log
US CUSTOMARY UNITS

Project: US Route 1 Bypass over Route 236 Bridge
Location: Kittery, Maine

Boring No.: BB-KDH-104
PIN: 19283.00

Driller:	Maine Test Borings	Elevation (ft.)	27.7	Auger ID/OD:	2.5 in.
Operator:	B. Enos	Datum:	NAVD 88	Sampler:	Split Spoon-2.375 in. ID
Logged By:	M. Snow	Rig Type:	Mobile B53 Truck	Hammer Wt./Fall:	S-300/30
Date Start/Finish:	1-5-12 / 1-5-12	Drilling Method:	SSA Drive	Core Barrel:	--
Boring Location:	E885414, N97850 (See Plan)	Casing ID/OD:	--	Water Level*:	Dry
Hammer Efficiency Factor: 0.6		Hammer Type:	Automatic ☐ Hydraulic ☐ Rope & Cathead ☒		

Definitions:
D = Split Spoon Sample
MD = Unsuccessful Split Spoon Sample attempt
U = Thin Wall Tube Sample
MU = Unsuccessful Thin Wall Tube Sample attempt
V = Insitu Vane Shear Test
MV = Unsuccessful Insitu Vane Shear Test attempt
R = Rock Core Sample
SSA = Solid Stem Auger
HSA = Hollow Stem Auger
RC = Roller Cone
WOH = weight of 140lb. hammer
WOR = weight of rods
WO1P = Weight of one person
S_u = Insitu Field Vane Shear Strength (psf)
T_v = Pocket Torvane Shear Strength (psf)
q_p = Unconfined Compressive Strength (ksf)
N-uncorrected = Raw field SPT N-value
Hammer Efficiency Factor = Annual Calibration Value
N_{60} = SPT N-uncorrected corrected for hammer efficiency
N_{60} = (Hammer Efficiency Factor/60%)*N-uncorrected
$S_{u(lab)}$ = Lab Vane Shear Strength (psf)
WC = water content, percent
LL = Liquid Limit
PL = Plastic Limit
PI = Plasticity Index
G = Grain Size Analysis
C = Consolidation Test

Sample Information

Depth (ft.)	Sample No.	Pen./Rec. (in.)	Sample Depth (ft.)	Blows (/6 in.) Shear Strength (psf) or RQD (%)	N-uncorrected	N_{60}	Casing Blows	Elevation (ft.)
0	1D*	18/15	0.5 - 2.0	25/20/24	44	44		27.20 / 27.00
	*2D	5/5	2.0 - 2.4	24(5")/6(0")				25.30 / 25.00
5								
10								
15								
20								
25								

Visual Description and Remarks:

-BITUMINOUS CONCRETE- 0.5

0.75 to 1 in. crushed stone 0.7

Brown, dry, dense, fine to medium SAND, little coarse sand, some gravel, trace silt
-FILL-(SW)

Brown, dry, dense, fine to coarse SAND, little gravel, trace silt
-FILL-(SW) 2.4

Note: Split spoon refusal at 2.4 ft, auger refusal on probable bedrock at 2.7 ft. 2.7

Bottom of Exploration at 2.7 feet below ground surface.

Remarks:

1. *Indicates sample obtained with 3-in. OD split spoon driven with 140 lb. hammer.
2. As-drilled coordinates of test borings determined by MaineDOT and provided in NAD 83(96) ME2000 West Zone coordinate system.
3. Hammer consisted of rope and cathead and safety hammer.
4. No elevated PID readings were detected during sample screening operations.

Stratification lines represent approximate boundaries between soil types; transitions may be gradual.

* Water level readings have been made at times and under conditions stated. Groundwater fluctuations may occur due to conditions present other than those at the time measurements were made.

Page 1 of 1

Boring No.: BB-KDH-104

Maine Department of Transportation
Soil/Rock Exploration Log
US CUSTOMARY UNITS

Project: US Route 1 Bypass over Route 236 Bridge
Location: Kittery, Maine

Boring No.: BB-KDH-105
PIN: 19283.00

Driller:	Maine Test Borings	Elevation (ft.)	46.5	Auger ID/OD:	2.5 in.
Operator:	B. Enos	Datum:	NAVD 88	Sampler:	Split Spoon-1.375/2.375 in. ID
Logged By:	M. Snow	Rig Type:	Mobile B53 Truck	Hammer Wt./Fall:	S-140/30
Date Start/Finish:	1-4-12 / 1-4-12	Drilling Method:	HSA Drive	Core Barrel:	--
Boring Location:	E885444, N97949 (See Plan)	Casing ID/OD:	--	Water Level*:	Dry
Hammer Efficiency Factor: 0.6		Hammer Type:	Automatic ☐ Hydraulic ☐ Rope & Cathead ☒		

Definitions:
D = Split Spoon Sample
MD = Unsuccessful Split Spoon Sample attempt
U = Thin Wall Tube Sample
MU = Unsuccessful Thin Wall Tube Sample attempt
V = Insitu Vane Shear Test
MV = Unsuccessful Insitu Vane Shear Test attempt
R = Rock Core Sample
SSA = Solid Stem Auger
HSA = Hollow Stem Auger
RC = Roller Cone
WOH = weight of 140lb. hammer
WOR = weight of rods
WO1P = Weight of one person
S_u = Insitu Field Vane Shear Strength (psf)
T_v = Pocket Torvane Shear Strength (psf)
q_p = Unconfined Compressive Strength (ksf)
N-uncorrected = Raw field SPT N-value
Hammer Efficiency Factor = Annual Calibration Value
N_{60} = SPT N-uncorrected corrected for hammer efficiency
N_{60} = (Hammer Efficiency Factor/60%)*N-uncorrected
$S_{u(lab)}$ = Lab Vane Shear Strength (psf)
WC = water content, percent
LL = Liquid Limit
PL = Plastic Limit
PI = Plasticity Index
G = Grain Size Analysis
C = Consolidation Test

Sample Information

Depth (ft.)	Sample No.	Pen./Rec. (in.)	Sample Depth (ft.)	Blows (/6 in.) Shear Strength (psf) or RQD (%)	N-uncorrected	N_{60}	Casing Blows	Elevation (ft.)
0								45.60 / 45.10
	1D*	18/10	1.5 - 3.0	20/23/21	44	44		
	2D*	24/16	3.0 - 5.0	14/8/6/12	14	14		
5	3D	24/10	5.0 - 7.0	9/7/7/18	14	14		
	4D	24/3	7.0 - 9.0	11/13/10/11	23	23		
	5D	24/12	9.0 - 11.0	7/7/9/4	16	16		
10	6D	24/10	11.0 - 13.0	4/7/4/5	11	11		
	7D	24/20	13.0 - 15.0	5/4/7/17	11	11		33.50
15	8D	24/18	15.0 - 17.0	11/11/11/23	22	22		31.50
								29.50
								27.50
20								
25								

Visual Description and Remarks:

-BITUMINOUS CONCRETE- 0.9

-PORTLAND CEMENT CONCRETE- 1.4

Brown, dry, dense, fine to coarse SAND, little gravel (one 3 in. diameter piece), trace silt
-FILL-(SW)

Brown, moist, medium dense, sandy GRAVEL, little silt
-FILL-(GM) — Laboratory Testing: G#23404, A-1-b, GM

Brown, dry, medium dense, GRAVEL, some fine to coarse sand, trace silt
-FILL-(GP)

Brown, dry, medium dense, fine to coarse SAND, little gravel, trace silt
-FILL-(SW)
Note: Missample, redrive spoon from 9 to 11 ft.

Gray, dry, medium dense, GRAVEL pieces, poor recovery
-FILL-(GP)

Brown, moist, medium dense, fine to medium SAND, little silt, little gravel, trace coarse sand
-FILL-(SP-SM)

Brown, moist, medium dense, fine to medium SAND, little silt, little gravel, trace coarse sand
-FILL-(SP-SM) 13.0

Gray-brown, mottled, moist, medium stiff, silty CLAY, few gray fine sand lenses
-MARINE DEPOSIT-(CL) 15.0

Brown, moist, medium dense, fine to medium SAND, little coarse sand, little gravel, trace silt
-GLACIAL TILL-(SP-SM) 17.0

Note: Drill action and spoon refusal indicate strata change at 17.0 ft.
-PROBABLE WEATHERED BEDROCK-
Note: Auger refusal on probable bedrock at 19.0 ft. 19.0

Bottom of Exploration at 19.0 feet below ground surface.

Remarks:

1. *Indicates sample obtained with 3-in. OD split spoon driven with 140 lb. hammer.
2. As-drilled coordinates of test borings determined by MaineDOT and provided in NAD 83(96) ME2000 West Zone coordinate system.
3. Hammer consisted of rope and cathead and safety hammer.
4. No elevated PID readings were detected during sample screening operations.

Stratification lines represent approximate boundaries between soil types; transitions may be gradual.

* Water level readings have been made at times and under conditions stated. Groundwater fluctuations may occur due to conditions present other than those at the time measurements were made.

Page 1 of 1

Boring No.: BB-KDH-105

Maine Department of Transportation
Soil/Rock Exploration Log
US CUSTOMARY UNITS

Project: US Route 1 Bypass over Route 236 Bridge
Location: Kittery, Maine

Boring No.: BB-KDH-106
PIN: 19283.00

Driller:	Maine Test Borings	Elevation (ft.)	45.7	Auger ID/OD:	--
Operator:	B. Enos	Datum:	NAVD 88	Sampler:	Split Spoon-1.375 in. ID
Logged By:	M. Snow	Rig Type:	Mobile B53 Truck	Hammer Wt./Fall:	NW-300/24; S-140/30
Date Start/Finish:	1-3-12 / 1-3-12	Drilling Method:	SSA to 5.0 ft; NW Drive	Core Barrel:	NQ-2.0 in. ID
Boring Location:	E885362, N97923 (See Plan)	Casing ID/OD:	NW-3.0 in. ID	Water Level*:	None observed
Hammer Efficiency Factor: 0.6		Hammer Type:	Automatic ☐ Hydraulic ☐ Rope & Cathead ☒		

Definitions:
D = Split Spoon Sample
MD = Unsuccessful Split Spoon Sample attempt
U = Thin Wall Tube Sample
MU = Unsuccessful Thin Wall Tube Sample attempt
V = Insitu Vane Shear Test
MV = Unsuccessful Insitu Vane Shear Test attempt
R = Rock Core Sample
SSA = Solid Stem Auger
HSA = Hollow Stem Auger
RC = Roller Cone
WOH = weight of 140lb. hammer
WOR = weight of rods
WO1P = Weight of one person
S_u = Insitu Field Vane Shear Strength (psf)
T_v = Pocket Torvane Shear Strength (psf)
q_p = Unconfined Compressive Strength (ksf)
N-uncorrected = Raw field SPT N-value
Hammer Efficiency Factor = Annual Calibration Value
N_{60} = SPT N-uncorrected corrected for hammer efficiency
N_{60} = (Hammer Efficiency Factor/60%)*N-uncorrected
$S_{u(lab)}$ = Lab Vane Shear Strength (psf)
WC = water content, percent
LL = Liquid Limit
PL = Plastic Limit
PI = Plasticity Index
G = Grain Size Analysis
C = Consolidation Test

Sample Information

Depth (ft.)	Sample No.	Pen./Rec. (in.)	Sample Depth (ft.)	Blows (/6 in.) Shear Strength (psf) or RQD (%)	N-uncorrected	N_{60}	Casing Blows	Elevation (ft.)
0							SSA	44.70
	1D	24/15	1.0 - 3.0	25/22/15/12	37	37		43.70 / 43.50 / 43.20
5	2D	24/6	5.0 - 7.0	6/6/5/4	11	11	11	
							12	
							13	
							13	
							13	
10	3D	24/5	10.0 - 12.0	5/5/4/7	9	9	5	
							10	
							15	
							21	
							23	
15	4D	24/3	15.0 - 17.0	46/7/6/5	13	13	45	
							10	
							10	28.20
							39 NQ	26.80
	R1	24/24	19.0 - 21.0	RQD = 0%				
20	R2	41/34	21.0 - 24.4	RQD = 39%				
	R3	25/25	24.4 - 26.5	RQD = 32%				
25								

Visual Description and Remarks:

-BITUMINOUS CONCRETE- 1.0

Gray-brown, dry, dense, fine to medium sand, trace silt
-FILL-(SP) 2.0

-BITUMINOUS CONCRETE- 2.2

Gray-brown, dry, dense, GRAVEL (0.75 in.), trace fine to coarse sand, trace silt
-FILL-(GP) 2.5

Brown, dry, dense, fine to coarse SAND, trace silt
-FILL-(SW)

Brown, moist, medium dense, fine to coarse SAND, little gravel, little silt
-FILL-(SM) — Laboratory Testing: G#230405, A-1-b, SM

Brown, wet, loose, fine to medium SAND, little coarse sand, little gravel, little silt
-FILL-(SP)

Note: Pushed on cobble at 15.0 ft.
Brown, wet, medium dense, fine to coarse SAND, little gravel, trace silt
-FILL-(SW)
Note: Washed ahead of casing 15.0 to 19.0 ft. 17.5

Note: Drill action and rock chips in wash water indicate strata change at 17.5 ft.
-PROBABLE WEATHERED BEDROCK- 18.9

Top of Bedrock at El. 26.8
Gray, fine-grained to aphanitic, PHYLLITE, Hard, slightly to moderately weathered, highly fractured joints dipping at moderate to steep angles, secondary vertical joints, very close to close, planar to undulating, smooth to rough, tight to open, occasional calcite veins
Rock Mass Quality=Very Poor
Recovery=100%
-KITTERY FORMATION-
R1 Core Times (min:sec):
19.0-20.0' (4:00), 20.0-21.0' (5:00)
Gray, fine grained to aphanitic, PHYLLITE, Hard, slightly to moderately weathered, highly fractured, joints dipping at low to moderate angles, secondary — Laboratory Testing: UC qp=12,670 psi

Remarks:

1. As-drilled coordinates of test borings determined by MaineDOT and provided in NAD 83(96) ME2000 West Zone coordinate system.
2. Hammer consisted of rope and cathead and safety hammer.
3. UC=unconfined compressive strength; psi=pounds per square in.
4. Water was introduced during the drilling process, therefore actual groundwater conditions were not observed at the time of drilling.
5. No elevated PID readings were detected during sample screening operations.

Stratification lines represent approximate boundaries between soil types; transitions may be gradual.

* Water level readings have been made at times and under conditions stated. Groundwater fluctuations may occur due to conditions other than those present at the time measurements were made.

Page 1 of 2

Boring No.: BB-KDH-106

Maine Department of Transportation
Soil/Rock Exploration Log
US CUSTOMARY UNITS

Project: US Route 1 Bypass over Route 236 Bridge
Location: Kittery, Maine

Boring No.: BB-KDH-106
PIN: 19283.00

Driller:	Maine Test Borings	Elevation (ft.)	45.7	Auger ID/OD:	--
Operator:	B. Enos	Datum:	NAVD 88	Sampler:	Split Spoon-1.375 in. ID
Logged By:	M. Snow	Rig Type:	Mobile B53 Truck	Hammer Wt./Fall:	NW-300/24; S-140/30
Date Start/Finish:	1-3-12 / 1-3-12	Drilling Method:	SSA to 5.0 ft; NW Drive	Core Barrel:	NQ-2.0 in. ID
Boring Location:	E885362, N97923 (See Plan)	Casing ID/OD:	NW-3.0 in. ID	Water Level*:	None observed
Hammer Efficiency Factor: 0.6		Hammer Type:	Automatic ☐ Hydraulic ☐ Rope & Cathead ☒		

Definitions:
D = Split Spoon Sample
MD = Unsuccessful Split Spoon Sample attempt
U = Thin Wall Tube Sample
MU = Unsuccessful Thin Wall Tube Sample attempt
V = Insitu Vane Shear Test
MV = Unsuccessful Insitu Vane Shear Test attempt
R = Rock Core Sample
SSA = Solid Stem Auger
HSA = Hollow Stem Auger
RC = Roller Cone
WOH = weight of 140lb. hammer
WOR = weight of rods
WO1P = Weight of one person
S_u = Insitu Field Vane Shear Strength (psf)
T_v = Pocket Torvane Shear Strength (psf)
q_p = Unconfined Compressive Strength (ksf)
N-uncorrected = Raw field SPT N-value
Hammer Efficiency Factor = Annual Calibration Value
N_{60} = SPT N-uncorrected corrected for hammer efficiency
N_{60} = (Hammer Efficiency Factor/60%)*N-uncorrected
$S_{u(lab)}$ = Lab Vane Shear Strength (psf)
WC = water content, percent
LL = Liquid Limit
PL = Plastic Limit
PI = Plasticity Index
G = Grain Size Analysis
C = Consolidation Test

Sample Information

Depth (ft.)	Sample No.	Pen./Rec. (in.)	Sample Depth (ft.)	Blows (/6 in.) Shear Strength (psf) or RQD (%)	N-uncorrected	N_{60}	Casing Blows	Elevation (ft.)
25							NQ Core	
	R4	31/27	26.5 - 29.1	RQD = 36%				
	R5	31/28	29.1 - 31.7	RQD = 77%				
30								14.00
35								
40								
45								
50								

Visual Description and Remarks:

vertical joints, very close to close, planar to undulating, smooth to rough, tight to open, occasional calcite veins.
Rock Mass Quality=Poor
Recovery=83%
-KITTERY FORMATION-
R2 Core Times (min:sec):
21.0-22.0' (5:00), 22.0-23.0' (5:00), 23.0-24.0' (4:00)
Gray, fine grained to aphanitic, PHYLLITE, Hard, slightly to moderately weathered, highly fractured, joints dipping at low to moderate angles, very close to close, planar to undulating, smooth to rough, tight to open, occasional calcite veins. Secondary vertical joints tight to open.
Rock Mass Quality=Poor
Recovery=100%
-KITTERY FORMATION-
R3 Core Times (min:sec):
24.4-25.4' (4:00), 25.4-26.5' (5:00)
Gray, fine grained to aphanitic, PHYLLITE, Hard, slightly to moderately weathered, highly fractured, joints dipping at low to moderate angles, very close to close, planar to undulating, smooth to rough, tight to open, occasional calcite veins, one near vertical secondary joint, discoloration on joint surfaces.
Rock Mass Quality=Poor
Recovery=87%
-KITTERY FORMATION-
R4 Core Times (min:sec):
26.5-27.5' (4:00), 27.5-28.5' (4:00), 28.5-29.1' (5:00)
Gray, fine grained to aphanitic PHYLLITE, Hard, slightly to moderately weathered, highly fractured from approximately 29.1 to 29.5 ft. Joints dipping at low to moderate angles, moderately close, planar to undulating, smooth to rough, open, frequent calcite veins, discoloration on joint surfaces.
Rock Mass Quality=Good
Recovery=90%
-KITTERY FORMATION-
R5 Core Times (min:sec):
29.1-30.1' (5:00), 30.1-31.7 (5:00) 31.7

Bottom of Exploration at 31.7 feet below ground surface.

Laboratory Testing Results: UC qp=14,797 psi

Remarks:

1. *Indicates sample obtained with 3-in. OD split spoon driven with 140 lb. hammer.
2. As-drilled coordinates of test borings determined by MaineDOT and provided in NAD 83(96) ME2000 West Zone coordinate system.
3. Hammer consisted of rope and cathead and safety hammer.
4. UC=unconfined compressive strength; psi=pounds per square in.
5. Water was introduced during the drilling process, therefore actual groundwater conditions were not observed at the time of drilling.

Stratification lines represent approximate boundaries between soil types; transitions may be gradual.

* Water level readings have been made at times and under conditions stated. Groundwater fluctuations may occur due to conditions other than those present at the time measurements were made.

Page 2 of 2

Boring No.: BB-KDH-106

McFarland Johnson

STATE OF MAINE
DEPARTMENT OF TRANSPORTATION

NHP-1928(300)

WIN 19283.00

BRIDGE PLANS

BRIDGE NO. 3860

SIGNATURE

P.E. NUMBER

DATE

		BY	DATE
PROJ. MANAGER	L. TIMBERLAKE		
DESIGN-DETAILED	D. Kull	P. Dustin	11/13
CHECKED-REVIEWED	T. Kendrick		11/13
DESIGN2-DETAILED2			
DESIGN3-DETAILED3			
REVISIONS 1			
REVISIONS 2			
REVISIONS 3			
REVISIONS 4			
FIELD CHANGES			

KITTERY OVERPASS BRIDGE
STATE ROUTE 236

KITTERY YORK COUNTY

BORING LOGS
(1 OF 2)

SHEET NUMBER

7

OF 49

Maine Department of Transportation
Soil/Rock Exploration Log
US CUSTOMARY UNITS

Project: US Route 1 Bypass over Route 236 Bridge
Location: Kittery, Maine

Boring No.: BB-KDH-201
PIN: 19283.00

Driller:	Maine Test Borings	Elevation (ft.)	37.2
Operator:	T. Schaefer	Datum:	NAVD 88
Logged By:	M. Snow	Rig Type:	Mobile B-53 Bombardier
Date Start/Finish:	8-19-13/8-19-13	Drilling Method:	NW Drive
Boring Location:	E885303, N97863 (See Plan)	Casing ID/OD:	NW-3.0 in. ID
Hammer Efficiency Factor: 0.6		Hammer Type:	Automatic ☐ Hydraulic ☐ Rope & Cathead ☒
Auger ID/OD:	--	Sampler:	Split Spoon-1.375 in. ID
Hammer Wt./Fall:	NW-300/241 S-140/30	Core Barrel:	NQ-2.0 in. ID
Water Level*:	None Observed		

Definitions:
D = Split Spoon Sample
MD = Unsuccessful Split Spoon Sample attempt
U = Thin Wall Tube Sample
MU = Unsuccessful Thin Wall Tube Sample attempt
V = Insitu Vane Shear Test
MV = Unsuccessful Insitu Vane Shear Test attempt
R = Rock Core Sample
SSA = Solid Stem Auger
HSA = Hollow Stem Auger
RC = Roller Cone
WOH = weight of 140lb. hammer
WOR = weight of rods
WOP = Weight of one person
S_u = Insitu Field Vane Shear Strength (psf)
T_v = Pocket Torvane Shear Strength (psf)
q_p = Unconfined Compressive Strength (ksf)
N-uncorrected = Raw field SPT N-value
Hammer Efficiency Factor = Annual Calibration Value
N_{60} = SPT N-uncorrected corrected for hammer efficiency
N_{60} = (Hammer Efficiency Factor/60%)*N-uncorrected
$S_{u(lab)}$ = Lab Vane Shear Strength (psf)
WC = water content, percent
LL = Liquid Limit
PL = Plastic Limit
PI = Plasticity Index
G = Grain Size Analysis
C = Consolidation Test

Sample Information

Depth (ft.)	Sample No.	Pen./Rec. (in.)	Sample Depth (ft.)	Blows (/6 in. Shear Strength (psf) or RQD (%)	N-uncorrected	N_{60}	Casing Blows	Elevation (ft.)	Graphic Log	Visual Description and Remarks	Laboratory Testing Results/ AASHTO and Unified Class
0	1D	24/8	0.0 - 2.0	2/5/3/3	8	8	2	36.50		Dark brown, moist, medium stiff, SILT, little fine sand -TOPSOIL-(OH) 0.7	
							5			Brown, moist, fine to medium silty SAND, trace coarse sand, trace gravel -FILL-(SM)	
							6				
							10				
							21	33.20		4.0	
5	2D	24/14	5.0 - 7.0	7/12/11/17	23	23	38	31.70		Brown-rust-brown-gray, wet, very stiff, mottled, silty CLAY, little fine sand, trace coarse sand and gravel -FILL-(CL) (appears reworked) 5.5	
							44			Brown-rust-brown-gray, wet, very stiff, mottled, silty CLAY with brown fine sand layers (3-in. thick) -MARINE DEPOSIT-(CL)	
							48				
							67				
							67	27.20		10.0	
	3D	24/12	10.0 - 12.0	15/25/31/52	56	56	41			Brown-rust-brown-gray, wet, very dense, fine to medium SAND, little coarse sand, little silt, little gravel -GLACIAL TILL-(SM)	
							47	25.00		12.2	
	R1	56/56	12.4 - 17.1	RQD = 55%			NQ Core	24.80		-WEATHERED BEDROCK- 12.4	
15										Top of Bedrock at El. 24.8 Gray, aphanitic PHYLLITE. Hard, fresh to slightly weathered. Joints dipping at low and steep angles, very close to close, tight to open, planar to stepped, smooth to rough, iron oxide on some joint surfaces, occasional calcite veins. Rock Mass Quality=Fair Recovery=100% -KITTERY FORMATION- R1 Core Times (min:sec): 12.4-13.4' (1:46), 13.4-14.4' (1:44), 14.4-15.4' (1:54), 15.4-16.4' (2:13), 16.4-17.1' (1:51)	
								20.10		17.1 Bottom of Exploration at 17.1 feet below ground surface.	
30											

Remarks:
1. As-drilled coordinates of test borings determined by MaineDOT and provided in NAD 83(96) ME2000 West Zone coordinate system.
2. Hammer consisted of rope and cathead and safety hammer.
3. No elevated PID readings were detected during sample screening operations.
4. Water was introduced during the drilling process, therefore actual groundwater conditions were not observed at the time of drilling.

Stratification lines represent approximate boundaries between soil types; transitions may be gradual.
* Water level readings have been made at times and under conditions stated. Groundwater fluctuations may occur due to conditions other than those present at the time measurements were made.

Page 1 of 1
Boring No.: BB-KDH-201

Maine Department of Transportation
Soil/Rock Exploration Log
US CUSTOMARY UNITS

Project: US Route 1 Bypass over Route 236 Bridge
Location: Kittery, Maine

Boring No.: BB-KDH-202
PIN: 19283.00

Driller:	Maine Test Borings	Elevation (ft.)	45.6
Operator:	T. Schaefer	Datum:	NAVD 88
Logged By:	M. Snow	Rig Type:	Mobile B-53 Bombardier
Date Start/Finish:	8-15-13/8-15-13	Drilling Method:	NW Drive
Boring Location:	E885343, N97840 (See Plan)	Casing ID/OD:	NW-3.0 in. ID
Hammer Efficiency Factor: 0.6		Hammer Type:	Automatic ☐ Hydraulic ☐ Rope & Cathead ☒
Auger ID/OD:	--	Sampler:	Split Spoon-1.375 in. ID
Hammer Wt./Fall:	NW-300/241 S-140/30	Core Barrel:	NQ-2.0 in. ID
Water Level*:	None Observed		

Definitions:
D = Split Spoon Sample
MD = Unsuccessful Split Spoon Sample attempt
U = Thin Wall Tube Sample
MU = Unsuccessful Thin Wall Tube Sample attempt
V = Insitu Vane Shear Test
MV = Unsuccessful Insitu Vane Shear Test attempt
R = Rock Core Sample
SSA = Solid Stem Auger
HSA = Hollow Stem Auger
RC = Roller Cone
WOH = weight of 140lb. hammer
WOR = weight of rods
WOP = Weight of one person
S_u = Insitu Field Vane Shear Strength (psf)
T_v = Pocket Torvane Shear Strength (psf)
q_p = Unconfined Compressive Strength (ksf)
N-uncorrected = Raw field SPT N-value
Hammer Efficiency Factor = Annual Calibration Value
N_{60} = SPT N-uncorrected corrected for hammer efficiency
N_{60} = (Hammer Efficiency Factor/60%)*N-uncorrected
$S_{u(lab)}$ = Lab Vane Shear Strength (psf)
WC = water content, percent
LL = Liquid Limit
PL = Plastic Limit
PI = Plasticity Index
G = Grain Size Analysis
C = Consolidation Test

Sample Information

Depth (ft.)	Sample No.	Pen./Rec. (in.)	Sample Depth (ft.)	Blows (/6 in. Shear Strength (psf) or RQD (%)	N-uncorrected	N_{60}	Casing Blows	Elevation (ft.)	Graphic Log	Visual Description and Remarks	Laboratory Testing Results/ AASHTO and Unified Class
0							SSA	44.60		-ASPHALT- 0.1	
								44.00		-CONCRETE-(with rebar) 1.6	
										Note: Description from auger cuttings. Brown, dry, fine to coarse SAND, some gravel, trace silt -FILL-(SW)	
										Brown, moist, medium dense, fine to medium SAND, some gravel (blast rock), trace coarse sand, trace silt -FILL-(SW)	
5	1D	24/12	5.0 - 7.0	3/3/12/30	15	15	7				
							41				
							34				
							33				
							17	36.60		9.0	
	2D	24/10	10.0 - 12.0	2/2/2/4	4	4	11			Dark brown, moist, soft, SILT, trace fine to medium sand, trace clay, trace organics -MARINE DEPOSIT-(ML)	
							8				
							15				
							301.0"	32.50		13.1	
	R1	60/60	14.5 - 19.5	RQD = 85%			NQ Core	31.10		Note: Advanced roller bit to 14.5 ft. Seat casing at 14.0 ft. -WEATHERED BEDROCK- Note: Weathered rock chips observed in wash water from 13.1 to 14.5 ft. 14.5	
15										Top of Bedrock at El. 31.1 Gray, aphanitic PHYLLITE. Hard, fresh to slightly weathered, oxidation observed on some joint surfaces. Joints dipping at low to steep angles, very close to moderately close, tight to open, planar to undulating, smooth to rough, frequent calcite veins, occasional healed joints. Rock Mass Quality=Good Recovery=100% -KITTERY FORMATION- R1 Core Times (min:sec): 14.5-15.5' (2:00), 15.5-16.5' (1:49), 16.5-17.5' (2:33), 17.5-18.5' (1:45), 18.5-19.5' (1:45)	
								26.10		19.5 Bottom of Exploration at 19.5 feet below ground surface.	
30											

Remarks:
1. As-drilled coordinates of test borings determined by MaineDOT and provided in NAD 83(96) ME2000 West Zone coordinate system.
2. Hammer consisted of rope and cathead and safety hammer.
3. No elevated PID readings were detected during sample screening operations.
4. Water was introduced during the drilling process, therefore actual groundwater conditions were not observed at the time of drilling.

Stratification lines represent approximate boundaries between soil types; transitions may be gradual.
* Water level readings have been made at times and under conditions stated. Groundwater fluctuations may occur due to conditions other than those present at the time measurements were made.

Page 1 of 1
Boring No.: BB-KDH-202

Maine Department of Transportation
Soil/Rock Exploration Log
US CUSTOMARY UNITS

Project: US Route 1 Bypass over Route 236 Bridge
Location: Kittery, Maine

Boring No.: BB-KDH-203
PIN: 19283.00

Driller:	Maine Test Borings	Elevation (ft.)	46.2
Operator:	T. Schaefer	Datum:	NAVD 88
Logged By:	M. Snow	Rig Type:	Mobile B-53 Bombardier
Date Start/Finish:	8-14-13/8-14-13	Drilling Method:	NW Drive
Boring Location:	E885396, N97895 (See Plan)	Casing ID/OD:	NW-3.0 in. ID
Hammer Efficiency Factor: 0.6		Hammer Type:	Automatic ☐ Hydraulic ☐ Rope & Cathead ☒
Auger ID/OD:	--	Sampler:	Split Spoon-1.375 in. ID
Hammer Wt./Fall:	NW-300/241 S-140/30	Core Barrel:	NQ-2.0 in. ID
Water Level*:	None Observed		

Definitions:
D = Split Spoon Sample
MD = Unsuccessful Split Spoon Sample attempt
U = Thin Wall Tube Sample
MU = Unsuccessful Thin Wall Tube Sample attempt
V = Insitu Vane Shear Test
MV = Unsuccessful Insitu Vane Shear Test attempt
R = Rock Core Sample
SSA = Solid Stem Auger
HSA = Hollow Stem Auger
RC = Roller Cone
WOH = weight of 140lb. hammer
WOR = weight of rods
WOP = Weight of one person
S_u = Insitu Field Vane Shear Strength (psf)
T_v = Pocket Torvane Shear Strength (psf)
q_p = Unconfined Compressive Strength (ksf)
N-uncorrected = Raw field SPT N-value
Hammer Efficiency Factor = Annual Calibration Value
N_{60} = SPT N-uncorrected corrected for hammer efficiency
N_{60} = (Hammer Efficiency Factor/60%)*N-uncorrected
$S_{u(lab)}$ = Lab Vane Shear Strength (psf)
WC = water content, percent
LL = Liquid Limit
PL = Plastic Limit
PI = Plasticity Index
G = Grain Size Analysis
C = Consolidation Test

Sample Information

Depth (ft.)	Sample No.	Pen./Rec. (in.)	Sample Depth (ft.)	Blows (/6 in. Shear Strength (psf) or RQD (%)	N-uncorrected	N_{60}	Casing Blows	Elevation (ft.)	Graphic Log	Visual Description and Remarks	Laboratory Testing Results/ AASHTO and Unified Class
0							SSA	45.20		-ASPHALT- 1.0	
								44.70		-CONCRETE-(with rebar) 1.5	
										Note: Description from auger cuttings: Brown, dry, fine to medium SAND, some gravel, little coarse sand, trace silt -FILL-(SW)	
								42.70		3.5	
								41.70		-CONCRETE- 4.5	
5	1D	24/12	5.0 - 7.0	3/2/3/3	5	5	5			Brown, moist, loose, fine to medium SAND, little coarse sand, little silt, little gravel -FILL-(SW)	
							6				
							20				
							36				
							20				
10	2D	24/4	10.0 - 12.0	16/7/7/8	14	14	33			Brown, moist, medium dense, medium to coarse SAND, some gravel, trace fine sand, trace silt -FILL-(SW)	
							23				
							14				
							14	32.20		14.0	
							29				
15	3D	24/20	15.0 - 17.0	10/9/19/50(5.0")	28	28	42			Brown-gray mottled, wet, very stiff, silty CLAY, little fine to coarse sand, little gravel (bedrock fragments) -MARINE DEPOSIT-(CL)	
							45	29.70		16.5	
								29.20		-WEATHERED BEDROCK- 17.0	
	R1	60/60	17.0 - 22.0	RQD = 50%			NQ Core			Top of Bedrock at El. 29.2 Note: Advanced roller bit to 17.0 ft. Seat casing at 17.0 ft. Gray, aphanitic PHYLLITE. Hard, fresh to slightly weathered, joints dipping at low to steep angles, very close to close, tight to open, planar to undulating, smooth to rough. Rock Mass Quality=Poor Recovery=100% -KITTERY FORMATION- R1 Core Times (min:sec): 17.0-18.0' (3:45), 18.0-19.0' (2:26), 19.0-20.0' (3:04), 20.0-21.0' (3:45), 21.0-22.0' (2:48)	
20								24.20		22.0 Bottom of Exploration at 22.0 feet below ground surface.	
30											

Remarks:
1. As-drilled coordinates of test borings determined by MaineDOT and provided in NAD 83(96) ME2000 West Zone coordinate system.
2. Hammer consisted of rope and cathead and safety hammer.
3. No elevated PID readings were detected during sample screening operations.
4. Water was introduced during the drilling process, therefore actual groundwater conditions were not observed at the time of drilling.

Stratification lines represent approximate boundaries between soil types; transitions may be gradual.
* Water level readings have been made at times and under conditions stated. Groundwater fluctuations may occur due to conditions other than those present at the time measurements were made.

Page 1 of 1
Boring No.: BB-KDH-203

Maine Department of Transportation
Soil/Rock Exploration Log
US CUSTOMARY UNITS

Project: US Route 1 Bypass over Route 236 Bridge
Location: Kittery, Maine

Boring No.: BB-KDH-204
PIN: 19283.00

Driller:	Maine Test Borings	Elevation (ft.)	32.1
Operator:	T. Schaefer	Datum:	NAVD 88
Logged By:	M. Snow	Rig Type:	Mobile B-53 Bombardier
Date Start/Finish:	8-15-13/8-15-13	Drilling Method:	NW Drive
Boring Location:	E885441, N97865 (See Plan)	Casing ID/OD:	NW-3.0 in. ID
Hammer Efficiency Factor: 0.6		Hammer Type:	Automatic ☐ Hydraulic ☐ Rope & Cathead ☒
Auger ID/OD:	--	Sampler:	Split Spoon-1.375 in. ID
Hammer Wt./Fall:	NW-300/241 S-140/30	Core Barrel:	NQ-2.0 in. ID
Water Level*:	None Observed		

Definitions:
D = Split Spoon Sample
MD = Unsuccessful Split Spoon Sample attempt
U = Thin Wall Tube Sample
MU = Unsuccessful Thin Wall Tube Sample attempt
V = Insitu Vane Shear Test
MV = Unsuccessful Insitu Vane Shear Test attempt
R = Rock Core Sample
SSA = Solid Stem Auger
HSA = Hollow Stem Auger
RC = Roller Cone
WOH = weight of 140lb. hammer
WOR = weight of rods
WOP = Weight of one person
S_u = Insitu Field Vane Shear Strength (psf)
T_v = Pocket Torvane Shear Strength (psf)
q_p = Unconfined Compressive Strength (ksf)
N-uncorrected = Raw field SPT N-value
Hammer Efficiency Factor = Annual Calibration Value
N_{60} = SPT N-uncorrected corrected for hammer efficiency
N_{60} = (Hammer Efficiency Factor/60%)*N-uncorrected
$S_{u(lab)}$ = Lab Vane Shear Strength (psf)
WC = water content, percent
LL = Liquid Limit
PL = Plastic Limit
PI = Plasticity Index
G = Grain Size Analysis
C = Consolidation Test

Sample Information

Depth (ft.)	Sample No.	Pen./Rec. (in.)	Sample Depth (ft.)	Blows (/6 in. Shear Strength (psf) or RQD (%)	N-uncorrected	N_{60}	Casing Blows	Elevation (ft.)	Graphic Log	Visual Description and Remarks	Laboratory Testing Results/ AASHTO and Unified Class
0	1D	24/4	0.0 - 2.0	2/5/7/9	12	12	PUSH	31.60		Dark brown, dry, stiff SILT, trace fine sand with roots -TOPSOIL-(OH) 0.5	
										-FILL-(SM)	
							20	28.10		Note: Silt, sand and gravel observed in wash water 0-4.0 ft. Clay observed in wash water 4.0-5.0 ft. 4.0	
							38				
5	2D	18/8	5.0 - 6.5	5/8/50	58	58	43			Brown, wet, hard, silty CLAY, trace fine and coarse sand (rock piece in spoon tip) -MARINE DEPOSIT-(CL)	
	R1	42/42	6.4 - 9.9	RQD = 14%			2916.0"	25.70		6.4 Top of Bedrock at El. 25.7 Gray, aphanitic PHYLLITE. Hard to soft, moderately severely weathered, highly fractured, joints dipping at low and steep angles, very close to close, open, planar to stepped, smooth to rough. Rock Mass Quality=Very Poor Recovery=100% R1 Core Times (min:sec): 6.4-7.4' (1:32), 7.4-8.4' (1:35), 8.4-9.4' (1:42), 9.4-9.9' (1:58) Gray, aphanitic PHYLLITE. Hard, moderately severely weathered, highly fractured, joints dipping at low and steep angles, very close, open, planar to stepped, smooth to rough. Rock Mass Quality=Very Poor Recovery=100% -KITTERY FORMATION- R2 Core Times (min:sec): 9.9-10.9' (1:47)	
							NQ Core				
	R2	12/12	9.9 - 10.9	RQD = 0%							
10								21.20		10.9 Bottom of Exploration at 10.9 feet below ground surface.	
30											

Remarks:
1. As-drilled coordinates of test borings determined by MaineDOT and provided in NAD 83(96) ME2000 West Zone coordinate system.
2. Hammer consisted of rope and cathead and safety hammer.
3. No elevated PID readings were detected during sample screening operations.
4. Water was introduced during the drilling process, therefore actual groundwater conditions were not observed at the time of drilling.

Stratification lines represent approximate boundaries between soil types; transitions may be gradual.
* Water level readings have been made at times and under conditions stated. Groundwater fluctuations may occur due to conditions other than those present at the time measurements were made.

Page 1 of 1
Boring No.: BB-KDH-204

McFarland Johnson

STATE OF MAINE
DEPARTMENT OF TRANSPORTATION
NHP-1928(300)
WIN 19283.00
BRIDGE NO. 3860
BRIDGE PLANS

PROJ. MANAGER	L. TIMBERLAKE	BY	DATE
DESIGN-DETAILED	D. Kull	P. Duslin	11/13
CHECKED-REVIEWED	T. Kendrick		11/13
DESIGN2-DETAILED2		SIGNATURE	
DESIGN3-DETAILED3			
REVISIONS 1		P.E. NUMBER	
REVISIONS 2			
REVISIONS 3		DATE	
REVISIONS 4			
FIELD CHANGES			

KITTERY OVERPASS BRIDGE
STATE ROUTE 236
KITTERY YORK COUNTY

BORING LOGS
(2 OF 2)

SHEET NUMBER
8
OF 49

Date:12/17/2013
Username:
Division:
Filename: ...\Drawings\007_Boring_Logs.dgn

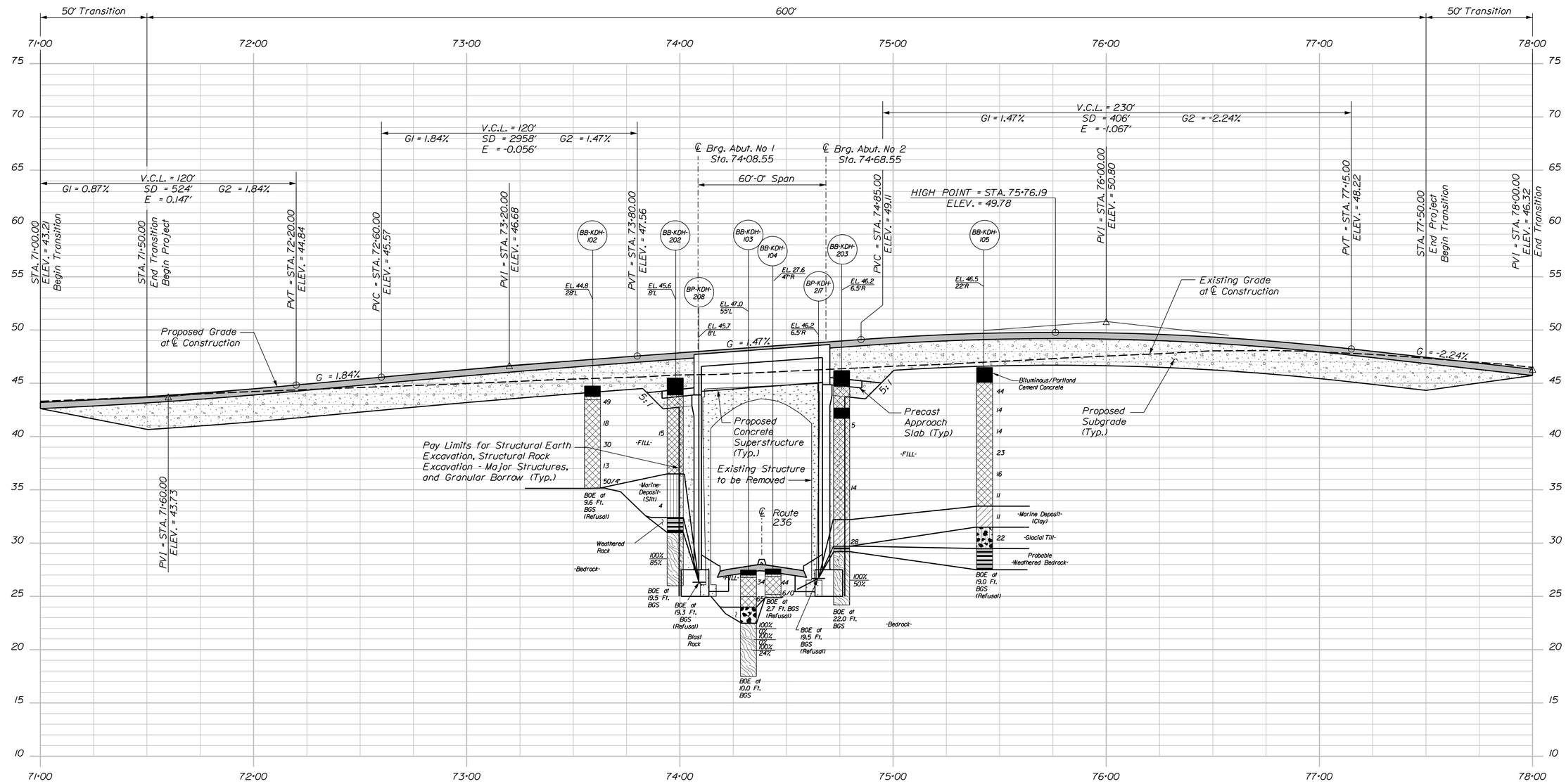

PROFILE

HORIZ. 25 0 25 50

VERT. 5 0 5 10

SCALE

LEGEND

BB-KDH-203	Test Boring or Probe designation
EL. 46.2 6.5'R	Ground surface elevation at Test Boring or Probe approximate perpendicular offset distance and direction measured from proposed centerline
	Corrected Standard Penetration Test (SPT) n-value (n60 blows per foot)
	50 blows, 4 inches of penetration
	Strata Interface
	Percent Recovery Percent Rock Quality designation (RQD)
BOE AT 22.0 FT BGS	Denotes Bottom of Exploration at approximate depth shown

NOTES

1. This generalized interpretive soil profile is intended to convey trends in subsurface conditions. The boundaries between strata are approximate and idealized, and have been developed by interpretations of widely spaced explorations and samples. Actual soil transitions may vary and are probably more erratic. For more specific information refer to the exploration logs.

HALEY & ALDRICH

McFarland Johnson

STATE OF MAINE
DEPARTMENT OF TRANSPORTATION

NHP-1928(300)

WIN 19283.00

BRIDGE NO. 3860

BRIDGE PLANS

SIGNATURE

P.E. NUMBER

DATE

PROJ. MANAGER	L. TIMBERLAKE	BY	DATE
DESIGN-DETAILED	D. Kull	P. Dustin	11/13
CHECKED-REVIEWED	T. Kendrick		11/13
DESIGN2-DETAILED2			
DESIGN3-DETAILED3			
REVISIONS 1			
REVISIONS 2			
REVISIONS 3			
REVISIONS 4			
FIELD CHANGES			

KITTERY OVERPASS BRIDGE
STATE ROUTE 236
KITTERY YORK COUNTY

INTERPRETIVE SUBSURFACE PROFILE

SHEET NUMBER

9

OF 49

Filename: ...\Drawings\009_GeoProfile.dgn Division: Username: Date:12/17/2013

Filename: ...\Drawings\010_Curb_plan.dgn Division: Username: Date:12/18/2013

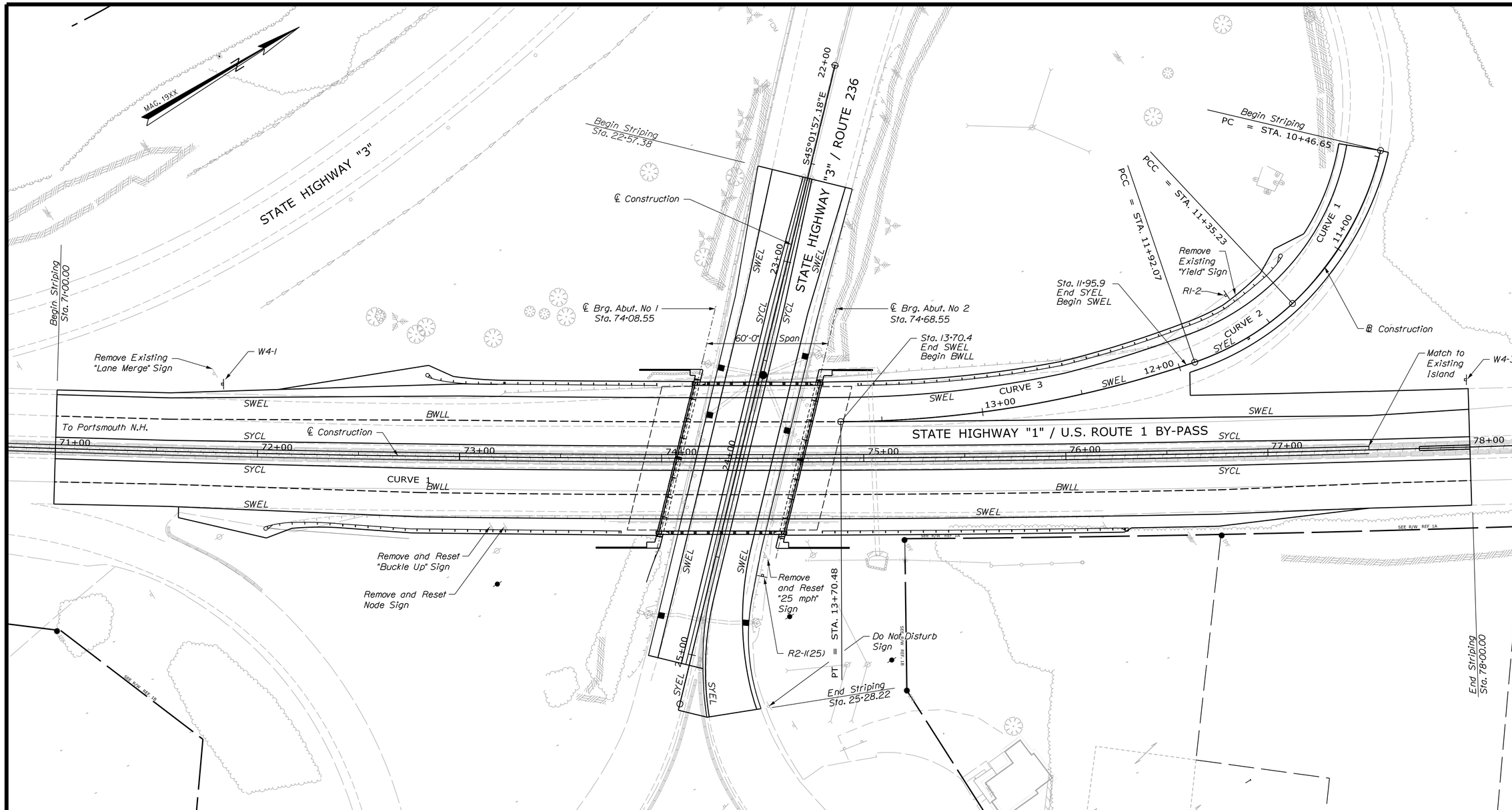

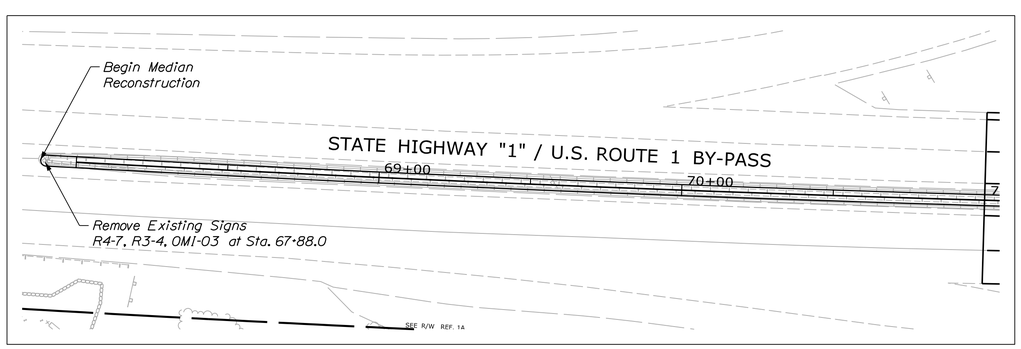

PLAN

25 0 25 50

Scale in Feet

CURB LAYOUT

ITEM 609.34 - CURB TYPE 5

STA. 67+88.0, LT. 2.0' TO STA. 77+50.0, LT. 2.0'
STA. 67+88.0, RT. 2.0' TO STA. 77+50.0, RT. 2.0'

ITEM 609.4 - RESET CURB TYPE 5

ROUTE 236 STA. 22+57.3, RT. 2.0' TO STA. 25+05.3, RT. 2.0'
ROUTE 236 STA. 22+57.3, RT. 2.0' TO STA. 25+28.2, LT. 14.7'

ITEM 609.11 - VERTICAL CURB TYPE 1

ROUTE 236 STA. 22+57.3, RT. 25.1' TO STA. 25+05.3, RT. 21.0'
ROUTE 236 STA. 22+57.3, LT. 22.6' TO STA. 25+17.9, LT. 39.4'

ITEM 609.1111 - SPECIAL GRANITE CURB - 39"

ROUTE 236 STA. 24+52.5, RT. 27.9' TO STA. 24+70.4, RT. 30.1'

LEGEND

SWEL	Solid White Edge Line
SYCL	Solid Yellow Center Line
BWLL	Broken White Lane Line
SYEL	Solid Yellow Edge Line

McFarland Johnson

STATE OF MAINE
DEPARTMENT OF TRANSPORTATION

NHP-1928(300)

WIN 19283.00

BRIDGE NO. 3860

BRIDGE PLANS

		BY	DATE
PROJ. MANAGER	L. TIMBERLAKE		
DESIGN-DETAILED	D. Kull	P. Dustin	11/13
CHECKED-REVIEWED	T. Kendrick		11/13
DESIGN2-DETAILED2			
DESIGN3-DETAILED3			
REVISIONS 1			
REVISIONS 2			
REVISIONS 3			
REVISIONS 4			
FIELD CHANGES			

SIGNATURE

P.E. NUMBER

DATE

KITTERY OVERPASS BRIDGE
STATE ROUTE 236
KITTERY YORK COUNTY

CURBING AND STRIPING PLAN

SHEET NUMBER

10

OF 49

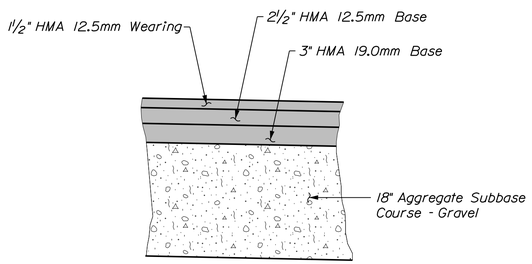

PAVEMENT WIDENING DETAIL

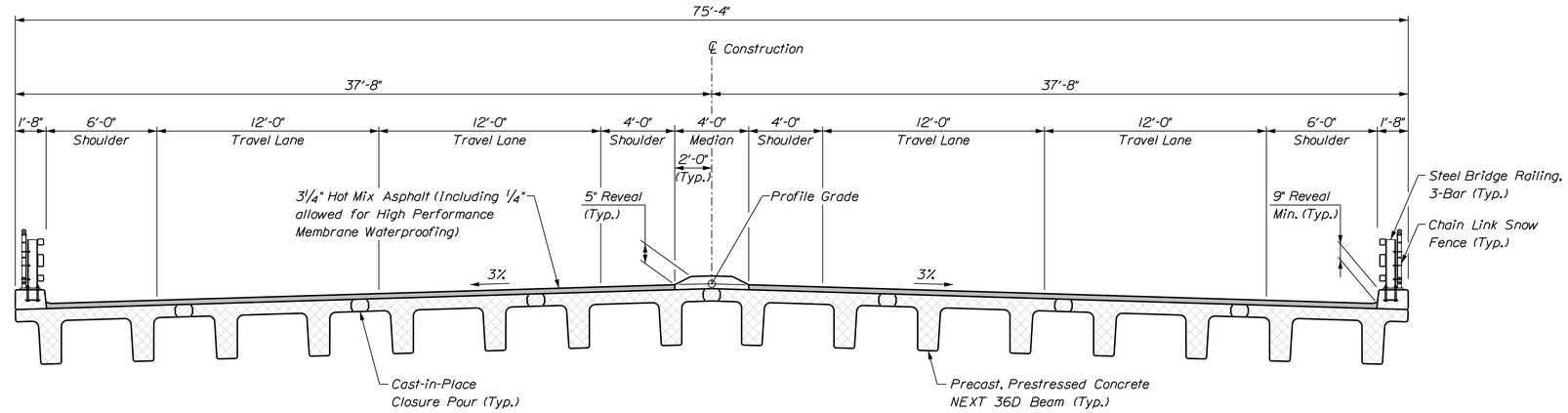

PROPOSED BRIDGE SECTION

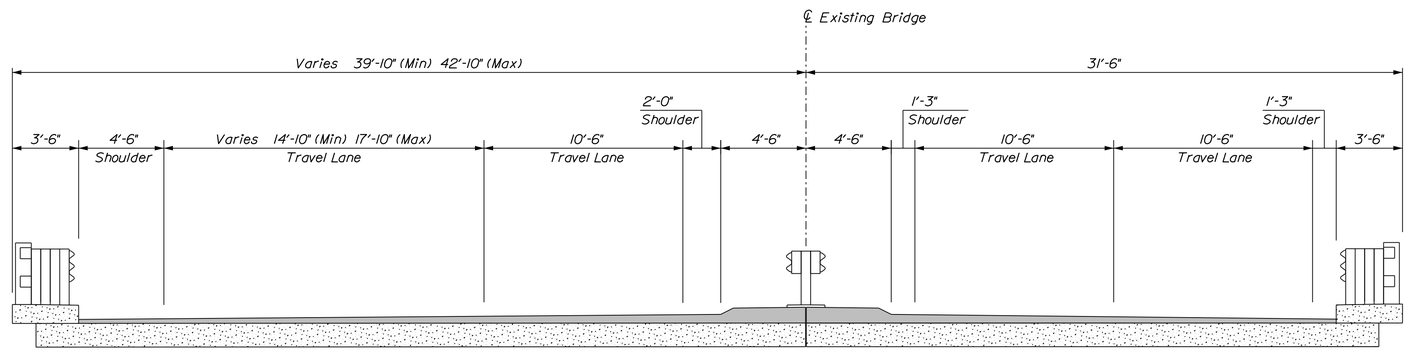

EXISTING BRIDGE SECTION

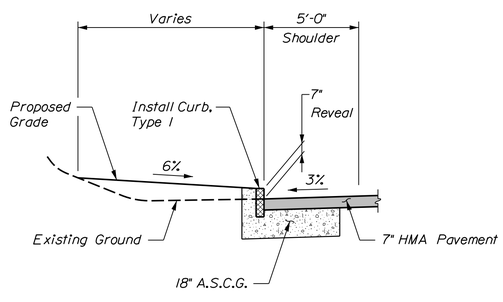

STATE ROUTE 236 BEYOND BRIDGE

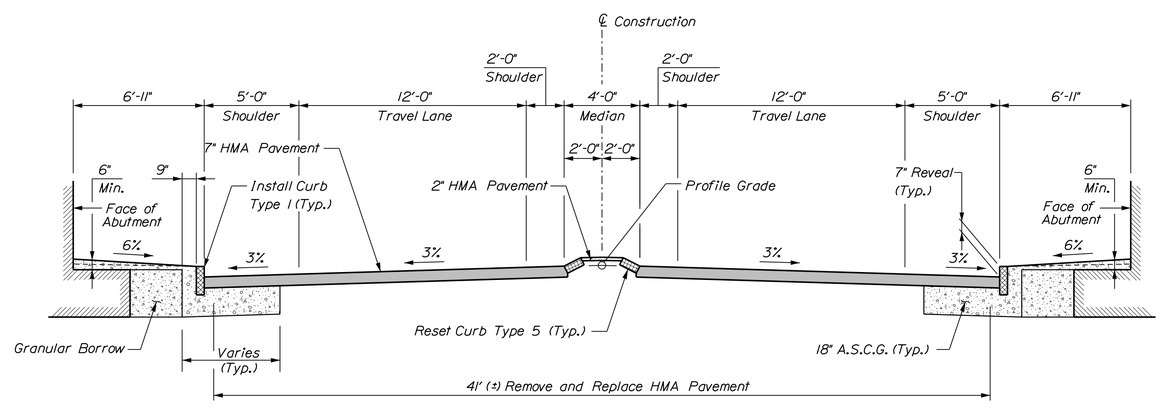

STATE ROUTE 236 BENEATH US ROUTE 1 BYPASS

LEGEND

- Cast-in-Place Concrete
- Pre-Cast Concrete

Date:12/17/2013 Username: Division: Filename: ...\Drawings\011_Typical_sect.dgn

STATE OF MAINE
DEPARTMENT OF TRANSPORTATION

NHP-1928(300)

WIN 19283.00

BRIDGE NO. 3860

BRIDGE PLANS

PROJ. MANAGER	L. TIMBERLAKE	BY	DATE
DESIGN-DETAILED	D. Kull	P. Dustin	11/13
CHECKED-REVIEWED	T. Kendrick		11/13
DESIGN2-DETAILED2			
DESIGN3-DETAILED3			
REVISIONS 1			
REVISIONS 2			
REVISIONS 3			
REVISIONS 4			
FIELD CHANGES			

SIGNATURE

P.E. NUMBER

DATE

KITTERY OVERPASS BRIDGE
STATE ROUTE 236
KITTERY YORK COUNTY

TYPICAL SECTIONS
(1 OF 2)

SHEET NUMBER
11
OF 49

McFarland Johnson

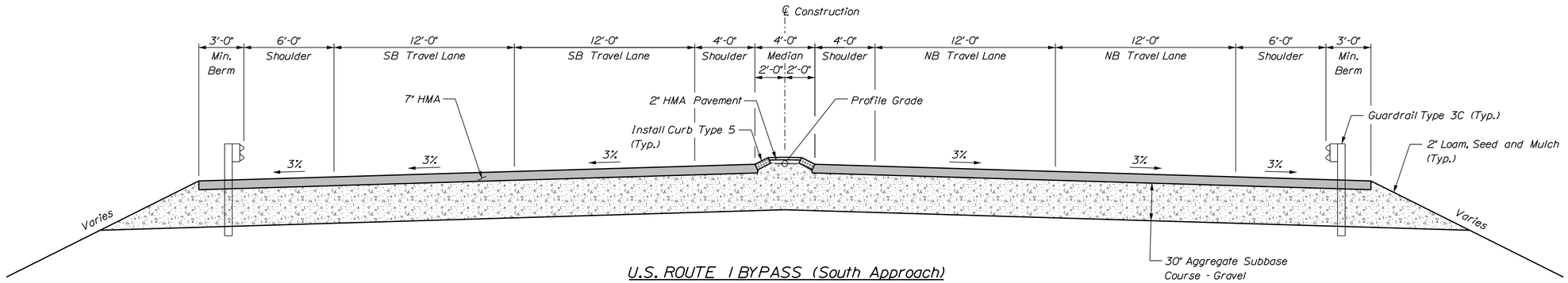

U.S. ROUTE 1 BYPASS (South Approach)

Sta. 71+50.00 to Bridge

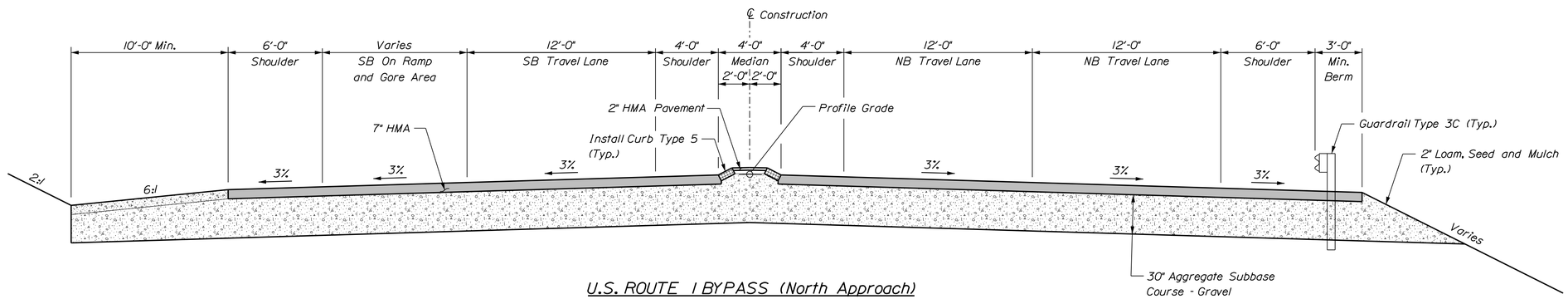

U.S. ROUTE 1 BYPASS (North Approach)

Bridge to Sta. 77+50.00

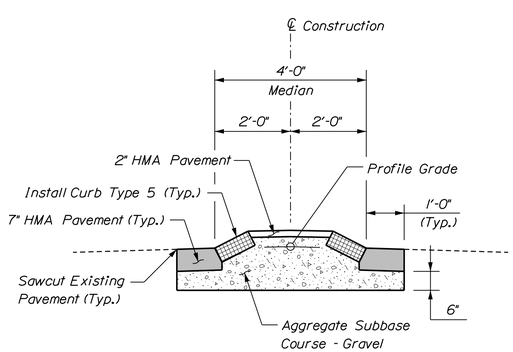

U.S. ROUTE 1 BYPASS (Median Reconstruction)

(Median Barrier not Shown for Clarity)

Sta. 67+87.59 to Sta. 71+50.00

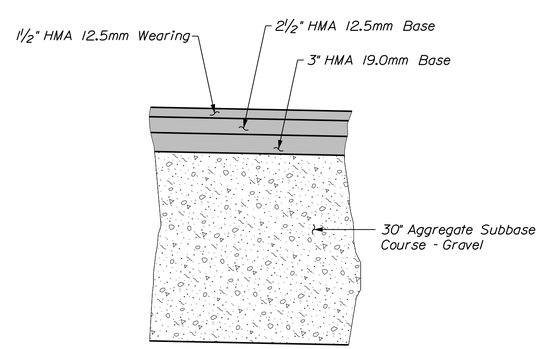

PAVEMENT DETAIL

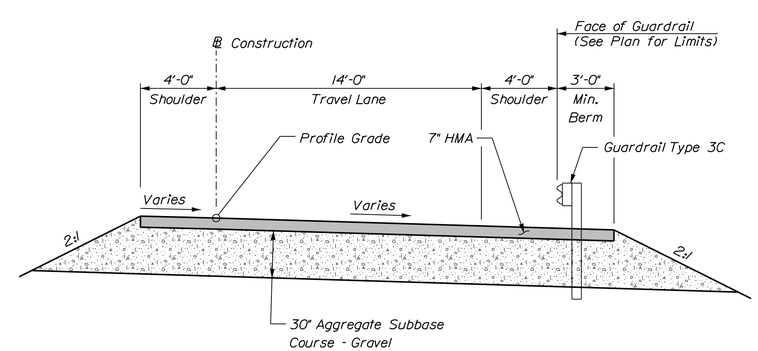

SB ON RAMP

Sta. 10+46.65 to Sta. 12+05.00

GENERAL NOTES

1. Remove existing Portland Cement Concrete Pavement on US Route 1 Bypass from Sta. 71+50.00 to Sta. 77+50.00.

McFarland Johnson

STATE OF MAINE
DEPARTMENT OF TRANSPORTATION

NHP-1928(300)

WIN 19283.00

BRIDGE NO. 3860

BRIDGE PLANS

SIGNATURE

P.E. NUMBER

DATE

		BY	DATE
PROJ. MANAGER	L. TIMBERLAKE		
DESIGN-DETAILED	D. Kull	P. Dustin	11/13
CHECKED-REVIEWED	T. Kendrick		11/13
DESIGN2-DETAILED2			
DESIGN3-DETAILED3			
REVISIONS 1			
REVISIONS 2			
REVISIONS 3			
REVISIONS 4			
FIELD CHANGES			

KITTERY OVERPASS BRIDGE
STATE ROUTE 236
KITTERY YORK COUNTY

TYPICAL SECTIONS
(2 OF 2)

SHEET NUMBER

12

OF 49

Filename: ...\Drawings\011_Typical_sect.dgn Division: Username: Date:12/17/2013

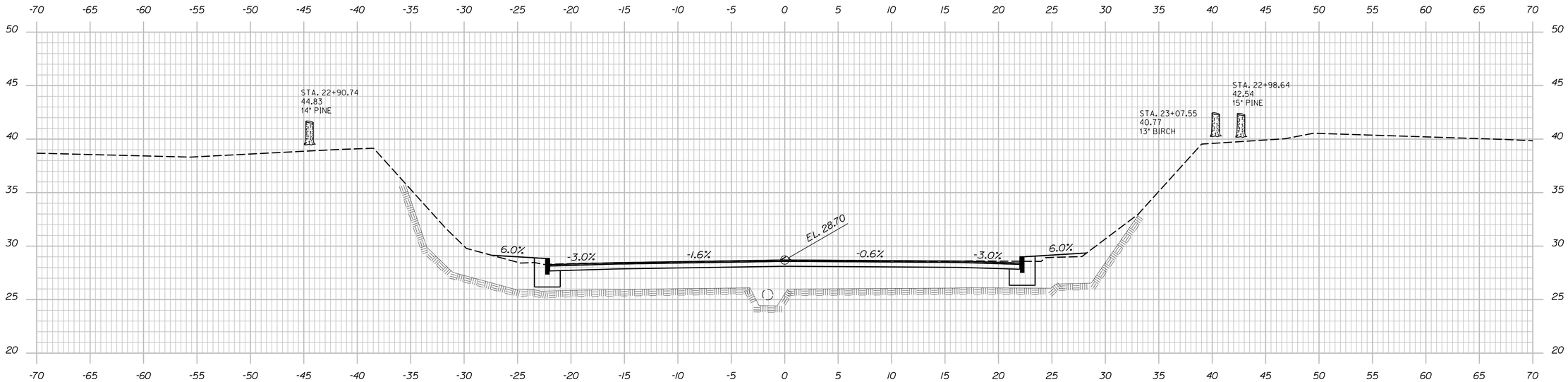

23+00.00

22+75.00

McFarland Johnson

STATE OF MAINE
DEPARTMENT OF TRANSPORTATION

NHP-1928(300)

WIN 19283.00

BRIDGE NO. 3860

BRIDGE PLANS

SIGNATURE

P.E. NUMBER

DATE

PROJ. MANAGER	L. TIMBERLAKE	BY	DATE
DESIGN-DETAILED	D. Kull	P. Dustin	11/13
CHECKED-REVIEWED	T. Kendrick		11/13
DESIGN2-DETAILED2			
DESIGN3-DETAILED3			
REVISIONS 1			
REVISIONS 2			
REVISIONS 3			
REVISIONS 4			
FIELD CHANGES			

KITTERY OVERPASS BRIDGE
STATE ROUTE 236
KITTERY YORK COUNTY

CROSS SECTIONS (RTE. 236) (1 OF 27)

SHEET NUMBER

13

OF 49

Date:12/17/2013

Username:

Division:

Filename: ...\013_Cross_Sections.dgn

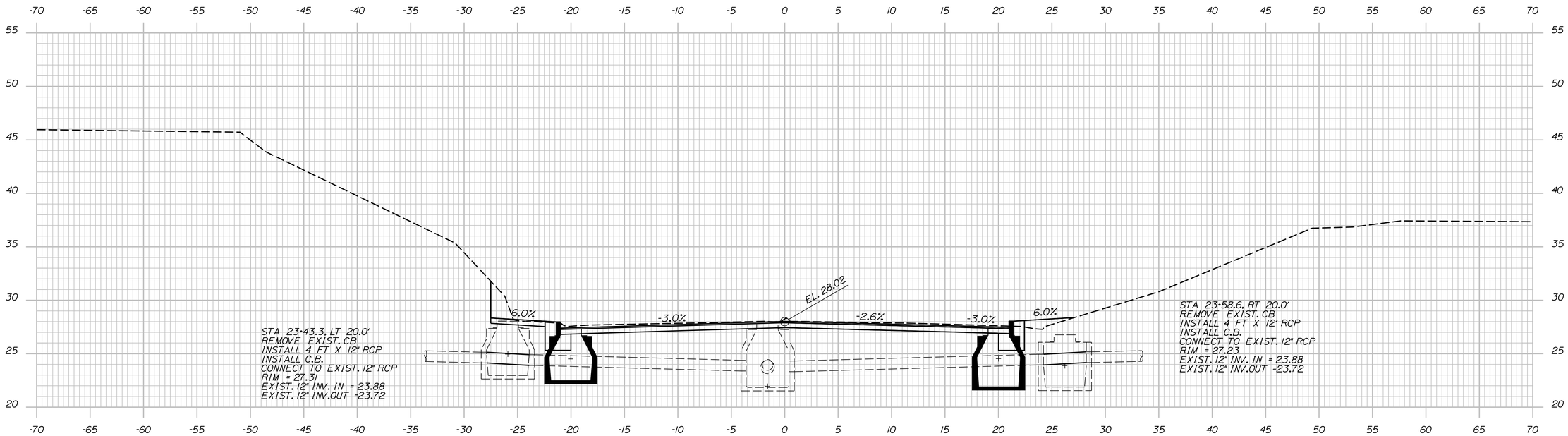

23+50.00

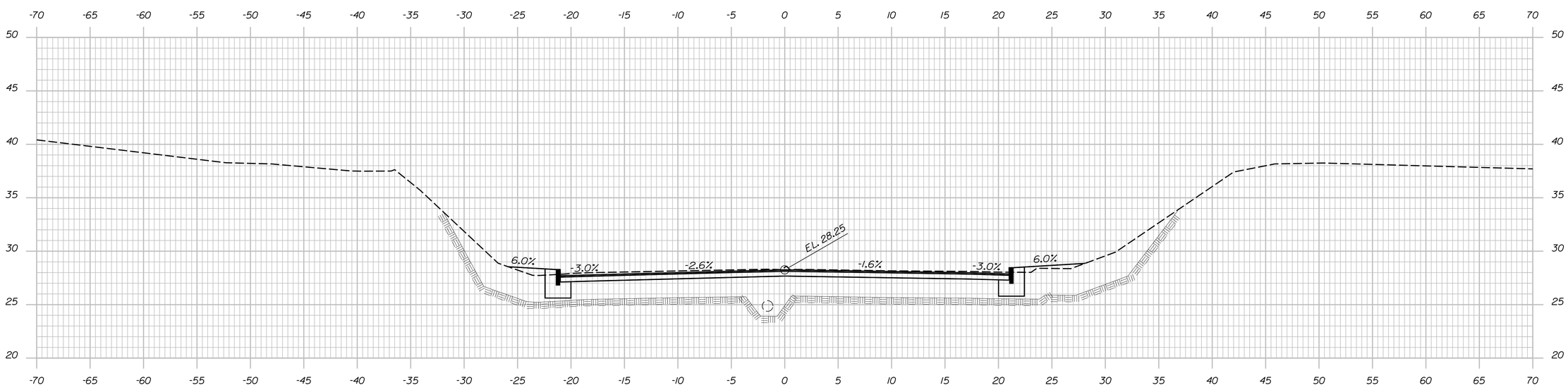

23+25.00

Date:12/17/2013

Username:

Division:

Filename: ...\013_Cross_Sections.dgn

STATE OF MAINE
DEPARTMENT OF TRANSPORTATION

NHP-1928(300)

WIN 19283.00

BRIDGE NO. 3860

BRIDGE PLANS

SIGNATURE

P.E. NUMBER

DATE

PROJ. MANAGER	L. TIMBERLAKE	BY	DATE
DESIGN-DETAILED	D. Kull	P. Dustin	11/13
CHECKED-REVIEWED	T. Kendrick		11/13
DESIGN2-DETAILED2			
DESIGN3-DETAILED3			
REVISIONS 1			
REVISIONS 2			
REVISIONS 3			
REVISIONS 4			
FIELD CHANGES			

KITTERY OVERPASS BRIDGE
STATE ROUTE 236
KITTERY YORK COUNTY

CROSS SECTIONS (RTE. 236)
(2 OF 27)

McFarland Johnson

SHEET NUMBER

14

OF 49

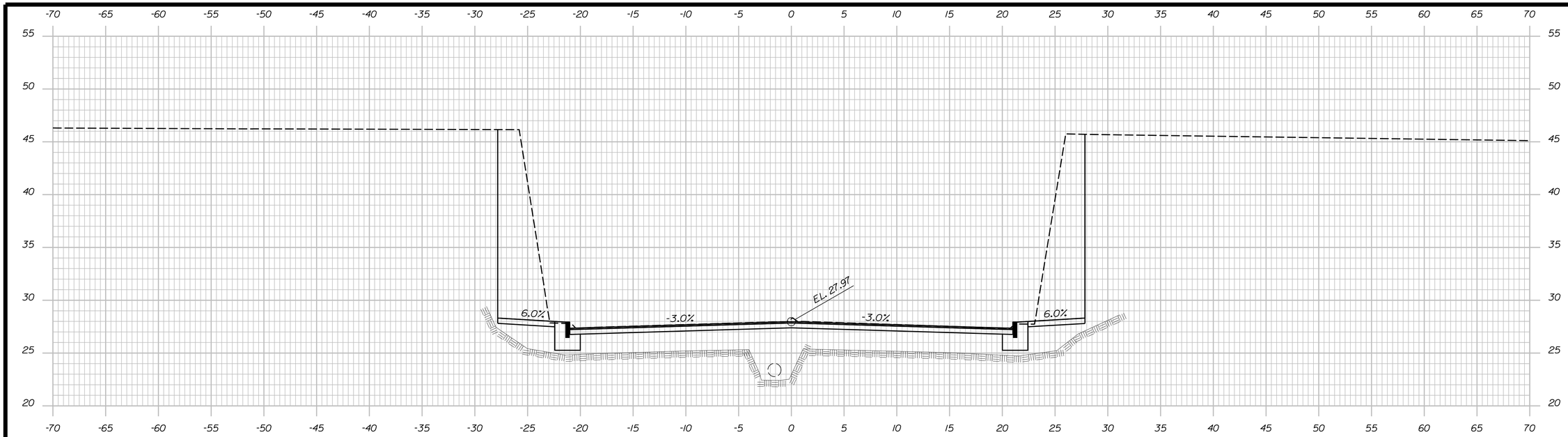

24+00.00

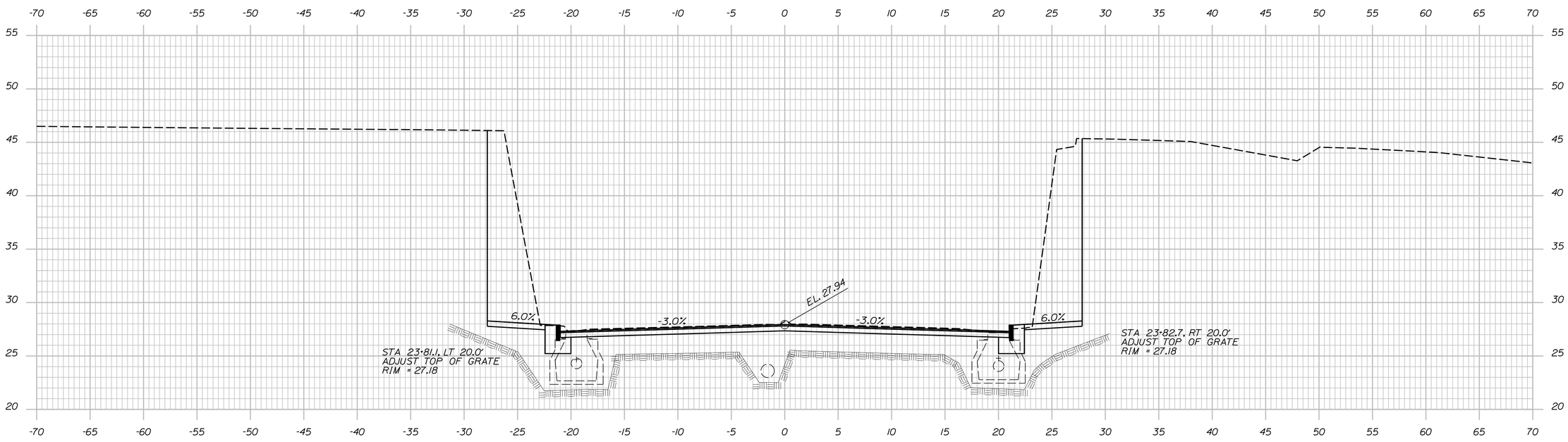

23+75.00

McFarland Johnson

STATE OF MAINE
DEPARTMENT OF TRANSPORTATION

NHP-1928(300)

WIN 19283.00

BRIDGE NO. 3860

BRIDGE PLANS

SIGNATURE

P.E. NUMBER

DATE

PROJ. MANAGER	L. TIMBERLAKE	BY	DATE
DESIGN-DETAILED	D. Kull	P. Dustin	11/13
CHECKED-REVIEWED	T. Kendrick		11/13
DESIGN2-DETAILED2			
DESIGN3-DETAILED3			
REVISIONS 1			
REVISIONS 2			
REVISIONS 3			
REVISIONS 4			
FIELD CHANGES			

KITTERY OVERPASS BRIDGE
STATE ROUTE 236
KITTERY YORK COUNTY

CROSS SECTIONS (RTE. 236) (3 OF 27)

SHEET NUMBER

15

OF 49

Date:12/17/2013

Username:

Division:

Filename: ...\013_Cross_Sections.dgn

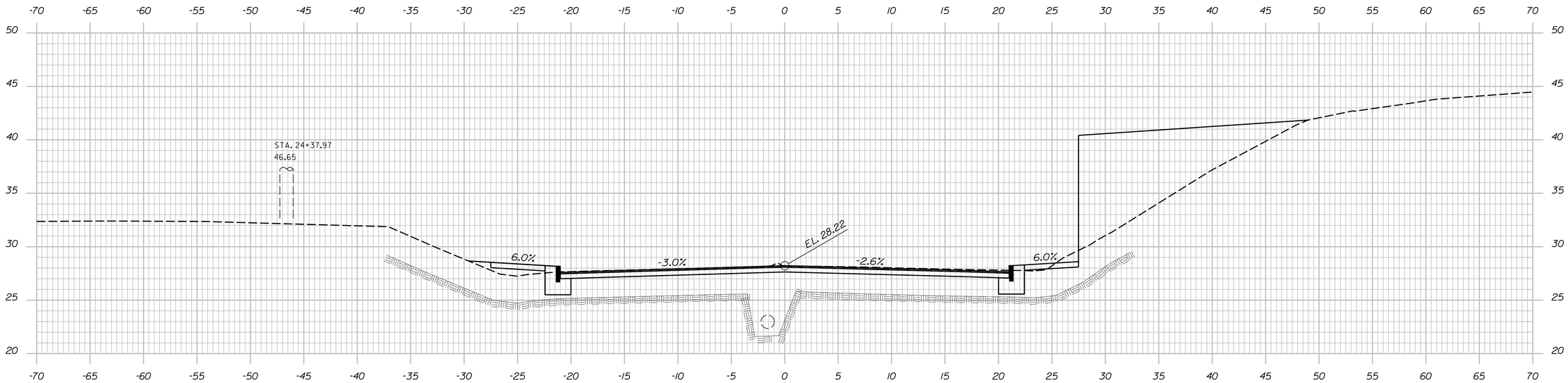

24+50.00

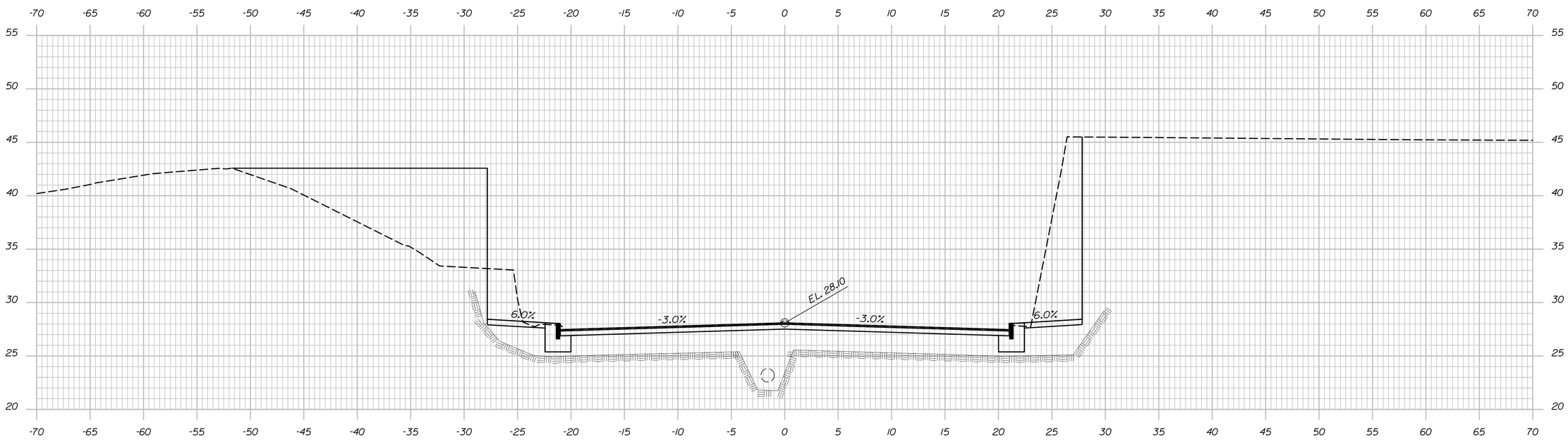

24+25.00

Date:12/17/2013

Username:

Division:

Filename: ...\013_Cross_Sections.dgn

STATE OF MAINE
DEPARTMENT OF TRANSPORTATION

NHP-1928(300)

WIN 19283.00

BRIDGE NO. 3860

BRIDGE PLANS

SIGNATURE

P.E. NUMBER

DATE

		BY	DATE
PROJ. MANAGER	L. TIMBERLAKE		
DESIGN-DETAILED	D. Kull	P. Dustin	11/13
CHECKED-REVIEWED	T. Kendrick		11/13
DESIGN2-DETAILED2			
DESIGN3-DETAILED3			
REVISIONS 1			
REVISIONS 2			
REVISIONS 3			
REVISIONS 4			
FIELD CHANGES			

KITTERY OVERPASS BRIDGE
STATE ROUTE 236
KITTERY YORK COUNTY

CROSS SECTIONS (RTE. 236)
(4 OF 27)

SHEET NUMBER

16

OF 49

McFarland Johnson

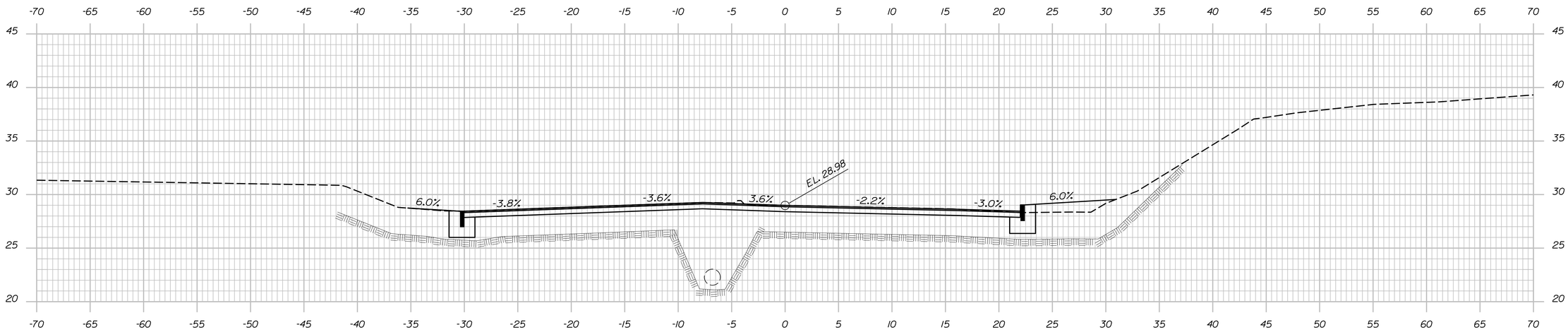

25+00.00

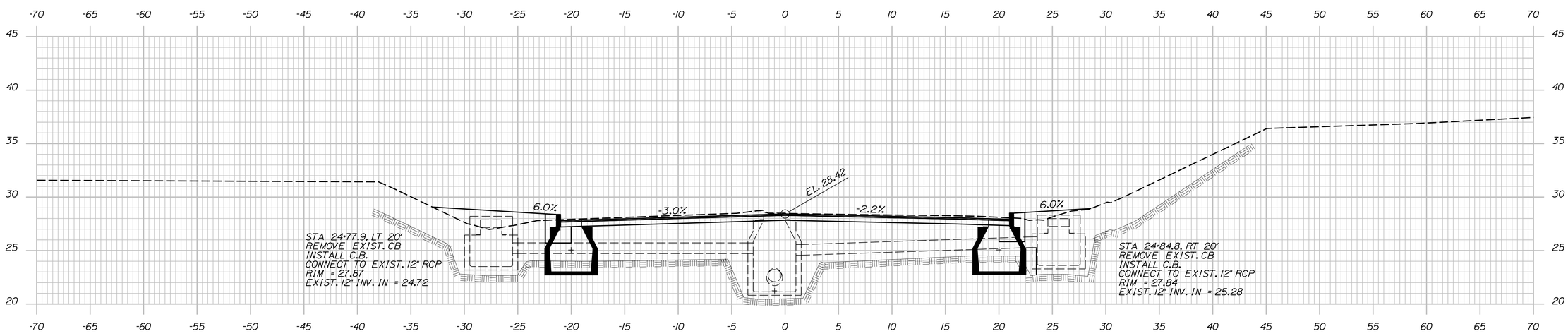

24+75.00

McFarland Johnson

STATE OF MAINE
DEPARTMENT OF TRANSPORTATION

NHP-1928(300)

WIN 19283.00

BRIDGE NO. 3860

BRIDGE PLANS

SIGNATURE

P.E. NUMBER

DATE

PROJ. MANAGER	L. TIMBERLAKE	BY	DATE
DESIGN-DETAILED	D. Kull	P. Dustin	11/13
CHECKED-REVIEWED	T. Kendrick		11/13
DESIGN2-DETAILED2			
DESIGN3-DETAILED3			
REVISIONS 1			
REVISIONS 2			
REVISIONS 3			
REVISIONS 4			
FIELD CHANGES			

KITTERY OVERPASS BRIDGE
STATE ROUTE 236
KITTERY YORK COUNTY

CROSS SECTIONS (RTE. 236) (5 OF 27)

SHEET NUMBER

17

OF 49

Filename: ...\013_Cross_Sections.dgn Division: Username: Date:12/17/2013

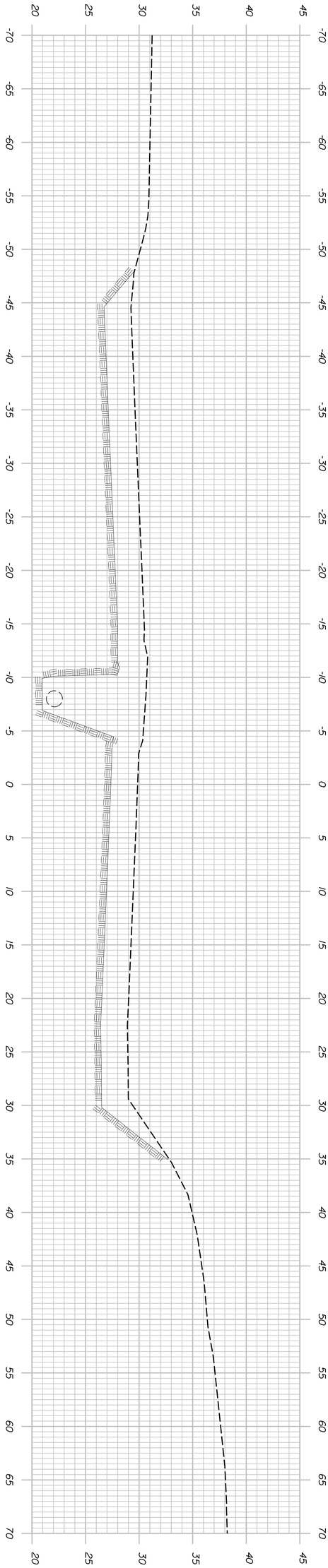

25+25.00

McFarland Johnson

SHEET NUMBER 18 OF 49	KITTERY OVERPASS BRIDGE STATE ROUTE 236 KITTERY YORK COUNTY CROSS SECTIONS (RTE. 236) (6 OF 27)	PROJ. MANAGER L. TIMBERLAKE / BY / DATE DESIGN-DETAILED CHECKED-REVIEWED DESIGN2-DETAILED2 DESIGN3-DETAILED3 REVISIONS 1 REVISIONS 2 REVISIONS 3 REVISIONS 4 FIELD CHANGES	SIGNATURE P.E. NUMBER DATE	STATE OF MAINE DEPARTMENT OF TRANSPORTATION NHP-1928(300) WIN BRIDGE NO. 3860 19283.00 BRIDGE PLANS

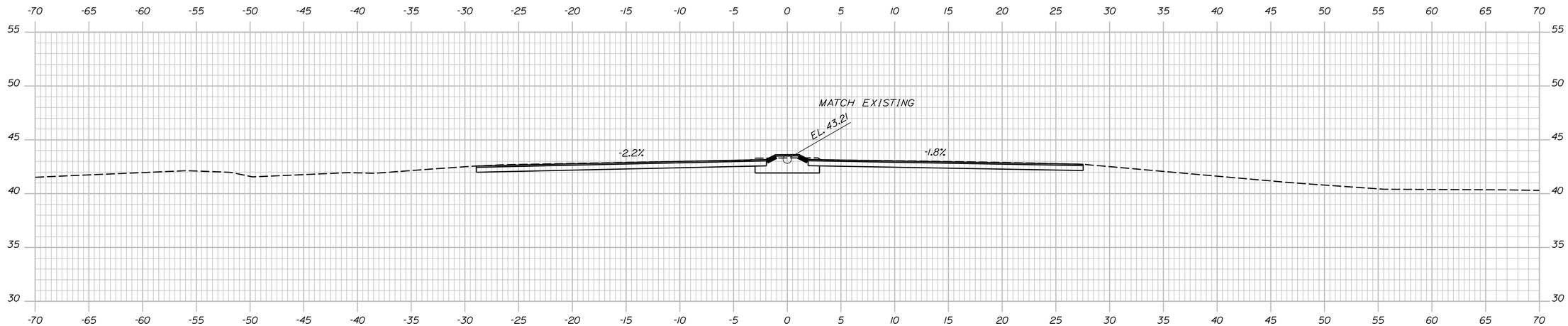

71+00.00

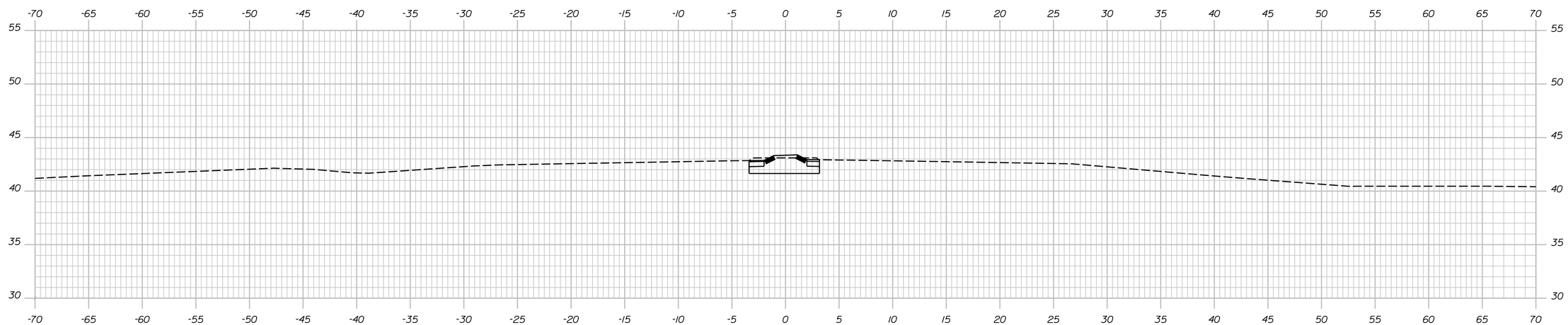

70+75.00

STATE OF MAINE
DEPARTMENT OF TRANSPORTATION

NHP-1928(300)

WIN 19283.00

BRIDGE NO. 3860

BRIDGE PLANS

PROJ. MANAGER	L. TIMBERLAKE	BY	DATE
DESIGN-DETAILED	$designer1$	$detailer1$	$projdate1$
CHECKED-REVIEWED	E. McCarthy	T. Kendrick	5\13
DESIGN2-DETAILED2	$designer2$	$detailer2$	$projdate2$
DESIGN3-DETAILED3	$designer3$	$detailer3$	$projdate3$
REVISIONS 1	------		$revdate1$
REVISIONS 2	------		$revdate2$
REVISIONS 3	$revision3$		$revdate3$
REVISIONS 4	$revision4$		$revdate4$
FIELD CHANGES	$fieldchange$		$fielddate$

SIGNATURE

P.E. NUMBER

DATE

KITTERY OVERPASS BRIDGE
STATE ROUTE 236
KITTERY YORK COUNTY

CROSS SECTIONS (RTE. 1 BYP)
(7 OF 27)

SHEET NUMBER
19
OF 49

Date:12/17/2013

Username:

Division:

Filename: ...\0f3_Cross_Sections.dgn

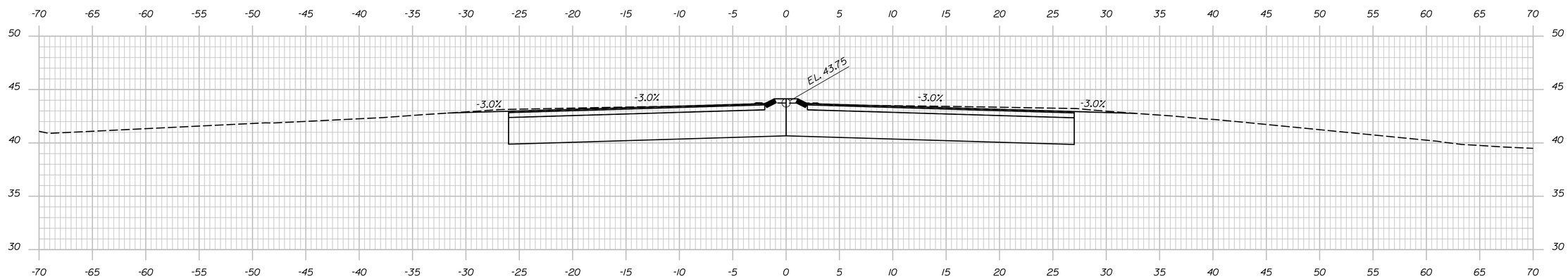

71+50.00

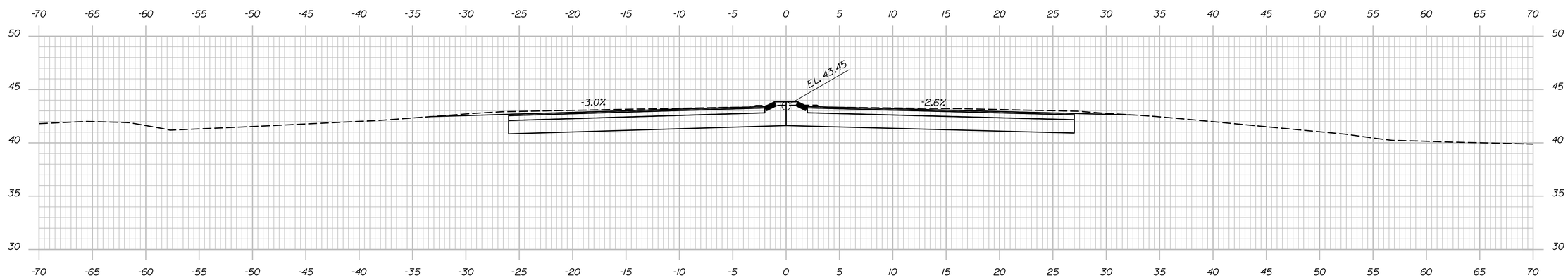

71+25.00

McFarland Johnson

STATE OF MAINE
DEPARTMENT OF TRANSPORTATION

NHP-1928(300)

WIN 19283.00

BRIDGE NO. 3860

BRIDGE PLANS

PROJ. MANAGER	L. TIMBERLAKE		
DESIGN-DETAILED	D. Kull	BY	DATE
CHECKED-REVIEWED	T. Kendrick	P. Duslin	11/13
DESIGN2-DETAILED2			11/13
DESIGN3-DETAILED3			
REVISIONS 1			
REVISIONS 2			
REVISIONS 3			
REVISIONS 4			
FIELD CHANGES			

SIGNATURE

P.E. NUMBER

DATE

KITTERY OVERPASS BRIDGE
STATE ROUTE 236
KITTERY YORK COUNTY

CROSS SECTIONS (RTE. 1 BYP)
(8 OF 27)

SHEET NUMBER
20
OF 49

Date:12/17/2013

Username:

Division:

Filename: ...\013_Cross_Sections.dgn

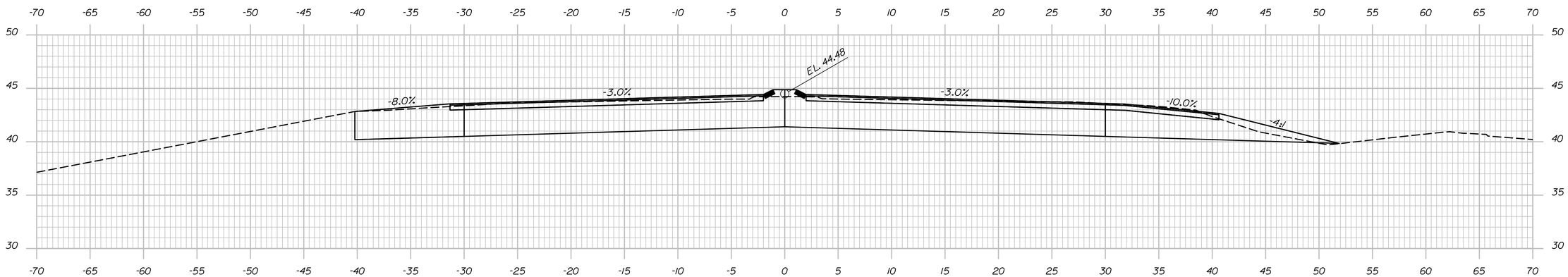

72+00.00

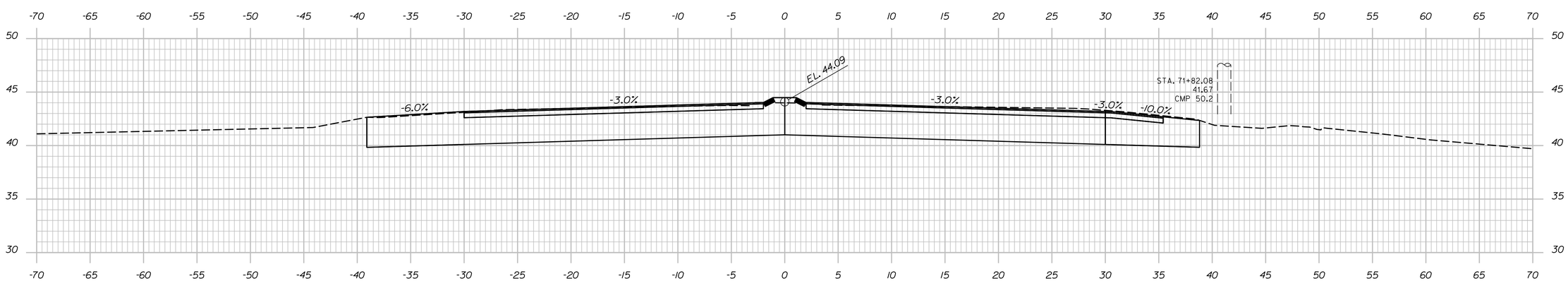

71+75.00

McFarland Johnson

STATE OF MAINE
DEPARTMENT OF TRANSPORTATION

NHP-1928(300)

WIN 19283.00

BRIDGE NO. 3860

BRIDGE PLANS

		BY	DATE
PROJ. MANAGER	L. TIMBERLAKE		
DESIGN-DETAILED	D. Kull	P. Dustin	11/13
CHECKED-REVIEWED	T. Kendrick		11/13
DESIGN2-DETAILED2			
DESIGN3-DETAILED3			
REVISIONS 1			
REVISIONS 2			
REVISIONS 3			
REVISIONS 4			
FIELD CHANGES			

SIGNATURE

P.E. NUMBER

DATE

KITTERY OVERPASS BRIDGE
STATE ROUTE 236
YORK COUNTY
KITTERY

CROSS SECTIONS (RTE. 1 BYP)
(9 OF 27)

SHEET NUMBER
21
OF 49

Date:12/17/2013 Username: Division: Filename: ...\013_Cross_Sections.dgn

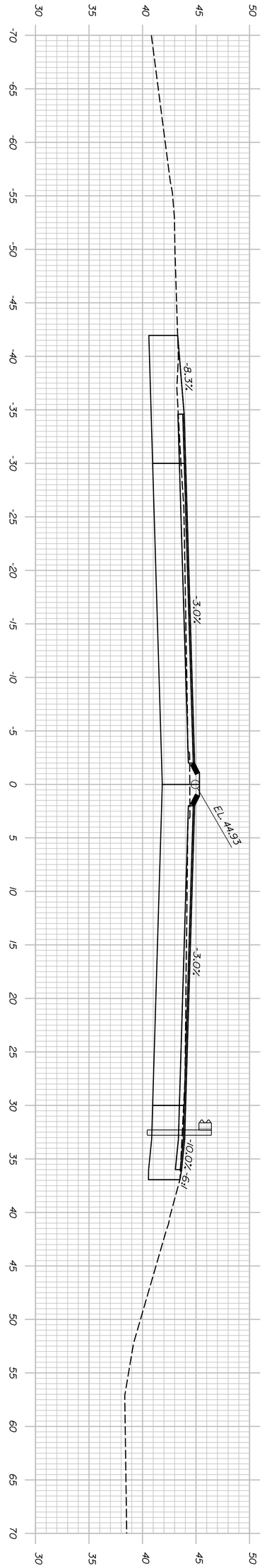

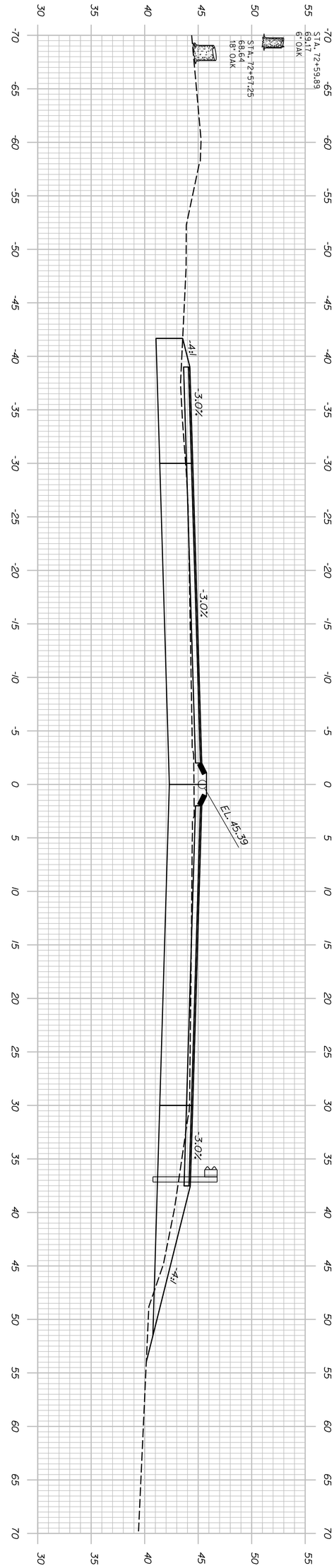

McFarland Johnson

PROJ. MANAGER	L. TIMBERLAKE	BY	DATE	
DESIGN-DETAILED	D. Kull	P. Dustin	11/13	
CHECKED-REVIEWED	T. Kendrick		11/13	SIGNATURE
DESIGN2-DETAILED2				
DESIGN3-DETAILED3				P.E. NUMBER
REVISIONS 1				
REVISIONS 2				
REVISIONS 3				DATE
REVISIONS 4				
FIELD CHANGES				

KITTERY OVERPASS BRIDGE
STATE ROUTE 236
KITTERY YORK COUNTY

CROSS SECTIONS (RTE. 1 BYP) (10 OF 27)

STATE OF MAINE
DEPARTMENT OF TRANSPORTATION

NHP-1928(300)

BRIDGE NO. 3860 WIN 19283.00 BRIDGE PLANS

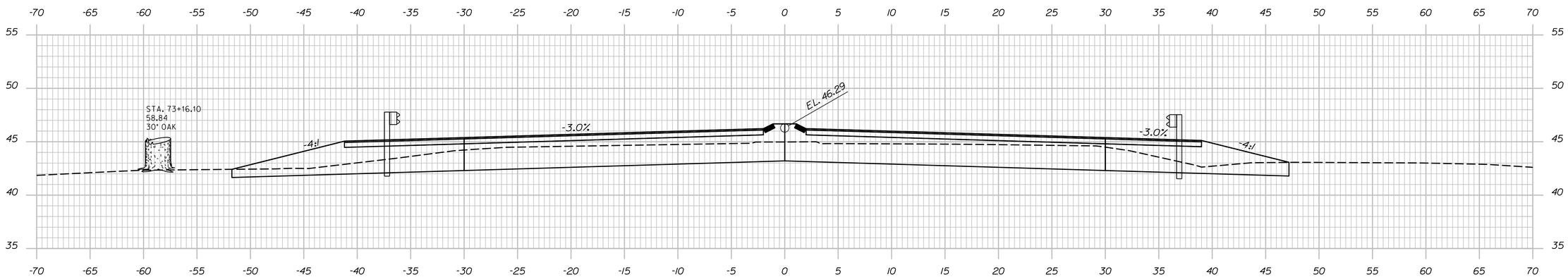

73+00.00

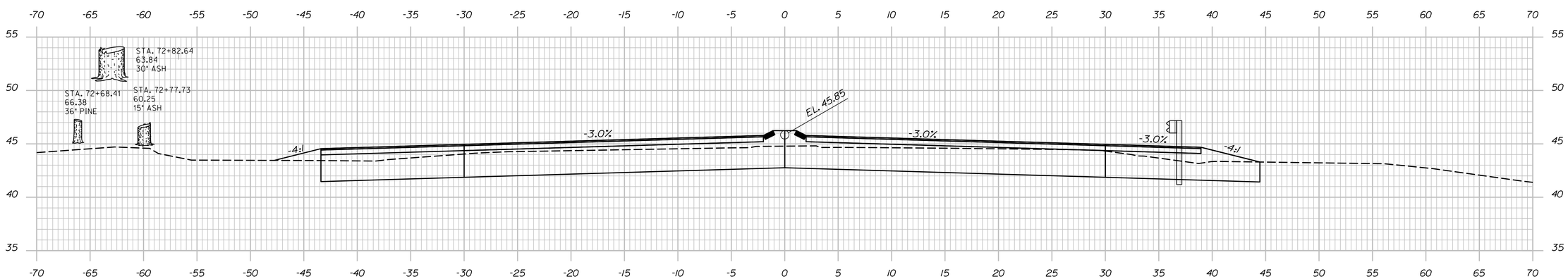

72+75.00

McFarland Johnson

STATE OF MAINE
DEPARTMENT OF TRANSPORTATION

NHP-1928(300)

WIN 19283.00

BRIDGE NO. 3860

BRIDGE PLANS

SIGNATURE

P.E. NUMBER

DATE

		BY	DATE
PROJ. MANAGER	L. TIMBERLAKE		
DESIGN-DETAILED	D. Kull	P. Dustin	11/13
CHECKED-REVIEWED	T. Kendrick		11/13
DESIGN2-DETAILED2			
DESIGN3-DETAILED3			
REVISIONS 1			
REVISIONS 2			
REVISIONS 3			
REVISIONS 4			
FIELD CHANGES			

KITTERY OVERPASS BRIDGE
STATE ROUTE 236
KITTERY YORK COUNTY

CROSS SECTIONS (RTE. 1 BYP)
(11 OF 27)

SHEET NUMBER
23
OF 49

Filename: ...\013_Cross_Sections.dgn Division: Username: Date:12/17/2013

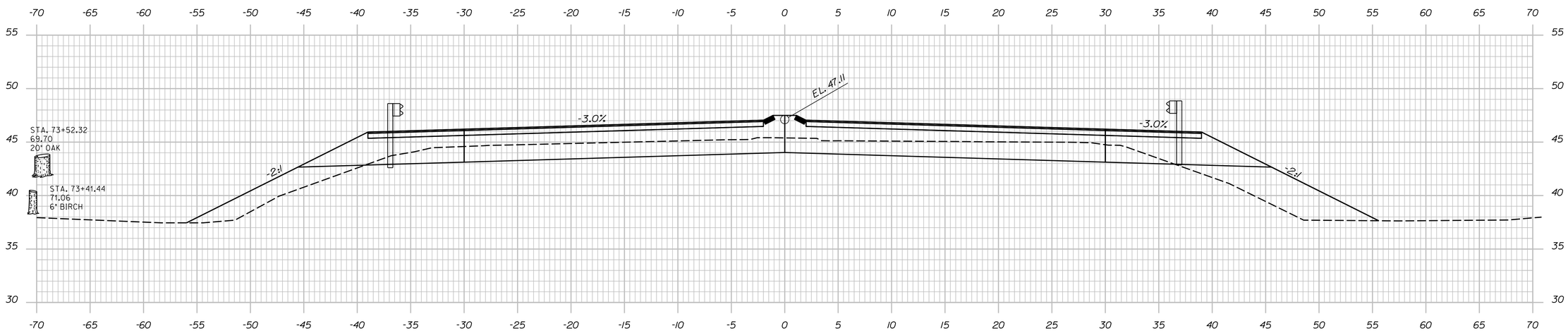

73+50.00

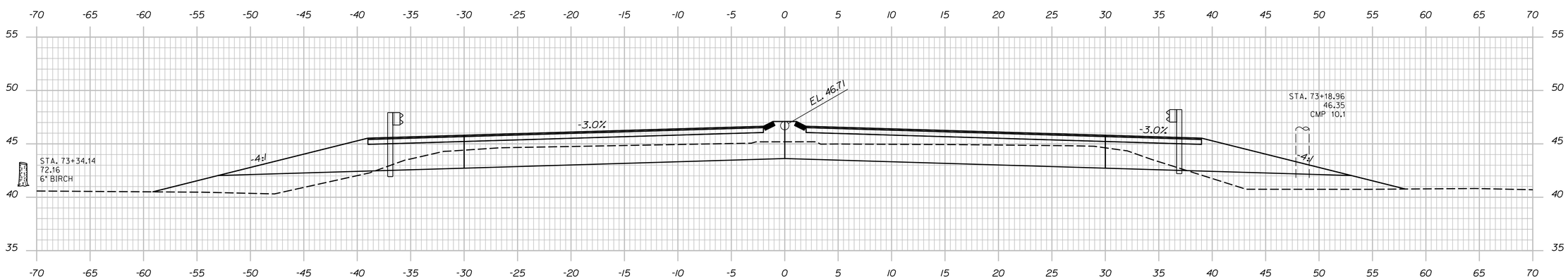

73+25.00

McFarland Johnson

STATE OF MAINE
DEPARTMENT OF TRANSPORTATION

NHP-1928(300)

WIN 19283.00

BRIDGE NO. 3860

BRIDGE PLANS

		BY	DATE
PROJ. MANAGER	L. TIMBERLAKE		
DESIGN-DETAILED	D. Kull	P. Dustin	11/13
CHECKED-REVIEWED	T. Kendrick		11/13
DESIGN2-DETAILED2			
DESIGN3-DETAILED3			
REVISIONS 1			
REVISIONS 2			
REVISIONS 3			
REVISIONS 4			
FIELD CHANGES			

SIGNATURE

P.E. NUMBER

DATE

KITTERY OVERPASS BRIDGE
STATE ROUTE 236
KITTERY YORK COUNTY

CROSS SECTIONS (RTE. 1 BYP)
(12 OF 27)

SHEET NUMBER

24

OF 49

Date:12/17/2013 Username: Division: Filename: ...\013_Cross_Sections.dgn

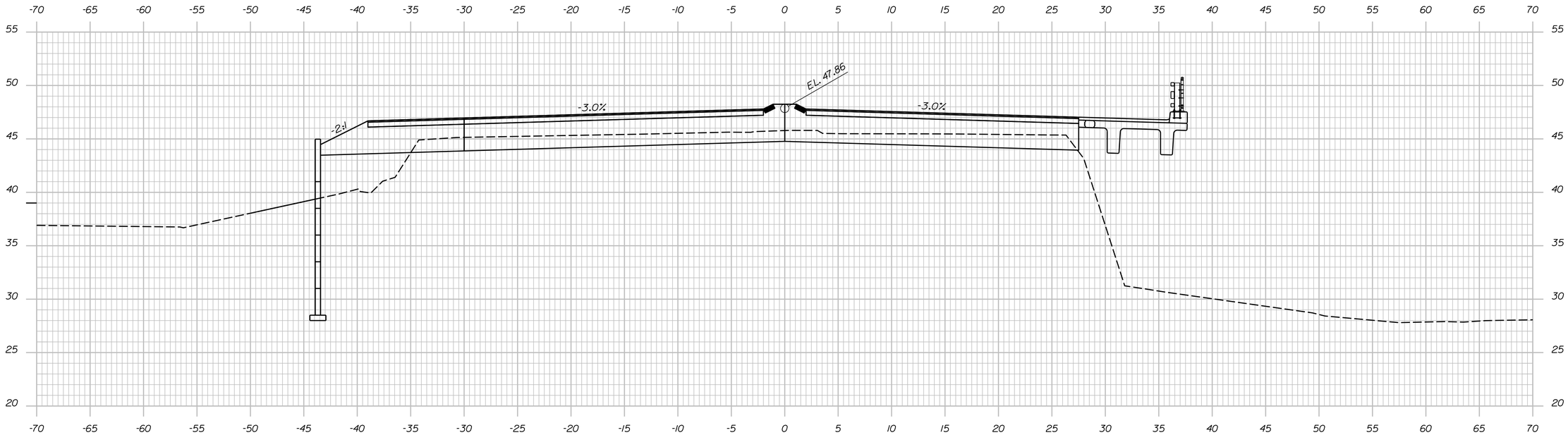

74+00.00

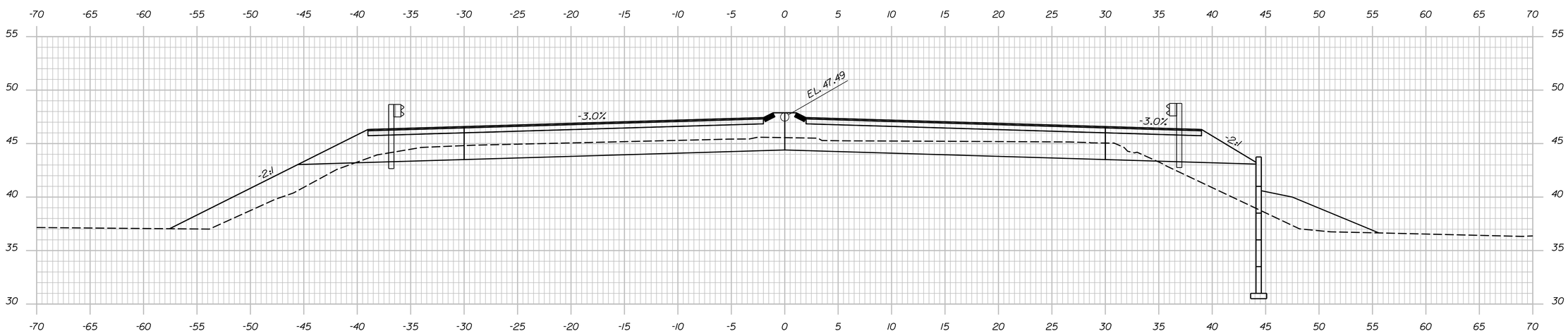

73+75.00

McFarland Johnson

STATE OF MAINE
DEPARTMENT OF TRANSPORTATION

NHP-1928(300)

WIN 19283.00

BRIDGE NO. 3860

BRIDGE PLANS

PROJ. MANAGER	L. TIMBERLAKE	BY	DATE
DESIGN-DETAILED	D. Kull	P. Dustin	11/13
CHECKED-REVIEWED	T. Kendrick		11/13
DESIGN2-DETAILED2			
DESIGN3-DETAILED3			
REVISIONS 1			
REVISIONS 2			
REVISIONS 3			
REVISIONS 4			
FIELD CHANGES			

SIGNATURE

P.E. NUMBER

DATE

KITTERY OVERPASS BRIDGE
STATE ROUTE 236
KITTERY YORK COUNTY

CROSS SECTIONS (RTE. 1 BYP)
(13 OF 27)

SHEET NUMBER
25
OF 49

Date:12/17/2013

Username:

Division:

Filename: ...\013_Cross_Sections.dgn

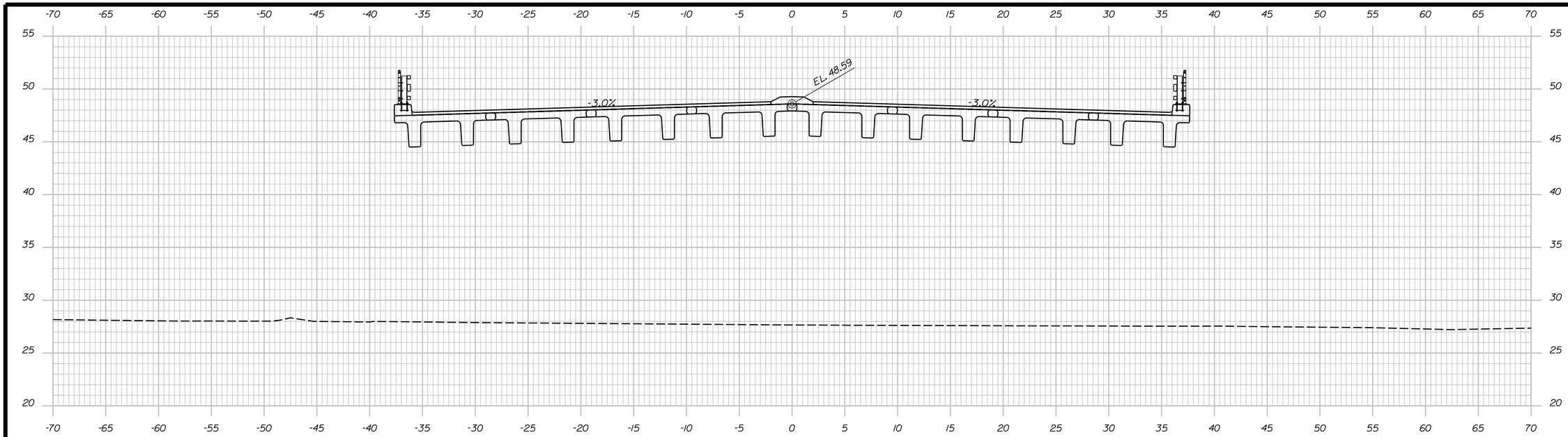

74+50.00

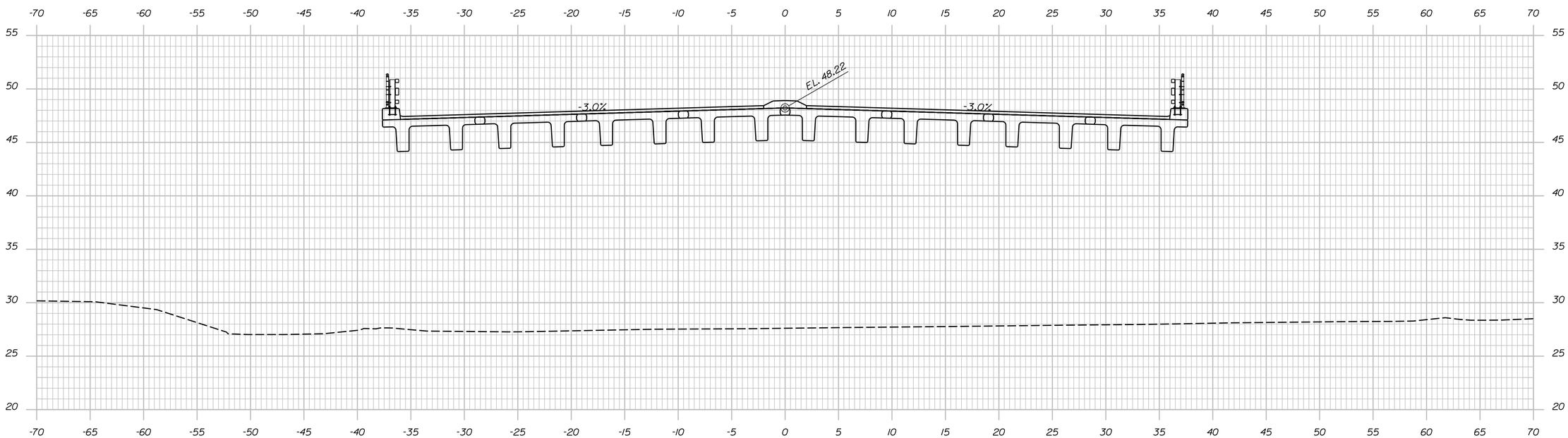

74+25.00

McFarland Johnson

STATE OF MAINE
DEPARTMENT OF TRANSPORTATION

NHP-1928(300)

WIN 19283.00

BRIDGE NO. 3860

BRIDGE PLANS

SIGNATURE

P.E. NUMBER

DATE

		BY	DATE
PROJ. MANAGER	L. TIMBERLAKE		
DESIGN-DETAILED	D. Kull	P. Dustin	11/13
CHECKED-REVIEWED	T. Kendrick		11/13
DESIGN2-DETAILED2			
DESIGN3-DETAILED3			
REVISIONS 1			
REVISIONS 2			
REVISIONS 3			
REVISIONS 4			
FIELD CHANGES			

KITTERY OVERPASS BRIDGE
STATE ROUTE 236
KITTERY YORK COUNTY

CROSS SECTIONS (RTE. 1 BYP)
(14 OF 27)

SHEET NUMBER
26
OF 49

Filename: ...\013_Cross_Sections.dgn Division: Username: Date:12/17/2013

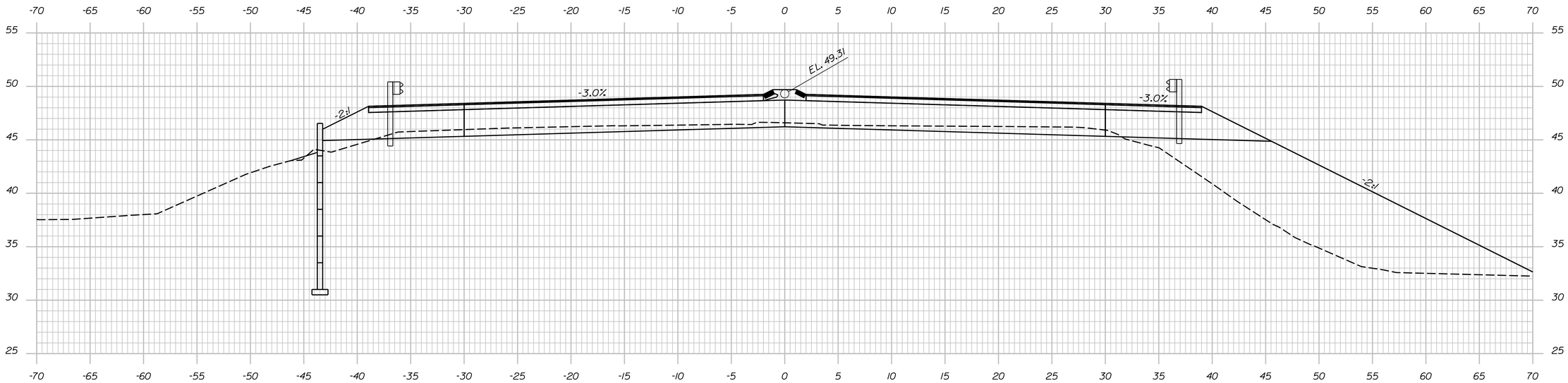

75+00.00

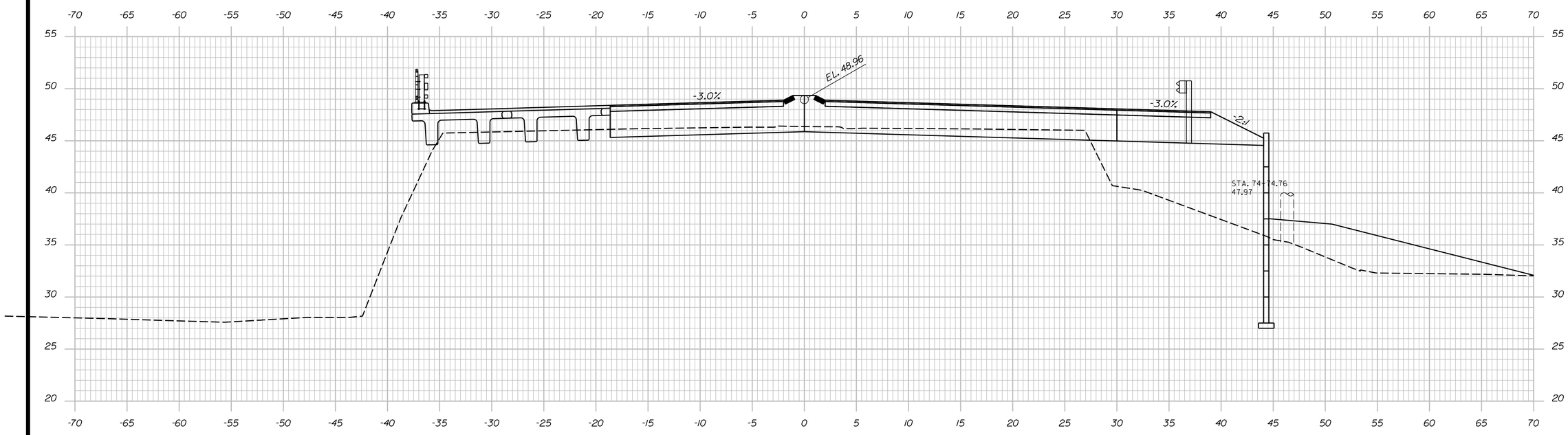

74+75.00

McFarland Johnson

STATE OF MAINE
DEPARTMENT OF TRANSPORTATION

NHP-1928(300)

WIN 19283.00

BRIDGE NO. 3860

BRIDGE PLANS

SIGNATURE

P.E. NUMBER

DATE

		BY	DATE
PROJ. MANAGER	L. TIMBERLAKE		
DESIGN-DETAILED	D. Kull	P. Dustin	11/13
CHECKED-REVIEWED	T. Kendrick		11/13
DESIGN2-DETAILED2			
DESIGN3-DETAILED3			
REVISIONS 1			
REVISIONS 2			
REVISIONS 3			
REVISIONS 4			
FIELD CHANGES			

KITTERY OVERPASS BRIDGE
STATE ROUTE 236
KITTERY YORK COUNTY

CROSS SECTIONS (RTE. 1 BYP)
(15 OF 27)

SHEET NUMBER
27
OF 49

Date:12/17/2013
Username:
Division:
Filename: ...\013_Cross_Sections.dgn

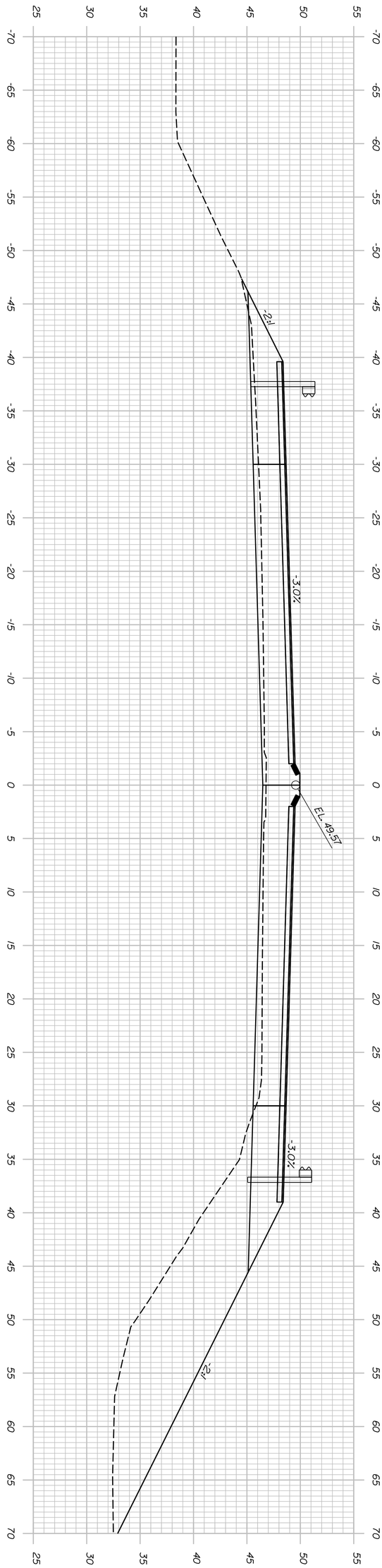

75+25.00

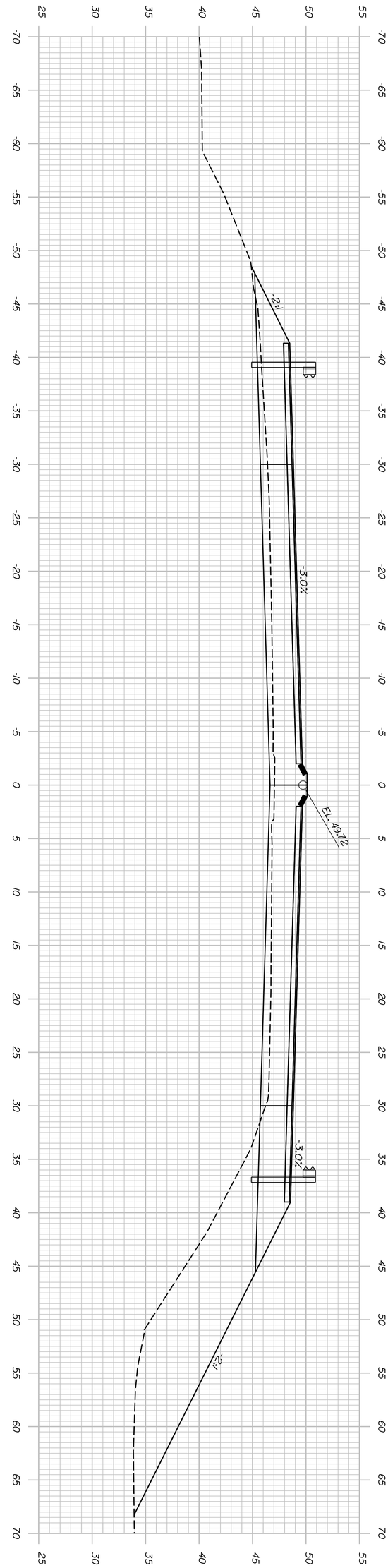

75+50.00

McFarland Johnson

SHEET NUMBER 28 OF 49	KITTERY OVERPASS BRIDGE STATE ROUTE 236 KITTERY YORK COUNTY CROSS SECTIONS (RTE. 1 BYP) (16 OF 27)	PROJ. MANAGER L. TIMBERLAKE / BY / DATE DESIGN-DETAILED D. Kull P. Dustin 11/13 CHECKED-REVIEWED T. Kendrick 11/13 DESIGN2-DETAILED2 DESIGN3-DETAILED3 REVISIONS 1 REVISIONS 2 REVISIONS 3 REVISIONS 4 FIELD CHANGES	SIGNATURE P.E. NUMBER DATE

STATE OF MAINE
DEPARTMENT OF TRANSPORTATION

NHP-1928(300)

BRIDGE NO. 3860 WIN 19283.00 BRIDGE PLANS

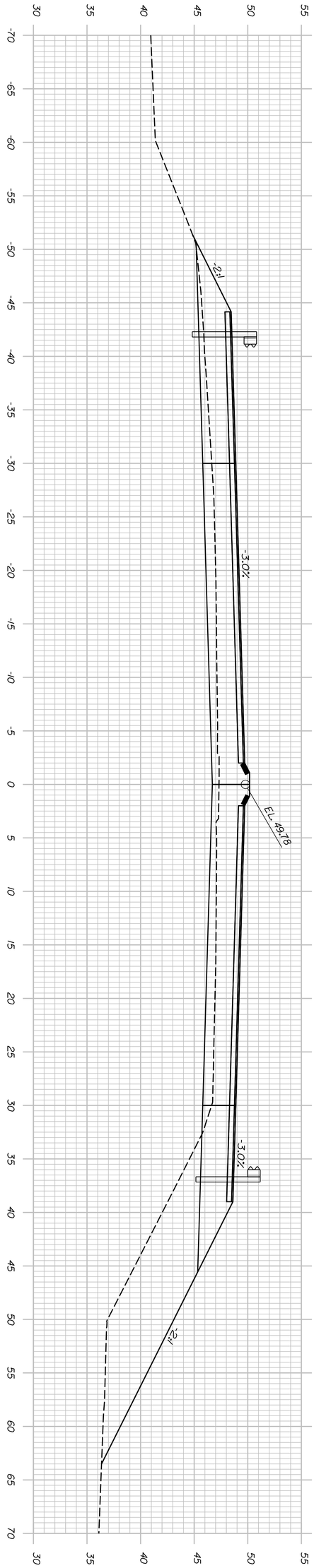

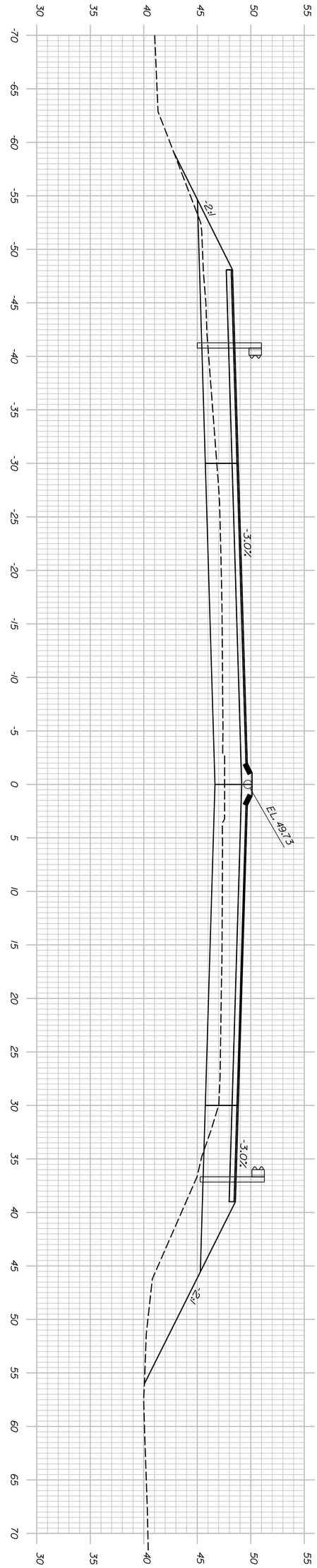

McFarland Johnson

PROJ. MANAGER	L. TIMBERLAKE	BY	DATE
DESIGN-DETAILED	D. Kull	P. Dustin	11/13
CHECKED-REVIEWED	T. Kendrick		11/13
DESIGN2-DETAILED2			
DESIGN3-DETAILED3			
REVISIONS 1			
REVISIONS 2			
REVISIONS 3			
REVISIONS 4			
FIELD CHANGES			

SIGNATURE

P.E. NUMBER

DATE

KITTERY OVERPASS BRIDGE
STATE ROUTE 236
KITTERY YORK COUNTY

CROSS SECTIONS (RTE. 1 BYP)
(17 OF 27)

STATE OF MAINE
DEPARTMENT OF TRANSPORTATION

NHP-1928(300)

BRIDGE NO. 3860 WIN 19283.00 BRIDGE PLANS

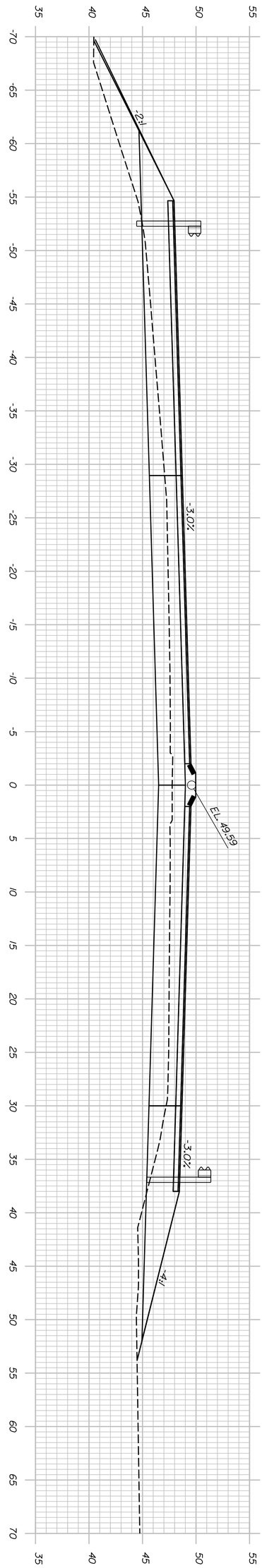

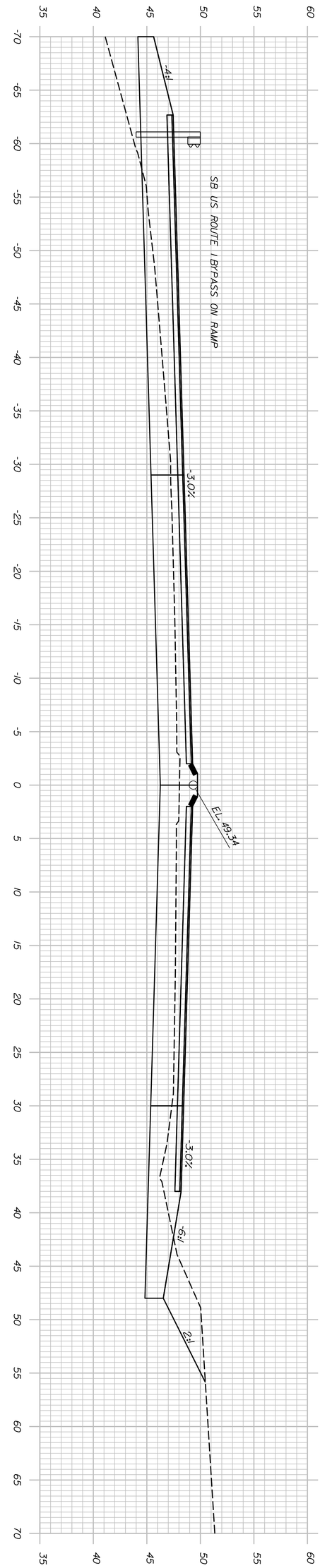

McFarland Johnson

PROJ. MANAGER	L. TIMBERLAKE	BY	DATE	
DESIGN-DETAILED	D. Kull	P. Dustin	11/13	
CHECKED-REVIEWED	T. Kendrick		11/13	SIGNATURE
DESIGN2-DETAILED2				
DESIGN3-DETAILED3				P.E. NUMBER
REVISIONS 1				
REVISIONS 2				
REVISIONS 3				DATE
REVISIONS 4				
FIELD CHANGES				

KITTERY OVERPASS BRIDGE
STATE ROUTE 236
KITTERY YORK COUNTY

CROSS SECTIONS (RTE. 1 BYP) (18 OF 27)

SHEET NUMBER 30 OF 49

STATE OF MAINE
DEPARTMENT OF TRANSPORTATION

NHP-1928(300)

BRIDGE NO. 3860 WIN 19283.00 BRIDGE PLANS

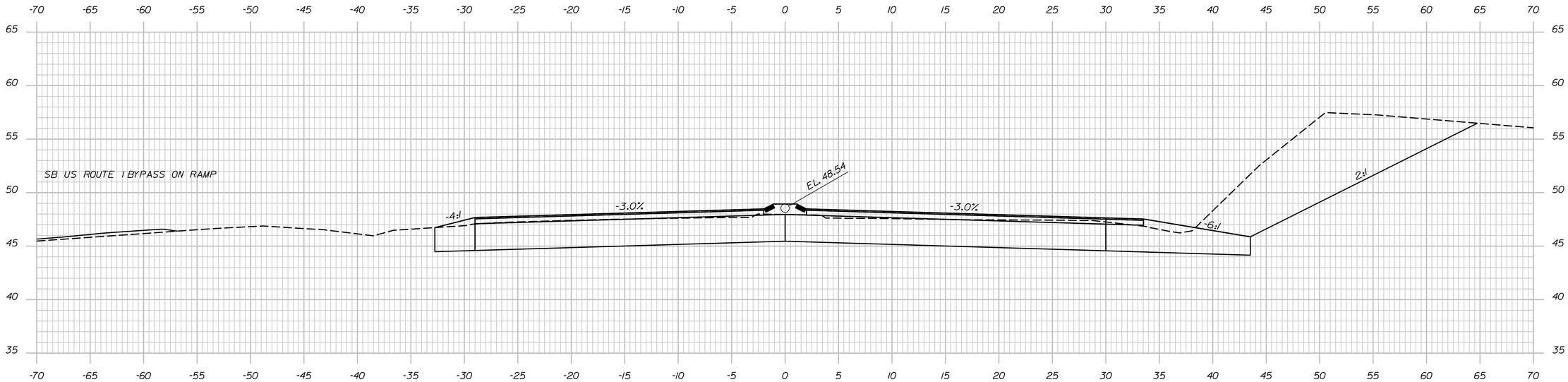

77+00.00

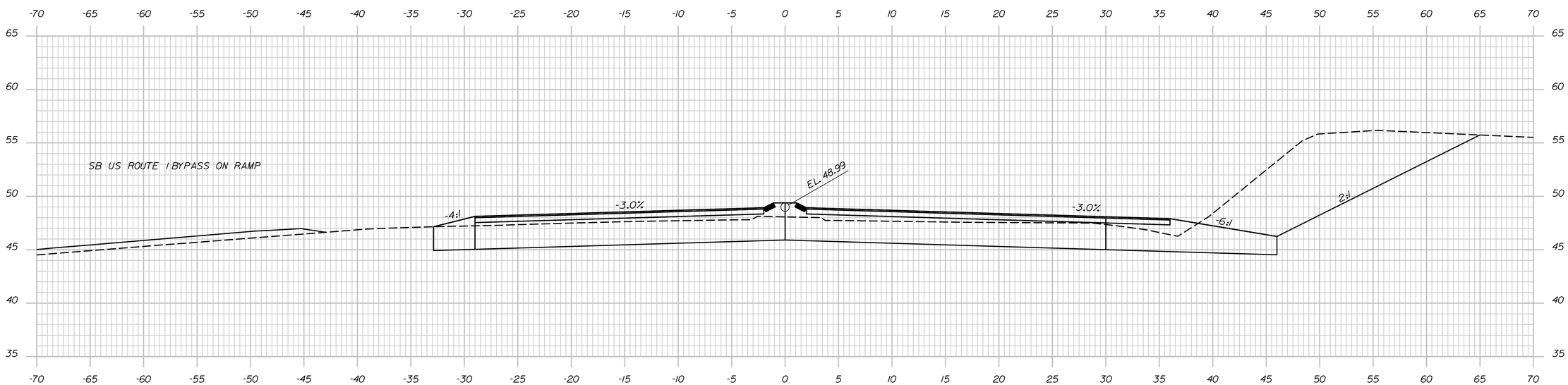

76+75.00

McFarland Johnson

STATE OF MAINE
DEPARTMENT OF TRANSPORTATION

NHP-1928(300)

WIN 19283.00

BRIDGE NO. 3860

BRIDGE PLANS

SIGNATURE

P.E. NUMBER

DATE

PROJ. MANAGER	L. TIMBERLAKE	BY	DATE
DESIGN-DETAILED	D. Kull	P. Dustin	11/13
CHECKED-REVIEWED	T. Kendrick		11/13
DESIGN2-DETAILED2			
DESIGN3-DETAILED3			
REVISIONS 1			
REVISIONS 2			
REVISIONS 3			
REVISIONS 4			
FIELD CHANGES			

KITTERY OVERPASS BRIDGE
STATE ROUTE 236
KITTERY YORK COUNTY

CROSS SECTIONS (RTE. 1 BYP) (19 OF 25)

SHEET NUMBER

31

OF 49

Date:12/17/2013

Username:

Division:

Filename: ...\013_Cross_Sections.dgn

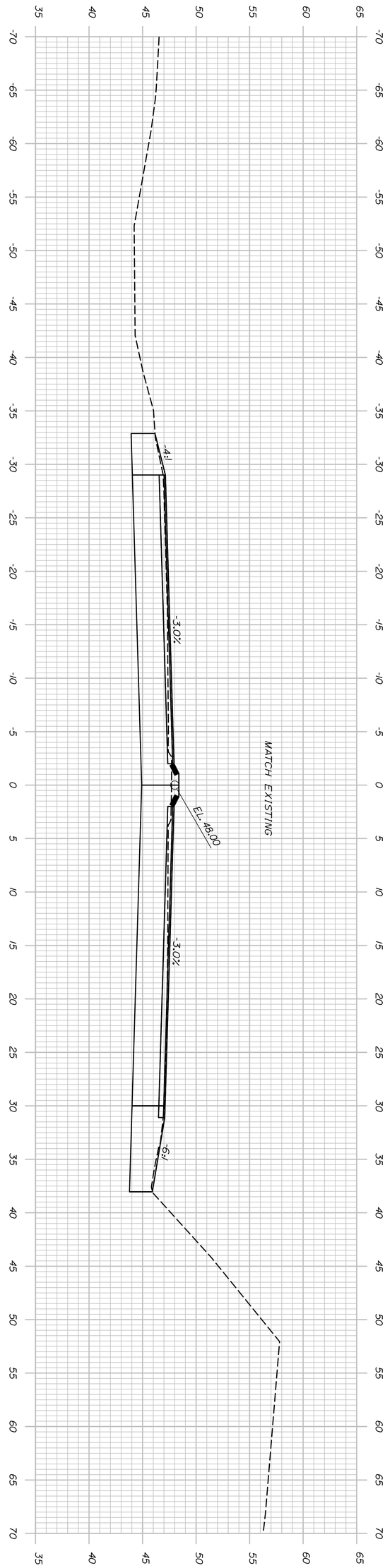

77+25.00

McFarland Johnson

PROJ. MANAGER	L. TIMBERLAKE	BY	DATE	
DESIGN-DETAILED	D. Kull	P. Dustin	11/13	
CHECKED-REVIEWED	T. Kendrick		11/13	SIGNATURE
DESIGN2-DETAILED2				
DESIGN3-DETAILED3				P.E. NUMBER
REVISIONS 1				
REVISIONS 2				
REVISIONS 3				DATE
REVISIONS 4				
FIELD CHANGES				

KITTERY OVERPASS BRIDGE
STATE ROUTE 236
KITTERY YORK COUNTY

CROSS SECTIONS (RTE. 1 BYP)
(20 OF 27)

STATE OF MAINE
DEPARTMENT OF TRANSPORTATION

NHP-1928(300)

WIN
BRIDGE NO. 3860 19283.00 BRIDGE PLANS

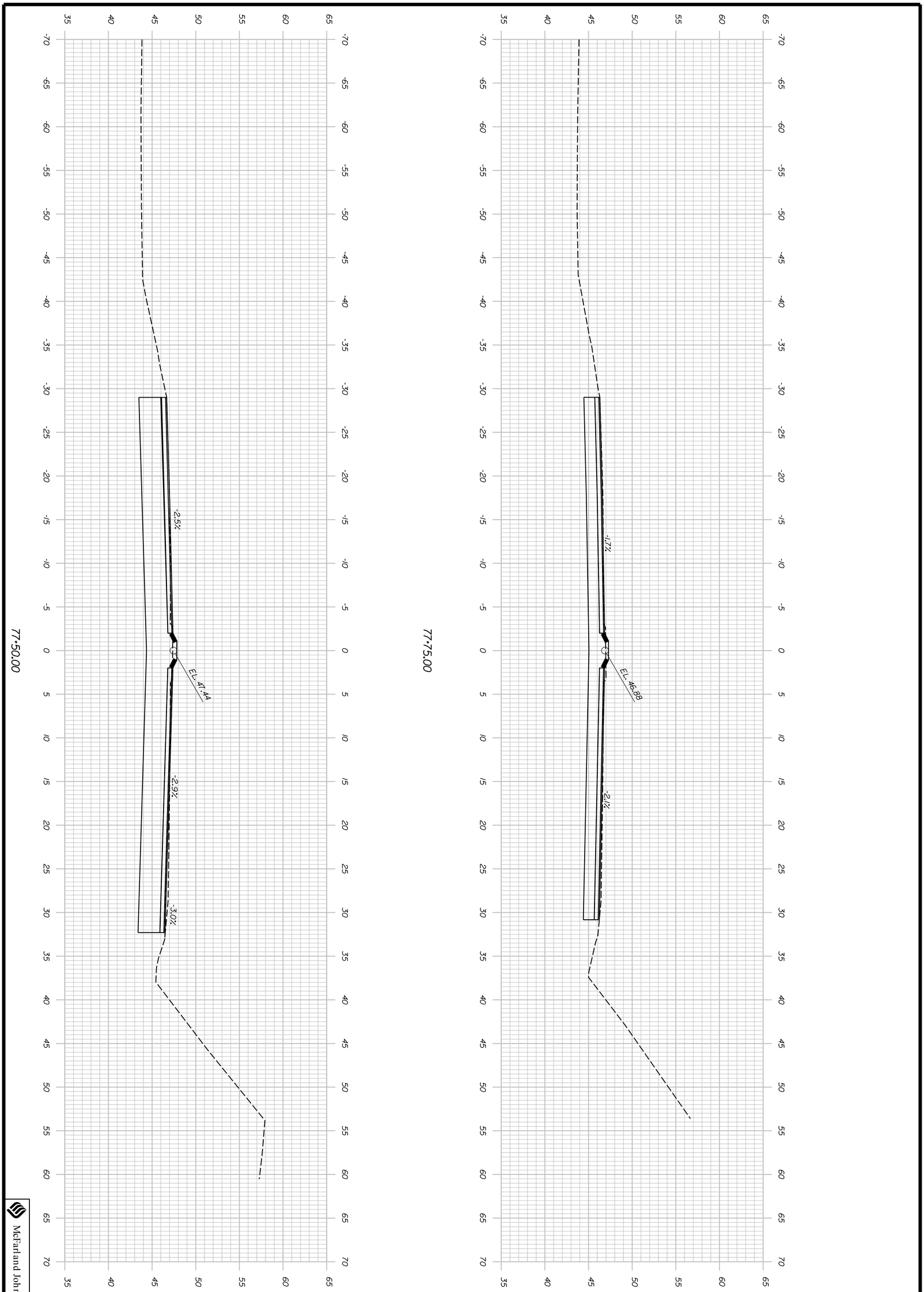

McFarland Johnson

SHEET NUMBER 33 OF 49	KITTERY OVERPASS BRIDGE STATE ROUTE 236 KITTERY YORK COUNTY CROSS SECTIONS (RTE. 1 BYP) (21 OF 27)	PROJ. MANAGER L. TIMBERLAKE / BY / DATE DESIGN-DETAILED D. Kull / P. Dustin / 11/13 CHECKED-REVIEWED T. Kendrick / 11/13 DESIGN2-DETAILED2 DESIGN3-DETAILED3 REVISIONS 1 REVISIONS 2 REVISIONS 3 REVISIONS 4 FIELD CHANGES	SIGNATURE P.E. NUMBER DATE	STATE OF MAINE DEPARTMENT OF TRANSPORTATION NHP-1928(300) BRIDGE NO. 3860 WIN 19283.00 BRIDGE PLANS	

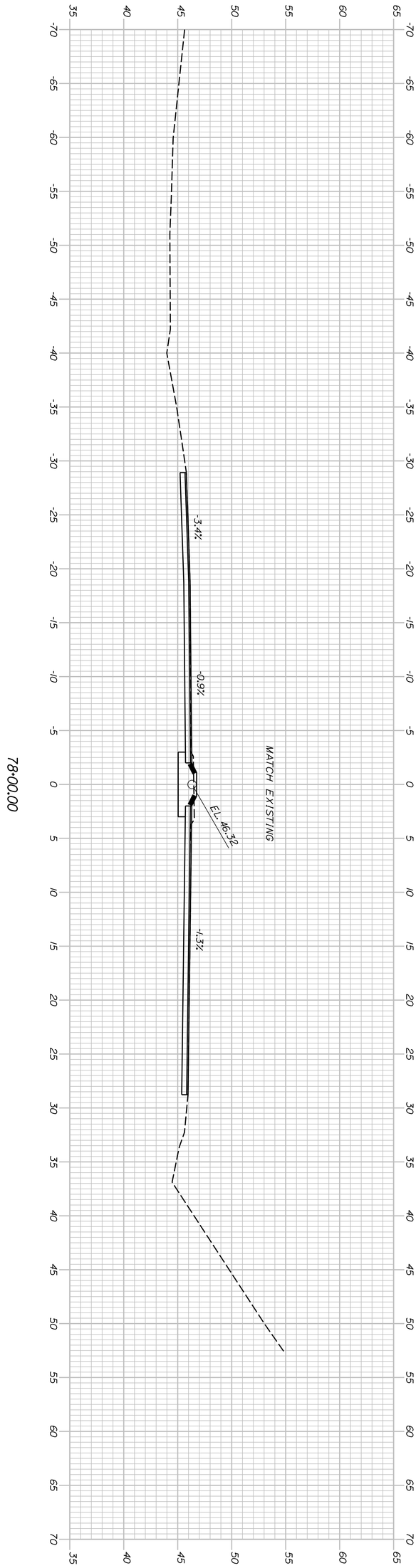

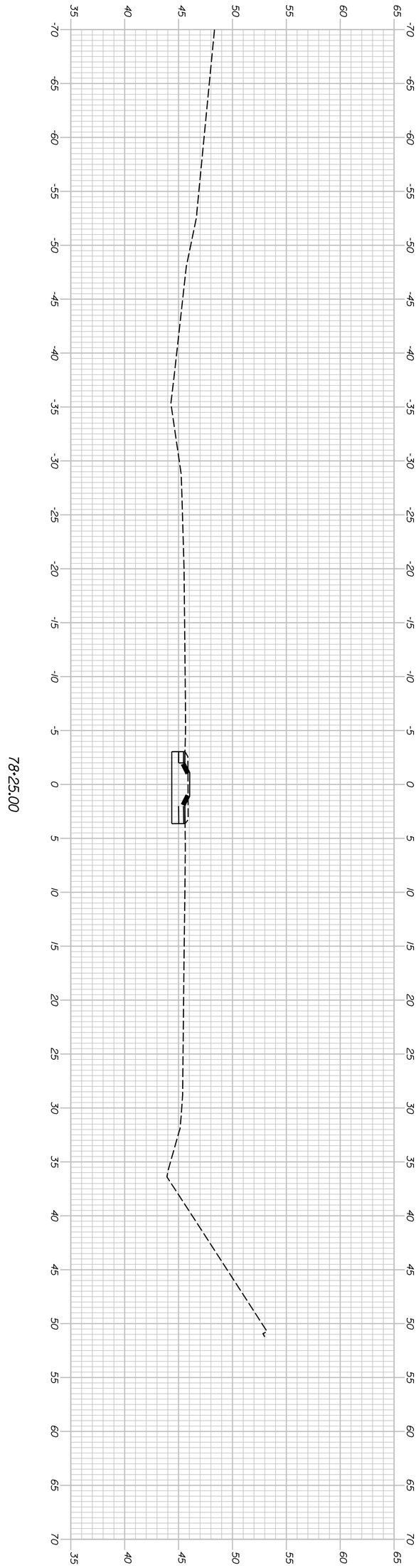

PROJ. MANAGER	L. TIMBERLAKE	BY	DATE
DESIGN-DETAILED	$designer1$	$detailer1$	$projdate1$
CHECKED-REVIEWED	E. McCarthy	T. Kendrick	5\13
DESIGN2-DETAILED2	$designer2$	$detailer2$	$projdate2$
DESIGN3-DETAILED3	$designer3$	$detailer3$	$projdate3$
REVISIONS 1	_____		$revdate1$
REVISIONS 2	_____		$revdate2$
REVISIONS 3	$revision3$		$revdate3$
REVISIONS 4	$revision4$		$revdate4$
FIELD CHANGES	$fieldchange$		$fielddate$

SIGNATURE

P.E. NUMBER

DATE

KITTERY OVERPASS BRIDGE
STATE ROUTE 236
KITTERY YORK COUNTY

CROSS SECTIONS (RTE. 1 BYP)
(22 OF 27)

SHEET NUMBER 34 OF 49

STATE OF MAINE
DEPARTMENT OF TRANSPORTATION

NHP-1928(300)

BRIDGE NO. 3860 WIN 19283.00 BRIDGE PLANS

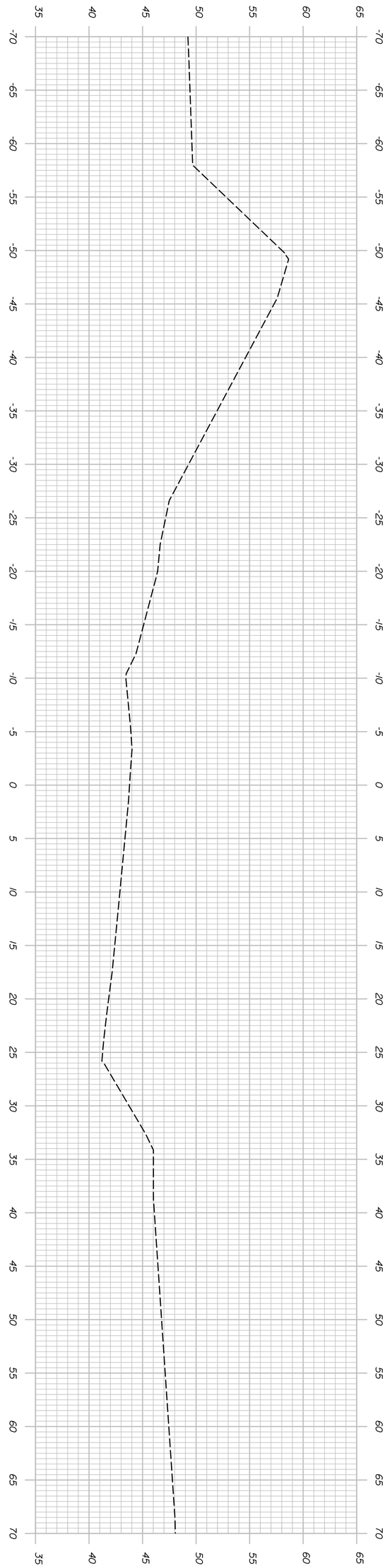

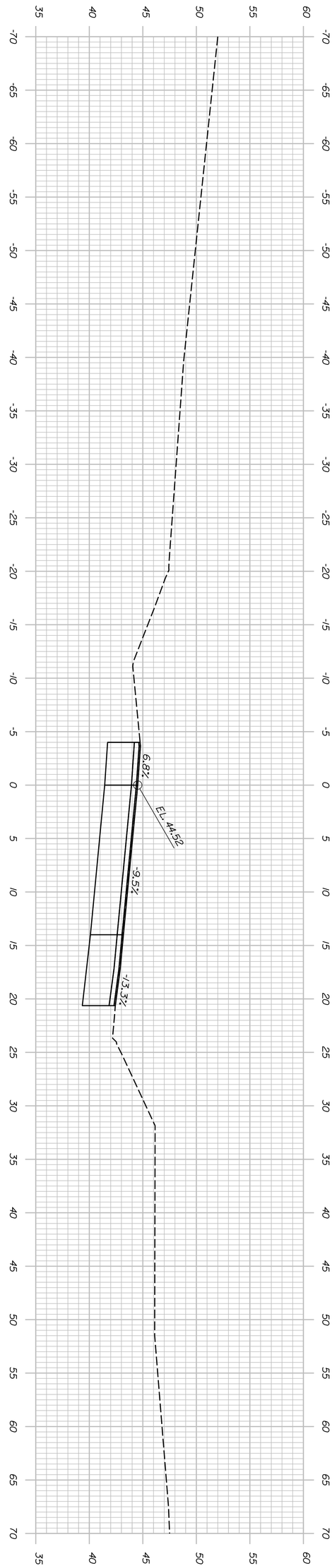

McFarland Johnson

PROJ. MANAGER	L. TIMBERLAKE	BY	DATE	
DESIGN-DETAILED	D. Kull	P. Dustin	11/13	
CHECKED-REVIEWED	T. Kendrick		11/13	SIGNATURE
DESIGN2-DETAILED2				
DESIGN3-DETAILED3				P.E. NUMBER
REVISIONS 1				
REVISIONS 2				
REVISIONS 3				DATE
REVISIONS 4				
FIELD CHANGES				

KITTERY OVERPASS BRIDGE
STATE ROUTE 236
KITTERY YORK COUNTY

CROSS SECTIONS (RAMP)
(23 OF 27)

SHEET NUMBER 35 OF 49

STATE OF MAINE
DEPARTMENT OF TRANSPORTATION

NHP-1928(300)

BRIDGE NO. 3860 WIN 19283.00 BRIDGE PLANS

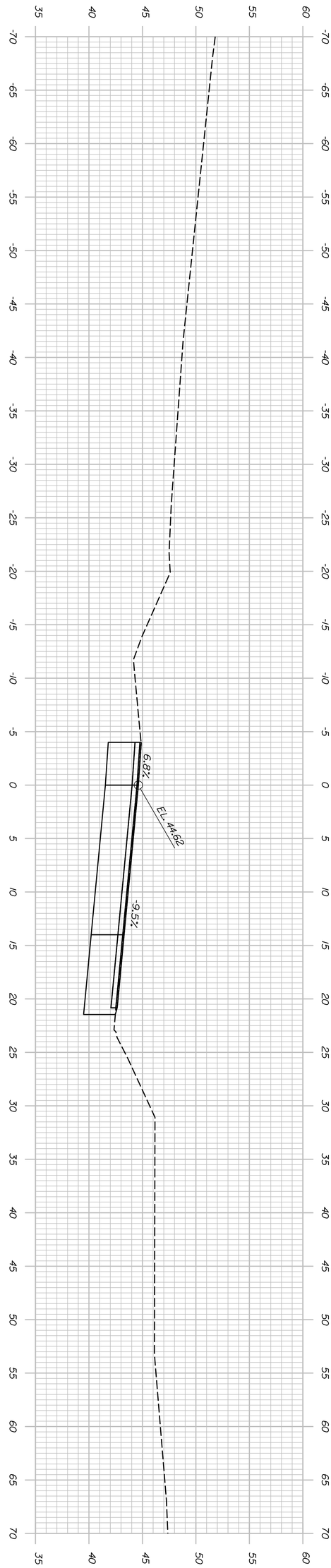

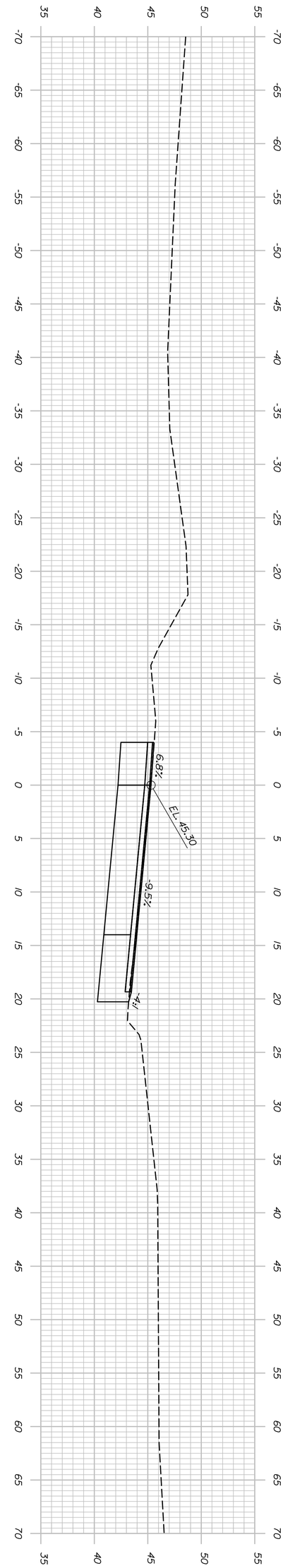

McFarland Johnson

PROJ. MANAGER	L. TIMBERLAKE	BY	DATE	
DESIGN-DETAILED	D. Kull	P. Dustin	11/13	
CHECKED-REVIEWED	T. Kendrick		11/13	SIGNATURE
DESIGN2-DETAILED2				
DESIGN3-DETAILED3				P.E. NUMBER
REVISIONS 1				
REVISIONS 2				
REVISIONS 3				DATE
REVISIONS 4				
FIELD CHANGES				

KITTERY OVERPASS BRIDGE
STATE ROUTE 236
KITTERY YORK COUNTY

CROSS SECTIONS (RAMP)
(24 OF 27)

STATE OF MAINE
DEPARTMENT OF TRANSPORTATION

NHP-1928(300)

BRIDGE NO. 3860 WIN 19283.00 BRIDGE PLANS

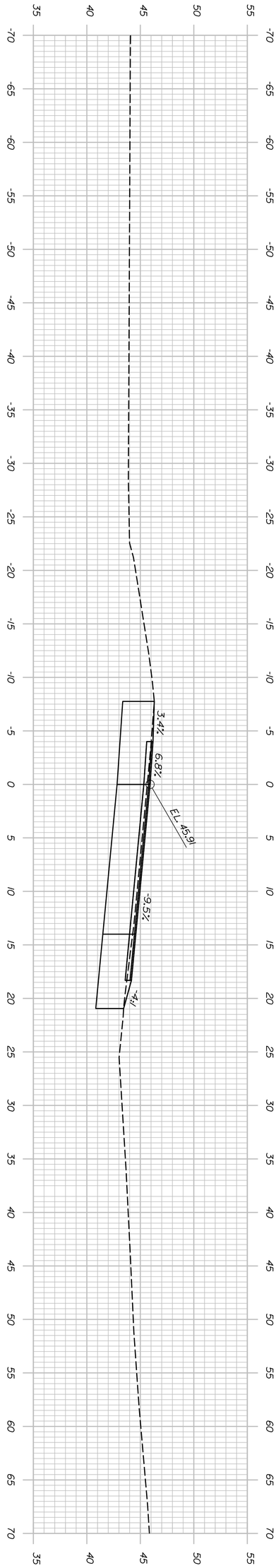

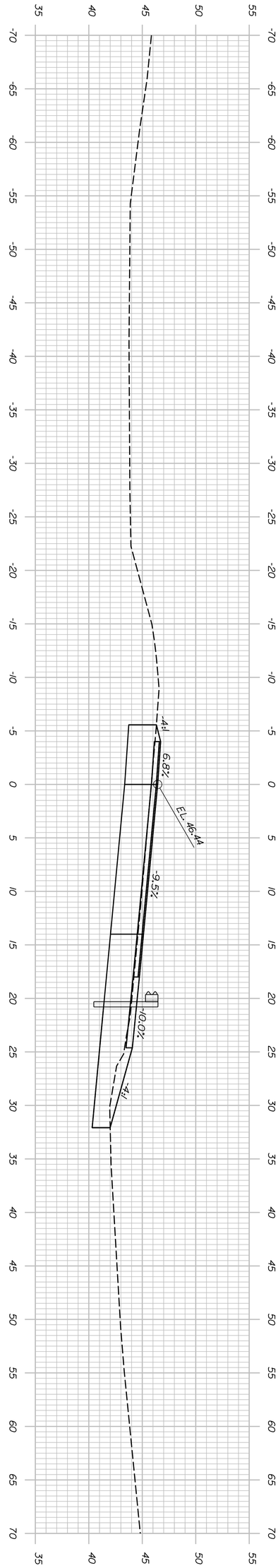

McFarland Johnson

PROJ. MANAGER	L. TIMBERLAKE	BY	DATE	
DESIGN-DETAILED	D. Kull	P. Dustin	11/13	
CHECKED-REVIEWED	T. Kendrick		11/13	SIGNATURE
DESIGN2-DETAILED2				
DESIGN3-DETAILED3				P.E. NUMBER
REVISIONS 1				
REVISIONS 2				
REVISIONS 3				DATE
REVISIONS 4				
FIELD CHANGES				

KITTERY OVERPASS BRIDGE
STATE ROUTE 236
KITTERY YORK COUNTY

CROSS SECTIONS (RAMP) (25 OF 27)

STATE OF MAINE
DEPARTMENT OF TRANSPORTATION

NHP-1928(300)

BRIDGE NO. 3860 WIN 19283.00 BRIDGE PLANS

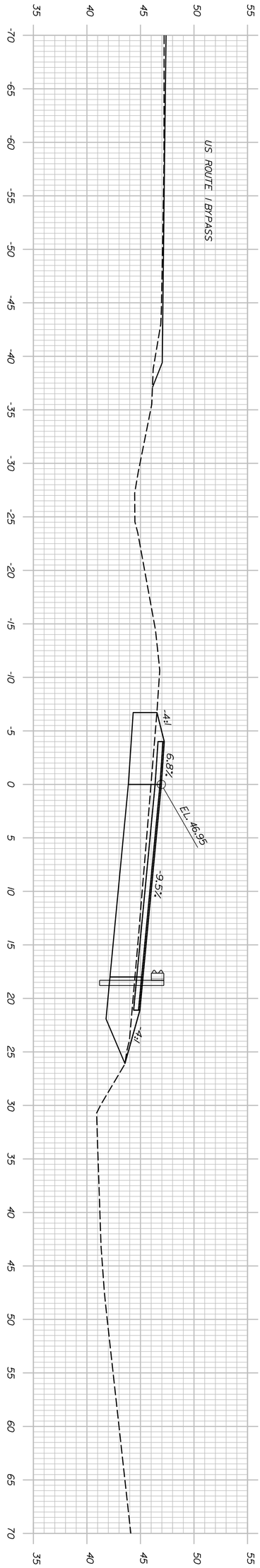

11+50.00

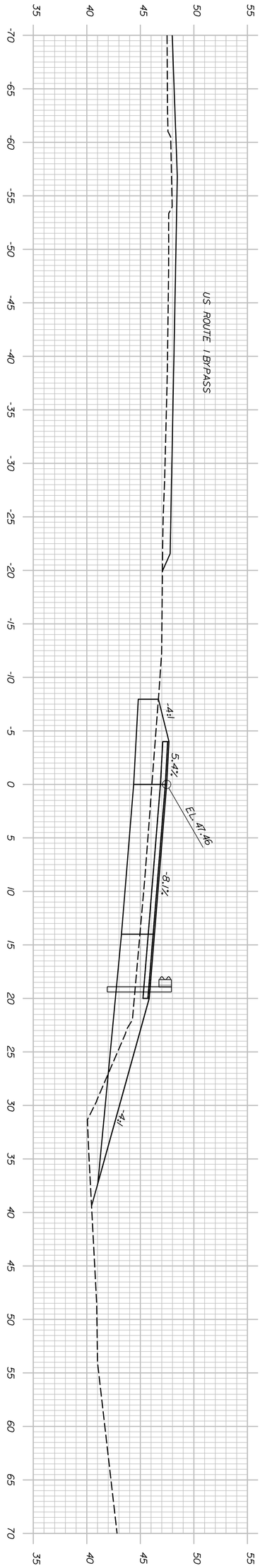

11+75.00

McFarland Johnson

PROJ. MANAGER	L. TIMBERLAKE	BY	DATE	
DESIGN-DETAILED	D. Kull	P. Dustin	11/13	
CHECKED-REVIEWED	T. Kendrick		11/13	SIGNATURE
DESIGN2-DETAILED2				
DESIGN3-DETAILED3				P.E. NUMBER
REVISIONS 1				
REVISIONS 2				
REVISIONS 3				DATE
REVISIONS 4				
FIELD CHANGES				

KITTERY OVERPASS BRIDGE
STATE ROUTE 236
KITTERY YORK COUNTY

CROSS SECTIONS (RAMP) (26 OF 27)

STATE OF MAINE
DEPARTMENT OF TRANSPORTATION

NHP-1928(300)

BRIDGE NO. 3860 WIN 19283.00 BRIDGE PLANS

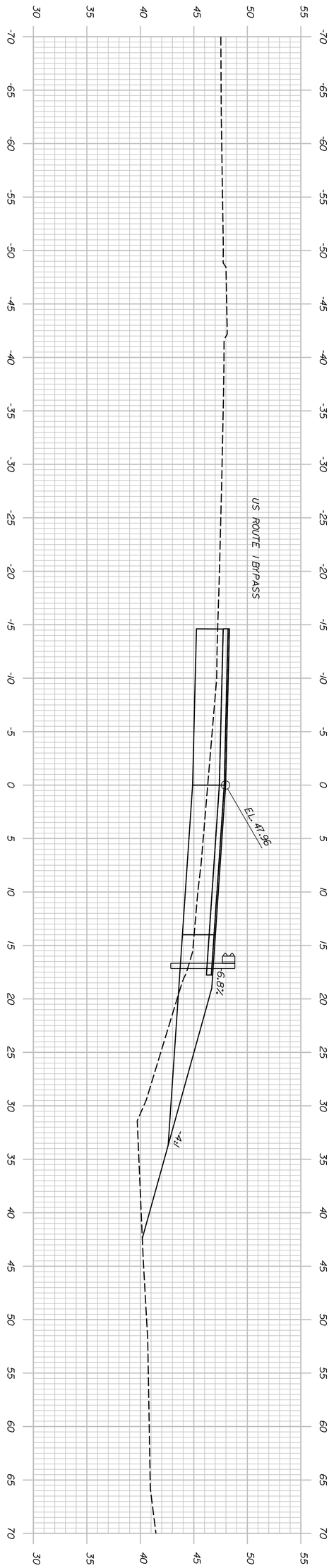

12+00.00

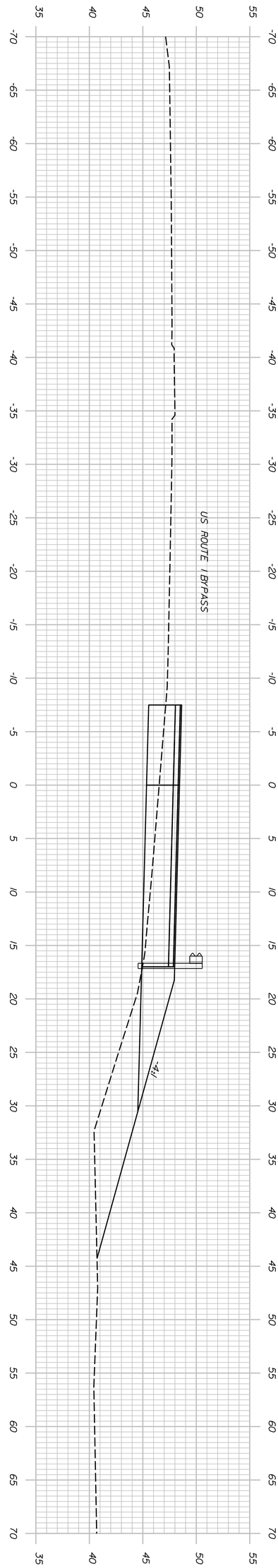

12+25.00

McFarland Johnson

PROJ. MANAGER	L. TIMBERLAKE	BY	DATE
DESIGN-DETAILED	D. Kull	P. Dustin	11/13
CHECKED-REVIEWED	T. Kendrick		11/13
DESIGN2-DETAILED2			
DESIGN3-DETAILED3			
REVISIONS 1			
REVISIONS 2			
REVISIONS 3			
REVISIONS 4			
FIELD CHANGES			

SIGNATURE

P.E. NUMBER

DATE

KITTERY OVERPASS BRIDGE
STATE ROUTE 236
KITTERY YORK COUNTY

CROSS SECTIONS (RAMP) (27 OF 27)

STATE OF MAINE
DEPARTMENT OF TRANSPORTATION

NHP-1928(300)

BRIDGE NO. 3860 WIN 19283.00 BRIDGE PLANS

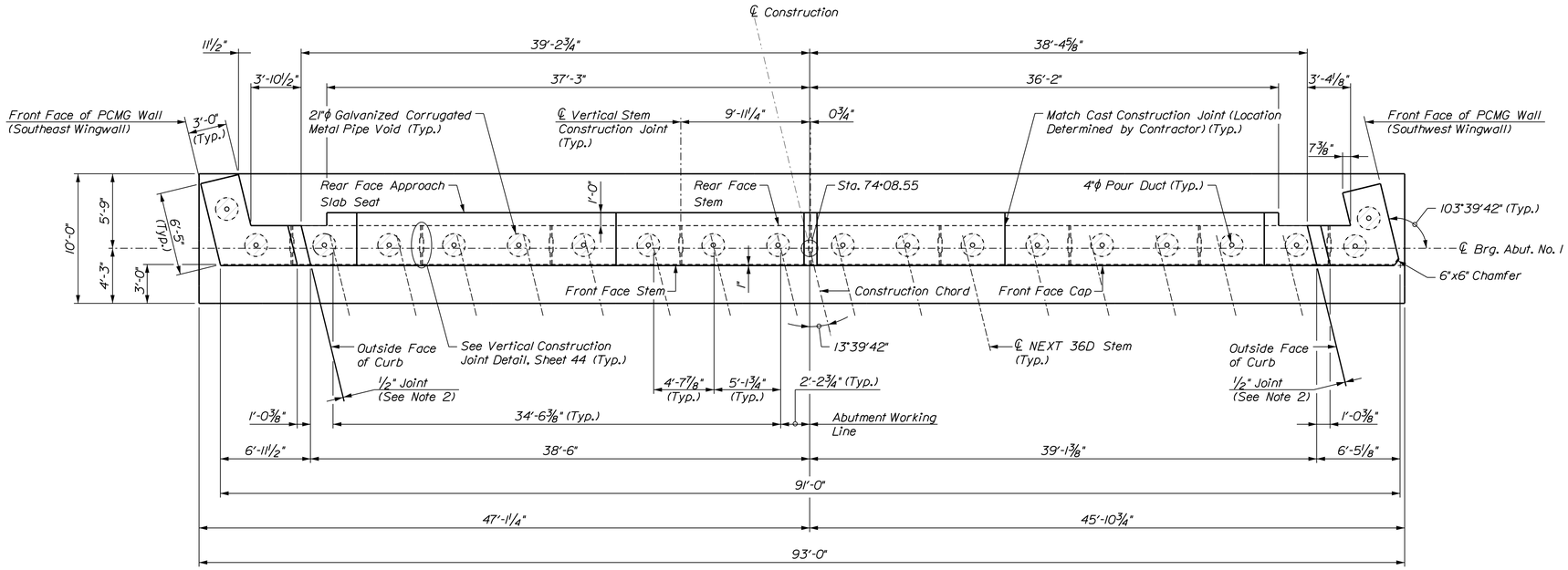

ABUTMENT NO. 1 PLAN

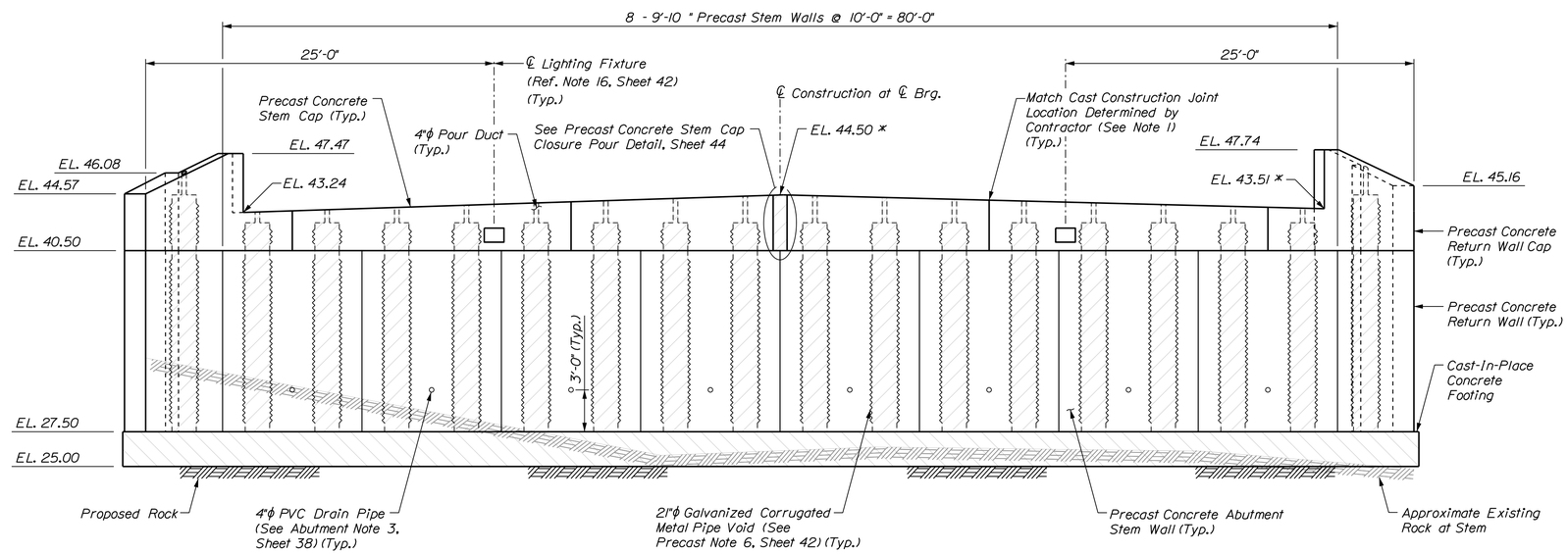

* Abutment cap elevations provided at ℄ Brg.

ABUTMENT NO. 1 ELEVATION

(Form Liner Pattern and Lighting Conduit not Shown for Clarity)

NOTES

1. The distance between stem and cap construction joints shall not be less than 1'-6".
2. Provide ½" gap between cast-in-place end diaphragm and precast return cap. Fill gap with closed cell foam.

LEGEND

Cast-in-Place Concrete

McFarland Johnson

STATE OF MAINE
DEPARTMENT OF TRANSPORTATION

NHP-1928(300)

WIN 19283.00

BRIDGE NO. 3860

BRIDGE PLANS

		BY	DATE
PROJ. MANAGER	L. TIMBERLAKE		
DESIGN-DETAILED	D. Kull	P. Dustin	11/13
CHECKED-REVIEWED	T. Kendrick		11/13
DESIGN2-DETAILED2			
DESIGN3-DETAILED3			
REVISIONS 1			
REVISIONS 2			
REVISIONS 3			
REVISIONS 4			
FIELD CHANGES			

SIGNATURE

P.E. NUMBER

DATE

KITTERY OVERPASS BRIDGE
STATE ROUTE 236
KITTERY YORK COUNTY

PRECAST ABUTMENT NO. 1

SHEET NUMBER

40

OF 49

Filename: ...\Draw\Drawings\040_Sub_abut.dgn Division: Username: Date:12/17/2013

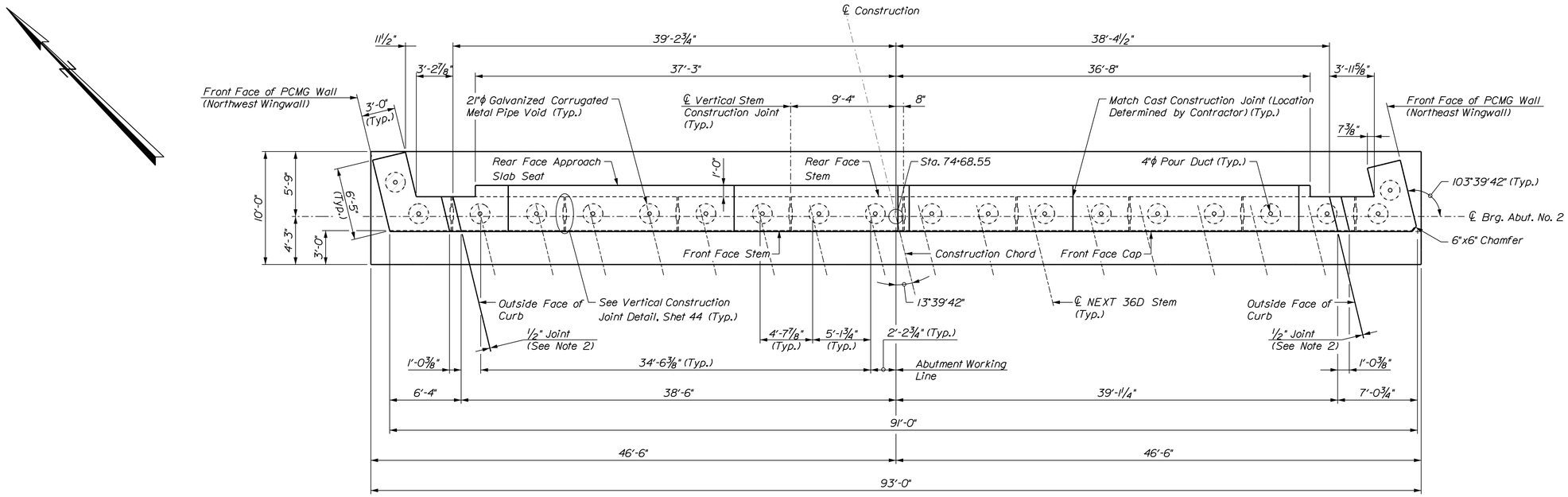

ABUTMENT NO. 2 PLAN

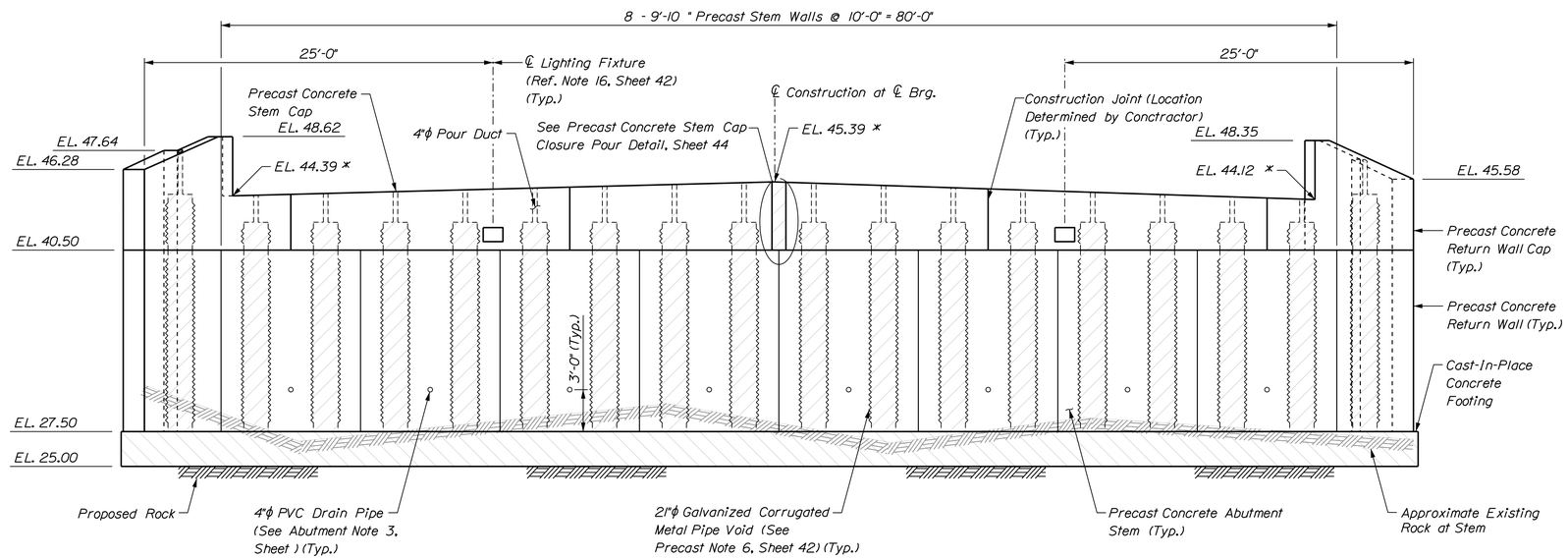

* Abutment cap elevations provided at ℄ Brg.

ABUTMENT NO. 2 ELEVATION

(Form Liner Pattern and Lighting Conduit not Shown for Clarity)

NOTES

1. The distance between stem and cap construction joints shall not be less than 1'-6".
2. Provide ½" gap between cast-in-place end diaphragm and precast return cap. Fill gap with closed cell foam.

LEGEND

Cast-in-Place Concrete

McFarland Johnson

STATE OF MAINE
DEPARTMENT OF TRANSPORTATION

NHP-1928(300)

WIN 19283.00

BRIDGE NO. 3860

BRIDGE PLANS

		BY	DATE
PROJ. MANAGER	L. TIMBERLAKE		
DESIGN-DETAILED	D. Kull	P. Dustin	11/13
CHECKED-REVIEWED	T. Kendrick		11/13
DESIGN2-DETAILED2			
DESIGN3-DETAILED3			
REVISIONS 1			
REVISIONS 2			
REVISIONS 3			
REVISIONS 4			
FIELD CHANGES			

SIGNATURE

P.E. NUMBER

DATE

KITTERY OVERPASS BRIDGE
STATE ROUTE 236
KITTERY YORK COUNTY

PRECAST ABUTMENT NO. 2

SHEET NUMBER

41

OF 49

Filename: ...\Draw\Drawings\040_Sub_abut.dgn Division: Username: Date:12/17/2013

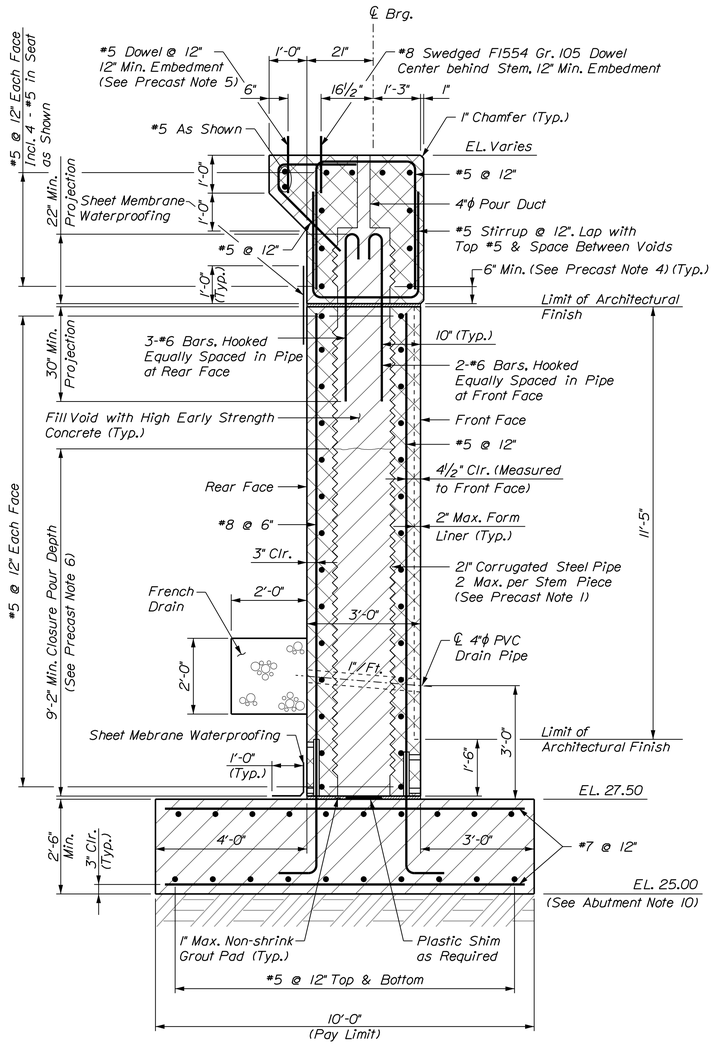

ABUTMENT TYPICAL SECTION

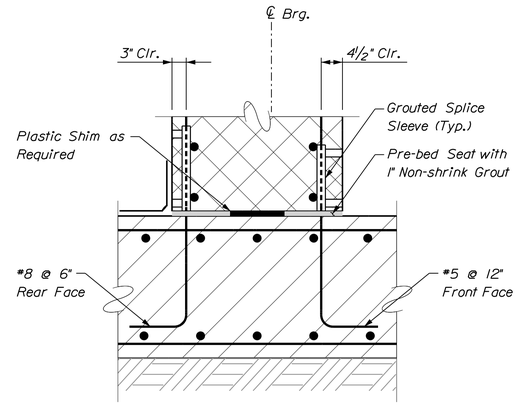

FOOTING CONNECTION DETAIL

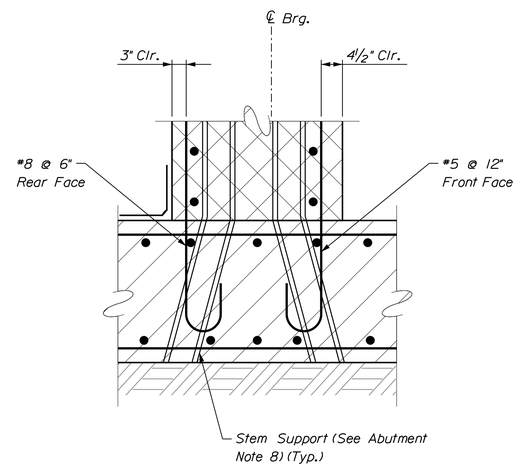

ALTERNATE FOOTING CONNECTION DETAIL

ABUTMENT NOTES

1. The maximum factored applied footing pressure is 14.19ksf.
2. Reinforcing steel shall have a minimum concrete cover of 2 inches in the stems and 3 inches in the footings unless otherwise noted.
3. Place 4 inch diameter drains at 10 foot maximum spacing in the precast abutment stems. The exact horizontal location will be determined by the manufacturer and detailed in the shop drawings.
4. The abutment stems will have an ashlar stone form liner pattern. The form liner shall be Ashlar Stone P/C 30664, Symons Dura-tex, as manufactured by Symons Corporation, 2400 Arthur Ave, Ellgrove IL 60007 (tel 1-800-800-7966) or Ashlar Stone No. 330 multi-cast, as manufactured by Greestreak, 3400 Tree Court Industrial Boulevard, St. Louis, MO 63122 (tel 1-800-325-9504) or an approved equal. The cost of the form liner shall be included in Item 534.76.
5. Apply one layer of membrane waterproofing in accordance with Section 508 of the Standard Specifications. Membrane waterproofing shall extend 12 inches beyond both sides of the joint.
6. Construct french drains behind the abutments in accordance with Standard Specifications Section 512, French Drains.
7. Abutments shall be backfilled with Granular Borrow. Pay limits will be the structural excavation limits in cut areas and a vertical plane located 10 feet behind the walls in fill areas.
8. Stem support for alternate footing connection to be designed and detailed by the Contractor and submitted to the Resident for review. Stem support may be left in footing.
9. Foundation concrete shall be placed on bedrock cleaned of all loose rock and soil. The bedrock subgrade shall be confirmed to be relatively level. Where the bedrock surface slope exceeds 6H:1V, the bedrock surface shall be made completely level. Prior to placing the concrete, the bearing surface shall be washed with high pressure water and air.
10. When the prepared bedrock surface is below the bottom of the footing elevation shown on the plans, concrete fill may be placed to fill the void. Concrete fill shall be Class "A" concrete. Alternatively, the footing thickness may be increased up to an additional 1 foot as approved by the Resident. If the footing thickness is increased, the top of the footing elevation shall be as shown on the plans.
11. When bedrock protrudes above the bottom of the footing shown, the rock shall be removed to the elevation shown on the plans. The minimum allowable footing thickness and width is shown on the plans. Payment for adjusting footing depth and adjusting reinforcing steel will be considered incidental to related Contract items. No separate payment will be made. Payment for bedrock removal shall be made under Item No. 206.092, Structural Rock Excavation - Major Structures.
12. Concrete in precast voids shall be placed and achieve a minimum compressed strength of 1000psi prior to backfilling abutments.
13. Joints in abutment cap shall not be located within one foot of the limits of the elastomeric bearings.
14. Reinforcing, including dowels in the footing, will be paid for under Item Nos. 503.12, Reinforcing Steel, Fabricated and Delivered and 503.13, Reinforcing Steel, Placing.
15. Cast-in-place footing concrete will be paid under Item 502.21, Structural Concrete Abutments and Retaining Walls.
16. Under bridge lighting to be mounted to precast concrete cap at the horizontal dimensions shown on the abutment elevations. Lights, including attachment hardware and electrical conduit, to be attached after the erection of the precast concrete cap. The cost of the lights, electrical conduit attachment hardware and attachment to the proposed electrical pole to be paid under Item 634.161, Bridge & Highway Lighting Including Wire. Refer to Special Provision 634 for light details.

PRECAST NOTES

1. The exact location of the 21 inch diameter corrugated metal pipe void shall be determined by the precast manufacturer. Location of the void shall not interfere with the reinforcing.
2. Precast abutment units will be paid for under Item 534.76, Precast Abutment. Concrete for the voids will be paid for under Item 502.211, Structural Concrete Abutments and Retaining Walls, Class A. Reinforcing in the voids will be paid under Item 502.211 and shall meet the requirements of Special Provision 503.
3. Reinforcing in the abutments will conform to Section 503 of the Special Provisions and will be paid for under Item 534.76, Precast Abutment.
4. Form the top and bottom 6 inches of the corrugated metal pipe with removable forms to eliminate steel at the horizontal construction joint.
5. No. 5 dowel bar may be drilled and grouted into precast abutment cap.
6. Corrugated metal pipe and closure pour may be omitted below the minimum No. 6 bar projection length.

MINIMUM SPLICE LENGTH

Bar Size	Splice Length	Splice Class
#5 (Footing)	36"	C

MINIMUM DEVELOPMENT LENGTH

Bar Size	Development Length
#5	30"
#8	30"

LEGEND

Cast-in-Place Concrete

Pre-Cast Concrete

McFarland Johnson

STATE OF MAINE
DEPARTMENT OF TRANSPORTATION

NHP-1928(300)

BRIDGE NO. 3860

WIN 19283.00

BRIDGE PLANS

PROJ. MANAGER	L. TIMBERLAKE	BY	DATE
DESIGN-DETAILED	D. Kull	P. Duslin	11/13
CHECKED-REVIEWED	T. Kendrick		11/13
DESIGN2-DETAILED2			
DESIGN3-DETAILED3			
REVISIONS 1			
REVISIONS 2			
REVISIONS 3			
REVISIONS 4			
FIELD CHANGES			

SIGNATURE

P.E. NUMBER

DATE

KITTERY OVERPASS BRIDGE
STATE ROUTE 236
KITTERY YORK COUNTY

ABUTMENT SECTIONS

SHEET NUMBER

42

OF 49

Filename: ...\Drawings\042_Sub_abut_sect.dgn Division: Username: Date:12/17/2013

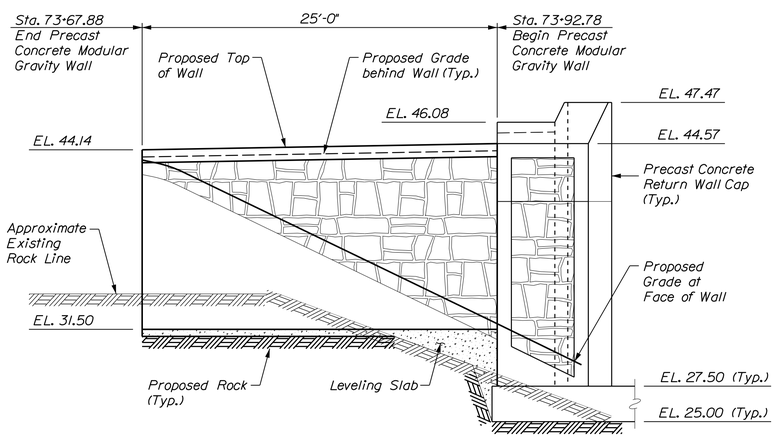

SOUTHEAST WINGWALL

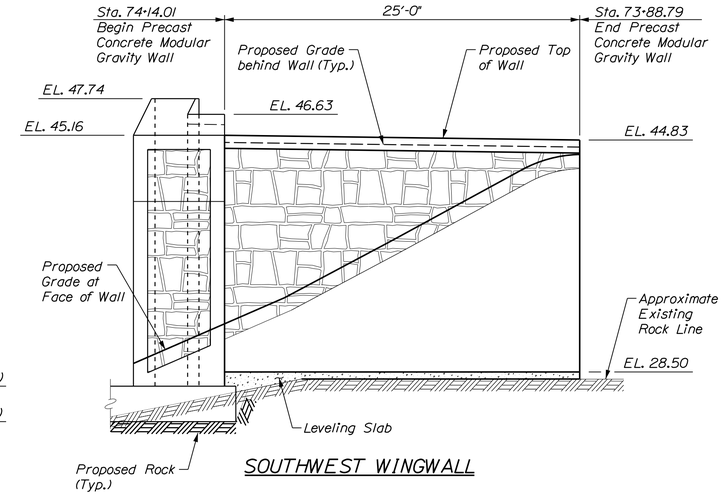

SOUTHWEST WINGWALL

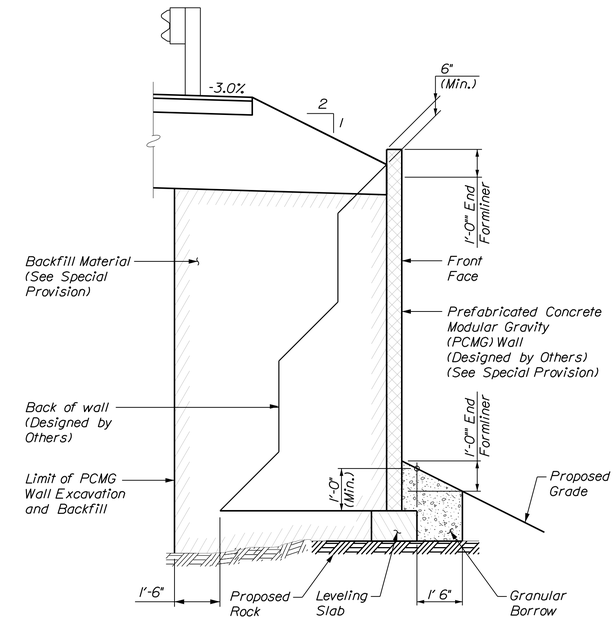

PREFABRICATED CONCRETE MODULAR GRAVITY WALL - TYPICAL SECTION

(Designed by Others)

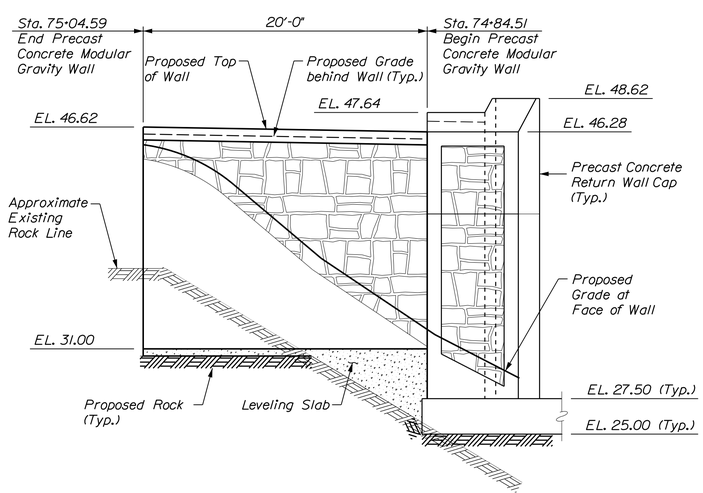

NORTHWEST WINGWALL

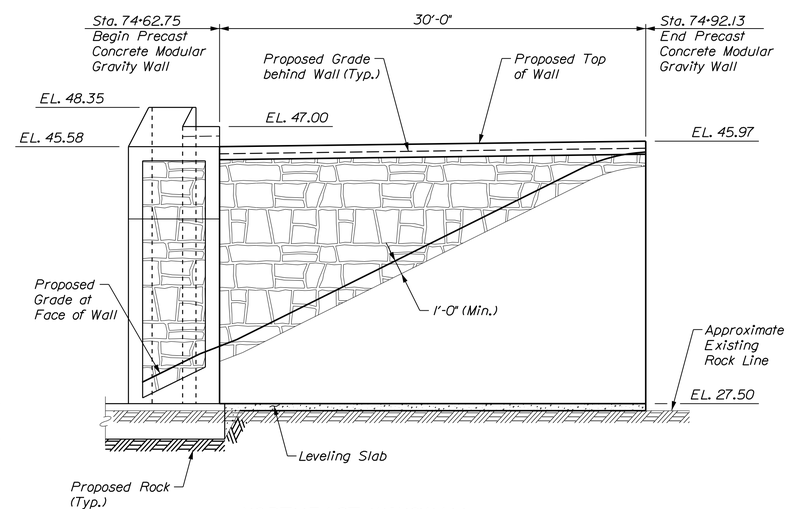

NORTHEAST WINGWALL

PRECAST CONCRETE MODULAR GRAVITY WALL NOTES

1. The Contractor shall provide a Precast Concrete Modular Gravity (PCMG) wall in accordance with Special Provision 635. The PCMG shall be designed and stamped by a Registered Professional Engineer and the design shall be submitted to the Resident for review. Plan details are shown for estimating purposes only.
2. The precast units shall be manufactured by the following, or equal:

   "T-Wall" as manufactured by a licensed manufacturer of Neel Company.
   "DoubleWal" as manufactured by a licensed manufacturer of DoubleWal Corp., Plainville, Connecticut.
3. The factored bearing pressure for PCMG walls shall not exceed the factored bearing resistance of 8 ksf for the strength limit state for wall system for wall system bases less than 8 feet wide and 10 ksf for bases to 14 feet wide. The factored bearing pressure for the service limit state shall not exceed the factored bearing resistance of 8 ksf.
4. Concrete testing shall be done in accordance with Standard Specification 535.
5. A one foot wide drainage geotextile fabric shall be secured to the back of the units at all horizontal and vertical joints for the full height of the wall. Payment for the drainage geotextile fabric shall be considered incidental to Pay Item 635.14.
6. Wall configuration may be revised based upon rock elevations determined during construction with approval required by the Resident. Cost of required rock excavation wil be paid under item 635.14.
7. Form liner is required to be placed to 1 foot below finished grade. The form liner shall be Ashlar Stone P/C 30664, Symons Dura-tex, as manufactured by Symons Corporation, 2400 Arthur Ave, Ellgrove IL 60007 (tel 1-800-800-7966) or Ashlar Stone No. 330 multi-cast, as manufactured by Greestreak, 3400 Tree Court Industrial Boulevard, St. Louis, MO 63122 (tel 1-800-325-9504) or an approved equal. The cost of the form liner shall be included in Item 635.14.
8. Leveling slab concrete may also be used as fill concrete as directed by the Resident. Cost shall be included in the unit cost and shall meet the requirements of Item 635.14, Prefabricated Concrete Modular Gravity Wall.

McFarland Johnson

STATE OF MAINE
DEPARTMENT OF TRANSPORTATION

NHP-1928(300)

WIN 19283.00

BRIDGE NO. 3860

BRIDGE PLANS

SIGNATURE

P.E. NUMBER

DATE

		BY	DATE
PROJ. MANAGER	L. TIMBERLAKE		
DESIGN-DETAILED	D. Kull	P. Dustin	11/13
CHECKED-REVIEWED	T. Kendrick		11/13
DESIGN2-DETAILED2			
DESIGN3-DETAILED3			
REVISIONS 1			
REVISIONS 2			
REVISIONS 3			
REVISIONS 4			
FIELD CHANGES			

KITTERY OVERPASS BRIDGE
STATE ROUTE 236
KITTERY YORK COUNTY

WINGWALL DETAILS

SHEET NUMBER

43

OF 49

Filename: ...\Drawings\043_ModularWall.dgn Division: Username: Date:12/17/2013

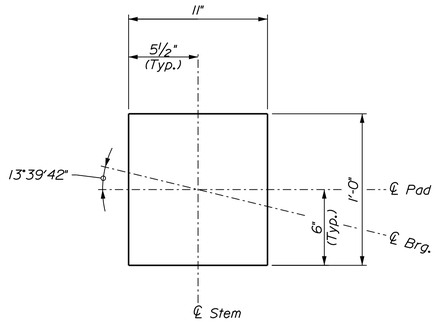

PLAN

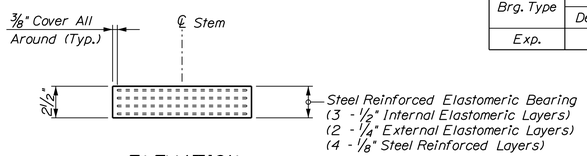

ELEVATION

ELASTOMERIC BEARING NOTES

1. The shear modulus of the elastomer shall be between 100 and 130 psi.
2. Bearings shall be covered during transit.
3. The bearings are designed so that the superstructure may be erected when the ambient air temperature is within the range of 65°F and 90°F. If the ambient air temperature is outside this range, the bearings shall be reset as directed by the Resident.
4. All bearings shall be marked prior to shipping. The marks shall include the bearing location on the bridge and a direction arrow that points up-station. All marks shall be permanent and shall be visible after the bearing is installed.
5. The Contractor is advised to have galvanized steel shims available to use for elevation adjustments upon setting the NEXT beams, the shims shall be included under Item No. 523.5402, Laminated Elastomeric Bearings, Expansion.

BEARING DESIGN LOADS AND MOVEMENTS

Brg. Type	VERTICAL REACTIONS (kips)			Horiz. Load - Long. (kips)	Horiz. Load - Trans. (kips)	DESIGN MOVEMENTS (in.)	
	Dead Load	Live Load	Total			Long.	Trans.
Exp.	45.0	40.0	85.0	2.70	–	0.36	–

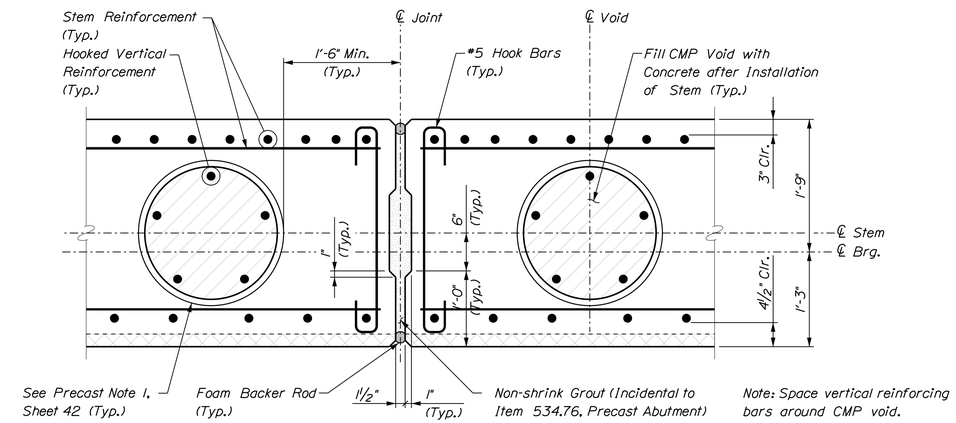

VERTICAL STEM CONSTRUCTION JOINT DETAIL

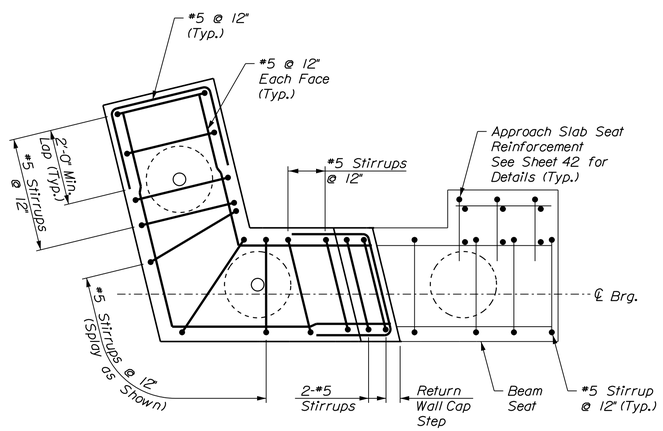

PRECAST UPPER RETURN WALL CAP PLAN

(Northwest and Southeast Wingwalls)

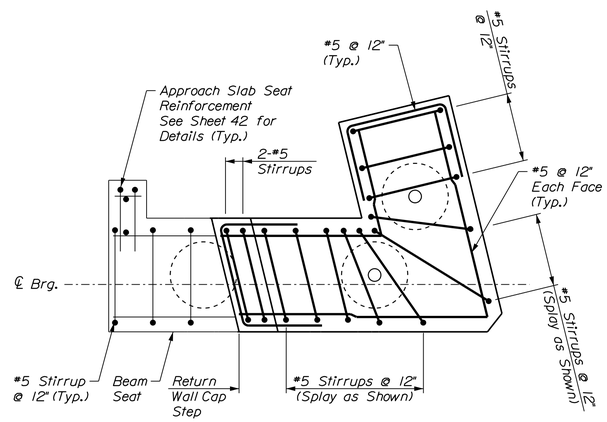

PRECAST UPPER RETURN WALL CAP PLAN

(Northeast and Southwest Wingwalls)

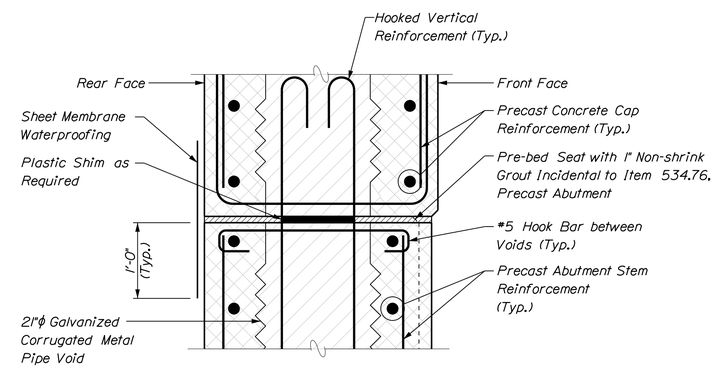

HORIZONTAL STEM CONSTRUCTION JOINT

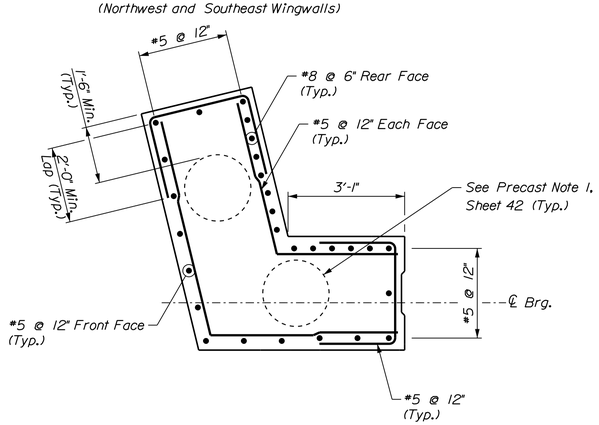

PRECAST RETURN WALL PLAN

(Northwest and Southeast Wingwalls)

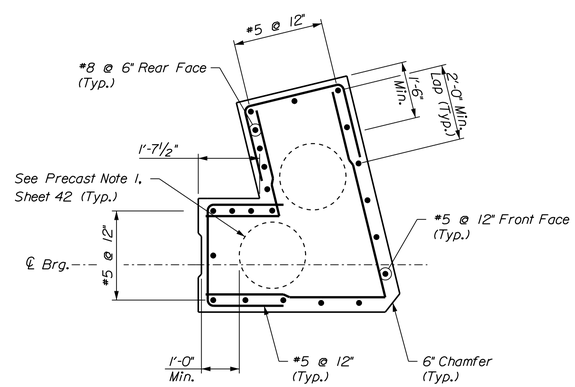

PRECAST RETURN WALL PLAN

(Northeast and Southwest Wingwalls)

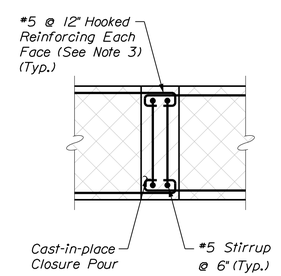

PRECAST CONCRETE CAP CLOSURE POUR PLAN

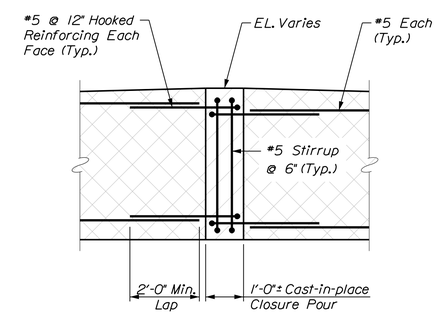

PRECAST CONCRETE CAP CLOSURE POUR ELEVATION

LEGEND

- Cast-in-Place Concrete
- Pre-Cast Concrete

McFarland Johnson

STATE OF MAINE
DEPARTMENT OF TRANSPORTATION

NHP-1928(300)

WIN 19283.00

BRIDGE NO. 3860

BRIDGE PLANS

		BY	DATE
PROJ. MANAGER	L. TIMBERLAKE		
DESIGN-DETAILED	D. Kull	P. Dustin	11/13
CHECKED-REVIEWED	T. Kendrick		11/13
DESIGN2-DETAILED2			
DESIGN3-DETAILED3			
REVISIONS 1			
REVISIONS 2			
REVISIONS 3			
REVISIONS 4			
FIELD CHANGES			

SIGNATURE

P.E. NUMBER

DATE

KITTERY OVERPASS BRIDGE
STATE ROUTE 236
KITTERY YORK COUNTY

MISCELLANEOUS DETAILS

SHEET NUMBER

44

OF 49

Filename: ...\Draw\Drawings\044_Misc_det.dgn Division: Username: Date:12/17/2013

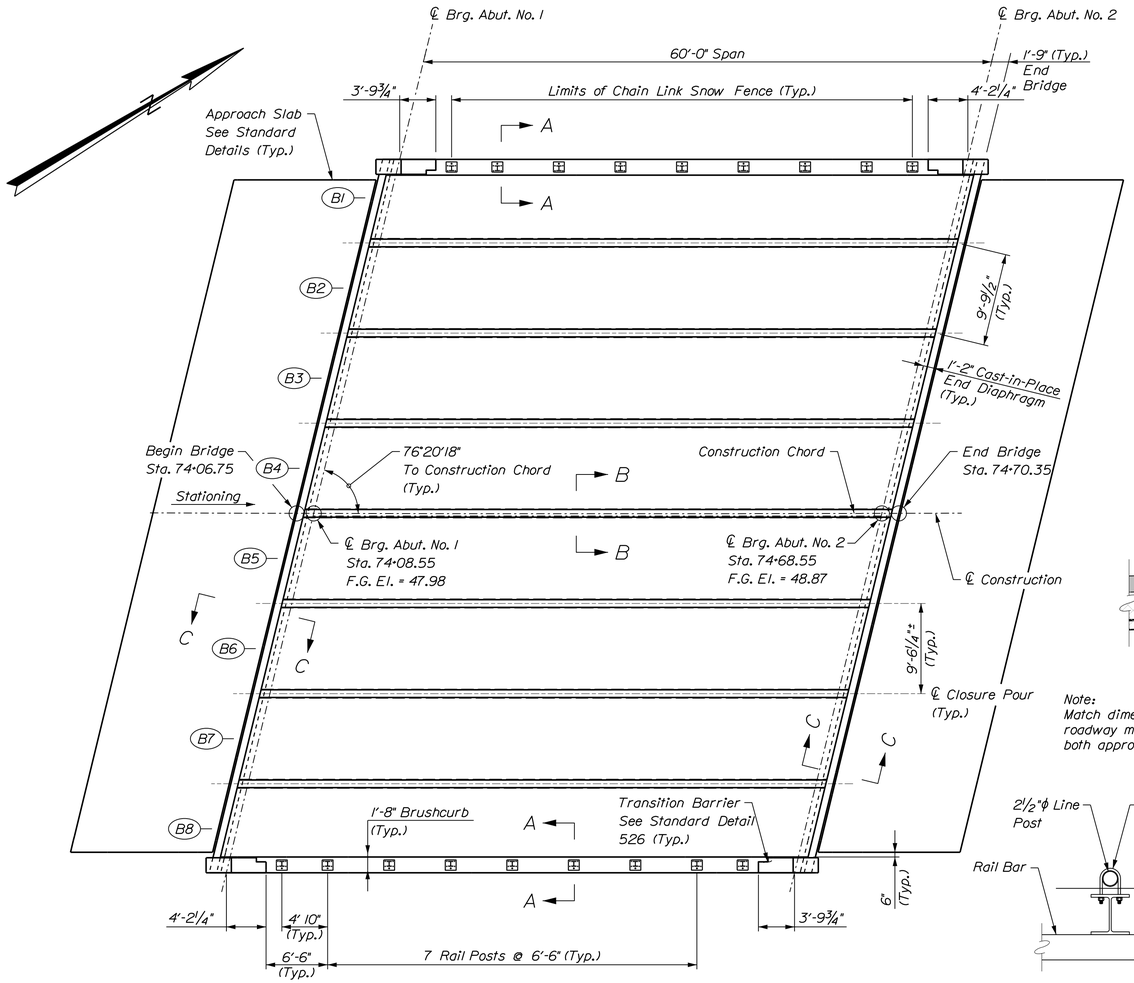

SUPERSTRUCTURE PLAN

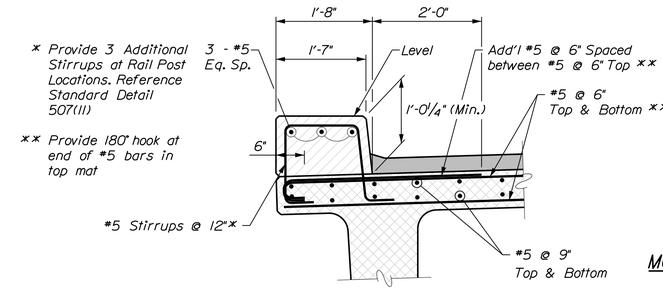

SECTION A-A

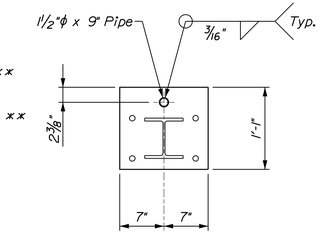

MODIFIED BASE PLATE PLAN

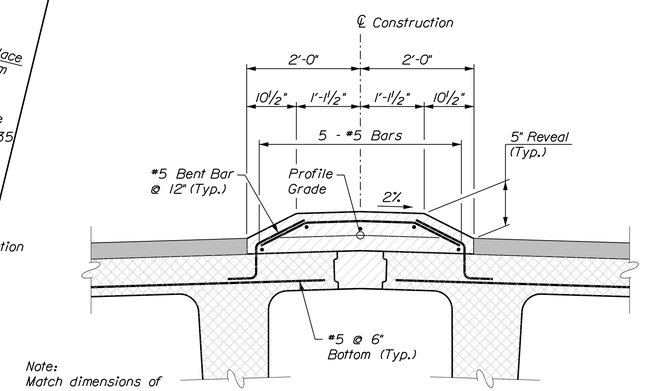

Note:
Match dimensions of roadway median at both approaches

SECTION B-B

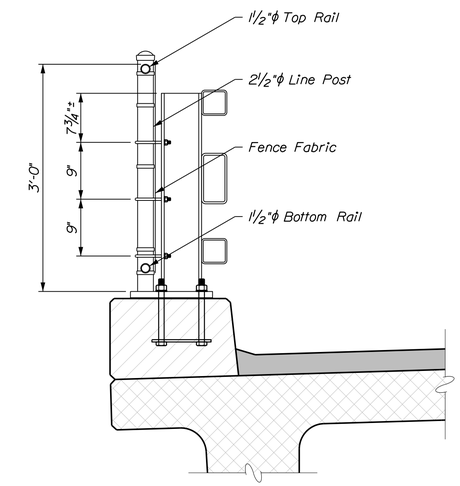

SIDEWALK RAIL SECTION

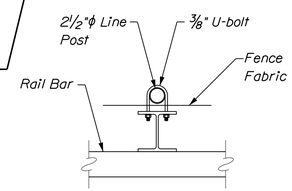

LINE POST DETAIL

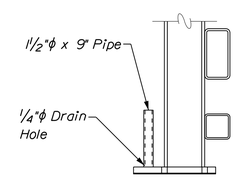

MODIFIED RAIL POST SECTION

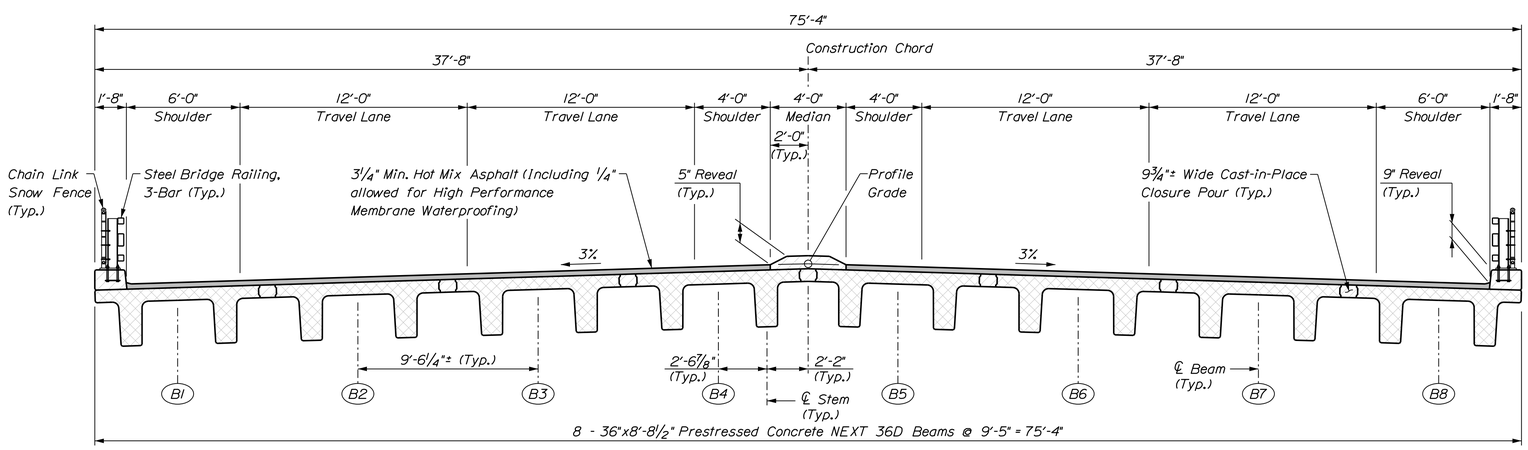

TRANSVERSE BRIDGE SECTION

SUPERSTRUCTURE NOTES

1. Reinforcing steel shall have a minimum concrete cover of 2 inches unless otherwise noted.
2. Form a one inch V-groove on the fascia at the horizontal joint between the curb and the NEXT Beam flange.
3. The concrete curb shall not be placed until the NEXT Beam has achieved the 28-day design strength. Payment for the concrete curb will be made under Item No. 502.49, Structural Concrete Curbs and Sidewalks.
4. The Contractor shall install Transition Barrier vertical closed stirrups, as shown in Standard Details Section 526 prior to the placement of the concrete curb.
5. Payment for the concrete bridge median will be made under Item No. 502.49, Structural Concrete Curbs and Sidewalks. Reinforcing in the concrete curb shall meet the requirements of Special Provision Section 503 and will be paid for under Item 502.49.
6. Reference Standard Detail 526 for reinforcing layout in the Transisiton Barrier.
7. For Section C-C, see Sheet 47.
8. Payment for modified base plates will be considered incidental to related Contract Items.

LEGEND

Cast-in-Place Concrete

Precast Concrete

McFarland Johnson

STATE OF MAINE
DEPARTMENT OF TRANSPORTATION

NHP-1928(300)

WIN 19283.00

BRIDGE NO. 3860

BRIDGE PLANS

		BY	DATE
PROJ. MANAGER	L. TIMBERLAKE		
DESIGN-DETAILED	D. Kull	P. Dustin	11/13
CHECKED-REVIEWED	T. Kendrick		11/13
DESIGN2-DETAILED2			
DESIGN3-DETAILED3			
REVISIONS 1			
REVISIONS 2			
REVISIONS 3			
REVISIONS 4			
FIELD CHANGES			

P.E. NUMBER

SIGNATURE

DATE

KITTERY OVERPASS BRIDGE
STATE ROUTE 236
KITTERY YORK COUNTY

FRAMING PLAN AND PROPOSED BRIDGE SECTION

SHEET NUMBER

45

OF 49

Date:12/17/2013

Username:

Division:

Filename: ...\Drawings\045_Framing_Plan.dgn

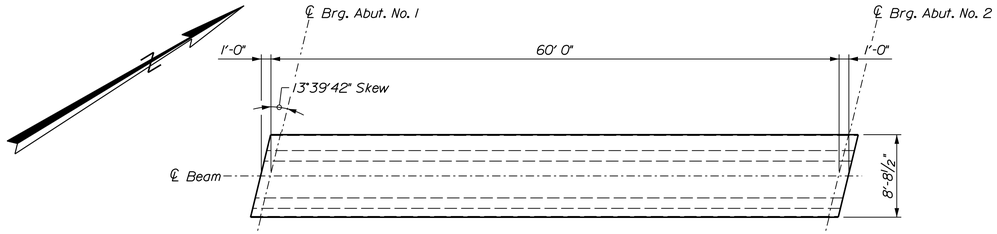

NEXT BEAM PLAN

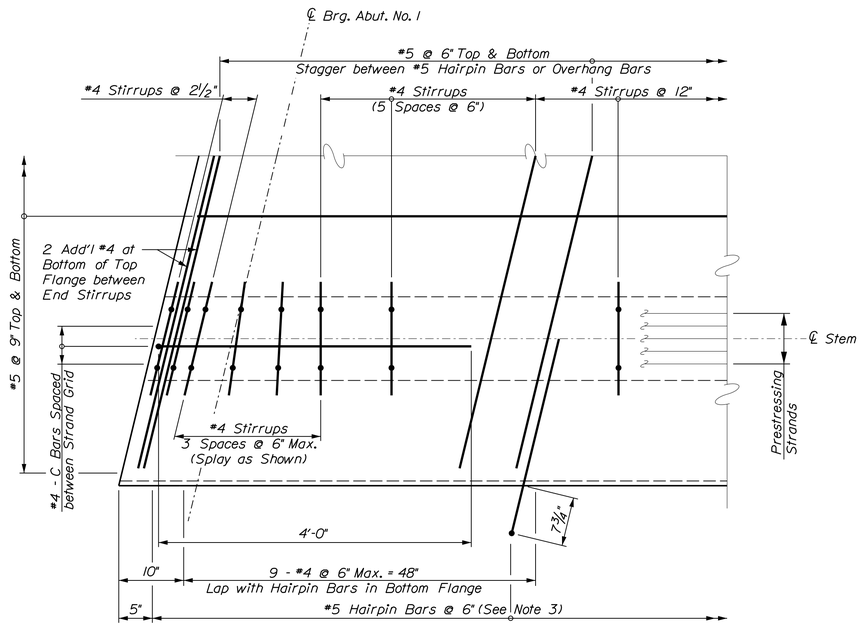

NEXT BEAM PARTIAL REINFORCEMENT PLAN

(Reinforcing Symmetrical about ℄)

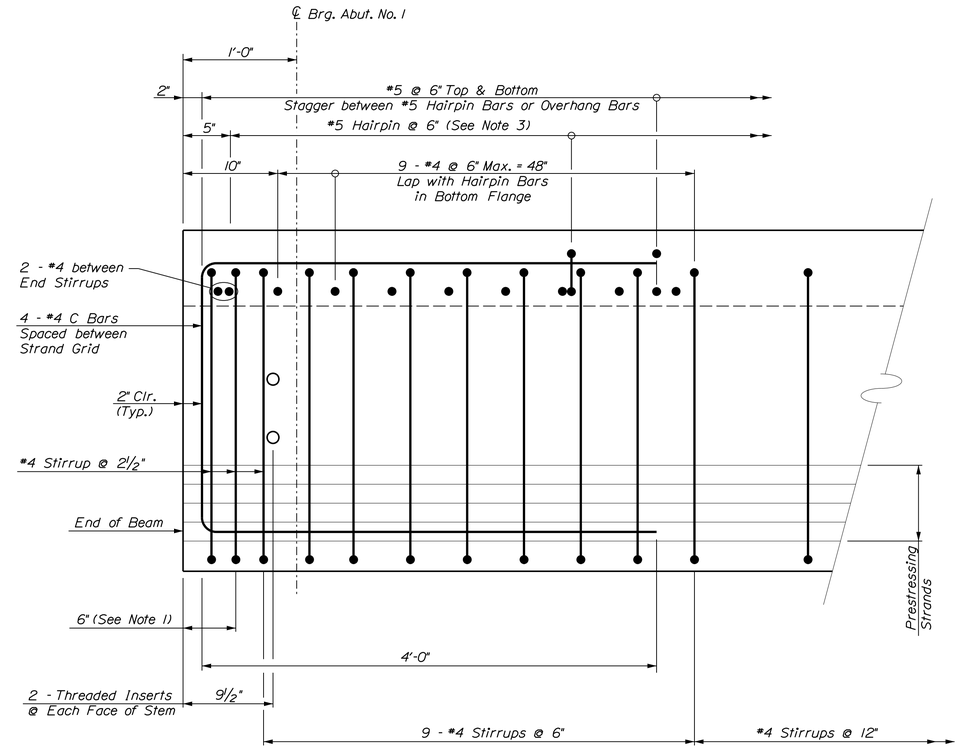

NEXT BEAM PARTIAL REINFORCEMENT ELEVATION

(Reinforcing Symmetrical about ℄)

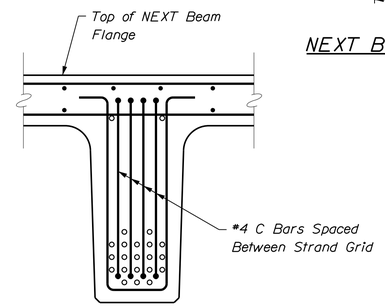

NEXT BEAM TYPICAL END VIEW

(See Note 1)

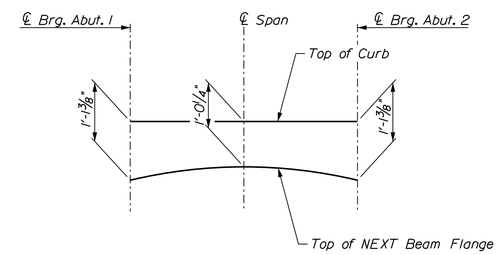

CURB HEIGHT REVEAL

Not to Scale

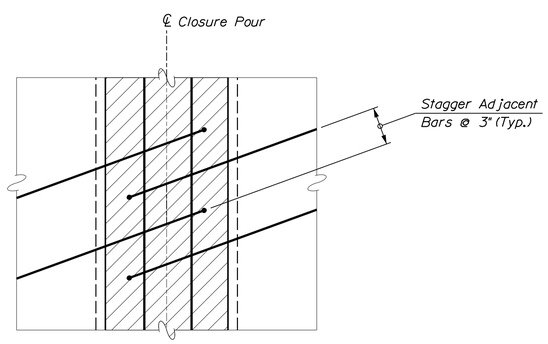

CLOSURE POUR PLAN

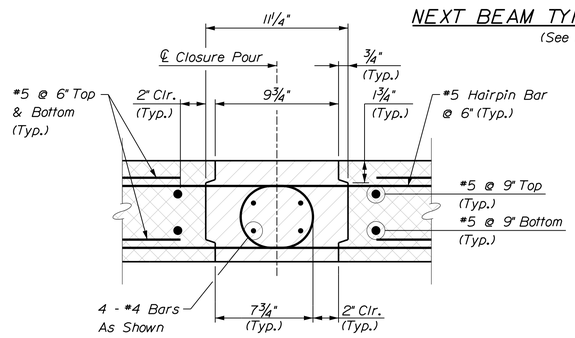

CLOSURE POUR DETAIL

LEGEND

- Cast-in-Place Concrete
- Precast Concrete

NOTES

1. 50 percent of strands to be debonded a minimum of 6 inches from end of beam.
2. Reinforcing and concrete in the cast-in-place closure pour will be paid under Item No. 502.492, Structural Concrete curb and Sidewalk, Class A. Reinforcing shall meet the requirements of Special Provision 503.
3. Additional #5 @ 6" overhang bars shown in Section A-A on Sheet 44 to be placed at same location in place of hairpin bars for overhang portion of Exterior NEXT Beams.

McFarland Johnson

STATE OF MAINE
DEPARTMENT OF TRANSPORTATION

NHP-1928(300)

WIN 19283.00

BRIDGE NO. 3860

BRIDGE PLANS

		BY	DATE
PROJ. MANAGER	L. TIMBERLAKE		
DESIGN-DETAILED	D. Kull	P. Dustin	11/13
CHECKED-REVIEWED	T. Kendrick		11/13
DESIGN2-DETAILED2			
DESIGN3-DETAILED3			
REVISIONS 1			
REVISIONS 2			
REVISIONS 3			
REVISIONS 4			
FIELD CHANGES			

SIGNATURE

P.E. NUMBER

DATE

KITTERY OVERPASS BRIDGE
STATE ROUTE 236
KITTERY YORK COUNTY

BEAM DETAILS
(1 OF 2)

SHEET NUMBER

46

OF 49

Filename: ...\Draw\Drawings\046_Beam_det.dgn Division: Username: Date:12/17/2013

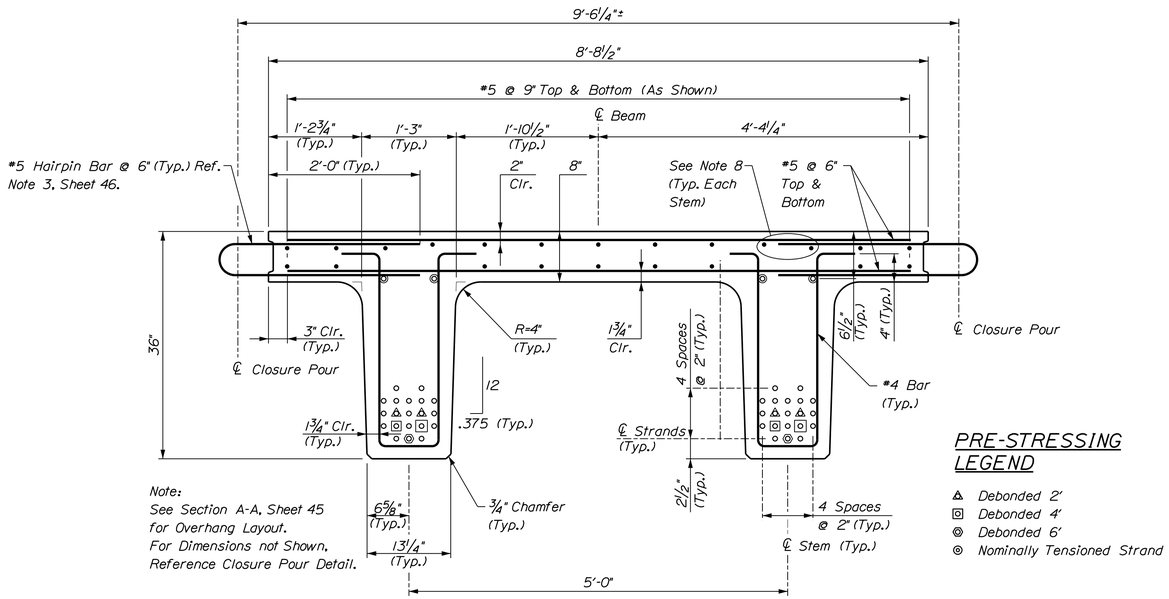

Note:
See Section A-A, Sheet 45 for Overhang Layout.
For Dimensions not Shown, Reference Closure Pour Detail.

PRE-STRESSING LEGEND

- △ Debonded 2'
- ▣ Debonded 4'
- ◎ Debonded 6'
- ⊙ Nominally Tensioned Strand

NEXT BEAM INTERIOR SECTION

(NEXT Beam Fascias Similar except for Overhang Section)

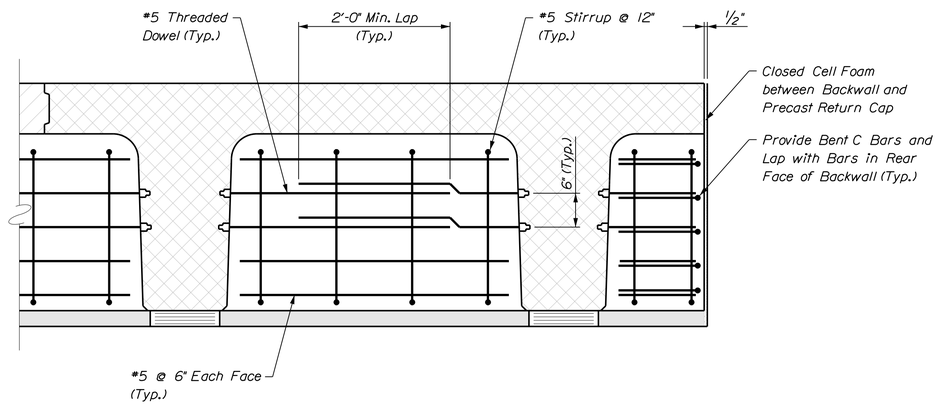

NEXT BEAM END DIAPHRAGM ELEVATION

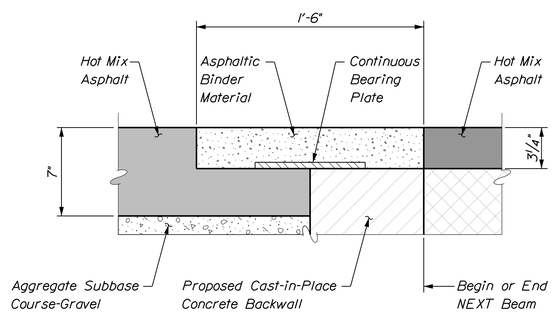

DETAIL "B"

LEGEND

- Cast-in-Place Concrete
- Precast Concrete

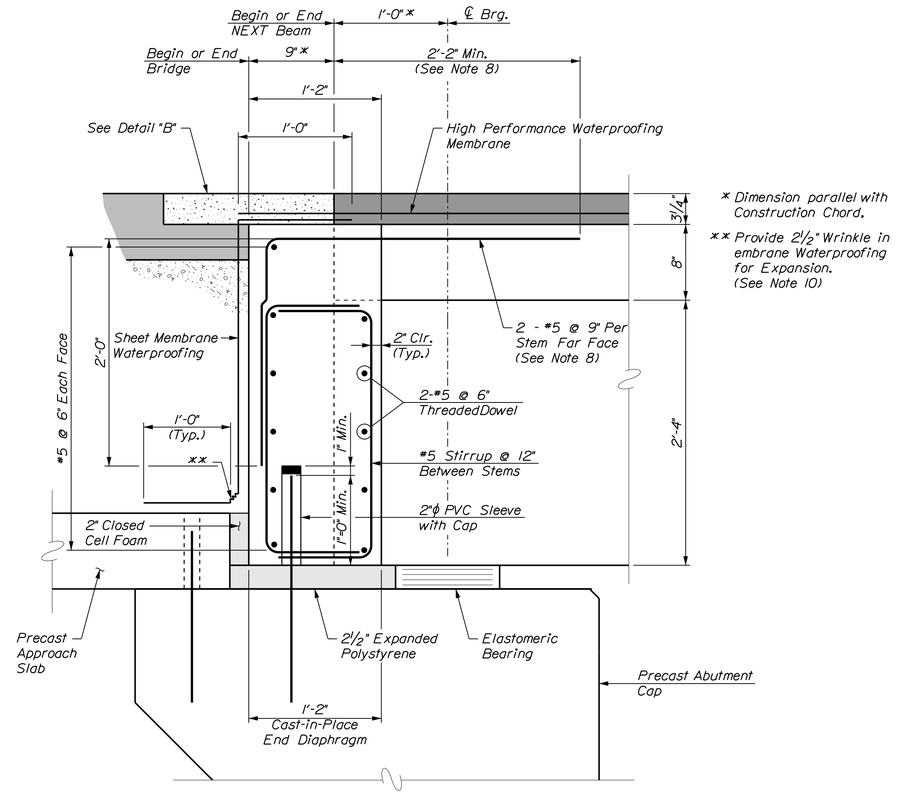

* Dimension parallel with Construction Chord.

** Provide 2 1/2" Wrinkle in embrane Waterproofing for Expansion. (See Note 10)

SECTION C-C

SUPERSTRUCTURE NOTES

1. NEXT D Beams are a non-proprietary shape developed by PCI NORTHEAST (PCINE). Standardized section properties and details may be found at http://www.pcine.org.

2. Design Values:
   a) Prestressing strands shall be 15.2mm diameter Carbon Fiber Composite Cable and shall meet the requirements of Special Provision 535, Precast, Prestressed Concrete Superstructure
   b) Estimated camber at release: 1 1/8"
   c) Tensioning force for fully tensioned strands: 39.5kips per strand
   d) Tensioning force for nominally tensioned strands: 5kips per strand

3. Reinforcing steel shall have a minimum concrete cover of two inches unless otherwise noted and shall meet the requirements of Special Provision Section 503, Reinforcing Steel.

4. The drilling of holes in the prestressed beams and the use of power actuated tools on the beams will not be permitted.

5. Payment for the cast-in-place closure pours and end diaphragm will be made under Item No. 502.492, Structural Concrete Curb and Sidewalk, Class "A". Reinforcing shall meet the requirements of Special Provision Section 503, Reinforcing Steel. Payment will be made under Item No. 502.492.

6. Ends of flanges in contact with closure pour concrete shall be sandblasted prior to delivery and power washed with water prior to erection of the beams.

7. Method of forming flange connection shall be determined by the Contractor. The forms shall be removable and able to accomodate differential camber. Form supports shall not penetrate through the top of pour or NEXT Beam unless approved by the Engineer.

8. Extend 2 - No. 5 bars above stem from top flange reinforcing beyond end of beam and a minimum of 2 feet into cast-in-place backwall. Bars can lap to longitudinal bars or may be extensions of #5 @ 9" in the top flange.

9. Payment for 2 1/2 inch expanded polystyrene and 2 inch closed cell foam will be made under Item 502.492, Structural Concrete Curb and Sidewalk, Class "A".

10. Apply one layer of mambrane waterproofing in accordance with Section 508 of the Standard Specifications.

11. Top of precast NEXT beam shall have a float finish per Special Provision 535.

McFarland Johnson

STATE OF MAINE
DEPARTMENT OF TRANSPORTATION

NHP-1928(300)

WIN 19283.00

BRIDGE NO. 3860

BRIDGE PLANS

		BY	DATE
PROJ. MANAGER	L. TIMBERLAKE		
DESIGN-DETAILED	D. Kull	P. Dustin	11/13
CHECKED-REVIEWED	T. Kendrick		11/13
DESIGN2-DETAILED2			
DESIGN3-DETAILED3			
REVISIONS 1			
REVISIONS 2			
REVISIONS 3			
REVISIONS 4			
FIELD CHANGES			

SIGNATURE

P.E. NUMBER

DATE

KITTERY OVERPASS BRIDGE
STATE ROUTE 236
KITTERY YORK COUNTY

BEAM DETAILS
(2 OF 2)

SHEET NUMBER
47
OF 49

Filename: ...\Draw\Drawings\046_Beam_det.dgn Division: Username: Date:12/17/2013

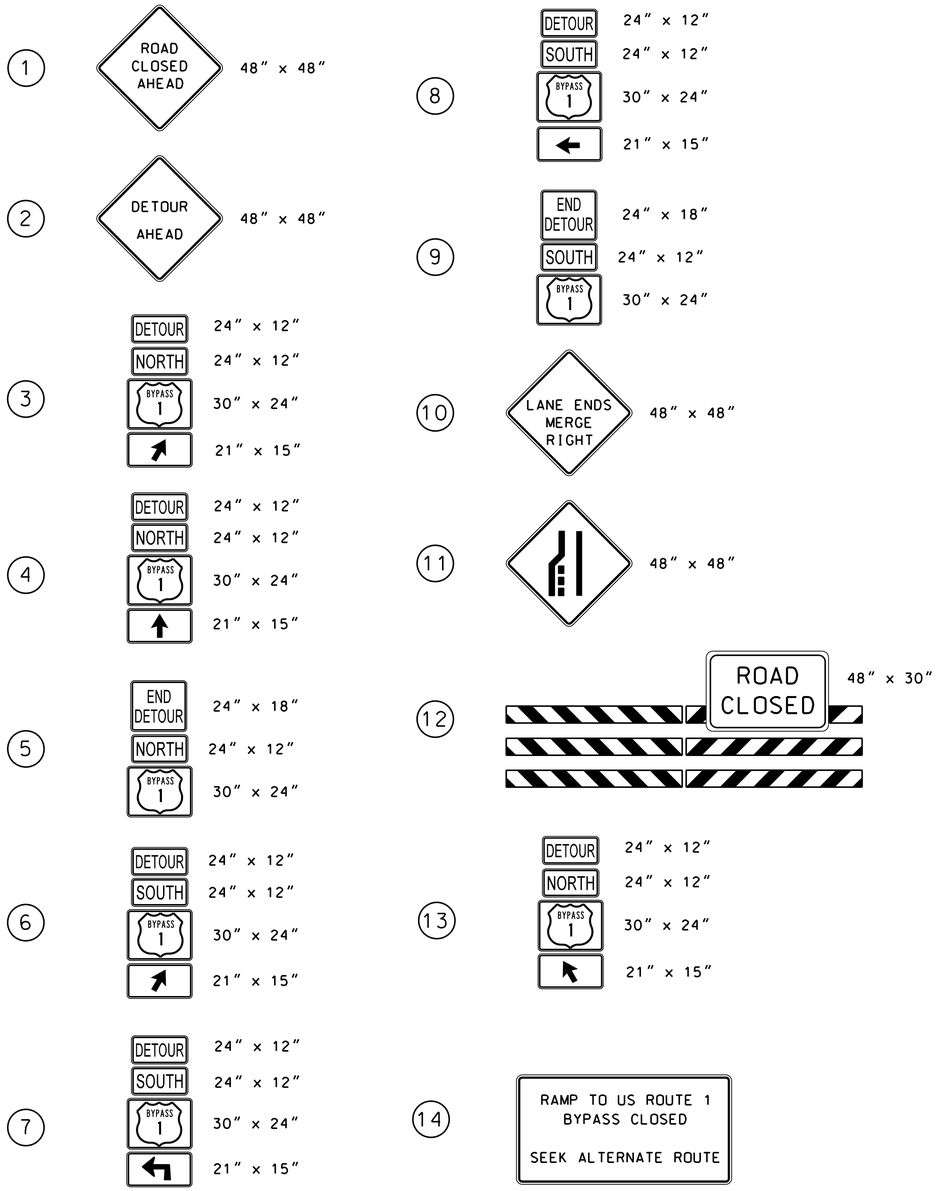

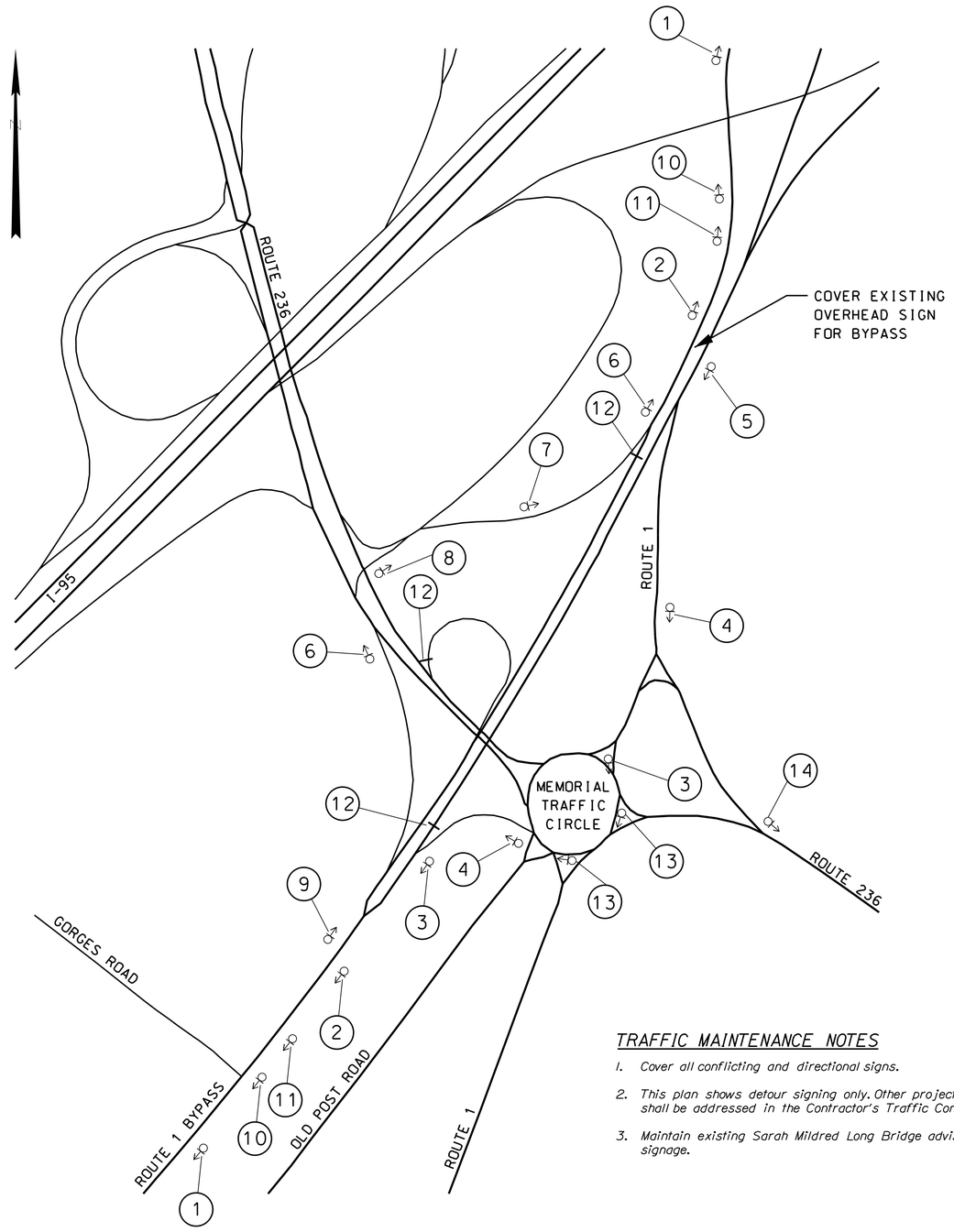

NOT TO SCALE

TRAFFIC CONTROL NOTES

1. TWO LANES OF TRAFFIC (ONE IN EACH DIRECTION) SHALL BE MAINTAINED ON ROUTE 236 AT ALL TIMES UNLESS OTHERWISE SPECIFIED IN THE SPECIAL PROVISIONS. MINIMUM LANE WIDTHS SHALL BE 13'.
2. THE CONTRACTOR MAY REMOVE THE EXISTING MEDIAN ISLAND ON ROUTE 236 AND PROVIDE TEMPORARY PAVEMENT TO ALLOW ADDITIONAL PAVEMENT WIDTH UNDER THE BRIDGE FOR TRAFFIC CONTROL. IF THE MEDIAN IS REMOVED, OPPOSING TRAFFIC LANES ON ROUTE 236 SHALL BE SEPARATED WITH TRAFFIC CONTROL DRUMS.
3. SEE SPECIAL PROVISIONS FOR ALLOWABLE CLOSURES OF ROUTE 236. SHOULD UNACCEPTABLE BACK-UPS RESULT FROM TRAFFIC CONTROL OPERATIONS, THE CONTRACTOR SHALL TAKE APPROPRIATE MEASURES TO RELIEVE THE BACK-UPS, AS APPROVED BY THE ENGINEER. CARE SHALL BE TAKEN TO ENSURE THAT TRAFFIC WITHIN THE TRAFFIC CIRCLE CONTINUES TO CIRCULATE. BACK-UPS SHALL NOT EXTEND INTO THE TRAFFIC CIRCLE AT ANY TIME DURING TEMPORARY CLOSURES.
4. THE CONTRACTOR MAY UTILIZE TEMPORARY CONCRETE BARRIER TO SHIELD THE WORK ZONE FROM ACTIVE TRAFFIC LANES ON ROUTE 236. ENDS OF TEMPORARY CONCRETE BARRIER SHALL BE PROTECTED WITH WORK ZONE CRASH CUSHIONS.
5. ANY TEMPORARY LANE SHIFTS SHALL CONFORM TO THE LATEST EDITION OF THE MUTCD AND MEDOT STANDARD DETAILS.
6. WHEN THE US ROUTE 1 BYPASS IS OPENED TO TRAFFIC, TEMPORARY CONCRETE BARRIER MAY USED IN LIEU OF PERMANENT BRIDGE RAILING ALONG THE BYPASS FOR A MAXIMUM OF 4 WEEKS. IF USED, TEMPORARY CONCRETE BARRIER SHALL BE A MINIMUM OF 4' FROM THE PERMANENT BRIDGE RAIL LOCATION. ENDS OF TEMPORARY BARRIER SHALL BE PROTECTED WITH WORK ZONE CRASH CUSHIONS.

TRAFFIC MAINTENANCE NOTES

1. Cover all conflicting and directional signs.
2. This plan shows detour signing only. Other project signing shall be addressed in the Contractor's Traffic Control Plan.
3. Maintain existing Sarah Mildred Long Bridge advisory signage.

McFarland Johnson

STATE OF MAINE
DEPARTMENT OF TRANSPORTATION

NHP-1928(300)

WIN 19283.00

BRIDGE NO. 3860

BRIDGE PLANS

		BY	DATE
PROJ. MANAGER	L. Timberlake		
DESIGN-DETAILED	D. Kull	P. Dustin	11/13
CHECKED-REVIEWED	T. Kendrick		11/13
DESIGN2-DETAILED2			
DESIGN3-DETAILED3			
REVISIONS 1			
REVISIONS 2			
REVISIONS 3			
REVISIONS 4			
FIELD CHANGES			

SIGNATURE

P.E. NUMBER

DATE

KITTERY OVERPASS BRIDGE
OVER STATE ROUTE 236
KITTERY YORK COUNTY

DETOUR SIGNING PLAN

SHEET NUMBER

48

OF 49

Filename: ...\Drawings\048_Detour_Plan.dgn Division: Username: Date:12/17/2013

Filename: ...\Draw\Drawings\049_RWPLAN1.dgn Division: Username: Date:12/17/2013

CONTROL INFORMATION

HORIZONTAL DATUM - US STATE PLAN NAD(83) 1996
ZONE - MAINE 2000 WEST ZONE
VERTICAL DATUM - NAVD 88
COMBINED SCALE FACTOR - 0.9999892

GRID NORTH

STATE HIGHWAY "3"

TO PORTSMOUTH, NH

STATE HIGHWAY "3" / ROUTES 1 & 236

STATE HIGHWAY "3" / ROUTE 236

TO ELIOT

STATE HIGHWAY "1"

US ROUTE 1 BYPASS
CURVE DATA

PI = 74+64.73
D = 00°29'23"
Δ = 06°30'14" Lt.
R = 11700.00'
L = 1328.11'
T = 664.77'
E = 18.87'

TO PORTSMOUTH N.H.

STATE HIGHWAY "1" / ROUTE 1 BY-PASS

STATE HIGHWAY "1" / U.S. ROUTE 1 BY-PASS

BEGIN B.L. STA. 74+00.00

END B.L. STA. 78+00.00

400.00'

+19±+20± +62 +08 +38 T1+4 +94+ +05 +31

TO PORTLAND

SEE R/W REF. 1A

SEE R/W REF. 1B

4,534± S.F. EASE.

1,553± S.F. EASE.

SLOPE LIMITS

PENN CONDOMINIUM ASSOCIATION
ITEM NO. (1)
SLOPE EASE. = 4,534± S.F. (1)
TOTAL AREA = 18,928± S.F. (PER SURVEY)
TAX MAP/LOT - 22/3 & 4

DAVID W. NEWSON
ITEM NO. (2)
SLOPE EASE. = 1,553± S.F. (1)
TOTAL AREA = 0.65± AC. (PER TOWN)
TAX MAP/LOT - 22/5

P.L.

LIMITED COMMON ELEMENT 2

UNIT 2

COMMON ELEMENT

LIMITED COMMON ELEMENT 1

UNIT 1

OSCAR D. BORETH
TAX MAP/LOT - 22/11

COASTAL BENCHMARK LLC
TAX MAP/LOT - 22/6

PATRICK L. J. VEILLEUX
TAX MAP/LOT - 14/10, 12 & 12A

STATE HIGHWAY "1"

STATE HIGHWAY "3" / U.S. ROUTE 1 & 236

STATE HIGHWAY "3" / ROUTE 236

Kittery Memorial Traffic Circle

STATE HIGHWAY "3"

TO PORTSMOUTH, NH OR YORK, MAINE

EXISTING RIGHT OF WAY
1) ROUTE 1 BY-PASS
A) MAINE - NEW HAMPSHIRE INTERSTATE BRIDGE AUTHORITY
PISCATAQUA RIVER BRIDGE
KITTERY, MAINE & PORTSMOUTH, NEW HAMPSHIRE
RIGHT OF WAY MAPS - ME. APPROACH
RE-SURVEYED BY MOULTON ENGINEERING
DATED AUGUST 1954
SHEET 1 OF 3
B) MAINE STATE HIGHWAY COMMISSION - RIGHT OF WAY PLAN
STATE HIGHWAY A-10
KITTERY, YORK COUNTY
DATED - JULY 1941
S.H.C. FILE NO. 16-58, SHEETS 3 & 4
C) MAINE STATE HIGHWAY COMMISSION - RIGHT OF WAY MAP
STATE HIGHWAY "1"
KITTERY, YORK COUNTY
WEIGHING STATION
DATED SEPTEMBER 1954
S.H.C. FILE NO. 16-103
YORK COUNTY REGISTRY OF DEEDS
PLAN BOOK 35, PAGE 37
D) MAINE STATE HIGHWAY COMMISSION - RIGHT OF WAY MAP
KITTERY, YORK COUNTY
FEDERAL AID SECONDARY PROJECT S-0100(5)
DATED - JANUARY 1956
S.H.C. FILE NO. 16-112, SHEET 1 OF 13
YORK COUNTY REGISTRY OF DEEDS
PLAN BOOK 29, PAGE 27
E) MAINE STATE HIGHWAY COMMISSION - RIGHT OF WAY MAP
STATE HIGHWAY "95"
KITTERY, YORK COUNTY
FEDERAL AID PROJECT NO. I-95-1(2), SECTION 2
DATED - JULY 1967
S.H.C. FILE NO. 16-181, SHEETS 11+14 OF 56
YORK COUNTY REGISTRY OF DEEDS
PLAN BOOK 107, PAGES 19-24
F) STATE OF MAINE - DEPARTMENT OF TRANSPORTATION
RIGHT OF WAY MAP
KITTERY, YORK COUNTY
LAND OF MAINE - NEW HAMPSHIRE BRIDGE AUTHORITY TO STATE
DATED DECEMBER 1938, SEPTEMBER 1985
D.OT. FILE NO. 16-297, SHEET 5 OF 6
YORK COUNTY REGISTRY OF DEEDS
PLAN BOOK 155, PAGE 68
G) STATE OF MAINE - DEPARTMENT OF TRANSPORTATION
RIGHT OF WAY MAP - STATE HIGHWAY "1"
KITTERY, YORK COUNTY
FEDERAL AID PROJECT NO. STP-01-5727(00)X, P.I.N. 5727.00
DATED - APRIL 1996
D.O.T. FILE NO. 16-357, SHEET 5 & 6 OF 6
YORK COUNTY REGISTRY OF DEEDS
PLAN BOOK 267, PAGE 20
2) GORGES ROAD
A) TOWN OF KITTERY RECORDS
BOOK 13, PAGE 61
ACCEPTED OCTOBER 12, 1980
YORK COUTY REGISTRY OF DEEDS
PLAN BOOK 171, PAGE 5
RECORDED AUGUST 24, 1988

TAX MAP INFORMATION
1) TOWN OF KITTERY
TAX MAPS 13, 14, 21 & 22

STATE OF MAINE
REGISTRY OF DEEDS
COUNTY _____
RECEIVED _____, _____
at ____h____m____M and recorded in
Plan Book _____, Page _____
Attest: _____
REGISTER

WIN 19283.00

SYMBOLS

- IP or ● IRF (IRON PIPE or PIN FOUND)
- S.T. (SEPTIC TANK)
- (ROW MONUMENT)
- BM (TRAVERSE POINT)
- WELL
- GRADING LIMIT LINE
- CONSTRUCTION LIMIT LINE
- PROPERTY LINE
- LIMITS OF PROPERTY PORTION (L.O.W.P.)
- EXISTING RIGHT OF WAY
- NEW RIGHT OF WAY
- NEW ROW WITHIN EXIST. ROW
- CONTROL OF ACCESS
- WATER LINE
- GAS LINE
- ELECTRIC LINE
- TELEPHONE LINE
- SEWER LINE

ITEM	TECH	CHECKED
BASE MAP		
EXIST. R/W	G.L.L.	C.W.K.
PROP. LINES	G.L.L.	
AREAS	G.L.L.	N.T.A.

STATE OF MAINE
DEPARTMENT OF TRANSPORTATION
16 STATE HOUSE STATION - AUGUSTA, ME 04333-0016

KITTERY
RIGHT OF WAY MAP

REVISIONS			
NO.	DATE	DESCRIPTION	BY

PLAN FILED IN PLAN BOOK PAGE COUNTY RECORD					
NO.	GRANTOR	INSTRUMENT	DATE	BOOK	PAGE
		COND.	10/29/13	16721	253

DAVID BERNHARDT
COMMISSIONER
JOYCE NOEL TAYLOR
CHIEF ENGINEER

DATE

STATE OF MAINE
CHRISTOPHER W. KNIGHT
2257
PROFESSIONAL LAND SURVEYOR

To the best of my knowledge and belief, this map constitutes an accurate graphical representation of the Highway Right of Way lines shown hereon. Other boundary lines, including lines between abutters, are approximate and for general reference only. See sheet X of this plan set for reference coordinates.

STATE HIGHWAYS "1" & "3"
U.S. ROUTE 1 BY-PASS / ROUTE 236
KITTERY YORK COUNTY
FEDERAL AID PROJECT NO. NHP-1928(300)

JUNE 2013	RIGHT-OF-WAY MAP	D.O.T. FILE NO. 16-492
SCALE 1" = 25'	SHEET 1 OF 1	

SHEET NUMBER
49
OF 49