STATE OF MAINE
DEPARTMENT OF TRANSPORTATION

SPECIFICATIONS

Design: Load and Resistance Factor Design per AASHTO LRFD Bridge Design Specifications, Sixth Edition 2012.

DESIGN LOADING

Live Load ..... HL-93 Modified for Strength I

TRAFFIC DATA

Current (2012) AADT	4,400
Future (2022) AADT	4,880
Future (2032) AADT	5,330
DHV - % of AADT	10%
Design Hour Volume	533
Heavy Trucks (% of AADT)	7%
Heavy Trucks (% of DHV)	6%
Directional Distribution (% of DHV)	60%
18 kip Equivalent P 2.0	123
18 kip Equivalent P 2.5	117
Design Speed (mph)	25

HYDROLOGIC DATA

Drainage Area	152.3 sq mi
Design Discharge (Q50)	10,367.1 cfs
Check Discharge (Q100)	11,811.3 cfs
Headwater Elevation (Q50)	309.9 ft
Headwater Elevation (Q100)	310.6 ft
Discharge Velocity (Q50)	8.0 fps
Discharge Velocity (Q100)	8.5 fps
Headwater Elevation (Q1.1)	302.7 ft
Discharge Velocity (Q1.1)	3.2 fps
Headwater Elevation (Q25)	309.8 ft

MATERIALS

Concrete:	
Curbs & Transition Barriers	Class "LP"
All Other	Class "A"
Reinforcing:	
Plain	ASTM A615/A615M, Grade 60
Epoxy Coated	ASTM A775/A775M, Grade 60
Structural Steel:	
All Material (except as noted)	ASTM A709/A709M, Grade 50W (unpainted)
Pipe Piles	ASTM A252, Grade 3
H-Piles	ASTM A572/A572M, Grade 50
High Strength Bolts	ASTM A325, Type 3

BASIC DESIGN STRESSES

Concrete	f 'c = 4,350 psi
Reinforcing Steel	f y = 60,000 psi
Structural Steel:	
ASTM A709, Grade 50W	F y = 50,000 psi
ASTM A252, Grade 3	F y = 45,000 psi
ASTM A572, Grade 50	F y = 50,000 psi
ASTM A325	F μ = 120,000 psi

UTILITIES

Central Maine Power Company
Fairpoint Communications
Time Warner Cable
Oxford Water District
Town of Oxford

MAINTENANCE OF TRAFFIC

Traffic to be maintained on existing bridge with proposed bridge constructed on realignment.

OXFORD
OXFORD COUNTY
COVERED BRIDGE
OVER
LITTLE ANDROSCOGGIN RIVER
KING STREET (ROUTE 121)

FEDERAL AID PROJECT NO. AC-BH-1926(800)X
PROJECT LENGTH 0.152 mi.
BRIDGE NO. 3738

STATE OF MAINE
DONALD G. ETTINGER, JR.
No. 9244
3/24/14
LICENSED
PROFESSIONAL ENGINEER

Gorrill-Palmer Consulting Engineers, Inc.
Responsible For Roadway/Approach Plans

LIST OF DRAWINGS

Title Sheet	1
Estimated Quantities	2
General Construction Notes	3
General Plans	4-5
Profiles	6-7
Boring Location Plan	8
Interpretive Subsurface Profile	9
Boring Logs	10-11
Signing & Striping Plan	12-13
Curbing Layout Plan	14
Typical Sections	15
Cross Sections	16-26
Abutment No. 1 Plan and Elevation	27
Abutment No. 1 Reinforcement	28
Abutment No. 2 Plan and Elevation	29
Abutment No. 2 Reinforcement	30
Pier Plan and Elevation	31
Pier Notes	32
Pier Details	33
Pier Cap Reinforcement	34
Bearing Details	35
Framing Plan	36
Girder Details	37-38
Cross Frame Details	39
Superstructure Plan	40
Superstructure Details	41-43
Reinforcing Steel Schedule	44
Town of Oxford Sewer Utility Details (11 Sheets by Others)	45-55
Oxford Water District Utility Details (2 Sheets by Others)	56-57
Right of Way Map	58-59

PROJECT LOCATION:	Covered Bridge #3738 carrying Route 121 over Little Androscoggin River, 0.04 miles northeasterly of West Poland Road 44°08'13"N, 70°29'23"W
PROGRAM AREA:	Bridge
OUTLINE OF WORK:	Bridge Replacement

WIN 19268.00

AC-BH-1926(800)X

STATE OF MAINE
DEPARTMENT OF TRANSPORTATION
APPROVED
COMMISSIONER: DATE 4-22-14
CHIEF ENGINEER: DATE 4-17-14

STATE OF MAINE JOHN A. BURGESS 5745 LICENSED PROFESSIONAL ENGINEER

PROJECT INFORMATION		
PROGRAM	BRIDGE	
PROJECT MANAGER	STEPHEN BODGE	SIGNATURE 5745
DESIGNER	JACK BURGESS	P.E. NUMBER
CONSULTANT	BECKER STRUCTURAL ENGINEERS	03-24-2014
PROJECT RESIDENT		DATE
CONTRACTOR		
PROJECT COMPLETION DATE		

OXFORD COVERED BRIDGE

TITLE SHEET

SHEET NUMBER 1 OF 59

Gorrill-Palmer Consulting Engineers, Inc.
Engineering Excellence Since 1998
PO Box 1237, 15 Shaker Road, Gray, ME 04039
207-657-6910 F Alt: 207-657-6912
E-Mail: mailbox@gorrillpalmer.com

BECKER STRUCTURAL ENGINEERS
75 York Street, Portland, Maine 04101
207.879.1838 • beckerstructural.com

Filename:\00\bridge\msta\001_Title.dgn Division: BRIDGE Username: CADD Date:3/4/2014

ESTIMATED QUANTITIES - SECTION 1			
ITEM NO.	DESCRIPTION	QUANTITY	UNIT
201.11	CLEARING	0.6	AC
201.23	REMOVING SINGLE TREE TOP ONLY	1	EA
201.24	REMOVING STUMP	1	EA
202.08	REMOVING BUILDING NO. 1	1	LS
202.19	REMOVING EXISTING BRIDGE (415 CY /131,000 LB)	1	LS
203.20	COMMON EXCAVATION	4425	CY
203.21	ROCK EXCAVATION	100	CY
203.2318	DISPOSAL OF SPECIAL WASTE	120	T
203.25	GRANULAR BORROW	820	CY
206.061	STRUCTURAL EARTH EXCAVATION - BELOW GRADE	50	CY
206.07	STRUCTURAL ROCK EXCAVATION- DRAINAGE & MINOR STR	100	CY
206.10	STR EARTH EXC - PIERS	25	CY
304.10	AGGR SUBB COURSE - GRAVEL	2750	CY
403.207	HOT MIX ASPHALT 19.0 MM HMA	620	T
403.2081	12.5 MM POLYMER MODIFIED HMA	368	T
403.209	HOT MIX ASPHALT 9.5 MM HMA (INCID.)	45	T
403.2131	12.5 MM POLYMER MODIFIED HMA BASE	368	T
409.15	BITUMINOUS TACK COAT - APPLIED	212	G
501.231	DYNAMIC LOADING TEST	4	EA
501.50	STEEL H-BEAM PILES 89 LBS/FT. DELIVERED	440	LF
501.501	STEEL H-BEAM PILES 89 LBS/FT. IN PLACE	440	LF
501.70	STEEL PIPE PILES, DELIVERED, 30" DIA x5/8" WALL	135	LF
501.70	STEEL PIPE PILES, DELIVERED, 30" DIA x3/4" WALL	95	LF
501.701	STEEL PIPE PILES, IN PLACE, 30" DIA x5/8" WALL	135	LF
501.701	STEEL PIPE PILES, IN PLACE, 30" DIA x3/4" WALL	95	LF
501.90	PILE TIPS	10	EA
501.903	PILE TIPS - ROCK INJECTOR POINT	5	EA
501.91	PILE SPLICES	5	EA
501.92	PILE DRIVING EQUIPMENT MOBILIZATION	1	LS
502.219	STRUCTURAL CONCRETE, ABUT & RET WALLS (102 CY)	1	LS
502.239	STR CONC PIERS (34 CY)	1	LS
502.26	STR CONC RD & SW SLABS ON STEEL BRIDGE (149 CY)	1	LS
502.31	STRUCTURAL CONCRETE APPROACH SLAB (23 CY)	1	LS
502.49	STRUCTURAL CONCRETE CURBS AND SIDEWALKS (22 CY)	1	LS
503.12	REINFORCING STEEL, FABRICATED/DELIVERED	19100	LB
503.13	REINFORCING STEEL, PLACING	19100	LB
503.14	EPOXY-COATED REINF STEEL, FAB'D/DELIV'D	1100	LB
503.15	EPOXY-COATED REINF STEEL, PLACING	1100	LB
504.702	STRUCTURAL STEEL FAB'D & DELIV'D, WELDED (185,500 LB)	1	LS
504.71	STRUCTURAL STEEL ERECTION (185,500 LB)	1	LS
504.905	ROCK ANCHORS	1	LS
504.906	ROCK DOWELS	1	LS
505.08	SHEAR CONNECTORS (2150 LBS)	1	LS
506.9105	POLYUREA ELASTOMER COATING	1	LS
507.0821	STEEL BRIDGE RAILING, 3-BAR (323 LF)	1	LS
508.14	HIGH PERFORMANCE WATERPROOFING MEMBRANE (615 SY)	1	LS
511.07	COFFERDAM - ABUTMENT NO. 2	1	LS
514.06	CURING BOX FOR CONC CYL	1	EA
515.21	PROT COAT FOR CONC SURFACES (200 SY)	1	LS
520.232	EXPANSION DEVICE - ASPHALTIC PLUG JOINT	62	LF
523.52	BEARING INSTALLATION	5	EA
523.5401	LAMINATED ELASTOMERIC BEARINGS, FIXED	5	EA
526.34	PERMANENT CONC TRANSITION BARRIER	4	EA
527.303	ENERGY ABSORBING SYSTEM (ET-PLUS)	1	EA
603.15	12" CULV PIPE OPTION I	5	LF
603.17	18" CULVERT PIPE OPTION I	124	LF
603.179	18" CULV PIPE OPTION III	66	LF
604.092	CATCH BASIN TYPE BI-C	6.4	EA
604.096	60" CATCH BASIN TYPE BI-C	1	EA
604.245	CATCH BASIN TYPE F4-C	1	EA
604.262	CATCH BASIN TYPE B5-C	1	EA
605.09	6" UNDERDRAIN TYPE B	40	LF
605.11	12" UNDERDRAIN TYPE C	810	LF
605.13	18" UNDERDRAIN TYPE C	43	LF
606.1721	BRIDGE TRANSITION - TYPE I	4	EA
606.23	GUARDRAIL TYPE 3C - SINGLE RAIL	325	LF
606.232	GUARDRAIL TYPE 3C - OVER 15 FOOT RADIUS	138	LF
606.265	TERMINAL END - SINGLE RAIL - GALV STEEL	3	EA
606.353	REFLECTORIZED FLEXIBLE GUARDRAIL MARKER	8	EA
606.356	UNDERDRAIN DELINEATOR POST	4	EA
609.31	CURB TYPE 3	1025	LF
610.08	PLAIN RIPRAP	175	CY
610.16	HEAVY RIPRAP	1730	CY
610.18	STONE DITCH PROTECTION	14	CY
613.319	EROSION CONTROL BLANKET	140	SY
615.07	LOAM	220	CY
618.1301	SEEDING METHOD NUMBER 1 - PLAN QUANTITY	17	UN
618.1411	SEEDING METHOD NUMBER 3 - PLAN QUANTITY	19	UN
619.1201	MULCH - PLAN QUANTITY	36	UN
620.58	EROSION CONTROL GEOTEXTILE	1350	SY
620.661	DRAINAGE GEOCOMPOSITE INSTALLATION	55	SY
627.733	4" WHITE OR YELLOW PAINTED PAVE MARKING LINE	4500	LF
627.75	WHITE OR YELLOW PAVEMENT AND CURB MARKING	65	SF
627.76	TEMP PAVEMENT MARKING LINE, WHITE OR YEL (7,000 LF)	1	LS
629.05	HAND LABOR, STRAIGHT TIME	80	HR
631.10	AIR COMPRESSOR (INCLUDING OPERATOR)	40	HR

ESTIMATED QUANTITIES - SECTION 1			
ITEM NO.	DESCRIPTION	QUANTITY	UNIT
631.11	AIR TOOL (INCLUDING OPERATOR)	40	HR
631.12	ALL-PURPOSE EXCAVATOR (INCLUDING OPERATOR)	80	HR
631.14	GRADER (INCLUDING OPERATOR)	40	HR
631.172	TRUCK-LARGE (INCLUDING OPERATOR)	40	HR
631.18	CHAIN SAW RENTAL(INCLUDING OPERATOR)	40	HR
631.20	STUMP CHIPPER RENTAL (INCLUDING OPERATOR)	20	HR
631.22	FRONT END LOADER (INCLUDING OPERATOR)	20	HR
631.32	CULVERT CLEANER (INCLUDING OPERATOR)	10	HR
637.071	DUST CONTROL	1	LS
639.18	FIELD OFFICE TYPE A	1	EA
645.271	REG WARNING CONFIRMATION AND ROUTE SIGN TYPE I	140	SF
652.312	TYPE III BARRICADE	8	EA
652.33	DRUM	75	EA
652.34	CONE	75	EA
652.35	CONSTRUCTION SIGNS	600	SF
652.361	MAINT OF TRAFF CONTROL DEVICES	1	LS
652.38	FLAGGER	2600	HR
652.41	PORTABLE - CHANGEABLE MESSAGE SIGN	2	EA
656.75	TEMP. SOIL EROS. AND WATER POLLUTION CONTROL	1	LS
658.20	ACRYLIC LATEX FINISH, GREEN	6	SY
659.10	MOBILIZATION	1	LS
660.21	ON-THE-JOB TRAINING (BID)	500	HR

ESTIMATED QUANTITIES - SECTION 2			
ITEM NO.	DESCRIPTION	QUANTITY	UNIT
659.10	MOBILIZATION SEWER	1	LS
827.30	ROCK EXCAVATION - REMOVE AND REFILL	15	CY
827.31	UNSUITABLE EXCAVATION, REMOVE AND REFILL ABOVE GRADE SEWER	15	CY
830.13	SEWER MAIN BRIDGE CROSSING	1	LS
845.10	STRUCTURAL STEEL UTILITY SUPPORT (2,500 LB)	1	LS

ESTIMATED QUANTITIES - SECTION 3			
ITEM NO.	DESCRIPTION	QUANTITY	UNIT
652.35	CONSTRUCTION SIGNS	32	SF
656.75	TEMPORARY SOIL EROSION AND WATER POLLUTION CONTROL	1	LS
659.10	MOBILIZATION	1	LS
823.311	12" GATE VALVE WITH BOX - RESILIENT WEDGE	2	EA
825.60	12" HDPE WATER MAIN	660	LF
825.62	8" HDPE WATER MAIN	20	LF
827.301	ROCK EXCAVATION WATER MAIN	10	CY
827.31	UNSUIT SOIL EXCAV., REMOVE & REFILL	25	CY
827.331	TRENCH INSULATION	25	SY
910.30	SPECIAL WORK - HYDRANT LATERAL AND VALVE	2	EA
910.301	SPECIAL WORK - WATER MAIN CONNECTION A	1	LS
910.301	SPECIAL WORK - WATER MAIN CONNECTION B	1	LS
910.301	SPECIAL WORK - WATER MAIN SERVICE LATERAL	1	LS

Corrill-Palmer Consulting Engineers, Inc.
PO Box 1257 Engineering Excellence Since 1998 207-657-5910
15 Shaker Road FAX: 207-657-5912
Gray, ME 04039 E-Mail: mailbox@gorr@palmer.com

BECKER STRUCTURAL ENGINEERS
75 York Street, Portland, Maine 04101
207.879.1838 • beckerstructural.com

STATE OF MAINE
DEPARTMENT OF TRANSPORTATION

AC-BH-1926(800)X

WIN 19268.00

BRIDGE NO. 3738

BRIDGE PLANS

		BY	DATE
PROJ. MANAGER	STEPHEN BODGE		
DESIGN-DETAILED	B.WELCH	D.BURGESS	03-04-14
CHECKED-REVIEWED	B.WELCH	J.BURGESS	03-04-14
DESIGN2-DETAILED2			
DESIGN3-DETAILED3			
REVISIONS 1			
REVISIONS 2			
REVISIONS 3			
REVISIONS 4			
FIELD CHANGES			

SIGNATURE

P.E. NUMBER

DATE

COVERED BRIDGE
OVER LITTLE ANDROSCOGGIN RIVER
OXFORD COUNTY
OXFORD

ESTIMATED QUANTITIES

SHEET NUMBER

2

OF 59

Filename: ...\bridge\msto\002_Estimate.dgn Division: BRIDGE Username: CADD Date:4/15/2014

GENERAL CONSTRUCTION NOTES

1. For easements, construction limits and right of way lines, refer to Right of Way Map.

2. The clearing and selective clearing and thinning lines shown on the plans are for estimating purposes only. The actual lines for clearing and thinning shall be established in the field by the contractor and approved by the Resident.

3. Grubbing in fill areas has been shown on the cross sections and the quantities noted. These limits are approximate and have been used for estimating purposes only. Actual grubbing limits may vary based on field conditions as directed by the Resident. Estimated grubbing depths are 6 inches in field areas and 12 inches in wooded areas.

4. All utility facilities shall be adjusted by the respective utilities unless otherwise noted.

5. The location of the existing utilities and drainage shown on the plans and cross sections were compiled from field survey and various other sources. Locations are approximate and not guaranteed to be accurate nor is it guaranteed that all utilities are shown. No separate or additional compensation will be allowed to the Contractor due to any variance between the data shown on the plans and the actual field conditions encountered.

6. See Special Provision 104 for utility installation work.

7. Do not excavate for Aggregate Subbase Course where existing material is suitable as determined by the Resident.

8. In areas where the Resident directs the Contractor not to excavate to the subgrade line shown on the plans, payment for removing existing pavement, grubbing, shaping, ditching, and compacting the existing subbase and layers of new subbase 6 inches or less thick will be made under appropriate equipment rental items.

9. Construct the riprap shelf at Abutment No. 1 at El. 313.00 and Abutment No. 2 at El. 310.00

10. No separate payment for Superintendent or Foreman shall be made for the supervision of equipment being paid for under the equipment rental items.

11. Except as otherwise shown, backfill for the wingwalls and abutment walls shall be Granular Borrow meeting the requirements of Subsection 703.19, Material for Underwater Backfill.

12. Entrances shall be constructed with:
Residential Paved: 2" Hot Mix Asphalt -Grading 9.5mm
12" Aggregate Subbase Course - Gravel

13. Existing culverts to remain shall be cleaned as directed by the Resident. Payment shall be made under item 631.32 Culvert Cleaner (Including operators).

14. Any necessary cutting of existing pipes to fit in areas of proposed catch basins and modifying existing catch basins to fit new pipes shall not be paid for separately and shall be considered incidental to 604 pay items.

15. Catch basin and rim elevations noted on the cross sections are the top of grate elevations at the center of grate. Catch basin offset locations are measured to the center of the grate.

16. Removal of existing drainage pipes, as noted on the plans, shall be considered incidental to item 203.20, Common Excavation.

17. Any damage to the existing roads, slopes, pipes or drainage structures caused by the Contractor's equipment, personnel or operation shall be repaired to the satisfaction of the Resident. All work, equipment and materials required to make repairs shall be at the Contractor's expense.

18. Pavement Markings shall be in accordance with the 'Manual on Uniform Traffic Control Devices for Streets and Highways" U.S.D.O.T.F.H.W.A. latest edition. Pavement Marking pay items are listed on the Quantitiy Sheet.

19. Place loam 2 inches deep on all new or reconstructed sideslopes or as directed by the Resident, unless otherwise noted.

20. An NCHRP350 compliant guardrail end treatment shall be installed concurrently with the placement of each section of beam guardrail.

21. Protective Coating for Concrete Surfaces shall be applied to the following areas:

All exposed surfaces of concrete curbs and sidewalks.
Fascias down to the drip notch.
All exposed surfaces of concrete transition barriers.

22. Project information referred to below may be accessed at the following MaineDOT web address: http://www.maine.gov/mdot/contractors/.

23. The existing bridge plans may be accessed at the MaineDOT web address. The plans are reproductions of the original drawings as prepared for the construction of the bridge. It is very unlikely that the plans will show any construction field changes and alterations which may have been made to the bridge during its life span.

24. The hydrologic report of the bridge site may be accessed at the MaineDOT web address. The hydrologic report is based on MaineDOT's interpretation of the information obtained for the subject site. No assurance is given that the information or the conclusions of the report will be representative of actual conditions at the time of construction.

25. The project geotechnical report titled: Geotechnical Design Report for the Replacement of Covered Bridge Route 121 over Little Androscoggin River Oxford, Maine, Soils Report No. 2013-29, December 16, 2013 may be accessed at MaineDOT web address.

26. Geotechnical information furnished or referred to in this plan set is for the use of the Bidders and the Contractor. No assurance is given that the information or interpretations will be representative of actual subsurface conditions at the construction site. MaineDOT will not be responsible for the Bidders' or Contractor's interpretations of, or conclusions drawn from, the geotechnical information. The boring logs contained in the plan set present factual and interpretive subsurface information collected at discrete locations. Data provided may not be representative of the subsurface conditions between the boring locations.

27. Quantities included for pay items measured and paid for by Lump Sum are estimated quantities and are provided by MaineDOT for informational purposes only. Lump Sum pay items will be paid for at the Contract Bid amount, with no addition or reduction in payment to the Contractor if the actual final quantities are different from the MaineDOT provided estimated quantities, except as follows:

a. If a Lump Sum pay item is eliminated, the requirements of Standard Specifications Section 109.2, Elimination of Items, will take precedence.

b. If other Contract Documents specifically allow a change in payment for a Lump Sum pay item, those requirements will be followed.

c. If a design change results in changes to estimated quantities for Lump Sum pay items, price adjustments will be made in accordance with Standard Specifications Section 109.7, Equitable Adjustments to Compensation.

28. The Contractor shall submit a Bridge Demolition Plan to the Resident at least 10 business days prior to the start of demolition work. The plan shall outline the methods and equipment to be used to remove and dispose of all materials included in the existing bridge. No work related to the removal of the bridge shall be undertaken by the Contractor until MaineDOT has reviewed the Bridge Demolition Plan for appropriateness and completeness. Payment for all work necessary for developing, submitting and finalizing the Demolition Plan will be considered incidental to the bridge removal pay item.

29. The existing bridge shall be removed and become the property of the Contractor. The steel portions of the existing bridge are coated with a lead-based paint system. The Contractor is responsible for the containment, proper management and disposal of all lead-contaminated hazardous waste generated by the process of demolition of the bridge. The Contractor is responsible for implementing appropriate OSHA mandated personal protection standards is solely responsible for the care, custody and control of the components of the existing bridge and any hazardous waste generated as a result of the storage, recycling or disposal of the bridge components, including lead-coated steel. The Contractor shall recycle or reuse the steel in accordance with the Maine Department of Environmental Protection's "Maine Hazardous Waste Management Regulations," Chapter 850. A copy of this regulation is available at MaineDOT's offices on Child Street in Augusta. Payment for all labor, materials, equipment and other costs required to remove and dispose of the existing bridge will be considered incidental to the bridge removal pay item.

30. A Maine Department of Environmental Protection (MDEP) data base review suggested some petroleum contamination issues in the vicinity of the project. In particular the Fire Station/Recreation Hall located at roughly Maine Department of Transportation (MaineDOT) station 51+00 to roughly MaineDOT station 52+50 left of center. However, the scope of work for this project suggests petroleum or hazardous waste should not be encountered. However, in light of the reported spills, the contractor shall employ appropriate health and safety measures to protect its workers against hazards associated with working near petroleum impacted soils. Furthermore, the Contractor shall remain alert for any additionally evidence of contamination. If the Contractor encounters evidence of soil or groundwater contamination, the Contractor shall secure the excavation, stop work in the contaminated area, and immediately notify the Resident. The Resident shall contact the Hydrogeologist in MaineDOT's Environmental Office at 207-624-3100 and the Maine Department of Environmental Protection at 800-482-0777. Work may only continue with authorization from the Resident.

31. Where pavement under this contract joins an existing pavement, the existing pavement shall be saw cut along a smooth line to a neat, even vertical joint, as directed by the Resident. Broken or raveled edges will not be permitted. All work necessary for the preparation of this joint will be considered incidental to the related contract items.

32. All waste material not used on the project shall be disposed of off the project in waste areas approved by the Resident.

33. Any necessary cleaning of existing pavement prior to paving shall be incidental to the related paving items.

34. No existing drainage shall be abandoned, removed or plugged without prior approval of the Resident. Abandoned structures to remain shall be plugged with brick and mortar, incidental to 'Drainage Items'.

35. Inlets and outlets of all culverts shall be riprapped unless otherwise noted on the plans or directed by the Resident.

36. Any necessary cutting of existing catch basins to allow for proposed pipe connections will not be paid for separately and will be considered incidental to 603 or 605 pay items.

37. All underdrain not labeled on the cross sections will have a flow line of 5.5 feet below finish grade directly above the underdrain. All underdrain shown on the cross sections will have the flow line scaled from the cross sections. All flow line elevations are subject to approval by the Resident.

38. Two Reflectorized Flexible G.R. Markers (Item 606.353) will be installed at each guardrail end.

39. Unless otherwise noted Seeding Method No. 1 shall be utilized on all lawns and developed areas. Seeding Method No. 3 shall be utilized on all guardrail fill slopes. On long guardrail backslopes, Seeding Method No. 3 may be used instead of Method No. 2 if noted or directed by the Resident.

40. "Undetermined Locations" shall be determined by the Resident.

41. All work shall be done in accordance with the Maine Department of Transportation's Best Management Practices for Erosion & Sedimentation Control, latest edition.

42. Driveway fill side slopes shall be the same as the non-guardrail fill slopes unless otherwise noted on the plans.

43. Required ditch protection shown on the plans or in the Construction Notes is for estimating purposes only. The actual type and location of ditch protection may be altered by the Resident.

44. Commercial paved entrances shall be constructed with: 3" hot mix asphalt and 11" aggregate subbase course gravel.

45. Unpaved entrances shall be constructed with 14" aggregate subbase course gravel unless otherwise noted in the plans or directed by the Resident.

46. A 3' paved lip shall be placed at all gravel entrances unless otherwise noted in the plans or directed by the Resident.

47. Place 12" aggregate subbase course gravel and 2" hot mix asphalt around catch basins in grassed areas (2' outside of frame) and paint with Acrylic Latex Color Finish - Green. Payment shall be under the applicable contract items.

48. All existing guardrail shall be removed and become the property of the Contractor. Removal and disposal shall be considered incidental to the guardrail items.

49. A delineator post (Item 606.356) will be installed at the end of each section of bituminous curb.

50. Loam has been estimated for disturbed lawn areas. Actual placement of the loam shall be as noted on the plans or designated by the Resident.

51. The contractor will be responsible for maintaining all existing mailboxes to ensure that the mail will be deliverable. Payment for this work will be made under the appropriate rental items.

52. The existing bridge substructure elements shall be removed to the following elevations:

West Abutment: 313.00
Piers: 293.00
East Abutment: 310.00

53. Guardrail shall be installed after base pavement has been placed on all based areas including those under guardrail sections. Payment for work underneath guardrail sections will be paid for under Item 403.2081 12.5MM Polymer Modified HMA.

Gorrill-Palmer Consulting Engineers, Inc.
Engineering Excellence Since 1998
PO Box 1237
15 Shaker Road
Gray, ME 04039
207-657-6910
FAX: 207-657-6912
E-Mail: mailbox@gorrillpalmer.com

BECKER STRUCTURAL ENGINEERS
75 York Street, Portland, Maine 04101
207.879.1838 ■ beckerstructural.com

STATE OF MAINE
DEPARTMENT OF TRANSPORTATION

AC-BH-1926(800)X

WIN 19268.00

BRIDGE NO. 3738

BRIDGE PLANS

PROJ. MANAGER	STEPHEN BODGE	BY	DATE
DESIGN-DETAILED	E.BROWNELL	D.BURGESS	03-04-14
CHECKED-REVIEWED	B.WELCH	J.BURGESS	03-04-14
DESIGN2-DETAILED2	------	------	------
DESIGN3-DETAILED3	------	------	------
REVISIONS 1	------	------	------
REVISIONS 2	------	------	------
REVISIONS 3	------	------	------
REVISIONS 4	------	------	------
FIELD CHANGES	------	------	------

SIGNATURE

P.E. NUMBER

DATE

COVERED BRIDGE
OVER LITTLE ANDROSCOGGIN RIVER
OXFORD
OXFORD COUNTY

GENERAL CONSTRUCTION NOTES

SHEET NUMBER
3
OF 59

Filename: ...\msta\003_notes_general.dgn Division: BRIDGE Username: CADD Date:3/4/2014

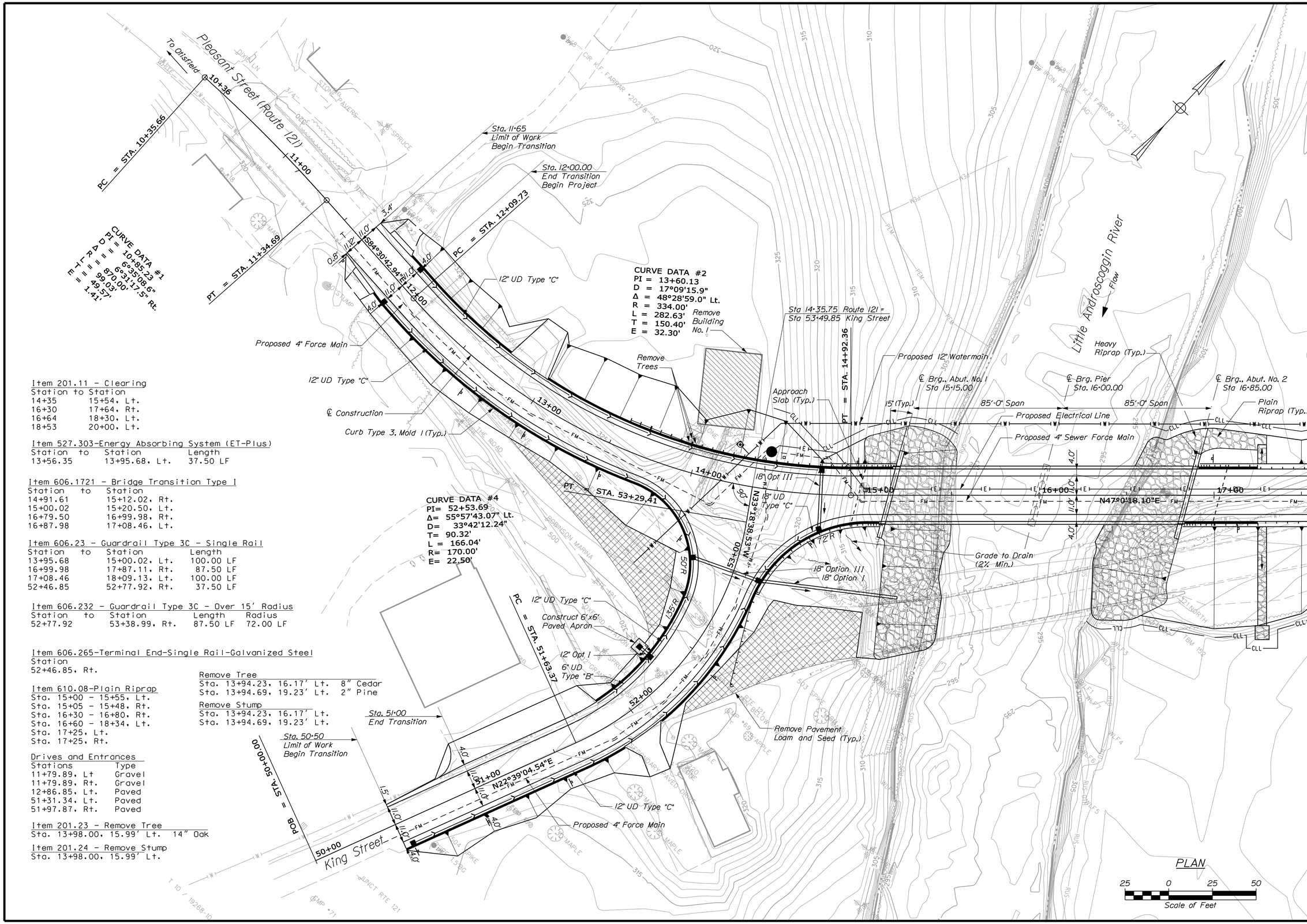

Item 201.11 - Clearing

Station to Station		
14+35	15+54, Lt.	
16+30	17+64, Rt.	
16+64	18+30, Lt.	
18+53	20+00, Lt.	

Item 527.303-Energy Absorbing System (ET-Plus)

Station	to Station	Length
13+56.35	13+95.68, Lt.	37.50 LF

Item 606.1721 - Bridge Transition Type I

Station	to Station
14+91.61	15+12.02, Rt.
15+00.02	15+20.50, Lt.
16+79.50	16+99.98, Rt.
16+87.98	17+08.46, Lt.

Item 606.23 - Guardrail Type 3C - Single Rail

Station	to Station	Length
13+95.68	15+00.02, Lt.	100.00 LF
16+99.98	17+87.11, Rt.	87.50 LF
17+08.46	18+09.13, Lt.	100.00 LF
52+46.85	52+77.92, Rt.	37.50 LF

Item 606.232 - Guardrail Type 3C - Over 15' Radius

Station	to Station	Length	Radius
52+77.92	53+38.99, Rt.	87.50 LF	72.00 LF

Item 606.265-Terminal End-Single Rail-Galvanized Steel

Station
52+46.85, Rt.

Item 610.08-Plain Riprap

Sta. 15+00 - 15+55, Lt.
Sta. 15+05 - 15+48, Rt.
Sta. 16+30 - 16+80, Rt.
Sta. 16+60 - 18+34, Lt.
Sta. 17+25, Lt.
Sta. 17+25, Rt.

Drives and Entrances

Stations	Type
11+79.89, Lt	Gravel
11+79.89, Rt.	Gravel
12+86.85, Lt.	Paved
51+31.34, Lt.	Paved
51+97.87, Rt.	Paved

Item 201.23 - Remove Tree

Sta. 13+98.00, 15.99' Lt. 14" Oak

Item 201.24 - Remove Stump

Sta. 13+98.00, 15.99' Lt.

Remove Tree

Sta. 13+94.23, 16.17' Lt. 8" Cedar
Sta. 13+94.69, 19.23' Lt. 2" Pine

Remove Stump

Sta. 13+94.23, 16.17' Lt.
Sta. 13+94.69, 19.23' Lt.

STATE OF MAINE
DEPARTMENT OF TRANSPORTATION

AC-BH-1926(800)X

WIN 19268.00

BRIDGE NO. 3738

BRIDGE PLANS

PROJ. MANAGER STEPHEN BODGE	BY	DATE
DESIGN-DETAILED L.MEEK	L. NEWHOUSE	01-23-14
CHECKED-REVIEWED D.ETTINGER	-	01-23-14
DESIGN2-DETAILED2 -	-	-
DESIGN3-DETAILED3 -	-	-
REVISIONS 1 -	-	-
REVISIONS 2 -	-	-
REVISIONS 3 -	-	-
REVISIONS 4 -	-	-
FIELD CHANGES -	-	-

SIGNATURE

P.E. NUMBER

DATE

COVERED BRIDGE
OVER LITTLE ANDROSCOGGIN RIVER
OXFORD
OXFORD COUNTY

GENERAL PLAN (1 of 2)

SHEET NUMBER

4

OF 59

Filename: ...\HIGHWAY\MSTA\004_BDPlan_01.dgn Division: HIGHWAY Username: CADD Date:3/5/2014

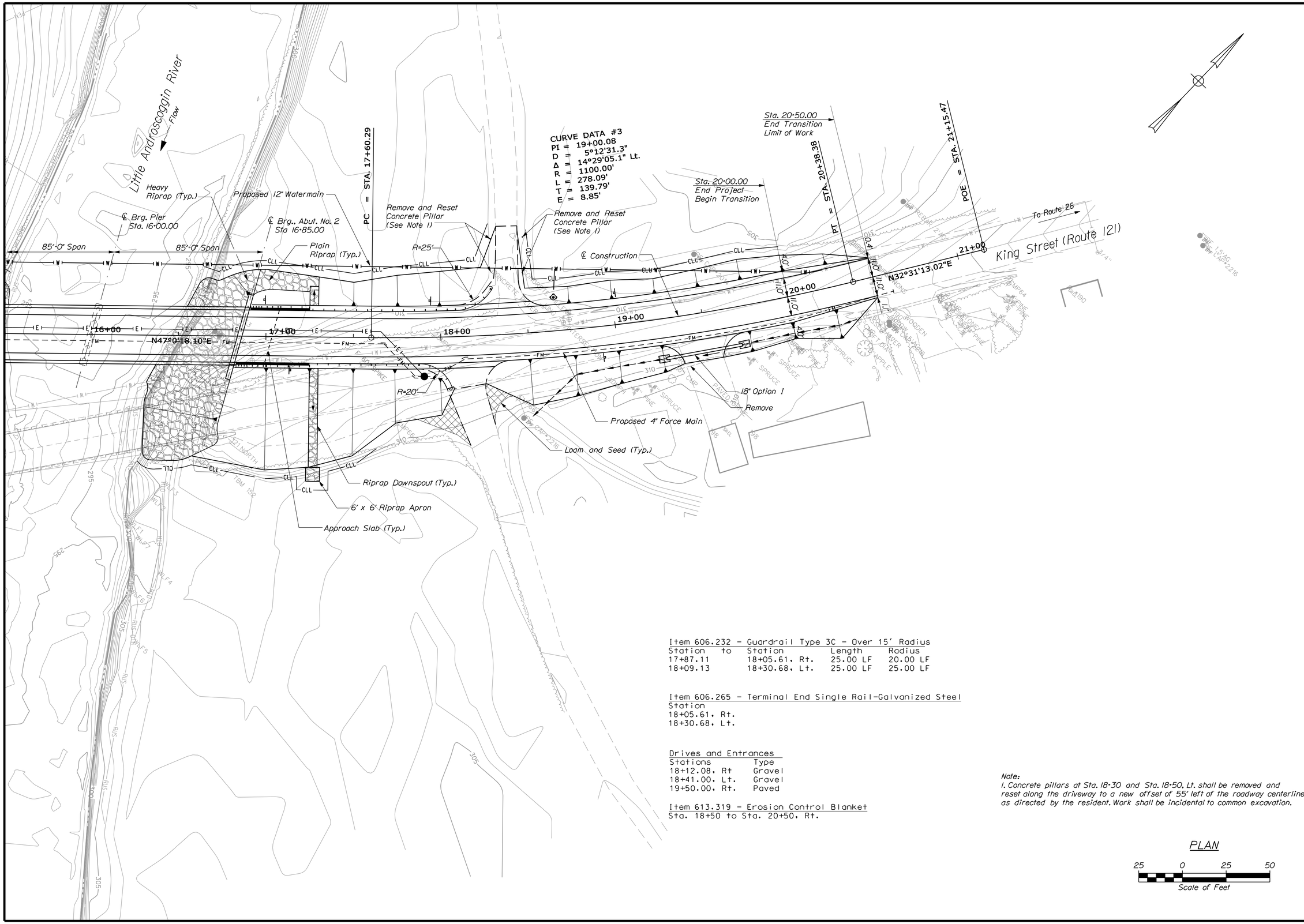

Item 606.232 - Guardrail Type 3C - Over 15' Radius

Station	to	Station	Length	Radius
17+87.11		18+05.61, Rt.	25.00 LF	20.00 LF
18+09.13		18+30.68, Lt.	25.00 LF	25.00 LF

Item 606.265 - Terminal End Single Rail-Galvanized Steel

Station
18+05.61, Rt.
18+30.68, Lt.

Drives and Entrances

Stations	Type
18+12.08, Rt	Gravel
18+41.00, Lt.	Gravel
19+50.00, Rt.	Paved

Item 613.319 - Erosion Control Blanket

Sta. 18+50 to Sta. 20+50, Rt.

Note:
1. Concrete pillars at Sta. 18+30 and Sta. 18+50, Lt. shall be removed and reset along the driveway to a new offset of 55' left of the roadway centerline, as directed by the resident. Work shall be incidental to common excavation.

PLAN

25 0 25 50
Scale of Feet

STATE OF MAINE
DEPARTMENT OF TRANSPORTATION

AC-BH-1926(800)X

WIN 19268.00

BRIDGE NO. 3738

BRIDGE PLANS

		BY	DATE
PROJ. MANAGER	STEPHEN BODGE		
DESIGN-DETAILED	L. MEEK	L. NEWHOUSE	01-23-14
CHECKED-REVIEWED	D. ETTINGER	-	01-23-14
DESIGN2-DETAILED2	-	-	-
DESIGN3-DETAILED3	-	-	-
REVISIONS 1	-	-	-
REVISIONS 2	-	-	-
REVISIONS 3	-	-	-
REVISIONS 4	-	-	-
FIELD CHANGES	-	-	-

SIGNATURE

P.E. NUMBER

DATE

COVERED BRIDGE
OVER LITTLE ANDROSCOGGIN RIVER
OXFORD
OXFORD COUNTY

GENERAL PLAN (2 of 2)

SHEET NUMBER
5
OF 59

Filename: ...\HIGHWAY\MSTA\005_BDPlan_02.dgn Division: HIGHWAY Username: CADD Date:3/5/2014

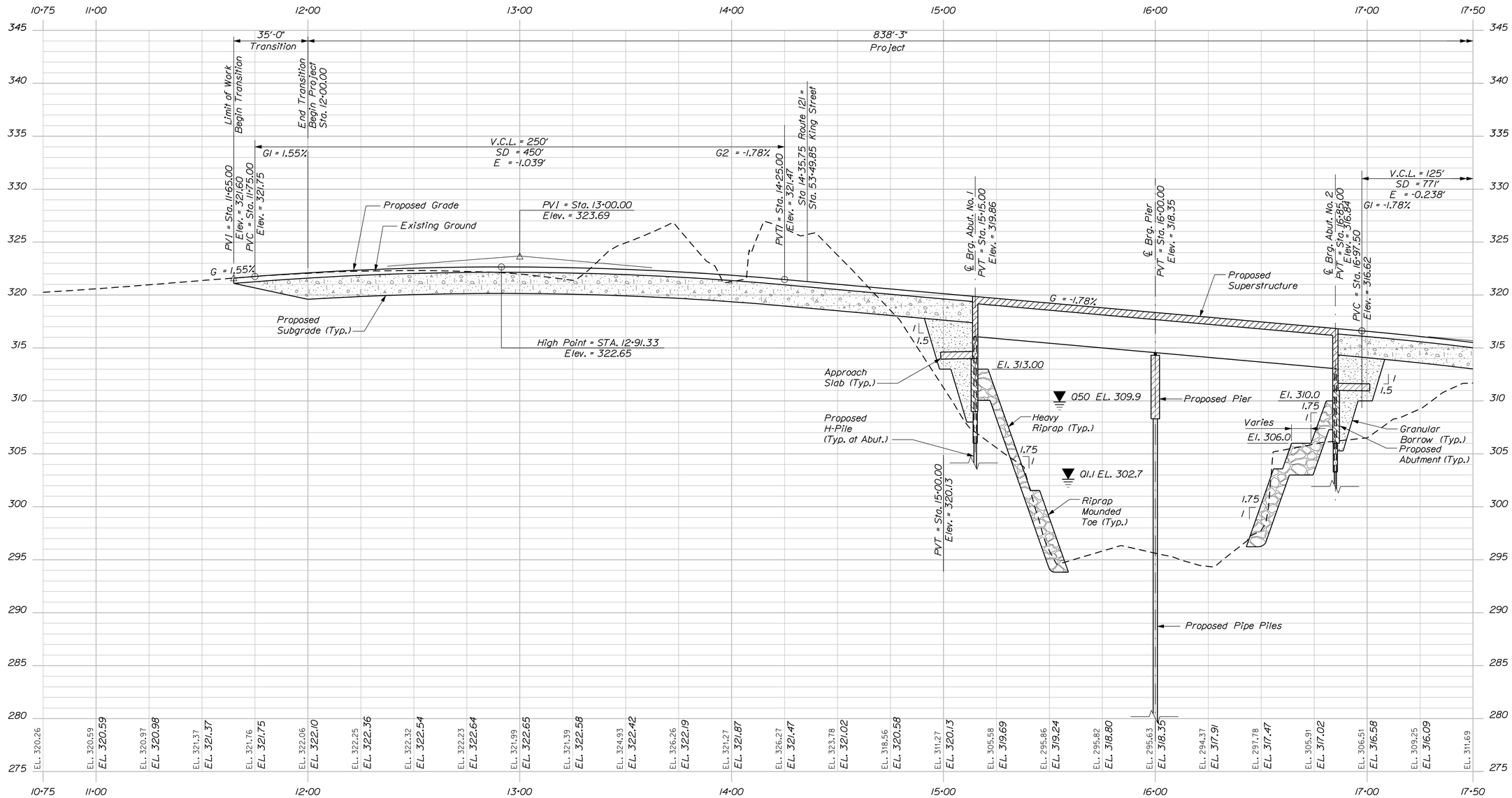

PROFILE

Horiz. 25 0 25 50

Vert. 5 0 5 10

Scale of Feet

STATE OF MAINE
DEPARTMENT OF TRANSPORTATION

AC-BH-1926(800)X

WIN 19268.00

BRIDGE NO. 3738

BRIDGE PLANS

PROJ. MANAGER	STEPHEN BOOSE	BY	DATE
DESIGN-DETAILED	L.MECK	L. NEWHOUSE	01-23-14
CHECKED-REVIEWED	D. ETTINGER	-	01-23-14
DESIGN2-DETAILED2	-	-	-
DESIGN3-DETAILED3	-	-	-
REVISIONS 1	-	-	-
REVISIONS 2	-	-	-
REVISIONS 3	-	-	-
REVISIONS 4	-	-	-
FIELD CHANGES	-	-	-

SIGNATURE

P.E. NUMBER

DATE

COVERED BRIDGE
OVER LITTLE ANDROSCOGGIN RIVER
OXFORD COUNTY
OXFORD

PROFILE (1 of 2)

SHEET NUMBER

6

OF 59

Filename: ...\MSTA\006_Profile_01.dgn Division: HIGHWAY Username: CADD Date:3/5/2014

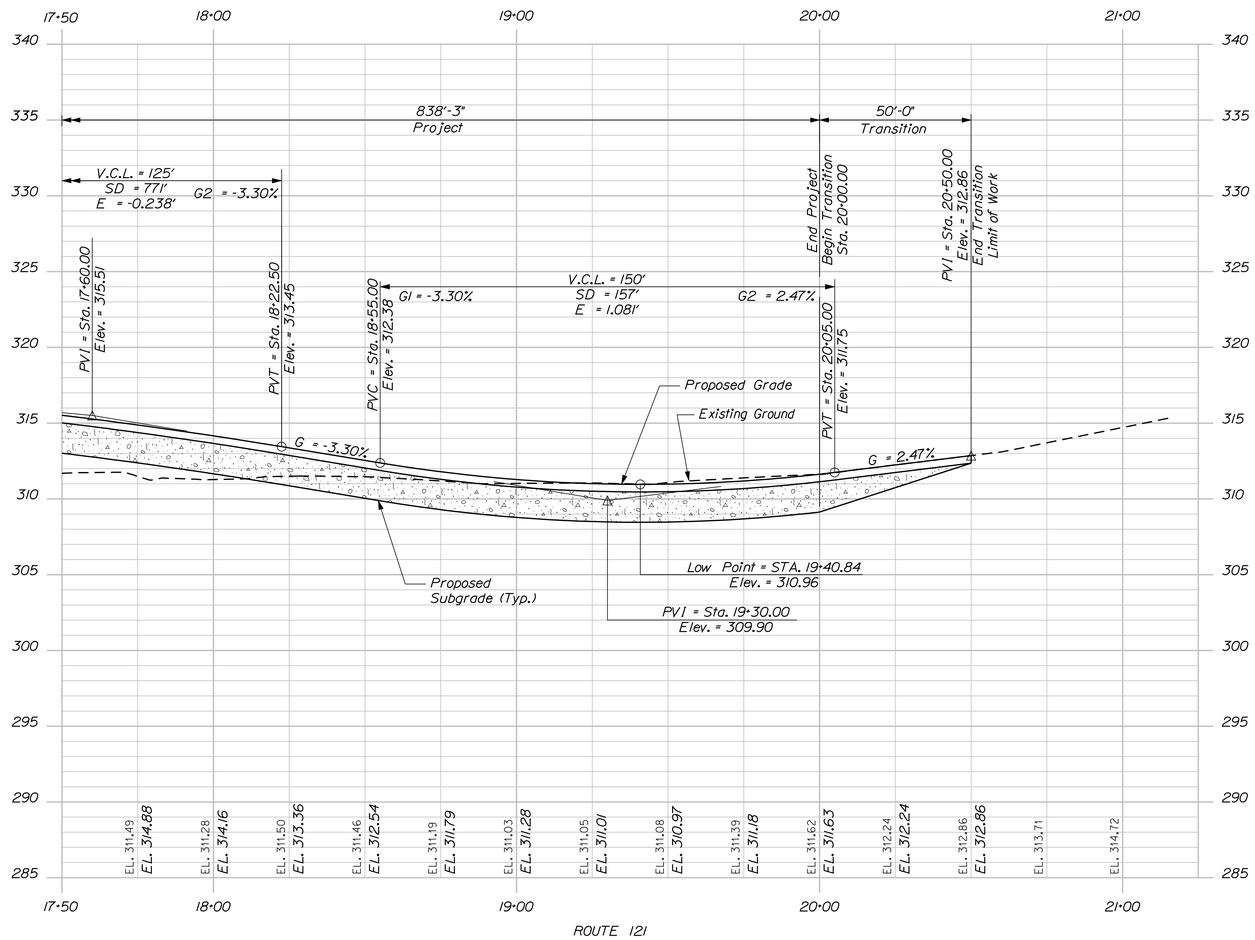

ROUTE 121

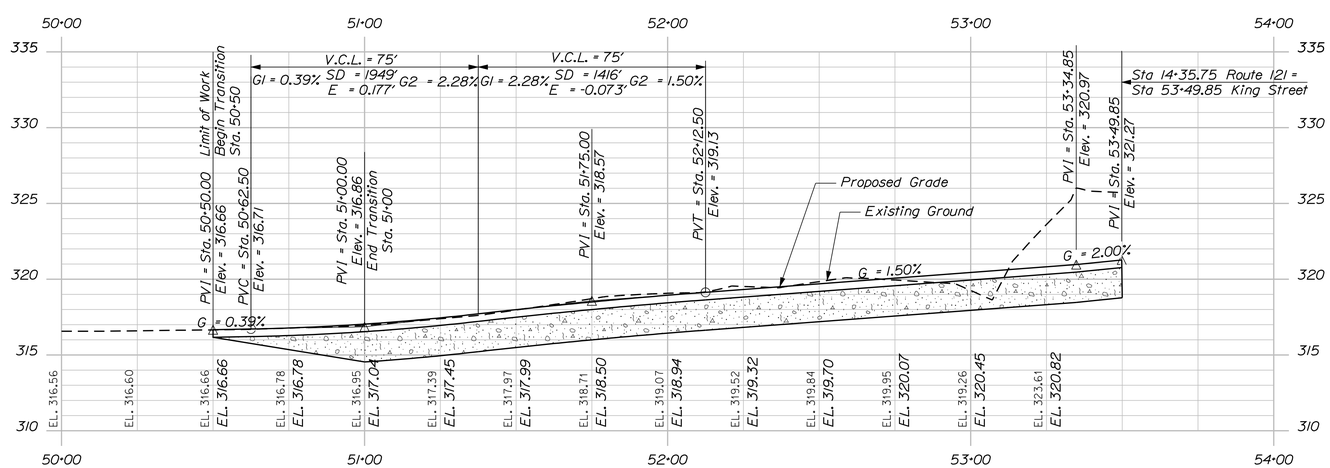

KING STREET

STATE OF MAINE
DEPARTMENT OF TRANSPORTATION

AC-BH-1926(800)X

WIN 19268.00

BRIDGE NO. 3738

BRIDGE PLANS

PROJ. MANAGER	STEPHEN BODGE	BY	DATE
DESIGN-DETAILED	L.MEEK	L.NEWHOUSE	01-23-14
CHECKED-REVIEWED	D.ETTINGER	-	01-23-14
DESIGN2-DETAILED2	-	-	-
DESIGN3-DETAILED3	-	-	-
REVISIONS 1	-	-	-
REVISIONS 2	-	-	-
REVISIONS 3	-	-	-
REVISIONS 4	-	-	-
FIELD CHANGES	-	-	-

SIGNATURE

P.E. NUMBER

DATE

COVERED BRIDGE
OVER LITTLE ANDROSCOGGIN RIVER
OXFORD
OXFORD COUNTY

PROFILE (2 of 2)

SHEET NUMBER

7

OF 59

Filename: ...\00\bridge\007_Profile_02.dgn Division: HIGHWAY Username: lnewhouse Date:2/14/2014

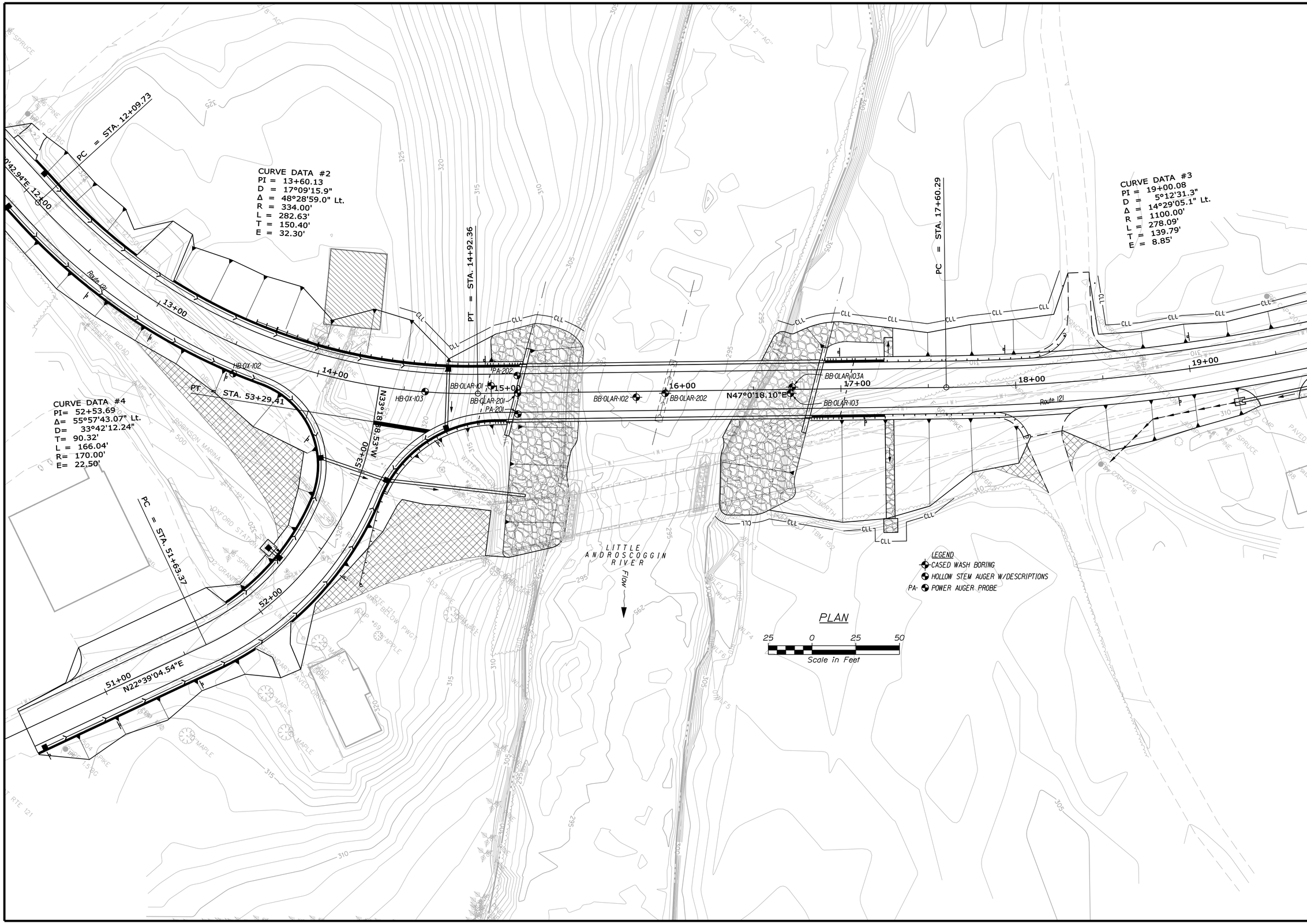

STATE OF MAINE
DEPARTMENT OF TRANSPORTATION

AC-BH-1926(800)X

WIN 19268.00

BRIDGE NO. 3738

BRIDGE PLANS

	BY	DATE
PROJ. MANAGER		
DESIGN-DETAILED		
CHECKED-REVIEWED		
DESIGN2-DETAILED2	L.KRUSINSKI	MAY 2013
DESIGN3-DETAILED3	T.WHITE	
REVISIONS 1		
REVISIONS 2		
REVISIONS 3		
REVISIONS 4		
FIELD CHANGES		

SIGNATURE

P.E. NUMBER

DATE

COVERED BRIDGE
LITTLE ANDROSCOGGIN RIVER
OXFORD COUNTY

BORING LOCATION PLAN

SHEET NUMBER

8

OF 59

Filename: ...\00\GEOTECH\MSTA\008_BLP1.dgn Division: GEOTECH Username: terry.white Date:3/10/2014

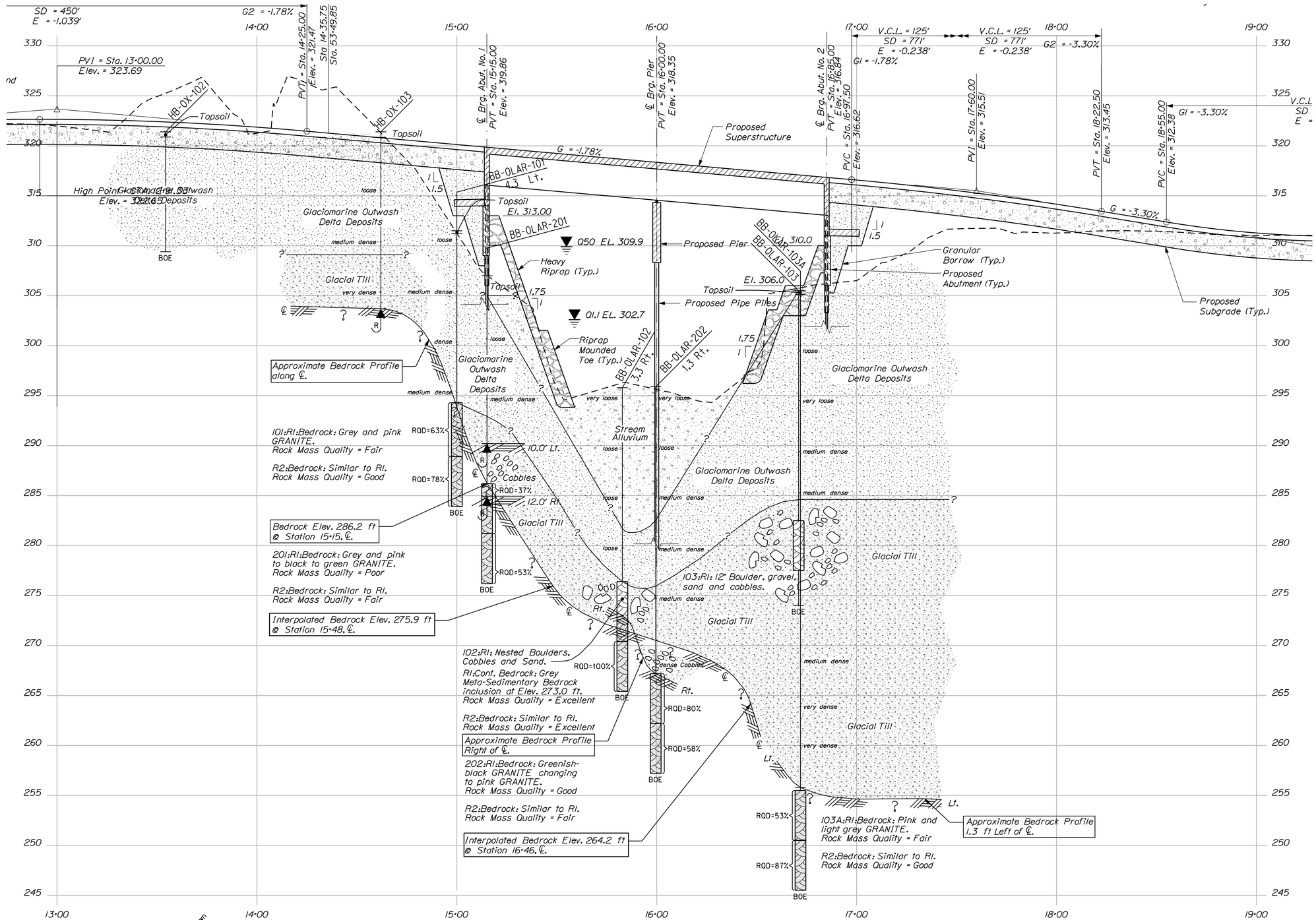

LEGEND

Boring No. Offset if shown
Pavement Thickness if applicable
Strata Interface
Boring
RQD= Rock Quality Designation for Rock Core Sample
BOE= Bottom Of Exploration
Refusal
No Refusal

PROFILE

HORIZ 25 0 25 50
VERT 5 0 5 10
SCALE

Note: This generalized interpretive soil profile is intended to convey trends in subsurface conditions. The boundaries between strata are approximate and idealized, and have been developed by interpretations of widely spaced explorations and samples. Actual soil transitions may vary and are probably more erratic. For more specific information refer to the exploration logs.

STATE OF MAINE
DEPARTMENT OF TRANSPORTATION

AC-BH-1926(800)X

BRIDGE NO. 3738

WIN 19268.00

BRIDGE PLANS

	BY	DATE
PROJ. MANAGER		
DESIGN-DETAILED		
CHECKED-REVIEWED		
DESIGN2-DETAILED2	L. KRUSINSKI	MAY 2013
DESIGN3-DETAILED3	T. WHITE	
REVISIONS 1		
REVISIONS 2		
REVISIONS 3		
REVISIONS 4		
FIELD CHANGES		

SIGNATURE

P.E. NUMBER

DATE

COVERED BRIDGE
LITTLE ANDROSCOGGIN RIVER
OXFORD COUNTY
OXFORD

INTERPRETIVE SUBSURFACE PROFILE

SHEET NUMBER
9
OF 59

Filename: ...\00\geotech\msta\009_ISP1.dgn Division: GEOTECH Username: terry.white Date:3/10/2014

Filename: ...\010_BORING LOGS & POWER AUGER PROBES1.dgn GEOTECH   Username: terry.white   Date:3/10/2014

Maine Department of Transportation — Soil/Rock Exploration Log — US CUSTOMARY UNITS

Project: Covered Bridge #3738 carries Route 121 over Little **Location:** Oxford, Maine
Boring No.: BB-OLAR-101 **WIN:** 19268.00

Driller:	Northern Test Boring	Elevation (ft.)	311.5	Auger ID/OD:	2.25/6.25 Hollow Stem
Operator:	Mike, Adam	Datum:	NAVD88	Sampler:	Standard Split Spoon
Logged By:	B. Wilder	Rig Type:	Diedrich D-50	Hammer Wt./Fall:	140#/30"
Date Start/Finish:	9/5/12; 08:00-13:00	Drilling Method:	Cased Wash Boring	Core Barrel:	NQ-2"
Boring Location:	15+00, 4.3 ft Lt.	Casing ID/OD:	HW	Water Level*:	13.8 ft bgs.
Hammer Efficiency Factor: 0.768		Hammer Type:	Automatic ☒ Hydraulic ☐ Rope & Cathead ☐		

Definitions: D = Split Spoon Sample; MD = Unsuccessful Split Spoon Sample attempt; U = Thin Wall Tube Sample; MU = Unsuccessful Thin Wall Tube Sample attempt; V = Insitu Vane Shear Test, PP = Pocket Penetrometer; MV = Unsuccessful Insitu Vane Shear Test attempt; R = Rock Core Sample; SSA = Solid Stem Auger; HSA = Hollow Stem Auger; RC = Roller Cone; WOH = weight of 140lb. hammer; WOR/C = weight of rods or casing; WO1P = Weight of one person; S_u = Insitu Field Vane Shear Strength (psf); T_v = Pocket Torvane Shear Strength (psf); q_p = Unconfined Compressive Strength (ksf); N-uncorrected = Raw field SPT N-value; Hammer Efficiency Factor = Annual Calibration Value; N_{60} = SPT N-uncorrected corrected for hammer efficiency; N_{60} = (Hammer Efficiency Factor/60%)*N-uncorrected; $S_{u(lab)}$ = Lab Vane Shear Strength (psf); WC = water content, percent; LL = Liquid Limit; PL = Plastic Limit; PI = Plasticity Index; G = Grain Size Analysis; C = Consolidation Test

Depth (ft.)	Sample No.	Pen./Rec. (in.)	Sample Depth (ft.)	Blows (/6 in.) Shear Strength (psf) or RQD (%)	N-uncorrected	N_{60}	Casing Blows	Elevation (ft.)	Visual Description and Remarks	Laboratory Testing Results/AASHTO and Unified Class
0	1D	24/20	0.00 - 2.00	1/1/1/2	2	3	HSA	311.30	TOPSOIL. (0.20) Brown, damp, very loose, fine to medium SAND, little silt, trace gravel, (Glaciomarine Outwash Delta Deposit).	G#261901 A-2-4, SM WC=11.2%
2.50								309.00		
5	2D	24/19	5.00 - 7.00	6/5/7/9	12	15			Light brownish-yellow, damp, medium dense, fine to medium SAND, trace silt, (Glaciomarine Outwash Delta Deposits).	G,DS#244224 A-3, SP-SM WC=3.5%
7.50								304.00		
10	3D	24/20	10.00 - 12.00	17/12/12/14	24	31			Brown, moist, dense, fine to medium SAND, some silt, little gravel, trace coarse sand, (Glaciomarine Outwash Delta Deposits).	G#244225 A-2-4, SM WC=10.3%
15	4D	24/16	15.00 - 17.00	7/9/7/7	16	20	34		Similar to above, except wet and medium dense.	
							51			
17.20	R1	64.8/59	17.20 - 22.60	RQD = 63%			a50 NQ-2	294.30	a50 blows for 0.2 ft. Top of Bedrock at Elev. 294.3 ft. R1:Bedrock: Grey and pink, medium granined, biotite GRANITE, medium hard moderately weathered to fresh, joint set approx. horizontal, closely spaced. Rock Mass Quality = Fair. R1:Core Times (min:sec) 17.2-18.2 ft (2:20) 18.2-19.2 ft (2:20) 19.2-20.2 ft (1:30) 20.2-21.2 ft (2:00) 21.2-22.2 ft (2:40) 22.2-22.6 ft (1:30) 91% Recovery Two 2" drops, seams.	
	R2	60/59	22.60 - 27.60	RQD = 78%					R2:Bedrock: Similar to R1, except more massive and joint set spacing is moderately close. Rock Mass Quality = Good. R2:Core Times (min:sec) 22.6-23.6 ft (3:00) 23.6-24.6 ft (3:30) 24.6-25.6 ft (3:20) 25.6-26.6 ft (3:25) 26.6-27.6 ft (3:25) 98% Recovery	
27.60								283.90	Bottom of Exploration at 27.60 feet below ground surface.	

Remarks:
Auto Hammer #283
DS=Direct Shear Test

Stratification lines represent approximate boundaries between soil types; transitions may be gradual.
* Water level readings have been made at times and under conditions stated. Groundwater fluctuations may occur due to conditions other than those present at the time measurements were made.
Page 1 of 1 — Boring No.: BB-OLAR-101

Maine Department of Transportation — Soil/Rock Exploration Log — US CUSTOMARY UNITS

Project: Covered Bridge #3738 carries Route 121 over Little **Location:** Oxford, Maine
Boring No.: BB-OLAR-201 **WIN:** 19268.00

Driller:	Northern Test Boring	Elevation (ft.)	307.0	Auger ID/OD:	5" Solid Stem
Operator:	Mike, Adam	Datum:	NAVD88	Sampler:	Standard Split Spoon
Logged By:	B. Wilder	Rig Type:	Diedrich D-50 Track	Hammer Wt./Fall:	140#/30"
Date Start/Finish:	5/22/13; 12:00-16:30	Drilling Method:	Cased Wash Boring	Core Barrel:	NQ-2"
Boring Location:	15+15, CL	Casing ID/OD:	HW	Water Level*:	7.0 ft bgs.
Hammer Efficiency Factor: 0.768		Hammer Type:	Automatic ☒ Hydraulic ☐ Rope & Cathead ☐		

Depth (ft.)	Sample No.	Pen./Rec. (in.)	Sample Depth (ft.)	Blows (/6 in.) Shear Strength (psf) or RQD (%)	N-uncorrected	N_{60}	Casing Blows	Elevation (ft.)	Visual Description and Remarks	Laboratory Testing Results/AASHTO and Unified Class
0	1D	24/17	0.00 - 2.00	1/1/1/1	2	3	SSA		Dark brown, moist, very loose, silty, fine to medium SAND, trace organics, (Topsoil).	
2.00								305.00		
5	2D	24/14	5.00 - 7.00	1/2/2/2	4	5			Light brown, moist, loose, fine SAND, some silt, (Glaciomarine Outwash Delta Deposits).	G#261746 A-2-4, SM WC=23.0%
8.80								298.20		
10	3D	24/19	10.00 - 12.00	10/7/8/8	15	19	79		Brown, very wet, medium dense, fine to medium SAND, little gravel, little silt, (Glaciomarine Outwash Delta Deposits).	
							69			
							72			
							58			
14.00	4D	24/10	14.00 - 16.00	6/11/13/14	24	31	5	293.00	Brown, wet, dense, fine to coarse SAND, some silt, little gravel (broken rock fragments), (Glacial Till).	
							6			
							16			
							82			
							120			
	5D	15.6/12	19.00 - 20.30	30/45/52(3.6")	---				Similar to above, except very dense, occasional cobbles, (Glacial Till). Roller Coned ahead to 20.8 ft bgs.	G#261747 A-1-b, SM WC=11.4%
20.80	R1	60/60	20.80 - 25.80	RQD = 37%			NQ-2	286.20	Top of Bedrock at Elev. 286.2 ft. R1:Bedrock: White to pink to black to green, medium grained, Granite, hard, very slightly weathered to fresh, joints subhorizontal to 45-80 degrees, two healed. Rock Mass Quality = Poor. R1:Core Times (min:sec) 20.8-21.8 ft (3:15) 21.58-22.8 ft (3:10) no water return 22.8-23.8 ft (3:30) 23.8-24.8 ft (3:45) 24.8-25.8 ft (3:40) 100% Recovery	
	R2	60/58	25.80 - 30.80	RQD = 53%					R2:Bedrock: Similar to R1. Rock Mass Quality = Fair. R2:Core Times (min:sec) 25.8-26.8 ft (3:50) 26.58-27.8 ft (4:20) no water return 27.8-28.8 ft (6:00) 28.8-29.8 ft (6:30) 29.8-30.8 ft (6:10) 97% Recovery	
30.80								276.20	Bottom of Exploration at 30.80 feet below ground surface.	

Remarks:
Auto Hammer #283

Stratification lines represent approximate boundaries between soil types; transitions may be gradual.
* Water level readings have been made at times and under conditions stated. Groundwater fluctuations may occur due to conditions other than those present at the time measurements were made.
Page 1 of 1 — Boring No.: BB-OLAR-201

Maine Department of Transportation — Soil/Rock Exploration Log — US CUSTOMARY UNITS

Project: Covered Bridge #3738 carries Route 121 over Little **Location:** Oxford, Maine
Boring No.: BB-OLAR-102 **WIN:** 19268.00

Driller:	Northern Test Boring	Elevation (ft.)	295.8	Auger ID/OD:	N/A
Operator:	Mike, Adam	Datum:	NAVD88	Sampler:	Standard Split Spoon
Logged By:	B. Wilder	Rig Type:	Diedrich D-50	Hammer Wt./Fall:	140#/30"
Date Start/Finish:	10/4/12; 07:30-17:00	Drilling Method:	Cased Wash Boring	Core Barrel:	NQ-2"
Boring Location:	15+82.9, 3.3 ft Rt.	Casing ID/OD:	HW	Water Level*:	Barge Boring
Hammer Efficiency Factor: 0.707		Hammer Type:	Automatic ☒ Hydraulic ☐ Rope & Cathead ☐		

Depth (ft.)	Sample No.	Pen./Rec. (in.)	Sample Depth (ft.)	Blows (/6 in.) Shear Strength (psf) or RQD (%)	N-uncorrected	N_{60}	Casing Blows	Elevation (ft.)	Visual Description and Remarks	Laboratory Testing Results/AASHTO and Unified Class
0	1D	24/2	0.00 - 2.00	WOH/WOH/1/1	1	1	HP		Brown, wet, very loose, fine to medium SAND, trace silt. (Stream Alluvium.)	
							9			
5	MD	24/0	5.00 - 7.00	1/2/2/2	4	5	8			
							17			
							22			
							40			
							44			
10	2D	24/13	10.00 - 12.00	1/1/4/4	5	6	14		Brown, wet, loose, fine to medium SAND, trace silt. (Sample jar broke, lost sample). (Stream Alluvium.)	
							42			
							73			
							68			
14.00							106	281.80		
15	3D	24/17	15.00 - 17.00	2/2/4/4	6	7	25		Light brown-yellow, loose, fine SAND, trace medium to coarse sand, trace silt, trace gravel. (Glaciomarine Outwash Delta Deposits)	G#261910 A-3, SP WC=22.8%
							35			
							72			
							77			
19.40	R1	72/48	19.40 - 25.40	RQD = 0%			NQ-2	276.40	R1: Granite boulders (upper 2'6") then nested sand and cobbles, followed by possibly top of metasedimentary bedrock inclusion (4"). (Glacial Till) R1:Core Times (min:sec) 19.4-20.4 ft (3:40) 20.4-*21.4 ft (4:00) 21.4-22.4 ft (3:35) 22.4-23.4 ft (2:10) 23.4-24.4 ft (2:15) 24.4-25.4 ft (3:22) 67% Recovery	
22.80								273.00	Top of Metasedimentary Bedrock inclusion at Elev. 273.00 ft.	
25	R2	60/57	25.40 - 30.40	RQD = 100%					R2: Metasedimentary bedrock inclusion R2:Core Times (min:sec) 25.4-26.4 ft (4:32) 26.4-27.4 ft (3:28) 27.4-28.4 ft (3:56) 28.4-29.4 ft (3:59) 29.4-30.4 ft (3:10) 95% Recovery	
30.40								265.40	Bottom of Exploration at 30.40 feet below ground surface.	

Remarks:
Auto Hammer #149
3.1 ft from Barge Deck to Ground.
HP = Hydraulic Push

Stratification lines represent approximate boundaries between soil types; transitions may be gradual.
* Water level readings have been made at times and under conditions stated. Groundwater fluctuations may occur due to conditions other than those present at the time measurements were made.
Page 1 of 1 — Boring No.: BB-OLAR-102

Maine Department of Transportation — Soil/Rock Exploration Log — US CUSTOMARY UNITS

Project: Covered Bridge #3738 carries Route 121 over Little **Location:** Oxford, Maine
Boring No.: BB-OLAR-202 **WIN:** 19268.00

Driller:	Northern Test Boring	Elevation (ft.)	295.9	Auger ID/OD:	N/A
Operator:	Mike, Adam	Datum:	NAVD88	Sampler:	Standard Split Spoon
Logged By:	B. Wilder	Rig Type:	Diedrich D-50 Trailer	Hammer Wt./Fall:	140#/30"
Date Start/Finish:	5/21/13-5/22/13	Drilling Method:	Cased Wash Boring	Core Barrel:	NQ-2"
Boring Location:	15+99.5, 1.3 ft Rt.	Casing ID/OD:	HW	Water Level*:	Water Boring on Raft
Hammer Efficiency Factor: 0.768		Hammer Type:	Automatic ☒ Hydraulic ☐ Rope & Cathead ☐		

Depth (ft.)	Sample No.	Pen./Rec. (in.)	Sample Depth (ft.)	Blows (/6 in.) Shear Strength (psf) or RQD (%)	N-uncorrected	N_{60}	Casing Blows	Elevation (ft.)	Visual Description and Remarks	Laboratory Testing Results/AASHTO and Unified Class
0	1D	24/15	0.00 - 2.00	1/WOH/WOH/WOH	---		aHP		aHP= Hydraulic Push Brown, very wet, very loose, fine to medium SAND, trace coarse sand, trace silt, trace gravel, (Stream Alluvium).	G#261748 A-1-b, SP WC=26.5%
							HP			
							HP			
							6			
							11			
5	2D	24/12	5.00 - 7.00	2/3/2/6	5	6	10		Similar to above, except loose with wood fragments.	
							32			
							30			
							38			
9.00							42	286.90		
10	3D	24/15	10.00 - 12.00	3/4/6/16	10	13	11		Light brown to grey, wet, medium dense, fine to coarse SAND, trace silt, trace gravel, trace wood fragments, (Stream Alluvium).	G#261749 A-1-b, SP WC=16.9%
							32			
							49			
13.00							61	282.90		
							61			
15	4D	24/14	15.00 - 17.00	3/5/9/15	14	18	19		Brown, saturated, medium dense, fine to medium SAND, trace silt, trace coarse sand, trace gravel, (Glaciomarine Outwash Delta Deposits).	G#261750 A-1-b, SP WC=23.3%
							42			
							74			
							109			
19.50							137	276.40		
20	5D	24/16	20.00 - 22.00	19/11/11/18	22	28	55		Grey, wet, medium dense, fine to coarse SAND, some gravel (granite and metasedimentary rock fragments), little silt, (Glacial Till).	
							88			
							88			
							76			
							90			
25	6D	24/15	25.00 - 27.00	17/23/17/50	40	51	35		Similar to above, except dense, occasional cobble. (Glacial Till). Roller Coned ahead to 28.7 ft bgs.	G#266773 A-1-b, SW-SM WC=10.0%
							100			
							43		b100 blows for for 0.7 ft.	
28.70	R1	60/60	28.70 - 33.70	RQD = 80%			b100 NQ-2	267.20	Top of Bedrock at Elev. 267.2 ft. R1: Bedrock: Top of core: Greenish black, medium to coarse grained, Granite changing to pink Granite, hard, very slightly weathered to fresh, joints subhorizontal to 60 degrees, joints smooth. Rock Mass Quality= Good. R1:Core Times (min:sec) 28.7-29.7 ft (8:00) 29.7-30.7 ft (7:10) 30.7-31.7 ft (7:15) 31.7-32.7 ft (7:20) 32.7-33.7 ft (7:15) 100% Recovery	
	R2	60/58	33.70 - 38.70	RQD = 58%					R2: Bedrock: Similar to R1. Rock Mass Quality=Fair. R2:Core Times (min:sec) 33.7-34.7 ft (8:05) 34.7-35.7 ft (7:15) 35.7-36.7 ft (7:25) 36.7-37.7 ft (7:30) 37.7-38.7 ft (7:30) 97% Recovery	
38.70								257.20	Bottom of Exploration at 38.70 feet below ground surface.	

Remarks:
Auto Hammer #283
4.2 ft from Raft Deck to Ground.

Stratification lines represent approximate boundaries between soil types; transitions may be gradual.
* Water level readings have been made at times and under conditions stated. Groundwater fluctuations may occur due to conditions other than those present at the time measurements were made.
Page 1 of 1 — Boring No.: BB-OLAR-202

STATE OF MAINE
DEPARTMENT OF TRANSPORTATION

AC-BH-1926(800)X

BRIDGE PLANS
WIN 19268.00
BRIDGE NO. 3738

	BY	DATE
PROJ. MANAGER		
DESIGN-DETAILED		
CHECKED-REVIEWED		
DESIGN2-DETAILED2	L.KRUSINSKI	T.WHITE	MAY 2013
DESIGN3-DETAILED3		
REVISIONS 1		
REVISIONS 2		
REVISIONS 3		
REVISIONS 4		
FIELD CHANGES		

SIGNATURE
P.E. NUMBER
DATE

COVERED BRIDGE
LITTLE ANDROSCOGGIN RIVER
OXFORD   OXFORD COUNTY

BORING LOGS & POWER AUGER PROBES

Filename: ...\011_BORING LOGS & POWER AUGER PROBES.dwg Username: terry.white Date:3/10/2014

Maine Department of Transportation
Soil/Rock Exploration Log
US CUSTOMARY UNITS

Project: Covered Bridge #3738 carries Route 121 over Little
Location: Oxford, Maine

Boring No.: BB-OLAR-103
WIN: 19268.00

Driller:	Northern Test Boring	Elevation (ft.)	305.5
Operator:	Mike, Adam	Datum:	NAVD88
Logged By:	B. Wilder	Rig Type:	Diedrich D-50
Date Start/Finish:	9/5/12; 13:00-15:30	Drilling Method:	Cased Wash Boring
Boring Location:	16+71.2, 2.2 ft Rt.	Casing ID/OD:	HW
Auger ID/OD:	2.25/6.25 Hollow Stem	Sampler:	Standard Split Spoon
Hammer Wt./Fall:	140#/30"	Core Barrel:	NQ-2"
Hammer Efficiency Factor: 0.768		Water Level*:	10.2 ft bgs.
Hammer Type:	Automatic ☒ Hydraulic ☐ Rope & Cathead ☐		

Definitions:
D = Split Spoon Sample
MD = Unsuccessful Split Spoon Sample attempt
U = Thin Wall Tube Sample
MU = Unsuccessful Thin Wall Tube Sample attempt
V = Insitu Vane Shear Test, PP = Pocket Penetrometer
MV = Unsuccessful Insitu Vane Shear Test attempt
R = Rock Core Sample
SSA = Solid Stem Auger
HSA = Hollow Stem Auger
RC = Roller Cone
WOH = weight of 140lb. hammer
WOR/C = weight of rods or casing
WO1P = Weight of one person
S_u = Insitu Field Vane Shear Strength (psf)
T_v = Pocket Torvane Shear Strength (psf)
q_p = Unconfined Compressive Strength (ksf)
Nuncorrected = Raw field SPT N-value
Hammer Efficiency Factor = Annual Calibration Value
N_{60} = SPT Nuncorrected corrected for hammer efficiency
N_{60} = (Hammer Efficiency Factor/60%)*Nuncorrected
$S_{u(lab)}$ = Lab Vane Shear Strength (psf)
W_c = water content, percent
LL = Liquid Limit
PL = Plastic Limit
PI = Plasticity Index
G = Grain Size Analysis
C = Consolidation Test

Sample Information

Depth (ft.)	Sample No.	Pen./Rec. (in.)	Sample Depth (ft.)	Blows (/6 in.) Shear Strength (psf) or RQD (%)	Nuncorrected	N_{60}	Casing Blows	Elevation (ft.)	Graphic Log	Visual Description and Remarks	Laboratory Testing Results/ AASHTO and Unified Class
0	1D	24/24	0.00 - 2.00	1/2/2/2	4	5	HSA	305.30		TOPSOIL. 0.20 Brown, moist, loose, fine to medium SAND, trace silt, trace coarse sand, trace gravel. (Glaciomarine Outwash Delta Deposits).	G4261902 A-2-4, SP-SM WC=9.4%
5	2D	24/15	5.00 - 7.00	3/2/2/3	4	5				Light brown to yellow brown, moist, loose, fine SAND, trace medium sand, little silt. (Glaciomarine Outwash Delta Deposits).	G-DSR261903 A-2-4, SM WC=10.5%
								297.50		8.00	
10	3D	24/17	10.00 - 12.00	1/1/1/2	2	3				Grey, wet, very loose, fine to medium SAND, little coarse sand, trace gravel, trace silt. (Glaciomarine Outwash Delta Deposits).	G4261905 A-3, SP WC=8.0%
								291.00		14.50	
15	4D	24/20	15.00 - 17.00	7/13/5/5	18	23	17			Brown, wet, medium dense, fine to coarse SAND, trace gravel, trace silt. (Glaciomarine Outwash Delta Deposits).	G4261904 A-1-b, SP WC=16.2%
							43				
							85				
							86				
							100				
20	5D/A	24/22	20.00 - 22.00	7/9/12/14	21	27	98			5D (20.0-21.0 ft) Similar to above.	
							126	284.50		21.00 5D/A (21.0-22.0 ft) Grey, wet, medium dense, fine to coarse SAND, some gravel, some silt. (Glacial Till).	
							250	282.50		23.00	
	R1	60/12	23.00 - 28.00				NQ-2			R1: 12" White granite BOULDER and GRAVEL. (Core in sample boggy: 20% Recovery). (Glacial Till)	
25											
	6D	4.8/4.8	28.00 - 28.40				RCA			Grey gravel and sand. Cobble from 28.0-28.6 ft bgs. (Glacial Till). Roller Coned ahead to 31.5 ft bgs.	
30								274.00		31.50	
										Bottom of Exploration at 31.50 feet below ground surface. NO REFUSAL Twisted off Roller Cone in hole, moved to BB-OLAR-103A.	
35											
40											
45											
50											

Remarks:
Auto Hammer #283
D5=Direct Shear Test

Stratification lines represent approximate boundaries between soil types; transitions may be gradual.
* Water level readings have been made at times and under conditions stated. Groundwater fluctuations may occur due to conditions other than those present at the time measurements were made.

Page 1 of 1
Boring No.: BB-OLAR-103

Maine Department of Transportation
Soil/Rock Exploration Log
US CUSTOMARY UNITS

Project: Covered Bridge #3738 carries Route 121 over Little
Location: Oxford, Maine

Boring No.: BB-OLAR-103A
WIN: 19268.00

Driller:	Northern Test Boring	Elevation (ft.)	305.5
Operator:	Mike, Adam	Datum:	NAVD88
Logged By:	B. Wilder	Rig Type:	Diedrich D-50
Date Start/Finish:	9/5/12-9/6/12	Drilling Method:	Cased Wash Boring
Boring Location:	16+72.1, 1.3 ft Lt.	Casing ID/OD:	HW
Auger ID/OD:	2.25/6.25 Hollow Stem	Sampler:	Standard Split Spoon
Hammer Wt./Fall:	140#/30"	Core Barrel:	NQ-2"
Hammer Efficiency Factor: 0.768		Water Level*:	10.0 ft bgs.
Hammer Type:	Automatic ☒ Hydraulic ☐ Rope & Cathead ☐		

Definitions:
D = Split Spoon Sample
MD = Unsuccessful Split Spoon Sample attempt
U = Thin Wall Tube Sample
MU = Unsuccessful Thin Wall Tube Sample attempt
V = Insitu Vane Shear Test, PP = Pocket Penetrometer
MV = Unsuccessful Insitu Vane Shear Test attempt
R = Rock Core Sample
SSA = Solid Stem Auger
HSA = Hollow Stem Auger
RC = Roller Cone
WOH = weight of 140lb. hammer
WOR/C = weight of rods or casing
WO1P = Weight of one person
S_u = Insitu Field Vane Shear Strength (psf)
T_v = Pocket Torvane Shear Strength (psf)
q_p = Unconfined Compressive Strength (ksf)
Nuncorrected = Raw field SPT N-value
Hammer Efficiency Factor = Annual Calibration Value
N_{60} = SPT Nuncorrected corrected for hammer efficiency
N_{60} = (Hammer Efficiency Factor/60%)*Nuncorrected
$S_{u(lab)}$ = Lab Vane Shear Strength (psf)
W_c = water content, percent
LL = Liquid Limit
PL = Plastic Limit
PI = Plasticity Index
G = Grain Size Analysis
C = Consolidation Test

Sample Information

Depth (ft.)	Sample No.	Pen./Rec. (in.)	Sample Depth (ft.)	Blows (/6 in.) Shear Strength (psf) or RQD (%)	Nuncorrected	N_{60}	Casing Blows	Elevation (ft.)	Graphic Log	Visual Description and Remarks	Laboratory Testing Results/ AASHTO and Unified Class
0							HSA			For 0.0-25.0 ft see BB-OLAR-103 for soil descriptions.	
5											
10											
15											
20											
25	10	24/12	25.00 - 27.00	14/11/15/22	26	33	25	280.50		25.00 Grey, wet, dense, gravelly, fine to coarse SAND, little silt. (Glacial Till). Roller Coned ahead to 30.0 ft bgs.	
							30				
							68				
							85				
							126				
30	20	24/12	30.00 - 32.00	10/14/14/14	28	36	128			Similar to above. (Glacial Till). Roller Coned ahead to 35.0 ft bgs.	G4261906 A-1-b, SW-SM WC=11.6%
							130				
							136				
							128				
							129				
35	30	24/14	35.00 - 37.00	13/8/5/10	13	17	135			Similar to above, except medium dense. (Glacial Till). Roller Coned ahead to 40.0 ft bgs.	
							136				
							140				
							187				
							398				
40	40	24/19	40.00 - 42.00	11/21/29/34	50	64	240			Grey, wet, very dense, gravelly, fine to coarse SAND, little silt. (Glacial Till). Roller Coned ahead to 45.0 ft bgs.	G4261907 A-1-a, SW-SM WC=8.9%
							268				
							297				
							286				
							301				
45	50	4.8/3	45.00 - 45.40	50(4.8")	---		OPEN HOLE			Similar to above. (Glacial Till). Roller Coned ahead to 50.0 ft bgs.	
50								255.80		49.70 Top of bedrock at Elev. 255.8 ft. R1:Bedrock: Pink and light grey, medium grained, biotite Granite, hard, fresh, joint set horizontal, at close to moderately close spacing. Rock Mass Quality= Fair. R1:Core Times (min:sec) 50.0-51.0 ft (2:45) 51.0-52.0 ft (2:40) 52.0-53.0 ft (3:10) 53.0-54.0 ft (3:25) 54.0-55.0 ft (3:30) 98% Recovery	
	R1	60/59	50.00 - 55.00	RQD = 53%			NQ-2				
55	R2	60/58	55.00 - 60.00	RQD = 87%						R2:Bedrock: Similar to R1, except massive, joints widely spaced. Rock Mass Quality = Good. R2:Core Times (min:sec) 55.0-56.0 ft (3:15) 56.0-57.0 ft (3:40) 57.0-58.0 ft (3:45) 58.0-59.0 ft (3:30) 59.0-60.0 ft (3:45) 96% Recovery	
60								245.50		60.00 Bottom of Exploration at 60.00 feet below ground surface.	
65											
70											
75											

Remarks:
Auto Hammer #283

Stratification lines represent approximate boundaries between soil types; transitions may be gradual.
* Water level readings have been made at times and under conditions stated. Groundwater fluctuations may occur due to conditions other than those present at the time measurements were made.

Page 1 of 1
Boring No.: BB-OLAR-103A

State of Maine - Department of Transportation
Power Auger Probe Summary Sheet

Town(s): Oxford **Work Number: 19268.00**

Station (Feet)	Offset (Feet)	Weathered Rock (Feet)	Refusal (Feet)	No Refusal (Feet)	Water Depth (Ft.)	Comments / Date 5/22/2013
15+15	10.0 Lt.		17.3			PA-202
15+15	12.0 Rt.		22.9			PA-201

STATE OF MAINE
DEPARTMENT OF TRANSPORTATION

AC-BH-1926(800)X

BRIDGE NO. 3738 | WIN 19268.00 | BRIDGE PLANS

	BY	DATE
PROJ. MANAGER		
DESIGN-DETAILED		
CHECKED-REVIEWED		
DESIGN2-DETAILED2	L.KRUSINSKI	MAY 2013
DESIGN3-DETAILED3	T.WHITE	
REVISIONS 1		
REVISIONS 2		
REVISIONS 3		
REVISIONS 4		
FIELD CHANGES		

SIGNATURE
P.E. NUMBER
DATE

COVERED BRIDGE
LITTLE ANDROSCOGGIN RIVER
OXFORD
OXFORD COUNTY

BORING LOGS &
POWER AUGER PROBES

SHEET NUMBER
11
OF 59

LEGEND	
4" SWLL	4" SOLID WHITE LANE LINE
4" DYCL	4" DOUBLE YELLOW CENTER LINE
SL	STOP LINE (24")

NOTES:

1. ALL WORK TO CONFORM TO MAINE DEPARTMENT OF TRANSPORTATION STANDARD SPECIFICATIONS FOR HIGHWAY AND BRIDGES AND STANDARD DETAILS.
2. ALL PROPOSED WORK SHALL BE IN CONFORMANCE WITH THE "MANUAL ON UNIFORM TRAFFIC CONTROL DEVICES FOR STREETS AND HIGHWAYS", "STANDARD HIGHWAY SIGNS", U.S.D.O.T., F.H.W.A., LATEST EDITION.
3. PAYMENT FOR REMOVAL OF EXISTING SIGNS SHALL BE INCIDENTAL TO OTHER SIGNING ITEMS.
4. THE CONTRACTOR SHALL REMOVE ALL EXISTING PAVEMENT MARKINGS THAT CONFLICT WITH PROPOSED MARKINGS.
5. PROPOSED SIGN LOCATIONS, OFFSET AND HEIGHT SHALL BE IN ACCORDANCE WITH THE MANUAL FOR UNIFORM TRAFFIC CONTROL DEVICES FOR STREETS AND HIGHWAYS (MUTCD), LATEST EDITION.
6. PAYMENT FOR METAL FLAGGING SIGNS SHALL BE INCIDENTAL TO THE 645 PAY ITEMS.
7. PAYMENT FOR SIGN RELOCATIONS TO BE INCIDENTAL TO ITEM 645.271. WORK SHALL INCLUDE RESET OR NEW POSTS. NO SEPARATE PAYMENT WILL BE MADE.

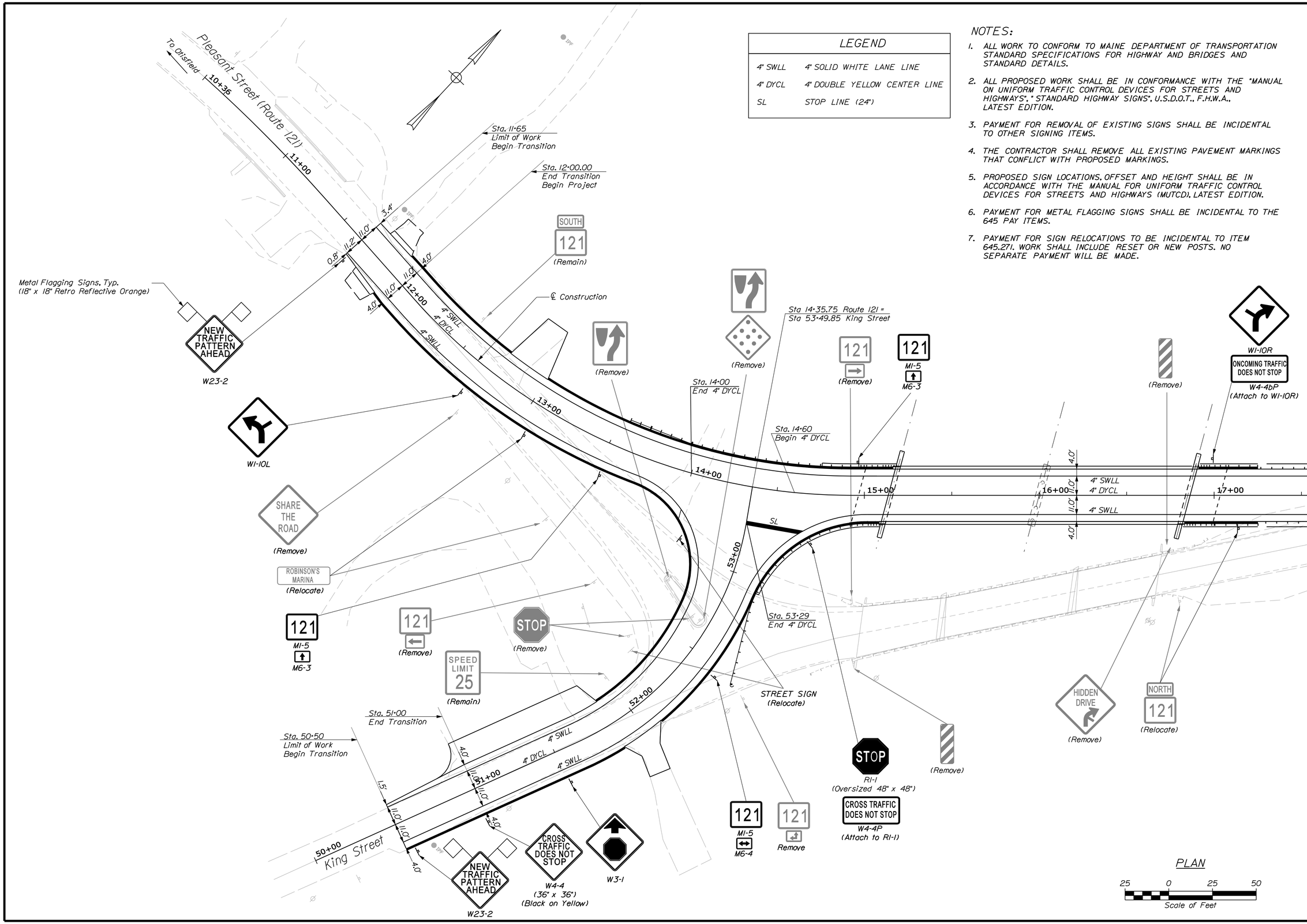

STATE OF MAINE
DEPARTMENT OF TRANSPORTATION

AC-BH-1926(800)X

WIN 19268.00

BRIDGE NO. 3738

BRIDGE PLANS

PROJ. MANAGER STEPHEN BODGE	BY	DATE
DESIGN-DETAILED L. MEEK	L. NEWHOUSE	01-23-14
CHECKED-REVIEWED D. ETTINGER	-	01-23-14
DESIGN2-DETAILED2 -	-	-
DESIGN3-DETAILED3 -	-	-
REVISIONS 1 -	-	-
REVISIONS 2 -	-	-
REVISIONS 3 -	-	-
REVISIONS 4 -	-	-
FIELD CHANGES -	-	-

SIGNATURE

P.E. NUMBER

DATE

COVERED BRIDGE
OVER LITTLE ANDROSCOGGIN RIVER
OXFORD
OXFORD COUNTY

SIGNING & STRIPING PLAN 1

SHEET NUMBER

12

OF 59

Filename: ...\00\bridge\012_SSPlan_01.dgn Division: HIGHWAY Username: lnewhouse Date:2/14/2014

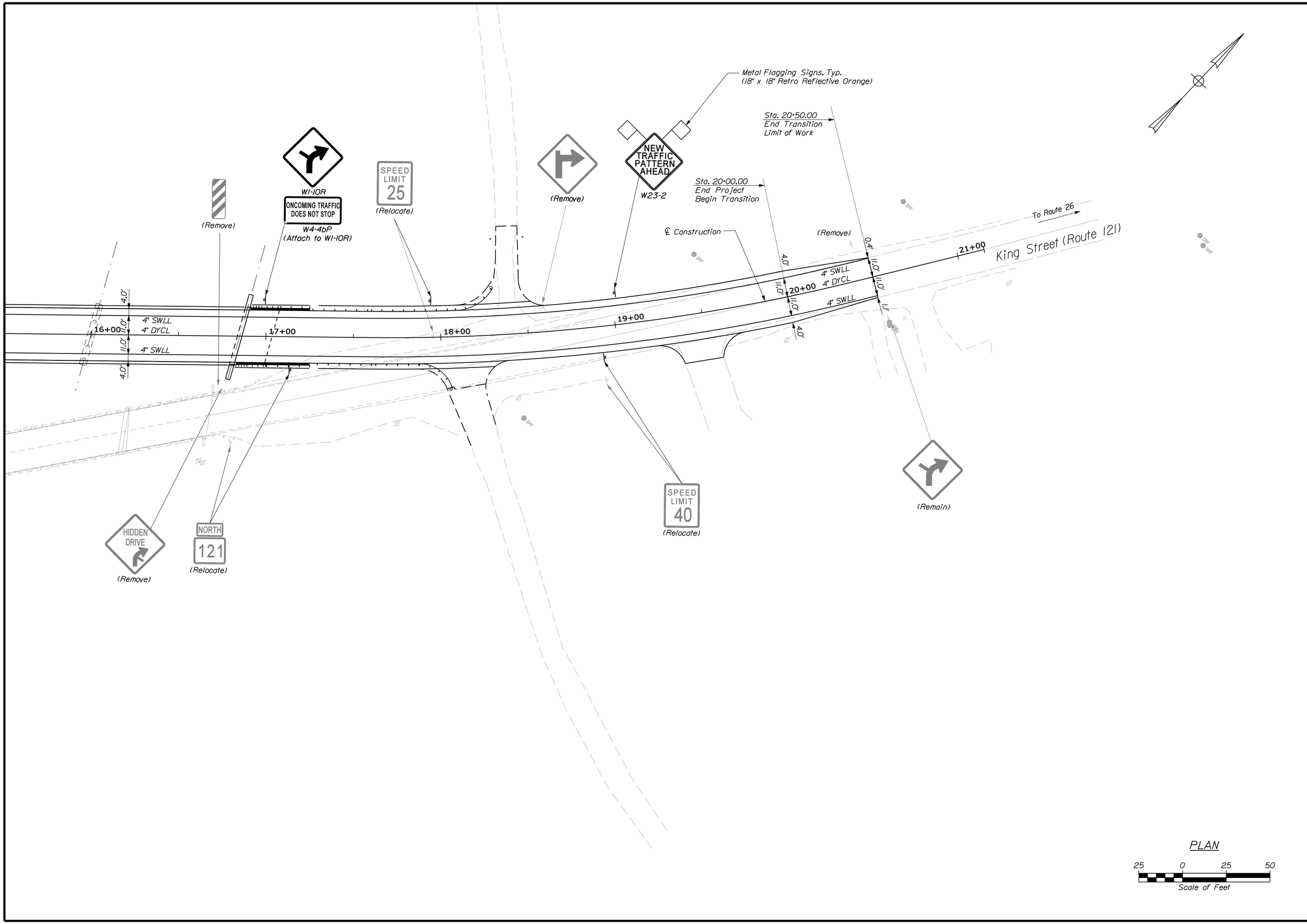

STATE OF MAINE
DEPARTMENT OF TRANSPORTATION

AC-BH-1926(800)X

WIN 19268.00

BRIDGE NO. 3738

BRIDGE PLANS

PROJ. MANAGER STEPHEN BODGE	BY	DATE
DESIGN-DETAILED L.MEEK	L. NEWHOUSE	01-23-14
CHECKED-REVIEWED D.ETTINGER	-	01-23-14
DESIGN2-DETAILED2 -	-	-
DESIGN3-DETAILED3 -	-	-
REVISIONS 1 -	-	-
REVISIONS 2 -	-	-
REVISIONS 3 -	-	-
REVISIONS 4 -	-	-
FIELD CHANGES -	-	-

SIGNATURE

P.E. NUMBER

DATE

COVERED BRIDGE
OVER LITTLE ANDROSCOGGIN RIVER
OXFORD
OXFORD COUNTY

SIGNING & STRIPING PLAN 2

SHEET NUMBER
13
OF 59

Filename: ...\00\bridge\013_SSPlan_02.dgn Division: HIGHWAY Username: lnewhouse Date:2/14/2014

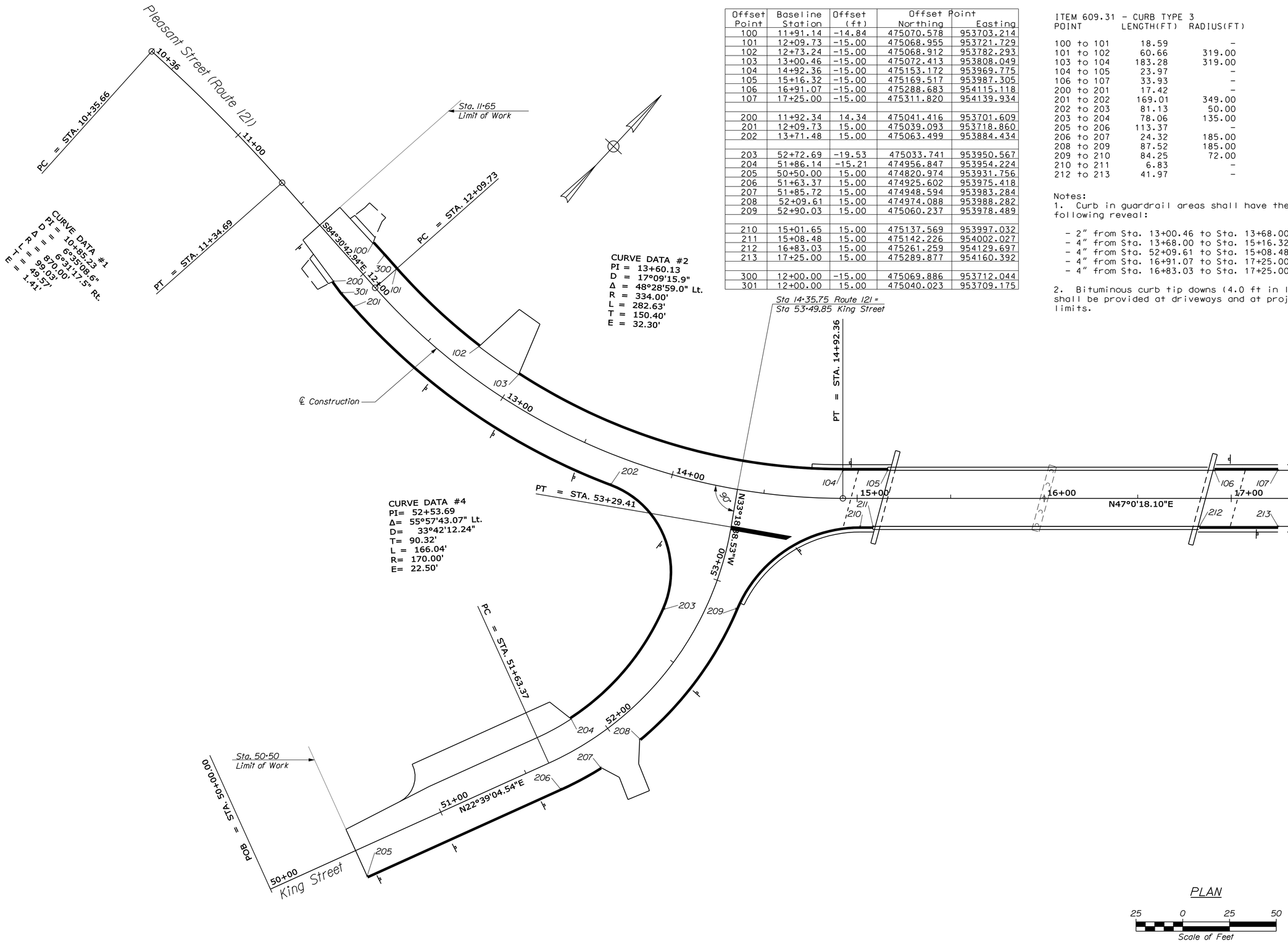

Offset Point	Baseline Station	Offset (ft)	Offset Point Northing	Offset Point Easting
100	11+91.14	-14.84	475070.578	953703.214
101	12+09.73	-15.00	475068.955	953721.729
102	12+73.24	-15.00	475068.912	953782.293
103	13+00.46	-15.00	475072.413	953808.049
104	14+92.36	-15.00	475153.172	953969.775
105	15+16.32	-15.00	475169.517	953987.305
106	16+91.07	-15.00	475288.683	954115.118
107	17+25.00	-15.00	475311.820	954139.934
200	11+92.34	14.34	475041.416	953701.609
201	12+09.73	15.00	475039.093	953718.860
202	13+71.48	15.00	475063.499	953884.434
203	52+72.69	-19.53	475033.741	953950.567
204	51+86.14	-15.21	474956.847	953954.224
205	50+50.00	15.00	474820.974	953931.756
206	51+63.37	15.00	474925.602	953975.418
207	51+85.72	15.00	474948.594	953983.284
208	52+09.61	15.00	474974.088	953988.282
209	52+90.03	15.00	475060.237	953978.489
210	15+01.65	15.00	475137.569	953997.032
211	15+08.48	15.00	475142.226	954002.027
212	16+83.03	15.00	475261.259	954129.697
213	17+25.00	15.00	475289.877	954160.392
300	12+00.00	-15.00	475069.886	953712.044
301	12+00.00	15.00	475040.023	953709.175

ITEM 609.31 - CURB TYPE 3

POINT	LENGTH(FT)	RADIUS(FT)
100 to 101	18.59	-
101 to 102	60.66	319.00
103 to 104	183.28	319.00
104 to 105	23.97	-
106 to 107	33.93	-
200 to 201	17.42	-
201 to 202	169.01	349.00
202 to 203	81.13	50.00
203 to 204	78.06	135.00
205 to 206	113.37	-
206 to 207	24.32	185.00
208 to 209	87.52	185.00
209 to 210	84.25	72.00
210 to 211	6.83	-
212 to 213	41.97	-

Notes:

1. Curb in guardrail areas shall have the following reveal:

- 2" from Sta. 13+00.46 to Sta. 13+68.00 Lt.
- 4" from Sta. 13+68.00 to Sta. 15+16.32 Lt.
- 4" from Sta. 52+09.61 to Sta. 15+08.48 Rt.
- 4" from Sta. 16+91.07 to Sta. 17+25.00 Lt.
- 4" from Sta. 16+83.03 to Sta. 17+25.00 Rt.

2. Bituminous curb tip downs (4.0 ft in length) shall be provided at driveways and at project limits.

STATE OF MAINE
DEPARTMENT OF TRANSPORTATION

AC-BH-1926(800)X

WIN 19268.00

BRIDGE NO. 3738

BRIDGE PLANS

PROJ. MANAGER STEPHEN BODGE			
DESIGN-DETAILED	L.MEEK	L.NEWHOUSE	01-23-14
CHECKED-REVIEWED	D.ETTINGER	-	-
DESIGN2-DETAILED2	-	-	-
DESIGN3-DETAILED3	-	-	-
REVISIONS 1	-	-	-
REVISIONS 2	-	-	-
REVISIONS 3	-	-	-
REVISIONS 4	-	-	-
FIELD CHANGES	-	-	-

SIGNATURE

P.E. NUMBER

DATE

COVERED BRIDGE
OVER LITTLE ANDROSCOGGIN RIVER
OXFORD
OXFORD COUNTY

CURBING PLAN

SHEET NUMBER

14

OF 59

Filename: ...\00\bridge\014_CurbPlan_01.dgn Division: HIGHWAY Username: lnewhouse Date:2/14/2014

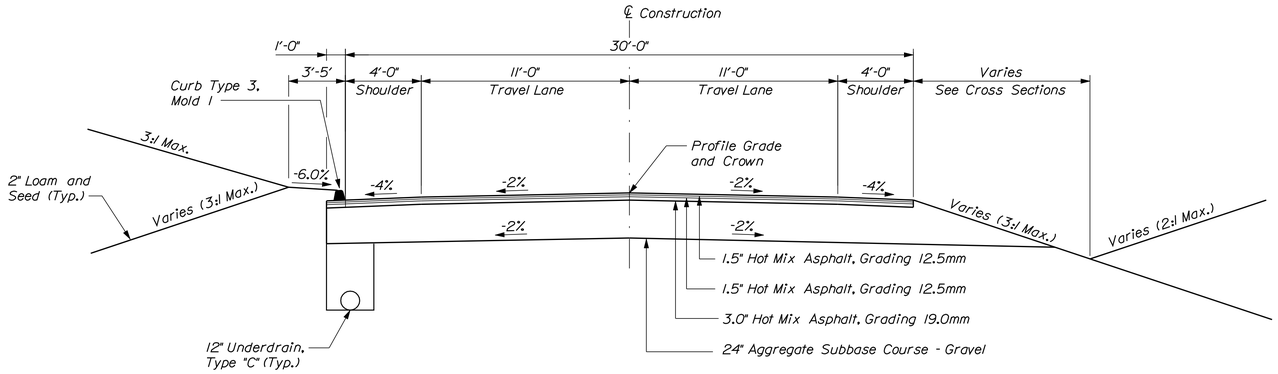

Sta. 11+90 to Sta. 13+56, Lt.
Sta. 11+92 to Sta. 14+00, Rt.
Sta. 51+86 to Sta. 53+25, Lt.
Sta. 50+50 to Sta. 52+90, Rt.

Sta. 18+30 to Sta. 20+50, Lt.
Sta. 18+05 to Sta. 20+50, Rt.

TYPICAL APPROACH SECTION

(ROUTE 121 AND KING STREET)

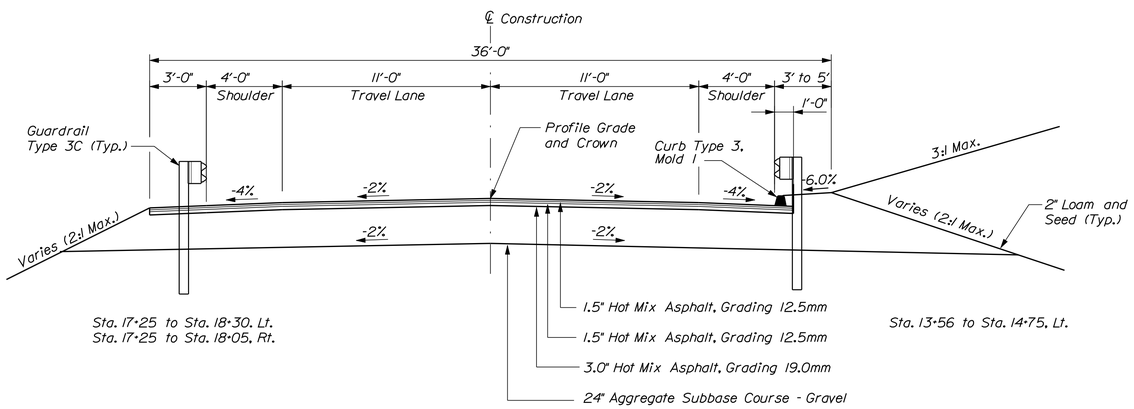

Sta. 17+25 to Sta. 18+30, Lt.
Sta. 17+25 to Sta. 18+05, Rt.

Sta. 13+56 to Sta. 14+75, Lt.

TYPICAL APPROACH SECTION WITH GUARDRAIL

(ROUTE 121 AND KING STREET)

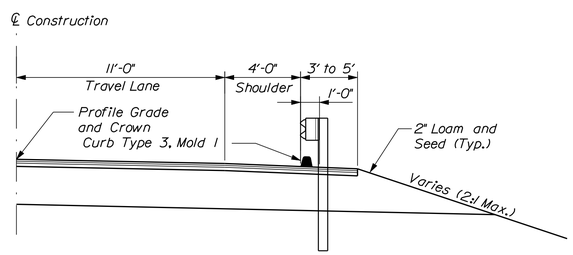

Sta. 14+75 to Abutment 1, Lt.
Sta. 52+90 to Abutment 1, Rt.
Abutment 2 to Sta 17+25, Lt. & Rt. - See Note 5

TYPICAL APPROACH SECTION WITH GUARDRAIL

(ROUTE 121 AND KING STREET)

NOTES:

1. The pavement, base and subbase depths as shown on the plans are intended to be nominal.

2. When superelevation exceeds the slope of the low side shoulder, the low side shoulder shall have the same slope as the travelway.

3. Crowns for both normal and superelevation sections for all courses of subbase and pavement shall be straight.

4. The algebraic difference between the shoulder and travelway cross slopes "rollover" shall not exceed 8%.

5. Pavement depth for shoulders and guardrail panel shall be 3' from Abutment #2 at Sta. 16+85 to Sta. 20+50.

6. The stationing shown under each typical is approximate.

King Street - Superelevation Table

Left Shoulder	Left Travelway	Station	Right Travelway	Right Shoulder
-4.00%	-2.00%	52+25	-2.00%	-4.00%
-4.00%	-2.00%	52+37.5	-2.00%	-4.00%
-4.00%	-1.50%	52+50	-2.00%	-4.00%
-4.00%	-0.50%	52+75	-2.00%	-4.00%
-4.00%	0.50%	53+00	-2.00%	-4.00%
-4.00%	1.50%	53+25	-2.00%	-4.00%
-4.00%	1.78%	53+34.85	-1.78%	-4.00%

STATE OF MAINE
DEPARTMENT OF TRANSPORTATION

AC-BH-1926(800)X

WIN 19268.00

BRIDGE NO: 3738

BRIDGE PLANS

		BY	DATE
PROJ. MANAGER	STEPHEN BODGE		
DESIGN-DETAILED	E.BROWNELL	D.BURGESS	01-23-14
CHECKED-REVIEWED	B.WELCH	J.BURGESS	01-23-14
DESIGN2-DETAILED2	-	-	-
DESIGN3-DETAILED3	-	-	-
REVISIONS 1	-	-	-
REVISIONS 2	-	-	-
REVISIONS 3	-	-	-
REVISIONS 4	-	-	-
FIELD CHANGES	-	-	-

SIGNATURE

P.E. NUMBER

DATE

OXFORD
OVER LITTLE ANDROSCOGGIN RIVER
OXFORD COUNTY

TYPICAL SECTIONS

NOT TO SCALE

Gorrill-Palmer Consulting Engineers, Inc.
PO Box 1237
15 Shaker Road
Gray, ME 04039
Engineering Excellence Since 1998
207-657-6910
FAX: 207-657-6912
E-Mail: mailbox@gorrillpalmer.com

BECKER
STRUCTURAL ENGINEERS
75 York Street, Portland, Maine 04101
207.879.1838 ■ beckerstructural.com

SHEET NUMBER
15
OF 59

Filename: ...\00\bridge\015_Btypical.dgn Division: HIGHWAY Username: lnewhouse Date:2/14/2014

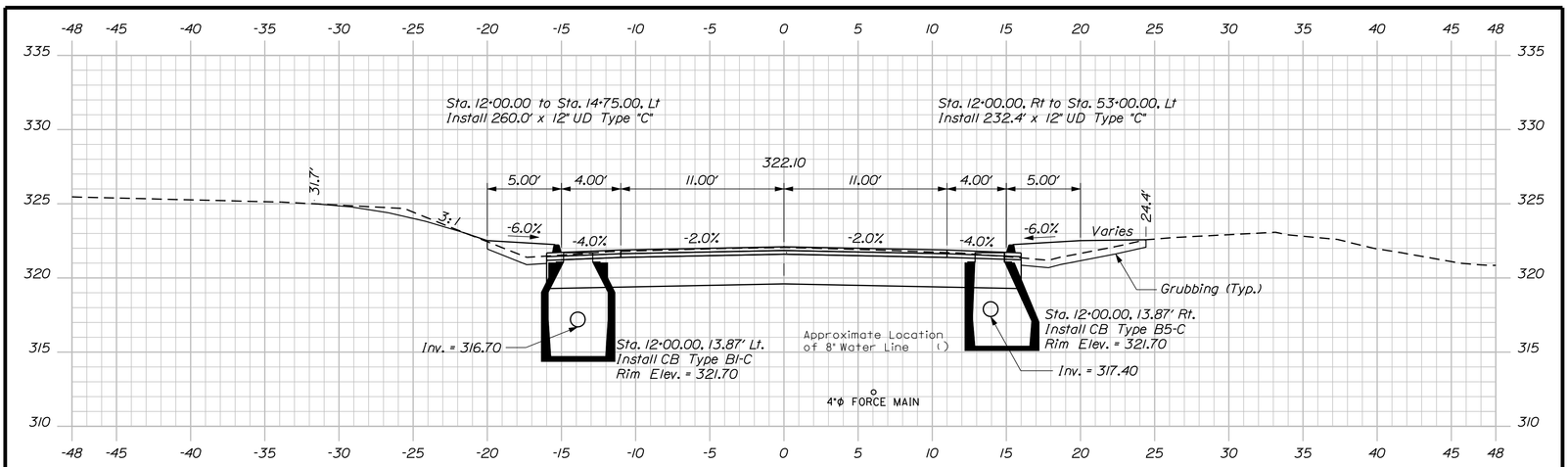

12+00.00

Sta. 12+00.00
End Transition
Begin Project

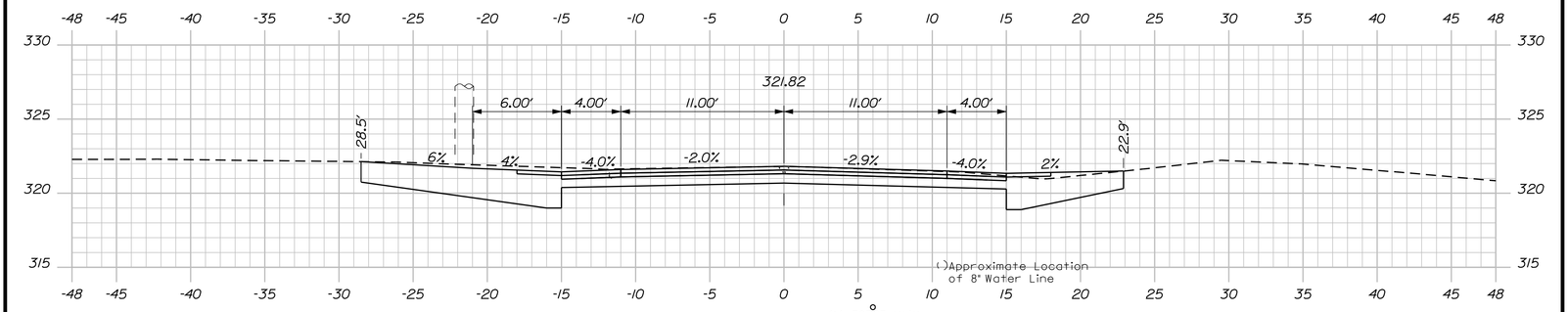

Gravel Entrance
18.0' Opening Width

11+79.89

Trail Entrance
18.0' Opening Width

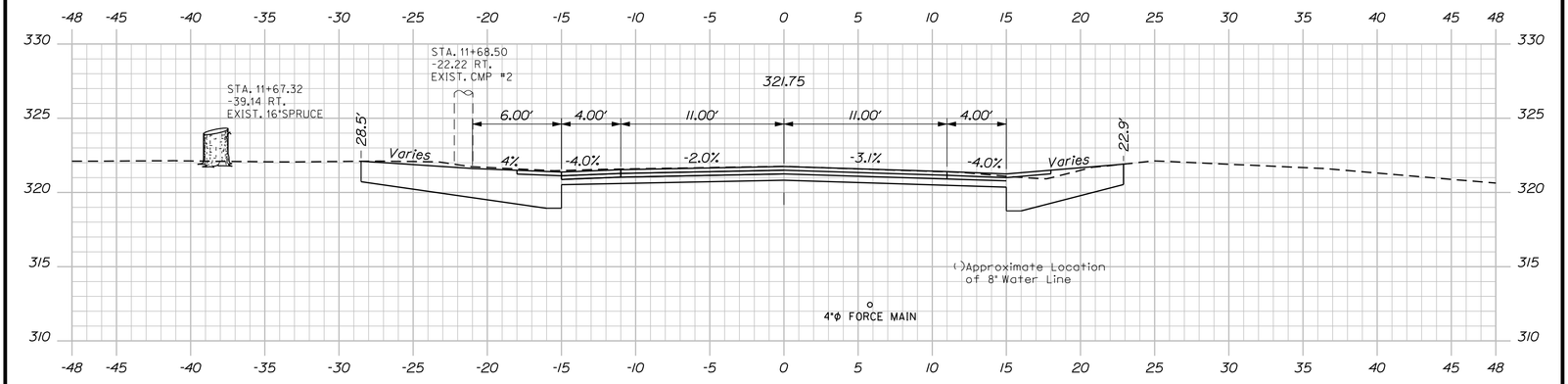

11+75.00

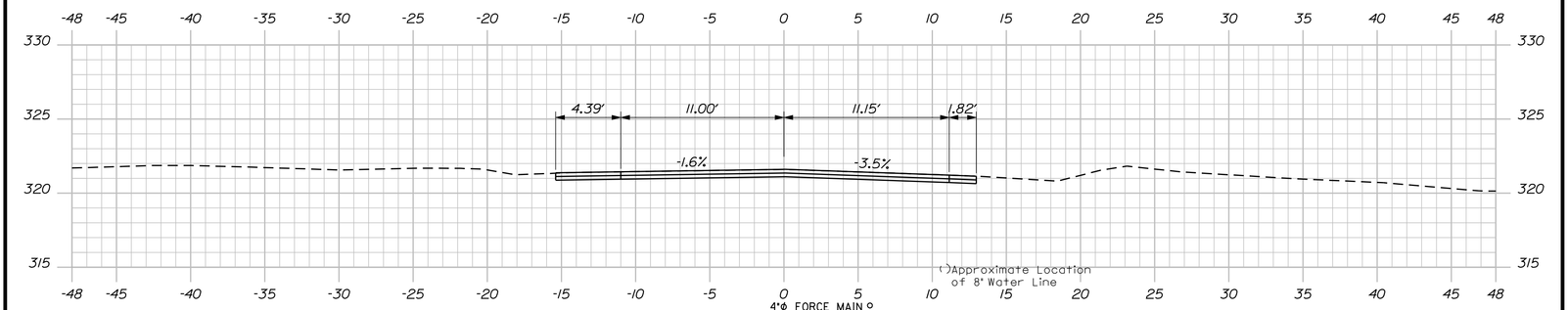

11+65.00

Sta. 11+65
Limit of Work
Begin Transition

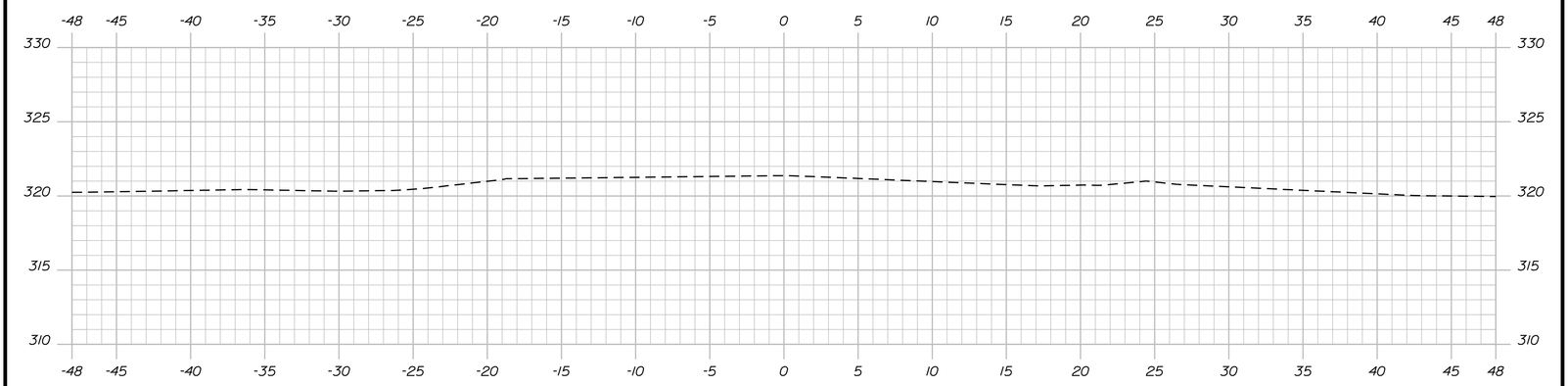

11+50.00

Route 121 Sta. 11+50.00 to Sta. 12+00.00

SHEET NUMBER 16 OF 59

COVERED BRIDGE
OVER LITTLE ANDROSCOGGIN RIVER
OXFORD OXFORD COUNTY

CROSS SECTIONS

PROJ. MANAGER STEPHEN BODGE		BY	DATE
DESIGN-DETAILED	L.MEEK	L.NEWHOUSE	01-23-14
CHECKED-REVIEWED	D.ETTINGER	-	01-23-14
DESIGN2-DETAILED2	-	-	-
DESIGN3-DETAILED3	-	-	-
REVISIONS 1	-		-
REVISIONS 2	-		-
REVISIONS 3	-		-
REVISIONS 4	-		-
FIELD CHANGES	-		-

SIGNATURE
P.E. NUMBER
DATE

STATE OF MAINE
DEPARTMENT OF TRANSPORTATION

AC-BH-1926(800)X

BRIDGE NO. 3738 WIN 19268.00 BRIDGE PLANS

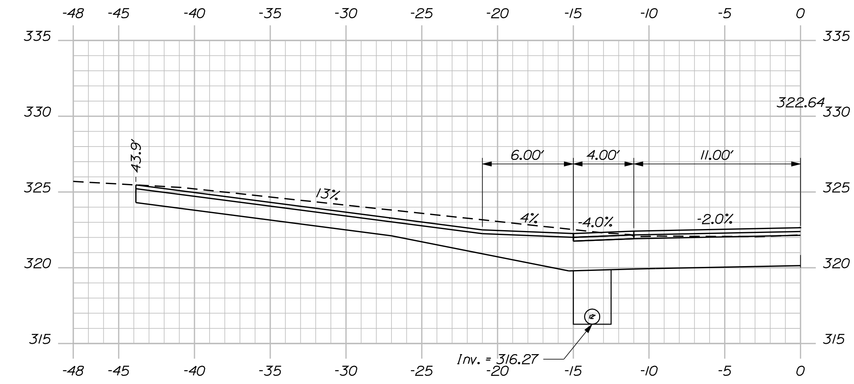

12+86.85

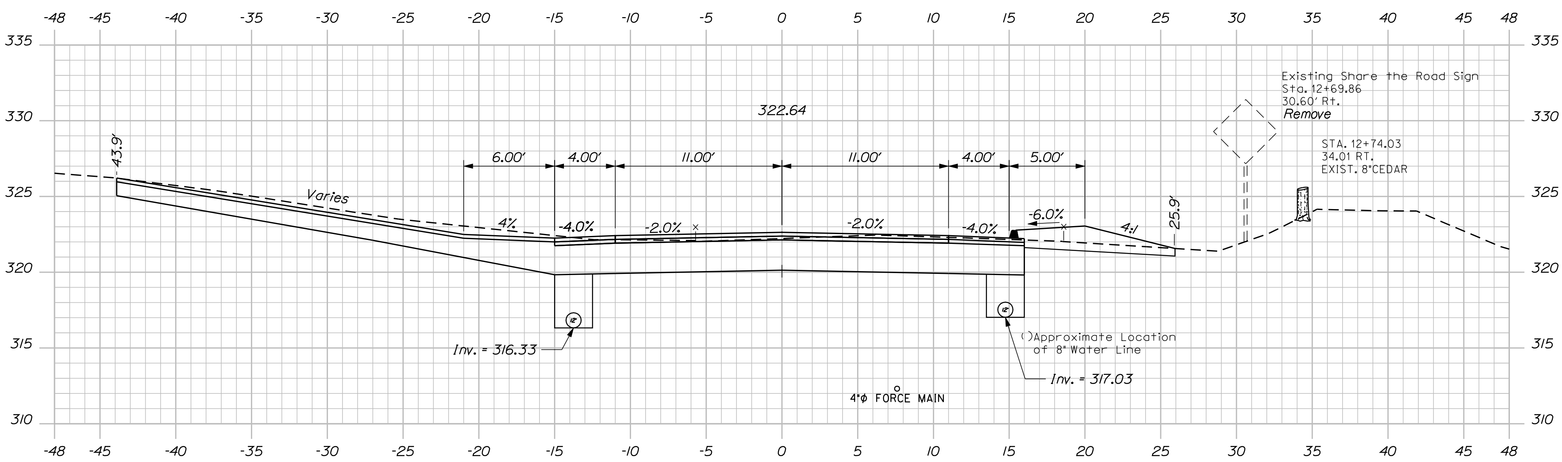

12+75.00

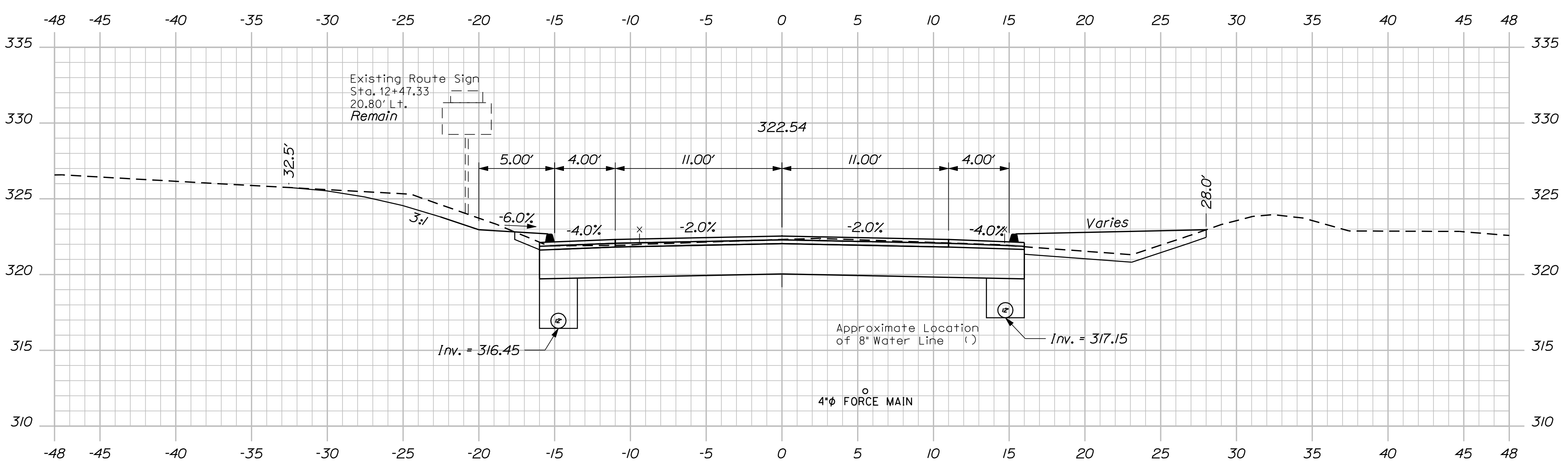

12+50.00

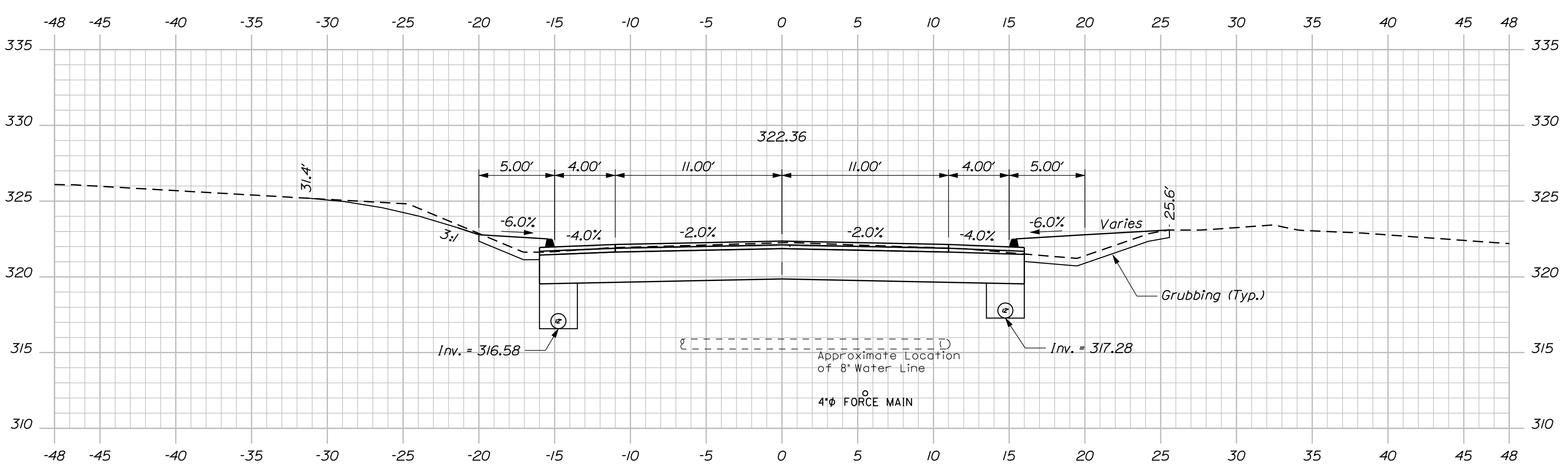

12+25.00

Route 121 Sta. 12+25.00 to Sta. 12+86.85

SHEET NUMBER 17 OF 59

COVERED BRIDGE
OVER LITTLE ANDROSCOGGIN RIVER
OXFORD OXFORD COUNTY

CROSS SECTIONS

PROJ. MANAGER STEPHEN BODGE	BY	DATE
DESIGN-DETAILED	L.MEEK	L.NEWHOUSE	01-23-14
CHECKED-REVIEWED	D.ETTINGER	-	01-23-14
DESIGN2-DETAILED2	-	-	-
DESIGN3-DETAILED3	-	-	-
REVISIONS 1	-		-
REVISIONS 2	-		-
REVISIONS 3	-		-
REVISIONS 4	-		-
FIELD CHANGES	-		-

SIGNATURE

P.E. NUMBER

DATE

STATE OF MAINE
DEPARTMENT OF TRANSPORTATION

AC-BH-1926(800)X

BRIDGE NO. 3738 WIN 19268.00 BRIDGE PLANS

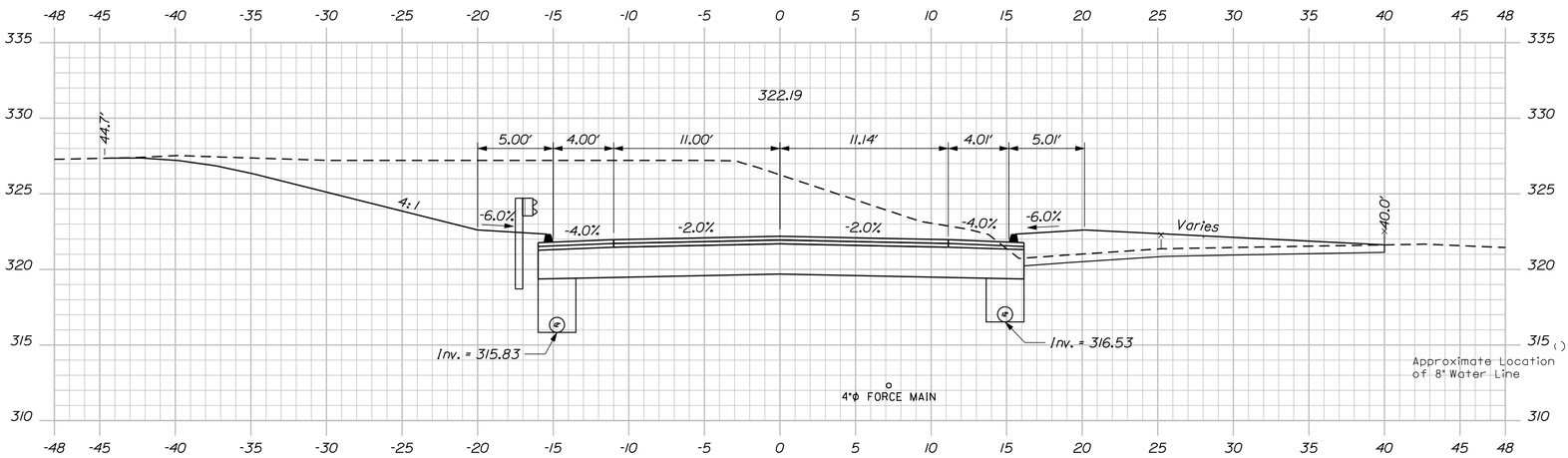

Sta. 13+56.35, 16.00' Lt. to Sta. 13+95.68, 15.00' Lt.
Install Energy Absorbing System (ET-Plus)

13+75.00

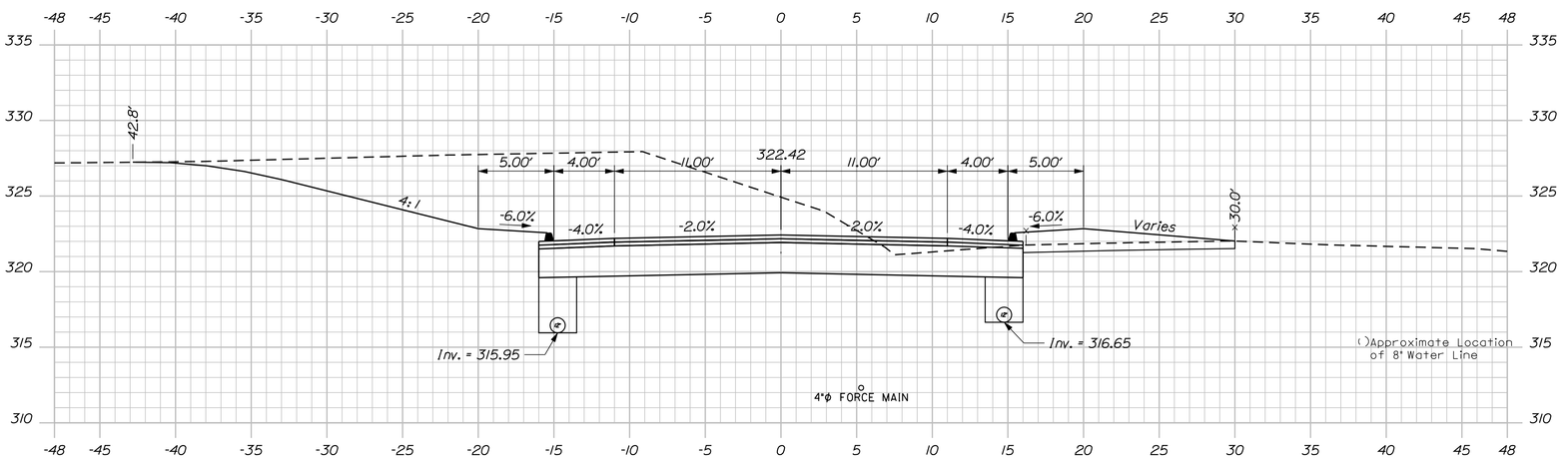

13+50.00

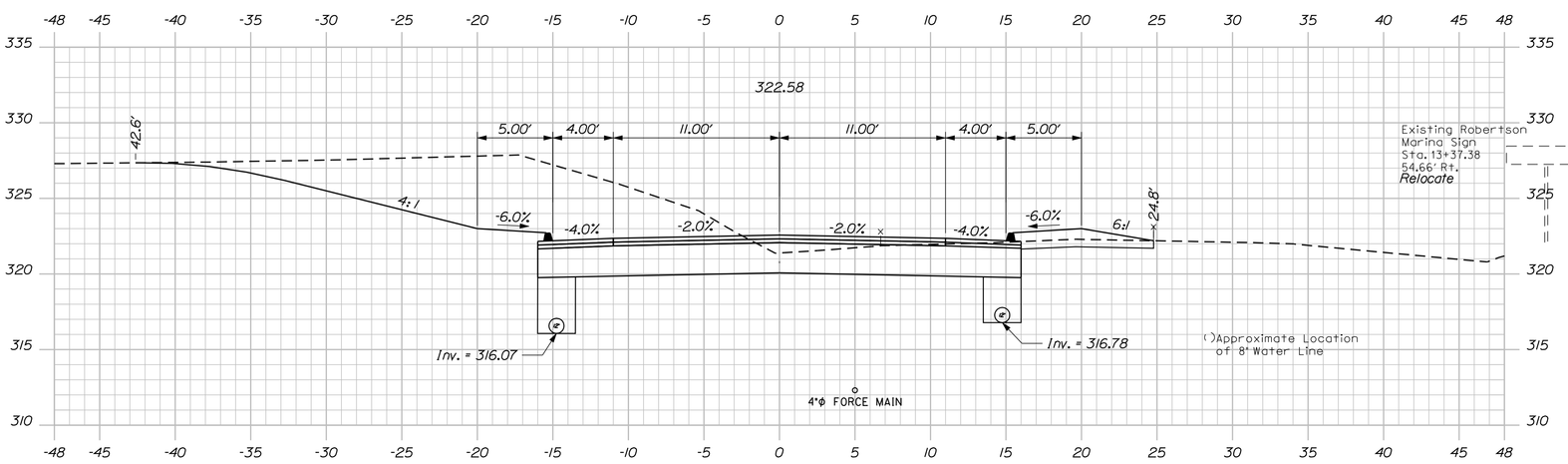

13+25.00

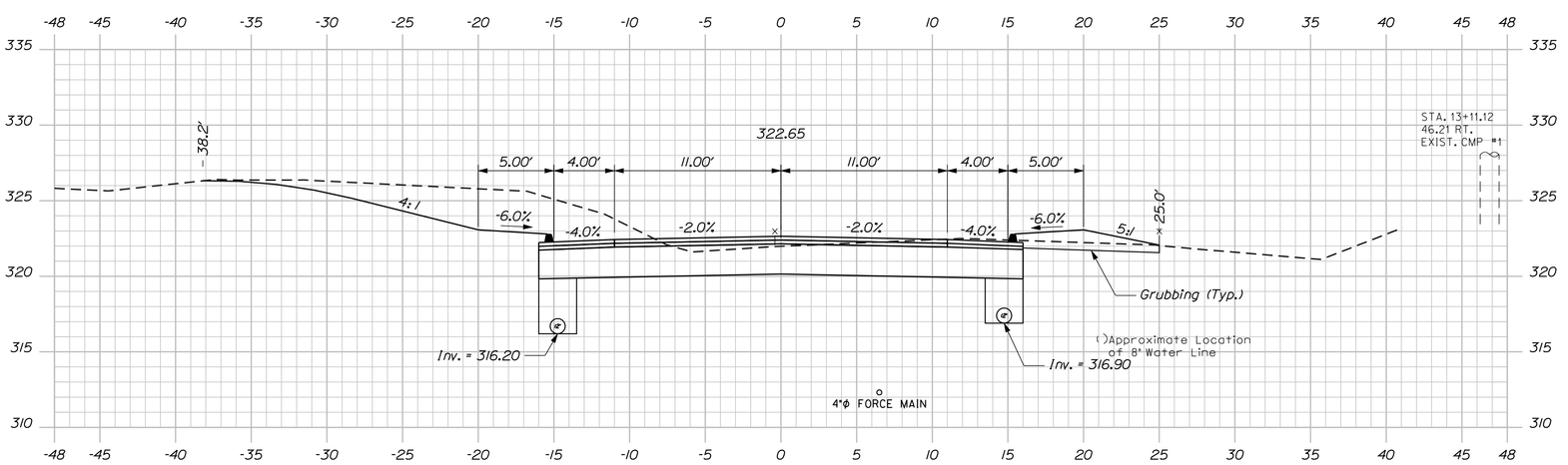

13+00.00

SHEET NUMBER 18 OF 59	COVERED BRIDGE OVER LITTLE ANDROSCOGGIN RIVER OXFORD OXFORD COUNTY	PROJ. MANAGER STEPHEN BODGE	BY	DATE	STATE OF MAINE DEPARTMENT OF TRANSPORTATION
		DESIGN-DETAILED L.MEEK	L.NEWHOUSE	01-23-14	AC-BH-1926(800)X
		CHECKED-REVIEWED D.ETTINGER	-	01-23-14	SIGNATURE
		DESIGN2-DETAILED2 -	-	-	
		DESIGN3-DETAILED3 -	-	-	P.E. NUMBER
		REVISIONS 1 -		-	
		REVISIONS 2 -		-	
		REVISIONS 3 -		-	DATE
		REVISIONS 4 -		-	
		FIELD CHANGES -		-	
	CROSS SECTIONS				BRIDGE NO. 3738 WIN 19268.00 BRIDGE PLANS

Route 121 Sta. 13+00.00 to Sta. 13+75.00

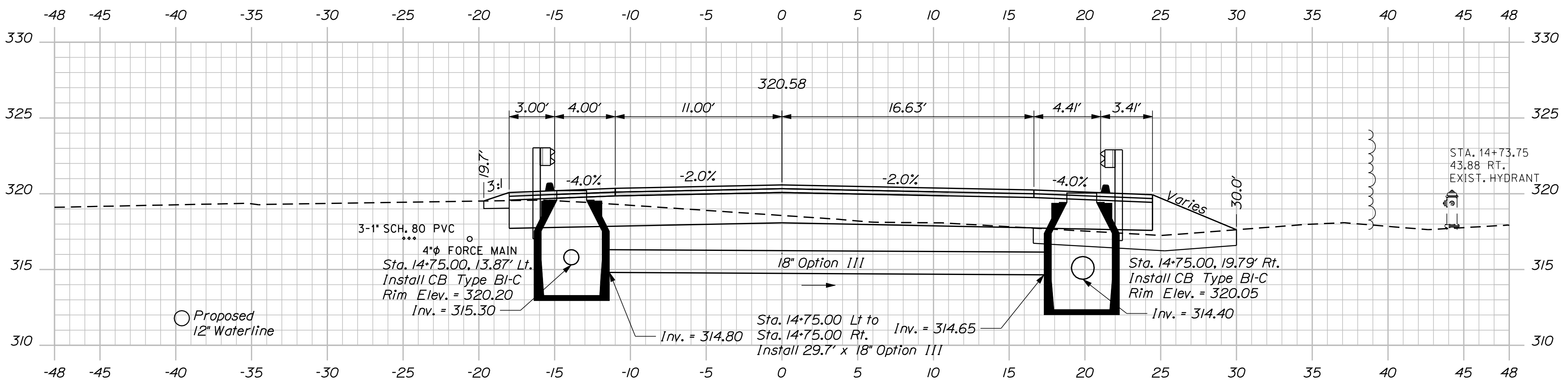

14+75.00

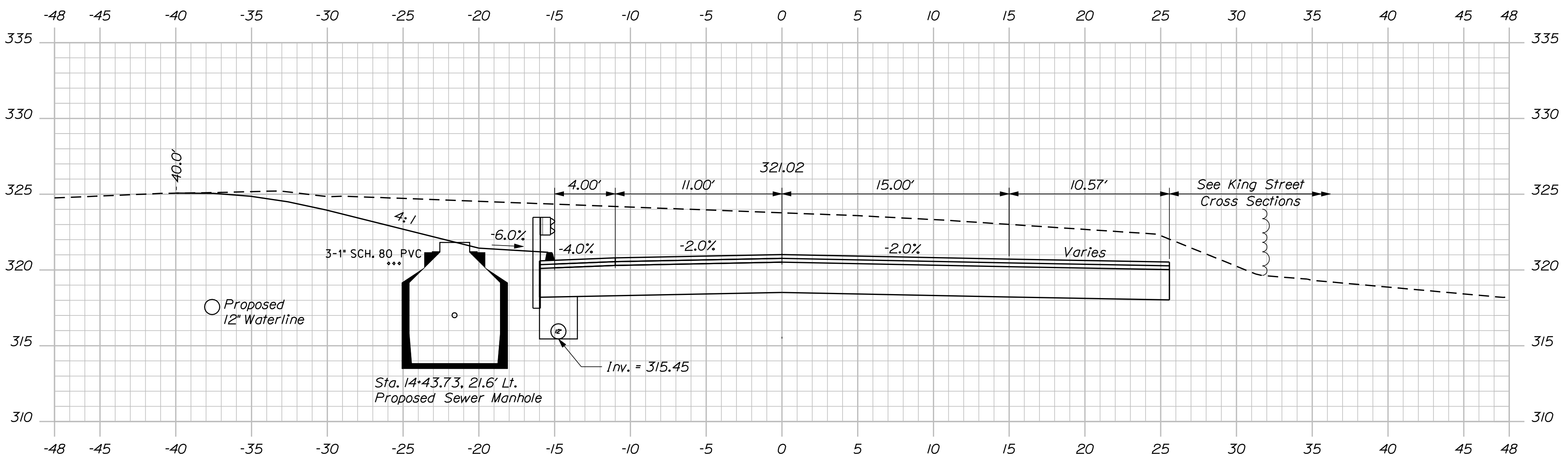

14+50.00

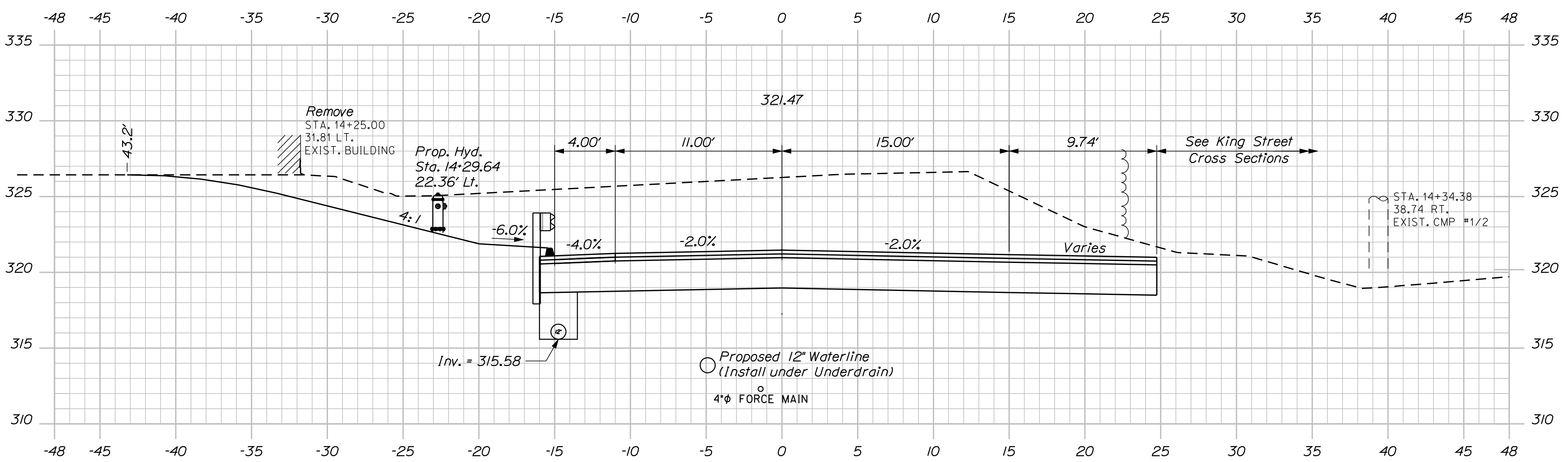

14+25.00

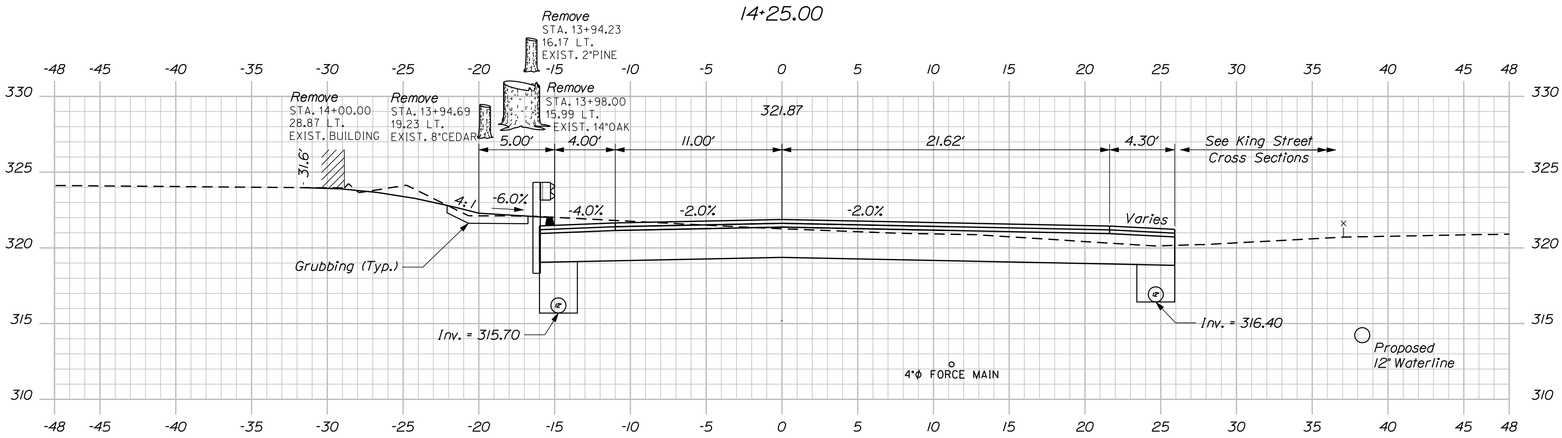

Sta. 13+95.68 to Sta. 15+00.02, Lt.
Install Guardrail Type 3C - Single Rail

14+00.00

Route 121 Sta. 14+00.00 to Sta. 14+75.00

SHEET NUMBER 19 OF 59

COVERED BRIDGE
OVER LITTLE ANDROSCOGGIN RIVER
OXFORD OXFORD COUNTY

CROSS SECTIONS

PROJ. MANAGER STEPHEN BODGE		BY	DATE
DESIGN-DETAILED	L.MEEK	L.NEWHOUSE	01-23-14
CHECKED-REVIEWED	D.ETTINGER	-	01-23-14
DESIGN2-DETAILED2	-	-	-
DESIGN3-DETAILED3	-	-	-
REVISIONS 1	-		-
REVISIONS 2	-		-
REVISIONS 3	-		-
REVISIONS 4	-		-
FIELD CHANGES	-		-

SIGNATURE
P.E. NUMBER
DATE

STATE OF MAINE
DEPARTMENT OF TRANSPORTATION

AC-BH-1926(800)X

BRIDGE NO. 3738 WIN 19268.00 BRIDGE PLANS

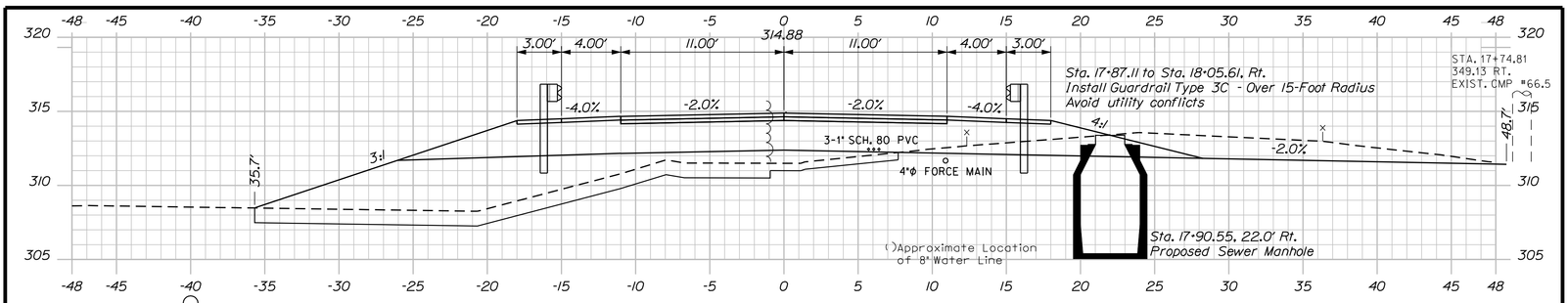

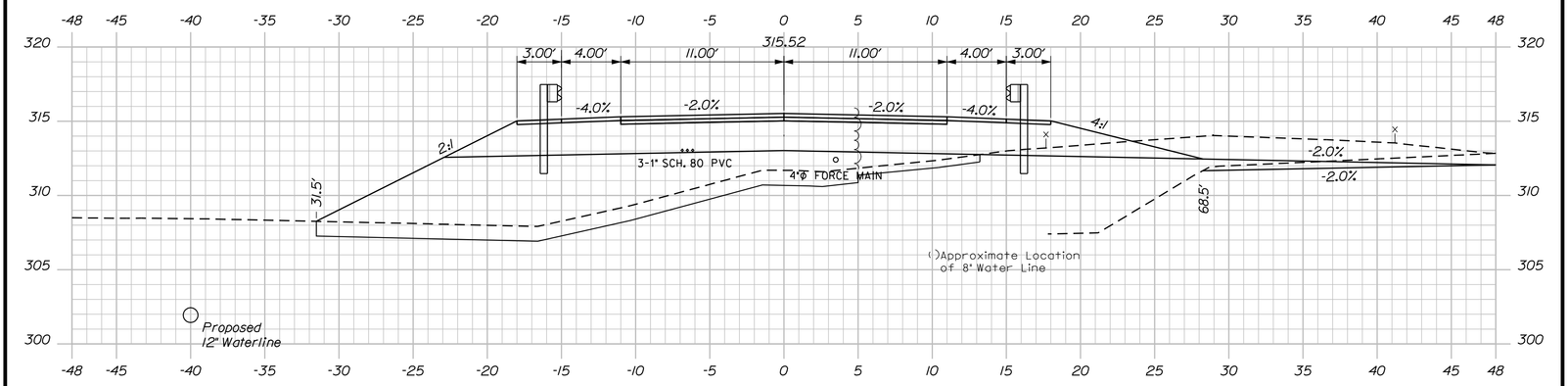

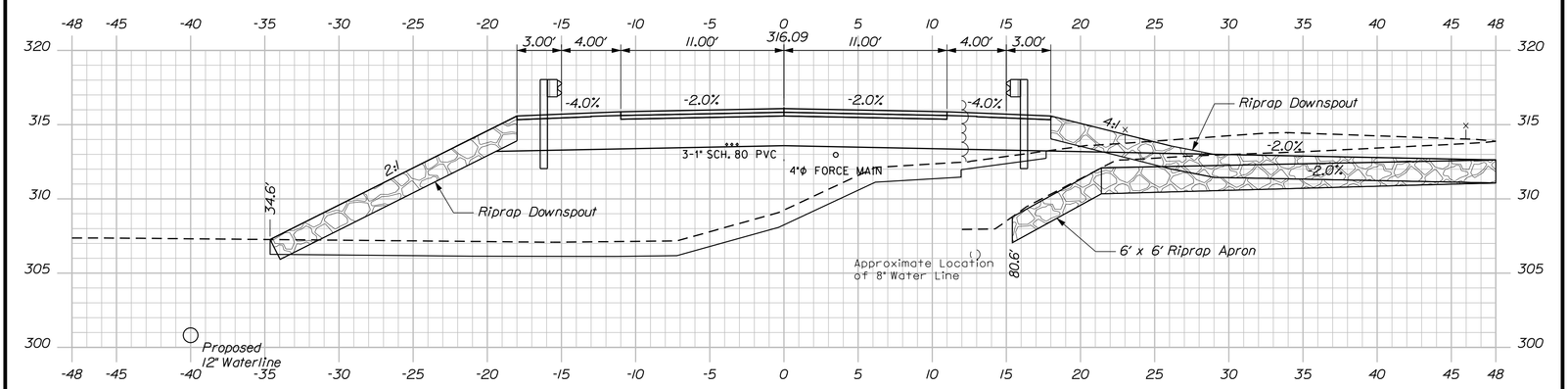

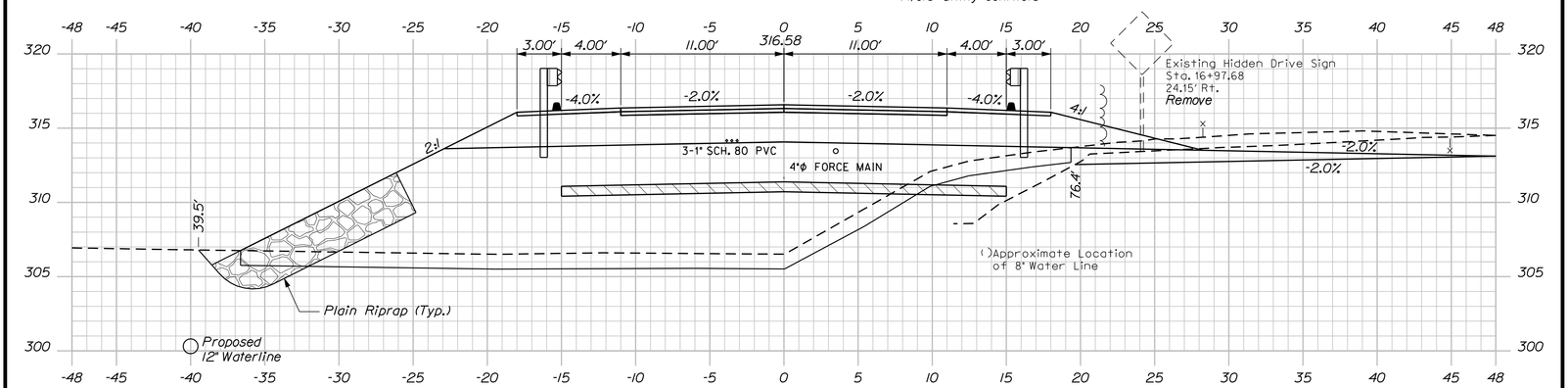

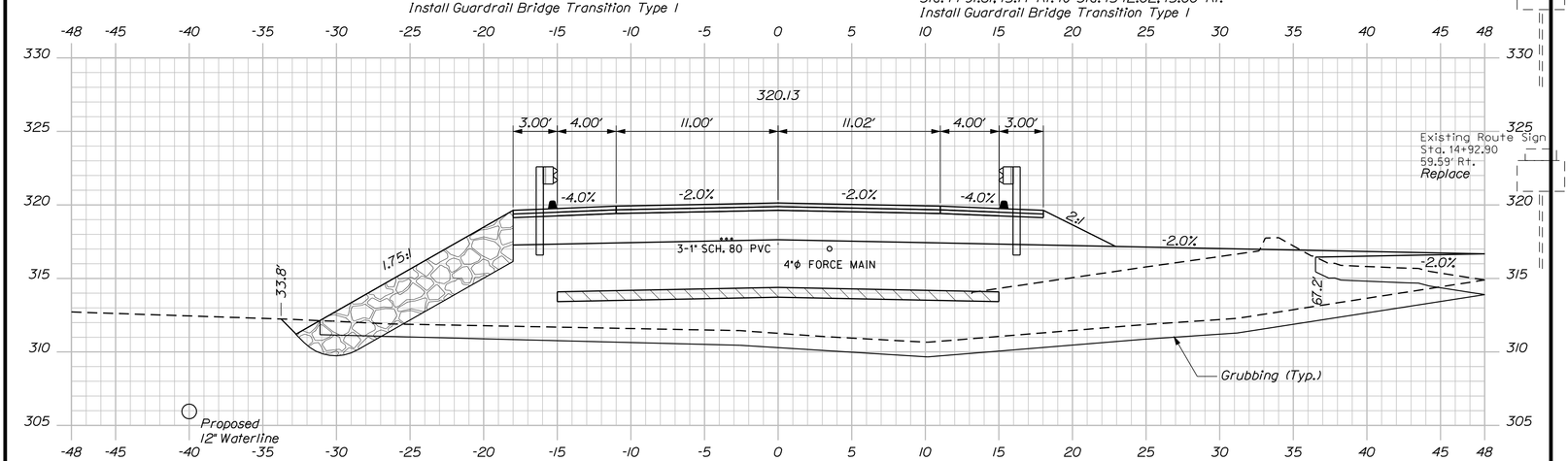

Route 121 Sta. 15+00.00 to Sta. 17+75.00

SHEET NUMBER 20 OF 59

COVERED BRIDGE
OVER LITTLE ANDROSCOGGIN RIVER
OXFORD OXFORD COUNTY

CROSS SECTIONS

PROJ. MANAGER STEPHEN BODGE		BY	DATE
DESIGN-DETAILED	L.MEEK	L.NEWHOUSE	01-23-14
CHECKED-REVIEWED	D.ETTINGER	-	01-23-14
DESIGN2-DETAILED2	-	-	-
DESIGN3-DETAILED3	-	-	-
REVISIONS 1	-		-
REVISIONS 2	-		-
REVISIONS 3	-		-
REVISIONS 4	-		-
FIELD CHANGES	-		-

SIGNATURE
P.E. NUMBER
DATE

STATE OF MAINE
DEPARTMENT OF TRANSPORTATION

AC-BH-1926(800)X

BRIDGE NO. 3738 WIN 19268.00 BRIDGE PLANS

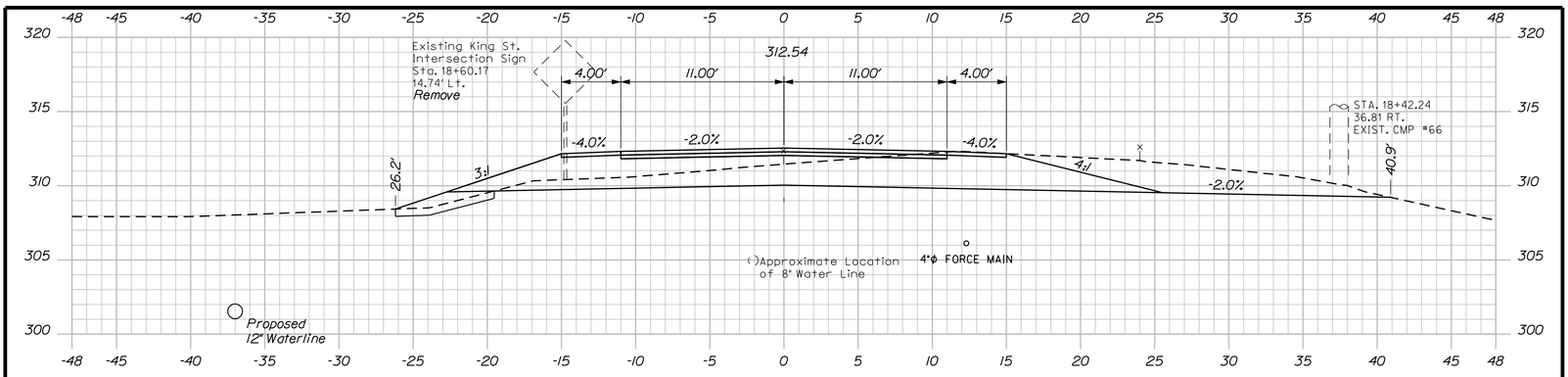

18+50.00

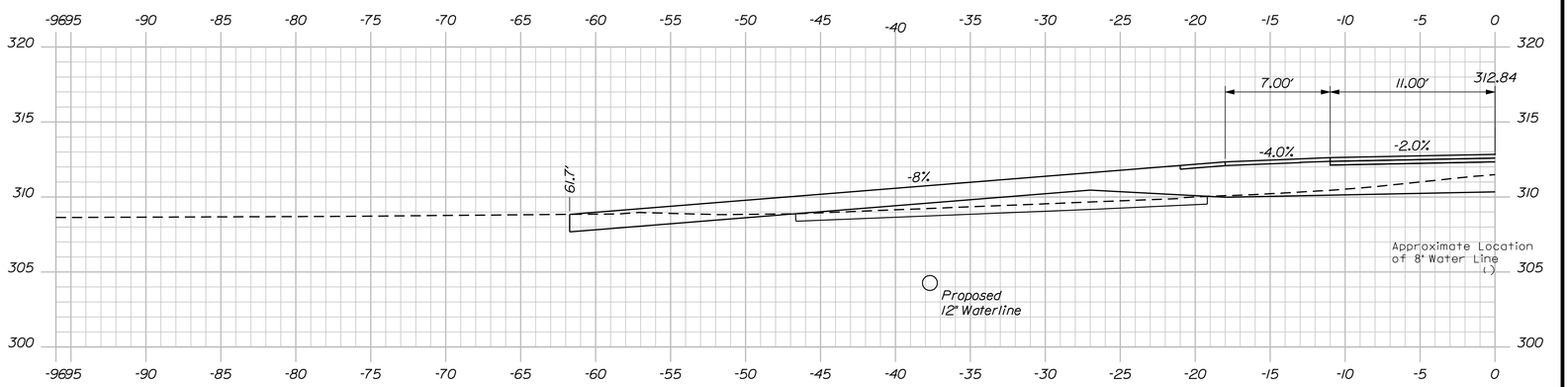

Woods Entrance
51.1' Opening Width

18+41.00

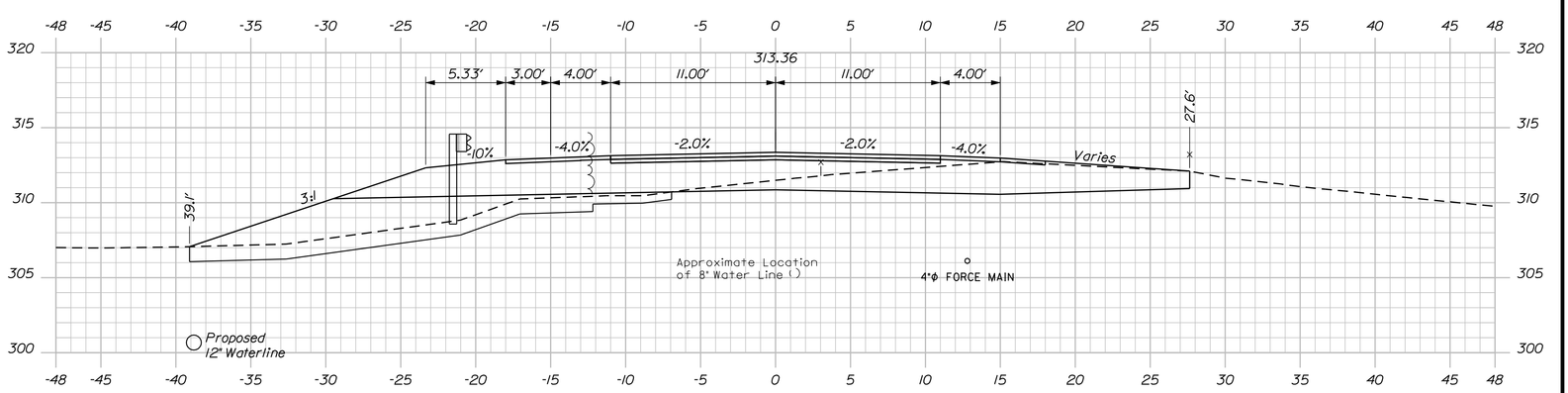

18+25.00

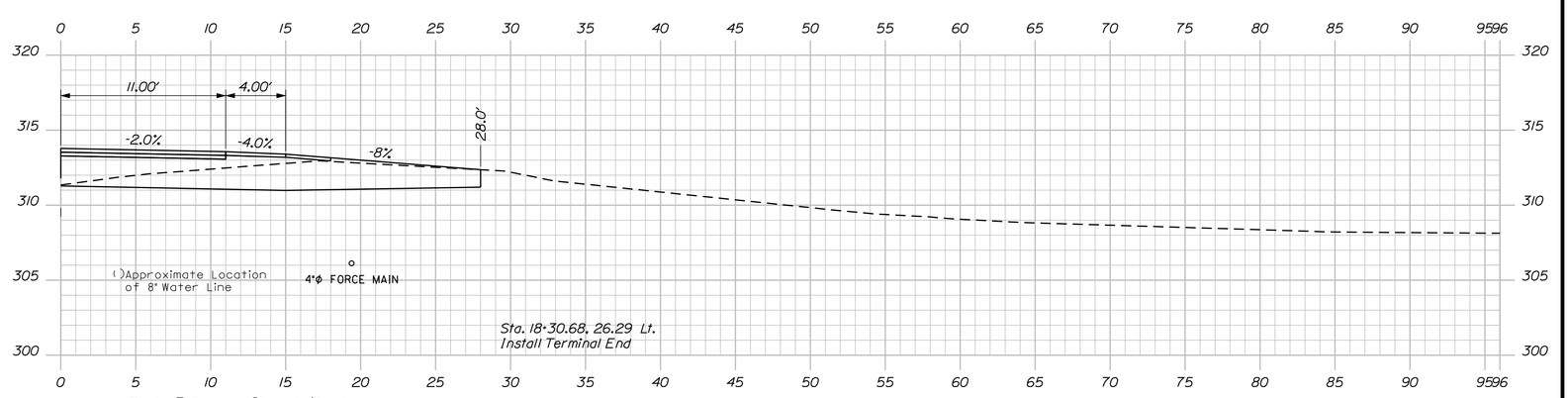

18+12.08

Woods Entrance - Skewed Ahead
52.5' Opening Width

Sta. 18+09.13 to Sta. 18+30.68, 26.29 Lt.
Install Guardrail Type 3C - Over 15-Foot Radius

Sta. 18+05.61, Rt.
Install Terminal End

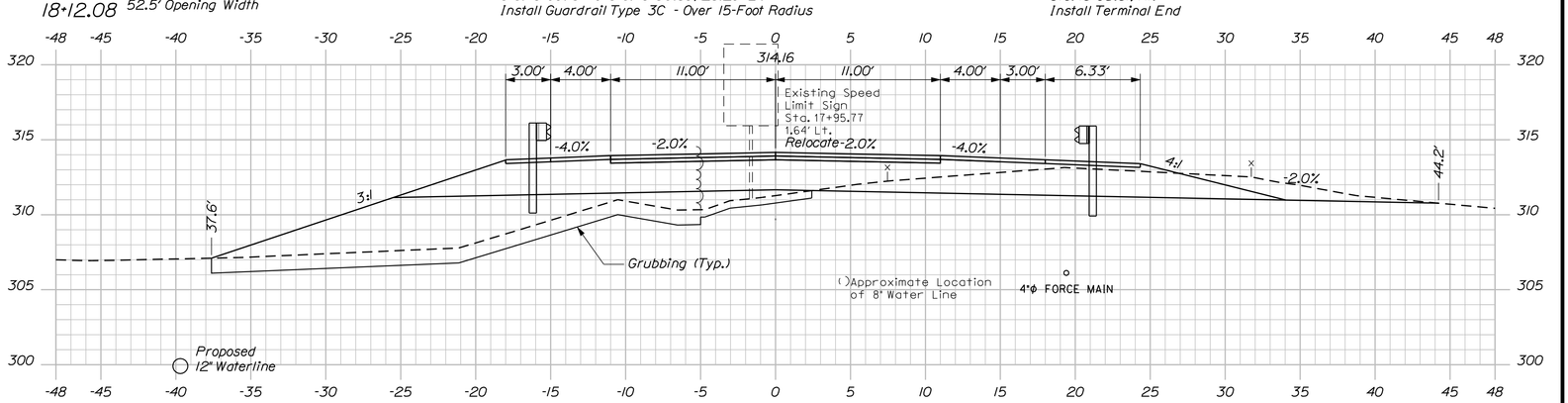

18+00.00

Route 121 Sta. 18+00.00 to Sta. 18+50.00

SHEET NUMBER 21 OF 59

COVERED BRIDGE
OVER LITTLE ANDROSCOGGIN RIVER
OXFORD OXFORD COUNTY

CROSS SECTIONS

PROJ. MANAGER STEPHEN BODGE	BY	DATE
DESIGN-DETAILED	L.MEEK	L.NEWHOUSE	01-23-14
CHECKED-REVIEWED	D.ETTINGER	-	01-23-14
DESIGN2-DETAILED2	-	-	-
DESIGN3-DETAILED3	-	-	-
REVISIONS 1	-		-
REVISIONS 2	-		-
REVISIONS 3	-		-
REVISIONS 4	-		-
FIELD CHANGES	-		-

SIGNATURE
P.E. NUMBER
DATE

STATE OF MAINE
DEPARTMENT OF TRANSPORTATION

AC-BH-1926(800)X

BRIDGE NO. 3738 WIN 19268.00 BRIDGE PLANS

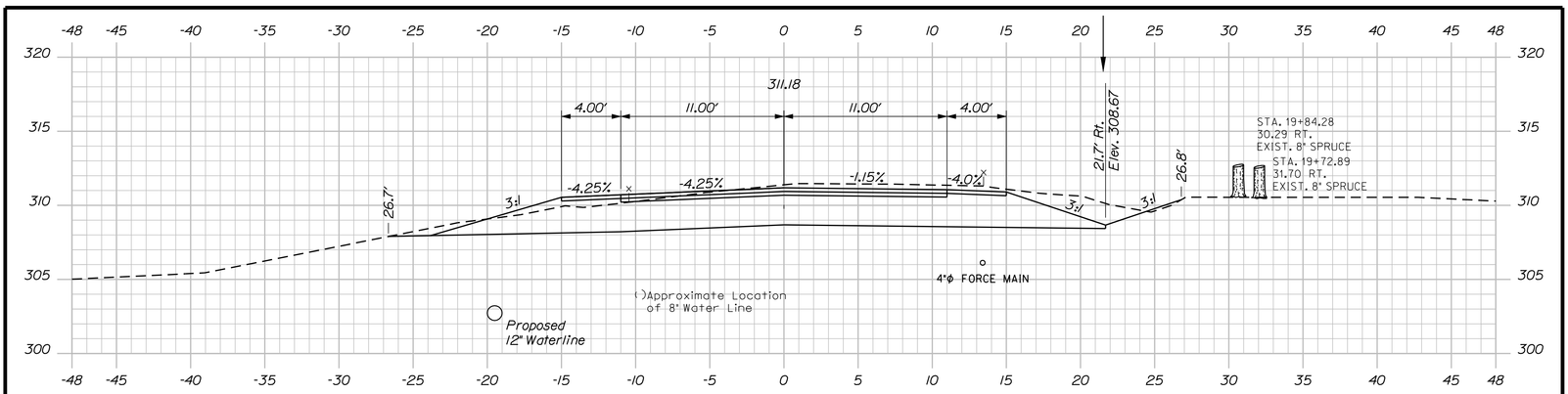

19+75.00

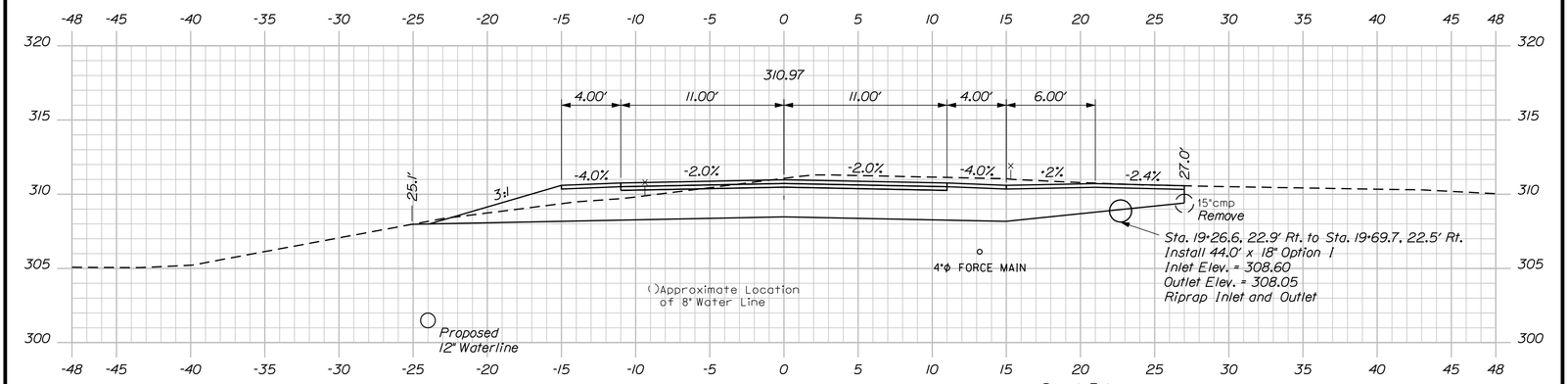

Paved Entrance
51.1' Opening Width

19+50.00

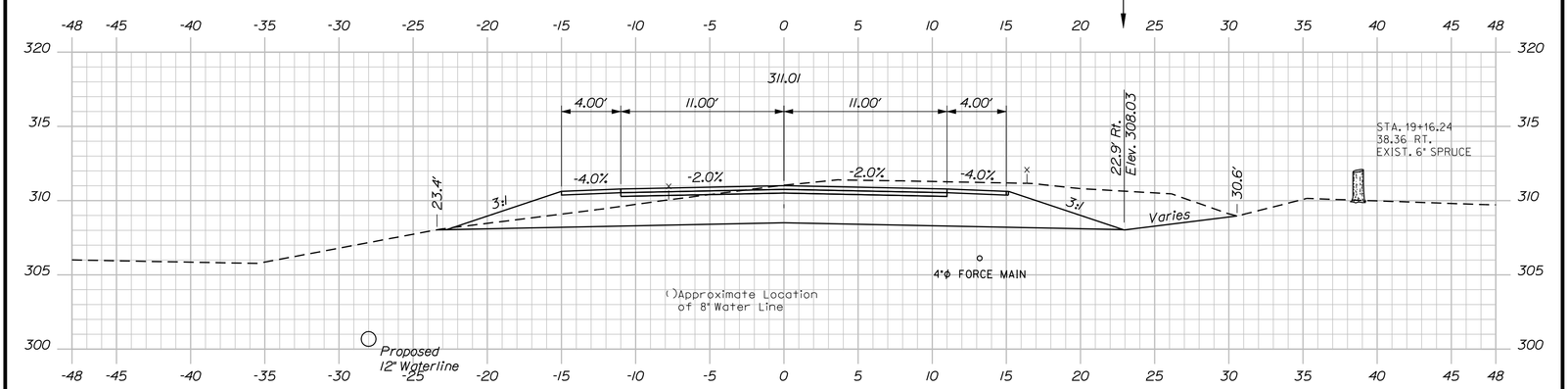

19+25.00

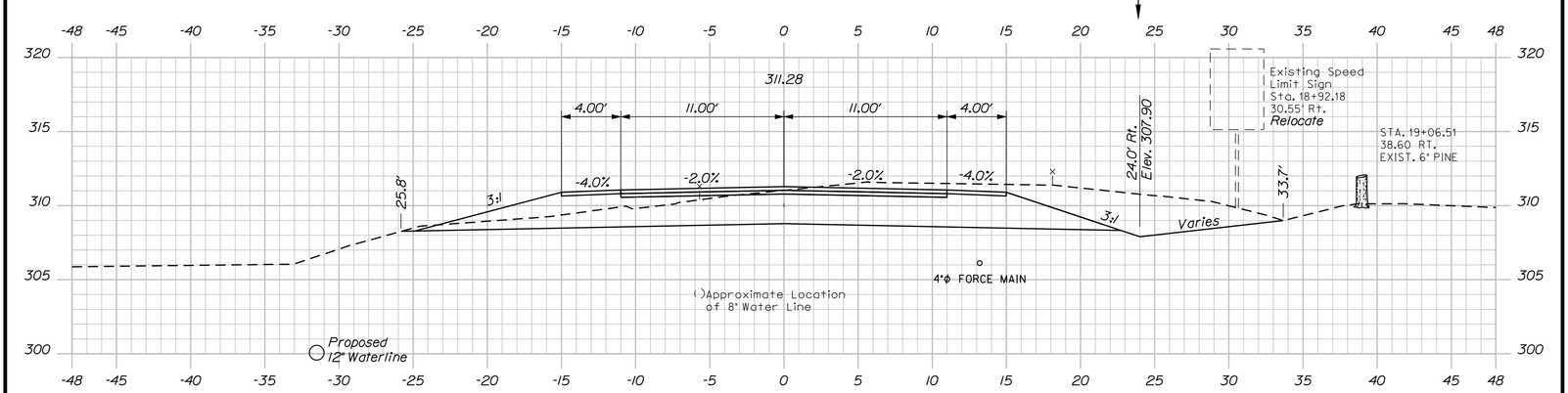

19+00.00

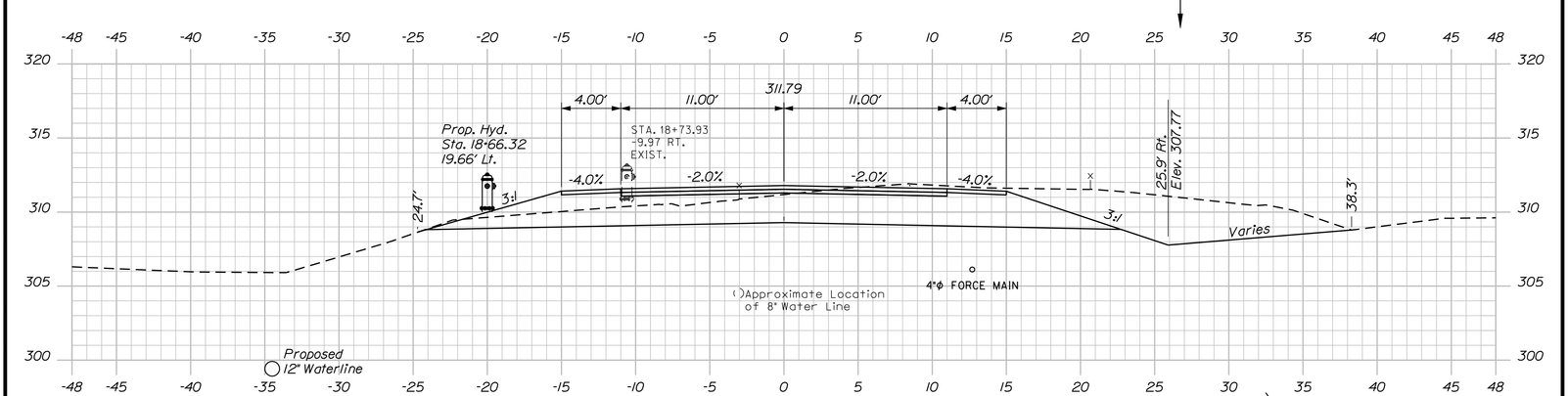

18+75.00

Route 121 Sta. 18+75.00 to Sta. 19+75.00

SHEET NUMBER 22 OF 59

COVERED BRIDGE
OVER LITTLE ANDROSCOGGIN RIVER
OXFORD OXFORD COUNTY

CROSS SECTIONS

PROJ. MANAGER STEPHEN BODGE		BY	DATE
DESIGN-DETAILED	L.MEEK	L.NEWHOUSE	01-23-14
CHECKED-REVIEWED	D.ETTINGER	-	01-23-14
DESIGN2-DETAILED2	-	-	-
DESIGN3-DETAILED3	-	-	-
REVISIONS 1	-		-
REVISIONS 2	-		-
REVISIONS 3	-		-
REVISIONS 4	-		-
FIELD CHANGES	-		-

SIGNATURE
P.E. NUMBER
DATE

STATE OF MAINE
DEPARTMENT OF TRANSPORTATION

AC-BH-1926(800)X

BRIDGE NO. 3738 WIN 19268.00 BRIDGE PLANS

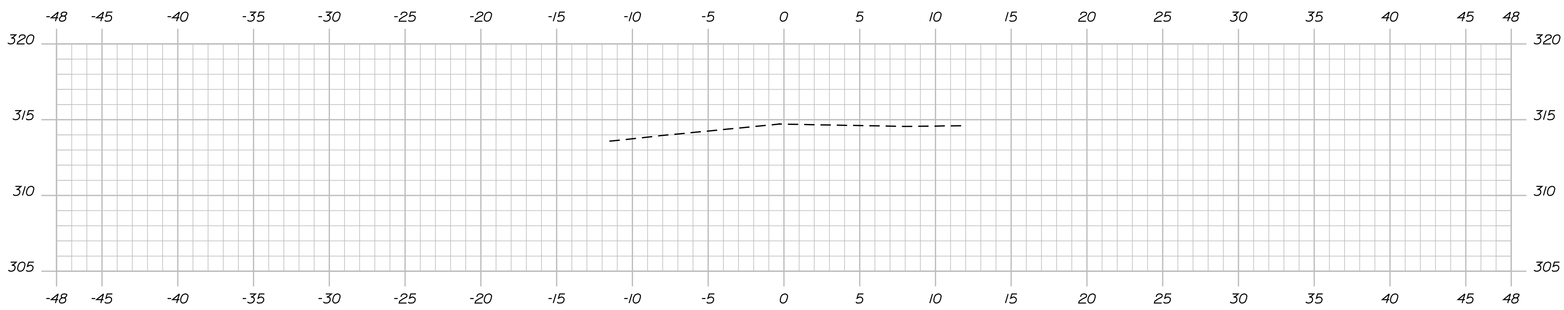

21+00.00

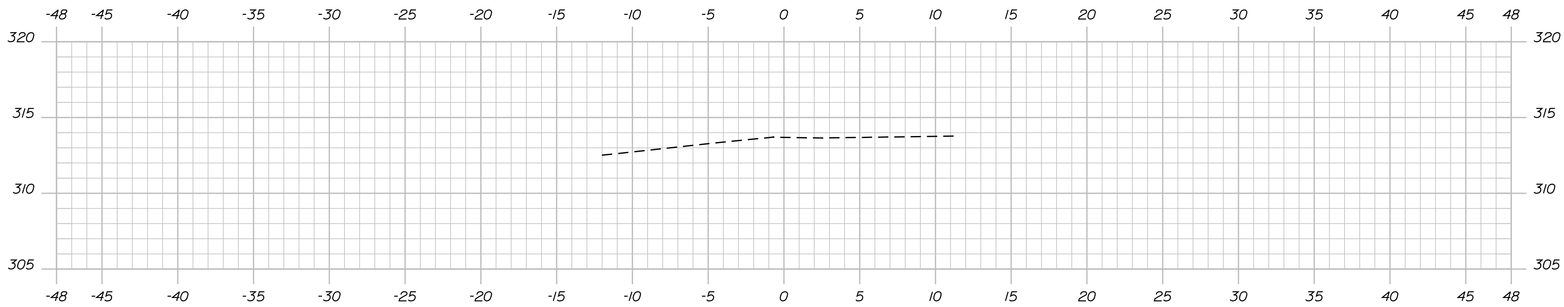

20+75.00

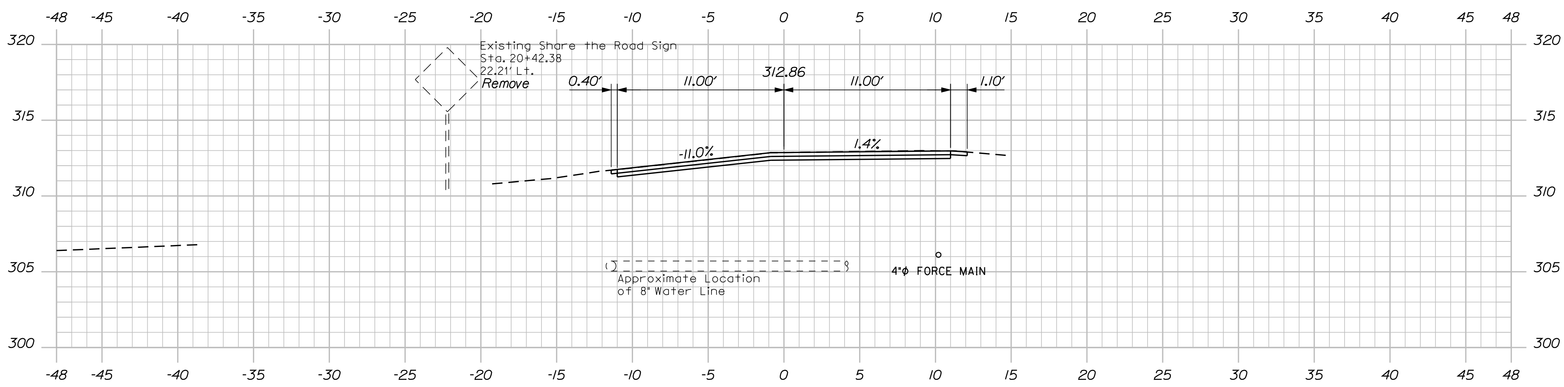

20+50.00 (BACK)

Sta. 20+50.00
End Transition
Limit of Work

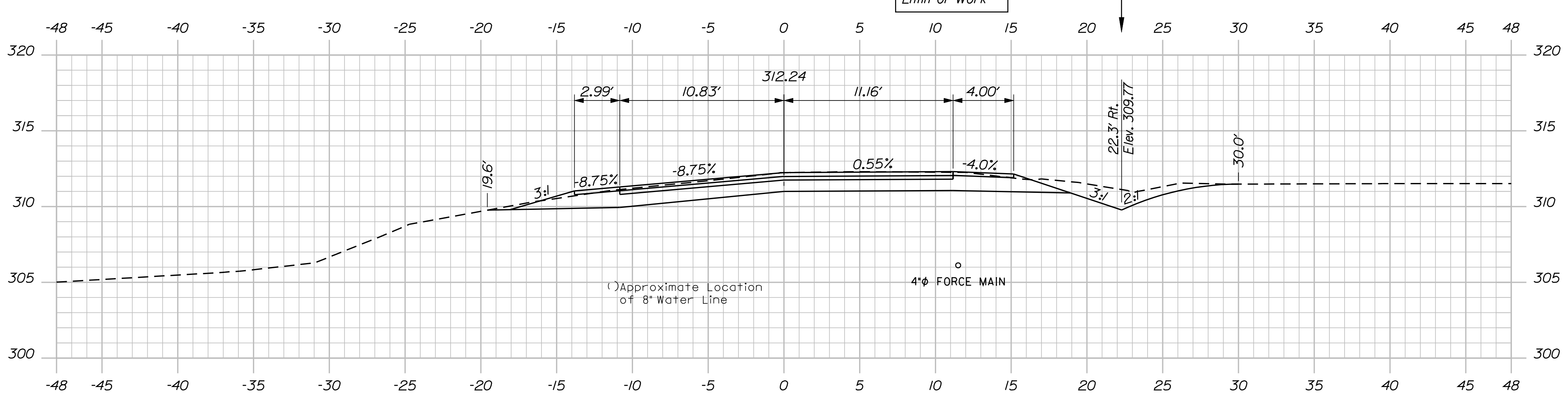

20+25.00

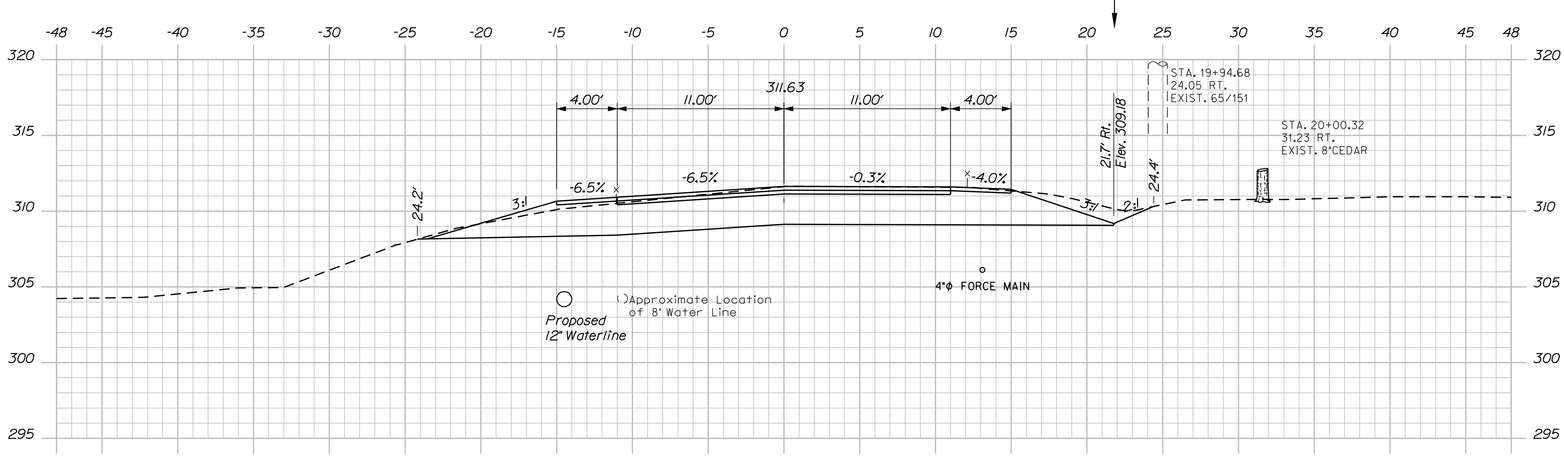

20+00.00

Sta. 20+00.00
End Project
Begin Transition

Route 121 Sta. 20+00.00 to Sta. 21+00.00

SHEET NUMBER 23 OF 59

COVERED BRIDGE
OVER LITTLE ANDROSCOGGIN RIVER
OXFORD OXFORD COUNTY

CROSS SECTIONS

PROJ. MANAGER STEPHEN BODGE		BY	DATE
DESIGN-DETAILED	L.MEEK	L.NEWHOUSE	01-23-14
CHECKED-REVIEWED	D.ETTINGER	-	01-23-14
DESIGN2-DETAILED2	-	-	-
DESIGN3-DETAILED3	-	-	-
REVISIONS 1	-		-
REVISIONS 2	-		-
REVISIONS 3	-		-
REVISIONS 4	-		-
FIELD CHANGES	-		-

SIGNATURE
P.E. NUMBER
DATE

STATE OF MAINE
DEPARTMENT OF TRANSPORTATION

AC-BH-1926(800)X

BRIDGE NO. 3738 WIN 19268.00 BRIDGE PLANS

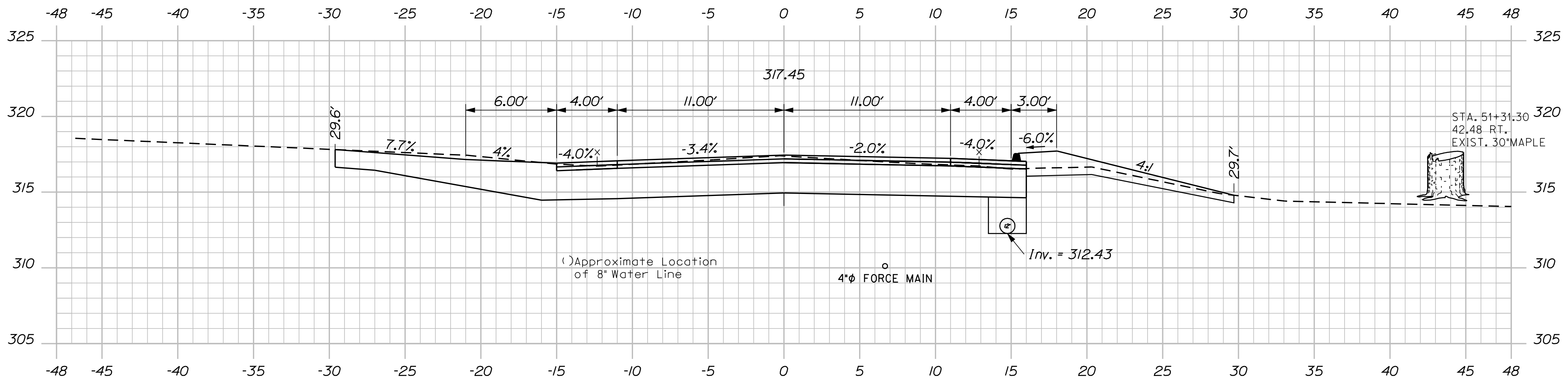

51+25.00

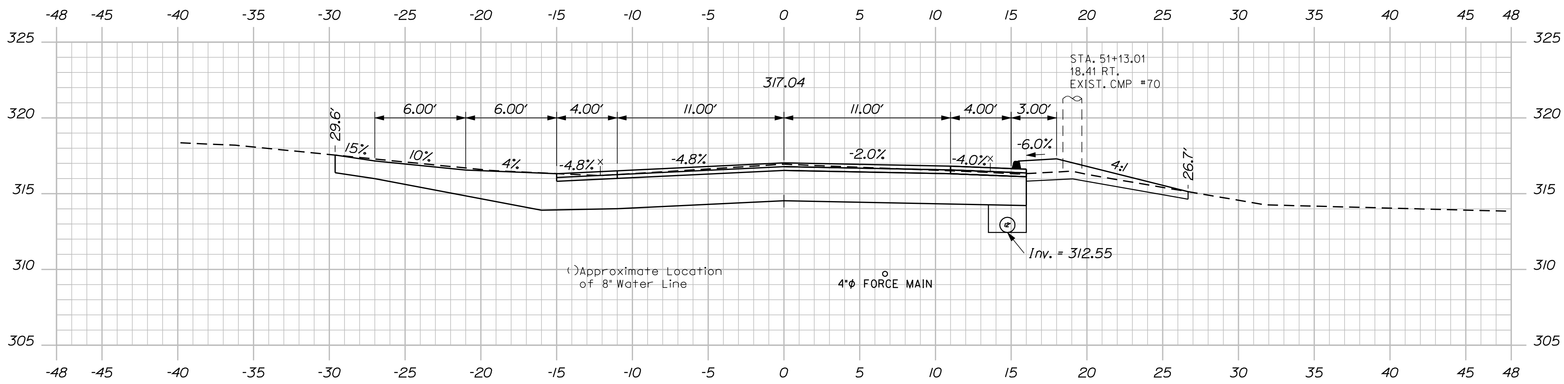

51+00.00

Sta. 51+00
End Transition

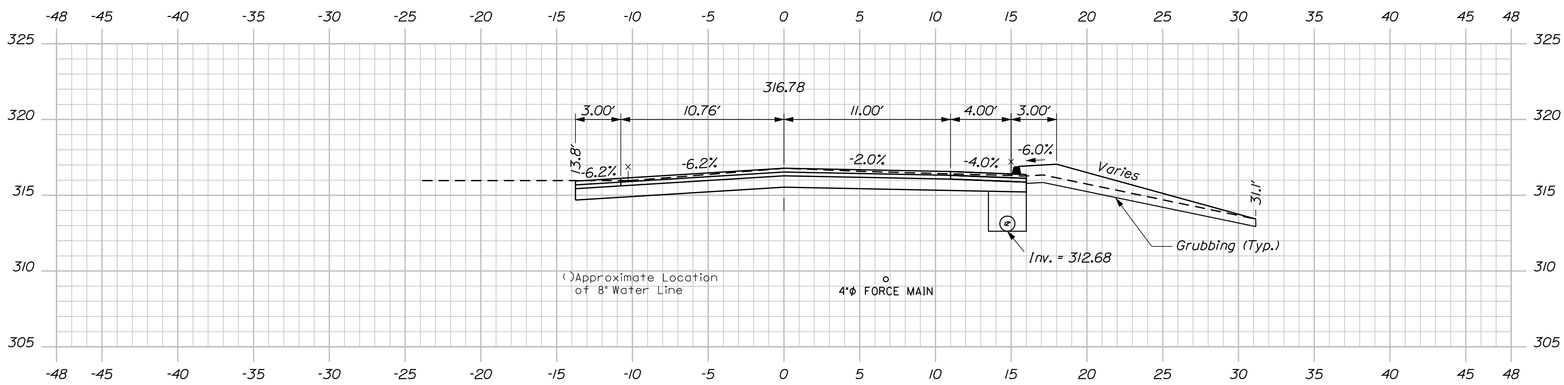

50+75.00

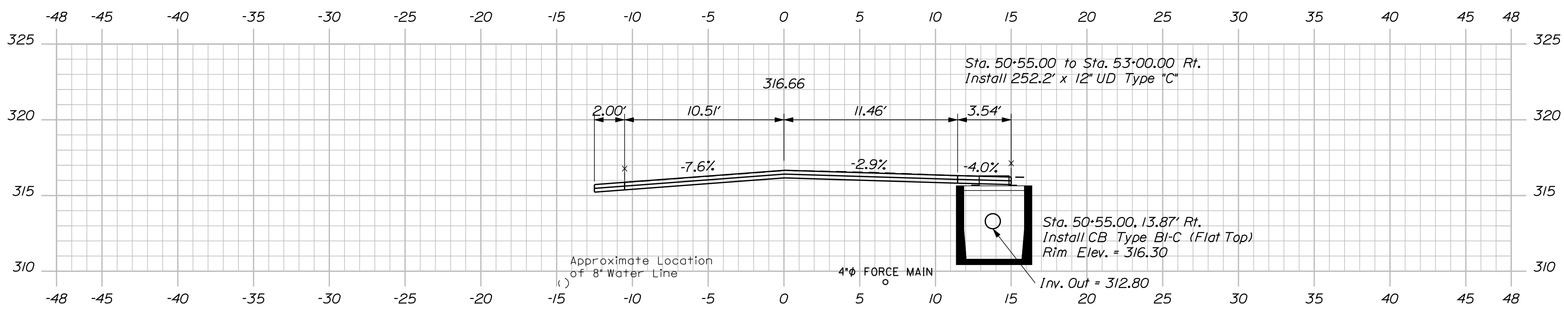

50+50.00

Sta. 50+50
Limit of Work
Begin Transition

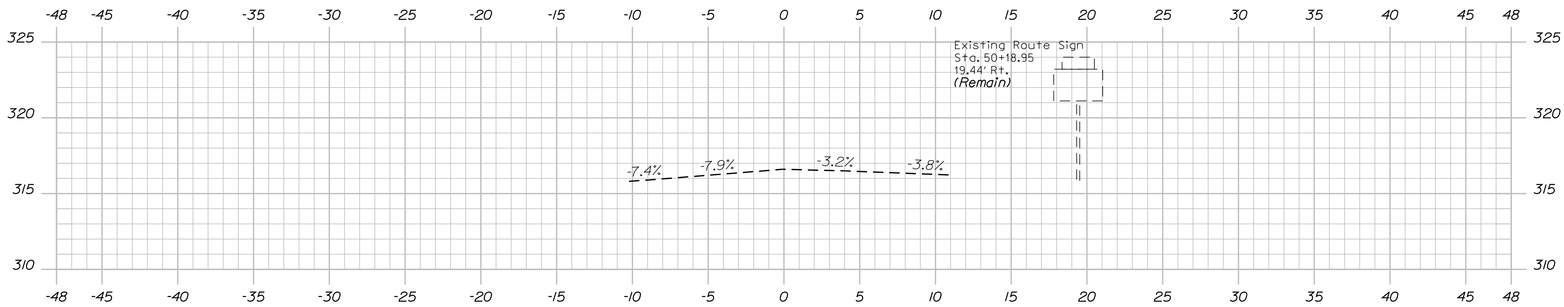

50+25.00

King Street Sta. 50+25.00 to Sta. 51+25.00

SHEET NUMBER 24 OF 59

COVERED BRIDGE
OVER LITTLE ANDROSCOGGIN RIVER
OXFORD OXFORD COUNTY

CROSS SECTIONS

PROJ. MANAGER STEPHEN BODGE	BY	DATE
DESIGN-DETAILED	L.MEEK	L.NEWHOUSE	01-23-14
CHECKED-REVIEWED	D.ETTINGER	-	01-23-14
DESIGN2-DETAILED2	-	-	-
DESIGN3-DETAILED3	-	-	-
REVISIONS 1	-		-
REVISIONS 2	-		-
REVISIONS 3	-		-
REVISIONS 4	-		-
FIELD CHANGES	-		-

SIGNATURE
P.E. NUMBER
DATE

STATE OF MAINE
DEPARTMENT OF TRANSPORTATION

AC-BH-1926(800)X

BRIDGE NO. 3738 WIN 19268.00 BRIDGE PLANS

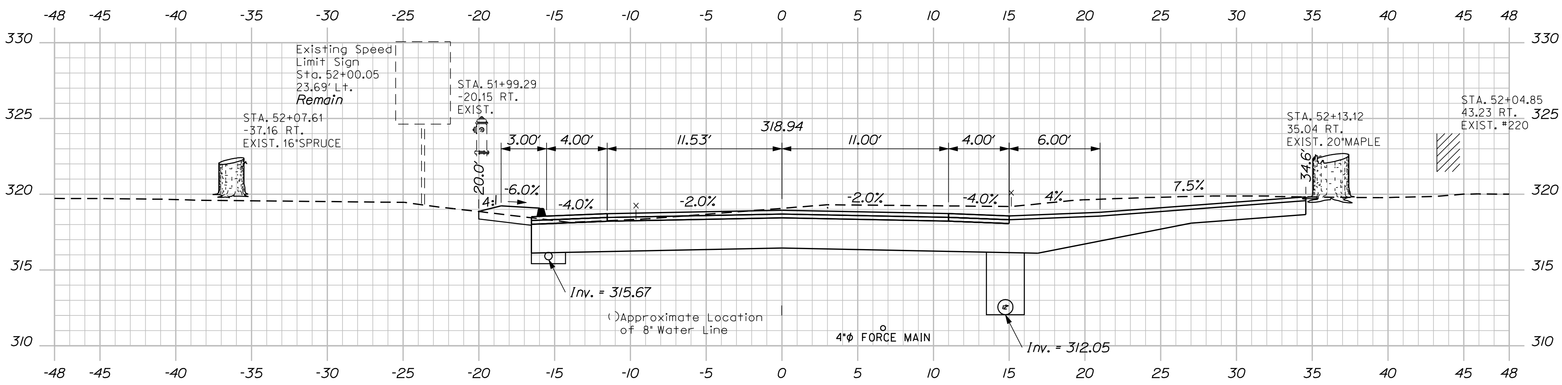

52+00.00

Sta. 51+85.00 to Sta 52+30.00. Lt.
Install 38.4' x 6' UD Type "B"

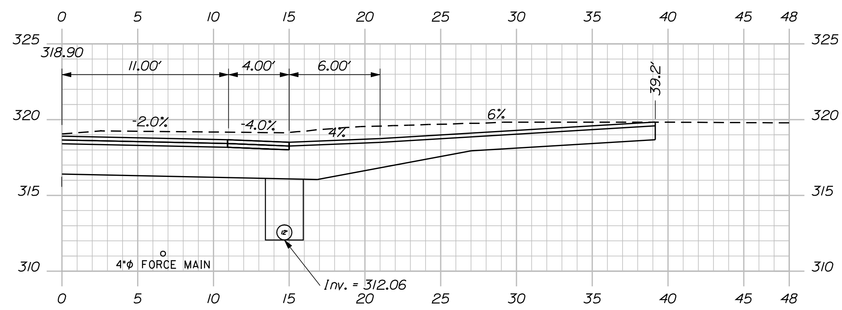

51+97.87

Paved Entrance - Skewed Back
26.0' Opening Width

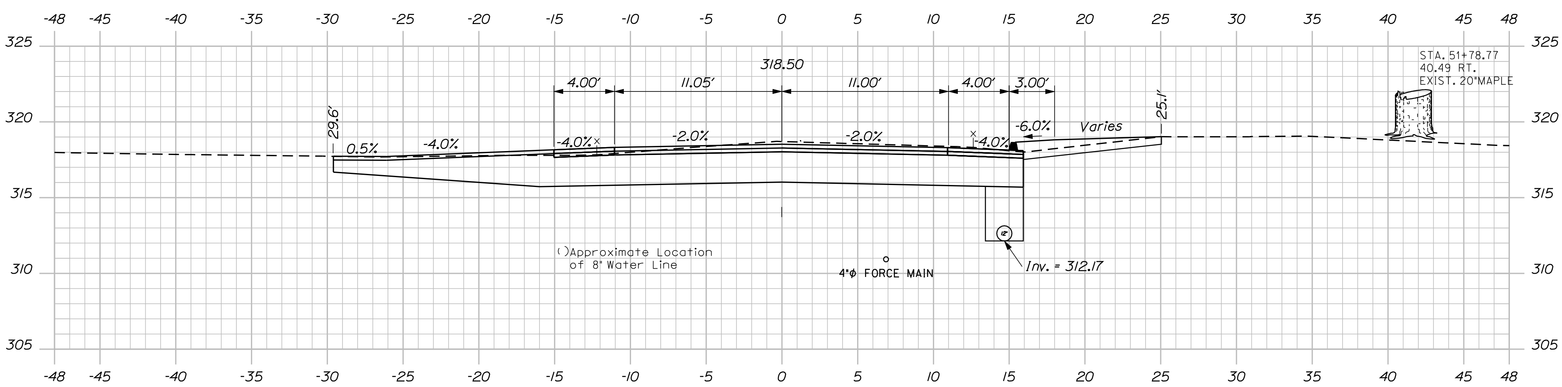

51+75.00

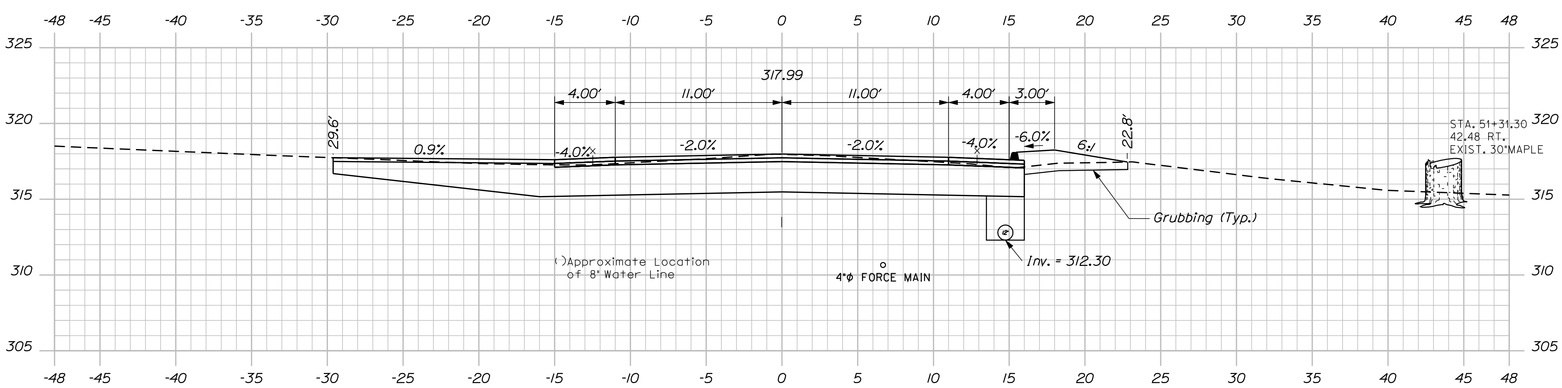

51+50.00

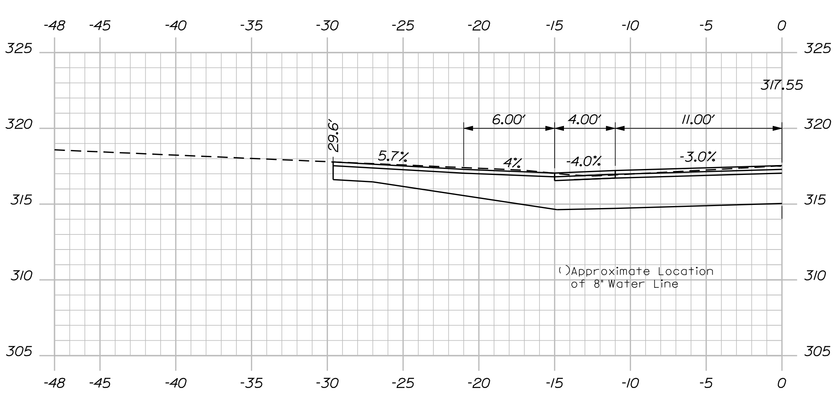

Paved Entrance
101.7' Opening Width

51+31.34

King Street Sta. 51+31.34 to Sta. 52+00.00

SHEET NUMBER 25 OF 59

COVERED BRIDGE
OVER LITTLE ANDROSCOGGIN RIVER
OXFORD OXFORD COUNTY

CROSS SECTIONS

PROJ. MANAGER STEPHEN BODGE		BY	DATE
DESIGN-DETAILED	L.MEEK	L.NEWHOUSE	01-23-14
CHECKED-REVIEWED	D.ETTINGER	-	01-23-14
DESIGN2-DETAILED2	-	-	-
DESIGN3-DETAILED3	-	-	-
REVISIONS 1	-		-
REVISIONS 2	-		-
REVISIONS 3	-		-
REVISIONS 4	-		-
FIELD CHANGES	-		-

SIGNATURE
P.E. NUMBER
DATE

STATE OF MAINE
DEPARTMENT OF TRANSPORTATION

AC-BH-1926(800)X

BRIDGE NO. 3738 WIN 19268.00 BRIDGE PLANS

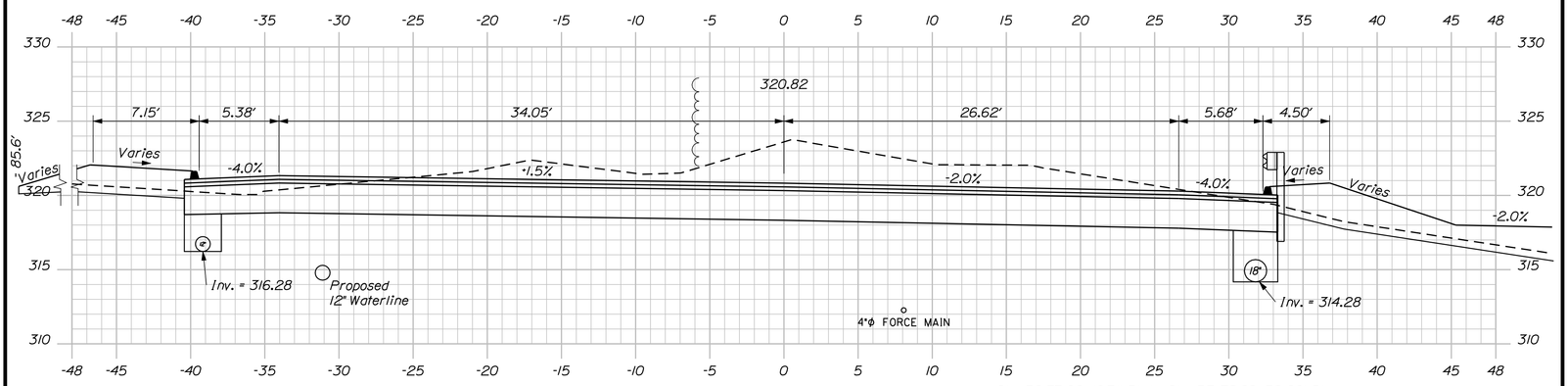

53+25.00

Sta. 52+77.92, 16.71' Rt. to Sta. 53+38.99, 58.20' Rt.
Install Guardrail Type 3C (Over 15'R)

Sta. 53+00.00, Rt. to Sta. 14+75.00, Rt.
Install 42.3' x 18" UD Type "C"

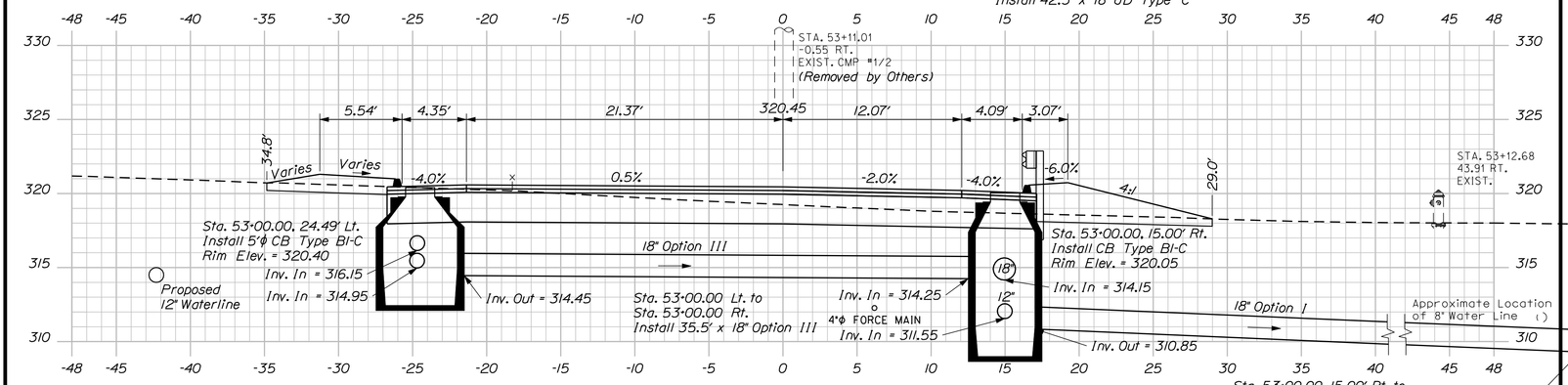

53+00.00

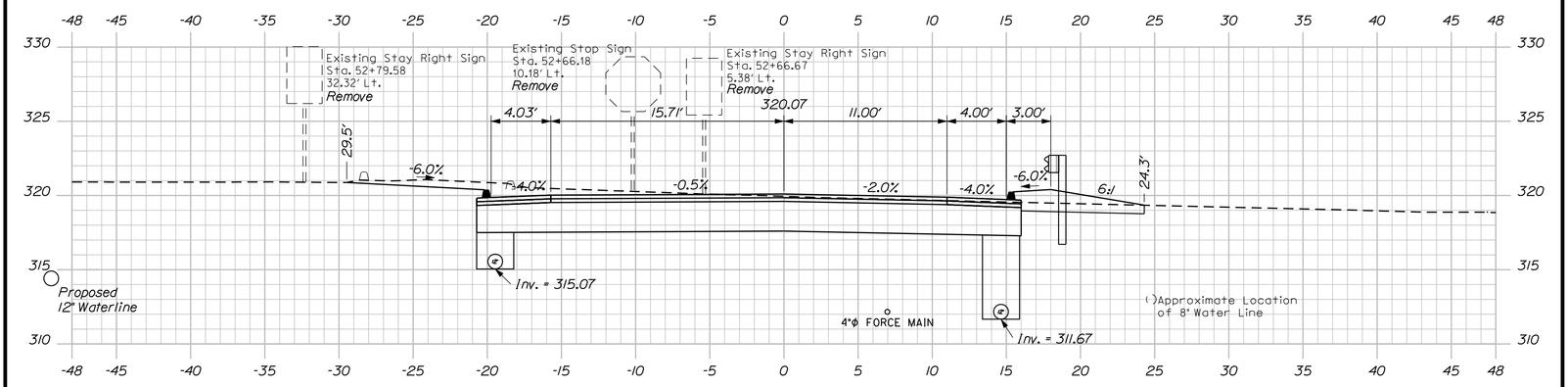

52+75.00

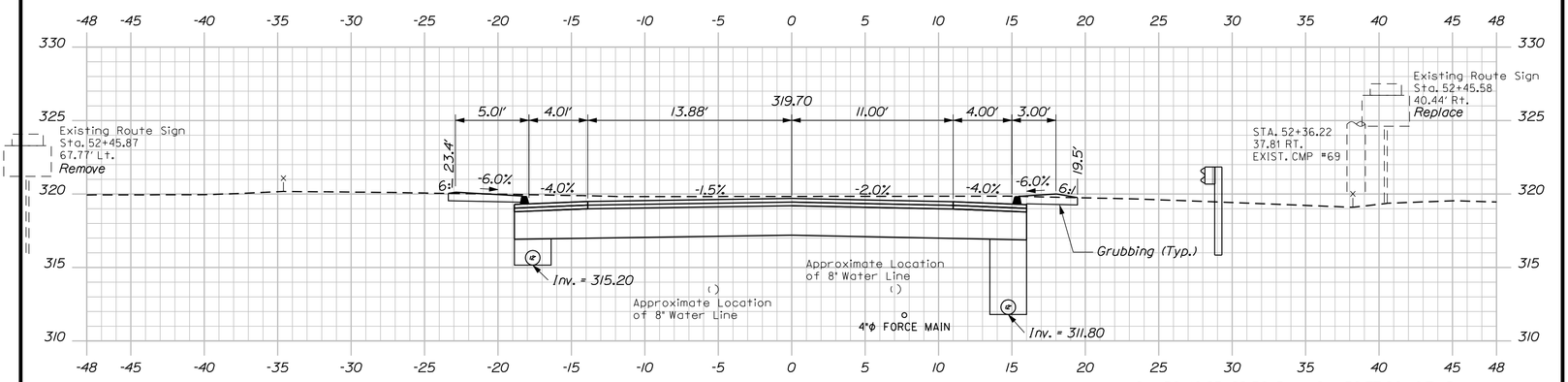

52+50.00

Sta. 52+46.85, 29.56' Rt. to Sta. 52+77.92, 16.71' Rt.
Install Guardrail Type 3C - Single Rail

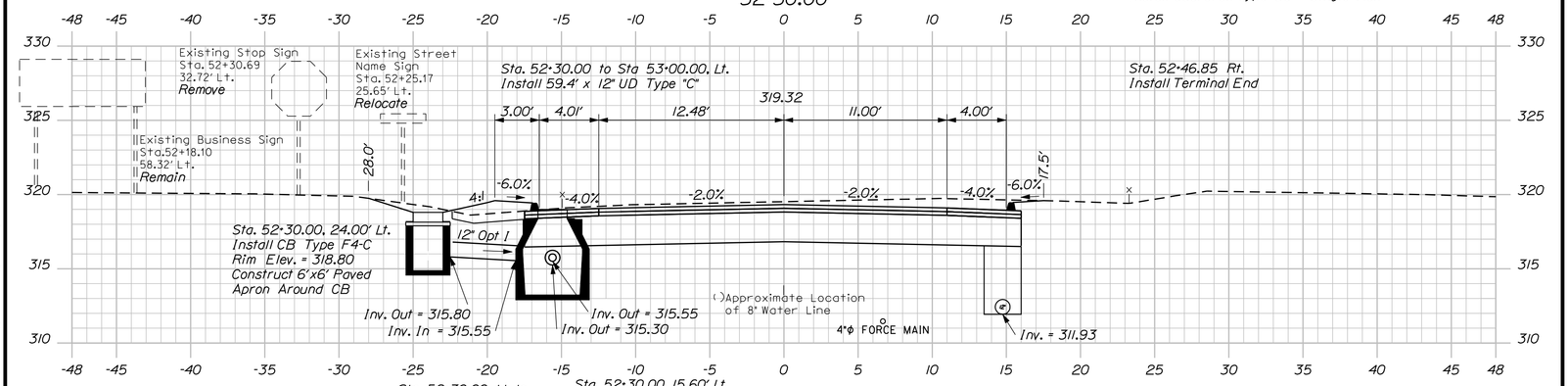

52+25.00

King Street Sta. 52+25.00 to Sta. 53+25.00

SHEET NUMBER 26 OF 59

COVERED BRIDGE
OVER LITTLE ANDROSCOGGIN RIVER
OXFORD OXFORD COUNTY

CROSS SECTIONS

PROJ. MANAGER STEPHEN BODGE	BY	DATE
DESIGN-DETAILED L.MEEK	L.NEWHOUSE	01-23-14
CHECKED-REVIEWED D.ETTINGER	-	01-23-14
DESIGN2-DETAILED2 -	-	-
DESIGN3-DETAILED3 -	-	-
REVISIONS 1 -		-
REVISIONS 2 -		-
REVISIONS 3 -		-
REVISIONS 4 -		-
FIELD CHANGES -		-

SIGNATURE
P.E. NUMBER
DATE

STATE OF MAINE
DEPARTMENT OF TRANSPORTATION

AC-BH-1926(800)X

BRIDGE NO. 3738 WIN 19268.00 BRIDGE PLANS

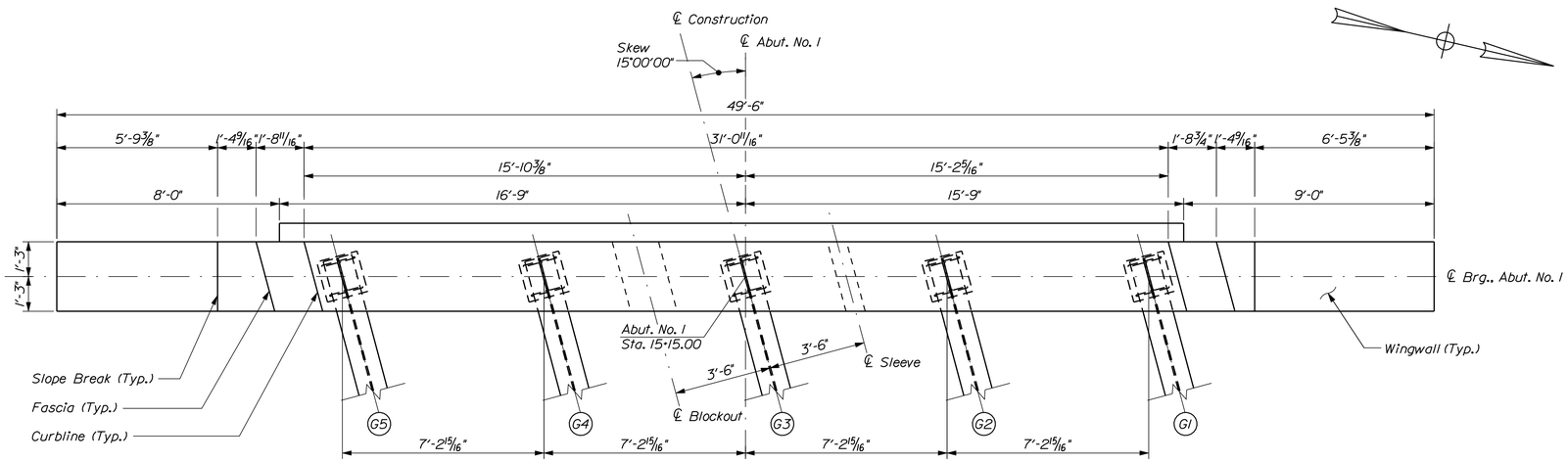

ABUTMENT NO. 1 PLAN

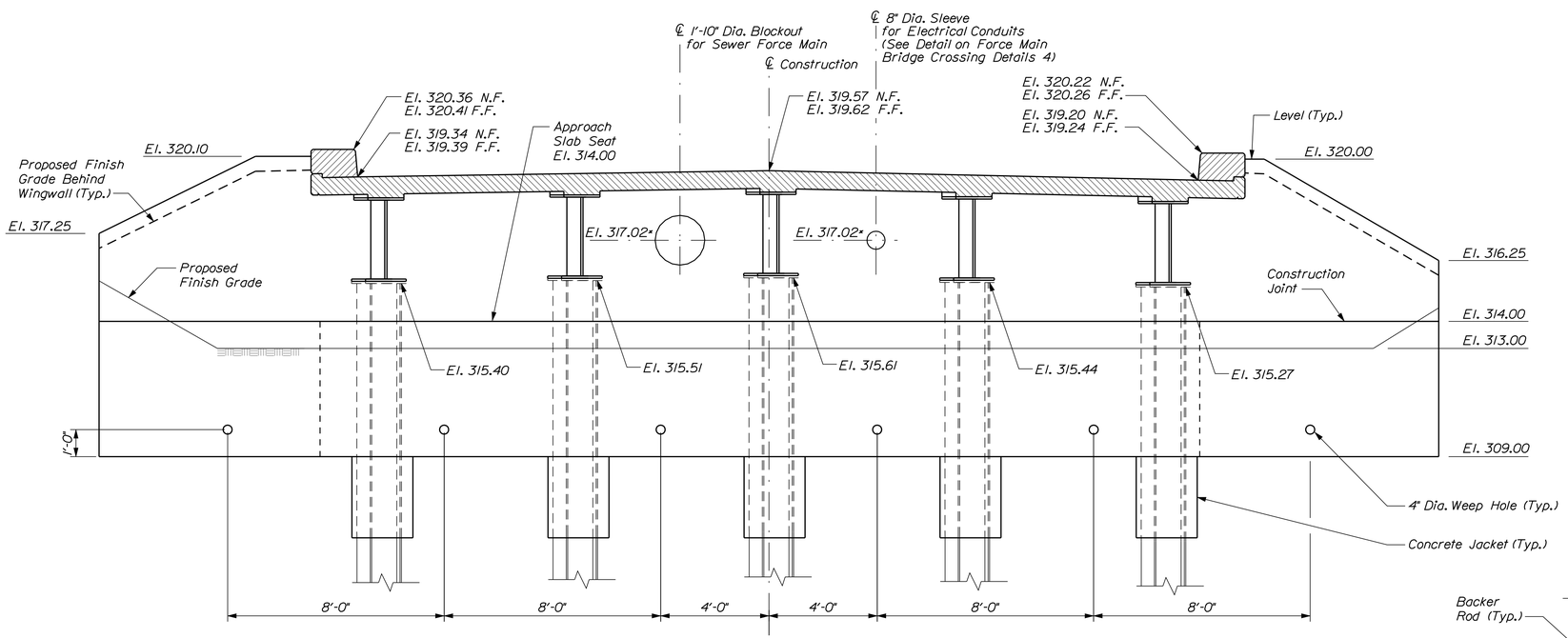

ABUTMENT NO. 1 ELEVATION

Notes:
1. Wearing Surface and End Diaphragms Omitted for Clarity.
2. *Elevation provided at ℄ Bearing.

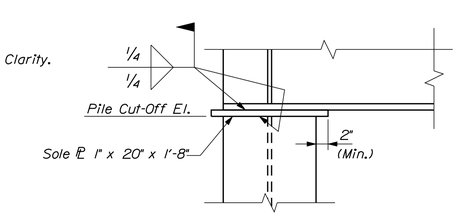

PILE CAP PLATE DETAIL

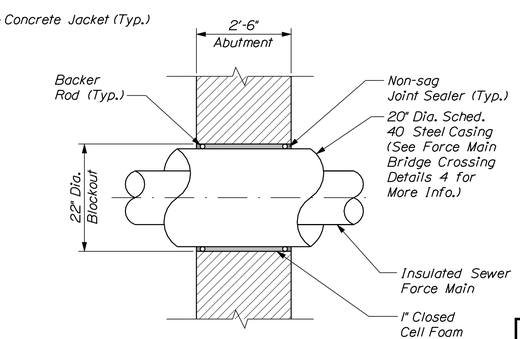

SEWER FORCE MAIN ABUTMENT PENETRATION DETAIL

ABUTMENT NOTES

1. Structural Earth Excavation, Abutments and Retaining Walls, required more than 12 inches below the bottom of the structure, will be paid for in accordance with Standard Specifications Section 206, Structural Excavation.

2. Reinforcing steel shall have a minimum concrete cover of 2 inches unless otherwise noted.

3. The Contractor shall install vertical type Transition Barrier reinforcing steel prior to the placement of the curb concrete. See Bridge Rail Detail for more information.

4. Cover joints where waterstops are not required in accordance with Standard Details Section 502(01).

5. Abutments and wingwalls shall be backfilled with Granular Borrow. Pay limits will be in accordance with Section A-A on Abutment No. 2 Plan and Elevation sheet.

6. Excavate 24-inch diameter by 36-inch deep hole around the centroid of each pile. The depth is measured from the bottom of the abutment. Fill the hole with abutment concrete. Payment for all labor and materials will be considered incidental to the related contract items.

7. Place 4" diameter drains in abutment at 8'-0" maximum spacing. The exact location shall be determined by Resident.

PILE NOTES

1. The maximum factored pile load is 225 kips for Strength I load combination.

2. Estimate of piles required:

   Abutment No. 1: 5-HP14x89 @ 31 feet
   Abutment No. 2: 5-HP14x89 @ 57 feet

3. H-pile material shall be ASTM A572/A572M, Grade 50.

4. Piles shall not be out of position shown by more than 2 inches in any direction.

5. Piles shall be driven to bedrock in accordance with Section 501 of the Standard Specifications.

6. All piles at Abutment No. 1 shall be equipped with a rock injector pile tip in accordance with Special Provisions Section 501, Rock Injector Pile Tip. All piles at Abutment No. 2 shall be equipped with a pile tip in accordance with Standard Specifications Section 501.10, Prefabricated Pile Tips.

7. The Contractor shall perform (2) dynamic load tests, one at each abutment, to confirm the ultimate capacity of the piles. The required nominal resistance for the pile is the factored axial pile load divided by a resistance factor of 0.65 per LRFD Specifications. The dynamic test shall be performed on the first production pile driven at each abutment.

8. The Contractor shall perform and submit (2) wave equation analyses, one for each abutment, for review and acceptance by the Resident. The maximum allowable driving stress is 0.90 times Fy. The submittal analyses shall include the proposed stopping criteria based on the wave equation analysis and the proposed driving system. The stopping criteria shall include the blows per inch and the number of 1-in. intervals at which pile installation may be terminated. The cost of performing the wave equation analysis will be considered incidental to Item No. 501.92, Pile Driving Equipment Mobilization.

9. Due to the presence of sloping bedrock at the site, pile walking during driving is possible. Costs for removing and re-driving pile that are out of position will be incidental to related items.

10. Cobbles or boulders may be encountered during pile driving operations. Clearing of obstructions shall be as specified in Section 501 of the Standard Specifications. The method shall be approved by the Resident. The cost of clearing obstructions will be considered incidental to related contract Pay Items.

BECKER
STRUCTURAL ENGINEERS
75 York Street, Portland, Maine 04101
207.879.1838 • beckerstructural.com

STATE OF MAINE
DEPARTMENT OF TRANSPORTATION

AC-BH-1926(800)X

WIN 19268.00

BRIDGE NO. 3738

BRIDGE PLANS

		BY	DATE
PROJ. MANAGER	STEPHEN BODGE		
DESIGN-DETAILED	B.WELCH	D.BURGESS	03-04-14
CHECKED-REVIEWED	B.WELCH	J.BURGESS	03-04-14
DESIGN2-DETAILED2	------	------	------
DESIGN3-DETAILED3	------	------	------
REVISIONS 1	------	------	------
REVISIONS 2	------	------	------
REVISIONS 3	------	------	------
REVISIONS 4	------	------	------
FIELD CHANGES	------	------	------

SIGNATURE

P.E. NUMBER

DATE

COVERED BRIDGE
OVER LITTLE ANDROSCOGGIN RIVER
OXFORD
OXFORD COUNTY

ABUTMENT NO. 1
PLAN AND ELEVATION

SHEET NUMBER
27
OF 59

Filename: ...\bridge\msto\027_Abut1_001.dgn Division: BRIDGE Username: CADD Date:3/4/2014

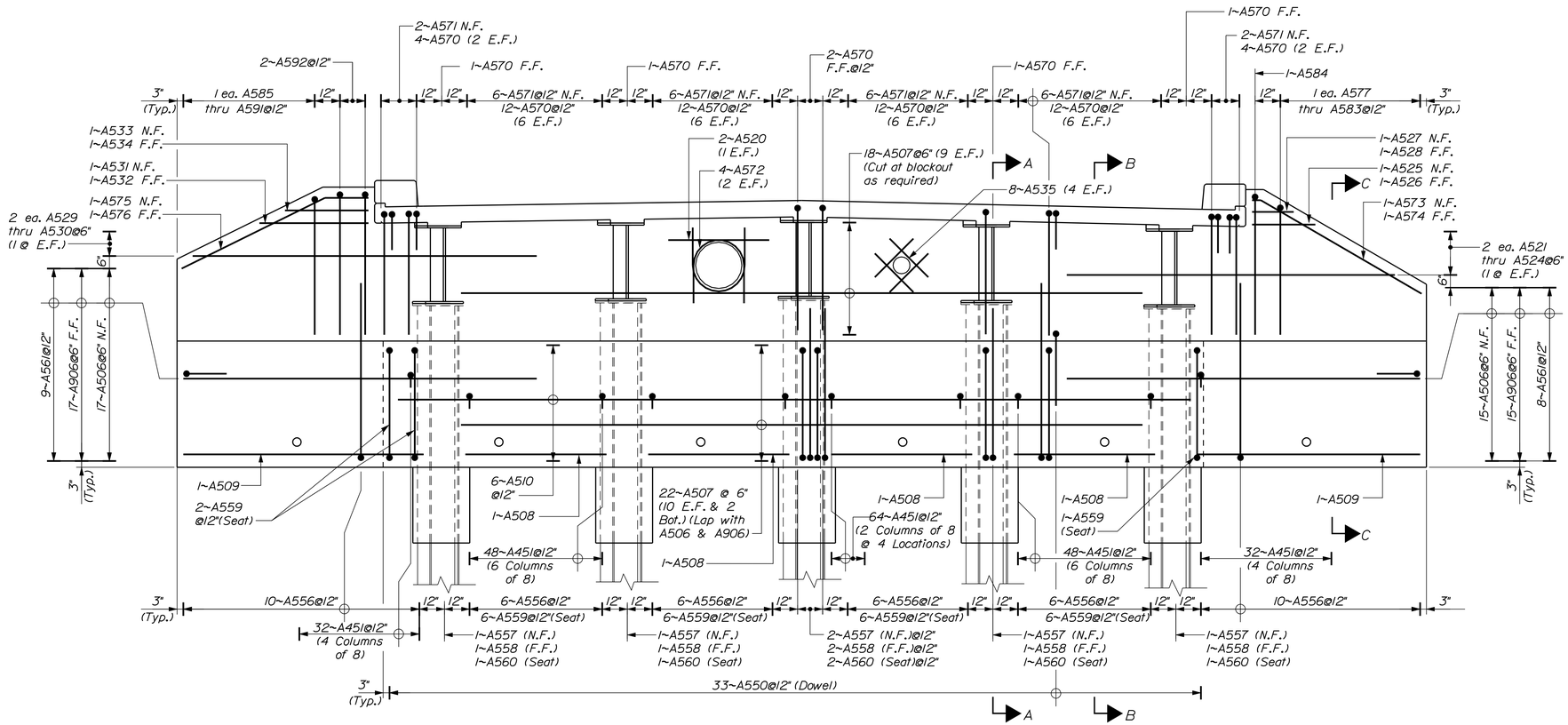

ABUTMENT NO. 1 - REINFORCEMENT ELEVATION

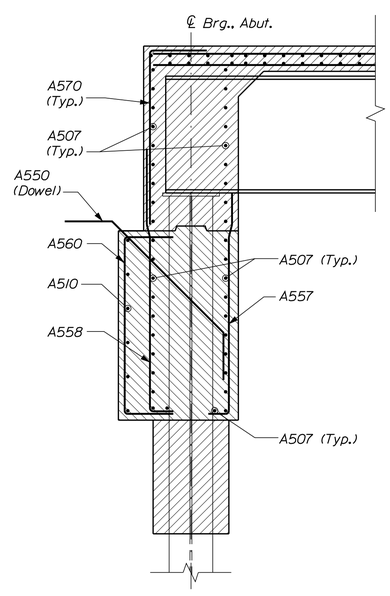

SECTION A-A
(At Pile)

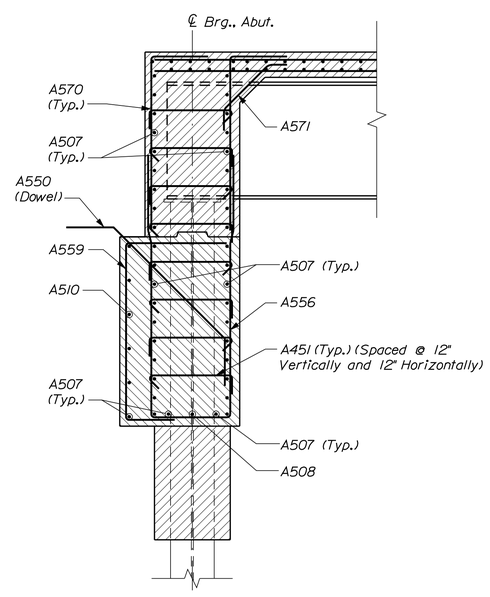

SECTION B-B
(Between Piles)

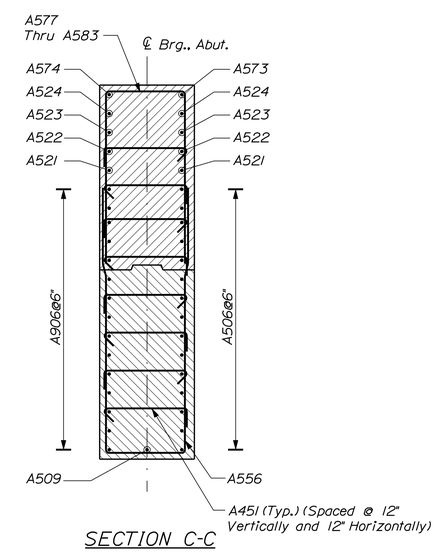

SECTION C-C

BECKER
STRUCTURAL ENGINEERS
75 York Street, Portland, Maine 04101
207.879.1838 ■ beckerstructural.com

STATE OF MAINE
DEPARTMENT OF TRANSPORTATION

AC-BH-1926(800)X

WIN 19268.00

BRIDGE NO. 3738

BRIDGE PLANS

		BY	DATE
PROJ. MANAGER	STEPHEN BODGE		
DESIGN-DETAILED	B.WELCH	D.BURGESS	03-04-14
CHECKED-REVIEWED	B.WELCH	J.BURGESS	03-04-14
DESIGN2-DETAILED2	------	------	------
DESIGN3-DETAILED3	------	------	------
REVISIONS 1	------	------	------
REVISIONS 2	------	------	------
REVISIONS 3	------	------	------
REVISIONS 4	------	------	------
FIELD CHANGES	------	------	------

SIGNATURE

P.E. NUMBER

DATE

COVERED BRIDGE
OVER LITTLE ANDROSCOGGIN RIVER
OXFORD COUNTY
OXFORD

ABUTMENT NO. 1
REINFORCEMENT

SHEET NUMBER
28
OF 59

Filename: ...\msta\028_Abut1 Rebar_002.dgn Division: BRIDGE Username: CADD Date:3/26/2014

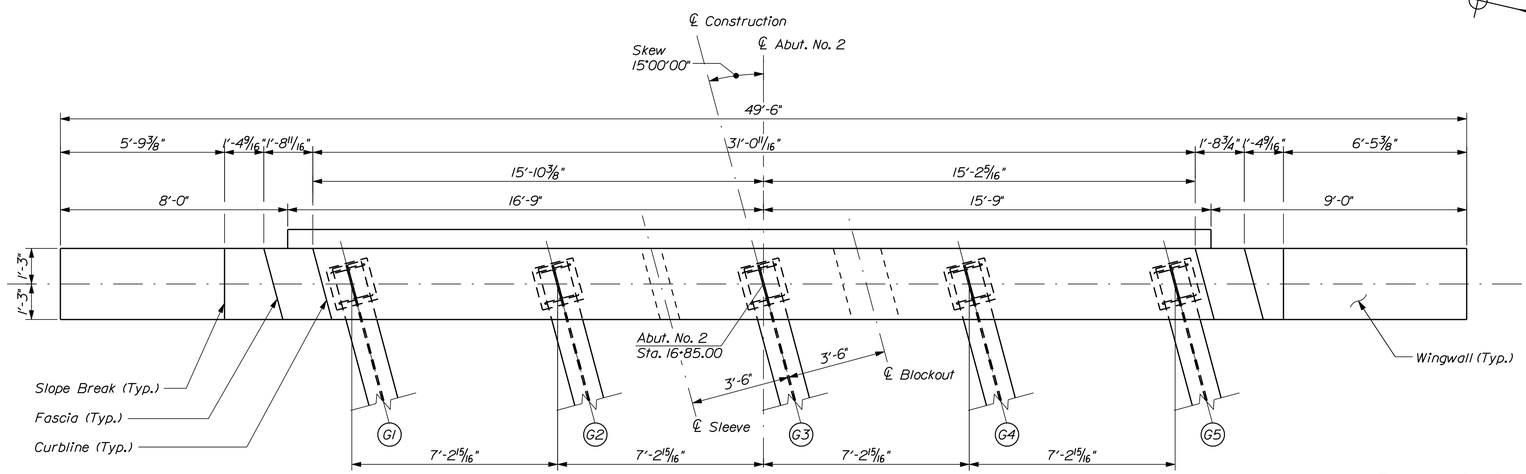

ABUTMENT NO. 2 PLAN

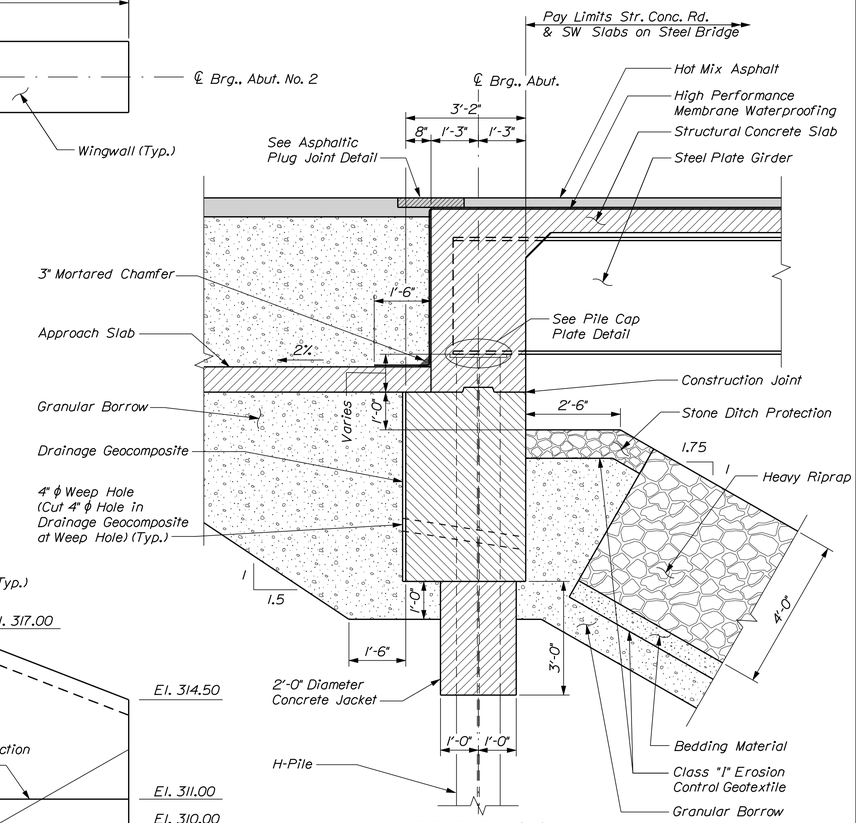

SECTION A-A

Note:
See "Riprap Mounded Toe Detail" for toe of slope treatment.

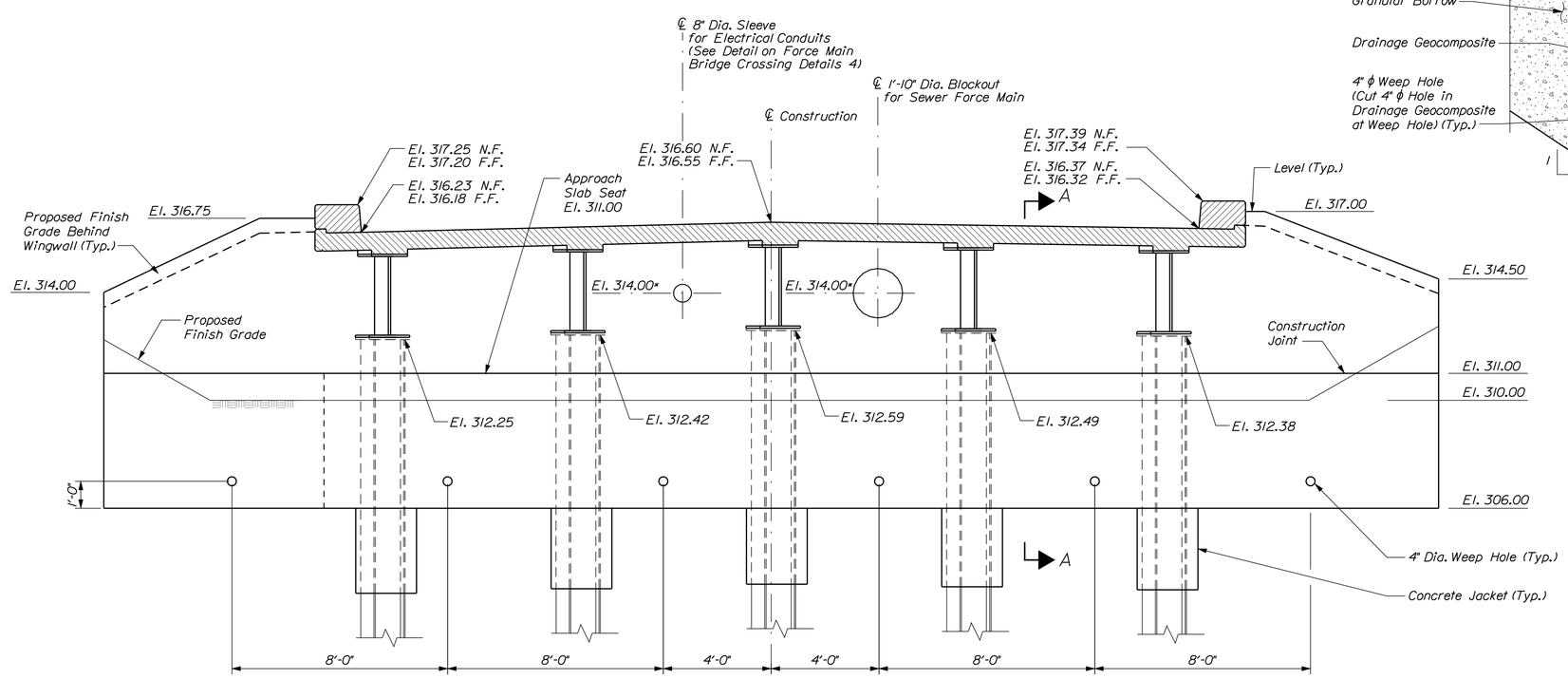

ABUTMENT NO. 2 ELEVATION

Notes:
1. Wearing Surface and End Diaphragms Omitted for Clarity.
2. *Elevation provided at ℄ Bearing.

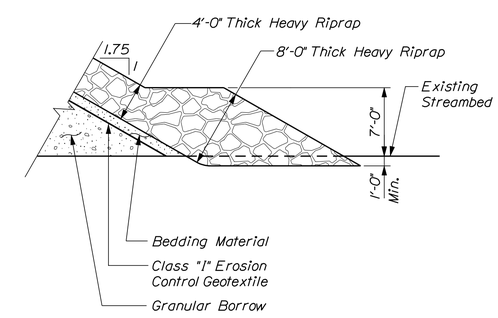

RIPRAP MOUNDED TOE DETAIL

BECKER STRUCTURAL ENGINEERS
75 York Street, Portland, Maine 04101
207.879.1838 ■ beckerstructural.com

STATE OF MAINE
DEPARTMENT OF TRANSPORTATION

AC-BH-1926(800)X

WIN 19268.00

BRIDGE NO. 3738

BRIDGE PLANS

PROJ. MANAGER	STEPHEN BODGE	BY	DATE
DESIGN-DETAILED	B.WELCH	D.BURGESS	03-04-14
CHECKED-REVIEWED	B.WELCH	J.BURGESS	03-04-14
DESIGN2-DETAILED2			
DESIGN3-DETAILED3			
REVISIONS 1			
REVISIONS 2			
REVISIONS 3			
REVISIONS 4			
FIELD CHANGES			

SIGNATURE

P.E. NUMBER

DATE

COVERED BRIDGE
OVER LITTLE ANDROSCOGGIN RIVER
OXFORD COUNTY
OXFORD

ABUTMENT NO. 2
PLAN AND ELEVATION

SHEET NUMBER
29
OF 59

Filename: ...\bridge\msta\029_Abut2_001.dgn Division: BRIDGE Username: CADD Date:4/15/2014

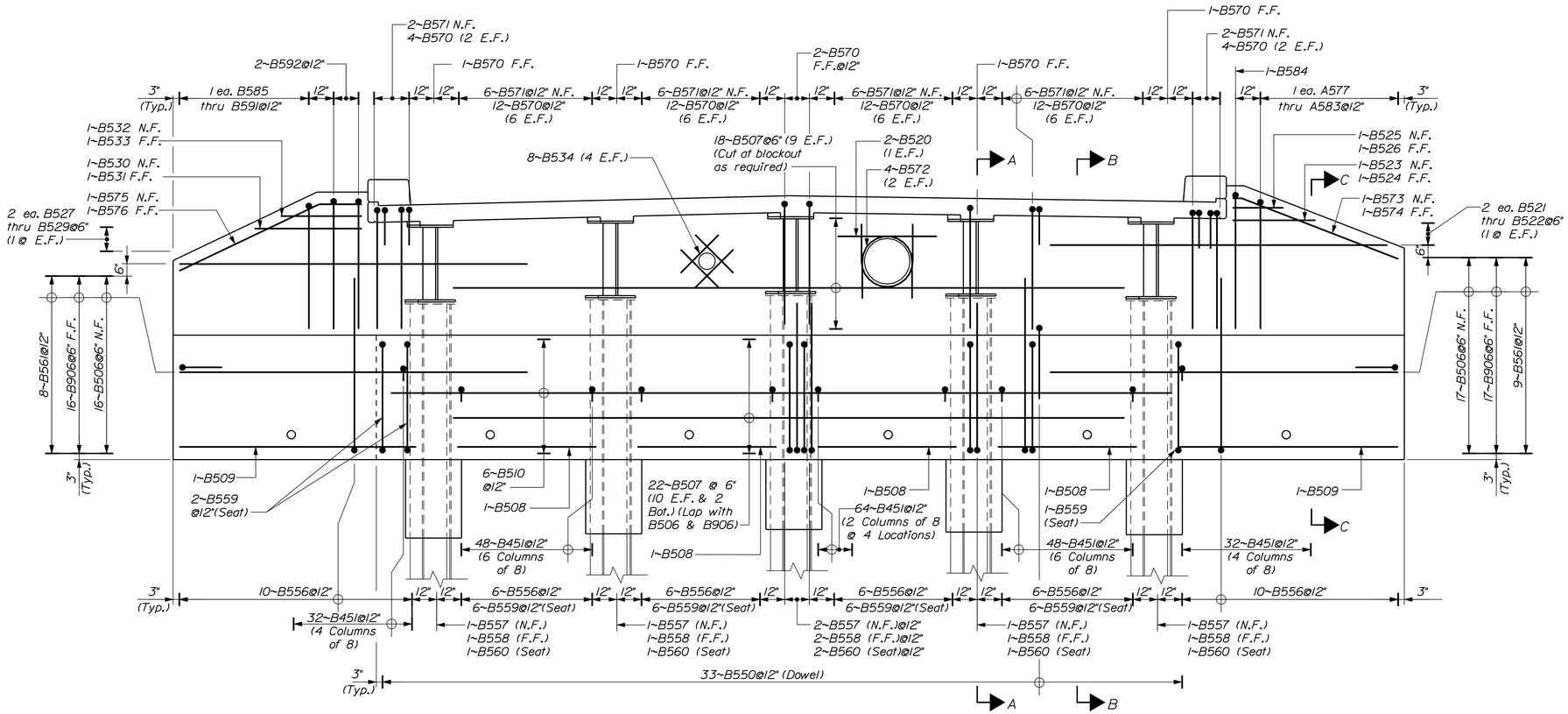

ABUTMENT NO. 2 - REINFORCEMENT ELEVATION

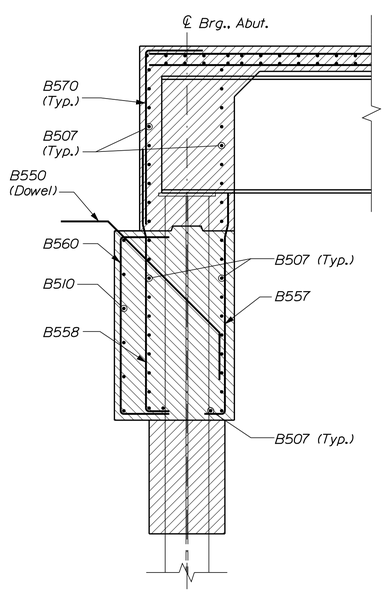

SECTION A-A
(At Pile)

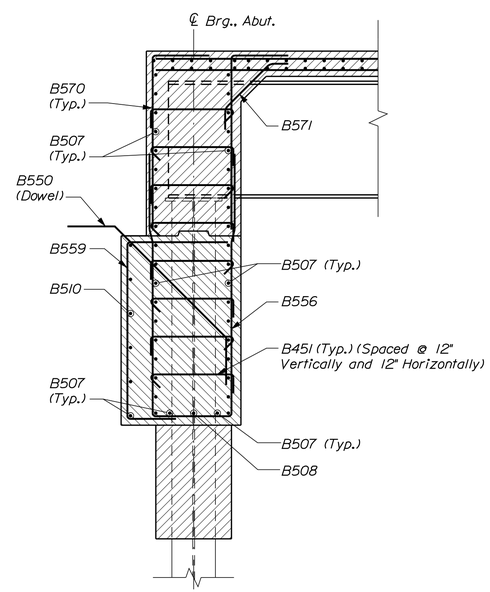

SECTION B-B
(Between Piles)

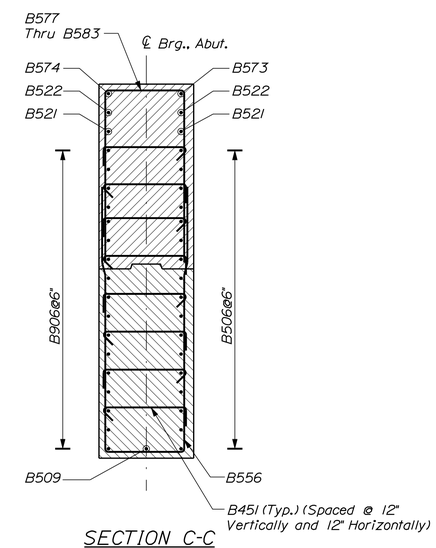

SECTION C-C

BECKER
STRUCTURAL ENGINEERS
75 York Street, Portland, Maine 04101
207.879.1838 ■ beckerstructural.com

STATE OF MAINE
DEPARTMENT OF TRANSPORTATION

AC-BH-1926(800)X

WIN 19268.00

BRIDGE NO. 3738

BRIDGE PLANS

		BY	DATE
PROJ. MANAGER	STEPHEN BODGE		
DESIGN-DETAILED	B.WELCH	D.BURGESS	03-04-14
CHECKED-REVIEWED	B.WELCH	J.BURGESS	03-04-14
DESIGN2-DETAILED2	------	------	------
DESIGN3-DETAILED3	------	------	------
REVISIONS 1	------	------	------
REVISIONS 2	------	------	------
REVISIONS 3	------	------	------
REVISIONS 4	------	------	------
FIELD CHANGES	------	------	------

SIGNATURE

P.E. NUMBER

DATE

COVERED BRIDGE
OVER LITTLE ANDROSCOGGIN RIVER
OXFORD COUNTY
OXFORD

ABUTMENT NO. 2
REINFORCEMENT

SHEET NUMBER
30
OF 59

Filename: ...\msta\030_Abut2 Rebar_002.dgn Division: BRIDGE Username: CADD Date:3/26/2014

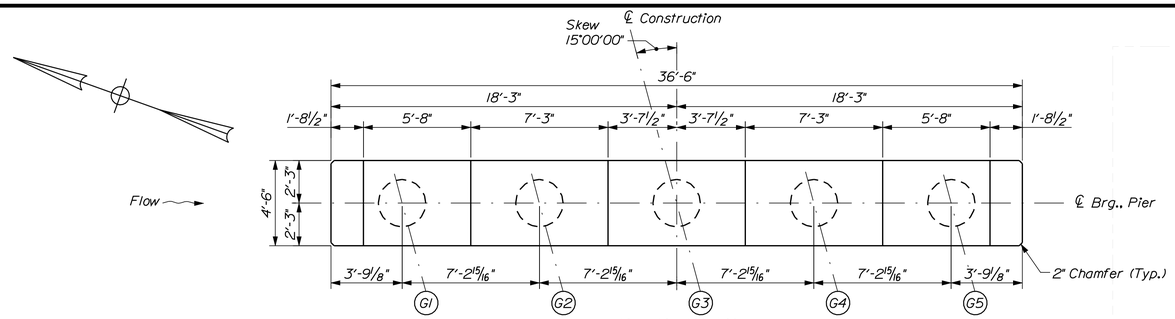

PIER PLAN

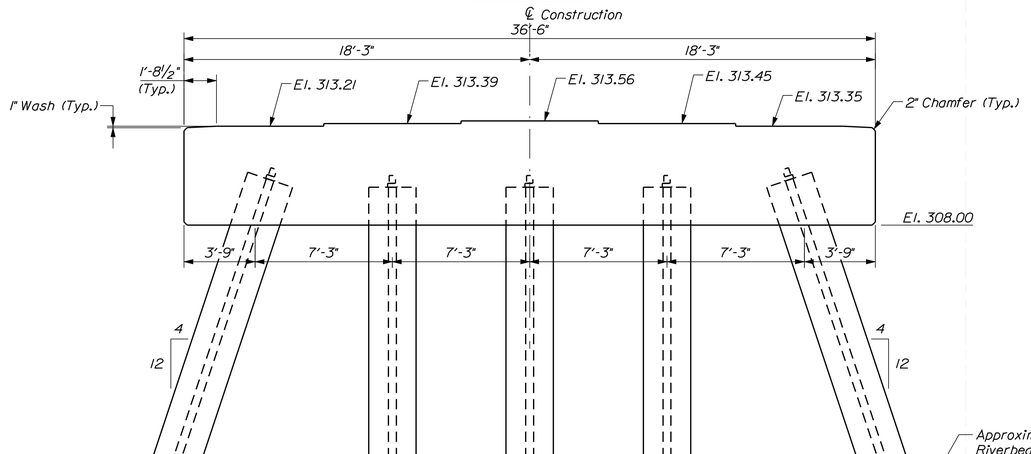

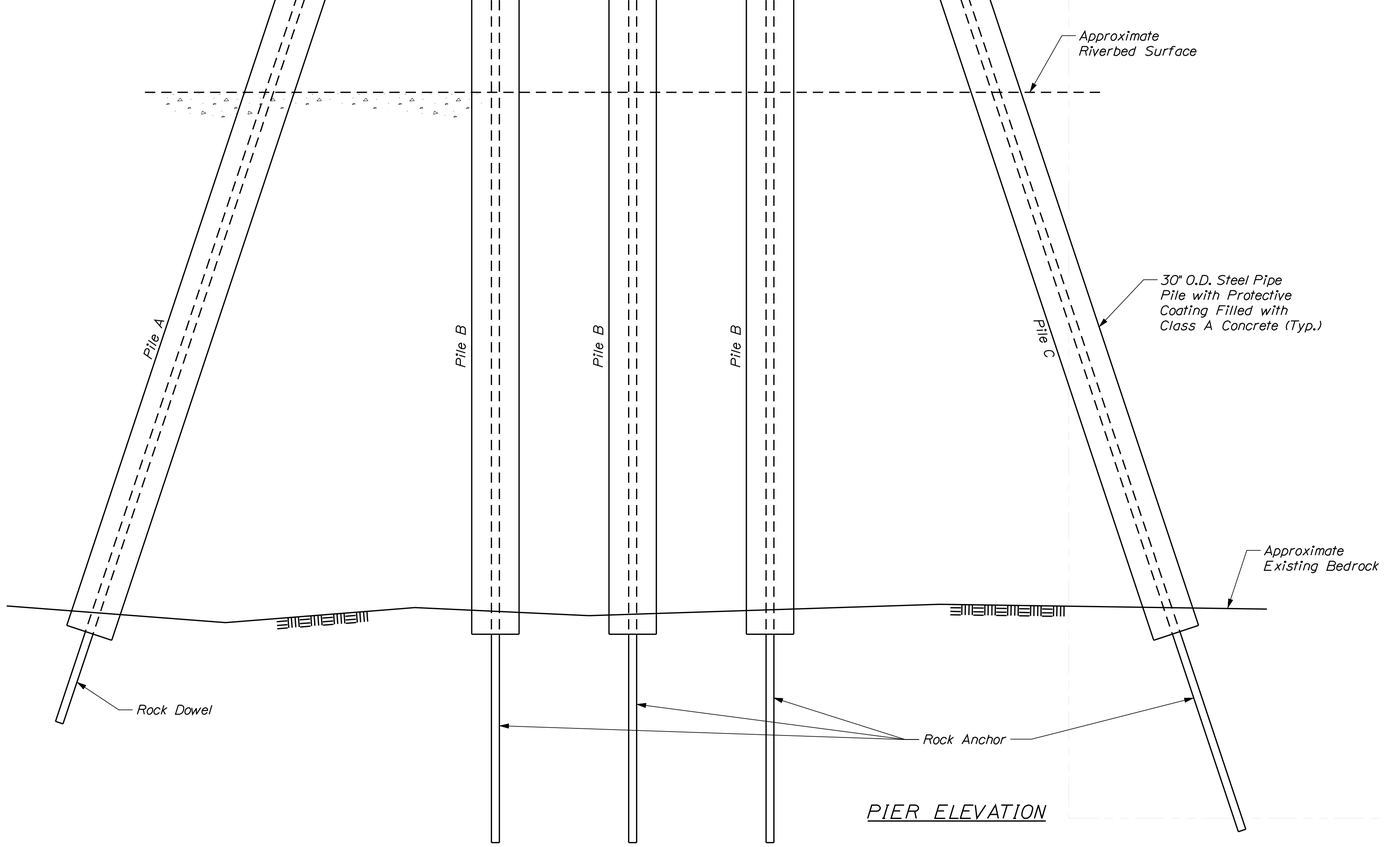

PIER ELEVATION

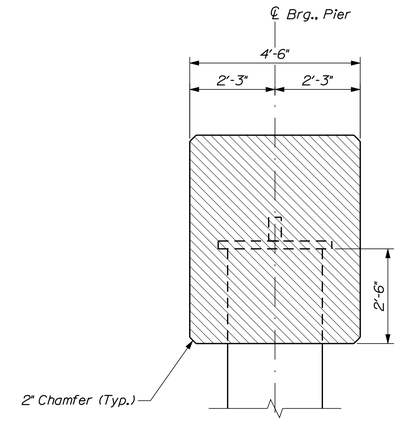

PIER CAP SECTION

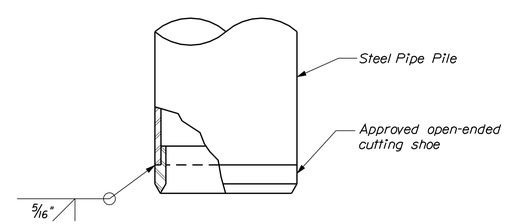

OPEN ENDED PILE DRIVING SHOE

BECKER
STRUCTURAL ENGINEERS
75 York Street, Portland, Maine 04101
207.879.1838 • beckerstructural.com

STATE OF MAINE
DEPARTMENT OF TRANSPORTATION

AC-BH-1926(800)X

WIN 19268.00

BRIDGE NO. 3738

BRIDGE PLANS

		BY	DATE
PROJ. MANAGER	STEPHEN BODGE		
DESIGN-DETAILED	B.WELCH	D.BURGESS	03-04-14
CHECKED-REVIEWED	B.WELCH	J.BURGESS	03-04-14
DESIGN2-DETAILED2	------	------	------
DESIGN3-DETAILED3	------	------	------
REVISIONS 1	------	------	------
REVISIONS 2	------	------	------
REVISIONS 3	------	------	------
REVISIONS 4	------	------	------
FIELD CHANGES	------	------	------

SIGNATURE

P.E. NUMBER

DATE

COVERED BRIDGE
OVER LITTLE ANDROSCOGGIN RIVER
OXFORD COUNTY
OXFORD

PIER PLAN AND ELEVATION

SHEET NUMBER
31
OF 59

Filename: ...\bridge\msla\031_Pier_001.dgn Division: BRIDGE Username: CADD Date:3/26/2014

PIER NOTES

1. Reinforcing steel shall have 2 inches minimum cover unless otherwise noted.

PIER DESIGN CRITERIA

1. Critical AASHTO Load Combination - Extreme II at Q1.1. (For Composite Pile Combined Axial Compression and Flexure)

2. Buoyancy: Water level assumed at elevation 302.7 at Q1.1 and elevation 309.9 at Q50.

3. Stream flow: Maximum Velocity of 3.2 fps at Q1.1 and 8.2 fps at Q50 skewed at 7.5° to longitudinal centerline of pier.

4. Wind: 40 PSF applied to substructure.

5. Ice: Thickness 1.5 feet, pressure 200 PSI at elevation 302.7 for Q1.1, or pressure 100 PSI a elevation 309.9 for Q50 (strength limit states). Thickness 2.5 feet, pressure 200 PSI at elevation 302.7 for Q1.1 or pressure 100 PSI at elevation 309.9 for Q50 (extreme limit states). 30% of nose force applied transverse to pier (strength and extreme limit states).

ROCK ANCHOR AND ROCK DOWEL NOTES

1. Pipe pile anchorage to bed rock:
   Pile A: Rock Dowel (1 location)
   Pile B: Rock Anchor (3 locations)
   Pile C: Rock Anchor (1 location)

2. The rock anchors shall have a 1⅜" nominal threadbar diameter, 142 kip design load, 166 kip lock off load and 20' minimum bonded length.

3. The rock anchors shall be solid threaded bar meeting ASTM A722, Type II, Grade 150 KSI.

4. The rock dowels shall be a #14 threadbar and have a 17 kip design load, 20 kip lock off load and a 5'-0" minimum bonded length.

5. Rock dowels shall be solid threaded bar meeting ASTM A615, Grade 75.

6. Rock anchor and rock dowel testing and installation shall be in accordance with Special Provision 504, Rock Anchors.

7. The Contractor shall proof or performance test all rock anchors. A minimum of one performance test shall be performed. All production anchors not performance tested shall be proof tested. Rock dowel shall be proof tested.

8. Grout for rock anchors and rock dowel installation shall have a non-shrink additive, a maximum water/cement ratio of 0.45 by weight and a minimum unconfined compressive strength of 4.0 ksi at time of testing.

9. No torch cutting of threadbar is permitted. All threadbar shall be saw cut in accordance with the manufacturer's recommendations.

10. Steel anchor bar material shall conform to the requirements of ASTM A709, Grade 36. Steel pipe collar material shall conform to the requirements of ASTM A53, Schedule 40. Diameter of the steel pipe collar shall be per rock anchor/dowel manufacturer requirements. The pipe collar shall be seal welded to the anchor bar. The unit shall be hot dipped galvanized after fabrication per ASTM A123.

11. A grout plug shall be placed at the bottom of the pipe pile prior to drilling drill hole for the rock anchors and rock dowel.

PIPE PILE NOTES

1. Pipe pile material shall be ASTM A252, Grade 3, (Fy = 45 ksi) and meet the requirements of Special Provision Section 711.

2. Piles shall not be out of position shown by more than 2 inches in any direction.

3. The maximum calculated factored axial pile loads are:
   30" ϕ ¾" Battered Pile = 767 Kips (Strength V)
   30" ϕ ⅝" Vertical Pile = 592 Kips (Strength I)
   Note: Loads include 142 Kip Post Tensioning load.

4. Estimates of piles pile lengths are determined from available soils information with no allowances for uncertain bedrock profiles:
   Pile A: 1 ~ 30" ϕ ¾" @ 46 feet
   Pile B: 3 ~ 30" ϕ ⅝" @ 44 feet
   Pile C: 1 ~ 30" ϕ ¾" @ 46 feet

5. Provisions must be made in order lengths to account for an additional four (4) feet for piles to be subject to dynamic pile testing instrumentation (per ASTM D4945).

6. Pipe pile and rock anchor installation shall be in accordance with Standard Specification 501, Special Provision 501 and Special Provision 504 - Rock Anchors.

7. All piles shall be driven open ended and fitted with an approved cast steel pile driving shoe conforming to the strength requirements of ASTM A148, Grade 90-60 and Special Provision 711.

8. The Contractor shall perform and submit two (2) wave equation analyses, one for each size pipe pile, for review and acceptance by the Resident. The maximum allowable driving stress is 0.90 times Fy. The submittal analyses shall include the proposed stopping criteria based on the wave equation analysis and the proposed driving system. The stopping criteria shall include the blows per inch and the number of 1-inch intervals at which pile installation may be terminated. The cost of performing the wave equation analyses will be considered incidental to Item No. 501.92 Pile Driving Equipment Mobilization.

9. The Contractor shall perform (2) dynamic load tests, one on each size pipe pile, to confirm the ultimate capacity of the piles and the driving criteria. The required nominal resistance of each size pile is the factored axial pile load including the post tensioning load divide by a resistance factor of 0.65 per the LRFD Specifications. The dynamic tests will be conducted on the first production plumb and battered piles driven, in accordance with Standard Specification 501, for the full drive length of the pile.

10. Piles shall be driven into sound bedrock and cleaned of soil, or other debris. If cleaning operations disturb bearing material or indicate the pile is not on bedrock, the pile shall be re-driven to the criteria established by the dynamic load test, as directed by the Resident. After cleaning pile and re-driving if required and before drilling for rock anchors, a grout plug shall be tremied two feet into the bottom of the pipe pile. Grout shall reach 2,000 PSI minimum compressive strength before drilling for rock anchors commences. Costs for the grout plug and re-driving pile will be incidental to related contract items.

11. All pipe piles shall be filled with Class A Concrete. Concrete for filling pipe piles and reinforcing steel within pipe piles will be considered incidental to Pay Item 501.701 - Steel Pipe Piles, In Place.

PIPE PILE NOTES (CONT.)

12. Holes shall be provided in the pipe piles to allow placement of two longitudinal reinforcing bars. Payment to be considered incidental to Pay Item 501.70. Holes shall not be drilled until the piles are in their final location.

13. Pile surfaces to be coated shall be prepared in accordance with Special Provision 506 and 711.

14. Pipe piles shall be coated with Polyurea Elastomer (PE) down to Elevation 280.00 in accordance with Special Provision 506. The piles shall be colored gray so as to match concrete. Prior to coating, a color chip shall be supplied by the fabricator for final color selection and approval by the Resident. After driving piles, PE shall be removed down to 3" above the bottom of the pier cap elevation to ensure an adequate bond between the pipe pile and concrete, as approved by the Resident.

15. The Contractor shall take care to prevent damage to the pile coating during driving activities. All driving frames shall be lined to help prevent damage to the pile coating. Driving frame liners shall be approved by the Resident.

16. Due to the presence of sloping bedrock at the site, pile walking during driving is possible. Costs for removing and re-driving pile that are out of position will be incidental to related items.

17. Pipe piles shall be driven to the required nominal resistance on or within bedrock in accordance with Section 501 of the Standard Specifications.

18. The Contractor may encounter cobble or boulders during pile driving operations. Clearing of obstructions shall be as specified in Section 501 of the Standard Specifications and Special Provision 501. The method of clearing obstructions will be considered incidental to related Pay Items.

19. The Contractor shall be required to support all pipe pile laterally in their final positions until the superstructure is complete and in place. Payment for this work will not be paid for separately but will be considered incidental to the related Pay Items.

BECKER STRUCTURAL ENGINEERS
75 York Street, Portland, Maine 04101
207.879.1838 • beckerstructural.com

STATE OF MAINE
DEPARTMENT OF TRANSPORTATION

AC-BH-1926(800)X

WIN 19268.00

BRIDGE NO. 3738

BRIDGE PLANS

PROJ. MANAGER	STEPHEN BODGE	BY	DATE
DESIGN-DETAILED	B.WELCH	D.BURGESS	03-04-14
CHECKED-REVIEWED	B.WELCH	J.BURGESS	03-04-14
DESIGN2-DETAILED2	----	----	----
DESIGN3-DETAILED3	----	----	----
REVISIONS 1	----	----	----
REVISIONS 2	----	----	----
REVISIONS 3	----	----	----
REVISIONS 4	----	----	----
FIELD CHANGES	----	----	----

SIGNATURE

P.E. NUMBER

DATE

COVERED BRIDGE
OVER LITTLE ANDROSCOGGIN RIVER
OXFORD
OXFORD COUNTY

PIER AND PILE NOTES

SHEET NUMBER
32
OF 59

Filename: ...\bridge\msto\032_Pier_002.dgn Division: BRIDGE Username: CADD Date:3/26/2014

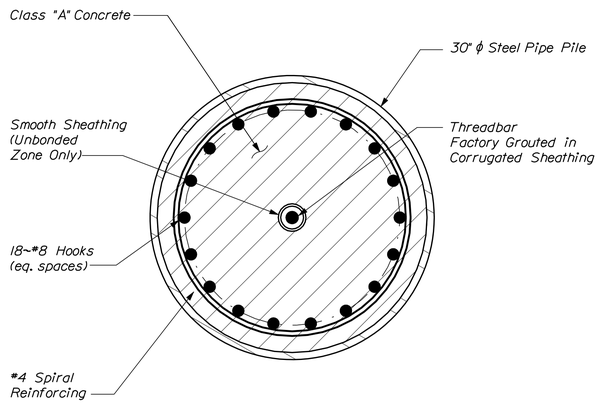

PIPE PILE SECTION

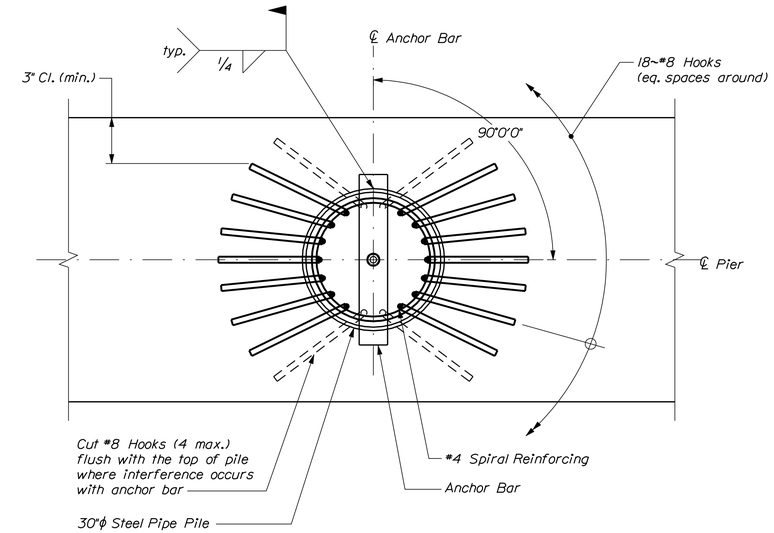

PILE REINFORCING PLAN

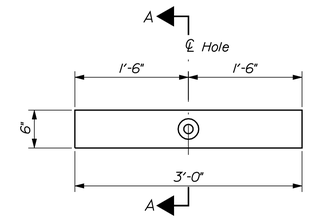

ANCHOR BAR

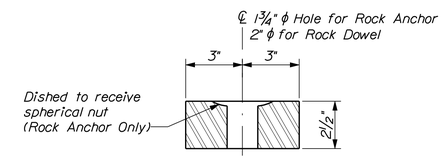

SECTION A-A

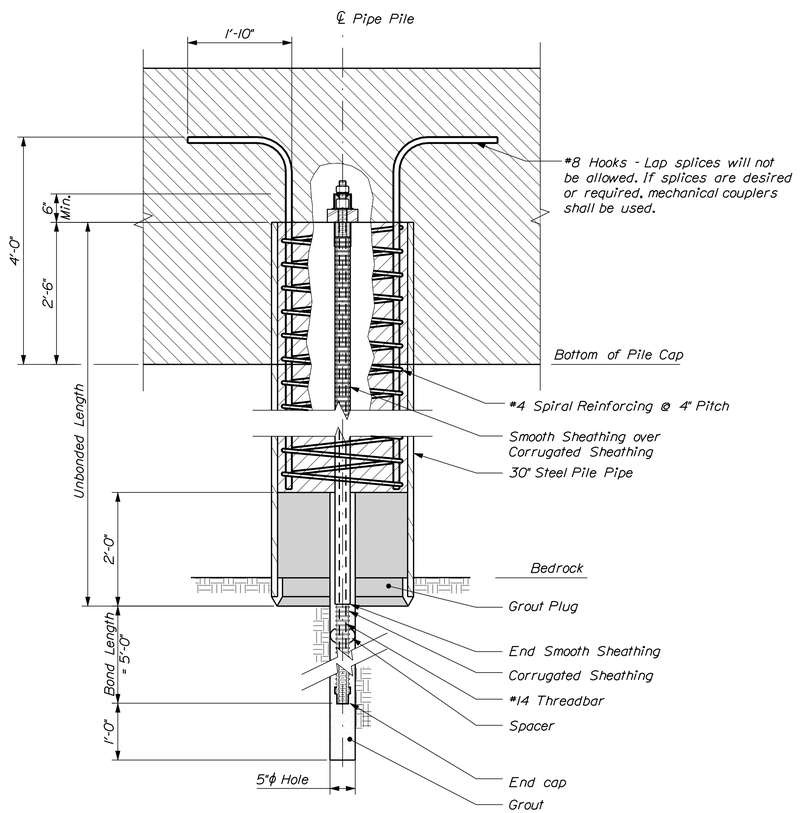

PILE REINFORCING SECTION & #14 THREADBAR ROCK DOWEL DETAILS

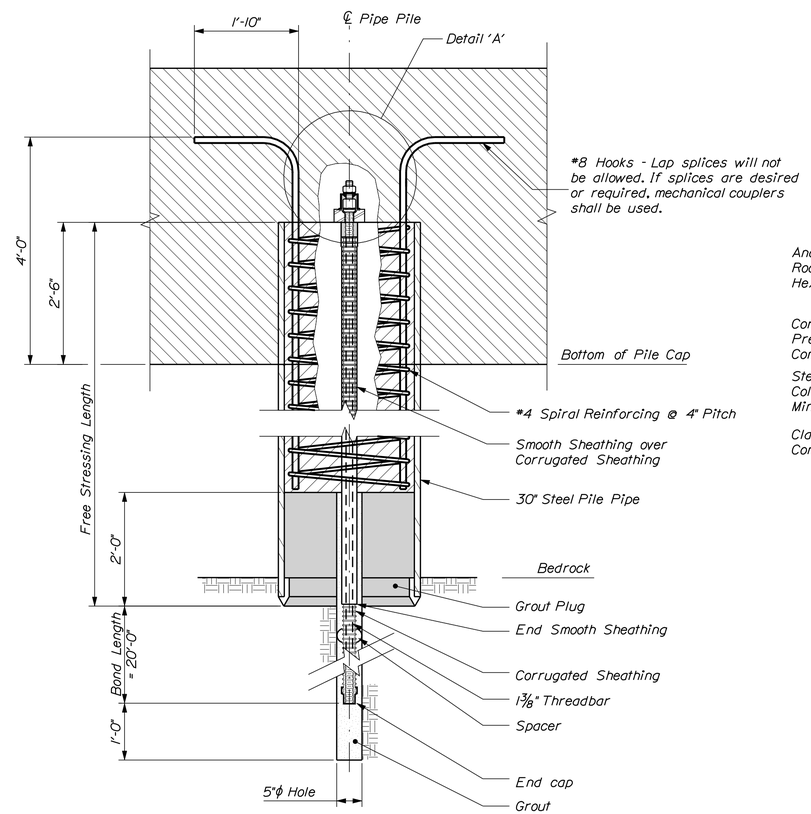

PILE REINFORCING SECTION & 1⅜" THREADBAR ROCK ANCHOR DETAILS

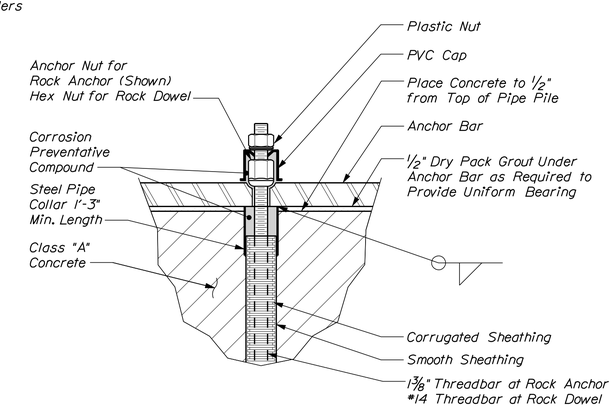

DETAIL 'A'

Pile Reinforcement Omitted for Clarity

BECKER STRUCTURAL ENGINEERS
75 York Street, Portland, Maine 04101
207.879.1838 • beckerstructural.com

STATE OF MAINE
DEPARTMENT OF TRANSPORTATION

AC-BH-1926(800)X

WIN 19268.00

BRIDGE NO. 3738

BRIDGE PLANS

PROJ. MANAGER STEPHEN BODGE		BY	DATE
DESIGN-DETAILED	B.WELCH	D.BURGESS	03-04-14
CHECKED-REVIEWED	B.WELCH	J.BURGESS	03-04-14
DESIGN2-DETAILED2	------	------	------
DESIGN3-DETAILED3	------	------	------
REVISIONS 1	------	------	------
REVISIONS 2	------	------	------
REVISIONS 3	------	------	------
REVISIONS 4	------	------	------
FIELD CHANGES	------	------	------

SIGNATURE

P.E. NUMBER

DATE

COVERED BRIDGE
OVER LITTLE ANDROSCOGGIN RIVER
OXFORD COUNTY
OXFORD

PIER DETAILS

SHEET NUMBER
33
OF 59

Filename: ...\bridge\mslo\033_Pier_003.dgn Division: BRIDGE Username: CADD Date:4/15/2014

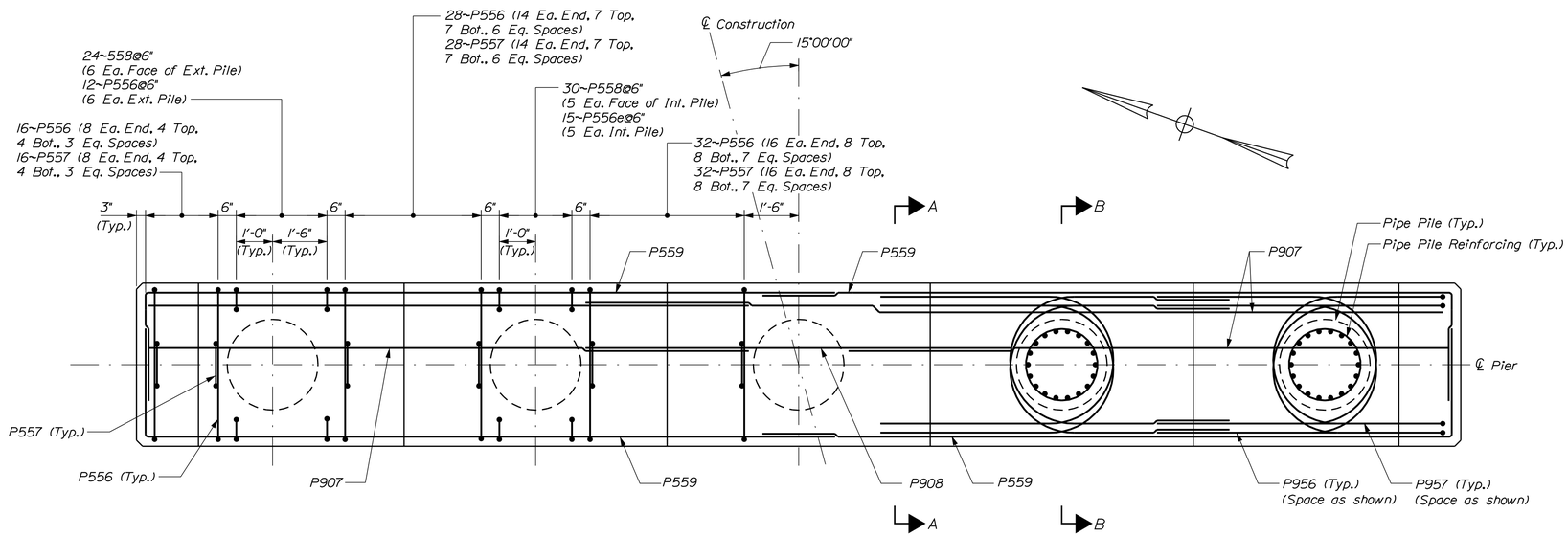

PLAN - PIER CAP REINFORCEMENT

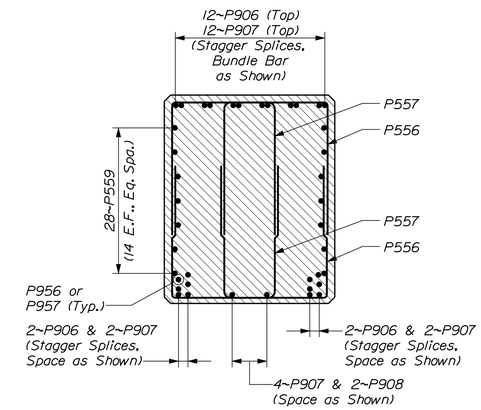

SECTION A-A

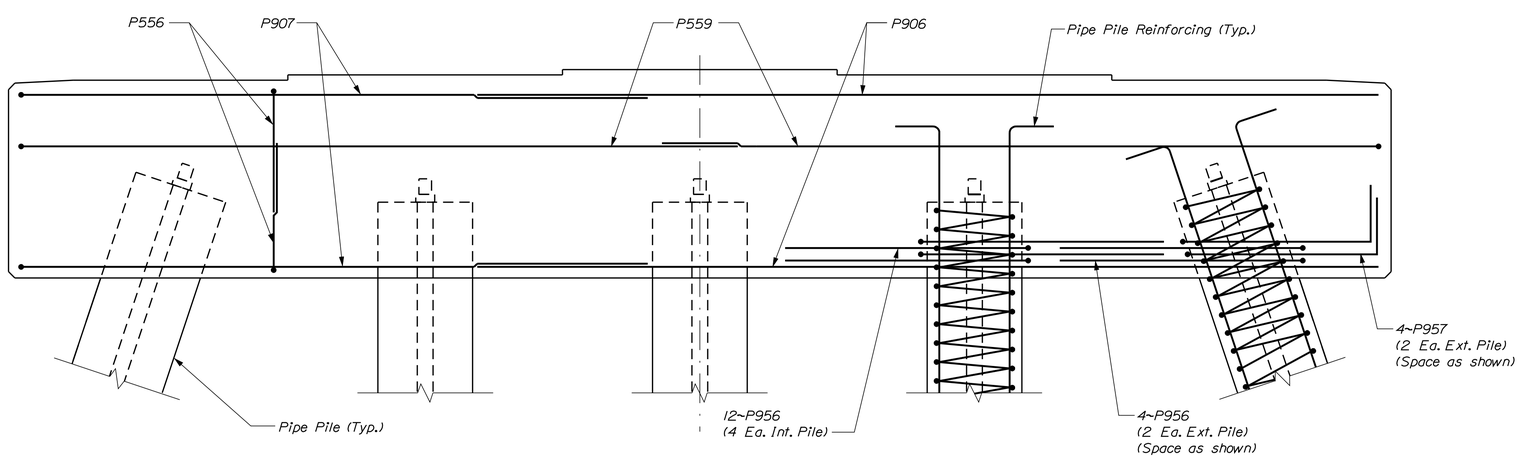

ELEVATION - PIER CAP REINFORCEMENT

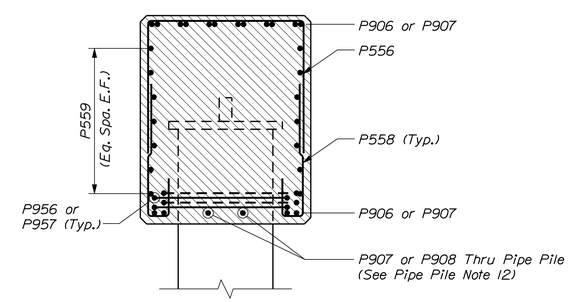

SECTION B-B

BECKER STRUCTURAL ENGINEERS
75 York Street, Portland, Maine 04101
207.879.1838 ■ beckerstructural.com

STATE OF MAINE
DEPARTMENT OF TRANSPORTATION

AC-BH-1926(800)X

WIN 19268.00

BRIDGE NO. 3738

BRIDGE PLANS

		BY	DATE
PROJ. MANAGER	STEPHEN BODGE		
DESIGN-DETAILED	B.WELCH	D.BURGESS	03-04-14
CHECKED-REVIEWED	B.WELCH	J.BURGESS	03-04-14
DESIGN2-DETAILED2	------	------	------
DESIGN3-DETAILED3	------	------	------
REVISIONS 1	------	------	------
REVISIONS 2	------	------	------
REVISIONS 3	------	------	------
REVISIONS 4	------	------	------
FIELD CHANGES	------	------	------

SIGNATURE

P.E. NUMBER

DATE

COVERED BRIDGE
OVER LITTLE ANDROSCOGGIN RIVER
OXFORD COUNTY
OXFORD

PIER CAP REINFORCEMENT

SHEET NUMBER
34
OF 59

Filename: ...\bridge\msta\034_Pier_004.dgn Division: BRIDGE Username: CADD Date:3/26/2014

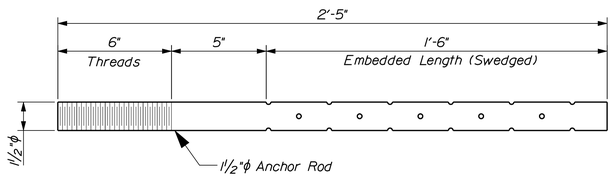

ANCHOR ROD DETAIL

ELASTOMERIC BEARING NOTES

1. The shear modulus of the elastomer shall be between 100 and 130 psi.

2. Vulcanizing of the elastomer to the steel plates shall be done during the primary mold process.

3. Upset the threads on the anchor rods after assembly of the bearing.

4. Anchor rods shall meet the requirements or ASTM F1554, Grade 105 and swedged on the embedded portion of the rod.

5. Bearings shall be covered during transit.

6. Sole plates and shear blocks shall meet the requirements of ASTM A709/A709M, Grade 50W. Masonry plates shall meet the requirements of ASTM A709/A709M, Grade 50.

7. Masonry plates shall be galvanized in accordance with Section 506. Sole plates and shear blocks for steel superstructures shall be treated in the same manner as the structural steel. Anchor rods, washers and nuts shall be galvanized to ASTM A153 or ASTM B695, Class 50, Type 1.

8. All bearings shall be marked prior to shipping. The marks shall include the bearing location on the bridge and a direction arrow that points upstation. All marks shall be permanent and shall be visible after the bearing is installed.

9. All necessary precautions shall be taken to protect bearing components from field weld flash and spatter. Heat from welding operations shall be controlled such that steel adjacent to the elastomer does not exceed 200 °F. The temperature shall be verified by the use of temperature indicating crayons or other suitable means.

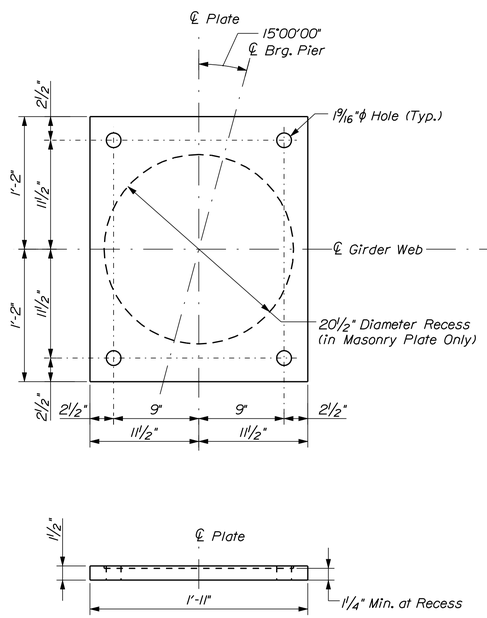

MASONRY PLATE

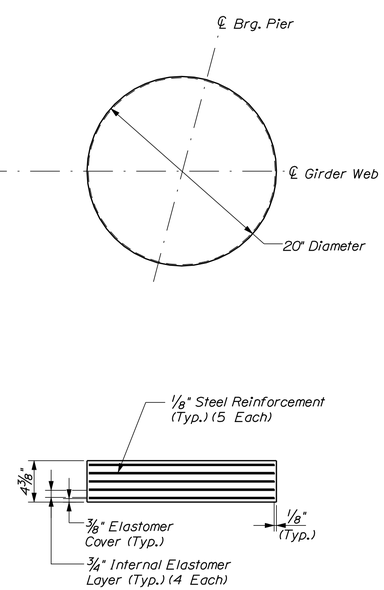

ELASTOMERIC BEARING AT PIER

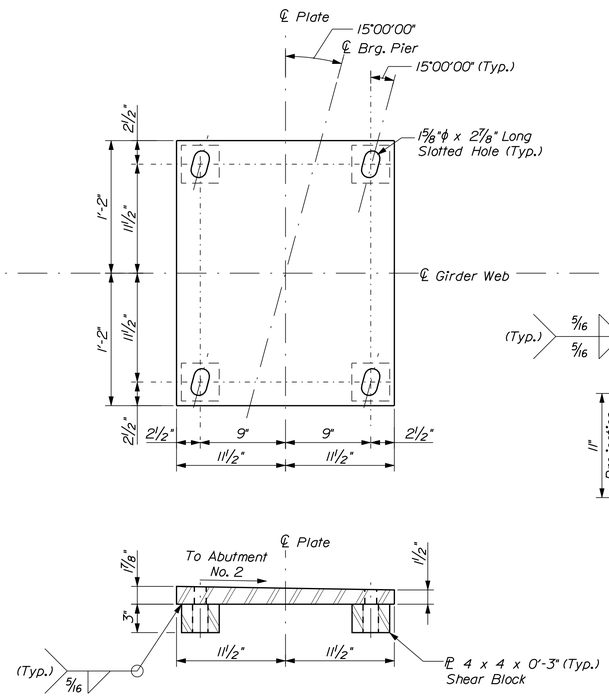

BEVELED SOLE PLATE

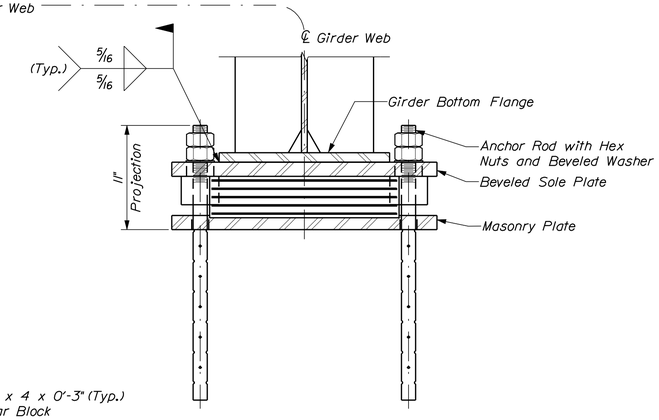

BEARING ASSEMBLY

BECKER STRUCTURAL ENGINEERS
75 York Street, Portland, Maine 04101
207.879.1838 ■ beckerstructural.com

STATE OF MAINE
DEPARTMENT OF TRANSPORTATION

AC-BH-1926(800)X

WIN 19268.00

BRIDGE NO. 3738

BRIDGE PLANS

PROJ. MANAGER STEPHEN BODGE		BY	DATE
DESIGN-DETAILED	B.WELCH	D.BURGESS	03-04-14
CHECKED-REVIEWED	B.WELCH	J.BURGESS	03-04-14
DESIGN2-DETAILED2	------	------	------
DESIGN3-DETAILED3	------	------	------
REVISIONS 1	------	------	------
REVISIONS 2	------	------	------
REVISIONS 3	------	------	------
REVISIONS 4	------	------	------
FIELD CHANGES	------	------	------

SIGNATURE

P.E. NUMBER

DATE

COVERED BRIDGE
OVER LITTLE ANDROSCOGGIN RIVER
OXFORD
OXFORD COUNTY

BEARING DETAILS

SHEET NUMBER
35
OF 59

Filename: ...\mstio\035_Bearing_001.dgn Division: BRIDGE Username: CADD Date:3/4/2014

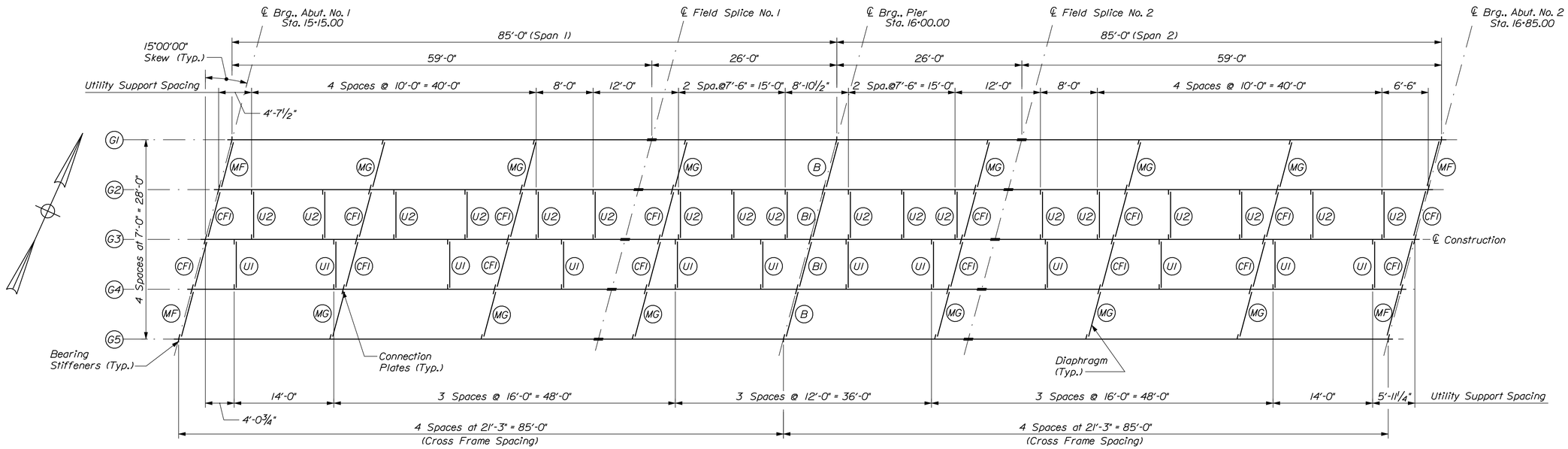

FRAMING PLAN

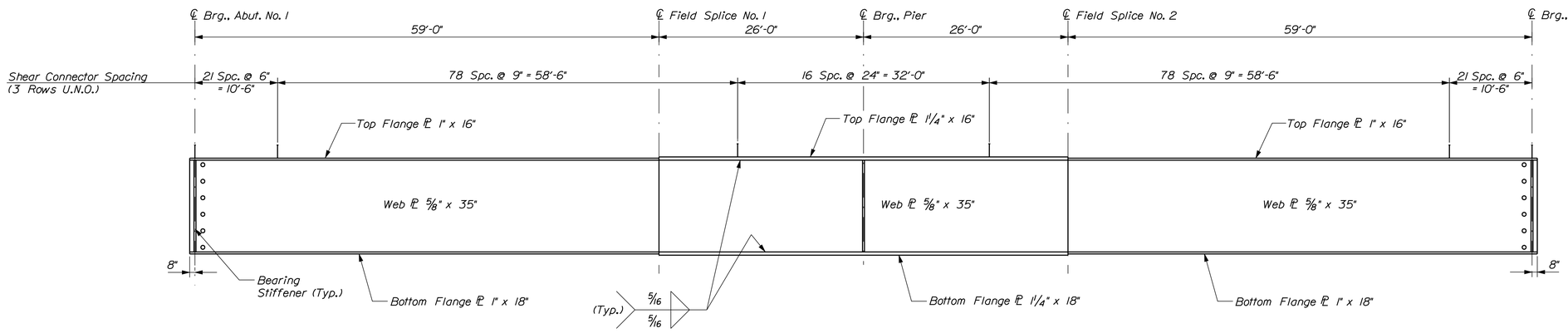

GIRDER ELEVATION

Vertical Scale Exaggerated for Clarity

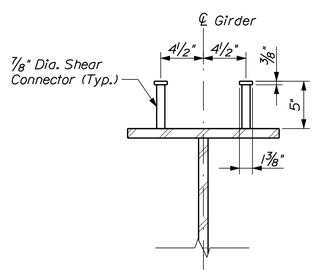

TYPICAL SECTION

STRUCTURAL STEEL NOTES

1. Camber ordinates, as shown, are computed to compensate for all dead load deflections and for the curvature of the finished grade profile.

2. No transverse butt-weld splices will be allowed in the flange plates or web plates within 10 feet or 10 percent of the span length (whichever is greater) from the points of maximum negative moment or maximum positive moment. butt-weld splices in flanges shall be not less than three feet from transverse butt-welds in the web plates and no transverse web or flange butt-welds shall be located within three feet of other transverse welds (e.g. connection plates to web welds) on either flange or web. No transverse butt-weld splices will be allowed in areas of stress reversal. See Welded Splice Transition Detail on Girder Details (1 of 2) sheet.

3. Sections of flange plates or web plates between transverse shop splices or between a transverse shop splice and a field splice shall not be less than 20 feet in length unless otherwise shown on the plans.

4. Bearing stiffeners shall be plumb after erection and dead loading of the structure. Intermediate web stiffeners may be either plumb or normal to the top flange.

5. Crossframe or diaphragm connection plates may be either plumb or normal to the top flange.

6. Filler plates may be steel conforming to the requirements of ASTM A709, Grade 36.

STRUCTURAL STEEL NOTES (CONT.)

7. For details of diaphragm Type A2, MF and MG, see Standard Details 504(15) and 504(17).

8. For field splice details, see Girder Details (1 of 2) sheet. The Contractor may substitute shop welded splices at the bolted field splice locations, as approved by the Resident.

9. Bolted field splice connections shall be made using ⅞" diameter, ASTM A325 Type 3 H.S. bolts. Hole size shall be 15/16" diameter unless otherwise shown. Bolt threads shall be excluded from the shear plane of field splice connections.

10. Bolted cross frame connections shall be made using ⅞" diameter ASTM A325 Type 3 H.S. bolts. Hole size shall be 15/16" diameter. The minimum edge distance shall be 1½" unless otherwise shown. Oversized or short-slotted holes are not permitted for use in cross frame connections.

BECKER
STRUCTURAL ENGINEERS
75 York Street, Portland, Maine 04101
207.879.1838 ■ beckerstructural.com

STATE OF MAINE
DEPARTMENT OF TRANSPORTATION

AC-BH-1926(800)X

WIN 19268.00

BRIDGE NO. 3738

BRIDGE PLANS

PROJ. MANAGER STEPHEN BODGE		BY	DATE
DESIGN-DETAILED	B.WELCH	D.BURGESS	03-04-14
CHECKED-REVIEWED	B.WELCH	J.BURGESS	03-04-14
DESIGN2-DETAILED2			
DESIGN3-DETAILED3			
REVISIONS 1			
REVISIONS 2			
REVISIONS 3			
REVISIONS 4			
FIELD CHANGES			

SIGNATURE

P.E. NUMBER

DATE

COVERED BRIDGE
OVER LITTLE ANDROSCOGGIN RIVER
OXFORD
OXFORD COUNTY

FRAMING PLAN

SHEET NUMBER

36

OF 59

Filename: ...\msto\036_Framing_001.dgn Division: BRIDGE Username: CADD Date:3/4/2014

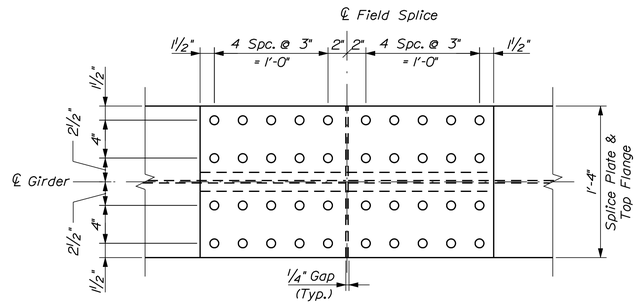

TOP VIEW

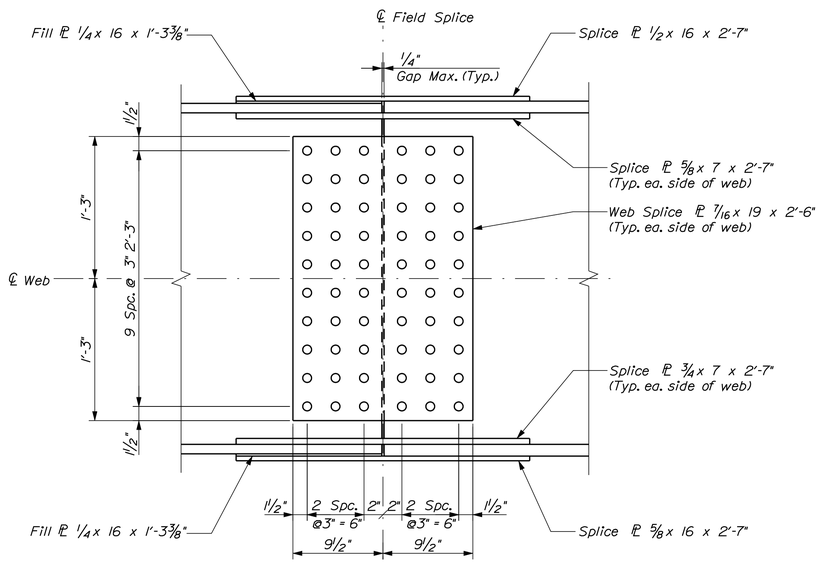

ELEVATION

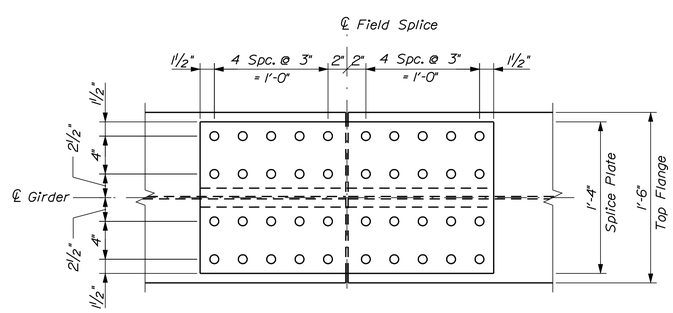

BOTTOM VIEW

BOLTED FIELD SPLICE

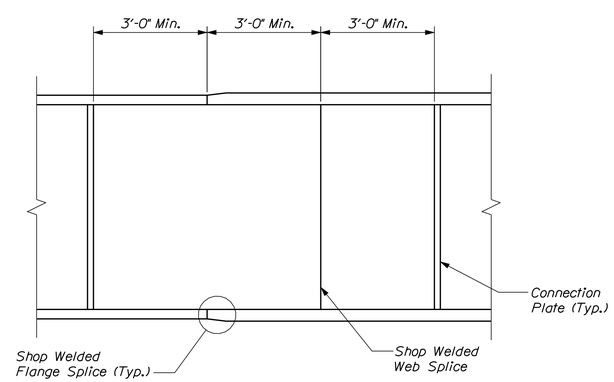

WELDED SPLICE TRANSITION DETAIL

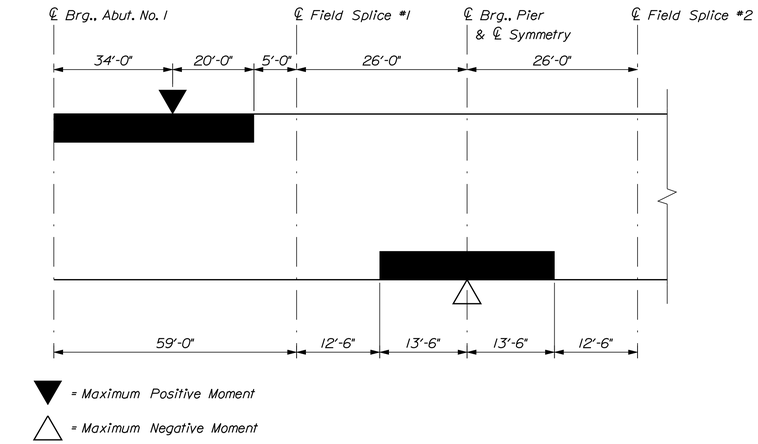

STRESS DIAGRAM - EXTERIOR GIRDERS

Shaded areas are always in compression, others are in tension or have stress reversals.

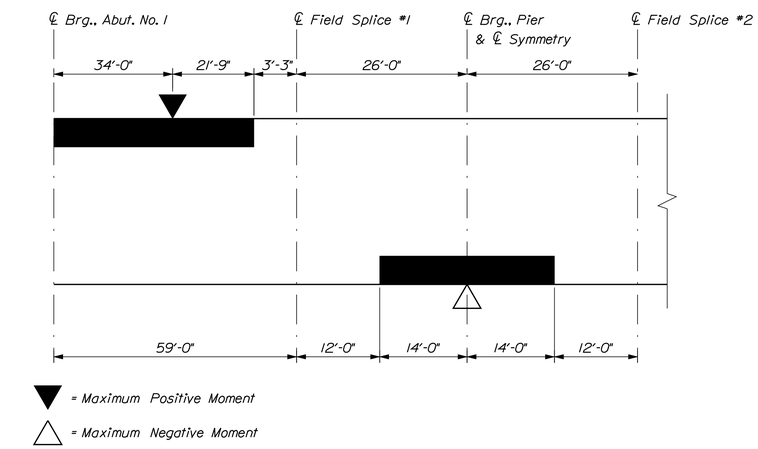

STRESS DIAGRAM - INTERIOR GIRDERS

Shaded areas are always in compression, others are in tension or have stress reversals.

STATE OF MAINE
DEPARTMENT OF TRANSPORTATION

AC-BH-1926(800)X

WIN 19268.00

BRIDGE NO. 3738

BRIDGE PLANS

PROJ. MANAGER STEPHEN BODGE		BY	DATE
DESIGN-DETAILED	B.WELCH	D.BURGESS	03-04-14
CHECKED-REVIEWED	B.WELCH	J.BURGESS	03-04-14
DESIGN2-DETAILED2			
DESIGN3-DETAILED3			
REVISIONS 1			
REVISIONS 2			
REVISIONS 3			
REVISIONS 4			
FIELD CHANGES			

SIGNATURE

P.E. NUMBER

DATE

COVERED BRIDGE
OVER LITTLE ANDROSCOGGIN RIVER
OXFORD
OXFORD COUNTY

GIRDER DETAILS (1 of 2)

SHEET NUMBER

37

OF 59

BECKER STRUCTURAL ENGINEERS
75 York Street, Portland, Maine 04101
207.879.1838 • beckerstructural.com

Filename: ...\msta\037_Girder_001.dgn Division: BRIDGE Username: CADD Date:4/15/2014

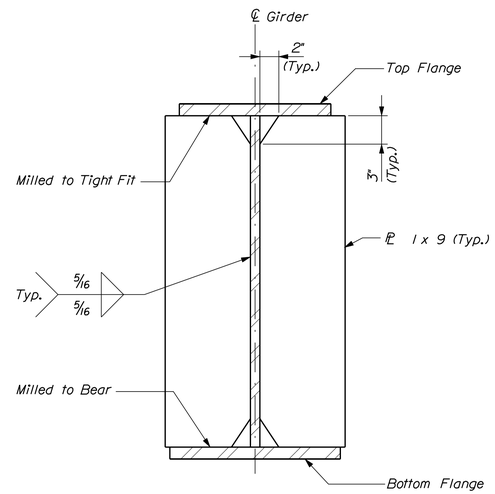

BEARING STIFFENERS AT PIER

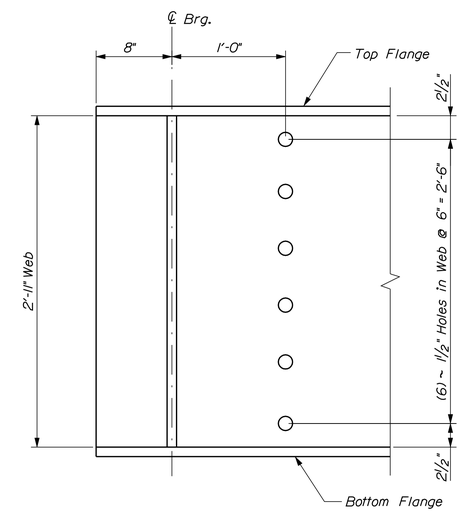

GIRDER END DETAIL

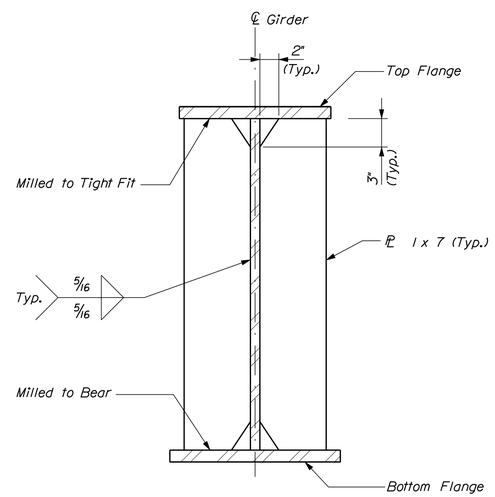

BEARING STIFFENERS AT ABUTMENT

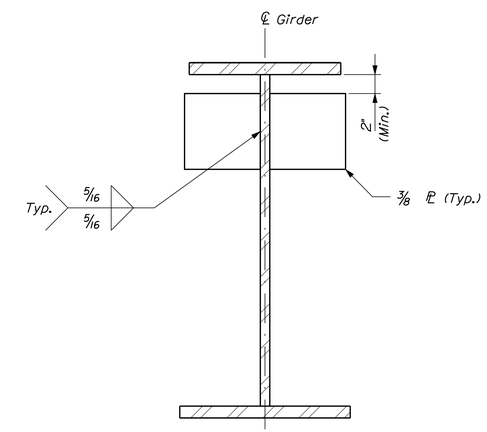

UTILITY SUPPORT CONNECTION PLATES

BECKER
STRUCTURAL ENGINEERS
75 York Street, Portland, Maine 04101
207.879.1838 • beckerstructural.com

STATE OF MAINE
DEPARTMENT OF TRANSPORTATION

AC-BH-1926(800)X

WIN 19268.00

BRIDGE NO. 3738

BRIDGE PLANS

PROJ. MANAGER STEPHEN BODGE			
DESIGN-DETAILED	B.WELCH	D.BURGESS	03-04-14
CHECKED-REVIEWED	B.WELCH	J.BURGESS	03-04-14
DESIGN2-DETAILED2			
DESIGN3-DETAILED3			
REVISIONS 1			
REVISIONS 2			
REVISIONS 3			
REVISIONS 4			
FIELD CHANGES			

SIGNATURE

P.E. NUMBER

DATE

COVERED BRIDGE
OVER LITTLE ANDROSCOGGIN RIVER
OXFORD
OXFORD COUNTY

GIRDER DETAILS (2 of 2)

SHEET NUMBER
38
OF 59

Filename: ...\bridge\msto\038_Girder_002.dgn Division: BRIDGE Username: CADD Date:3/4/2014

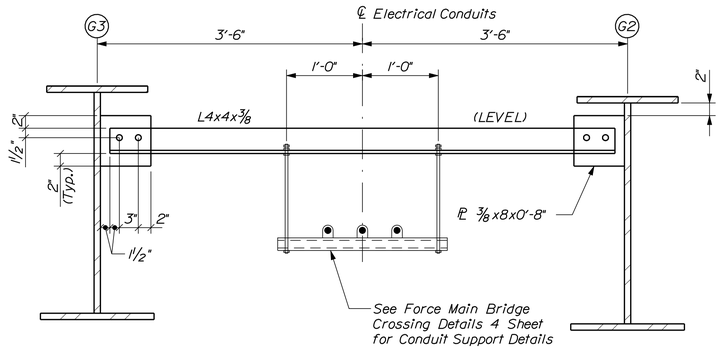

UTILITY SUPPORT TYPE U2

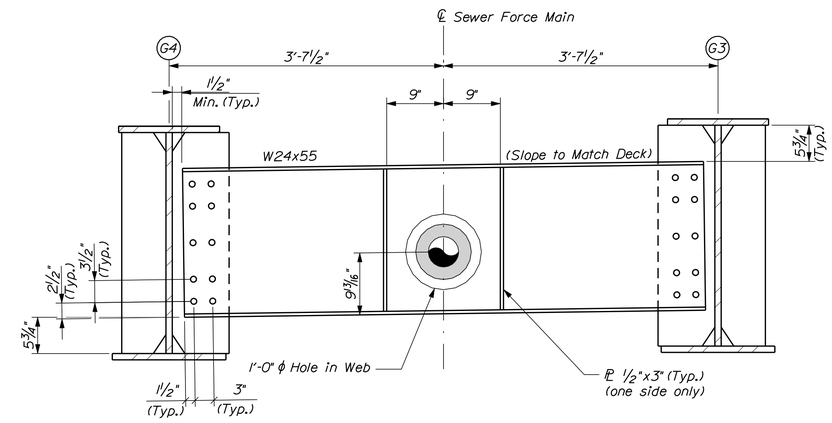

PIER DIAPHRAGM TYPE BI

Note:
1. Sewer Force Main bay shown (Electrical Conduit bay similar)
2. See Standard Detail Section 504 for information not shown.

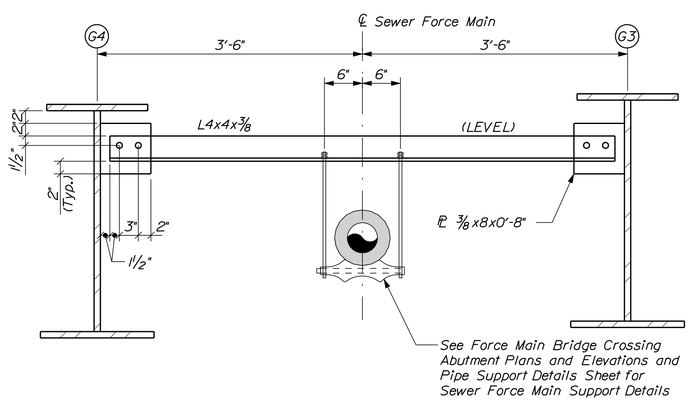

UTILITY SUPPORT TYPE U1

Notes:
1. Payment for utility supports type "U1" and "U2" connection plates, angles and bolts will be made under Item 845.10, Structural Steel Utility Support.

2. See Standard Detail Section 504 for information not shown.

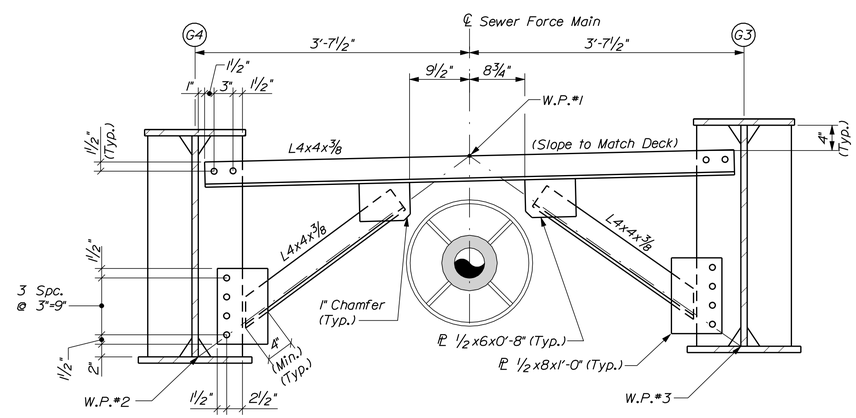

END DIAPHRAGM TYPE CF1

Notes:
1. Sewer Force Main bay shown (Electrical Conduit bay similar)
2. See Standard Detail Section 504 for information not shown.

BECKER STRUCTURAL ENGINEERS
75 York Street, Portland, Maine 04101
207.879.1838 ▪ beckerstructural.com

STATE OF MAINE
DEPARTMENT OF TRANSPORTATION

AC-BH-1926(800)X

WIN 19268.00

BRIDGE NO. 3738

BRIDGE PLANS

PROJ. MANAGER STEPHEN BODGE		BY	DATE
DESIGN-DETAILED	B.WELCH	D.BURGESS	03-04-14
CHECKED-REVIEWED	B.WELCH	J.BURGESS	03-04-14
DESIGN2-DETAILED2	------	------	------
DESIGN3-DETAILED3	------	------	------
REVISIONS 1	------	------	------
REVISIONS 2	------	------	------
REVISIONS 3	------	------	------
REVISIONS 4	------	------	------
FIELD CHANGES	------	------	------

SIGNATURE

P.E. NUMBER

DATE

COVERED BRIDGE
OVER LITTLE ANDROSCOGGIN RIVER
OXFORD COUNTY
OXFORD

CROSS FRAME DETAILS

SHEET NUMBER
39
OF 59

Filename: ...\msta\039_CrossFrame_001.dgn Division: BRIDGE Username: CADD Date:3/4/2014

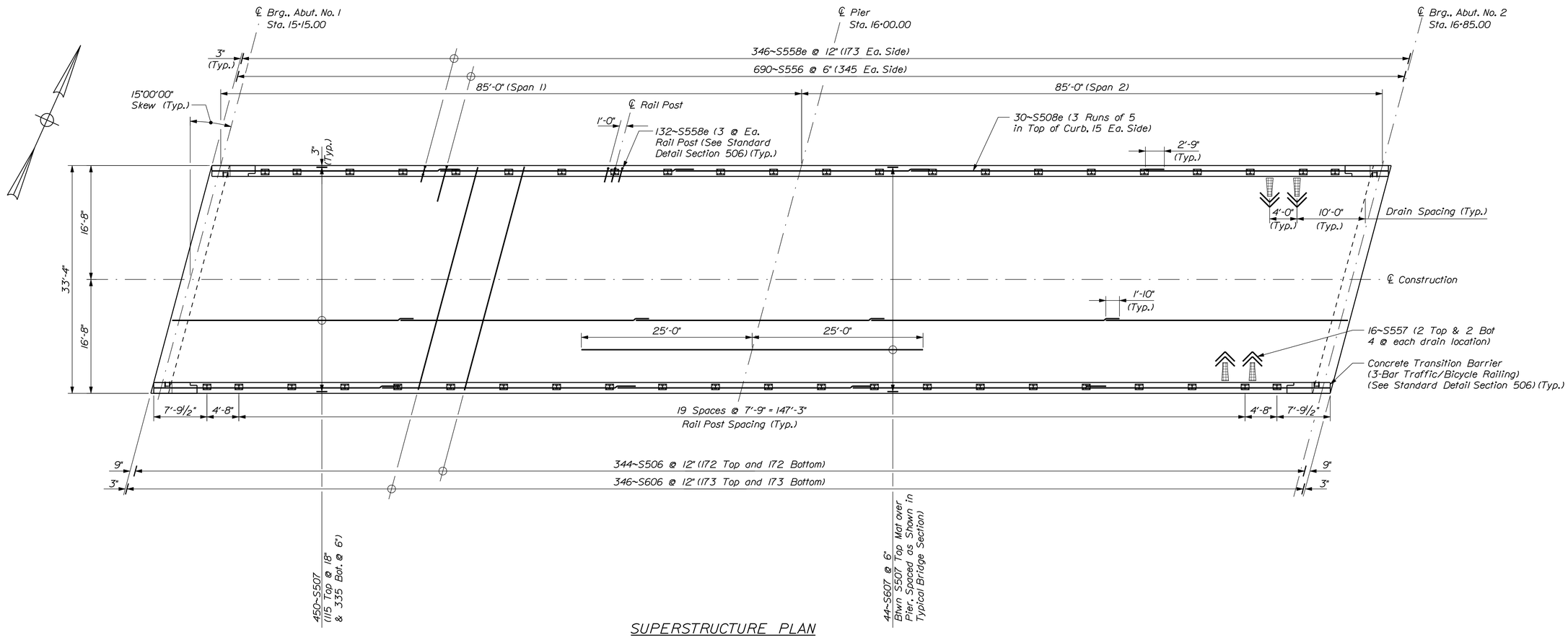

SUPERSTRUCTURE PLAN

BECKER
STRUCTURAL ENGINEERS
75 York Street, Portland, Maine 04101
207.879.1838 ■ beckerstructural.com

STATE OF MAINE
DEPARTMENT OF TRANSPORTATION

AC-BH-1926(800)X

WIN 19268.00

BRIDGE NO. 3738

BRIDGE PLANS

PROJ. MANAGER STEPHEN BODGE	BY	DATE
DESIGN-DETAILED B.WELCH	D.BURGESS	03-04-14
CHECKED-REVIEWED B.WELCH	J.BURGESS	03-04-14
DESIGN2-DETAILED2		
DESIGN3-DETAILED3		
REVISIONS 1		
REVISIONS 2		
REVISIONS 3		
REVISIONS 4		
FIELD CHANGES		

SIGNATURE

P.E. NUMBER

DATE

COVERED BRIDGE
OVER LITTLE ANDROSCOGGIN RIVER
OXFORD
OXFORD COUNTY

SUPERSTRUCTURE PLAN

SHEET NUMBER
40
OF 59

Filename: ...\040_Superstructure_001.dgn Division: BRIDGE Username: CADD Date:3/4/2014

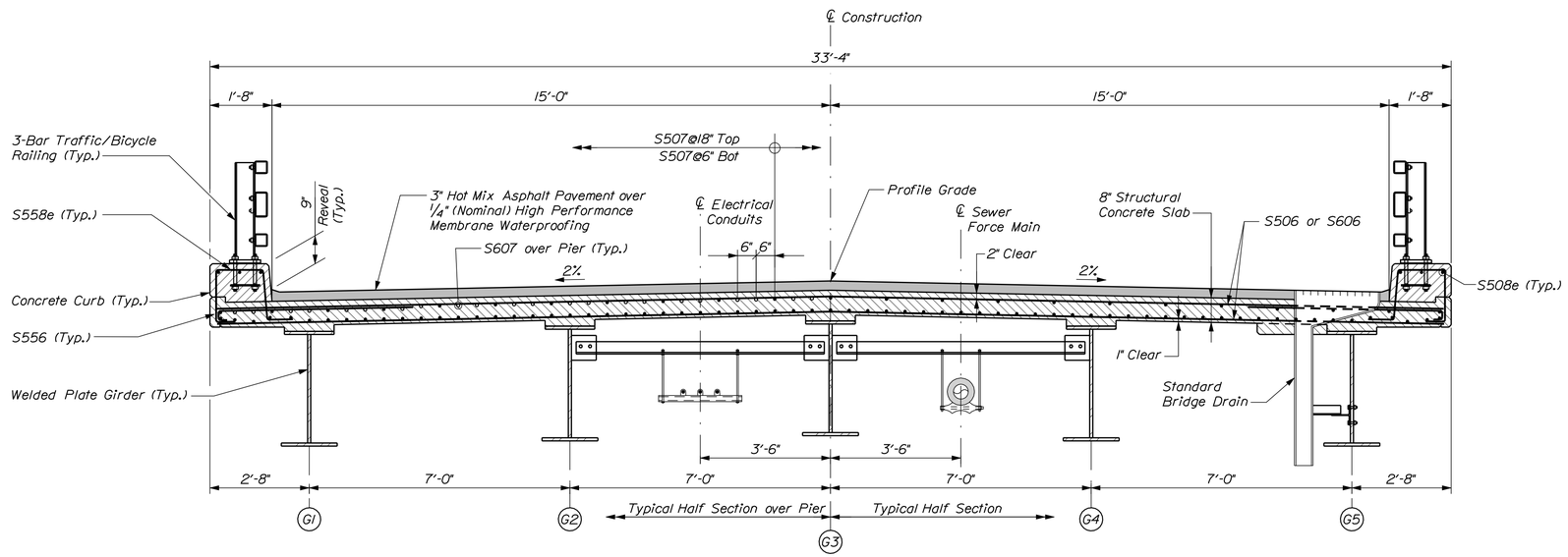

TYPICAL BRIDGE SECTION

Note: For clarity, girders over pier are shown everywhere.

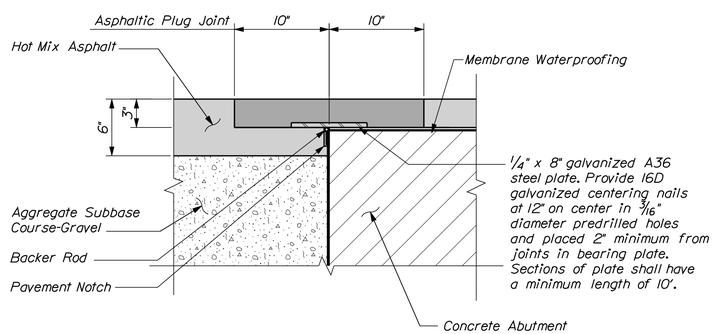

ASPHALT PLUG JOINT DETAIL

SUPERSTRUCTURE NOTES

1. The theoretical blocking used for design of the structure is 2 3/4" inch at the centerline of bearing of the abutments and piers. Refer to Standard Detail 502(02) for blocking details.

2. Reinforcing steel shall have a minimum concrete cover of 2 inches unless otherwise noted.

3. Adjust reinforcing steel to fit around the bridge drains in a manner approved by the Resident. Do not cut transverse reinforcing bars.

4. Form a one inch V-groove on the fascias at the horizontal joint between the curb and slab.

5. The superstructure slab concrete shall be placed in one continuous operation and the concrete shall be kept plastic one complete span behind the span being placed.

6. Payment for reinforcing steel fabricated, delivered, and placed in the cast-in-place portion of the structural concrete slab will be considered incidental to the appropriate Standard Specifications Section 502 pay item.

BECKER STRUCTURAL ENGINEERS
75 York Street, Portland, Maine 04101
207.879.1838 ■ beckerstructural.com

STATE OF MAINE
DEPARTMENT OF TRANSPORTATION

AC-BH-1926(800)X

WIN 19268.00

BRIDGE NO. 3738

BRIDGE PLANS

PROJ. MANAGER STEPHEN BODGE		BY	DATE
DESIGN-DETAILED	B.WELCH	D.BURGESS	03-04-14
CHECKED-REVIEWED	B.WELCH	J.BURGESS	03-04-14
DESIGN2-DETAILED2	------	------	------
DESIGN3-DETAILED3	------	------	------
REVISIONS 1	------		------
REVISIONS 2	------		------
REVISIONS 3	------		------
REVISIONS 4	------		------
FIELD CHANGES	------		------

SIGNATURE

P.E. NUMBER

DATE

COVERED BRIDGE
OVER LITTLE ANDROSCOGGIN RIVER
OXFORD
OXFORD COUNTY

SUPERSTRUCTURE DETAILS
(1 OF 3)

SHEET NUMBER

41

OF 59

Filename: ...\041_Superstructure_002.dgn Division: BRIDGE Username: CADD Date:3/4/2014

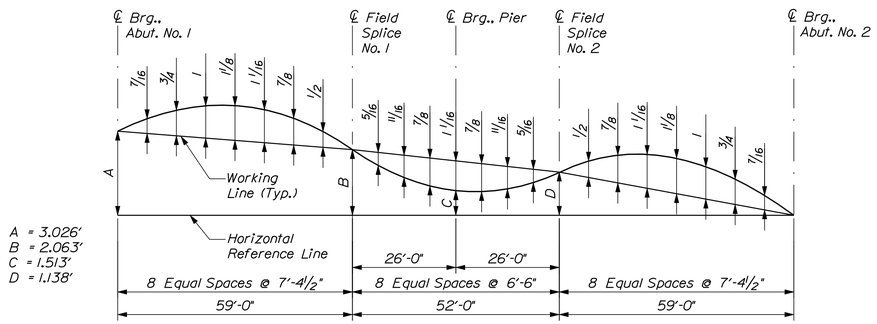

CAMBER DIAGRAM - INTERIOR GIRDERS 2 - 4

Camber ordinates are in inches, unless otherwise noted.

DEAD LOAD DEFLECTIONS - INTERIOR GIRDERS 2 - 4 (IN)

		℄ Brg. Abut 1	1	2	3	4	5	6	7	8	9	℄ Brg Pier
Span 1	Steel	0.000	0.090	0.165	0.216	0.236	0.226	0.189	0.133	0.072	0.022	0.000
	Fluid	0.000	0.348	0.641	0.838	0.918	0.878	0.733	0.516	0.280	0.084	0.000
	Superimposed	0.000	0.128	0.237	0.313	0.349	0.341	0.293	0.216	0.123	0.038	0.000
		℄ Brg. Pier	1	2	3	4	5	6	7	8	9	℄ Brg Abut 2
Span 2	Steel	0.000	0.022	0.072	0.133	0.189	0.226	0.236	0.216	0.165	0.090	0.000
	Fluid	0.000	0.084	0.280	0.516	0.733	0.878	0.918	0.838	0.641	0.348	0.000
	Superimposed	0.000	0.038	0.123	0.216	0.293	0.341	0.349	0.313	0.237	0.128	0.000

Deflections given at 10th points.

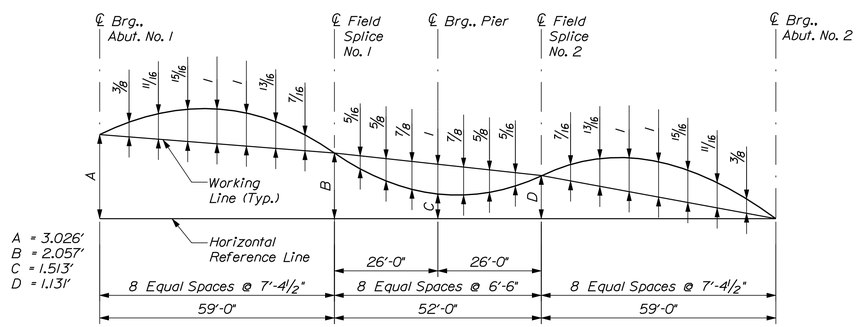

CAMBER DIAGRAM - EXTERIOR GIRDERS 1 & 5

Camber ordinates are in inches, unless otherwise noted.

DEAD LOAD DEFLECTIONS - EXTERIOR GIRDERS 1 & 5 (IN)

		℄ Brg. Abut 1	1	2	3	4	5	6	7	8	9	℄ Brg Pier
Span 1	Steel	0.000	0.090	0.165	0.216	0.236	0.226	0.189	0.133	0.072	0.022	0.000
	Fluid	0.000	0.297	0.545	0.713	0.781	0.747	0.624	0.439	0.238	0.071	0.000
	Superimposed	0.000	0.132	0.244	0.322	0.358	0.349	0.300	0.220	0.125	0.039	0.000
		℄ Brg. Pier	1	2	3	4	5	6	7	8	9	℄ Brg Abut 2
Span 2	Steel	0.000	0.022	0.072	0.133	0.189	0.226	0.236	0.216	0.165	0.090	0.000
	Fluid	0.000	0.071	0.238	0.439	0.624	0.747	0.781	0.713	0.545	0.297	0.000
	Superimposed	0.000	0.039	0.125	0.220	0.300	0.349	0.358	0.322	0.244	0.132	0.000

Deflections given at 10th points.

BECKER STRUCTURAL ENGINEERS
75 York Street, Portland, Maine 04101
207.879.1838 ▪ beckerstructural.com

STATE OF MAINE
DEPARTMENT OF TRANSPORTATION

AC-BH-1926(800)X

WIN 19268.00

BRIDGE NO. 3738

BRIDGE PLANS

		BY	DATE
PROJ. MANAGER	STEPHEN BODGE		
DESIGN-DETAILED	B.WELCH	D.BURGESS	03-04-14
CHECKED-REVIEWED	B.WELCH	J.BURGESS	03-04-14
DESIGN2-DETAILED2	------	------	------
DESIGN3-DETAILED3	------	------	------
REVISIONS 1	------	------	------
REVISIONS 2	------	------	------
REVISIONS 3	------	------	------
REVISIONS 4	------	------	------
FIELD CHANGES	------	------	------

SIGNATURE

P.E. NUMBER

DATE

COVERED BRIDGE
OVER LITTLE ANDROSCOGGIN RIVER
OXFORD COUNTY
OXFORD

SUPERSTRUCTURE DETAILS
(2 OF 3)

SHEET NUMBER

42

OF 59

Filename: ...\042_Superstructure_003.dgn Division: BRIDGE Username: CADD Date:3/4/2014

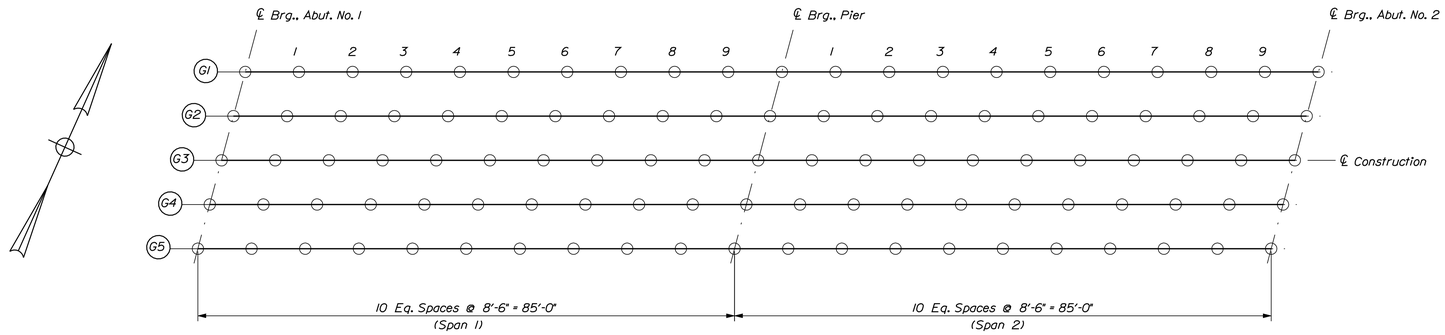

BOTTOM OF SLAB ELEVATION LAYOUT PLAN

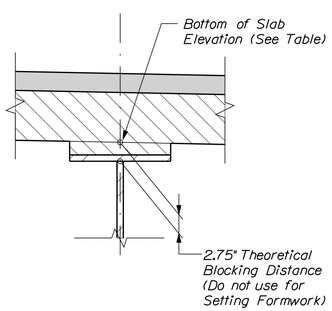

BLOCKING DETAIL

BOTTOM OF SLAB ELEVATION TABLE

		℄ Brg. Abut 1	1	2	3	4	5	6	7	8	9	℄ Brg. Pier
Span 1	G1	318.58	318.43	318.28	318.13	317.98	317.82	317.67	317.52	317.37	317.22	317.07
	G2	318.75	318.60	318.45	318.30	318.15	318.00	317.85	317.70	317.54	317.39	317.24
	G3	318.93	318.78	318.62	318.47	318.32	318.17	318.02	317.87	317.72	317.57	317.42
	G4	318.82	318.67	318.52	318.37	318.22	318.06	317.91	317.76	317.61	317.46	317.31
	G5	318.71	318.56	318.41	318.26	318.11	317.96	317.81	317.66	317.50	317.35	317.20
		℄ Brg. Pier	1	2	3	4	5	6	7	8	9	℄ Brg. Abut 2
Span 2	G1	317.07	316.92	316.77	316.62	316.46	316.31	316.16	316.01	315.86	315.71	315.56
	G2	317.24	317.09	316.94	316.79	316.64	316.49	316.34	316.19	316.03	315.88	315.73
	G3	317.42	317.26	317.11	316.96	316.81	316.66	316.51	316.36	316.21	316.06	315.91
	G4	317.31	317.16	317.01	316.86	316.70	316.55	316.40	316.25	316.10	315.95	315.80
	G5	317.20	317.05	316.90	316.75	316.60	316.45	316.30	316.15	315.99	315.84	315.69

BECKER
STRUCTURAL ENGINEERS
75 York Street, Portland, Maine 04101
207.879.1838 ▪ beckerstructural.com

STATE OF MAINE
DEPARTMENT OF TRANSPORTATION

AC-BH-1926(800)X

WIN 19268.00

BRIDGE NO. 3738

BRIDGE PLANS

PROJ. MANAGER	STEPHEN BODGE		
DESIGN-DETAILED	B.WELCH	D.BURGESS	03-04-14
CHECKED-REVIEWED	B.WELCH	J.BURGESS	03-04-14
DESIGN2-DETAILED2	------	------	------
DESIGN3-DETAILED3	------	------	------
REVISIONS 1	------		------
REVISIONS 2	------		------
REVISIONS 3	------		------
REVISIONS 4	------		------
FIELD CHANGES	------		------

SIGNATURE

P.E. NUMBER

DATE

COVERED BRIDGE
OVER LITTLE ANDROSCOGGIN RIVER
OXFORD COUNTY
OXFORD

SUPERSTRUCTURE DETAILS
(3 OF 3)

SHEET NUMBER
43
OF 59

Filename: ...\043_Superstructure_004.dgn Division: BRIDGE Username: CADD Date:3/4/2014

STRAIGHT BARS

MARK	QTY.	LENGTH	LOCATION	MARK	QTY.	LENGTH	LOCATION
Abutment No. 1				*Abutment No. 2*			
A506	32	13'-0"		B106	33	13'-0"	
A507	40	27'-0"		B507	40	27'-0"	
A508	4	5-0"		B508	4	5-0"	
A509	2	9'-0"		B509	2	9'-0"	
A510	6	32'-0"	Approach Slab Shelf	B510	6	32'-0"	Approach Slab Shelf
A520	2	6'-0"	Block Out	B520	2	6'-0"	Block Out
A521	2	12'-0"	Wing	B521	2	12'-0"	Wing
A522	2	11'-3"	Wing	B522	2	10'-9"	Wing
A523	2	10'-6"	Wing	B523	1	3'-0"	Wing
A524	2	9'-9"	Wing	B524	1	3'-6"	Wing
A525	1	2'-3"	Wing	B525	1	1'-9"	Wing
A526	1	2'-9"	Wing	B526	1	2'-3"	Wing
A527	1	1'-6"	Wing	B527	2	12'-3"	Wing
A528	1	2'-0"	Wing	B528	2	11'-3"	Wing
A529	2	12'-0"	Wing	B529	2	10'-3"	Wing
A530	2	11'-0"	Wing	B530	1	3'-3"	Wing
A531	1	4'-0"	Wing	B531	1	2'-9"	Wing
A532	1	3'-6"	Wing	B532	1	2'-3"	Wing
A533	1	3'-0"	Wing	B533	1	1'-9"	Wing
A534	1	2'-6"	Wing	B534	8	2'-0"	Block Out
A535	8	2'-0"	Block Out	B906	33	15'-8"	Wing
A906	32	15'-8"	Wing				
Pier							
P906	16	24'-0"					
P907	20	16'-6"					
P908	2	11'-9"					
Superstructure							
S506	344	34'-0"					
S507	450	36'-0"					
S508e	30	36'-8"	Curb, Epoxy Coated				
S606	346	34'-0"					
S607	44	50'-0"					

BENT BARS

MARK	QTY.	LENGTH	TYPE	A	B	C	D	E	F	G	H	O	R	LOCATION
Abutment No. 1														
A451	224	3'-2"	T9		6"	2'-2"	6"							
A550	33	6'-0"	W				1'-0"	4'-0"	1'-0"		8½"			Dowel
A556	44	16'-0"	S		6'-10"	2'-2"	6'-10"							
A557	6	6'-5"	L	5'-9"	8"									
A558	6	7'-7"	L	6'-10"	8"									
A559	27	8'-7"	S		2'-9"	4'-6"	1'-4"							Approach Slab Shelf
A560	6	7'-2"	S		1'-4"	4'-6"	1'-4"							Approach Slab Shelf
A561	17	5'-10"	S		1'-10"	2'-2"	1'-10"							
A570	62	5'-10"	L		4'-10"	1'-0"								
A571	28	3'-6"	W				1'-0"	1'-6"	1'-0"					
A572	4	5'-5"	PR	1'-0"	3'-5"	1'-0"							1'-2"	Block Out
A573	1	7'-6"	V				7'-0"	6"			6"			Wing
A574	1	8'-0"	V				7'-0"	1'-0"			1'-0"			Wing
A575	1	7'-6"	V				6'-0"	1'-6"			8"			Wing
A576	1	7'-0"	V				6'-0"	1'-0"			5"			Wing
A577	1	6'-2"	S	2'-0"	2'-2"	2'-0"								Wing
A578	1	7'-2"	S	2'-6"	2'-2"	2'-6"								Wing
A579	1	8'-2"	S	3'-0"	2'-2"	3'-0"								Wing
A580	1	9'-6"	S	3'-8"	2'-2"	3'-8"								Wing
A581	1	10'-8"	S	4'-3"	2'-2"	4'-3"								Wing
A582	1	11'-8"	S	4'-9"	2'-2"	4'-9"								Wing
A583	1	13'-2"	S	5'-6"	2'-2"	5'-6"								Wing
A584	1	13'-4"	S	5'-6"	2'-4"	5'-6"								Wing
A585	1	7'-10"	S	2'-10"	2'-2"	2'-10"								Wing
A586	1	8'-10"	S	3'-4"	2'-2"	3'-4"								Wing
A587	1	9'-10"	S	3'-10"	2'-2"	3'-10"								Wing
A588	1	10'-10"	S	4'-4"	2'-2"	4'-4"								Wing
A589	1	11'-10"	S	4'-10"	2'-2"	4'-10"								Wing
A590	1	12'-10"	S	5'-4"	2'-2"	5'-4"								Wing
A591	1	13'-6"	S	5'-8"	2'-2"	5'-8"								Wing
A592	1	13'-8"	S	5'-8"	2'-4"	5'-8"								Wing
Abutment No. 2														
B451	224	3'-2"	T9		6"	2'-2"	6"							
B550	33	6'-0"	W				1'-0"	4'-0"	1'-0"		8½"			Dowel
B556	44	16'-0"	S		6'-10"	2'-2"	6'-10"							
B557	6	6'-5"	L	5'-9"	8"									
B558	6	7'-7"	L	6'-10"	8"									
B559	27	8'-7"	S		2'-9"	4'-6"	1'-4"							Approach Slab Shelf
B560	6	7'-2"	S		1'-4"	4'-6"	1'-4"							Approach Slab Shelf
B561	17	5'-10"	S		1'-10"	2'-2"	1'-10"							
B570	62	5'-10"	L		4'-10"	1'-0"								
B571	28	3'-6"	W				1'-0"	1'-6"	1'-0"					
B572	4	5'-5"	PR	1'-0"	3'-5"	1'-0"							1'-2"	Block Out
B573	1	7'-0"	V				6'-6"	6"			2¼"			Wing
B574	1	7'-6"	V				6'-6"	1'-0"			4½"			Wing
B575	1	7'-6"	V				6'-0"	1'-6"			8"			Wing
B576	1	7'-0"	V				6'-0"	1'-0"			5"			Wing
B577	1	8'-6"	S	3'-2"	2'-2"	3'-2"								Wing
B578	1	9'-2"	S	3'-6"	2'-2"	3'-6"								Wing
B579	1	9'-10"	S	3'-10"	2'-2"	3'-10"								Wing
B580	1	10'-8"	S	4'-3"	2'-2"	4'-3"								Wing
B581	1	10'-6"	S	4'-8"	2'-2"	4'-8"								Wing
B582	1	12'-4"	S	5'-1"	2'-2"	5'-1"								Wing
B583	1	13'-2"	S	5'-6"	2'-2"	5'-6"								Wing
B584	1	13'-4"	S	5'-6"	2'-4"	5'-6"								Wing
B585	1	7'-6"	S	2'-8"	2'-2"	2'-8"								Wing
B586	1	8'-6"	S	3'-2"	2'-2"	3'-2"								Wing
B587	1	9'-6"	S	3'-8"	2'-2"	3'-8"								Wing
B588	1	10'-4"	S	4'-1"	2'-2"	4'-1"								Wing
B589	1	11'-2"	S	4'-6"	2'-2"	4'-6"								Wing
B590	1	12'-2"	S	5'-0"	2'-2"	5'-0"								Wing
B591	1	12'-8"	S	5'-3"	2'-2"	5'-3"								Wing
B592	1	12'-10"	S	5'-3"	2'-4"	5'-3"								Wing
Pier														
P556	103	11'-6"	S		3'-8"	4'-2"	3'-8"							
P557	76	8'-8"	S		3'-8"	1'-4"	3'-8"							
P558	54	5'-3"	S		3'-8"	7"	1'-0"							
P559	28	22'-0"	L	19'-0"	3'-0"									
P956	16	15'-6"	PR	5'-0"	5'-6"	5'-0"							1'-9"	
P957	4	14'-2"	PR(MOD)		1'-6"	2'-10"	5'-6"	2'-10"	1'-6"				1'-9"	
Superstructure														
S556	690	5'-8"	C	8"	5'-0"									
S557	16	6'-0"	L	3'-0"	3'-0"									
S558e	478	5'-2"	SC	8"	1'-3"	1'-3½"	1'-3"			8"		1'-5"		Curb, Epoxy Coated

Note:

1. Refer to MaineDOT Standard Details Section 526 for transition barrier reinforcing steel.

2. Transition barrier reinforcing steel shall be epoxy coated.

3. Refer to MaineDOT Standard Details Section 502 for approach slab reinforcing steel.

TYPE - BENDING DIAGRAMS

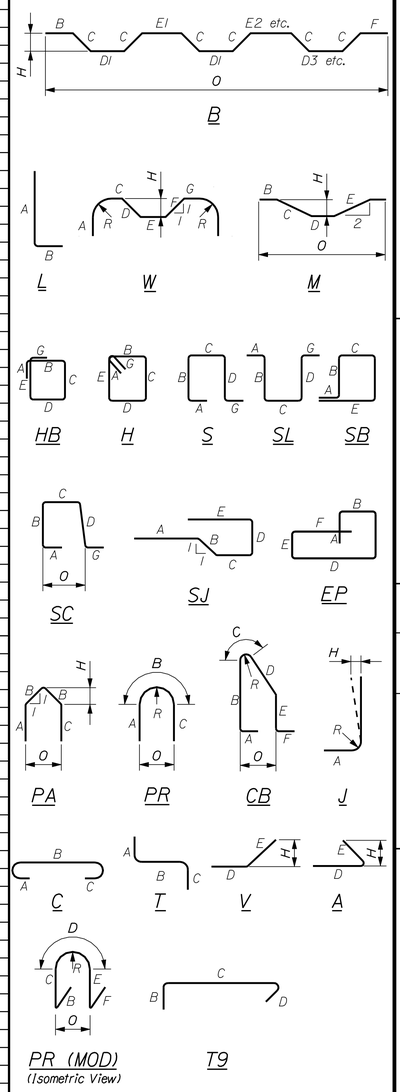

All dimensions are out-to-out of bar.

Bending details and hooks shall conform to the recommendations of the current revision of ACI Standard 315 and ACI Standard 318.

Reinforcing Bar: ASTM A615/A615M, Grade 60

GENERAL NOTES

1. The first two digits following the letter(s) of the mark indicate the size ofthe bar:

   Mark 'A502' = bar size #5
   Mark 'P805' = bar size #8
   Mark 'S650' = bar size #6

2. Mark legend:
   'e' = epoxy coated

BECKER STRUCTURAL ENGINEERS
75 York Street, Portland, Maine 04101
207.879.1838 • beckerstructural.com

STATE OF MAINE
DEPARTMENT OF TRANSPORTATION

AC-BH-1926(800)X

WIN 19268.00

BRIDGE NO. 3738

BRIDGE PLANS

	BY	DATE
PROJ. MANAGER STEPHEN BODGE		
DESIGN-DETAILED	D.BURGESS	03-04-14
CHECKED-REVIEWED	J.BURGESS	03-04-14
DESIGN2-DETAILED2		
DESIGN3-DETAILED3		
REVISIONS 1		
REVISIONS 2		
REVISIONS 3		
REVISIONS 4		
FIELD CHANGES		

SIGNATURE

P.E. NUMBER

DATE

COVERED BRIDGE
OVER LITTLE ANDROSCOGGIN RIVER
OXFORD
OXFORD COUNTY

REINFORCING SCHEDULE

SHEET NUMBER

44

OF 59

Filename: ...\bridge\msta\044_Rebar_001.dgn Division: BRIDGE Username: CADD Date:3/4/2014

22x34 SHEET
1:1

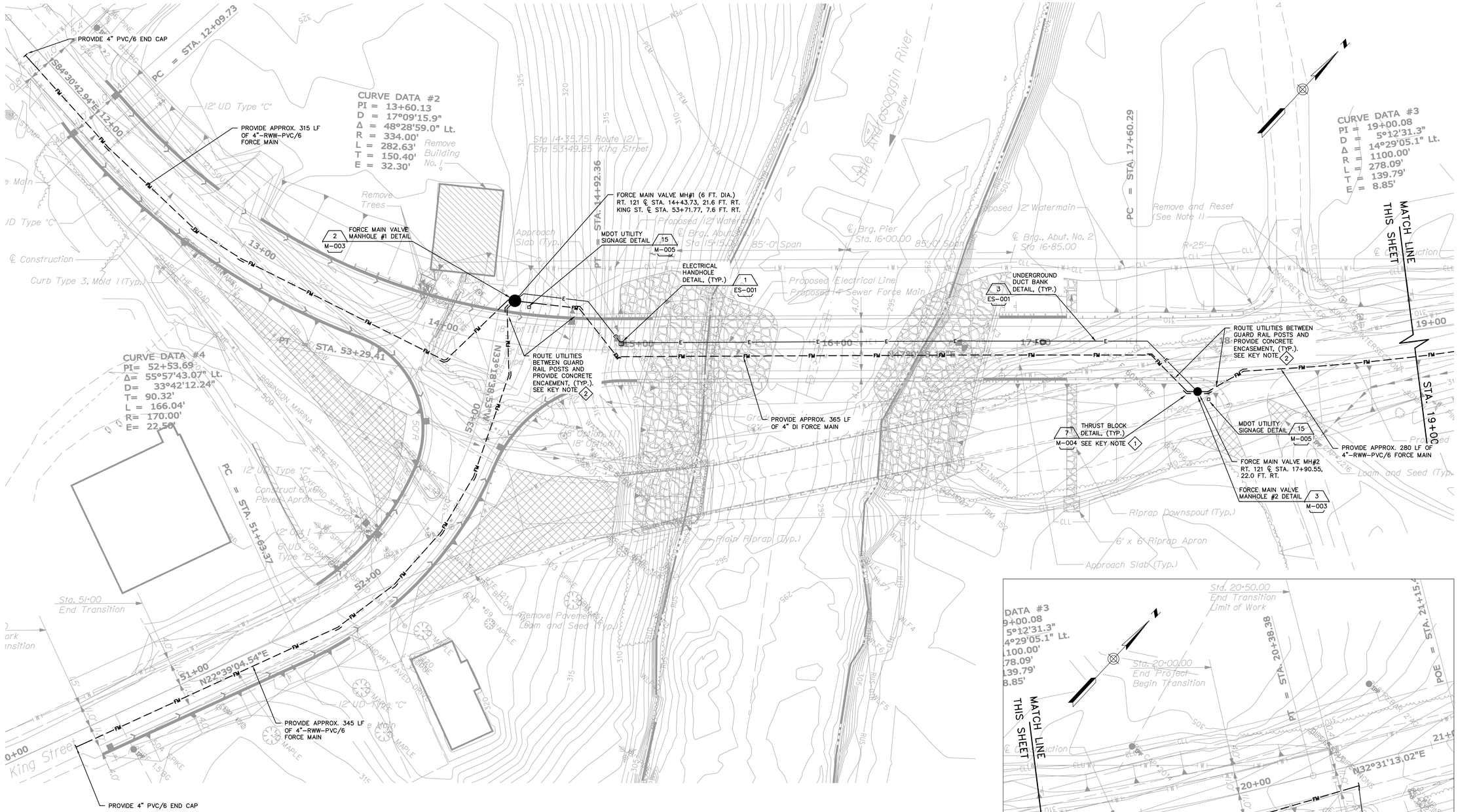

CIVIL KEYED NOTES

1. PROVIDE CONCRETE THRUST BLOCKS AT ALL FITTINGS AND DIRECTIONAL CHANGES IN FORCE MAIN PIPING.
2. ROUTE FORCE MAIN AND ELECTRICAL DUCTS BETWEEN GUARD RAIL POSTS. PROVIDE CONCRETE UTILITY ENCASEMENT WHERE COVER IS LESS THAN 4'-6" AT ALL GUARD RAIL CROSSING LOCATIONS. SEE DETAIL 1 SHEET C-003.

COVERED BRIDGE SEWER FORCE MAIN PLAN

SCALE: 1"=25'

25' 0 25' 50'

BAR SCALE
1" = 25'
CHECK GRAPHIC SCALE BEFORE USING

BID SET

41 Hutchins Drive
Portland, Maine 04102
800.426.4262 | www.woodardcurran.com
WOODARD & CURRAN
COMMITMENT & INTEGRITY DRIVE RESULTS

THIS DOCUMENT OR THE PROPERTY OF WOODARD & CURRAN INC. AND ITS CLIENT. THIS DOCUMENT OR THE PROPERTY OF WOODARD & CURRAN INC. AND ITS CLIENT.

STATE OF MAINE BRENT M. BRIDGES No. 5217 PROFESSIONAL ENGINEER

REV	DESCRIPTION	DATE

DESIGNED BY: RTP
DRAWN BY: NTD
CHECKED BY: MKC
225546-C001_C003_ES-001.dwg

COVERED BRIDGE SEWER FORCE MAIN PLAN

TOWN OF OXFORD, MAINE

COVERED BRIDGE OVER LITTLE ANDROSCOGGIN RIVER

JOB NO.: 225546.01
DATE: FEB., 2014
SCALE: AS NOTED
SHEET: OF

C-001

\\Portland\Projects1\225546 Town of Oxford - Preliminary Design\wip\CAD Drawings\MDOT Bridge Crossings\Covered Bridge\Cad drawings\225546-C001_ES-001.dwg, Mar 26, 2014 - 10:59am

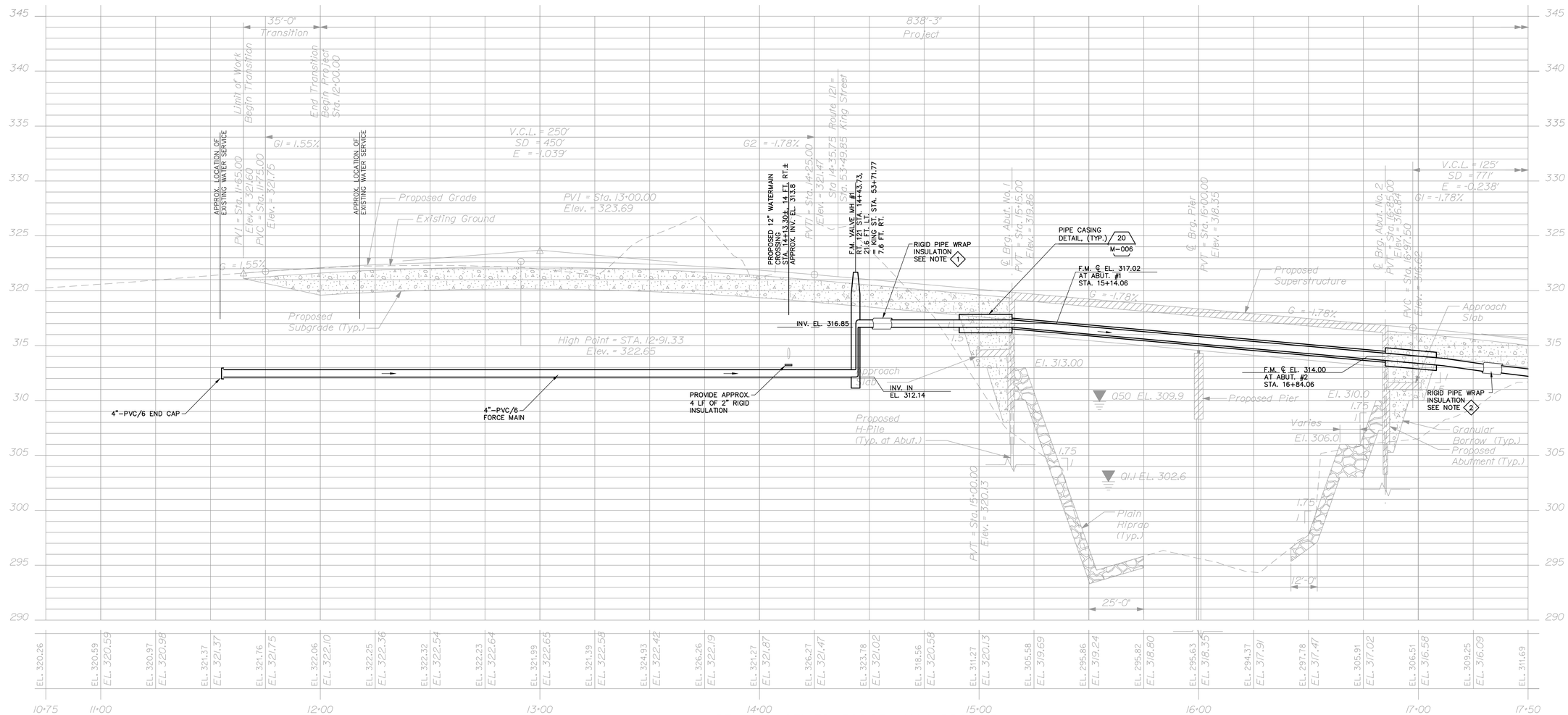

RT. 121 SEWER FORCE MAIN PROFILE

SCALE: 1"=25' HORIZ.
1"=5' VERT.

CIVIL KEYED NOTES

1. FOR 4"-RWW-DI/2 PIPING FROM FORCE MAIN VALVE MH #1, TO ABUTMENT NO. 1, PROVIDE 2" RIGID HIGH DENSITY POLYISOCYANURATE PIPE INSULATION, FULL VAPOR BARRIER, HEAT TRACE, AND 50 MIL FLEXIBLE SHEET MEMBRANE EXTERIOR JACKET DESIGNED FOR DIRECT BURY. INSULATION, VAPOR BARRIER AND JACKET SHALL BE CONTINUOUS. SEE INSULATED PIPE TRENCH DETAIL. TRANSITION TO ALUMINUM JACKET AT ABUTMENT. PROVIDE ALUMINUM JACKET IN EXPOSED AREAS. SEE MECHANICAL DETAILS.

2. FOR 4"-RWW-DI/2 PIPING FROM ABUTMENT NO. 2 TO VALVE MH #2, PROVIDE 2" RIGID HIGH DENSITY POLYISOCYANURATE PIPE INSULATION, FULL VAPOR BARRIER, HEAT TRACE AND 50 MIL FLEXIBLE SHEET MEMBRANE EXTERIOR JACKET DESIGNED FOR DIRECT BURY. INSULATION, VAPOR BARRIER AND JACKET SHALL BE CONTINUOUS. SEE INSULATED PIPE TRENCH DETAIL. PROVIDE ALUMINUM JACKET THROUGH ABUTMENT PENETRATION. PROVIDE ALUMINUM JACKET IN EXPOSED AREAS. SEE MECHANICAL DETAILS.

BID SET

41 Hutchins Drive
Portland, Maine 04102
800.426.4262 | www.woodardcurran.com
WOODARD & CURRAN
COMMITMENT & INTEGRITY DRIVE RESULTS

THIS DOCUMENT IS THE PROPERTY OF WOODARD & CURRAN INC. AND ITS CLIENT. THIS DOCUMENT OR ITS CONTENTS MAY NOT BE REPRODUCED, REVISED, OR DISTRIBUTED WITHOUT WRITTEN PERMISSION.

STATE OF MAINE BRENT M. BRIDGES No. 5217 PROFESSIONAL ENGINEER

REV.	DESCRIPTION	DATE

DESIGNED BY: RTP
DRAWN BY: NTD
CHECKED BY: MKC
225546-C001_C003_ES-001.dwg

RT. 121 SEWER FORCE MAIN PROFILE

TOWN OF OXFORD, MAINE

COVERED BRIDGE OVER LITTLE ANDROSCOGGIN RIVER

JOB NO.: 225546.01
DATE: FEB., 2014
SCALE: AS NOTED
SHEET: OF

C-002

22x34 SHEET 1:1

\\Portland\Projects\225546 Town of Oxford - Preliminary Design\wip\CAD Drawings\MDOT Bridge Crossings\Covered Bridge\Cad drawings\225546-C001_C003_ES-001.dwg, Mar 26, 2014 - 10:58am

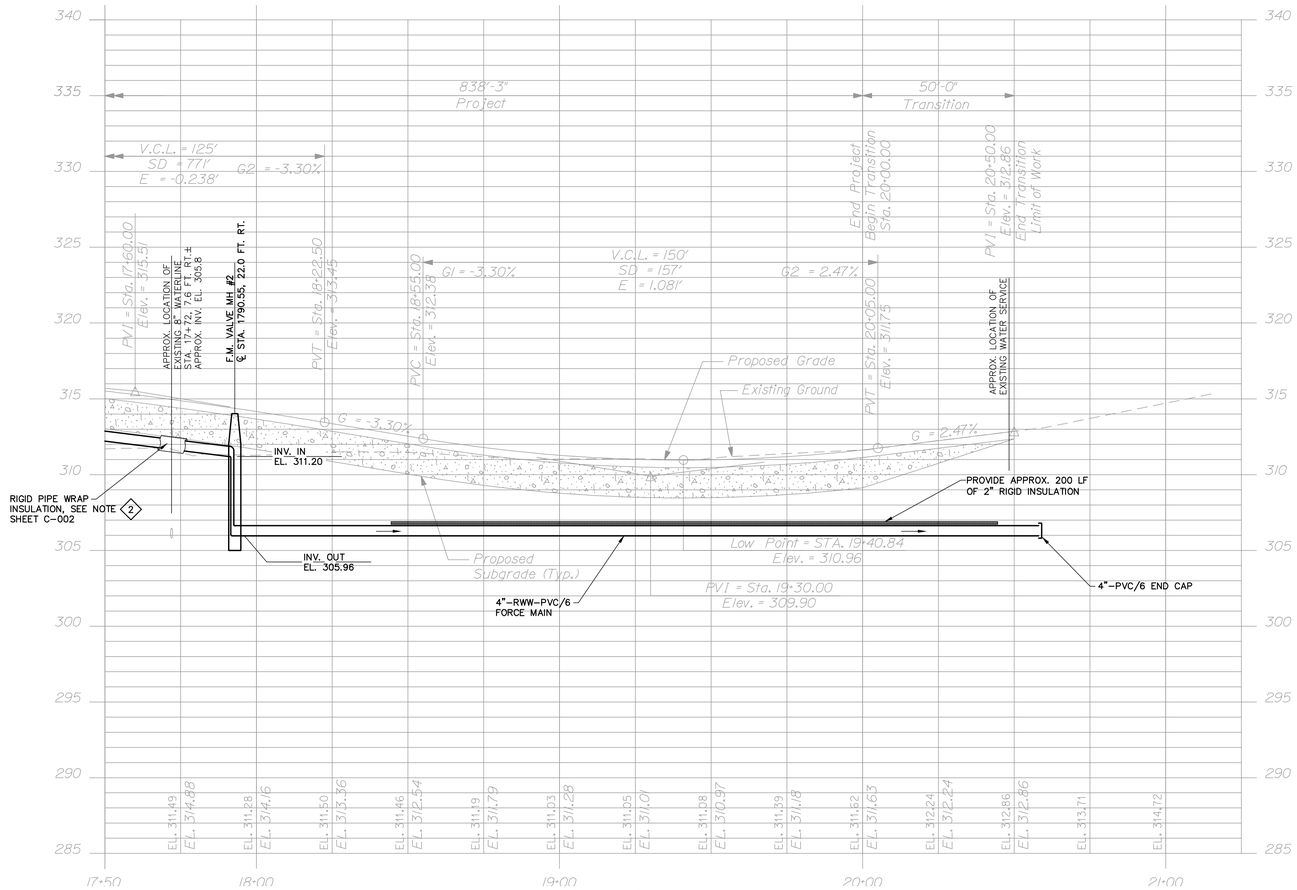

RT. 121 (CONT.) SEWER FORCE MAIN PROFILE

SCALE: 1"=25' HORIZ.
1"=5' VERT.

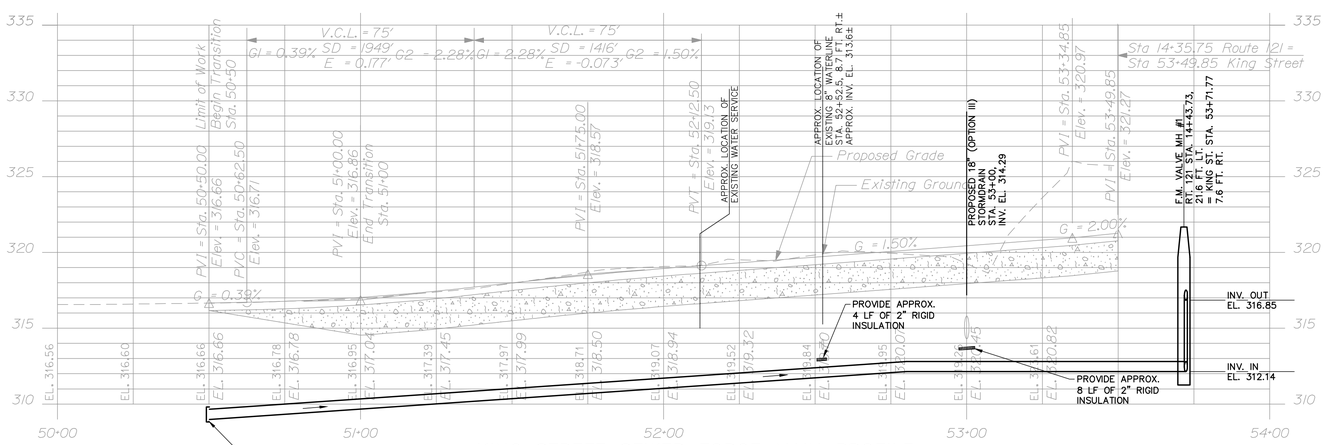

KING STREET SEWER FORCE MAIN PROFILE

SCALE: 1"=25' HORIZ.
1"=5' VERT.

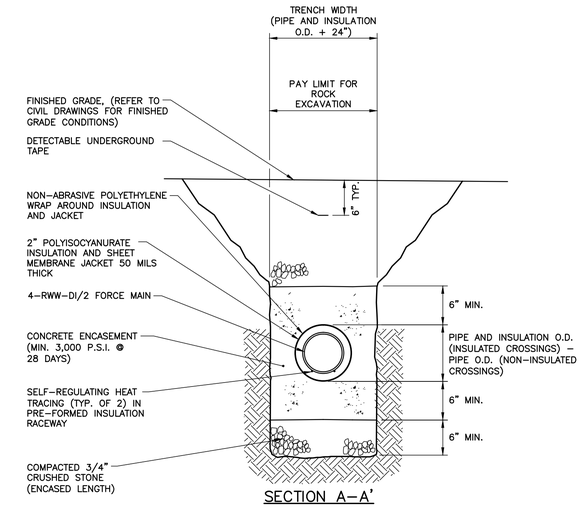

SECTION A-A'

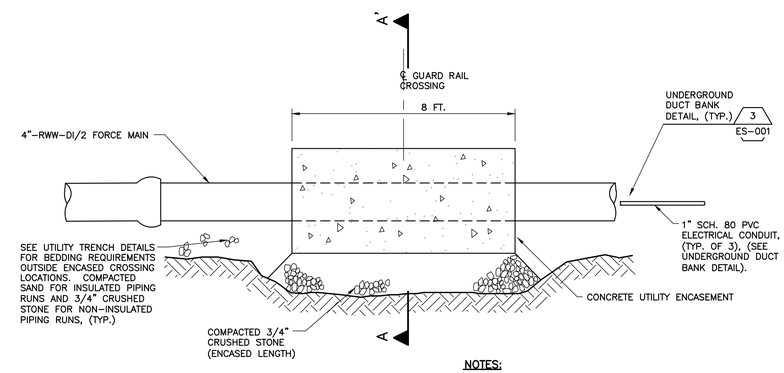

NOTES:

1. CONCRETE ENCASEMENT SHALL BE CENTERED AT GUARD RAIL CROSSINGS.
2. FORCE MAIN PIPE, INSULATION AND JACKET SHALL BE WRAPPED WITH POLYETHYLENE PRIOR TO PLACEMENT OF CONCRETE.
3. PROVIDE COMPACTED 3/4" CRUSHED STONE BEDDING FOR ENCASED CONCRETE SEGMENTS. REFER TO PIPE TRENCH DETAILS FOR BEDDING REQUIREMENTS OUTSIDE ENCASED CROSSING LOCATIONS.
4. PROVIDE UTILITY ENCASEMENT WHERE COVER IS LESS THAN 4'-6" AT ALL GUARD RAIL CROSSING LOCATIONS.
5. REFER TO UNDERGROUND DUCT BANK DETAIL FOR ADDITIONAL REQUIREMENTS AT ELECTRICAL UTILITY CROSSING LOCATIONS.

1 / C-003 CONCRETE UTILITY ENCASEMENT AT GUARD RAIL CROSSINGS

SCALE: N.T.S.

41 Hutchins Drive
Portland, Maine 04102
800.426.4262 | www.woodardcurran.com
WOODARD & CURRAN
COMMITMENT & INTEGRITY DRIVE RESULTS

THIS DOCUMENT, THE PROPERTY OF WOODARD & CURRAN INC., AND THE CLIENT, IS INTENDED FOR THE USE OF THE CLIENT AND MAY NOT BE REPRODUCED, REVISED, OR DISTRIBUTED.

STATE OF MAINE BRENT M. BRIDGES No. 5217 PROFESSIONAL ENGINEER

REV.	DESCRIPTION	DATE

DESIGNED BY: RTP
DRAWN BY: NTD
CHECKED BY: MKC
225546-C001_C003_ES-001.dwg

RT. 121 PROFILE
STA. 17+50 TO STA. 20+50±
AND KING ST. PROFILE
STA. 50+50 TO STA. 53+71.77

TOWN OF OXFORD, MAINE

COVERED BRIDGE OVER
LITTLE ANDROSCOGGIN RIVER

JOB NO.: 225546.01
DATE: FEB. 2014
SCALE: AS NOTED
SHEET: OF

C-003

BID SET

22x34 SHEET
1:1

\\Portland\Projects1\225546 Town of Oxford - Preliminary Design\wip\CAD Drawings\MDOT Bridge Crossings\Covered Bridge\Cad drawings\225546-C001_C003_ES-001.dwg, Mar 26, 2014 - 10:57am

MECHANICAL GENERAL NOTES

1. ALL PROCESS EQUIPMENT, DIMENSIONS, PIPING, SYSTEM LAYOUTS, APPURTENANCES, ETC., HAVE BEEN LAID OUT AND SELECTED BY THE ENGINEER TO ALLOW FOR FUTURE EXPANSION. IF THE CONTRACTOR PROPOSES TO FURNISH EQUIPMENT THAT REQUIRES AND ARRANGEMENT OR SPACE WHICH DIFFERS FROM THAT WHICH HAS BEEN SPECIFIED OR INDICATED ON THE CONTRACT DRAWINGS; THE CONTRACTOR SHALL PREPARE AND SUBMIT DETAILED ARCHITECTURAL, STRUCTURAL, MECHANICAL, PLUMBING, PROCESS AND INSTRUMENTATION, ELECTRICAL, HVAC, AND CONTROL DRAWINGS, EQUIPMENT LISTS, ETC. FOR REVIEW BY THE ENGINEER. A SUBMITTAL SHALL SPECIFICALLY OUTLINE ALL NECESSARY CHANGES AND CONTAIN ALL FEATURES OF THE ALTERNATE EQUIPMENT AND/OR PROCESS SYSTEM WHICH IS BEING PROPOSED TO BE FURNISHED. THE INFORMATION SHALL INCLUDE BUT IS NOT LIMITED TO; PLAN/SECTION DRAWINGS, SCHEMATICS, AND ALL THE NECESSARY APPURTENANCES REQUIRED SUCH AS SUPPLIES, HYDRAULIC SYSTEMS, MAKE-UP WATER SUPPLIES, ELECTRICAL WIRING, CONTROLS, CHEMICAL FEED SYSTEMS, ETC. ANY SUCH CHANGES (IF APPROVED BY THE ENGINEER) SHALL BE AT NO ADDITIONAL COST. THE CONTRACTOR SHALL ASSUME ALL COST AND LIABILITY FOR SATISFACTORILY ACCOMPLISHING ALL NECESSARY CHANGES AS REQUIRED FOR EQUIPMENT AND/OR ARRANGEMENTS WHICH DIFFER FROM THE CONTRACT DOCUMENTS. NO CHANGE IN CONTRACT TIME SHALL BE GRANTED FOR EQUIPMENT AND/OR ARRANGEMENTS WHICH DIFFER FROM THE CONTRACT DOCUMENTS. REFER TO THE CONTRACT SPECIFICATIONS FOR ADDITIONAL DETAILS.
2. DIELECTRIC COUPLINGS, FLANGES, UNIONS, ETC., SHALL BE PROVIDED AT ALL CONNECTIONS OF DISSIMILAR METALLIC PIPING.
3. THE FOLLOWING MECHANICAL DRAWINGS MAY NOT SHOW ALL VALVES, GAUGES, SWITCHES, OPERATORS, DRAINS, VENTS, COUPLINGS, ETC., AS REQUIRED FOR COMPLETE AND OPERATIONAL SYSTEMS. SOME SMALL DIAMETER PIPING RUNS (2" AND SMALLER) MAY NOT BE SHOWN IN THEIR ENTIRETY FOR CLARITY ON THE DRAWINGS. SMALL DIAMETER PIPING IS GENERALLY SHOWN SCHEMATICALLY AND DIAGRAMMATICALLY. THE CONTRACTOR SHALL BE RESPONSIBLE FOR FIELD ROUTING ALL PIPING TO AVOID INTERFERENCES WITH OTHER DISCIPLINES OF CONSTRUCTION. ALL PIPE ROUTING SHALL BE AS APPROVED BY THE ENGINEER. PROVIDE, INSTALL, AND TEST ALL PIPING SYSTEMS AS SPECIFIED AND AS SHOWN ON THE DRAWINGS. ALL PIPING AND APPURTENANCES SHALL BE PROVIDED AND INSTALLED FOR COMPLETE AND OPERATIONAL SYSTEMS.
4. EXTERIOR PIPING IS GENERALLY SHOWN ON THE CIVIL DRAWINGS. FOR CLARITY SOME EXTERIOR PIPING HAS BEEN SHOWN ON THE MECHANICAL DRAWINGS.
5. SIZES OF EQUIPMENT FOUNDATIONS AND CONCRETE PADS WHICH HAVE BEEN INDICATED ON THE DRAWINGS ARE APPROXIMATE. EXACT DIMENSIONS FOR ALL FOUNDATIONS AND CONCRETE PADS SHALL BE DETERMINED BY THE CONTRACTOR IN THE FIELD FOR THE SPECIFIC EQUIPMENT PROVIDED. UNLESS OTHERWISE SPECIFIED OR INDICATED ON THE DRAWINGS ALL FLOOR MOUNTED EQUIPMENT SHALL BE PLACED ON CONCRETE PADS WHICH CONFORM TO THE DETAILS AND REQUIREMENTS SHOWN ON THE DRAWINGS.
6. NOT ALL AND ONLY CERTAIN TYPES OF PIPING SUPPORTS HAVE BEEN SHOWN ON THE DRAWINGS. PIPE SUPPORTS WHICH HAVE BEEN INDICATED ON THE DRAWINGS ARE SHOWN TO CONVEY THE INTENT OF THE DESIGN FOR A PARTICULAR SYSTEM. THE SUPPORTS WHICH HAVE BEEN SHOWN ARE NOT INTENDED TO REPRESENT A COMPLETE SYSTEM. ALL PIPING SUPPORTS, INCLUDING THOSE WHICH HAVE BEEN SHOWN FOR CONCEPTUAL PURPOSES, SHALL BE DESIGNED, FURNISHED, AND INSTALLED BY THE CONTRACTOR AS SPECIFIED AND AS APPROVED BY THE ENGINEER. ALL PIPING WHICH IS ADJACENT TO VALVES, COUPLINGS, INSTRUMENTS, EQUIPMENT, AND APPURTENANCES SHALL BE PROPERLY SUPPORTED AND/OR ANCHORED IN ACCORDANCE WITH THE RECOMMENDATIONS OF THE PIPING MANUFACTURER. ALL PIPING SHALL BE INDEPENDENTLY SUPPORTED. THE SUPPORT OF PIPING FOR OTHER ASSOCIATED PIPING SHALL NOT BE ACCEPTABLE UNDER ANY CIRCUMSTANCES.
7. NOT ALL AND ONLY CERTAIN TYPES OF VALVE AND GATE OPERATORS (EG. HAND WHEELS, CHAIN WHEELS, HAND CRANKS, MOTOR OPERATORS, LEVERS, ETC.) HAVE BEEN SHOWN FOR CLARITY. ALL VALVE AND GATE OPERATORS SHALL BE LOCATED TO ALLOW CONVENIENT AND UNOBSTRUCTED ACCESS FOR OPENING/CLOSING AS REQUIRED. THE FINAL INSTALLED ORIENTATION OF ALL OPERATORS SHALL BE AS APPROVED BY THE ENGINEER. UNDER NO CIRCUMSTANCES SHALL VALVES BE INSTALLED WITH OPERATORS OR STEMS ORIENTED IN THE VERTICAL DOWNWARD POSITION.
8. THE CONTRACTOR SHALL FIELD LOCATE AND PROVIDE TAGS ON ALL PROCESS VALVES. THE PROCESS VALVE IDENTIFICATION NUMBERS AND TAGS SHALL BE AS INDICATED ON THE DRAWINGS. SUBMIT SAMPLE TAG NUMBERING FOR REVIEW PRIOR TO ORDERING.
9. PORTIONS OF NON-PROCESS MECHANICAL PIPING MAY BE SHOWN ON THE MECHANICAL DRAWINGS FOR CLARITY AND COORDINATION BETWEEN DISCIPLINES DURING CONSTRUCTION. REFER TO THE APPROPRIATE DRAWINGS AND/OR SPECIFICATIONS FOR ADDITIONAL DETAILS AND REQUIREMENTS.
10. ALL PROCESS PIPING SYSTEMS SHALL BE PROVIDED WITH VENTS AT HIGH POINTS AND DRAINS AT LOW POINTS. PROVIDE ADDITIONAL VENT AND DRAIN CONNECTIONS AS INDICATED ON THE DRAWINGS. FIELD ROUTE DRAIN PIPING TO END TERMINATION AS DIRECTED BY ENGINEER OR AS INDICATED ON THE DRAWINGS.
11. ALL PIPING SHALL BE INSTALLED SUCH THAT ANY PIPE, LAYER OF PIPING, OR EQUIPMENT CAN BE REMOVED WITHOUT DISTURBING REMAINING/ADJACENT PIPING AND ASSOCIATED PIPE SUPPORTS.
12. UNLESS OTHERWISE SPECIFIED OR INDICATED ON THE DRAWINGS ALL FLOOR, CONCRETE WALL/TANK, AND CMU WALL PENETRATIONS SHALL BE CONSTRUCTED IN ACCORDANCE WITH THE DETAILS SHOWN ON THE DRAWINGS. IF APPROVED BY THE ENGINEER, THE CONTRACTOR MAY SUBSTITUTE ALTERNATE PENETRATION METHODS PROVIDED THAT THEY MEET THE INTENDED DESIGN REQUIREMENTS AND FUNCTIONALITY.
13. THE NUMBER OF UNIONS AND COUPLINGS SHOWN IS APPROXIMATE. THE CONTRACTOR SHALL PROVIDE ALL UNIONS OR DISMANTLING COUPLINGS WHETHER THEY HAVE BEEN SHOWN ON THE DRAWINGS OR NOT. UNIONS AND DISMANTLING COUPLINGS SHALL BE PROVIDED ON ALL PIPING WITH WELDED, THREADED, OR SOLVENT CEMENTED JOINTS: AT ALL EQUIPMENT CONNECTIONS, AT A MINIMUM OF EVERY 50 LINEAR FEET, AND IN BRANCH LINES TO ALLOW CONVENIENT REMOVAL OF PIPING, EQUIPMENT, AND APPURTENANCES. FOR BRIDGE CROSSINGS PROVIDE COUPLINGS AND EXPANSION JOINTS IN LOCATIONS AS SHOWN ON THE DRAWINGS.
14. THE CONTRACTOR SHALL NOTE THAT ALL EXISTING INFORMATION ON THE DRAWINGS IS SHOWN WITH A LIGHTER LINE WEIGHT WITH THE EXCEPTION OF SCANNED IMAGES UTILIZED FROM PREVIOUS CONSTRUCTION PROJECTS. SCANNED IMAGES ARE NOT TO SCALE.
15. ALL BURIED CONNECTIONS TO ALL STRUCTURES SHALL BE PROVIDED WITH SOLID SLEEVE TYPE COUPLINGS LOCATED APPROXIMATELY FOUR (4) FEET FROM THE RESPECTIVE EXTERIOR WALL OF EACH STRUCTURE. SLEEVE TYPE COUPLINGS SHALL ALLOW FOR DIFFERENTIAL SETTLEMENT OF INTERIOR AND EXTERIOR PIPING. ALL COUPLED CONNECTIONS SHALL BE LOCATED ON THE EXTERIOR OF STRUCTURES IN THE YARD. PROVIDE TRANSITION SLEEVE TYPE COUPLINGS AS REQUIRED AND AS INDICATED ON THE DRAWINGS TO ACCOMMODATE PIPING TRANSITIONS OF DIFFERENT SIZES AND MATERIALS. ALL STAINLESS STEEL PIPING SHALL BE CONNECTED USING 304L STAINLESS STEEL SLEEVE COUPLINGS.
16. PROVIDE CAST/DUCTILE IRON WALL CASTINGS, STAINLESS STEEL PIPE SLEEVES, OR HDPE PIPE SLEEVES FOR ALL PIPE PENETRATIONS MADE THROUGH CONCRETE FOUNDATIONS, WALLS, AND SLABS. ALL WALL SLEEVES AND WALL CASTINGS SHALL HAVE INTEGRAL WATER STOPS. REFER TO THE DRAWINGS FOR LOCATIONS OF PENETRATIONS. UNLESS OTHERWISE SPECIFIED OR INDICATED ON THE DRAWINGS, ALL PENETRATIONS THROUGH EXISTING STRUCTURAL WALLS, FOUNDATIONS, AND SLABS SHALL BE CORE DRILLED AND SEALED WITH MECHANICAL SEALS. ALL OPENINGS SHALL BE COMPATIBLE WITH REQUIRED PIPING AND STANDARD SEAL SIZES.
17. ALL FLOW MEASURING ELEMENTS SHALL BE LOCATED A MINIMUM OF FIVE PIPE DIAMETERS UPSTREAM AND THREE PIPE DIAMETERS DOWNSTREAM OF ANY HYDRAULIC DISTURBANCE, EXCEPT IN SITUATIONS WHERE DIMENSIONAL CONSTRAINTS PRECLUDE THE MINIMUM SEPARATION DISTANCES. IN SEPARATION CASES WITH LESS THAN THE MINIMUM, THE CONTRACTOR SHALL CONSULT THE ENGINEER FOR REVIEW OF THE LAYOUT.
18. INSTALL CORPORATION COCKS ON ALL BUILDING AND STRUCTURE INTERIOR PIPING HIGH POINTS TO PREVENT AIR BINDING. THE CONTRACTOR SHALL BE RESPONSIBLE FOR DETERMINING THE EXACT NUMBER AND LOCATION OF ALL CORPORATION COCKS BASED UPON THE INFORMATION PROVIDED IN THE CONTRACT DOCUMENTS AND THE ACTUAL FIELD ROUTING OF PIPING. FIELD VERIFY ALL LOCATIONS WITH THE ENGINEER PRIOR TO INSTALLATION. EACH MANUAL AIR RELEASE SHALL INCLUDE A ½" CORPORATION COCK AND TYPE V26 STAINLESS STEEL BALL VALVE.
19. AFTER INSTALLATION IS COMPLETE ALL PIPING SYSTEMS SHALL BE PRESSURE TESTED. ALL LEAKS OR OTHER ASSOCIATED DEFECTS SHALL BE CORRECTED AND THE PIPING SHALL BE RETESTED AT NO ADDITIONAL COST. TEST PRESSURES WILL BE PROVIDED BY THE ENGINEER FOR EACH SYSTEM. PRESSURE TESTING SHALL BE CONDUCTED FOR A MINIMUM PERIOD OF TWO (2) HOURS FOR EACH PIPING SYSTEM.
20. UNLESS OTHERWISE SPECIFIED OR INDICATED ON THE DRAWINGS; PROVIDE REINFORCED CONCRETE PADS UNDER ALL EQUIPMENT, CONTROL PANELS, PIPE SUPPORTS, EQUIPMENT SUPPORTS, ETC. REFER TO THE MECHANICAL AND STRUCTURAL DRAWINGS FOR PAD LOCATIONS AND ADDITIONAL DETAILS. PROVIDE A MINIMUM THICKNESS OF 4 INCHES. PROVIDE INCREASED PAD THICKNESS AS INDICATED ON THE DRAWINGS.
21. THE CONTRACTOR SHALL NOT SCALE DISTANCES OFF THE DRAWINGS. WRITTEN DIMENSIONS SHALL PREVAIL OVER SCALED DIMENSIONS. REPORT ANY AND ALL DIMENSIONAL DISCREPANCIES TO THE ENGINEER.
22. UNLESS OTHERWISE SPECIFIED OR INDICATED ON THE DRAWINGS; ALL REDUCTION FITTINGS SHALL BE CONCENTRIC TYPE. WHEN SPECIFIED OR INDICATED ON THE DRAWINGS, PROVIDE ECCENTRIC (ECC) REDUCERS. ALL REDUCERS SHALL BE OF THE SAME MATERIAL AS THE CONNECTING PIPING UNLESS OTHERWISE INDICATED. ECCENTRIC REDUCERS IN HORIZONTAL PIPING SHALL BE INSTALLED WITH THE FLAT SIDE UP.
23. ALL PENETRATIONS BETWEEN AREAS CLASSIFIED AS HAZARDOUS (CLASS 1, DIVISION 1 & CLASS 1, DIVISION II) AND UNCLASSIFIED AREAS SHALL BE SEALED "GAS TIGHT".
24. UNLESS OTHERWISE SPECIFIED OR INDICATED ON THE DRAWINGS, ALL "METALLIC" PIPING SHALL BE CONNECTED THROUGH STANDARD ANSI FLANGED CONNECTIONS OR WELDED CONNECTIONS. PLASTIC PIPING CONNECTIONS SHALL BE SOLVENT CEMENT WELDED. PROVIDE FLANGED ATTACHMENTS AS REQUIRED AND AS INDICATED ON THE DRAWINGS FOR CONNECTION TO EQUIPMENT AND APPURTENANCES. UNLESS OTHERWISE SPECIFIED OR INDICATED ON THE DRAWINGS, THE USE OF ALTERNATIVE JOINTING METHODS; INCLUDING BUT NOT LIMITED TO; COUPLINGS, FLANGED ADAPTORS, AND/OR GROOVED "VICTAULIC TYPE" CONNECTIONS SHALL NOT BE ACCEPTABLE WITHOUT PRIOR WRITTEN APPROVAL OF THE ENGINEER.
25. WHERE NEW PIPING IS TO BE CONNECTED TO EXISTING PIPING, THE CONTRACTOR SHALL PROVIDE AND INSTALL ALL ADAPTORS, FITTINGS, AND ADDITIONAL PIPING AS REQUIRED FOR A COMPLETE AND OPERATIONAL SYSTEM. THE USE OF UNI-FLANGES SHALL NOT BE ACCEPTABLE UNLESS OTHERWISE SPECIFIED OR INDICATED ON THE DRAWINGS.
26. UNLESS OTHERWISE SPECIFIED OR INDICATED ON THE DRAWINGS, ALL BURIED PIPING SHALL BE ROUTED TO PENETRATE THROUGH BUILDING FOUNDATION WALLS. ROUTING OF PIPING THROUGH OR UNDER FOOTINGS SHALL NOT BE ACCEPTABLE UNLESS APPROVED IN WRITING BY THE ENGINEER. ROUTE PIPE UP VERTICALLY FOR A LENGTH AS REQUIRED AND PROVIDE ALL FITTINGS AND APPURTENANCES TO ALLOW FOR A PERPENDICULAR 90 DEGREE PENETRATION WITH THE RESPECTIVE BUILDING FOUNDATION WALL. PROVIDE 2 INCH RIGID FOAM INSULATION AS REQUIRED FOR ALL PIPING WHICH HAS LESS THAN SIX (6) FEET OF COVER. REFER TO THE CIVIL DRAWINGS FOR ADDITIONAL DETAILS AND REQUIREMENTS. FIELD VERIFY THE LOCATION OF ALL PENETRATIONS WITH THE ENGINEER.

VALVE SYMBOLS

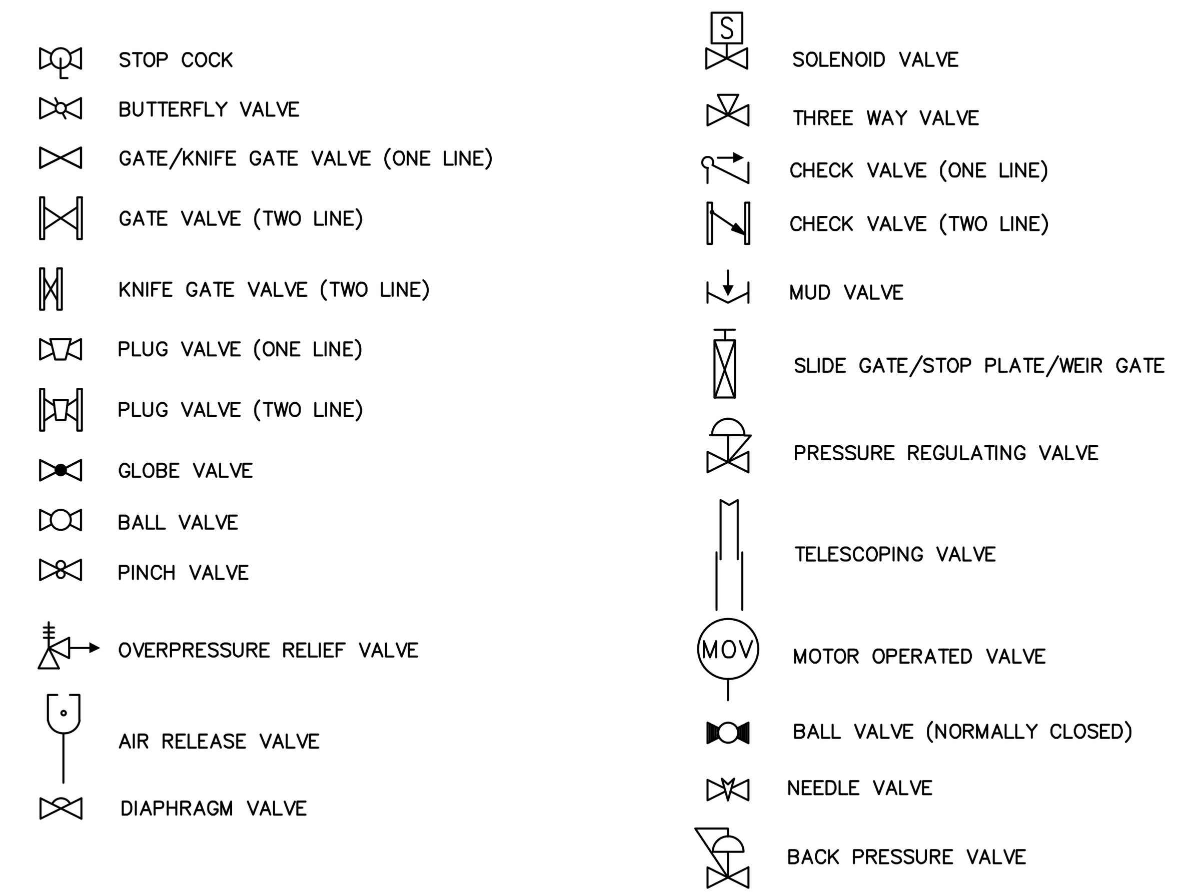

VALVE, STRAINER & COUPLING TAG SYMBOL KEY

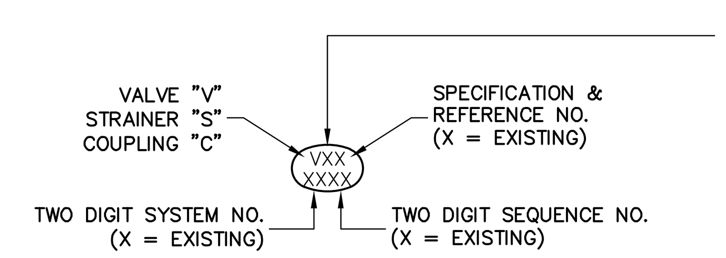

1	GATE	6	CHECK
2	BALL	7	ANGLE
3	BUTTERFLY	8	PINCH OR DIAPHRAGM
4	PLUG	9	3-WAY OR 4-WAY
5	GLOBE/NEEDLE	0	SPECIAL (SEE SPECIFICATIONS)

VALVE AND PIPE DESIGNATIONS/ABBREVIATIONS

FLUID DESIGNATIONS

AE – AERATION TANK EFFLUENT
AS – ALUMINUM SULFATE
BIS – SODIUM BISULFITE
BYP – BYPASS LINE
CN – CENTRATE
CW – POTABLE CITY WATER (COLD)
DRN – DRAIN
DS – DEWATERED SLUDGE (CAKE)
EFF – FINAL EFFLUENT
FCL – FERRIC CHLORIDE
FES – FINAL EFFLUENT SAMPLE
GRT – GRIT SLURRY
HWE – HEADWORKS EFFLUENT
HYP – SODIUM HYPOCHLORITE
IR – INTERNAL RECYCLE
IS – INFLUENT SAMPLE
LPA – LOW PRESSURE AIR
ML – MIXED LIQUOR
NPW – PLANT WATER (TREATED EFFLUENT)
OD – ODOROUS AIR "FOUL"
OV – OVERFLOW
OX – OXIDANT CHEMICAL
P – PERMEATE
PE – PRIMARY EFFLUENT
PL – POLYMER SOLUTION
PSC – PRIMARY SCUM
PSL – PRIMARY SLUDGE
RCW – RECYCLED WATER
RAS – RETURN ACTIVATED SLUDGE
RIF – RAW INFLUENT WASTE WATER
RWW – RAW WASTE WATER
SC – SCUM
SCR – SCREENINGS
SD – STORM DRAIN
SE – SECONDARY EFFLUENT
SEP – SEPTAGE
SH – SODIUM HYDROXIDE (CAUSTIC)
SN – SUPERNATANT
SPD – SUMP PUMP DISCHARGE
SS – SANITARY SEWER
SSC – SECONDARY SCUM
SSL – SECONDARY SLUDGE
SW – SEAL WATER
TE – TERTIARY EFFLUENT
TKD – TANK DRAIN
TSL – TERTIARY SLUDGE
TW – POTABLE TOWN WATER (COLD)
UD – UNDERDRAIN
V – VENT
WAS – WASTE ACTIVATED SLUDGE

EQUIPMENT DESIGNATIONS

AC – AIR COMPRESSOR
AG – AGITATOR
B – BLOWER
CBA – COARSE BUBBLE AERATION SYSTEM
CC – CROSS COLLECTOR
CF – CENTRIFUGE
CV – CONVEYOR
CY – GRIT CYCLONE
D – DECANTER
DC – DAVIT CRANE
EF – EXHAUST FAN
EUH – ELECTRIC UNIT HEATER
FA – FLOATING AERATOR
FBA – FINE BUBBLE AERATION SYSTEM
FM – FLOATING MIXER
G – GRINDER
GC – GRIT CLASSIFIER
GN – GENERATOR
H – HEATER
HD – HEAT DETECTOR
HT – HEAT TRACING
ICM – INDUCTION CHEMICAL MIXER
M – MOTOR
MC – MACERATOR
MOD – MOTOR OPERATED DAMPER
MV – MOTOR-OPERATED VALVE
MX – MIXER (VERTICAL SHAFT)
O – ODOR CONTROL SYSTEM
P – PUMP
PC – PRIMARY CLARIFIER
PL – POLYMER FEED SYSTEM
S – SCREEN
SC – SECONDARY CLARIFIER
SD – SMOKE DETECTOR
SCL – SCUM COLLECTOR
SG – SLIDE GATE
SLG – SLUICE GATE
SM – SUBMERSIBLE MIXER
SMP – SAMPLER
SP – STOP PLATE
SRS – SEPTAGE RECEIVING STATION
T – TANK
WG – WEIR GATE
WP – WASH PRESS

GENERAL ABBREVIATIONS

ACFM – ACTUAL CUBIC FEET PER MINUTE
AFF – ABOVE FINISHED FLOOR
ALGNMT – ALIGNMENT
BF – BLIND FLANGE
ECC – ECCENTRIC
EL – ELEVATION
FF – FINISHED FLOOR
FLG – FLANGE
FL – FLOOR
FS – FLOW SWITCH
GPD – GALLONS PER DAY
GPH – GALLONS PER HOUR
GPM – GALLONS PER MINUTE
HB – HOSE BIB
HWL – HIGH WATER LEVEL
ICFM – INLET CUBIC FEET PER MINUTE
INCL – INCLUDED WITH PURCHASED EQUIPMENT
INV – INVERT
LWL – LOW WATER LEVEL
MGD – MILLION GALLONS PER DAY
HB – HOSE BIB
HWL – HIGH WATER LEVEL
ICFM – INLET CUBIC FEET PER MINUTE
INCL – INCLUDED WITH PURCHASED EQUIPMENT
INV – INVERT
LWL – LOW WATER LEVEL
MGD – MILLION GALLONS PER DAY
MG/L – MILLIGRAMS PER LITER
MHW – MEAN HIGH WATER
MJ – MECHANICAL JOINT
MLW – MEAN LOW WATER
MSL – MEAN SEA LEVEL
NTS – NOT TO SCALE
O.L. – OVERLOAD
OC – ON CENTER
PE – PLAIN END
PLC – PROGRAMMABLE LOGIC CONTROLLER
PPD – POUND PER DAY
PSIA – POUNDS PER SQUARE INCH ABSOLUTE
PSIG – GAUGE POUNDS PER SQUARE INCH
RED – REDUCER
SCFM – CUBIC FEET PER MINUTE (STANDARD CONDITIONS)
SCH – SCHEDULE
SP – SET POINT (TYPICAL)
STDBY – STANDBY
TDH – TOTAL DYNAMIC HEAD
TYP – TYPICAL
UNO – UNLESS NOTED OTHERWISE
VCP – VENDOR SUPPLIED CONTROL PANEL
WS – WATER SURFACE
mA – MILLIAMP

PIPE MATERIALS

CU/1 – COPPER PIPE & TUBING
DI/1 – DUCTILE IRON PIPE (FLANGED)
DI/2 – DUCTILE IRON PIPE (MECHANICAL JOINT)
PVC/1 – PVC PIPE (SOCKET WELDED)
PVC/2 – PVC TUBING
PVC/3 – PVC DOUBLE CONTAINMENT PIPE
PVC/4 – PVC PIPE (CPVC)
PVC/5 – PVC PIPE (BURIED GRAVITY FLOW)
PVC/6 – PVC PIPE (BURIED FORCE MAIN)
SS/1 – STAINLESS STEEL PIPE (SCH. 10S)
SS/2 – STAINLESS STEEL PIPE (SCH. 40)
SS/3 – STAINLESS STEEL TUBING
SS/4 – STAINLESS STEEL HOSE
CS/1 – CARBON STEEL PIPE
GCS/X – GALVANIZED CARBON STEEL PIPE (EXISTING)
PE/1 – POLYETHYLENE PIPING (SOCKET WELDED)
PE/2 – POLYETHYLENE TUBING (HIGH DENSITY)
PE/3 – POLYETHYLENE TUBING (LOW DENSITY)
PE/4 – POLYETHYLENE PIPING (BURIED)

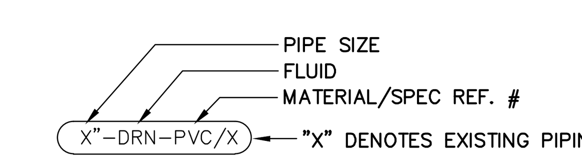

VALVE, STRAINER & COUPLING TYPE LISTING

SPECIALTY VALVES (TYPE V0#)

V00 – BACK PRESSURE VALVE
V01 – METALLIC PRESSURE REGULATING VALVE
V02 – PVC PRESSURE REGULATING VALVE
V03 – BACK FLOW PREVENTER (RPZ)
V04 – METALLIC PRESSURE RELIEF VALVE
V05 – PVC PRESSURE RELIEF VALVE
V06 – WASTEWATER AIR RELEASE VALVE
V07 – WASTEWATER AIR & VACUUM VALVE
V08 – WASTEWATER COMBINATION AIR VALVE
V09 – TELESCOPING VALVE

GATE VALVES (TYPE V1#)

V10 – KNIFE GATE VALVE (RESILIENT SEATED)
V11 – KNIFE GATE VALVE (METAL SEATED)
V12 – GATE VALVE (RESILIENT SEATED)
V13 – GATE VALVE (METAL SEATED)
V14 – BURIED GATE VALVE (RESILIENT SEATED)
V15 – BURIED GATE VALVE (DOUBLE METAL DISK)
V16 – PVC GATE VALVE
V17 – BURIED INSERTION GATE VALVE (RESILIENT SEATED)
V18 – NOT USED
V19 – NOT USED

BALL VALVES (TYPE V2#)

V20 – PVC BALL VALVE (TRUE UNION SOCKET)
V21 – PVC BALL VALVE (FLANGED)
V22 – PVC BALL VALVE (THREADED)
V23 – METALLIC BALL VALVE (FLANGED)
V24 – METALLIC BALL VALVE (THREADED)
V25 – STAINLESS STEEL BALL VALVE (FLANGED)
V26 – STAINLESS STEEL BALL VALVE (THREADED)
V27 – NOT USED
V28 – NOT USED
V29 – NOT USED

BUTTERFLY VALVES (TYPE V3#)

V30 – METALLIC BUTTERFLY VALVE (LIQUID SERVICE)
V31 – METALLIC BUTTERFLY VALVE (LIQUID SERVICE >24")
V32 – METALLIC BUTTERFLY VALVE (AIR SERVICE)
V33 – PVC BUTTERFLY VALVE (LIQUID SERVICE)
V34 – PVC BUTTERFLY VALVE (AIR "DAMPER" SERVICE)
V35 – METALLIC BUTTERFLY VALVE (BURIED LIQUID SERVICE)
V36 – METALLIC BUTTERFLY VALVE (BURIED AIR SERVICE)
V37 – NOT USED
V38 – NOT USED
V39 – NOT USED

PLUG VALVES (TYPE V4#)

V40 – METALLIC PLUG VALVE (FLANGED)
V41 – BURIED PLUG VALVE (MECHANICAL JOINT)
V42 – MUD VALVE (PLUG TYPE DRAIN VALVE)
V43 – NOT USED
V44 – NOT USED
V45 – NOT USED
V46 – NOT USED
V47 – NOT USED
V48 – NOT USED
V49 – NOT USED

GLOBE & NEEDLE VALVES (TYPE V5#)

V50 – METALLIC GLOBE VALVE
V51 – PVC GLOBE VALVE
V52 – METALLIC NEEDLE VALVE
V53 – NOT USED
V54 – NOT USED
V55 – NOT USED
V56 – NOT USED
V57 – NOT USED
V58 – NOT USED
V59 – NOT USED

CHECK VALVES (TYPE V6#)

V60 – PVC BALL CHECK VALVE
V61 – PVC SWING CHECK VALVE
V62 – METALLIC SWING CHECK VALVE
V63 – METALLIC FLAP CHECK VALVE
V64 – DOUBLE DISK SWING CHECK VALVE
V65 – SLANTING DISK SWING CHECK VALVE
V66 – WAFER STYLE SILENT CHECK VALVE
V67 – GLOBE STYLE SILENT CHECK VALVE
V68 – METALLIC BALL CHECK VALVE
V69 – DUCK BILL CHECK VALVE

PINCH & DIAPHRAGM VALVES (TYPE V8#)

V80 – PVC DIAPHRAGM VALVE
V81 – METALLIC PINCH VALVE (CLOSED BODY)
V82 – NOT USED
V83 – NOT USED
V84 – NOT USED
V85 – NOT USED
V86 – NOT USED
V87 – NOT USED
V88 – NOT USED
V89 – NOT USED

STRAINERS (TYPE S0#)

S01 – PVC Y-STRAINER (CLEAR)
S02 – METALLIC Y-SRAINER
S03 – PVC SIMPLEX BASKET STRAINER
S04 – METALLIC SIMPLEX BASKET STRAINER
S05 – PVC DUPLEX BASKET STRAINER
S06 – METALLIC DUPLEX BASKET STRAINER
S07 – WATER FILTER
S08 – NOT USED
S09 – NOT USED
S10 – NOT USED

COUPLINGS (TYPE C##)

C01 – SOLID SLEEVE TYPE COUPLINGS
C02 – FLEXIBLE SLEEVE TYPE COUPLINGS
C03 – FLEXIBLE SPLIT RING GROOVED END COUPLINGS
C04 – FLEXIBLE SPLIT RING SHOULDERED END COUPLINGS
C05 – RIGID SPLIT RING GROOVED END COUPLINGS
C06 – RIGID SPLIT RING SHOULDERED END COUPLINGS
C07 – SLEEVE TYPE FLANGED ADAPTORS
C08 – STAINLESS STEEL SLEEVE TYPE FLANGED ADAPTORS
C09 – SHORT BODY FLANGED ADAPTORS
C10 – SPLIT TYPE FLANGED ADAPTORS
C11 – LIQUID SERVICE EXPANSION JOINTS (FILLED ARCH)
C12 – AIR SERVICE EXPANSION JOINTS (BELLOWS STYLE)
C13 – QUICK CONNECT COUPLINGS
C14 – RESTRAINED MECHANICAL JOINT COUPLINGS
C15 – DUCTILE IRON EXPANSION JOINT

MECHANICAL DETAIL REFERENCE

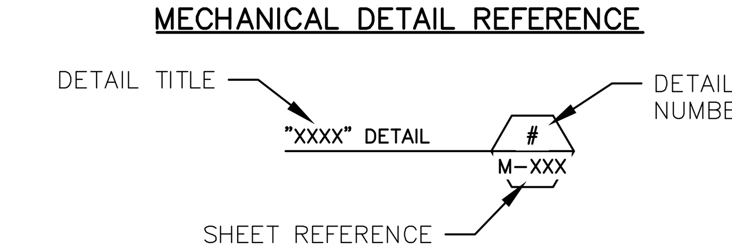

PROCESS PIPE INSULATION TYPE LISTING

I/1 – FIBROUS GLASS PIPE INSULATION
I/2 – ELASTOMERIC FOAM PIPE INSULATION
I/3 – MINERAL WOOL PIPE INSULATION
I/4 – POLYISOCYANURATE PIPE INSULATION

INSULATION JACKET TYPE LISTING

J/1 – PVC INSULATION JACKET
J/2 – ALUMINUM INSULATION JACKET
J/3 – STAINLESS STEEL JACKET
J/4 – SHEET MEMBRANE JACKET

BID SET

41 Hutchins Drive
Portland, Maine 04102
800.426.4262 | www.woodardcurran.com
COMMITMENT & INTEGRITY DRIVE RESULTS
WOODARD & CURRAN

THIS DOCUMENT IS THE PROPERTY OF WOODARD & CURRAN INC. AND ITS CLIENT. REPRODUCTION OR MODIFICATION WITHOUT WRITTEN PERMISSION IS PROHIBITED.

STATE OF MAINE – BRENT M. BRIDGES – No. 5217 – LICENSED – PROFESSIONAL ENGINEER

REV						DESCRIPTION	DATE

DESIGNED BY: RTP | CHECKED BY: MKC
DRAWN BY: NTD | 225546-M001.dwg

MECHANICAL LEGEND, ABBREVIATIONS AND NOTES

TOWN OF OXFORD, MAINE

COVERED BRIDGE OVER LITTLE ANDROSCOGGIN RIVER

JOB NO.: 225546.01
DATE: FEB., 2014
SCALE: AS NOTED
SHEET: OF

M-001

\\Portland\Projects1\225546 Town of Oxford - Preliminary Design\wip\CAD Drawings\MDOT Bridge Crossings\Covered Bridge\Cad drawings\225546-M001.dwg, Mar 26, 2014 - 11:04am

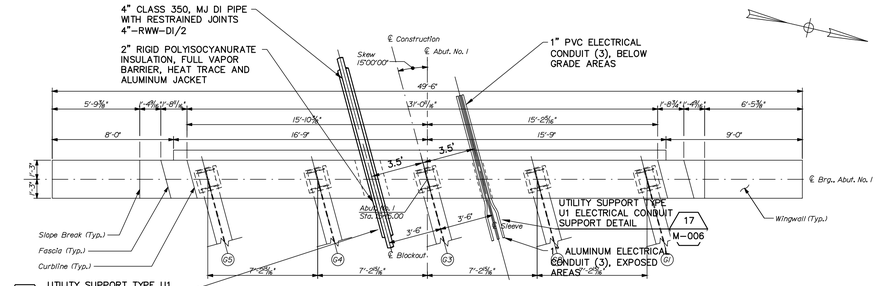

FORCE MAIN THRU ABUTMENT #1 PLAN

SCALE: 1"=5'

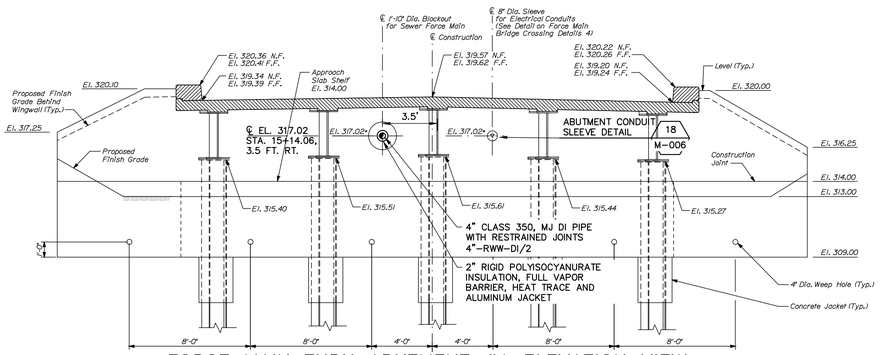

FORCE MAIN THRU ABUTMENT #1 ELEVATION VIEW

SCALE: 1"=5'

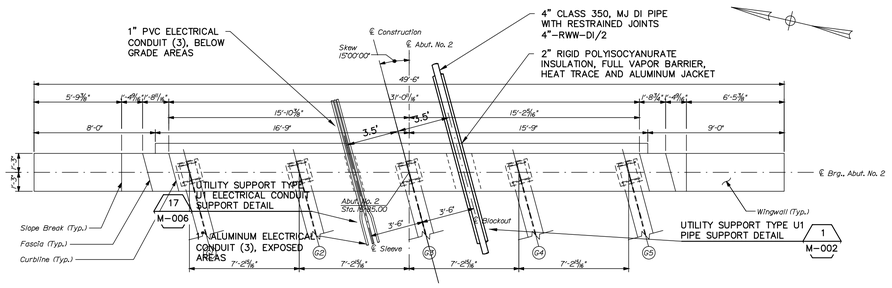

FORCE MAIN THRU ABUTMENT #2 PLAN

SCALE: 1"=5'

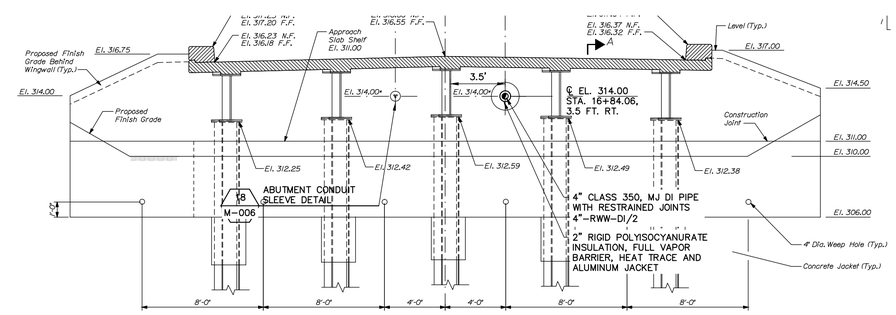

FORCE MAIN THRU ABUTMENT #2 ELEVATION VIEW

SCALE: 1"=5'

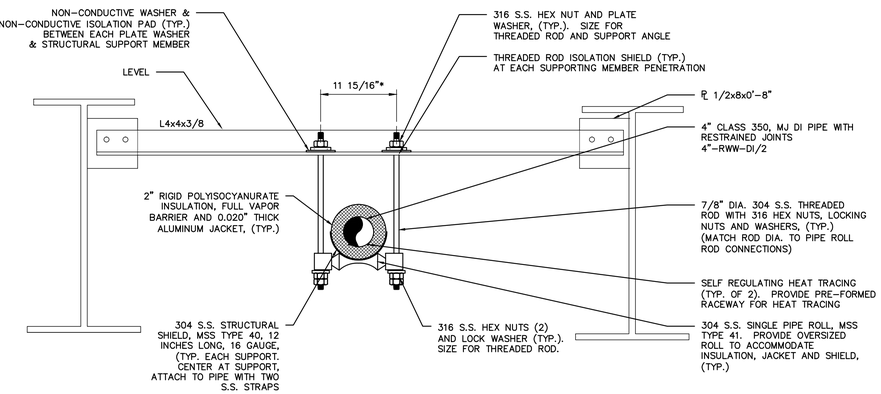

UTILITY SUPPORT TYPE U1 PIPE SUPPORT DETAIL

1 / M-002

SCALE: 1"=1'-0"

MECHANICAL GENERAL NOTES

1. FOR "*" DIMENSIONS, FIELD VERIFY WITH SUPPORT SHOP DRAWINGS.
2. VAPOR BARRIER, INSULATION AND JACKETING SHALL BE CONTINUOUS THROUGH EACH SUPPORT.
3. PROVIDE 0.020" THICK ALUMINUM JACKET IN EXPOSED ABOVE GRADE AREAS. PROVIDE HEAVY DUTY .50 MIL VAPOR BARRIER SHEET MEMBRANE JACKET SUITABLE FOR DIRECT BURY IN BELOW GRADE AREAS.
4. SEAL ALL SEAMS IN VAPOR BARRIER WITH VAPOR BARRIER TAPE.
5. SEE FRAMING PLAN FOR UTILITY SUPPORT SPACING.

BID SET

WOODARD & CURRAN
41 Hutchins Drive
Portland, Maine 04102
800.426.4262 | www.woodardcurran.com
COMMITMENT & INTEGRITY DRIVE RESULTS

THIS DOCUMENT IS THE PROPERTY OF WOODARD & CURRAN INC. AND ITS CLIENT. REPRODUCTION OR USE WITHOUT WRITTEN PERMISSION IS PROHIBITED.

STATE OF MAINE BRENT M. BRIDGES No. 5217 PROFESSIONAL ENGINEER

REV	DESCRIPTION	DATE

DESIGNED BY: RTP
DRAWN BY: NTD
CHECKED BY: MKC
225546-M002_M006.dwg

FORCE MAIN BRIDGE CROSSING ABUTMENT PLANS AND ELEVATIONS AND PIPE SUPPORT DETAILS

TOWN OF OXFORD, MAINE

COVERED BRIDGE OVER LITTLE ANDROSCOGGIN RIVER

JOB NO.: 225546.01
DATE: FEB., 2014
SCALE: AS NOTED
SHEET: OF

M-002

\\Portland\Projects1\225546 Town of Oxford - Preliminary Design\wip\CAD Drawings\MDOT Bridge Crossings\Covered Bridge\Cad drawings\225546-M002_M006.dwg, Mar 26, 2014 - 11:00am

22x34 SHEET
1:1

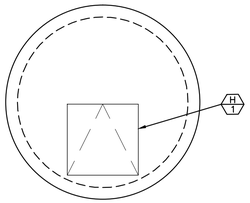

FORCE MAIN VALVE MANHOLE #1 PLAN AT GRADE

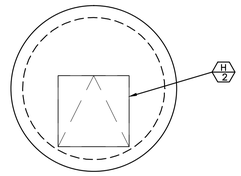

FORCE MAIN VALVE MANHOLE #2 PLAN AT GRADE

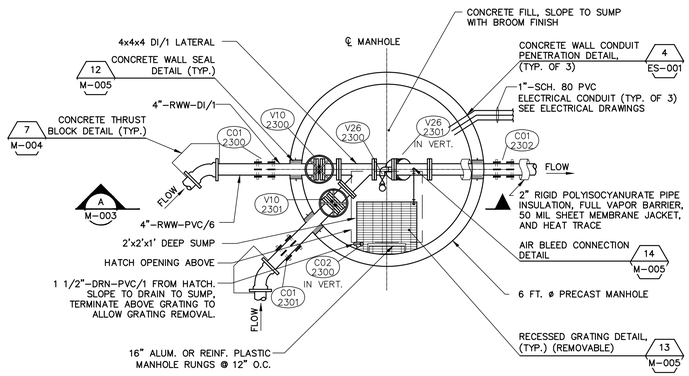

FORCE MAIN VALVE MANHOLE #1 PLAN

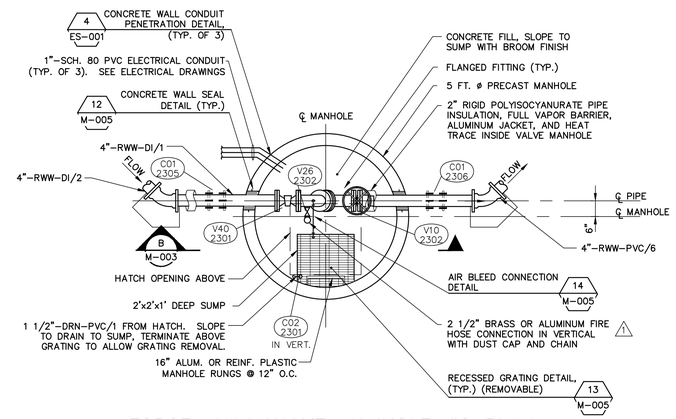

FORCE MAIN VALVE MANHOLE #2 PLAN

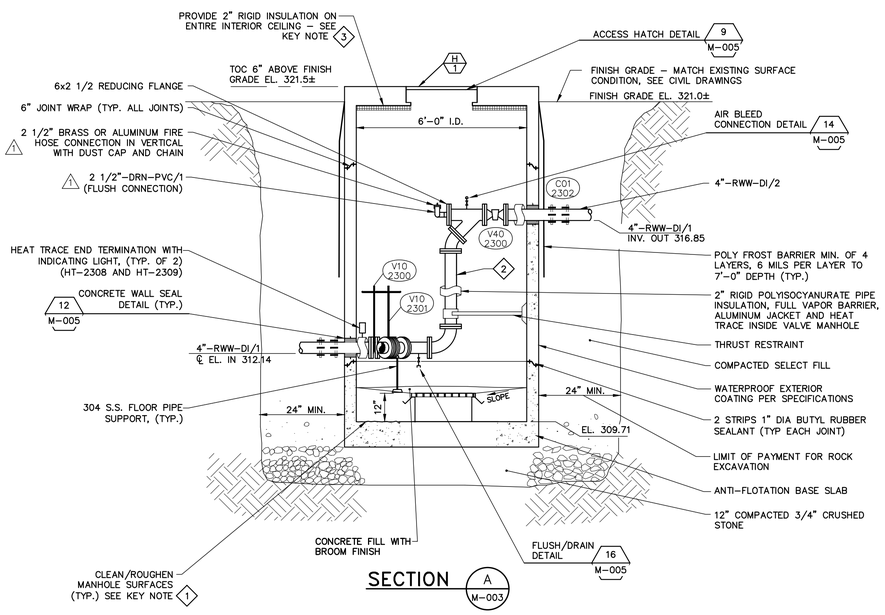

SECTION A M-003

2 C-001 FORCE MAIN VALVE MANHOLE #1 DETAIL

SCALE: N.T.S.

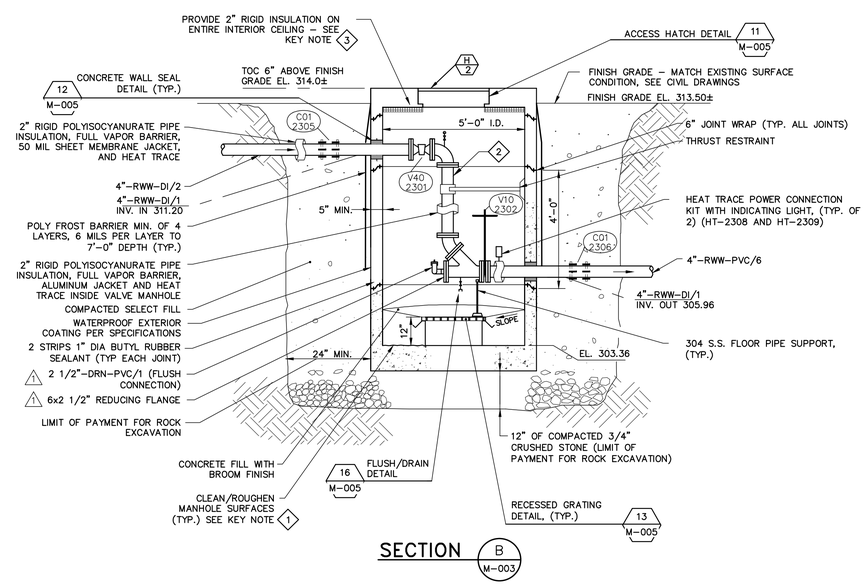

SECTION B M-003

3 C-001 FORCE MAIN VALVE MANHOLE #2 DETAIL

SCALE: N.T.S.

MECHANICAL KEYED NOTES

1. CLEAN AND ROUGHEN ALL CONCRETE SURFACES PRIOR TO POURING CONCRETE FILL. APPLY EPOXY BONDING COMPOUND TO CLEANED AND ROUGHENED SURFACES PRIOR TO POURING CONCRETE FILL.
2. PROVIDE A TWO PART EPOXY COATING FOR ALL TYPE DI/1 PIPING AND FITTINGS INSIDE VALVE MANHOLES.
3. MECHANICALLY ATTACH ALL INTERIOR RIGID INSULATION WITH INSULATION FASTENERS. PROVIDE HILTI X-IE INSULATION FASTENERS, OR ENGINEER APPROVED EQUAL. AT CORNERS ATTACH @ 12" FROM EDGE. ATTACH AT APPROXIMATELY 3"-6" O.C. E.W. THEREAFTER. FIELD TRIM INSULATION AROUND ACCESS HATCH OPENING AND PIPING.

MECHANICAL GENERAL NOTES

1. PROVIDE A MINIMUM 6" CLEAR BETWEEN PIPE PENETRATIONS AND PRECAST STRUCTURE JOINTS.
2. FILL ALL BOLT AND LIFTING POCKETS WITH NON-SHRINK GROUT FOR CORROSION PREVENTION.
3. PROVIDE TWO COATS OF BITUMINOUS DAMP-PROOFING ON ENTIRE EXTERIOR OF STRUCTURES BELOW GRADE.
4. ALL PRECAST STRUCTURES SHALL BE HYDROSTATICALLY TESTED PER (ACI 350.1-01), CHAPTER 2, HST-VIO. HYDROSTATIC TESTING SHALL BE WITNESSED BY ENGINEER. ALL HYDROSTATIC TESTING SHALL BE COMPLETED TO THE SATISFACTION OF ENGINEER PRIOR TO BACKFILL OF STRUCTURES. PROVIDE ALL LABOR, WATER, PUMPING EQUIPMENT, PIPING AND RELATED APPURTENANCES FOR TESTING. WASTEWATER SHALL NOT BE USED FOR TESTING. PROVIDE DISPOSAL OF TEST WATER.
5. PROVIDE 304-S.S. PIPE SUPPORTS IN VALVE STRUCTURES.

WOODARD & CURRAN
41 Hutchins Drive
Portland, Maine 04102
800.426.4262 | www.woodardcurran.com
COMMITMENT & INTEGRITY DRIVE RESULTS

THIS DOCUMENT IS THE PROPERTY OF WOODARD & CURRAN INC. AND THE CLIENT. REPRODUCTION OR USE FOR ANY PURPOSE OTHER THAN THOSE AUTHORIZED BY WOODARD & CURRAN INC. IS FORBIDDEN.

STATE OF MAINE BRENT M. BRIDGES No. 5217 PROFESSIONAL ENGINEER

REV		DATE
1	ADD. 1 – 2 1/2" FIRE HOSE CONNECTION	2014.04.02

DESIGNED BY: RTP
DRAWN BY: NTD
CHECKED BY: MKC
225546-M002_M006.dwg

FORCE MAIN BRIDGE CROSSING DETAILS 1

TOWN OF OXFORD, MAINE

COVERED BRIDGE OVER LITTLE ANDROSCOGGIN RIVER

JOB NO.: 225546.01
DATE: FEB., 2014
SCALE: AS NOTED
SHEET: OF

M-003

BID SET

\\Portland\Projects1\225546 Town of Oxford - Preliminary Design\wip\CAD Drawings\MDOT Bridge Crossings\Covered Bridge\Cad drawings\225546-M002_M006.dwg, Apr 02, 2014 - 3:10pm

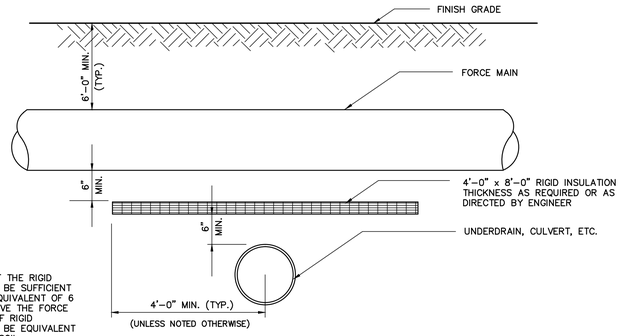

NOTE:
THE THICKNESS OF THE RIGID INSULATION SHALL BE SUFFICIENT TO PROVIDE AN EQUIVALENT OF 6 FEET OF SOIL ABOVE THE FORCE MAIN. ONE INCH OF RIGID INSULATION SHALL BE EQUIVALENT TO ONE FOOT OF SOIL.

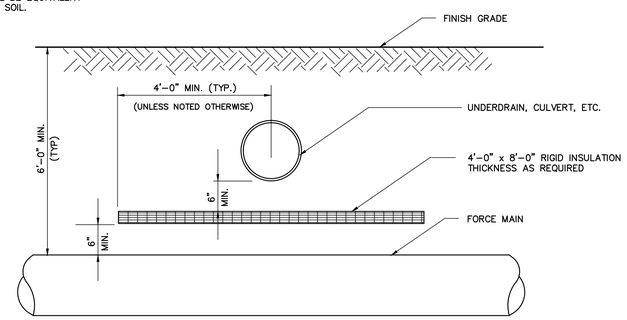

4 / M-004 TYPICAL PIPE CROSSING INSULATION DETAIL

SCALE: N.T.S.

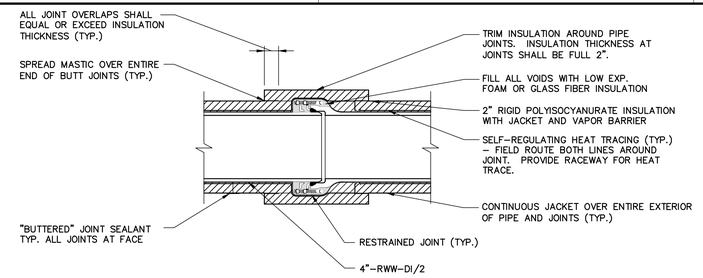

5 / M-004 INSULATED PIPE JOINT DETAIL

SCALE: N.T.S.

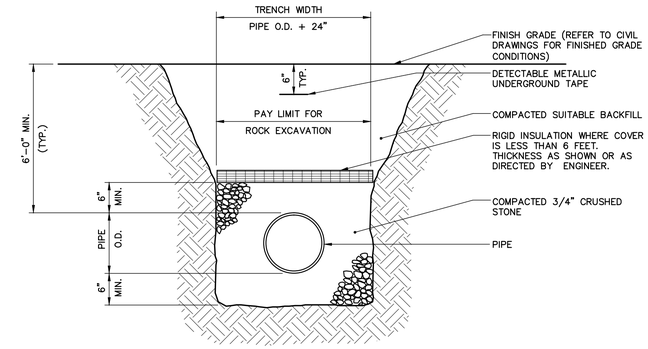

NOTES:

1. MAINTAIN UNIFORM TRENCH WIDTH TO 6" OVER PIPE.
2. 1" OF INSULATION IS EQUAL TO ONE FOOT OF COVER.
3. PER MDOT REGULATIONS FOR PIPES INSTALLED BENEATH STATE ROADS, SEPARATION GEOTEXTILE FABRIC MUST BE INSTALLED ABOVE ALL CRUSHED STONE BEDDING AROUND PIPES, PRIOR TO BACK FILLING.
4. PROVIDE FINISHED GRADE CONDITIONS AS SHOWN ON THE CIVIL DRAWINGS.
5. PROVIDE 4" LOAM AND SEED FOR TRENCH IN NON-PAVED AREAS.

9 / M-004 TYPICAL PIPE TRENCH DETAIL

SCALE: N.T.S.

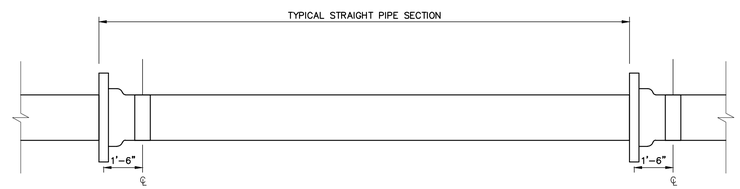

FORCE MAIN PIPE SUPPORT SPACING KEY (STRAIGHT PIPE SEGMENTS)

6 / M-004

SCALE: N.T.S.

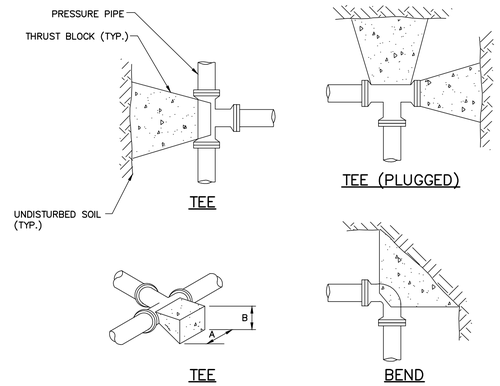

TABLE 1: 4" THRU 10" FITTINGS				
SOIL TYPE	TEES		BENDS	
	A	B	A	B
SOFT CLAY	48"	24"	48"	24"
SAND	24"	24"	24"	24"
GRAVEL	24"	18"	24"	18"

TABLE 2: 12" THRU 16" FITTINGS				
SOIL TYPE	TEES		BENDS	
	A	B	A	B
SOFT CLAY	60"	36"	72"	36"
SAND	36"	30"	48"	30"
GRAVEL	30"	24"	40"	24"

NOTES:

1. CONCRETE FOR ALL THRUST BLOCKS SHALL BE MINIMUM 3,000 PSI., 28 DAY STRENGTH, TYPE I CEMENT, 3/4" STONE.
2. WHERE POSSIBLE, CONSTRUCT THRUST BLOCKS AGAINST UNDISTURBED SOIL. WHERE NOT POSSIBLE, PLACE FILL BETWEEN THE THRUST BLOCK AND THE UNDISTURBED SOIL COMPACTED TO 90% STANDARD PROCTOR DENSITY.
3. WRAP FITTINGS WITH POLYETHYLENE PRIOR TO CONSTRUCTING THRUST BLOCKS. NO JOINTS SHALL BE COVERED WITH CONCRETE.
4. THRUST BLOCK DIMENSIONS ARE BASED ON A MAXIMUM PIPE PRESSURE OF 150 PSI.

7 / C-001, M-003 TYPICAL THRUST BLOCK DETAIL

SCALE: N.T.S.

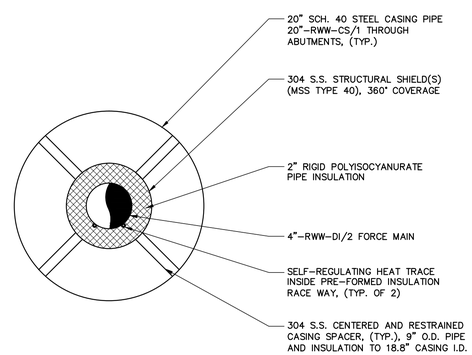

NOTES:

1. PROVIDE CASING SPACERS WITHIN 1'-6" OF PIPE BELL END. PROVIDE SPACERS EVERY 6 TO 8 L.F. THEREAFTER.
2. CASING SPACERS SHALLHAVE 304 S.S. BANDS AND RISERS, PVC LINER, 304 S.S. HARDWARE AND GLASS FILLED POLYMER PLASTIC RUNNERS/RISERS.

8 / M-004 ABUTMENT CASING CROSS SECTION

SCALE: N.T.S.

NOTES:

1. MAINTAIN UNIFORM TRENCH WIDTH TO 6" OVER PIPE. .
2. PROVIDE 4" LOAM AND SEED FOR TRENCH IN NON-PAVED AREAS.
3. 1" OF INSULATION IS EQUAL TO ONE FOOT OF COVER. 2" WRAPPED PIPE INSULATION SHALL BE CONSIDERED EQUAL TO 2 FEET OF COVER.
4. PROVIDE SEPARATION GEOTEXTILE FABRIC AROUND THE EXTERIOR OF ALL SAND BEDDING PRIOR TO BACK FILLING.
5. INSULATION JACKET SEGMENT OVERLAPS SHALL BE 4" MINIMUM.
6. BACKFILL SAND SHALL BE FREE OF ROCKS OR MATERIALS WHICH MAY PUNCTURE INSULATION JACKET. FILL MATERIAL CONTAINING CLAY OF OTHER MATERIALS THAT MAY STICK TO THE MEMBRANE, SHRINK/PULL SEAMS, SHALL NOT BE USED.

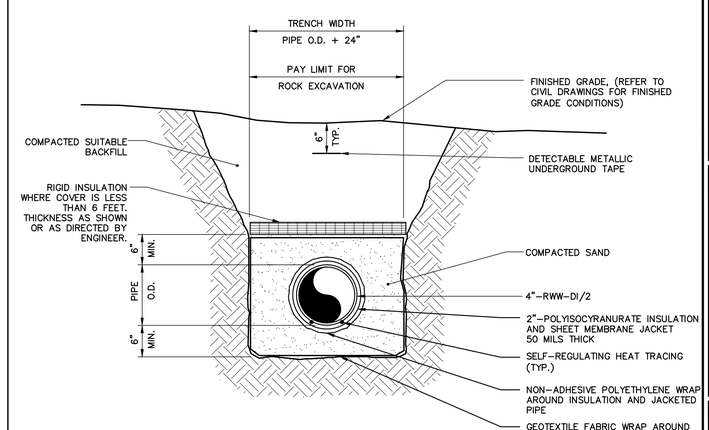

10 / M-004 TYPICAL INSULATED PIPE TRENCH DETAIL

SCALE: N.T.S.

BID SET

WOODARD & CURRAN
41 Hutchins Drive
Portland, Maine 04102
800.426.4262 | www.woodardcurran.com
COMMITMENT & INTEGRITY DRIVE RESULTS

THIS DOCUMENT IS THE PROPERTY OF WOODARD & CURRAN INC. AND THE CLIENT. THIS DOCUMENT OR THE INFORMATION CONTAINED HEREIN MAY NOT BE REPRODUCED, A PERMISSION.

STATE OF MAINE
BRENT M. BRIDGES
No. 5217
PROFESSIONAL ENGINEER

REV	DESCRIPTION	DATE

DESIGNED BY: RTP
DRAWN BY: NTD
CHECKED BY: MKC
225546-M002_M006.dwg

FORCE MAIN BRIDGE CROSSING DETAILS 2

TOWN OF OXFORD, MAINE

COVERED BRIDGE OVER LITTLE ANDROSCOGGIN RIVER

JOB NO.: 225546.01
DATE: FEB., 2014
SCALE: AS NOTED
SHEET: OF

M-004

\\Portland\Projects\225546 Town of Oxford - Preliminary Design\wip\CAD Drawings\MDOT Bridge Crossings\Covered Bridge\Cad drawings\225546-M002_M006.dwg, Mar 26, 2014 - 11:02am

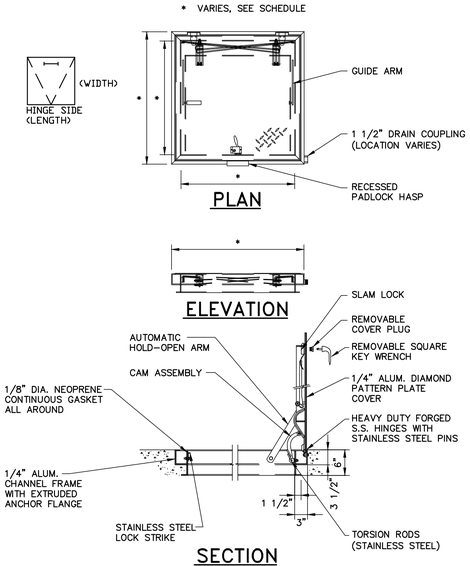

11 / M-003 ACCESS HATCH DETAIL

SCALE: N.T.S.

NOTES:

1. PROVIDE "TYPE PVC/1" DRAIN PIPING IN CONCRETE FOR DRAINAGE OF HATCH CHANNEL FRAME INTO STRUCTURE BELOW.
2. HATCH DIMENSIONS SHOWN ON PLANS AND IN HATCH SCHEDULE ARE BASED ON "CLEAR" OPENING ONLY. ACTUAL HATCH PERIMETER IS LARGER.
3. ALL HATCH COVERS SHALL BE ALUMINUM DIAMOND PATTERN PLATE AND ALL HARDWARE SHALL BE 316 STAINLESS STEEL.
4. PROVIDE ADDITIONAL CONCRETE REINFORCING AROUND ALL HATCH OPENINGS.
5. SEE PLAN FOR HATCH LAYOUT. HINGE SIDE SHALL CORRESPOND TO THE "LENGTH" DIMENSION IN ABOVE SCHEDULE AND SHALL BE DEFINED AS SHOWN.
6. PROVIDE BITUMINOUS COATING FOR ALL ALUMINUM SURFACES IN CONTACT WITH CONCRETE.
7. PROVIDE ONE KEYED PADLOCK FOR EACH HATCH. PADLOCKS SHALL BE KEYED ALIKE. PROVIDE SIX KEYS FOR OWNER.
8. PROVIDE SAFETY NETTING OR GRATING FOR HATCHES PER SCHEDULE. PROVIDE NETTING WHICH COMPLIES WITH OSHA STANDARD 1926.502 (C)(4)(i). ALL HOOKS, ANCHORS, AND HARDWARE SHALL BE 316 S.S.

HATCH SCHEDULE

HATCH TAG NO.	SHEET REF.	HATCH SIZE (LxW)	NEW OR EXISTING	LOCATION	LIVE LOAD CAPACITY	SEALED	INSULATED	SAFETY ACCESSORY	LEAF TYPE
H-1	M-003	2'-6"x2'-6"	NEW	FORCE MAIN VALVE MH #1	300 P.S.F.	YES	YES	NETTING	SINGLE
H-2	M-003	2'-6"x2'-6"	NEW	FORCE MAIN VALVE MH #2	300 P.S.F.	YES	YES	NETTING	SINGLE

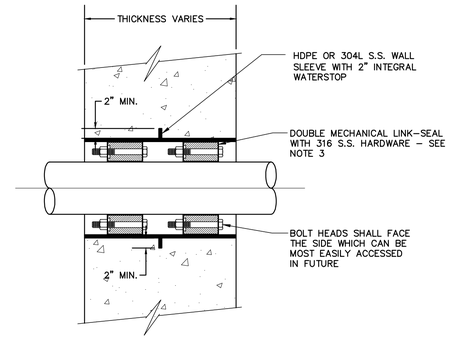

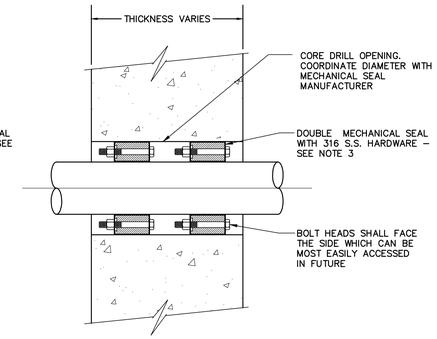

NOTES:

1. REFER TO DRAWINGS FOR PIPE PENETRATION LOCATIONS, TYPES, AND SIZES.
2. MECHANICAL SEAL AND WALL SLEEVE SIZE SHALL BE SIZED AS RECOMMENDED BY MANUFACTURER FOR EACH APPLICATION.
3. SINGLE MECHANICAL SEAL MAY BE USED FOR PENETRATIONS WHERE BOTH SIDES OF WALL ARE DRY.
4. FOR INSULATED PIPING, INSTALL INSULATION THROUGH WATER TIGHT INSTALLATION OF MECHANICAL SEAL.

12 / M-003 CONCRETE WALL SEAL DETAIL

SCALE: N.T.S.

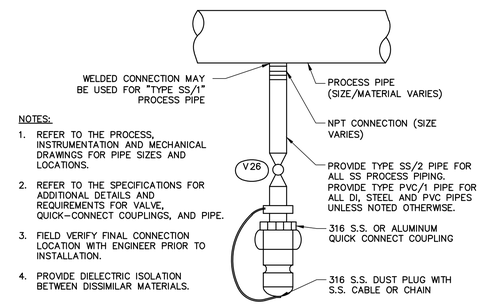

NOTES:

1. REFER TO THE PROCESS, INSTRUMENTATION AND MECHANICAL DRAWINGS FOR PIPE SIZES AND LOCATIONS.
2. REFER TO THE SPECIFICATIONS FOR ADDITIONAL DETAILS AND REQUIREMENTS FOR VALVE, QUICK-CONNECT COUPLINGS, AND PIPE.
3. FIELD VERIFY FINAL CONNECTION LOCATION WITH ENGINEER PRIOR TO INSTALLATION.
4. PROVIDE DIELECTRIC ISOLATION BETWEEN DISSIMILAR MATERIALS.

16 / M-003 FLUSH/DRAIN DETAIL

SCALE: N.T.S.

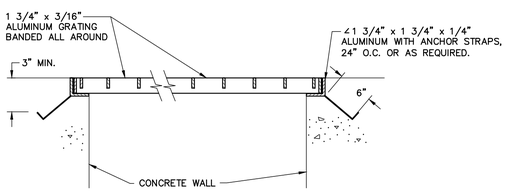

NOTES:

1. ALUMINUM SURFACES IN CONTACT WITH CONCRETE TO BE PAINTED WITH BITUMASTIC OR COAL-TAR EPOXY.
2. PROVIDE GRATING SADDLE CLIP ANCHORS FOR NON-REMOVABLE GRATING
3. GRATING WIDTH VARIES. SEE DRAWINGS.

13 / M-003 RECESSED GRATING DETAIL

SCALE: N.T.S.

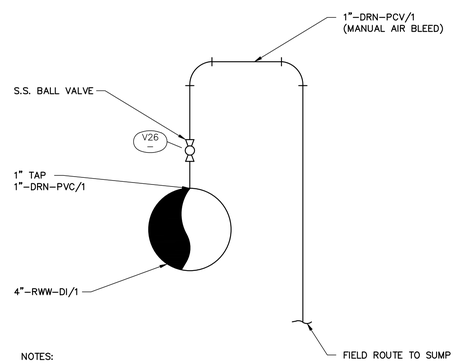

NOTES:

1. SLOPE DRAIN PIPING TO SUMP.
2. PROVIDE 304 S.S. SUPPORTS FOR DRAIN PIPING.

14 / M-003 AIR BLEED CONNECTION DETAIL

SCALE: N.T.S.

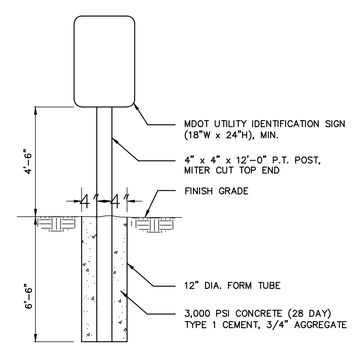

NOTES:

1. REFER TO SPECIFICATION 10 14 00, SIGNAGE FOR ADDITIONAL DETAILS AND REQUIREMENTS.
2. FIELD VERIFY SIGN LOCATION WITH ENGINEER PRIOR TO INSTALLATION.
3. PROVIDE TWO SIGNS, ONE ON EACH SIDE OF CROSSING.

15 / C-001 MDOT UTILITY SIGNAGE DETAIL

SCALE: N.T.S.

41 Hutchins Drive
Portland, Maine 04102
800.426.4262 | www.woodardcurran.com
WOODARD & CURRAN
COMMITMENT & INTEGRITY DRIVE RESULTS

THIS DOCUMENT IS THE PROPERTY OF WOODARD & CURRAN INC. AND ITS CLIENT. THIS DOCUMENT OR ITS CONTENTS MAY NOT BE REPRODUCED, REPURPOSED, OR RESHARED WITHOUT WRITTEN PERMISSION.

STATE OF MAINE BRENT M. BRIDGES No. 5217 LICENSED PROFESSIONAL ENGINEER

REV	DESCRIPTION	DATE

DESIGNED BY: RTP
DRAWN BY: NTD
CHECKED BY: MKC
225546-M002_M006.dwg

FORCE MAIN BRIDGE CROSSING DETAILS 3

TOWN OF OXFORD, MAINE

COVERED BRIDGE OVER LITTLE ANDROSCOGGIN RIVER

JOB NO.: 225546.01
DATE: FEB., 2014
SCALE: AS NOTED
SHEET: OF

M-005

BID SET

\\Portland\Projects1\225546 Town of Oxford – Preliminary Design\wip\CAD Drawings\MDOT Bridge Crossings\Covered Bridge\Cad drawings\225546-M002_M006.dwg, Mar 26, 2014 – 11:03am

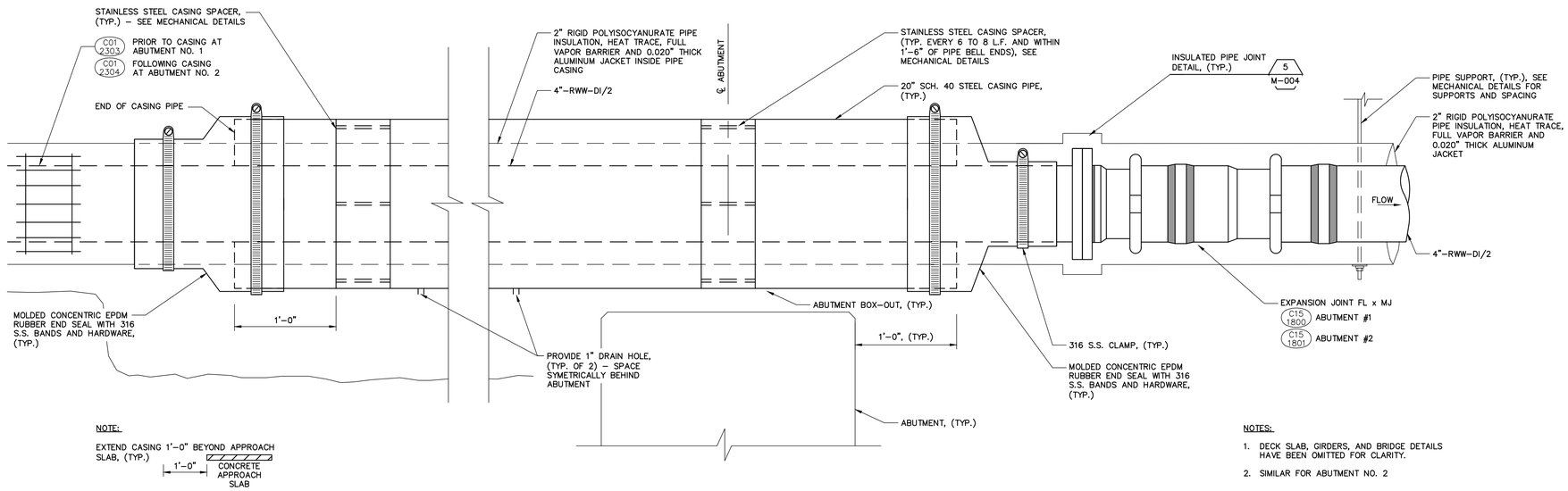

NOTE:

EXTEND CASING 1'–0" BEYOND APPROACH SLAB, (TYP.)

NOTES:

1. DECK SLAB, GIRDERS, AND BRIDGE DETAILS HAVE BEEN OMITTED FOR CLARITY.
2. SIMILAR FOR ABUTMENT NO. 2

20 / C–002 PIPE CASING DETAIL

SCALE: N.T.S.

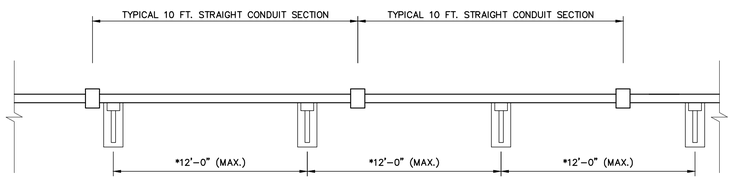

ELECTRICAL CONDUIT SUPPORT SPACING KEY (STRAIGHT PIPE SEGMENTS)

19 / M–006

SCALE: N.T.S.

* SEE FRAMING PLAN FOR SPACING

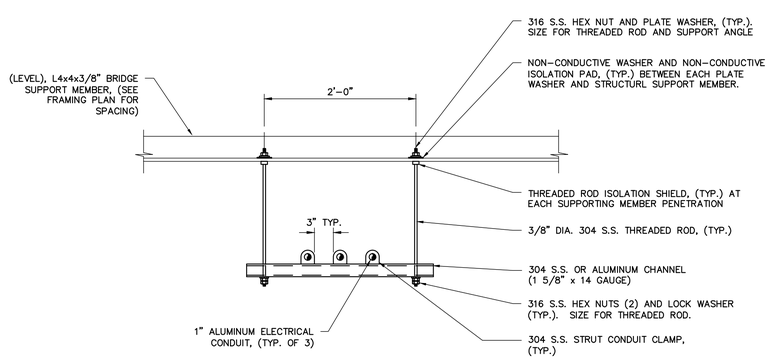

UTILITY SUPPORT TYPE U2 ELECTRICAL CONDUIT SUPPORT DETAIL

17 / M–002

SCALE: 1"=1'–0"

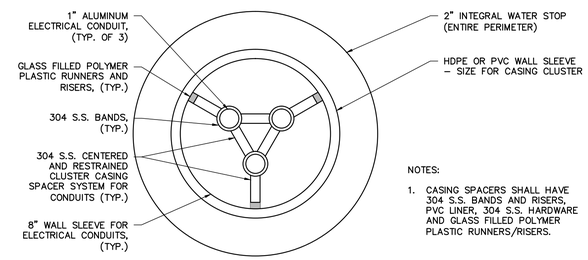

NOTES:

1. CASING SPACERS SHALL HAVE 304 S.S. BANDS AND RISERS, PVC LINER, 304 S.S. HARDWARE AND GLASS FILLED POLYMER PLASTIC RUNNERS/RISERS.

SECTION C / M–006

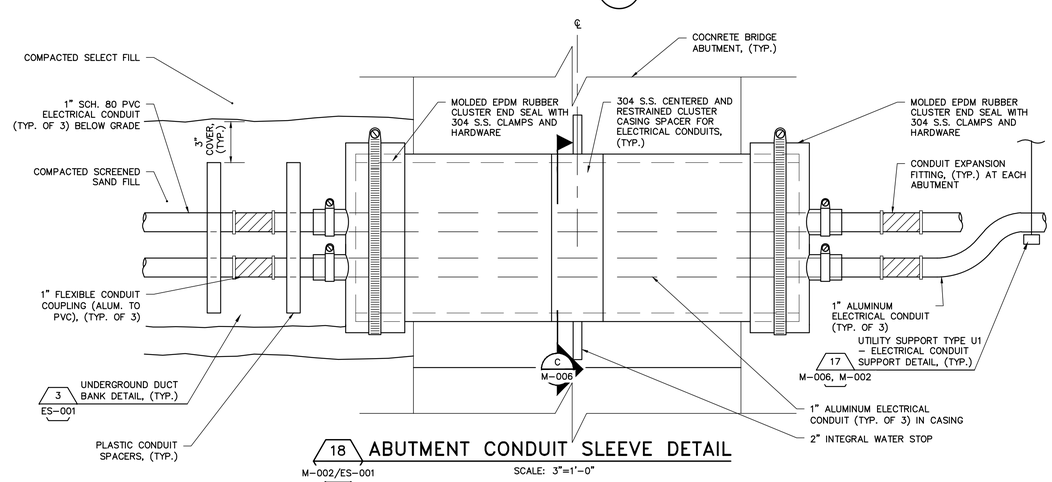

18 / M–002/ES–001 ABUTMENT CONDUIT SLEEVE DETAIL

SCALE: 3"=1'–0"

BID SET

22x34 SHEET 1:1

41 Hutchins Drive
Portland, Maine 04102
800.426.4262 | www.woodardcurran.com
WOODARD & CURRAN
COMMITMENT & INTEGRITY DRIVE RESULTS

THIS DOCUMENT, AND THE IDEAS AND DESIGNS INCORPORATED HEREIN, AS AN INSTRUMENT OF PROFESSIONAL SERVICE, IS THE PROPERTY OF WOODARD & CURRAN INC., AND IS TO BE RETURNED UPON REQUEST.

STATE OF MAINE BRENT M. BRIDGES No. 5217 LICENSED PROFESSIONAL ENGINEER

REV	DESCRIPTION	DATE

DESIGNED BY: RTP
DRAWN BY: NTD
CHECKED BY: MKC
225546-M002_M006.dwg

FORCE MAIN BRIDGE CROSSING DETAILS 4

TOWN OF OXFORD, MAINE

COVERED BRIDGE OVER LITTLE ANDROSCOGGIN RIVER

JOB NO.: 225546.01
DATE: FEB., 2014
SCALE: AS NOTED
SHEET: OF

M-006

\\Portland\Projects\225546 Town of Oxford – Preliminary Design\wip\CAD Drawings\MDOT Bridge Crossings\Covered Bridge\Cad drawings\225546-M002_M006.dwg, Mar 26, 2014 – 11:04am

22x34 SHEET
1:1

POWER

- X-# — USED FOR CONDUIT AND CABLE SCHEDULES
- (#)#/C W OR W/O SHLD, #"C
- M — X-## — X=TYPE OF PANEL, -##=PANEL NUMBER; #=NUMBER/TYPE/SIZE OF CABLES; NOTHING SHOWN INDICATES 2/C #12AWG, #12GND, 3/4"C
- HASH MARKS INDICATE NUMBER OF CONDUCTORS SIZE NOT SHOWN INDICATES #12AWG MINIMUM. NEC SIZED GND WOULD BE IN ADDITION TO NUMBER OF HASH MARKS.
- WIRING IN RACEWAY
- WIRING IN RACEWAY CONCEALED UNDERSLAB, MINIMUM 3/4"C
- UG — WIRING IN RACEWAY CONCEALED UNDERGROUND, MINIMUM 3/4"C
- CONDUIT TURNING UP
- CONDUIT TURNING DOWN
- CONDUIT STUB
- EY CONDUIT SEAL
- FLEXIBLE NON-METALLIC CONDUIT
- PANELBOARD
- CP — CONTROL PANEL
- ATC — AUTOMATIC TEMPERATURE CONTROL PANEL
- POWER COMPANY METER
- NON-FUSED SAFETY SWITCH
- F — FUSED SAFETY SWITCH
- NON-FUSED DISCONNECT/MAGNETIC MOTOR STARTER
- M — MANUAL MOTOR SWITCH (MOTOR RATED SWITCH), TOGGLE OPERATED, SINGLE PHASE. 1 OR 2 POLE AS REQUIRED
- CB — 100A — ENCLOSED CIRCUIT BREAKER AMPERE RATING
- M — ELECTRIC MOTOR, NUMBER INDICATES HORSEPOWER RATING
- HS — H/O/A — LOCAL SELECTOR SWITCH
  - H/O/A – HAND/OFF/AUTO
  - H/O/R – HAND/OFF/REMOTE
  - L/O/R – LOCAL/OFF/REMOTE
  - SS – SPEED SWITCH
- PUSHBUTTON STATION
- J — JUNCTION BOX
- T — TRANSFORMER
- P — POWER POLE
- DUPLEX RECEPTACLE, NEMA 5-20R – MTD CL UP 24" OR AS NOTED
- GFCI DUPLEX RECEPTACLE, NEMA 5-20R – MOUNTED CL UP 48" OR 6" ABOVE COUNTER
- QUAD GFCI RECEPTACLE, NEMA 5-20R – MOUNTED CL UP 48" OR 6" ABOVE COUNTER
- DUPLEX RECEPTACLE, NEMA 5-20R – MOUNTED CL UP 48" OR AS NOTED
- QUAD RECEPTACLE, NEMA 5-20R – MTD CL UP 24" OR AS NOTED
- SINGLE RECEPTACLE, NEMA 5-20R – MTD CL UP 24" OR AS NOTED
- FLUSH FLOOR OUTLET, DUPLEX RECEPTACLE, NEMA 5-20R
- MULTI SERVICE FLUSH FLOOR BOX WITH DUPLEX RECEPTACLE AND PROVISIONS FOR DATA
- FLUSH CEILING MTD DEVICE BOXES, ONE W/ DUPLEX RCPT FOR PROJECTOR POWER AND ONE FOR DATA TO SERVE OH PROJECTOR. RUN ONE 1 1/2"C TO JBOX LOCATED AT FRONT OF ROOM FOR PROJECTOR CABLE PATHWAY. VERIFY FINAL LOCATION W/ OWNER PRIOR TO ROUGH IN.
- POWER RECEPTACLE, NEMA CONFIGURATION AS NOTED OR AS REQUIRED FOR EQUIPMENT SERVED.
- MOD — MOTORIZED DAMPER

- T — THERMOSTAT
- R — RELAY
- BT — DOOR BELL/BUZZER AND TRANSFORMER – MTD CL UP 7'-0" AFF
- X-# — EQUIPMENT TAG
- # — KEYED NOTE TAG

LIGHTING

- X'x4' FLUORESCENT FIXTURE — FIXTURE TYPE (SEE LIGHT FIXTURE SCHEDULE)
- A — 2'x2' FLUORESCENT FIXTURE
- A — FIXTURE W/ CROSSED LINES INDICATE FIXTURES CONNECTED TO NIGHT LIGHTING CIRCUIT
- A — DOWN LIGHT
- A — WALL MOUNTED FIXTURES
- A — FLOOD LIGHT
- A — POLE MOUNTED LIGHT FIXTURE
- A — WALL PACK
- EXIT SIGN, CEILING/UNIT MOUNTED. ARROW INDICATES EGRESS DIRECTION. SHADING INDICATES SIGN FACE.
- EXIT SIGN, WALL MOUNTED. SHADING INDICATES SIGN FACE.
- BATT — DUAL HEAD EMERGENCY LIGHT BATTERY PACK WITH NUMBER OF HEADS AS INDICATED – WALL MOUNTED MTD 7'-6" AFF. ROMAN NUMERAL FOR REMOTE HEAD REFERENCE.
- TANDEM EMERGENCY LIGHT BATTERY PACK & EXIT SIGN WITH NUMBER OF HEADS AS INDICATED – WALL MOUNTED MTD 7'-6" AFF. ROMAN NUMERAL FOR REMOTE HEAD REFERENCE.
- REMOTE EMERGENCY LIGHTING HEAD – WALL MOUNTED MTD 7'-6" AFF. ROMAN NUMERAL INDICATES BATTERY UNIT CONNECTED TO.
- S — SINGLE POLE TOGGLE SWITCH – MTD CL UP 4'-0" AFF
- S_3 — 3-WAY TOGGLE SWITCH – MTD CL UP 4'-0" AFF
- S_4 — 4-WAY TOGGLE SWITCH – MTD CL UP 4'-0" AFF
- S_M — WALL MOUNTED OCCUPANCY SENSOR – MTD CL UP 4'-0" AFF
- S_P — TOGGLE SWITCH WITH PILOT LIGHT – MTD CL UP 4'-0" AFF
- S_D — DIMMER SWITCH – MTD CL UP 4'-0" AFF
- S_{LV} — LOW VOLTAGE SWITCH – MTD CL UP 4'-0" AFF (SEE LIGHTING CONTROL SCHEDULE)
- S_{XP} — EXPLOSION PROOF SWITCH
- LC — LIGHTING CONTACTOR
- X — OCCUPANCY SENSOR WALL OR CEILING "X" INDICATES TYPE, "ARROW" INDICATES PATTERN DIRECTION
- PC — PHOTOCELL

GROUNDING

- GROUND ROD
- EXOTHERMIC WELD CONNECTION
- G — BARE COPPER CONDUCTOR RUN EXPOSED
- G — BARE COPPER CONDUCTOR EMBEDDED IN CONCRETE OR BURIED
- BOLTED CONNECTION

SECURITY

- SEC — SECURITY PANEL
- DS — DOOR INTRUSION SWITCH
- CR — CARD READER
- KP — KEY PAD
- E — EMERGENCY EXIT DOOR
- MOTION SENSOR
- CAM — SECURITY CAMERA PTZ = PAN/TILT/ZOOM

FIRE ALARM DIAGRAM SYMBOLS

- FACP — FIRE ALARM CONTROL PANEL
- FAA — FIRE ALARM ANNUNCIATOR
- FCPS — FIELD CHARGER POWER SUPPLY
- M — FIRE ALARM MASTER BOX
- K — KNOX BOX
- F — FIRE ALARM MANUAL PULL STATION – WALL MTD CL UP 4'-0"
- HL — FIRE ALARM AUDIBLE/VISIBLE NOTIFICATION APPLIANCE CANDELA (CD) POWER PER NFPA 72 OR AS NOTED – WALL MTD BOTTOM UP 80" AFF.
- L — FIRE ALARM VISUAL NOTIFICATION APPLIANCE CANDELA (CD) POWER PER NFPA 72 OR AS NOTED – WALL MTD BOTTOM UP 80" AFF
- CEILING MOUNTED SMOKE DETECTOR
- CEILING MOUNTED HEAT DETECTOR
- DUCT SMOKE DETECTOR S=SUPPLY, R=RETURN
- FS — SPRINKLER SYSTEM FLOW SWITCH
- TS — SPRINKLER SYSTEM TAMPER SWITCH
- PS — SPRINKLER SYSTEM PRESSURE SWITCH
- DH — FIRE ALARM SYSTEM MAGNETIC DOOR HOLDER
- M — MONITOR MODULE
- C — CONTROL MODULE
- R — RELAY MODULE

COMMUNICATIONS

- TEL — TELEPHONE BACKBOARD
- W — PROVISIONS FOR TELEPHONE OUTLET. TWO-GANG WALL BOX WITH ONE 1"C STUB TO ABOVE ACCESSIBLE CEILING – MTD CL UP SAME AS ASSOCIATED RECEPTACLE
  W–INDICATES WALL MOUNTED AT 60" AFF
  P–INDICATES PAYPHONE
  (2)–INDICATES 2 OUTLETS, SINGLE BOX
- PROVISIONS FOR DATA OUTLET. TWO-GANG WALL BOX WITH ONE 1"C STUB TO ABOVE ACCESSIBLE CEILING – MTD CL UP SAME AS ASSOCIATED RECEPTACLE
- PROVISIONS FOR TELEPHONE & DATA OUTLET. TWO-GANG WALL BOX WITH ONE 1"C STUB TO ABOVE ACCESSIBLE CEILING – MTD CL UP SAME AS ASSOCIATED RECEPTACLE
- PROVISIONS FOR SCADA SYSTEM OUTLET. TWO-GANG WALL BOX WITH ONE 1"C STUB TO ABOVE ACCESSIBLE CEILING – MTD CL UP SAME AS ASSOCIATED RECEPTACLE
- CEILING MOUNTED TELEPHONE SYSTEM OUTLET
- CEILING MOUNTED DATA SYSTEM OUTLET
- CEILING MOUNTED VOICE & DATA OUTLET
- FLUSH TELEPHONE FLOOR OUTLET
- FLUSH DATA FLOOR OUTLET
- FLUSH VOICE & DATA FLOOR OUTLET
- TV — TELEVISION COAXIAL OUTLET. MOUNTED UP SAME AS ASSOCIATED RECEPTACLE.

INTERCOM & PAGING SYSTEM

- S — WALL MOUNTED SPEAKER
- S — CEILING MOUNTED SPEAKER
- PA — PAGING SYSTEM CONTROL PANEL
- HS — PAGING SYSTEM HANDSET

ONE-LINE DIAGRAM SYMBOLS

- 52 — MEDIUM VOLTAGE DRAWOUT TYPE POWER CIRCUIT BREAKER WITH MANUAL CONTROL SWITCH
- AT AF EO — LOW VOLTAGE CIRCUIT BREAKER
  - AF – AMP FRAME
  - AT – AMP TRIP
  - EO – ELECTRICALLY OPERATED
- ST — ST – SHUNT TRIP; GF – GROUND FAULT; EO – ELECTRICALLY OPERATED
- DISCONNECT, ISOLATION OR SAFETY SWITCH
- FUSED DISCONNECT SWITCH
- 1 — MAGNETIC MOTOR STARTER. NUMERAL INDICATES NEMA SIZE FVNR UNLESS OTHERWISE NOTED.
  - FVR – FULL VOLTAGE REVERSING
  - RVAT – REDUCING VOLTAGE AUTO TRANSFORMER
  - 2S – TWO SPEED
  - YD – WYE DELTA REDUCED VOLTAGE STARTER
- CAPACITOR
- VFD 11 — VFD = VARIABLE FREQUENCY DRIVE; SS = SOLID STATE STARTER; DC = DC VARIABLE DRIVE; NUMERAL INDICATES AMP RATING
- OA — POWER TRANSFORMER
  - OA – LIQUID TYPE SELF COOLED
  - AA – DRY TYPE SELF COOLED
  - FA – FAN COOLED
- CONNECTION
- 2 — 480/120 — POTENTIAL TRANSFORMER RATIO; NUMBER REQUIRED
- 2 — 600/5 — CURRENT TRANSFORMER RATIO; NUMBER REQUIRED
- 5 — MOTOR, NUMERAL INDICATES HORSEPOWER
- X — GENERAL LOAD, NUMERAL INDICATES LOAD IN KVA
- GENERATOR
- N E L ATS — ATS – AUTOMATIC TRANSFER SWITCH; MTS – MANUAL TRANSFER SWITCH
- A — METER
  - A – AMMETER
  - V – VOLTMETER
  - W – WATTMETER
  - KWH – KILOWATT HOUR
  - KVAR – KILOVAR METER
  - VAR – VAR METER
  - HZ – FREQUENCY METER
  - PF – POWER FACTOR METER
- 3 — LINE OR LOAD REACTOR NUMERAL INDICATES % IMPENDENCE
- DPM — DIGITAL POWER MONITOR
- AS — METER TRANSFER SWITCH
  - AS – AMMETER SWITCH
  - VS – VOLTMETER SWITCH
- SPD — SPD = SURGE PROTECTION DEVICE; ENDN = ETHERNET TO DEVICENET LINKING DEVICE; DPS = DEVICENET POWER SUPPLY
- MEDIUM VOLTAGE CABLE TERMINATION
- DRAWOUT DEVICE
- GROUND

MOTOR ELEMENTARY SYMBOLS

- CP WIRING
- FIELD WIRING (BY E.C.)
- # — CP TERMINAL BLOCK
- # — MOTOR STARTER TERMINAL BLOCK

MOTOR ELEMENTARY NOTES

1. CONTRACTOR SHALL BE RESPONSIBLE FOR ALL INSTALLATION OF ALL FIELD WIRING. PROVIDE ALL FIELD WIRING TO LOCATIONS INDICATED AND MAKE ALL FINAL CONNECTIONS AS REQUIRED FOR A COMPLETE INSTALLATION.

INSTRUMENTATION SYMBOLS PARTIAL LIST

- LS XX — FIELD MOUNTED INSTRUMENT; INSTRUMENT IDENTIFICATION TYPE; INSTRUMENT LOOP #
- FS XX — FIELD MOUNTED INSTRUMENT – EXISTING
- FS XXX — VENDER SUPPLIED INSTRUMENT
- LIH XXX — INDICATION LIGHT

INSTRUMENTATION IDENTIFIER LIST

AE	ANALYSIS ELEMENT	LS	LEVEL SWITCH
AIT	ANALYSIS INDICATING TRANSMITTER	LSH	LEVEL SWITCH HIGH
AT	ANALYSIS TRANSMITTER	LSL	LEVEL SWITCH LOW
DPS	DIFFERENTIAL PRESSURE SWITCH	MOV	MOTOR OPERATED VALVE
FCV	FLOW CONTROL VALVE	PE	PRESSURE ELEMENT
FE	FLOW ELEMENT	PIT	PRESSURE INDICATING TRANSMITTER
FI	FLOW INDICATION HIGH	PT	PRESSURE TRANSMITTER
FIT	FLOW INDICATION	PS	PRESSURE SWITCH
FT	FLOW TRANSMITTER	SMP	SAMPLER
FS	FLOW SWITCH	SV	SOLENOID VALVE
KWT	KILOWATT TRANSMITTER	TE	TEMPERATURE ELEMENT
LE	LEVEL ELEMENT	TIT	TEMPERATURE INDICATING TRANSMITTER
LI	LEVEL INDICATION	TT	TEMPERATURE TRANSMITTER
LIT	LEVEL INDICATING TRANSMITTER	ZS	PROXIMITY SWITCH
LT	LEVEL TRANSMITTER		

CONTROL DIAGRAM SYMBOLS

NOTE: ALL CONTROL SYMBOLS ARE DRAWN ASSUMING DEENERGIZED CIRCUITS, EMPTY TANKS, UNPRESSURIZED LINES, ETC.

OPEN ON INCREASE	CLOSE ON INCREASE	
		PRESSURE SWITCH
		LEVEL SWITCH
		FLOW SWITCH
		TEMPERATURE SWITCH
NORMALLY CLOSED	NORMALLY OPEN	
		PUSH BUTTON
		INSTANTANEOUS CONTACT
		TIMED CLOSE CONTACT
		TIMED OPEN CONTACT
		LIMIT SWITCH

- H O A XOO OOX — SELECTOR SWITCH: QUANTITY OF ARROWS INDICATES NUMBER OF POSITIONS. XOO INDICATES UPPER CONTACT CLOSED IN LEFT POSITION AND OPEN IN CENTER AND RIGHT POSITIONS
- INTERNAL WIRING
- FIELD WIRING (BY E.C.)

GENERAL NOTES:

1. LOCATION OF EQUIPMENT, MOTORS, VALVES, INSTRUMENTS, ETC. SHOWN ON THE DRAWINGS ARE FOR DIAGRAMMATICAL PURPOSES ONLY. REFER TO THE MECHANICAL DRAWINGS FOR EXACT LOCATIONS. FINAL LOCATIONS TO BE DETERMINED IN FIELD TO MATCH EQUIPMENT SUPPLIED BY CONTRACTOR.
2. PROVIDE CONCRETE HOUSEKEEPING PADS FOR ALL FLOOR MOUNTED ELECTRICAL EQUIPMENT. PROVIDE A MINIMUM OF A 4" PAD WITH A 2" CHAMFER 2" BEYOND AROUND EXPOSED EDGES OF EQUIPMENT.
3. ALL SPARE CONDUIT SHALL BE TERMINATED AT A JUNCTION BOX PROVIDED BY THE CONTRACTOR FOR EASE OF FUTURE INSTALLATIONS. CONTRACTOR SHALL SUBMIT SIZE AND TYPE OF BOXES TO THE ENGINEER FOR REVIEW.
4. MINIMUM SIZE CONDUIT SHALL BE 3/4".

GENERAL POWER NOTES:

1. ALL WORK SHALL BE PERFORMED IN ACCORDANCE WITH NATIONAL ELECTRICAL CODE (NEC).
2. ALL MOTOR SAFETY SWITCHES, DISCONNECTS AND MOTOR STARTERS SHALL BE PROVIDED UNLESS NOTED AS FURNISHED WITH EQUIPMENT (FWE).
3. ALL PENETRATIONS THROUGH FLOORS, RATED WALLS AND PARTITIONS SHALL BE SEALED WITH UL APPROVED FIRE SEALANT MATERIAL TO MAINTAIN THE RATING OF THE SEPARATION.
4. ALL ENCLOSURES, CONDUIT BODIES AND THEIR COVERS CONTAINING FIRE ALARM SYSTEM CONDUCTORS SHALL BE PAINTED RED.
5. AN EQUIPMENT GROUNDING CONDUCTOR SHALL BE INSTALLED WITH EVERY FEEDER AND BRANCH CIRCUIT.
6. FLEXIBLE CONNECTIONS TO MOTORS SHALL BE LIQUID TIGHT FLEXIBLE METAL CONDUIT, UNLESS OTHERWISE NOTED.
7. LIGHTING TOGGLE SWITCHES SHALL BE INDUSTRIAL SPECIFICATION GRADE 120 VOLT, SIDE WIRED AND PROVIDED WITH GROUNDING SCREW. LEVITON, PASS AND SEYMOUR OR ENGINEER APPROVED EQUAL.
8. CONVENIENCE RECEPTACLES SHALL BE INDUSTRIAL SPECIFICATIONS GRADE GROUNDING TYPE NEMA 5-20R, SIDE WIRED. LEVITON, PASS AND SEYMOUR OR ENGINEER APPROVED EQUAL.
9. PROVIDE STAINLESS STEEL WALL PLATES FOR ALL WIRING DEVICES.
10. ALL WIRING SHALL BE 600V, COPPER WITH THHN/THWN INSULATION. SERVICE ENTRANCE CONDUCTORS SHALL HAVE XHHW INSULATION UNLESS SPECIFIED OTHERWISE. WHERE APPROVED BY CODE AND LOCAL AUTHORITIES, METAL CLAD CABLE, TYPE MC, MAY BE USED FOR WIRING OF LIGHT FIXTURES, LIGHT SWITCHES, RECEPTACLES, ETC. MC CABLE SHALL HAVE FULL SIZE GROUND WIRES.
11. MINIMUM SIZE POWER WIRING SHALL BE #12.

ABBREVIATIONS

A.AMP	AMPERES	FACP	FIRE ALARM CONTROL PANEL	MC	METAL CLAD	S.STL	STAINLESS STEEL
ACB	AIR CIRCUIT BREAKER	FBO	FURNISHED BY OTHERS	MCC	MOTOR CONTROL CENTER	ST	SINGLE THROW
AC	ALTERNATING CURRENT	FLOUR	FLUORESCENT	MCB	MAIN CIRCUIT BREAKER	SV	SOLENOID VALVE
AFF	ABOVE FINISHED FLOOR	FWE	FURNISHED WITH EQUIPMENT	MEC	MASSACHUSETTS ELECTRIC CODE	T	TELEPHONE
AFG	ABOVE FINISHED GRADE	G.C.	GENERAL CONTRACTOR	MFG	MANUFACTURER	TB	TERMINAL BOX
AHJ	AUTHORITY HAVING JURISDICTION	GEC	GROUNDING ELECTRODE CONDUCTOR	MH	MANHOLE	T.C.	TRAY RATED CABLE
AIC	AMPERE INTERRUPT CAPACITY	GEN	GENERATOR	MLO	MAIN LUGS ONLY	TEMP	TEMPERATURE
AWG	AMERICAN WIRE GAUGE	GFCI	GROUND FAULT CIRCUIT INTERRUPTER	MTD	MOUNTED	TV	TELEVISION
BFG	BELOW FINISHED GRADE	G.GND	GROUND	MTR	MOTOR	TVSS	TRANSIENT VOLTAGE SURGE SUPPRESSOR
BHE	BANGOR HYDRO ELECTRIC COMPANY	H.	HAZARDOUS	MV	MEDIUM VOLTAGE	TYP	TYPICAL
BW	BUSWAY	HID	HIGH INTENSITY DISCHARGE	NC	NORMALLY CLOSED	UE	UNDERGROUND ELECTRIC
CATV	CABLE, TELEVISION	HOA	HAND-OFF-AUTO	NEC	NATIONAL ELECTRIC CODE	UG	UNDERGROUND
CB	CIRCUIT BREAKER	HP	HORSEPOWER	NEUT	NEUTRAL	UH	UNIT HEATER
CCTV	CLOSED CIRCUIT TELEVISION	HPS	HIGH PRESSURE SODIUM	NO	NORMALLY OPEN	UPS	UNINTERRUPTED POWER SUPPLY
CL	CENTER LINE	HTR	HEATER	OL	OVERLOAD ELEMENT	V	VOLTS
CKT	CIRCUIT	HZ	FREQUENCY IN CYCLES/SECOND	PF	POWER FACTOR	VA	VOLT-AMPERES
CP	CONTROL PANEL	IG	ISOLATED GROUND	PH	PHASE	VAR	VOLT-AMPERE REACTIVE
CPT	CONTROL POWER TRANSFORMER	IMT	INTERMEDIATE METALLIC CONDUIT	PL	PILOT LIGHT	VSC	VENDOR SUPPLIED CABLE
CR	CORROSION RESISTANT	INC	INCANDESCENT	PRI	PRIMARY	W	WATT
CT	CURRENT TRANSFORMER	JBOX	JUNCTION BOX	PT	POTENTIAL TRANSFORMER	WM	WATT METER
CU	COPPER	K	KILO	PVC	POLYVINYL CHLORIDE	WP	WEATHER PROOF
DIG	DIGITAL	KCMIL	1000 CIRCULAR MILS	RGS	RIGID STEEL CONDUIT	XFMR	TRANSFORMER
DISC	DISCONNECT	KVA	KILOVOLT AMPERE	RTD	RESISTANCE TEMPERATURE DETECTOR	XP	EXPLOSION PROOF
DPM	DIGITAL POWER MONITOR	KVAR	KILOVOLT AMPERE REACTIVE	SEC	SECONDARY		
E.C.	ELECTRICAL CONTRACTOR	KW	KILOWATT	SPD	SURGE PROTECTION DEVICE		
EMT	ELECTRIC METALLIC TUBING	KWH	KILOWATT HOUR	SS	SOLID STATE		
EM	EMERGENCY	LPS	LOW PRESSURE SODIUM	SST	SOLID STATE TRIP		

ABBREVIATED LIST OF NEMA ENCLOSURE TYPES

TYPE 1: GENERAL PURPOSE. INDOOR.
TYPE 2: DRIP-PROOF. NONCORROSIVE. INDOOR.
TYPE 3: DUST-TIGHT. RAINTIGHT. OUTDOOR.
TYPE 3R: RAINPROOF. OUTDOOR.
TYPE 4: WATERTIGHT AND DUST-TIGHT. NONCORROSIVE. INDOOR AND OUTDOOR.
TYPE 4X: WATERTIGHT AND DUST-TIGHT. CORROSION RESISTANT. INDOOR AND OUTDOOR.
TYPE 6: WATERTIGHT. DUST-TIGHT. SHORT-TIME SUBMERSIBLE. INDOOR AND OUTDOOR.
TYPE 6P: WATERTIGHT. DUST-TIGHT. LONG-TIME SUBMERSIBLE. INDOOR AND OUTDOOR.
TYPE 7: CLASS 1, GROUPS A, B, C, OR D. INDOOR.
TYPE 8: CLASS 1, GROUPS A, B, C, OR D. INDOOR OR OUTDOOR.
TYPE 9: CLASS II, GROUPS E OR G. INDOOR.
TYPE 12: DUST-TIGHT. WATERTIGHT. NONCORROSIVE LIQUID. INDOOR.
TYPE 13: WATERTIGHT. DUST-TIGHT. OILTIGHT. NONCORROSIVE LIQUID INDOOR.

GENERAL CONTROLS NOTES:

1. PROVIDE WIRING AND CONDUIT BETWEEN CONTROL PANELS AND FIELD INSTRUMENTS AS REQUIRED BY EQUIPMENT VENDORS AND AS INDICATED ON THE DRAWINGS.
2. MINIMUM SIZE CONTROL WIRING SHALL BE #14.
3. SHIELDED CABLE SHALL BE 2/C #18.
4. WIRING FOR THE FOLLOWING CATEGORIES SHALL BE RUN IN SEPARATE RACEWAYS. DO NOT COMBINE CATEGORIES IN A SINGLE CONDUIT.
   A. 120V POWER WIRING
   B. CONTROL AND DISCRETE OUTPUT SIGNALS (120VAC)
   C. DISCRETE INPUT SIGNALS (24VDC)
   D. ANALOG SIGNAL WIRING (4-20mADC)

BID SET

41 Hutchins Drive
Portland, Maine 04102
800.426.4262 | www.woodardcurran.com
COMMITMENT & INTEGRITY DRIVE RESULTS
WOODARD & CURRAN

THIS DOCUMENT IS THE PROPERTY OF WOODARD & CURRAN INC. AND ITS CLIENT. THIS DOCUMENT OR ANY PORTION THEREOF MAY NOT BE REPRODUCED OR USED WITHOUT THE WRITTEN CONSENT OF WOODARD & CURRAN INC. AND ITS CLIENT.

STATE OF MAINE ANDREW J. FITZPATRICK No. 17867 LICENSED PROFESSIONAL ENGINEER

REV	DESCRIPTION	DATE

DESIGNED BY: RTP
DRAWN BY: NTD
CHECKED BY: AJF
225546-EG-001.dwg

ELECTRICAL SYSTEM NOTES, LEGEND, AND GENERAL INDEX

TOWN OF OXFORD, MAINE

COVERED BRIDGE OVER LITTLE ANDROSCOGGIN RIVER

JOB NO.: 225546.01
DATE: FEB., 2014
SCALE: AS NOTED
SHEET: OF

EG-001

\\Portland\Projects\225546 Town of Oxford - Preliminary Design\wip\CAD Drawings\MDOT Bridge Crossings\Covered Bridge\Cad drawings\225546-EG-001.dwg, Mar 26, 2014 - 10:55am

22x34 SHEET
1:1

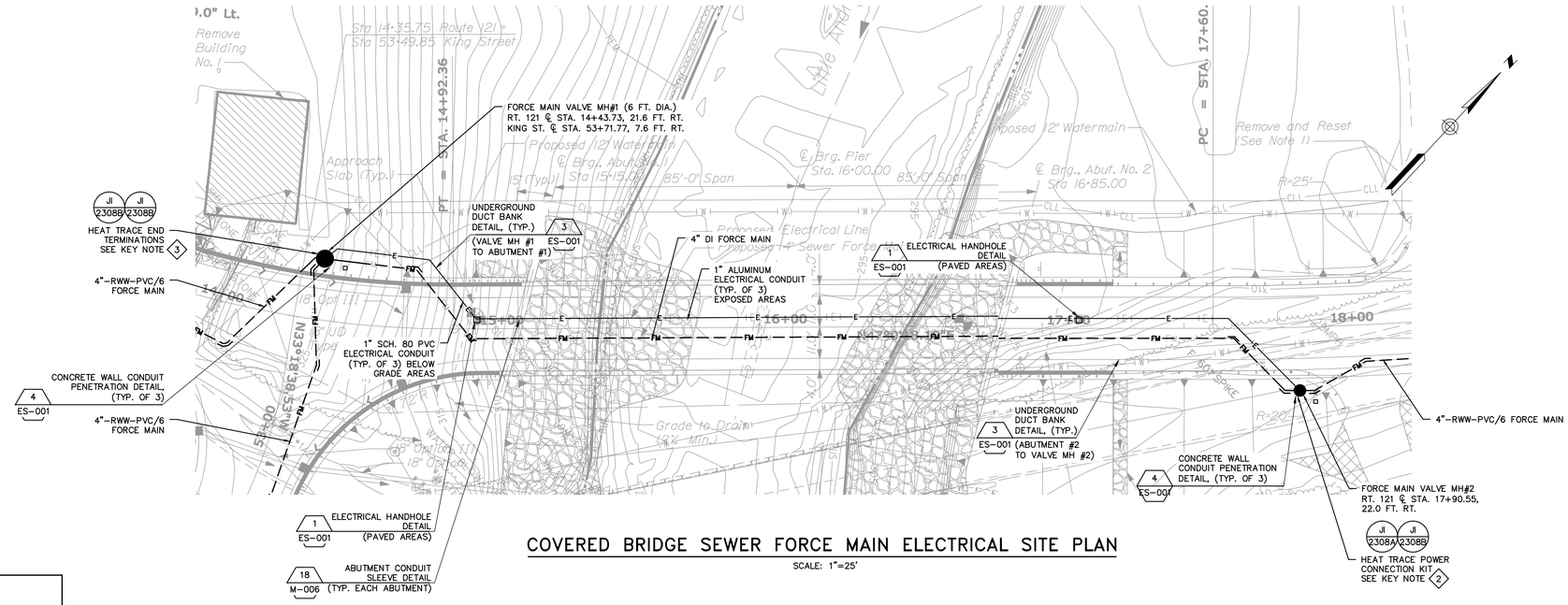

COVERED BRIDGE SEWER FORCE MAIN ELECTRICAL SITE PLAN

SCALE: 1"=25'

NOTES:

1. NUMBER AND SIZE OF CONDUITS SHALL BE AS INDICATED ON THE DRAWINGS.
2. STRUCTURE SHALL MEET AASHTO H20 LOADING REQUIREMENTS
3. PROVIDE SEPARATION BETWEEN DIFFERENT CABLE TYPES IN ACCORDANCE WITH NEC REQUIREMENTS.

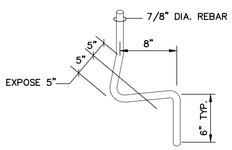

PULL-EYE DETAIL

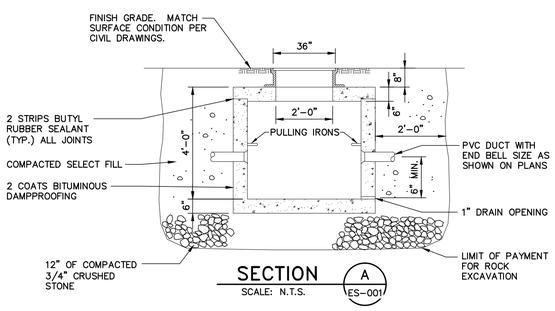

SECTION A / ES-001

SCALE: N.T.S.

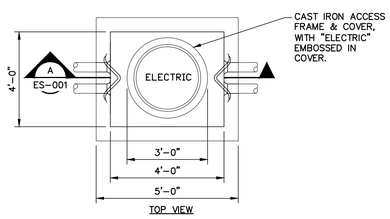

TOP VIEW

ELECTRICAL HANDHOLE DETAIL (PAVED AREAS)

1 / ES-001

SCALE: N.T.S.

GENERAL NOTES:

1. CONDUITS NOT TERMINATING IN OR AT THE PULLBOX(ES) SHALL NOT RUN THROUGH PULLBOX(ES) UNLESS REQUIRED FOR PULLING.
2. FINAL DIMENSIONS OF PULLBOX(ES) SHALL BE AS VERIFIED IN THE FIELD AND SHALL BE IN ACCORDANCE WITH NEC REQUIREMENTS.
3. PULLBOX COVER(S) SHALL BE POLYMER CONCRETE, SKID RESISTANT, AND SHALL BE MARKED "ELECTRIC". PROVIDE EXTENSIONS TO MEET FINISH GRADE.
4. PULLBOX(ES) SHALL BE PRECAST EQUAL TO: QUAZITE, HIGHLINE, OR ENGINEER APPROVED EQUAL.
5. UTILIZE TIER RATING APPROPRIATE FOR INSTALLATION LOCATION.

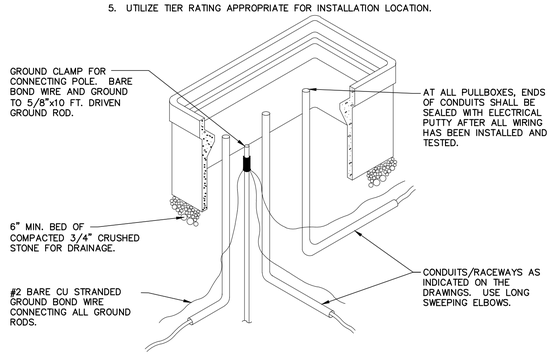

HANDHOLE/PULLBOX DETAIL (NON-PAVED AREAS)

2 / ES-001

SCALE: N.T.S.

NOTES:

1. UTILIZE SCHEDULE 80 PVC FOR ALL UNDERGROUND CONDUIT.
2. PROVIDE CONCRETE ENCASEMENT AT GUARD RAIL CROSSINGS. SEE CONCRETE UTILITY ENCASEMENT AT GUARD RAIL CROSSING DETAIL 1/C-003 FOR ADDITIONAL REQUIREMENTS.

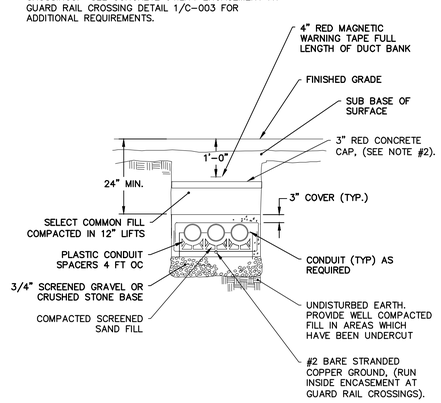

UNDERGROUND DUCT BANK DETAIL

3 / ES-001

SCALE: N.T.S.

ELECTRICAL GENERAL NOTES

1. PROVIDE TESTING OF EACH HEAT TRACE RUN. PROVIDE TEMPORARY POWER TO DEMONSTRATE THAT EACH HEAT TRACE RUN IS FULLY FUNCTIONAL AND IS FREE FROM DEFECTS. A PERMANENT POWER SUPPLY FOR EACH HEAT TRACING SYSTEM WILL BE PROVIDED AS PART OF A SEPARATE FUTURE PROJECT PHASE.
2. PROVIDE PULL ROPE FOR EACH ONE INCH CONDUIT RUN FROM VALVE MANHOLE #1 TO VALVE MANHOLE #2. POWER AND CONTROL WIRING WILL BE PROVIDED AS PART OF A SEPARATE FUTURE PROJECT PHASE.
3. PROVIDE HAND HOLES AND PULL BOXES APPROXIMATELY AS SHOWN BETWEEN VALVE MANHOLE #1 AND VALVE MANHOLE #2.
4. PROVIDE GROUND RESISTANCE TESTING FOR EACH BELOW GRADE DUCT RUN.

ELECTRICAL KEYED NOTES

1. PROVIDE TWO (2) PARALLEL RUNS OF SELF-REGULATING HEAT TRACING ALONG FORCE MAIN PIPING FROM VALVE MANHOLE #1 TO VALVE MANHOLE #2. REFER TO THE MECHANICAL DRAWINGS FOR THE ORIENTATION OF HEAT TRACING ON THE FORCE MAIN PIPING. REFER TO SPECIFICATION 40 41 13 PROCESS PIPE HEAT TRACING FOR ADDITIONAL DETAILS AND REQUIREMENTS.
2. PROVIDE TWO (2) HEAT TRACING POWER CONNECTION KITS WITH INDICATION LIGHTS IN VALVE MANHOLE #2. ONE POWER CONNECTION KIT SHALL BE DEDICATED FOR EACH HEAT TRACE RUN. PROVIDE CONNECTION OF EACH HEAT TRACE RUN TO CONNECTION KITS. POWER CONNECTION KITS SHALL BE MOUNTED ABOVE PIPE INSULATION.
3. PROVIDE TWO (2) HEAT TRACING END TERMINATION KITS WITH INDICATION LIGHTS IN VALVE MANHOLE #1. ONE END TERMINATION KIT SHALL BE DEDICATED FOR EACH HEAT TRACE RUN. PROVIDE TERMINATION OF EACH HEAT TRACE RUN TO THE END KITS. END TERMINATION SHALL BE MOUNTED ABOVE PIPE INSULATION.

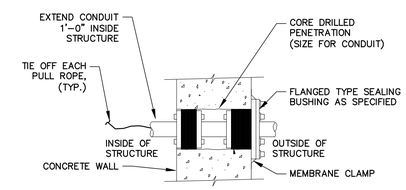

CONCRETE WALL CONDUIT PENETRATION DETAIL

4 / ES-001

SCALE: N.T.S.

BID SET

41 Hutchins Drive
Portland, Maine 04102
800.426.4262 | www.woodardcurran.com
WOODARD & CURRAN
COMMITMENT & INTEGRITY DRIVE RESULTS

THIS DOCUMENT IS THE PROPERTY OF WOODARD & CURRAN INC. AND THE CLIENT. THIS DOCUMENT OR ANY PORTION THEREOF, MAY NOT BE REPRODUCED, REPUBLISHED, OR RESUBMITTED WITHOUT WRITTEN PERMISSION.

STATE OF MAINE ANDREW J. FITZPATRICK No. 11827 LICENSED PROFESSIONAL ENGINEER

REV	DESCRIPTION	DATE

DESIGNED BY: RTP | CHECKED BY: AJF
DRAWN BY: NTD | 225546-C001_C003_ES-001.dwg

FORCE MAIN BRIDGE CROSSING ELECTRICAL SITE PLAN AND DETAILS

TOWN OF OXFORD, MAINE

COVERED BRIDGE OVER LITTLE ANDROSCOGGIN RIVER

JOB NO.: 225546.01
DATE: FEB. 2014
SCALE: AS NOTED
SHEET: OF

ES-001

\\Portland\Projects\225546 Town of Oxford - Preliminary Design\wip\CAD Drawings\MDOT Bridge Crossings\Covered Bridge\Cad drawings\225546-C001_C003_ES-001.dwg, Mar 26, 2014 - 10:56am

RIVER CROSSING CROSS SECTION
(NTS)

GRAPHIC SCALE

25 0 12.5 25 50 100

(IN FEET)
1 inch = 25 ft.

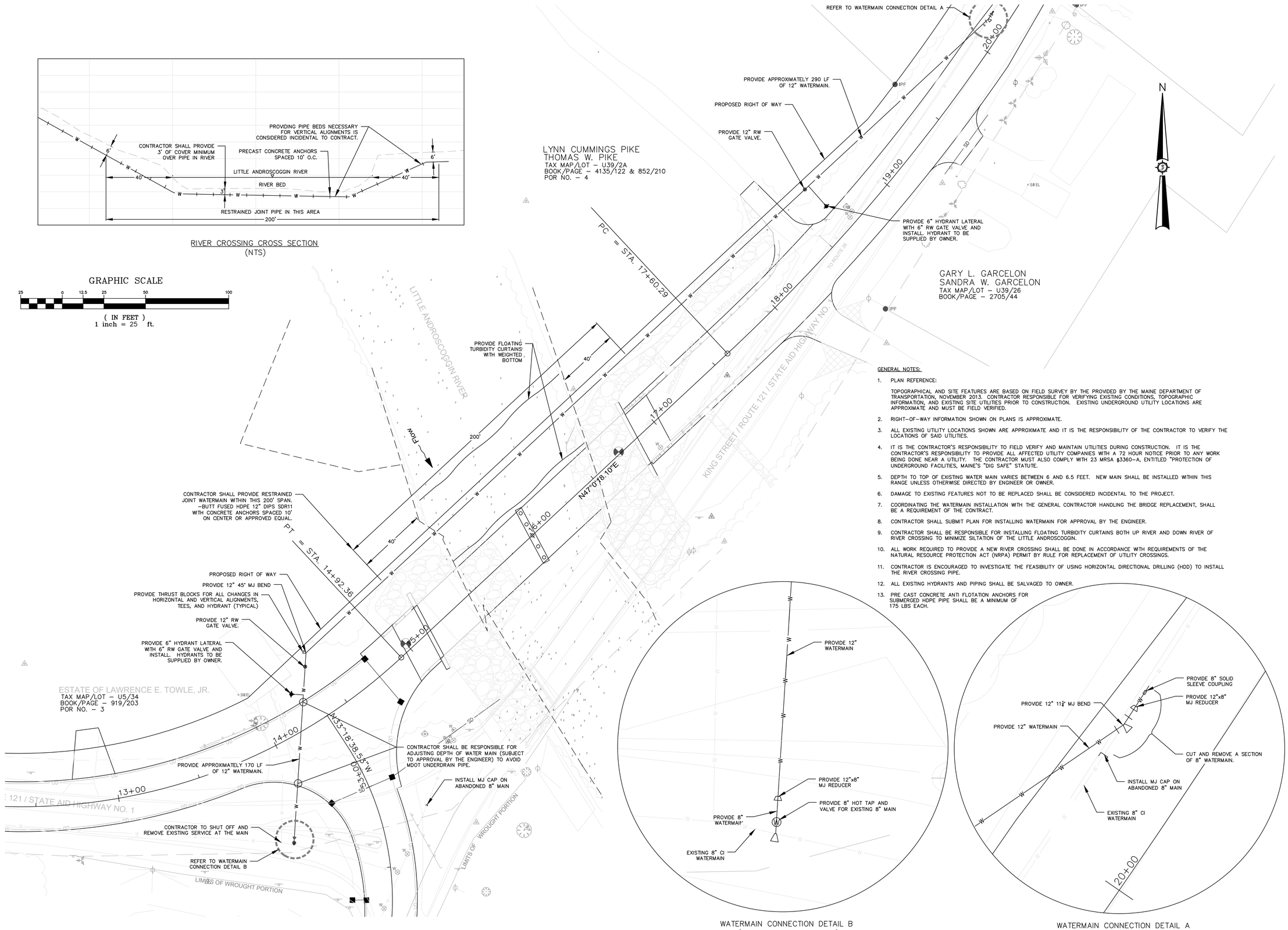

WATERMAIN CONNECTION DETAIL B
(WESTERN SIDE OF RIVER)

WATERMAIN CONNECTION DETAIL A
(EASTERN SIDE OF RIVER)

GENERAL NOTES:

1. PLAN REFERENCE:

   TOPOGRAPHICAL AND SITE FEATURES ARE BASED ON FIELD SURVEY BY THE PROVIDED BY THE MAINE DEPARTMENT OF TRANSPORTATION, NOVEMBER 2013. CONTRACTOR RESPONSIBLE FOR VERIFYING EXISTING CONDITIONS, TOPOGRAPHIC INFORMATION, AND EXISTING SITE UTILITIES PRIOR TO CONSTRUCTION. EXISTING UNDERGROUND UTILITY LOCATIONS ARE APPROXIMATE AND MUST BE FIELD VERIFIED.

2. RIGHT–OF–WAY INFORMATION SHOWN ON PLANS IS APPROXIMATE.

3. ALL EXISTING UTILITY LOCATIONS SHOWN ARE APPROXIMATE AND IT IS THE RESPONSIBILITY OF THE CONTRACTOR TO VERIFY THE LOCATIONS OF SAID UTILITIES.

4. IT IS THE CONTRACTOR'S RESPONSIBILITY TO FIELD VERIFY AND MAINTAIN UTILITIES DURING CONSTRUCTION. IT IS THE CONTRACTOR'S RESPONSIBILITY TO PROVIDE ALL AFFECTED UTILITY COMPANIES WITH A 72 HOUR NOTICE PRIOR TO ANY WORK BEING DONE NEAR A UTILITY. THE CONTRACTOR MUST ALSO COMPLY WITH 23 MRSA §3360–A, ENTITLED "PROTECTION OF UNDERGROUND FACILITIES, MAINE'S "DIG SAFE" STATUTE.

5. DEPTH TO TOP OF EXISTING WATER MAIN VARIES BETWEEN 6 AND 6.5 FEET. NEW MAIN SHALL BE INSTALLED WITHIN THIS RANGE UNLESS OTHERWISE DIRECTED BY ENGINEER OR OWNER.

6. DAMAGE TO EXISTING FEATURES NOT TO BE REPLACED SHALL BE CONSIDERED INCIDENTAL TO THE PROJECT.

7. COORDINATING THE WATERMAIN INSTALLATION WITH THE GENERAL CONTRACTOR HANDLING THE BRIDGE REPLACEMENT, SHALL BE A REQUIREMENT OF THE CONTRACT.

8. CONTRACTOR SHALL SUBMIT PLAN FOR INSTALLING WATERMAIN FOR APPROVAL BY THE ENGINEER.

9. CONTRACTOR SHALL BE RESPONSIBLE FOR INSTALLING FLOATING TURBIDITY CURTAINS BOTH UP RIVER AND DOWN RIVER OF RIVER CROSSING TO MINIMIZE SILTATION OF THE LITTLE ANDROSCOGGIN.

10. ALL WORK REQUIRED TO PROVIDE A NEW RIVER CROSSING SHALL BE DONE IN ACCORDANCE WITH REQUIREMENTS OF THE NATURAL RESOURCE PROTECTION ACT (NRPA) PERMIT BY RULE FOR REPLACEMENT OF UTILITY CROSSINGS.

11. CONTRACTOR IS ENCOURAGED TO INVESTIGATE THE FEASIBILITY OF USING HORIZONTAL DIRECTIONAL DRILLING (HDD) TO INSTALL THE RIVER CROSSING PIPE.

12. ALL EXISTING HYDRANTS AND PIPING SHALL BE SALVAGED TO OWNER.

13. PRE CAST CONCRETE ANTI FLOTATION ANCHORS FOR SUBMERGED HDPE PIPE SHALL BE A MINIMUM OF 175 LBS EACH.

Rev. #	Dwg. By	Description	Date

OXFORD WATER DISTRICT

Project Location: OXFORD, MAINE

Designed By: MR | Drawn By: JLD | Date: 3/12/2014 | Scale: 1"=25' | Checked | Approved

Drawing Description: **KING STREET WATERMAIN REPLACEMENT PLAN VIEW**

Seal

83888E

Engineer: SEWALL — AN INTEGRATED TEAM OF GEOSPATIAL ENGINEERING, ARCHITECTURE AND NATURAL RESOURCE CONSULTANTS. JAMES W. SEWALL COMPANY Since 1880. 800.448.7202. SEWALL.COM

Project No.

Phase: CONST

Sheet No.: **C-1**

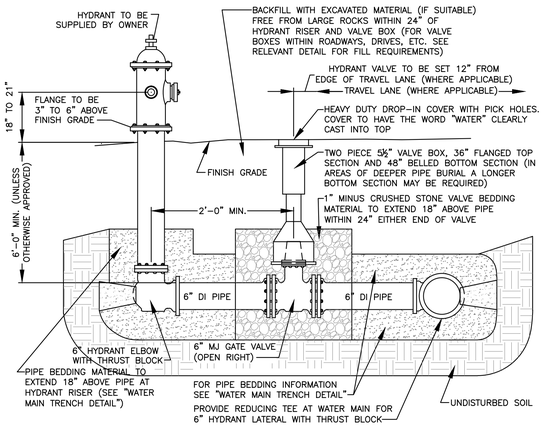

HYDRANT LATERAL DETAIL

NOT TO SCALE

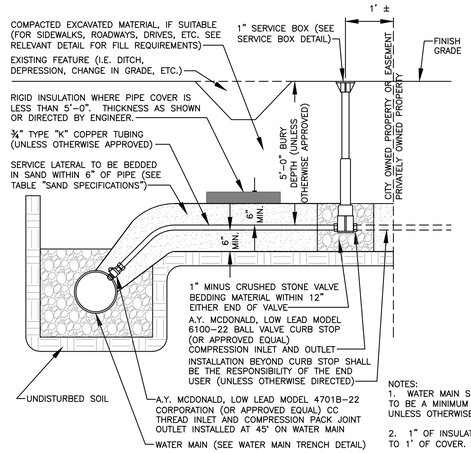

NOTES:
1. WATER MAIN SERVICE TAPS TO BE A MINIMUM OF 24" APART, UNLESS OTHERWISE APPROVED.
2. 1" OF INSULATION IS EQUAL TO 1' OF COVER.

WATER MAIN SERVICE LATERAL DETAIL

NOT TO SCALE

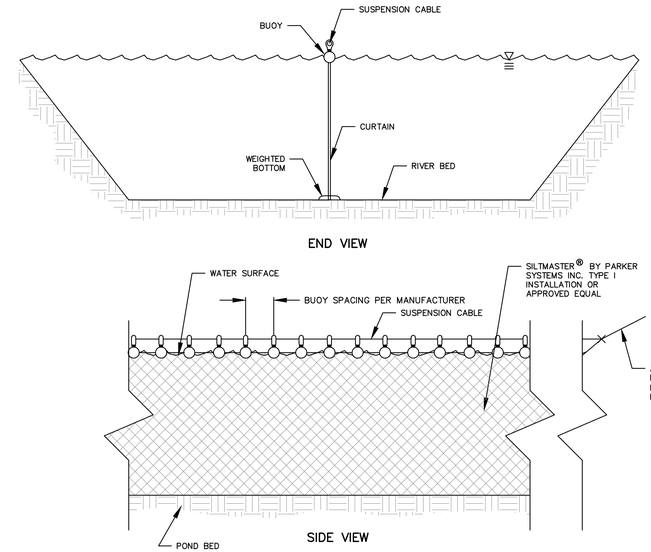

POLY-FABRIC TURBIDITY CURTAIN DETAIL

NOT TO SCALE

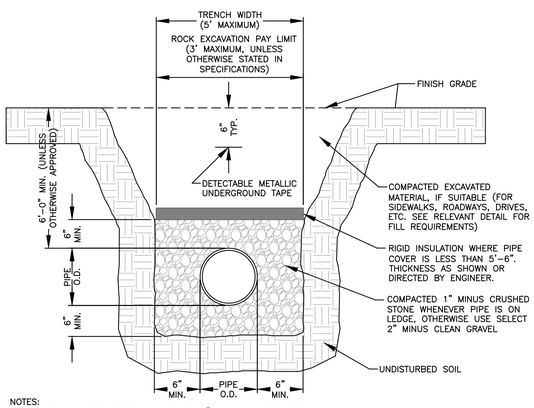

NOTES:
1. MAINTAIN UNIFORM TRENCH WIDTH TO 6" MINIMUM OVER PIPE.
2. SEE PAVEMENT DETAILS FOR PAVING REQUIREMENTS IN ROAD WORK AREAS.
3. PROVIDE 4" LOAM, SEED, AND MULCH FOR TRENCHES IN NON-GRAVELED AND NON-PAVED AREAS.
4. 1" OF INSULATION IS EQUAL TO 1' OF COVER.

WATER MAIN TRENCH DETAIL

NOT TO SCALE

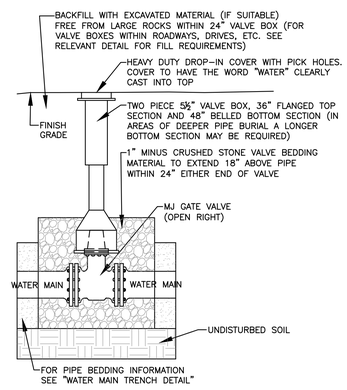

WATER MAIN VALVE AND VALVE BOX DETAIL

NOT TO SCALE

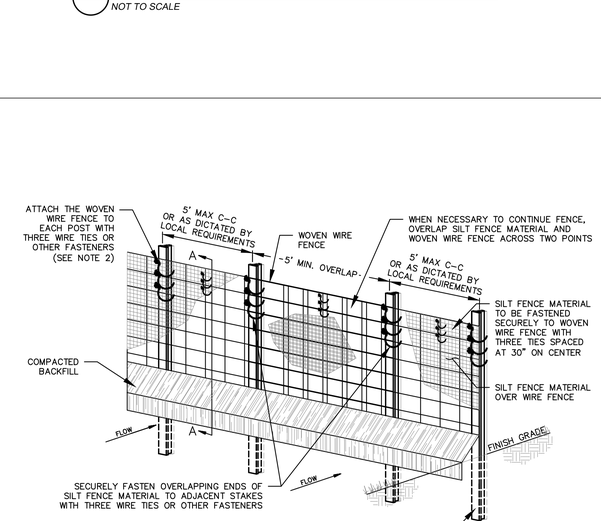

POSTS: STEEL T OR U TYPE.
FENCE: WOVEN WIRE, 14-1/2 GA., 6" MAX. MESH OPENING.
FABRIC: IN ACCORDANCE WITH ASTM D 6461 LATEST EDITION.

1. INSTALLATION SHALL COMPLY WITH ASTM D 6462 LATEST EDITION.
2. ATTACH THE WOVEN WIRE FENCE TO EACH POST AND THE GEOTEXTILE TO THE WOVEN WIRE FENCE (SPACED EVERY 30") WITH THREE WIRE TIES OR OTHER FASTENERS, ALL SPACED WITHIN THE TOP 8" OF THE FABRIC. ATTACH EACH TIE DIAGONALLY 45 DEGREES THROUGH THE FABRIC, WITH EACH PUNCTURE AT LEAST 1" VERTICALLY APART. ALSO, EACH TIE PLACED ON A POST SHOULD BE POSITIONED TO HANG ON A POST NIPPLE WHEN TIGHTENED TO PREVENT SAGGING.
3. WHEN TWO SECTIONS OF SILT FENCE MATERIAL ADJOIN EACH OTHER, THEY SHALL BE OVERLAPPED A MINIMUM OF 60" ACROSS TWO POSTS, AS SHOWN.
4. MAINTENANCE SHALL BE PERFORMED AS NOTED IN THE SWPPP. DEPTH OF ACCUMULATED SEDIMENTS MAY NOT EXCEED ONE-HALF THE HEIGHT OF THE FENCE. MAINTENANCE CLEANOUT MUST BE CONDUCTED REGULARLY TO PREVENT ACCUMULATED SEDIMENTS FROM REACHING ONE-HALF THE HEIGHT OF THE SILT FENCE MATERIAL ABOVE GRADE.
5. ALL SILT FENCE SHALL INCLUDE WIRE SUPPORT UNLESS THE STATIC SLICING EQUIPMENT IS UTILIZED TO INSTALL THE FENCE PER DETAIL- "SILT FENCE INSTALLATION (SLICING METHOD)".
6. WRAP APPROXIMATELY 6" OF FABRIC AROUND THE END POSTS AND SECURE WITH 3 TIES.
7. COMPACT THE SOIL IMMEDIATELY NEXT TO THE SILT FENCE FABRIC WITH THE FRONT WHEEL OF THE TRACTOR, SKID STEER, OR ROLLER EXERTING AT LEAST 60 POUNDS PER SQ. INCH. COMPACT THE UPSTREAM SIDE FIRST. COMPACT EACH SIDE TWICE FOR A TOTAL OF FOUR TRIPS.
8. ADD POST CAPS AS NEEDED BASED ON SITE CONDITIONS AND APPLICABLE AGENCY REQUIREMENTS.

SEDIMENTATION/SILT FENCE WITH WIRE SUPPORT

NOT TO SCALE

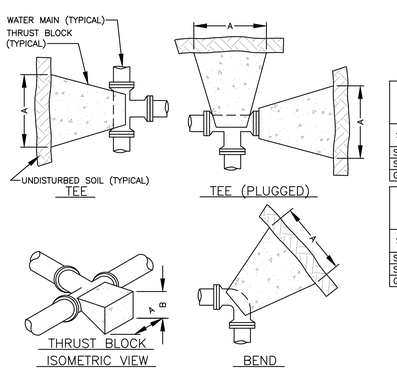

THRUST BLOCK SIZE CHART (FITTINGS UP TO 10")				
SOIL TYPE	TEES		BENDS	
	A	B	A	B
SOFT CLAY	48"	24"	48"	24"
SAND	24"	24"	24"	24"
GRAVEL	24"	18"	24"	18"

THRUST BLOCK SIZE CHART (FITTINGS 12" TO 16")				
SOIL TYPE	TEES		BENDS	
	A	B	A	B
SOFT CLAY	60"	36"	72"	36"
SAND	36"	30"	48"	30"
GRAVEL	30"	24"	40"	24"

NOTES:
1. CONCRETE FOR ALL THRUST BLOCKS TO BE MINIMUM 3,000 PSI AFTER 28 DAYS, TYPE I CEMENT, ¾" STONE.
2. WHERE POSSIBLE, CONSTRUCT THRUST BLOCKS AGAINST UNDISTURBED SOIL. WHERE NOT POSSIBLE, PLACE 90%, STANDARD PROCTOR DENSITY, COMPACTED FILL BETWEEN THE THRUST BLOCK AND THE UNDISTURBED SOIL.
3. WRAP FITTINGS WITH POLYETHYLENE PRIOR TO CONSTRUCTING THRUST BLOCKS. NO JOINTS SHALL BE COVERED WITH CONCRETE.
4. THRUST BLOCK DIMENSIONS ARE BASED ON A MAXIMUM WATER MAIN PRESSURE OF 150 PSI.

THRUST BLOCK DETAIL

NOT TO SCALE

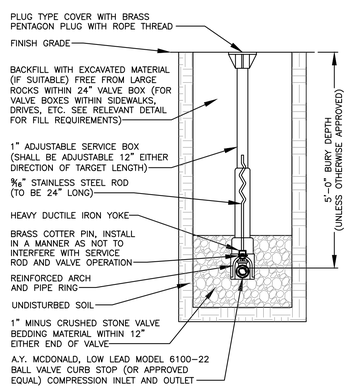

NOTES:
1. SERVICE BOX SHALL ACCOMMODATE UP TO 1" SERVICES.
2. SERVICE BOX TO BE INSTALLED IN SUCH A MANNER AS TO ENSURE IT WILL BE FREE FROM OBSTRUCTIONS AND DEBRIS AND THAT NO MATERIAL WILL INTERFERE WITH VALVE OPERATION.

WATER MAIN SERVICE CURB STOP DETAIL

NOT TO SCALE

Rev. #	Dwg. By	Description	Date

OXFORD WATER DISTRICT

Project Location: OXFORD, MAINE

Designed By: MR
Drawn By: JLD
Date: 3/12/2014
Scale: 1"=25'
Checked
Approved

Drawing Description: **KING STREET WATERMAIN REPLACEMENT DETAILS**

Seal

Project No.: **83888E**

Engineer: SEWALL
AN INTEGRATED TEAM OF GEOSPATIAL ENGINEERING, LANDSCAPE ARCHITECTURAL RESOURCE CONSULTANTS
JAMES W. SEWALL COMPANY *Since 1880*
SEWALL.COM 888-698-8202

Phase: CONST

Sheet No.: **D-1**

HORIZONTAL DATUM - US STATE PLANE NAD83(1996)
ZONE - MAINE 2000 WEST ZONE
VERTICAL DATUM - NAVD 88
COMBINED SCALE FACTOR - 0.9999658

GRID NORTH

TOWN OF OXFORD
PARCEL NO. (2)
LAND TAKEN = 0.28± AC.
SLOPE EASE. = 0.08± AC. (2)
TEMP. CONST. RIGHTS = 0.08± AC. (1)
BUILDING = (1)
TOTAL AREA = 1.73± AC. (CALC.)
REM. AREA = 1.45± AC.

CURVE DATA #2
PI = 13+60.13
D = 17°09'15.9"
Δ = 48°28'59.0" Lt.
R = 334.00'
L = 282.63'
T = 150.40'
E = 32.30'

NOTE: RIGHTS TAKEN TO RAZE AND REMOVE THAT PORTION OF THE BUILDING THAT LIES OUTSIDE OF THE NEW BOUNDARIES OF STATE AID HIGHWAY NO. 1 AT ABOUT STATION 14+15 LEFT.

RONALD T. SMITH
SHELLEY A. SMITH

HOUSE

PLEASANT STREET / ROUTE 121 / STATE AID HIGHWAY NO. 1

TO OTISFIELD

BEGIN B.L. 10+36

PC = STA. 10+35.66

PT = STA. 11+34.69

HEIRS OF NELSON G. SMITH

RIGHT OF WAY EASEMENT OXFORD COUNTY REGISTRY OF DEEDS BOOK 947, PAGE 428

PC = STA. 12+09.73

S 84°30'43" E 75.04'

126'± TEMP. CONST. 204± S.F. LIMITS

129'± (TOTAL = 288'±)

STA. 53+29.41

PT

STA. 14+92.36

END B.L. 15+06

N 33°18'38" W 20.43'

END STATE AID HIGHWAY NO. 1 / BEGIN ROUTE 121

82.18'

282.63'

171.47'

0.08± AC.

0.28± AC.

0.28± AC.

0.08± AC.

TEMP. CONST. LIMITS 92'

LITTLE ANDROSCOGGIN RIVER

FLOW

(TOTAL = 623'±) 2.58'±

451± S.F.

CURVE DATA
STATE AID HIGHWAY NO. 5
(KING STREET)
PI= 52+53.69
Δ= 55°57'43.1" Lt.
D= 33°42'12.2"
T= 90.32'
L = 166.04'
R= 170.00'
E= 22.50'

LIMITS OF WROUGHT PORTION

166.04'

10.00'

INLET DRAINAGE STRUCTURE
STA. 53+20 TO STA. 53+40 LT.

DRAINAGE EASE. LIMITS
119± S.F.

PC = STA. 51+63.37

94'±

BUILDING

HOUSE

ESTATE OF EDWIN F. MURPHY, SR.
BONITA PARADIS, CO-PR'S
CYNDE HEINO, CO-PR'S
PARCEL NO. (3)
LAND TAKEN = 0.09± AC. (PRESC. EASE.)
LAND TAKEN = 997± S.F. (OTHER)
TOTAL LAND TAKEN = 0.11± AC.
SLOPE EASE. = 451± S.F. (1)
TEMP. CONST. RIGHTS = 1,498± S.F. (1)
TOTAL AREA = 1.75± AC. (PER OWNER)
REM. AREA = 1.64± AC.

1,498± S.F.

914± S.F.

0.13± AC.

N 22°39'05" E
STATE AID HIGHWAY NO. 5

113.37'

1,153± S.F.

0.07± AC.

97± S.F.

TEMP. CONST. LIMITS 34± S.F.

64± S.F.

TO POLAND

POB = STA. 50+00.00

KING STREET

HAYES BOARDING STABLES/YOU CAN DO IT!
PARCEL NO. (9)
LAND TAKEN = 303± S.F. (PRESC. EASE.)
LAND TAKEN = 64± S.F. (OTHER)
TOTAL LAND TAKEN = 367± S.F.
TEMP. CONST. RIGHTS = 34± S.F. (1)
TOTAL AREA = 7.2± AC. (PER TOWN)
REM. AREA = 7.1± AC.

TOWN OF OXFORD
PARCEL NO. (1)
LAND TAKEN = 0.13± AC.(PRESC. EASE.)
LAND TAKEN = 1,153± S.F. (OTHER)
TOTAL LAND TAKEN = 0.16± AC.
DRAINAGE EASE. = 119± S.F. (1)
TEMP. CONST. RIGHTS = 1,118± S.F. (2)
TOTAL AREA = 1.41± AC. (PER TOWN)
REM. AREA = 1.25± AC.

CURVE DATA
PI = 10+85.23
D = 6°35'08.6"
Δ = 6°31'17.5" Rt.
R = 870.00'
L = 99.03'
T = 49.57'
E = 1.41'

1) EXISTING RIGHT OF WAY
A) KING STREET
1) ROUTE 121 & NORTHEAST OF INTERSECTION
A) OXFORD COUNTY COMMISSIONERS RECORDS VOLUME 1A, PAGE 309 MAY 1905 3.5 RODS WIDE (57.75')
B) PRESCRIPTIVE EASEMENT FOR HIGHWAY PURPOSES WITHIN LIMITS OF WROUGHT PORTION (L.O.W.P.)
2) SOUTHERLY OF INTERSECTION
A) PRESCRIPTIVE EASEMENT FOR HIGHWAY PURPOSES WITHIN LIMITS OF WROUGHT PORTION (L.O.W.P.)
B) PLEASANT STREET (ROUTE 121)
1) OXFORD COUNTY COMMISSIONERS RECORDS VOLUME 1A, PAGE 309 MAY 1905 3.5 RODS WIDE (57.75')
2) PRESCRIPTIVE EASEMENT FOR HIGHWAY PURPOSES WITHIN LIMITS OF WROUGHT PORTION (L.O.W.P.)
2) AS-BUILT PLANS
STATE HIGHWAY COMMISSION- BRIDGE DIVISION COVERED BRIDGE OVER LITTLE ANDROSCOGGIN RIVER OXFORD, OXFORD COUNTY DATED MAY 1940 BRIDGE NO. 3738
3) CONTROL INFORMATION
HORIZONTAL DATUM - US STATE PLANE NAD83(1996) ZONE - MAINE 2000 WEST ZONE VERTICAL DATUM - NAVD 88 COMBINED SCALE FACTOR - 0.9999658

STATE OF MAINE
REGISTRY OF DEEDS
COUNTY _____
RECEIVED _____, _____
at _____h_____m_____M and recorded in
Plan Book _____, Page _____
Attest: _____
REGISTER

COVERED BRIDGE
OVER
LITTLE ANDROSCOGGIN RIVER

BRIDGE NO. 3738 WIN 19268.00

SYMBOLS
IP or IPF (IRON PIPE or PIN FOUND)
S.T. (SEPTIC TANK)
(ROW MONUMENT)
&BM (TRAVERSE POINT)
WELL (WELL)
GRADING LIMIT LINE
CONSTRUCTION LIMIT LINE
PROPERTY LINE
LIMITS OF WROUGHT PORTION (L.O.W.P.)
EXISTING RIGHT OF WAY
NEW RIGHT OF WAY
NEW ROW WITHIN EXIST. ROW
CONTROL OF ACCESS
WATER LINE
GAS LINE
ELECTRIC LINE
TELEPHONE LINE
SEWER LINE

ITEM	TECH	CHECKED
BASE MAP		
EXIST. R/W	G.L.L.	C.W.K.
PROP. LINES	G.L.L.	
AREAS	G.L.L.	N.T.A.

STATE OF MAINE
DEPARTMENT OF TRANSPORTATION
16 STATE HOUSE STATION - AUGUSTA, ME 04333-0016
OXFORD
RIGHT OF WAY MAP

Filename: ...\00\ROW\MSTA\001_RWPLAN1.dgn Division: BRIDGE Username: David.Show Date:4/15/2014

REVISIONS

NO.	DATE	DESCRIPTION	BY

PLAN FILED IN PLAN BOOK PAGE COUNTY RECORD

NO.	GRANTOR	INSTRUMENT	DATE	BOOK	PAGE
		COND.	4/14/14	5104	311

DAVID BERNHARDT
COMMISSIONER
JOYCE NOEL TAYLOR
CHIEF ENGINEER
DATE

STATE OF MAINE
CHRISTOPHER W. KNIGHT
2257
PROFESSIONAL LAND SURVEYOR

To the best of my knowledge and belief the Highway Right of Way lines depicted hereon are based upon a survey conforming to the Standards of Practice promulgated by the Maine Board of Licensure for Professional Land Surveyors 02-360 CMR, Chapter 90; Exceptions: (1) No separate survey report, (2) Monumentation only as shown on plan. See sheet X of this plan set for coordinates. (3) Other boundary lines, including lines between abutters are approximate and for general reference purposes only.

STATE AID HIGHWAY NO. 1 & 5
ROUTE 121 / PLEASANT STREET & KING STREET
OXFORD OXFORD COUNTY
FEDERAL AID PROJECT NO. BH-1926(800)X

FEBRUARY 2014 | RIGHT-OF-WAY MAP | D.O.T. FILE NO. 9-377
SCALE 1" = 25' | SHEET 1 OF 2

SHEET NUMBER
58
OF 59

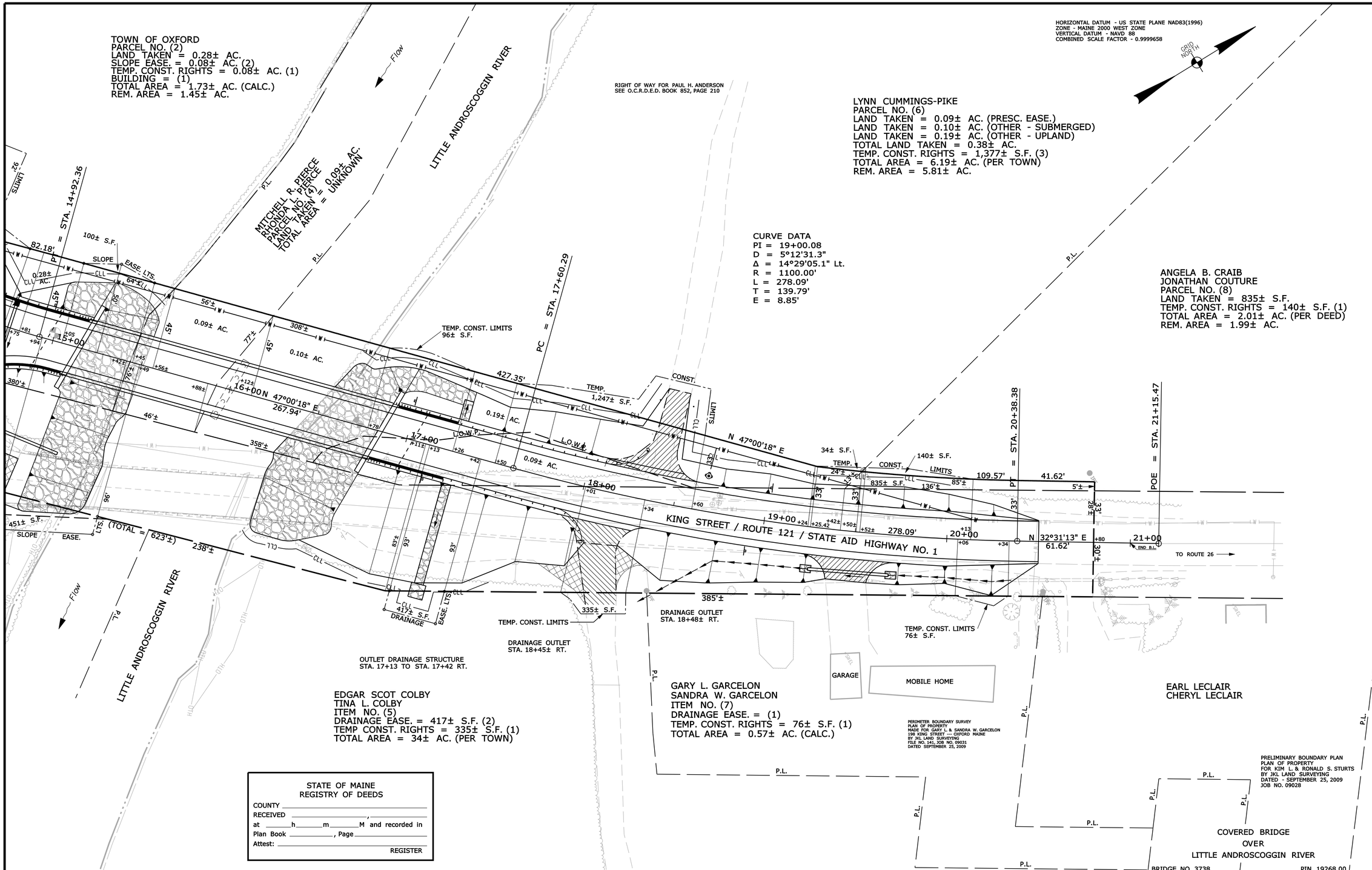

SYMBOLS

- IP or IPF (IRON PIPE or PIN FOUND)
- ST. (SEPTIC TANK)
- (ROW MONUMENT)
- BM (TRAVERSE POINT)
- WELL
- GRADING LIMIT LINE
- CONSTRUCTION LIMIT LINE
- PROPERTY LINE
- LIMITS OF "ARROUND" PORTION (L.O.W.P.)
- EXISTING RIGHT OF WAY
- NEW RIGHT OF WAY
- NEW ROW WITHIN EXIST. ROW
- CONTROL OF ACCESS
- WATER LINE
- GAS LINE
- ELECTRIC LINE
- TELEPHONE LINE
- SEWER LINE

ITEM	TECH	CHECKED
BASE MAP		
EXIST. R/W	G.L.L.	C.W.K.
PROP. LINES	G.L.L.	
AREAS	G.L.L.	N.T.A.

STATE OF MAINE
DEPARTMENT OF TRANSPORTATION
16 STATE HOUSE STATION - AUGUSTA, ME 04333-0016

OXFORD
RIGHT OF WAY MAP

Filename: ...\00\row\msta\002_RWPLAN2.dgn Division: BRIDGE Username: David.Show Date:4/15/2014

REVISIONS

NO.	DATE	DESCRIPTION	BY

PLAN FILED IN PLAN BOOK PAGE COUNTY RECORD

NO.	GRANTOR	INSTRUMENT	DATE	BOOK	PAGE
		COND.	4/14/14	5104	311

DAVID BERNHARDT
COMMISSIONER
JOYCE NOEL TAYLOR
CHIEF ENGINEER
DATE

STATE OF MAINE
CHRISTOPHER W. KNIGHT
2257
PROFESSIONAL LAND SURVEYOR

To the best of my knowledge and belief the Highway Right of Way lines depicted hereon are based upon a survey conforming to the Standards of Practice promulgated by the Maine Board of Licensure for Professional Land Surveyors 02-360 CMR, Chapter 90; Exceptions: (1) No separate survey report, (2) Monumentation only as shown on plan. See sheet X of this plan set for coordinates. (3) Other boundary lines, including lines between abutters are approximate and for general reference purposes only.

STATE AID HIGHWAY NO. 1
ROUTE 121 / KING STREET
OXFORD OXFORD COUNTY
FEDERAL AID PROJECT NO. BH-1926(800)X

FEBRUARY 2014 | RIGHT-OF-WAY MAP | D.O.T. FILE NO. 9-377
SCALE 1" = 25' | SHEET 2 OF 2

SHEET NUMBER
59
OF 59