STATE OF MAINE
DEPARTMENT OF TRANSPORTATION

SPECIFICATIONS

Design: Load and Resistance Factor Design per AASHTO LRFD Bridge Design Specifications, Sixth Edition 2012 and 2013 Interim Specifications.

DESIGN LOADING

Live Load ..... HL - 93 Modified for Strength I

TRAFFIC DATA

Current (2012) AADT	5910
Future (2032) AADT	7090
DHV - % of AADT	11%
Design Hour Volume	780
Heavy Trucks (% of AADT)	6%
Heavy Trucks (% of DHV)	6%
Directional Distribution (% of DHV)	55%
18 kip Equivalent P 2.0	168
18 kip Equivalent P 2.5	160
Design Speed (mph)	25 mph (15 mph Advisory & Chevron Signing at Bridge Approach Horizontal Curves)

HYDROLOGIC DATA

Drainage Area	3,262 sq mi
Design Discharge (Q50)	74,100 cfs
Check Discharge (Q100)	80,500 cfs
Headwater Elevation (Q50)	82.8 ft
Headwater Elevation (Q100)	83.8 ft
Discharge Velocity (Q50)	11.5 fps
Discharge Velocity (Q100)	11.9 fps
Headwater Elevation (Q2)	76.3 ft
Discharge Velocity (Q2)	8.5 fps
Headwater Elevation (Q25)	81.8 ft

MATERIALS

Concrete:	
Curb, Sidewalk, & Transition Barrier	Class "LP"
Seals	Class "A"
All Other	Class "A"
Reinforcing Steel:	
Deck, Curb, Sidewalk, & Transition Barrier	Corrosion Resistant Reinforcing System
All Other	ASTM A 615/A 615M, Grade 60
Structural Steel:	
All Material (except as noted)	ASTM A 709, Grade 50W (unpainted)
High Strength Bolts	ASTM A 325, Type 3
High Strength Bolts (in painted areas)	ASTM A 325, Type I, Galvanized

BASIC DESIGN STRESSES

Concrete:	
Class "LP"	f 'c = 5,075 psi
Class "A"	f 'c = 4,350 psi
Reinforcing Steel:	
ASTM A615/A615M, Grade 60	f y = 60,000 psi
Corrosion Resistant Reinforcing	See Special Provision for Section 503
Structural Steel:	
ASTM A 709, Grade 50W	F y = 50,000 psi
ASTM A 709, Grade 36	F y = 36,000 psi
ASTM A 325	F μ = 120,000 psi

DURHAM-LISBON
ANDROSCOGGIN COUNTY
DURHAM BRIDGE
OVER
ANDROSCOGGIN RIVER
ROUTE 9/125
FEDERAL AID PROJECT NO. BH-1823(900)
PROJECT LENGTH 0.10 mi.
BRIDGE REPLACEMENT
BRIDGE NO. 3334

LIST OF DRAWINGS

Title Sheet	1
Estimated Quantities	2
General Notes	3
General Plan	4-5
Profile	6-7
Exploration Location Plan	8
Interpretive Subsurface Profile	9-10
Boring Logs	11-12
Existing Bridge Plan & Profile	13
Curb Geometry & Drainage	14
Signing & Striping Plan	15
Sign Summary Sheet	16
Pavement Marking Details	17
Typical Sections	18
Slope Details	19
Cross Sections: Route 9 & 125	20-36
Cross Sections: Route 9	37-40
Cross Sections: Lisbon Drive	41-49
Abutment No. 1	50-54
Abutment No. 2	55-62
Pier	63-65
Bearings	66-69
Structural Steel	70-76
Superstructure Slab	77-81
Finger Joint	82-83
Reinforcement Schedules	84-85
Right-of-Way Map	86-87
Fairpoint Plans	T1-T3

UTILITIES

Central Maine Power Company (Aerial)
Comcast (Aerial)
FairPoint Communications (Aerial & Underground)
Miller Hydro
Pan Am

MAINTENANCE OF TRAFFIC

Maintain Two-Way Traffic on Existing Bridge.
Maintain Alternating One-Way Traffic with Temporary Traffic Signals on Route 9 During Durham Abutment Construction.

PROJECT LOCATION:	In the Towns of Durham & Lisbon, ¼ mile south of Route 196, carrying Route 9/125 over the Androscoggin River. Lat./Long. 43°59'34" N, 70°03'29" W
PROGRAM AREA:	Bridge
OUTLINE OF WORK:	Bridge replacement with 535' of approach work, approximately 250' of gravel drive construction, intersection reconstruction, and existing steel truss & substructure demolition.

Stantec

STATE OF MAINE
DEPARTMENT OF TRANSPORTATION

		DATE
APPROVED	COMMISSIONER:	7/23/14
	CHIEF ENGINEER:	7-25-14

STATE OF MAINE
TIMOTHY W. MERRITT
No. 9294
PROFESSIONAL ENGINEER

	SIGNATURE	
	9294	
	P.E. NUMBER	
	07-17-14	
	DATE	

PROJECT INFORMATION

PROGRAM	BRIDGE PROGRAM
PROJECT MANAGER	L. TIMBERLAKE
DESIGNER	T. MERRITT
CONSULTANT	STANTEC
PROJECT RESIDENT	
CONTRACTOR	
PROJECT COMPLETION DATE	

18239.00

BH-1823(900)

DURHAM-LISBON
DURHAM BRIDGE

TITLE SHEET

SHEET NUMBER
1
OF 87

Filename: ...\00\BRIDGE\MSTA\001_Title.dgn Division: BRIDGE Username: common Date:7/16/2014

ESTIMATED QUANTITIES - SECTION 1

ITEM NO.	DESCRIPTION	QUANTITY	UNIT
202.15	REM MANHOLE OR CATCH BASIN	5	EA
202.19	REMOVING EXISTING BRIDGE (1690 CY; 204 T)	1	LS
203.20	COMMON EXCAVATION	8000	CY
203.21	ROCK EXCAVATION	750	CY
203.213	SHATTER SOLID ROCK SUBGRADE	180	SY
203.216	EXPLORATORY DRILLING	4	HR
203.2312	HEALTH AND SAFETY PLAN (HASP)	1	LS
203.25	GRANULAR BORROW	1950	CY
206.07	STR ROCK EXC - DR & MINOR STR	95	CY
206.082	STR EA EXC-MAJOR STRUCTURES	1360	CY
206.092	STR RK EXC- MAJOR STRUCTURES	690	CY
206.11	STR ROCK EXC - PIERS	120	CY
304.10	AGGR SUBB COURSE - GRAVEL, TYPE D	1630	CY
403.208	HOT MIX ASPHALT 12.5 MM HMA SURFACE	310	T
403.209	HOT MIX ASPHALT 9.5 MM (INCIDENTALS)	19	T
403.213	HOT MIX ASPHALT 12.5 MM BASE	580	T
409.15	BITUMINOUS TACK COAT - APPLIED	190	G
502.21	STR CONC ABUT & RET WALL	240	CY
502.211	STR CONC ABUT & RET WALL - CL A OVERHANG STABILIZATION	150	CY
502.219	STR CONC ABUT & RET WALL (688 CY)	1	LS
502.22	STR CONC ABUT & RET WALL UW	380	CY
502.239	STR CONC PIERS (183 CY)	1	LS
502.24	STR CONC PIERS UW	140	CY
502.26	STR CONC RD&SW SLAB ON ST BR (380 CY)	1	LS
502.31	STR CONC APPROACH SLAB (31 CY)	1	LS
502.49	STRUCT.CONC. CURBS AND SW (116 CY)	1	LS
502.56	CONCRETE FILL	10	CY
503.12	REINF STEEL, FAB & DEL	100100	LB
503.13	REINF STEEL, PLACING	100100	LB
504.701	STR STEEL FAB & DEL, ROLLED (9450 LB)	1	LS
504.702	STR STEEL FAB & DEL, WELDED (676700 LB)	1	LS
504.71	STR STEEL ERECTION (686150 LB)	1	LS
504.906	ROCK DOWEL (24 EA)	1	LS
505.08	SHEAR CONNECTORS (2515 EA)	1	LS
507.0821	STEEL BR RAIL, 3 BAR (338 LF)	1	LS
507.0831	STEEL BR RAIL, 4 BAR (338 LF)	1	LS
508.14	HIGH PERF. WATERPROOFING MEMBRANE (1300 SY)	1	LS
511.07	COFFERDAM: ABUT NO. 1 & OVERHANG STABILIZATION	1	LS
511.07	COFFERDAM: ABUT NO. 2	1	LS
511.07	COFFERDAM: PIER	1	LS
512.08	FRENCH DRAINS	75	LF
512.081	FRENCH DRAINS (210 LF)	1	LS
514.06	CURING BOX FOR CONC CYL	1	EA
515.21	PROTECTIVE COAT FOR CONC SUR (620 SY)	1	LS
520.232	EXPANSION DEVICE - ASPHALTIC PLUG JOINT	39	LF
521.23	EXP DEV FINGER JT	1	EA
523.52	BEARING INSTALLATION	17	EA
523.5401	LAMINATED ELASTOMERIC BEARINGS, FIXED	6	EA
523.5402	LAMINATED ELASTOMERIC BEARINGS,EXPANSION	11	EA
524.301	TEMPORARY STRUCTURAL SUPPORT	1	LS
526.301	TEMPORARY CONC BARRIER TYPE I (350 LF)	1	LS
526.34	PERMANENT CONC TRANSITION BARRIER	4	EA
603.169	15" CULV PIPE OPTION III	60	LF
603.179	18" CULV PIPE OPTION III	170	LF
604.092	CATCH BASIN TYPE B1-C	4	EA
604.247	CATCH BASIN TYPE F5-C	1	EA
605.09	6" UNDERDRAIN TYPE B	60	LF
605.13	18" UNDERDRAIN TYPE C	74	LF
606.1721	BRIDGE TRANSITION - TYPE 1	4	EA
606.23	GR TY 3C - SINGLE RAIL	225	LF
606.231	GR TY 3C - 15 FOOT RADIUS AND LESS	19	LF

ESTIMATED QUANTITIES - SECTION 1

ITEM NO.	DESCRIPTION	QUANTITY	UNIT
606.232	GR TY 3C - OVER 15' RADIUS	137.5	LF
606.265	TERM END- SGL RAIL- GALV STEEL	1	EA
606.353	REFLECTORIZED FLEXIBLE GUARDRAIL MARKER	2	EA
606.551	GR TP 3 - SINGLE RAIL W RUB RAIL	275	LF
606.79	GUARDRAIL 350 FLARED TERMINAL	1	EA
607.16	CHAIN LINK FENCE - 4'	200	LF
607.24	REMOVE AND RESET FENCE	212	LF
609.31	CURB TYPE 3	640	LF
610.16	HEAVY RIPRAP	2900	CY
610.18	STONE DITCH PROTECTION	21.5	CY
613.319	EROSION CONTROL BLANKET	215	SY
615.07	LOAM	54	CY
618.1301	SEEDING METHOD NUMBER 1 - PLAN QUANTITY	1	UN
618.1411	SEEDING METHOD NUMBER 3 - PLAN QUANTITY	2	UN
619.12	MULCH	3	UN
619.1401	EROSION CONTROL MIX	10	CY
620.58	EROSION CONTROL GEOTEXTILE	2000	SY
621.389	DWF EVERGREENS (15"-18") GP A	24	EA
621.54	DECID SHRUBS (18"-24") GP A	8	EA
627.18	12" SOLID WHITE PAVEMENT MARKING	180	LF
627.733	4" WHITE OR YELLOW PAINTED PAVE MRK LINE	4400	LF
627.77	REMOVING PAVEMENT MARKINGS	300	SF
627.78	TEMP 4" PAINT PVMT MARK LINE W OR Y	300	LF
629.05	HAND LABOR, STRAIGHT TIME	300	HR
631.12	ALL-PURPOSE EXC (INC OPERATOR)	40	HR
631.14	GRADER (INCLUDING OPERATOR)	300	HR
631.15	ROLLER EARTH BASE CRS (INC OP)	300	HR
631.172	TRUCK-LARGE (INC OPERATOR)	300	HR
631.22	FRONT END LOADER (INC OPER)	300	HR
634.2041	LUMINAIRES	1	EA
634.25	SERV POLE COMP W/CABINET&CONTR	1	EA
635.311	PRECAST CONCRETE BLOCK GRAVITY WALL	200	LF
639.18	FIELD OFFICE TYPE A	0.5	EA
643.72	TEMPORARY TRAFFIC SIGNAL	1	LS
645.103	DEMOUNT GUIDE SIGN	4	EA
645.106	DEMOUNT REG, WRNG, CONF & RTE MARKER SGN	21	EA
645.108	DEMOUNT POLE	27	EA
645.113	REINSTALL GUIDE SIGN	3	EA
645.291	ROADSIDE GUIDE SIGNS TYPE II	131	SF
645.292	REG,WARN,CONF,RT SIGNS TYPE II	100	SF
652.312	TYPE III BARRICADE	2	EA
652.33	DRUM	12	EA
652.34	CONE	12	EA
652.35	CONSTRUCTION SIGNS	250	SF
652.36	MAINTENANCE OF TRAFFIC CONTROL DEVICES	150	CD
652.38	FLAGGER	3000	HR
652.41	PORTABLE CHANGEABLE MESSAGE SIGN	2	EA
656.75	TEMP SOIL EROSION & WATER POLLUTION CTRL	1	LS
659.10	MOBILIZATION	1	LS
660.21	ON-THE-JOB TRAINING (BID)	2000	HR
910.3	SPECIAL WORK - PRESSURE TESTING	24	EA
910.3	SPECIAL WORK - CONSOLIDATION GROUTING AND RE-DRILLING	6	EA
910.301	SPECIAL WORK - RELOCATE SIGN & MASONRY WALL	1	LS

ESTIMATED QUANTITIES - SECTION 1 - FAIRPOINT CONDUITS

ITEM NO.	DESCRIPTION	QUANTITY	UNIT
206.07	STR ROCK EXC - DR & MINOR STR	36	CY
652.38	FLAGGER	80	HR
910.30	SPECIAL WORK - UTILITY CONDUIT (FAIRPOINT - APPROACHES ONLY)	1	LS
910.30	SPECIAL WORK - UTILITY CONDUIT (FAIRPOINT - BRIDGE ONLY)	1	LS

Stantec

STATE OF MAINE
DEPARTMENT OF TRANSPORTATION

BH-1823(900)

WIN 18239.00

BRIDGE NO. 3334

BRIDGE PLANS

		BY	DATE
PROJ. MANAGER	L. TIMBERLAKE		
DESIGN-DETAILED	DDT/SM	DDT	JUNE 2014
CHECKED-REVIEWED	TWM	TWM	JUNE 2014
DESIGN2-DETAILED2			
DESIGN3-DETAILED3			
REVISIONS 1			
REVISIONS 2			
REVISIONS 3			
REVISIONS 4			
FIELD CHANGES			

SIGNATURE

P.E. NUMBER

DATE

DURHAM BRIDGE
ANDROSCOGGIN RIVER
DURHAM-LISBON ANDROSCOGGIN COUNTY

ESTIMATED QUANTITIES

SHEET NUMBER
2
OF 87

Filename: ...\BRIDGE\MSTA\002_Quantities.dgn Division: BRIDGE Username: common Date:7/18/2014

GENERAL CONSTRUCTION NOTES

1. During construction, the road will be closed to traffic for a time period specified in the Special Provisions.

2. For easements, construction limits and right of way lines, refer to Right of Way Map.

3. The clearing limits as shown on the plans are approximate. The exact limits will be established in the field by the Resident. Payment for clearing will be considered incidental to Contract items.

4. All utility facilities shall be adjusted by the respective utilities unless otherwise noted.

5. Do not excavate for Aggregate Subbase Course where existing material is suitable as determined by the Resident.

6. In areas where the Resident directs the Contractor not to excavate to the subgrade line shown on the plans, payment for removing existing pavement, grubbing, shaping, ditching, and compacting the existing subbase and layers of new subbase 6 inches or less thick will be made under appropriate equipment rental items.

7. All embankment material, except as otherwise shown, placed below EL. 95 shall be Granular Borrow meeting the requirements of Subsection 703.19, Material for Underwater Backfill.

8. Place loam 2 inches deep on all new or reconstructed sideslopes or as directed by the Resident.

9. Erosion Control Mix may be substituted in those areas normally receiving loam and seed as directed by the Resident. Placement shall be in accordance with Standard Specifications Section 619, Mulch. Payment will be made under Item No. 619.1401, Erosion Control Mix.

10. Place a 24-in. wide strip of Temporary Erosion Control Blanket on the sideslopes along the top of the riprap and behind the wingwalls.

11. Guardrail posts as shown in the Standard Details shall be modified from the indicated length of 6 feet to a length of 7 feet with an embedment of 4.5 feet. Payment will be considered incidental to the guardrail pay items.

12. An NCHRP350 compliant guardrail end treatment shall be installed concurrently with the placement of each section of beam guardrail.

13. Extended-use Erosion Control Blanket, seeded gutters, riprap downspouts, and other gutters lined with Stone Ditch Protection shall be constructed after paving and shoulder work is completed, where it is apparent that runoff will cause continual erosion. Payment will be made under the appropriate Contract items.

14. Protective Coating for Concrete Surfaces shall be applied to the following areas:

- All exposed surfaces of concrete curbs and sidewalks.
- Fascias down to the drip notch.
- All exposed surfaces of Concrete Transition Barriers.
- Top of Abutment No. 1 backwall and to one foot below the top of backwall on the back side.

15. Project information referred to below may be accessed at the following MaineDOT web address: http://www.maine.gov/mdot/contractors/*projecttbl.

16. The existing bridge plans may be accessed at the MaineDOT web address. The plans are reproductions of the original drawings as prepared for the construction of the bridge. It is very unlikely that the plans will show any construction field changes or any alterations which may have been made to the bridge during its life span.

17. The hydrologic report of the bridge site may be accessed at the MaineDOT web address. The hydrologic report is based on MaineDOT's interpretation of the information obtained for the subject site. No assurance is given that the information or the conclusions of the report will be representative of actual conditions at the time of construction.

18. The project geotechnical report titled: Final Geotechnical Design Report, Route 125 Bridge Over the Androscoggin River, MaineDOT WIN 18239.00, Durham-Lisbon, Maine, Soils Report No. 2014-04C, dated: January 13, 2014 may be accessed at the MaineDOT website.

19. Geotechnical information furnished or referred to in this plan set is for the use of the Bidders and the Contractor. No assurance is given that the information or interpretations will be representative of actual subsurface conditions at the construction site. MaineDOT will not be responsible for the Bidders' or Contractor's interpretations of, or conclusions drawn from, the geotechnical information. The boring logs contained in the plan set present factual and interpretive subsurface information collected at discrete locations. Data provided may not be representative of the subsurface conditions between the boring locations.

20. Quantities included for pay items measured and paid for by Lump Sum are estimated quantities and are provided by MaineDOT for informational purposes only. Lump Sum pay items will be paid for at the Contract Bid amount, with no addition or reduction in payment to the Contractor if the actual final quantities are different from the MaineDOT provided estimated quantities, except as follows:

a. If a Lump Sum pay item is eliminated, the requirements of Standard Specifications Section 109.2, Elimination of Items, will take precedence.

b. If other Contract Documents specifically allow a change in payment for a Lump Sum pay item, those requirements will be followed.

c. If a design change results in changes to estimated quantities for Lump Sum pay items, price adjustments will be made in accordance with Standard Specifications Section 109.7, Equitable Adjustments to Compensation.

21. The Contractor shall submit a Bridge Demolition Plan to the Resident at least 10 business days prior to the start of demolition work. The plan shall outline the methods and equipment to be used to remove and dispose of all materials included in the existing bridge. No work related to the removal of the bridge shall be undertaken by the Contractor until MaineDOT has reviewed the Bridge Demolition Plan for appropriateness and completeness. Payment for all work necessary for developing, submitting and finalizing the Demolition Plan will be considered incidental to the bridge removal pay item.

22. The existing bridge shall be removed by and become the property of the Contractor. The steel portions of the existing bridge are coated with a lead-based paint system. The Contractor is responsible for the containment, proper management and disposal of all lead-contaminated hazardous waste generated by the process of demolishing the bridge. The Contractor is responsible for implementing appropriate OSHA mandated personal protection standards related to this process. Once the existing bridge is removed, the Contractor is solely responsible for the care, custody and control of the components of the existing bridge and any hazardous waste generated as a result of the storage, recycling or disposal of the bridge components, including lead-coated steel. The Contractor shall recycle or reuse the steel in accordance with the Maine Department of Environmental Protection's "Maine Hazardous Waste Management Regulations," Chapter 850. A copy of this regulation is available at MaineDOT's offices on Child Street in Augusta. Payment for all labor, materials, equipment and other costs required to remove and dispose of the existing bridge will be considered incidental to the bridge removal pay item.

23. The Maine Department of Environmental Protection (MDEP) has reported spills and releases involving petroleum products adjacent to the project. Based on the scope of work presented, available data suggests that this contamination may only be adjacent to the immediate areas of any excavation proposed by the Maine Department of Transportation (MaineDOT). However, in light of MDEP's findings, the Contractor shall employ appropriate health and safety measures to protect its workers against hazards associated with working near petroleum-impacted soils. Furthermore, the Contractor shall remain alert for any additionally evidence of contamination. If the Contractor encounters evidence of soil or groundwater contamination, the Contractor shall secure the excavation, stop work in the contaminated area, and immediately notify the Resident. The Resident shall contact the Hydrogeologist in MDOT's Environmental Office at 207-624-3100 and the Maine Department of Environmental Protection at 800-482-0777. Work may only continue with authorization from the Resident.

24. The Contractor's operations shall not have any impacts to the normal operations of Miller Hydro's upstream Worumbo Hydroelectric Dam, including its tailrace hydraulics and its electrical distribution and transmission. The Dam is FERC regulated and is a run-of-the-river dam. The Contractor's temporary construction access, any work trestle, and cofferdams shall be constructed and removed without impacting the dam tailrace or its hydraulics.

25. The Contractor shall maintain public access to the FERC regulated fish access trail on the Lisbon River Bank during construction, except for the area under and downstream of the proposed bridge. The public parking lot near STA. 59+00 to Sta. 60+00 shall also be maintained during construction for public use.

26. Place riprap on slopes steeper than 2H:1V, or as directed by the Resident.

27. No existing drainage shall be abandoned, removed or plugged without approval from the Resident.

28. Any necessary cutting of existing pipes or drainage structures to fit proposed pipe or drainage structures shall not be paid for separately and will be considered incidental to the new pipe or drainage structure.

29. Any base pavement not surfaced before winter will require temporary pavement markings matching the final condition.

30. The Contractor will be responsible for maintaining all existing mailboxes to ensure that the mail will be deliverable. No separate payment will be made for this work; it shall be considered incidental to the contract.

31. Any damage to the slopes caused by the Contractor's equipment, personnel, or operation shall be repaired to the satisfaction of the resident. All work, equipment and materials required to make repairs shall be at the Contractor's expense.

32. All work shall be done in accordance with the Maine Department of Transportation's Best Management Practices for Erosion Control & Sediment Control, February, 2008.

33. All exposed edges of concrete shall be chamfered 5/8" ± 1/8".

Stantec

STATE OF MAINE
DEPARTMENT OF TRANSPORTATION

BH-1823(900)

WIN 18239.00

BRIDGE NO. 3334

BRIDGE PLANS

		BY	DATE
PROJ. MANAGER	L. TIMBERLAKE		
DESIGN-DETAILED	DDT	DDT	JUNE 2014
CHECKED-REVIEWED	TWM	TWM	JUNE 2014
DESIGN2-DETAILED2			
DESIGN3-DETAILED3			
REVISIONS 1			
REVISIONS 2			
REVISIONS 3			
REVISIONS 4			
FIELD CHANGES			

SIGNATURE

P.E. NUMBER

DATE

DURHAM BRIDGE
ANDROSCOGGIN RIVER
DURHAM-LISBON ANDROSCOGGIN COUNTY

GENERAL NOTES

SHEET NUMBER

3

OF 87

Filename: ...\MSTA\003_GeneralNotes.dgn Division: BRIDGE Username: common Date:7/17/2014

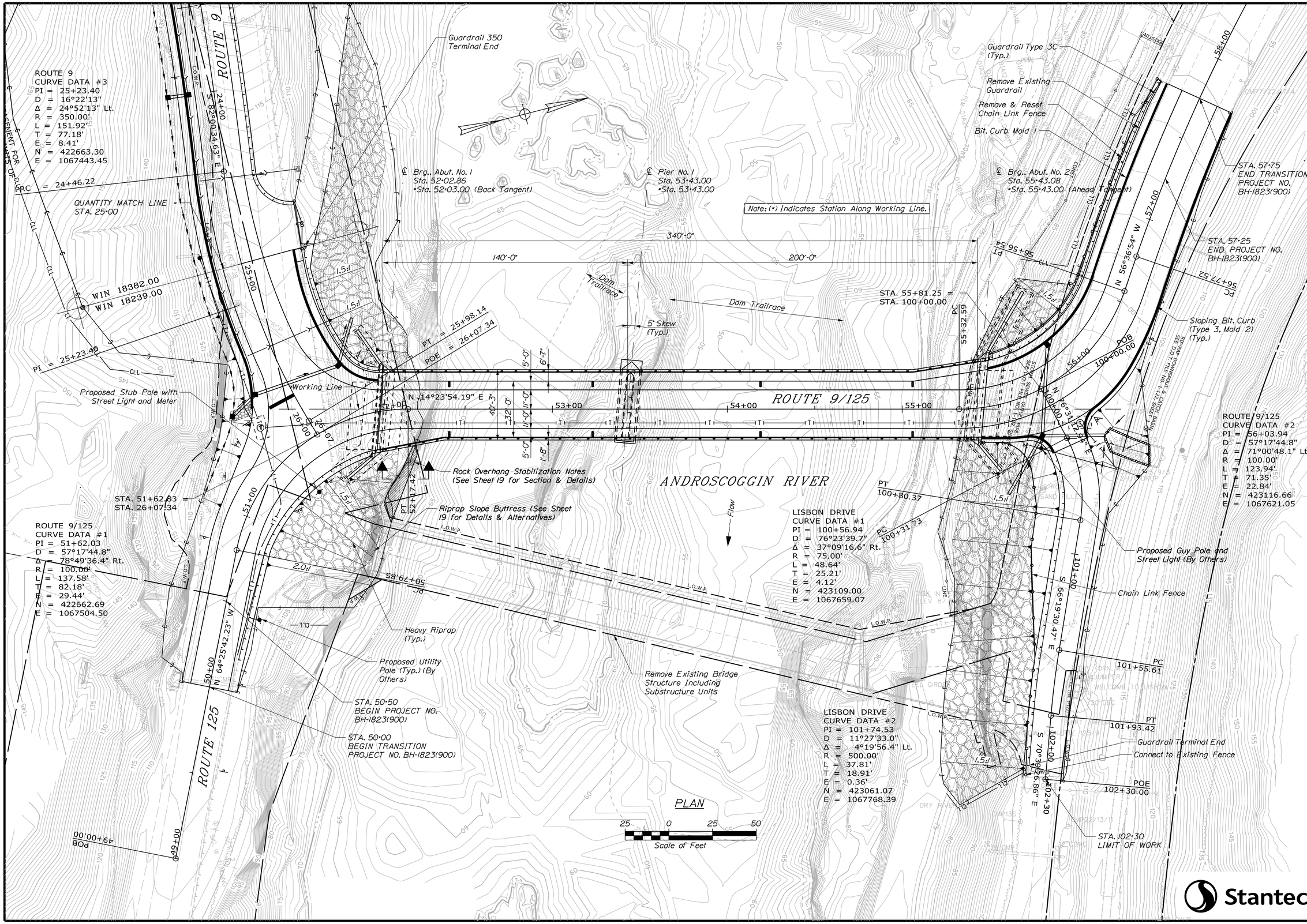

STATE OF MAINE
DEPARTMENT OF TRANSPORTATION

BH-1823(900)

WIN 18239.00

BRIDGE NO. 3334

BRIDGE PLANS

PROJ. MANAGER	L. TIMBERLAKE	BY	DATE
DESIGN-DETAILED	DOT	JTS	JUNE 2014
CHECKED-REVIEWED	AML	DOT\TWM	JUNE 2014
DESIGN2-DETAILED2	ISM	PZA	JAN 2014
DESIGN3-DETAILED3			
REVISIONS 1			
REVISIONS 2			
REVISIONS 3			
REVISIONS 4			
FIELD CHANGES			

SIGNATURE

P.E. NUMBER

DATE

DURHAM BRIDGE
ANDROSCOGGIN RIVER
DURHAM-LISBON ANDROSCOGGIN COUNTY

GENERAL PLAN 1

SHEET NUMBER

4

OF 87

Filename: ...\MSTA\004_General Plan1.dgn Division: BRIDGE Username: common Date:7/17/2014

Filename: ...\MSTA\005_GeneralPlan2.dgn Division: BRIDGE Username: common Date:7/17/2014

Stantec

STATE OF MAINE
DEPARTMENT OF TRANSPORTATION

BH-1823(900)

WIN 18239.00

BRIDGE NO. 3334

BRIDGE PLANS

		BY	DATE
PROJ. MANAGER	L. TIMBERLAKE		
DESIGN-DETAILED	DDT	JTS	JUNE 2014
CHECKED-REVIEWED	AML	DDT\TWM	JUNE 2014
DESIGN2-DETAILED2	ISM	PZA	JAN 2014
DESIGN3-DETAILED3			
REVISIONS 1			
REVISIONS 2			
REVISIONS 3			
REVISIONS 4			
FIELD CHANGES			

SIGNATURE

P.E. NUMBER

DATE

DURHAM BRIDGE
ANDROSCOGGIN RIVER
DURHAM-LISBON ANDROSCOGGIN COUNTY

GENERAL PLAN 2

SHEET NUMBER

5

OF 87

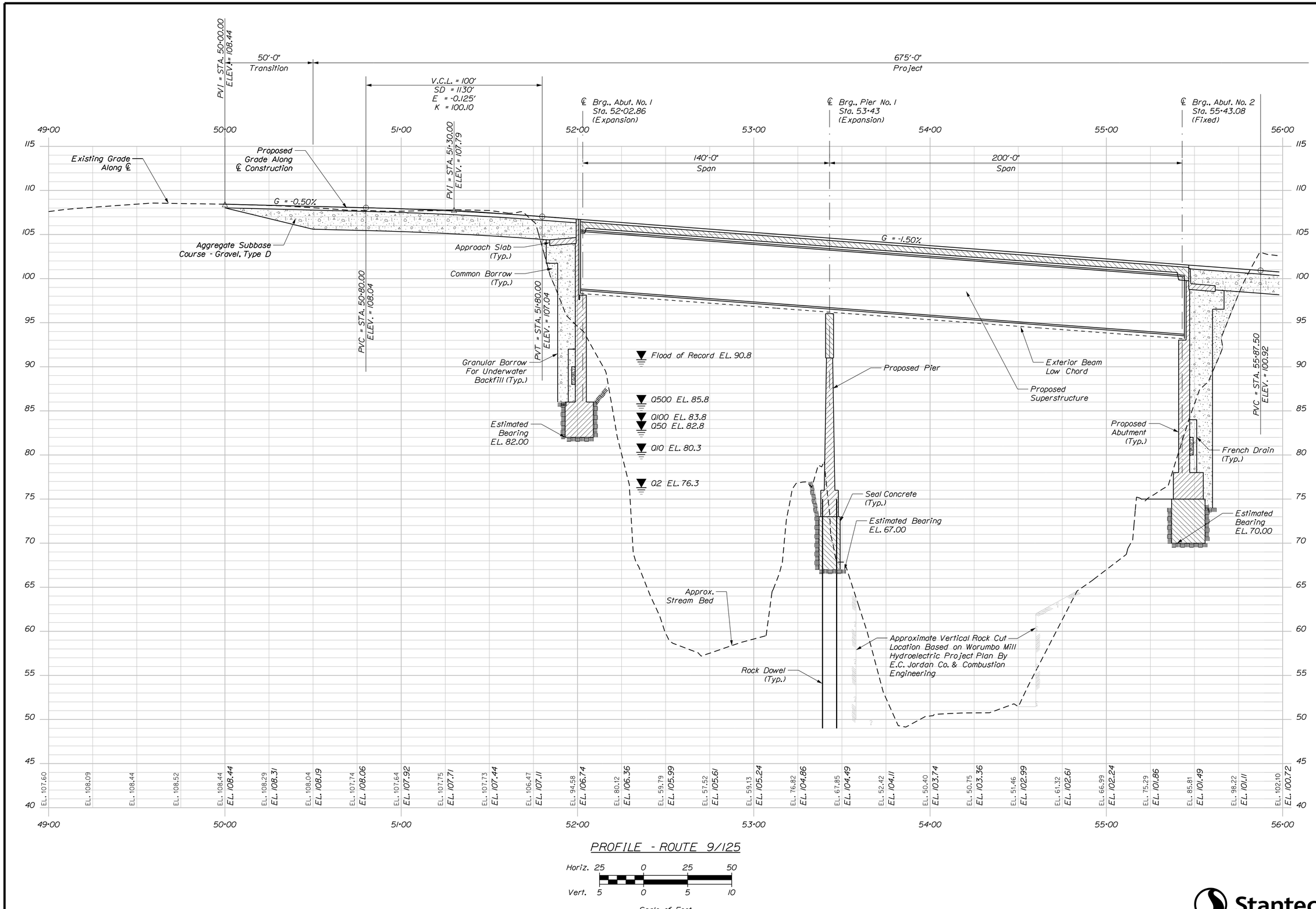

PROFILE - ROUTE 9/125

Stantec

STATE OF MAINE
DEPARTMENT OF TRANSPORTATION

BH-1823(900)

WIN 18239.00

BRIDGE NO. 3334

BRIDGE PLANS

PROJ. MANAGER	L. TIMBERLAKE	BY	DATE
DESIGN-DETAILED	DDT	JTS	JUNE 2014
CHECKED-REVIEWED	AML	DDT,TWM	JUNE 2014
DESIGN2-DETAILED2	ISM	PZA	JAN 2014
DESIGN3-DETAILED3			
REVISIONS 1			
REVISIONS 2			
REVISIONS 3			
REVISIONS 4			
FIELD CHANGES			

SIGNATURE

P.E. NUMBER

DATE

DURHAM BRIDGE
ANDROSCOGGIN RIVER
DURHAM-LISBON ANDROSCOGGIN COUNTY

PROFILE 1

SHEET NUMBER

6

OF 87

Filename: ...\BRIDGE\MSTA\006_Profile1.dgn Division: BRIDGE Username: common Date:7/17/2014

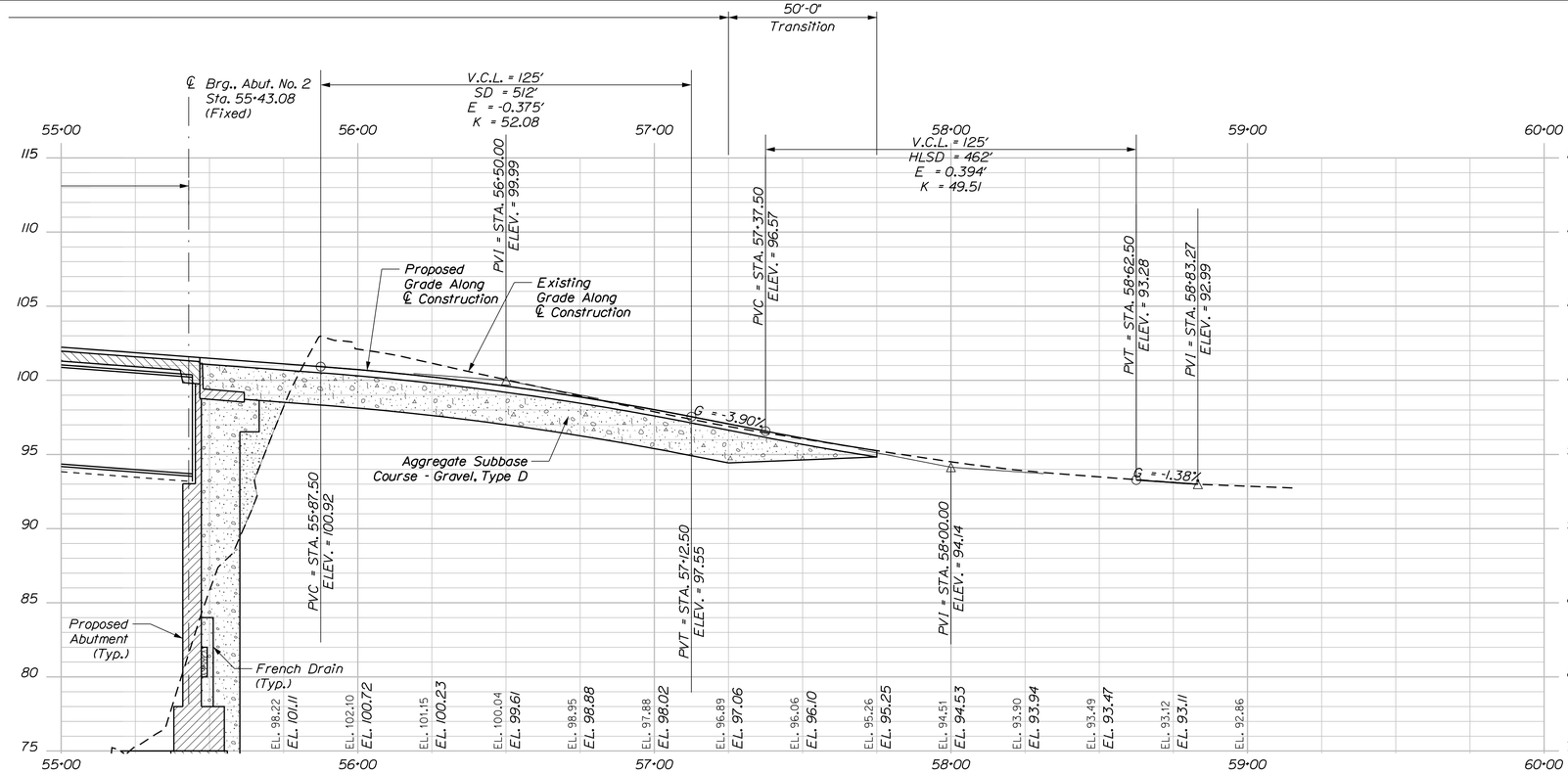

PROFILE - ROUTE 9/125

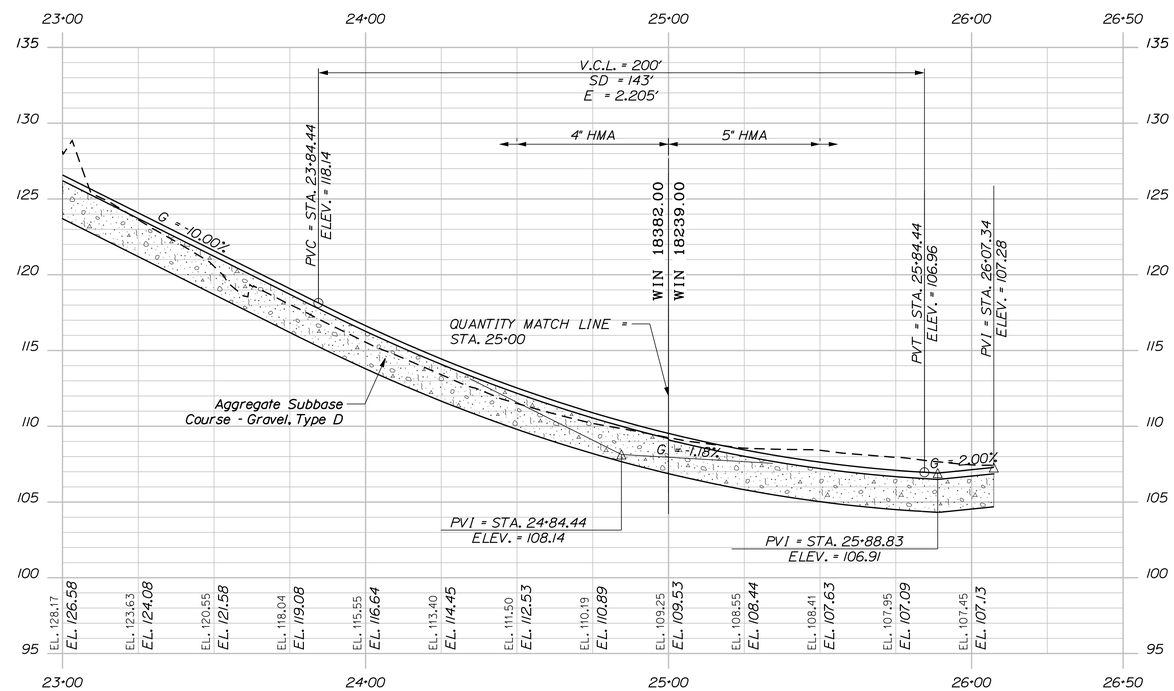

PROFILE - ROUTE 9

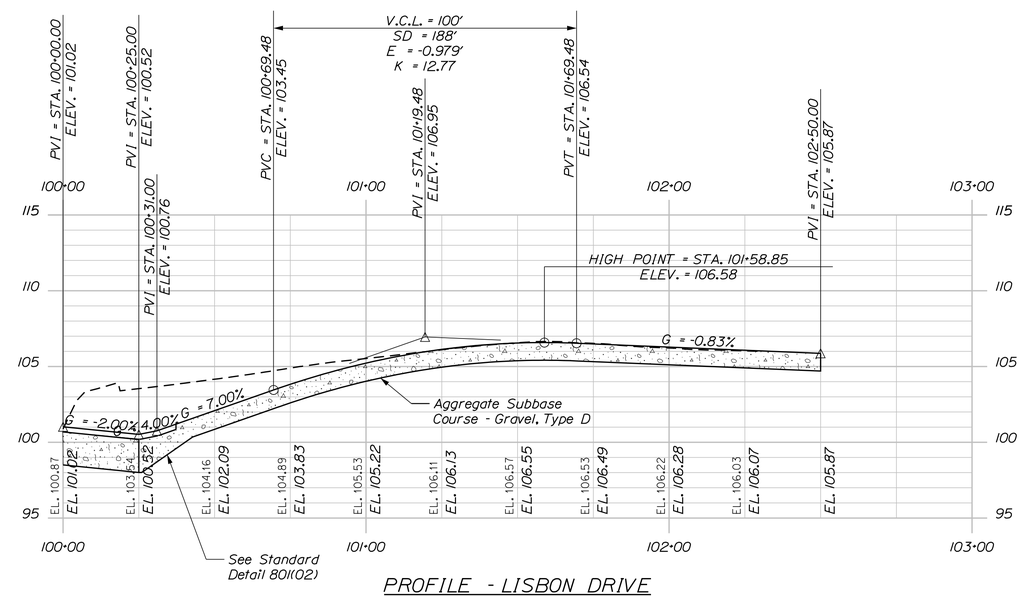

PROFILE - LISBON DRIVE

Horiz. 25 0 25 50
Vert. 5 0 5 10
Scale of Feet

Stantec

STATE OF MAINE
DEPARTMENT OF TRANSPORTATION

BH-1823(900)

WIN 18239.00

BRIDGE NO. 3334

BRIDGE PLANS

PROJ. MANAGER	L. TIMBERLAKE	BY	DATE
DESIGN-DETAILED	DOT	JTS	JUNE 2014
CHECKED-REVIEWED	AML	DDT\TWM	JUNE 2014
DESIGN2-DETAILED2	ISM	PZA	JAN 2014
DESIGN3-DETAILED3			
REVISIONS 1			
REVISIONS 2			
REVISIONS 3			
REVISIONS 4			
FIELD CHANGES			

SIGNATURE

P.E. NUMBER

DATE

DURHAM BRIDGE
ANDROSCOGGIN RIVER
DURHAM-LISBON ANDROSCOGGIN COUNTY

PROFILE 2

SHEET NUMBER

7

OF 87

Filename: ...\BRIDGE\MSTA\007_Profile2.dgn Division: BRIDGE Username: common Date:7/17/2014

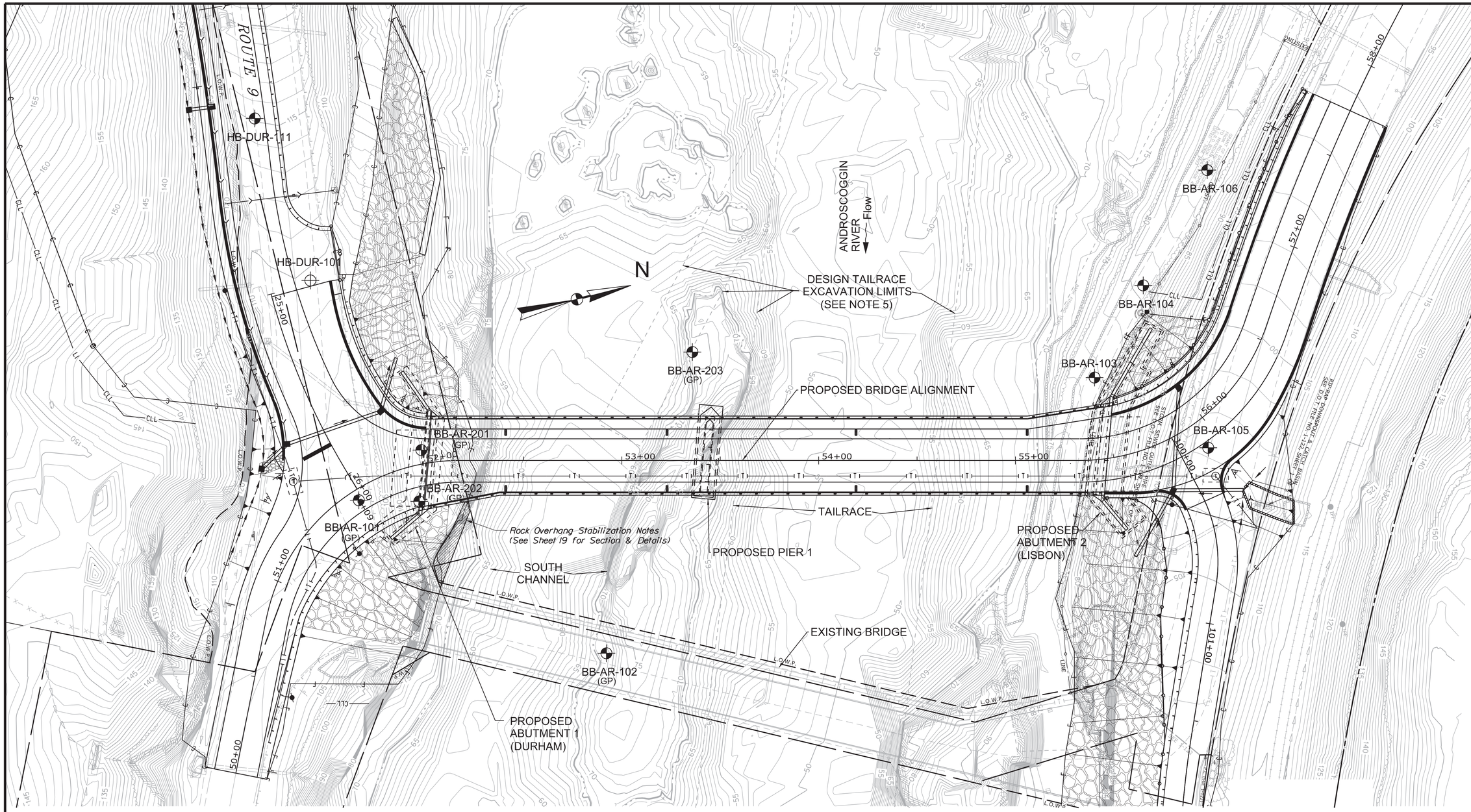

NOTES:

1) BASE MAP DEVELOPED FROM ELECTRONIC FILES PROVIDED BY STANTEC ON DECEMBER 12, 2012 (FILES INCLUDED CONTOURS.DGN AND TOPO.DGN) AND ON DECEMBER 16, 2013 (FILES INCLUDED ALIGNMENTS.DGN AND BRIDGE.DGN).

2) THE AS DRILLED LOCATIONS OF THE TEST BORINGS AND PROBES WERE SURVEYED BY MAINE DOT SURVEY CREW. COORDINATES WERE GIVEN BY MAINE DOT SURVEY.

3) BB-AR-100 SERIES BORINGS WERE PERFORMED BY MAINE TEST BORING OF HERMON, MAINE BETWEEN OCTOBER 11, 2012 AND OCTOBER 16, 2012 AND OBSERVED BY GZA PERSONNEL. BB-AR-200 SERIES BORINGS WERE PERFORMED BY MAINE TEST BORING OF HERMON, MAINE AND NEW HAMPSHIRE BORINGS OF LONDONDERRY, NEW HAMPSHIRE BETWEEN MAY 29, 2013 AND JULY 17, 2013.

4) HB-DUR-100 SERIES PROBES/BORINGS WERE PERFORMED AND MONITORED BY MAINE DOT ON FEBRUARY 10, 2011.

5) DESIGN TAILRACE EXCAVATION LIMITS BASED ON DRAWING TITLED, "EXCAVATION PLAN LOWER TAILRACE," (DWG. NO. C-105) BY E.C. JORDAN CO., REVISION DATE MAY 15, 1989.

6) UNLESS SPECIFICALLY STATED BY WRITTEN AGREEMENT, THIS DRAWING IS THE SOLE PROPERTY OF GZA GEOENVIRONMENTAL, INC. (GZA). THE INFORMATION SHOWN ON THE DRAWING IS SOLELY FOR USE BY GZA'S CLIENT OR THE CLIENT'S DESIGNATED REPRESENTATIVE FOR THE SPECIFIC PROJECT AND LOCATION IDENTIFIED ON THE DRAWING. THE DRAWING SHALL NOT BE TRANSFERRED, REUSED, COPIED, OR ALTERED IN ANY MANNER FOR USE AT ANY OTHER LOCATION OR FOR ANY OTHER PURPOSE WITHOUT THE PRIOR WRITTEN CONSENT OF GZA. ANY TRANSFER, REUSE, OR MODIFICATION TO THE DRAWING BY THE CLIENT OR OTHERS, WITHOUT THE PRIOR WRITTEN EXPRESS CONSENT OF GZA, WILL BE AT THE USER'S SOLE RISK AND WITHOUT ANY RISK OR LIABILITY TO GZA.

LEGEND:

BB-AR-106 — LOCATION AND DESIGNATION OF RT. 125 BRIDGE TEST BORING (DRILLED BY MAINE TEST BORING/NEW HAMPSHIRE BORINGS FOR GZA)

HB-DUR-101 (GP) — LOCATION AND DESIGNATION OF RT. 9 HIGHWAY PROBE (DRILLED BY MAINE DOT)

INDICATES BOREHOLE GEOPHYSICAL TESTING CONDUCTED BY NORTHEAST GEOPHYSICAL IN COMPLETED BOREHOLE

APPROXIMATE LIMITS OF UNDERMINED ROCK SLOPE

25 0 25 50
Scale of Feet

PREPARED BY: GZA

STATE OF MAINE
DEPARTMENT OF TRANSPORTATION

BH-1823(900)

WIN 18239.00

BRIDGE NO. 3334

BRIDGE PLANS

STATE OF MAINE ANDREW R. BLASDELL NO. 10957 PROFESSIONAL ENGINEER

P.E. NUMBER		
06/27/2014		
DATE		
SIGNATURE		
10957		

PROJ. MANAGER	L. TIMBERLAKE	BY	DATE
DESIGN-DETAILED	GZA	MJD	JUNE 2014
CHECKED-REVIEWED	GZA	ARB	JUNE 2014
DESIGN2-DETAILED2	GZA	ETL	JUNE 2014
DESIGN3-DETAILED3			
REVISIONS 1			
REVISIONS 2			
REVISIONS 3			
REVISIONS 4			
FIELD CHANGES			

DURHAM BRIDGE
ANDROSCOGGIN RIVER
DURHAM-LISBON ANDROSCOGGIN COUNTY

EXPLORATION LOCATION PLAN

SHEET NUMBER

8

OF 87

Filename: ...\MSTA\gza\008_GEOPLAN_1.dgn Division: BRIDGE Username: common Date:6/27/2014

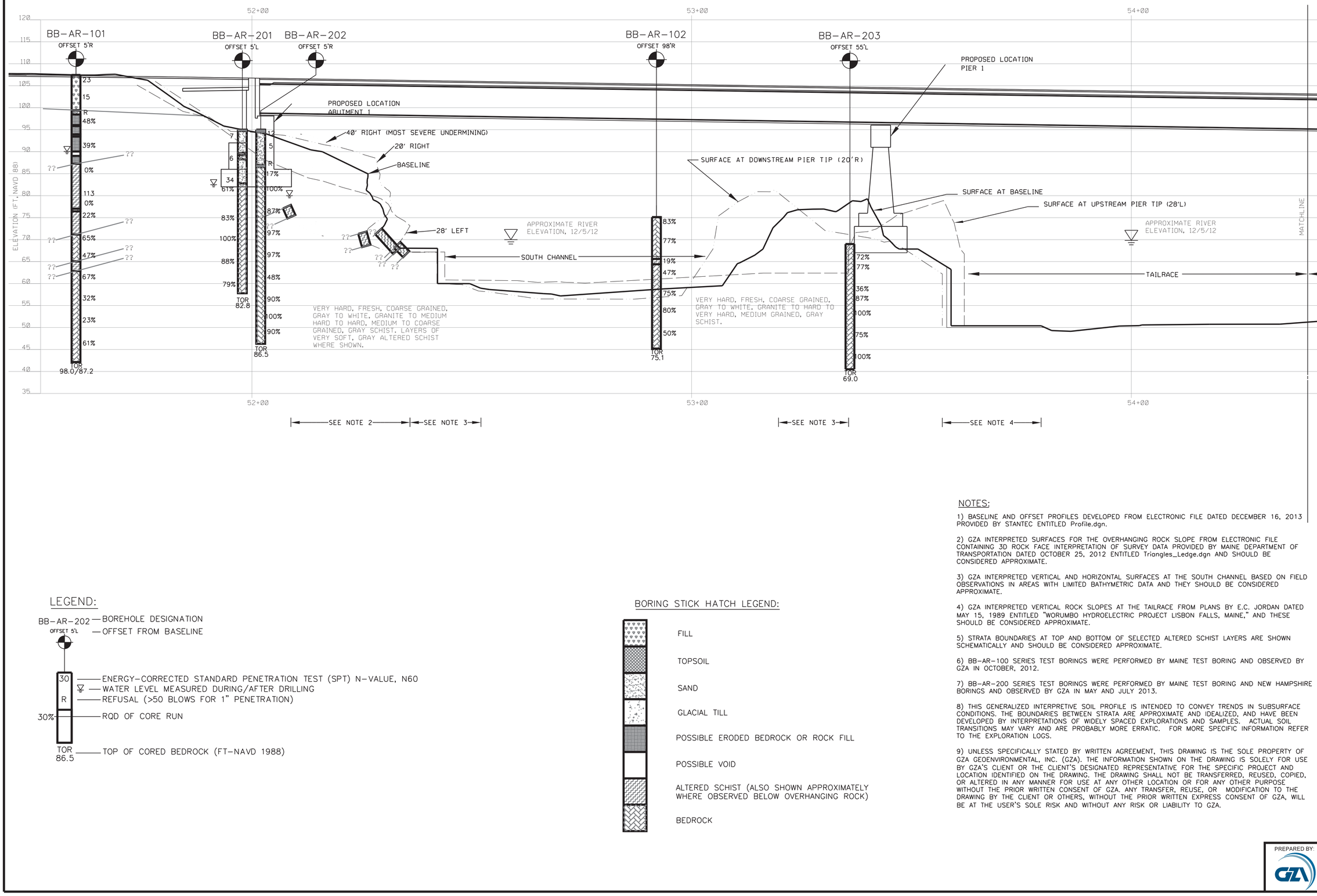

LEGEND:

BB-AR-202 — BOREHOLE DESIGNATION
OFFSET 5'L — OFFSET FROM BASELINE

30 — ENERGY-CORRECTED STANDARD PENETRATION TEST (SPT) N-VALUE, N60
▽ — WATER LEVEL MEASURED DURING/AFTER DRILLING
R — REFUSAL (>50 BLOWS FOR 1" PENETRATION)
30% — RQD OF CORE RUN
TOR 86.5 — TOP OF CORED BEDROCK (FT-NAVD 1988)

BORING STICK HATCH LEGEND:

- FILL
- TOPSOIL
- SAND
- GLACIAL TILL
- POSSIBLE ERODED BEDROCK OR ROCK FILL
- POSSIBLE VOID
- ALTERED SCHIST (ALSO SHOWN APPROXIMATELY WHERE OBSERVED BELOW OVERHANGING ROCK)
- BEDROCK

NOTES:

1) BASELINE AND OFFSET PROFILES DEVELOPED FROM ELECTRONIC FILE DATED DECEMBER 16, 2013 PROVIDED BY STANTEC ENTITLED Profile.dgn.

2) GZA INTERPRETED SURFACES FOR THE OVERHANGING ROCK SLOPE FROM ELECTRONIC FILE CONTAINING 3D ROCK FACE INTERPRETATION OF SURVEY DATA PROVIDED BY MAINE DEPARTMENT OF TRANSPORTATION DATED OCTOBER 25, 2012 ENTITLED Triangles_Ledge.dgn AND SHOULD BE CONSIDERED APPROXIMATE.

3) GZA INTERPRETED VERTICAL AND HORIZONTAL SURFACES AT THE SOUTH CHANNEL BASED ON FIELD OBSERVATIONS IN AREAS WITH LIMITED BATHYMETRIC DATA AND THEY SHOULD BE CONSIDERED APPROXIMATE.

4) GZA INTERPRETED VERTICAL ROCK SLOPES AT THE TAILRACE FROM PLANS BY E.C. JORDAN DATED MAY 15, 1989 ENTITLED "WORUMBO HYDROELECTRIC PROJECT LISBON FALLS, MAINE," AND THESE SHOULD BE CONSIDERED APPROXIMATE.

5) STRATA BOUNDARIES AT TOP AND BOTTOM OF SELECTED ALTERED SCHIST LAYERS ARE SHOWN SCHEMATICALLY AND SHOULD BE CONSIDERED APPROXIMATE.

6) BB-AR-100 SERIES TEST BORINGS WERE PERFORMED BY MAINE TEST BORING AND OBSERVED BY GZA IN OCTOBER, 2012.

7) BB-AR-200 SERIES TEST BORINGS WERE PERFORMED BY MAINE TEST BORING AND NEW HAMPSHIRE BORINGS AND OBSERVED BY GZA IN MAY AND JULY 2013.

8) THIS GENERALIZED INTERPRETIVE SOIL PROFILE IS INTENDED TO CONVEY TRENDS IN SUBSURFACE CONDITIONS. THE BOUNDARIES BETWEEN STRATA ARE APPROXIMATE AND IDEALIZED, AND HAVE BEEN DEVELOPED BY INTERPRETATIONS OF WIDELY SPACED EXPLORATIONS AND SAMPLES. ACTUAL SOIL TRANSITIONS MAY VARY AND ARE PROBABLY MORE ERRATIC. FOR MORE SPECIFIC INFORMATION REFER TO THE EXPLORATION LOGS.

9) UNLESS SPECIFICALLY STATED BY WRITTEN AGREEMENT, THIS DRAWING IS THE SOLE PROPERTY OF GZA GEOENVIRONMENTAL, INC. (GZA). THE INFORMATION SHOWN ON THE DRAWING IS SOLELY FOR USE BY GZA'S CLIENT OR THE CLIENT'S DESIGNATED REPRESENTATIVE FOR THE SPECIFIC PROJECT AND LOCATION IDENTIFIED ON THE DRAWING. THE DRAWING SHALL NOT BE TRANSFERRED, REUSED, COPIED, OR ALTERED IN ANY MANNER FOR USE AT ANY OTHER LOCATION OR FOR ANY OTHER PURPOSE WITHOUT THE PRIOR WRITTEN CONSENT OF GZA. ANY TRANSFER, REUSE, OR MODIFICATION TO THE DRAWING BY THE CLIENT OR OTHERS, WITHOUT THE PRIOR WRITTEN EXPRESS CONSENT OF GZA, WILL BE AT THE USER'S SOLE RISK AND WITHOUT ANY RISK OR LIABILITY TO GZA.

PREPARED BY: GZA

STATE OF MAINE
DEPARTMENT OF TRANSPORTATION

BH-1823(900)

WIN 18239.00

BRIDGE PLANS

BRIDGE NO. 3334

STATE OF MAINE ANDREW R. BLASDELL NO. 10957 PROFESSIONAL ENGINEER

P.E. NUMBER		
06/27/2014		
DATE		
SIGNATURE		
10957		

PROJ. MANAGER	L. TIMBERLAKE		
DESIGN-DETAILED	GZA	MJD	JUNE 2014
CHECKED-REVIEWED	GZA	ARB	JUNE 2014
DESIGN2-DETAILED2	GZA	ETL	JUNE 2014
DESIGN3-DETAILED3			
REVISIONS 1			
REVISIONS 2			
REVISIONS 3			
REVISIONS 4			
FIELD CHANGES			

DURHAM BRIDGE
ANDROSCOGGIN RIVER
DURHAM-LISBON ANDROSCOGGIN COUNTY

INTERPRETIVE SUBSURFACE PROFILE - SOUTH

SHEET NUMBER

9

OF 87

Filename: ...\MSTA\gza\009_PROFILE_1.dgn Division: BRIDGE Username: common Date:6/27/2014

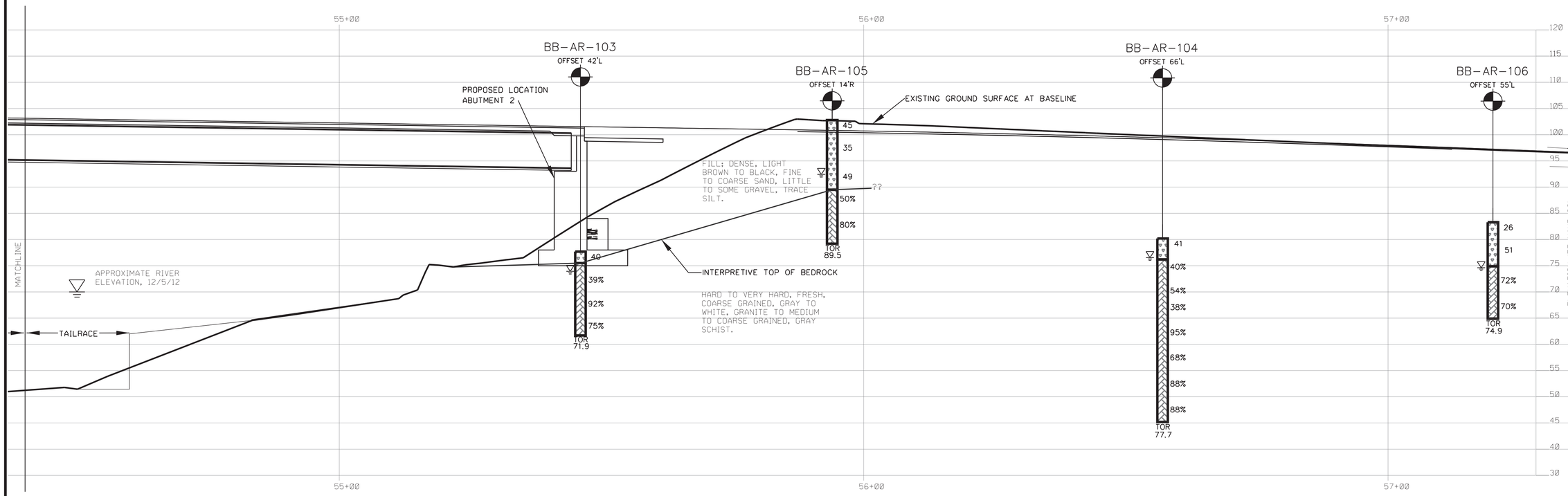

LEGEND:

BB-AR-202 — BOREHOLE DESIGNATION

OFFSET 5'L — OFFSET FROM BASELINE

30 — ENERGY-CORRECTED STANDARD PENETRATION TEST (SPT) N-VALUE, N60

▽ — WATER LEVEL MEASURED DURING/AFTER DRILLING

R — REFUSAL (>50 BLOWS FOR 1" PENETRATION)

30% — RQD OF CORE RUN

TOR 86.5 — TOP OF CORED BEDROCK (FT-NAVD 1988)

BORING STICK HATCH LEGEND:

FILL

BEDROCK

NOTES:

1) BASELINE PROFILE DEVELOPED FROM ELECTRONIC FILE DATED DECEMBER 16, 2013 PROVIDED BY STANTEC ENTITLED Profile.dgn. OFFSET PROFILES WERE ALSO DEVELOPED BY STANTEC BUT ARE NOT SHOWN.

2) VERTICAL TAILRACE ROCK SLOPES ARE ANTICIPATED BETWEEN STATIONS 54+50 AND 54+80 BASED ON PLANS BY E.C. JORDAN DATED MAY 15, 1989 ENTITLED "WORUMBO HYDROELECTRIC PROJECT LISBON FALLS, MAINE," AND FIELD OBSERVATIONS. THESE SLOPES ARE NOT DEPICTED ACCURATELY BY THE GROUND LINE PROFILES ABOVE.

3) THIS GENERALIZED INTERPRETIVE SOIL PROFILE IS INTENDED TO CONVEY TRENDS IN SUBSURFACE CONDITIONS. THE BOUNDARIES BETWEEN STRATA ARE APPROXIMATE AND IDEALIZED, AND HAVE BEEN DEVELOPED BY INTERPRETATIONS OF WIDELY SPACED EXPLORATIONS AND SAMPLES. ACTUAL SOIL TRANSITIONS MAY VARY AND ARE PROBABLY MORE ERRATIC. FOR MORE SPECIFIC INFORMATION REFER TO THE EXPLORATION LOGS.

4) UNLESS SPECIFICALLY STATED BY WRITTEN AGREEMENT, THIS DRAWING IS THE SOLE PROPERTY OF GZA GEOENVIRONMENTAL, INC. (GZA). THE INFORMATION SHOWN ON THE DRAWING IS SOLELY FOR USE BY GZA'S CLIENT OR THE CLIENT'S DESIGNATED REPRESENTATIVE FOR THE SPECIFIC PROJECT AND LOCATION IDENTIFIED ON THE DRAWING. THE DRAWING SHALL NOT BE TRANSFERRED, REUSED, COPIED, OR ALTERED IN ANY MANNER FOR USE AT ANY OTHER LOCATION OR FOR ANY OTHER PURPOSE WITHOUT THE PRIOR WRITTEN CONSENT OF GZA. ANY TRANSFER, REUSE, OR MODIFICATION TO THE DRAWING BY THE CLIENT OR OTHERS, WITHOUT THE PRIOR WRITTEN EXPRESS CONSENT OF GZA, WILL BE AT THE USER'S SOLE RISK AND WITHOUT ANY RISK OR LIABILITY TO GZA.

PREPARED BY: GZA

STATE OF MAINE
DEPARTMENT OF TRANSPORTATION

BH-1823(900)

WIN 18239.00

BRIDGE PLANS

BRIDGE NO. 3334

STATE OF MAINE ANDREW R. BLASDELL NO. 10957 PROFESSIONAL ENGINEER

SIGNATURE	10957
P.E. NUMBER	06/27/2014
DATE	

		BY	DATE
PROJ. MANAGER	L. TIMBERLAKE		
DESIGN-DETAILED	GZA	MJD	JUNE 2014
CHECKED-REVIEWED	GZA	ARB	JUNE 2014
DESIGN2-DETAILED2	GZA	ETL	JUNE 2014
DESIGN3-DETAILED3	GZA		
REVISIONS 1			
REVISIONS 2			
REVISIONS 3			
REVISIONS 4			
FIELD CHANGES			

DURHAM BRIDGE
ANDROSCOGGIN RIVER
DURHAM-LISBON ANDROSCOGGIN COUNTY

INTERPRETIVE SUBSURFACE PROFILE - NORTH

SHEET NUMBER

10

OF 87

Filename: ...\MSTA\gza\010_PROFILE_2.dgn Division: BRIDGE Username: common Date:6/27/2014

Date:6/27/2014 Username: common Division: BRIDGE Filename: ...\MSTA\011_Boring Logs1.dgn

1

Maine Department of Transportation
Soil/Rock Exploration Log
US CUSTOMARY UNITS

Project: Route 125 Bridge Over Androscoggin | **Location:** Lisbon - Durham, Maine | **Boring No.:** BB-AR-101 | **PIN:** 18239.00

Driller:	Maine Test Borings	**Elevation (ft.)**	107.4	**Auger ID/OD:**	-
Operator:	Gerry Rudnicki	**Datum:**	NAVD 88	**Sampler:**	2" Split Spoon
Logged By:	Michael Devoid	**Rig Type:**	Mobile Drill 53	**Hammer Wt./Fall:**	140/30"
Date Start/Finish:	10/11/12-10/11/12	**Drilling Method:**	HW Spin 10.4'/NW Spin 30.4'	**Core Barrel:**	NX
Boring Location:	N 422688, E 1067532	**Casing ID/OD:**	4.0"/4.5" / 3.0"/3.5"	**Water Level*:**	17'
Hammer Efficiency Factor:	0.6	**Hammer Type:**	Automatic ☐ Hydraulic ☐ Rope & Cathead ☒		

Definitions:
D = Split Spoon Sample; MD = Unsuccessful Split Spoon Sample attempt; U = Thin Wall Tube Sample; MU = Unsuccessful Thin Wall Tube Sample attempt; V = Insitu Vane Shear Test; MV = Unsuccessful Insitu Vane Shear Test attempt
R = Rock Core Sample; SSA = Solid Stem Auger; HSA = Hollow Stem Auger; RC = Roller Cone; WOH = weight of 140lb. hammer; WOR = weight of rods; WO1P = Weight of one person
S_u = Insitu Field Vane Shear Strength (psf); T_v = Pocket Torvane Shear Strength (psf); q_p = Unconfined Compressive Strength (ksf); N-uncorrected = Raw field SPT N-value; Hammer Efficiency Factor = Annual Calibration Value; N_{60} = SPT N-uncorrected corrected for hammer efficiency; N_{60} = (Hammer Efficiency Factor/60%)*N-uncorrected
$S_{u(lab)}$ = Lab Vane Shear Strength (psf); WC = water content, percent; LL = Liquid Limit; PL = Plastic Limit; PI = Plasticity Index; G = Grain Size Analysis; C = Consolidation Test

Sample Information

Sample No.	Pen./Rec. (in.)	Sample Depth (ft.)	Blows (/6 in.) Shear Strength (psf) or RQD (%)	N-uncorrected	N_{60}	Casing Blows
1D	24/14	0.5 - 2.5	12-12-11-11	23	23	
2D	24/14	5.0 - 7.0	5-7-8-9	15	15	30
						33
						16
						135
3D	0/0	9.0 - 9.0	50/0"			SPIN
R1	60/47	10.4 - 15.4	RQD = 48%			
R2	72/44	15.4 - 21.4	RQD = 39%			
R3	60/6	21.4 - 26.4	RQD = 0%			

Visual Description and Remarks (Elevation (ft.) / Depth) — Laboratory Testing Results/AASHTO and Unified Class.

- 106.9 — Pavement (0.5)
- Medium dense, light brown, fine to coarse SAND, some Gravel, trace Silt. - FILL - (G#18, SP-SM, A-1-b)
- Medium dense, light brown, fine to coarse SAND, some Gravel, trace Silt. - FILL - (G#19, SP-SM, A-1-b)
- 99.4 — 8.0 — - Possible Bedrock or Rock Fill - (Based on drill action)
- 98.0 — 9.4 — See Remark 1
- Very hard, fresh, medium to coarse-grained, gray SCHIST. Joints are very close to moderately spaced, low angle, planar, rough, fresh, very wide to open, silt infillings, pegmatitic intrusions at 10.4'-10.8', 11.8'-12.1', 14.9'-15.4' Rock Core Times (Min/ft): 1.25; 2.25; 2.0; 1.75; 1.0. - POSSIBLE BEDROCK OR ROCK FILL - (96.0, 95.8; 93.9 — 11.4)
- 93.4 — 11.6 — Possible Void, See Remark 2. — 13.5
- Possible Void, See Remark 2. — 14.0
- Very hard, fresh, coarse-grained, light gray GRANITE. Joints are extremely close to moderately spaced, low angle, planar, rough, fresh, very wide to partially open, Silt infillings. Rock Core Times (Min/ft): 1.0; 1.37; 1.0; 1.0; 1.5; 0.75. - POSSIBLE BEDROCK OR ROCK FILL - (90.0; 89.0 — 17.4)
- Possible Void, See Remark 2. — 18.4
- 87.2 — 20.2 — Possible Void, See Remark 2.
- 86.2 — 21.2 — Rock fragments and Gravel. Rock Core Times (Min/ft): 1.0; 1.0; 0.75; 0.5; 0.75. Rock Mass Quality = Very Poor
- See Remark 3

Remarks:

1. Increased drilling resistance on roller bit from 9.4'-10.4', assumed Rock. Advanced casing to 10.4' and began coring.
2. There was no return of drilling water at 11.4', and the core barrel dropped 11.4'-11.6'; 13.5'-14.0'; 17.4'-18.4'; 20.2'-21.2' with minimal resistance; dropping core barrel and reduced recovery and/or increased core length indicate the presence of possible voids.
3. Unable to advance core barrel below core run R4 due to caving sand. Spun 3" casing; refused at 30.4', 0.4' above prior core depth. Began coring R5 at 30.4'.
4. Optical and acoustic televiewer logging conducted in portion of completed borehole below 30.4' on 10/15/12.

Stratification lines represent approximate boundaries between soil types; transitions may be gradual.
* Water level readings have been made at times and under conditions stated. Groundwater fluctuations may occur due to conditions other than those present at the time measurements were made.

Page 1 of 3 — **Boring No.:** BB-AR-101

2

Maine Department of Transportation — Boring No.: BB-AR-101 — PIN: 18239.00

Soil/Rock Exploration Log, US CUSTOMARY UNITS. Project: Route 125 Bridge Over Androscoggin. Location: Lisbon - Durham, Maine. Driller: Maine Test Borings; Elevation (ft.) 107.4; Auger ID/OD: -; Operator: Gerry Rudnicki; Datum: NAVD 88; Sampler: 2" Split Spoon; Logged By: Michael Devoid; Rig Type: Mobile Drill 53; Hammer Wt./Fall: 140/30"; Date Start/Finish: 10/11/12-10/11/12; Drilling Method: HW Spin 10.4'/NW Spin 30.4'; Core Barrel: NX; Boring Location: N 422688, E 1067532; Casing ID/OD: 4.0"/4.5" / 3.0"/3.5"; Water Level*: 17'; Hammer Efficiency Factor: 0.6; Hammer Type: Automatic ☐ Hydraulic ☐ Rope & Cathead ☒

Sample No.	Pen./Rec. (in.)	Sample Depth (ft.)	Blows (/6 in.) Shear Strength (psf) or RQD (%)	N-uncorrected	N_{60}	Casing Blows
4D	19/19	26.4 - 28.0	39-36-77-50/1"	113	113	
R4	34/8	28.0 - 30.8	RQD = 0%			
R5	60/54	30.4 - 35.4	RQD = 22%			NX
R6	60/56	36.3 - 41.3	RQD = 65%			
R7	60/55	40.4 - 45.4	RQD = 47%			
R8	60/64	45.4 - 50.4	RQD = 67%			
R9	60/60	50.4 - 55.4	RQD = 32%			

Visual Description and Remarks:

- 80.6 — Top 3": Dark brown, fine to medium SAND. Bottom 16": Very soft, completely weathered, gray, ALTERED SCHIST, with quartz seam at 27.7'. - WEATHERED ROCK - — 26.8
- Very soft, highly weathered, gray, ALTERED SCHIST. Rock Core Times (Min/ft): 2.0; 1.25; 1.5/0.8' See Remark 4. — 30.4
- 77.0 / 76.0 — 30.4'-31.4': Hard to medium hard, fresh, medium-grained, gray SCHIST. Primary joints are very close to close, low angle, planar, rough, fresh, tight. Secondary joints similar but at vertical angle. — 31.4
- 31.4'-35.4': Soft to very soft, highly to completely weathered, medium-grained, gray, ALTERED SCHIST. Primary joints are very close to close, low angle, planar, rough, fresh, partially open. Secondary joints similar but vertical angle. Min/ft: 1.5; 1.0; 0.75; 1.0; 1.5. Rock Mass Quality = Very Poor — 36.3
- 71.1 — Medium hard, fresh, medium-grained, gray SCHIST. Joints are very close to moderately spaced, low angle, planar, rough, fresh, tight, to partially open. Granitic pegmatite intrusion at 38.5-39.4'. Rock Core Times (Min/ft): 1.25; 1.0; 1.0; 1.25; 1.0. Rock Mass Quality = Fair (q_p=4.19KSI)
- Medium hard, medium-grained, gray SCHIST. Joints are very close to moderately spaced, low angle, planar, rough, fresh, tight, to partially open. Rock Core Times (Min/ft): 1.25; 1.0; 1.0; 1.0; 2.0. Rock Mass Quality = Poor — 42.4
- 65.0 — Transitions from medium hard to very soft from 42.4-43', very soft from 43.0-44.6', completely weathered, medium-grained, gray, ALTERED SCHIST. — 44.6
- 62.8 — Pegmatite intrusion at 44.6-45.4'. Hard, fresh, coarse-grained, white to gray PEGMATITE. Joints are very close to moderately spaced, moderately dipping, planar, rough, fresh, tight, pits and vugs. Rock Core Times (Min/ft): 1.5; 1.0; 2.25; 2.25; 1.75. Rock Mass Quality = Fair
- Hard, fresh, coarse-grained, white to gray PEGMATITE. Joints are very close to moderately spaced, moderately dipping, planar, rough, fresh, tight, pits and vugs. Secondary

Remarks:

1. Increased drilling resistance on roller bit from 9.4'-10.4', assumed Rock. Advanced casing to 10.4' and began coring.
2. There was no return of drilling water at 11.4', and the core barrel dropped 11.4'-11.6'; 13.5'-14.0'; 17.4'-18.4'; 20.2'-21.2' with minimal resistance; dropping core barrel and reduced recovery and/or increased core length indicate the presence of possible voids.
3. Unable to advance core barrel below core run R4 due to caving sand. Spun 3" casing; refused at 30.4', 0.4' above prior core depth. Began coring R5 at 30.4'.
4. Optical and acoustic televiewer logging conducted in portion of completed borehole below 30.4' on 10/15/12.
Stratification lines represent approximate boundaries between soil types; transitions may be gradual. * Water level readings have been made at times and under conditions stated. Groundwater fluctuations may occur due to conditions other than those present at the time measurements were made.

Page 2 of 3 — **Boring No.:** BB-AR-101

3

Maine Department of Transportation — Boring No.: BB-AR-101 — PIN: 18239.00

Soil/Rock Exploration Log, US CUSTOMARY UNITS. Project: Route 125 Bridge Over Androscoggin. Location: Lisbon - Durham, Maine. Driller: Maine Test Borings; Elevation (ft.) 107.4; Operator: Gerry Rudnicki; Datum: NAVD 88; Sampler: 2" Split Spoon; Logged By: Michael Devoid; Rig Type: Mobile Drill 53; Hammer Wt./Fall: 140/30"; Date Start/Finish: 10/11/12-10/11/12; Drilling Method: HW Spin 10.4'/NW Spin 30.4'; Core Barrel: NX; Boring Location: N 422688, E 1067532; Casing ID/OD: 4.0"/4.5" / 3.0"/3.5"; Water Level*: 17'; Hammer Efficiency Factor: 0.6; Hammer Type: Automatic ☐ Hydraulic ☐ Rope & Cathead ☒

Sample No.	Pen./Rec. (in.)	Sample Depth (ft.)	Blows (/6 in.) Shear Strength (psf) or RQD (%)	N-uncorrected	N_{60}	Casing Blows
R10	60/45	55.4 - 60.4	RQD = 23%			
R11	59/60	60.4 - 65.3	RQD = 61%			

Visual Description and Remarks:

- joints with vertical angle, weathered seam 54.8- 55.4'. Rock Core Times (Min/ft): 1.0; 1.25; 1.25; 1.25; 1.0. Rock Mass Quality = Very Poor
- 55.4-56.4': Hard, fresh, coarse-grained, white to gray PEGMATITE. Joints are very close to moderately spaced, moderately dipping, planar, rough, fresh, tight, pits and vugs. 56.4-57.9': Hard, fresh, medium-grained, gray SCHIST. 57.9-60.4': Very hard, fresh, medium-grained, white-gray GRANITE. Primary joints are extremely close to close, low angle, planar, rough, fresh, partially open to open. Secondary joints are similar but vertical angle. Min/ft: 1.25; 1.5; 1.5; 1.25; 1.25. Rock Mass Quality = Very Poor
- Very hard, fresh, coarse-grained, light gray GRANITE. Primary joints are very close to moderately spaced, low angle, planar, rough, fresh, tight. Secondary joints are similar but vertical angle. Gray SCHIST intrusions at 62.3-62.6', 63.3-63.4'. Min/ft: 1.5; 1.25; 2.0; 1.5; 1.25/0.9'. Rock Mass Quality = Fair
- 42.1 — 65.3 — **Bottom of Exploration at 65.30 feet below ground surface.**

Remarks:

1. Increased drilling resistance on roller bit from 9.4'-10.4', assumed Rock. Advanced casing to 10.4' and began coring.
2. There was no return of drilling water at 11.4', and the core barrel dropped 11.4'-11.6'; 13.5'-14.0'; 17.4'-18.4'; 20.2'-21.2' with minimal resistance; dropping core barrel and reduced recovery and/or increased core length indicate the presence of possible voids.
3. Unable to advance core barrel below core run R4 due to caving sand. Spun 3" casing; refused at 30.4', 0.4' above prior core depth. Began coring R5 at 30.4'.
4. Optical and acoustic televiewer logging conducted in portion of completed borehole below 30.4' on 10/15/12.
Stratification lines represent approximate boundaries between soil types; transitions may be gradual. * Water level readings have been made at times and under conditions stated. Groundwater fluctuations may occur due to conditions other than those present at the time measurements were made.

Page 3 of 3 — **Boring No.:** BB-AR-101

4

Maine Department of Transportation — Boring No.: BB-AR-102 — PIN: 18239.00

Soil/Rock Exploration Log, US CUSTOMARY UNITS. **Project:** Route 125 Bridge Over Androscoggin. **Location:** Lisbon - Durham, Maine

Driller:	Maine Test Borings	**Elevation (ft.)**	75.1	**Auger ID/OD:**	-
Operator:	Gerry Rudnicki	**Datum:**	NAVD 88	**Sampler:**	2" Split Spoon
Logged By:	Michael Devoid	**Rig Type:**	Mobile Drill B55	**Hammer Wt./Fall:**	140/30"
Date Start/Finish:	10/15/12-10/15/12	**Drilling Method:**	NW Spin 0.3'	**Core Barrel:**	NX
Boring Location:	N 422790, E 1067638	**Casing ID/OD:**	3.0"/3.5"	**Water Level*:**	
Hammer Efficiency Factor:	0.6	**Hammer Type:**	Automatic ☐ Hydraulic ☐ Rope & Cathead ☒		

Sample No.	Pen./Rec. (in.)	Sample Depth (ft.)	Blows (/6 in.) Shear Strength (psf) or RQD (%)	N-uncorrected	N_{60}	Casing Blows
R1	54/54	0.0 - 4.5	RQD = 83%			NX
R2	60/60	4.5 - 9.5	RQD = 77%			
R3	31/31	9.5 - 12.1	RQD = 19%			
R4	38/38	12.1 - 15.3	RQD = 47%			
R5	55/54	15.3 - 19.9	RQD = 75%			
R6	60/60	19.9 - 24.9	RQD = 80%			
R7	60/62	24.9 - 29.9	RQD = 50%			

Visual Description and Remarks:

- Very hard, fresh, medium to coarse-grained, light gray, GRANITE. Joints are close to wide spaced, low angle, planar, rough, fresh, tight to partially open. Rock core times (Min/ft): 1.5; 1.75; 1.5; 1.5; 1.5/0.5. Rock Mass Quality = Very Poor
- Very hard, fresh, medium to coarse-grained, light gray, GRANITE. Primary joints are very close to moderately spaced, low angle, planar, rough, fresh, tight to partially open. Secondary joints are similar but high angle. Weathered seams at 5.6'; 6.1'. Rock core times (Min/ft): 1.5; 1.5; 1.5; 1.5; 1.5 Rock Mass Quality = Good (q_p=16.29KSI)
- 65.6 — 9.5 — Very soft, completely weathered, gray ALTERED SCHIST.
- 64.4 — 10.7 — Medium hard, moderately weathered, medium-grained, gray, SCHIST. Primary joints are extremely close to close, low angle, planar, rough, decomposed, open, sand infillings. Secondary joints are similar but high to vertical angle. Rock core times (Min/ft): 1.5; 1.5; 2/0.6'. Rock Mass Quality = Very Poor
- Hard to medium hard, fresh to slightly weathered, medium grained, gray, SCHIST. Joints are extremely close to close, low angle, planar, rough, fresh, open to partially open, sand infillings. Weathered seams at 12.6-12.8'; 13.1-13.2'. Pegmatite bands at 12.6' and 13.0'. Rock core times (Min/ft): 2.0; 2.0; 2.5 Rock Mass Quality = Poor
- Hard, fresh, medium grained, gray SCHIST. Joints are very close to moderately spaced, low angle, planar, rough, fresh, tight to partially open, sand infillings. Rock core times (Min/ft): 2.0; 1.75; 1.75; 2.0; 2.0/0.6' Rock Mass Quality = Fair (q_p=11.83KSI)
- Hard, fresh, medium-grained, gray SCHIST. Joints are very close to moderately spaced, low angle, planar, rough, fresh, tight to partially open, sand infillings. Rock core times (Min/ft): 2.0; 1.75; 1.75; 2.0; 2.0/0.6'. Rock Mass Quality = Good
- Hard, fresh, medium-grained, gray, SCHIST. Joints are very close to moderately spaced, low angle, planar, rough, fresh,

Remarks:

1. Bedrock was exposed above river water level. Spun 3" casing 0.5' into exposed rock and began coring at rock surface.
2. Existing ground surface at boring location was 32.2' below top of bridge deck.
3. Optical and acoustic televiewer logging conducted in rock portion of completed borehole on 10/15/12.

Stratification lines represent approximate boundaries between soil types; transitions may be gradual. * Water level readings have been made at times and under conditions stated. Groundwater fluctuations may occur due to conditions other than those present at the time measurements were made.

Page 1 of 2 — **Boring No.:** BB-AR-102

5

Maine Department of Transportation — Boring No.: BB-AR-102 — PIN: 18239.00

Soil/Rock Exploration Log, US CUSTOMARY UNITS. Project: Route 125 Bridge Over Androscoggin. Location: Lisbon - Durham, Maine. Driller: Maine Test Borings; Elevation (ft.) 75.1; Auger ID/OD: -; Operator: Gerry Rudnicki; Datum: NAVD 88; Sampler: 2" Split Spoon; Logged By: Michael Devoid; Rig Type: Mobile Drill B55; Hammer Wt./Fall: 140/30"; Date Start/Finish: 10/15/12-10/15/12; Drilling Method: NW Spin 0.3'; Core Barrel: NX; Boring Location: N 422790, E 1067638; Casing ID/OD: 3.0"/3.5"; Water Level*: ; Hammer Efficiency Factor: 0.6; Hammer Type: Automatic ☐ Hydraulic ☐ Rope & Cathead ☒

Visual Description and Remarks:

- tight. Granitic intrusions at 24.6'-25.6' and 29.0'-29.6'. Rock Mass Quality = Poor
- 45.2 — 29.9 — **Bottom of Exploration at 29.90 feet below ground surface.**

Remarks:

1. Bedrock was exposed above river water level. Spun 3" casing 0.5' into exposed rock and began coring at rock surface.
2. Existing ground surface at boring location was 32.2' below top of bridge deck.
3. Optical and acoustic televiewer logging conducted in rock portion of completed borehole on 10/15/12.
Stratification lines represent approximate boundaries between soil types; transitions may be gradual. * Water level readings have been made at times and under conditions stated. Groundwater fluctuations may occur due to conditions other than those present at the time measurements were made.

Page 2 of 2 — **Boring No.:** BB-AR-102

6

Maine Department of Transportation — Boring No.: BB-AR-103 — PIN: 18239.00

Soil/Rock Exploration Log, US CUSTOMARY UNITS. **Project:** Route 125 Bridge Over Androscoggin. **Location:** Lisbon - Durham, Maine

Driller:	Maine Test Borings	**Elevation (ft.)**	77.7	**Auger ID/OD:**	-
Operator:	Gerry Rudnicki	**Datum:**	NAVD 88	**Sampler:**	2" Split Spoon
Logged By:	Michael Devoid	**Rig Type:**	Mobile Drill B55	**Hammer Wt./Fall:**	140/30"
Date Start/Finish:	10/12/12-10/12/12	**Drilling Method:**	NW Spin 3'	**Core Barrel:**	NX
Boring Location:	N 423065, E 1067564	**Casing ID/OD:**	3.0"/3.5"	**Water Level*:**	3.5'
Hammer Efficiency Factor:	0.6	**Hammer Type:**	Automatic ☐ Hydraulic ☐ Rope & Cathead ☒		

Sample No.	Pen./Rec. (in.)	Sample Depth (ft.)	Blows (/6 in.) Shear Strength (psf) or RQD (%)	N-uncorrected	N_{60}	Casing Blows
1D	24/10	0.0 - 2.0	5-11-29-16	40	40	
R1	36/28	3.0 - 6.0	RQD = 39%			NX
R2	60/60	6.0 - 11.0	RQD = 92%			
R3	60/60	11.0 - 16.0	RQD = 75%			

Visual Description and Remarks:

- Dense, brown, fine to coarse SAND and Gravel, trace Silt. Trace brick fragments. - FILL -
- See Remark 1
- 74.7 — 3.0 — 3.0' to 4.2'- Hard, fresh, medium grained, white, GRANITE, Joints are moderately spaced, low angle, planar, rough and discolored. Rock core times (Min/ft): 1.75; 0.75; 1.0. — 4.2
- 73.5 / 71.7 — Soft to medium hard, slightly to moderately weathered, white to gray, GRANITE. Joints are very to extremely close, low angle, undulating, rough, decomposed, and open. - WEATHERED BEDROCK - — 6.0
- Very hard, fresh, medium to coarse-grained, white to gray, GRANITE, with gray SCHIST intrusion at 7.0'-10.2'. Joints are very close to wide, low angle, planar, rough, fresh, tight, weathered seam at 8.7'-8.9' and at 9.9'-10.0'. Min/ft: 1.75; 1.9; 1.9; 1.5; 1.75. Rock Mass Quality = Excellent (q_p=19.35KSI)
- Very hard, fresh, medium-grained, gray, SCHIST. Joints are very close to moderately spaced, low angle, planar, rough, fresh, tight. Pegmatite intrusions at 14.2'-14.4' and 15.8'-16.0'. Min/ft: 1.0; 1.25; 1.25; 1.5; 1.5. Rock Mass Quality = Fair
- 61.7 — 16.0 — **Bottom of Exploration at 16.00 feet below ground surface.**

Remarks:

1. Increased drilling resistance on roller bit at 3.0'. Advanced casing to 3.0' and began coring.

Stratification lines represent approximate boundaries between soil types; transitions may be gradual. * Water level readings have been made at times and under conditions stated. Groundwater fluctuations may occur due to conditions other than those present at the time measurements were made.

Page 1 of 1 — **Boring No.:** BB-AR-103

7

Maine Department of Transportation — Boring No.: BB-AR-104 — PIN: 18239.00

Soil/Rock Exploration Log, US CUSTOMARY UNITS. **Project:** Route 125 Bridge Over Androscoggin. **Location:** Lisbon - Durham, Maine

Driller:	Maine Test Borings	**Elevation (ft.)**	80.2	**Auger ID/OD:**	-
Operator:	Gerry Rudnicki	**Datum:**	NAVD 88	**Sampler:**	2" Split Spoon
Logged By:	Michael Devoid	**Rig Type:**	Mobile Drill B55	**Hammer Wt./Fall:**	140/30"
Date Start/Finish:	10/15/12-10/16/12	**Drilling Method:**	HW Drive 2.5'	**Core Barrel:**	NX
Boring Location:	N 423101, E 1067525	**Casing ID/OD:**	4.0"/4.5"	**Water Level*:**	3.2'
Hammer Efficiency Factor:	0.6	**Hammer Type:**	Automatic ☐ Hydraulic ☐ Rope & Cathead ☒		

Sample No.	Pen./Rec. (in.)	Sample Depth (ft.)	Blows (/6 in.) Shear Strength (psf) or RQD (%)	N-uncorrected	N_{60}	Casing Blows
1D	21/6	0.0 - 1.8	8-10-31-80/3"	41	41	
R1	60/55	4.0 - 9.0	RQD = 40%			NX
R2	24/24	9.0 - 11.0	RQD = 54%			
R3	60/60	11.0 - 16.0	RQD = 38%			
R4	60/60	16.0 - 21.0	RQD = 95%			
R5	60/56	21.0 - 26.0	RQD = 68%			

Visual Description and Remarks:

- Dense, brown, fine to coarse SAND and Gravel, trace Silt. Trace brick fragments. - FILL -
- 77.7 — 2.5 — See Remark 1
- 76.2 — 4.0 — Very hard, fresh, coarse-grained, light gray, GRANITE. Joints are very close to close, low angle, planar, rough, fresh, tight to partially open. Iron staining in joints. coarse Pegmatite intrusion at 4.6'-5.1'. Rock core times (Min/ft): 4.0; 2.25; 1.5; 2.0; 2.25. Rock Mass Quality = Poor
- Very hard, fresh, coarse-grained, light gray, GRANITE. Joints are very close to close, low angle, planar, rough, fresh, tight to partially open. Rock core times (Min/ft): 2.0, 2.0. Rock Mass Quality = Fair
- 11'-13': Very hard, fresh, coarse-grained, light gray, GRANITE. Joints are very close to close, low angle, planar, rough, fresh, tight to partially open. 13'-16': Medium hard to hard, fresh, medium-grained, gray SCHIST. Primary joints are very close to close, low angle, planar, rough, fresh to decomposed, tight to partially open. Weathered seams at 13.0-13.7', 15.5-16.0'. Rock core times (Min/ft): 2.0; 2.0; 2.0; 2.0; 2.0. Rock Mass Quality = Poor
- Very hard, fresh, coarse-grained, light gray, GRANITE. Joints are close to moderately spaced, low angle, planar, rough, fresh, tight. Rock core times (Min/ft): 2.25; 2.25; 2.5; 2.25; 2.5. Rock Mass Quality = Excellent
- Very hard, fresh, medium to coarse-grained, banded, light gray, GRANITE and gray SCHIST. Joints are close to moderately spaced, low to moderate dipping, planar, rough, fresh, tight. Rock core times (Min/ft): 2.25; 2.5; 2.0; 2.25; 2.5. Rock Mass Quality = Fair

Remarks:

1. Increased drilling resistance at 2.5'. Advanced roller core through apparent fractured/weathered rock to 4' and began coring.
2. Optical and acoustic televiewer logging conducted in rock portion of completed borehole on 10/16/12.

Stratification lines represent approximate boundaries between soil types; transitions may be gradual. * Water level readings have been made at times and under conditions stated. Groundwater fluctuations may occur due to conditions other than those present at the time measurements were made.

Page 1 of 2 — **Boring No.:** BB-AR-104

8

Maine Department of Transportation — Boring No.: BB-AR-104 — PIN: 18239.00

Soil/Rock Exploration Log, US CUSTOMARY UNITS. Project: Route 125 Bridge Over Androscoggin. Location: Lisbon - Durham, Maine. Driller: Maine Test Borings; Elevation (ft.) 80.2; Auger ID/OD: -; Operator: Gerry Rudnicki; Datum: NAVD 88; Sampler: 2" Split Spoon; Logged By: Michael Devoid; Rig Type: Mobile Drill B55; Hammer Wt./Fall: 140/30"; Date Start/Finish: 10/15/12-10/16/12; Drilling Method: HW Drive 2.5'; Core Barrel: NX; Boring Location: N 423101, E 1067525; Casing ID/OD: 4.0"/4.5"; Water Level*: 3.2'; Hammer Efficiency Factor: 0.6; Hammer Type: Automatic ☐ Hydraulic ☐ Rope & Cathead ☒

Sample No.	Pen./Rec. (in.)	Sample Depth (ft.)	Blows (/6 in.) Shear Strength (psf) or RQD (%)	N-uncorrected	N_{60}	Casing Blows
R6	60/60	26.0 - 31.0	RQD = 88%			
R7	48/47	31.0 - 35.0	RQD = 88%			

Visual Description and Remarks:

- Very hard, fresh, medium-grained, gray SCHIST. Joints are closed to moderately spaced, low to moderate angle, planar, rough, fresh, tight. Rock core times (Min/ft): 2.25; 2.0; 2.0; 2.25; 2.0. Rock Mass Quality = Good
- Very hard, fresh, medium-grained, gray SCHIST. Joints are close to moderately spaced, low to moderate angle, planar, rough, fresh, tight. Rock core times (Min/ft): 2.5; 2.25; 2.25; 2.25. Rock Mass Quality = Good
- 45.2 — 35.0 — **Bottom of Exploration at 35.00 feet below ground surface.**

Remarks:

1. Increased drilling resistance at 2.5'. Advanced roller core through apparent fractured/weathered rock to 4' and began coring.
2. Optical and acoustic televiewer logging conducted in rock portion of completed borehole on 10/16/12.
Stratification lines represent approximate boundaries between soil types; transitions may be gradual. * Water level readings have been made at times and under conditions stated. Groundwater fluctuations may occur due to conditions other than those present at the time measurements were made.

Page 2 of 2 — **Boring No.:** BB-AR-104

STATE OF MAINE
DEPARTMENT OF TRANSPORTATION
BH-1823(900)
WIN 18239.00
BRIDGE PLANS
BRIDGE NO. 3334

STATE OF MAINE — ANDREW R. BLAISDELL — NO. 10957 — LICENSED — PROFESSIONAL ENGINEER

SIGNATURE
10957
P.E. NUMBER
06/27/2014
DATE

		BY	DATE
PROJ. MANAGER	L. TIMBERLAKE		
DESIGN-DETAILED	GZA	JTS	JUNE 2014
CHECKED-REVIEWED	GZA	DDT\TWM	JUNE 2014
DESIGN2-DETAILED2			
DESIGN3-DETAILED3			
REVISIONS 1			
REVISIONS 2			
REVISIONS 3			
REVISIONS 4			
FIELD CHANGES			

DURHAM BRIDGE
ANDROSCOGGIN RIVER
DURHAM-LISBON ANDROSCOGGIN COUNTY

BORING LOGS 1

SHEET NUMBER
11
OF 87

Filename: ...\MSTA\012_Boring Logs2.dgn
Division: BRIDGE
Username: common
Date:6/27/2014

9

Maine Department of Transportation
Soil/Rock Exploration Log
US CUSTOMARY UNITS

Project: Route 125 Bridge Over Androscoggin		**Boring No.:** BB-AR-105	
Location: Lisbon - Durham, Maine		**PIN:** 18239.00	
Driller: Maine Test Borings	**Elevation (ft.)** 102.8	**Auger ID/OD:** -	
Operator: Gerry Rudnicki	**Datum:** NAVD 88	**Sampler:** 2" Split Spoon	
Logged By: Michael Devoid	**Rig Type:** Mobile Drill B55	**Hammer Wt./Fall:** 140/30"	
Date Start/Finish: 10/12/12-10/12/12	**Drilling Method:** HW Drive 13.0'	**Core Barrel:** NX	
Boring Location: N 423112, E 1067613	**Casing ID/OD:** 4.0"/4.5"	**Water Level*:** 9.5'	
Hammer Efficiency Factor: 0.6	**Hammer Type:** Automatic ☐ Hydraulic ☐ Rope & Cathead ☒		

Definitions:
D = Split Spoon Sample
MD = Unsuccessful Split Spoon Sample attempt
U = Thin Wall Tube Sample
MU = Unsuccessful Thin Wall Tube Sample attempt
V = Insitu Vane Shear Test
MV = Unsuccessful Insitu Vane Shear Test attempt
R = Rock Core Sample
SSA = Solid Stem Auger
HSA = Hollow Stem Auger
RC = Roller Cone
WOH = weight of 140lb. hammer
WOR = weight of rods
WO1P = Weight of one person
S_u = Insitu Field Vane Shear Strength (psf)
T_v = Pocket Torvane Shear Strength (psf)
q_p = Unconfined Compressive Strength (ksf)
N-uncorrected = Raw field SPT N-value
Hammer Efficiency Factor = Annual Calibration Value
N_{60} = SPT N-uncorrected corrected for hammer efficiency
N_{60} = (Hammer Efficiency Factor/60%)*N-uncorrected
$S_{u(lab)}$ = Lab Vane Shear Strength (psf)
WC = water content, percent
LL = Liquid Limit
PL = Plastic Limit
PI = Plasticity Index
G = Grain Size Analysis
C = Consolidation Test

Depth (ft.)	Sample No.	Pen./Rec. (in.)	Sample Depth (ft.)	Blows (/6 in.) Shear Strength (psf) or RQD (%)	N-uncorrected	N_{60}	Casing Blows	Elevation (ft.)	Visual Description and Remarks	Laboratory Testing Results/ AASHTO and Unified Class.
0	1D	24/15	0.3 - 2.3	26-25-20-16	45	45		102.5	- PAVEMENT - (0.3) Dense, light, brown, fine to coarse SAND, little Gravel, trace Silt.	G#20 SP-SM A-1-b
5	2D	24/10	5.0 - 7.0	20-19-16-19	35	35	40		Dense, brown to black, fine to coarse SAND, little Gravel, trace Silt, possible coal ash (black material). - FILL -	
							30			
							39			
							38			
							63			
10	3D	24/11	10.0 - 12.0	10-39-10-35	49	49	28		Dense, brown, fine to coarse SAND, some Gravel, little Silt.	G#21 SM A-1-b
							56			
							72			
	R1	60/60	13.6 - 18.6	RQD = 50%			NX	89.5	(13.3) See Remark 1 Hard, fresh, medium-grained, gray, SCHIST. Joints are very close to close, low angle, planar, rough, fresh, tight to partially open, sand infillings. Iron staining at most joints. Granitic intrusion at 15.3-15.9'. Min/ft: 1.25; 1.25; 1.5; 1.5; 1.5. Rock Mass Quality = Poor	
15										
	R2	60/60	18.6 - 23.6	RQD = 80%					18.6-21.0':Hard, fresh, medium-grained, gray, SCHIST. Joints are very close to close, low angle, planar, rough, fresh, tight to partially open, sand infillings. 21.0-23.6': Very hard, fresh, coarse-grained, white, GRANITE. Joints are close to moderate spacing, low angle, planar, rough, fresh, tight to partially open. Min/ft: 1.25; 1.5; 1.5; 1.5; 1.5. Rock Mass Quality = Good	q_p=10.96KSI
20										
								79.2	(23.6) **Bottom of Exploration at 23.60 feet below ground surface.**	
25										

Remarks:

1. Increased drilling resistance on roller bit from 13.3' to 13.6', assumed Rock. Rolled ahead to 13.6' and began coring.

Stratification lines represent approximate boundaries between soil types; transitions may be gradual.
* Water level readings have been made at times and under conditions stated. Groundwater fluctuations may occur due to conditions other than those present at the time measurements were made.

Page 1 of 1
Boring No.: BB-AR-105

10

Maine Department of Transportation
Soil/Rock Exploration Log
US CUSTOMARY UNITS

Project: Route 125 Bridge Over Androscoggin		**Boring No.:** BB-AR-106	
Location: Lisbon - Durham, Maine		**PIN:** 18239.00	
Driller: Maine Test Borings	**Elevation (ft.)** 83.3	**Auger ID/OD:** -	
Operator: Gerry Rudnicki	**Datum:** NAVD 88	**Sampler:** 2" Split Spoon	
Logged By: Michael Devoid	**Rig Type:** Mobile Drill B55	**Hammer Wt./Fall:** 140/30"	
Date Start/Finish: 10/16/12-10/16/12	**Drilling Method:** HW Drive 8.0"	**Core Barrel:** NX	
Boring Location: N 423147, E 1067476	**Casing ID/OD:** 4.0"/4.5"	**Water Level*:** 9.0'	
Hammer Efficiency Factor: 0.6	**Hammer Type:** Automatic ☐ Hydraulic ☐ Rope & Cathead ☒		

Definitions:
D = Split Spoon Sample
MD = Unsuccessful Split Spoon Sample attempt
U = Thin Wall Tube Sample
MU = Unsuccessful Thin Wall Tube Sample attempt
V = Insitu Vane Shear Test
MV = Unsuccessful Insitu Vane Shear Test attempt
R = Rock Core Sample
SSA = Solid Stem Auger
HSA = Hollow Stem Auger
RC = Roller Cone
WOH = weight of 140lb. hammer
WOR = weight of rods
WO1P = Weight of one person
S_u = Insitu Field Vane Shear Strength (psf)
T_v = Pocket Torvane Shear Strength (psf)
q_p = Unconfined Compressive Strength (ksf)
N-uncorrected = Raw field SPT N-value
Hammer Efficiency Factor = Annual Calibration Value
N_{60} = SPT N-uncorrected corrected for hammer efficiency
N_{60} = (Hammer Efficiency Factor/60%)*N-uncorrected
$S_{u(lab)}$ = Lab Vane Shear Strength (psf)
WC = water content, percent
LL = Liquid Limit
PL = Plastic Limit
PI = Plasticity Index
G = Grain Size Analysis
C = Consolidation Test

Depth (ft.)	Sample No.	Pen./Rec. (in.)	Sample Depth (ft.)	Blows (/6 in.) Shear Strength (psf) or RQD (%)	N-uncorrected	N_{60}	Casing Blows	Elevation (ft.)	Visual Description and Remarks	Laboratory Testing Results/ AASHTO and Unified Class.
0	1D	24/5	0.0 - 2.0	7-16-10-14	26	26			Medium dense, brown, fine to coarse SAND, some Gravel, trace Silt. - FILL -	
5	2D	24/6	5.0 - 7.0	2-31-20-25	51	51	13		Very dense, brown, fine to coarse SAND, some Gravel, trace Silt. - FILL -	
							40			
							39			
	R1	60/59	8.4 - 13.4	RQD = 72%			NX	74.9	(8.4) See Remark 1 Hard, fresh, medium-grained, gray, SCHIST. Joints are extremely close to moderately spaced, low angle, planar, rough, fresh, tight to partially open. Iron staining at few joints. Rock core times (Min/ft): 2.0; 2.0; 2.5; 2.0; 2.0. Rock Mass Quality = Fair	
10										
	R2	60/52	13.4 - 18.4	RQD = 70%					Hard, fresh, medium-grained, gray, SCHIST. Joints are extremely close to moderately spaced, low angle, planar, rough, fresh, tight to partially open. Iron staining at few joints. Rock Mass Quality = Fair	
15										
								64.9	(18.4) **Bottom of Exploration at 18.40 feet below ground surface.**	
20										
25										

Remarks:

1. Rock encountered at 8.4', began coring.

Stratification lines represent approximate boundaries between soil types; transitions may be gradual.
* Water level readings have been made at times and under conditions stated. Groundwater fluctuations may occur due to conditions other than those present at the time measurements were made.

Page 1 of 1
Boring No.: BB-AR-106

11

Maine Department of Transportation
Soil/Rock Exploration Log
US CUSTOMARY UNITS

Project: Route 125 Over Androscoggin River		**Boring No.:** BB-AR-201	
Location: Durham-Lisbon, Maine		**PIN:** 18239.00	
Driller: Maine Test Boring	**Elevation (ft.)** 95.0	**Auger ID/OD:**	
Operator: Al Francis	**Datum:** NAVD88	**Sampler:** Standard SS 2"	
Logged By: Evan Lonstein	**Rig Type:** Skid CME	**Hammer Wt./Fall:** 140 lb/30"	
Date Start/Finish: 05/30/13-05/31/13	**Drilling Method:** Drive & Wash	**Core Barrel:** NQ2	
Boring Location: N 422725, E 1067515	**Casing ID/OD:** 4"	**Water Level*:** 12.5'/25.0'	
Hammer Efficiency Factor: 0.6	**Hammer Type:** Automatic ☐ Hydraulic ☐ Rope & Cathead ☒		

Definitions:
D = Split Spoon Sample
MD = Unsuccessful Split Spoon Sample attempt
U = Thin Wall Tube Sample
MU = Unsuccessful Thin Wall Tube Sample attempt
V = Insitu Vane Shear Test
MV = Unsuccessful Insitu Vane Shear Test attempt
R = Rock Core Sample
SSA = Solid Stem Auger
HSA = Hollow Stem Auger
RC = Roller Cone
WOH = weight of 140lb. hammer
WOR = weight of rods
WO1P = Weight of one person
S_u = Insitu Field Vane Shear Strength (psf)
T_v = Pocket Torvane Shear Strength (psf)
q_p = Unconfined Compressive Strength (ksf)
N-uncorrected = Raw field SPT N-value
Hammer Efficiency Factor = Annual Calibration Value
N_{60} = SPT N-uncorrected corrected for hammer efficiency
N_{60} = (Hammer Efficiency Factor/60%)*N-uncorrected
$S_{u(lab)}$ = Lab Vane Shear Strength (psf)
WC = water content, percent
LL = Liquid Limit
PL = Plastic Limit
PI = Plasticity Index
G = Grain Size Analysis
C = Consolidation Test

Depth (ft.)	Sample No.	Pen./Rec. (in.)	Sample Depth (ft.)	Blows (/6 in.) Shear Strength (psf) or RQD (%)	N-uncorrected	N_{60}	Casing Blows	Elevation (ft.)	Visual Description and Remarks	Laboratory Testing Results/ AASHTO and Unified Class.
0	1D	24/11	0.0 - 2.0	2-4-3-2	7	7	8	94.7	Top 4": Loose, dark brown, fine to coarse SAND, some Silt, moist. -FOREST MAT- (0.3) Bottom 7": Loose, brown, fine to coarse SAND, some Gravel, little Silt, moist.	
							19			
							19			
							19			
							40			
5	2D	24/5	5.0 - 7.0	4-3-3-1	6	6	25		Loose, brown, fine to coarse SAND, some Gravel, little Silt (large piece of gravel in tip). -GLACIAL TILL-	
							12			
							12			
							35			
							43			
10	3D	24/8	10.0 - 12.0	11-16-18-20	34	34	130		Dense, brown, fine to coarse SAND, some Gravel, little Silt, wet. Advanced roller cone from 12.0'-12.4'. Drilling action and cuttings indicate rock at 12.2'.	
							162			
	R1	56/56	12.4 - 17.1	RQD = 61%			NQ2	82.8	(12.2) Very hard, slightly weathered, medium to coarse grained, gray, GRANITE. Joints are extremely close to moderately spaced, low angle, undulating, rough, fresh to decomposed, partially open to open. Rock Mass Quality = Fair 100% Recovery Rock Core Times (min/ft): 3.5, 3.0, 3.5, 7.5, 17.0	q_p = 12.5 ksi
15										
	R2	57/55	17.1 - 21.9	RQD = 83%					Very hard, fresh, medium to coarse grained, gray GRANITE. Joints are very close to wide, low angle, planar, rough, fresh, partially open to open. Silt infillings. Rock Mass Quality = Good 96% Recovery Rock Core Times (min/ft): 3.0, 25.0, 2.5, 3.0, 4.0	
20										
	R3	60/60	21.9 - 26.9	RQD = 100%					Very hard, fresh, medium to coarse grained, gray GRANITE. Joints are close to wide, low angle to moderately dipping, undulating, rough, fresh, tight to open. Rock mass quality = Excellent 100% Recovery Rock Core Times (min/ft): 2.0, 2.0, 2.0, 3.0, 4.5	
25										
	R4	60/53	26.9 - 31.9	RQD = 88%					Very hard, fresh, medium to coarse grained, gray GRANITE. Joints are very close to moderate, low angle to moderately dipping, planar, rough, fresh to discolored, partially open to open. Rock Mass Quality = Good	
30										

Remarks:

1. Core times between about 15' and 19' are longer due to use of softer rock bit. Core times reduced after hard rock bit was used, below 19'.
2. PVC casing installed to 12.5' for future borehole geophysical testing.
3. Water level was measured at 12.5' immediately after installation of PVC casing.
4. Water level was measured at 25' during geophysical testing on 6/25/13.

Stratification lines represent approximate boundaries between soil types; transitions may be gradual.
* Water level readings have been made at times and under conditions stated. Groundwater fluctuations may occur due to conditions other than those present at the time measurements were made.

Page 1 of 2
Boring No.: BB-AR-201

12

Maine Department of Transportation
Soil/Rock Exploration Log
US CUSTOMARY UNITS

Project: Route 125 Over Androscoggin River		**Boring No.:** BB-AR-201	
Location: Durham-Lisbon, Maine		**PIN:** 18239.00	
Driller: Maine Test Boring	**Elevation (ft.)** 95.0	**Auger ID/OD:**	
Operator: Al Francis	**Datum:** NAVD88	**Sampler:** Standard SS 2"	
Logged By: Evan Lonstein	**Rig Type:** Skid CME	**Hammer Wt./Fall:** 140 lb/30"	
Date Start/Finish: 05/30/13-05/31/13	**Drilling Method:** Drive & Wash	**Core Barrel:** NQ2	
Boring Location: N 422725, E 1067515	**Casing ID/OD:** 4"	**Water Level*:** 12.5'/25.0'	
Hammer Efficiency Factor: 0.6	**Hammer Type:** Automatic ☐ Hydraulic ☐ Rope & Cathead ☒		

Definitions:
D = Split Spoon Sample
MD = Unsuccessful Split Spoon Sample attempt
U = Thin Wall Tube Sample
MU = Unsuccessful Thin Wall Tube Sample attempt
V = Insitu Vane Shear Test
MV = Unsuccessful Insitu Vane Shear Test attempt
R = Rock Core Sample
SSA = Solid Stem Auger
HSA = Hollow Stem Auger
RC = Roller Cone
WOH = weight of 140lb. hammer
WOR = weight of rods
WO1P = Weight of one person
S_u = Insitu Field Vane Shear Strength (psf)
T_v = Pocket Torvane Shear Strength (psf)
q_p = Unconfined Compressive Strength (ksf)
N-uncorrected = Raw field SPT N-value
Hammer Efficiency Factor = Annual Calibration Value
N_{60} = SPT N-uncorrected corrected for hammer efficiency
N_{60} = (Hammer Efficiency Factor/60%)*N-uncorrected
$S_{u(lab)}$ = Lab Vane Shear Strength (psf)
WC = water content, percent
LL = Liquid Limit
PL = Plastic Limit
PI = Plasticity Index
G = Grain Size Analysis
C = Consolidation Test

Depth (ft.)	Sample No.	Pen./Rec. (in.)	Sample Depth (ft.)	Blows (/6 in.) Shear Strength (psf) or RQD (%)	N-uncorrected	N_{60}	Casing Blows	Elevation (ft.)	Visual Description and Remarks	Laboratory Testing Results/ AASHTO and Unified Class.
30									88% Recovery Rock Core Times (min/ft): 3.5, 3.0, 2.5, 3.0, 4.5	
	R5	64/62	31.9 - 37.2	RQD = 79%				63.1	(31.9) Top 7": Very soft to hard, slightly to completely weathered, fine to coarse grained, gray WEATHERED GRANITE. Joints are extremely close to very close, low angle, planar, rough, disintegrated, open.	
								62.5	(32.5) Bottom 57": Very hard, fresh, medium to coarse grained, gray GRANITE. Joints are close to moderately spaced, low angle to moderately dipping, planar, rough, fresh, partially open to open. Rock Mass Quality = Good 97% Recovery Rock Core Times (min/ft): 11.5, 2.0, 3.0, 4.0, 4.0	
35										
								57.8	(37.2) **Bottom of Exploration at 37.20 feet below ground surface.**	
40										
45										
50										
55										
60										

Remarks:

1. Core times between about 15' and 19' are longer due to use of softer rock bit. Core times reduced after hard rock bit was used, below 19'.
2. PVC casing installed to 12.5' for future borehole geophysical testing.
3. Water level was measured at 12.5' immediately after installation of PVC casing.
4. Water level was measured at 25' during geophysical testing on 6/25/13.

Stratification lines represent approximate boundaries between soil types; transitions may be gradual.
* Water level readings have been made at times and under conditions stated. Groundwater fluctuations may occur due to conditions other than those present at the time measurements were made.

Page 2 of 2
Boring No.: BB-AR-201

13

Maine Department of Transportation
Soil/Rock Exploration Log
US CUSTOMARY UNITS

Project: Route 125 Over Androscoggin River		**Boring No.:** BB-AR-202	
Location: Durham-Lisbon, Maine		**PIN:** 18239.00	
Driller: Maine Test Boring	**Elevation (ft.)** 94.7	**Auger ID/OD:**	
Operator: Al Francis	**Datum:** NAVD88	**Sampler:** Standard SS 2"	
Logged By: Evan Lonstein	**Rig Type:** Skid CME	**Hammer Wt./Fall:** 140 lbs/30"	
Date Start/Finish: 05/28/13-05/29/13	**Drilling Method:** Drive & Wash	**Core Barrel:** NQ2	
Boring Location: N 422717, E 1067540	**Casing ID/OD:** 4"	**Water Level*:** 15.0'/24.5'	
Hammer Efficiency Factor: 0.6	**Hammer Type:** Automatic ☐ Hydraulic ☐ Rope & Cathead ☒		

Definitions:
D = Split Spoon Sample
MD = Unsuccessful Split Spoon Sample attempt
U = Thin Wall Tube Sample
MU = Unsuccessful Thin Wall Tube Sample attempt
V = Insitu Vane Shear Test
MV = Unsuccessful Insitu Vane Shear Test attempt
R = Rock Core Sample
SSA = Solid Stem Auger
HSA = Hollow Stem Auger
RC = Roller Cone
WOH = weight of 140lb. hammer
WOR = weight of rods
WO1P = Weight of one person
S_u = Insitu Field Vane Shear Strength (psf)
T_v = Pocket Torvane Shear Strength (psf)
q_p = Unconfined Compressive Strength (ksf)
N-uncorrected = Raw field SPT N-value
Hammer Efficiency Factor = Annual Calibration Value
N_{60} = SPT N-uncorrected corrected for hammer efficiency
N_{60} = (Hammer Efficiency Factor/60%)*N-uncorrected
$S_{u(lab)}$ = Lab Vane Shear Strength (psf)
WC = water content, percent
LL = Liquid Limit
PL = Plastic Limit
PI = Plasticity Index
G = Grain Size Analysis
C = Consolidation Test

Depth (ft.)	Sample No.	Pen./Rec. (in.)	Sample Depth (ft.)	Blows (/6 in.) Shear Strength (psf) or RQD (%)	N-uncorrected	N_{60}	Casing Blows	Elevation (ft.)	Visual Description and Remarks	Laboratory Testing Results/ AASHTO and Unified Class.
0	1D	24/10	0.0 - 2.0	1-4-8-12	12	12	16	94.1	Top 8": Medium dense, dark brown, fine to coarse SAND, little Silt, roots, moist. -TOPSOIL- (0.6) Bottom 4": Medium dense, brown, fine to coarse SAND and GRAVEL, trace Silt, moist.Increased drilling resistance from 3.9- 4.7', possible cobble. Brown sand in wash water.	
							40			
							45			
							65			
							50			
5	2D	24/0	5.0 - 7.0	12-3-2-3	5	5	16		-POSSIBLE GLACIAL TILL-	
							14			
							20		No Recovery.	
	3D	6/6	8.0 - 8.5	46	R		46/6"	86.7	(8.0) Very dense, gray, fine to coarse SAND and GRAVEL, trace Silt.	
	~~R1~~	~~24/19~~	~~8.5 - 10.5~~	~~RQD = 17%~~			~~NQ2~~	86.2	-WEATHERED ROCK- Advanced roller cone to 8.5'.	
10	R2	61/61	10.5 - 15.6	RQD = 100%				84.2	(8.5) Hard, slightly weathered, medium grained, gray SCHIST. Joints are extremely close to close, low angle to moderately dipping, planar, rough, discolored (iron staining), tight to open. Occasional Pegmatite intrusions. Rock Mass Quality = Very Poor 79% Recovery Rock core times (min/ft): 2.5, 2.5	q_p = 15.0 ksi
15	R3	60/60	15.6 - 20.6	RQD = 87%					(10.5) Very hard, fresh, medium to coarse grained, gray GRANITE. Joints are close to moderately spaced, low angle, planar, rough, fresh to discolored (iron staining), tight to open. Rock Mass Quality= Excellent 100% Recovery Rock core times (min/ft): 3.0, 2.0, 2.0, 2.5, 3.0	
20	R4	60/60	20.6 - 25.6	RQD = 97%					Very hard, fresh, medium to coarse grained, gray GRANITE. Joints are very close to moderately spaced, low angle, planar, rough, fresh, tight to open. Coarse grained Pegmatite intrusion at 20.0-20.6'. Rock Mass Quality = Very Good 100% Recovery Rock core times (min/ft): 2.5, 4.0, 5.5, 6.0, 5.5	
25	R5	60/60	25.6 - 30.6	RQD = 97%					Very hard, fresh, medium to coarse grained, gray GRANITE. Joints are close to moderately spaced, low angle, planar, rough, fresh, tight to partially open. Rock Mass Quality = Excellent 100% Recovery Rock core times (min/ft): 4.0, 11.0, 25.0 Very hard, fresh, medium grained, gray GRANITE. Joints are close to moderately spaced, low angle, planar, rough, fresh, tight. Rock Mass Quality = Excellent 100% Recovery Rock core times (min/ft): 2.5, 2.5, 2.5	
30										

Remarks:

1. No water return 23.5-23.7'.
2. PVC Casing installed to 8.5' for future borehole geophysical testing.
3. Water level was measured at 24.5' during geophysical testing on 6/25/13.

Stratification lines represent approximate boundaries between soil types; transitions may be gradual.
* Water level readings have been made at times and under conditions stated. Groundwater fluctuations may occur due to conditions other than those present at the time measurements were made.

Page 1 of 2
Boring No.: BB-AR-202

14

Maine Department of Transportation
Soil/Rock Exploration Log
US CUSTOMARY UNITS

Project: Route 125 Over Androscoggin River		**Boring No.:** BB-AR-202	
Location: Durham-Lisbon, Maine		**PIN:** 18239.00	
Driller: Maine Test Boring	**Elevation (ft.)** 94.7	**Auger ID/OD:**	
Operator: Al Francis	**Datum:** NAVD88	**Sampler:** Standard SS 2"	
Logged By: Evan Lonstein	**Rig Type:** Skid CME	**Hammer Wt./Fall:** 140 lbs/30"	
Date Start/Finish: 05/28/13-05/29/13	**Drilling Method:** Drive & Wash	**Core Barrel:** NQ2	
Boring Location: N 422717, E 1067540	**Casing ID/OD:** 4"	**Water Level*:** 15.0'/24.5'	
Hammer Efficiency Factor: 0.6	**Hammer Type:** Automatic ☐ Hydraulic ☐ Rope & Cathead ☒		

Definitions:
D = Split Spoon Sample
MD = Unsuccessful Split Spoon Sample attempt
U = Thin Wall Tube Sample
MU = Unsuccessful Thin Wall Tube Sample attempt
V = Insitu Vane Shear Test
MV = Unsuccessful Insitu Vane Shear Test attempt
R = Rock Core Sample
SSA = Solid Stem Auger
HSA = Hollow Stem Auger
RC = Roller Cone
WOH = weight of 140lb. hammer
WOR = weight of rods
WO1P = Weight of one person
S_u = Insitu Field Vane Shear Strength (psf)
T_v = Pocket Torvane Shear Strength (psf)
q_p = Unconfined Compressive Strength (ksf)
N-uncorrected = Raw field SPT N-value
Hammer Efficiency Factor = Annual Calibration Value
N_{60} = SPT N-uncorrected corrected for hammer efficiency
N_{60} = (Hammer Efficiency Factor/60%)*N-uncorrected
$S_{u(lab)}$ = Lab Vane Shear Strength (psf)
WC = water content, percent
LL = Liquid Limit
PL = Plastic Limit
PI = Plasticity Index
G = Grain Size Analysis
C = Consolidation Test

Depth (ft.)	Sample No.	Pen./Rec. (in.)	Sample Depth (ft.)	Blows (/6 in.) Shear Strength (psf) or RQD (%)	N-uncorrected	N_{60}	Casing Blows	Elevation (ft.)	Visual Description and Remarks	Laboratory Testing Results/ AASHTO and Unified Class.
30	R6	60/60	30.6 - 35.6	RQD = 48%				62.6	Top 4" same as R5. Middle 14": Hard, fresh, medium grained, gray GRANITE. Joints are very close to close, low angle, planar, rough, fresh, tight to partially open. (32.1) Bottom 42": Very hard, fresh, medium to coarse grained, gray GRANITE. Primary joints are close to moderately spaced, low angle, planar, rough, fresh, partially open. Secondary joints are moderately spaced, high angle, planar, rough, fresh, partially open. Rock Mass Quality = Poor 100% Recovery Rock core times (min/ft): 1.5, 2.0, 2.0, 2.0, 2.0	
35	R7	62/62	35.6 - 40.8	RQD = 90%					Very hard, fresh, medium to coarse grained, gray GRANITE. Joints are close to moderately spaced, low angle, planar, rough, fresh, partially open. Pegmatite intrusion at 36.5-36.6'. Rock Mass Quality = Good 100% Recovery Rock core times (min/ft): 1.5, 2.0, 1.5, 2.0, 2.0	
40	R8	54/55	40.8 - 45.3	RQD = 100%				53.9	(40.8) Very hard, fresh, coarse grained, gray/white, PEGMATITIC GRANITE. Joints are close to wide, low angle, planar, rough, fresh, tight to partially open. Rock Mass Quality = Excellent 93% Recovery Rock core times (min/ft): 1.5, 2.0, 3.5, 3.0, 2.0/0.5	
45	R9	42/41	45.8 - 49.3	RQD = 90%					Very hard, fresh, coarse grained, gray PEGMATITIC GRANITE. Joints are close to widely spaced, low angle, undulating, rough, fresh, tight to partially open. Rock Mass Quality = Excellent 93% Recovery Rock core times (min/ft): 4.0, 3.0, 5.5, 1.5	
								46.0	(48.7) **Bottom of Exploration at 48.70 feet below ground surface.**	
50										
55										
60										

Remarks:

1. No water return 23.5-23.7'.
2. PVC Casing installed to 8.5' for future borehole geophysical testing.
3. Water level was measured at 24.5' during geophysical testing on 6/25/13.

Stratification lines represent approximate boundaries between soil types; transitions may be gradual.
* Water level readings have been made at times and under conditions stated. Groundwater fluctuations may occur due to conditions other than those present at the time measurements were made.

Page 2 of 2
Boring No.: BB-AR-202

15

Maine Department of Transportation
Soil/Rock Exploration Log
US CUSTOMARY UNITS

Project: Route 125 Over Androscoggin River		**Boring No.:** BB-AR-203	
Location: Durham-Lisbon, Maine		**PIN:** 18239.00	
Driller: New Hampshire Borings	**Elevation (ft.)** 69.0	**Auger ID/OD:**	
Operator: Ken Smith	**Datum:** NAVD88	**Sampler:** --	
Logged By: Michael Devoid	**Rig Type:** Dietrich D-25	**Hammer Wt./Fall:** --	
Date Start/Finish: 07/16/13-07/17/13	**Drilling Method:** NQ2 Wireline Cone	**Core Barrel:** NQ2	
Boring Location: N 423871, E 1067501	**Casing ID/OD:** 2.5" Wireline	**Water Level*:** 1.0'	
Hammer Efficiency Factor: --	**Hammer Type:** Automatic ☐ Hydraulic ☐ Rope & Cathead ☐		

Definitions:
D = Split Spoon Sample
MD = Unsuccessful Split Spoon Sample attempt
U = Thin Wall Tube Sample
MU = Unsuccessful Thin Wall Tube Sample attempt
V = Insitu Vane Shear Test
MV = Unsuccessful Insitu Vane Shear Test attempt
R = Rock Core Sample
SSA = Solid Stem Auger
HSA = Hollow Stem Auger
RC = Roller Cone
WOH = weight of 140lb. hammer
WOR = weight of rods
WO1P = Weight of one person
S_u = Insitu Field Vane Shear Strength (psf)
T_v = Pocket Torvane Shear Strength (psf)
q_p = Unconfined Compressive Strength (ksf)
N-uncorrected = Raw field SPT N-value
Hammer Efficiency Factor = Annual Calibration Value
N_{60} = SPT N-uncorrected corrected for hammer efficiency
N_{60} = (Hammer Efficiency Factor/60%)*N-uncorrected
$S_{u(lab)}$ = Lab Vane Shear Strength (psf)
WC = water content, percent
LL = Liquid Limit
PL = Plastic Limit
PI = Plasticity Index
G = Grain Size Analysis
C = Consolidation Test

Depth (ft.)	Sample No.	Pen./Rec. (in.)	Sample Depth (ft.)	Blows (/6 in.) Shear Strength (psf) or RQD (%)	N-uncorrected	N_{60}	Casing Blows	Elevation (ft.)	Visual Description and Remarks	Laboratory Testing Results/ AASHTO and Unified Class.
0							RC		Advanced roller cone to 3' to provide room for core barrel.	
	R1	18/15	3.0 - 4.5	RQD = 72%			NX		Very hard, fresh, medium to coarse grained, gray PEGMATITIC GRANITE. Joints are very close to close, low angle, planar, rough, fresh, partially open. Rock Mass Quality = Fair 83% Recovery Rock Core Times (min/ft): 20.0, 10/0.5	
	R2	60/56	4.5 - 9.5	RQD = 77%					Very hard, fresh, medium to coarse grained, gray, PEGMATITIC GRANITE. Joints are very close to moderately spaced, low angle, planar, rough, fresh, partially open, slight iron staining at joints. Rock Mass Quality = Good 93% Recovery Rock Core Times (min/ft): 12.0, 9.5, 5.25, 7.0, 12.0	
5										
	R3	12/14	9.5 - 10.5	RQD = 36%					Very hard, fresh, medium to coarse grained, gray PEGMATITIC GRANITE. Joints are very close to close, low angle, planar, rough, fresh, partially open. Rock Mass Quality = Poor 117% Recovery Rock Core Times (min/ft): 25.0	
10	R4	60/60	10.5 - 15.5	RQD = 87%				55.0	10.5-14.0': Very hard, fresh, medium to coarse grained, gray PEGMATITIC GRANITE. Joints are close to moderately spaced, low angle, planar, rough, fresh, tight. (14.0) 14.0-15.5': Hard, fresh, medium grained, gray SCHIST. Joints are close, low angle, planar, rough, fresh, tight.Rock Mass Quality = Good100% RecoveryRock Core Times (min/ft): 4.75, 4.0, 6.5, 5.0, 3.0	
15	R5	60/60	15.5 - 20.5	RQD = 100%					Very hard, fresh, medium grained, gray SCHIST. Joints are close to moderately spaced, low angle, planar, rough, fresh, tight. Rock Mass Quality = Excellent 100% Recovery Rock Core Times (min/ft): 2.5, 2.75, 4.0, 3.5, 3.75	q_p = 8.4 ksi
20	R6	60/57	20.5 - 25.5	RQD = 75%					Similar to R5 but with a PEGMATITE intrusion from 22.4-24.5'. Rock Mass Quality = Fair 95% Recovery Rock Core Times (min/ft): 4.75, 3.75, 6.0, 6.5, 4.25	
25	R7	36/42	25.5 - 28.5	RQD = 100%					Similar to R5 but with gray GRANITE from 28.3-28.5'. Rock Mass Quality = Excellent 117% Recovery Rock Core Times (min/ft): 2.5, 5.0, 6.5	
								40.5	(28.5) **Bottom of Exploration at 28.50 feet below ground surface.**	
30										

Remarks:

Stratification lines represent approximate boundaries between soil types; transitions may be gradual.
* Water level readings have been made at times and under conditions stated. Groundwater fluctuations may occur due to conditions other than those present at the time measurements were made.

Page 1 of 1
Boring No.: BB-AR-203

STATE OF MAINE
DEPARTMENT OF TRANSPORTATION
BH-1823(900)
WIN 18239.00
BRIDGE PLANS
BRIDGE NO. 3334

STATE OF MAINE ★ ANDREW R. BLAISDELL NO. 10957 LICENSED ★ PROFESSIONAL ENGINEER

SIGNATURE
10957
P.E. NUMBER
06/27/2014
DATE

		BY	DATE
PROJ. MANAGER	L. TIMBERLAKE		
DESIGN-DETAILED	GZA	JTS	JUNE 2014
CHECKED-REVIEWED	GZA	DDT\TWM	JUNE 2014
DESIGN2-DETAILED2			
DESIGN3-DETAILED3			
REVISIONS 1			
REVISIONS 2			
REVISIONS 3			
REVISIONS 4			
FIELD CHANGES			

DURHAM BRIDGE
ANDROSCOGGIN RIVER
DURHAM-LISBON ANDROSCOGGIN COUNTY

BORING LOGS 2

SHEET NUMBER
12
OF 87

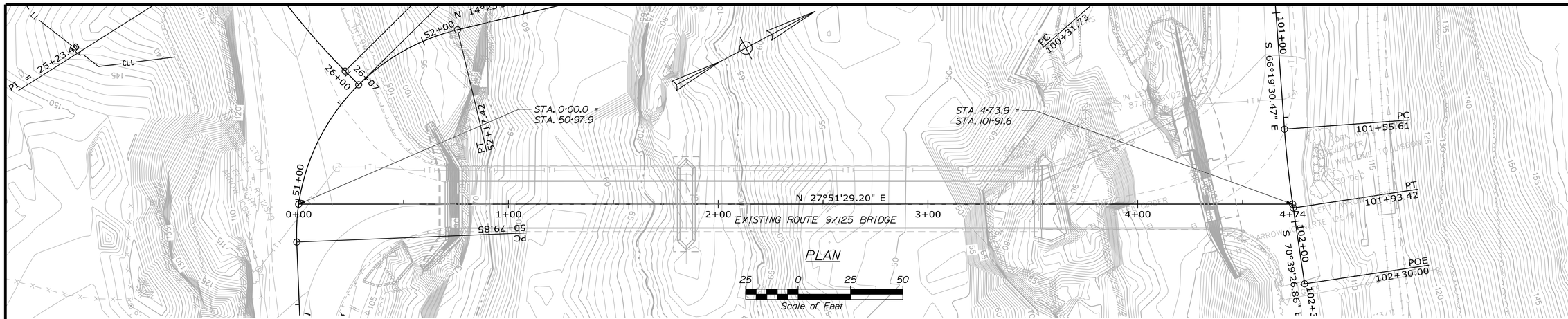

BRIDGE REMOVAL NOTES

1. Unless otherwise shown, or described herein, all existing substructures shall be removed in their entirety.

2. The existing Lisbon Abutment shall be removed to a minimum of 1'-0" below the bottom of the protective aggregate cushion of the proposed riprap slope.

3. The existing South Pier shall be removed to a minimum of 1'-0" below existing ground and shall be backfilled with heavy riprap stone.

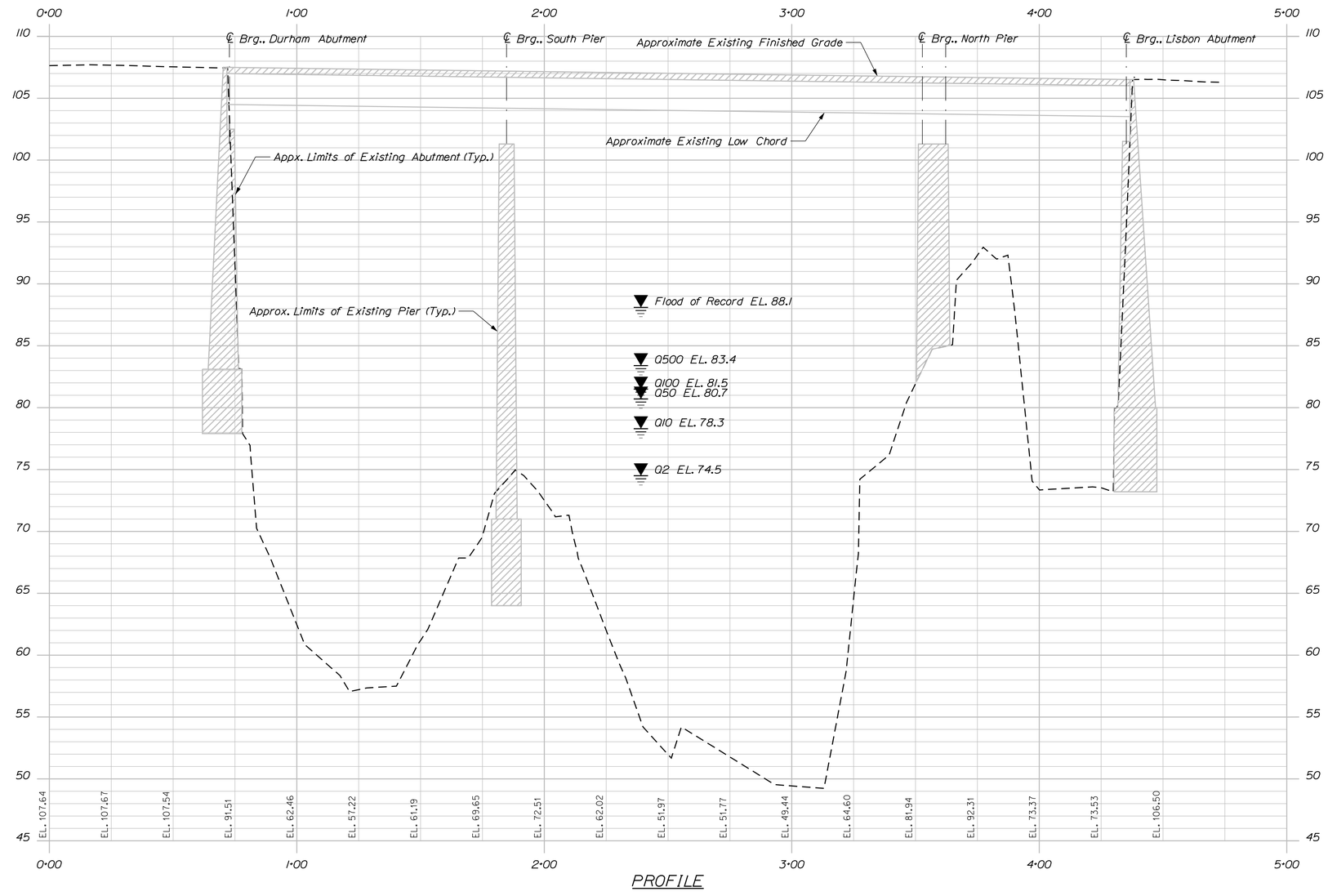

Horiz. 25 0 25 50
Vert. 5 0 5 10
Scale of Feet

Stantec

STATE OF MAINE
DEPARTMENT OF TRANSPORTATION

BH-1823(900)

WIN 18239.00

BRIDGE NO. 3334

BRIDGE PLANS

		BY	DATE
PROJ. MANAGER	L. TIMBERLAKE		
DESIGN-DETAILED	DDT	DDT	JUNE 2014
CHECKED-REVIEWED	TWM	DDT\TWM	JUNE 2014
DESIGN2-DETAILED2			
DESIGN3-DETAILED3			
REVISIONS 1			
REVISIONS 2			
REVISIONS 3			
REVISIONS 4			
FIELD CHANGES			

SIGNATURE

P.E. NUMBER

DATE

DURHAM BRIDGE
ANDROSCOGGIN RIVER
DURHAM-LISBON ANDROSCOGGIN COUNTY

EXISTING BRIDGE PLAN & PROFILE

SHEET NUMBER

13

OF 87

Filename: ...\MSTA\013_Existing_Bridge.dgn Division: BRIDGE Username: common Date:7/17/2014

Curve Data for Alignment #1							
Point #	Point Type	Station	Northing	Easting	Radius	Length	Tangent
1.1	POB	0+00.00	422700.97	1067420.21			9.3
1.2	PC	0+09.30	422700.34	1067429.49			
					130.00	59.33	
1.3	PC	0+68.63	422709.69	1067487.56			
					30.00	27.95	
1.4	POE	0+96.58	422730.00	106750.27			

Geometric Station & Offset for Alignment #1				
Point #	Station	Offset	Northing	Easting
1.1	25+00.08	-30.30	422700.97	1067420.21
1.2	25+10.11	-30.30	422700.34	1067429.49
1.3	25+74.54	-30.86	422709.69	1067487.56
1.4	25+99.48	-45.88	422730.00	106750.27

Curve Data for Alignment #2							
Point #	Point Type	Station	Northing	Easting	Radius	Length	Tangent
2.1	POB	0+00.00	422654.67	1067420.88			
					336.00	50.11	
2.2	PRC	0+09.30	422658.79	1067470.71			
					70.00	54.47	
2.3	POE	0+96.58	422656.20	1067502.75			

Geometric Station & Offset for Alignment #2				
Point #	Station	Offset	Northing	Easting
2.1	25+00	16.00	422654.67	1067420.88
2.2	25+47.85	16.00	422658.79	1067470.71
2.3	25.77.11	24.69	422656.20	1067502.75

Curve Data for Alignment #3							
Point #	Point Type	Station	Northing	Easting	Radius	Length	Tangent
3.1	PC	0+00.0	423067.30	1067585.21			
					81.00	86.54	
3.2	PT	0+86.54	423141.12	1067548.38			
3.3	POE	2+04.16	423209.51	1067452.79			117.62

Geometric Station & Offset for Alignment #3				
Point #	Station	Offset	Northing	Easting
3.1	55+51.23	-21.08	423067.30	1067585.21
3.2	56+59.32	-19.57	423141.12	1067548.38
3.3	57+75	-20.00	423209.51	1067452.79

Note:
Bridge will be constructed normal to the working line. Approach cross slopes shall vary to meet grades displayed on plan.

(*) Indicates Elevation Along Face of Backwall

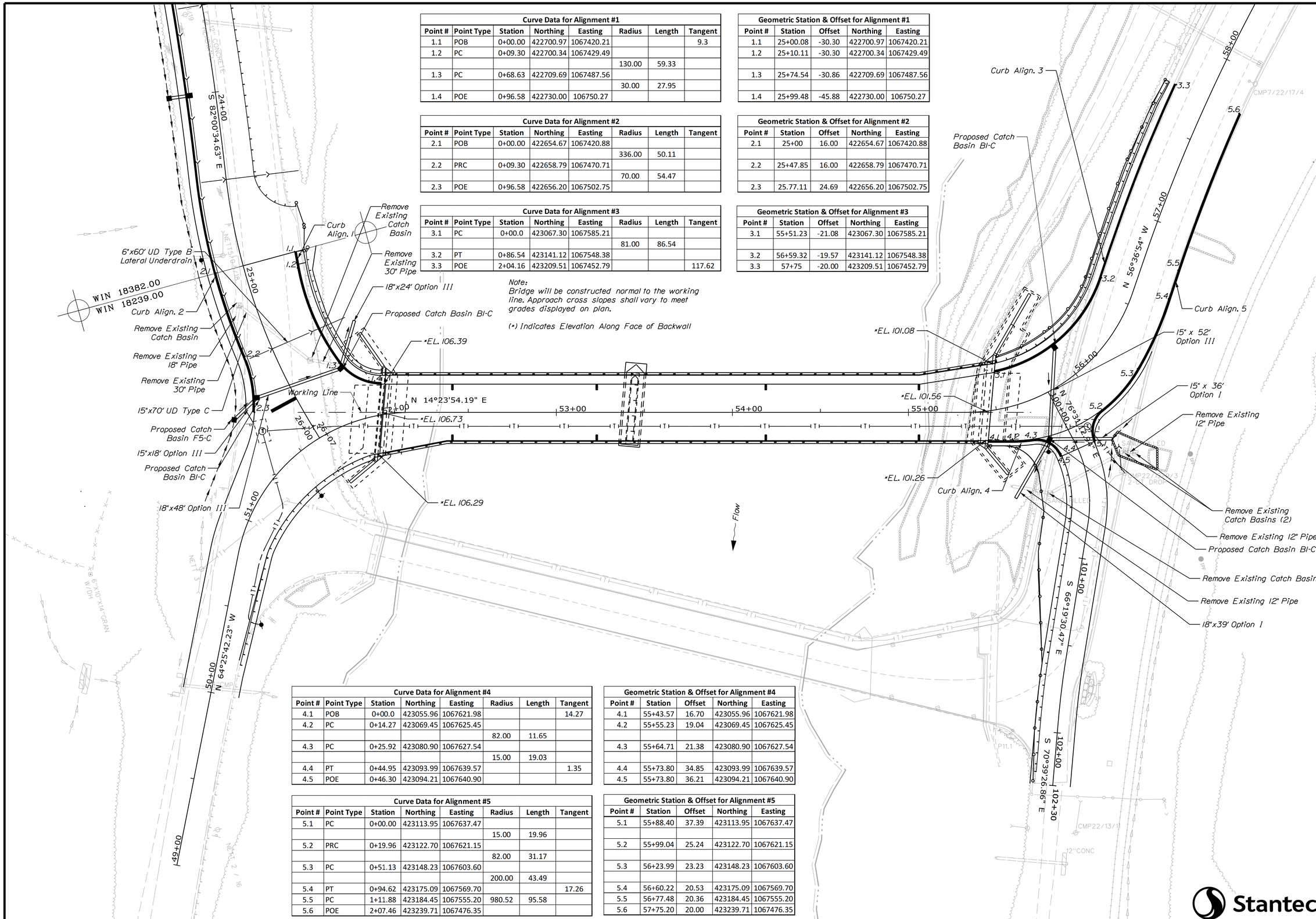

Curve Data for Alignment #4							
Point #	Point Type	Station	Northing	Easting	Radius	Length	Tangent
4.1	POB	0+00.0	423055.96	1067621.98			14.27
4.2	PC	0+14.27	423069.45	1067625.45			
					82.00	11.65	
4.3	PC	0+25.92	423080.90	1067627.54			
					15.00	19.03	
4.4	PT	0+44.95	423093.99	1067639.57			1.35
4.5	POE	0+46.30	423094.21	1067640.90			

Geometric Station & Offset for Alignment #4				
Point #	Station	Offset	Northing	Easting
4.1	55+43.57	16.70	423055.96	1067621.98
4.2	55+55.23	19.04	423069.45	1067625.45
4.3	55+64.71	21.38	423080.90	1067627.54
4.4	55+73.80	34.85	423093.99	1067639.57
4.5	55+73.80	36.21	423094.21	1067640.90

Curve Data for Alignment #5							
Point #	Point Type	Station	Northing	Easting	Radius	Length	Tangent
5.1	PC	0+00.00	423113.95	1067637.47			
					15.00	19.96	
5.2	PRC	0+19.96	423122.70	1067621.15			
					82.00	31.17	
5.3	PC	0+51.13	423148.23	1067603.60			
					200.00	43.49	
5.4	PT	0+94.62	423175.09	1067569.70			17.26
5.5	PC	1+11.88	423184.45	1067555.20	980.52	95.58	
5.6	POE	2+07.46	423239.71	1067476.35			

Geometric Station & Offset for Alignment #5				
Point #	Station	Offset	Northing	Easting
5.1	55+88.40	37.39	423113.95	1067637.47
5.2	55+99.04	25.24	423122.70	1067621.15
5.3	56+23.99	23.23	423148.23	1067603.60
5.4	56+60.22	20.53	423175.09	1067569.70
5.5	56+77.48	20.36	423184.45	1067555.20
5.6	57+75.20	20.00	423239.71	1067476.35

Stantec

STATE OF MAINE
DEPARTMENT OF TRANSPORTATION

BH-1823(900)

WIN 18239.00

BRIDGE NO. 3334

BRIDGE PLANS

PROJ. MANAGER	L. TIMBERLAKE		
		BY	DATE
DESIGN-DETAILED	ISM	PZA	JUNE 2014
CHECKED-REVIEWED	JCM	ISM/TWM	JUNE 2014
DESIGN2-DETAILED2			
DESIGN3-DETAILED3			
REVISIONS 1			
REVISIONS 2			
REVISIONS 3			
REVISIONS 4			
FIELD CHANGES			

P.E. NUMBER

SIGNATURE

DATE

DURHAM BRIDGE
ANDROSCOGGIN RIVER
DURHAM-LISBON ANDROSCOGGIN COUNTY

CURB GEOMETRY

SHEET NUMBER

14

OF 87

Filename: ...\MSTA\014_Curb Geometry.dgn Division: BRIDGE Username: common Date:7/18/2014

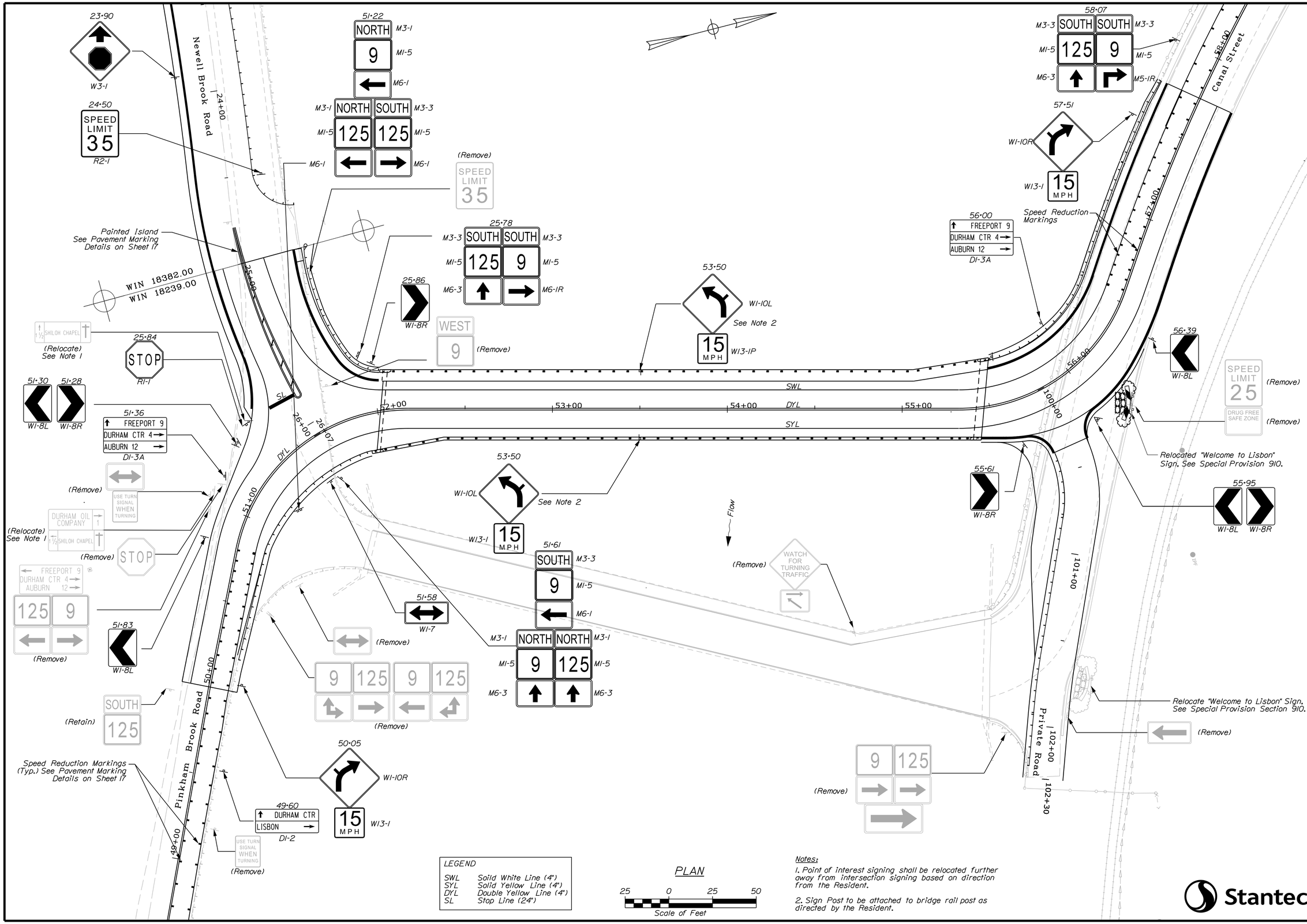

LEGEND

SWL	Solid White Line (4")
SYL	Solid Yellow Line (4")
DYL	Double Yellow Line (4")
SL	Stop Line (24")

PLAN

25 0 25 50

Scale of Feet

Notes:

1. Point of interest signing shall be relocated further away from intersection signing based on direction from the Resident.

2. Sign Post to be attached to bridge rail post as directed by the Resident.

Stantec

STATE OF MAINE
DEPARTMENT OF TRANSPORTATION

BH-1823(900)

WIN 18239.00

BRIDGE NO. 3334

BRIDGE PLANS

		BY	DATE
PROJ. MANAGER	L. TIMBERLAKE		
DESIGN-DETAILED	ISM	PZA	JUNE 2014
CHECKED-REVIEWED	JCM	ISM/TWM	JUNE 2014
DESIGN2-DETAILED2			
DESIGN3-DETAILED3			
REVISIONS 1			
REVISIONS 2			
REVISIONS 3			
REVISIONS 4			
FIELD CHANGES			

SIGNATURE

P.E. NUMBER

DATE

DURHAM BRIDGE
ANDROSCOGGIN RIVER
DURHAM-LISBON ANDROSCOGGIN COUNTY

SIGNING & STRIPING PLAN

SHEET NUMBER

15

OF 87

Filename: ...\015_Signing & Striping Plan.dgn Division: BRIDGE Username: common Date:7/17/2014

ITEM NUMBER	IDENTIFICATION NUMBER	SIZE OF SIGN WIDTH	SIZE OF SIGN HEIGHT	TEXT	TEXT DIMENSIONS (INCHES) LETTER HEIGHT	TEXT DIMENSIONS (INCHES) VERTICAL SPACING	TEXT DIMENSIONS (INCHES) ARROW RTE. MKR.	NUMBER OF SIGNS REQUIRED	COLOR BACK-GROUND	COLOR LEGEND BORDER	TOTAL AREA IN SQUARE FEET	POST
NEWELL BROOK ROAD (ROUTE 9)												
645.292	W3-1	36	36					1	YELLOW	BLACK	9.00	U CHANNEL
645.292	R2-1	24	30	SPEED LIMIT 35				1	WHITE	BLACK	5.00	U CHANNEL
645.292	R1-1	30	30	STOP				1	RED	WHITE	6.25	U CHANNEL
645.292	M3-1	24	12	NORTH				2	WHITE	BLACK	2.00	U CHANNEL
645.292	M1-5	24	24	9				3	WHITE	BLACK	4.00	U CHANNEL
645.292	M6-1	21	15	←				3	WHITE	BLACK	2.19	U CHANNEL
645.292	M3-3	24	12	NORTH SOUTH 125 125 ← →				1	WHITE	BLACK	2.00	U CHANNEL
645.292	W1-7	36	18	↔				1	YELLOW	BLACK	4.50	U CHANNEL
PINKHAM BROOK ROAD (ROUTE 125)												
645.292	D1-2	66	30	↑ DURHAM CTR LISBON →				1	GREEN	WHITE	13.75	U CHANNEL
645.292	W1-10R	36	36					1	YELLOW	BLACK	9.00	U CHANNEL
645.292	W13-1	18	18	15 MPH				1	WHITE	BLACK	2.25	U CHANNEL
645.292	M3-3	24	12	SOUTH				1	WHITE	BLACK	2.00	U CHANNEL
645.292	M1-5	24	24	9				3	WHITE	BLACK	4.00	U CHANNEL
645.292	M6-1	21	15	←				2	WHITE	BLACK	2.19	U CHANNEL
645.292	M3-1	24	12	NORTH NORTH 9 125				2	WHITE	BLACK	2.00	U CHANNEL
645.292	M6-3	21	15	↑ ↑				2	WHITE	BLACK	2.19	U CHANNEL
645.292	W1-10L	36	36					1	YELLOW	BLACK	9.00	U CHANNEL
645.292	W13-1	18	18	15 MPH				1	YELLOW	BLACK	2.25	U CHANNEL

ITEM NUMBER	IDENTIFICATION NUMBER	SIZE OF SIGN WIDTH	SIZE OF SIGN HEIGHT	TEXT	TEXT DIMENSIONS (INCHES) LETTER HEIGHT	TEXT DIMENSIONS (INCHES) VERTICAL SPACING	TEXT DIMENSIONS (INCHES) ARROW RTE. MKR.	NUMBER OF SIGNS REQUIRED	COLOR BACK-GROUND	COLOR LEGEND BORDER	TOTAL AREA IN SQUARE FEET	POST
PINKHAM BROOK ROAD (ROUTE 125)												
645.292	W1-8R	18	24					2	YELLOW	YELLOW	3.00	U CHANNEL
645.292	W1-8L	18	24					2	YELLOW	YELLOW	3.00	U CHANNEL
645.292	M3-3	24	12	SOUTH SOUTH 125 9				2	WHITE	BLACK	2.00	U CHANNEL
645.292	M1-5	24	24					2	WHITE	BLACK	4.00	U CHANNEL
645.292	M6-3	21	15	↑ →				1	WHITE	BLACK	2.19	U CHANNEL
645.292	M6-1R	21	15					1	WHITE	BLACK	2.19	U CHANNEL
CANAL STEET (ROUTE 9/125)												
645.292	M3-3	24	12	SOUTH SOUTH 125 9				2	WHITE	BLACK	2.00	U CHANNEL
645.292	M1-5	24	24					2	WHITE	BLACK	4.00	U CHANNEL
645.292	M6-3	21	15	↑ ↱				1	WHITE	BLACK	2.19	U CHANNEL
645.292	M5-1R	21	15					1	WHITE	BLACK	2.19	U CHANNEL
645.292	W1-10R	36	36					1	YELLOW	BLACK	9.00	U CHANNEL
645.292	W13-1	18	18	15 MPH				1	YELLOW	BLACK	2.25	U CHANNEL
645.291	D1-3A	84	42	↑ FREEPORT 9 DURHAM CTR 4 → AUBURN 12 →				1	GREEN	WHITE	24.50	U CHANNEL
645.292	W1-8R	18	24					2	YELLOW	BLACK	3.00	U CHANNEL
645.292	W1-10L	36	36					1	YELLOW	BLACK	6.25	U CHANNEL
645.292	W13-1	18	18	15 MPH				1	YELLOW	BLACK	2.25	U CHANNEL
645.292	D1-3A	84	42	↑ FREEPORT 9 DURHAM CTR 4 → AUBURN 12 →				1	GREEN	WHITE	24.50	U CHANNEL
645.292	W1-8L	18	24					2	YELLOW	YELLOW	3.00	U CHANNEL

*F Y-G = Fluorescent Yellow-Green

Stantec

STATE OF MAINE
DEPARTMENT OF TRANSPORTATION

BH-1823(900)

WIN 18239.00

BRIDGE NO. 3334

BRIDGE PLANS

SIGNATURE

P.E. NUMBER

DATE

	BY	DATE
PROJ. MANAGER	L. TIMBERLAKE	
DESIGN-DETAILED	ISM	PZA	JUNE 2014
CHECKED-REVIEWED	JCM	ISM/TWM	JUNE 2014
DESIGN2-DETAILED2		
DESIGN3-DETAILED3		
REVISIONS 1		
REVISIONS 2		
REVISIONS 3		
REVISIONS 4		
FIELD CHANGES		

DURHAM BRIDGE
ANDROSCOGGIN RIVER
DURHAM-LISBON ANDROSCOGGIN COUNTY

SIGN SUMMARY SHEET

SHEET NUMBER

16

OF 87

Filename: ...\016_Sign Summary Sheet.dgn Division: BRIDGE Username: common Date:7/17/2014

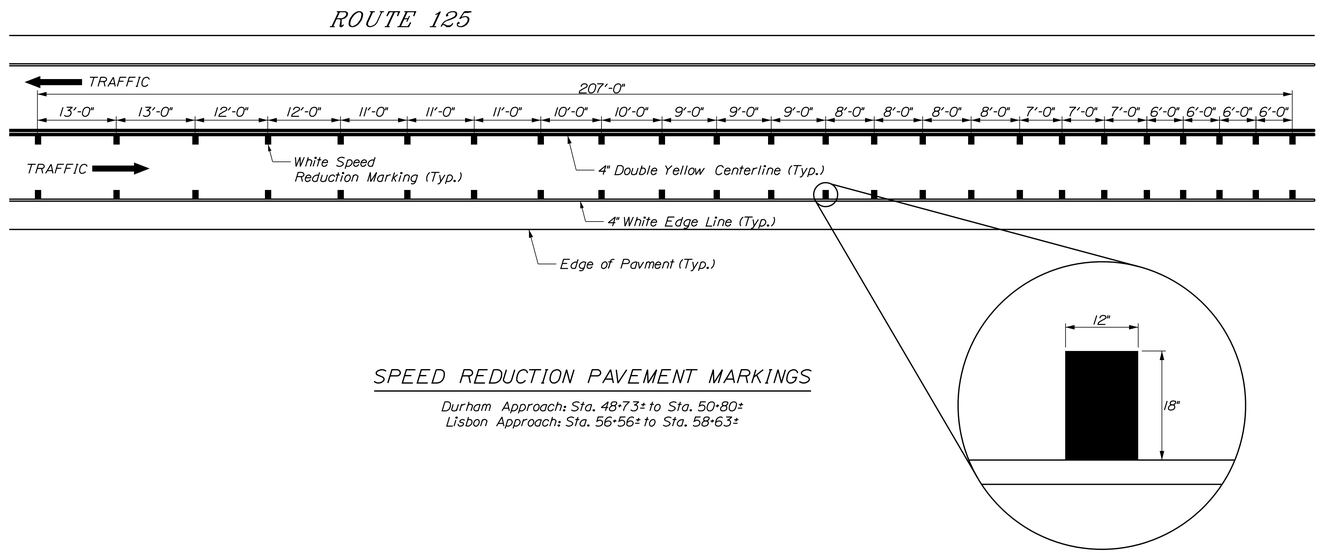

SPEED REDUCTION PAVEMENT MARKINGS

Durham Approach: Sta. 48+73± to Sta. 50+80±
Lisbon Approach: Sta. 56+56± to Sta. 58+63±

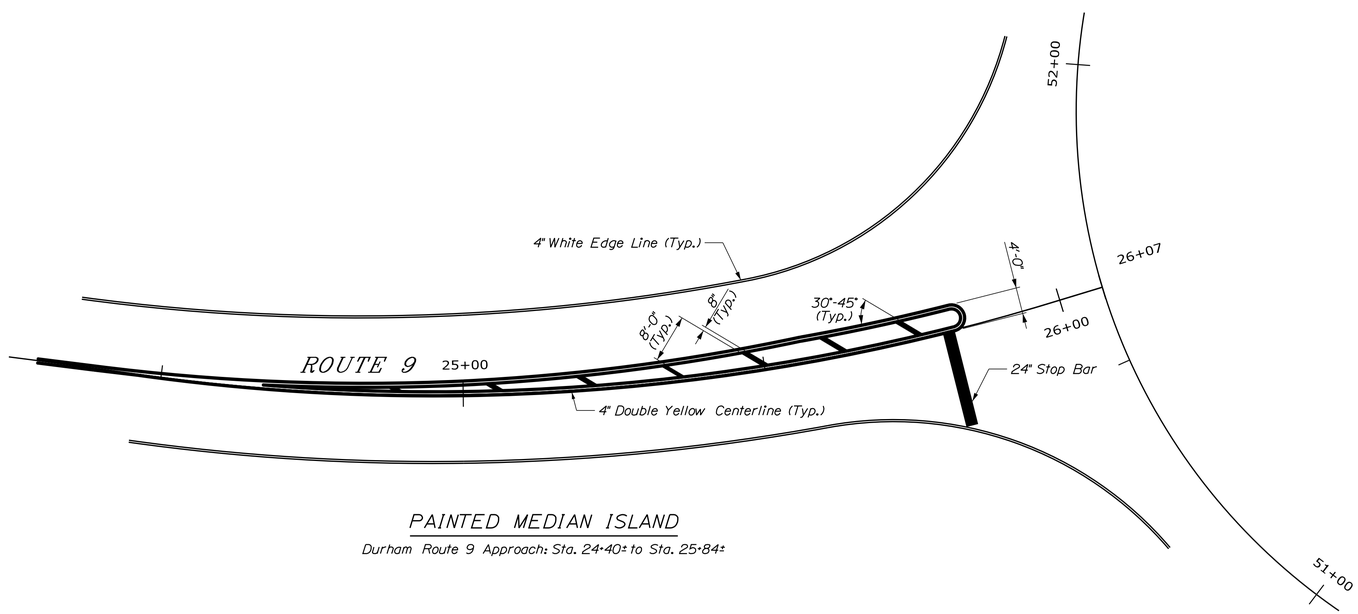

PAINTED MEDIAN ISLAND

Durham Route 9 Approach: Sta. 24+40± to Sta. 25+84±

Stantec

STATE OF MAINE
DEPARTMENT OF TRANSPORTATION

BH-1823(900)

WIN 18239.00

BRIDGE NO. 3334

BRIDGE PLANS

		BY	DATE
PROJ. MANAGER	L. TIMBERLAKE		
DESIGN-DETAILED	ISM	PZA	JUNE 2014
CHECKED-REVIEWED	JCM	ISM/TWM	JUNE 2014
DESIGN2-DETAILED2			
DESIGN3-DETAILED3			
REVISIONS 1			
REVISIONS 2			
REVISIONS 3			
REVISIONS 4			
FIELD CHANGES			

SIGNATURE

P.E. NUMBER

DATE

DURHAM BRIDGE
ANDROSCOGGIN RIVER
DURHAM-LISBON ANDROSCOGGIN COUNTY

PAVEMENT MARKING DETAILS

SHEET NUMBER

17

OF 87

Filename: ...\017_Pavement Marking Details.dgn Division: BRIDGE Username: common Date:7/17/2014

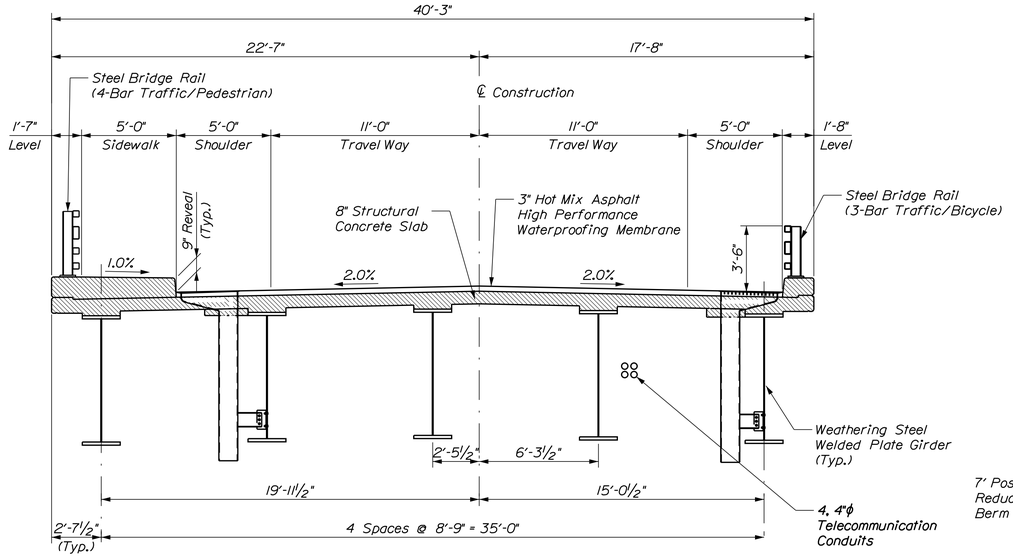

PROPOSED BRIDGE SECTION

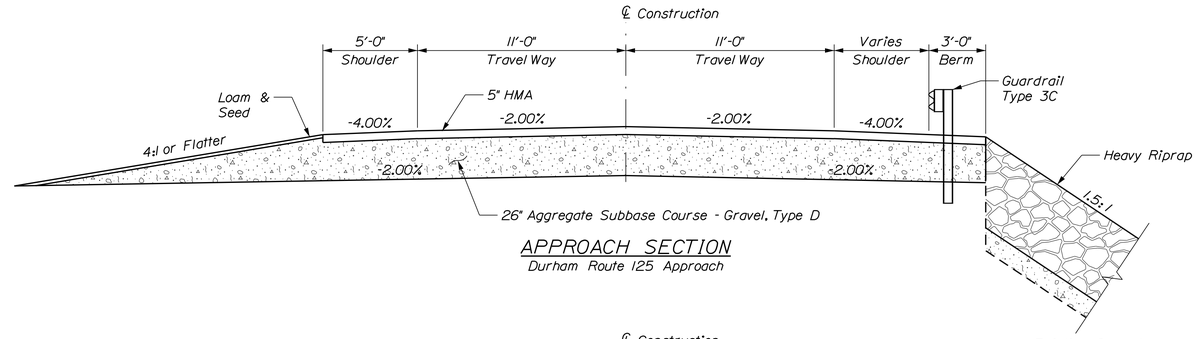

APPROACH SECTION
Durham Route 125 Approach

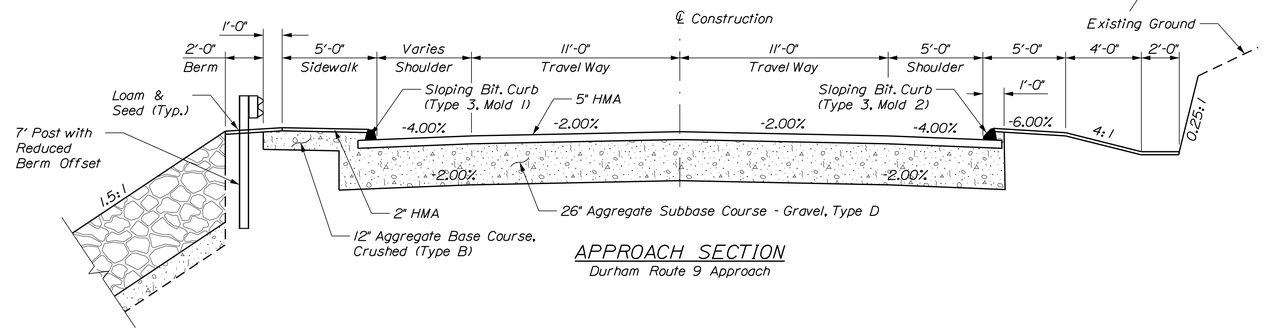

APPROACH SECTION
Durham Route 9 Approach

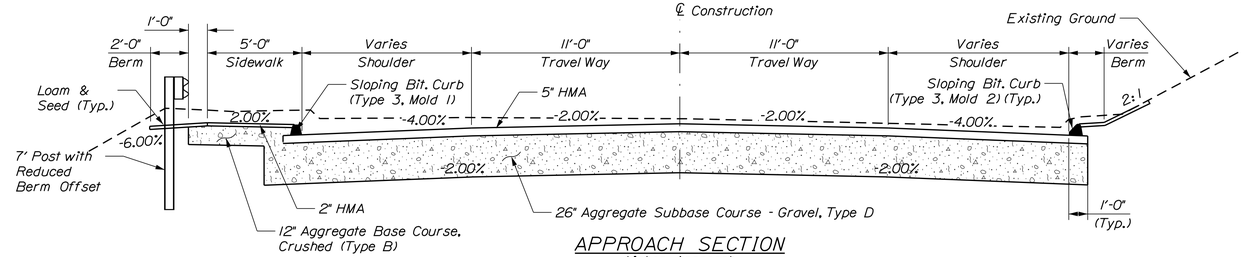

APPROACH SECTION
Lisbon Approach
STA. 56+00± to STA. 57+75±

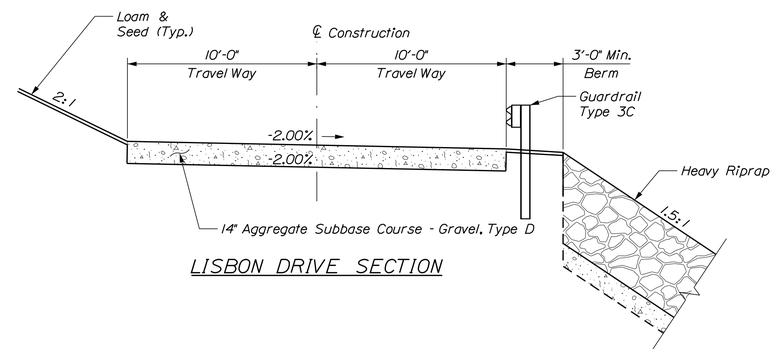

LISBON DRIVE SECTION

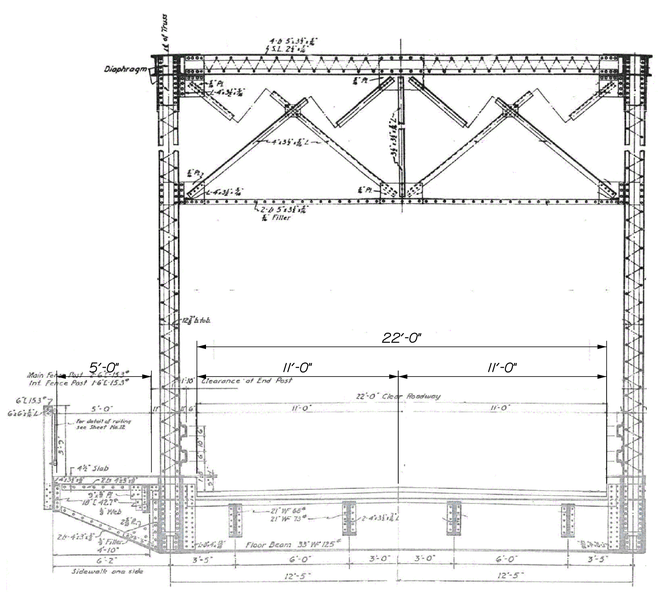

EXISTING BRIDGE SECTION

Stantec

STATE OF MAINE
DEPARTMENT OF TRANSPORTATION

BH-1823(900)

WIN 18239.00

BRIDGE NO. 3334

BRIDGE PLANS

PROJ. MANAGER	L. TIMBERLAKE		
DESIGN-DETAILED	DOT	JTS	JUNE 2014
CHECKED-REVIEWED	TWM	DOT/TWM	JUNE 2014
DESIGN2-DETAILED2	ISM	PZA	JAN 2014
DESIGN3-DETAILED3			
REVISIONS 1			
REVISIONS 2			
REVISIONS 3			
REVISIONS 4			
FIELD CHANGES			

SIGNATURE

P.E. NUMBER

DATE

DURHAM BRIDGE
ANDROSCOGGIN RIVER
DURHAM-LISBON ANDROSCOGGIN COUNTY

TYPICAL SECTIONS

SHEET NUMBER
18
OF 87

Filename: ...\MSTA\018_Typical Sections.dgn Division: BRIDGE Username: common Date:7/17/2014

RIPRAP SLOPE BUTTRESS NOTES

1. Where riprap slopes terminate on bedrock, the riprap shall be keyed into the slope as shown below.

2. All costs for bedrock removal for the riprap toe shall be paid under Item No. 206.07 - Structural Rock Excavation - Drainage & Minor Structures.

3. At the Contractor's option a Precast Concrete Block Gravity Wall may be used in lieu of keying riprap into bedrock.

4. The Contractor shall submit proposed riprap toe details and layout to the Resident for review and approval.

PRECAST CONCRETE BLOCK GRAVITY WALL NOTES

1. The bearing surface shall be leveled by pouring a concrete fill leveling surface, or by locally benching the bedrock. Cost of surface preparation shall be incidental to Item No. 635.311 - Precast Concrete Block Gravity Wall.

2. 4-in x 4-in weeper blockout drains shall be installed in precast segments at 10-ft maximum spacing or one drain per precast segment, whichever is smaller.

3. Dowels shall meet the requirements of ASTM A 615/A 615M, Grade 60 and shall be galvanized to ASTM A 153 or ASTM B695, Class 50, Type 1. Payment for galvanizing will be considered incidental to the Precast Concrete Block Gravity Wall pay item. See Dowel Notes for installation details.

4. The maximum dowel spacing shall be 3'-0" along the length of the wall, and a minimum of 2 dowels shall be installed per block segment.

DOWEL NOTES

1. The connection between the precast concrete block gravity wall or the rock overhang stabilization concrete and the bearing surface shall be doweled.

2. The method of installing dowels shall be approved by the Resident.

3. All cost for installation of the anchor dowels shall be incidental to Item No. 635.311 - Precast Concrete Block Gravity Wall or Item No. 502.211 - Structural Concrete Abutment & Retaining Wall - Class A Overhang Stabilization.

4. The anchoring material shall be one of the products listed on the MaineDOT List of Prequalified Grout Materials for Keyways and Anchoring and shall have a maximum water-cement ratio of 0.45 by weight and a minimum unconfined compressive strength of 4.35 ksi at the time of testing. Installation shall be in conformance with manufacturer's recommendation. The anchor material chosen shall be submitted to the Resident prior to installation.

5. Holes drilled for the dowel reinforcing steel shall be a minimum diameter of 2½ inches.

6. The minimum embedment depth into bedrock or concrete shall be 2'-0".

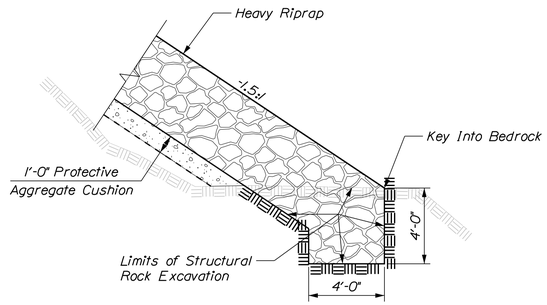

RIPRAP BEDROCK KEY DETAIL

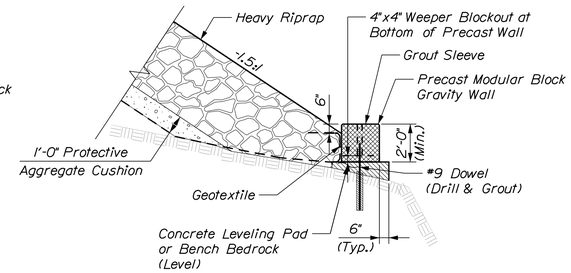

PRECAST CONCRETE BLOCK GRAVITY WALL
(Special Provision 635)

ROCK OVERHANG STABILIZATION NOTES

1. Dowels shall meet the requirements of ASTM A 615/A 615M, Grade 60 and shall be galvanized to ASTM A 153 or ASTM B695, Class 50, Type 1. Payment for galvanizing will be considered incidental to the Structural Concrete Abutments and Retaining Walls - Class A Overhang Stabilization pay item. See Dowel Notes for installation details.

2. The Modified French Drain shall consist of Stone for French Drains meeting the requirements of Standard Specification 703.24 and shall be wrapped in Erosion Control Geotextile meeting the requirements of Standard Specification 722.03 (Class 1).

3. Following Modified French Drain construction and prior to placing concrete the exposed portion of the Modified French Drain shall be covered with two layers of polyethylene sheeting or other material approved by the Resident to prevent the wet concrete from penetrating into the geotextile and stone.

4. Payment for rock overhang stabilization will be made under Item No. 502.211, Structural Concrete Abutments and Retaining Walls - Class A Overhang Stabilization. See Special Provision 502.

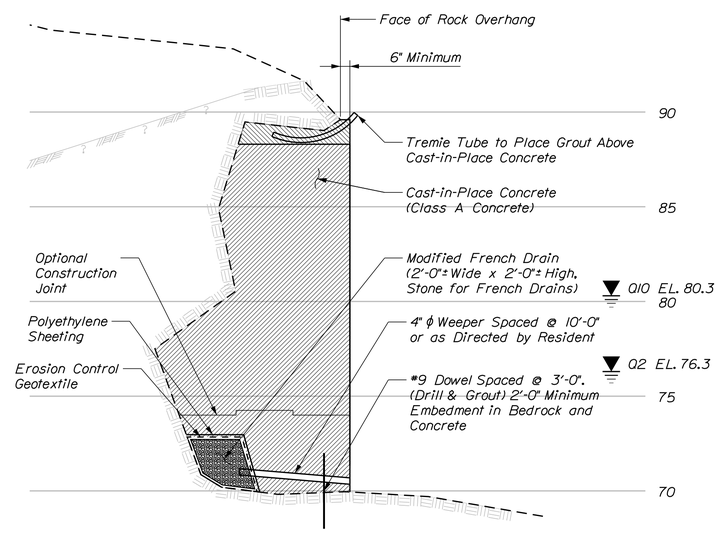

SECTION - ROCK OVERHANG STABILIZATION
(SECTION TAKEN DOWNSTREAM OF PROPOSED DURHAM ABUTMENT)

STATE OF MAINE
DEPARTMENT OF TRANSPORTATION

BH-1823(900)

WIN 18239.00

BRIDGE NO. 3334

BRIDGE PLANS

STATE OF MAINE
ANDREW R. BLODGETT
NO. 10957
LICENSED
PROFESSIONAL ENGINEER

PROJ. MANAGER	L. TIMBERLAKE		
DESIGN-DETAILED	GZA	DDT	JUNE 2014
CHECKED-REVIEWED	GZA	GZA/TWM	JUNE 2014
DESIGN2-DETAILED2			
DESIGN3-DETAILED3			
REVISIONS 1			
REVISIONS 2			
REVISIONS 3			
REVISIONS 4			
FIELD CHANGES			

SIGNATURE

10957
P.E. NUMBER

07/16/2014
DATE

DURHAM BRIDGE
ANDROSCOGGIN RIVER
DURHAM-LISBON ANDROSCOGGIN COUNTY

SLOPE DETAILS

SHEET NUMBER
19
OF 87

Filename: ...\MSTA\019_Slope Details.dgn Division: BRIDGE Username: common Date:7/16/2014

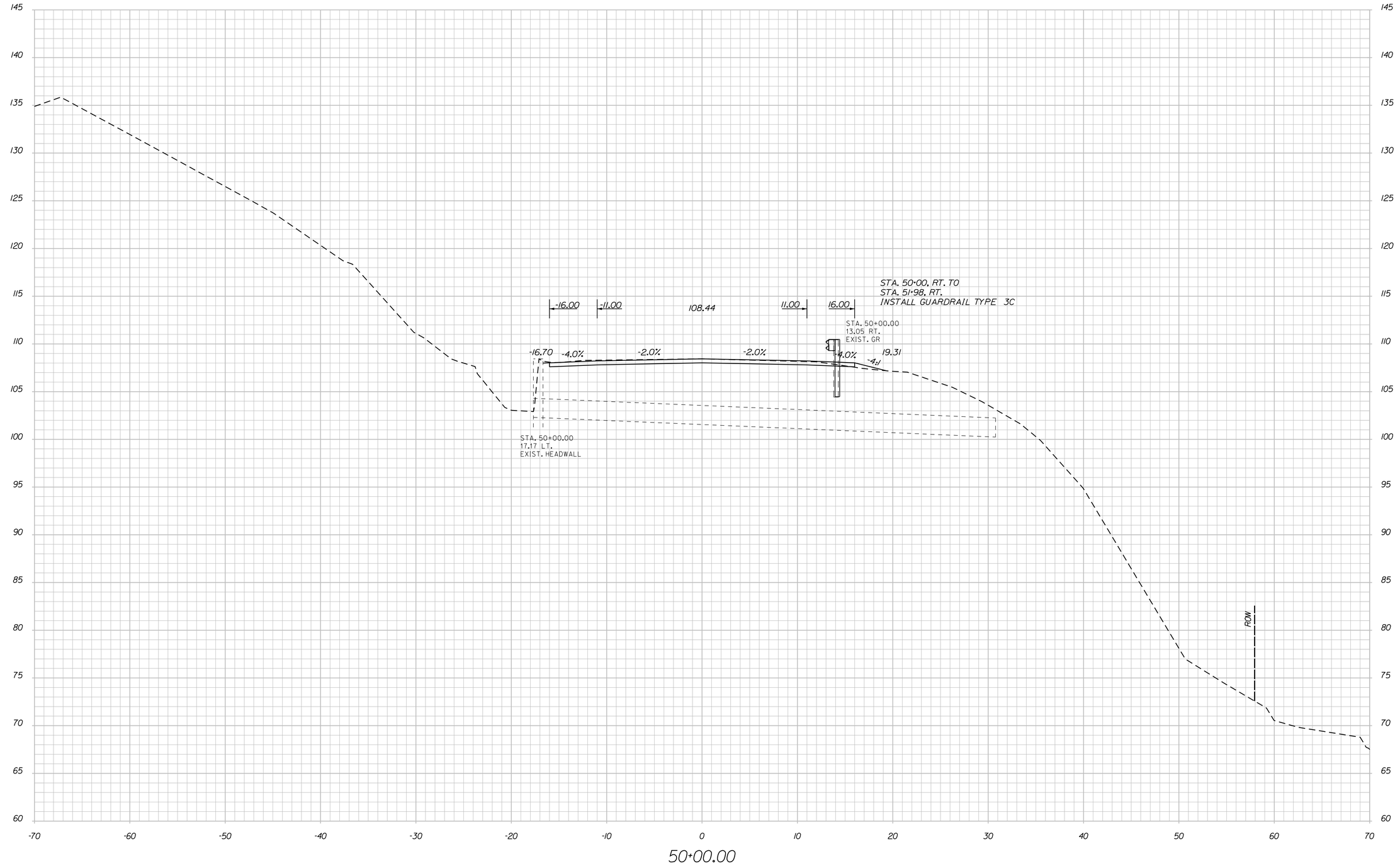

STA. 50+00, RT. TO
STA. 51+98, RT.
INSTALL GUARDRAIL TYPE 3C

Stantec

STATE OF MAINE
DEPARTMENT OF TRANSPORTATION

BH-1823(900)

WIN
18239.00

BRIDGE NO. 3334

BRIDGE PLANS

PROJ. MANAGER	L. TIMBERLAKE		
DESIGN-DETAILED	JSM	BY	DATE
CHECKED-REVIEWED	JCM	PZA	JUNE 2014
DESIGN2-DETAILED2		JSM/TWM	JUNE 2014
DESIGN3-DETAILED3			
REVISIONS 1			
REVISIONS 2			
REVISIONS 3			
REVISIONS 4			
FIELD CHANGES			

SIGNATURE

P.E. NUMBER

DATE

DURHAM BRIDGE
ANDROSCOGGIN RIVER
DURHAM-LISBON ANDROSCOGGIN COUNTY

CROSS SECTIONS

SHEET NUMBER
20
OF 87

Filename: ...\MSTA\020_Cross Section1.dgn Division: BRIDGE Username: common Date:7/17/2014

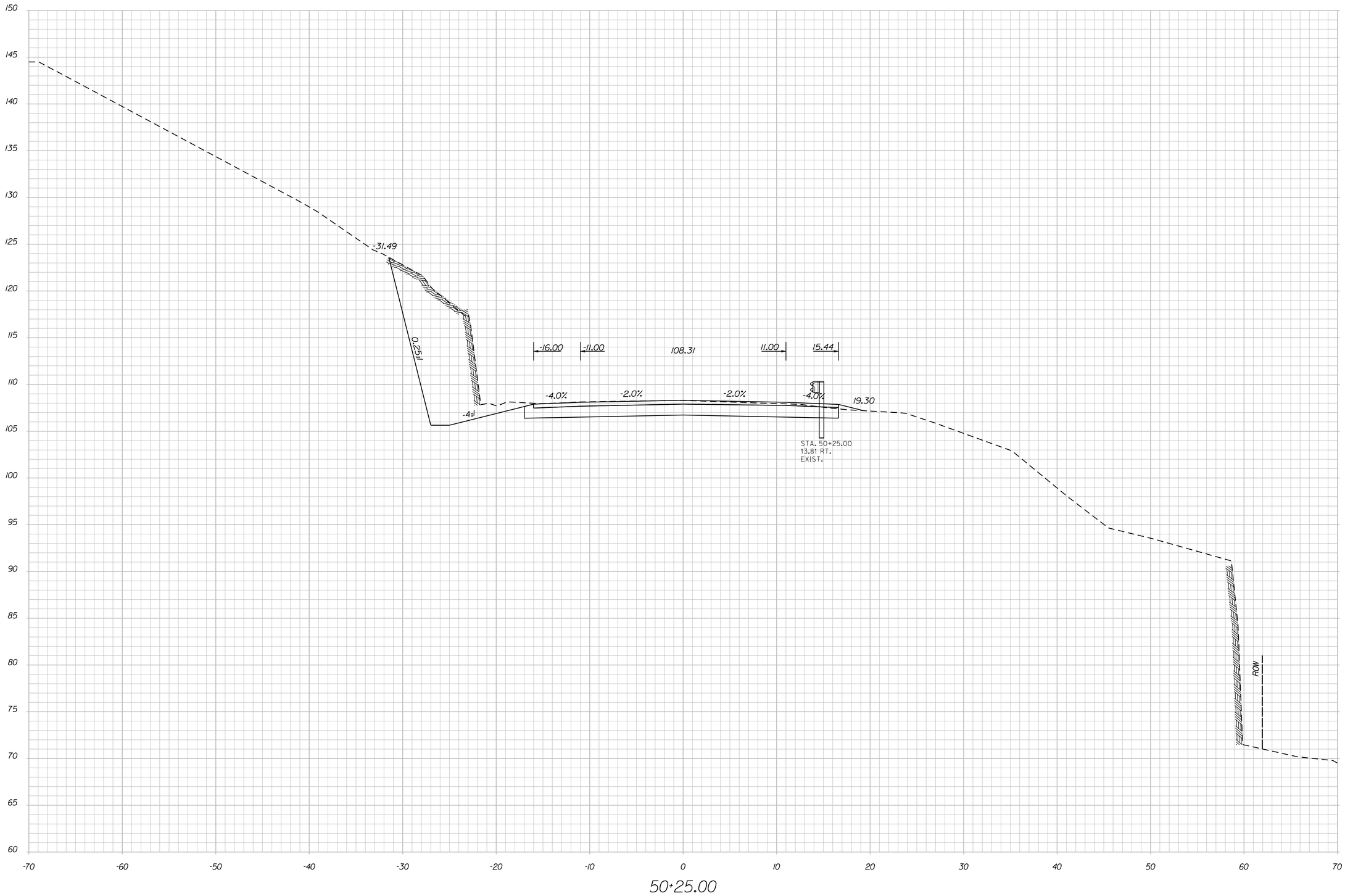

Stantec

STATE OF MAINE
DEPARTMENT OF TRANSPORTATION

BH-1823(900)

WIN 18239.00

BRIDGE NO. 3334

BRIDGE PLANS

PROJ. MANAGER	L. TIMBERLAKE		
DESIGN-DETAILED	JSM	PZA	JUNE 2014
CHECKED-REVIEWED	JCM	JSM/TWM	JUNE 2014
DESIGN2-DETAILED2			
DESIGN3-DETAILED3			
REVISIONS 1			
REVISIONS 2			
REVISIONS 3			
REVISIONS 4			
FIELD CHANGES			

SIGNATURE

P.E. NUMBER

DATE

DURHAM BRIDGE
ANDROSCOGGIN RIVER
DURHAM-LISBON ANDROSCOGGIN COUNTY

CROSS SECTIONS

SHEET NUMBER

21

OF 87

Filename: ...\MSTA\021_Cross Section2.dgn Division: BRIDGE Username: common Date:7/17/2014

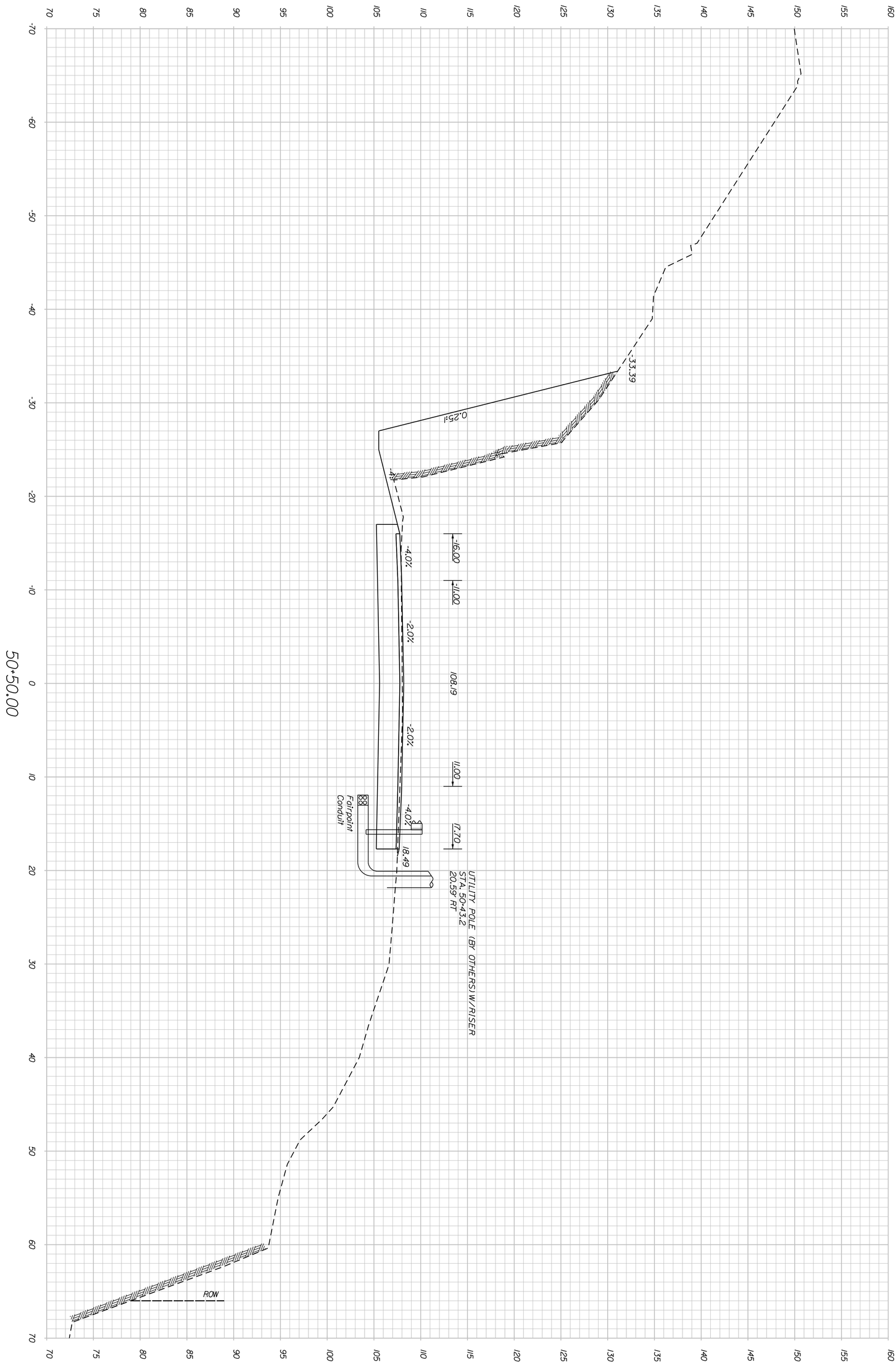

Stantec

SHEET NUMBER 22 OF 87	DURHAM BRIDGE ANDROSCOGGIN RIVER DURHAM-LISBON ANDROSCOGGIN COUNTY CROSS SECTIONS	PROJ. MANAGER L. TIMBERLAKE	BY	DATE
		DESIGN-DETAILED	ISM	PZA	JUNE 2014
		CHECKED-REVIEWED	JCM	ISM/TWM	JUNE 2014
		DESIGN2-DETAILED2			
		DESIGN3-DETAILED3			
		REVISIONS 1			
		REVISIONS 2			
		REVISIONS 3			
		REVISIONS 4			
		FIELD CHANGES			

SIGNATURE

P.E. NUMBER

DATE

STATE OF MAINE
DEPARTMENT OF TRANSPORTATION

BH-1823(900)

BRIDGE NO. 3334 WIN 18239.00 BRIDGE PLANS

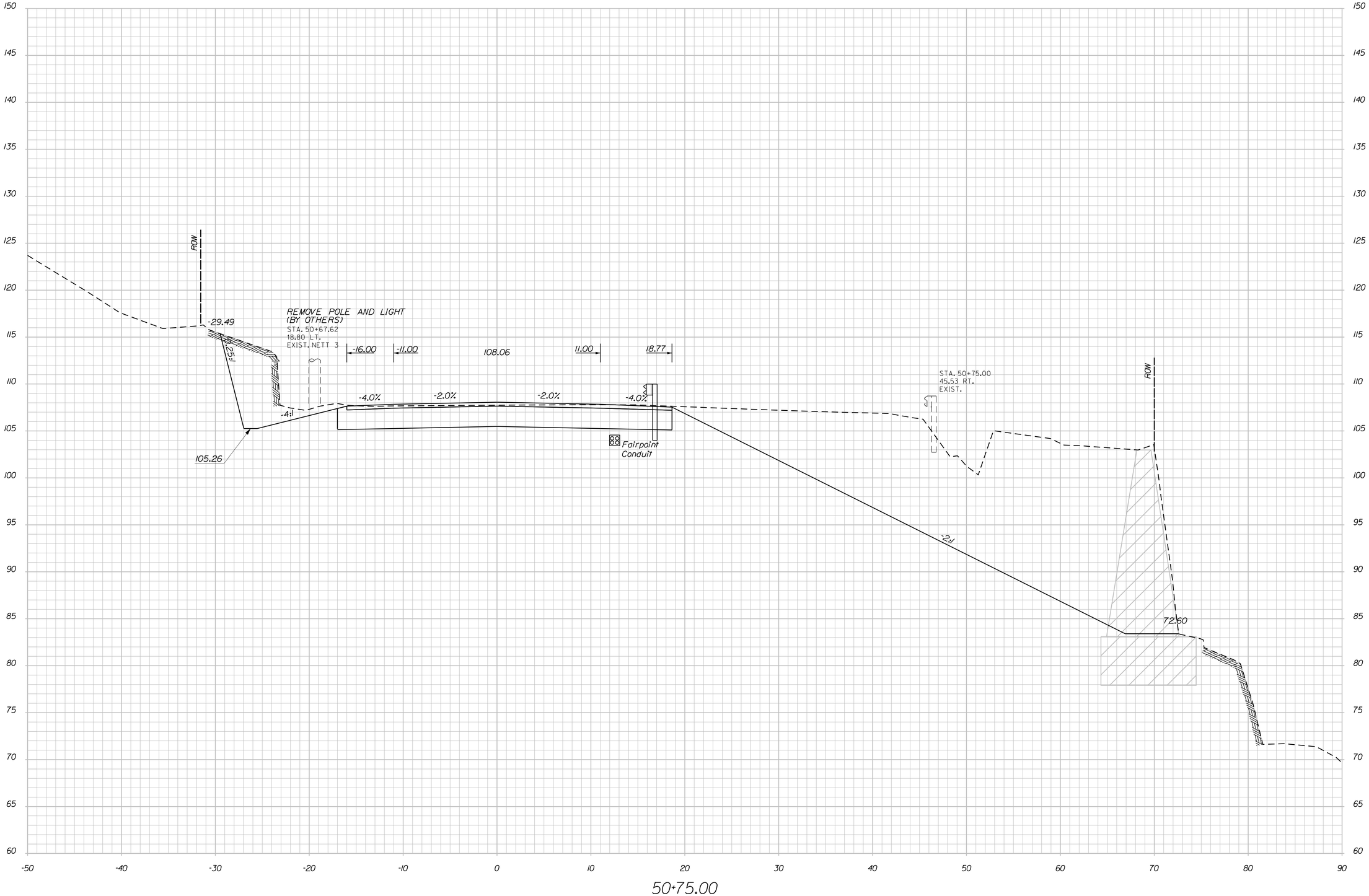

Stantec

STATE OF MAINE
DEPARTMENT OF TRANSPORTATION

BH-1823(900)

WIN
18239.00

BRIDGE NO. 3334

BRIDGE PLANS

		BY	DATE
PROJ. MANAGER	L. TIMBERLAKE		
DESIGN-DETAILED	ISM	PZA	JUNE 2014
CHECKED-REVIEWED	JCM	ISM/TWM	JUNE 2014
DESIGN2-DETAILED2			
DESIGN3-DETAILED3			
REVISIONS 1			
REVISIONS 2			
REVISIONS 3			
REVISIONS 4			
FIELD CHANGES			

SIGNATURE

P.E. NUMBER

DATE

DURHAM BRIDGE
ANDROSCOGGIN RIVER
DURHAM-LISBON ANDROSCOGGIN COUNTY

CROSS SECTIONS

SHEET NUMBER

23

OF 87

Filename: ...\MSTA\023_Cross Section4.dgn Division: BRIDGE Username: common Date:7/17/2014

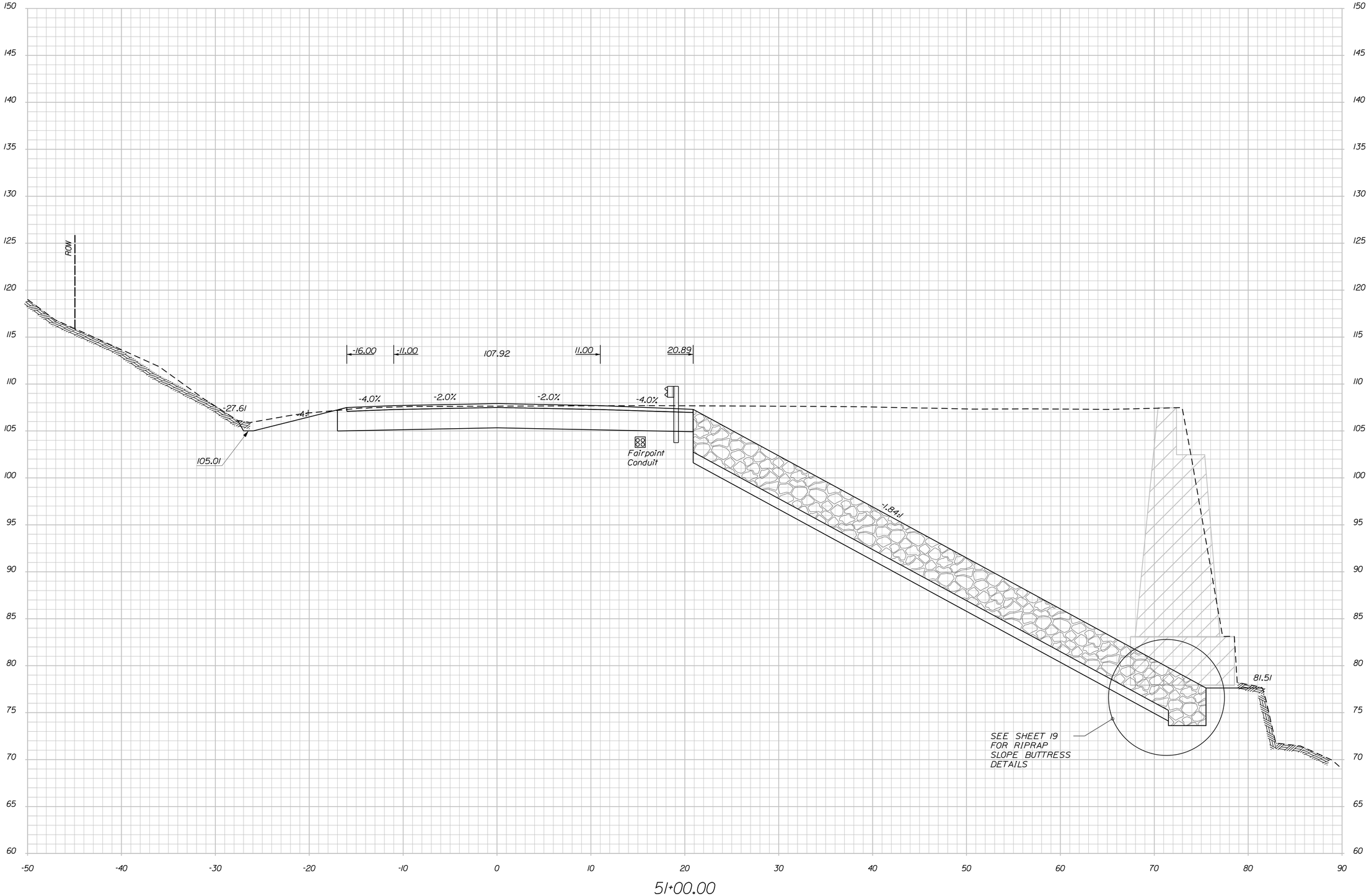

STATE OF MAINE
DEPARTMENT OF TRANSPORTATION

BH-1823(900)

WIN
18239.00

BRIDGE NO. 3334

BRIDGE PLANS

PROJ. MANAGER	L. TIMBERLAKE	BY	DATE
DESIGN-DETAILED	ISM	PZA	JUNE 2014
CHECKED-REVIEWED	JCM	ISM/TWM	JUNE 2014
DESIGN2-DETAILED2			
DESIGN3-DETAILED3			
REVISIONS 1			
REVISIONS 2			
REVISIONS 3			
REVISIONS 4			
FIELD CHANGES			

SIGNATURE

P.E. NUMBER

DATE

DURHAM BRIDGE
ANDROSCOGGIN RIVER
DURHAM-LISBON ANDROSCOGGIN COUNTY

CROSS SECTIONS

SHEET NUMBER

24

OF 87

Stantec

Filename: ...\MSTA\024_Cross Section5.dgn Division: BRIDGE Username: common Date:7/17/2014

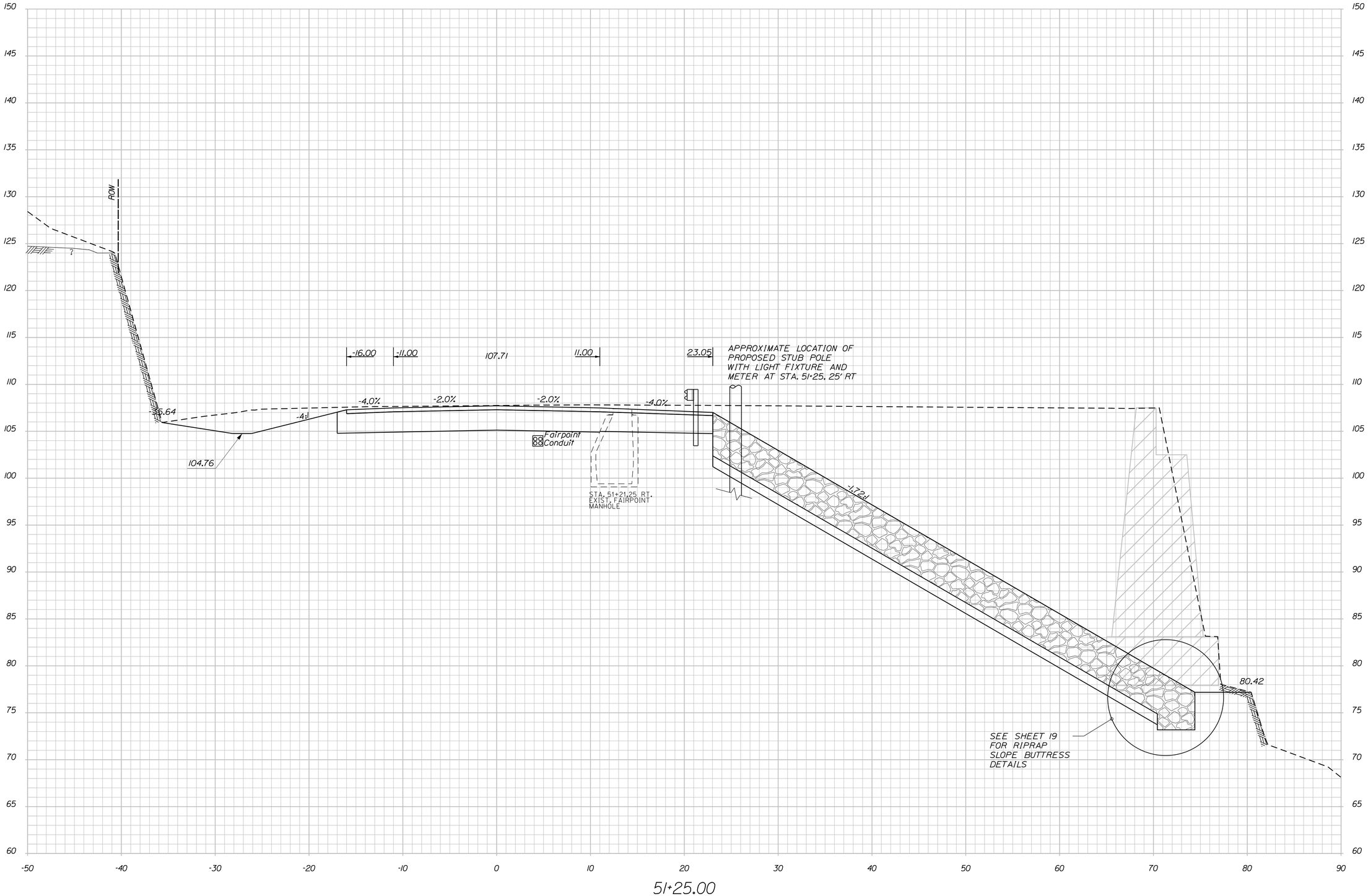

STATE OF MAINE
DEPARTMENT OF TRANSPORTATION

BH-1823(900)

WIN 18239.00

BRIDGE NO. 3334

BRIDGE PLANS

PROJ. MANAGER	L. TIMBERLAKE	BY	DATE
DESIGN-DETAILED	ISM	PZA	JUNE 2014
CHECKED-REVIEWED	JCM	ISM/TWM	JUNE 2014
DESIGN2-DETAILED2			
DESIGN3-DETAILED3			
REVISIONS 1			
REVISIONS 2			
REVISIONS 3			
REVISIONS 4			
FIELD CHANGES			

SIGNATURE

P.E. NUMBER

DATE

DURHAM BRIDGE
ANDROSCOGGIN RIVER
DURHAM-LISBON ANDROSCOGGIN COUNTY

CROSS SECTIONS

SHEET NUMBER

25

OF 87

Stantec

Filename: ...\MSTA\025_Cross Section6.dgn Division: BRIDGE Username: common Date:7/17/2014

Stantec

STATE OF MAINE
DEPARTMENT OF TRANSPORTATION

BH-1823(900)

WIN
18239.00

BRIDGE NO. 3334

BRIDGE PLANS

SIGNATURE

P.E. NUMBER

DATE

		BY	DATE
PROJ. MANAGER	L. TIMBERLAKE		
DESIGN-DETAILED	ISM	PZA	JUNE 2014
CHECKED-REVIEWED	JCM	ISM/TWM	JUNE 2014
DESIGN2-DETAILED2			
DESIGN3-DETAILED3			
REVISIONS 1			
REVISIONS 2			
REVISIONS 3			
REVISIONS 4			
FIELD CHANGES			

DURHAM BRIDGE
ANDROSCOGGIN RIVER
DURHAM-LISBON ANDROSCOGGIN COUNTY

CROSS SECTIONS

SHEET NUMBER

26

OF 87

Filename: ...\MSTA\026_Cross Section7.dgn Division: BRIDGE Username: common Date:7/17/2014

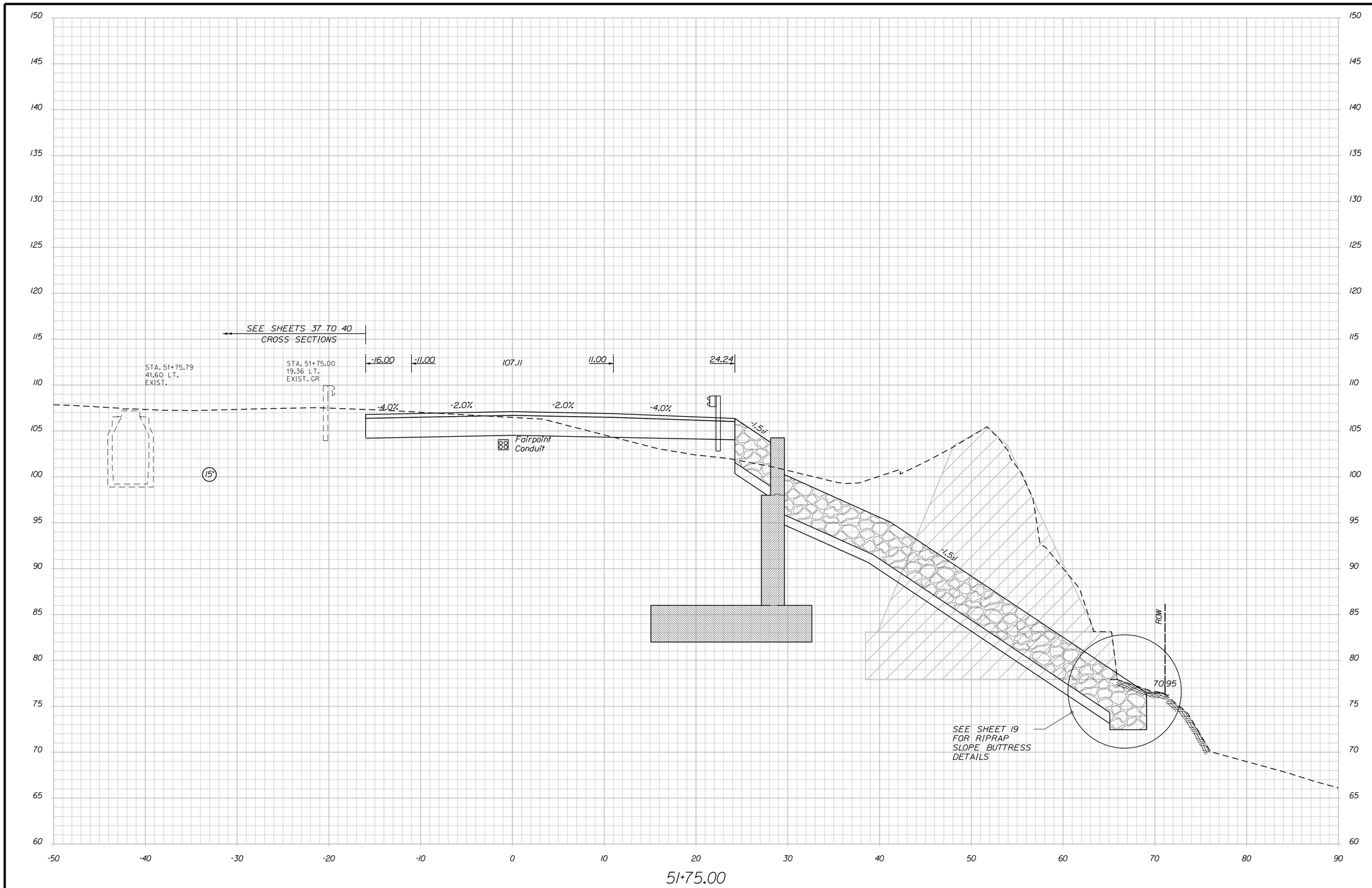

Stantec

STATE OF MAINE
DEPARTMENT OF TRANSPORTATION

BH-1823(900)

WIN
18239.00

BRIDGE NO. 3334

BRIDGE PLANS

		BY	DATE
PROJ. MANAGER	L. TIMBERLAKE		
DESIGN-DETAILED	ISM	PZA	JUNE 2014
CHECKED-REVIEWED	JCM	ISM/TWM	JUNE 2014
DESIGN2-DETAILED2			
DESIGN3-DETAILED3			
REVISIONS 1			
REVISIONS 2			
REVISIONS 3			
REVISIONS 4			
FIELD CHANGES			

SIGNATURE

P.E. NUMBER

DATE

DURHAM BRIDGE
ANDROSCOGGIN RIVER
DURHAM-LISBON ANDROSCOGGIN COUNTY

CROSS SECTIONS

SHEET NUMBER

27

OF 87

Filename: ...\MSTA\027_Cross Section8.dgn Division: BRIDGE Username: common Date:7/17/2014

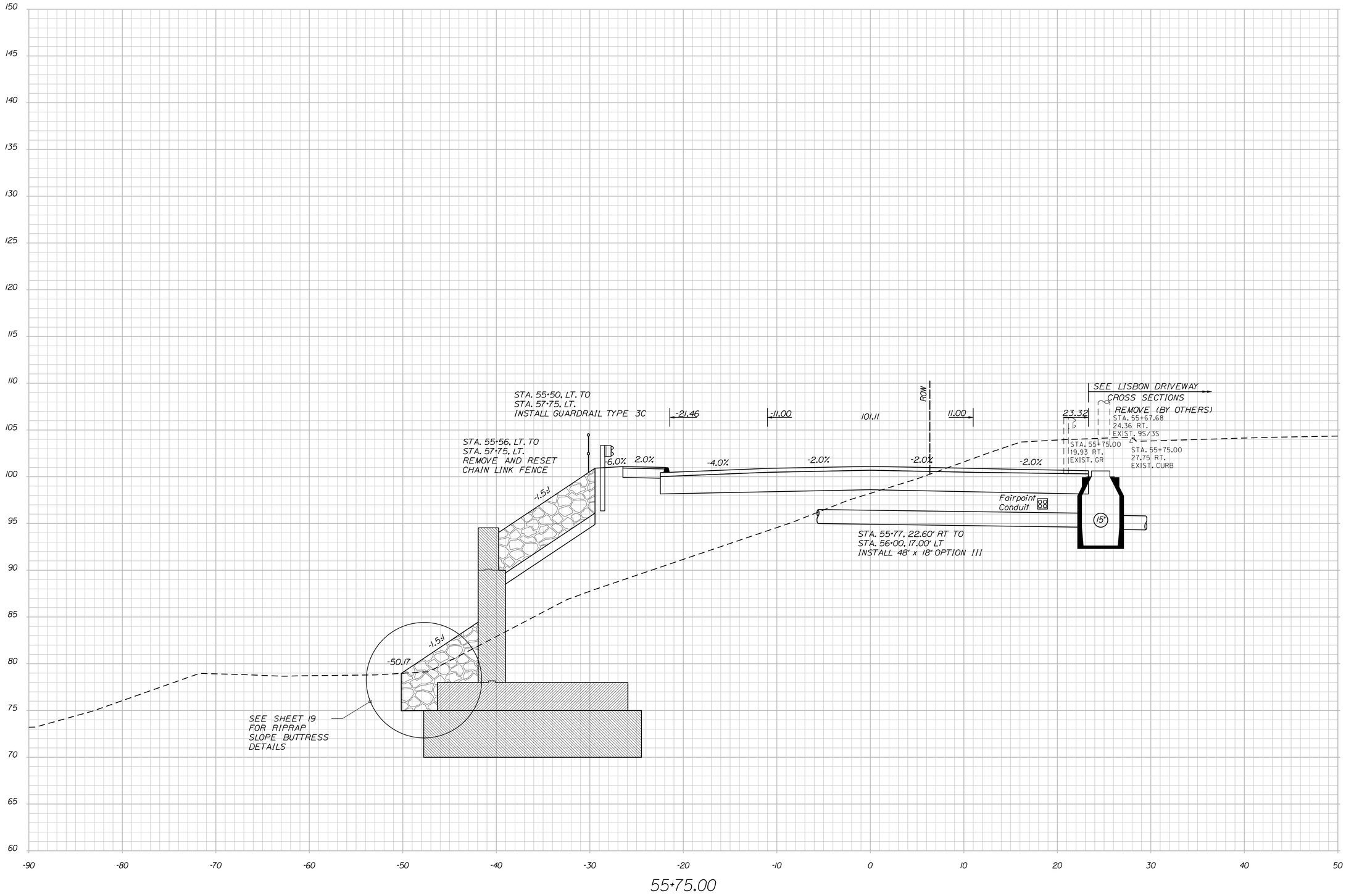

Stantec

STATE OF MAINE
DEPARTMENT OF TRANSPORTATION

BH-1823(900)

WIN
18239.00

BRIDGE NO. 3334

BRIDGE PLANS

		BY	DATE
PROJ. MANAGER	L. TIMBERLAKE		
DESIGN-DETAILED	ISM	PZA	JUNE 2014
CHECKED-REVIEWED	JCM	ISM/TWM	JUNE 2014
DESIGN2-DETAILED2			
DESIGN3-DETAILED3			
REVISIONS: 1			
REVISIONS: 2			
REVISIONS: 3			
REVISIONS: 4			
FIELD CHANGES			

SIGNATURE

P.E. NUMBER

DATE

DURHAM BRIDGE
ANDROSCOGGIN RIVER
DURHAM-LISBON ANDROSCOGGIN COUNTY

CROSS SECTIONS

SHEET NUMBER

28

OF 87

Filename: ...\MSTA\028_Cross Section9.dgn Division: BRIDGE Username: common Date:7/17/2014

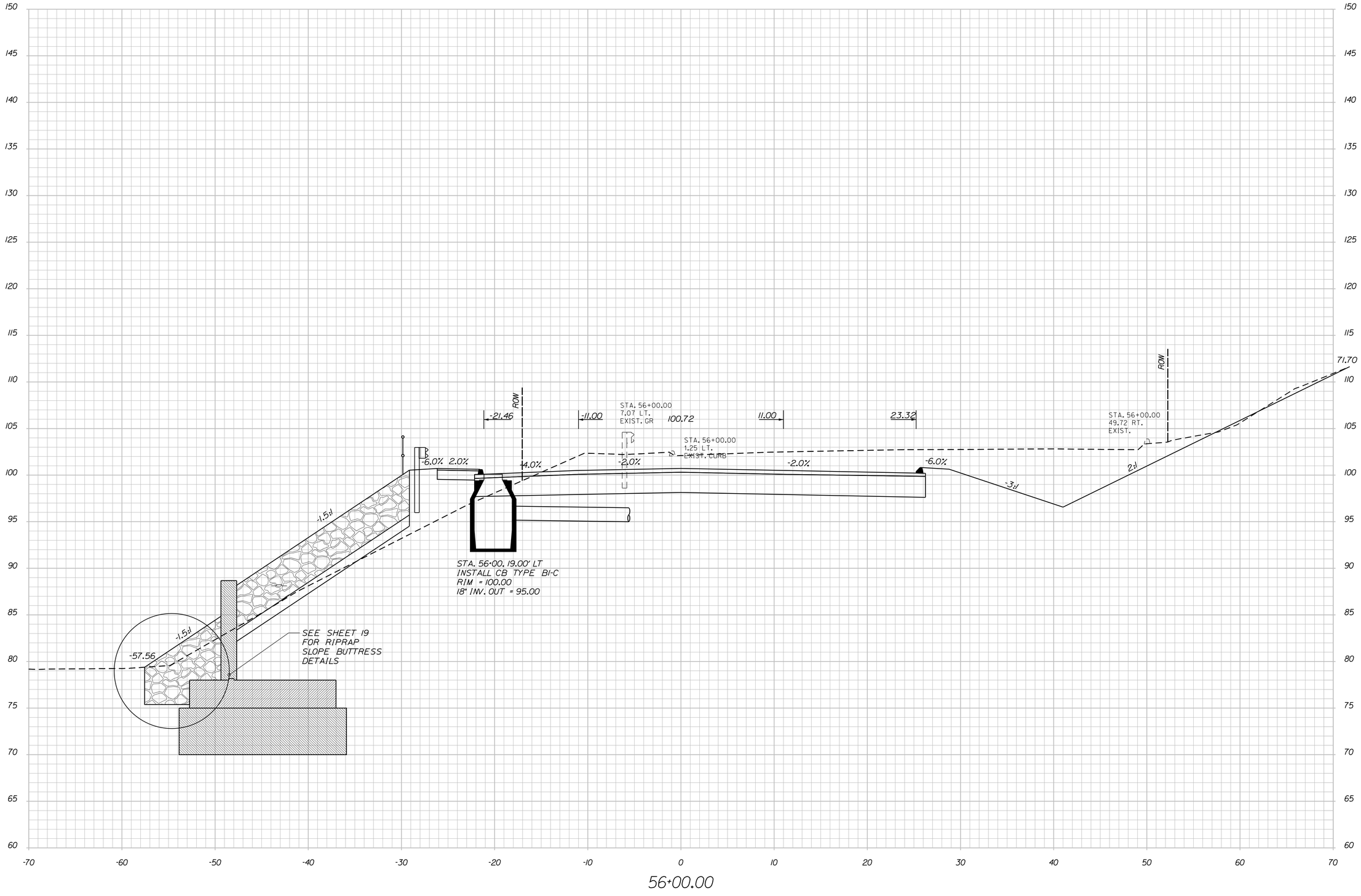

Stantec

STATE OF MAINE
DEPARTMENT OF TRANSPORTATION

BH-1823(900)

WIN 18239.00

BRIDGE NO. 3334

BRIDGE PLANS

PROJ. MANAGER	L. TIMBERLAKE	BY	DATE
DESIGN-DETAILED	ISM	PZA	JUNE 2014
CHECKED-REVIEWED	JCM	ISM/TWM	JUNE 2014
DESIGN2-DETAILED2			
DESIGN3-DETAILED3			
REVISIONS 1			
REVISIONS 2			
REVISIONS 3			
REVISIONS 4			
FIELD CHANGES			

SIGNATURE

P.E. NUMBER

DATE

DURHAM BRIDGE
ANDROSCOGGIN RIVER
DURHAM-LISBON ANDROSCOGGIN COUNTY

CROSS SECTIONS

SHEET NUMBER

29

OF 87

Filename: ...\MSTA\029_Cross Section10.dgn Division: BRIDGE Username: common Date:7/17/2014

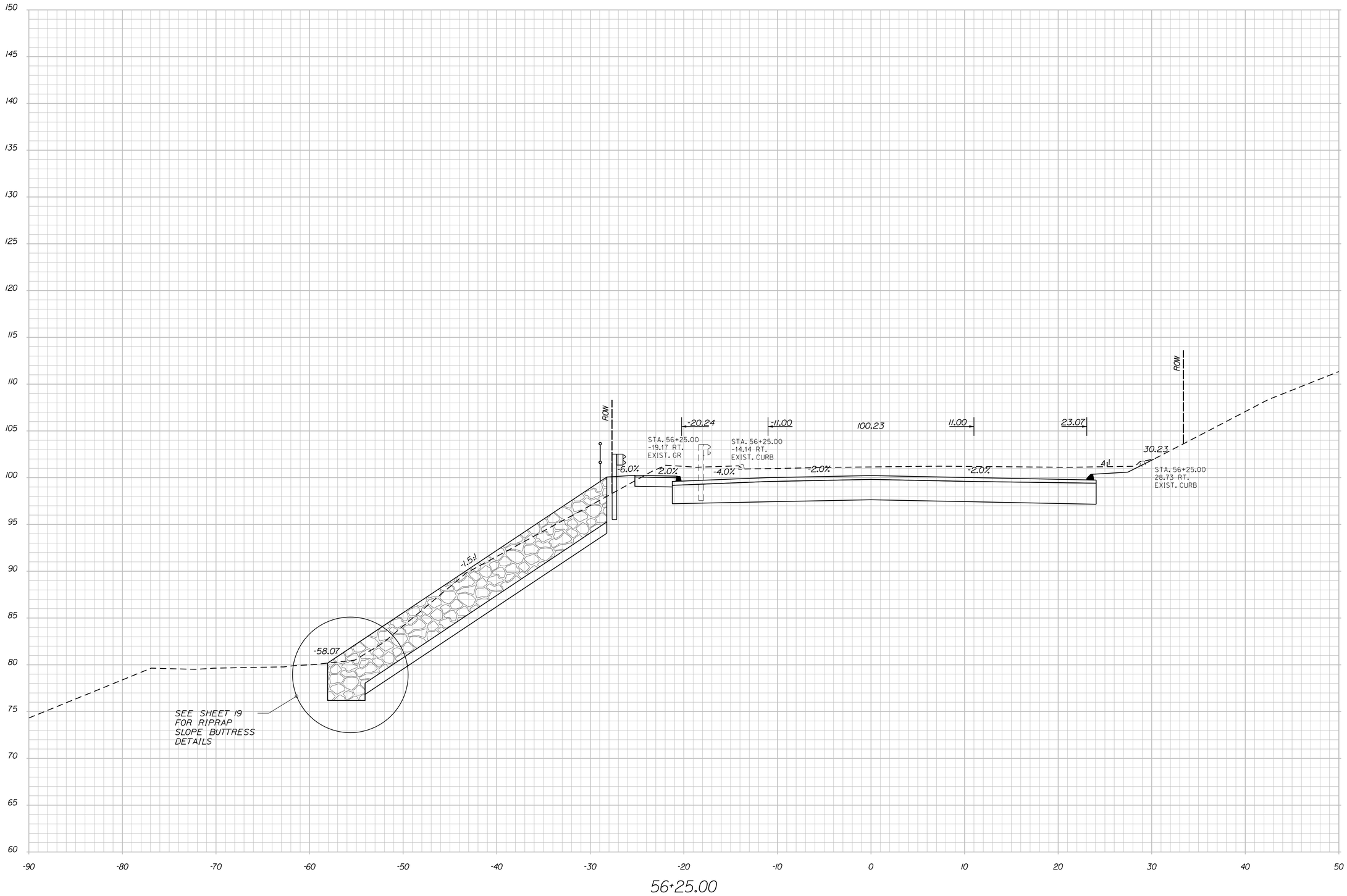

STATE OF MAINE
DEPARTMENT OF TRANSPORTATION

BH-1823(900)

WIN
18239.00

BRIDGE NO. 3334

BRIDGE PLANS

PROJ. MANAGER	L. TIMBERLAKE	BY	DATE
DESIGN-DETAILED	ISM	PZA	JUNE 2014
CHECKED-REVIEWED	JCM	ISM/TWM	JUNE 2014
DESIGN2-DETAILED2			
DESIGN3-DETAILED3			
REVISIONS 1			
REVISIONS 2			
REVISIONS 3			
REVISIONS 4			
FIELD CHANGES			

SIGNATURE

P.E. NUMBER

DATE

DURHAM BRIDGE
ANDROSCOGGIN RIVER
DURHAM-LISBON ANDROSCOGGIN COUNTY

CROSS SECTIONS

SHEET NUMBER
30
OF 87

Stantec

Filename: ...\MSTA\030_Cross Section11.dgn Division: BRIDGE Username: common Date:7/17/2014

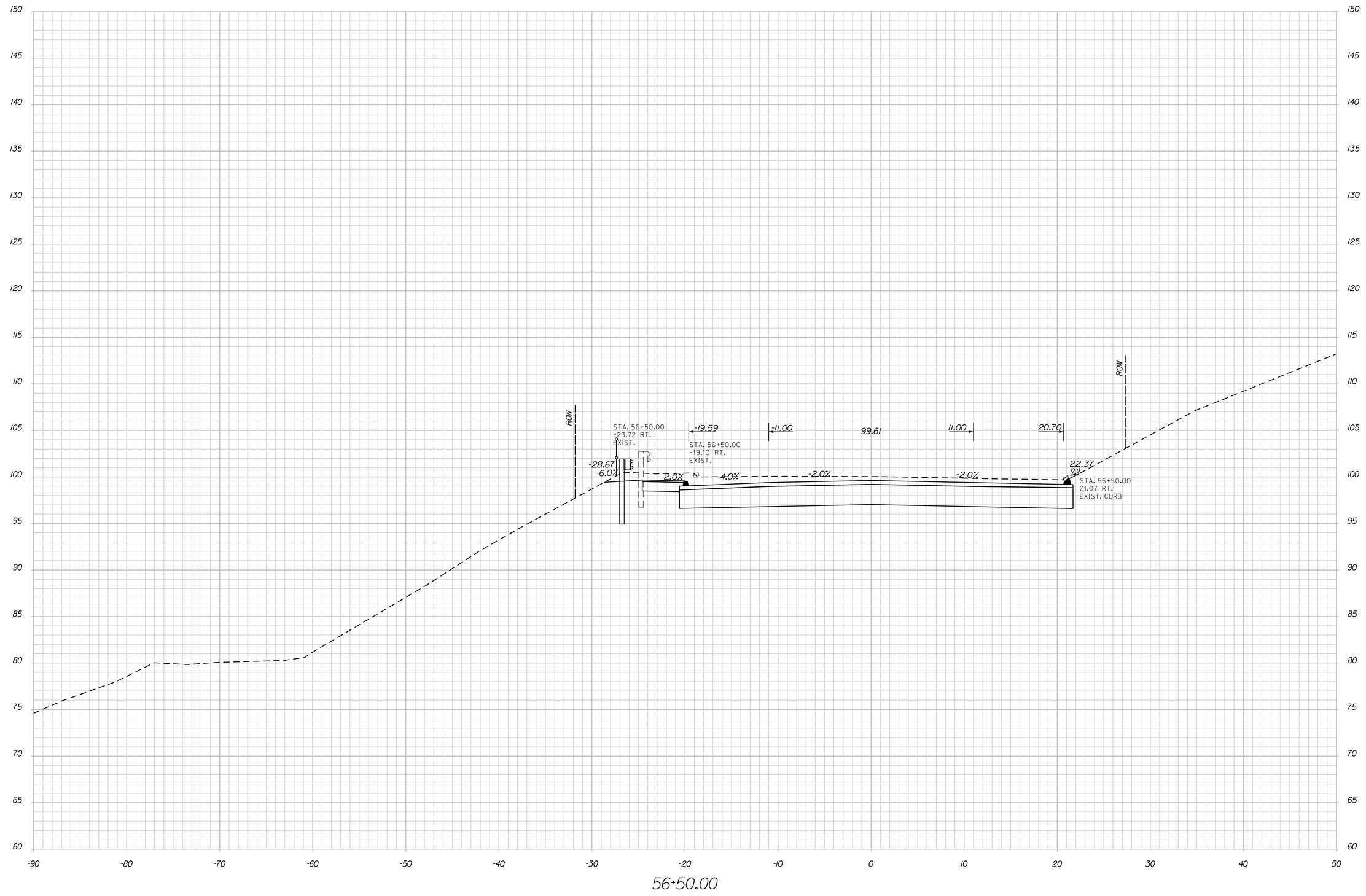

Stantec

STATE OF MAINE
DEPARTMENT OF TRANSPORTATION

BH-1823(900)

WIN 18239.00

BRIDGE NO. 3334

BRIDGE PLANS

PROJ. MANAGER	L. TIMBERLAKE	BY	DATE
DESIGN-DETAILED	ISM	PZA	JUNE 2014
CHECKED-REVIEWED	JCM	ISM/TWM	JUNE 2014
DESIGN2-DETAILED2			
DESIGN3-DETAILED3			
REVISIONS 1			
REVISIONS 2			
REVISIONS 3			
REVISIONS 4			
FIELD CHANGES			

SIGNATURE

P.E. NUMBER

DATE

DURHAM BRIDGE
ANDROSCOGGIN RIVER
DURHAM-LISBON ANDROSCOGGIN COUNTY

CROSS SECTIONS

SHEET NUMBER

31

OF 87

Filename: ...\MSTA\031_Cross Section12.dgn Division: BRIDGE Username: common Date:7/17/2014

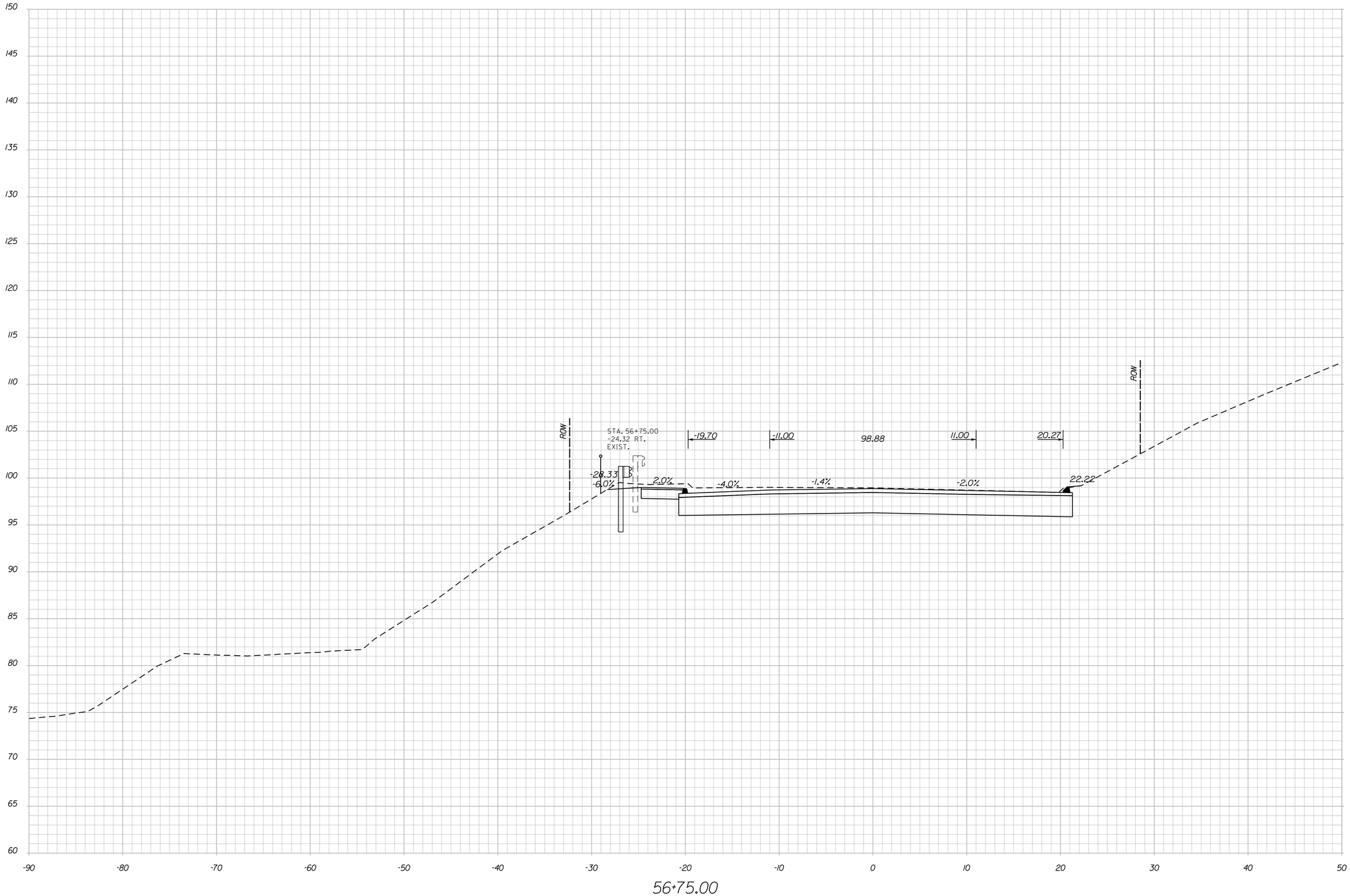

Stantec

STATE OF MAINE
DEPARTMENT OF TRANSPORTATION

BH-1823(900)

WIN
18239.00

BRIDGE NO. 3334

BRIDGE PLANS

PROJ. MANAGER	L. TIMBERLAKE		
DESIGN-DETAILED	JSM	PZA	JUNE 2014
CHECKED-REVIEWED	JCM	JSM/TWM	JUNE 2014
DESIGN2-DETAILED2			
DESIGN3-DETAILED3			
REVISIONS 1			
REVISIONS 2			
REVISIONS 3			
REVISIONS 4			
FIELD CHANGES			

SIGNATURE

P.E. NUMBER

DATE

DURHAM BRIDGE
ANDROSCOGGIN RIVER
DURHAM-LISBON ANDROSCOGGIN COUNTY

CROSS SECTIONS

SHEET NUMBER

32

OF 87

Filename: ...\MSTA\032_Cross Section13.dgn Division: BRIDGE Username: common Date:7/17/2014

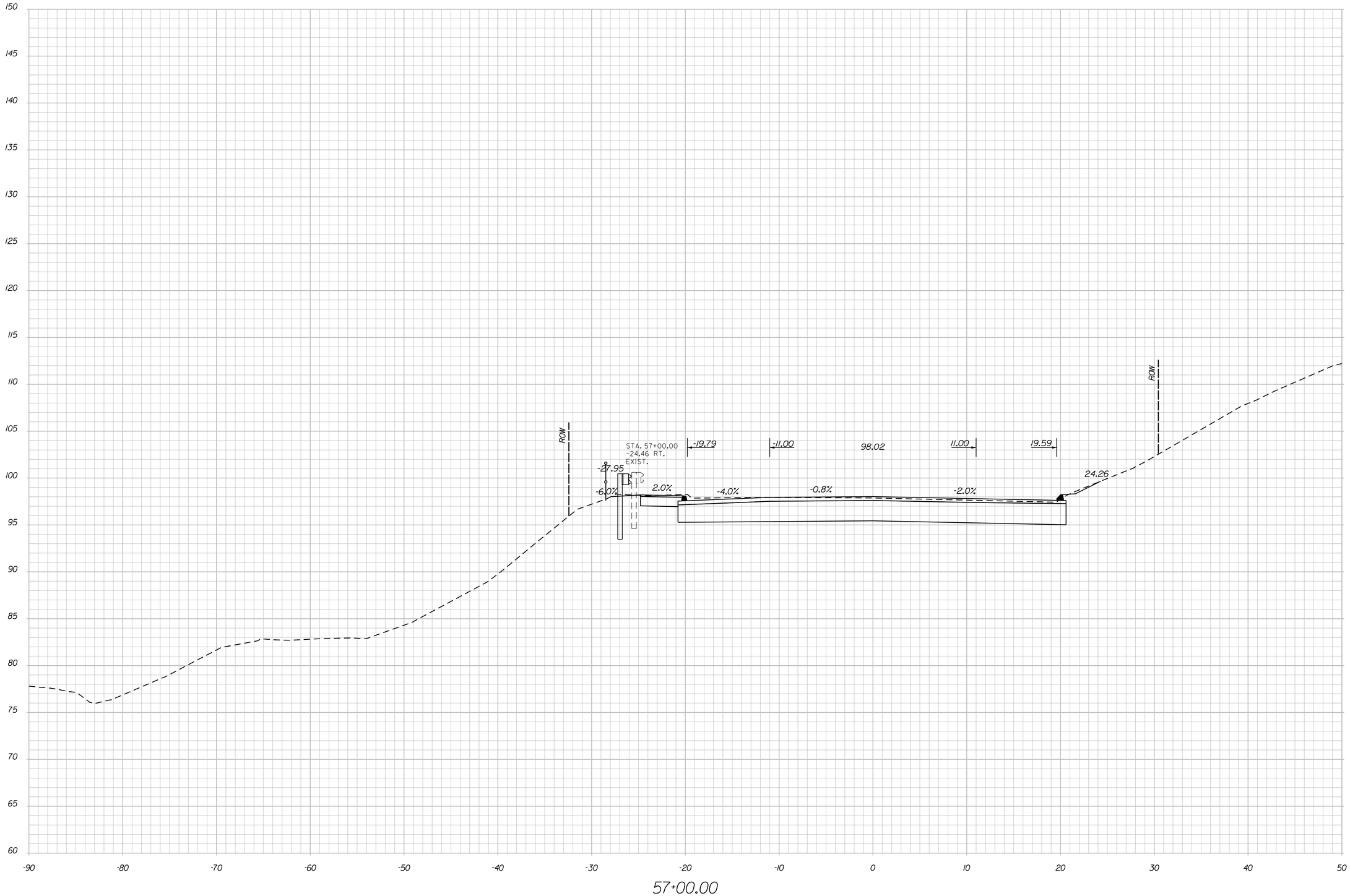

Stantec

STATE OF MAINE
DEPARTMENT OF TRANSPORTATION

BH-1823(900)

WIN 18239.00

BRIDGE NO. 3334

BRIDGE PLANS

PROJ. MANAGER	L. TIMBERLAKE		
DESIGN-DETAILED	ISM	PZA	JUNE 2014
CHECKED-REVIEWED	JCM	ISM/TWM	JUNE 2014
DESIGN2-DETAILED2			
DESIGN3-DETAILED3			
REVISIONS 1			
REVISIONS 2			
REVISIONS 3			
REVISIONS 4			
FIELD CHANGES			

SIGNATURE

P.E. NUMBER

DATE

DURHAM BRIDGE
ANDROSCOGGIN RIVER
DURHAM-LISBON ANDROSCOGGIN COUNTY

CROSS SECTIONS

SHEET NUMBER

33

OF 87

Filename: ...\MSTA\033_Cross Section14.dgn Division: BRIDGE Username: common Date:7/17/2014

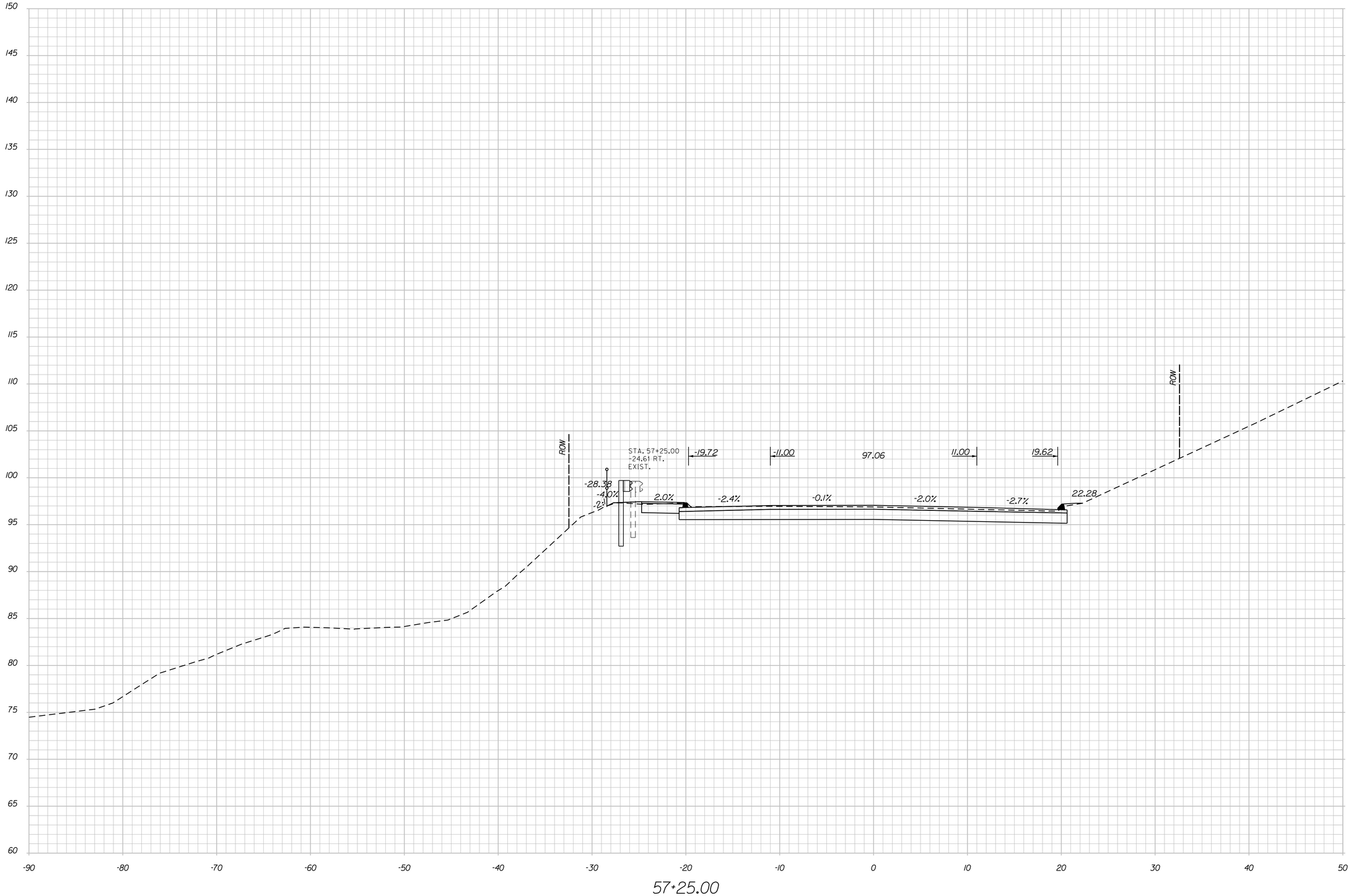

Stantec

STATE OF MAINE
DEPARTMENT OF TRANSPORTATION

BH-1823(900)

WIN
18239.00

BRIDGE NO. 3334

BRIDGE PLANS

PROJ. MANAGER	L. TIMBERLAKE	BY	DATE
DESIGN-DETAILED	ISM	PZA	JUNE 2014
CHECKED-REVIEWED	JCM	ISM/TWM	JUNE 2014
DESIGN2-DETAILED2			
DESIGN3-DETAILED3			
REVISIONS 1			
REVISIONS 2			
REVISIONS 3			
REVISIONS 4			
FIELD CHANGES			

SIGNATURE

P.E. NUMBER

DATE

DURHAM BRIDGE
ANDROSCOGGIN RIVER
DURHAM-LISBON ANDROSCOGGIN COUNTY

CROSS SECTIONS

SHEET NUMBER

34

OF 87

Filename: ...\MSTA\034_Cross Section15.dgn Division: BRIDGE Username: common Date:7/17/2014

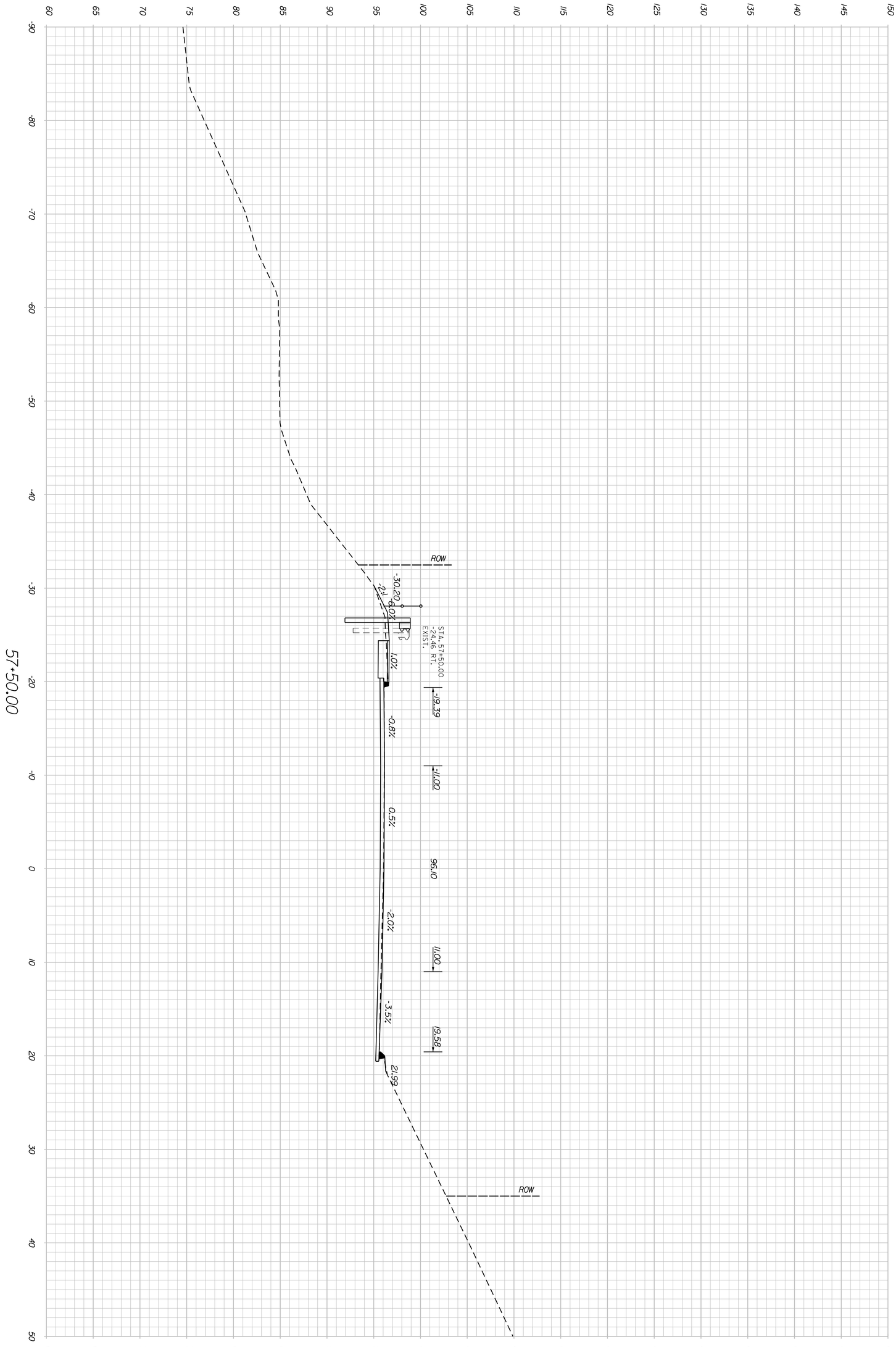

Stantec

PROJ. MANAGER	L. TIMBERLAKE	BY	DATE	
DESIGN-DETAILED	ISM	PZA	JUNE 2014	
CHECKED-REVIEWED	JCM	ISM/TWM	JUNE 2014	SIGNATURE
DESIGN2-DETAILED2				
DESIGN3-DETAILED3				P.E. NUMBER
REVISIONS 1				
REVISIONS 2				
REVISIONS 3				DATE
REVISIONS 4				
FIELD CHANGES				

DURHAM BRIDGE
ANDROSCOGGIN RIVER
DURHAM-LISBON ANDROSCOGGIN COUNTY

CROSS SECTIONS

STATE OF MAINE
DEPARTMENT OF TRANSPORTATION

BH-1823(900)

BRIDGE NO. 3334 WIN 18239.00 BRIDGE PLANS

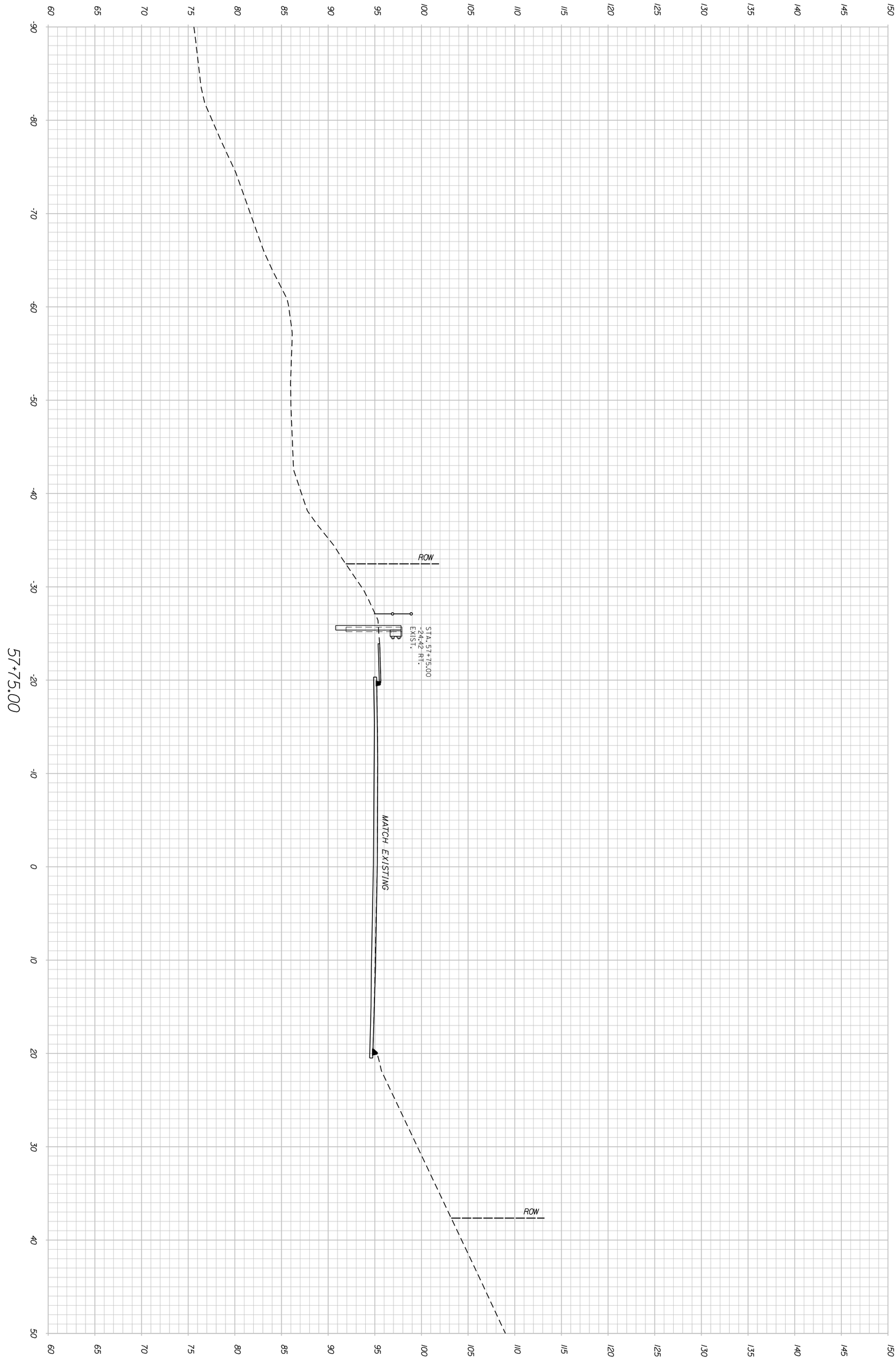

Stantec

PROJ. MANAGER	L. TIMBERLAKE	BY	DATE	
DESIGN-DETAILED	JSM	PZA	JUNE 2014	
CHECKED-REVIEWED	JCM	JSM/TWM	JUNE 2014	SIGNATURE
DESIGN2-DETAILED2				
DESIGN3-DETAILED3				P.E. NUMBER
REVISIONS 1				
REVISIONS 2				
REVISIONS 3				DATE
REVISIONS 4				
FIELD CHANGES				

DURHAM BRIDGE
ANDROSCOGGIN RIVER
DURHAM-LISBON ANDROSCOGGIN COUNTY

CROSS SECTIONS

SHEET NUMBER 36 OF 87

STATE OF MAINE
DEPARTMENT OF TRANSPORTATION

BH-1823(900)

BRIDGE NO. 3334 WIN 18239.00 BRIDGE PLANS

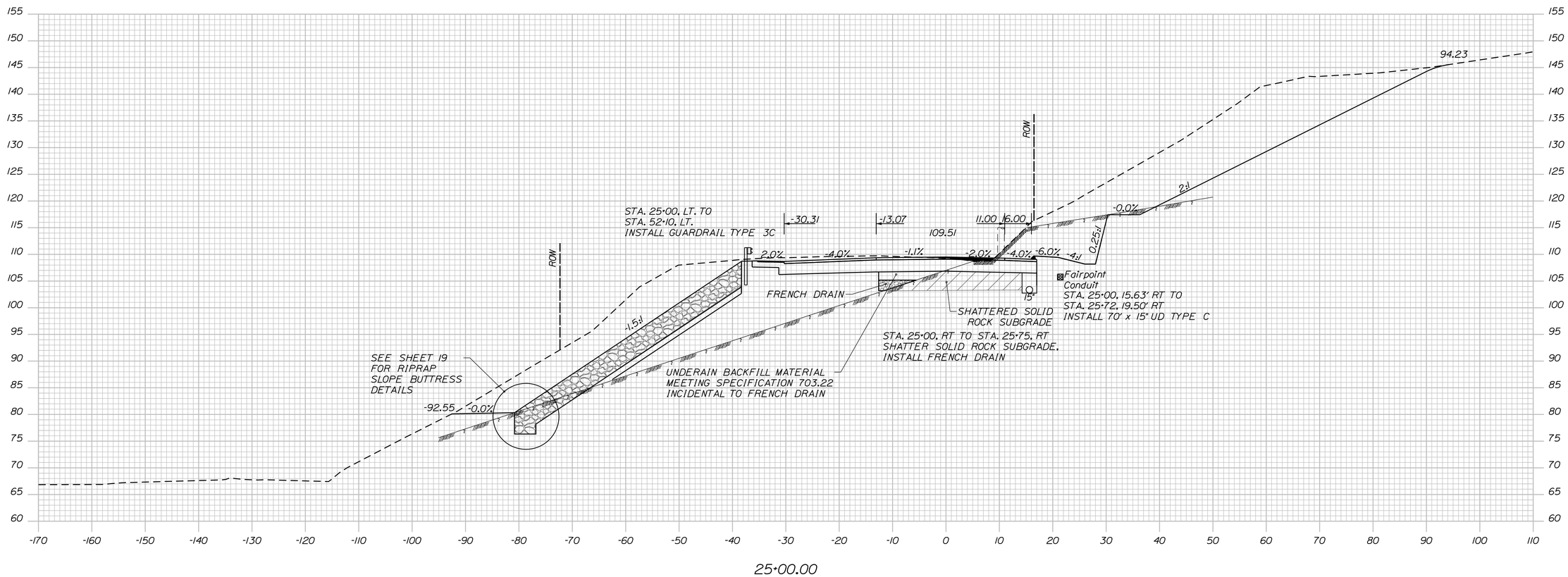

Stantec

STATE OF MAINE
DEPARTMENT OF TRANSPORTATION

BH-1823(900)

WIN 18239.00

BRIDGE NO. 3334

BRIDGE PLANS

PROJ. MANAGER	L. TIMBERLAKE	BY	DATE
DESIGN-DETAILED	JSM	PZA	JUNE 2014
CHECKED-REVIEWED	JCM	JSM/TWM	JUNE 2014
DESIGN2-DETAILED2			
DESIGN3-DETAILED3			
REVISIONS 1			
REVISIONS 2			
REVISIONS 3			
REVISIONS 4			
FIELD CHANGES			

SIGNATURE

P.E. NUMBER

DATE

DURHAM BRIDGE
ANDROSCOGGIN RIVER
DURHAM-LISBON ANDROSCOGGIN COUNTY

CROSS SECTIONS

SHEET NUMBER

37

OF 87

Filename: ...\MSTA\037_Cross Section18.dgn Division: BRIDGE Username: common Date:7/17/2014

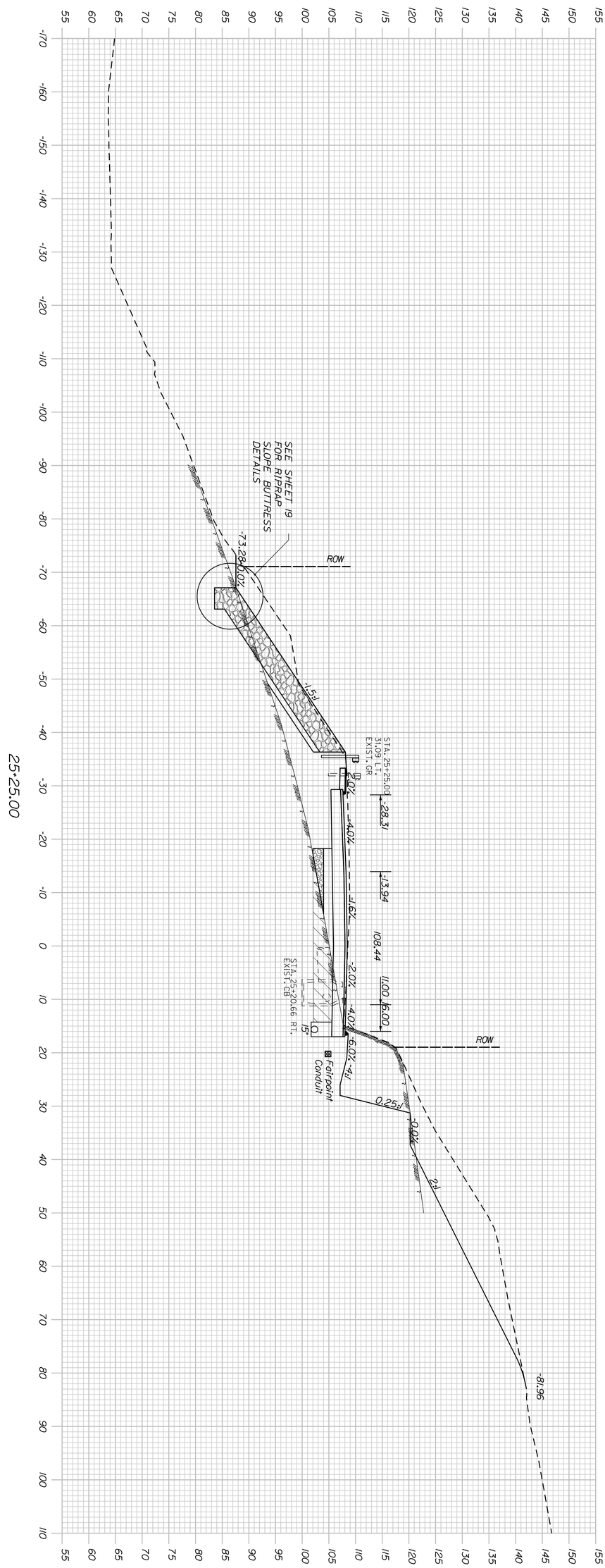

Stantec

SHEET NUMBER 38 OF 87	DURHAM BRIDGE ANDROSCOGGIN RIVER DURHAM-LISBON ANDROSCOGGIN COUNTY CROSS SECTIONS	PROJ. MANAGER L. TIMBERLAKE DESIGN-DETAILED ISM PZA JUNE 2014 CHECKED-REVIEWED JCM ISM/TWM JUNE 2014 DESIGN2-DETAILED2 DESIGN3-DETAILED3 REVISIONS 1 REVISIONS 2 REVISIONS 3 REVISIONS 4 FIELD CHANGES	SIGNATURE P.E. NUMBER DATE	STATE OF MAINE DEPARTMENT OF TRANSPORTATION BH-1823(900) BRIDGE NO. 3334 WIN 18239.00 BRIDGE PLANS

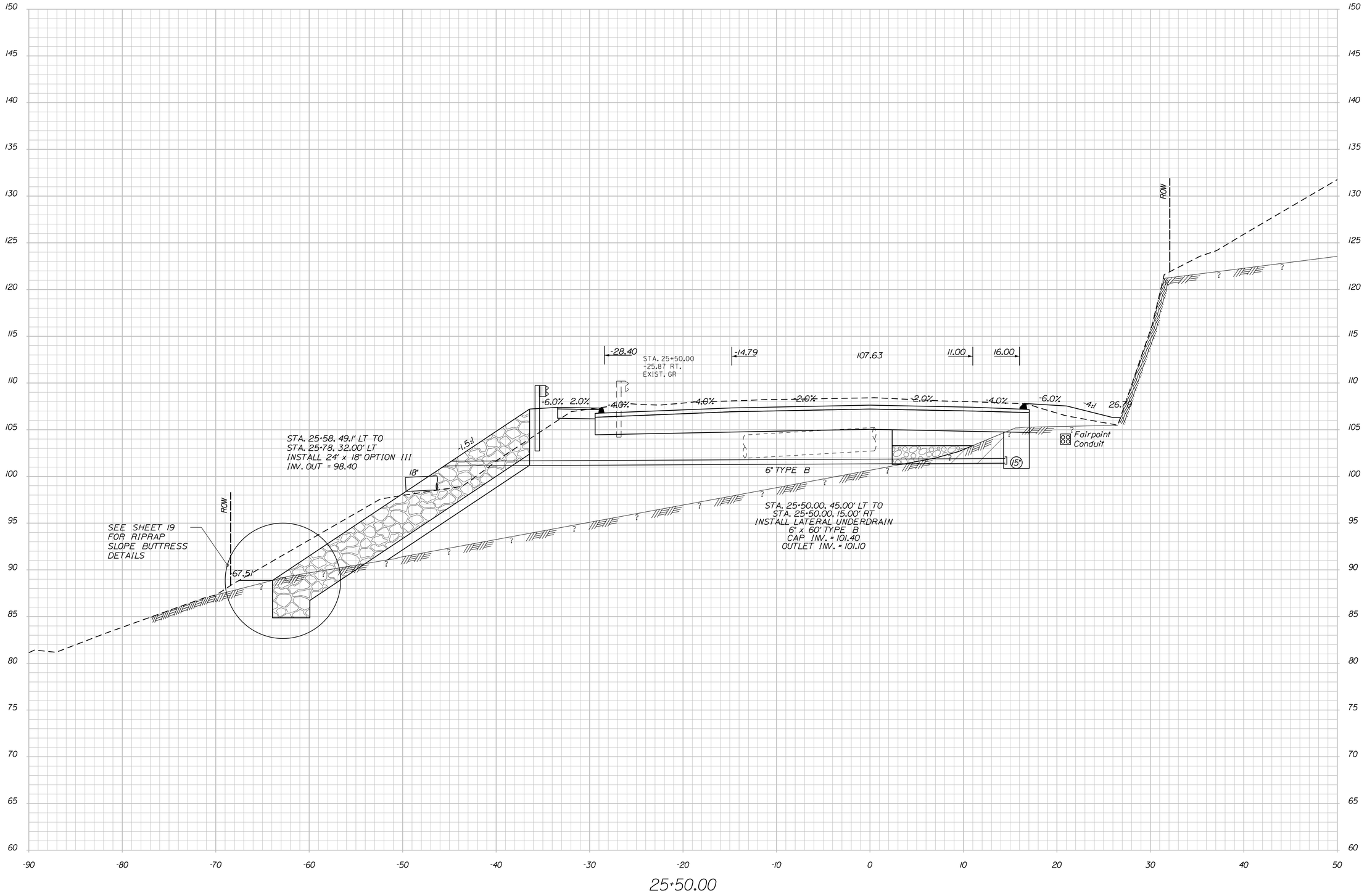

Stantec

STATE OF MAINE
DEPARTMENT OF TRANSPORTATION

BH-1823(900)

WIN
18239.00

BRIDGE NO. 3334

BRIDGE PLANS

PROJ. MANAGER	L. TIMBERLAKE	BY	DATE
DESIGN-DETAILED	ISM	PZA	JUNE 2014
CHECKED-REVIEWED	JCM	ISM/TWM	JUNE 2014
DESIGN2-DETAILED2			
DESIGN3-DETAILED3			
REVISIONS 1			
REVISIONS 2			
REVISIONS 3			
REVISIONS 4			
FIELD CHANGES			

SIGNATURE

P.E. NUMBER

DATE

DURHAM BRIDGE
ANDROSCOGGIN RIVER
DURHAM-LISBON ANDROSCOGGIN COUNTY

CROSS SECTIONS

SHEET NUMBER

39

OF 87

Filename: ...\MSTA\039_Cross Section20.dgn Division: BRIDGE Username: common Date:7/17/2014

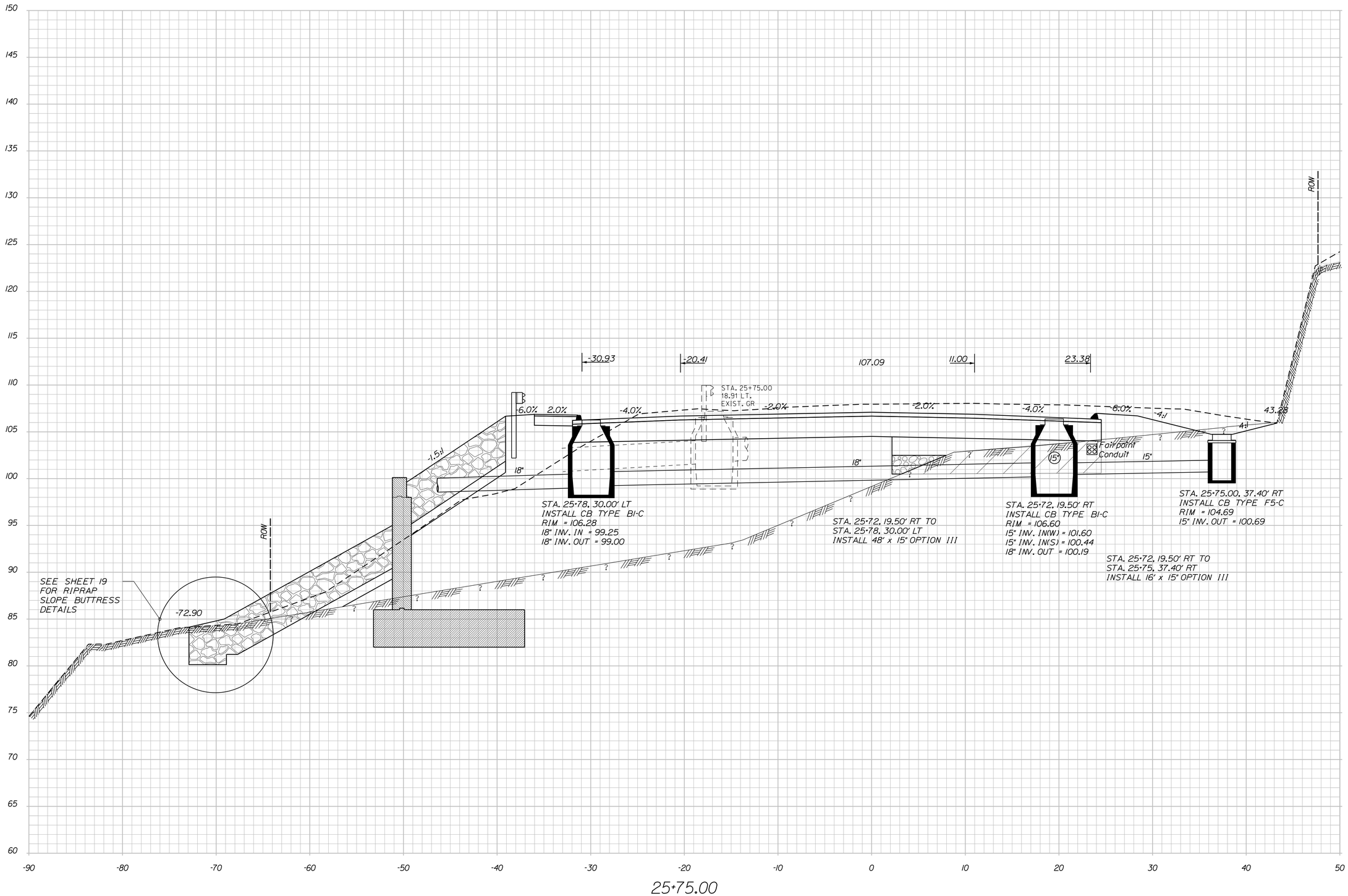

Stantec

STATE OF MAINE
DEPARTMENT OF TRANSPORTATION

BH-1823(900)

WIN
18239.00

BRIDGE NO. 3334

BRIDGE PLANS

PROJ. MANAGER	L. TIMBERLAKE	BY	DATE
DESIGN-DETAILED	ISM	PZA	JUNE 2014
CHECKED-REVIEWED	JCM	ISM/TWM	JUNE 2014
DESIGN2-DETAILED2			
DESIGN3-DETAILED3			
REVISIONS 1			
REVISIONS 2			
REVISIONS 3			
REVISIONS 4			
FIELD CHANGES			

SIGNATURE

P.E. NUMBER

DATE

DURHAM BRIDGE
ANDROSCOGGIN RIVER
DURHAM-LISBON ANDROSCOGGIN COUNTY

CROSS SECTIONS

SHEET NUMBER

40

OF 87

Filename: ...\MSTA\040_Cross Section21.dgn Division: BRIDGE Username: common Date:7/17/2014

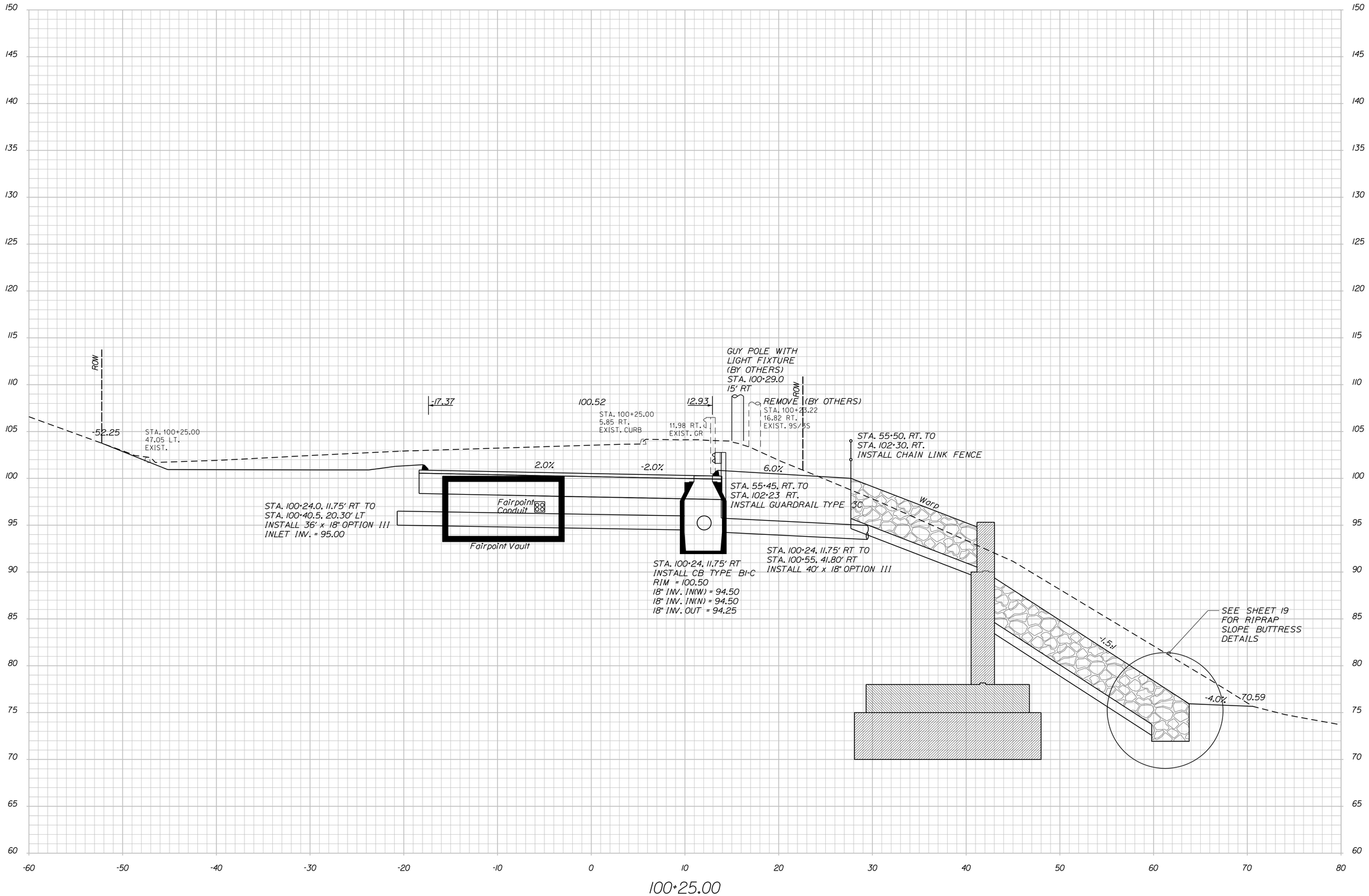

Stantec

STATE OF MAINE
DEPARTMENT OF TRANSPORTATION

BH-1823(900)

WIN
18239.00

BRIDGE NO. 3334

BRIDGE PLANS

PROJ. MANAGER	L. TIMBERLAKE	BY	DATE
DESIGN-DETAILED	JSM	PZA	JUNE 2014
CHECKED-REVIEWED	JCM	ISM/TWM	JUNE 2014
DESIGN2-DETAILED2			
DESIGN3-DETAILED3			
REVISIONS 1			
REVISIONS 2			
REVISIONS 3			
REVISIONS 4			
FIELD CHANGES			

SIGNATURE

P.E. NUMBER

DATE

DURHAM BRIDGE
ANDROSCOGGIN RIVER
DURHAM-LISBON ANDROSCOGGIN COUNTY

CROSS SECTIONS

SHEET NUMBER

41

OF 87

Filename: ...\MSTA\041_Cross Section22.dgn Division: BRIDGE Username: common Date:7/17/2014

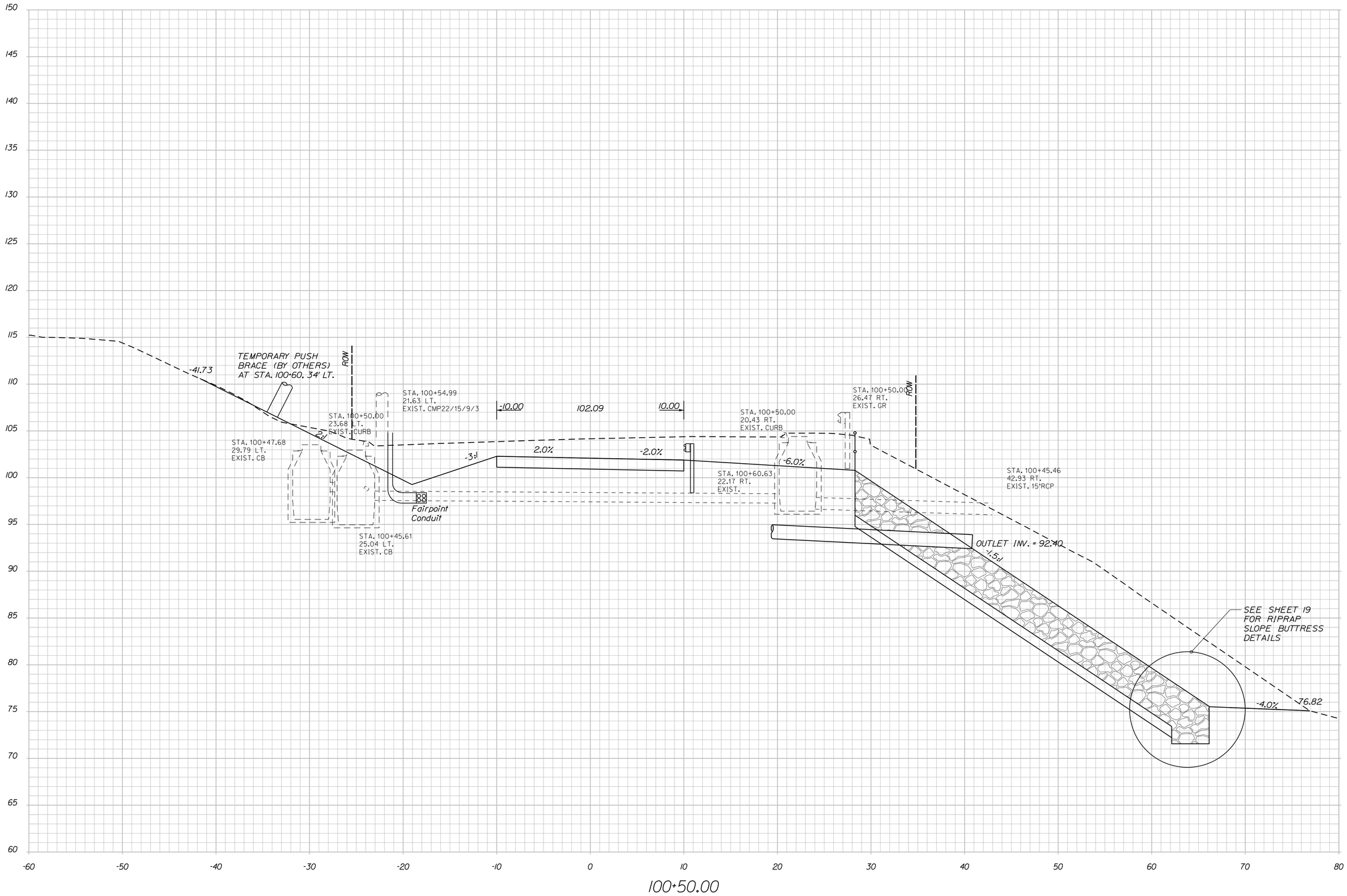

STATE OF MAINE
DEPARTMENT OF TRANSPORTATION

BH-1823(900)

WIN 18239.00

BRIDGE NO. 3334

BRIDGE PLANS

		BY	DATE
PROJ. MANAGER	L. TIMBERLAKE		
DESIGN-DETAILED	ISM	PZA	JUNE 2014
CHECKED-REVIEWED	JCM	ISM/TWM	JUNE 2014
DESIGN2-DETAILED2			
DESIGN3-DETAILED3			
REVISIONS 1			
REVISIONS 2			
REVISIONS 3			
REVISIONS 4			
FIELD CHANGES			

SIGNATURE

P.E. NUMBER

DATE

DURHAM BRIDGE
ANDROSCOGGIN RIVER
DURHAM-LISBON ANDROSCOGGIN COUNTY

CROSS SECTIONS

SHEET NUMBER

42

OF 87

Stantec

Filename: ...\MSTA\042_Cross Section23.dgn Division: BRIDGE Username: common Date:7/17/2014

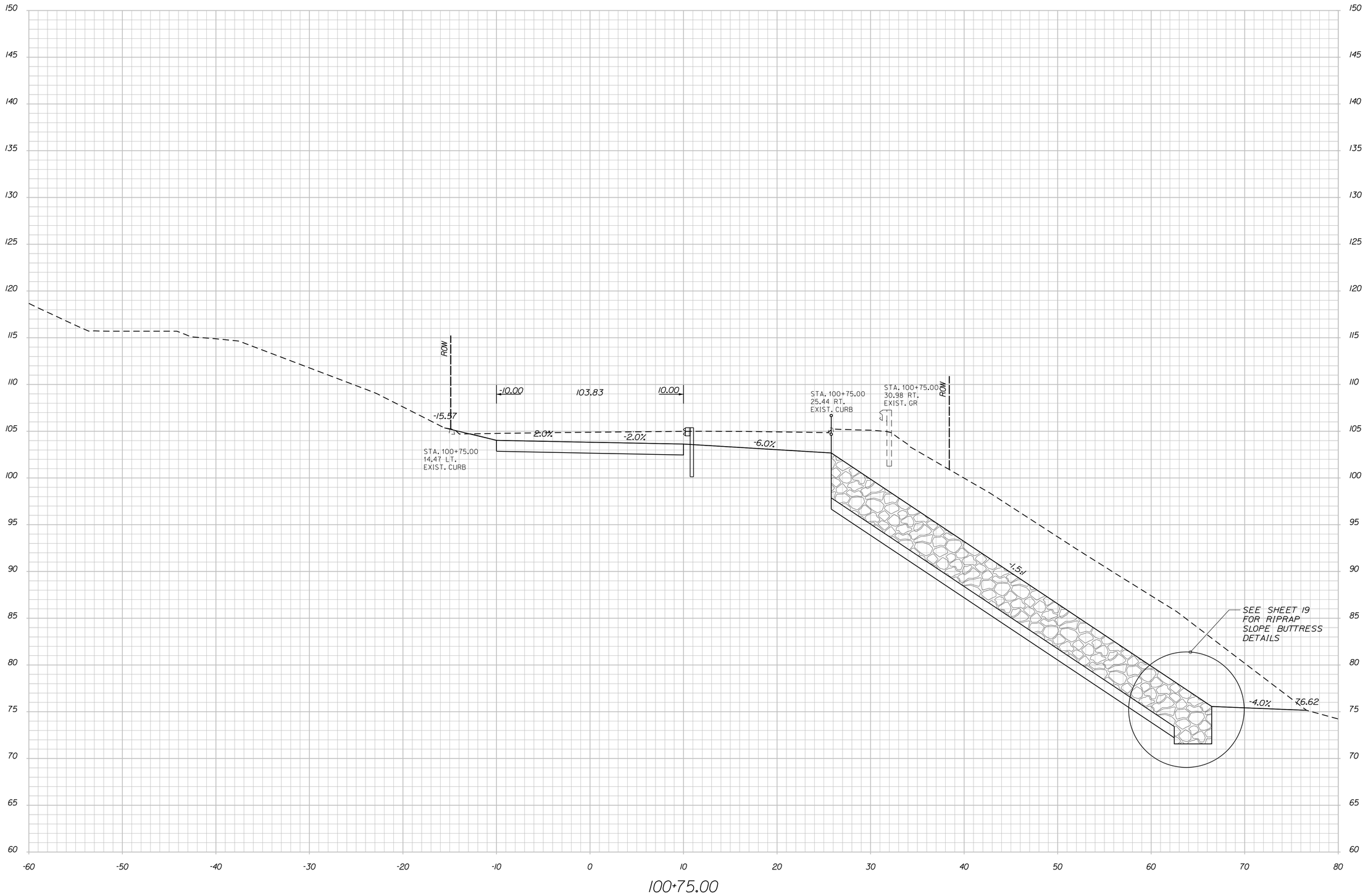

Stantec

STATE OF MAINE
DEPARTMENT OF TRANSPORTATION

BH-1823(900)

WIN
18239.00

BRIDGE NO. 3334

BRIDGE PLANS

PROJ. MANAGER	L. TIMBERLAKE	BY	DATE
DESIGN-DETAILED	ISM	PZA	JUNE 2014
CHECKED-REVIEWED	JCM	ISM/TWM	JUNE 2014
DESIGN2-DETAILED2			
DESIGN3-DETAILED3			
REVISIONS 1			
REVISIONS 2			
REVISIONS 3			
REVISIONS 4			
FIELD CHANGES			

SIGNATURE

P.E. NUMBER

DATE

DURHAM BRIDGE
ANDROSCOGGIN RIVER
DURHAM-LISBON ANDROSCOGGIN COUNTY

CROSS SECTIONS

SHEET NUMBER

43

OF 87

Filename: ...\MSTA\043_Cross Section24.dgn Division: BRIDGE Username: common Date:7/17/2014

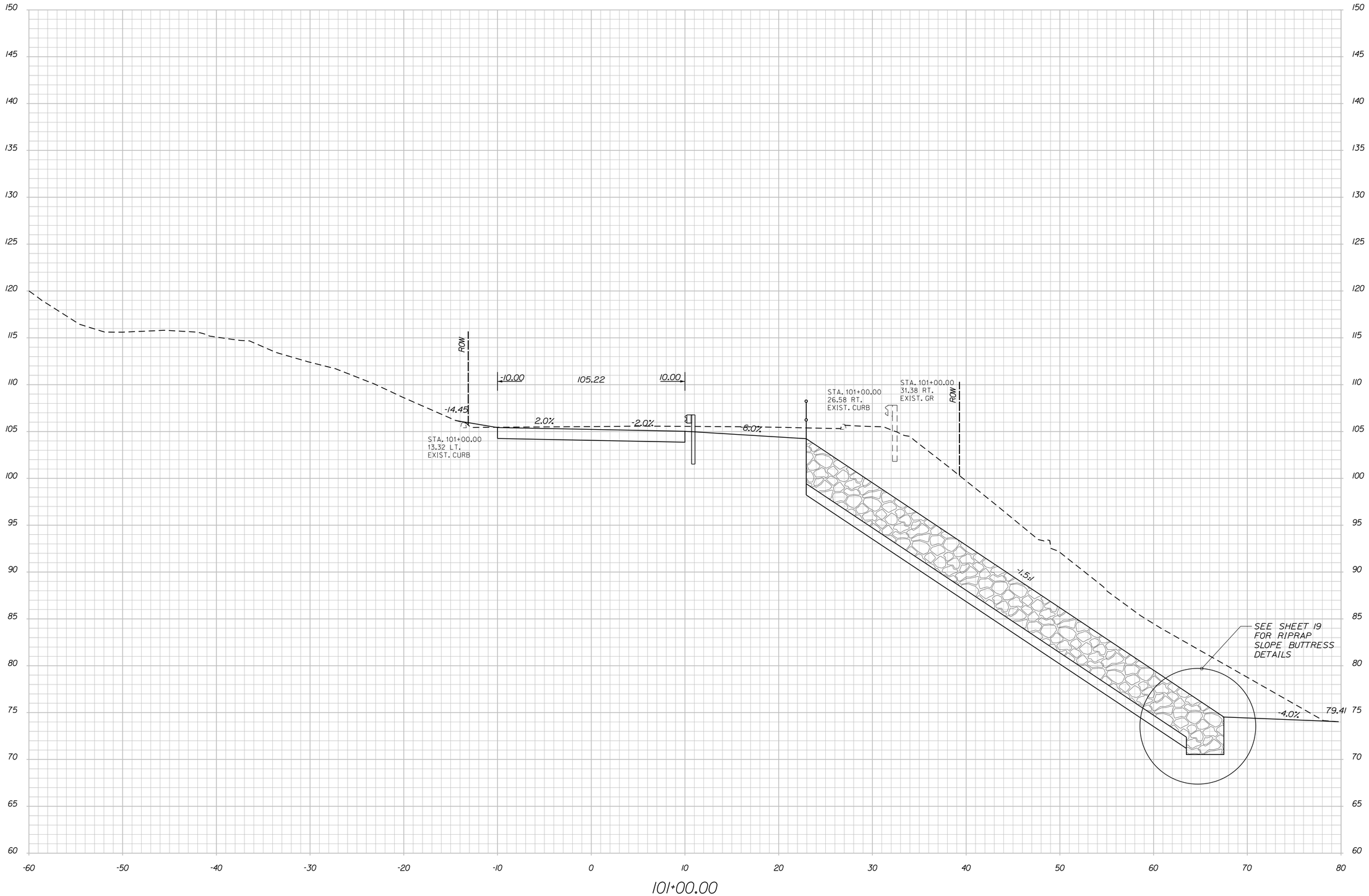

Stantec

STATE OF MAINE
DEPARTMENT OF TRANSPORTATION

BH-1823(900)

WIN
18239.00

BRIDGE NO. 3334

BRIDGE PLANS

PROJ. MANAGER	L. TIMBERLAKE	BY	DATE
DESIGN-DETAILED	JSM	PZA	JUNE 2014
CHECKED-REVIEWED	JCM	JSM/TWM	JUNE 2014
DESIGN2-DETAILED2			
DESIGN3-DETAILED3			
REVISIONS 1			
REVISIONS 2			
REVISIONS 3			
REVISIONS 4			
FIELD CHANGES			

SIGNATURE

P.E. NUMBER

DATE

DURHAM BRIDGE
ANDROSCOGGIN RIVER
DURHAM-LISBON ANDROSCOGGIN COUNTY

CROSS SECTIONS

SHEET NUMBER

44

OF 87

Filename: ...\MSTA\044_Cross Section25.dgn Division: BRIDGE Username: common Date:7/17/2014

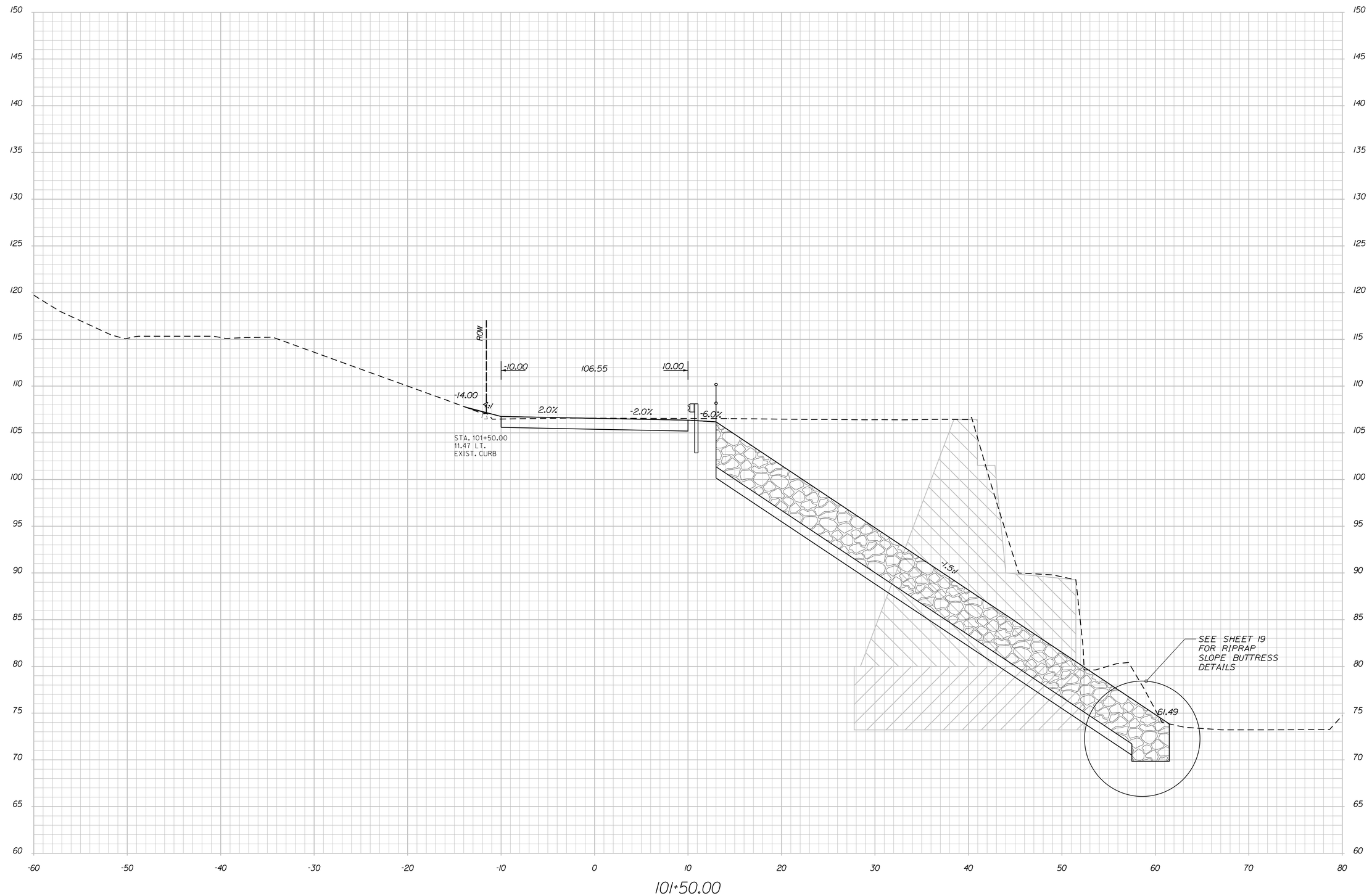

STATE OF MAINE
DEPARTMENT OF TRANSPORTATION

BH-1823(900)

WIN
18239.00

BRIDGE NO. 3334

BRIDGE PLANS

PROJ. MANAGER	L. TIMBERLAKE	BY	DATE
DESIGN-DETAILED	ISM	PZA	JUNE 2014
CHECKED-REVIEWED	JCM	ISM/TWM	JUNE 2014
DESIGN2-DETAILED2			
DESIGN3-DETAILED3			
REVISIONS 1			
REVISIONS 2			
REVISIONS 3			
REVISIONS 4			
FIELD CHANGES			

SIGNATURE

P.E. NUMBER

DATE

DURHAM BRIDGE
ANDROSCOGGIN RIVER
DURHAM-LISBON ANDROSCOGGIN COUNTY

CROSS SECTIONS

SHEET NUMBER

45

OF 87

Stantec

Filename: ...\MSTA\045_Cross Section26.dgn Division: BRIDGE Username: common Date:7/17/2014

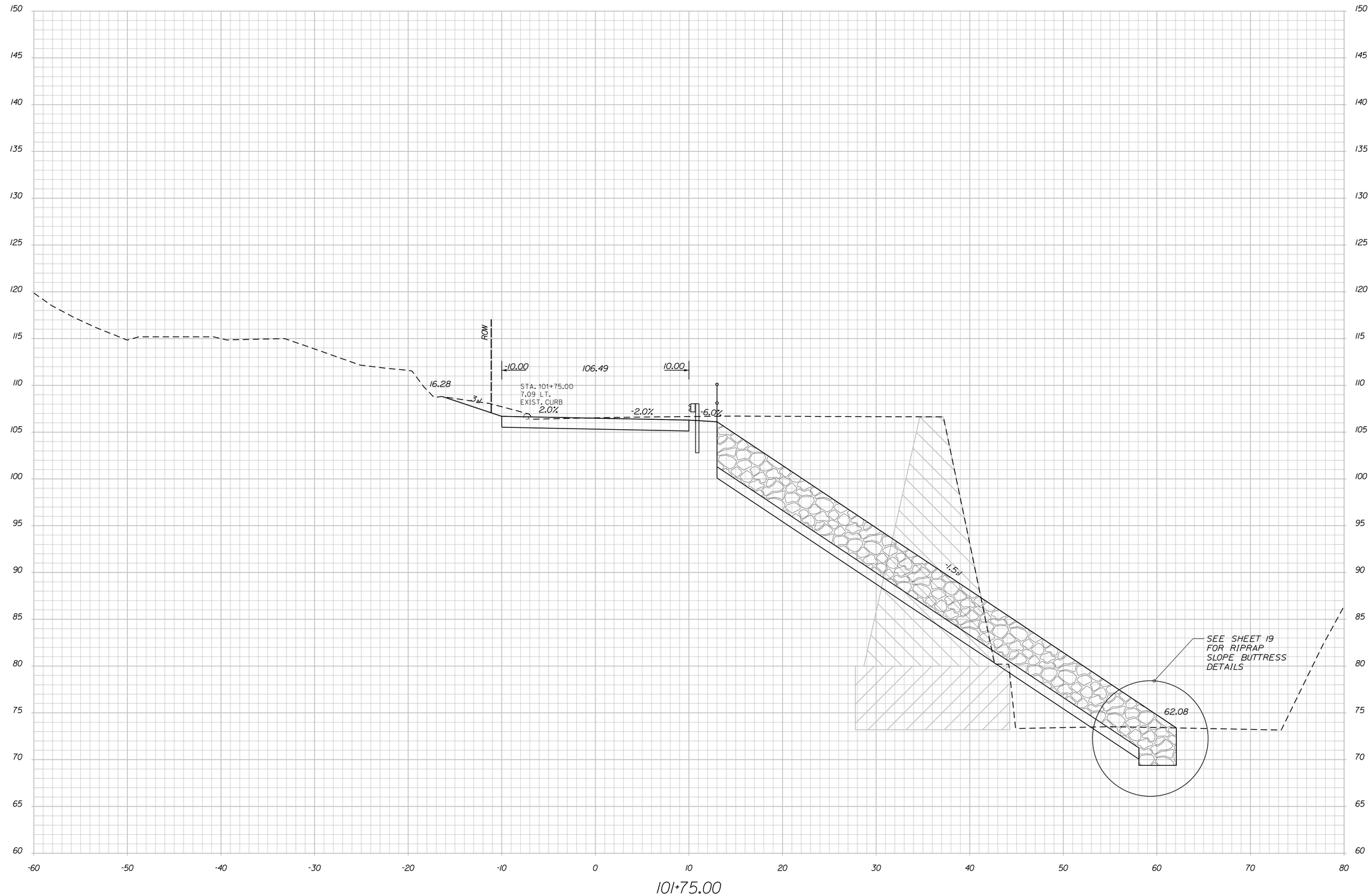

Stantec

STATE OF MAINE
DEPARTMENT OF TRANSPORTATION

BH-1823(900)

WIN 18239.00

BRIDGE NO. 3334

BRIDGE PLANS

		BY	DATE
PROJ. MANAGER	L. TIMBERLAKE		
DESIGN-DETAILED	JSM	PZA	JUNE 2014
CHECKED-REVIEWED	JCM	ISM/TWM	JUNE 2014
DESIGN2-DETAILED2			
DESIGN3-DETAILED3			
REVISIONS 1			
REVISIONS 2			
REVISIONS 3			
REVISIONS 4			
FIELD CHANGES			

SIGNATURE

P.E. NUMBER

DATE

DURHAM BRIDGE
ANDROSCOGGIN RIVER
DURHAM-LISBON ANDROSCOGGIN COUNTY

CROSS SECTIONS

SHEET NUMBER

46

OF 87

Filename: ...\MSTA\046_Cross Section27.dgn Division: BRIDGE Username: common Date:7/17/2014

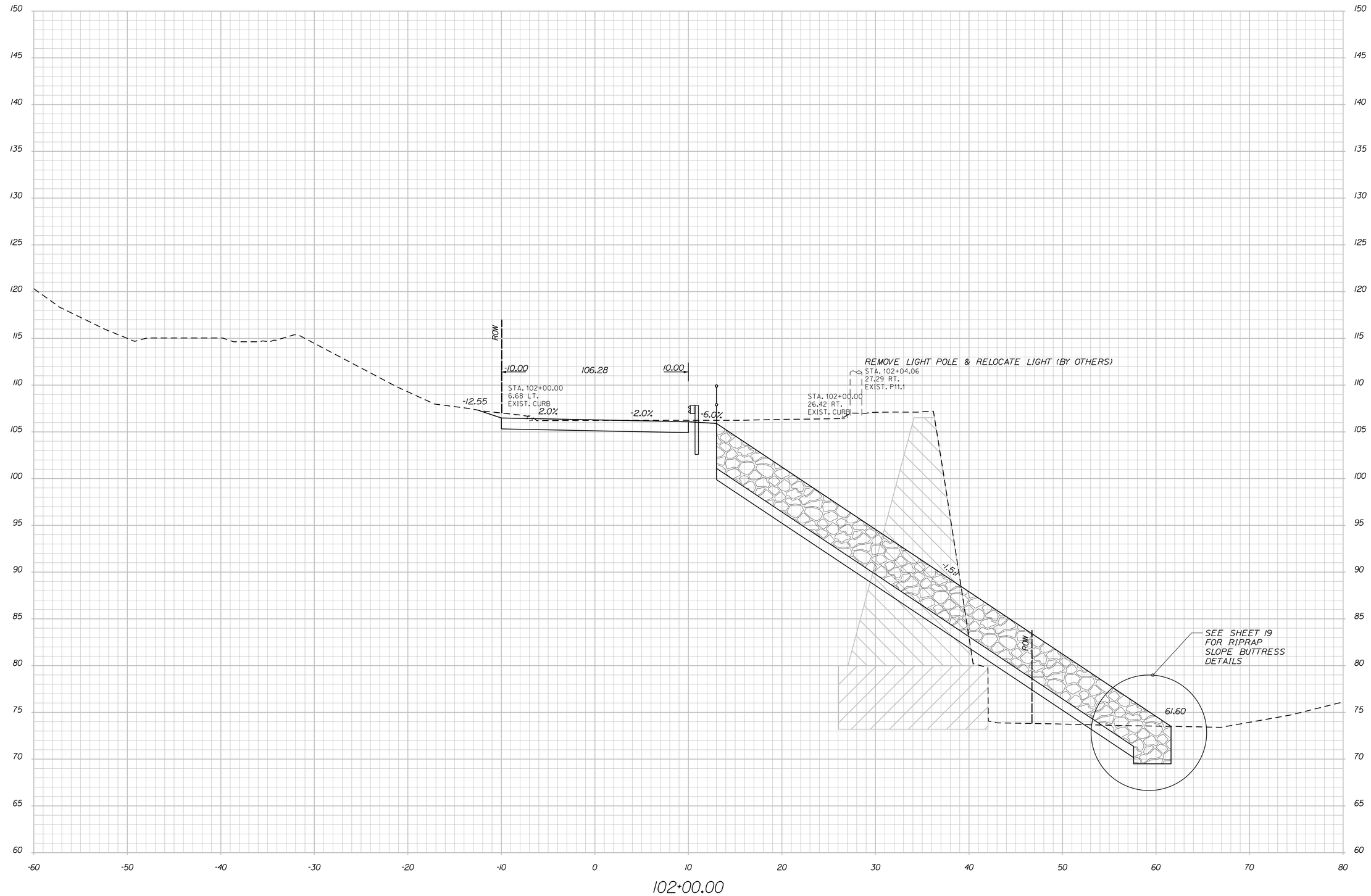

Stantec

STATE OF MAINE
DEPARTMENT OF TRANSPORTATION

BH-1823(900)

WIN
18239.00

BRIDGE NO. 3334

BRIDGE PLANS

SIGNATURE

P.E. NUMBER

DATE

		BY	DATE
PROJ. MANAGER	L. TIMBERLAKE		
DESIGN-DETAILED	JSM	PZA	JUNE 2014
CHECKED-REVIEWED	JCM	ISM/TWM	JUNE 2014
DESIGN2-DETAILED2			
DESIGN3-DETAILED3			
REVISIONS 1			
REVISIONS 2			
REVISIONS 3			
REVISIONS 4			
FIELD CHANGES			

DURHAM BRIDGE
ANDROSCOGGIN RIVER
DURHAM-LISBON ANDROSCOGGIN COUNTY

CROSS SECTIONS

SHEET NUMBER

47

OF 87

Filename: ...\MSTA\047_Cross Section28.dgn Division: BRIDGE Username: common Date:7/17/2014

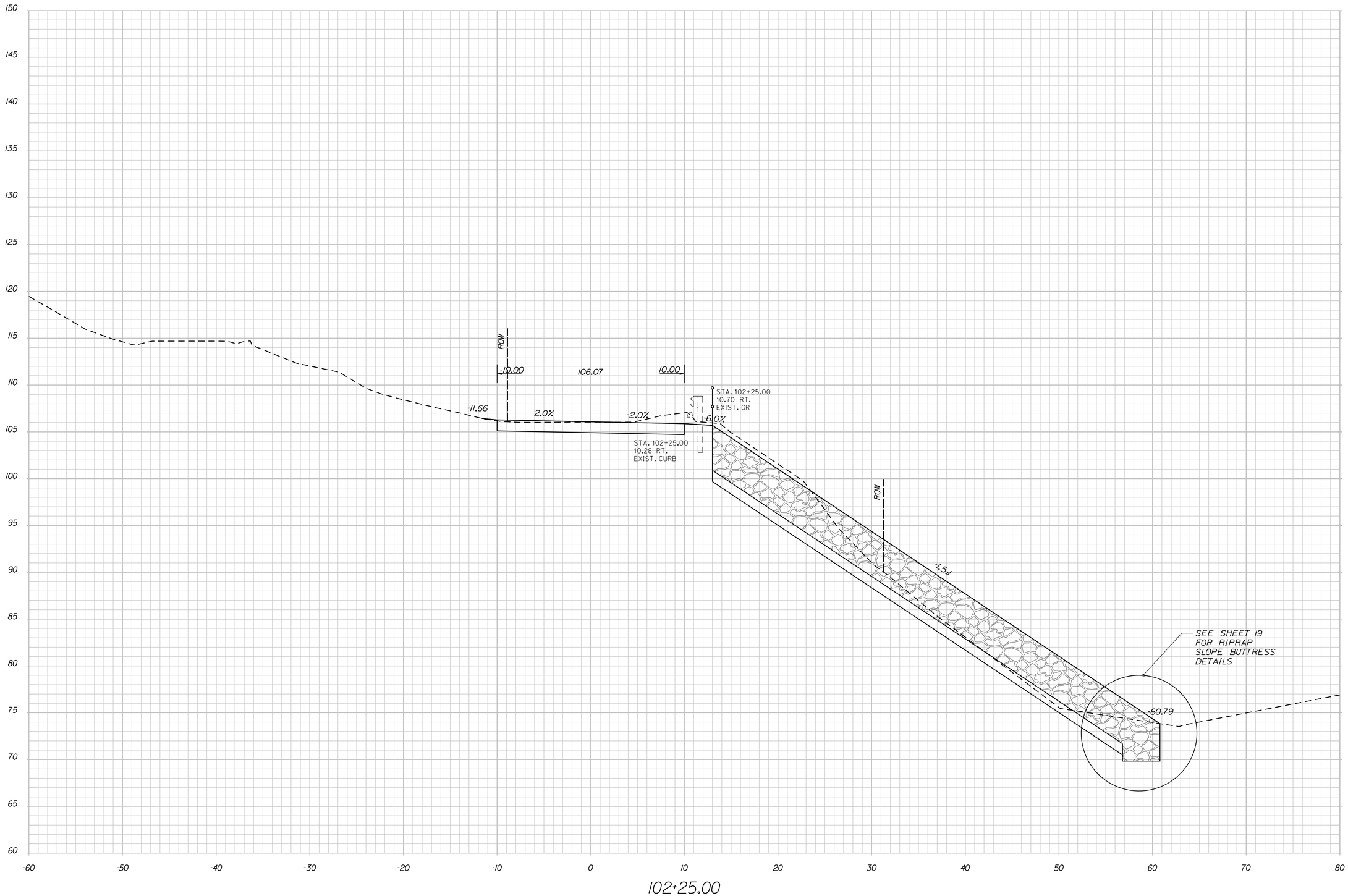

Stantec

STATE OF MAINE
DEPARTMENT OF TRANSPORTATION

BH-1823(900)

WIN
18239.00

BRIDGE NO. 3334

BRIDGE PLANS

PROJ. MANAGER	L. TIMBERLAKE		
DESIGN-DETAILED	ISM	PZA	JUNE 2014
CHECKED-REVIEWED	JCM	ISM/TWM	JUNE 2014
DESIGN2-DETAILED2			
DESIGN3-DETAILED3			
REVISIONS 1			
REVISIONS 2			
REVISIONS 3			
REVISIONS 4			
FIELD CHANGES			

SIGNATURE

P.E. NUMBER

DATE

DURHAM BRIDGE
ANDROSCOGGIN RIVER
DURHAM-LISBON ANDROSCOGGIN COUNTY

CROSS SECTIONS

SHEET NUMBER

48

OF 87

Filename: ...\MSTA\048_Cross Section29.dgn Division: BRIDGE Username: common Date:7/17/2014

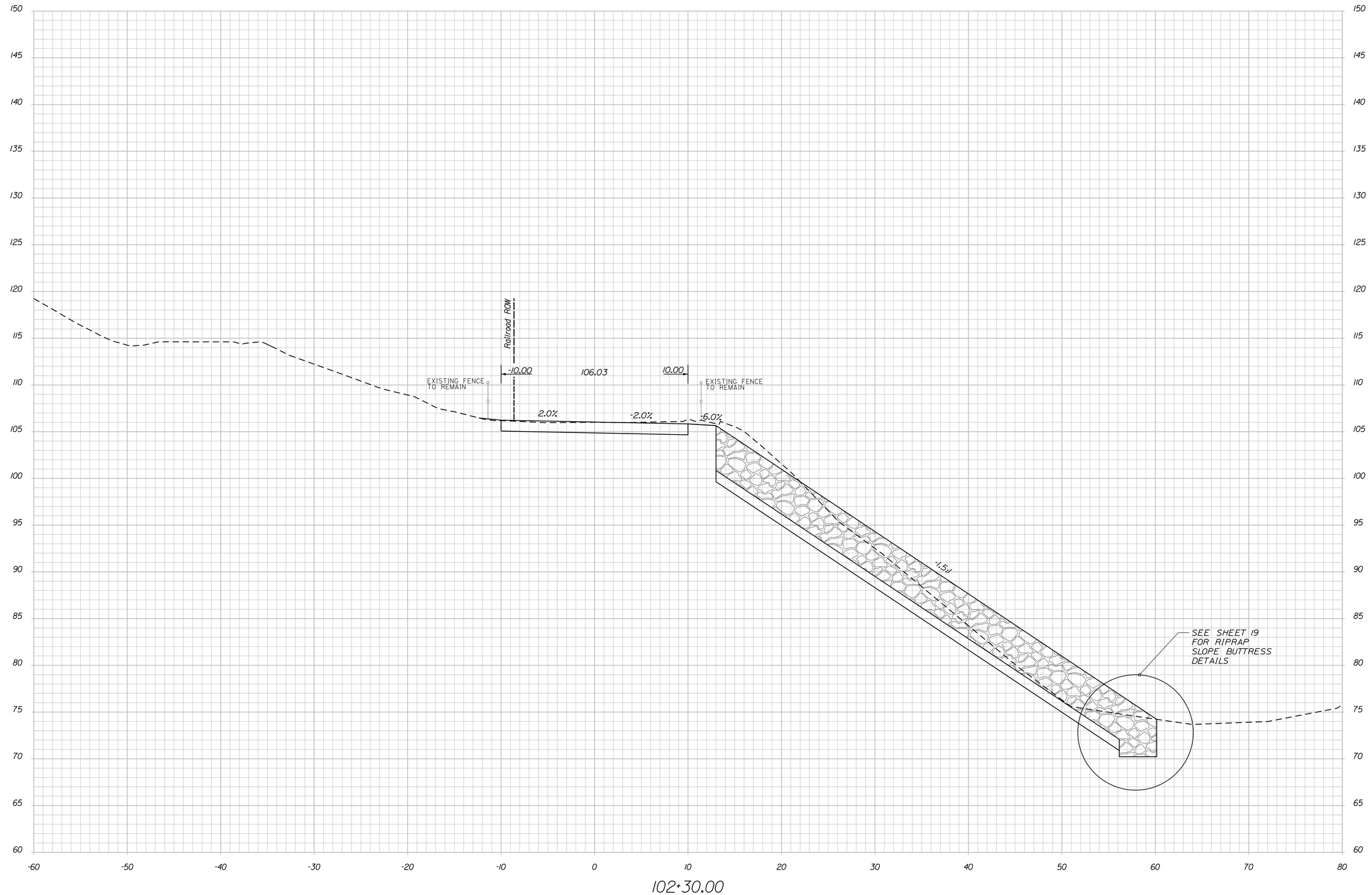

Stantec

STATE OF MAINE
DEPARTMENT OF TRANSPORTATION

BH-1823(900)

WIN 18239.00

BRIDGE NO. 3334

BRIDGE PLANS

SIGNATURE

P.E. NUMBER

DATE

PROJ. MANAGER	L. TIMBERLAKE	BY	DATE
DESIGN-DETAILED	ISM	PZA	JUNE 2014
CHECKED-REVIEWED	JCM	ISM/TWM	JUNE 2014
DESIGN2-DETAILED2			
DESIGN3-DETAILED3			
REVISIONS 1			
REVISIONS 2			
REVISIONS 3			
REVISIONS 4			
FIELD CHANGES			

DURHAM BRIDGE
ANDROSCOGGIN RIVER
DURHAM-LISBON ANDROSCOGGIN COUNTY

CROSS SECTIONS

SHEET NUMBER

49

OF 87

Filename: ...\MSTA\049_Cross Section30.dgn Division: BRIDGE Username: common Date:7/17/2014

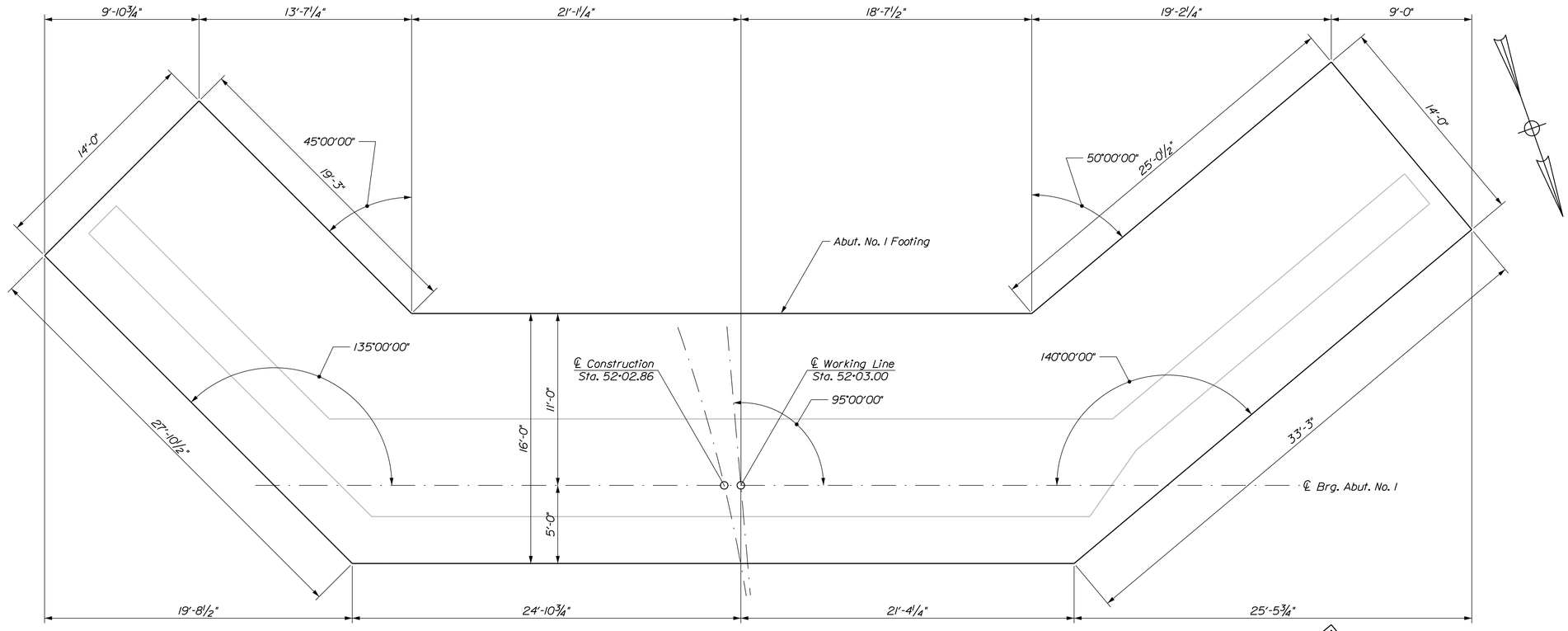

PLAN - ABUTMENT NO. 1 FOOTING

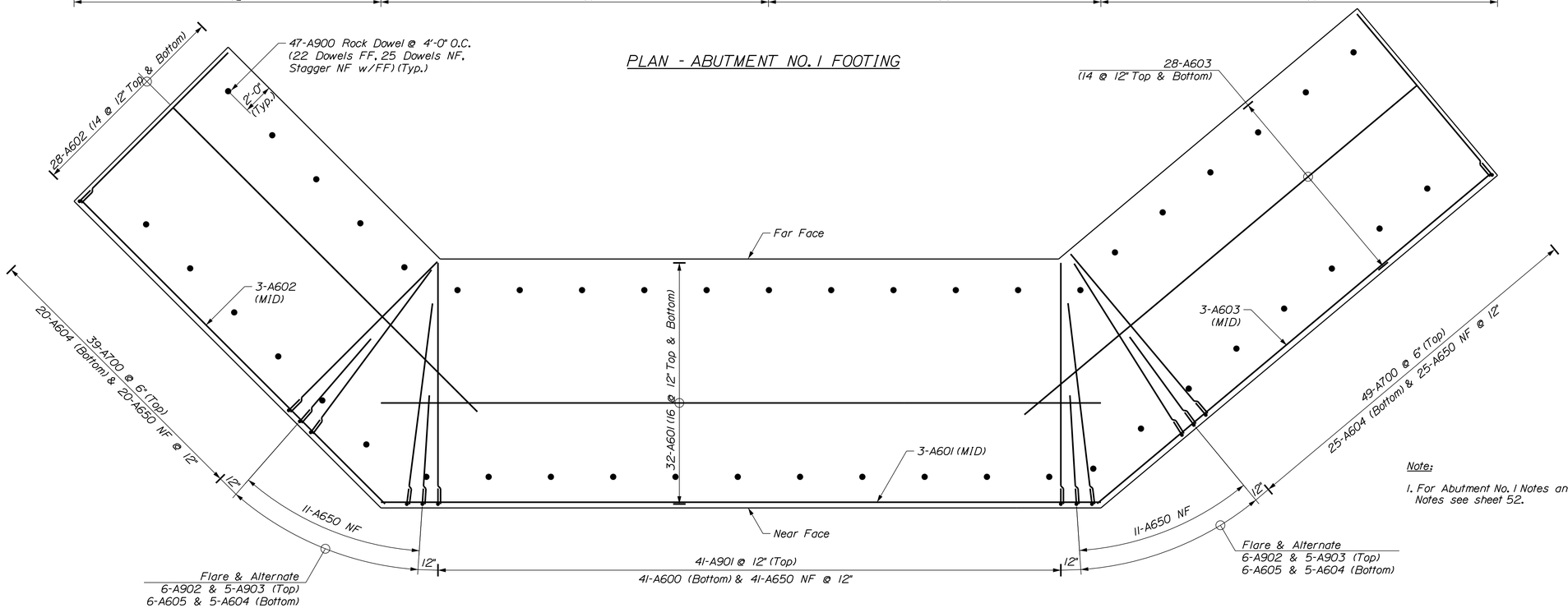

PLAN - ABUTMENT NO. 1 FOOTING REINFORCEMENT

Note:

1. For Abutment No. 1 Notes and Rock Dowel Notes see sheet 52.

LEGEND

NF = Near Face
FF = Far Face
EF = Each Face
MID = Middle

Stantec

STATE OF MAINE
DEPARTMENT OF TRANSPORTATION

BH-1823(900)

WIN 18239.00

BRIDGE NO. 3334

BRIDGE PLANS

PROJ. MANAGER	L. TIMBERLAKE	BY	DATE
DESIGN-DETAILED	DOT	JTS	JUNE 2014
CHECKED-REVIEWED	JHH	DOT:TWM	JUNE 2014
DESIGN2-DETAILED2			
DESIGN3-DETAILED3			
REVISIONS 1			
REVISIONS 2			
REVISIONS 3			
REVISIONS 4			
FIELD CHANGES			

SIGNATURE

P.E. NUMBER

DATE

DURHAM BRIDGE
ANDROSCOGGIN RIVER
DURHAM-LISBON ANDROSCOGGIN COUNTY

ABUTMENT NO. 1 FOOTING
PLAN & REINFORCEMENT

SHEET NUMBER

50

OF 87

Filename: ...\MSTA\050_S Abut1 Ftg.dgn Division: BRIDGE Username: common Date:7/17/2014

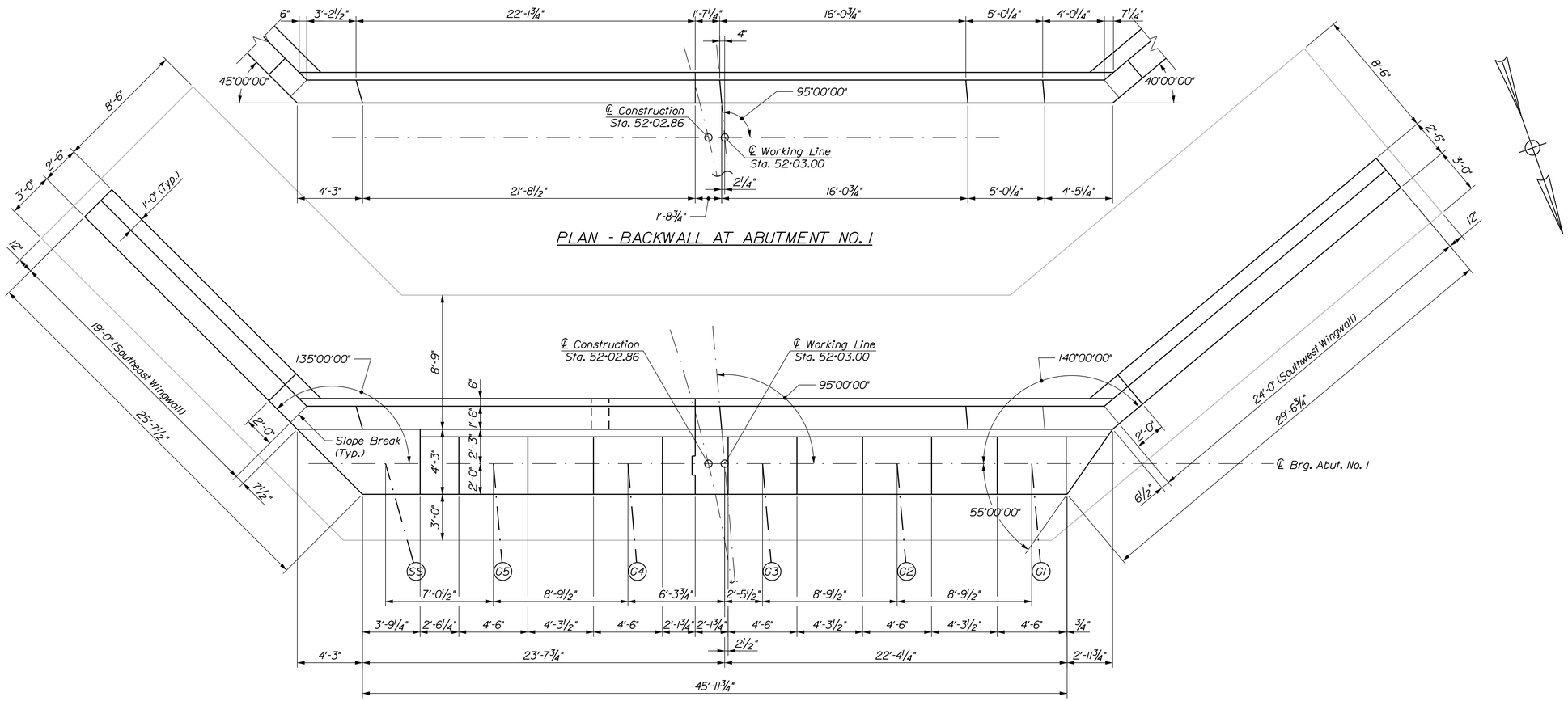

PLAN - BACKWALL AT ABUTMENT NO. 1

PLAN - ABUTMENT NO. 1

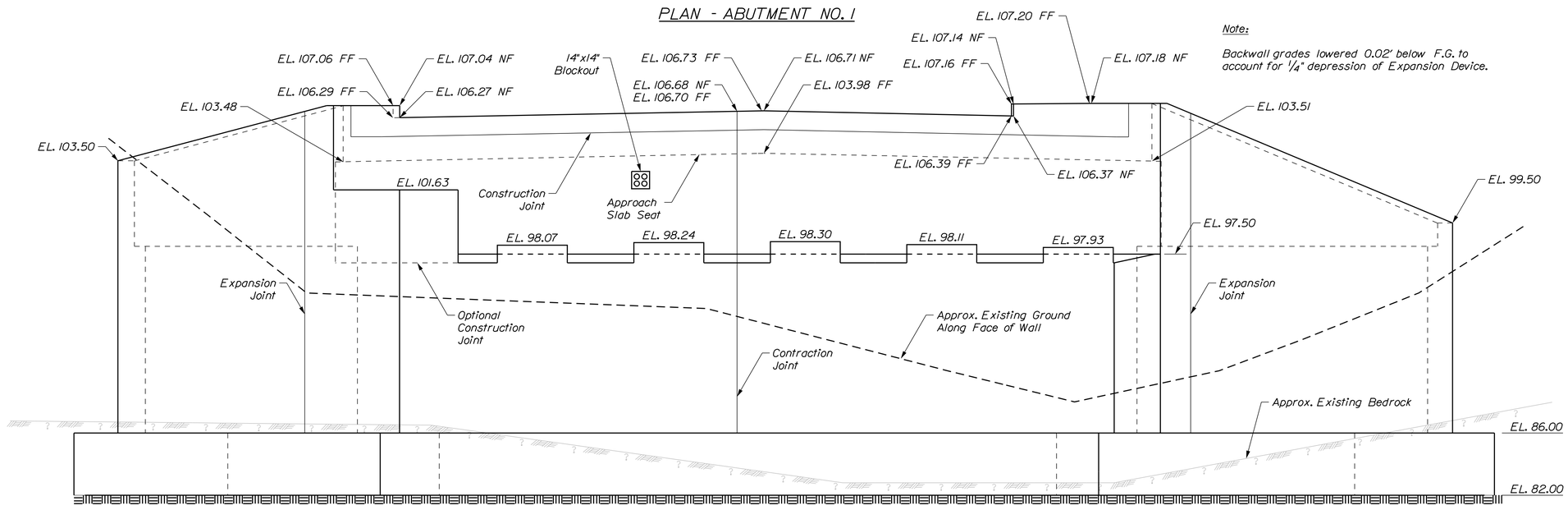

ELEVATION - ABUTMENT NO. 1

Note:

Backwall grades lowered 0.02' below F.G. to account for ¼" depression of Expansion Device.

LEGEND

NF = Near Face
FF = Far Face

Stantec

STATE OF MAINE
DEPARTMENT OF TRANSPORTATION

BH-1823(900)

WIN 18239.00

BRIDGE NO. 3334

BRIDGE PLANS

		BY	DATE
PROJ. MANAGER	L. TIMBERLAKE		
DESIGN-DETAILED	DOT	JTS	JUNE 2014
CHECKED-REVIEWED	JRH	DDT\TWM	JUNE 2014
DESIGN2-DETAILED2			
DESIGN3-DETAILED3			
REVISIONS 1			
REVISIONS 2			
REVISIONS 3			
REVISIONS 4			
FIELD CHANGES			

SIGNATURE

P.E. NUMBER

DATE

DURHAM BRIDGE
ANDROSCOGGIN RIVER
DURHAM-LISBON ANDROSCOGGIN COUNTY

ABUTMENT NO. 1
PLAN & ELEVATION

SHEET NUMBER

51

OF 87

Filename: ...\00\BRIDGE\MSTA\051_S Abut1.dgn Division: BRIDGE Username: common Date:7/17/2014

ABUTMENT NOTES

1. The following notes shall apply to both Abutment No. 1 and Abutment No. 2.

2. Reinforcing steel shall have a minimum concrete cover of 2 inches in the walls and 3 inches in the footings unless otherwise noted.

3. Place 4-in. diameter drains in the breastwall and wingwalls at 10-ft maximum spacing. The exact location will be determined by the Resident.

4. Cover joints where waterstops are not required in accordance with Standard Details Section 502.

5. Construct French Drains behind the abutments and wingwalls in accordance with Standard Specifications Section 512, French Drains.

6. Abutments, wingwalls and their footings shall be backfilled with Granular Borrow for Underwater Backfill. Pay limits will be the structural excavation limits in cut areas and a vertical plane located 10 feet behind the walls and 1 foot behind footings in fill areas.

7. The Utility Conduits passing through the abutment backwalls shall either pass through cast-in-place sleeves or run through a utility blockout, at the option of the Contractor. Additional reinforcing steel shall be provided around the Utility Conduit for either option, as shown on the plans. If blockouts are used, all voids around the Conduits shall be fully grouted with a MaineDOT pre-approved product.

8. Bend or cut bars as directed by the Resident Engineer to provide 2" clear cover around the utility blockouts.

9. The bedrock will vary in nature, slope, and degree of fracturing. Bedrock elevations shown are estimated based on the boring information. Actual rock elevations may vary. After the foundation excavations are completed and all unsound bedrock removed, the Contractor shall survey the foundation bedrock and provide the exact bedrock elevations to the Resident for review and approval by the Engineer.

10. If the bedrock elevations vary from the elevations assumed in the development of the plan set, the abutments and or wingwalls may need to be modified. The Contractor shall grant the Department seven (7) Calendar Days to modify the plans from the date the Resident accepts the bedrock survey.

11. Foundation concrete shall be placed on sound bedrock cleaned of all weathered or fractured rock or loose soil. Prior to placing the footing/seal, the bearing surface shall be washed with high pressure water and air, and smooth bedrock shall be roughened. Where the bedrock surface slope exceeds 2H:1V the bedrock surface shall be benched in level steps or made less steep than 2H:1V.

12. When the prepared bedrock surface is below the bottom of the footing elevation shown on the plans concrete fill may be placed to fill the void if constructed in the-dry. Concrete fill shall be Class A concrete. Alternatively the footing thickness may be increased up to an additional 1 foot as approved by the Resident. If the footing thickness is increased, the top of footing elevation shall be as shown on the plans.

13. When bedrock protrudes above the bottom of the footing, the footing may be raised and vertical reinforcing may be cut in the field with the approval of the Resident. The minimum allowable footing thickness is shown on the plans. Payment for adjusting footing depth and adjusting reinforcing steel will be considered incidental to related contact items. No separate payment will be made.

14. At the option of the Resident, bedrock that protrudes above the bottom of the footing/seal elevation may be removed. Payment for bedrock removal will be made under Item No. 206.0692, Structural Rock Excavation - Major Structures.

ABUTMENT NO. 1 NOTES

1. The maximum factored applied footing pressure is 11.1 ksf.

2. Payment for Abutment No. 1 Footing will be made under Item No. 502.21, Structural Concrete Abutments and Retaining Walls (CY). Payment for all other Abutment No. 1 concrete will be made under Item No. 502.219, Structural Concrete Abutments and Retaining Walls (LS).

ABUTMENT NO. 1 ROCK DOWEL NOTES

1. The connection between the footing and the bearing surface shall be doweled.

2. The method of installing dowels shall be approved by the Resident.

3. All cost for installation of the anchor dowels shall be incidental to Item No. 503.12 - Reinforcing Steel, Fabricated and Delivered.

4. The anchoring material shall be one of the products listed on the MaineDOT List of Prequalified Grout Materials for Keyways and Anchoring and shall have a maximum water-cement ratio of 0.45 by weight and a minimum unconfined compressive strength of 4.35 ksi at the time of testing. Installation shall be in conformance with the manufacturer's recommendations. The anchor material chosen shall be submitted to the Resident prior to installation.

5. Holes drilled for #9 dowel reinforcing steel shall be a minimum diameter of 2½ inches.

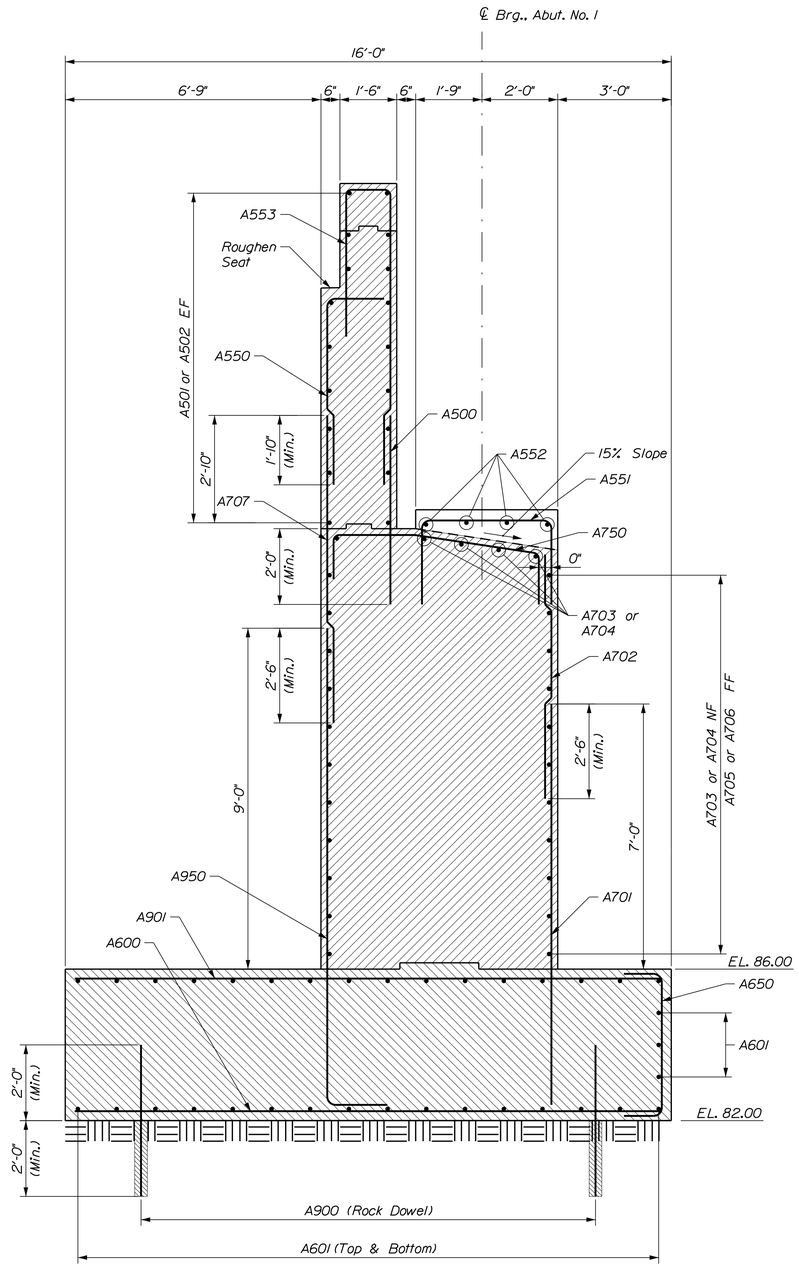

TYPICAL SECTION - ABUTMENT NO. 1

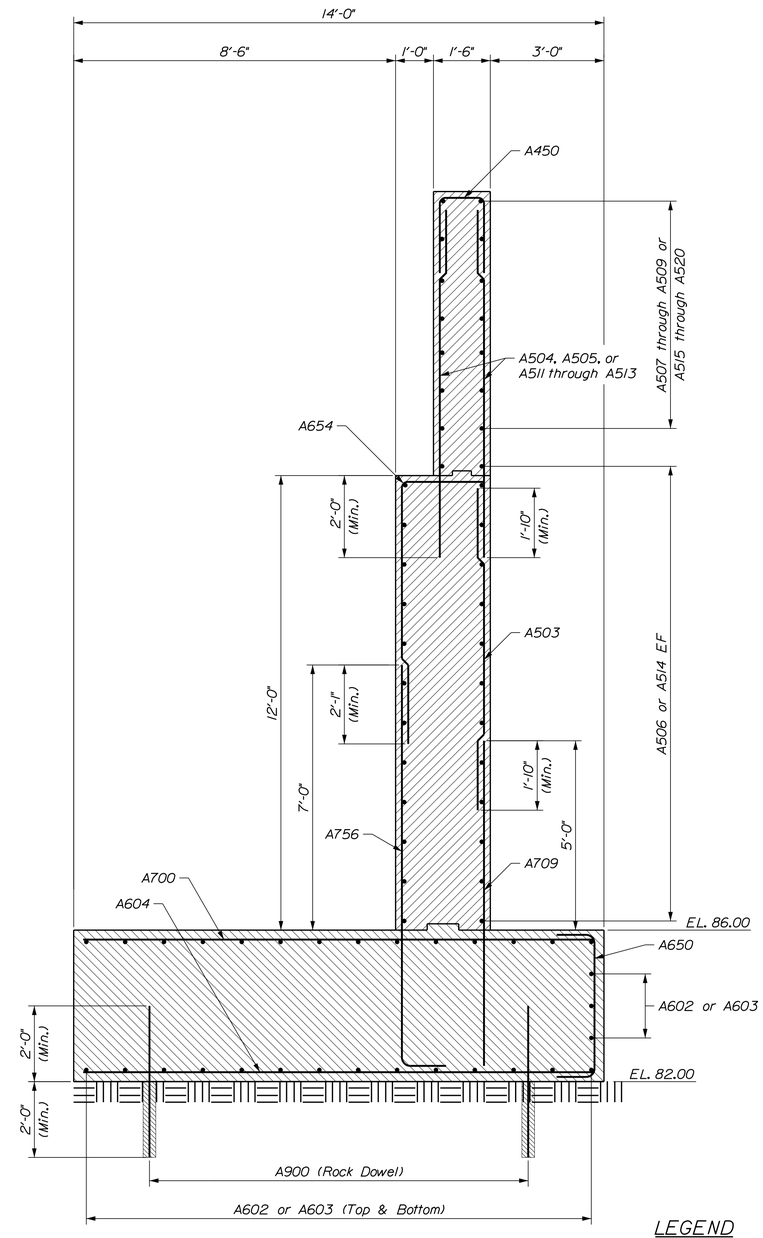

TYPICAL SECTION - ABUTMENT NO. 1 WINGWALL

LEGEND

NF = Near Face
FF = Far Face
EF = Each Face
MID = Middle

Stantec

STATE OF MAINE
DEPARTMENT OF TRANSPORTATION

BH-1823(900)

BRIDGE NO. 3334 — WIN 18239.00 — BRIDGE PLANS

PROJ. MANAGER	L. TIMBERLAKE	BY	DATE
DESIGN-DETAILED	DDT	JTS	JUNE 2014
CHECKED-REVIEWED	JHH	DDT/TWM	JUNE 2014
DESIGN2-DETAILED2			
DESIGN3-DETAILED3			
REVISIONS 1			
REVISIONS 2			
REVISIONS 3			
REVISIONS 4			
FIELD CHANGES			

SIGNATURE

P.E. NUMBER

DATE

DURHAM BRIDGE
ANDROSCOGGIN RIVER
DURHAM-LISBON ANDROSCOGGIN COUNTY

ABUTMENT NO. 1 SECTIONS

SHEET NUMBER
52
OF 87

Filename: ...\MSTA\052_S Abut1 Sections.dgn Division: BRIDGE Username: common Date:7/18/2014

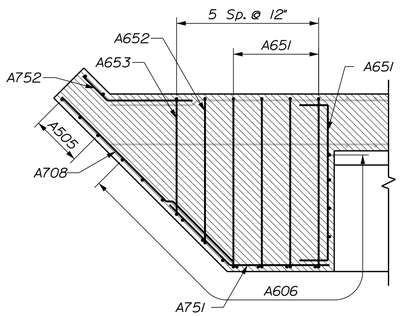

SECTION A-A

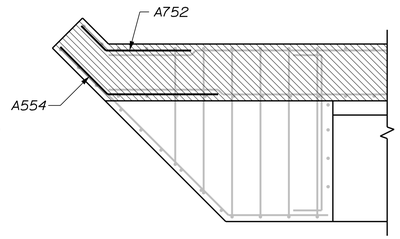

SECTION B-B

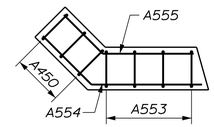

SECTION C-C

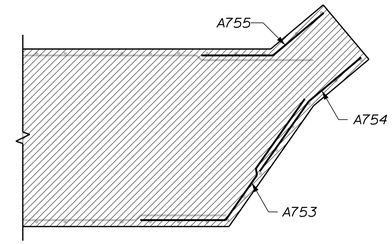

SECTION D-D

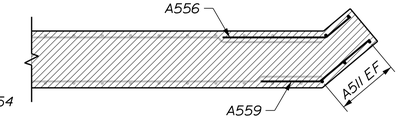

SECTION E-E

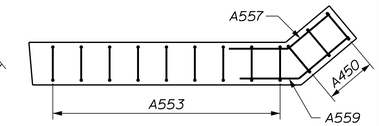

SECTION F-F

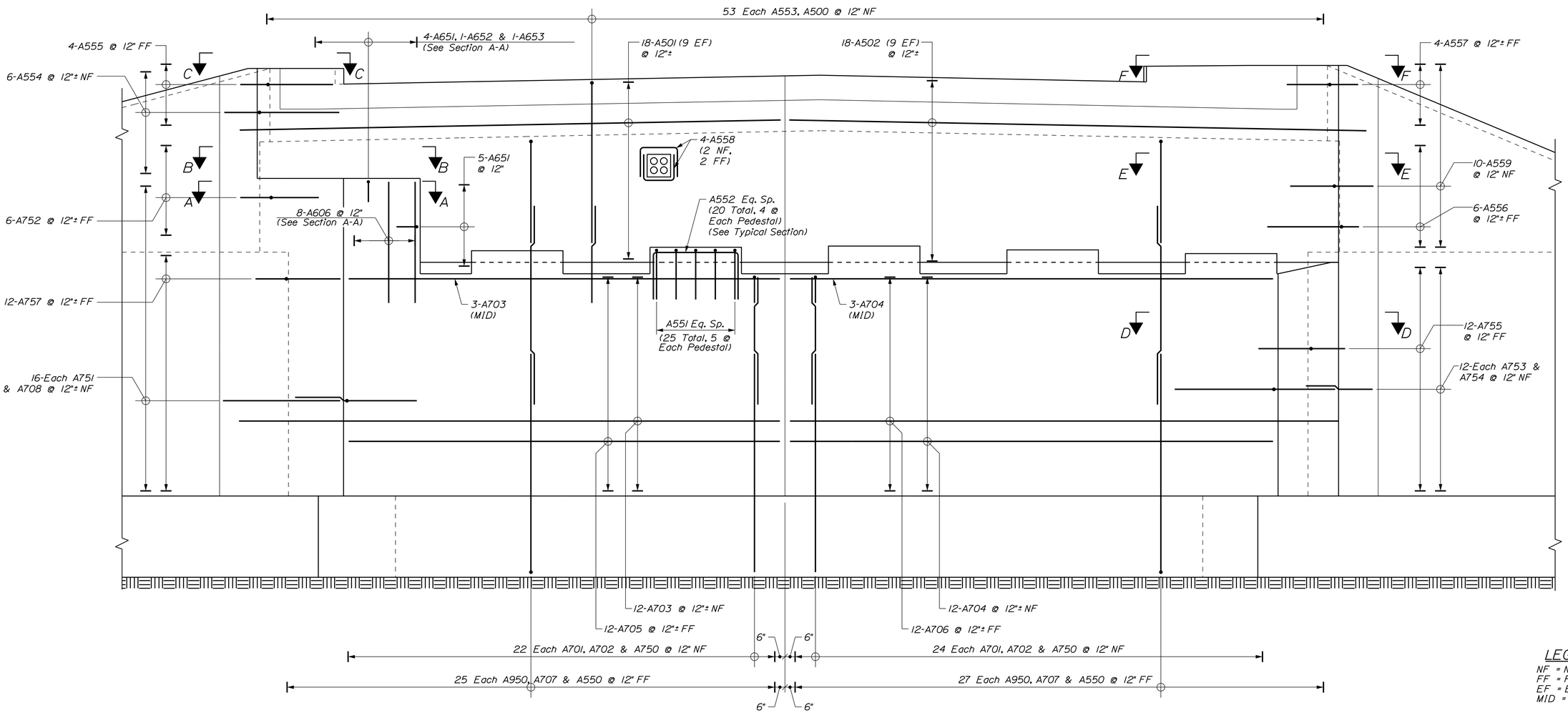

ELEVATION - ABUTMENT NO. 1 REINFORCEMENT

LEGEND

NF = Near Face
FF = Far Face
EF = Each Face
MID = Middle

Stantec

STATE OF MAINE
DEPARTMENT OF TRANSPORTATION

BH-1823(900)

WIN 18239.00

BRIDGE NO. 3334

BRIDGE PLANS

		BY	DATE
PROJ. MANAGER	L. TIMBERLAKE		
DESIGN-DETAILED	DOT	JTS	JUNE 2014
CHECKED-REVIEWED	JRH	DOT/TWM	JUNE 2014
DESIGN2-DETAILED2			
DESIGN3-DETAILED3			
REVISIONS 1			
REVISIONS 2			
REVISIONS 3			
REVISIONS 4			
FIELD CHANGES			

SIGNATURE

P.E. NUMBER

DATE

DURHAM BRIDGE
ANDROSCOGGIN RIVER
DURHAM-LISBON ANDROSCOGGIN COUNTY

ABUTMENT NO. 1
REINFORCEMENT

SHEET NUMBER

53

OF 87

Filename: ...\MSTA\053_S Abut1 Reinf.dgn Division: BRIDGE Username: common Date:7/17/2014

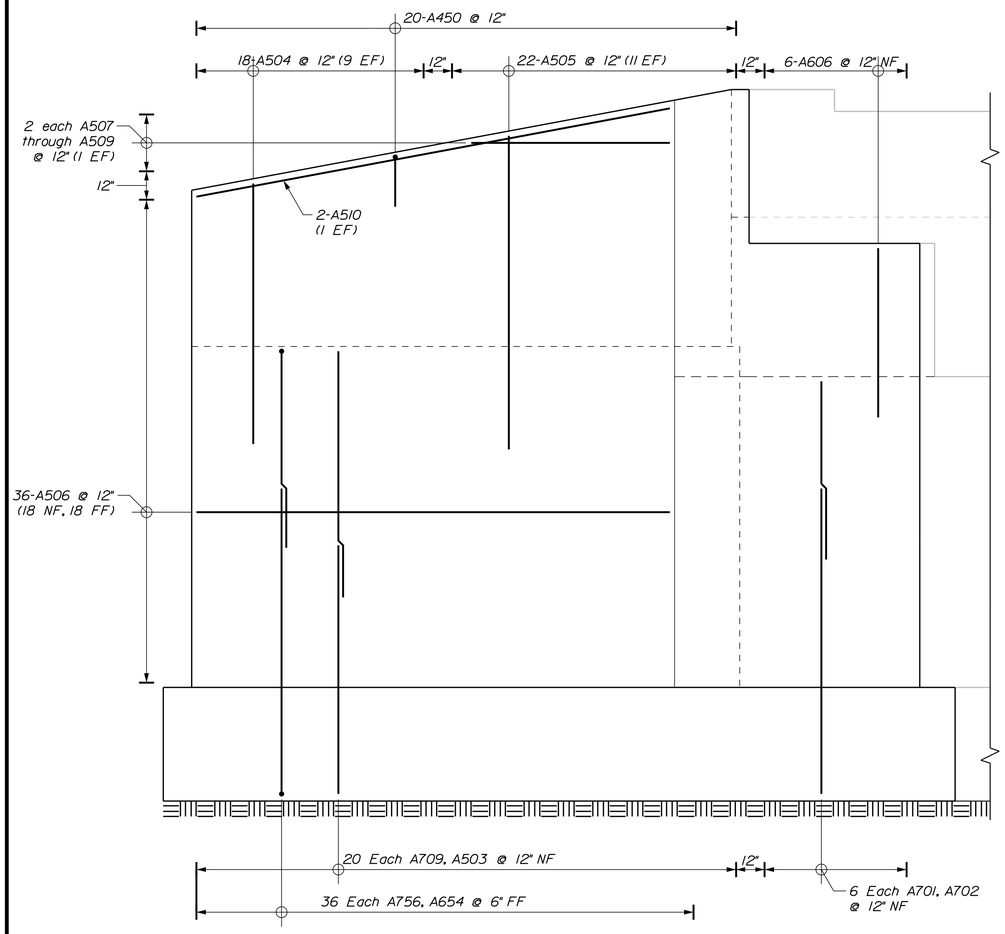

ABUTMENT NO. 1 SOUTHEAST WINGWALL REINFORCING ELEVATION

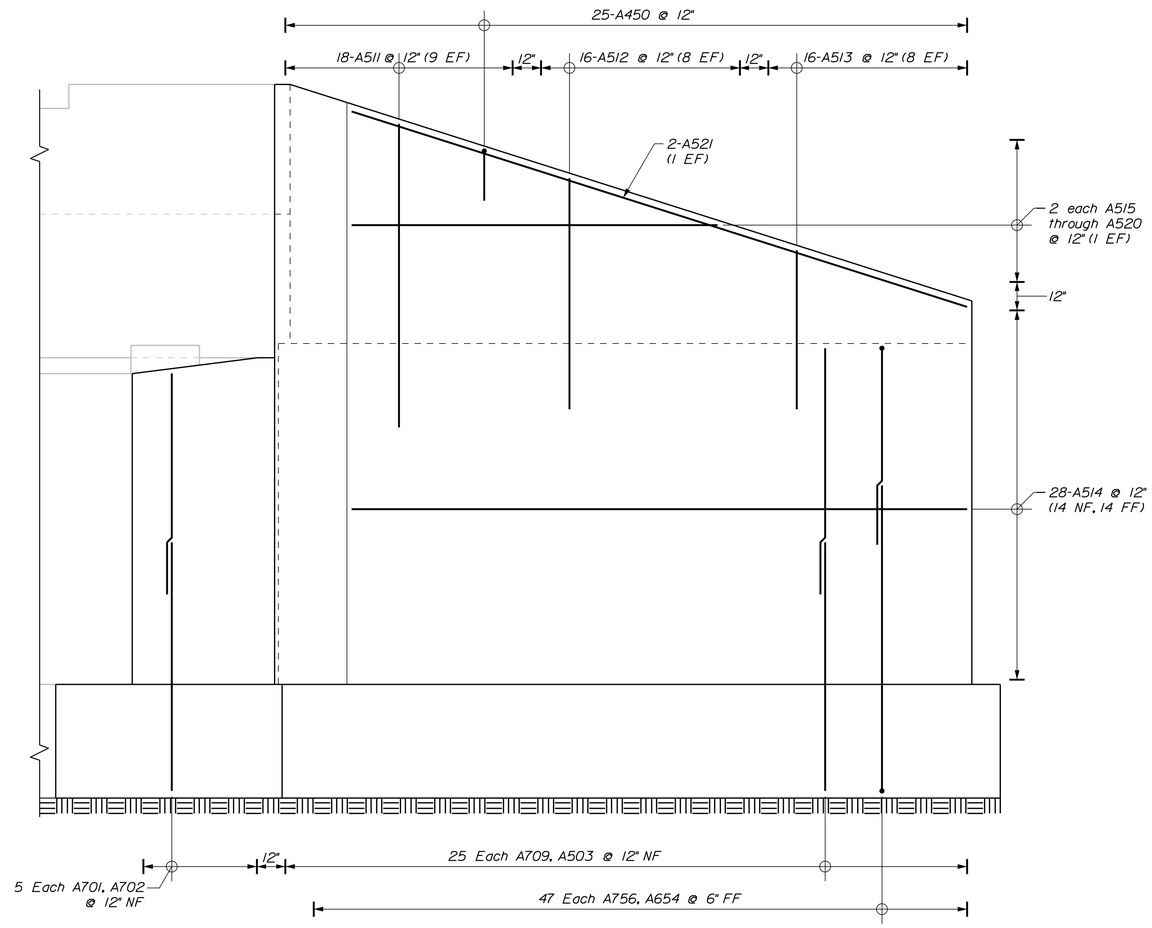

ABUTMENT NO. 1 SOUTHWEST WINGWALL REINFORCING ELEVATION

LEGEND

NF = Near Face
FF = Far Face
EF = Each Face
MID = Middle

Stantec

STATE OF MAINE
DEPARTMENT OF TRANSPORTATION

BH-1823(900)

WIN 18239.00

BRIDGE NO. 3334

BRIDGE PLANS

		BY	DATE
PROJ. MANAGER	L. TIMBERLAKE		
DESIGN-DETAILED	DDT	JTS	JUNE 2014
CHECKED-REVIEWED	JHH	DDT\TWM	JUNE 2014
DESIGN2-DETAILED2			
DESIGN3-DETAILED3			
REVISIONS 1			
REVISIONS 2			
REVISIONS 3			
REVISIONS 4			
FIELD CHANGES			

SIGNATURE

P.E. NUMBER

DATE

DURHAM BRIDGE
ANDROSCOGGIN RIVER
DURHAM-LISBON ANDROSCOGGIN COUNTY

ABUTMENT NO. 1 WINGWALL REINFORCEMENT

SHEET NUMBER

54

OF 87

Filename: ...\MSTA\054_S Abut1 WW Reinf.dgn Division: BRIDGE Username: common Date:7/17/2014

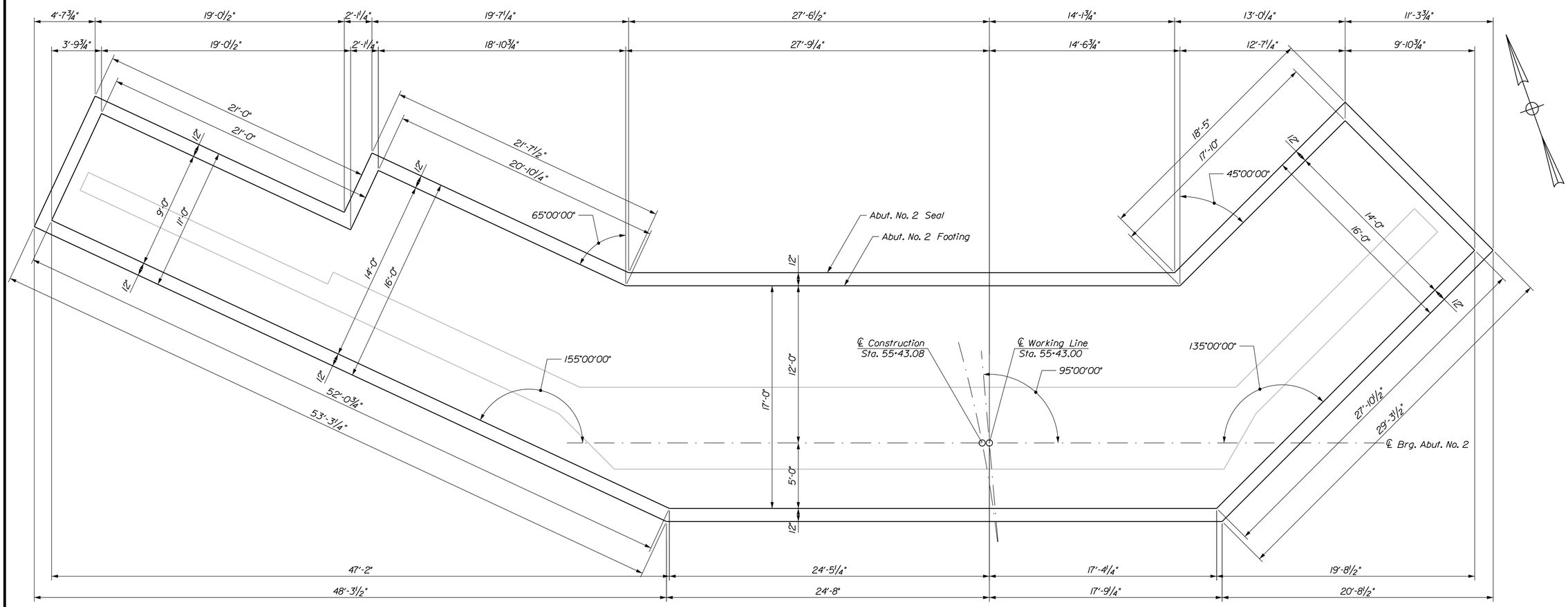

PLAN - ABUTMENT NO. 2 SEAL & FOOTING

ABUTMENT NO. 2 NOTES

1. The maximum factored applied footing pressure is 16.6 ksf. The maximum factored applied seal pressure is 20.3 ksf.

2. Cofferdam excavation inspection shall be the responsibility of the Contractor and shall be conducted in accordance with Special Provision 511 Cofferdams. An inspection report shall be submitted to the Resident for review. The report shall include bedrock elevation measurements and observations and shall assess the levelness, cleanliness and sediment thickness. Sediment measurements and bedrock elevation measurements shall be taken at a minimum of 20 evenly distributed locations.

3. Roughen the top surface of the seal concrete prior to pouring footing concrete.

4. See Abutment Notes on sheet 52 for additional notes.

ABUTMENT NO. 2 SEAL COFFERDAM NOTES

1. When sheet piling is used for seal cofferdams, appropriate rolled corners shall be used, and the inside face of the sheet piling shall be at or outside of the seal concrete dimensions shown.

2. The seal concrete placement dimensions shown represent the minimum seal size necessary to meet design requirements and are not based on the use of any particular sheet pile section.

3. The horizontal pay limit for seal concrete will be to the dimensions shown on the plans. No additional payment will be made for concrete placed outside these limits.

4. The depth of the seal is set for a maximum water elevation of 80.3. At this water elevation, in order to provide sufficient resistance to buoyancy, the top of seal elevations require that the maximum average bottom of seal elevation be less than or equal to EL. 70.0. If the water elevation at the time of construction is higher or the elevation of the bottom of seal differs from the elevations noted, the depth of the seal shall be adjusted.

5. If the average elevation of the bottom surface of the seal exceeds the respective limits, the pertinent information shall be forwarded to the Resident for new seal depth design. The Contractor shall adequately vent the cofferdams to ensure the maximum water surface elevation remains at 80.3 feet or below.

ABUTMENT NO. 2 ROCK DOWEL NOTES

1. The connection between the concrete seal and the bearing surface, as well as the concrete seal and the abutment footing shall be doweled.

2. The method of installing dowels shall be approved by the Resident.

3. All cost for installation of the anchor dowels shall be incidental to Item No. 503.12 - Reinforcing Steel, Fabricated and Delivered.

4. The anchoring material shall be one of the products listed on the MaineDOT List of Prequalified Grout Materials for Keyways and Anchoring and shall have a maximum water-cement ratio of 0.45 by weight and a minimum unconfined compressive strength of 4.35 ksi at the time of testing. Installation shall be in conformance with the manufacturer's recommendations. The anchor material chosen shall be submitted to the Resident prior to installation.

5. Holes drilled for #11 dowel reinforcing steel shall be a minimum diameter of 3½ inches.

Stantec

STATE OF MAINE
DEPARTMENT OF TRANSPORTATION

BH-1823(900)

WIN 18239.00

BRIDGE NO. 3334

BRIDGE PLANS

PROJ. MANAGER	L. TIMBERLAKE	BY	DATE
DESIGN-DETAILED	DOT	JTS	JUNE 2014
CHECKED-REVIEWED	JHH	DOT\TWM	JUNE 2014
DESIGN2-DETAILED2			
DESIGN3-DETAILED3			
REVISIONS 1			
REVISIONS 2			
REVISIONS 3			
REVISIONS 4			
FIELD CHANGES			

SIGNATURE

P.E. NUMBER

DATE

DURHAM BRIDGE
ANDROSCOGGIN RIVER
DURHAM-LISBON ANDROSCOGGIN COUNTY

ABUTMENT NO. 2
SEAL & FOOTING PLAN

SHEET NUMBER

55

OF 87

Filename: ...\MSTA\055_N Abut2 SealFtg.dgn Division: BRIDGE Username: common Date:7/17/2014

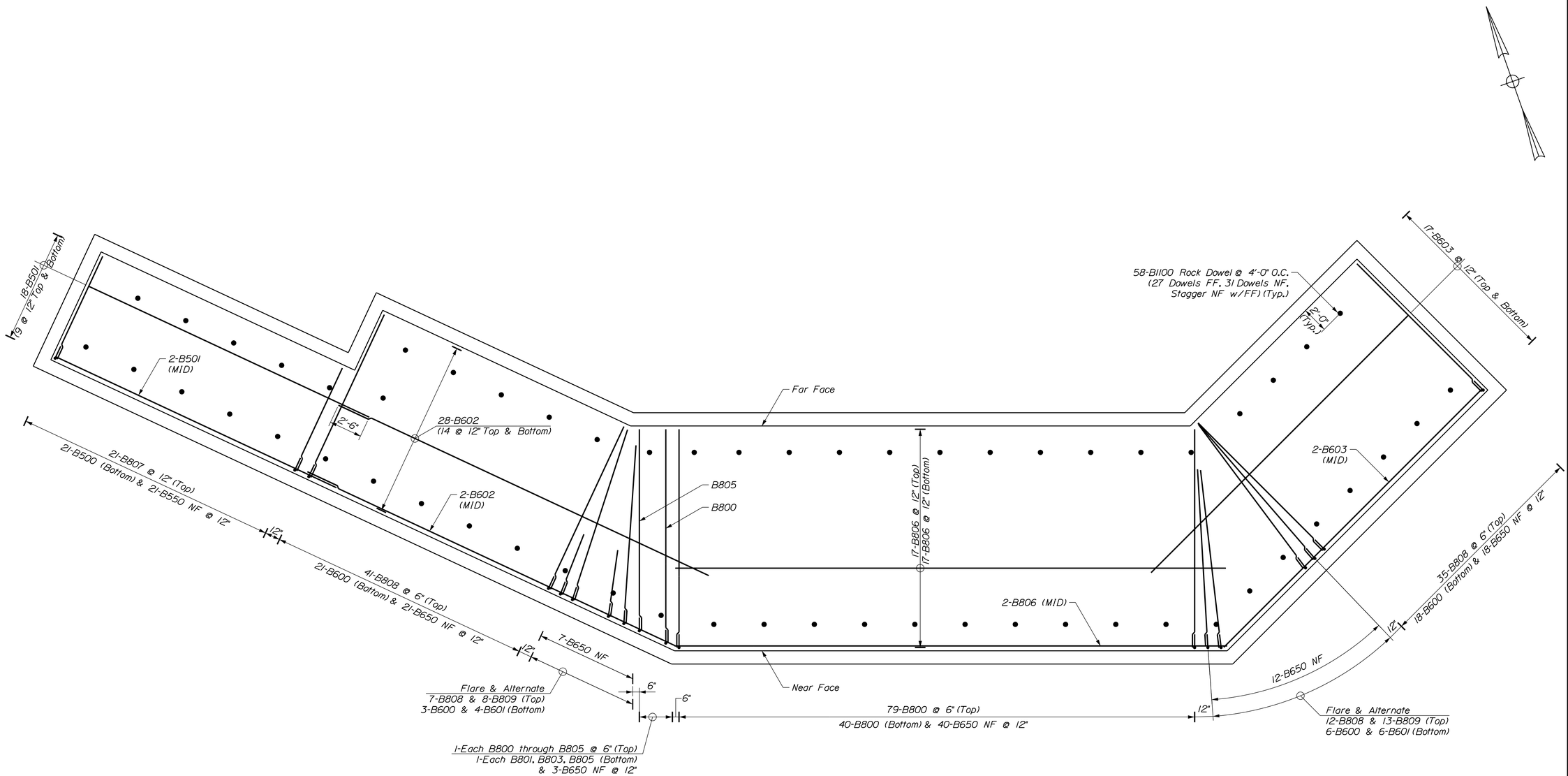

PLAN - ABUTMENT NO. 2 FOOTING REINFORCEMENT

LEGEND

NF = Near Face
FF = Far Face
EF = Each Face
MID = Middle

Stantec

STATE OF MAINE
DEPARTMENT OF TRANSPORTATION

BH-1823(900)

WIN 18239.00

BRIDGE NO. 3334

BRIDGE PLANS

SIGNATURE

P.E. NUMBER

DATE

PROJ. MANAGER	L. TIMBER-LAKE	BY	DATE
DESIGN-DETAILED	DDT	JTS	JUNE 2014
CHECKED-REVIEWED	JHH	DDT\TWM	JUNE 2014
DESIGN2-DETAILED2			
DESIGN3-DETAILED3			
REVISIONS 1			
REVISIONS 2			
REVISIONS 3			
REVISIONS 4			
FIELD CHANGES			

DURHAM BRIDGE
ANDROSCOGGIN RIVER
DURHAM-LISBON ANDROSCOGGIN COUNTY

ABUTMENT NO. 2
FOOTING REINFORCEMENT

SHEET NUMBER

56

OF 87

Filename: ...\MSTA\056_N Abut2 Ftg Reinf.dgn Division: BRIDGE Username: common Date:7/17/2014

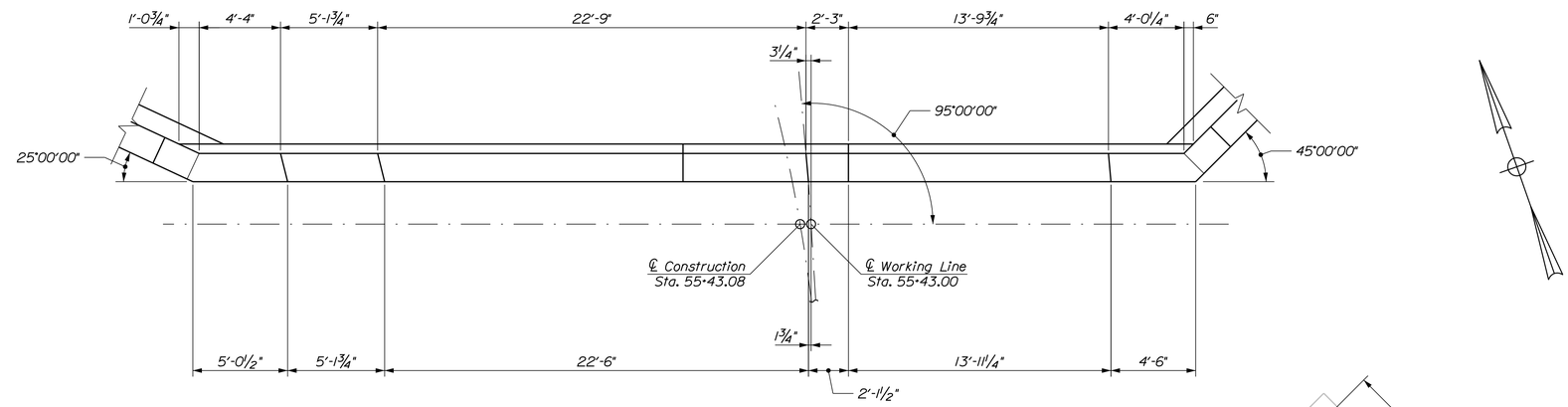

PLAN - BACKWALL AT ABUTMENT NO. 2

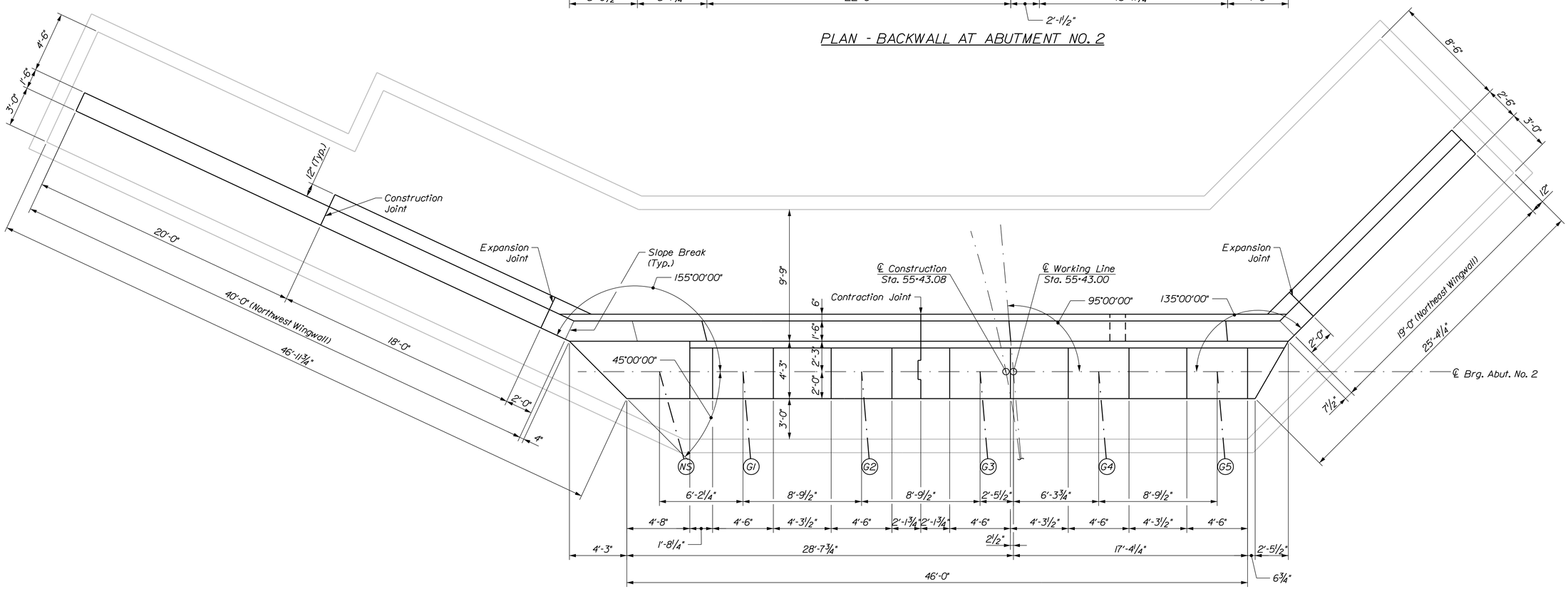

PLAN - ABUTMENT NO. 2

Stantec

STATE OF MAINE
DEPARTMENT OF TRANSPORTATION

BH-1823(900)

WIN 18239.00

BRIDGE NO. 3334

BRIDGE PLANS

PROJ. MANAGER	L. TIMBER-AKE	BY	DATE
DESIGN-DETAILED	DDT	JTS	JUNE 2014
CHECKED-REVIEWED	JHH	DDT\TWM	JUNE 2014
DESIGN2-DETAILED2			
DESIGN3-DETAILED3			
REVISIONS 1			
REVISIONS 2			
REVISIONS 3			
REVISIONS 4			
FIELD CHANGES			

SIGNATURE

P.E. NUMBER

DATE

DURHAM BRIDGE
ANDROSCOGGIN RIVER
DURHAM-LISBON ANDROSCOGGIN COUNTY

ABUTMENT NO. 2 PLAN

SHEET NUMBER

57

OF 87

Filename: ...\MSTA\057_N Abut2 Plan.dgn Division: BRIDGE Username: common Date:7/17/2014

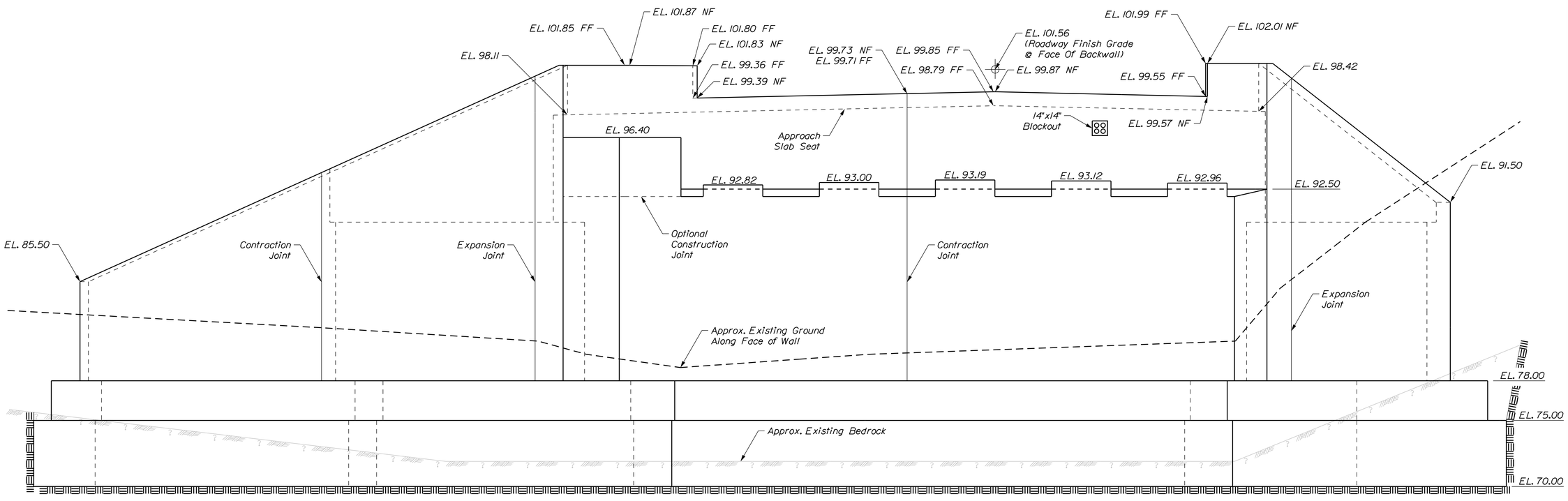

ELEVATION - ABUTMENT NO. 2

LEGEND

NF = Near Face
FF = Far Face

Stantec

STATE OF MAINE
DEPARTMENT OF TRANSPORTATION

BH-1823(900)

WIN 18239.00

BRIDGE NO. 3334

BRIDGE PLANS

PROJ. MANAGER	L. TIMBERLAKE		
DESIGN-DETAILED	DOT	JTS	JUNE 2014
CHECKED-REVIEWED	JRH	DOT\TWM	JUNE 2014
DESIGN2-DETAILED2			
DESIGN3-DETAILED3			
REVISIONS 1			
REVISIONS 2			
REVISIONS 3			
REVISIONS 4			
FIELD CHANGES			

SIGNATURE

P.E. NUMBER

DATE

DURHAM BRIDGE
ANDROSCOGGIN RIVER
DURHAM-LISBON ANDROSCOGGIN COUNTY

ABUTMENT NO. 2 ELEVATION

SHEET NUMBER

58

OF 87

Filename: ...\MSTA\058_N Abut2 Elev.dgn Division: BRIDGE Username: common Date:7/17/2014

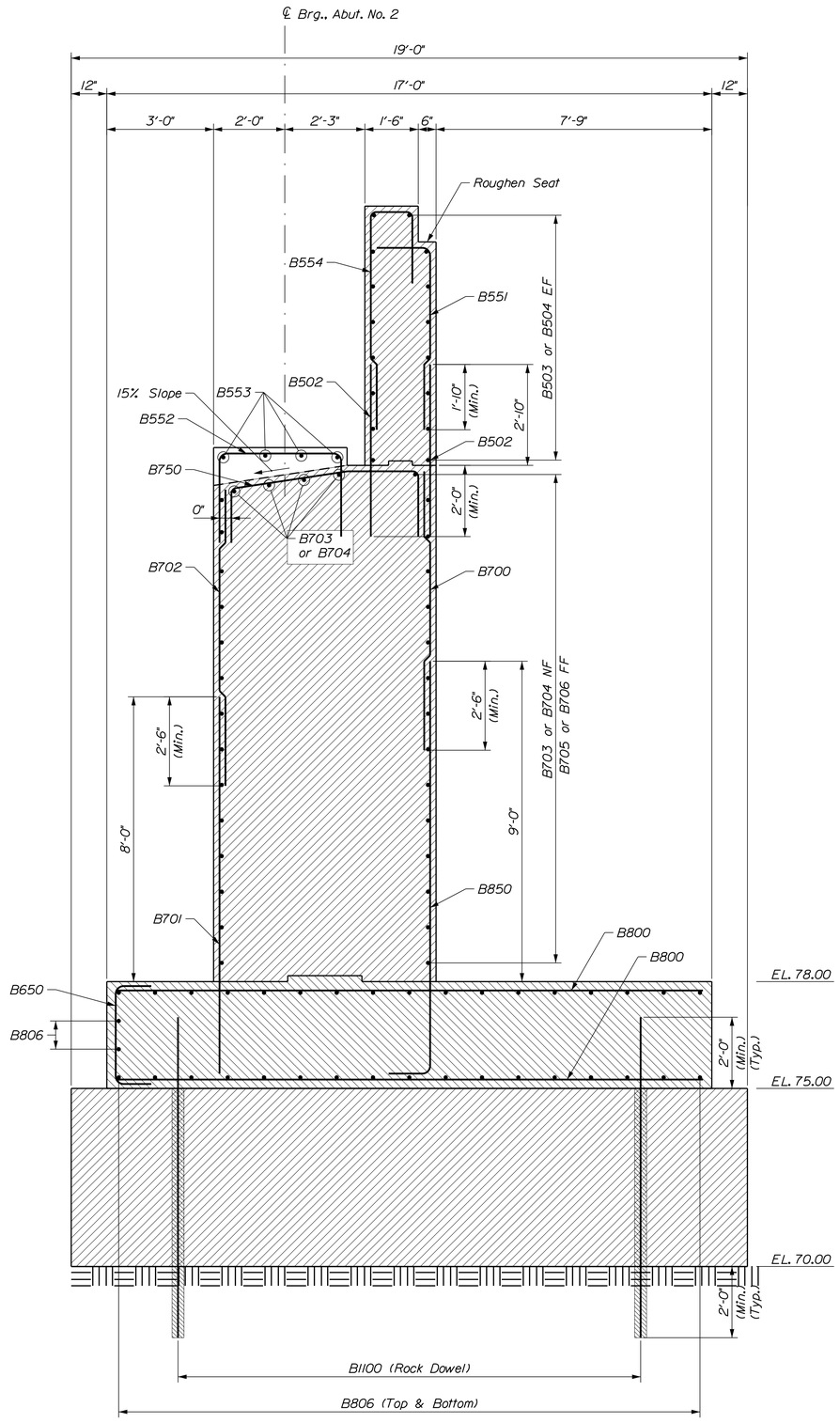

TYPICAL SECTION - ABUTMENT NO. 2

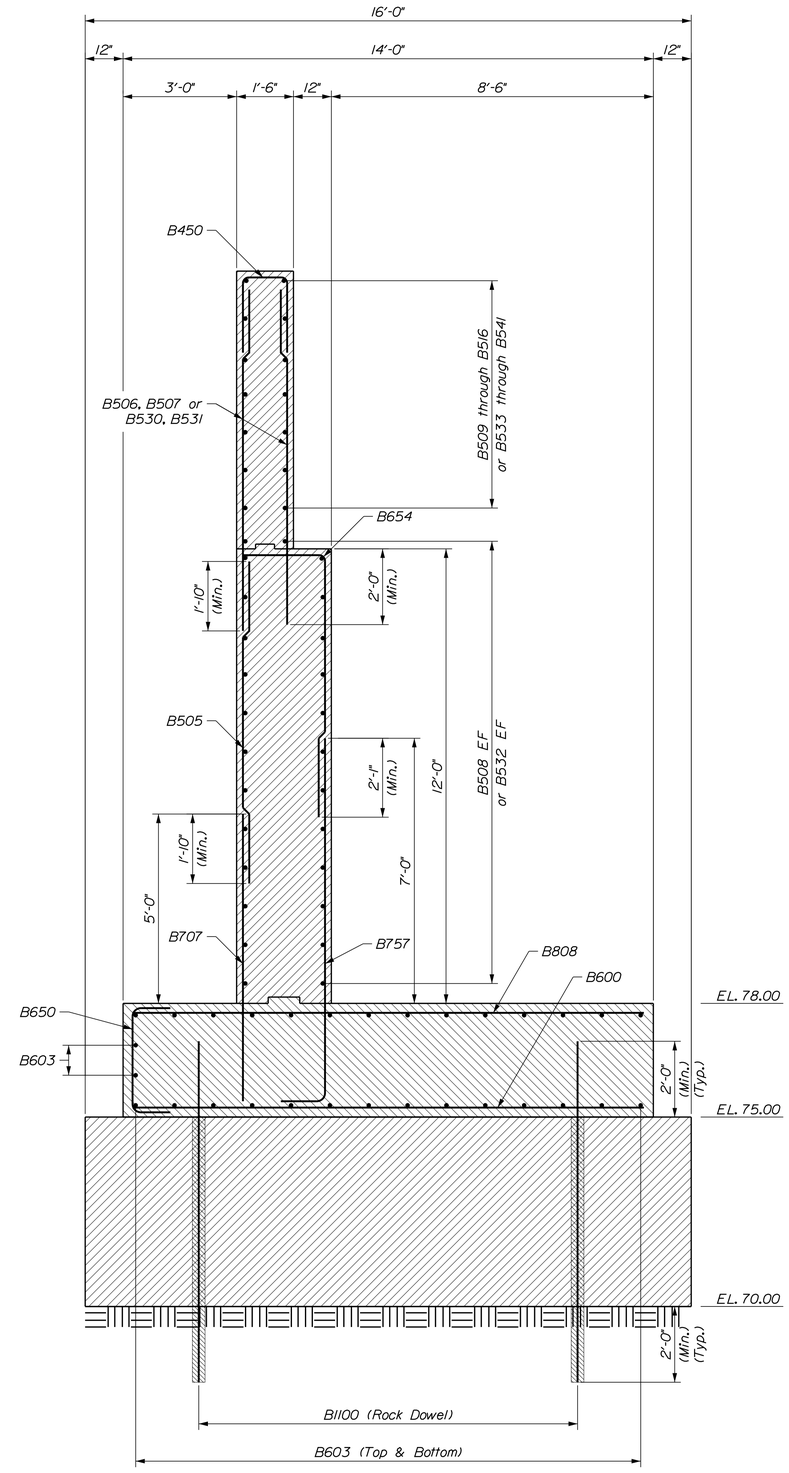

TYPICAL SECTION - ABUTMENT NO. 2 WINGWALL

LEGEND
NF = Near Face
FF = Far Face
EF = Each Face
MID = Middle

Stantec

STATE OF MAINE
DEPARTMENT OF TRANSPORTATION

BH-1823(900)

WIN 18239.00

BRIDGE NO. 3334

BRIDGE PLANS

PROJ. MANAGER	L. TIMBERLAKE	BY	DATE
DESIGN-DETAILED	DDT	JTS	JUNE 2014
CHECKED-REVIEWED	JRH	DDT\TWM	JUNE 2014
DESIGN2-DETAILED2			
DESIGN3-DETAILED3			
REVISIONS 1			
REVISIONS 2			
REVISIONS 3			
REVISIONS 4			
FIELD CHANGES			

SIGNATURE

P.E. NUMBER

DATE

DURHAM BRIDGE
ANDROSCOGGIN RIVER
DURHAM-LISBON ANDROSCOGGIN COUNTY

ABUTMENT NO. 2 SECTIONS

SHEET NUMBER
59
OF 87

Filename: ...\MSTA\059_N Abut2 Sections.dgn Division: BRIDGE Username: common Date:7/17/2014

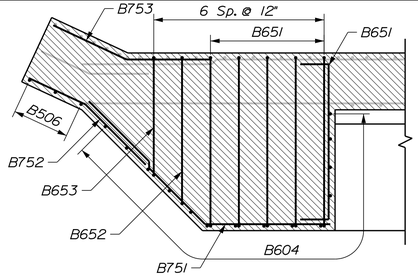

SECTION A-A

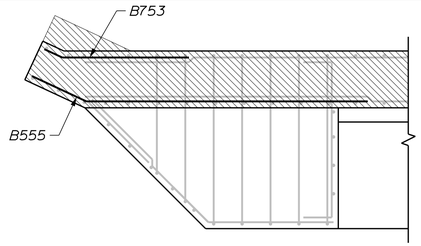

SECTION B-B

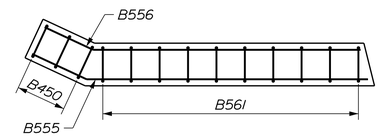

SECTION C-C

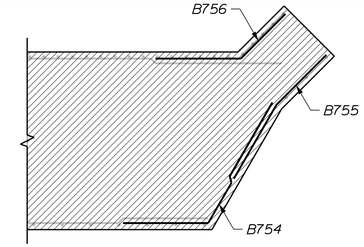

SECTION D-D

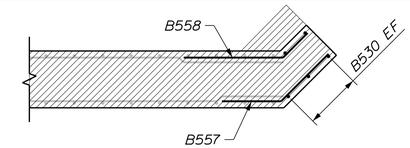

SECTION E-E

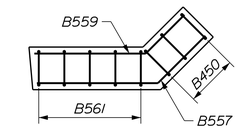

SECTION F-F

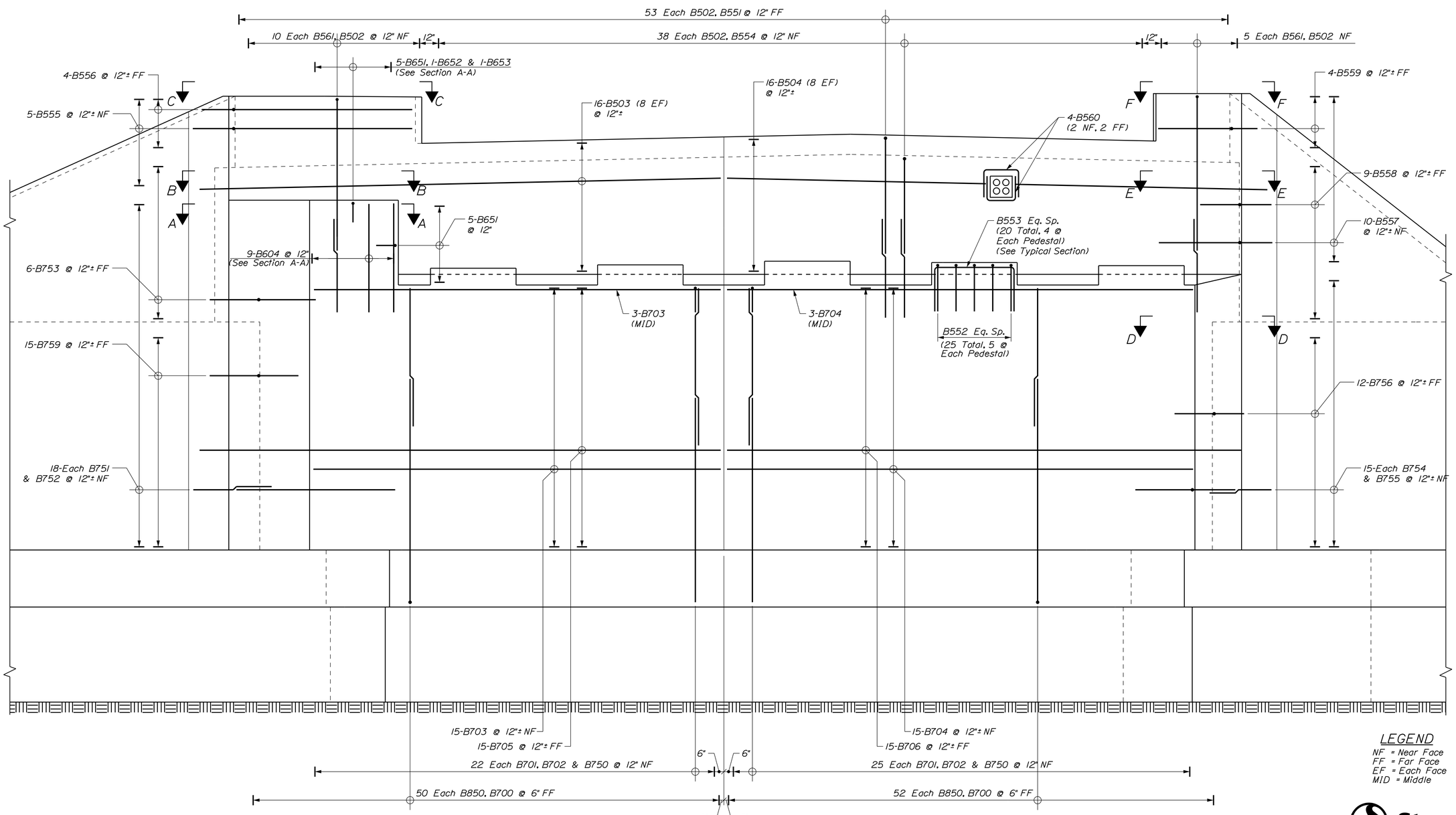

ELEVATION - ABUTMENT NO. 2 REINFORCEMENT

LEGEND
NF = Near Face
FF = Far Face
EF = Each Face
MID = Middle

Stantec

STATE OF MAINE
DEPARTMENT OF TRANSPORTATION

BH-1823(900)

WIN 18239.00

BRIDGE NO. 3334

BRIDGE PLANS

		BY	DATE
PROJ. MANAGER	L. TIMBERLAKE		
DESIGN-DETAILED	DOT	JTS	JUNE 2014
CHECKED-REVIEWED	JRH	DDT\TWM	JUNE 2014
DESIGN2-DETAILED2			
DESIGN3-DETAILED3			
REVISIONS 1			
REVISIONS 2			
REVISIONS 3			
REVISIONS 4			
FIELD CHANGES			

SIGNATURE

P.E. NUMBER

DATE

DURHAM BRIDGE
ANDROSCOGGIN RIVER
DURHAM-LISBON ANDROSCOGGIN COUNTY

ABUTMENT NO. 2
REINFORCEMENT

SHEET NUMBER
60
OF 87

Filename: ...\MSTA\060_N Abut2 Reinf.dgn Division: BRIDGE Username: common Date:7/17/2014

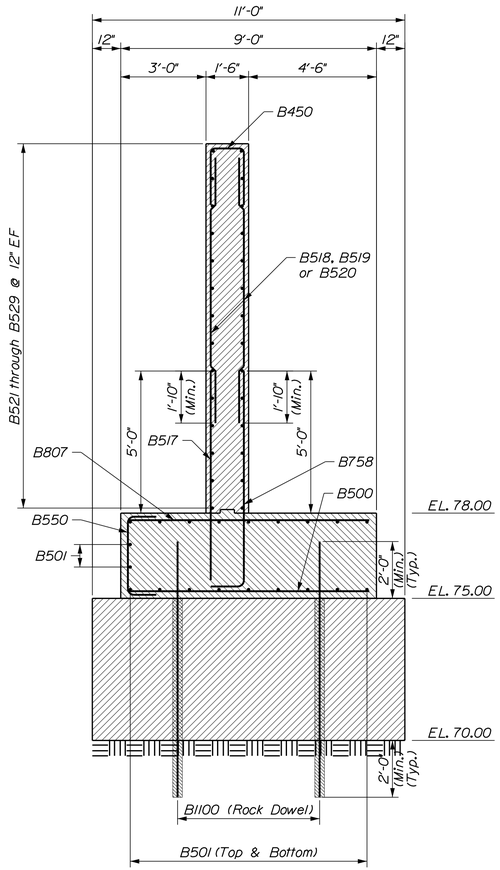

TYPICAL SECTION - ABUTMENT NO. 2 WINGWALL
(Short Section)

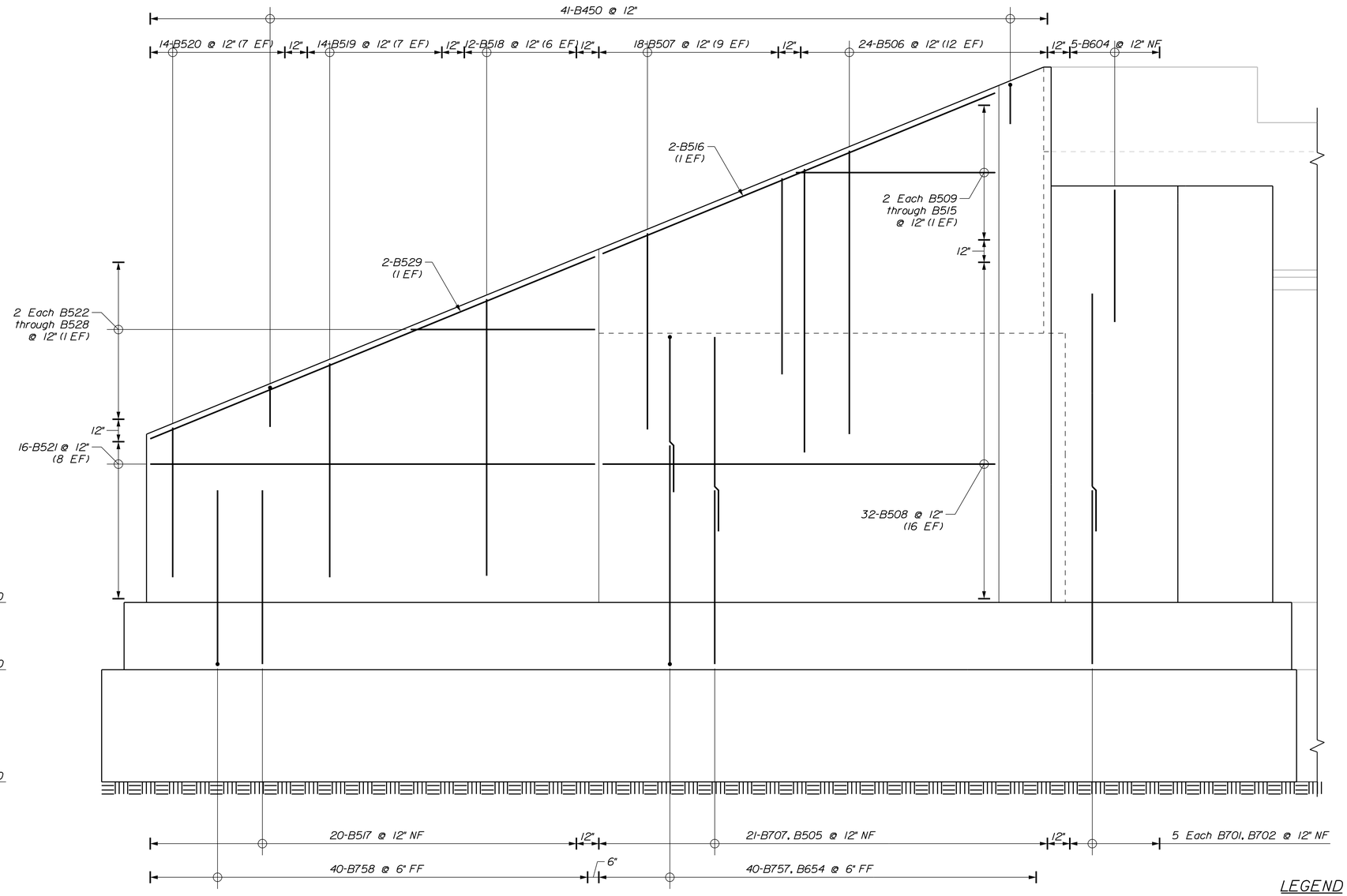

ABUTMENT NO. 2 NORTHWEST WINGWALL REINFORCING ELEVATION

LEGEND
NF = Near Face
FF = Far Face
EF = Each Face
MID = Middle

Stantec

STATE OF MAINE
DEPARTMENT OF TRANSPORTATION

BH-1823(900)

WIN 18239.00

BRIDGE NO. 3334

BRIDGE PLANS

SIGNATURE

P.E. NUMBER

DATE

PROJ. MANAGER	L. TIMBERLAKE	BY	DATE
DESIGN-DETAILED	DDT	JTS	JUNE 2014
CHECKED-REVIEWED	JHH	DDT\TWM	JUNE 2014
DESIGN2-DETAILED2			
DESIGN3-DETAILED3			
REVISIONS 1			
REVISIONS 2			
REVISIONS 3			
REVISIONS 4			
FIELD CHANGES			

DURHAM BRIDGE
ANDROSCOGGIN RIVER
DURHAM-LISBON ANDROSCOGGIN COUNTY

ABUTMENT NO. 2
NORTHWEST WINGWALL

SHEET NUMBER
61
OF 87

Filename: ...\061_N Abut2 NW WW Reinf.dgn Division: BRIDGE Username: common Date:7/17/2014

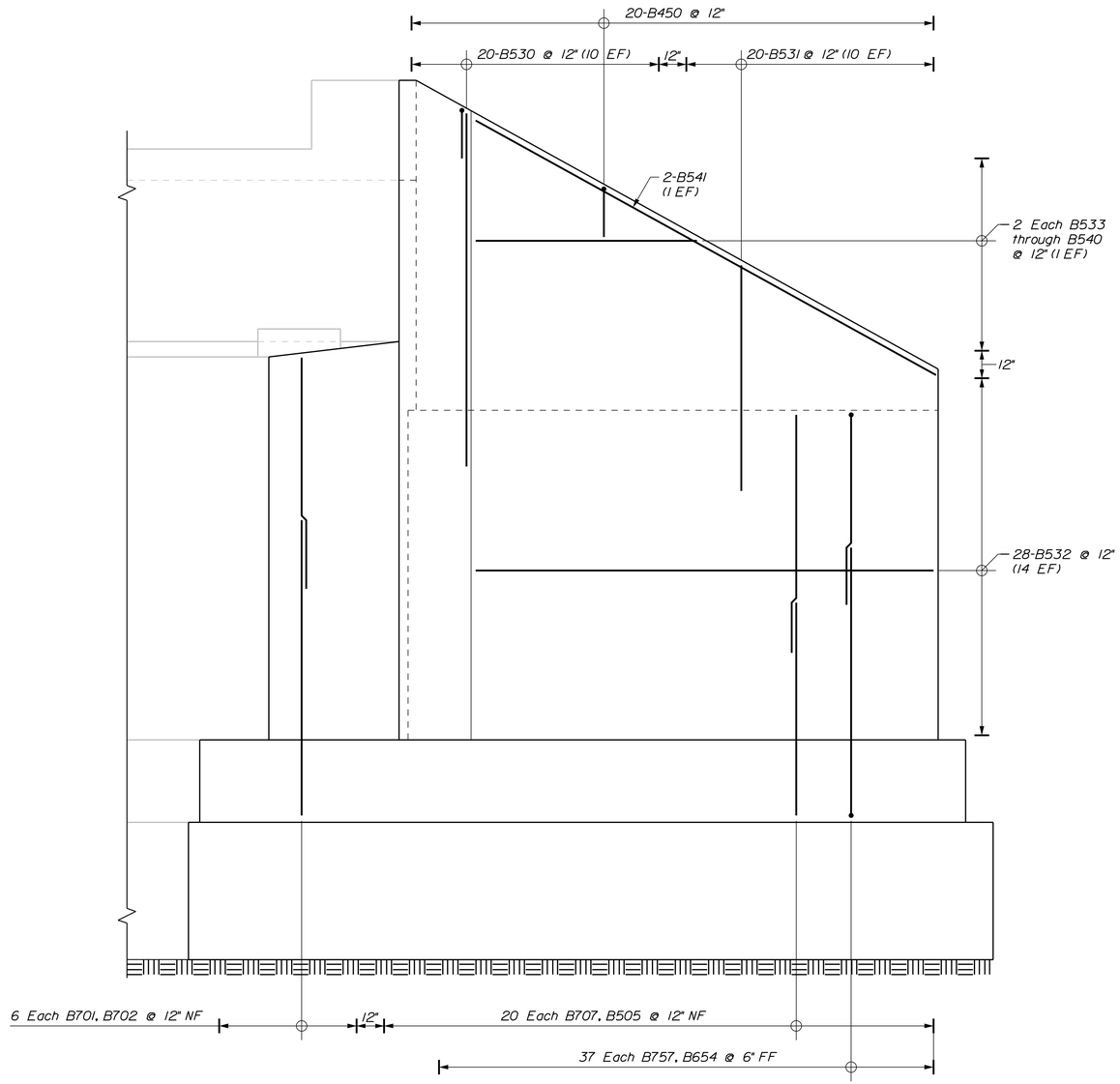

ABUTMENT NO. 2 NORTHEAST WINGWALL REINFORCING ELEVATION

LEGEND
NF = Near Face
FF = Far Face
EF = Each Face
MID = Middle

Stantec

STATE OF MAINE
DEPARTMENT OF TRANSPORTATION

BH-1823(900)

WIN 18239.00

BRIDGE NO. 3334

BRIDGE PLANS

PROJ. MANAGER	L. TIMBERLAKE	BY	DATE
DESIGN-DETAILED	DDT	JTS	JUNE 2014
CHECKED-REVIEWED	JHH	DDT\TWM	JUNE 2014
DESIGN2-DETAILED2			
DESIGN3-DETAILED3			
REVISIONS 1			
REVISIONS 2			
REVISIONS 3			
REVISIONS 4			
FIELD CHANGES			

SIGNATURE

P.E. NUMBER

DATE

DURHAM BRIDGE
ANDROSCOGGIN RIVER
DURHAM-LISBON ANDROSCOGGIN COUNTY

ABUTMENT NO. 2
NORTHEAST WINGWALL

SHEET NUMBER
62
OF 87

Filename: ...\062_N Abut2 NE WW Reinf.dgn Division: BRIDGE Username: common Date:7/17/2014

PIER DESIGN CRITERIA

1. Critical AASHTO Load Combination: Maine Modified Strength I with Ice

2. Buoyancy: Q2 - Water level assumed at EL. 76.3
Q50 - Water level assumed at EL. 82.8

3. Stream flow: Q2 - Velocity of 8.5 fps
Q50 - Velocity of 11.5 fps
Applied 30 degrees to longitudinal centerline of pier. Debris loading accounted for by increasing exposed surface area of pier by 25%.

4. Wind: 106 mph

5. Ice: Q2 - Thickness 2'-0", pressure 28.8 ksf (3'-0" thickness at Extreme Event II)
Q50 - Thickness of 2'-0", pressure 14.4 ksf (3'-0" thickness at Extreme Event II)
30% of nose force applied transverse to pier.

PIER SEAL COFFERDAM NOTES

1. When sheet piling is used for seal cofferdams, appropriate rolled corners shall be used, and the inside face of the sheet piling shall be at or outside of the seal concrete dimensions shown.

2. The seal concrete placement dimensions shown represent the minimum seal size necessary to meet design requirements and are not based on the use of any particular sheet pile section.

3. The horizontal pay limit for seal concrete will be to the dimensions shown on the plans. No additional payment will be made for concrete placed outside these limits.

4. The depth of the seal is set for a maximum water elevation of 80.3. At this water elevation, in order to provide sufficient resistance to buoyancy, the top of seal elevations require that the maximum average bottom of seal elevation be less than or equal to EL. 67.5. If the water elevation at the time of construction is higher or the elevation of the bottom of seal differs from the elevations noted, the depth of the seal shall be adjusted.

5. If the average elevation of the bottom surface of the seal exceeds the respective limits, the pertinent information shall be forwarded to the Resident for new seal depth design. The Contractor shall adequately vent the cofferdams to ensure the maximum water surface elevation remains at 80.3 feet or below.

PIER NOTES

1. The maximum factored applied footing pressure is 31.9 ksf.

2. The maximum factored applied seal pressure is 26.4 ksf.

3. Reinforcing steel shall have a minimum concrete cover of 3 inches unless otherwise noted.

4. The bedrock will vary in nature, slope, and degree of fracturing. Bearing surface elevations shown are estimated based on the boring information. Actual rock elevations may vary. After the foundation excavations are completed and all unsound bedrock removed, the Contractor shall survey the foundation bedrock and provide the exact bedrock elevations to the Resident for review and approval by the Engineer.

5. If the bedrock elevations vary from the elevations assumed in the development of the plan set, the pier may need to be modified. The Contractor shall grant the Department seven (7) Calendar Days to modify the plans from the date the Resident accepts the bedrock survey.

6. Foundation concrete shall be placed on bedrock cleaned of all loose, weathered or fractured rock and loose soil. Prior to placing the footing/seal, the bearing surface shall be washed with high pressure water and air, and smooth bedrock shall be roughened. Where the bedrock surface slope exceeds 2H:1V the bedrock surface shall be benched in level steps or made less steep than 2H:1V.

7. Cofferdam excavation inspection shall be the responsibility of the Contractor and shall be conducted in accordance with Special Provision 511 Cofferdams. An inspection report shall be submitted to the Resident for review. The report shall include bedrock elevation measurements and observations and shall assess the levelness, cleanliness and sediment thickness. Sediment measurements and bedrock elevation measurements shall be taken at a minimum of 20 evenly distributed locations.

8. When the prepared bedrock surface is below the bottom of the footing elevation shown on the plans concrete fill may be placed to fill the void if constructed in the-dry. Concrete fill shall be Class A concrete. Alternatively the footing thickness may be increased up to an additional 1 foot as approved by the Resident. If the footing thickness is increased, the top of footing elevation shall be as shown on the plans.

9. When bedrock protrudes above the bottom of the footing, the footing may be raised and vertical reinforcing may be cut in the field with the approval of the Resident. The minimum allowable footing thickness is shown on the plans. Payment for adjusting footing depth and adjusting reinforcing steel will be considered incidental to related contact items. No separate payment will be made.

10. At the option of the Resident, bedrock that protrudes above the bottom of the footing/seal elevation may be removed. Payment for bedrock removal will be made under Item No. 206.11, Structural Rock Excavation - Piers.

PIER ROCK DOWEL NOTES

1. The connection between the concrete seal and the bearing surface, as well as the concrete seal and the pier footing shall be doweled.

2. The method of installing dowels shall be approved by the Resident and shall be as specified below.

3. Water pressure testing shall be performed in drilled dowel holes and the results shall be evaluated in accordance with Special Provision 910. Payment will be made under Item No. 910.30 - Special Work - Pressure Testing.

4. If a dowel hole does not meet the criteria provided in Special Provision 910 for watertightness, consolidation grouting & re-drilling shall be conducted in accordance with Special Provision 910, Item No. 910.30 - Special Work - Consolidation Grouting and Re-Drilling.

5. Holes drilled for #11 dowel reinforcing steel shall be a minimum diameter of 3½ inches.

6. The Geotechnical Engineer shall be provided the opportunity to review and approve the exposed bedrock surface. Inspection of the excavated rock bearing surface is necessary at the pier to consider the stability of the supporting rock mass.

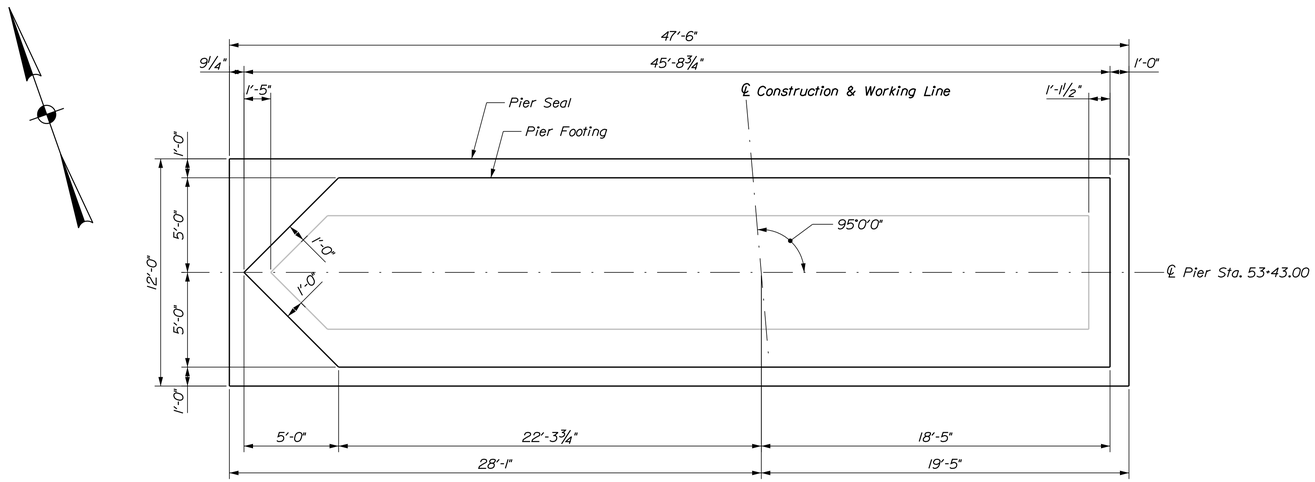

PLAN - PIER SEAL & FOOTING

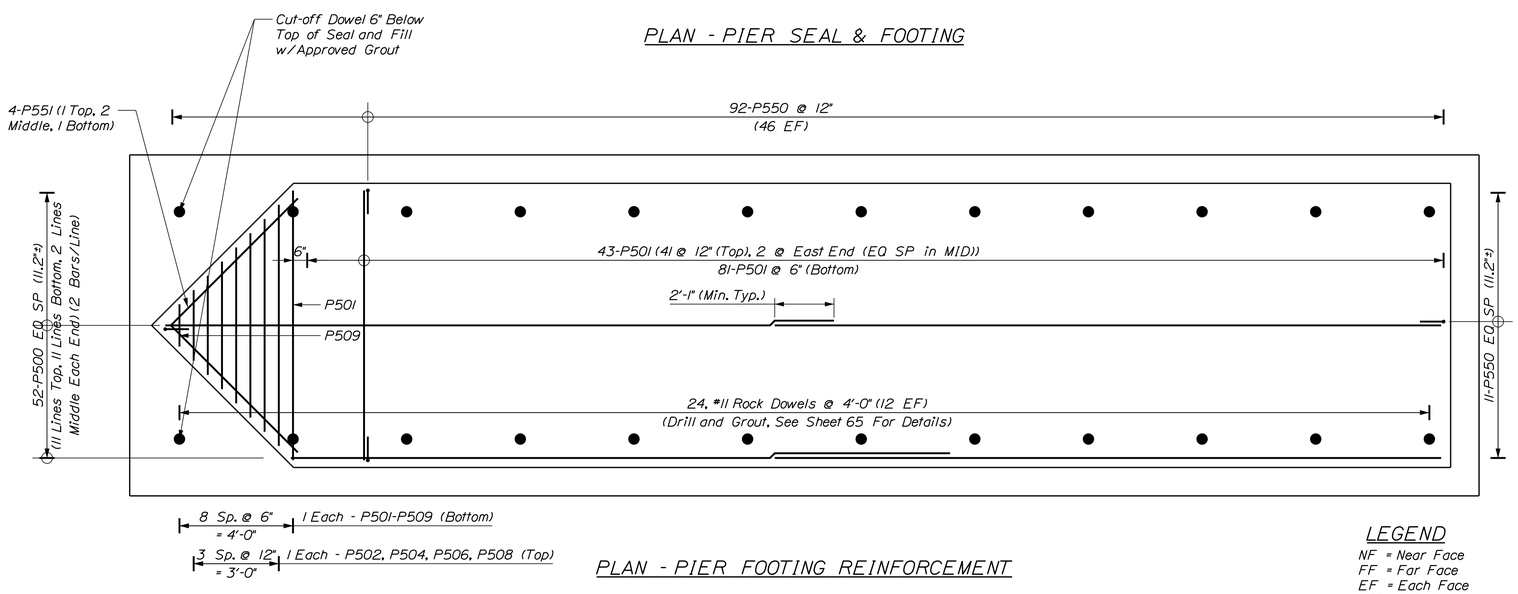

PLAN - PIER FOOTING REINFORCEMENT

LEGEND

NF = Near Face
FF = Far Face
EF = Each Face
MID = Middle

Stantec

STATE OF MAINE
DEPARTMENT OF TRANSPORTATION

BH-1823(900)

WIN 18239.00

BRIDGE NO. 3334

BRIDGE PLANS

PROJ. MANAGER	L. TIMBERLAKE	BY	DATE
DESIGN-DETAILED	DOT	JTS	JUNE 2014
CHECKED-REVIEWED	TEK	TEK/TWM	JUNE 2014
DESIGN2-DETAILED2			
DESIGN3-DETAILED3			
REVISIONS 1			
REVISIONS 2			
REVISIONS 3			
REVISIONS 4			
FIELD CHANGES			

SIGNATURE

P.E. NUMBER

DATE

DURHAM BRIDGE
ANDROSCOGGIN RIVER
DURHAM-LISBON ANDROSCOGGIN COUNTY

PIER SEAL & FOOTING

SHEET NUMBER
63
OF 87

Filename: ...\BRIDGE\MSTA\063_Pier_Sht1.dgn Division: BRIDGE Username: common Date:7/17/2014

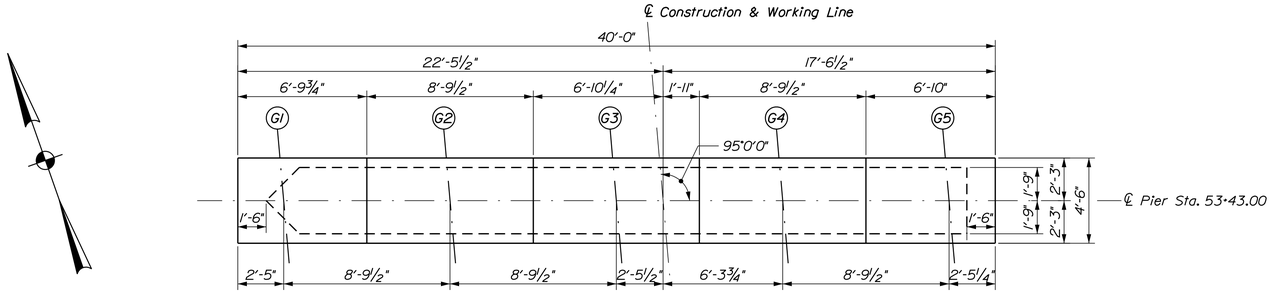

PLAN - PIER CAP

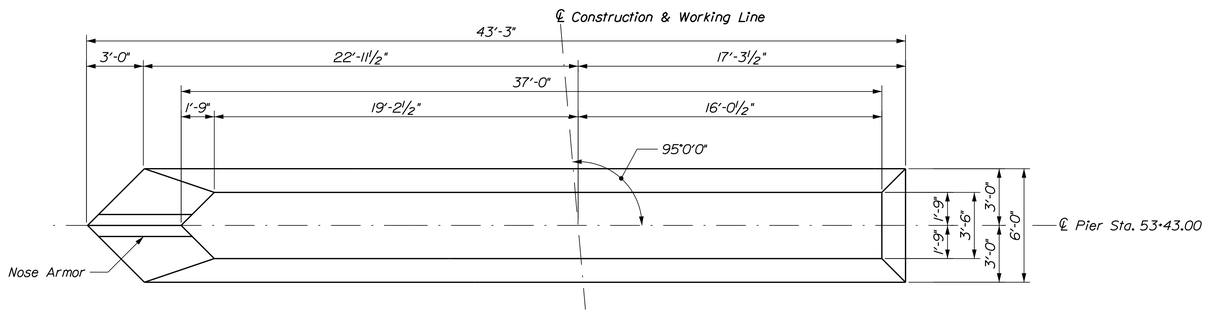

PLAN - PIER SHAFT

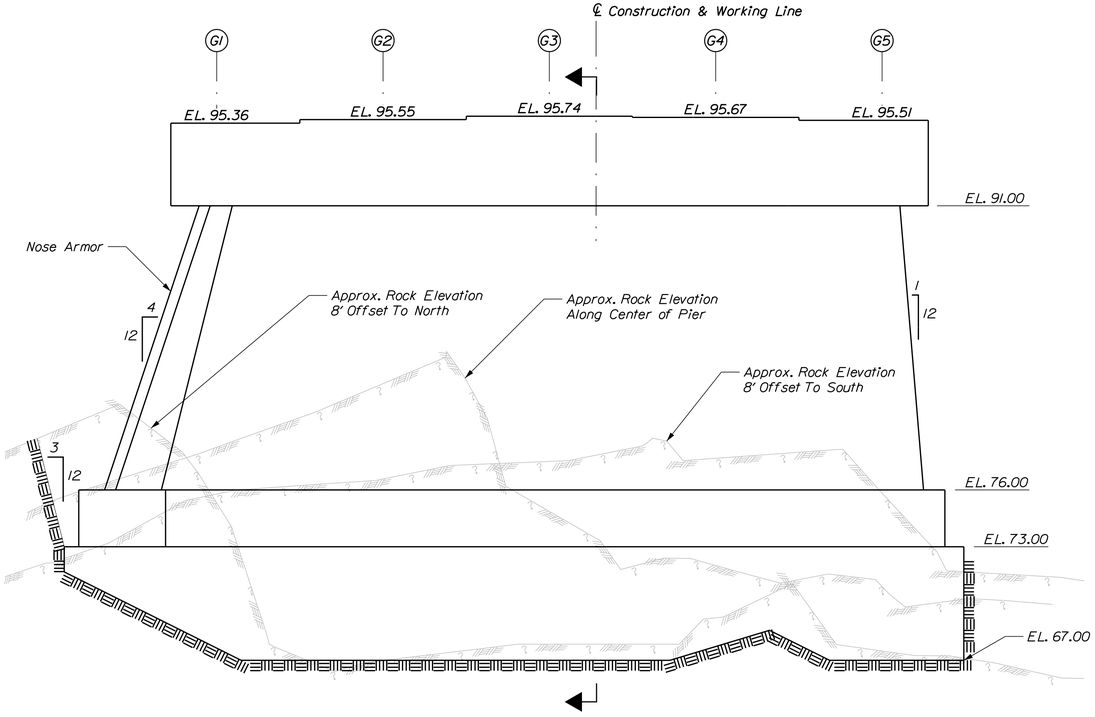

ELEVATION - PIER

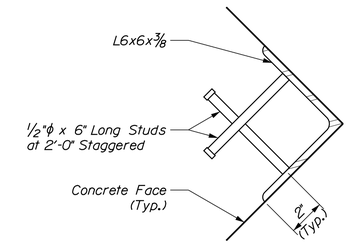

NOSE ARMOR DETAIL

PIER NOSE ARMOR NOTES

1. Payment for furnishing and placing the concrete anchors and pier nose shall be incidental to the unit price bid for the concrete pier.

2. Pier Nose Protection shall be extended from top of footing to EL. 91.00.

3. Nose armor, including anchor studs, shall be cleaned and galvanized in accordance with Section 506 of the Contract Special Provisions and included in Pay Item 502.239 - Structural Concrete Piers.

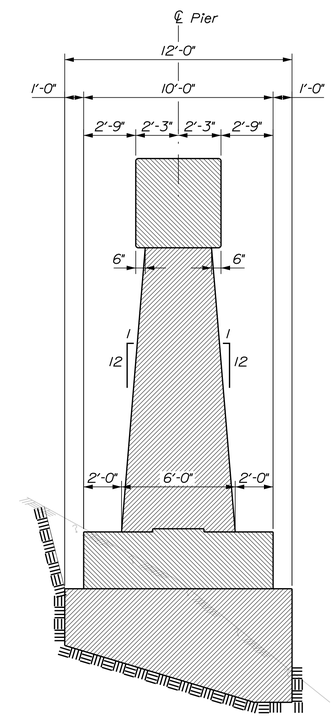

SECTION - PIER

Stantec

STATE OF MAINE
DEPARTMENT OF TRANSPORTATION

BH-1823(900)

WIN 18239.00

BRIDGE NO. 3334

BRIDGE PLANS

PROJ. MANAGER	L. TIMBERLAKE	BY	DATE
DESIGN-DETAILED	DDT	JTS	JUNE 2014
CHECKED-REVIEWED	TEK	TEK/TWM	JUNE 2014
DESIGN2-DETAILED2			
DESIGN3-DETAILED3			
REVISIONS 1			
REVISIONS 2			
REVISIONS 3			
REVISIONS 4			
FIELD CHANGES			

SIGNATURE

P.E. NUMBER

DATE

DURHAM BRIDGE
ANDROSCOGGIN RIVER
DURHAM-LISBON ANDROSCOGGIN COUNTY

PIER PLAN

SHEET NUMBER

64

OF 87

Filename: ...\BRIDGE\MSTA\064_Pier_Sht2.dgn Division: BRIDGE Username: common Date:7/17/2014

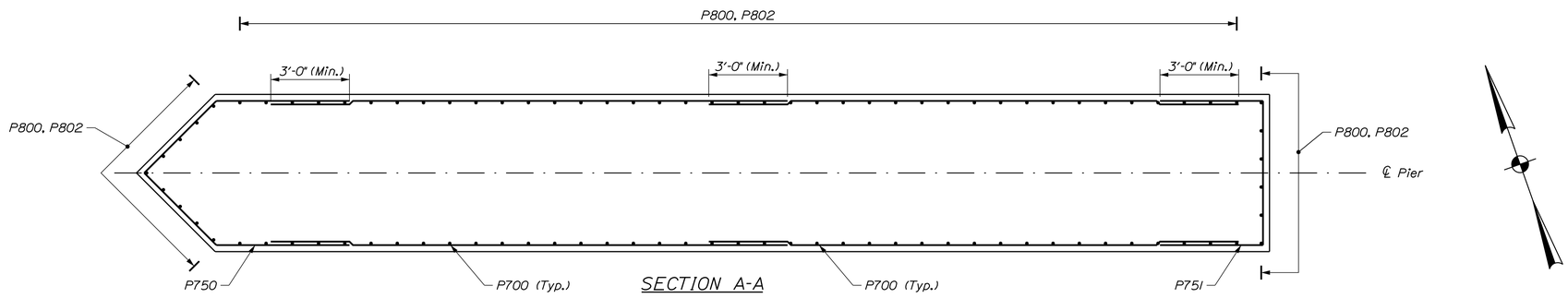

SECTION A-A

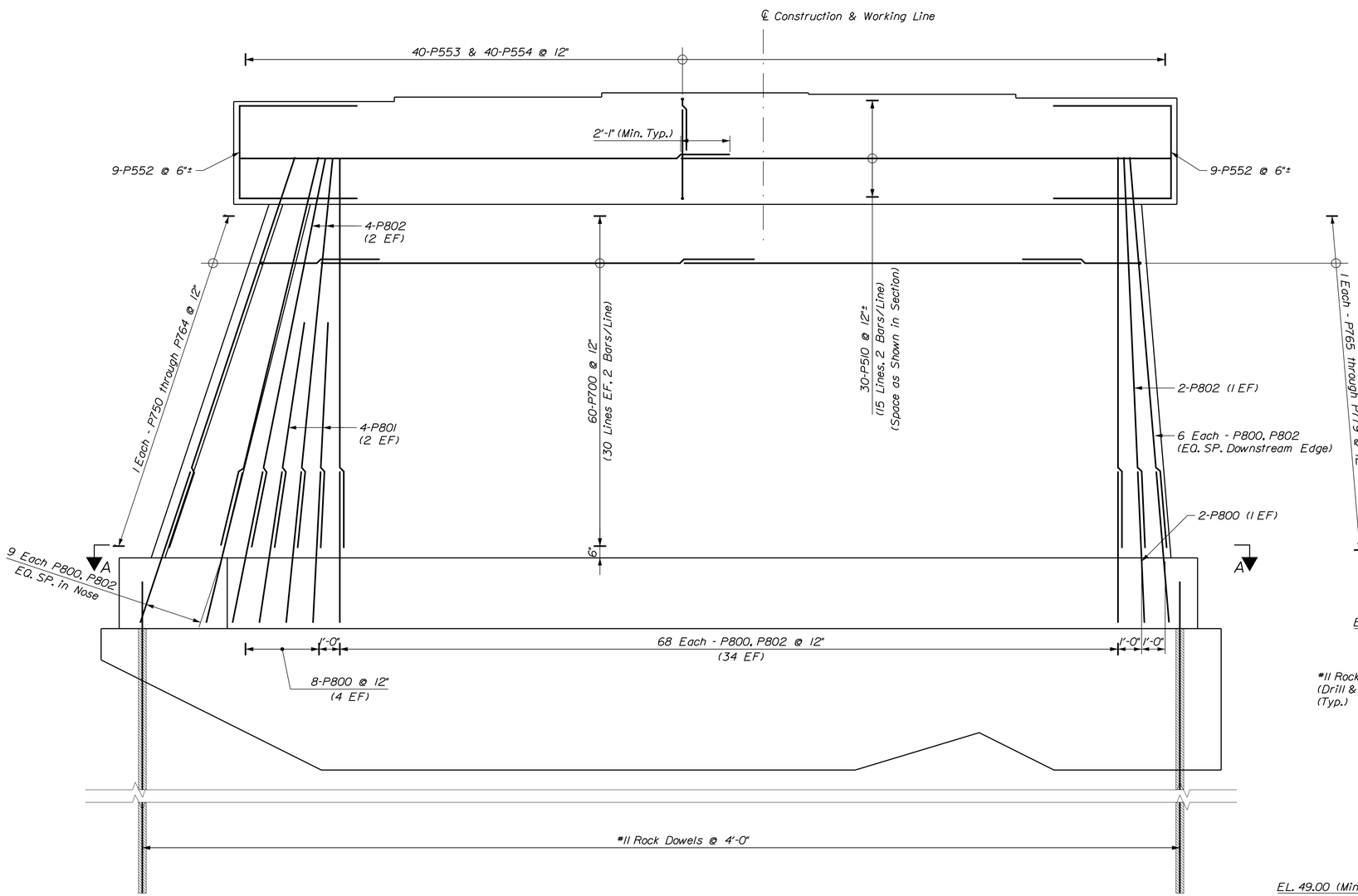

ELEVATION - PIER REINFORCING

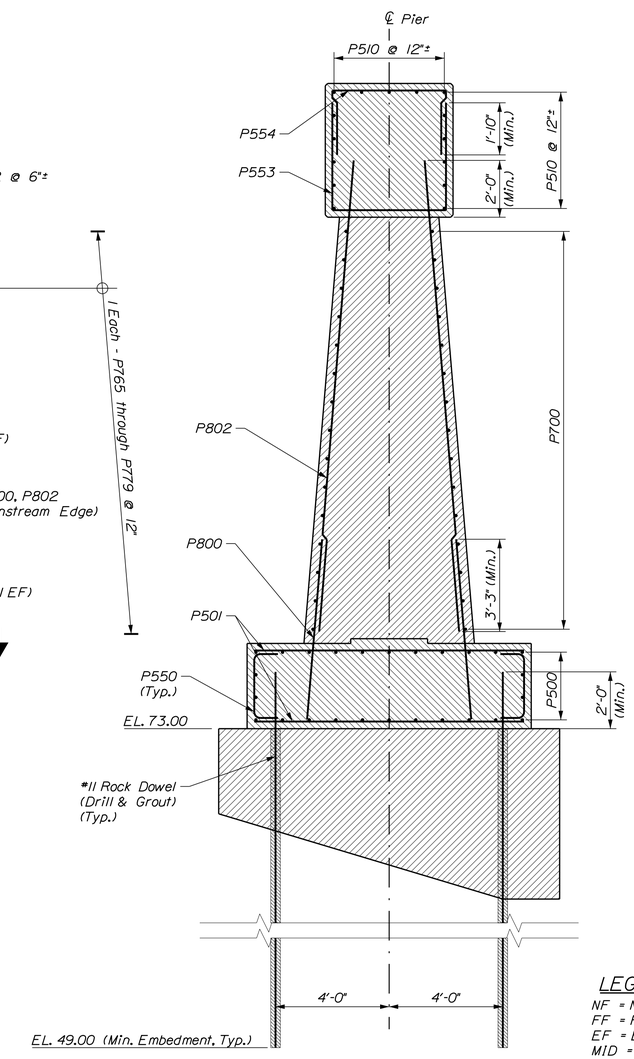

SECTION - PIER REINFORCING

LEGEND

NF = Near Face
FF = Far Face
EF = Each Face
MID = Middle

Stantec

STATE OF MAINE
DEPARTMENT OF TRANSPORTATION

BH-1823(900)

WIN 18239.00

BRIDGE NO. 3334

BRIDGE PLANS

PROJ. MANAGER	L. TIMBERLAKE	BY	DATE
DESIGN-DETAILED	DOT	DOT	JUNE 2014
CHECKED-REVIEWED	TEK	TEK/TWM	JUNE 2014
DESIGN2-DETAILED2			
DESIGN3-DETAILED3			
REVISIONS 1			
REVISIONS 2			
REVISIONS 3			
REVISIONS 4			
FIELD CHANGES			

SIGNATURE

P.E. NUMBER

DATE

DURHAM BRIDGE
ANDROSCOGGIN RIVER
DURHAM-LISBON ANDROSCOGGIN COUNTY

PIER REINFORCEMENT

SHEET NUMBER

65

OF 87

Filename: ...\BRIDGE\MSTA\065_Pier_Sht3.dgn Division: BRIDGE Username: common Date:7/17/2014

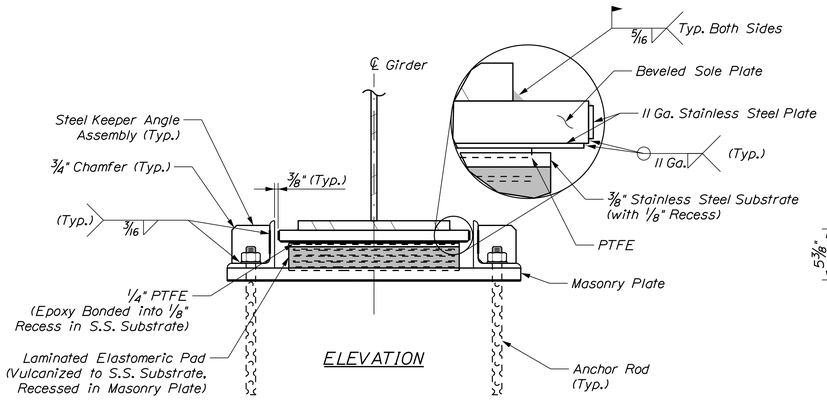

ELEVATION

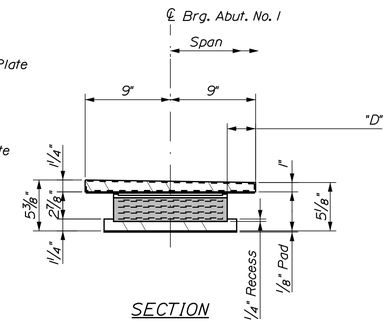

SECTION

TEMPERATURE ADJUSTMENT	
TEMP. (°F)	"D" (IN)
45 °F	3.00
50 °F	2.87
55 °F	2.73
60 °F	2.60
65 °F	2.47
70 °F	2.34
75 °F	2.20
80 °F	2.07
85 °F	1.94
90 °F	1.81

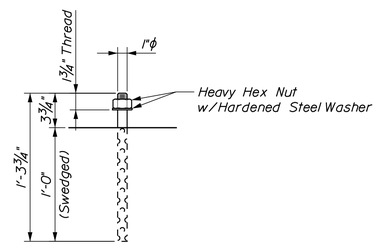

ANCHOR ROD DETAIL

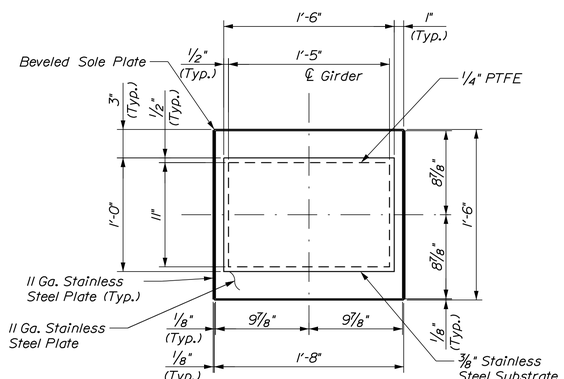

SOLE PLATE PLAN
(Looking Up From Bottom of S.S. Substrate)

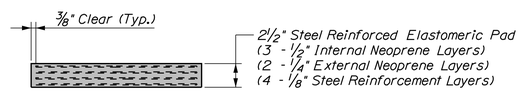

ELASTOMERIC PAD SECTION

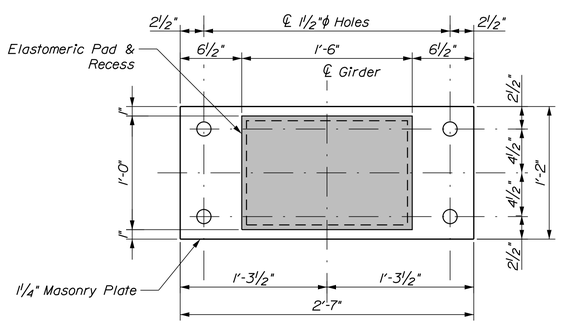

MASONRY PLATE PLAN
(Looking Down at Laminated Pad)
(Keeper Not Shown)

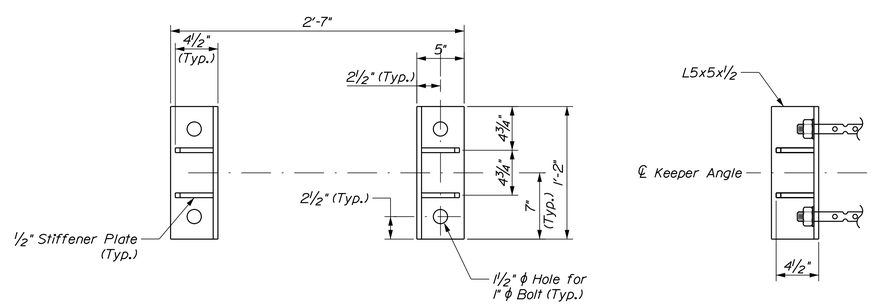

KEEPER ANGLE ASSEMBLY

EXPANSION BEARING DETAIL
5 Assemblies Required @ Abutment No. 1

ELASTOMERIC BEARING NOTES

1. The design temperature and range shall be 125 °F (-20 °F to 105 °F).

2. The elastomer shall be 100% neoprene.

3. The shear modulus of the elastomer shall be 150 psi ± 15%.

4. Masonry plates, sole plates, shear blocks, keeper angles and plate washers shall meet the requirements of ASTM A 709/A 709M, Grade 50 or 50W.

5. Anchor rods shall meet the requirements of ASTM F 1554, Grade 55 and shall be swedged on the embedded portion of the rod.

6. Heavy hex nuts for anchor rods shall meet the requirements of ASTM A 563M, Class 5.

7. Masonry plates, sole plates, keeper angles, and shear blocks shall be galvanized in accordance with Section 506. Anchor rods, washers, nuts and shear pins shall be galvanized to ASTM A 153 or ASTM B 695, Class 50, Type 1. Payment for galvanizing shall will be considered incidental to the elastomeric bearing pay items.

8. Vulcanizing of the elastomer to the steel plates shall be done during the primary mold process.

9. All bearings shall be marked prior to shipping. The marks shall include the bearing location on the bridge and a direction arrow that points upstation. All marks shall be permanent and shall be visible after the bearing is installed.

10. Bearings shall be covered during transit.

11. The bearings are designed so that the superstructure may be erected when the ambient air temperature is within the range of 65°F and 90°F. If the ambient air temperature is outside this range, the bearings shall be reset as directed by the Resident.

12. All necessary precautions shall be taken to protect bearing components from field weld flash and spatter. Heat from welding operations shall be controlled such that steel adjacent to the elastomer does not exceed 200 °F. The temperature shall be verified by the use of temperature indicating crayons or other suitable means.

13. After the sole plate has been welded to the structural steel, the shear blocks, the top 5 inches of the anchor rods, the plate washers and the exposed surface of the sole plates, including the anchor bolt holes, shall be treated with a dielectric material as approved by the Resident.

PTFE SLIDING SURFACE NOTES

1. The PTFE (Teflon) surface shall be made of pure virgin PTFE resin fabricated as unfilled sheet with a dimpled-lubricated surface conforming to AASHTO LRFD Bridge Design Specifications, Section 14.7.2 "PTFE Sliding Surfaces" and AASHTO LRFD Bridge Construction Specifications, Section 18.8.2 "Materials" and Section 18.8.3 "Fabrication Requirements".

2. The PTFE shall be bonded to the stainless steel substrate by an approved epoxy resin under factory-controlled conditions and in accordance with written instructions of the manufacturer of the adhesive.

3. The stainless steel mating surface shall be fabricated in accordance with AASHTO LRFD Bridge Design Specifications, Section 14.7.2 "Mating Surface".

4. The expansion joint shall be preset to the temperature anticipated at the time of installation. Final setting in the field shall be determined by the Resident (See Temperature Adjustment Table).

ABUT. NO. 1 - SERVICE I DESIGN LOADS & MOVEMENT		
NON-COMPOSITE DEAD LOAD	49	KIP
SUPERIMPOSED DEAD LOAD (DW + DC)	23	KIP
LIVE LOAD (HL-93)	125	KIP
LIVE LOAD ROTATION	0.002	RAD
COMPRESSIVE DEFLECTION	0.033	IN
TOTAL MOVEMENT (ΔT = 125° F)	3.32	IN
FACTORED SHEAR DEFORMATION	N/A	IN

Stantec

STATE OF MAINE
DEPARTMENT OF TRANSPORTATION

BH-1823(900)

WIN 18239.00

BRIDGE NO. 3334

BRIDGE PLANS

		BY	DATE
PROJ. MANAGER	L. TIMBERLAKE		
DESIGN-DETAILED	DDT	JTS	JUNE 2014
CHECKED-REVIEWED	AML	DDT\TWM	JUNE 2014
DESIGN2-DETAILED2			
DESIGN3-DETAILED3			
REVISIONS 1			
REVISIONS 2			
REVISIONS 3			
REVISIONS 4			
FIELD CHANGES			

SIGNATURE

P.E. NUMBER

DATE

DURHAM BRIDGE
ANDROSCOGGIN RIVER
DURHAM-LISBON ANDROSCOGGIN COUNTY

ABUTMENT NO. 1 BEARINGS

SHEET NUMBER
66
OF 87

Filename: ...\MSTA\066_Abut 1 Brgs.dgn Division: BRIDGE Username: common Date:7/17/2014

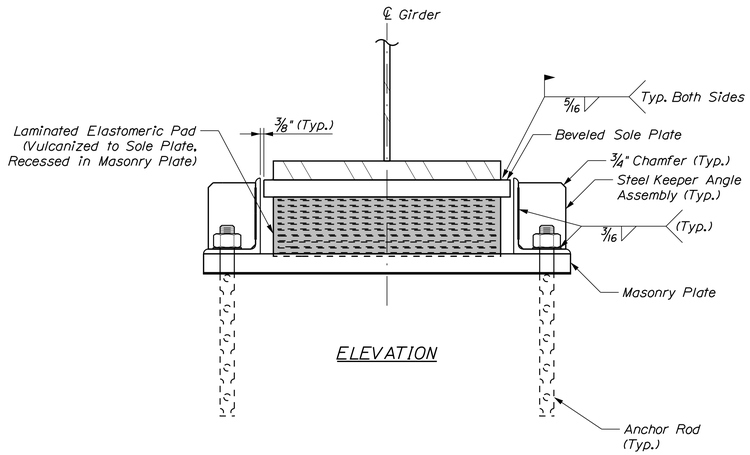

ELEVATION

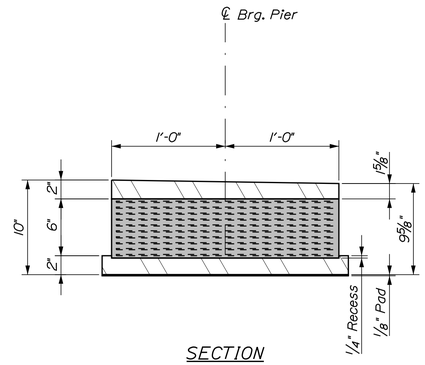

SECTION

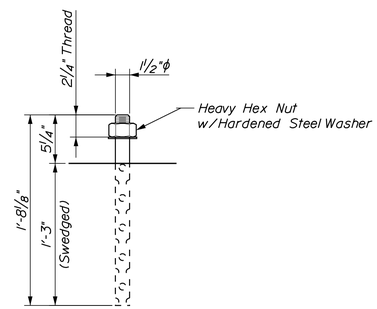

ANCHOR ROD DETAIL

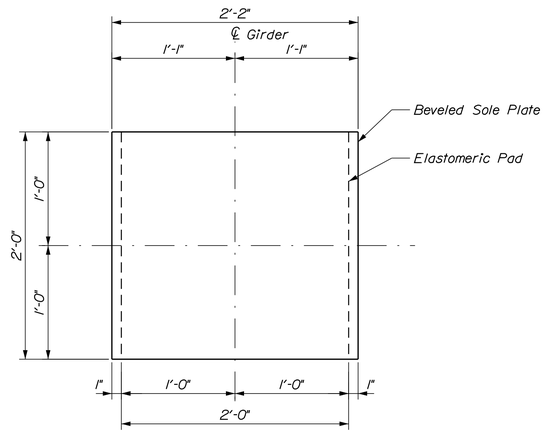

SOLE PLATE PLAN
(Looking Up at Bottom of Beveled Sole Plate)

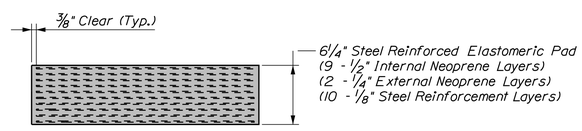

ELASTOMERIC PAD SECTION

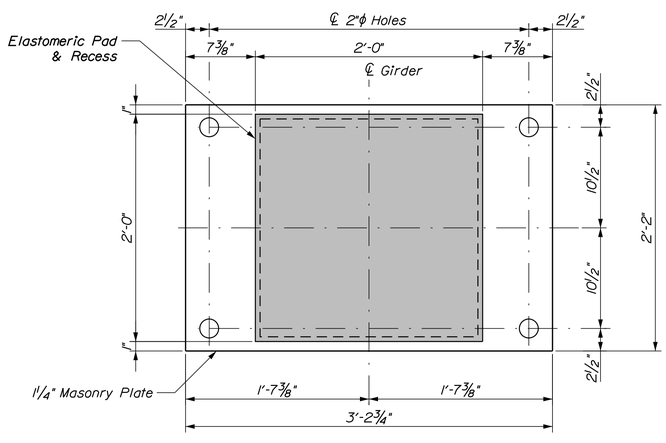

MASONRY PLATE PLAN
(Looking Down at Laminated Elastomeric Pad)
(Keeper Not Shown)

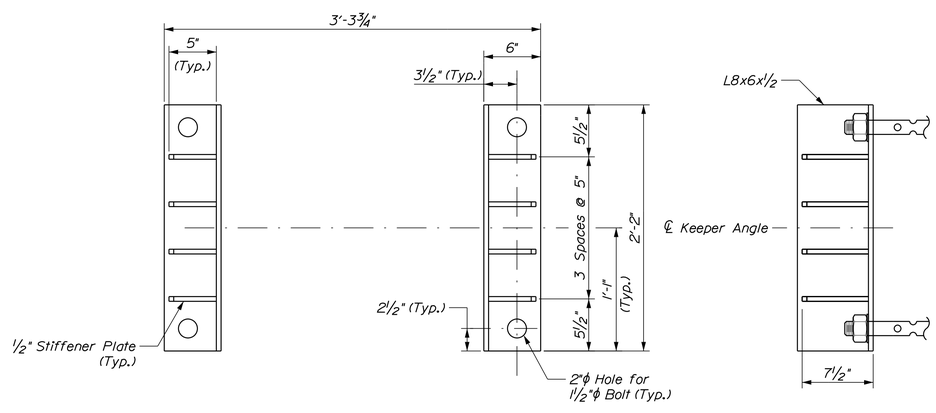

KEEPER ANGLE ASSEMBLY

EXPANSION BEARING DETAIL
5 Assemblies Required @ Pier

PIER - SERVICE I DESIGN LOADS & MOVEMENT		
NON-COMPOSITE DEAD LOAD	301	KIP
SUPERIMPOSED DEAD LOAD (DW + DC)	118	KIP
LIVE LOAD (HL-93)	285	KIP
LIVE LOAD ROTATION	0.003	RAD
COMPRESSIVE DEFLECTION	0.029	IN
TOTAL MOVEMENT (ΔT = 125° F)	1.95	IN
FACTORED SHEAR DEFORMATION	2.06	IN

Stantec

STATE OF MAINE
DEPARTMENT OF TRANSPORTATION

BH-1823(900)

WIN 18239.00

BRIDGE NO. 3334

BRIDGE PLANS

		BY	DATE
PROJ. MANAGER	L. TIMBERLAKE		
DESIGN-DETAILED	DOT	JTS	JUNE 2014
CHECKED-REVIEWED	AML	DDT\TWM	JUNE 2014
DESIGN2-DETAILED2			
DESIGN3-DETAILED3			
REVISIONS 1			
REVISIONS 2			
REVISIONS 3			
REVISIONS 4			
FIELD CHANGES			

SIGNATURE

P.E. NUMBER

DATE

DURHAM BRIDGE
ANDROSCOGGIN RIVER
DURHAM-LISBON ANDROSCOGGIN COUNTY

PIER BEARINGS

SHEET NUMBER
67
OF 87

Filename: ...\BRIDGE\MSTA\067_Pier Brgs.dgn Division: BRIDGE Username: common Date:7/17/2014

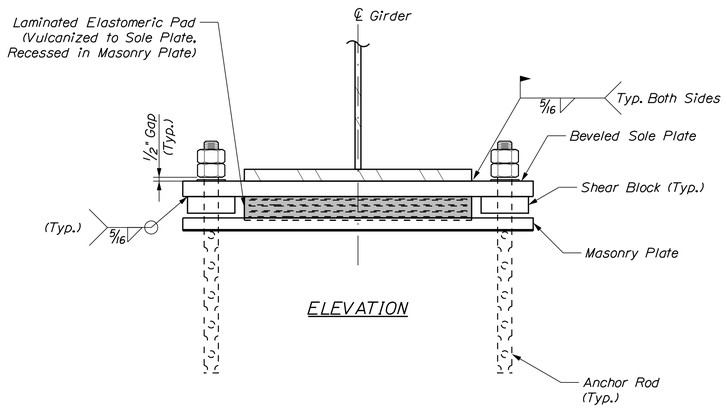

ELEVATION

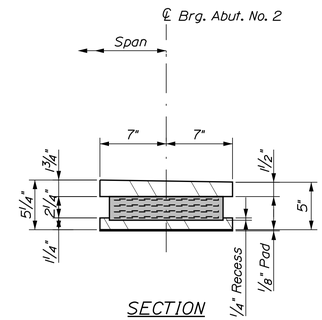

SECTION

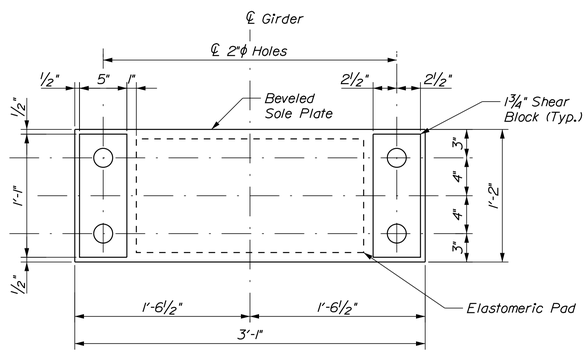

SOLE PLATE PLAN
(Looking Up at Bottom of Beveled Sole Plate)

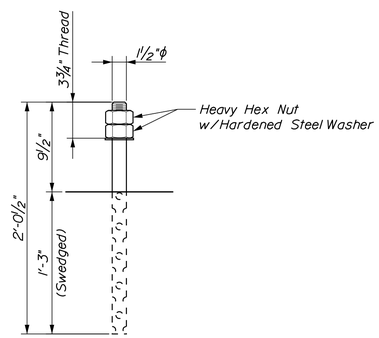

ANCHOR ROD DETAIL

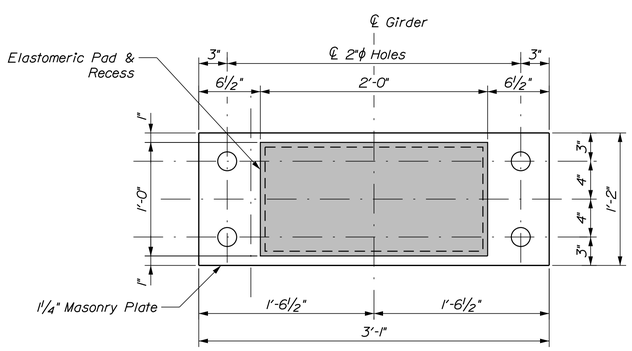

MASONRY PLATE PLAN
(Looking Down at Laminated Elastomeric Pad)

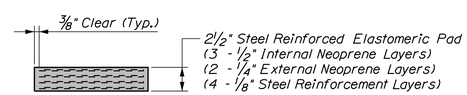

ELASTOMERIC PAD SECTION

ABUT. NO. 2 - SERVICE I DESIGN LOADS & MOVEMENT		
NON-COMPOSITE DEAD LOAD	103	KIP
SUPERIMPOSED DEAD LOAD (DW + DC)	44	KIP
LIVE LOAD (HL-93)	143	KIP
LIVE LOAD ROTATION	0.004	RAD
COMPRESSIVE DEFLECTION	0.027	IN
TOTAL MOVEMENT (ΔT = 125° F)	0.00	IN
FACTORED SHEAR DEFORMATION	0.00	IN

FIXED BEARING DETAIL
5 Assemblies Required @ Abutment No. 2

Stantec

STATE OF MAINE
DEPARTMENT OF TRANSPORTATION

BH-1823(900)

WIN 18239.00

BRIDGE NO. 3334

BRIDGE PLANS

		BY	DATE
PROJ. MANAGER	L. TIMBERLAKE		
DESIGN-DETAILED	DOT	JTS	JUNE 2014
CHECKED-REVIEWED	AML	DOT\TWM	JUNE 2014
DESIGN2-DETAILED2			
DESIGN3-DETAILED3			
REVISIONS 1			
REVISIONS 2			
REVISIONS 3			
REVISIONS 4			
FIELD CHANGES			

SIGNATURE

P.E. NUMBER

DATE

DURHAM BRIDGE
ANDROSCOGGIN RIVER
DURHAM-LISBON ANDROSCOGGIN COUNTY

ABUTMENT NO. 2 BEARINGS

SHEET NUMBER
68
OF 87

Filename: ...\MSTA\068_Abut 2 Brgs.dgn Division: BRIDGE Username: common Date:7/17/2014

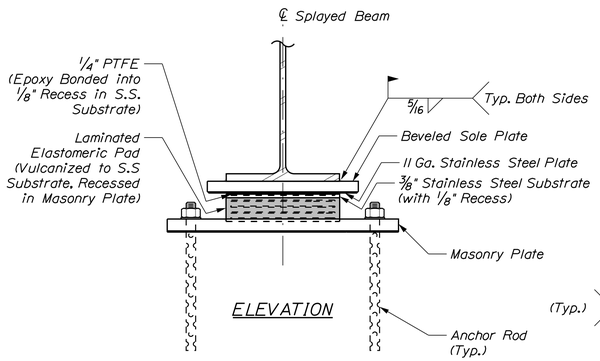

ELEVATION

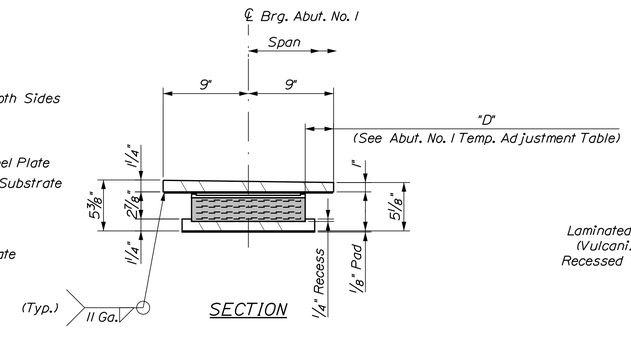

SECTION

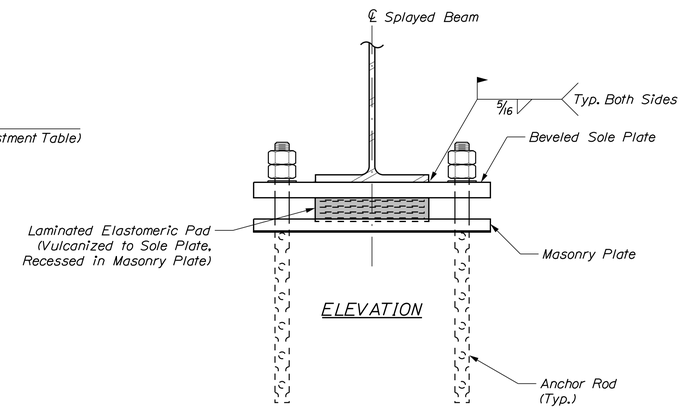

ELEVATION

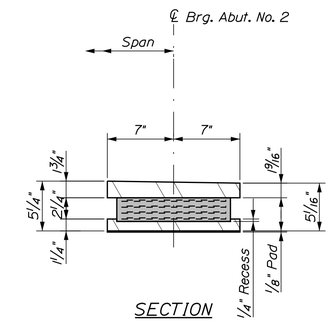

SECTION

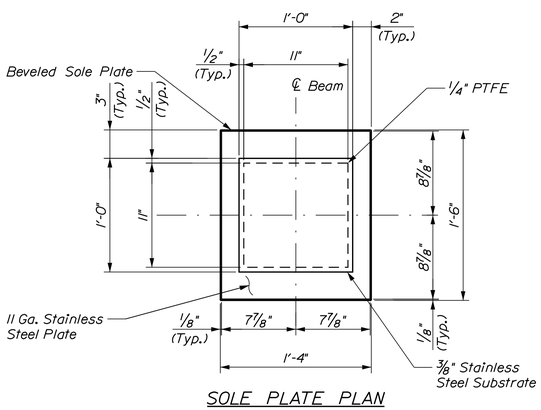

SOLE PLATE PLAN
(Looking Up From Bottom of S.S. Substrate)

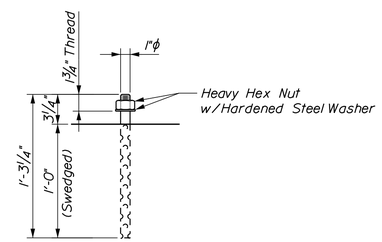

ANCHOR ROD DETAIL

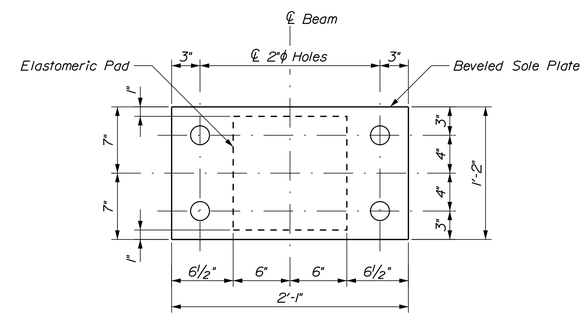

SOLE PLATE PLAN
(Looking Up at Bottom of Beveled Sole Plate)

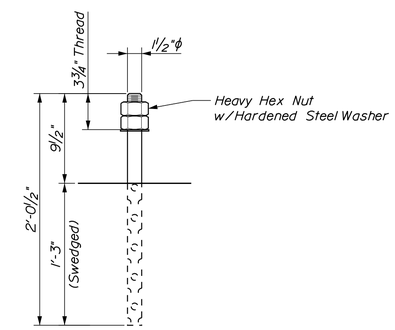

ANCHOR ROD DETAIL

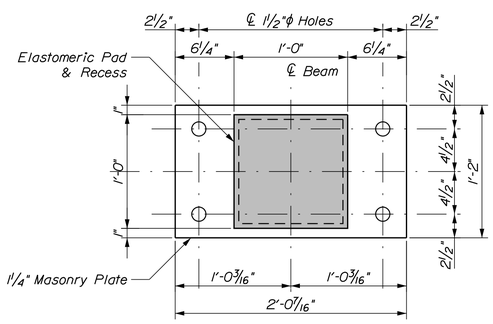

MASONRY PLATE PLAN
(Looking Down at Laminated Elastomeric Pad)

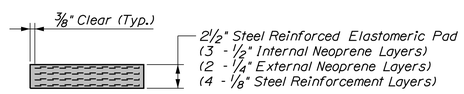

ELASTOMERIC PAD SECTION

EXPANSION BEARING DETAIL
Splayed Beam at Abutment No. 1

SPLAY BEAM - SERVICE I DESIGN LOADS & MOVEMENT		
NON-COMPOSITE DEAD LOAD	14	KIP
SUPERIMPOSED DEAD LOAD (DW + DC)	17	KIP
LIVE LOAD (HL-93)	41	KIP
LIVE LOAD ROTATION	0.001	RAD
COMPRESSIVE DEFLECTION	0.028	IN
TOTAL MOVEMENT (ΔT = 125° F)	N/A	IN
FACTORED SHEAR DEFORMATION	N/A	IN

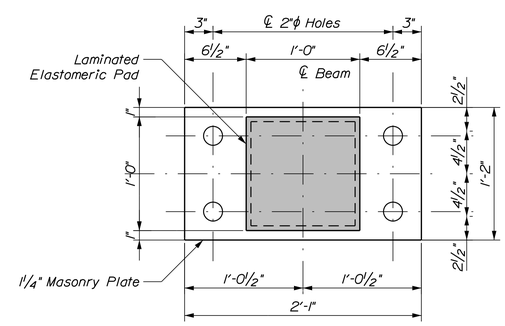

MASONRY PLATE PLAN
(Looking Down at Laminated Elastomeric Pad)

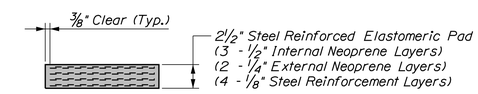

ELASTOMERIC PAD SECTION

FIXED BEARING DETAIL
Splayed Beam at Abutment No. 2

Stantec

STATE OF MAINE
DEPARTMENT OF TRANSPORTATION

BH-1823(900)

WIN 18239.00

BRIDGE NO. 3334

BRIDGE PLANS

PROJ. MANAGER	L. TIMBERLAKE	BY	DATE
DESIGN-DETAILED	DOT	JTS	JUNE 2014
CHECKED-REVIEWED	AML	DDT\TWM	JUNE 2014
DESIGN2-DETAILED2			
DESIGN3-DETAILED3			
REVISIONS 1			
REVISIONS 2			
REVISIONS 3			
REVISIONS 4			
FIELD CHANGES			

SIGNATURE

P.E. NUMBER

DATE

DURHAM BRIDGE
ANDROSCOGGIN RIVER
DURHAM-LISBON ANDROSCOGGIN COUNTY

ABUTMENT SPLAY BEARINGS

SHEET NUMBER
69
OF 87

Filename: ...\MSTA\069_Splayed Brgs.dgn Division: BRIDGE Username: common Date:7/17/2014

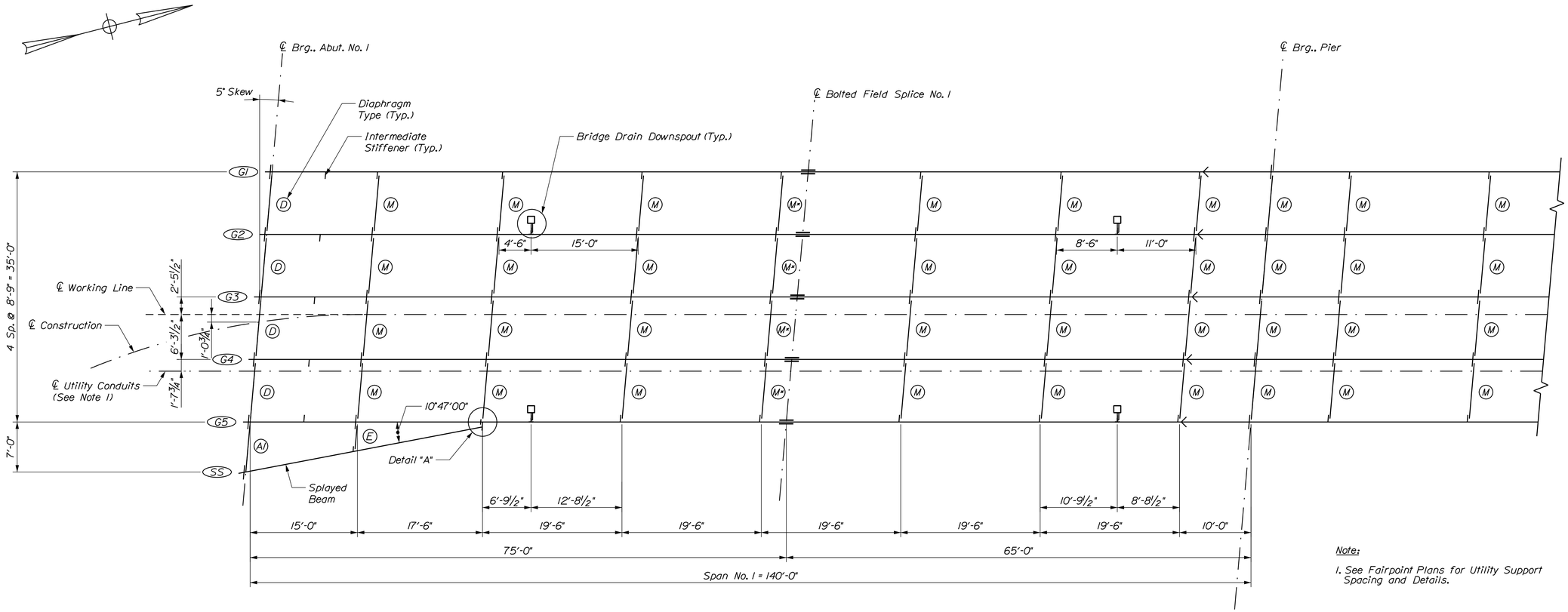

Note:

1. See Fairpoint Plans for Utility Support Spacing and Details.

FRAMING PLAN - SPAN NO. 1

(Dimensions are Horizontal)

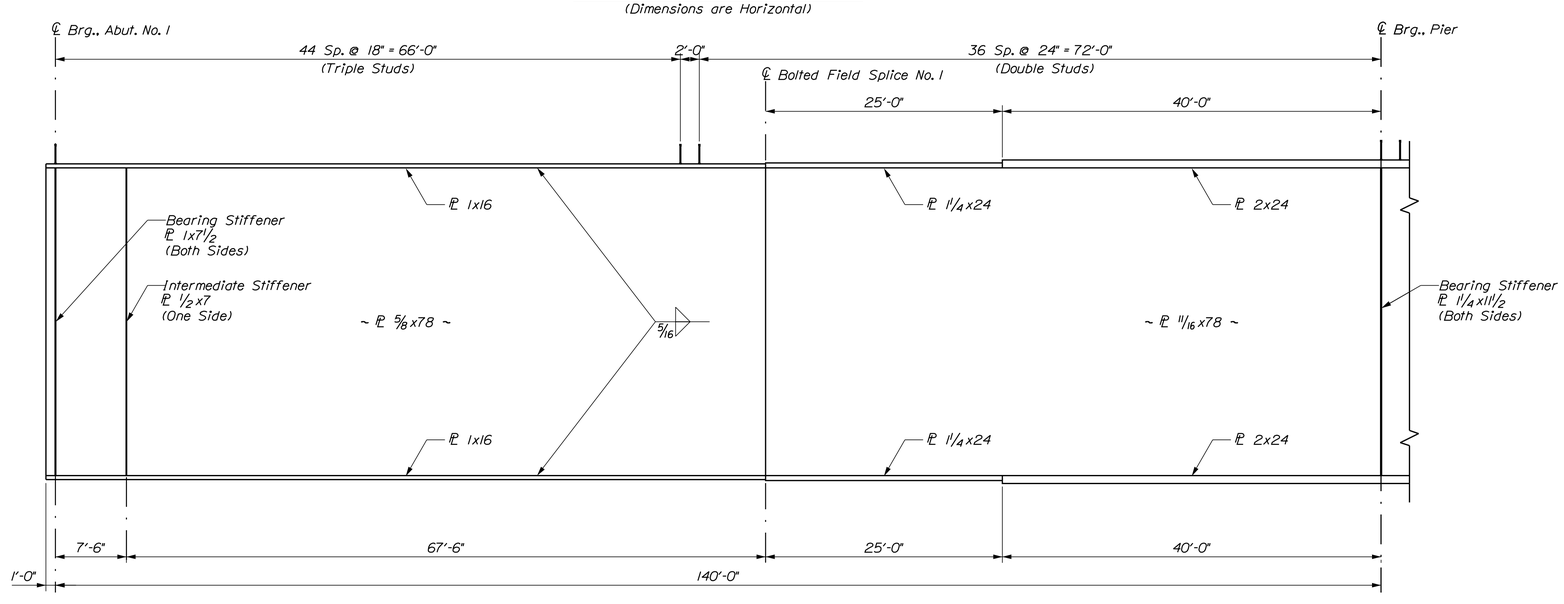

GIRDER ELEVATION - SPAN NO. 1

(209 Studs x 5 Girders = 1045 Studs)
(Crossframe Connection Plates Shall be 1/2" Thick)

Stantec

STATE OF MAINE
DEPARTMENT OF TRANSPORTATION

BH-1823(900)

WIN 18239.00

BRIDGE NO. 3334

BRIDGE PLANS

		BY	DATE
PROJ. MANAGER	L. TIMBERLAKE		
DESIGN-DETAILED	DDT	JTS	JUNE 2014
CHECKED-REVIEWED	AML	DDT/TWM	JUNE 2014
DESIGN2-DETAILED2			
DESIGN3-DETAILED3			
REVISIONS 1			
REVISIONS 2			
REVISIONS 3			
REVISIONS 4			
FIELD CHANGES			

SIGNATURE

P.E. NUMBER

DATE

DURHAM BRIDGE
ANDROSCOGGIN RIVER
DURHAM-LISBON ANDROSCOGGIN COUNTY

FRAMING PLAN SPAN NO. 1

SHEET NUMBER

70

OF 87

Filename: ...\BRIDGE\MSTA\070_Framing 1.dgn Division: BRIDGE Username: common Date:7/17/2014

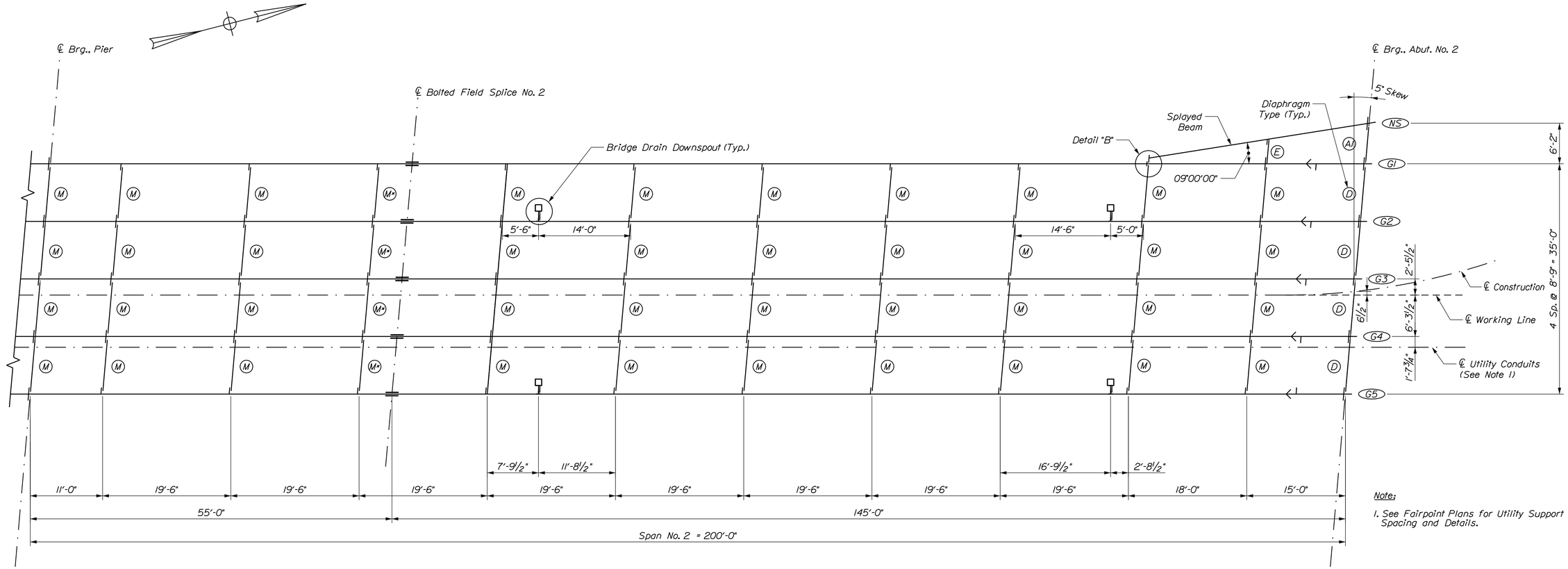

Note:

1. See Fairpoint Plans for Utility Support Spacing and Details.

FRAMING PLAN - SPAN NO. 2

(Dimensions are Horizontal)

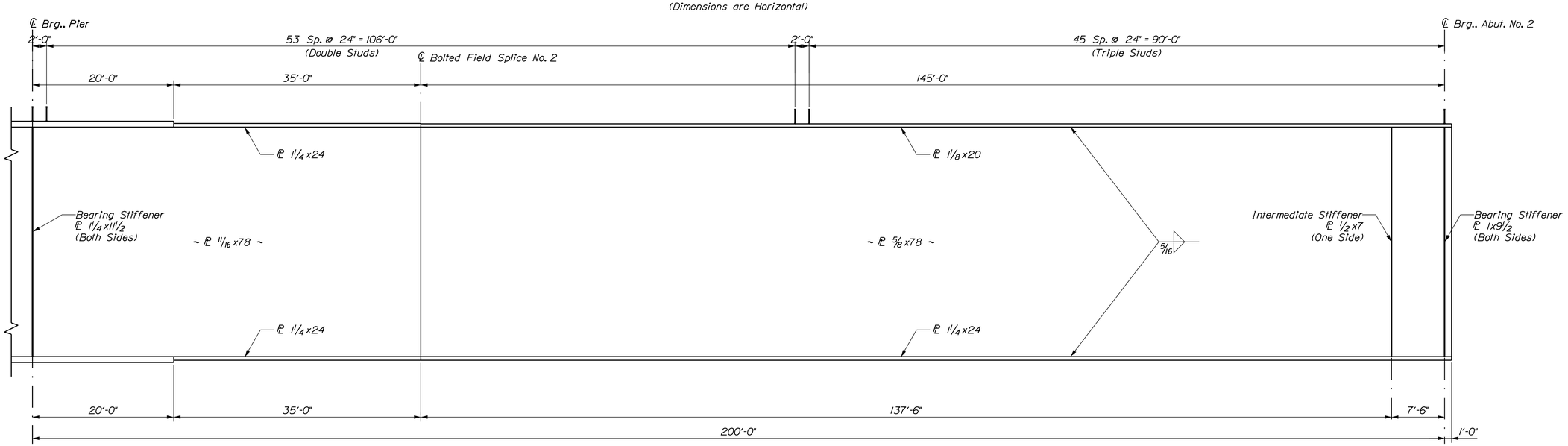

GIRDER ELEVATION - SPAN NO. 2

(246 Studs x 5 Girders = 1230 Studs)
(Crossframe Connection Plates Shall be ½" Thick)

Stantec

STATE OF MAINE
DEPARTMENT OF TRANSPORTATION

BH-1823(900)

WIN 18239.00

BRIDGE NO. 3334

BRIDGE PLANS

		BY	DATE
PROJ. MANAGER	L. TIMBERLAKE		
DESIGN-DETAILED	ODT	JTS	JUNE 2014
CHECKED-REVIEWED	AML	ODT/TWM	JUNE 2014
DESIGN2-DETAILED2			
DESIGN3-DETAILED3			
REVISIONS 1			
REVISIONS 2			
REVISIONS 3			
REVISIONS 4			
FIELD CHANGES			

SIGNATURE

P.E. NUMBER

DATE

DURHAM BRIDGE
ANDROSCOGGIN RIVER
DURHAM-LISBON ANDROSCOGGIN COUNTY

FRAMING PLAN SPAN NO. 2

SHEET NUMBER

71

OF 87

Filename: ...\BRIDGE\MSTA\071_Framing 2.dgn Division: BRIDGE Username: common Date:7/17/2014

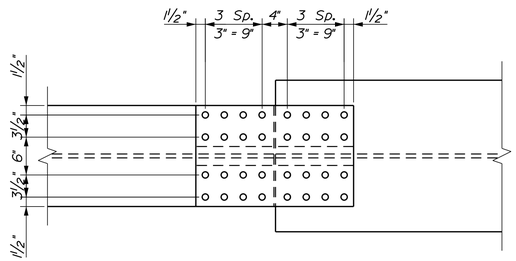

TOP VIEW

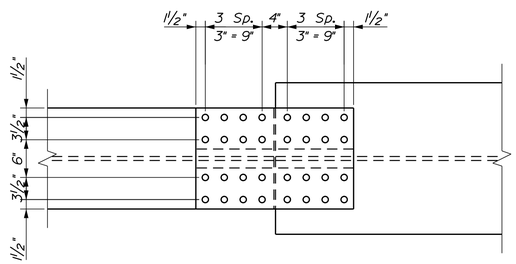

BOTTOM VIEW

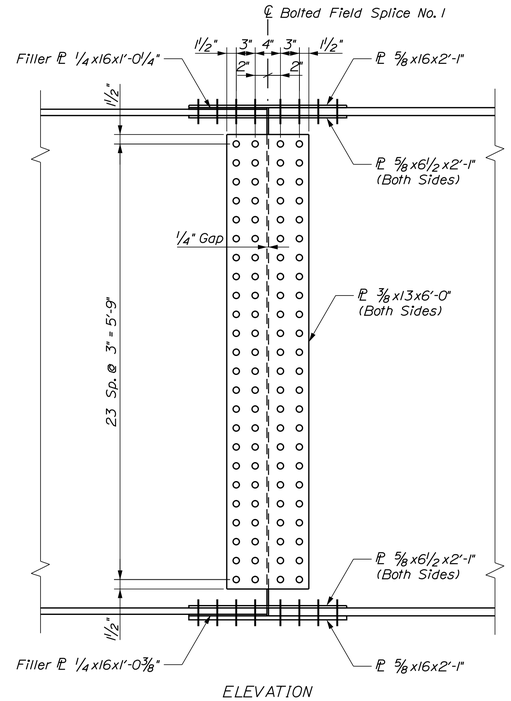

ELEVATION

BOLTED FIELD SPLICE NO. 1

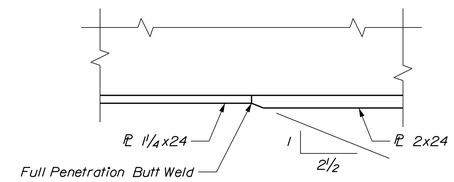

FLANGE TRANSITION DETAIL
(Typical Top & Bottom Flange)

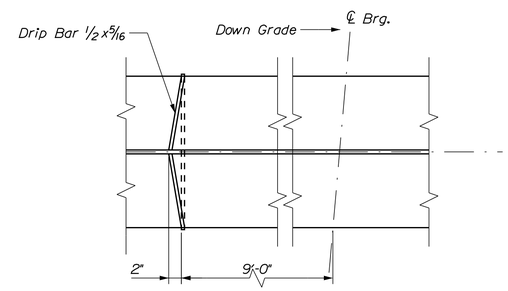

DRIP BAR PLAN
(Typical at Pier & Abut. No. 2)

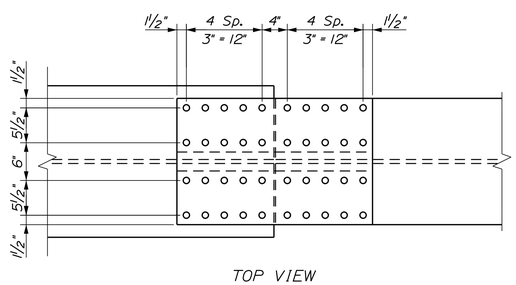

TOP VIEW

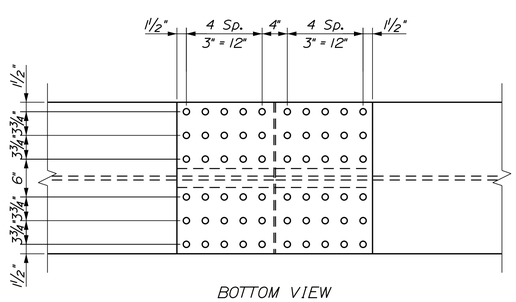

BOTTOM VIEW

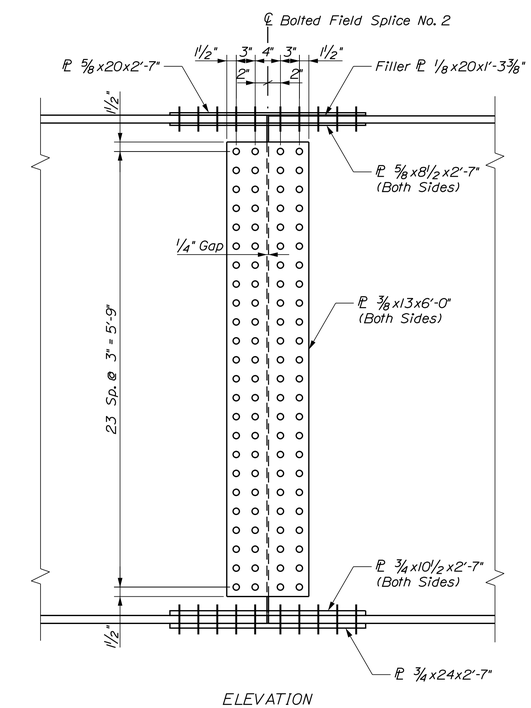

ELEVATION

BOLTED FIELD SPLICE NO. 2

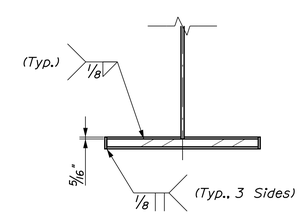

DRIP BAR SECTION

Stantec

STATE OF MAINE
DEPARTMENT OF TRANSPORTATION

BH-1823(900)

WIN 18239.00

BRIDGE NO. 3334

BRIDGE PLANS

		BY	DATE
PROJ. MANAGER	L. TIMBERLAKE		
DESIGN-DETAILED	DOT	JTS	JUNE 2014
CHECKED-REVIEWED	AML	DOT\TWM	JUNE 2014
DESIGN2-DETAILED2			
DESIGN3-DETAILED3			
REVISIONS 1			
REVISIONS 2			
REVISIONS 3			
REVISIONS 4			
FIELD CHANGES			

SIGNATURE

P.E. NUMBER

DATE

DURHAM BRIDGE
ANDROSCOGGIN RIVER
DURHAM-LISBON ANDROSCOGGIN COUNTY

STRUCTURAL STEEL DETAILS

SHEET NUMBER

72

OF 87

Filename: ...\MSTA\072_GirderSplice.dgn Division: BRIDGE Username: common Date:7/17/2014

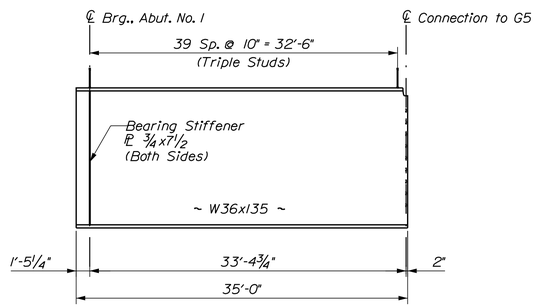

SOUTH SPLAYED BEAM ELEVATION
(120 Studs)
(Crossframe Connection Plates Shall be 1/2" Thick)

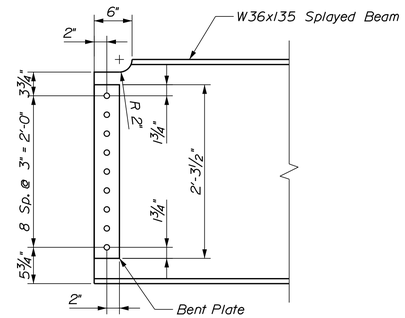

WEB COPE DETAIL

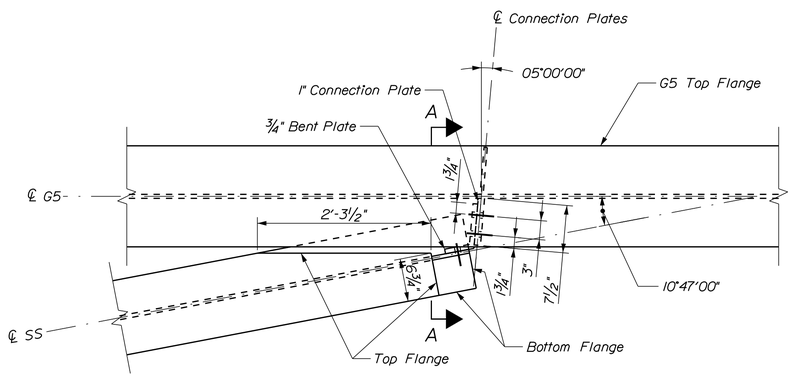

DETAIL "A"

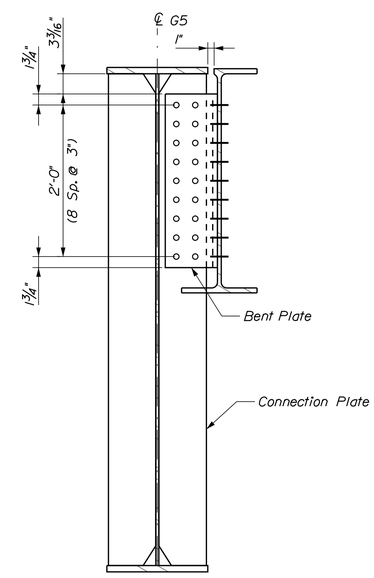

SECTION A-A

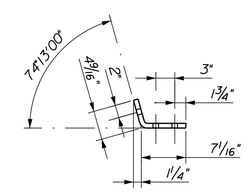

BENT PLATE

Stantec

STATE OF MAINE
DEPARTMENT OF TRANSPORTATION

BH-1823(900)

WIN 18239.00

BRIDGE NO. 3334

BRIDGE PLANS

		BY	DATE
PROJ. MANAGER	L. TIMBERLAKE		
DESIGN-DETAILED	DDT	DDT	JUNE 2014
CHECKED-REVIEWED	AML	AML/TWM	JUNE 2014
DESIGN2-DETAILED2			
DESIGN3-DETAILED3			
REVISIONS 1			
REVISIONS 2			
REVISIONS 3			
REVISIONS 4			
FIELD CHANGES			

SIGNATURE

P.E. NUMBER

DATE

DURHAM BRIDGE
ANDROSCOGGIN RIVER
DURHAM-LISBON ANDROSCOGGIN COUNTY

SOUTH SPLAYED
BEAM DETAILS

SHEET NUMBER
73
OF 87

Filename: ...\MSTA\073_Splayed_Beam1.dgn Division: BRIDGE Username: common Date:7/17/2014

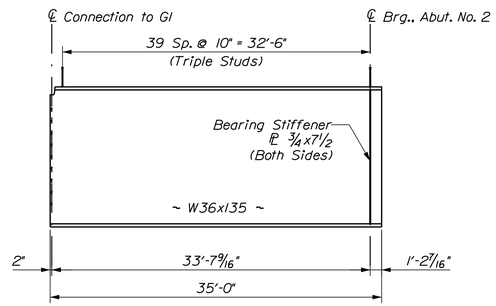

NORTH SPLAYED BEAM ELEVATION
(120 Studs)
(Crossframe Connection Plates Shall be 1/2" Thick)

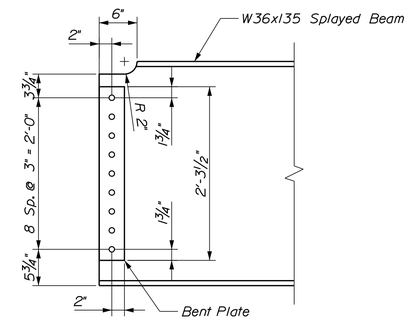

WEB COPE DETAIL

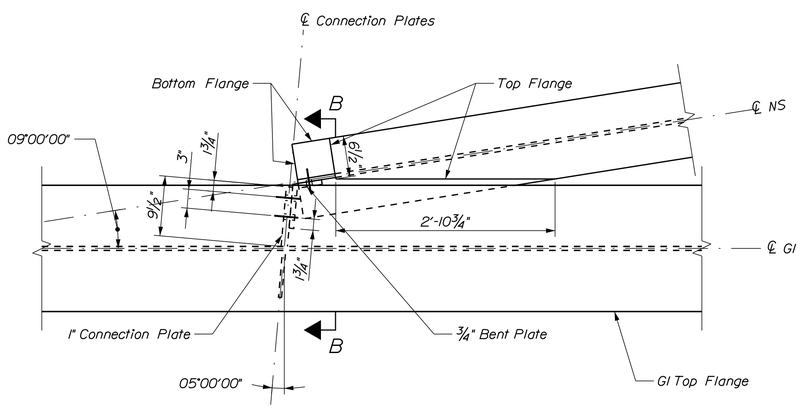

DETAIL "B"

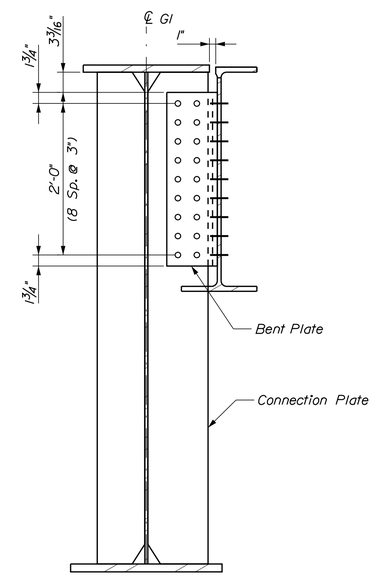

SECTION B-B

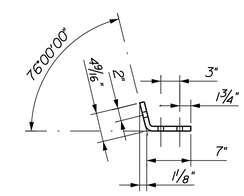

BENT PLATE

Stantec

STATE OF MAINE
DEPARTMENT OF TRANSPORTATION

BH-1823(900)

WIN 18239.00

BRIDGE NO. 3334

BRIDGE PLANS

		BY	DATE
PROJ. MANAGER	L. TIMBERLAKE		
DESIGN-DETAILED	DDT	DDT	JUNE 2014
CHECKED-REVIEWED	AML	AML/TWM	JUNE 2014
DESIGN2-DETAILED2			
DESIGN3-DETAILED3			
REVISIONS 1			
REVISIONS 2			
REVISIONS 3			
REVISIONS 4			
FIELD CHANGES			

SIGNATURE

P.E. NUMBER

DATE

DURHAM BRIDGE
ANDROSCOGGIN RIVER
DURHAM-LISBON ANDROSCOGGIN COUNTY

NORTH SPLAYED
BEAM DETAILS

SHEET NUMBER
74
OF 87

Filename: ...\MSTA\074_Splayed_Beam2.dgn Division: BRIDGE Username: common Date:7/17/2014

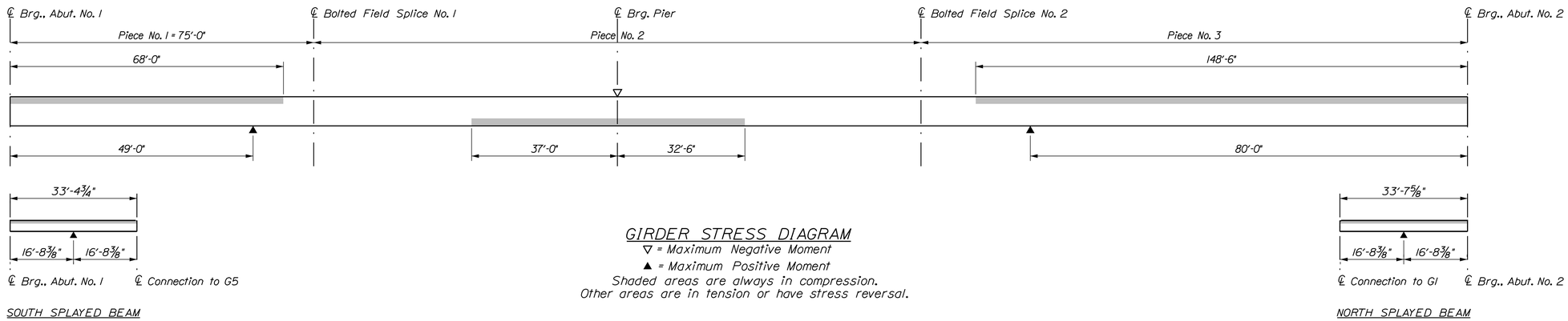

GIRDER STRESS DIAGRAM

▽ = Maximum Negative Moment

▲ = Maximum Positive Moment

Shaded areas are always in compression.
Other areas are in tension or have stress reversal.

STRUCTURAL STEEL NOTES

1. Camber ordinates, as shown, are computed to compensate for all dead load deflections and for the curvature of the finished grade profile.

2. No transverse butt weld splices will be allowed in the flange plates or web plates within 10 feet or 10 percent of the span length (whichever is greater) from the points of maximum negative moment or maximum positive moment. Butt weld splices in flanges shall be not less than one foot from transverse butt welds in the web plates and no transverse web or flange butt welds shall be located within one foot of other transverse welds (e.g. connection plates to web welds) on either flange or web. No transverse butt weld splices will be allowed in areas of stress reversal.

3. Sections of flange plates or web plates between transverse shop splices or between a transverse shop splice and a field splice shall be not less than 20 feet in length unless otherwise shown on the plans.

4. Bearing stiffeners shall be plumb after erection and dead loading of the structure. Intermediate web stiffeners may be either plumb or normal to the top flange.

5. Connection plates for diaphragms and crossframes shall have a minimum thickness of 1/2 inch.

6. Connection plates and stiffeners shall be welded to the top and bottom flanges using a 5/16 inch fillet weld on both sides of the plate. Intermediate stiffeners shall be tight-fit to both flanges.

7. Crossframe or diaphragm connection plates may be either plumb or normal to the top flange.

8. The "Drip Bar" shall be used on the high side of the Pier and Abutment No. 2 on all girders.

9. Bolted field splice connections shall be made using 7/8"ϕ ASTM A 325 H.S. bolts. Holes size shall be 15/16"ϕ. Bolt threads shall be excluded from the shear plane of the field splice connections.

10. Girder ends and end diaphragms shall be coated to a distance of 10 feet from the centerline of bearing in accordance with Special Provisions Section 506, Protective Coating - Steel (Zinc Rich Coating System).

11. Filler plates may be steel conforming to the requirements of ASTM A 709, Grade 36.

12. At locations marked with an asterisk (*), the designated crossframes shall be changed to a Type D diaphragm as required to accommodate the Contractor's deck placement sequence. No extra compensation will be allowed for any diaphragms so substituted, and any additional costs will be considered incidental to Contract items.

13. The Contractor may substitute welded plate girders in place of the rolled beams shown on the plans, as approved by the Resident. The fabricator shall determine the plate thicknesses based upon the depth and moment of inertia of the rolled section.

14. The splayed beams shall have natural mill camber in the upward direction.

15. Refer to Utility Plans for Conduit Support System details.

BOTTOM OF SLAB ELEVATIONS

Span No. 1

Girder	0'	10'	20'	30'	40'	50'	60'	70'	80'	90'	100'	110'	120'	130'	140'	Girder
G1	105.33	105.33	105.30	105.22	105.09	104.90	104.65	104.36	104.05	103.75	103.49	103.28	103.15	103.12	103.23	G1
G2	105.52	105.54	105.52	105.46	105.33	105.13	104.86	104.55	104.22	103.90	103.62	103.41	103.28	103.27	103.42	G2
G3	105.71	105.72	105.71	105.64	105.51	105.31	105.05	104.74	104.41	104.09	103.81	103.59	103.46	103.45	103.61	G3
G4	105.64	105.66	105.65	105.58	105.45	105.25	104.98	104.67	104.35	104.02	103.74	103.53	103.40	103.39	103.54	G4
G5	105.48	105.47	105.44	105.37	105.23	105.04	104.79	104.50	104.19	103.89	103.63	103.42	103.29	103.26	103.38	G5

Span No. 2

Girder	150'	160'	170'	180'	190'	200'	210'	220'	230'	240'	250'	260'	270'	280'	290'	300'	310'	320'	330'	340'	Girder
G1	103.23	103.51	103.92	104.44	105.04	105.65	106.24	106.77	107.19	107.49	107.64	107.62	107.43	107.05	106.49	105.77	104.88	103.85	102.71	101.50	G1
G2	103.42	103.76	104.25	104.86	105.56	106.28	106.97	107.59	108.10	108.46	108.65	108.66	108.45	108.05	107.43	106.62	105.63	104.49	103.21	101.84	G2
G3	103.61	103.94	104.44	105.05	105.74	106.46	107.16	107.78	108.29	108.65	108.84	108.84	108.64	108.23	107.62	106.81	105.82	104.67	103.39	102.02	G3
G4	103.54	103.88	104.37	104.98	105.68	106.40	107.09	107.71	108.22	108.58	108.78	108.78	108.58	108.17	107.55	106.75	105.76	104.61	103.33	101.96	G4
G5	103.38	103.66	104.07	104.59	105.18	105.79	106.38	106.91	107.34	107.64	107.78	107.77	107.57	107.19	106.64	105.91	105.02	104.00	102.86	101.64	G5

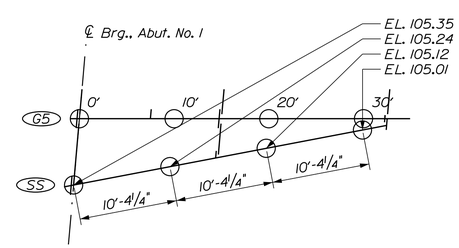

SS - BOT. SLAB EL.

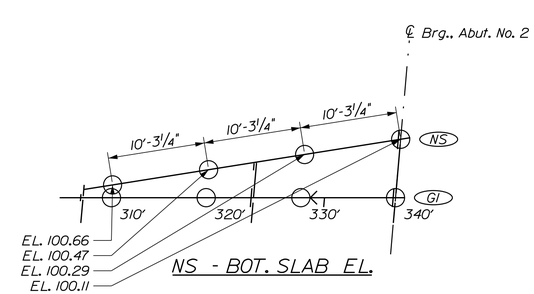

NS - BOT. SLAB EL.

Stantec

STATE OF MAINE
DEPARTMENT OF TRANSPORTATION

BH-1823(900)

WIN 18239.00

BRIDGE NO. 3334

BRIDGE PLANS

		BY	DATE
PROJ. MANAGER	L. TIMBERLAKE		
DESIGN-DETAILED	DOT	JTS	JUNE 2014
CHECKED-REVIEWED	AML	DDT/TWM	JUNE 2014
DESIGN2-DETAILED2			
DESIGN3-DETAILED3			
REVISIONS 1			
REVISIONS 2			
REVISIONS 3			
REVISIONS 4			
FIELD CHANGES			

SIGNATURE

P.E. NUMBER

DATE

DURHAM BRIDGE
ANDROSCOGGIN RIVER
DURHAM-LISBON ANDROSCOGGIN COUNTY

GIRDER STRESS DIAGRAM
BOTTOM OF SLAB EL.

SHEET NUMBER

75

OF 87

Filename: ...\075_Beam Stress Diagram.dgn Division: BRIDGE Username: common Date:7/17/2014

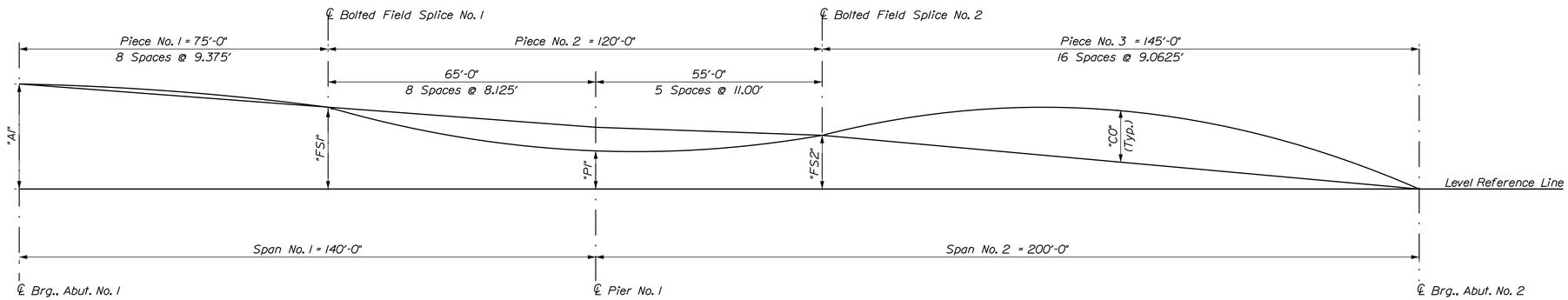

CAMBER DIAGRAM

TABLE OF DEFLECTIONS ~ EXTERIOR GIRDERS (IN)

	"A1"								"FS1"									"P1"					"FS2
	Piece No. 1									Piece No. 2													
	0.0'	9.375'	18.75'	28.125'	37.50'	46.875'	56.25'	65.625'	75.0'	0.0'	8.125'	16.25'	24.375'	32.50'	40.625'	48.75'	56.875'	65.0'	76.0'	87.0'	98.0'	109.0'	120.0'
Steel Dead Load	0.00	-0.04	-0.07	-0.09	-0.09	-0.08	-0.05	-0.01	0.04	0.04	0.08	0.11	0.14	0.15	0.15	0.12	0.08	0.00	-0.15	-0.36	-0.62	-0.89	-1.17
Fluid Dead Load	0.00	-0.08	-0.15	-0.19	-0.20	-0.18	-0.12	-0.05	0.04	0.04	0.12	0.19	0.24	0.27	0.27	0.23	0.14	0.00	-0.29	-0.69	-1.16	-1.67	-2.19
Superimposed Dead Load	0.00	-0.06	-0.11	-0.14	-0.16	-0.15	-0.13	-0.09	-0.04	-0.04	0.01	0.06	0.10	0.13	0.14	0.13	0.08	0.00	-0.18	-0.43	-0.73	-1.04	-1.35

	"FS2"																"A2"
	Piece No. 3																
	0.0'	9.063'	18.125'	27.188'	36.250'	45.313'	54.375'	63.438'	72.500'	81.563'	90.625'	99.688'	108.75'	117.813'	126.875'	135.938'	145.0'
Steel Dead Load	-1.17	-1.38	-1.58	-1.74	-1.87	-1.96	-2.01	-2.00	-1.95	-1.85	-1.69	-1.49	-1.25	-0.97	-0.66	-0.34	0.00
Fluid Dead Load	-2.19	-2.60	-2.97	-3.29	-3.54	-3.71	-3.80	-3.79	-3.69	-3.49	-3.20	-2.82	-2.36	-1.84	-1.26	-0.64	0.00
Superimposed Dead Load	-1.35	-1.59	-1.80	-1.98	-2.11	-2.20	-2.24	-2.23	-2.16	-2.04	-1.86	-1.64	-1.37	-1.06	-0.73	-0.37	0.00

TABLE OF DEFLECTIONS ~ INTERIOR GIRDERS (IN)

	"A1"								"FS1"									"P1"					"FS2
	Piece No. 1									Piece No. 2													
	0.0'	9.375'	18.75'	28.125'	37.50'	46.875'	56.25'	65.625'	75.0'	0.0'	8.125'	16.25'	24.375'	32.50'	40.625'	48.75'	56.875'	65.0'	76.0'	87.0'	98.0'	109.0'	120.0'
Steel Dead Load	0.00	-0.04	-0.07	-0.09	-0.09	-0.08	-0.05	-0.01	0.04	0.04	0.08	0.11	0.14	0.15	0.15	0.12	0.08	0.00	-0.15	-0.36	-0.62	-0.89	-1.17
Fluid Dead Load	0.00	-0.10	-0.19	-0.24	-0.25	-0.22	-0.16	-0.06	0.05	0.05	0.15	0.23	0.30	0.34	0.33	0.28	0.18	0.00	-0.36	-0.86	-1.45	-2.09	-2.74
Superimposed Dead Load	0.00	-0.06	-0.10	-0.14	-0.16	-0.16	-0.13	-0.10	-0.05	-0.05	0.00	0.05	0.09	0.12	0.13	0.12	0.08	0.00	-0.17	-0.41	-0.70	-1.00	-1.30

	"FS2"																"A2"
	Piece No. 3																
	0.0'	9.063'	18.125'	27.188'	36.250'	45.313'	54.375'	63.438'	72.500'	81.563'	90.625'	99.688'	108.75'	117.813'	126.875'	135.938'	145.0'
Steel Dead Load	-1.17	-1.38	-1.58	-1.74	-1.87	-1.96	-2.01	-2.00	-1.95	-1.85	-1.69	-1.49	-1.25	-0.97	-0.66	-0.34	0.00
Fluid Dead Load	-2.74	-3.25	-3.72	-4.11	-4.43	-4.64	-4.75	-4.74	-4.61	-4.36	-3.99	-3.52	-2.95	-2.30	-1.58	-0.80	0.00
Superimposed Dead Load	-1.30	-1.52	-1.72	-1.89	-2.02	-2.10	-2.14	-2.12	-2.06	-1.94	-1.77	-1.56	-1.30	-1.01	-0.69	-0.35	0.00

TABLE OF CAMBER ORDINATES "CO" (IN)

Girder	"A1"								"FS1"								"P1"					"FS2	Girder
	Piece No. 1									Piece No. 2													
	0.0'	9.375'	18.75'	28.125'	37.50'	46.875'	56.25'	65.625'	75.0'	0.0'	8.125'	16.25'	24.375'	32.50'	40.625'	48.75'	56.875'	65.0'	76.0'	87.0'	98.0'	109.0'	120.0'	
G1	0"	1/8"	5/16"	7/16"	7/16"	3/8"	5/16"	1/8"	0"	0"	- 7/16"	- 15/16"	-1 3/8"	-1 3/4"	-2 1/8"	-2 5/16"	-2 1/2"	-2 1/2"	-2 5/16"	-1 7/8"	-1 5/16"	- 5/8"	0"	G1
G2	0"	3/16"	5/16"	7/16"	1/2"	7/16"	5/16"	3/16"	0"	0"	1/2"	-1"	-1 1/2"	-1 15/16"	-2 5/16"	-2 9/16"	-2 3/4"	-2 3/4"	-2 9/16"	-2 1/16"	-1 7/16"	- 11/16"	0"	G2
G3	0"	3/16"	5/16"	7/16"	1/2"	7/16"	5/16"	3/16"	0"	0"	1/2"	-1"	-1 1/2"	-1 15/16"	-2 5/16"	-2 9/16"	-2 3/4"	-2 3/4"	-2 9/16"	-2 1/16"	-1 7/16"	- 11/16"	0"	G3
G4	0"	3/16"	5/16"	7/16"	1/2"	7/16"	5/16"	3/16"	0"	0"	1/2"	-1"	-1 1/2"	-1 15/16"	-2 5/16"	-2 9/16"	-2 3/4"	-2 3/4"	-2 9/16"	-2 1/16"	-1 7/16"	- 11/16"	0"	G4
G5	0"	1/8"	5/16"	7/16"	7/16"	3/8"	5/16"	1/8"	0"	0"	- 7/16"	- 15/16"	-1 3/8"	-1 3/4"	-2 1/8"	-2 5/16"	-2 1/2"	-2 1/2"	-2 5/16"	-1 7/8"	-1 5/16"	- 5/8"	0"	G5

Girder	"FS2"																"A2"	Girder
	Piece No. 3																	
	0.0'	9.063'	18.125'	27.188'	36.250'	45.313'	54.375'	63.438'	72.500'	81.563'	90.625'	99.688'	108.75'	117.813'	126.875'	135.938'	145.0'	
G1	0"	1 1/8"	2 3/16"	3 1/8"	3 15/16"	4 5/8"	5 1/16"	5 5/16"	5 7/16"	5 1/4"	4 15/16"	4 7/16"	3 3/4"	2 15/16"	2 1/16"	1"	0"	G1
G2	0"	1 1/4"	2 7/16"	3 1/2"	4 3/8"	5 1/8"	5 5/8"	5 7/8"	6"	5 13/16"	5 1/2"	4 15/16"	4 3/16"	3 1/4"	2 1/4"	1 1/8"	0"	G2
G3	0"	1 1/4"	2 7/16"	3 1/2"	4 3/8"	5 1/8"	5 5/8"	5 7/8"	6"	5 13/16"	5 1/2"	4 15/16"	4 3/16"	3 1/4"	2 1/4"	1 1/8"	0"	G3
G4	0"	1 1/4"	2 7/16"	3 1/2"	4 3/8"	5 1/8"	5 5/8"	5 7/8"	6"	5 13/16"	5 1/2"	4 15/16"	4 3/16"	3 1/4"	2 1/4"	1 1/8"	0"	G4
G5	0"	1 1/8"	2 3/16"	3 1/8"	3 15/16"	4 5/8"	5 1/16"	5 5/16"	5 7/16"	5 1/4"	4 15/16"	4 7/16"	3 3/4"	2 15/16"	2 1/16"	1"	0"	G5

TABLE OF CAMBER DIMENSIONS (FT)

Girder	"A2"	"FS2"	"P1"	"FS1"	"A1"
G1	0.00	2.57	3.21	3.97	5.10
G2	0.00	2.61	3.23	3.97	5.10
G3	0.00	2.61	3.23	3.97	5.10
G4	0.00	2.61	3.23	3.97	5.10
G5	0.00	2.57	3.21	3.97	5.10

Stantec

STATE OF MAINE
DEPARTMENT OF TRANSPORTATION

BH-1823(900)

WIN 18239.00

BRIDGE NO. 3334

BRIDGE PLANS

		BY	DATE
PROJ. MANAGER	L. TIMBERLAKE		
DESIGN-DETAILED	DDT	DDT	JUNE 2014
CHECKED-REVIEWED	AML	AML/TWM	JUNE 2014
DESIGN2-DETAILED2			
DESIGN3-DETAILED3			
REVISIONS 1			
REVISIONS 2			
REVISIONS 3			
REVISIONS 4			
FIELD CHANGES			

SIGNATURE

P.E. NUMBER

DATE

DURHAM BRIDGE
ANDROSCOGGIN RIVER
DURHAM-LISBON ANDROSCOGGIN COUNTY

CAMBER DIAGRAM

SHEET NUMBER
76
OF 87

Filename: ...\00\BRIDGE\MSTA\076_Camber.dgn Division: BRIDGE Username: common Date:7/17/2014

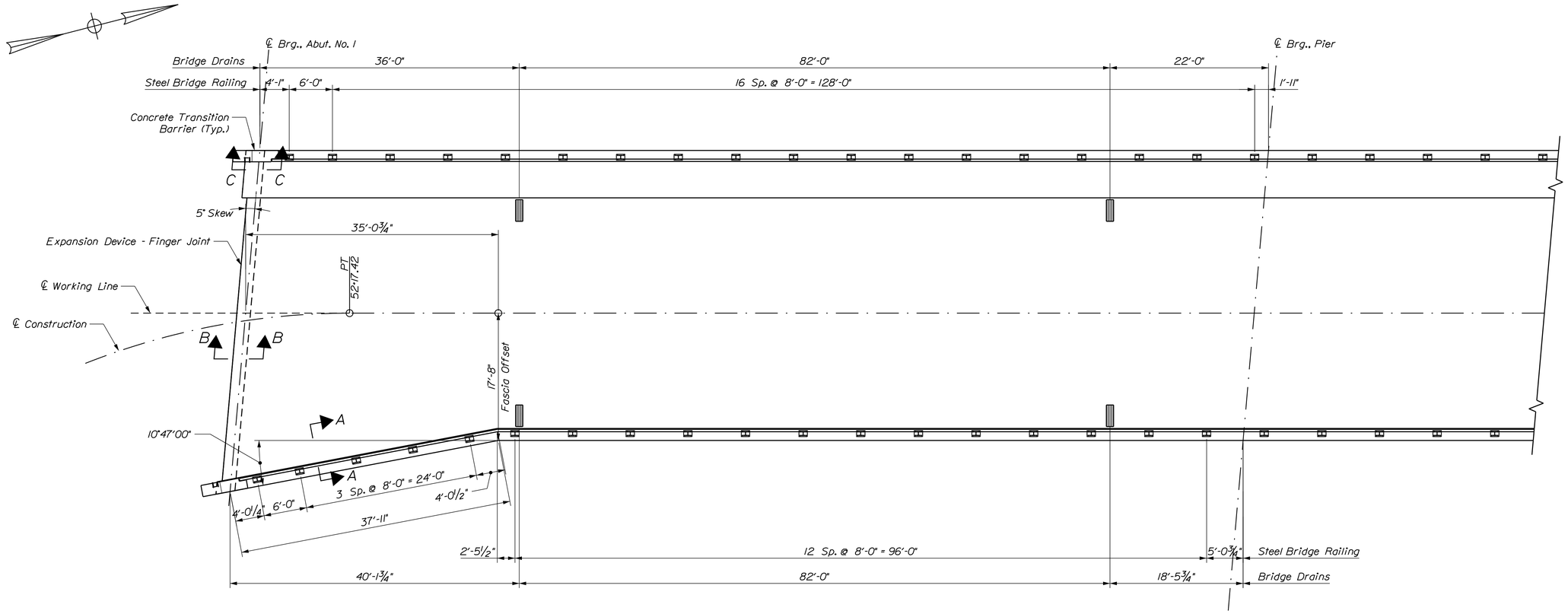

SUPERSTRUCTURE PLAN - SPAN NO. 1

Note: For Section B-B and C-C see sheet 81.

SUPERSTRUCTURE NOTES

1. The theoretical blocking used for design of the structure is 4½" inches at the centerline of bearing of the abutments and piers. Refer to Standard Detail 502(02) for blocking details.

2. Reinforcing steel shall have a minimum concrete cover of 2 inches unless otherwise noted.

3. Adjust reinforcing steel to fit around the bridge drains in a manner approved by the Resident. Do not cut transverse reinforcing bars.

4. Form a one inch V-groove on the fascias at the horizontal joint between the curb and slab.

5. Unless the superstructure slab concrete is placed in one continuous operation, the initial placement shall begin at the simply supported Durham end of the deck slab and shall terminate at the completion of a positive moment section. Successive placements shall proceed from the end of the previous placement, terminate at the completion of a positive moment section, and include two or more spans. Concrete in a placement shall be kept plastic one complete span behind the span being placed. A minimum of 5 days shall elapse between successive partial placements. The superstructure slab concrete placement sequence shall be approved by the Resident.

6. At the Contractor's option, Precast Deck Panels may be used in place of the full depth cast-in-place deck slab, in accordance with Special Provisions Section 502, Structural Concrete - Precast Deck Panels, and in accordance with the Standard Details.

7. Payment for reinforcing steel fabricated, delivered, and placed in the cast-in-place portion of the structural concrete slab, sidewalk, and curb will be considered incidental to the appropriate Standard Specifications Section 502 pay item.

8. Provide 3 additional stirrups in the curbs at each Transition Barrier location.

9. The Contractor shall install Transition Barrier vertical closed stirrups, as shown in Standard Details Section 526, prior to the placement of the curb or sidewalk concrete.

10. After placement of the superstructure concrete, the abutments and piers shall be thoroughly cleaned of all stains by a method approved by the Resident. Payment will be considered incidental to Contract items.

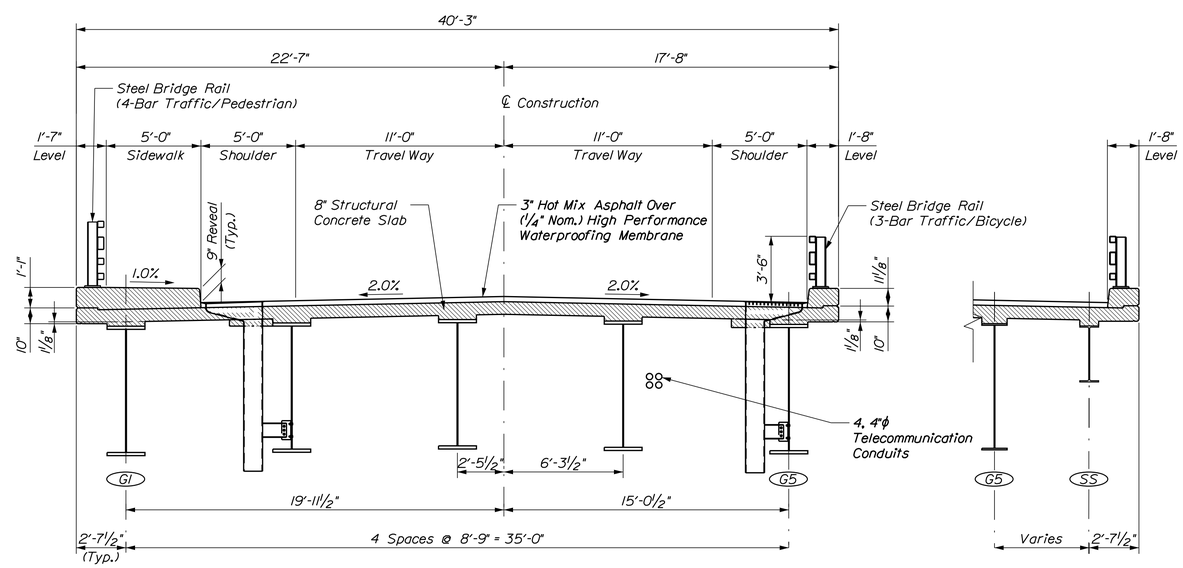

PROPOSED BRIDGE SECTION

SECTION A-A

(North Splayed Beam Similar)

Stantec

STATE OF MAINE
DEPARTMENT OF TRANSPORTATION

BH-1823(900)

WIN 18239.00

BRIDGE NO. 3334

BRIDGE PLANS

PROJ. MANAGER	L. TIMBERLAKE		
DESIGN-DETAILED	DDT	JTS	JUNE 2014
CHECKED-REVIEWED	AML	DDT\TWM	JUNE 2014
DESIGN2-DETAILED2			
DESIGN3-DETAILED3			
REVISIONS 1			
REVISIONS 2			
REVISIONS 3			
REVISIONS 4			
FIELD CHANGES			

SIGNATURE

P.E. NUMBER

DATE

DURHAM BRIDGE
ANDROSCOGGIN RIVER
DURHAM-LISBON ANDROSCOGGIN COUNTY

SUPERSTRUCTURE PLAN
SPAN NO. 1

SHEET NUMBER

77

OF 87

Filename: ...\MSTA\077_Superstructure1.dgn Division: BRIDGE Username: common Date:7/17/2014

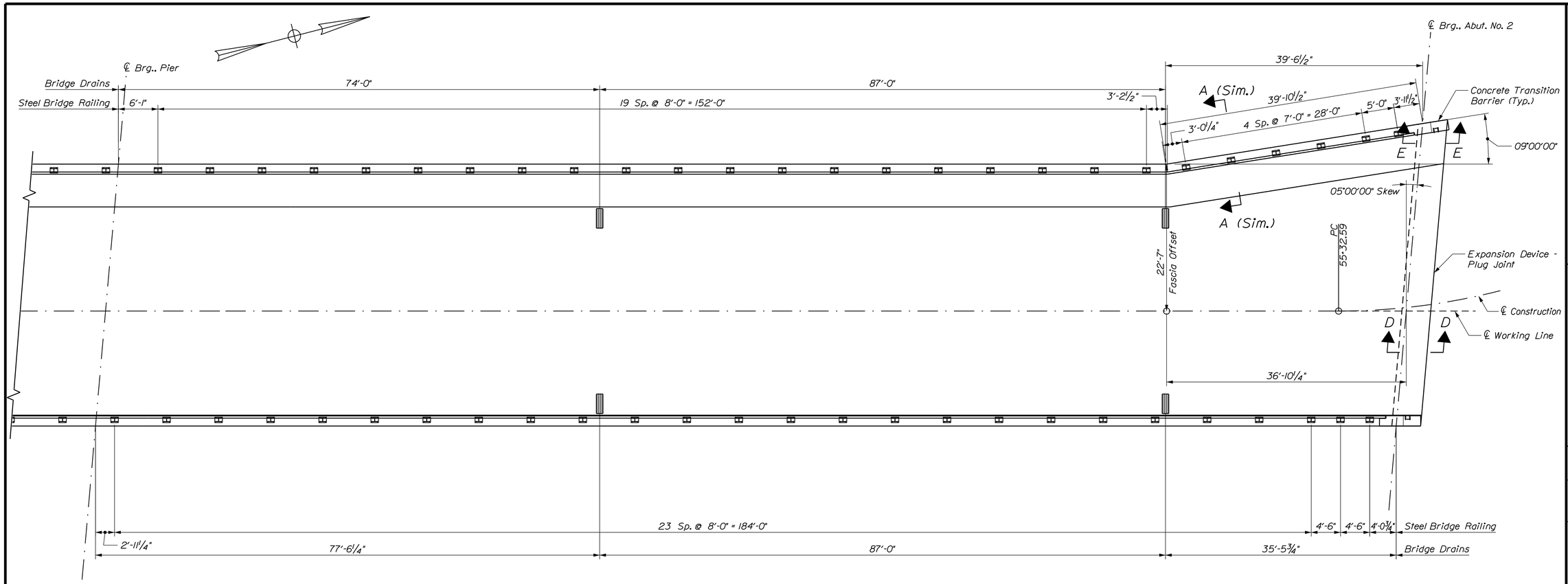

SUPERSTRUCTURE PLAN - SPAN NO. 2

Note: For Section D-D and E-E see sheet 81.

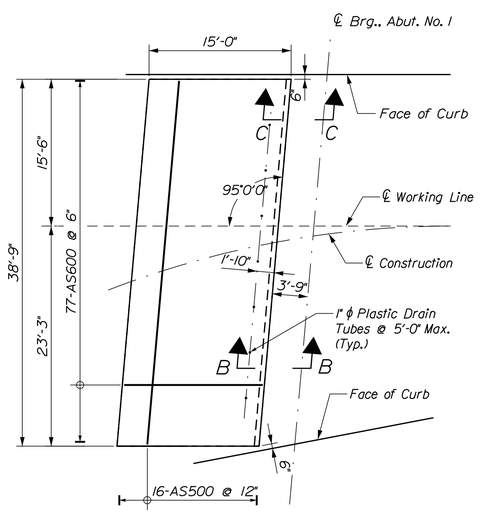

APPROACH SLAB PLAN - ABUTMENT NO. 1

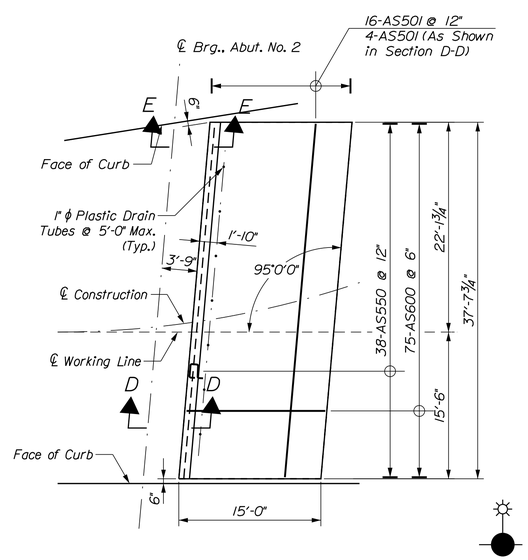

APPROACH SLAB PLAN - ABUTMENT NO. 2

Stantec

STATE OF MAINE
DEPARTMENT OF TRANSPORTATION

BH-1823(900)

WIN 18239.00

BRIDGE NO. 3334

BRIDGE PLANS

		BY	DATE
PROJ. MANAGER	L. TIMBERLAKE		
DESIGN-DETAILED	DOT	JTS	JUNE 2014
CHECKED-REVIEWED	AML	DOT\TWM	JUNE 2014
DESIGN2-DETAILED2			
DESIGN3-DETAILED3			
REVISIONS 1			
REVISIONS 2			
REVISIONS 3			
REVISIONS 4			
FIELD CHANGES			

SIGNATURE

P.E. NUMBER

DATE

DURHAM BRIDGE
ANDROSCOGGIN RIVER
DURHAM-LISBON ANDROSCOGGIN COUNTY

SUPERSTRUCTURE PLAN
SPAN NO. 2

SHEET NUMBER
78
OF 87

Filename: ...\MSTA\078_Superstructure2.dgn Division: BRIDGE Username: common Date:7/17/2014

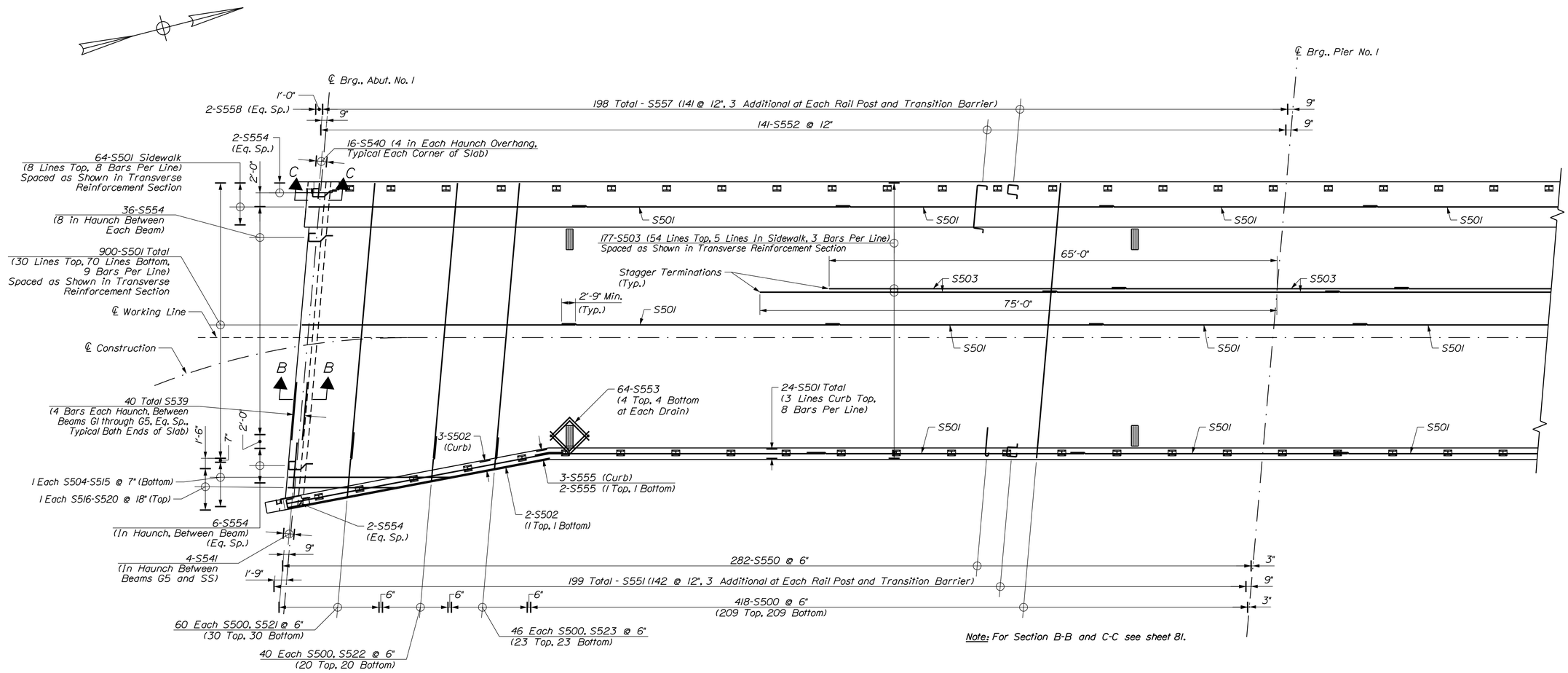

SUPERSTRUCTURE REINFORCEMENT PLAN - SPAN NO. 1

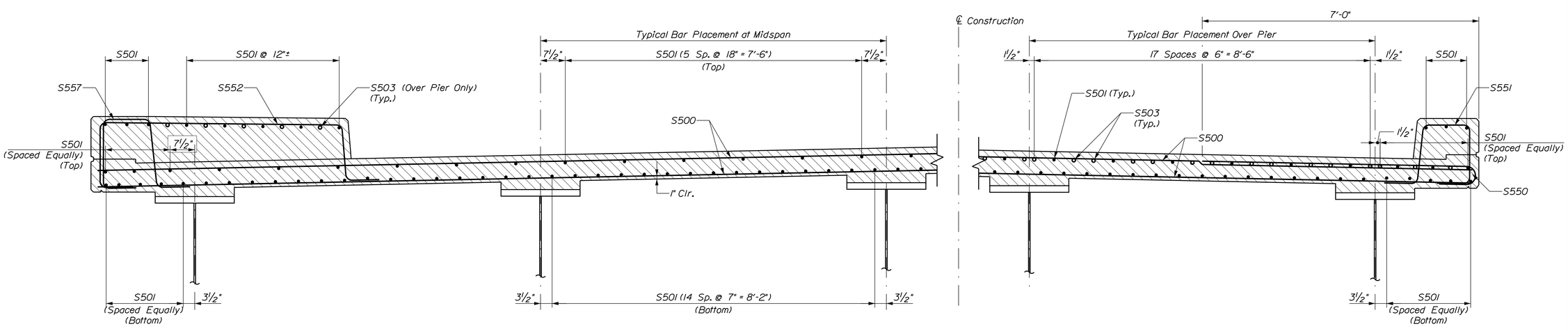

TRANSVERSE REINFORCEMENT SECTION

Stantec

STATE OF MAINE
DEPARTMENT OF TRANSPORTATION

BH-1823(900)

WIN 18239.00

BRIDGE NO. 3334

BRIDGE PLANS

PROJ. MANAGER	L. TIMBERLAKE		
DESIGN-DETAILED	DDT	JTS	JUNE 2014
CHECKED-REVIEWED	AML	DDT/TWM	JUNE 2014
DESIGN2-DETAILED2			
DESIGN3-DETAILED3			
REVISIONS 1			
REVISIONS 2			
REVISIONS 3			
REVISIONS 4			
FIELD CHANGES			

SIGNATURE

P.E. NUMBER

DATE

DURHAM BRIDGE
ANDROSCOGGIN RIVER
DURHAM-LISBON ANDROSCOGGIN COUNTY

SUPERSTRUCTURE REINF. PLAN - SPAN NO. 1

SHEET NUMBER

79

OF 87

Filename: ...\079_SuperstructureReinf1.dgn Division: BRIDGE Username: common Date:7/17/2014

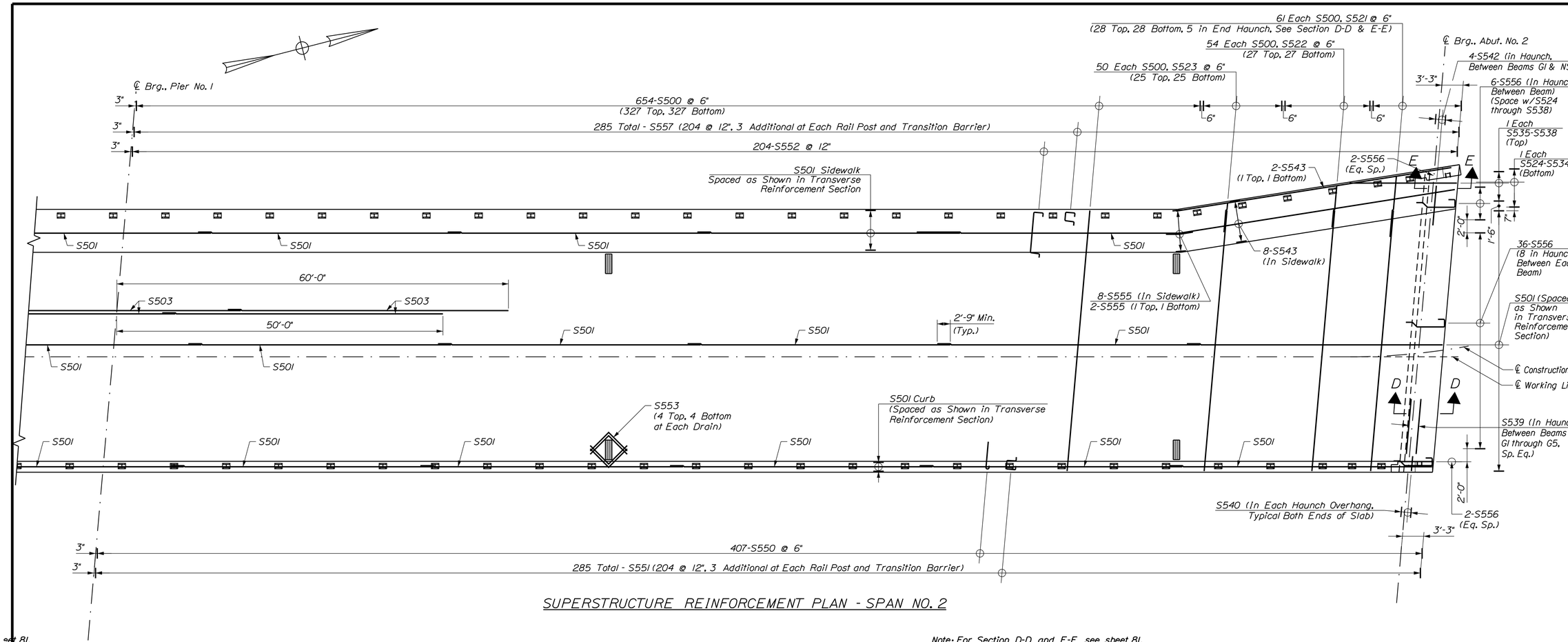

SUPERSTRUCTURE REINFORCEMENT PLAN - SPAN NO. 2

see 81.

Note: For Section D-D and E-E see sheet 81.

Stantec

STATE OF MAINE
DEPARTMENT OF TRANSPORTATION

BH-1823(900)

WIN 18239.00

BRIDGE NO. 3334

BRIDGE PLANS

PROJ. MANAGER	L. TIMBERLAKE		
DESIGN-DETAILED	DOT	JTS	JUNE 2014
CHECKED-REVIEWED	AML	DOT\TWM	JUNE 2014
DESIGN2-DETAILED2			
DESIGN3-DETAILED3			
REVISIONS 1			
REVISIONS 2			
REVISIONS 3			
REVISIONS 4			
FIELD CHANGES			

SIGNATURE

P.E. NUMBER

DATE

DURHAM BRIDGE
ANDROSCOGGIN RIVER
DURHAM-LISBON ANDROSCOGGIN COUNTY

SUPERSTRUCTURE REINF.
PLAN - SPAN NO. 2

SHEET NUMBER

80

OF 87

Date:7/17/2014

Username: common

Division: BRIDGE

Filename: ...\080_SuperstructureReinf2.dgn

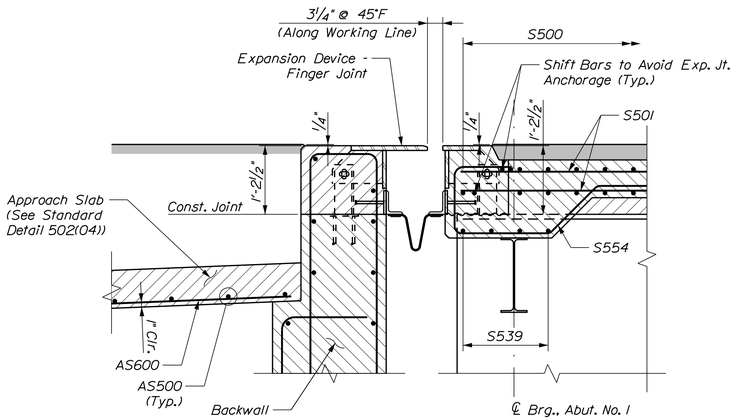

SECTION B-B

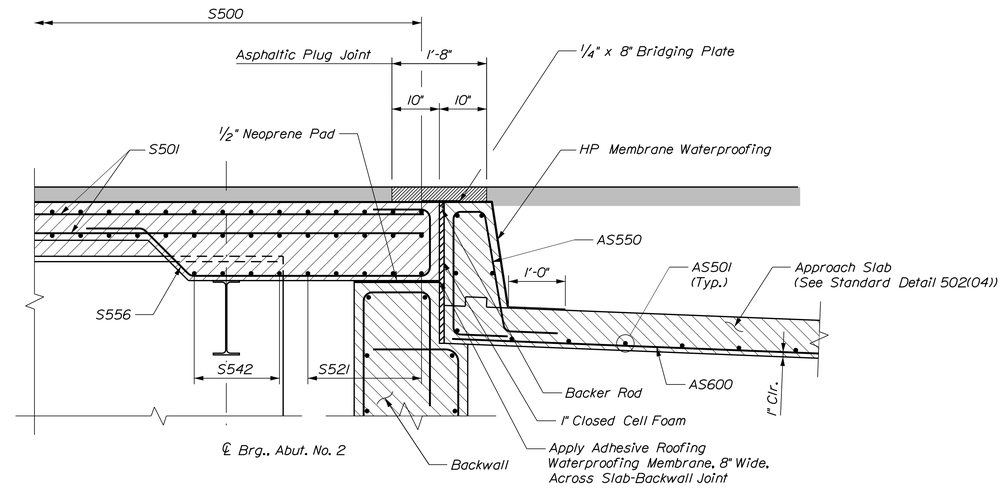

SECTION D-D

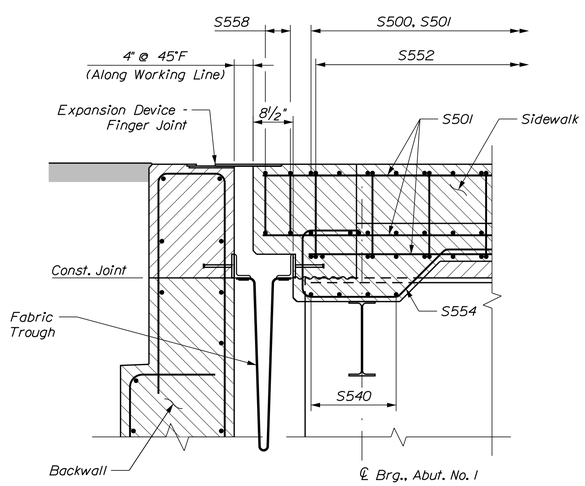

SECTION C-C

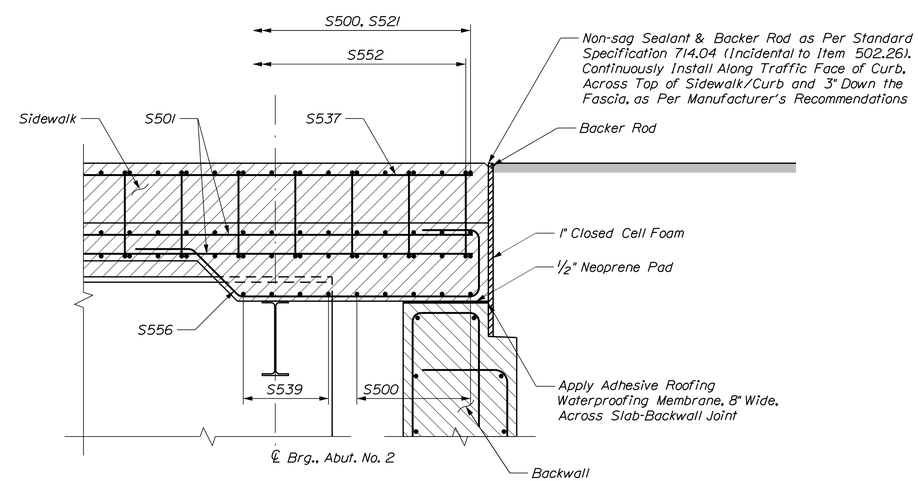

SECTION E-E

Stantec

STATE OF MAINE
DEPARTMENT OF TRANSPORTATION

BH-1823(900)

WIN 18239.00

BRIDGE NO. 3334

BRIDGE PLANS

PROJ. MANAGER	L. TIMBERLAKE	BY	DATE
DESIGN-DETAILED	DOT	JTS	JUNE 2014
CHECKED-REVIEWED	AML	DOT\TWM	JUNE 2014
DESIGN2-DETAILED2			
DESIGN3-DETAILED3			
REVISIONS 1			
REVISIONS 2			
REVISIONS 3			
REVISIONS 4			
FIELD CHANGES			

SIGNATURE

P.E. NUMBER

DATE

DURHAM BRIDGE
ANDROSCOGGIN RIVER
DURHAM-LISBON ANDROSCOGGIN COUNTY

SUPERSTRUCTURE SECTIONS

SHEET NUMBER

81

OF 87

Filename: ...\081_SuperstructureSections.dgn Division: BRIDGE Username: common Date:7/17/2014

EXPANSION DEVICE - FINGER JOINT NOTES

1. See Standard Detail Plate 521(11) for Notes.
2. See Standard Detail Plates 521(01) - 521(10) for additional details.
3. Substitute the ¾"ϕ x 8" studs shown in the Standard Details with ⅞"ϕ x 8" studs and use a minimum clear cover of 1½" measured from the edge of plate to the center of the stud.
4. See Sections B-B and C-C on Sheet 81 for Joint Sections.

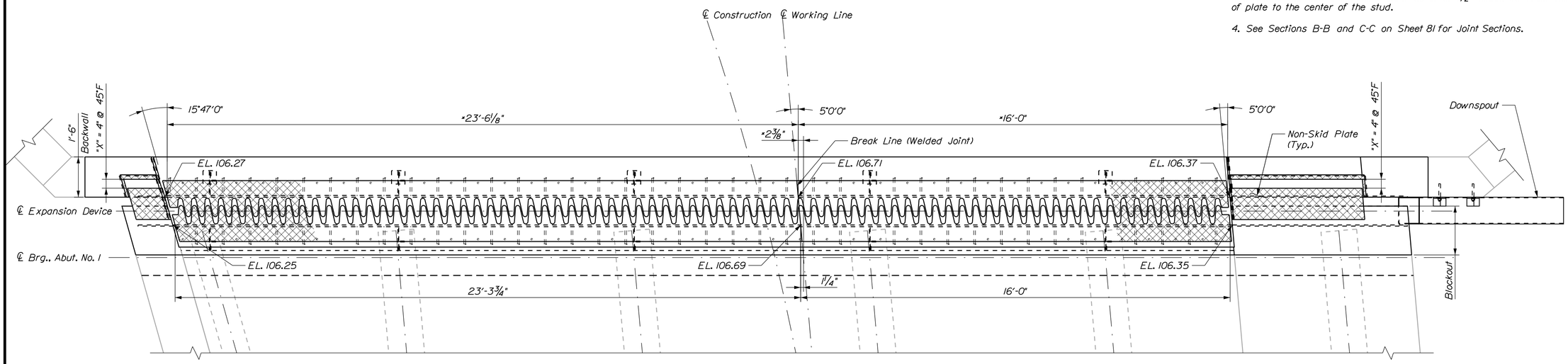

PLAN - FINGER JOINT
(Transition Barriers Not Shown For Clarity)

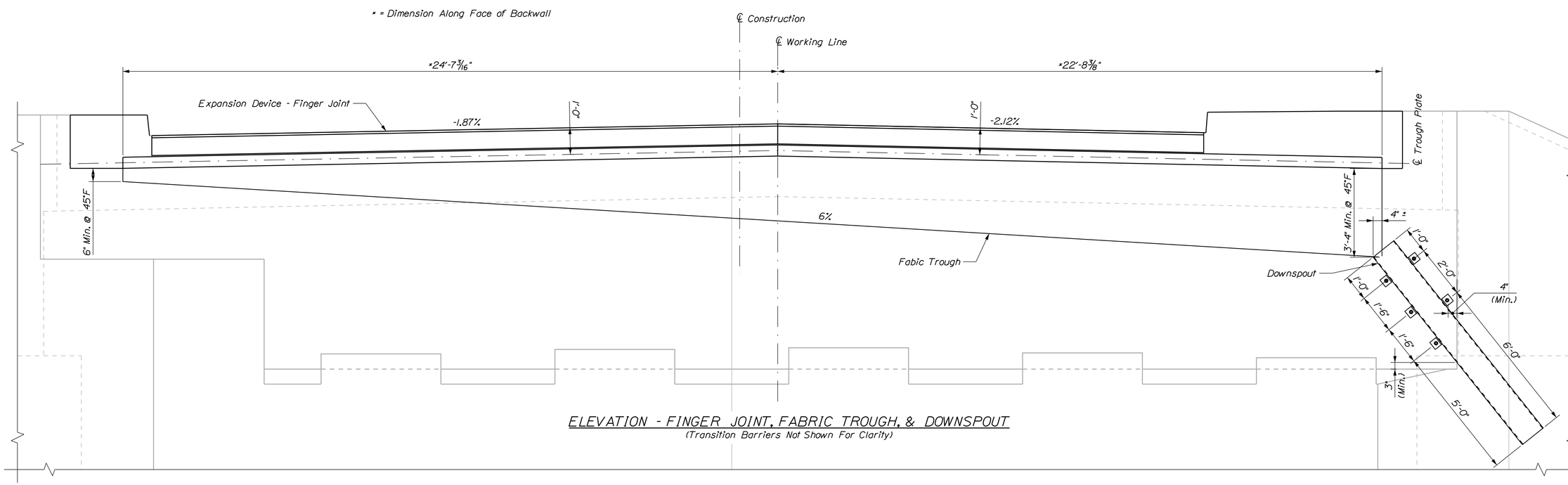

ELEVATION - FINGER JOINT, FABRIC TROUGH, & DOWNSPOUT
(Transition Barriers Not Shown For Clarity)

Stantec

STATE OF MAINE
DEPARTMENT OF TRANSPORTATION

BH-1823(900)

WIN 18239.00

BRIDGE NO. 3334

BRIDGE PLANS

PROJ. MANAGER	L. TIMBERLAKE	BY	DATE
DESIGN-DETAILED	DOT	DOT	JUNE 2014
CHECKED-REVIEWED	AML	AML/TWM	JUNE 2014
DESIGN2-DETAILED2			
DESIGN3-DETAILED3			
REVISIONS 1			
REVISIONS 2			
REVISIONS 3			
REVISIONS 4			
FIELD CHANGES			

SIGNATURE

P.E. NUMBER

DATE

DURHAM BRIDGE
ANDROSCOGGIN RIVER
DURHAM-LISBON ANDROSCOGGIN COUNTY

ABUT. NO. 1
FINGER JOINT

SHEET NUMBER
82
OF 87

Filename: ...\MSTA\082_Fingerjoint.dgn Division: BRIDGE Username: common Date:7/17/2014

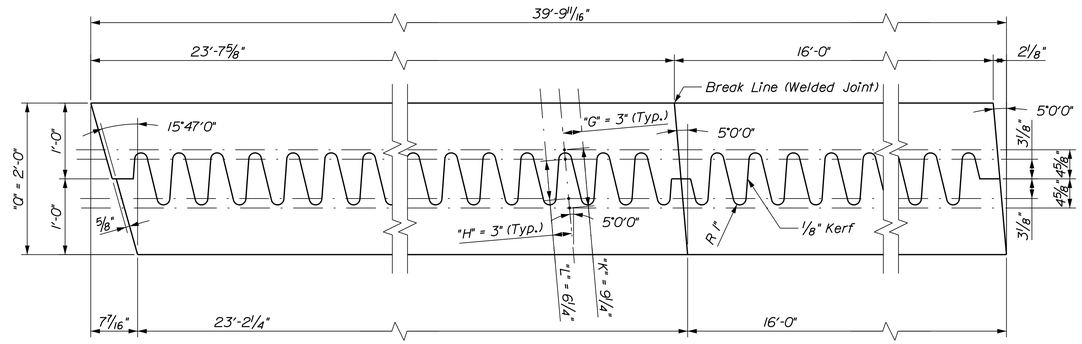

FINGER CUTTING DETAIL

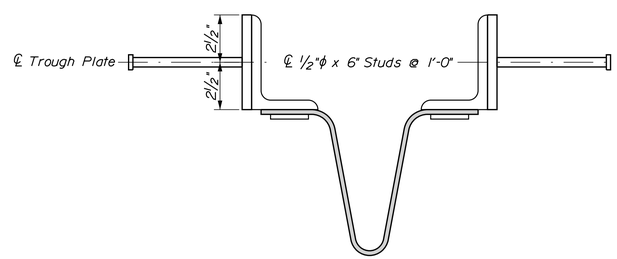

TROUGH SECTION - ANCHORAGE

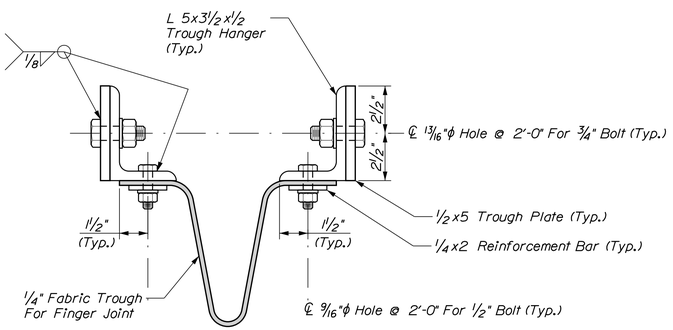

TROUGH SECTION

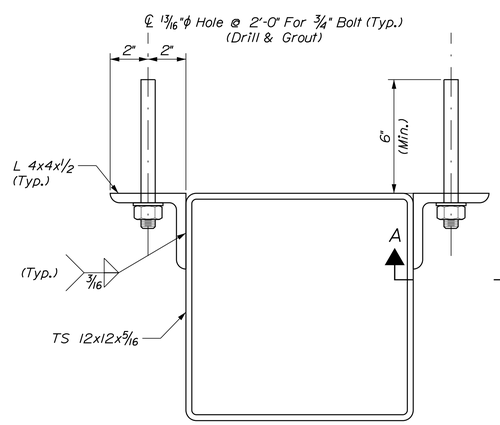

DOWNSPOUT SECTION

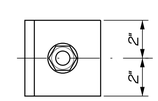

SECTION A-A

Stantec

STATE OF MAINE
DEPARTMENT OF TRANSPORTATION

BH-1823(900)

WIN 18239.00

BRIDGE NO. 3334

BRIDGE PLANS

		BY	DATE
PROJ. MANAGER	L. TIMBERLAKE		
DESIGN-DETAILED	DOT	DOT	JUNE 2014
CHECKED-REVIEWED	AML	AML/TWM	JUNE 2014
DESIGN2-DETAILED2			
DESIGN3-DETAILED3			
REVISIONS 1			
REVISIONS 2			
REVISIONS 3			
REVISIONS 4			
FIELD CHANGES			

SIGNATURE

P.E. NUMBER

DATE

DURHAM BRIDGE
ANDROSCOGGIN RIVER
DURHAM-LISBON ANDROSCOGGIN COUNTY

ABUT. NO. 1
FINGER JOINT

SHEET NUMBER

83

OF 87

Filename: ...\MSTA\083_Fingerjoint.dgn Division: BRIDGE Username: common Date:7/17/2014

STRAIGHT BARS

MARK	QTY.	LENGTH	LOCATION
			Abutment No. 1
A500	53	4'-10"	Vertical - Backwall (NF)
A501	18	25'-5"	Horizontal - Backwall (EF)
A502	18	27'-2"	Horizontal - Backwall (EF)
A503	45	8'-8"	Vertical - Wingwall (NF)
A504	18	8'-10"	Vertical - Southeast Wingwall (EF)
A505	18	10'-10"	Vertical - Southeast Wingwall (EF)
A506	36	16'-8"	Horiz. - Southeast Wingwall (EF)
A507	2	12'-4"	Vertical - Southeast Wingwall (EF)
A508	2	7'-0"	Vertical - Southeast Wingwall (EF)
A509	2	1'-6"	Vertical - Southeast Wingwall (EF)
A510	2	16'-11"	Horiz. - Southeast Wingwall (Top)
A511	18	11'-0"	Vertical - Southwest Wingwall (EF)
A512	16	8'-2"	Vertical - Southwest Wingwall (EF)
A513	16	5'-8"	Vertical - Southwest Wingwall (EF)
A514	28	21'-8"	Horiz. - Southwest Wingwall (EF)
A515	2	19'-2"	Horiz. - Southwest Wingwall (EF)
A516	2	16'-0"	Horiz. - Southwest Wingwall (EF)
A517	2	12'-10"	Horiz. - Southwest Wingwall (EF)
A518	2	9'-8"	Horiz. - Southwest Wingwall (EF)
A519	2	6'-7"	Horiz. - Southwest Wingwall (EF)
A520	2	3'-5"	Horiz. - Southwest Wingwall (EF)
A521	2	22'-10"	Horiz. - Southwest Wingwall (Top)
A600	41	15'-6"	Transverse - Footing (Bottom)
A601	35	43'-3"	Longitudinal - Footing(Top&Bottom)
A602	31	27'-7"	Longitudinal - Footing(SE Wing)
A603	31	33'-0"	Longitudinal - (Footing SW Wing)
A604	55	13'-6"	Transverse - Footing (Wings, Bottom)
A605	12	9'-0"	Transverse - Corner Flare (Footing Bot.)
A606	14	6'-0"	Vertical - Southeast Corner (NF)
A700	88	13'-6"	Transverse - Footing(Wings, Top)
A701	57	10'-9"	Vertical - Breastwall (NF)
A702	57	6'-6"	Vertical - Breastwall (NF)
A703	15	21'-6"	Horiz. - Breastwall (NF)
A704	15	24'-1"	Horiz. - Breastwall (NF)
A705	12	25'-10"	Horiz. - Breastwall (FF)
A706	12	27'-2"	Horiz. Breastwall (FF)
A707	52	7'-8"	Vertical - Backwall (FF)
A708	16	8'-3"	Horiz. - Southeast Corner (NF)
A709	45	8'-9"	Vertical - Wingwall (NF)
A900	47	4'-0"	Rock Dowel - Footing
A901	41	15'-6"	Transverse - Footing (Top)
A902	12	9'-0"	Transverse - Corner Flare (Footing Top)
A903	10	13'-0"	Transverse - Corner Flare (Footing Top)

MARK	QTY.	LENGTH	LOCATION
			Abutment No. 2
B500	21	8'-6"	Transverse - Footing (Top)
B501	20	23'-5"	Longitudinal - Footing (Top & Bottom)
B502	106	4'-10"	Vertical - Backwall (FF)
B503	16	25'-9"	Horiz. - Backwall(EF)
B504	16	26'-11"	Horiz. - Backwall(EF)
B505	41	8'-10"	Vertical - Wingwall (NF)
B506	24	14'-0"	Vertical - Northwest Wingwall (EF)
B507	18	9'-0"	Vertical - Northwest Wingwall (EF)
B508	32	17'-6"	Horiz. - Northwest Wingwall (EF)
B509	2	16'-3"	Horiz. - Northwest Wingwall (EF)
B510	2	13'-9"	Horiz. - Northwest Wingwall (EF)
B511	2	11'-4"	Horiz. - Northwest Wingwall (EF)
B512	2	8'-10"	Horiz. - Northwest Wingwall (EF)
B513	2	6'-5"	Horiz. - Northwest Wingwall (EF)
B514	2	3'-11"	Horiz. - Northwest Wingwall (EF)
B515	2	1'-6"	Horiz. - Northwest Wingwall (EF)
B516	2	18'-11"	Horiz. - Northwest Wingwall (Top)
B517	20	7'-9"	Vertical - Northwest Wingwall (NF)
B518	12	11'-11"	Vertical - Northwest Wingwall (EF)
B519	14	9'-7"	Vertical - Northwest Wingwall (EF)
B520	14	6'-9"	Vertical - Northwest Wingwall (EF)
B521	16	19'-10"	Horiz. - Northwest Wingwall (EF)
B522	2	17'-11"	Horiz. - Northwest Wingwall (EF)
B523	2	15'-5"	Horiz. - Northwest Wingwall (EF)
B524	2	13'-0"	Horiz. - Northwest Wingwall (EF)
B525	2	10'-8"	Horiz. - Northwest Wingwall (EF)
B526	2	8'-2"	Horiz. - Northwest Wingwall (EF)
B527	2	5'-9"	Horiz. - Northwest Wingwall (EF)
B528	2	3'-3"	Horiz. - Northwest Wingwall (EF)
B529	2	21'-6"	Horiz. - Northwest Wingwall (Top)
B530	20	14'-0"	Vertical - Northeast Wingwall (EF)
B531	20	8'-5"	Vertical - Northeast Wingwall (EF)
B532	28	16'-8"	Horiz. - Northeast Wingwall (EF)
B533	2	15'-3"	Horiz. - Northeast Wingwall (EF)
B524	2	13'-5"	Horiz. - Northeast Wingwall (EF)
B535	2	11'-8"	Horiz. - Northeast Wingwall (EF)
B536	2	9'-10"	Horiz. - Northeast Wingwall (EF)
B537	2	8'-0"	Horiz. - Northeast Wingwall (EF)
B538	2	6'-3"	Horiz. - Northeast Wingwall (EF)
B539	2	4'-5"	Horiz. - Northeast Wingwall (EF)
B540	2	2'-7"	Horiz. - Northeast Wingwall (EF)
B541	2	19'-0"	Horiz. - Northeast Wingwall (Top)
B600	48	13'-6"	Transverse - Footing (Bottom)
B601	10	9'-0"	Transverse - Footing (Wings, Bottom)
B602	30	30'-10"	Longitudinal - Footing (Top & Bottom)
B603	19	27'-6"	Transverse - Footing (Wings, Bottom)
B604	14	6'-0"	Vertical - Northwest Corner (NF)
B700	102	7'-10"	Vertical - Breastwall (FF)
B701	58	10'-9"	Vertical - Breastwall (NF)
B702	58	8'-6"	Vertical - Breastwall (NF)
B703	18	21'-6"	Horiz. - Breastwall (NF)
B704	18	24'-6"	Horiz. - Breastwall (NF)
B705	15	26'-8"	Horiz. - Breastwall (FF)
B706	15	26'-11"	Horiz. - Breastwall (FF)
B707	41	7'-9"	Vertical - Wingwall (NF)
B800	119	16'-6"	Transverse - Footing (Top & Bottom)
B801	2	16'-3"	Transverse - Footing (Top & Bottom)
B802	1	16'-0"	Transverse - Footing (Top)
B803	2	15'-9"	Transverse - Footing (Top & Bottom)
B804	1	15'-6"	Transverse - Footing (Top)
B805	2	15'-3"	Transverse - Footing (Top & Bottom)
B806	36	41'-8"	Longitudinal - Footing (Top & Bottom)
B807	21	8'-6"	Transverse - Footing (Top)
B808	95	13'-6"	Transverse - Footing(Top)
B809	21	9'-0"	Transverse - Footing (Top)
B1100	58	10'-0"	Rock Dowel - Footing

BENT BARS

MARK	QTY.	LENGTH	TYPE	A	B	C	D	E	F	G	H	O	R	LOCATION
								Abutment No. 1						
A450	45	4'-2"	U		1'-6"	1'-2"	1'-6"							Southeast/Southwest Wingwall (Top)
A550	52	7'-0"	L	5'-6"	1'-6"									Vertical - Backwall (FF)
A551	25	8'-9"	U		2'-8"	3'-5"	2'-8"							Beam Seat
A552	20	9'-6"	U		2'-8"	4'-2"	2'-8"							Beam Seat
A553	53	14'-4"	U		4'-7"	1'-2"	8'-7"							Vertical - Backwall (NF)
A554	6	4'-8"	V				2'-4"	2'-4"			1'-8"			Horiz. - Southeast Corner (NF)
A555	4	4'-0"	V				2'-1"	1'-11"			1'-5"			Horiz. - Southeast Corner (FF)
A556	6	3'-3"	V				2'-1"	1'-2"			8 3/4"			Horiz. - Southwest Corner (NF/FF)
A557	4	3'-11"	V				2'-1"	1'-10"			1'-3"			Horiz. - Southwest Corner (FF)
A558	4	4'-0"	U		1'-3"	1'-6"	1'-3"							Utility Blockout
A559	10	4'-5"	V				2'-1"	2'-4"			1'-6"			Horiz. - Backwall (NF)
A650	108	5'-6"	U		1'-0"	3'-6"	1'-0"							Footing - Toe (NF)
A651	9	7'-11"	U		1'-0"	5'-11"	1'-0"							Horiz./Vertical - Southeast Corner
A652	1	7'-1"	U		1'-0"	5'-1"	1'-0"							Horiz. - Southeast Corner
A653	1	6'-1"	U		1'-0"	4'-1"	1'-0"							Horiz. - Southeast Corner
A654	83	9'-2"	L	7'-0"	2'-2"									Vertical - Wingwall (FF)
A750	46	8'-3"	U		1'-2"	5'-11"	1'-2"							Horiz. Breastwall (Top)
A751	16	6'-5"	V				3'-0"	3'-5"			2'-1"			Horiz. - Southeast Corner (NF)
A752	6	4'-3"	V				1'-3"	3'-0"			2'-1 1/2"			Horiz. Southeast Corner (FF)
A753	12	8'-0"	V				3'-0"	5'-0"			4'-2"			Horiz. - Southwest Corner (NF)
A754	12	5'-5"	V				3'-0"	2'-5"			7 1/2"			Horiz. - Southwest Corner (NF)
A755	12	5'-4"	V				3'-0"	2'-4"			1'-6"			Horiz. - Southwest Corner (FF)
A756	83	11'-11"	L	10'-9"	1'-2"									Vertical - Wingwall (FF)
A757	12	5'-2"	V				2'-2"	3'-0"			2'-1 1/2"			Horiz. Southeast Corner (FF)
A950	52	14'-4"	L	12'-9"	1'-7"									Vertical - Breastwall (FF)
								Abutment No. 2						
B450	61	4'-2"	U		1'-6"	1'-2"	1'-6"							Northwest/Northeast Wingwall (Top)
B550	21	4'-2"	U		10"	2'-6"	10"							Footing - Toe (NF)
B551	54	6'-11"	L	5'-5"	1'-6"									Vertical - Breastwall (FF)
B552	25	8'-9"	U		2'-8"	3'-5"	2'-8"							Beam Seat
B553	20	9'-6"	U		2'-8"	4'-2"	2'-8"							Beam Seat
B554	38	10'-3"	U		2'-10"	1'-2"	6'-3"							Vertical - Backwall (NF)
B555	5	11'-11"	V				9'-10"	2'-1"			11"			Horiz. - Northwest Corner (NF)
B556	4	11'-3"	V				9'-5"	1'-10"			10"			Horiz. - Northwest Corner (FF)
B557	10	6'-7"	V				4'-3"	2'-4"			1'-8"			Horiz. - Northeast Corner (NF)
B558	9	3'-4"	V				2'-1"	1'-3"			10 1/2"			Horiz. - Northeast Corner (FF)
B559	4	5'-10"	V				3'-11"	1'-11"			1'-4"			Horiz. - Northeast Corner (FF)
B560	4	4'-0"	U		1'-3"	1'-6"	1'-3"							Utility Blockout
B561	15	15'-1"	V		5'-3"	1'-2"	8'-8"							Vertical - Backwall (NF)
B650	101	4'-6"	U		1'-0"	2'-6"	1'-0"							Footing - Toe (NF)
B651	10	7'-11"	U		1'-0"	5'-11"	1'-0"							Horiz./Vertical - Northwest Corner
B652	1	7'-2"	U		1'-0"	5'-2"	1'-0"							Horiz. - Northwest Corner
B653	1	6'-2"	U		1'-0"	4'-2"	1'-0"							Horiz. - Northwest Corner
B654	77	9'-2"	L	7'-0"	2'-2"									Vertical - Wingwall (FF)
B750	58	8'-3"	U		1'-2"	5'-11"	1'-2"							Horiz. - Breastwall (Top)
B751	18	10'-4"	V				6'-0"	4'-4"			3'-1"			Horiz. - Northwest Corner (NF)
B752	18	5'-2"	V				3'-0"	2'-2"			9"			Horiz. - Northwest Corner (NF)
B753	6	3'-9"	V				3'-0"	9"			4"			Horiz. - Northwest Corner (FF)
B754	15	7'-10"	V				3'-0"	4'-10"			4'-2"			Horiz.- Northwest Corner (NF)
B755	15	5'-6"	V				3'-0"	2'-6"			8"			Horiz.- Northwest Corner (NF)
B756	12	5'-3"	V				3'-0"	2'-3"			1'-7"			Horiz.- Northwest Corner (FF)
B757	77	10'-11"	L	9'-9"	1'-2"									Vertical - Wingwall (FF)
B758	40	8'-11"	L	7'-9"	1'-2"									Vertical - Northwest Wingwall (FF)
B759	15	5'-10"	V				3'-0"	2'-10"			1'-2"			Horiz. - Northwest Corner (FF)
B850	102	13'-1"	L	11'-9"	1'-4"									Vertical - Backwall (FF)

TYPE - BENDING DIAGRAMS

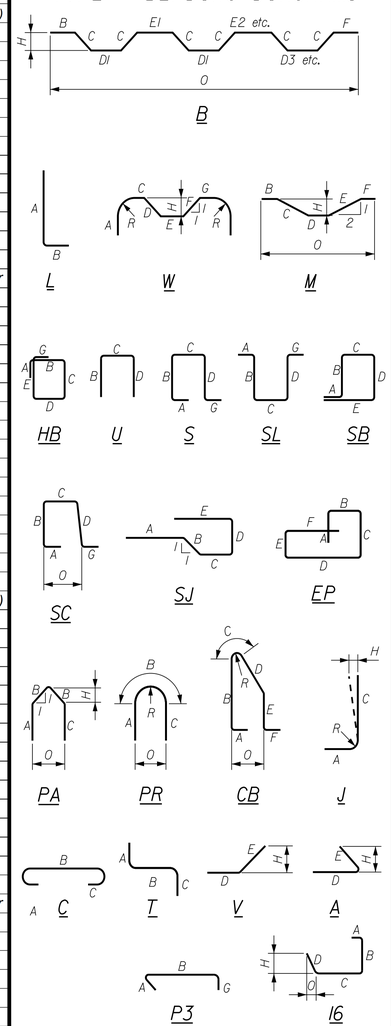

All dimensions are out-to-out of bar.

Bending details and hooks shall conform to the recommendations of the current revision of ACI Standard 318.

Reinforcing Bar: ASTM A615/A615M, Grade 420

GENERAL NOTES

1. The first two digits following the letter(s) of the mark indicate the size of the bar:

   Mark "A1602" = bar size #16
   Mark "P2501" = bar size #25
   Mark "S1950" = bar size #19

2. Each crank bar, Type B, may be replaced by two (2) straight bars (one top and one bottom) of the same bar size as the crank bar. Payment in either case shall be based on crank bars as schedule on the plans.

Stantec

STATE OF MAINE
DEPARTMENT OF TRANSPORTATION

BH-1823(900)

WIN 18239.00

BRIDGE PLANS

BRIDGE NO. 3334

PROJ. MANAGER	L. TIMBERLAKE	BY	DATE
DESIGN-DETAILED	JTS	JTS	OCT 2013
CHECKED-REVIEWED	DDT	JTS/DDT	OCT 2013
DESIGN2-DETAILED2			
DESIGN3-DETAILED3			
REVISIONS 1			
REVISIONS 2			
REVISIONS 3			
REVISIONS 4			
FIELD CHANGES			

SIGNATURE

P.E. NUMBER

DATE

DURHAM BRIDGE
ANDROSCOGGIN RIVER
DURHAM-LISBON ANDROSCOGGIN COUNTY

REINFORCEMENT SCHEDULE 1

SHEET NUMBER

84

OF 87

Filename: ...\MSTA\084_Reinf_Sched_1.dgn Division: BRIDGE Username: common Date:7/17/2014

STRAIGHT BARS

MARK	QTY.	LENGTH	LOCATION
			Superstructure
*S500	1383	40'-0"	Transverse - Top & Bottom
*S501	988	40'-9"	Longitudinal - Top & Bottom
*S502	3	39'-5"	Longitudinal - Curb (Top)
*S503	177	43'-6"	Longitudinal - Sdwlk/Over Pier (Top)
*S504	1	34'-8"	Longitudinal - South Taper (Bot)
*S505	1	31'-8"	Longitudinal - South Taper (Bot)
*S506	1	28'-8"	Longitudinal - South Taper (Bot)
*S507	1	25'-8"	Longitudinal - South Taper (Bot)
*S508	1	22'-8"	Longitudinal - South Taper (Bot)
*S509	1	19'-7"	Longitudinal - South Taper (Bot)
*S510	1	16'-7"	Longitudinal - South Taper (Bot)
*S511	1	13'-7"	Longitudinal - South Taper (Bot)
*S512	1	10'-7"	Longitudinal - South Taper (Bot)
*S513	1	7'-6"	Longitudinal - South Taper (Bot)
*S514	1	4'-6"	Longitudinal - South Taper (Bot)
*S515	1	1'-6"	Longitudinal - South Taper (Bot)
*S516	1	30'-6"	Longitudinal - South Taper (Top)
*S517	1	23'-5"	Longitudinal - South Taper (Top)
*S518	1	15'-8"	Longitudinal - South Taper (Top)
*S519	1	9'-2"	Longitudinal - South Taper (Top)
*S520	1	1'-5"	Longitudinal - South Taper (Top)
*S521	121	10'-0"	Transverse - South Taper (Top & Bot.)
*S522	94	7'-4"	Transverse - South Taper (Top & Bot.)
*S523	96	5'-4"	Transverse - South Taper (Top & Bot.)
*S524	1	38'-9"	Longitudinal - North Taper (Bot.)
*S525	1	38'-2"	Longitudinal - North Taper (Bot.)
*S526	1	31'-6"	Longitudinal - North Taper (Bot.)
*S527	1	27'-10"	Longitudinal - North Taper (Bot.)
*S528	1	24'-3"	Longitudinal - North Taper (Bot.)
*S529	1	20'-8"	Longitudinal - North Taper (Bot.)
*S530	1	17'-0"	Longitudinal - North Taper (Bot.)
*S531	1	13'-4"	Longitudinal - North Taper (Bot.)
*S532	1	9'-9"	Longitudinal - North Taper (Bot.)
*S533	1	6'-1"	Longitudinal - North Taper (Bot.)
*S534	1	2'-6"	Longitudinal - North Taper (Bot.)
*S535	1	32'-10"	Longitudinal - North Taper (Top)
*S536	1	23'-3"	Longitudinal - North Taper (Top)
*S537	1	15'-5"	Longitudinal - North Taper (Top)
*S538	1	6'-0"	Longitudinal - North Taper (Top)
*S539	20	8'-5"	Transverse - Haunch
*S540	8	2'-4"	Transverse - Haunch Overhang
*S541	4	6'-8"	Transverse - South Taper
*S542	4	6'-2"	Transverse - North Taper
*S543	10	42'-6"	North Sidewalk
			Approach Slab
AS500	16	38'-5"	Transverse - South Approach
AS501	20	37'-3"	Transverse - North Approach
AS600	152	14'-8"	Longitudinal - South & North Approach

MARK	QTY.	LENGTH	LOCATION
			Pier
P500	52	23'-8"	Longitudinal - Footing (Top & Bottom)
P501	125	9'-6"	Transverse - Footing (Top & Bottom)
P502	2	8'-6"	Transverse - Footing (Top & Bottom)
P503	1	7'-6"	Transverse - Footing (Top & Bottom)
P504	2	6'-6"	Transverse - Footing (Top & Bottom)
P505	1	5'-6"	Transverse - Footing (Top & Bottom)
P506	2	4'-6"	Transverse - Footing (Top & Bottom)
P507	1	3'-6"	Transverse - Footing (Top & Bottom)
P508	2	2'-6"	Transverse - Footing (Top & Bottom)
P509	1	1'-6"	Transverse - Footing (Top & Bottom)
P510	30	20'-10"	Longitudinal - Pier Cap
P700	60	21'-0"	Longitudinal - Pier Shaft
P800	93	6'-6"	Vertical - Pier Shaft
P801	4	10'-0"	Vertical - Pier Shaft
P802	89	18'-0"	Vertical - Pier Shaft

BENT BARS

MARK	QTY.	LENGTH	TYPE	A	B	C	D	E	F	G	H	O	R	LOCATION
														Superstructure
*S550	689	7'-7"	C	7"	7'-0"									Overhang
*S551	484	5'-7"	SC	10"	1'-4"	1'-2"	1'-5"			10"		6'-4"		Curb
*S552	345	10'-5"	SC	10"	1'-4"	6'-1"	1'-4"			10"		6'-4"		Sidewalk
*S553	64	8'-0"	L	4'-0"	4'-0"									Drains
*S554	46	5'-5"	SJ	10"	1'-3"	1'-6"	1'-0"	10"						South End Haunch
*S555	15	6'-0"	V				3'-0"	3'-0"			5 9/16"			Sidewalk/Curb - Flare Splice
*S556	46	8'-1"	SJ	10"	1'-3"	4'-2"	1'-0"	10"						North End Haunch
*S557	483	6'-1"	SC	10"	1'-7"	1'-2"	1'-8"			10"		1'-4"		Sidewalk
*S558	2	16'-8"	HB	10"	6'-3"	1'-3"	6'-3"	1'-3"		10"				South End Haunch
														Approach Slab
AS550	38	6'-7"	SC	10"	2'-2"	6"	2'-3"			10"		11"		Approach Slab Seat
														Pier
P550	103	4'-6"	U		1'-0"	2'-6"	1'-0"							Pier Footing/Seal
P551	4	13'-0"	V				6'-6"	6'-6"			6'-6"			Pier Footing - Nose
P552	18	13'-10"	U		5'-0"	3'-10"	5'-0"							Vertical - Pier Cap
P553	40	11'-6"	U		3'-9"	4'-0"	3'-9"							Vertical - Pier Cap
P554	40	10'-0"	U		3'-0"	4'-0"	3'-0"							Vertical - Pier Cap
P750	1	14'-10"	PA	3'-7"	3'-10"	3'-7"					2'-8 1/2"	5'-5"		Pier - Nose
P751	1	14'-8"	PA	3'-7"	3'-9"	3'-7"					2'-7 1/2"	5'-3"		Pier - Nose
P752	1	14'-4"	PA	3'-7"	3'-7"	3'-7"					2'-6 1/2"	5'-1"		Pier - Nose
P753	1	14'-2"	PA	3'-7"	3'-6"	3'-7"					2'-5 1/2"	4'-11"		Pier - Nose
P754	1	13'-10"	PA	3'-7"	3'-4"	3'-7"					2'-4 1/2"	4'-9"		Pier - Nose
P755	1	13'-8"	PA	3'-7"	3'-3"	3'-7"					2'-3 1/2"	4'-7"		Pier - Nose
P756	1	13'-4"	PA	3'-7"	3'-1"	3'-7"					2'-2 1/2"	4'-5"		Pier - Nose
P757	1	13'-2"	PA	3'-7"	3'-0"	3'-7"					2'-1 1/2"	4'-3"		Pier - Nose
P758	1	13'-0"	PA	3'-7"	2'-11"	3'-7"					2'-0 1/2"	4'-1"		Pier - Nose
P759	1	12'-8"	PA	3'-7"	2'-9"	3'-7"					1'-11 1/2"	3'-11"		Pier - Nose
P760	1	12'-6"	PA	3'-7"	2'-8"	3'-7"					1'-10 1/2"	3'-9"		Pier - Nose
P761	1	12'-2"	PA	3'-7"	2'-6"	3'-7"					1'-9 1/2"	3'-7"		Pier - Nose
P762	1	12'-0"	PA	3'-7"	2'-5"	3'-7"					1'-8 1/2"	3'-5"		Pier - Nose
P763	1	11'-10"	PA	3'-7"	2'-4"	3'-7"					1'-7 1/2"	2'-5"		Pier - Nose
P764	1	11'-6"	PA	3'-7"	2'-2"	3'-7"					1'-6 1/2"	3'-1"		Pier - Nose
P765	1	12'-7"	U		3'-7"	5'-5"	3'-7"							Pier - Downstream Edge
P766	1	12'-5"	U		3'-7"	5'-3"	3'-7"							Pier - Downstream Edge
P767	1	12'-3"	U		3'-7"	5'-1"	3'-7"							Pier - Downstream Edge
P768	1	12'-1"	U		3'-7"	4'-11"	3'-7"							Pier - Downstream Edge
P769	1	11'-11"	U		3'-7"	4'-9"	3'-7"							Pier - Downstream Edge
P770	1	11'-9"	U		3'-7"	4'-7"	3'-7"							Pier - Downstream Edge
P771	1	11'-7"	U		3'-7"	4'-5"	3'-7"							Pier - Downstream Edge
P772	1	11'-5"	U		3'-7"	4'-3"	3'-7"							Pier - Downstream Edge
P773	1	11'-3"	U		3'-7"	4'-1"	3'-7"							Pier - Downstream Edge
P774	1	11'-1"	U		3'-7"	3'-11"	3'-7"							Pier - Downstream Edge
P775	1	10'-11"	U		3'-7"	3'-9"	3'-7"							Pier - Downstream Edge
P776	1	10'-9"	U		3'-7"	3'-7"	3'-7"							Pier - Downstream Edge
P777	1	10'-7"	U		3'-7"	3'-5"	3'-7"							Pier - Downstream Edge
P778	1	9'-7"	U		3'-7"	2'-5"	3'-7"							Pier - Downstream Edge
P779	1	10'-3"	U		3'-7"	3'-1"	3'-7"							Pier - Downstream Edge

TYPE - BENDING DIAGRAMS

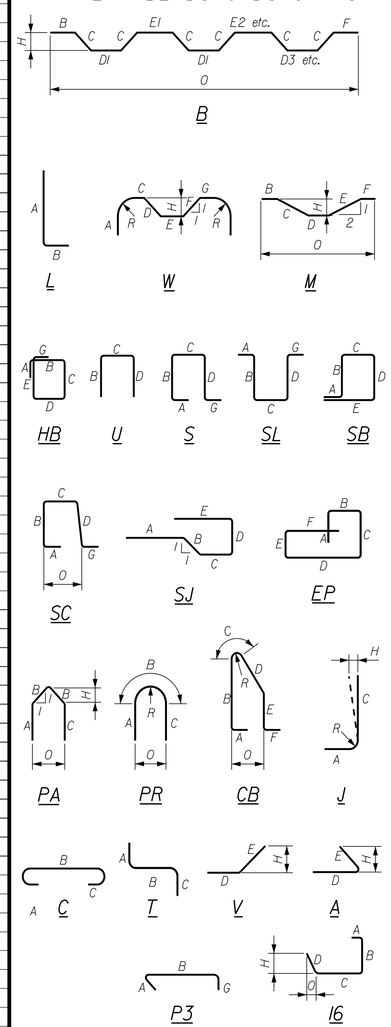

All dimensions are out-to-out of bar.

Bending details and hooks shall conform to the recommendations of the current revision of ACI Standard 318.

Reinforcing Bar: ASTM A615/A615M, Grade 420

GENERAL NOTES

1. The first two digits following the letter(s) of the mark indicate the size ofthe bar:

   Mark "A1602" = bar size #16
   Mark "P2501" = bar size #25
   Mark "S1950" = bar size #19

2. Each crank bar, Type B, may be replaced by two (2) straight bars (one top and one bottom) of the same bar size as the crank bar. Payment in either case shall be based on crank bars as schedule on the plans.

3. Bars marked (*) are part of the corrosion resistant reinforcing system. Item 503.30.

4. Deck, curb, and sidewalk reinforcing is not included in 503 pay items. See note 7 on sheet 77.

Stantec

STATE OF MAINE
DEPARTMENT OF TRANSPORTATION

BH-1823(900)

WIN 18239.00

BRIDGE PLANS

BRIDGE NO. 3334

PROJ. MANAGER	L. TIMBERLAKE	BY	DATE
DESIGN-DETAILED	JTS	JTS	OCT 2013
CHECKED-REVIEWED	DDT	JTS/DDT	OCT 2013
DESIGN2-DETAILED2			
DESIGN3-DETAILED3			
REVISIONS 1			
REVISIONS 2			
REVISIONS 3			
REVISIONS 4			
FIELD CHANGES			

SIGNATURE

P.E. NUMBER

DATE

DURHAM BRIDGE
ANDROSCOGGIN RIVER
DURHAM-LISBON ANDROSCOGGIN COUNTY

REINFORCEMENT SCHEDULE 2

SHEET NUMBER

85

OF 87

Filename: ...\MSTA\085_Reinf_Sched_2.dgn Division: BRIDGE Username: common Date:7/17/2014

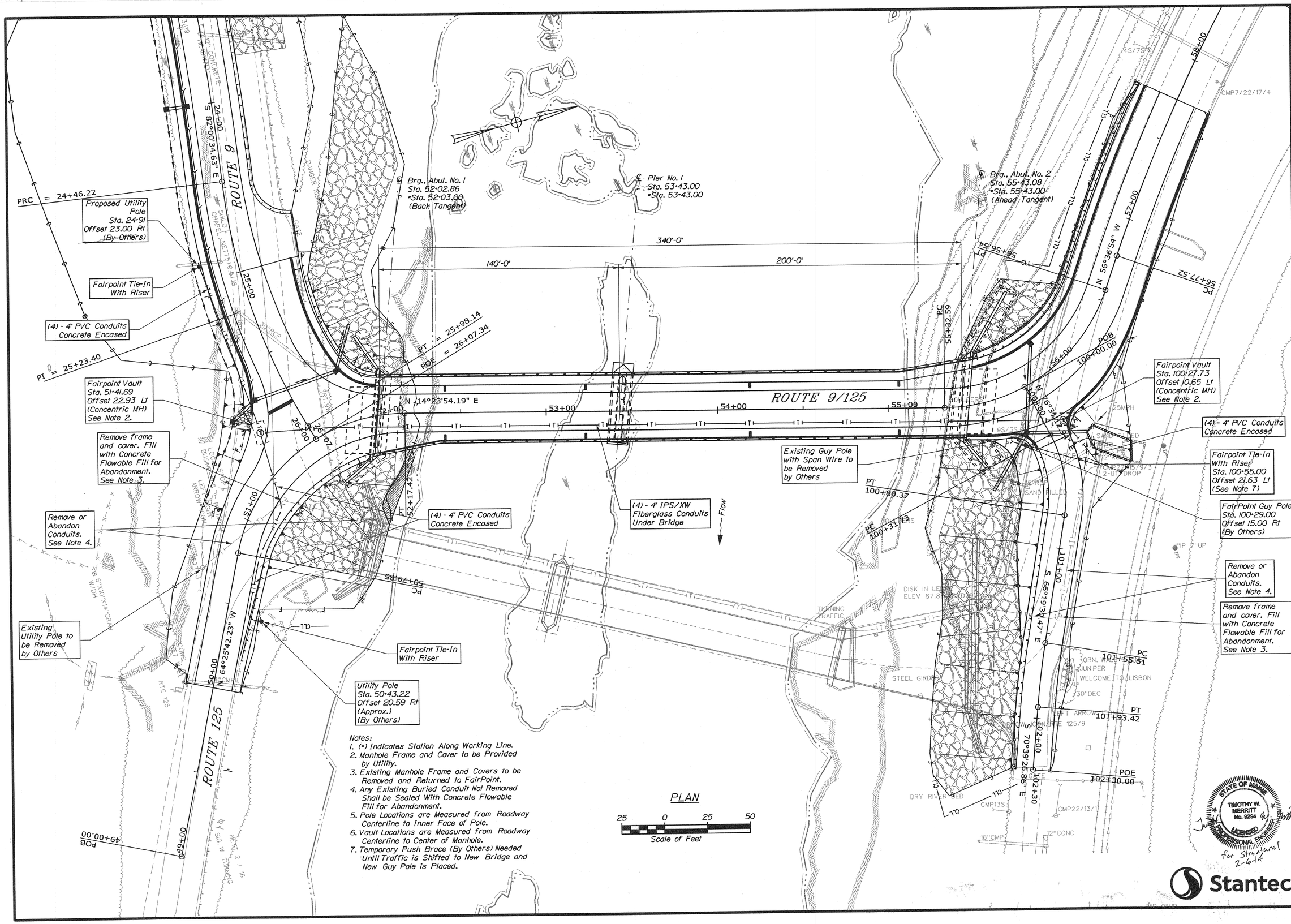

Notes:
1. (*) Indicates Station Along Working Line.
2. Manhole Frame and Cover to be Provided by Utility.
3. Existing Manhole Frame and Covers to be Removed and Returned to FairPoint.
4. Any Existing Buried Conduit Not Removed Shall be Sealed With Concrete Flowable Fill for Abandonment.
5. Pole Locations are Measured from Roadway Centerline to Inner Face of Pole.
6. Vault Locations are Measured from Roadway Centerline to Center of Manhole.
7. Temporary Push Brace (By Others) Needed Until Traffic is Shifted to New Bridge and New Guy Pole is Placed.

Stantec Consulting Services Inc.
482 Payne Road, Scarborough ME 04074
Tel. 207.883.3355 Fax 207.883.3376

FAIRPOINT COMMUNICATIONS

PROJECT NUMBER
195310928

STATE OF MAINE — RICHARD C. HENDEE, JR. No. 7674 — LICENSED PROFESSIONAL ENGINEER

PROJ. MANAGER	L. TIMBERLAKE	BY	DATE
DESIGN-DETAILED	JCM	JTS	FEB 2014
CHECKED-REVIEWED	JCM/DH/DDT	TWM/DH	FEB 2014
DESIGN2-DETAILED2			
DESIGN3-DETAILED3			
REVISIONS 1			
REVISIONS 2			
REVISIONS 3			
REVISIONS 4			
FIELD CHANGES			

SIGNATURE #7674
P.E. NUMBER
2-6-2014
DATE

DURHAM BRIDGE
ANDROSCOGGIN RIVER
DURHAM-LISBON ANDROSCOGGIN COUNTY

FAIRPOINT CONDUIT LAYOUT PLAN

STATE OF MAINE — TIMOTHY W. MERRITT No. 9294 — LICENSED PROFESSIONAL ENGINEER
for Structural 2-6-14

Stantec

SHEET NUMBER
T-1
OF 3

Filename: ...\MSTAVT-1_GeneralPlan.dgn Division: BRIDGE Username: common Date:2/6/2014

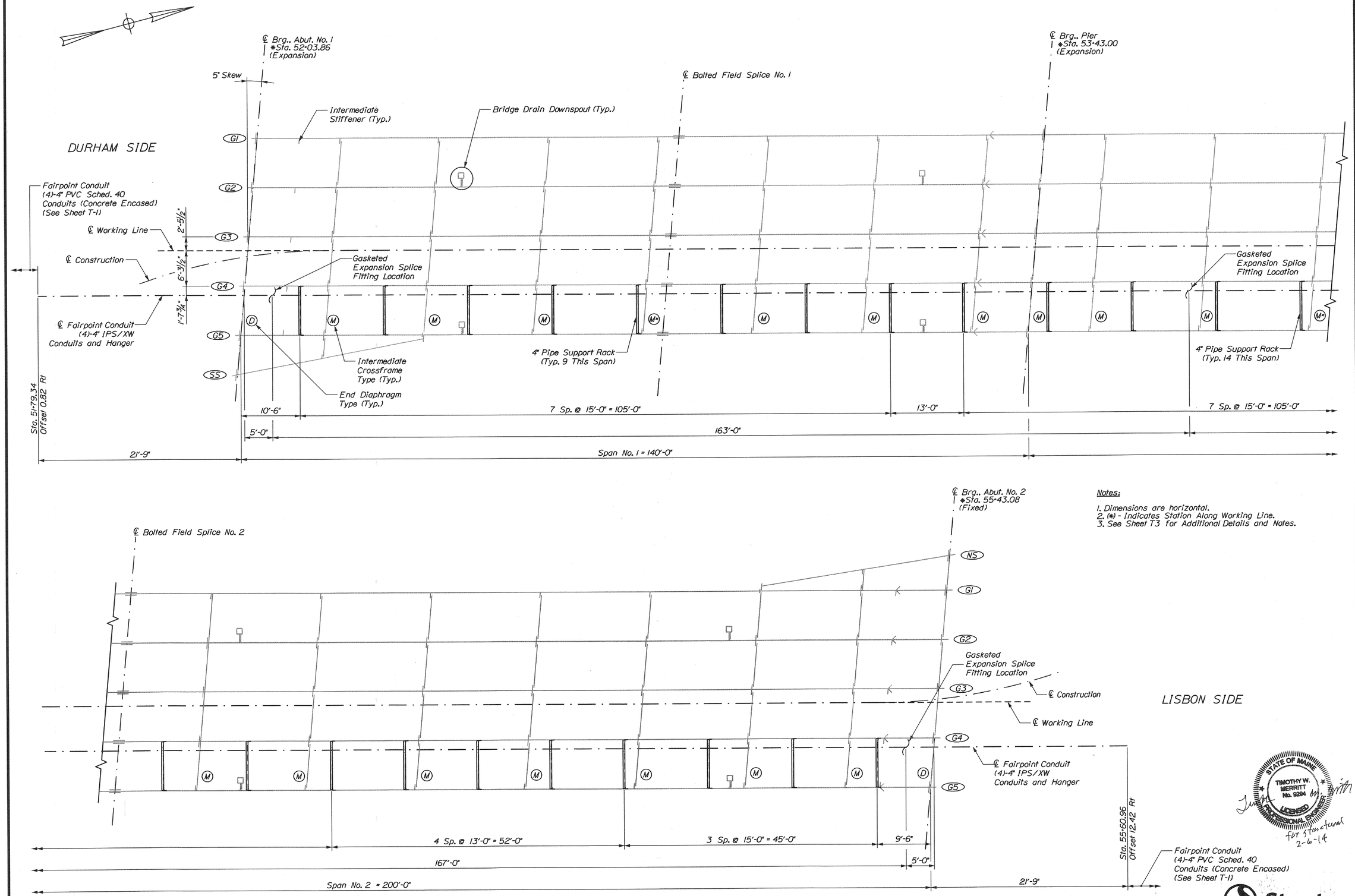

FRAMING PLAN

Notes:

1. Dimensions are horizontal.
2. (*) - Indicates Station Along Working Line.
3. See Sheet T3 for Additional Details and Notes.

STATE OF MAINE
TIMOTHY W. MERRITT
No. 9294
LICENSED
PROFESSIONAL ENGINEER
for Structural
2-6-14

Stantec

Stantec Consulting Services Inc.
482 Payne Road, Scarborough ME 04074
Tel. 207.883.3355 Fax 207.883.3376

FAIRPOINT COMMUNICATIONS

PROJECT NUMBER
195310928

STATE OF MAINE
RICHARD C. HENDEE, JR.
No. 7674
LICENSED
PROFESSIONAL ENGINEER

P.E. NUMBER #7674
SIGNATURE
2-6-2014
DATE

		BY	DATE
PROJ. MANAGER	L. TIMBERLAKE		
DESIGN-DETAILED	JCM	JTS	FEB 2014
CHECKED-REVIEWED	JCM/DH/DDT	TWM/DH	FEB 2014
DESIGN2-DETAILED2			
DESIGN3-DETAILED3			
REVISIONS 1			
REVISIONS 2			
REVISIONS 3			
REVISIONS 4			
FIELD CHANGES			

DURHAM BRIDGE
ANDROSCOGGIN RIVER
DURHAM-LISBON ANDROSCOGGIN COUNTY

UTILITY SUPPORT LAYOUT

SHEET NUMBER
T-2
OF 3

Filename: ...\MSTA\T-2_Framing Plan.dgn Division: BRIDGE Username: common Date:2/6/2014

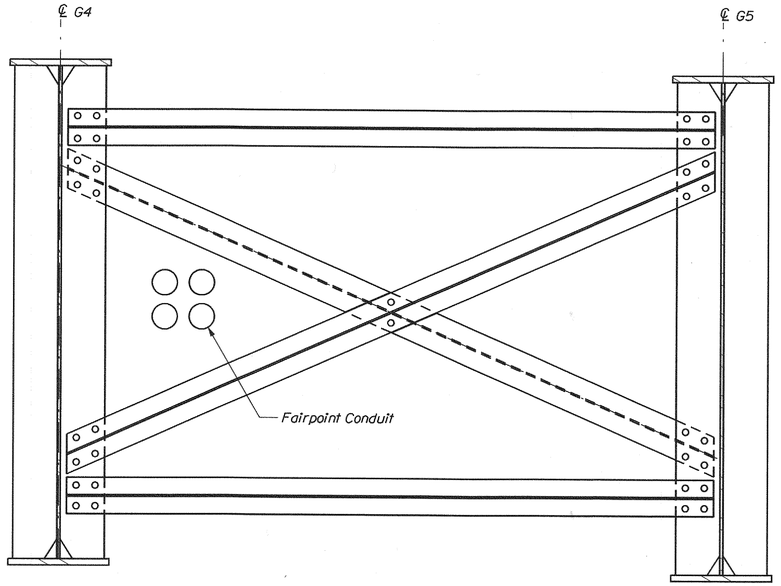

CONDUIT LOCATION AT TYPICAL INTERMEDIATE CROSSFRAME

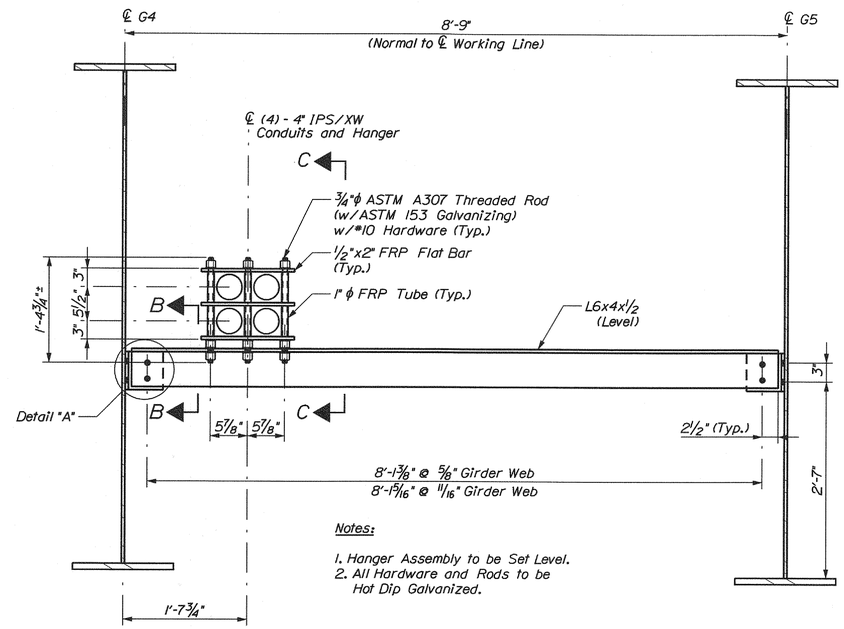

Notes:

1. Hanger Assembly to be Set Level.
2. All Hardware and Rods to be Hot Dip Galvanized.

TYPICAL UTILITY SUPPORT

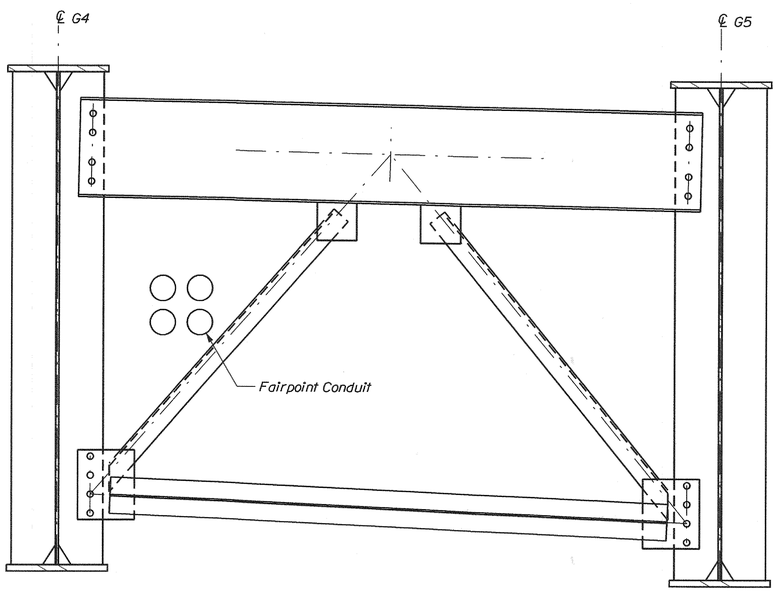

CONDUIT LOCATION AT TYPICAL END DIAPHRAGM

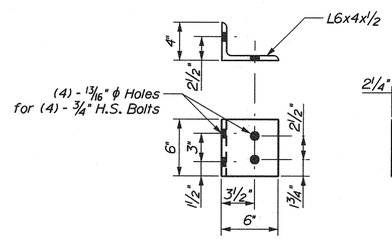

DETAIL "A"

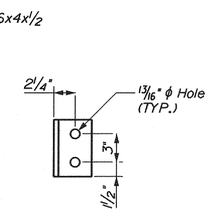

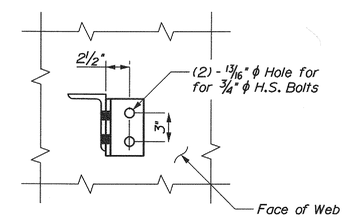

SECTION B-B

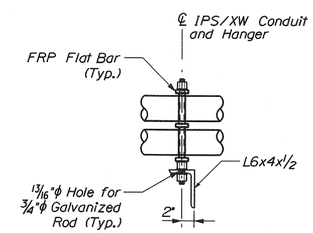

SECTION C-C

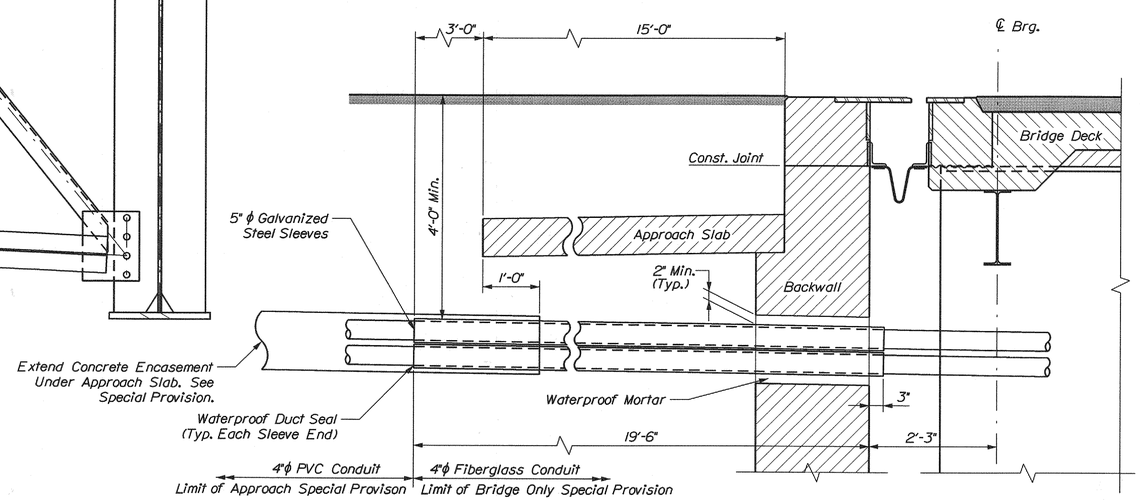

TYPICAL SECTION AT ABUTMENT

(Abutment No. 1 Shown, Abutment No. 2 Similar)

NOTES

1. Fairpoint fiberglass conduits stop 10 feet beyond ends of bridge approach slabs and shall be encased in concrete beyond the bridge approach slabs. After entering the concrete they shall be housed in 4" PVC conduits and sealed. Total Fairpoint run is approximately 725 feet.
2. All conduits located under the bridge shall be run in free air and suspended by their individual rack assemblies and shall be of the type specified on the drawings.
3. All sleeves running through the abutment backwalls shall be cast-in-place or run through existing block-outs then sealed off with a waterproof mortar when finally completed.
4. Conduits run under the bridge shall have expansion joints as shown.
5. These drawings are based on available bridge design drawings. Contractor shall verify all dimensions before fabrication and installation of conduits and supports.
6. Fiberglass duct supports are designed for a maximum cable load of 8.0 lbs per foot per 4" duct and a duct self-weight of 2.4 lbs per foot and hanger weight of 15 lbs. The total unfactored conduit load at a support is 650 lbs maximum.
7. 4" straight couplings shall be installed as required.
8. The Contractor is required to comply with all nationally accepted safety practices, OSHA and any other safety requirements imposed by the Owner, Agency or any other parties which may have jurisdiction over safety.
9. All connections between duct sections, expansion joints, adapters and couplings are to be bonded. Refer to manufacturer's instructions for bonding procedures.
10. Cap the ends of the ducts if the underground portion of the work is not done at the same time as the bridge portion.
11. All attachment rods, spacer rods, nuts, lock and flat washers to be zinc coated.
12. This design is for the express purpose for use on the bridge over the Androscoggin River in Durham-Lisbon, Maine.
13. See MaineDOT Plans for additional bridge and approach roadway details.
14. Structural steel utility support angles and connection angles shall be ASTM A709, Grade 50W.

Stantec Consulting Services Inc.
482 Payne Road, Scarborough ME 04074
Tel. 207883.3355 Fax 207.883.3376

FAIRPOINT COMMUNICATIONS

PROJECT NUMBER 195310928

STATE OF MAINE RICHARD C. HENDEE, JR. No. 7674 LICENSED PROFESSIONAL ENGINEER

P.E. NUMBER #7674 — SIGNATURE — 2-6-2014 DATE

	BY	DATE
PROJ. MANAGER	L. TIMBERLAKE	
DESIGN-DETAILED	JCM	JTS	FEB 2014
CHECKED-REVIEWED	JCM/DH/DDT	TWM/DH	FEB 2014
DESIGN2-DETAILED2		
DESIGN3-DETAILED3		
REVISIONS 1		
REVISIONS 2		
REVISIONS 3		
REVISIONS 4		
FIELD CHANGES		

DURHAM BRIDGE
ANDROSCOGGIN RIVER
DURHAM-LISBON ANDROSCOGGIN COUNTY

UTILITY SUPPORT DETAILS

STATE OF MAINE TIMOTHY W. MERRITT No. 9294 LICENSED PROFESSIONAL ENGINEER

for structural 2-6-14

Stantec

SHEET NUMBER

T-3

OF 3

Filename: ...\00\BRIDGE\MSTA\T-3_Details.dgn Division: BRIDGE Username: common Date:2/6/2014

STATE OF MAINE
DEPARTMENT OF TRANSPORTATION

INDEX OF SHEETS

Description	Sheet No.
Title Sheet	1
Typical Sections	2-3
Estimated Quantities	4
Drainage Summary	5
General Notes	6
Construction Notes	7
Buttress Details	8
Plans	9-11
Profiles	12-14
Driveway Plan/Profile	15-17
Grading Detail	18
Cross Sections	19-46
Right of Way Map	47-49

DURHAM
ANDROSCOGGIN
ROUTE 9
STP-1838(200)
PROJECT LENGTH : 0.259 MILES

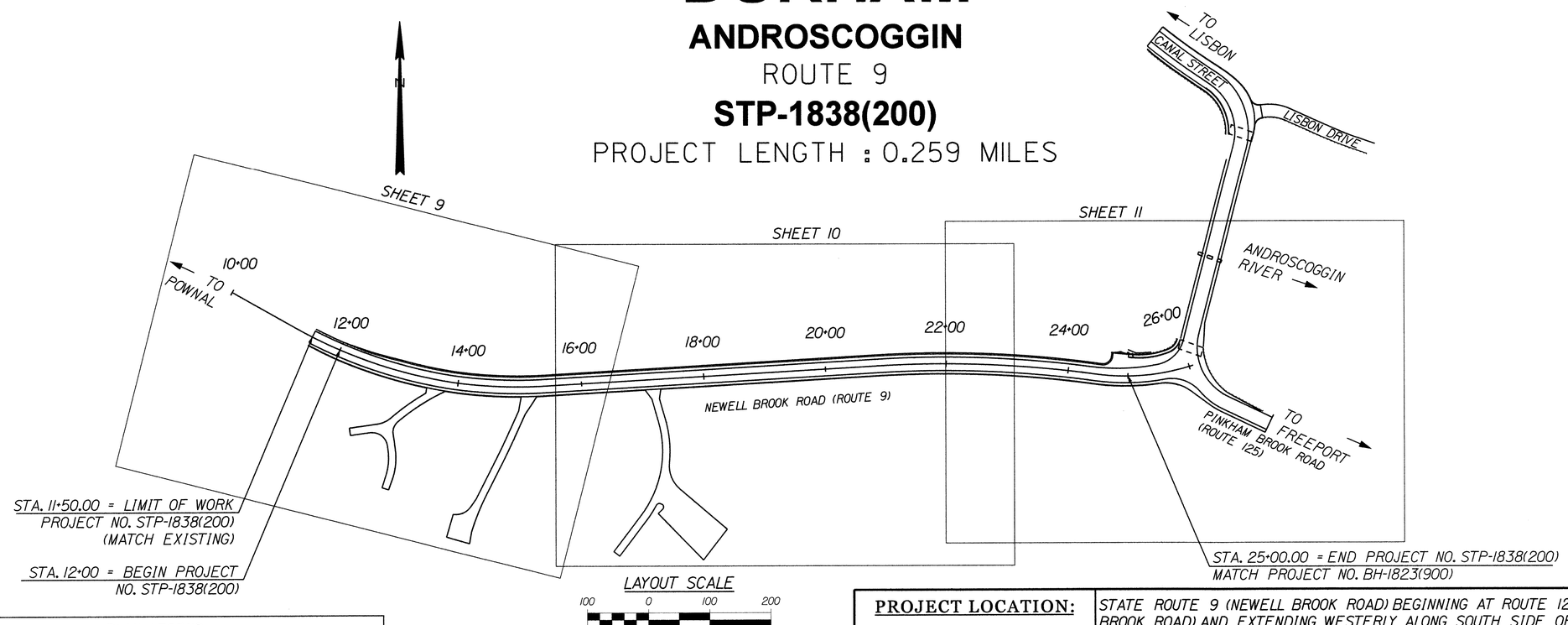

PLAN LEGEND

Town, County, State
Property Lines
R/W Lines-Existing
R/W Lines-Proposed
Culvert-Existing
Culvert Proposed
Curbing — Existing — Proposed
Type 1
Type 3
Type 5
Outline of Bodies of Water
Ledge
Buildings
Trees — Conifer — Deciduous
Tree Line
Clearing Limit Line — CLL
Centerline-Existing
Centerline-Proposed — x10+00
Travelway-Existing
Travelway-Proposed
Railroad
Catch Basins — Existing ■ Proposed
Manholes — Existing ● Proposed
Proposed Underdrain
Proposed Ditch
Existing Ditch
Utility Poles — Existing ♦ Proposed
Fire Hydrants — Existing ◉ Proposed
Existing Water Line
Existing San. Sewer
Existing San. Sewer Manhole
Guardrail-Existing
Guardrail-Proposed
Guardrail-Cable, Other

TRAFFIC DATA

Current (2014) AADT	2510
Future (2026) AADT	2815
DHV - % of AADT	13%
Design Hour Volume	389
% Heavy Trucks (AADT)	6%
% Heavy Trucks (DHV)	4%
Directional Distribution (DHV)	54%
18 kip Equivalent P 2.0	98
18 kip Equivalent P 2.5	93
Design Speed (mph)	35
Functional Class:	Major/Urban Collector (Priority 4)

PROJECT LOCATION:	STATE ROUTE 9 (NEWELL BROOK ROAD) BEGINNING AT ROUTE 125 (PINKHAM BROOK ROAD) AND EXTENDING WESTERLY ALONG SOUTH SIDE OF ANDROSCOGGIN RIVER FOR 0.26 OF A MILE.
PROGRAM AREA:	HIGHWAY PROGRAM
OUTLINE OF WORK:	SLOPE STABILIZATION AND RELOCATION OF ROUTE 9 (NEWELL BROOK ROAD) INCLUDING HIGHWAY RECONSTRUCTION WITH GRADING, DRAINAGE, BASE & PAVEMENT.

Stantec

STATE OF MAINE
DEPARTMENT OF TRANSPORTATION
APPROVED
COMMISSIONER: DATE 7/23/14
CHIEF ENGINEER: DATE 7-23-14

STATE OF MAINE — GARY A. SANTY No. 9419 — LICENSED PROFESSIONAL ENGINEER

SIGNATURE
9419
P.E. NUMBER
July 18, 2014
DATE

PROJECT INFORMATION

PROGRAM	HIGHWAY
PROJECT MANAGER	E. MARTIN
DESIGNER	G. SANTY
CONSULTANT	STANTEC
PROJECT RESIDENT	
CONTRACTOR	
PROJECT COMPLETION DATE	

WIN NUMBER: 18382.00 FEDERAL PROJECT NO: STP-1838(200)

DURHAM
ROUTE 9

TITLE SHEET

SHEET NUMBER
1
OF 49

Filename: ...\18382\00\HIGHWAY\001_Title.dgn Division: HIGHWAY Username: common Date:7/18/2014

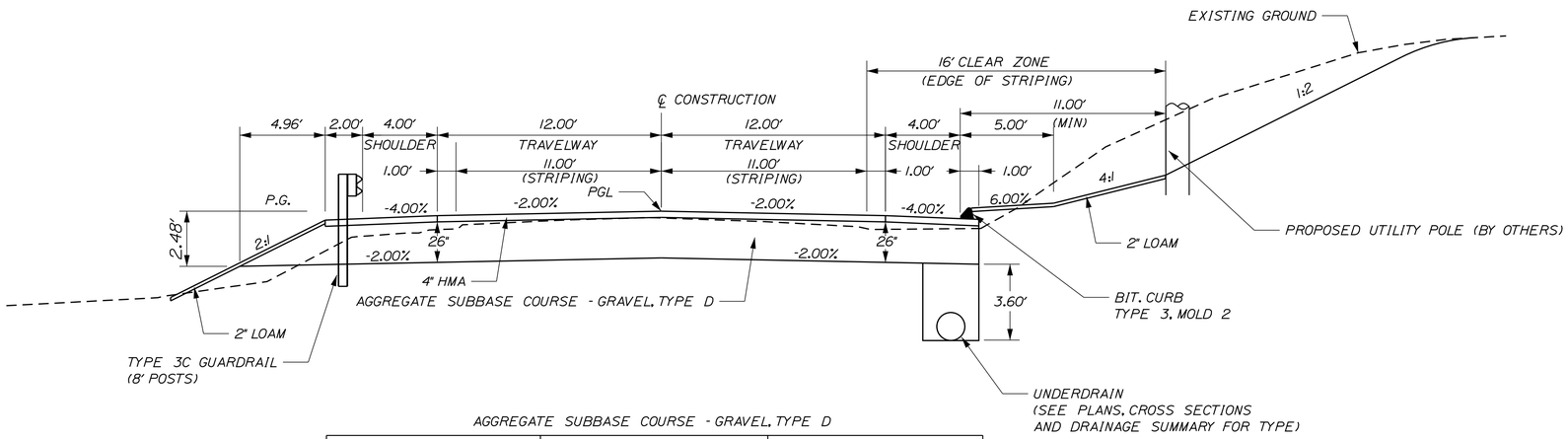

AGGREGATE SUBBASE COURSE - GRAVEL, TYPE D

LEFT SHOULDER 68.67 CY/100 LF STATION TO STATION	12FT. TRAVELED LANES 192.59 CY/100 LF STATION TO STATION	RIGHT SHOULDER 39.00 CY/100 LF STATION TO STATION
17+00 TO 18+75	17+00 TO 19+25	17+00 TO 19+25

FULL CONSTRUCTION NORMAL

SUPERELEVATION TABLE

LEFT TRAVELWAY	STATION	RIGHT TRAVELWAY
MATCH EX.	11+50	MATCH EX.
-4.9%	12+00	4.9%
↓	TO	↓
-4.9%	15+00	4.9%
-3.2%	15+50	3.2%
-2.0%	16+00	1.5%
-2.0%	16+50	-0.3%
-2.0%	17+00	-2.0%
↓	TO	↓
-2.0%	19+50	-2.0%
-0.6%	20+00	-2.0%
0.6%	20+50	-2.0%
1.8%	21+00	-2.0%
3.0%	21+50	-3.0%
↓	TO	↓
3.0%	23+00	-3.0%
2.0%	23+50	-2.0%
1.0%	24+00	-2.0%
-0.1%	24+50	-2.0%
-1.1%	25+00	-2.0%

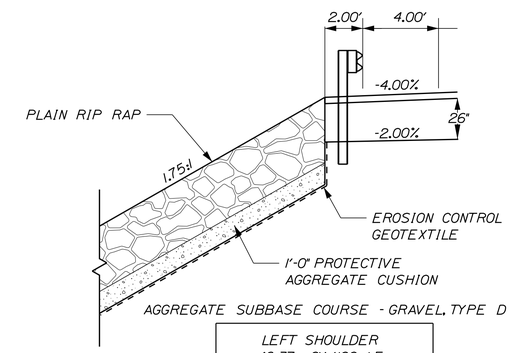

LEFT SHOULDER 46.37 CY/100 LF STATION TO STATION
18+75 TO 21+80

STABILIZED SLOPES

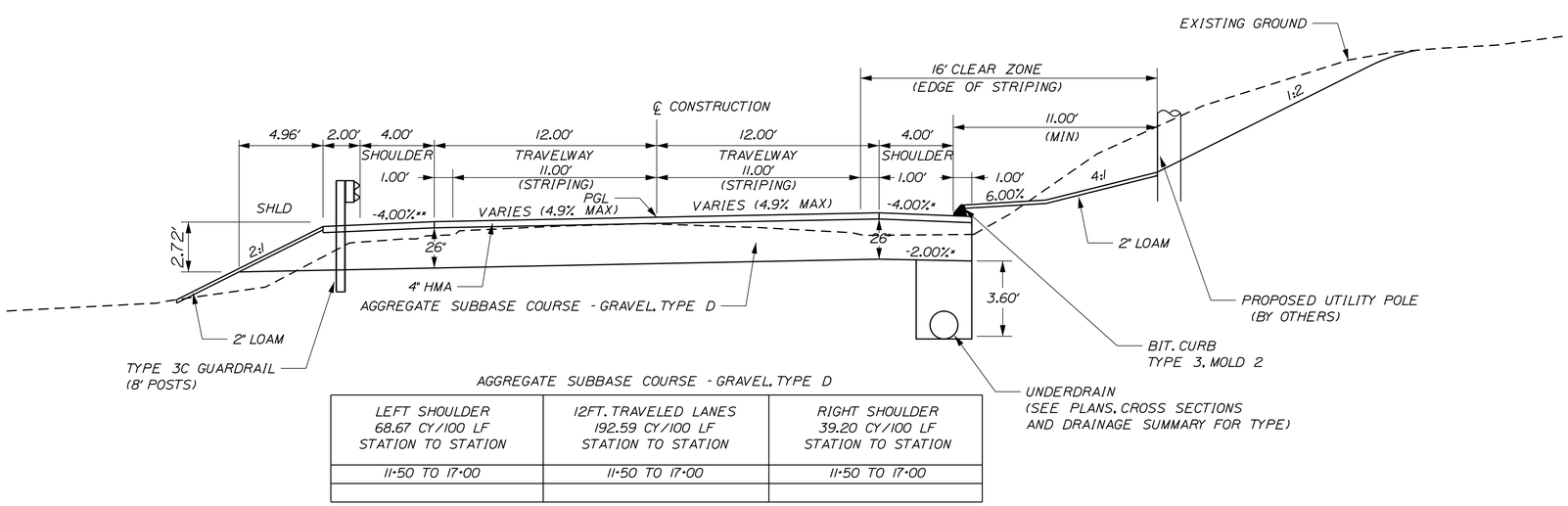

AGGREGATE SUBBASE COURSE - GRAVEL, TYPE D

LEFT SHOULDER 68.67 CY/100 LF STATION TO STATION	12FT. TRAVELED LANES 192.59 CY/100 LF STATION TO STATION	RIGHT SHOULDER 39.20 CY/100 LF STATION TO STATION
11+50 TO 17+00	11+50 TO 17+00	11+50 TO 17+00

FULL CONSTRUCTION SUPERELEVATED

NOTES:

1. THE PAVEMENT, BASE AND SUBBASE DEPTHS AS SHOWN ON THE PLANS ARE INTENDED TO BE NOMINAL.

2. WHEN SUPER ELEVATION EXCEEDS THE SLOPE OF THE LOW SIDE SHOULDER, THE LOW SIDE SHOULDER SHALL HAVE THE SAME SLOPE AS THE TRAVEL WAY.

3. CROWNS FOR BOTH NORMAL AND SUPER ELEVATED SECTIONS FOR ALL COURSES OF SUBBASE AND PAVEMENT SHALL BE STRAIGHT.

4. THE GRAVEL QUANTITY CALCULATION IS BASED ON A 2" LOAM DEPTH. THE ACTUAL DEPTH MAY VARY. SEE THE GENERAL NOTES.

* 5. THE ALGEBRAIC DIFFERENCE BETWEEN THE SHOULDER AND TRAVEL WAY CROSS SLOPES "ROLLOVER" SHALL NOT EXCEED 8%.

** 6. IN A SUPERELEVATED SECTION WHEN THE TRAVELWAY CROSS SLOPE ON THE LOW SIDE EXCEEDS THE TYPICAL SHOULDER CROSS SLOPE, THE SHOULDER CROSS SLOPE SHALL MATCH THE TRAVELWAY CROSS SLOPE.

7. THE STATIONING SHOWN UNDER EACH TYPICAL IS APPROXIMATE AND DOES NOT SHOW AREAS IN SUPER ELEVATION TRANSITION.

8. THE SUBGRADE FROM THE EDGE OF THE TRAVEL WAY TO THE SIDE SLOPE SUBGRADE INTERCEPT WILL BE AT -2.0%.

9. SIDE SLOPES PER TYPICAL UNLESS OTHERWISE SHOWN ON SECTIONS.

NOT TO SCALE

STATE OF MAINE
DEPARTMENT OF TRANSPORTATION

STP-1838(200)

WIN 18382.00

HIGHWAY PLANS

		BY	DATE
PROJ. MANAGER	E. MARTIN		
DESIGN-DETAILED	I. MAYNARD	I. MAYNARD	JUNE 2014
CHECKED-REVIEWED	G. SANTY	-----	JUNE 2014
DESIGN2-DETAILED2	-----	-----	-----
DESIGN3-DETAILED3	-----	-----	-----
REVISIONS 1	-----	-----	-----
REVISIONS 2	-----	-----	-----
REVISIONS 3	-----	-----	-----
REVISIONS 4	-----	-----	-----
FIELD CHANGES	-----	-----	-----

SIGNATURE

P.E. NUMBER

DATE

DURHAM
ROUTE 9

TYPICAL SECTIONS

SHEET NUMBER

2

OF 49

Filename: ...\00\HIGHWAY\002_Typicals.dgn Division: HIGHWAY Username: common Date:7/16/2014

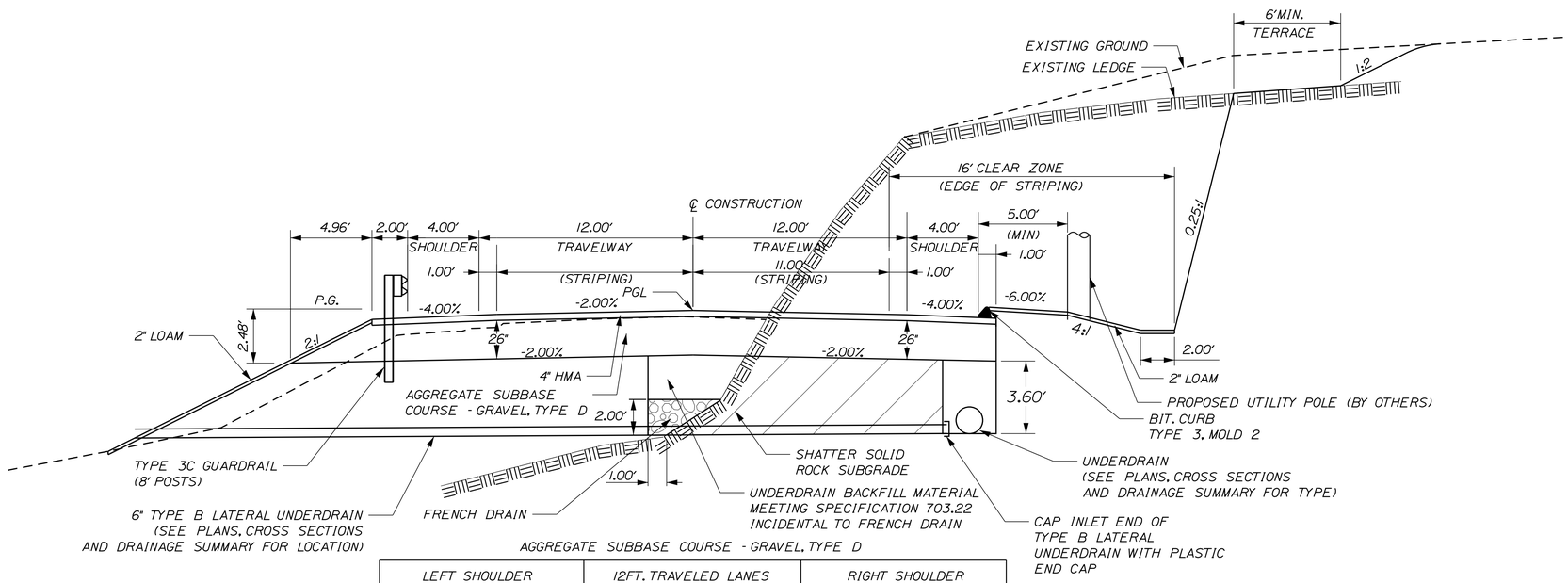

LEFT SHOULDER 68.67 CY/100 LF STATION TO STATION	12FT. TRAVELED LANES 192.59 CY/100 LF STATION TO STATION	RIGHT SHOULDER 39.20 CY/100 LF STATION TO STATION
21+80 TO 25+00	19+25 TO 25+00	19+25 TO 25+00

FULL CONSTRUCTION
LEDGE CUT

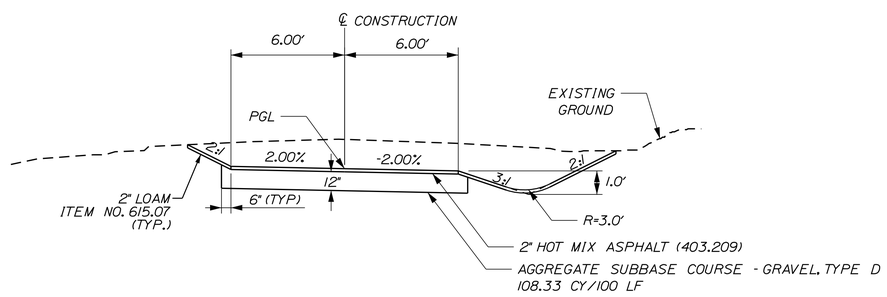

FULL CONSTRUCTION
DRIVEWAY

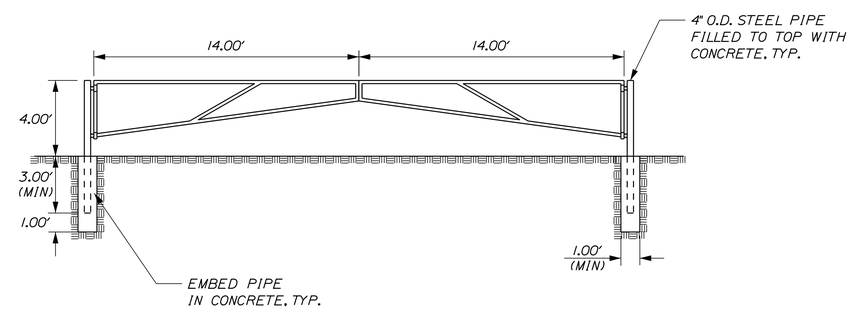

14' DRIVE GATES

24+72 to 24+86
24+86 to 25+00

NOTES:

1. ALL PIPE TO BE 2" O.D. STEEL PIPE UNLESS OTHERWISE NOTED

2. ALL WORK DEPICTED ON THIS DETAIL SHALL BE PAID AS ITEM 607.151 DRIVEGATEWAY 14 FOOT - METAL

NOT TO SCALE

STATE OF MAINE
DEPARTMENT OF TRANSPORTATION

STP-1838(200)

WIN
18382.00

HIGHWAY PLANS

PROJ. MANAGER	E. MARTIN	BY	DATE
DESIGN-DETAILED	I. MAYNARD	I. MAYNARD	JUNE 2014
CHECKED-REVIEWED	G. SANTY	------	JUNE 2014
DESIGN2-DETAILED2	------	------	------
DESIGN3-DETAILED3	------	------	------
REVISIONS 1	------	------	------
REVISIONS 2	------	------	------
REVISIONS 3	------	------	------
REVISIONS 4	------	------	------
FIELD CHANGES	------	------	------

SIGNATURE

P.E. NUMBER

DATE

DURHAM
ROUTE 9

TYPICAL SECTIONS

SHEET NUMBER
3
OF 49

Filename: ...\00\HIGHWAY\003_Typicals.dgn Division: HIGHWAY Username: common Date:7/16/2014

ESTIMATED QUANTITIES

ITEM NO.	DESCRIPTION	ROUNDED QUANTITY	UNIT
201.11	CLEARING	2.9	AC
202.08	REMOVING BUILDING NO. 1 : STEVENS' SHED LARGE	1	LS
202.08	REMOVING BUILDING NO. 2: STEVENS' HOME	1	LS
202.08	REMOVING BUILDING NO. 3: STEVENS' SHED SMALL	1	LS
202.08	REMOVING BUILDING NO. 4: STEVENS' GARAGE	1	LS
202.08	REMOVING BUILDING NO. 5: STEVENS' SHED REMAINS	1	LS
202.15	REM MANHOLE OR CATCH BASIN	1	EA
203.20	COMMON EXCAVATION	61000	CY
203.21	ROCK EXCAVATION	5000	CY
203.213	SHATTER SOLID ROCK SUBGRADE	1600	SY
203.216	EXPLORATORY DRILLING	8	HR
206.07	STR ROCK EXC - DR & MINOR STR	1	CY
304.10	AGGR SUBB COURSE - GRAVEL, TYPE D	4600	CY
403.208	HOT MIX ASPHALT 12.5 MM HMA SURFACE	430	T
403.209	HOT MIX ASPHALT 9.5 MM (INCIDENTALS)	205	T
403.213	HOT MIX ASPHALT 12.5 MM BASE	690	T
409.15	BITUMINOUS TACK COAT - APPLIED	265	G
512.08	FRENCH DRAINS	725	LF
603.169	15" CULV PIPE OPTION III	78	LF
603.179	18" CULV PIPE OPTION III	40	LF
604.092	CATCH BASIN TYPE B1-C	6	EA
604.247	CATCH BASIN TYPE F5-C	1	EA
605.09	6" UNDERDRAIN TYPE B	530	LF
605.12	15" UNDERDRAIN TYPE C	900	LF
606.23	GR TY 3C - SINGLE RAIL	1300	LF
606.232	GR TY 3C - OVER 15' RADIUS	25	LF
606.265	TERM END- SGL RAIL- GALV STEEL	1	EA
606.353	REFLECTORIZED FLEXIBLE GUARDRAIL MARKER	2	EA
606.356	UNDERDRAIN DELINEATOR POST	8	EA
607.151	DRIVE GATEWAY 14 FOOT - METAL	2	EA
609.31	CURB TYPE 3	930	LF
610.08	PLAIN RIPRAP	1600	CY
610.16	HEAVY RIPRAP	520	CY
610.18	STONE DITCH PROTECTION	75	CY
615.07	LOAM	1000	CY
618.1401	SEEDING METHOD NUMBER 2 - PLAN QUANTITY	65	UN
618.1411	SEEDING METHOD NUMBER 3 - PLAN QUANTITY	23	UN
619.12	MULCH	88	UN
620.58	EROSION CONTROL GEOTEXTILE	2200	SY
627.733	4" WHITE OR YELLOW PAINTED PAVE MRK LINE	5300	LF
627.75	WHITE OR YELLOW PAVEMENT & CURB MARKING	10	SF
627.78	TEMP 4" PAINT PVMT MARK LINE W OR Y	10600	LF
629.05	HAND LABOR, STRAIGHT TIME	40	HR
631.121	HVY DUTY ALL-PURP EXC (INC OP)	40	HR
631.13	BULLDOZER (INCLUDING OPERATOR)	100	HR
631.14	GRADER (INCLUDING OPERATOR)	100	HR
631.15	ROLLER EARTH BASE CRS (INC OP)	100	HR
631.172	TRUCK-LARGE (INC OPERATOR)	100	HR
631.180	CHAIN SAW RENTAL(INC OPERATOR)	40	HR
631.200	STUMP CHIPPER (INC OPERATOR)	40	HR
631.220	FRONT END LOADER (INC OPER)	40	HR
635.311	PRECAST CONCRETE BLOCK GRAVITY WALL	570	LF
639.180	FIELD OFFICE TYPE A	0.5	EA
652.33	DRUM	20	EA
652.34	CONE	20	EA
652.35	CONSTRUCTION SIGNS	100	SF
652.36	MAINTENANCE OF TRAFFIC CONTROL DEVICES	150	CD
652.38	FLAGGER	1500	HR
652.41	PORTABLE CHANGEABLE MESSAGE SIGN	1	EA
656.75	TEMP SOIL EROSION & WATER POLLUTION CTRL	1	LS
659.10	MOBILIZATION	1	LS

EARTHWORK SUMMARY

COMMON EXCAVATION

ROUTE 9 COMMON EXCAVATION (FROM CROSS SECTIONS)	56,025	
DRIVES	4,579	
PAVEMENT SALVAGE IN CUT (INCLUDED IN COMMON EX.)	500	
TOTAL COMMON EXCAVATION		60,604
Rounding		396
Total		61,000

FILL FOR BORROW CALCULATIONS

COMMON FILL (NO FILL ON PROJECT)		
TOTAL FILL		0

ROCK EXCAVATION FOR ESTIMATE

ROCK EXCAVATION (FROM CROSS SECTIONS)	4,971	
TOTAL ROCK EXCAVATION		4,971

AVAILABLE COMMON EXCAVATION BORROW CALCULATIONS

(1) TOTAL COMMON EXCAVATION		60,604
DEDUCTIONS:		
PAVEMENT SALVAGE (CUT & FILL)	500	
(2) TOTAL DEDUCTIONS		500
TOTAL AVAILABLE COMMON EXCAVATION		60,104
TOTAL AVAILABLE STRUCT. EXCAVATIONS (UNDERDRAIN ONLY)		506
TOTAL AVAILABLE NON-ROCK EXCAVATION		60,610

COMPUTATION OF WASTE STORAGE & WASTE MATERIAL

TOTAL AVAIL. WASTE STORAGE AREA (FROM CROSS SECTIONS)	0
NO ONSITE WASTE STORAGE	

COMPUTATION FOR COMMON BORROW FOR ESTIMATE

(3) TOTAL FILL (TOTAL FILL - GRANULAR BORROW)					0
TOTAL AVAIL. NON-ROCK EXCAV.	60,610	x 0.85 =	51,519		
TOTAL AVAIL. ROCK EXCAV.	4,971	x 1.33 =	6,611		
TOTAL AVAIL. STR. ROCK EXCAV.	0	x 1.33 =	0		
(4) TOTAL AVAILABLE EXCAVATION				=	58,130
EXCESS EXCAVATION = TOTAL AVAILABLE EXCAVATION MINUS TOTAL FILL					58,130
PLUS TOTAL WASTE MATERIAL TO BE WASTED					

STATE OF MAINE
DEPARTMENT OF TRANSPORTATION

STP-1838(200)

WIN 18382.00

HIGHWAY PLANS

		BY	DATE
PROJ. MANAGER	E. MARTIN		
DESIGN-DETAILED	I. MAYNARD	I. MAYNARD	JUNE 2014
CHECKED-REVIEWED	C. SANTY	------	JUNE 2014
DESIGN2-DETAILED2	------	------	------
DESIGN3-DETAILED3	------	------	------
REVISIONS 1	------	------	------
REVISIONS 2	------	------	------
REVISIONS 3	------	------	------
REVISIONS 4	------	------	------
FIELD CHANGES	------	------	------

SIGNATURE

P.E. NUMBER

DATE

DURHAM
ROUTE 9

ESTIMATED QUANTITIES

SHEET NUMBER

4

OF 49

Filename: ...\00\HIGHWAY\004_Quantity.dgn Division: HIGHWAY Username: common Date:7/21/2014

STATION	CULVERT PIPE											CATCH BASIN					PIPE ARCH				MH	UNDERDRAIN						ELBOWS, TEES, WYES AND INLET GRATE UNITS	REMARKS
	RCP			CMP		OPTION I		OPTION III														TYPE B		TYPE C					
								SMOOTHLINED		CORRUGATED										GAGE OR WALL THICKNESS		TYPE B	OUTLET	SMOOTHLINED		CORRUGATED		DESCRIPTIONS	
	SIZE	LENGTH	CLASS	SIZE	LENGTH	SIZE	LENGTH	SIZE	LENGTH	SIZE	LENGTH	A1-C	B1-C		E	F	SPAN	RISE	LENGTH			LENGTH	LENGTH	SIZE	LENGTH	SIZE	LENGTH		
CATCH BASINS																													
STA. 14+00.00, 14.875' RT.													1																
STA. 15+45.00, 14.875' RT.													1																
STA. 17+50.00, 14.875' RT.													1																
STA. 19+50.00, 14.875' RT.													1																
STA. 21+50.00, 14.875' RT.													1																
STA. 24+00.00, 14.875' RT.													1																
STA. 24+00.00 26.50' RT.																1													
CLOSED DRAINAGE																													
STA. 13+79.00, 34.25' RT. TO 14+00.00, 14.875', RT.								15"	30'	15"	30'																		
STA. 15+34.00, 30.00' RT. TO 15+45.00, 14.875', RT.								15"	16'	15"	16'																		
STA. 17+38.40, 31.50' RT. TO 17+50.00, 14.875', RT.								15"	20'	15"	20'																		
STA. 19+50.00, 14.875' RT. TO 29.00' LT.								18"	40'	24"	40'																		
STA. 24+00.00, 24.50' RT. TO 14.875', RT.								15"	9'	15"	8'																		
UNDERDRAIN																													
STA. 14+00.00, TO 15+45.00, 14.875', RT.																								15"	146'	15"	146'		
STA. 15+45.00, TO 17+50.00, 14.875', RT.																								15"	203'	15"	203'		
STA. 17+50.00, TO 19+50.00, 14.875', RT.																								15"	198'	15"	198'		
STA. 18+50, 14.00', RT. TO 31.00', LT																						45'							LATERAL UNDERDRAIN
STA. 19+48, 16.00' RT. TO 29.00' LT.																						40'							LATERAL UNDERDRAIN
STA. 19+50.00, TO 21+50.00, 14.875', RT.																						195'							
STA. 20+50, 14.00', RT. TO 31.00', LT																						45'							LATERAL UNDERDRAIN
STA. 21+50, 14.00', RT. TO 41.00', LT																						55'							LATERAL UNDERDRAIN
STA. 21+50.00, TO 24+00.00, 14.875', RT.																								15"	244'	15"	244'		
STA. 22+50.00, 14.00', RT. TO 34.00', LT																						48'							LATERAL UNDERDRAIN
STA. 23+50.00, 14.00', RT. TO 32.00', LT																						46'							LATERAL UNDERDRAIN
STA. 24+00.00, TO 25+00.00, 14.875', RT.																								15"	100'	15"	100'		CONNECT TO UD FROM BRIDGE PROJECT WIN 18239.00
STA. 24+50.00, 14.00', RT. TO 40.00', LT																						54'							LATERAL UNDERDRAIN

STATE OF MAINE
DEPARTMENT OF TRANSPORTATION

STP-1838(200)

WIN 18382.00

HIGHWAY PLANS

PROJ. MANAGER	E. MARTIN	BY	DATE
DESIGN-DETAILED	I. MAYNARD	I. MAYNARD	JUNE 2014
CHECKED-REVIEWED	G. SANTY	-----	JUNE 2014
DESIGN2-DETAILED2		-----	-----
DESIGN3-DETAILED3		-----	-----
REVISIONS 1		-----	-----
REVISIONS 2		-----	-----
REVISIONS 3		-----	-----
REVISIONS 4		-----	-----
FIELD CHANGES		-----	-----

SIGNATURE

P.E. NUMBER

DATE

DURHAM
ROUTE 9

DRAINAGE SUMMARY

SHEET NUMBER

5

OF 49

Filename: ...\005_DrainageSummary.dgn Division: HIGHWAY Username: common Date:7/16/2014

1. THE UTILITIES INVOLVED IN THIS CONTRACT ARE AS FOLLOWS:
   CENTRAL MAINE POWER
   FAIRPOINT

2. ALL UTILITY FACILITIES SHALL BE ADJUSTED BY THE RESPECTIVE UTILITIES UNLESS OTHERWISE NOTED.

3. A TEMPORARY RAMP SHALL BE CONSTRUCTED WITH HMA AT THE ENDS OF THE ROADWAY SECTION PAVED OR MILLED EACH DAY. THE USES OF MILLINGS OR RAP WILL NOT BE ALLOWED, BUT COLD PATCH MAY BE TEMPORARILY UTILIZED UNTIL HMA PLANTS ARE OPEN FOR THE SEASON.

4. TEMPORARY RAMPS SHALL BE CONSTRUCTED WITH ONE FOOT OF LENGTH FOR EVERY 1/4" OF TRANSITION DEPTH ON THE LEADING AND THE TRAILING END. MATERIALS, PLACEMENT, MAINTENANCE, AND REMOVALE SHALL BE INCIDENTAL TO CONTRACT ITEMS. (NOTE: FOR ALL OTHER ROADWAYS WITH SPEED LIMITS LESS THAN 50 MPH)

5. TRIM ALL TREE BRANCHES TO 20 FEET ABOVE THE PAVEMENT AND 21 FEET FROM CENTERLINE, AS WELL AS ANY BRANCHES DAMAGED BY THE CONTRACTOR DURING CONSTRUCTION. PAYMENT SHALL BE MADE UNDER THE APPROPRIATE RENTAL ITEMS. IF A TREE SPECIALIST IS SUBCONTRACTED FOR THIS WORK, PAYMENT WILL BE MADE BY INVOICE PLUS 5%.

6. CLEARING LIMITS SHALL BE 10' BEYOND AND PARALLEL TO THE CONSTRUCTION SLOPE LINES OR AS SHOWN ON THE PLANS UNLESS OTHERWISE AUTHORIZED BY THE RESIDENT.

7. THE CLEARING AND SELECTIVE CLEARING AND THINNING LINES SHOWN ON THE PLANS ARE FOR ESTIMATING PURPOSES ONLY. THE ACTUAL LINES FOR CLEARING AND THINNING SHALL BE ESTABLISHED IN THE FIELD BY THE CONTRACTOR AND APPROVED BY THE RESIDENT.

8. DRIVEWAY FILL SIDE SLOPES SHALL BE THE SAME AS THE NON-GUARDRAIL FILL SLOPES UNLESS OTHERWISE NOTED ON THE PLANS.

9. ALL WASTE MATERIAL NOT USED ON THE PROJECT SHALL BE DISPOSED OF OFF THE PROJECT IN ACCEPTABLE WASTE AREAS REVIEWED BY THE RESIDENT. GRADING, SEEDING AND MULCHING OF WASTE AREAS SHALL BE CONSIDERED INCIDENTAL.

10. REQUIRED DITCH PROTECTION SHOWN ON THE PLANS OR IN THE CONSTRUCTION NOTES IS FOR ESTIMATING PURPOSES ONLY. THE ACTUAL TYPE AND LOCATION OF DITCH PROTECTION MAY BE ALTERED BY THE RESIDENT.

11. IF FOUNDATION MATERIAL IS REQUIRED UNDER CULVERTS, IT SHALL MEET THE REQUIREMENTS FOR GRANULAR BORROW - UNDERWATER BACKFILL AND WILL PAID FOR AS GRANULAR BORROW.

12. GRANULAR BORROW USED TO BACKFILL MUCK EXCAVATION OR IN LOW WET AREAS TO 1' ABOVE WATER LEVEL OR OLD GROUND SHALL MEET REQUIREMENTS FOR GRANULAR BORROW UNDERWATER BACKFILL.

13. RESIDENTIAL PAVED ENTRANCES SHALL BE CONSTRUCTED WITH: 2" HOT MIX ASPHALT AND 12" DENSE GRADED CRUSHED AGGREGATE.

14. ALL PAVED WALKS TO BE CONSTRUCTED WITH 12" DENSE GRADED CRUSHED AGGREGATE AND 2" HOT MIX ASPHALT UNLESS OTHERWISE NOTED IN THE PLANS OR DIRECTED BY THE RESIDENT.

15. ANY NECESSARY CLEANING OF EXISTING PAVEMENT PRIOR TO PAVING SHALL BE INCIDENTAL TO THE RELATED PAVING ITEMS.

16. WHEN SUPER ELEVATION EXCEEDS THE SLOPE OF THE LOW SIDE SHOULDER, THE SHOULDER PAVEMENT WILL HAVE SAME SLOPE AS TRAVELED WAY.

17. EXISTING CULVERTS AND CATCH BASINS WILL BE CLEANED AS DIRECTED BY THE RESIDENT UNDER THE APPROPRIATE PAY ITEMS.

18. NO EXISTING DRAINAGE SHALL BE ABANDONED, REMOVED OR PLUGGED WITHOUT PRIOR APPROVAL OF THE RESIDENT.

19. INLETS AND OUTLETS OF ALL CULVERTS SHALL BE RIPRAPPED UNLESS OTHERWISE NOTED ON THE PLANS OR DIRECTED BY THE RESIDENT.

20. THE CULVERT SIZES SHOWN ON THE PLANS AND CROSS SECTIONS ARE FOR SMOOTHLINED PIPES. FOR COMPARABLE CORRUGATED SIZES SEE THE DRAINAGE TABULATION.

21. PLASTIC END CAPS SHALL BE USED ON ALL DEAD-END 6-INCH TYPE B UNDERDRAIN.

22. A 3 FT. X 3 FT. SQUARE RIPRAP PAD SHALL BE CONSTRUCTED AT U.D. OUTLETS.

23. GUARDRAIL END TREATMENTS SHALL BE INSTALLED CONCURRENTLY WITH THE PLACEMENT OF EACH SECTION OF BEAM GUARDRAIL.

24. ALL EXISTING GUARDRAIL SHALL BE REMOVED AND BECOME THE PROPERTY OF THE CONTRACTOR. REMOVAL AND DISPOSAL SHALL BE CONSIDERED INCIDENTAL TO THE GUARDRAIL ITEMS.

25. TWO REFLECTORIZED FLEXIBLE G.R. MARKERS (ITEM 606.353) WILL BE INSTALLED AT EACH GUARDRAIL END.

26. A DELINEATOR POST (ITEM 606.356) WILL BE INSTALLED AT EACH UNDERDRAIN OUTLET.

27. A DELINEATOR POST (ITEM 606.356) WILL BE INSTALLED AT THE END OF EACH SECTION OF BITUMINOUS CURB.

28. CONNECTIONS FOR PROPOSED GUARDRAIL TO EXISTING GUARDRAIL WILL BE CONSIDERED INCIDENTAL TO ITEM 606.

29. LOAM HAS BEEN ESTIMATED FOR DISTURBED LAWN AREAS. ACTUAL PLACEMENT OF THE LOAM SHALL BE AS NOTED ON THE PLANS OR DESIGNATED BY THE RESIDENT.

30. UNLESS OTHERWISE NOTED SEEDING METHOD NO. 1 SHALL BE UTILIZED ON ALL LAWNS AND DEVELOPED AREAS; SEEDING METHOD NO. 2 SHALL BE UTILIZED ON ALL NON-GUARDRAIL SLOPES. SEEDING METHOD NO. 3 SHALL BE UTILIZED ON ALL GUARDRAIL FILL SLOPES. ON LONG NON-GUARDRAIL BACKSLOPES. SEEDING METHOD NO. 3 MAY BE USED INSTEAD OF METHOD NO. 2 IF NOTED OR DIRECTED BY THE RESIDENT.

31. LOAM SHALL BE PLACED TO A NOMINAL DEPTH OF 4 INCHES IN LAWN AREAS AND 2 INCHES IN ALL OTHER AREAS UNLESS OTHERWISE NOTED OR DIRECTED.

32. WHITE PAVEMENT/CURB MARKING (ITEM 627.75) SHALL BE APPLIED TO BITUMINOUS CURB ENDS AT DRIVEWAY OPENINGS AS DIRECTED BY THE RESIDENT.

33. ANY BASE PAVEMENT NOT SURFACED BEFORE WINTER WILL REQUIRE TEMPORARY PAVEMENT MARKINGS OF PAINT, BOTH YELLOW CENTERLINE AND WHITE EDGE LINES AND WILL BE CONSIDERED PART OF ITEM 627.78

34. THE CONTRACTOR WILL BE RESPONSIBLE FOR MAINTAINING ALL EXISTING MAILBOXES TO ENSURE THAT THE MAIL WILL BE DELIVERABLE. NO SEPARATE PAYMENT WILL BE MADE FOR THIS WORK; IT SHALL BE CONSIDERED INCIDENTAL TO THE CONTRACT.

35. A COPY OF THE SOILS REPORT FOR THIS PROJECT IS AVAILABLE BY AT http://www.maine.gov/mdot/contractors/

36. AREAS REQUIRING FILL ON THE PROJECT WILL COME FROM SUITABLE EXCAVATION FROM EXCAVATION AREAS.

37. ESTIMATED QUANTITIES FOR REQUIRED STRUCTURAL EARTH EXCAVATION, DRAINAGE AND MINOR STRUCTURES ARE INFORMATIONAL ONLY AND REPRESENT THE APPROXIMATE MINIMUM QUANTITY REQUIRED TO INSTALL DRAINAGE STRUCTURES. ADDITIONAL EXCAVATION FOR THE CONTRACTOR'S CONVENIENCE OR TO COMPLY WITH BACKSLOPING REQUIREMENTS WILL NOT BE PAID FOR DIRECTLY BUT WILL BE CONSIDERED INCIDENTAL TO THE RELATED DRAINAGE ITEMS.

38. NO SEPARATE PAYMENT FOR SUPERINTENDENT OR FOREMAN WILL BE MADE FOR THE SUPERVISION OF EQUIPMENT BEING PAID FOR UNDER THE EQUIPMENT RENTAL ITEMS.

39. ALL WORK SHALL BE DONE IN ACCORDANCE WITH THE MAINE DEPARTMENT OF TRANSPORTATION'S BEST MANAGEMENT PRACTICES FOR EROSION CONTROL & SEDIMENT CONTROL, FEBRUARY, 2008.

40. THE MAINE DEPARTMENT OF ENVIRONMENTAL PROTECTION (MDEP) HAS FOUND NO EVIDENCE OF SOIL CONTAMINATION ALONG THE PROPOSED PROJECT. IF THE CONTRACTOR ENCOUNTERS EVIDENCE OF SOIL OR GROUNDWATER CONTAMINATION, THE CONTRACTOR SHALL SECURE THE EXCAVATION, STOP WORK IN THE CONTAMINATED AREA, AND IMMEDIATELY NOTIFY THE RESIDENT. THE RESIDENT SHALL CONTACT THE HYDROGEOLOGIST IN MDOT'S ENVIRONMENTAL OFFICE AT 207-624-3100 AND THE MAINE DEPARTMENT OF ENVIRONMENTAL PROTECTION AT 800-482-0777. WORK MAY ONLY CONTINUE WITH AUTHORIZATION FROM THE RESIDENT.

41. THE CONTRACTOR IS RESPONSIBLE FOR TRANSFERRING THE EXISTING STRIPING PATTERN ON TO THE SURFACE COURSE. STRIPING PATTERN WILL BE REVIEWED BY REGION TRAFFIC ENGINEER PRIOR TO FINAL STRIPING.

42. THE CONTRACTOR IS NOT REQUIRED TO MAINTAIN PUBLIC ACCESS TO THE MILLER GRAVEL PATHWAY AT STATION 24+80, LT. BUT SHALL MAINTAIN EMERGENCY ACCESS FOR MILLER HYDRO AS NEEDED.

STATE OF MAINE
DEPARTMENT OF TRANSPORTATION

STP-1838(200)

WIN 18382.00

HIGHWAY PLANS

PROJ. MANAGER	E. MARTIN	BY	DATE
DESIGN-DETAILED	L. MAYNARD	L. MAYNARD	JUNE 2014
CHECKED-REVIEWED	G. SANTY	-----	JUNE 2014
DESIGN2-DETAILED2	-----	-----	SIGNATURE
DESIGN3-DETAILED3	-----	-----	P.E. NUMBER
REVISIONS 1	-----	-----	-----
REVISIONS 2	-----	-----	-----
REVISIONS 3	-----	-----	-----
REVISIONS 4	-----	-----	DATE
FIELD CHANGES	-----	-----	-----

DURHAM
ROUTE 9

GENERAL NOTES

SHEET NUMBER
6
OF 49

CONSTRUCT THE FOLLOWING DRIVES AND ENTRANCES

STATION	OFFSET	DESCRIPTION	
13+74	RT	Paved	Residential
15+18	RT	Paved	Residential
17+19	RT	Paved	Residential
101+50	RT	Paved	Residential

ITEM NO. 201.11 CLEARING

STATION TO STATION	OFFSET
14+26 - 24+58	LT
11+50 - 13+50	RT
13+50 - 15+00	RT
15+50 - 16+00	RT
17+30 - 19+50	RT
19+50 - 23+00	RT
23+50 - 25+00	LT

ITEM NO. 202.08 REMOVE BUILDING NO. 1: STEVENS' SHED LARGE
STATION 21+10.75' RT. SHED

ITEM NO. 202.08 REMOVE BUILDING NO. 2: STEVENS' HOME
STATION 21+50.117' RT. 2 STORY

ITEM NO. 202.08 REMOVE BUILDING NO. 3: STEVENS' SHED SMALL
STATION 20+70.125' RT. SHED

ITEM NO. 202.08 REMOVE BUILDING NO. 4: STEVENS' GARAGE
STATION 20+93.125' RT. GARAGE

ITEM NO. 202.08 REMOVE BUILDING NO. 4: STEVENS' SHED REMAINS
STATION 20+40.130' RT. SHED REMAINS

ITEM NO. 203.213 SHATTER SOLID ROCK SUBGRADE

STATION	TO STATION
18+00	25+00

ITEM NO. 512.08 FRENCH DRAINS

STATION	TO STATION
18+00	25+00

ITEM NO. 606.23 GR TY 3C - SINGLE RAIL*

STATION	TO STATION	OFFSET
11+50.0	24+47.8	LT

*USE 8' POSTS FOR ALL GUARDRAIL

ITEM NO. 606.232 GR TY 3C - OVER 15' RADIUS

STATION	TO STATION	OFFSET	RADIUS
24+47.8	24+75.0	LT	16

ITEM NO. 607.151 DRIVE GATEWAY 14 FOOT - METAL

STATION	TO STATION	OFFSET
24+72	24+86	LT
24+86	25+00	LT

ITEM NO. 609.31 CURB TYPE 3

STATION	TO STATION	OFFSET	MOLD
11+50.0	13+52.0	RT	2
13+82.5	15+04.6	RT	2
15+30.9	17+06.3	RT	2
17+32.3	25+00.0	RT	2

ITEM NO. 610.08 PLAIN RIPRAP

STATION	OFFSET	DESCRIPTION
18+50	LT	OUTLET PAD
18+75 - 20+85	LT	STABILIZED SLOPE
21+50	LT	OUTLET PAD
22+50	LT	OUTLET PAD
23+50	LT	OUTLET PAD
24+50	LT	OUTLET PAD
	LT	

ITEM NO. 610.16 HEAVY RIPRAP

STATION	OFFSET	DESCRIPTION
23+65 - 25+00	LT	STABILIZED SLOPE

ITEM NO. 610.18 STONE
DITCH PROTECTION

STATION	TO STATION	OFFSET	WIDTH
100+76.6	102+54.0	LT	4.0
200+55.0	202+23.0	LT	4.0
300+73.3	302+10.7	LT	4.0

ITEM 620.58 EROSION CONTROL GEOTEXTILE INSTALLED
UNDER PLAIN RIP-RAP & STONE DITCH PROTECTION
PER STANDARD DETAILS

ITEM NO. 635.311 PRECAST CONCRETE BLOCK GRAVITY WALL

STATION	TO STATION	OFFSET
19+00	20+75	LT
21+25	23+50	LT
23+70	25+00	LT

627.733 4" WHITE OR YELLOW PAINTED PAVE MRK LINE

STATION	OFFSET	DESCRIPTION
11+50 - 25+00	LT	EDGE LINE
11+50 - 25+00	RT	EDGE LINE
11+50 - 24+40	CL	DOUBLE YELLOW CENTERLINE CONNECT TO PAINTED ISLAND SEE WIN 18239.00 FOR DETAILS

- FINAL STRIPING WILL NOT COMMENCE UNTIL 10 DAYS HAVE ELAPSED FROM THE COMPLETION OF SURFACE PAVEMENT AND MUST BE COMPLETED WITHIN 20 DAYS OF THE COMPLETION OF SURFACE PAVEMENT. UNLESS OTHERWISE DIRECTED, FAILURE TO COMPLY WILL RESULT IN A TRAFFIC CONTROL VIOLATION.
- ONCE CONSTRUCTION IS COMPLETE, MAINTENANCE OF TRAFFIC CONTROL DEVICES (652.36) WILL NOT BE PAID WHILE WAITING TO FINAL STRIPE.
- ONCE CONSTRUCTION IS COMPLETE, LIQUIDATED DAMAGES WILL NOT BE CHARGED WHILE WAITING TO FINAL STRIPE

627.78 TEMP 4" PAINT PAVE MARK LINE W OR Y

STATION	OFFSET	DESCRIPTION
11+50 - 25+00	LT	EDGE LINE
11+50 - 25+00	RT	EDGE LINE
11+50 - 24+40	CL	DOUBLE YELLOW CENTERLINE CONNECT TO PAINTED ISLAND SEE WIN 18239.00 FOR DETAILS

- TEMPORARY CENTER LINES SHALL BE PAINTED ON ALL MATCHED PAVEMENT WITHIN ONE WEEK.
- TEMPORARY EDGE LINES SHALL BE PAINTED ON ALL PAVEMENT LAYERS WITHIN FOUR WEEKS.
- ALL TEMPORARY LINES SHALL BE PAINTED PRIOR TO FINAL STRIPING.
- MULTILANE SECTIONS, TRUCK LANES, AND MILLED SURFACES MUST BE STRIPED DAILY ON ALL MATCHED PAVEMENT LAYERS.
- TOMS MUST BE USED ON ALL PAVEMENT LAYERS UNTIL TEMPORARY PAINT IS APPLIED.
- TOMS WILL BE REMOVED BEFORE FINAL STRIPING.
- TOM REMOVAL WILL BE ADDRESSED IN THE TRAFFIC CONTROL PLAN.
- ONLY PAINTED TEMPORARY LINE WILL BE PAID UNDER THIS ITEM. TOMS WILL BE CONSIDERED INCIDENTAL TO THE CONTRACT.

STATE OF MAINE
DEPARTMENT OF TRANSPORTATION

STP-1838(200)

WIN 18382.00

HIGHWAY PLANS

PROJ. MANAGER	E. MARTIN	BY	DATE
DESIGN-DETAILED	I. MAYNARD	I. MAYNARD	JUNE 2014
CHECKED-REVIEWED	G. SANTY	-----	JUNE 2014
DESIGN2-DETAILED2	------	------	------
DESIGN3-DETAILED3	------	------	------
REVISIONS 1	------	------	------
REVISIONS 2	------	------	------
REVISIONS 3	------	------	------
REVISIONS 4	------	------	------
FIELD CHANGES	------	------	------

SIGNATURE

P.E. NUMBER

DATE

DURHAM
ROUTE 9

CONSTRUCTION NOTES

SHEET NUMBER
7
OF 49

Filename: ...\007_Notes_Construction.dgn Division: HIGHWAY Username: common Date:7/21/2014

GENERAL NOTES

1. A PRECAST CONCRETE BLOCK GRAVITY WALL SHALL BE USED AT THE TOE OF THE RIP RAP AND SOIL SLOPES TERMINATING ON SLOPING LEDGE.

2. THE CONTRACTOR SHALL SUBMIT PROPOSED RIPRAP TOE DETAILS AND LAYOUT TO THE RESIDENT FOR REVIEW AND APPROVAL.

PRECAST CONCRETE BLOCK GRAVITY WALL NOTES

1. THE BEARING SURFACE SHALL BE LEVELED BY POURING A CONCRETE FILL LEVELING SURFACE, OR BY LOCALLY BENCHING THE BEDROCK. COST OF SURFACE PREPARATION SHALL BE INCIDENTAL TO ITEM NO. 635.311 - PRECAST CONCRETE BLOCK GRAVITY WALL.

2. 4-IN x 4-IN BLOCKOUT DRAINS SHALL BE INSTALLED AT 10-FT MAXIMUM SPACING OR ONE DRAING PER PRECAST SEGMENT, WHICHEVER IS SMALLER.

3. DOWELS SHALL MEET THE REQUIREMENTS OF ASTM A 615/A 615M, GRADE 60 AND SHALL BE GALVANIZED TO ASTM A 153 OR ASTM B695, CLASS 50, TYPE 1. PAYMENT FOR GALVANIZING WILL BE CONSIDERED INCIDENTAL TO THE PRECAST CONCRETE BLOCK GRAVITY WALL PAY ITEM. SEE DOWEL NOTES FOR INSTALLATION DETAILS.

4. THE MAXIMUM DOWEL SPACING SHALL BE 3'-0" ALONG THE LENGTH OF THE WALL, AND A MINIMUM OF 2 DOWELS SHALL BE INSTALLED PER BLOCK SEGMENT.

DOWEL NOTES

1. THE CONNECTION BETWEEN THE PRECAST CONCRETE BLOCK GRAVITY WALL OR THE ROCK OVERHANG STABILIZATION CONCRETE AND THE BEARING SURFACE SHALL BE DOWELED.

2. THE METHOD OF INSTALLING DOWELS SHALL BE APPROVED BY THE RESIDENT.

3. ALL COST FOR INSTALLATION OF THE ANCHOR DOWELS SHALL BE INCIDENTAL TO ITEM NO. 635.311 - PRECAST CONCRETE BLOCK GRAVITY WALL OR ITEM NO. 502.211 - STRUCTURAL CONCRETE ABUTMENT & RETAINING WALL - CLASS A OVERHANG STABILIZATION.

4. THE ANCHORING MATERIAL SHALL BE ONE OF THE PRODUCTS LISTED ON THE MAINEDOT LIST OF PREQUALIFIED GROUT MATERIALS FOR KEYWAYS AND ANCHORING AND SHALL HAVE A MAXIMUM WATER-CEMENT RATIO OF 0.45 BY WEIGHT AND A MINIMUM UNCONFINED COMPRESSIVE STRENGTH OF 4.35 KSI AT THE TIME OF TESTING. INSTALLATION SHALL BE IN CONFORMANCE WITH MANUFACTURER'S RECOMMENDATION. THE ANCHOR MATERIAL CHOSEN SHALL BE SUBMITTED TO THE RESIDENT PRIOR TO INSTALLATION.

5. HOLES DRILLED FOR THE DOWEL REINFORCING STEEL SHALL BE A MINIMUM DIAMETER OF 2½ INCHES.

6. THE MINIMUM EMBEDMENT DEPTH INTO BEDROCK OR CONCRETE SHALL BE 2'-0".

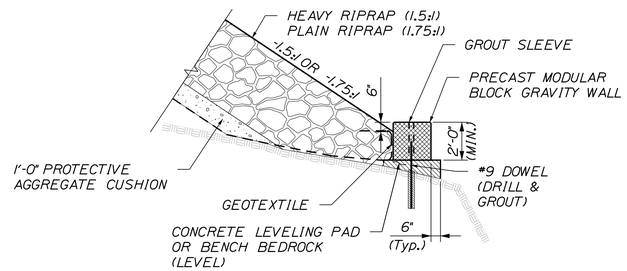

PRECAST CONCRETE BLOCK GRAVITY WALL
(SPECIAL PROVISION 635)

RIPRAP SLOPE BUTTRESS

SEE CROSS SECTION AND PLANS FOR APPROXIMATE LOCATIONS. LOCATIONS WILL VERY DEPENDING ON CONDITIONS ENCOUNTERED DURING CONSTRUCTION.

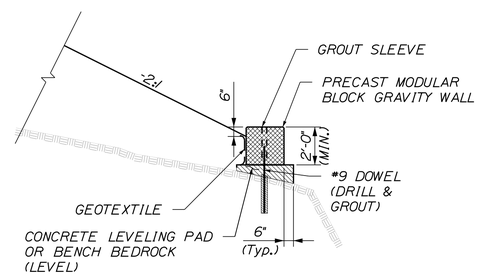

PRECAST CONCRETE BLOCK GRAVITY WALL
(SPECIAL PROVISION 635)

SOIL SLOPE BUTTRESS

BUTTRESS WILL BE REQUIRED FOR SOIL SLOPES TERMINATING ON SLOPING LEDGE. SEE CROSS SECTION AND PLANS FOR APPROXIMATE LOCATIONS. LOCATIONS WILL VARY DEPENDING ON CONDITIONS ENCOUNTERED DURING CONSTRUCTION.

NOT TO SCALE

STATE OF MAINE
DEPARTMENT OF TRANSPORTATION

STP-1838(200)

WIN 18382.00

HIGHWAY PLANS

		BY	DATE
PROJ. MANAGER	E. MARTIN		
DESIGN-DETAILED	I. MAYNARD	I. MAYNARD	JUNE 2014
CHECKED-REVIEWED	G. SANTY	-----	JUNE 2014
DESIGN2-DETAILED2	-----	-----	-----
DESIGN3-DETAILED3	-----	-----	-----
REVISIONS 1	-----	-----	-----
REVISIONS 2	-----	-----	-----
REVISIONS 3	-----	-----	-----
REVISIONS 4	-----	-----	-----
FIELD CHANGES	-----	-----	-----

SIGNATURE

P.E. NUMBER

DATE

DURHAM
ROUTE 9

BUTTRESS DETAILS

SHEET NUMBER
8
OF 49

Filename: ...\00\HIGHWAY\008_Details.dgn Division: HIGHWAY Username: common Date:7/16/2014

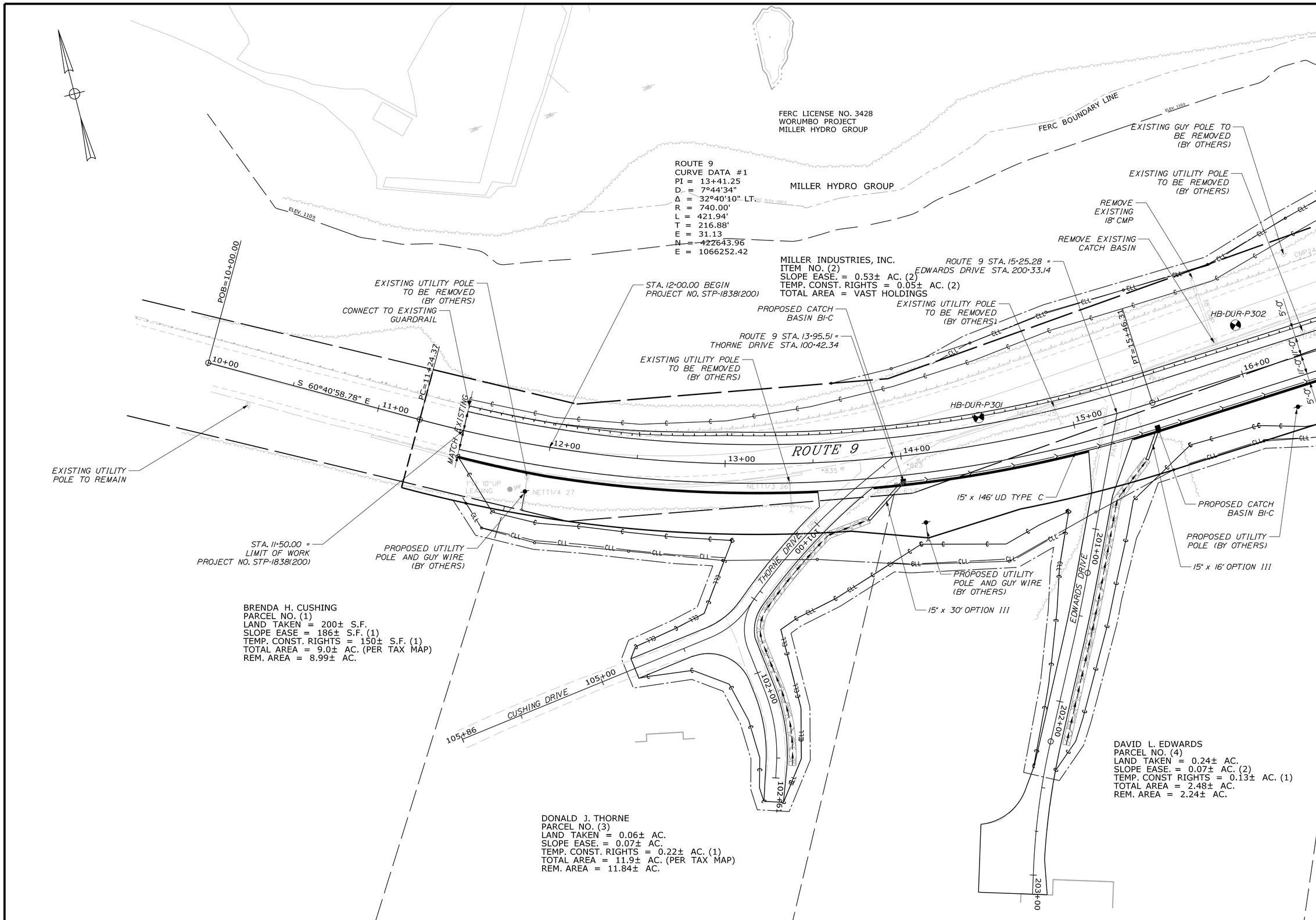

STATE OF MAINE
DEPARTMENT OF TRANSPORTATION

STP-1838(200)

PIN 18382.00

HIGHWAY PLANS

	BY	DATE
PROJ. MANAGER	E. MARTIN	
DESIGN-DETAILED	I. MAYNARD	JUNE 2014
CHECKED-REVIEWED	I. MAYNARD	JUNE 2014
DESIGN2-DETAILED2	G. SANTY	
DESIGN3-DETAILED3		
REVISIONS 1		
REVISIONS 2		
REVISIONS 3		
REVISIONS 4		
FIELD CHANGES		

SIGNATURE

P.E. NUMBER

DATE

DURHAM
ROUTE 9

PLANS

SHEET NUMBER

9

OF 49

Filename: ...\18382\00\HIGHWAY\009_Plan1.dgn Division: HIGHWAY Username: common Date:7/16/2014

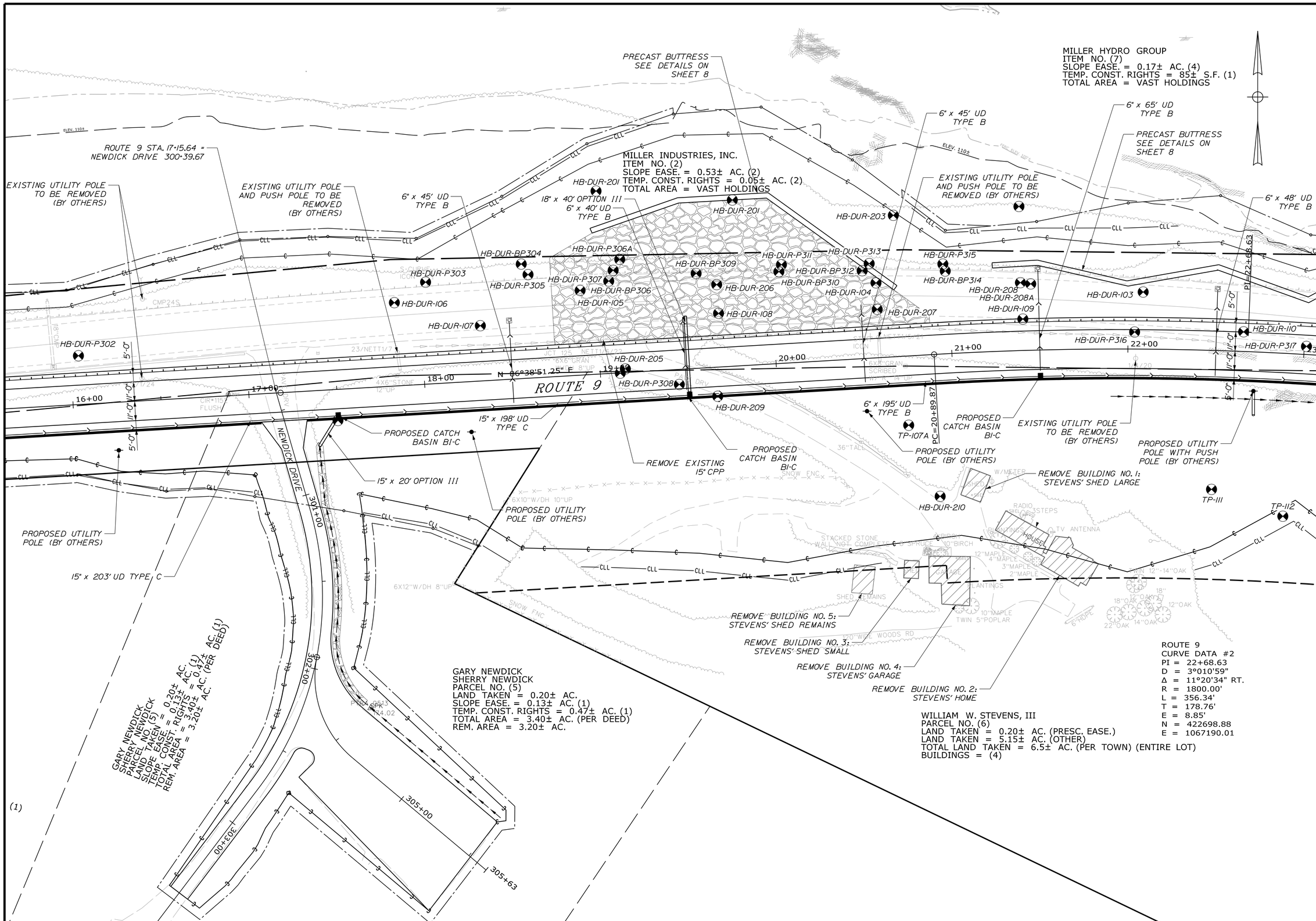

STATE OF MAINE
DEPARTMENT OF TRANSPORTATION

STP-1838(200)

WIN 18382.00

HIGHWAY PLANS

	BY	DATE
PROJ. MANAGER	E. MARTIN	
DESIGN-DETAILED	I. MAYNARD	JUNE 2014
CHECKED-REVIEWED	C. SANTY	
DESIGN2-DETAILED2		
DESIGN3-DETAILED3		
REVISIONS 1		
REVISIONS 2		
REVISIONS 3		
REVISIONS 4		
FIELD CHANGES		

SIGNATURE

P.E. NUMBER

DATE

DURHAM
ROUTE 9

PLANS

SHEET NUMBER

10

OF 49

Filename: ...\18382\00\HIGHWAY\010_Plan2.dgn Division: HIGHWAY Username: common Date:7/21/2014

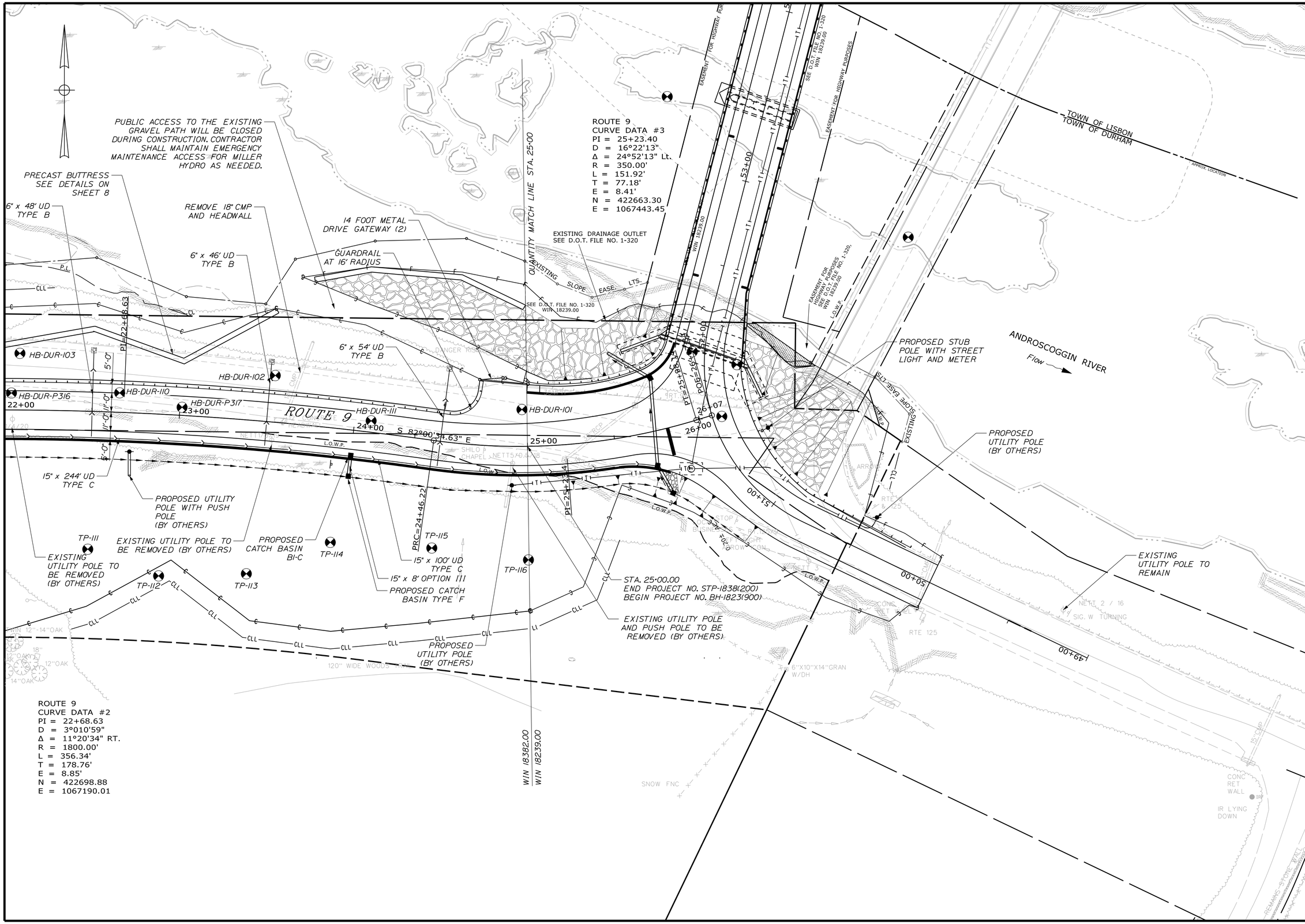

STATE OF MAINE
DEPARTMENT OF TRANSPORTATION

STP-1838(200)

WIN 18382.00

HIGHWAY PLANS

PROJ. MANAGER	E. MARTIN	BY	DATE
DESIGN-DETAILED	I. MAYNARD	I. MAYNARD	JUNE 2014
CHECKED-REVIEWED	G. SANTY	------	JUNE 2014
DESIGN2-DETAILED2	------	------	SIGNATURE
DESIGN3-DETAILED3	------	------	------
REVISIONS 1	------	------	P.E. NUMBER
REVISIONS 2	------	------	------
REVISIONS 3	------	------	DATE
REVISIONS 4	------	------	------
FIELD CHANGES	------	------	------

DURHAM
ROUTE 9

PLANS

SHEET NUMBER

11

OF 49

Filename: ...\18382\00\HIGHWAY\011_Plan3.dgn Division: HIGHWAY Username: common Date:7/16/2014

PROFILE

STATE OF MAINE
DEPARTMENT OF TRANSPORTATION

STP-1838(200)

WIN
18382.00

HIGHWAY PLANS

		BY	DATE
PROJ. MANAGER	E. MARTIN		
DESIGN-DETAILED	I. MAYNARD	I. MAYNARD	JUNE 2014
CHECKED-REVIEWED	G. SANTY	-----	JUNE 2014
DESIGN2-DETAILED2	-----	-----	-----
DESIGN3-DETAILED3	-----	-----	-----
REVISIONS 1	-----	-----	-----
REVISIONS 2	-----	-----	-----
REVISIONS 3	-----	-----	-----
REVISIONS 4	-----	-----	-----
FIELD CHANGES	-----	-----	-----

SIGNATURE

P.E. NUMBER

DATE

DURHAM
ROUTE 9

PROFILE

SHEET NUMBER

12

OF 49

Filename: ...\00\HIGHWAY\012_Profile1.dgn Division: HIGHWAY Username: common Date:7/16/2014

PROFILE

STATE OF MAINE
DEPARTMENT OF TRANSPORTATION

STP-1838(200)

WIN
18382.00

HIGHWAY PLANS

		BY	DATE
PROJ. MANAGER	E. MARTIN		
DESIGN-DETAILED	I. MAYNARD	I. MAYNARD	JUNE 2014
CHECKED-REVIEWED	G. SANTY	------	JUNE 2014
DESIGN2-DETAILED2	------	------	------
DESIGN3-DETAILED3	------	------	------
REVISIONS 1	------	------	------
REVISIONS 2	------	------	------
REVISIONS 3	------	------	------
REVISIONS 4	------	------	------
FIELD CHANGES	------	------	------

SIGNATURE

P.E. NUMBER

DATE

DURHAM
ROUTE 9

PROFILE

SHEET NUMBER

13

OF 49

Filename: ...\00\HIGHWAY\013_Profile2.dgn Division: HIGHWAY Username: common Date:7/16/2014

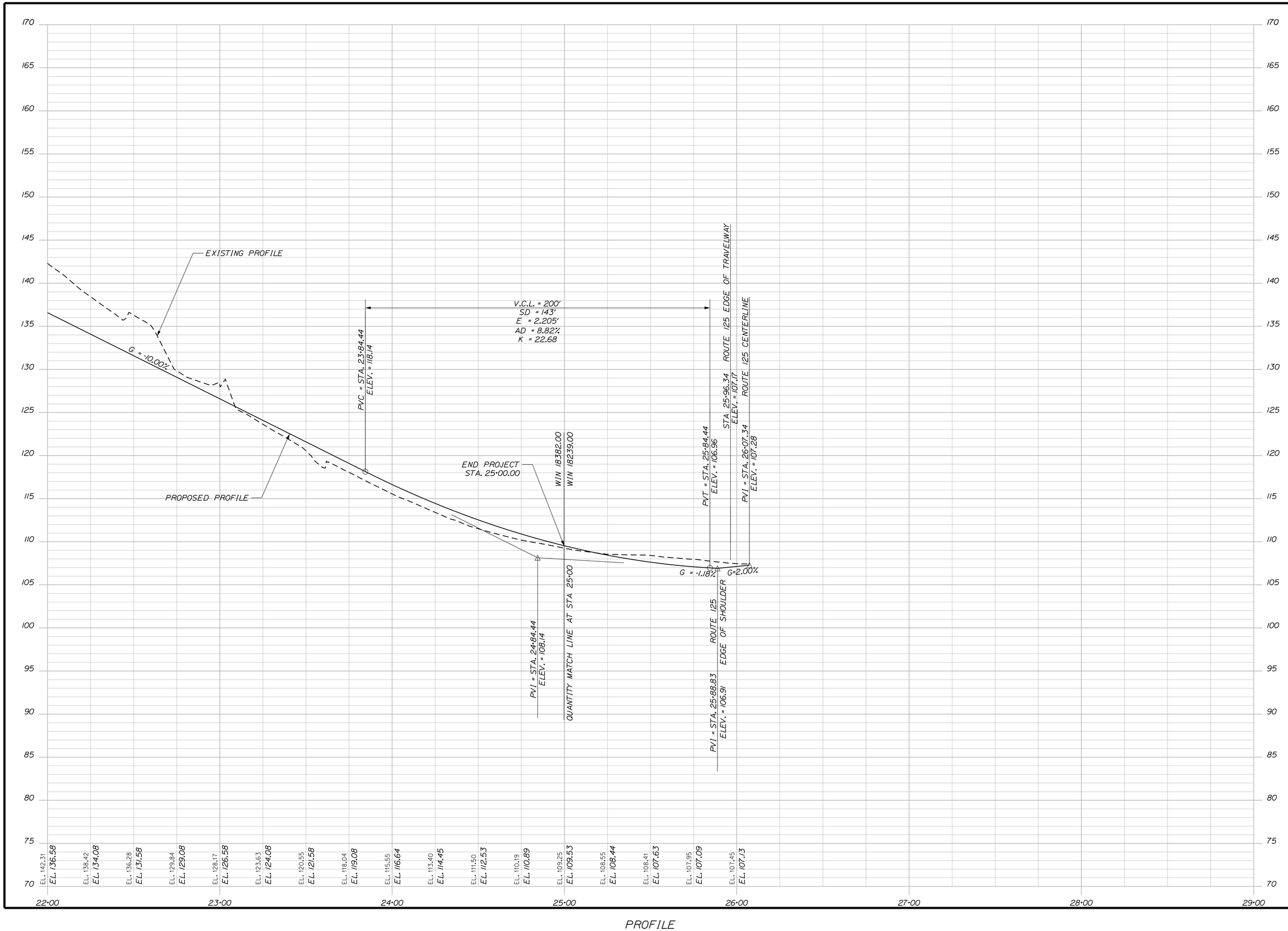

PROFILE

Filename: ...\00\HIGHWAY\014_Profile3.dgn Division: HIGHWAY Username: common Date:7/16/2014

STATE OF MAINE
DEPARTMENT OF TRANSPORTATION

STP-1838(200)

WIN 18382.00

HIGHWAY PLANS

		BY	DATE
PROJ. MANAGER	E. MARTIN		
DESIGN-DETAILED	I. MAYNARD	I. MAYNARD	JUNE 2014
CHECKED-REVIEWED	G. SANTY	------	JUNE 2014
DESIGN2-DETAILED2	------	------	------
DESIGN3-DETAILED3	------	------	------
REVISIONS 1	------	------	------
REVISIONS 2	------	------	------
REVISIONS 3	------	------	------
REVISIONS 4	------	------	------
FIELD CHANGES	------	------	------

SIGNATURE

P.E. NUMBER

DATE

DURHAM
ROUTE 9

PROFILE

SHEET NUMBER

14

OF 49

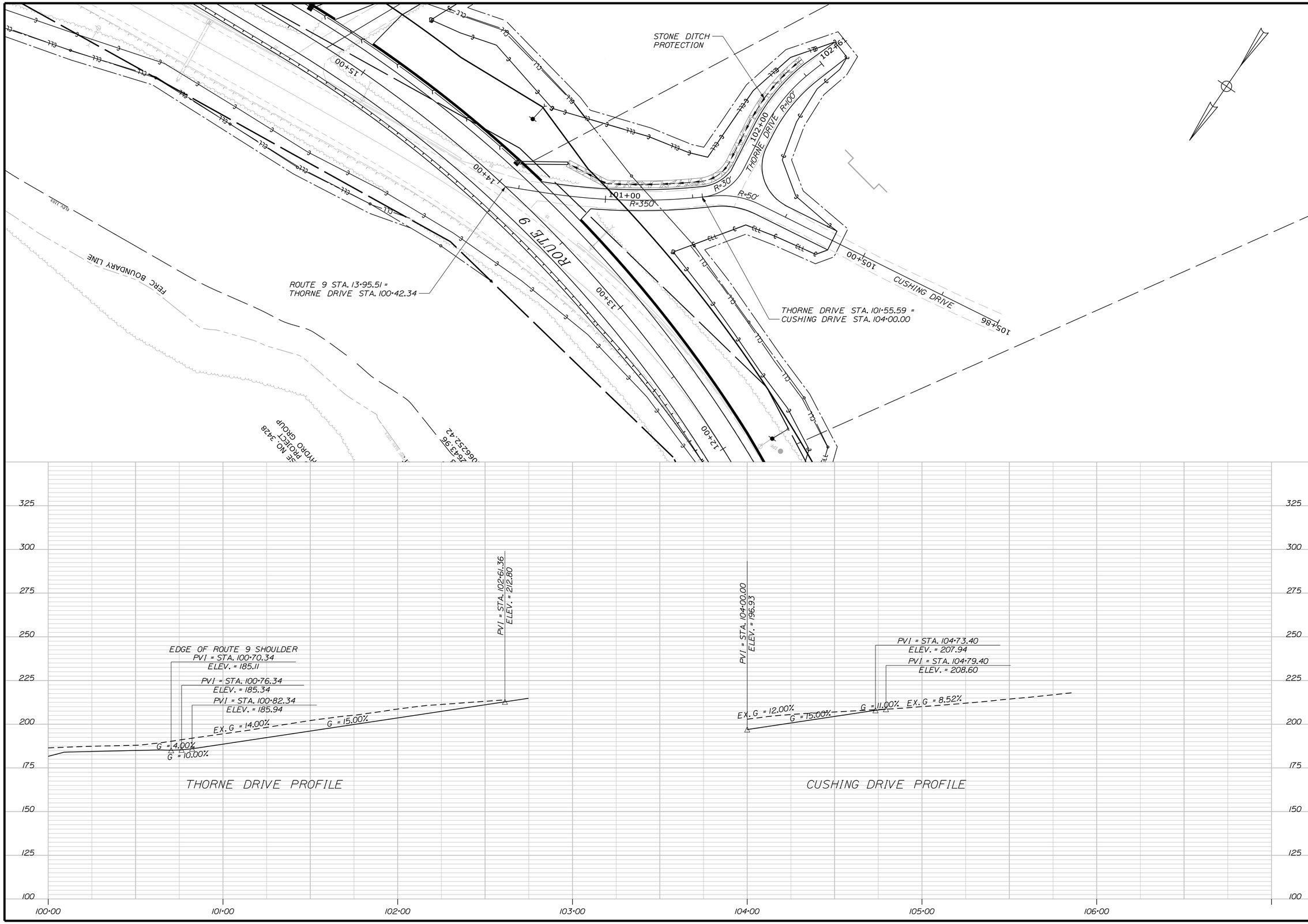

STATE OF MAINE
DEPARTMENT OF TRANSPORTATION

STP-1838(200)

PIN 18382.00

HIGHWAY PLANS

PROJ. MANAGER	E. MARTIN	BY	DATE
DESIGN-DETAILED	I. MAYNARD	I. MAYNARD	JUNE 2014
CHECKED-REVIEWED	G. SANTY	------	JUNE 2014
DESIGN2-DETAILED2	------	------	------
DESIGN3-DETAILED3	------	------	------
REVISIONS 1	------	------	------
REVISIONS 2	------	------	------
REVISIONS 3	------	------	------
REVISIONS 4	------	------	------
FIELD CHANGES	------	------	------

SIGNATURE

P.E. NUMBER

DATE

DURHAM
ROUTE 9

PLAN / PROFILE

SHEET NUMBER

15

OF 49

Filename: ...\015_Thorne-Cushing Plan-Profile.dgn Division: HIGHWAY Username: common Date:7/16/2014

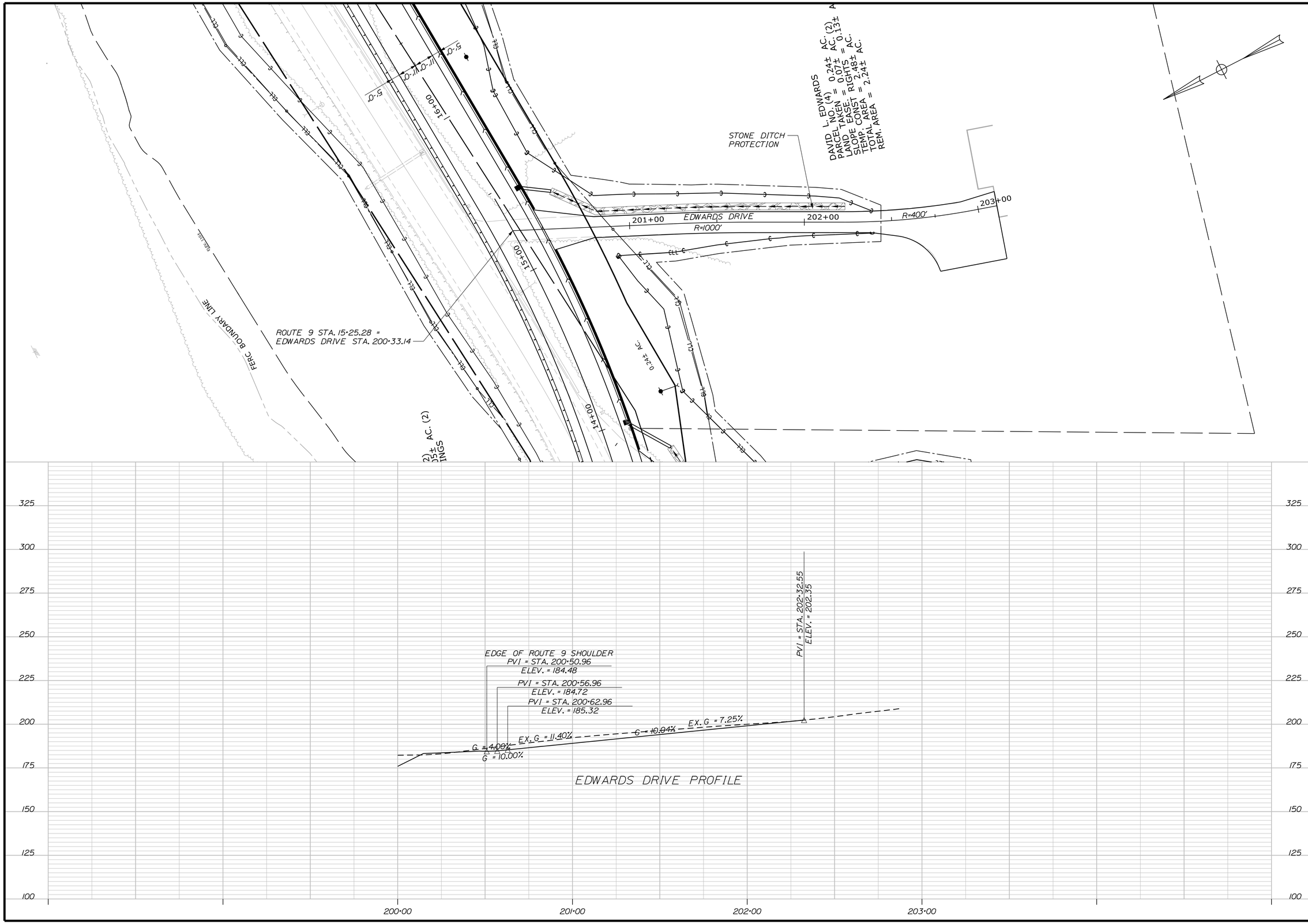

STATE OF MAINE
DEPARTMENT OF TRANSPORTATION

STP-1838(200)

PIN
18382.00

HIGHWAY PLANS

PROJ. MANAGER	E. MARTIN	BY	DATE
DESIGN-DETAILED	I. MAYNARD	I. MAYNARD	JUNE 2014
CHECKED-REVIEWED	G. SANTY	------	JUNE 2014
DESIGN2-DETAILED2	------	------	------
DESIGN3-DETAILED3	------	------	------
REVISIONS 1	------	------	------
REVISIONS 2	------	------	------
REVISIONS 3	------	------	------
REVISIONS 4	------	------	------
FIELD CHANGES	------	------	------

SIGNATURE

P.E. NUMBER

DATE

DURHAM
ROUTE 9

PLAN / PROFILE

SHEET NUMBER

16

OF 49

Filename: ...\016_Edwards Plan-Profile.dgn Division: HIGHWAY Username: common Date:7/16/2014

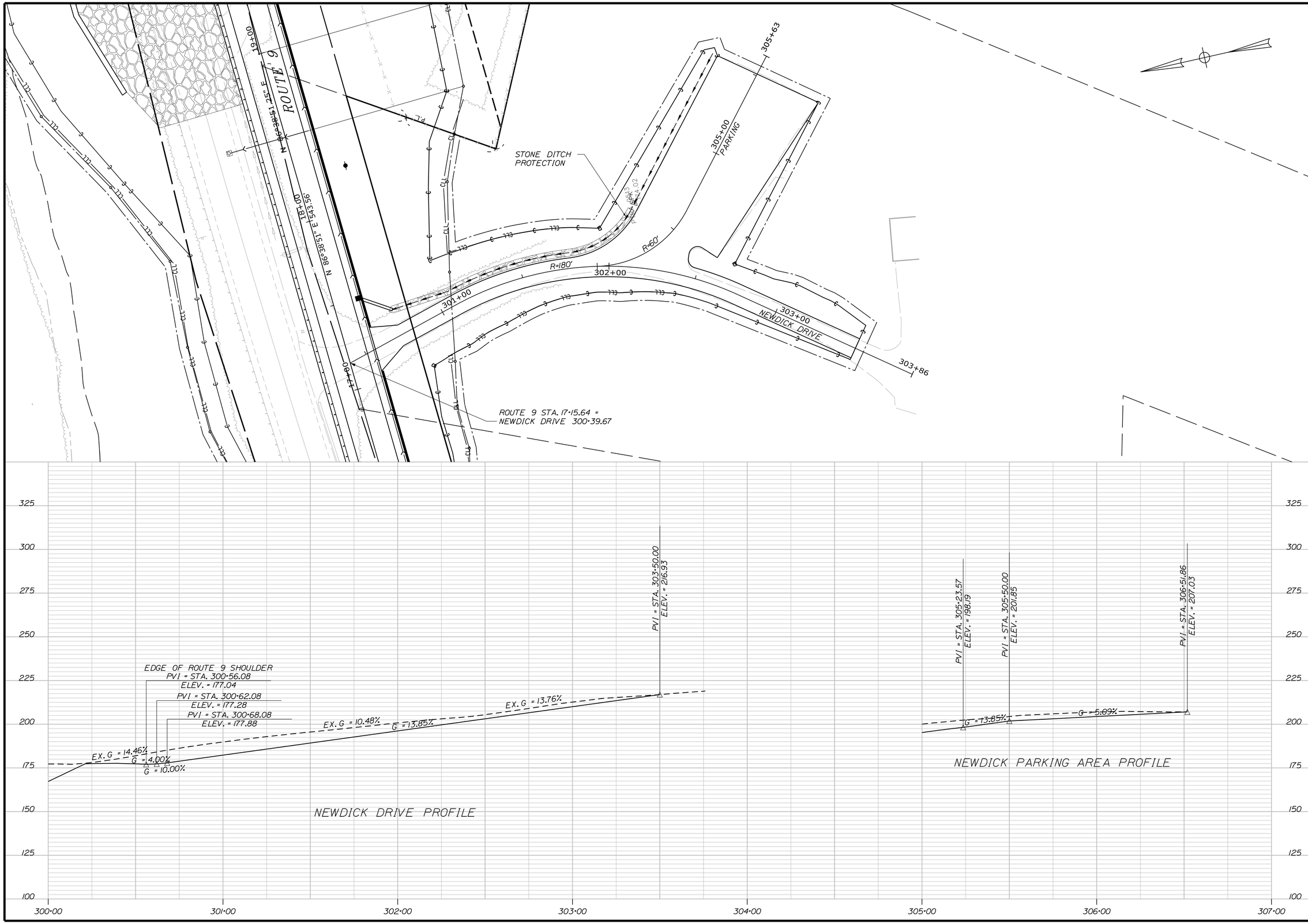

STATE OF MAINE
DEPARTMENT OF TRANSPORTATION

STP-1838(200)

PIN
18382.00

HIGHWAY PLANS

PROJ. MANAGER	E. MARTIN	BY	DATE
DESIGN-DETAILED	I. MAYNARD	I. MAYNARD	JUNE 2014
CHECKED-REVIEWED	G. SANTY	------	JUNE 2014
DESIGN2-DETAILED2	------	------	------
DESIGN3-DETAILED3	------	------	------
REVISIONS 1	------	------	------
REVISIONS 2	------	------	------
REVISIONS 3	------	------	------
REVISIONS 4	------	------	------
FIELD CHANGES	------	------	------

SIGNATURE

P.E. NUMBER

DATE

DURHAM
ROUTE 9

PLAN / PROFILE

SHEET NUMBER

17

OF 49

Filename: ...\017_Newdick Plan-Profile.dgn Division: HIGHWAY Username: common Date:7/16/2014

NOTE:
BUTTRESS LOCATION BASED ON ASSUMED LEDGE LOCATIONS FROM AVAILABLE SUBSURFACE DATA. LOCATIONS WILL NEED TO BE DETERMINED BASED ON ACTUAL FIELD CONDITIONS.

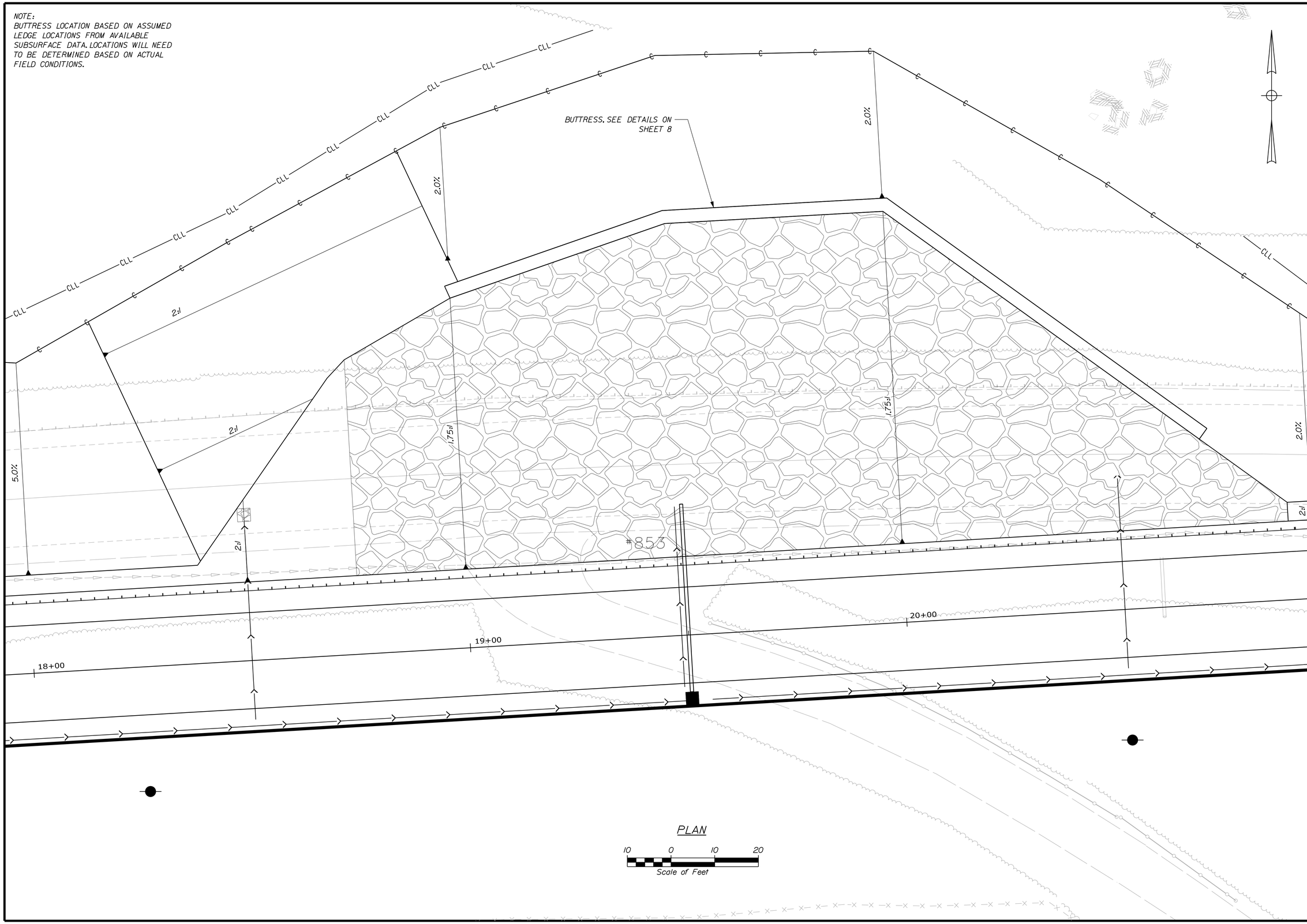

STATE OF MAINE
DEPARTMENT OF TRANSPORTATION

STP-1838(200)

WIN 18382.00

HIGHWAY PLANS

	BY	DATE
PROJ. MANAGER	E. MARTIN	
DESIGN-DETAILED	L MAYNARD	JUNE 2014
CHECKED-REVIEWED	G. SANTY	JUNE 2014
DESIGN2-DETAILED2		
DESIGN3-DETAILED3		
REVISIONS 1		
REVISIONS 2		
REVISIONS 3		
REVISIONS 4		
FIELD CHANGES		

SIGNATURE

P.E. NUMBER

DATE

DURHAM
ROUTE 9

GRADING DETAIL

SHEET NUMBER
18
OF 49

Filename: ...\HIGHWAY\018_Grading Detail.dgn Division: HIGHWAY Username: common Date:7/16/2014

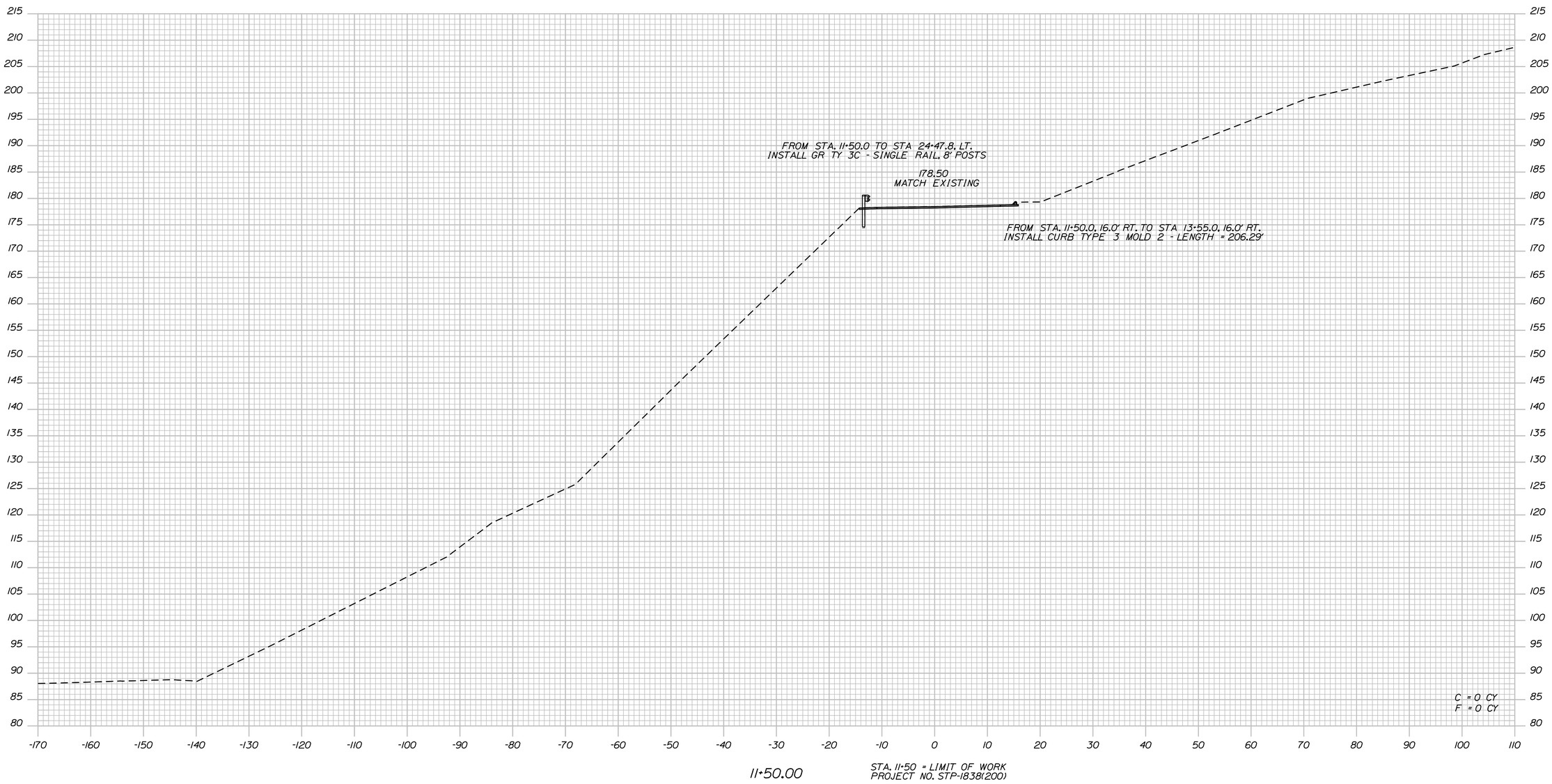

STATE OF MAINE
DEPARTMENT OF TRANSPORTATION

STP-1838(200)

WIN
18382.00

HIGHWAY PLANS

PROJ. MANAGER	E. MARTIN	BY	DATE
DESIGN-DETAILED	I. MAYNARD	I. MAYNARD	JUNE 2014
CHECKED-REVIEWED	G. SANTY	-----	JUNE 2014
DESIGN2-DETAILED2	-----	-----	-----
DESIGN3-DETAILED3	-----	-----	-----
REVISIONS 1	-----	-----	-----
REVISIONS 2	-----	-----	-----
REVISIONS 3	-----	-----	-----
REVISIONS 4	-----	-----	-----
FIELD CHANGES	-----	-----	-----

SIGNATURE

P.E. NUMBER

DATE

DURHAM
ROUTE 9

CROSS SECTIONS

SHEET NUMBER

19

OF 49

Filename: ...\00\HIGHWAY\MSTA\xsect.dgn Division: HIGHWAY Username: common Date:7/16/2014

Sta. 11+50.00 to Sta. 11+50.00

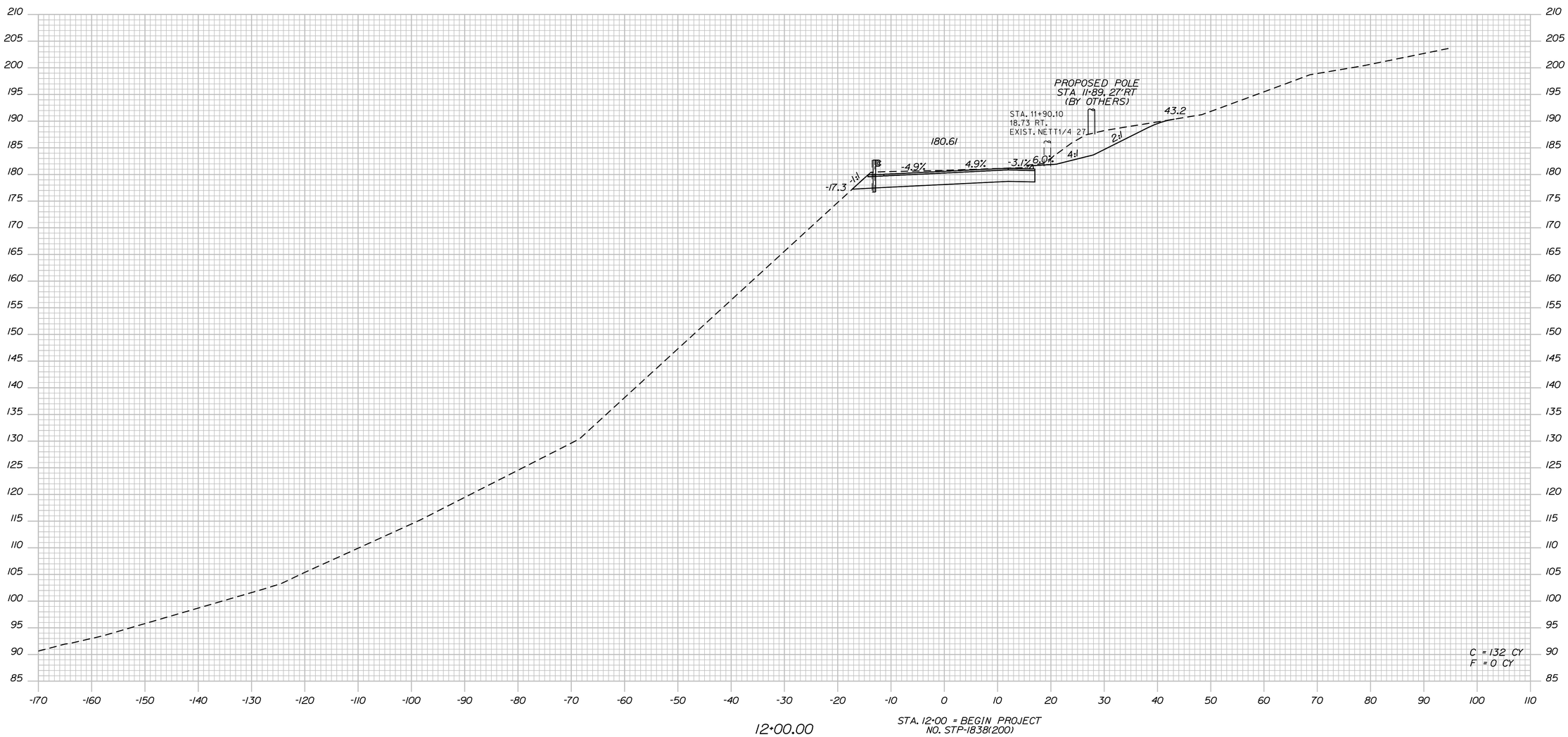

STATE OF MAINE
DEPARTMENT OF TRANSPORTATION

STP-1838(200)

WIN
18382.00

HIGHWAY PLANS

PROJ. MANAGER	E. MARTIN	BY	DATE
DESIGN-DETAILED	I. MAYNARD	I. MAYNARD	JUNE 2014
CHECKED-REVIEWED	G. SANTY	------	JUNE 2014
DESIGN2-DETAILED2	------	------	------
DESIGN3-DETAILED3	------	------	------
REVISIONS 1	------	------	------
REVISIONS 2	------	------	------
REVISIONS 3	------	------	------
REVISIONS 4	------	------	------
FIELD CHANGES	------	------	------

SIGNATURE

P.E. NUMBER

DATE

DURHAM
ROUTE 9

CROSS SECTIONS

SHEET NUMBER

20

OF 49

Filename: ...\00\HIGHWAY\MSTA1\xsect.dgn Division: HIGHWAY Username: common Date:7/16/2014

Sta. 12+00.00 to Sta. 12+00.00

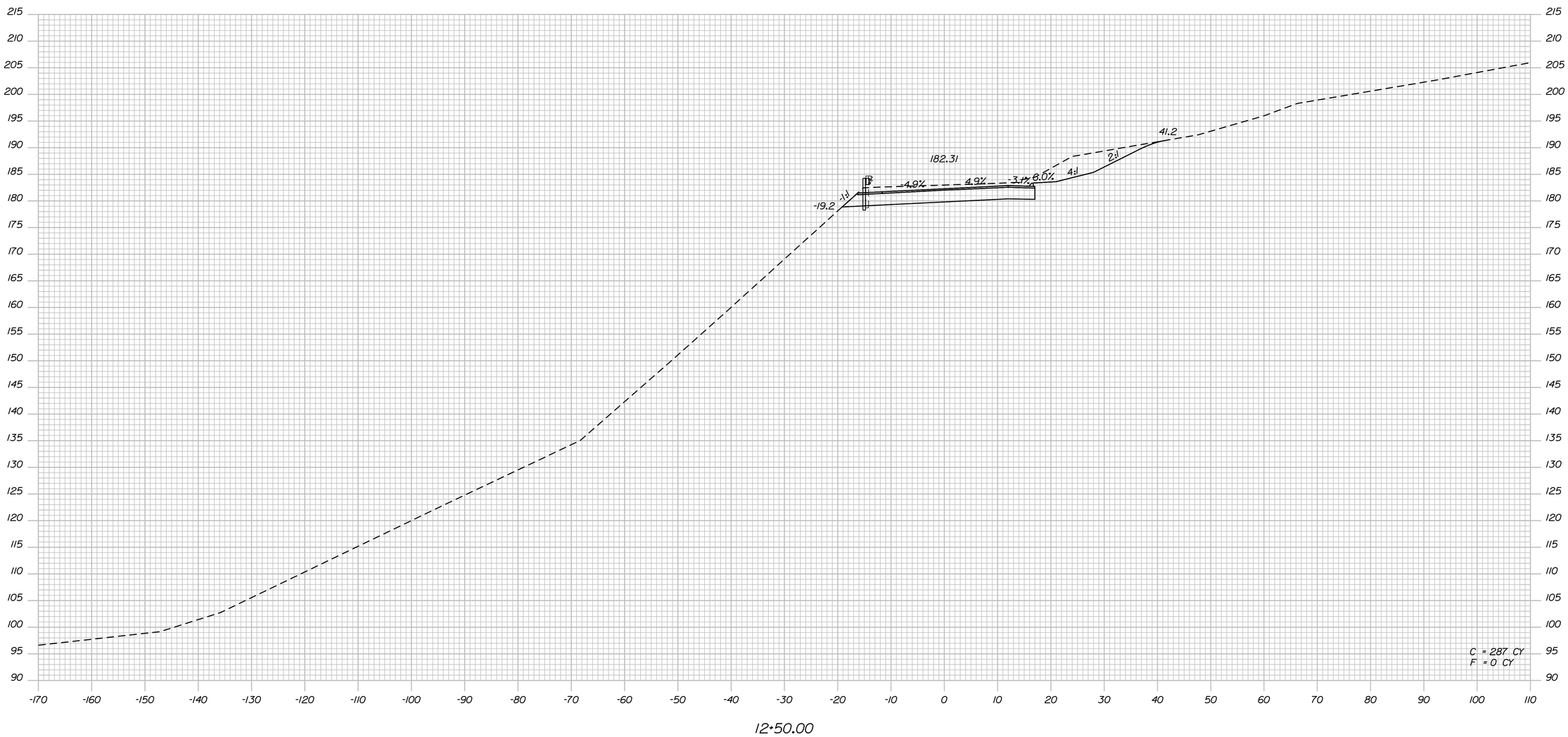

Filename: ...\00\HIGHWAY\MSTA1\xsect.dgn Division: HIGHWAY Username: common Date:7/16/2014

STATE OF MAINE
DEPARTMENT OF TRANSPORTATION

STP-1838(200)

WIN
18382.00

HIGHWAY PLANS

PROJ. MANAGER	E. MARTIN	BY	DATE
DESIGN-DETAILED	I. MAYNARD	I. MAYNARD	JUNE 2014
CHECKED-REVIEWED	G. SANTY	------	JUNE 2014
DESIGN2-DETAILED2	------	------	------
DESIGN3-DETAILED3	------	------	------
REVISIONS 1	------	------	------
REVISIONS 2	------	------	------
REVISIONS 3	------	------	------
REVISIONS 4	------	------	------
FIELD CHANGES	------	------	------

SIGNATURE

P.E. NUMBER

DATE

DURHAM
ROUTE 9

CROSS SECTIONS

SHEET NUMBER

21

OF 49

Sta. 12+50.00 to Sta. 12+50.00

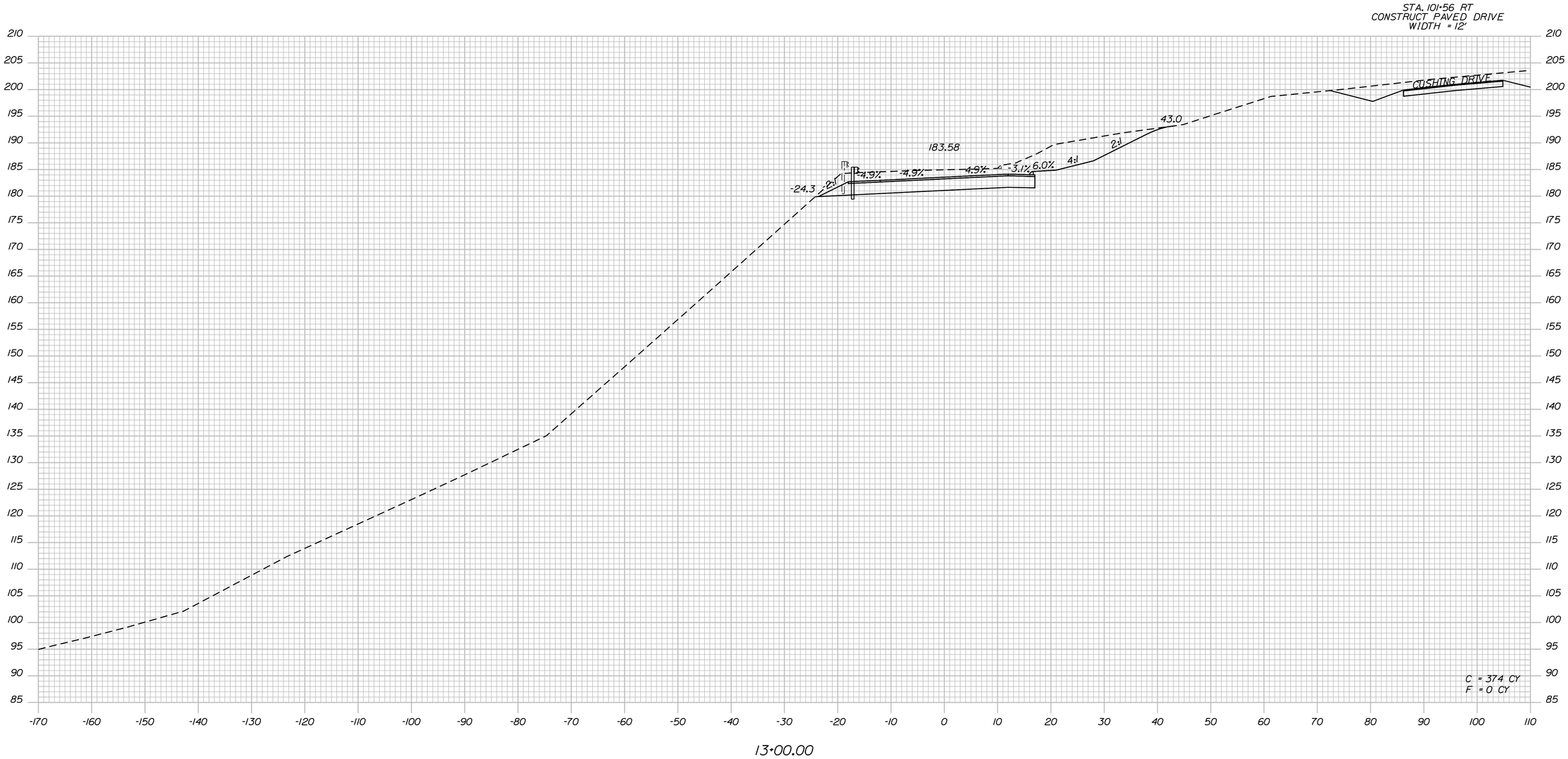

STATE OF MAINE
DEPARTMENT OF TRANSPORTATION

STP-1838(200)

WIN
18382.00

HIGHWAY PLANS

PROJ. MANAGER	E. MARTIN	BY	DATE
DESIGN-DETAILED	I. MAYNARD	I. MAYNARD	JUNE 2014
CHECKED-REVIEWED	G. SANTY	------	JUNE 2014
DESIGN2-DETAILED2	------	------	------
DESIGN3-DETAILED3	------	------	------
REVISIONS 1	------	------	------
REVISIONS 2	------	------	------
REVISIONS 3	------	------	------
REVISIONS 4	------	------	------
FIELD CHANGES	------	------	------

SIGNATURE

P.E. NUMBER

DATE

DURHAM
ROUTE 9

CROSS SECTIONS

SHEET NUMBER
22
OF 49

Filename: ...\00\HIGHWAY\MSTA\xsect.dgn Division: HIGHWAY Username: common Date:7/16/2014

Sta. 13+00.00 to Sta. 13+00.00

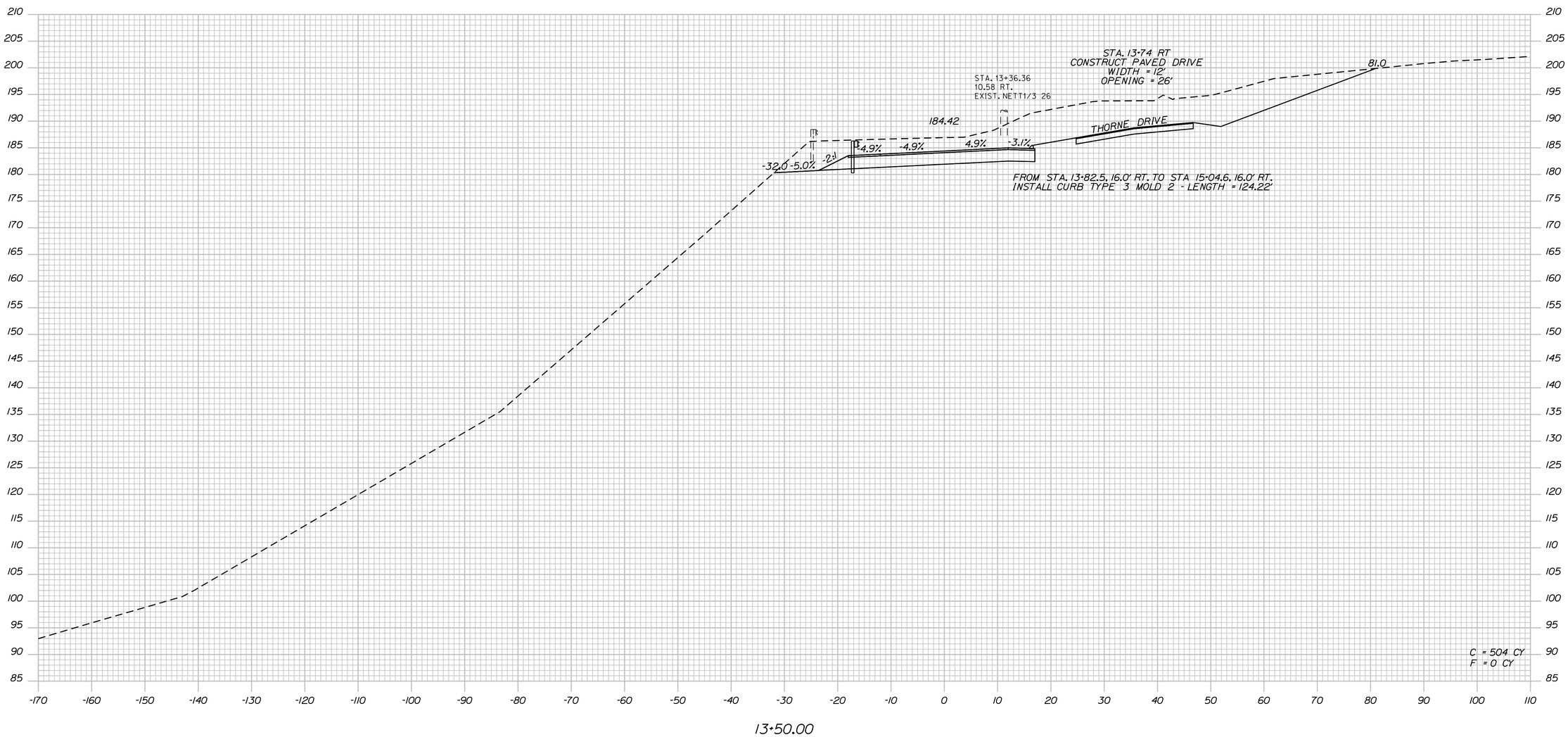

STATE OF MAINE
DEPARTMENT OF TRANSPORTATION

STP-1838(200)

WIN
18382.00

HIGHWAY PLANS

PROJ. MANAGER	E. MARTIN	BY	DATE
DESIGN-DETAILED	I. MAYNARD	I. MAYNARD	JUNE 2014
CHECKED-REVIEWED	G. SANTY	------	JUNE 2014
DESIGN2-DETAILED2	------	------	------
DESIGN3-DETAILED3	------	------	------
REVISIONS 1	------	------	------
REVISIONS 2	------	------	------
REVISIONS 3	------	------	------
REVISIONS 4	------	------	------
FIELD CHANGES	------	------	------

SIGNATURE

P.E. NUMBER

DATE

DURHAM
ROUTE 9

CROSS SECTIONS

SHEET NUMBER

23

OF 49

Filename: ...\00\HIGHWAY\MSTA\xsect.dgn Division: HIGHWAY Username: common Date:7/16/2014

Sta. 13+50.00 to Sta. 13+50.00

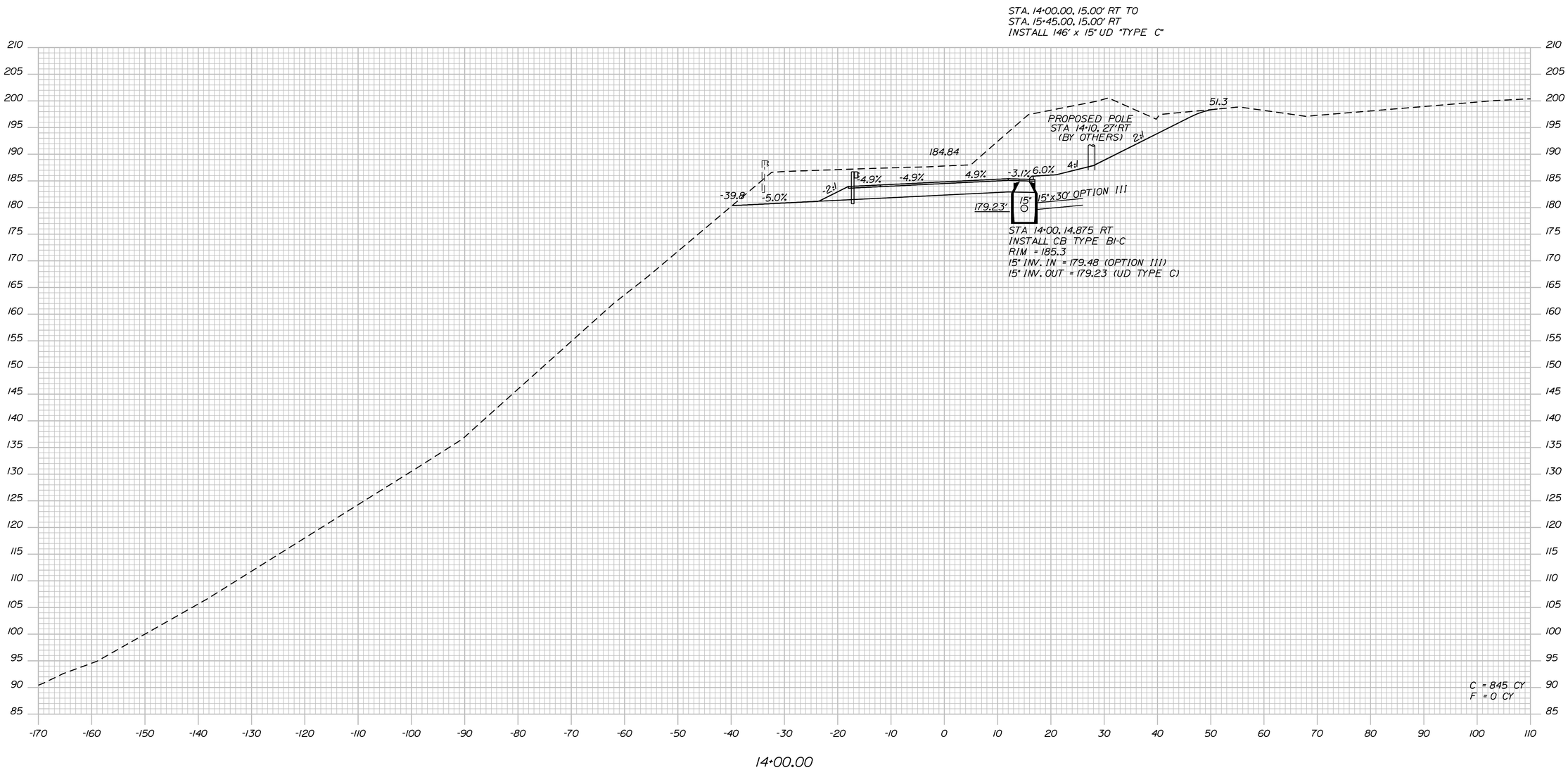

STATE OF MAINE
DEPARTMENT OF TRANSPORTATION

STP-1838(200)

WIN
18382.00

HIGHWAY PLANS

PROJ. MANAGER	E. MARTIN	BY	DATE	
DESIGN-DETAILED	I. MAYNARD	I. MAYNARD	JUNE 2014	SIGNATURE
CHECKED-REVIEWED	G. SANTY	------	JUNE 2014	------
DESIGN2-DETAILED2	------	------	------	------
DESIGN3-DETAILED3	------	------	------	P.E. NUMBER
REVISIONS 1	------	------	------	------
REVISIONS 2	------	------	------	------
REVISIONS 3	------	------	------	DATE
REVISIONS 4	------	------	------	------
FIELD CHANGES	------	------	------	------

DURHAM
ROUTE 9

CROSS SECTIONS

SHEET NUMBER
24
OF 49

Filename: ...\00\HIGHWAY\MSTA\xsect.dgn Division: HIGHWAY Username: common Date:7/16/2014

Sta. 14+00.00 to Sta. 14+00.00

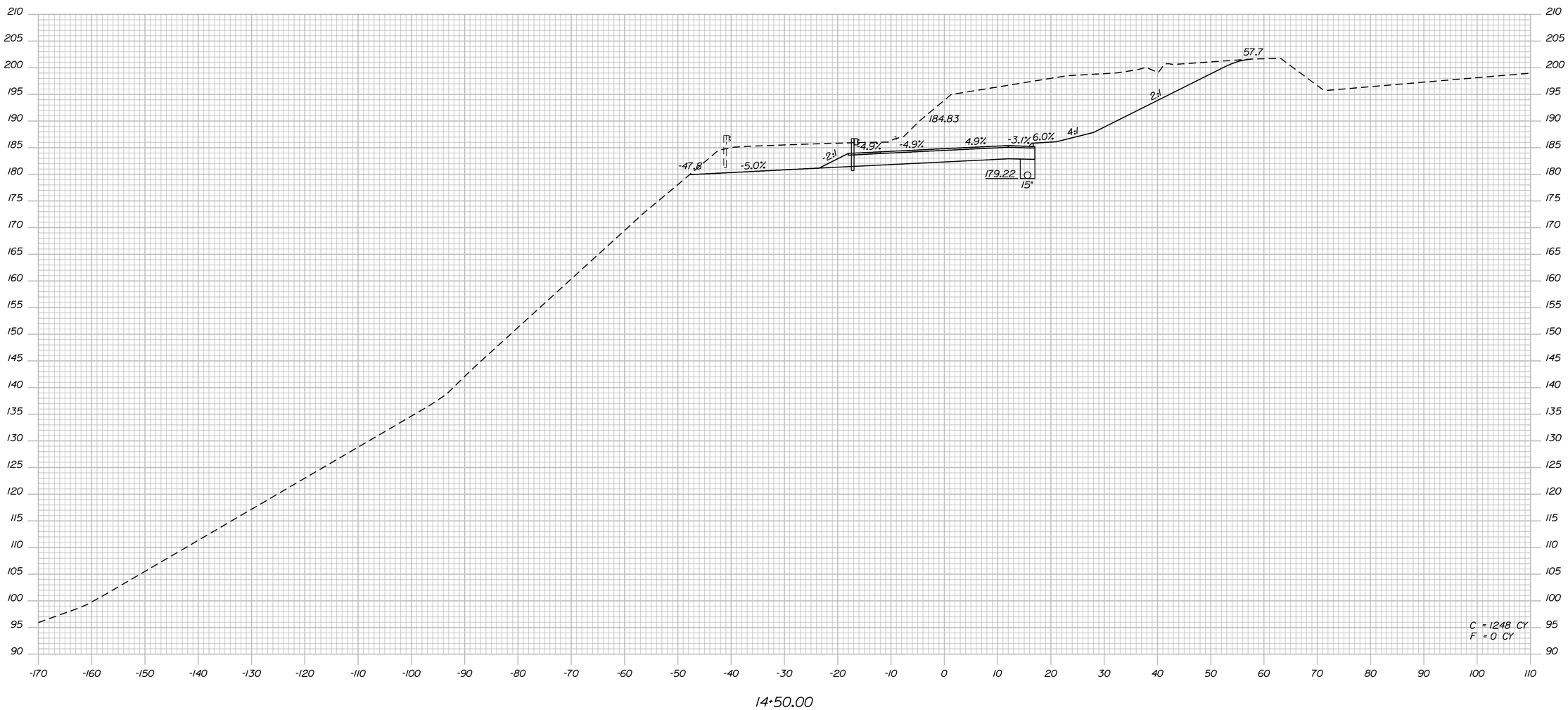

Filename: ...\00\HIGHWAY\MSTA\xsect.dgn Division: HIGHWAY Username: common Date:7/16/2014

STATE OF MAINE
DEPARTMENT OF TRANSPORTATION

STP-1838(200)

WIN
18382.00

HIGHWAY PLANS

PROJ. MANAGER	E. MARTIN	BY	DATE
DESIGN-DETAILED	I. MAYNARD	I. MAYNARD	JUNE 2014
CHECKED-REVIEWED	G. SANTY	------	JUNE 2014
DESIGN2-DETAILED2	------	------	------
DESIGN3-DETAILED3	------	------	------
REVISIONS 1	------	------	------
REVISIONS 2	------	------	------
REVISIONS 3	------	------	------
REVISIONS 4	------	------	------
FIELD CHANGES	------	------	------

SIGNATURE

P.E. NUMBER

DATE

DURHAM
ROUTE 9

CROSS SECTIONS

SHEET NUMBER

25

OF 49

Sta. 14+50.00 to Sta. 14+50.00

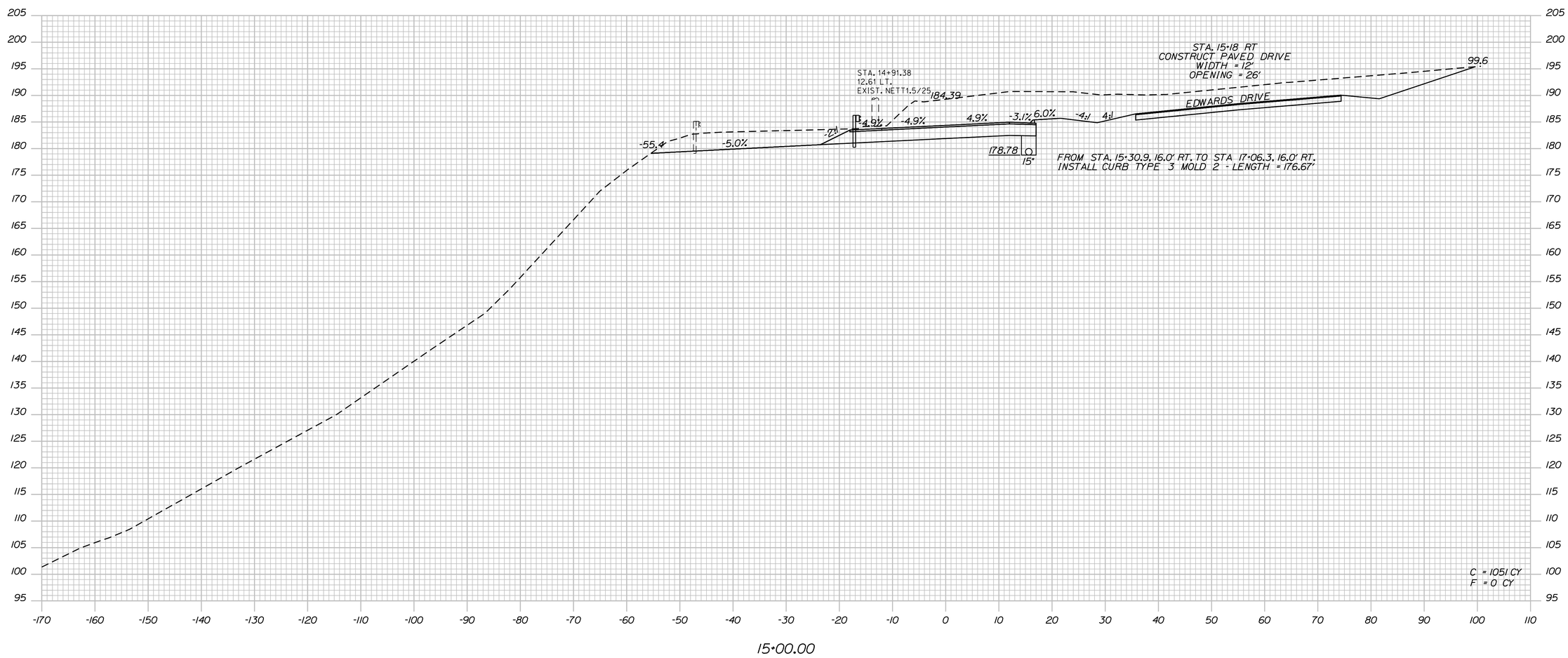

STATE OF MAINE
DEPARTMENT OF TRANSPORTATION

STP-1838(200)

WIN
18382.00

HIGHWAY PLANS

PROJ. MANAGER	E. MARTIN	BY	DATE
DESIGN-DETAILED	I. MAYNARD	I. MAYNARD	JUNE 2014
CHECKED-REVIEWED	G. SANTY	----	JUNE 2014
DESIGN2-DETAILED2	------	------	------
DESIGN3-DETAILED3	------	------	------
REVISIONS 1	------	------	------
REVISIONS 2	------	------	------
REVISIONS 3	------	------	------
REVISIONS 4	------	------	------
FIELD CHANGES	------	------	------

SIGNATURE

P.E. NUMBER

DATE

DURHAM
ROUTE 9

CROSS SECTIONS

SHEET NUMBER

26

OF 49

Filename: ...\00\HIGHWAY\MSTA\xsect.dgn Division: HIGHWAY Username: common Date:7/16/2014

Sta. 15+00.00 to Sta. 15+00.00

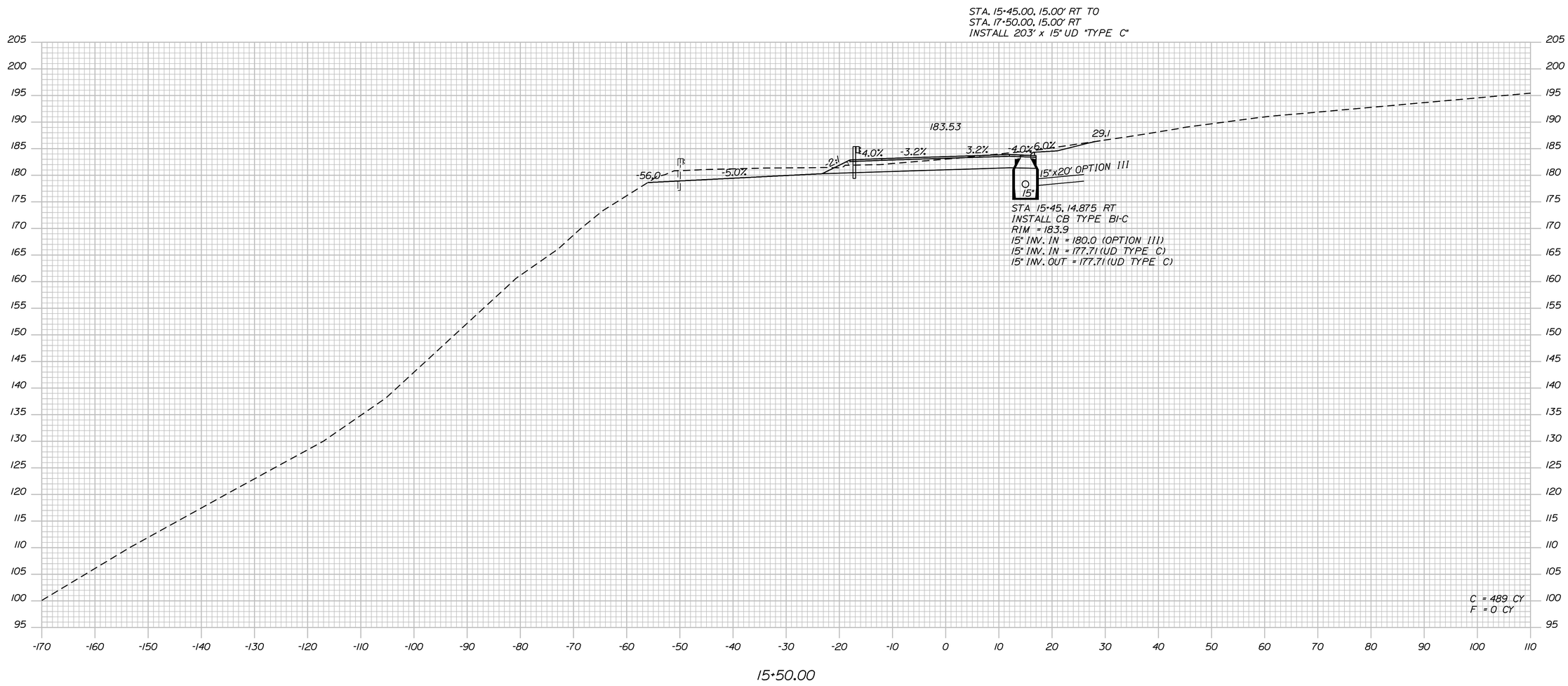

STATE OF MAINE
DEPARTMENT OF TRANSPORTATION

STP-1838(200)

WIN
18382.00

HIGHWAY PLANS

PROJ. MANAGER	E. MARTIN	BY	DATE
DESIGN-DETAILED	I. MAYNARD	I. MAYNARD	JUNE 2014
CHECKED-REVIEWED	G. SANTY		JUNE 2014
DESIGN2-DETAILED2			
DESIGN3-DETAILED3			
REVISIONS 1			
REVISIONS 2			
REVISIONS 3			
REVISIONS 4			
FIELD CHANGES			

SIGNATURE

P.E. NUMBER

DATE

DURHAM
ROUTE 9

CROSS SECTIONS

SHEET NUMBER

27

OF 49

Sta. 15+50.00 to Sta. 15+50.00

Filename: ...\00\HIGHWAY\MSTA\xsect.dgn Division: HIGHWAY Username: common Date:7/16/2014

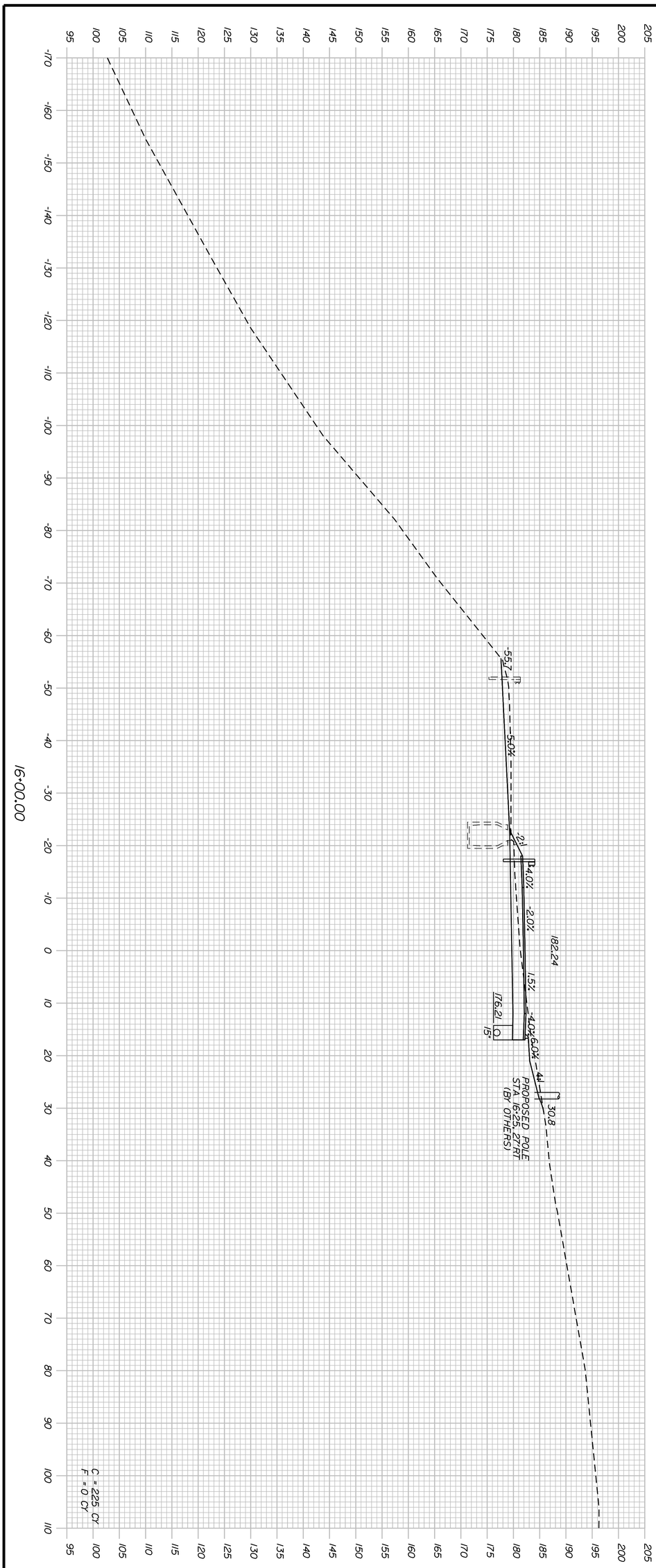

Sta. 16+00.00 to Sta. 16+00.00

PROJ. MANAGER	E. MARTIN	BY	DATE
DESIGN-DETAILED	I. MAYNARD	I. MAYNARD	JUNE 2014
CHECKED-REVIEWED	G. SANTY	_____	JUNE 2014
DESIGN2-DETAILED2	_____	_____	_____
DESIGN3-DETAILED3	_____	_____	_____
REVISIONS 1	_____		_____
REVISIONS 2	_____		_____
REVISIONS 3	_____		_____
REVISIONS 4	_____		_____
FIELD CHANGES	_____		_____

SIGNATURE

P.E. NUMBER

DATE

SHEET NUMBER 28 OF 49

DURHAM
ROUTE 9

CROSS SECTIONS

STATE OF MAINE
DEPARTMENT OF TRANSPORTATION

STP-1838(200)

WIN 18382.00

HIGHWAY PLANS

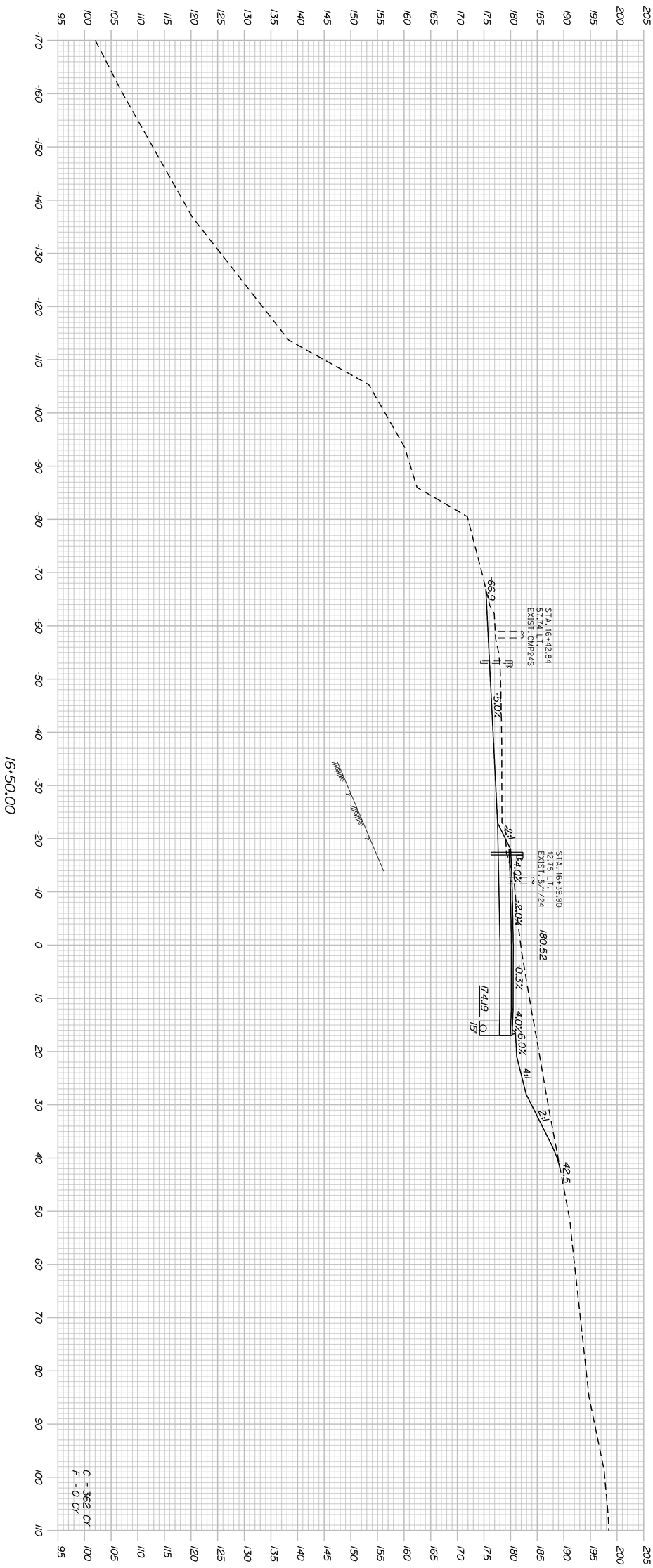

Sta. 16+50.00 to Sta. 16+50.00

SHEET NUMBER 29 OF 49	DURHAM ROUTE 9	PROJ. MANAGER E. MARTIN	BY / DATE
		DESIGN-DETAILED I. MAYNARD	I. MAYNARD JUNE 2014
		CHECKED-REVIEWED G. SANTY	____ JUNE 2014
		DESIGN2-DETAILED2	
		DESIGN3-DETAILED3	
		REVISIONS 1	
		REVISIONS 2	
		REVISIONS 3	
		REVISIONS 4	
		FIELD CHANGES	

SIGNATURE

P.E. NUMBER

DATE

STATE OF MAINE
DEPARTMENT OF TRANSPORTATION

STP-1838(200)

WIN 18382.00

HIGHWAY PLANS

CROSS SECTIONS

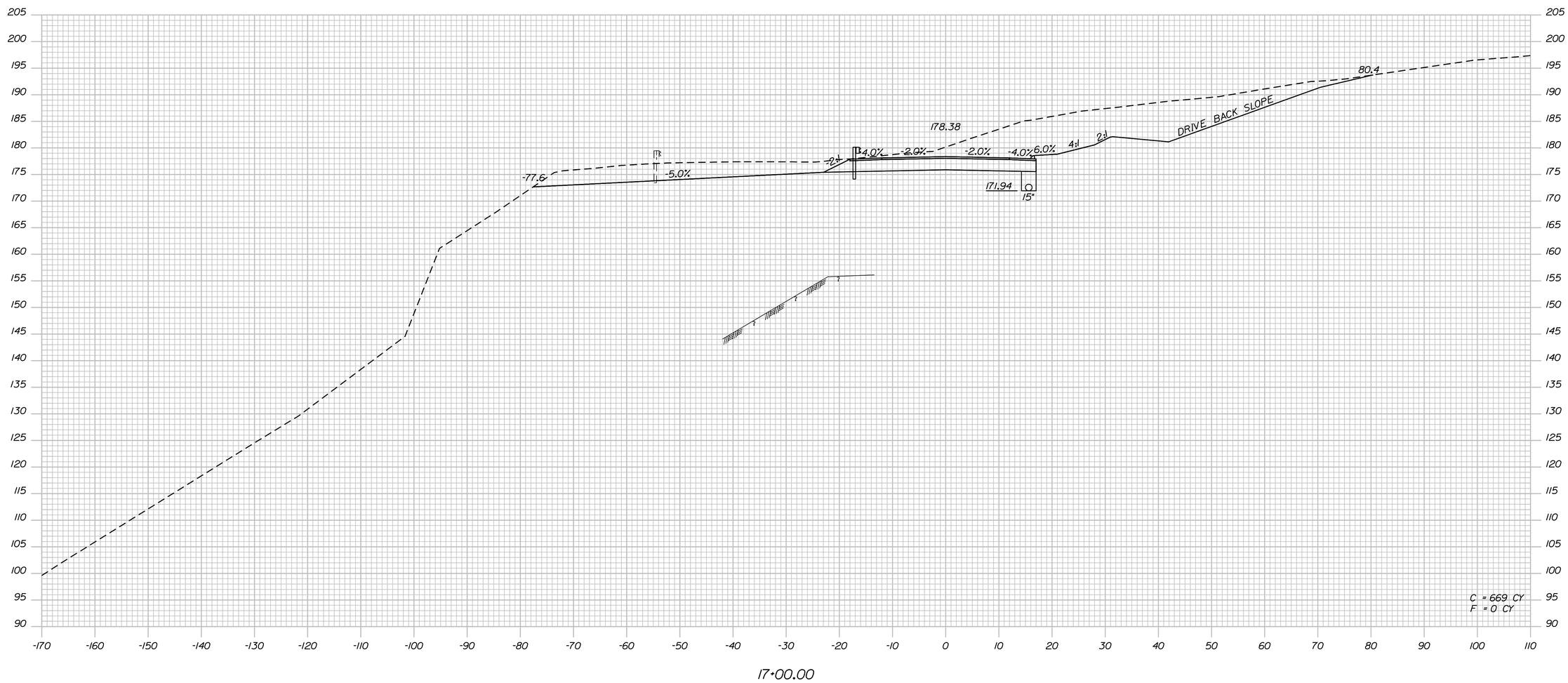

STATE OF MAINE
DEPARTMENT OF TRANSPORTATION

STP-1838(200)

WIN
18382.00

HIGHWAY PLANS

PROJ. MANAGER	E. MARTIN	BY	DATE
DESIGN-DETAILED	I. MAYNARD	I. MAYNARD	JUNE 2014
CHECKED-REVIEWED	C. SANTY	-----	JUNE 2014
DESIGN2-DETAILED2	-----	-----	-----
DESIGN3-DETAILED3	-----	-----	-----
REVISIONS 1	-----	-----	-----
REVISIONS 2	-----	-----	-----
REVISIONS 3	-----	-----	-----
REVISIONS 4	-----	-----	-----
FIELD CHANGES	-----	-----	-----

SIGNATURE

P.E. NUMBER

DATE

DURHAM
ROUTE 9

CROSS SECTIONS

SHEET NUMBER

30

OF 49

Sta. 17+00.00 to Sta. 17+00.00

Filename: ...\00\HIGHWAY\MSTA\xsect.dgn Division: HIGHWAY Username: common Date:7/16/2014

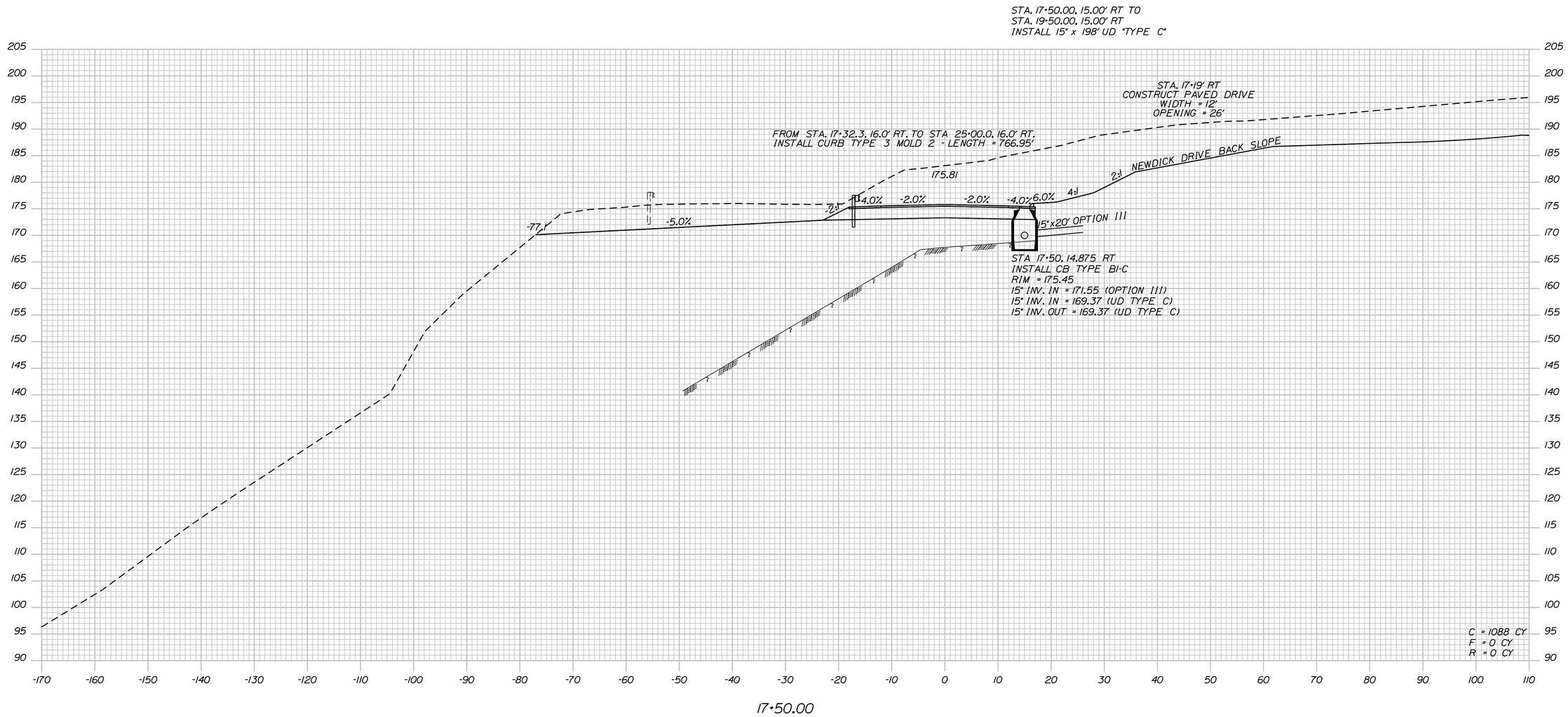

STATE OF MAINE
DEPARTMENT OF TRANSPORTATION

STP-1838(200)

WIN
18382.00

HIGHWAY PLANS

PROJ. MANAGER	E. MARTIN	BY	DATE	
DESIGN-DETAILED	I. MAYNARD	I. MAYNARD	JUNE 2014	SIGNATURE
CHECKED-REVIEWED	G. SANTY	------	------	------
DESIGN2-DETAILED2	------	------	------	P.E. NUMBER
DESIGN3-DETAILED3	------	------	------	------
REVISIONS 1	------	------	------	------
REVISIONS 2	------	------	------	DATE
REVISIONS 3	------	------	------	------
REVISIONS 4	------	------	------	------
FIELD CHANGES	------	------	------	------

DURHAM
ROUTE 9

CROSS SECTIONS

SHEET NUMBER

31

OF 49

Sta. 17+50.00 to Sta. 17+50.00

Filename: ...\00\HIGHWAY\MSTA\xsect.dgn Division: HIGHWAY Username: common Date:7/16/2014

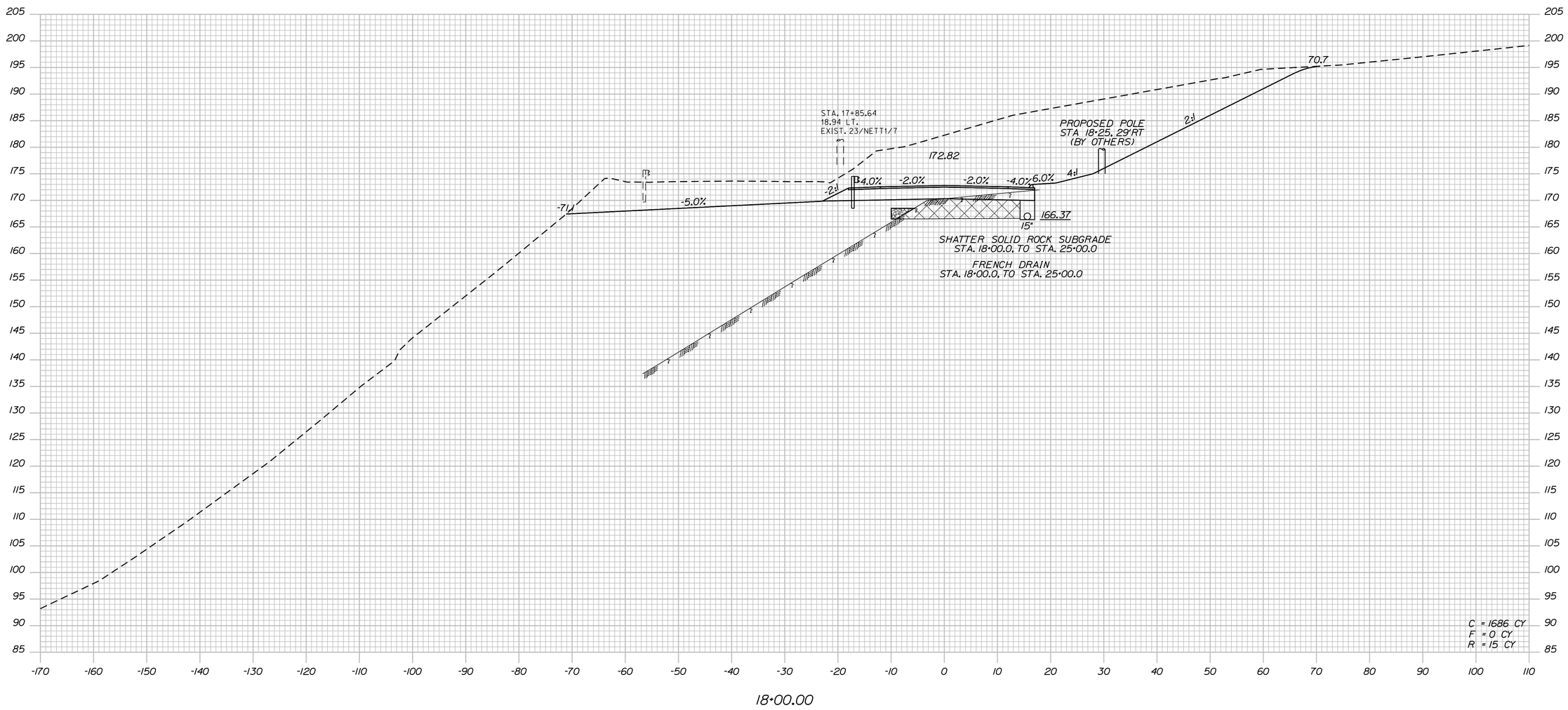

STATE OF MAINE
DEPARTMENT OF TRANSPORTATION

STP-1838(200)

WIN
18382.00

HIGHWAY PLANS

PROJ. MANAGER	E. MARTIN	BY	DATE
DESIGN-DETAILED	I. MAYNARD	I. MAYNARD	JUNE 2014
CHECKED-REVIEWED	G. SANTY	-----	JUNE 2014
DESIGN2-DETAILED2	-----	-----	-----
DESIGN3-DETAILED3	-----	-----	-----
REVISIONS 1	-----	-----	-----
REVISIONS 2	-----	-----	-----
REVISIONS 3	-----	-----	-----
REVISIONS 4	-----	-----	-----
FIELD CHANGES	-----	-----	-----

SIGNATURE

P.E. NUMBER

DATE

DURHAM
ROUTE 9

CROSS SECTIONS

SHEET NUMBER
32
OF 49

Sta. 18+00.00 to Sta. 18+00.00

Filename: ...\00\HIGHWAY\MSTA\xsect.dgn Division: HIGHWAY Username: common Date:7/16/2014

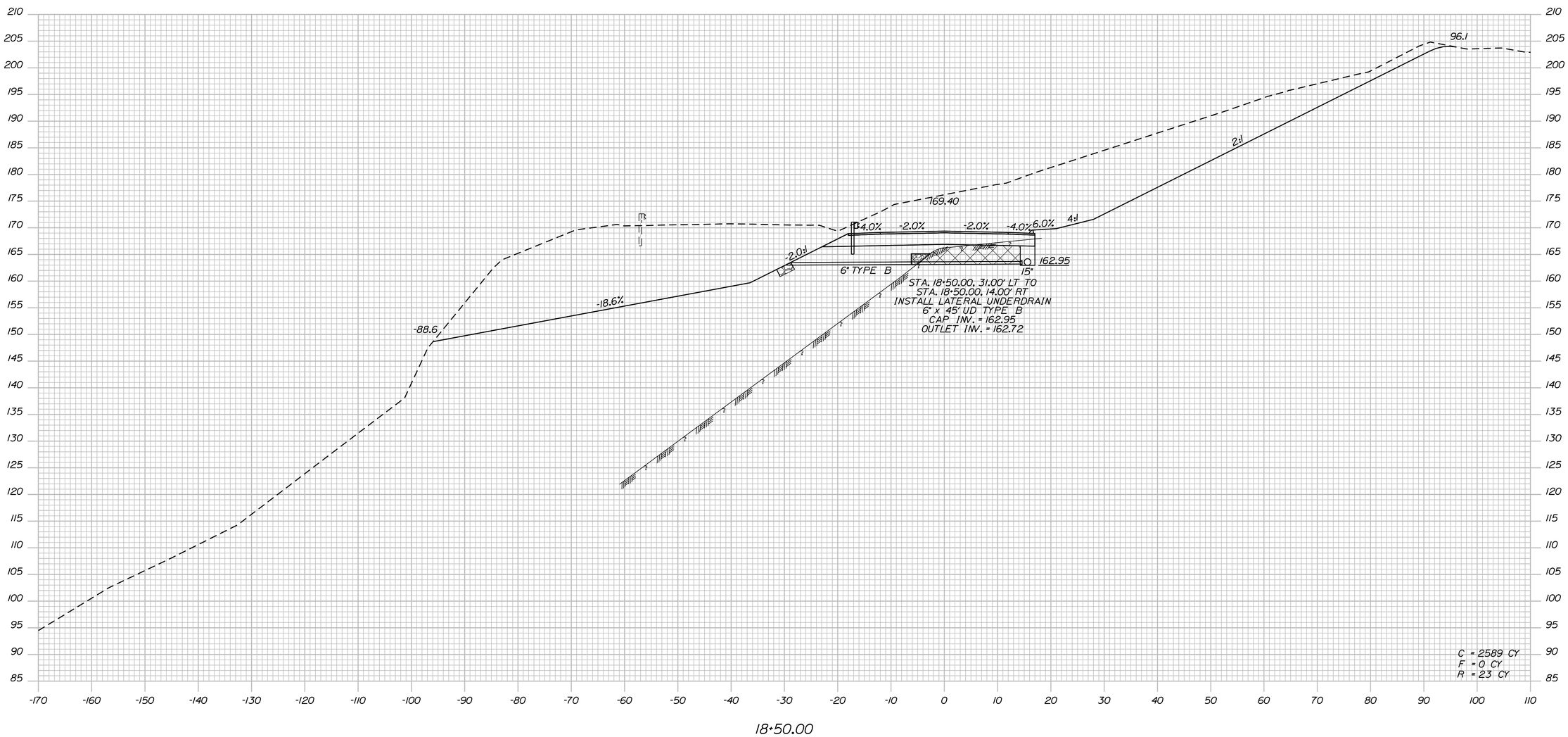

STATE OF MAINE
DEPARTMENT OF TRANSPORTATION

STP-1838(200)

WIN
18382.00

HIGHWAY PLANS

PROJ. MANAGER	E. MARTIN	BY	DATE
DESIGN-DETAILED	I. MAYNARD	I. MAYNARD	JUNE 2014
CHECKED-REVIEWED	G. SANTY	------	JUNE 2014
DESIGN2-DETAILED2	------	------	------
DESIGN3-DETAILED3	------	------	------
REVISIONS 1	------	------	------
REVISIONS 2	------	------	------
REVISIONS 3	------	------	------
REVISIONS 4	------	------	------
FIELD CHANGES	------	------	------

SIGNATURE

P.E. NUMBER

DATE

DURHAM
ROUTE 9

CROSS SECTIONS

SHEET NUMBER

33

OF 49

Filename: ...\00\HIGHWAY\MSTA\xsect.dgn Division: HIGHWAY Username: common Date:7/16/2014

Sta. 18+50.00 to Sta. 18+50.00

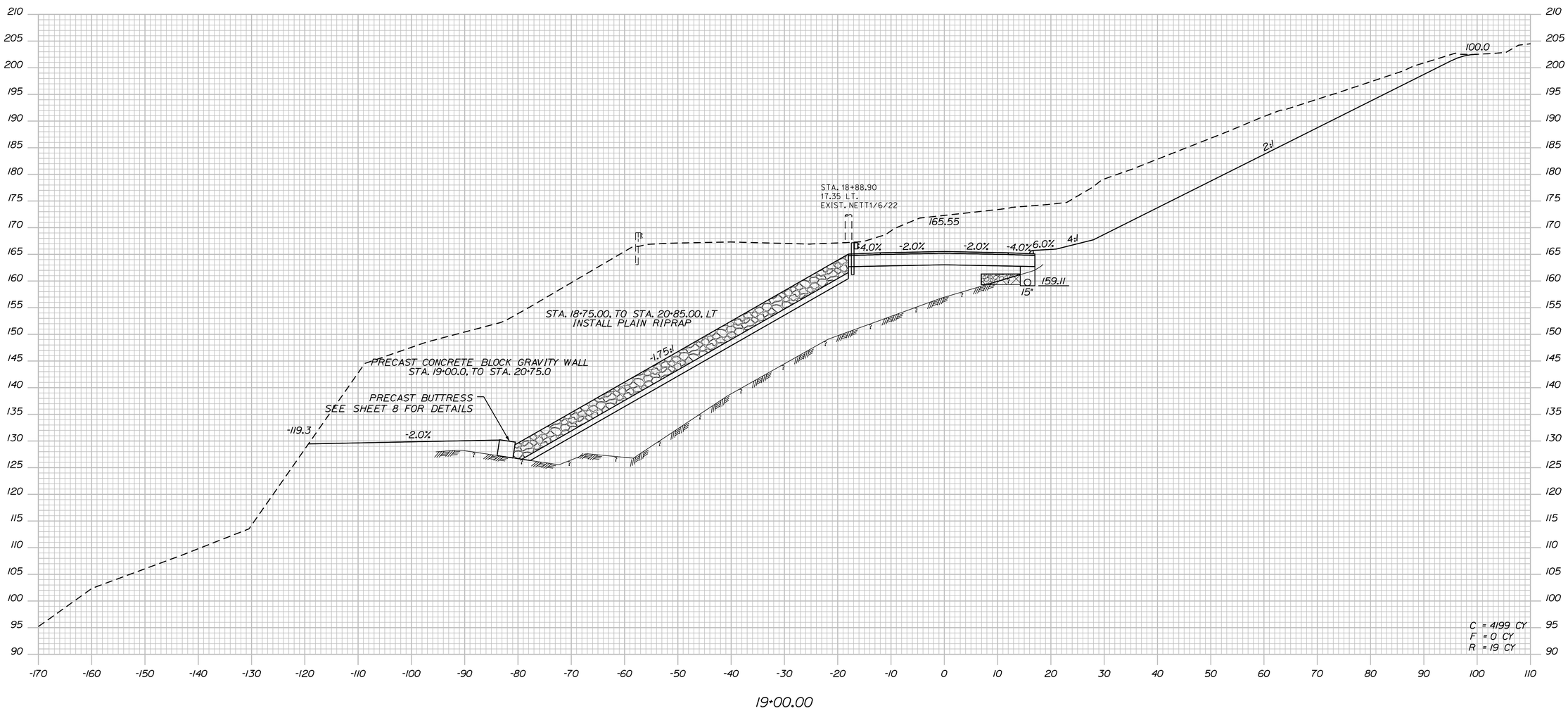

STATE OF MAINE
DEPARTMENT OF TRANSPORTATION

STP-1838(200)

WIN
18382.00

HIGHWAY PLANS

PROJ. MANAGER	E. MARTIN	BY	DATE
DESIGN-DETAILED	I. MAYNARD	I. MAYNARD	JUNE 2014
CHECKED-REVIEWED	G. SANTY	------	JUNE 2014
DESIGN2-DETAILED2	------	------	------
DESIGN3-DETAILED3	------	------	------
REVISIONS 1	------	------	------
REVISIONS 2	------	------	------
REVISIONS 3	------	------	------
REVISIONS 4	------	------	------
FIELD CHANGES	------	------	------

SIGNATURE

P.E. NUMBER

DATE

DURHAM
ROUTE 9

CROSS SECTIONS

SHEET NUMBER

34

OF 49

Sta. 19+00.00 to Sta. 19+00.00

Filename: ...\00\HIGHWAY\MSTA\xsect.dgn Division: HIGHWAY Username: common Date:7/16/2014

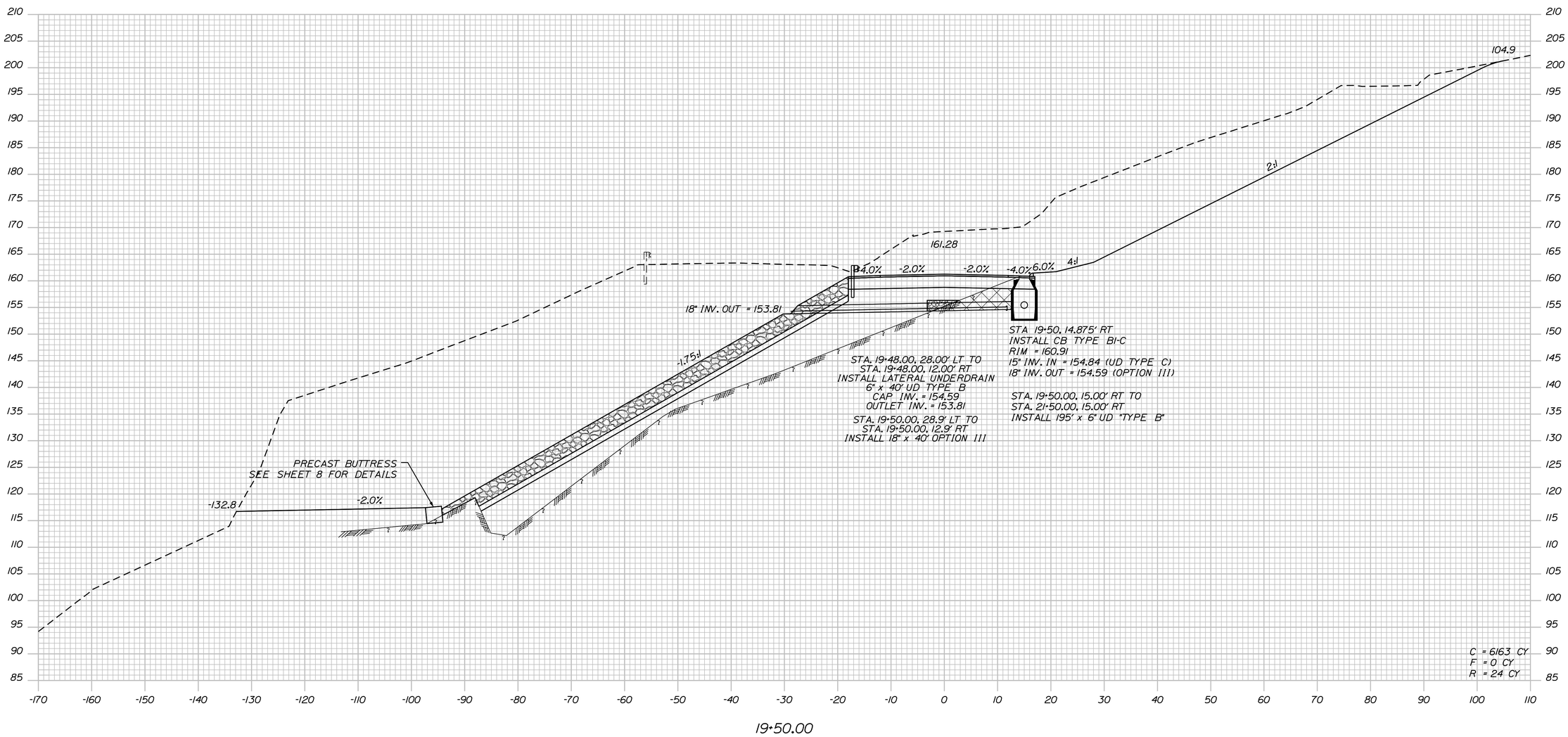

STATE OF MAINE
DEPARTMENT OF TRANSPORTATION

STP-1838(200)

WIN
18382.00

HIGHWAY PLANS

PROJ. MANAGER	E. MARTIN	BY	DATE
DESIGN-DETAILED	I. MAYNARD	I. MAYNARD	JUNE 2014
CHECKED-REVIEWED	G. SANTY	------	JUNE 2014
DESIGN2-DETAILED2	------	------	------
DESIGN3-DETAILED3	------	------	------
REVISIONS 1	------	------	------
REVISIONS 2	------	------	------
REVISIONS 3	------	------	------
REVISIONS 4	------	------	------
FIELD CHANGES	------	------	------

SIGNATURE

P.E. NUMBER

DATE

DURHAM
ROUTE 9

CROSS SECTIONS

SHEET NUMBER

35

OF 49

Filename: ...\00\HIGHWAY\MSTA\xsect.dgn Division: HIGHWAY Username: common Date:7/16/2014

Sta. 19+50.00 to Sta. 19+50.00

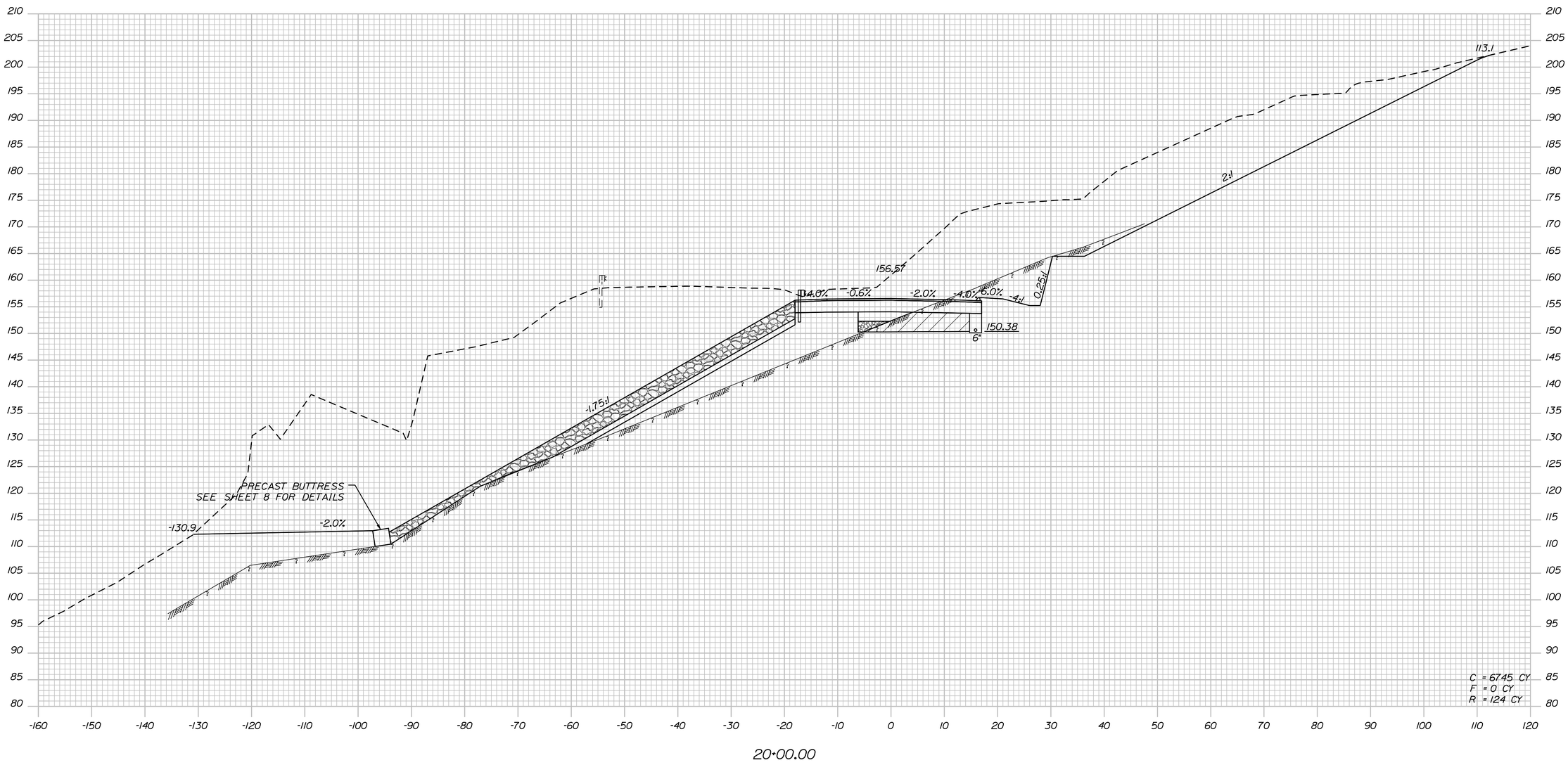

Filename: ...\00\HIGHWAY\MSTA\xsect.dgn Division: HIGHWAY Username: common Date:7/16/2014

STATE OF MAINE
DEPARTMENT OF TRANSPORTATION

STP-1838(200)

WIN
18382.00

HIGHWAY PLANS

		BY	DATE
PROJ. MANAGER	E. MARTIN		
DESIGN-DETAILED	I. MAYNARD	I. MAYNARD	JUNE 2014
CHECKED-REVIEWED	G. SANTY	------	JUNE 2014
DESIGN2-DETAILED2	------	------	------
DESIGN3-DETAILED3	------	------	------
REVISIONS 1	------	------	------
REVISIONS 2	------	------	------
REVISIONS 3	------	------	------
REVISIONS 4	------	------	------
FIELD CHANGES	------	------	------

SIGNATURE

P.E. NUMBER

DATE

DURHAM
ROUTE 9

CROSS SECTIONS

SHEET NUMBER

36

OF 49

Sta. 20+00.00 to Sta. 20+00.00

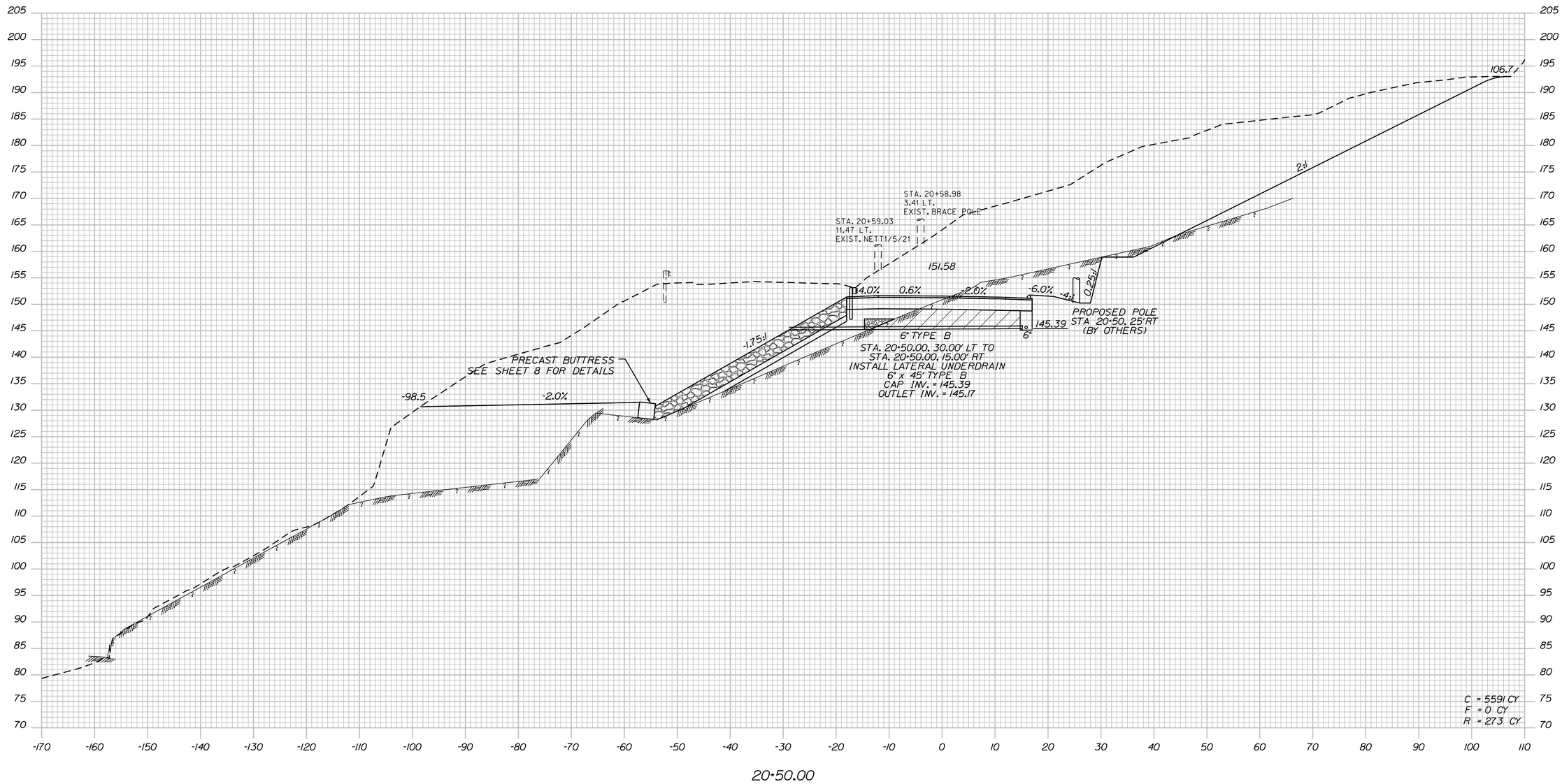

STATE OF MAINE
DEPARTMENT OF TRANSPORTATION

STP-1838(200)

WIN
18382.00

HIGHWAY PLANS

PROJ. MANAGER	E. MARTIN	BY	DATE
DESIGN-DETAILED	I. MAYNARD	I. MAYNARD	JUNE 2014
CHECKED-REVIEWED	G. SANITY	-----	JUNE 2014
DESIGN2-DETAILED2	-----	-----	-----
DESIGN3-DETAILED3	-----	-----	-----
REVISIONS 1	-----	-----	-----
REVISIONS 2	-----	-----	-----
REVISIONS 3	-----	-----	-----
REVISIONS 4	-----	-----	-----
FIELD CHANGES	-----	-----	-----

SIGNATURE

P.E. NUMBER

DATE

DURHAM
ROUTE 9

CROSS SECTIONS

SHEET NUMBER

37

OF 49

Filename: ...\00\HIGHWAY\MSTA\xsect.dgn Division: HIGHWAY Username: common Date:7/16/2014

Sta. 20+50.00 to Sta. 20+50.00

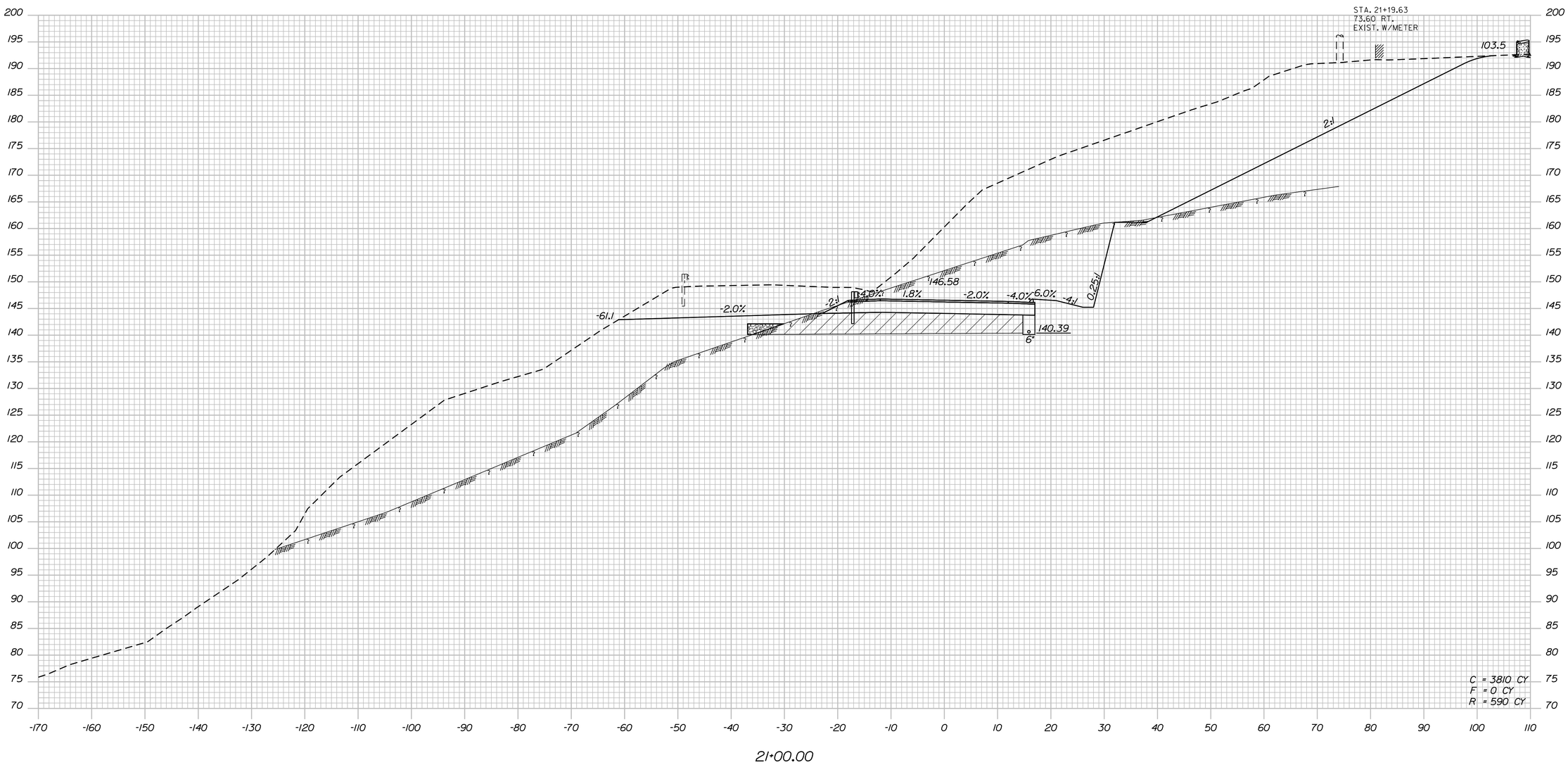

STATE OF MAINE
DEPARTMENT OF TRANSPORTATION

STP-1838(200)

WIN
18382.00

HIGHWAY PLANS

PROJ. MANAGER	E. MARTIN	BY	DATE
DESIGN-DETAILED	I. MAYNARD	I. MAYNARD	JUNE 2014
CHECKED-REVIEWED	C. SANTY	-----	JUNE 2014
DESIGN2-DETAILED2	-----	-----	-----
DESIGN3-DETAILED3	-----	-----	-----
REVISIONS 1	-----	-----	-----
REVISIONS 2	-----	-----	-----
REVISIONS 3	-----	-----	-----
REVISIONS 4	-----	-----	-----
FIELD CHANGES	-----	-----	-----

SIGNATURE

P.E. NUMBER

DATE

DURHAM
ROUTE 9

CROSS SECTIONS

SHEET NUMBER

38

OF 49

Filename: ...\00\HIGHWAY\MSTA\xsect.dgn Division: HIGHWAY Username: common Date:7/16/2014

Sta. 21+00.00 to Sta. 21+00.00

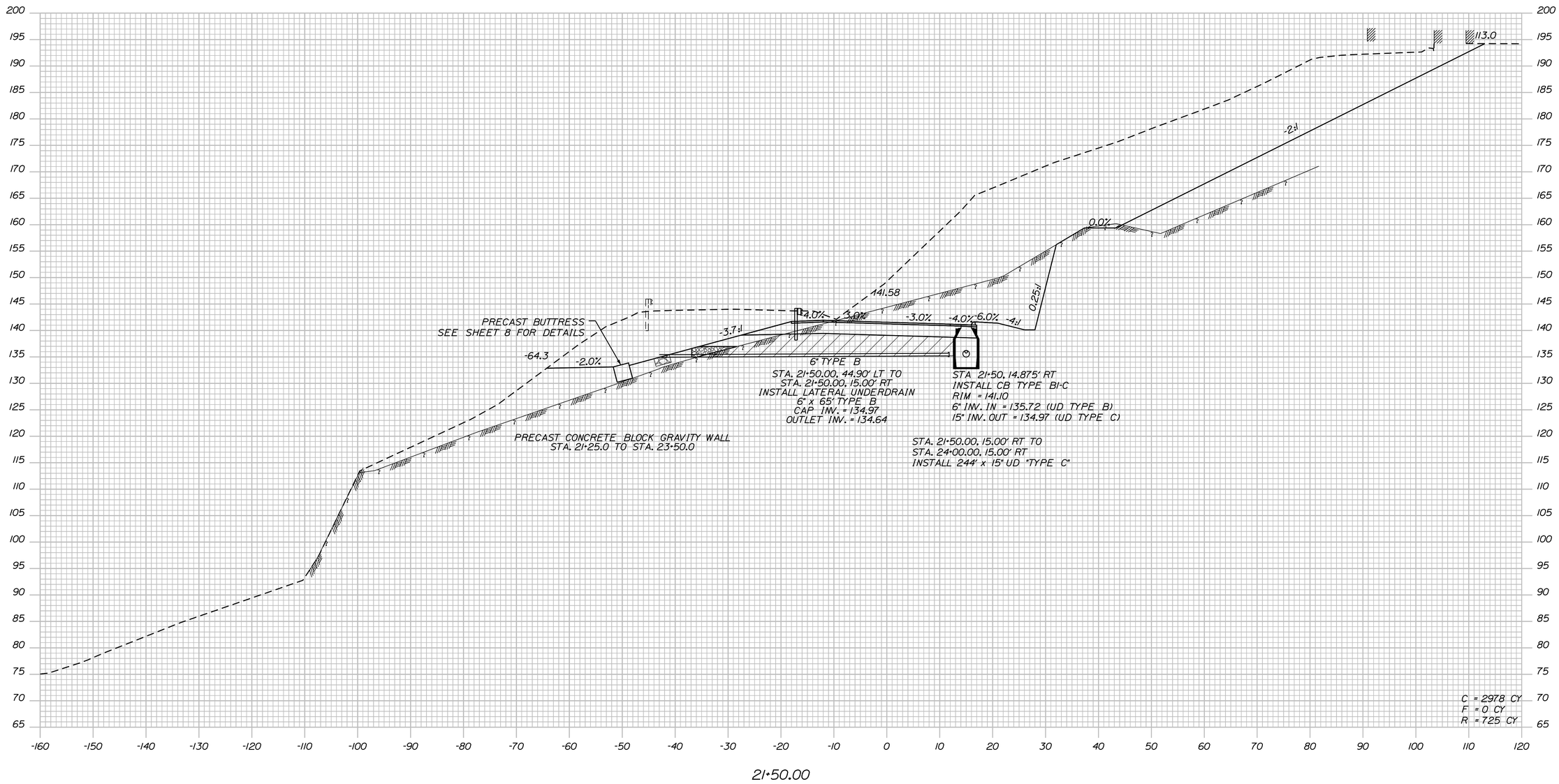

STATE OF MAINE
DEPARTMENT OF TRANSPORTATION

STP-1838(200)

WIN
18382.00

HIGHWAY PLANS

		BY	DATE
PROJ. MANAGER	E. MARTIN		
DESIGN-DETAILED	I. MAYNARD	I. MAYNARD	JUNE 2014
CHECKED-REVIEWED	G. SANTY	------	JUNE 2014
DESIGN2-DETAILED2	------	------	------
DESIGN3-DETAILED3	------	------	------
REVISIONS 1	------	------	------
REVISIONS 2	------	------	------
REVISIONS 3	------	------	------
REVISIONS 4	------	------	------
FIELD CHANGES	------	------	------

SIGNATURE

P.E. NUMBER

DATE

DURHAM
ROUTE 9

CROSS SECTIONS

SHEET NUMBER
39
OF 49

Sta. 21+50.00 to Sta. 21+50.00

Filename: ...\00\HIGHWAY\MSTA\xsect.dgn Division: HIGHWAY Username: common Date:7/16/2014

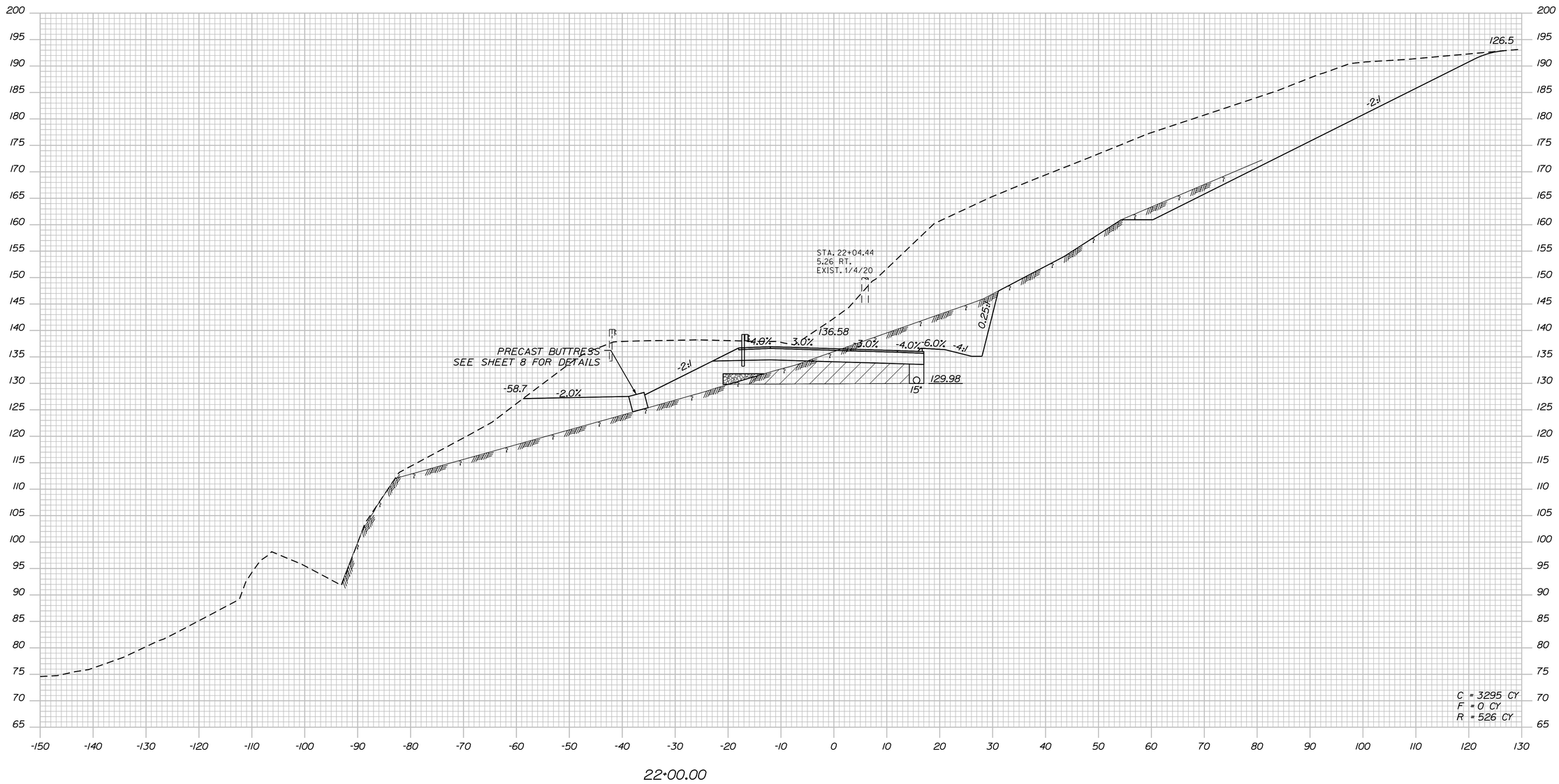

STATE OF MAINE
DEPARTMENT OF TRANSPORTATION

STP-1838(200)

WIN
18382.00

HIGHWAY PLANS

		BY	DATE
PROJ. MANAGER	E. MARTIN		
DESIGN-DETAILED	I. MAYNARD	I. MAYNARD	JUNE 2014
CHECKED-REVIEWED	G. SANTY	------	JUNE 2014
DESIGN2-DETAILED2	------	------	------
DESIGN3-DETAILED3	------	------	------
REVISIONS 1	------	------	------
REVISIONS 2	------	------	------
REVISIONS 3	------	------	------
REVISIONS 4	------	------	------
FIELD CHANGES	------	------	------

SIGNATURE

P.E. NUMBER

DATE

DURHAM
ROUTE 9

CROSS SECTIONS

SHEET NUMBER

40

OF 49

Sta. 22+00.00 to Sta. 22+00.00

Filename: ...\00\HIGHWAY\MSTA\xsect.dgn Division: HIGHWAY Username: common Date:7/16/2014

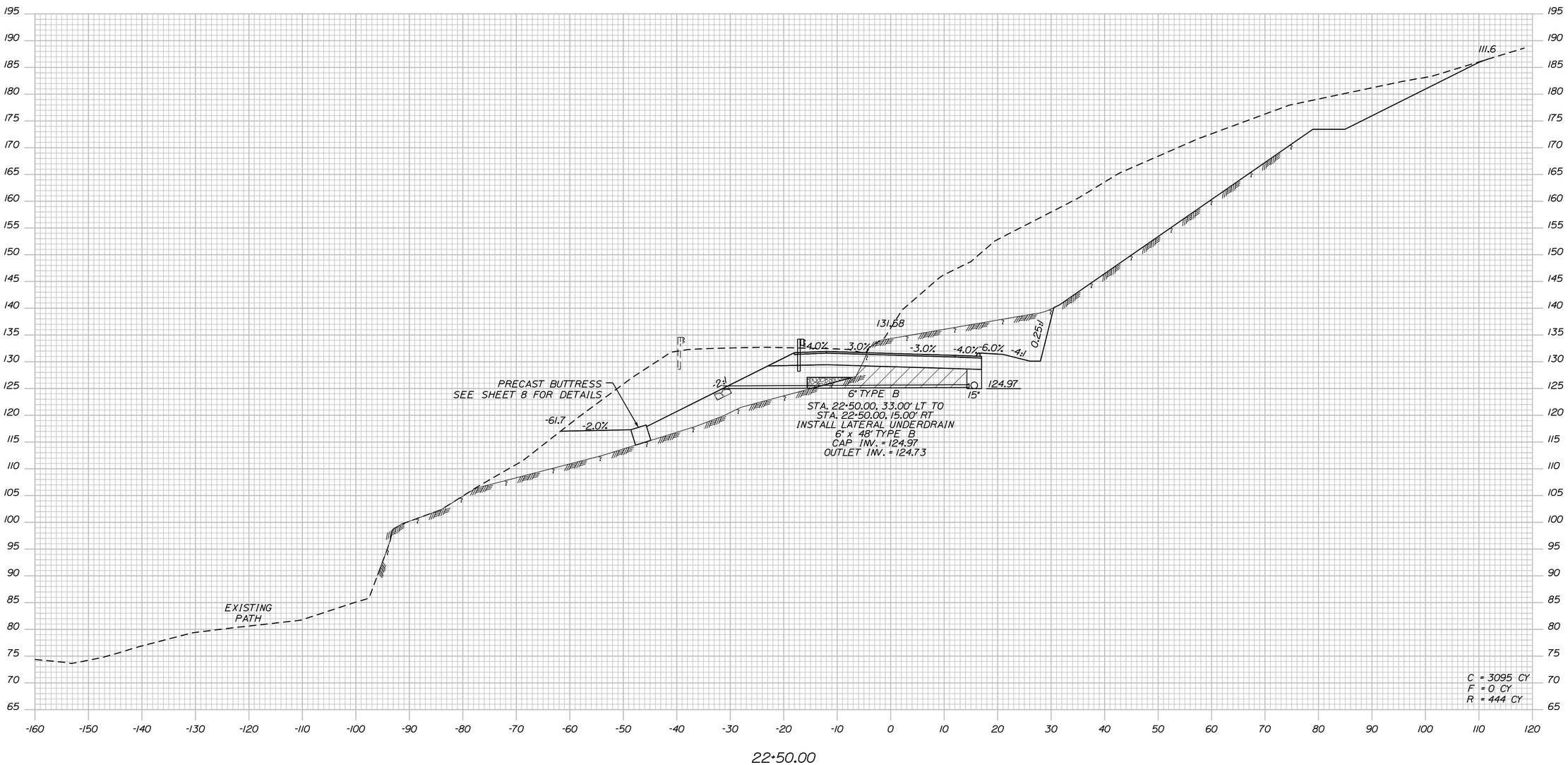

STATE OF MAINE
DEPARTMENT OF TRANSPORTATION

STP-1838(200)

WIN
18382.00

HIGHWAY PLANS

PROJ. MANAGER	E. MARTIN	BY	DATE
DESIGN-DETAILED	I. MAYNARD	I. MAYNARD	JUNE 2014
CHECKED-REVIEWED	G. SANTY	------	JUNE 2014
DESIGN2-DETAILED2	------	------	------
DESIGN3-DETAILED3	------	------	------
REVISIONS 1	------		------
REVISIONS 2	------		------
REVISIONS 3	------		------
REVISIONS 4	------		------
FIELD CHANGES	------		------

SIGNATURE

P.E. NUMBER

DATE

DURHAM
ROUTE 9

CROSS SECTIONS

SHEET NUMBER

41

OF 49

Sta. 22+50.00 to Sta. 22+50.00

Filename: ...\00\HIGHWAY\MSTA\xsect.dgn Division: HIGHWAY Username: common Date:7/16/2014

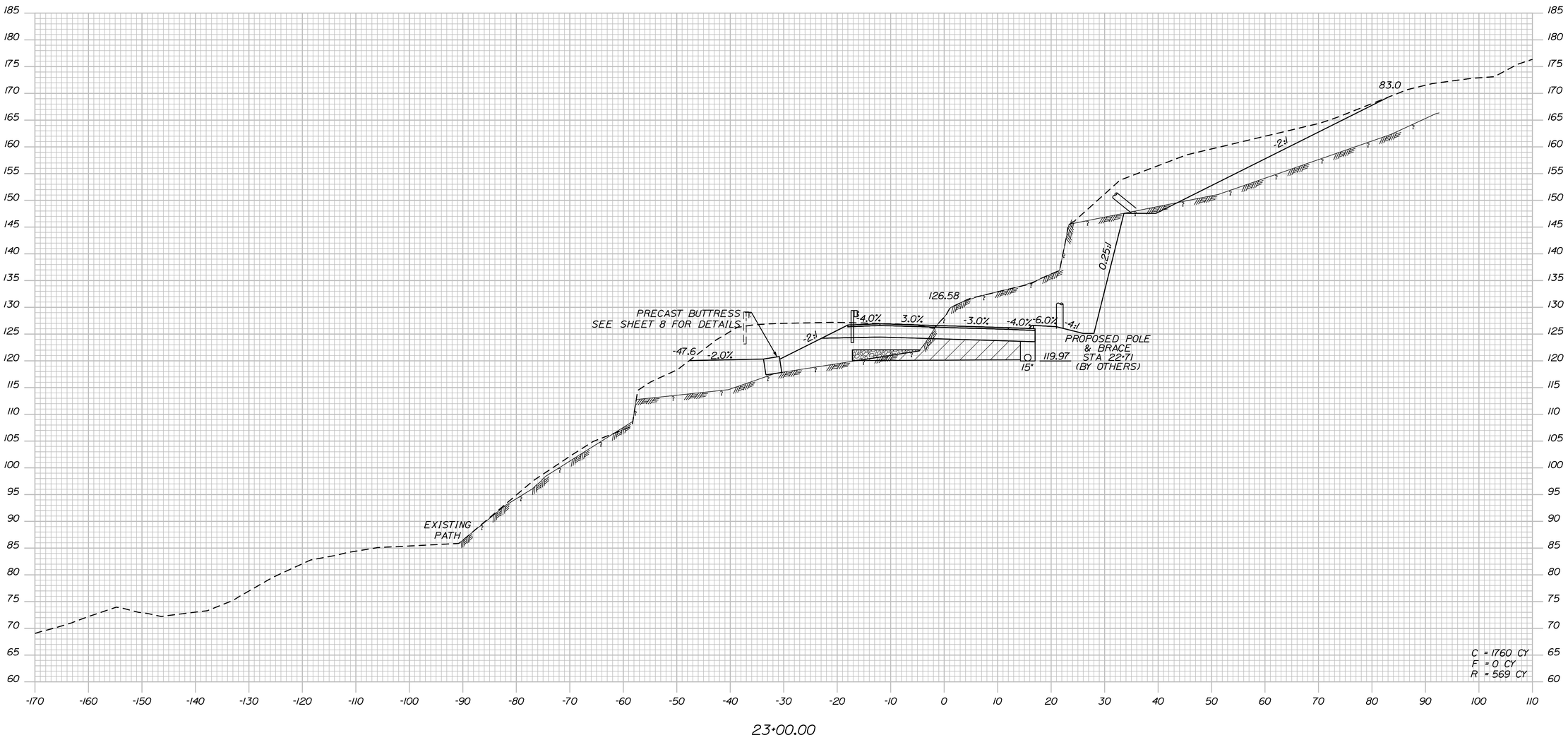

STATE OF MAINE
DEPARTMENT OF TRANSPORTATION

STP-1838(200)

WIN
18382.00

HIGHWAY PLANS

PROJ. MANAGER	E. MARTIN	BY	DATE
DESIGN-DETAILED	I. MAYNARD	I. MAYNARD	JUNE 2014
CHECKED-REVIEWED	G. SANTY	------	JUNE 2014
DESIGN2-DETAILED2	------	------	------
DESIGN3-DETAILED3	------	------	------
REVISIONS 1	------	------	------
REVISIONS 2	------	------	------
REVISIONS 3	------	------	------
REVISIONS 4	------	------	------
FIELD CHANGES	------	------	------

SIGNATURE

P.E. NUMBER

DATE

DURHAM
ROUTE 9

CROSS SECTIONS

SHEET NUMBER

42

OF 49

Filename: ...\00\HIGHWAY\MSTA\xsect.dgn Division: HIGHWAY Username: common Date:7/16/2014

Sta. 23+00.00 to Sta. 23+00.00

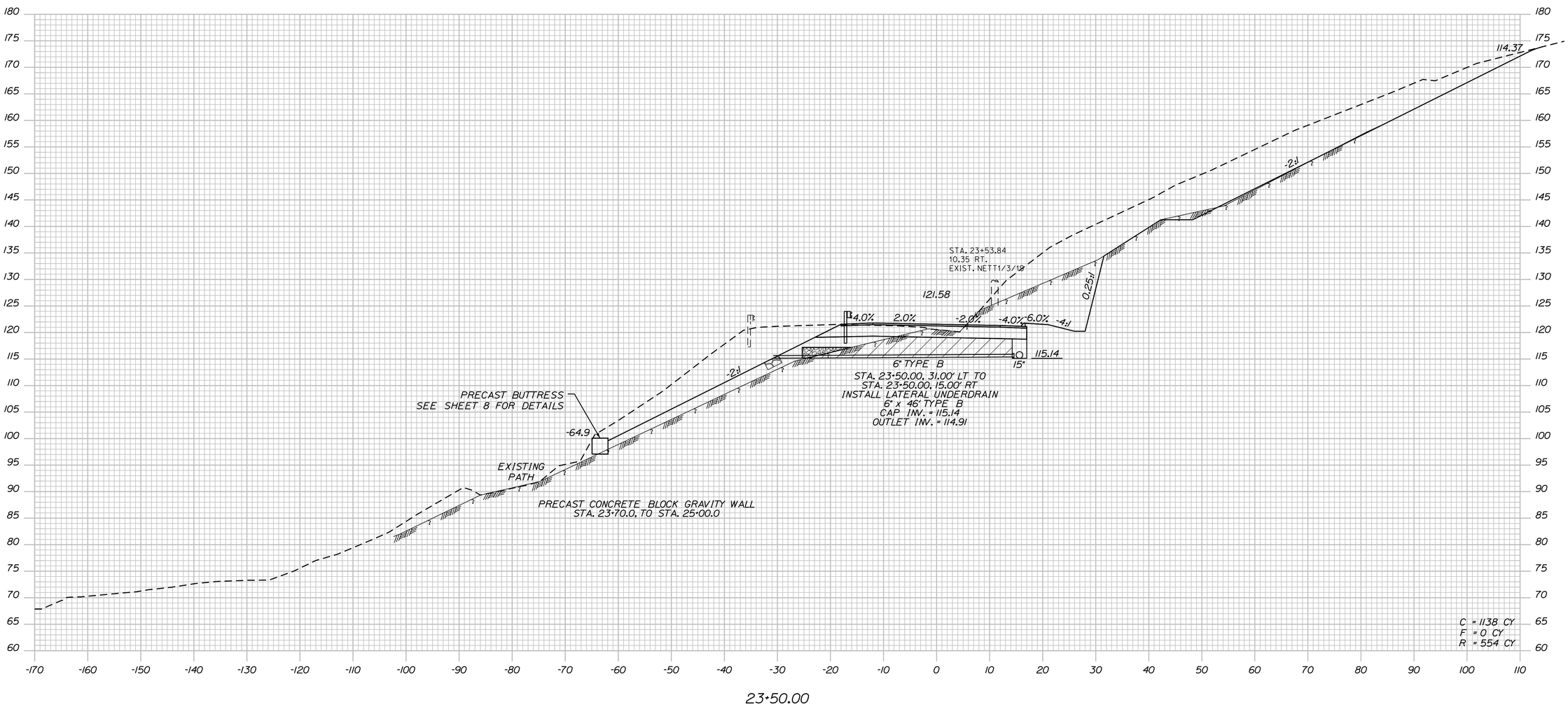

STATE OF MAINE
DEPARTMENT OF TRANSPORTATION

STP-1838(200)

WIN
18382.00

HIGHWAY PLANS

PROJ. MANAGER	E. MARTIN	BY	DATE
DESIGN-DETAILED	I. MAYNARD	I. MAYNARD	JUNE 2014
CHECKED-REVIEWED	G. SANTY	------	JUNE 2014
DESIGN2-DETAILED2	------	------	------
DESIGN3-DETAILED3	------	------	------
REVISIONS 1	------	------	------
REVISIONS 2	------	------	------
REVISIONS 3	------	------	------
REVISIONS 4	------	------	------
FIELD CHANGES	------	------	------

SIGNATURE

P.E. NUMBER

DATE

DURHAM
ROUTE 9

CROSS SECTIONS

SHEET NUMBER

43

OF 49

Filename: ...\00\HIGHWAY\MSTA\xsect.dgn Division: HIGHWAY Username: common Date:7/16/2014

Sta. 23+50.00 to Sta. 23+50.00

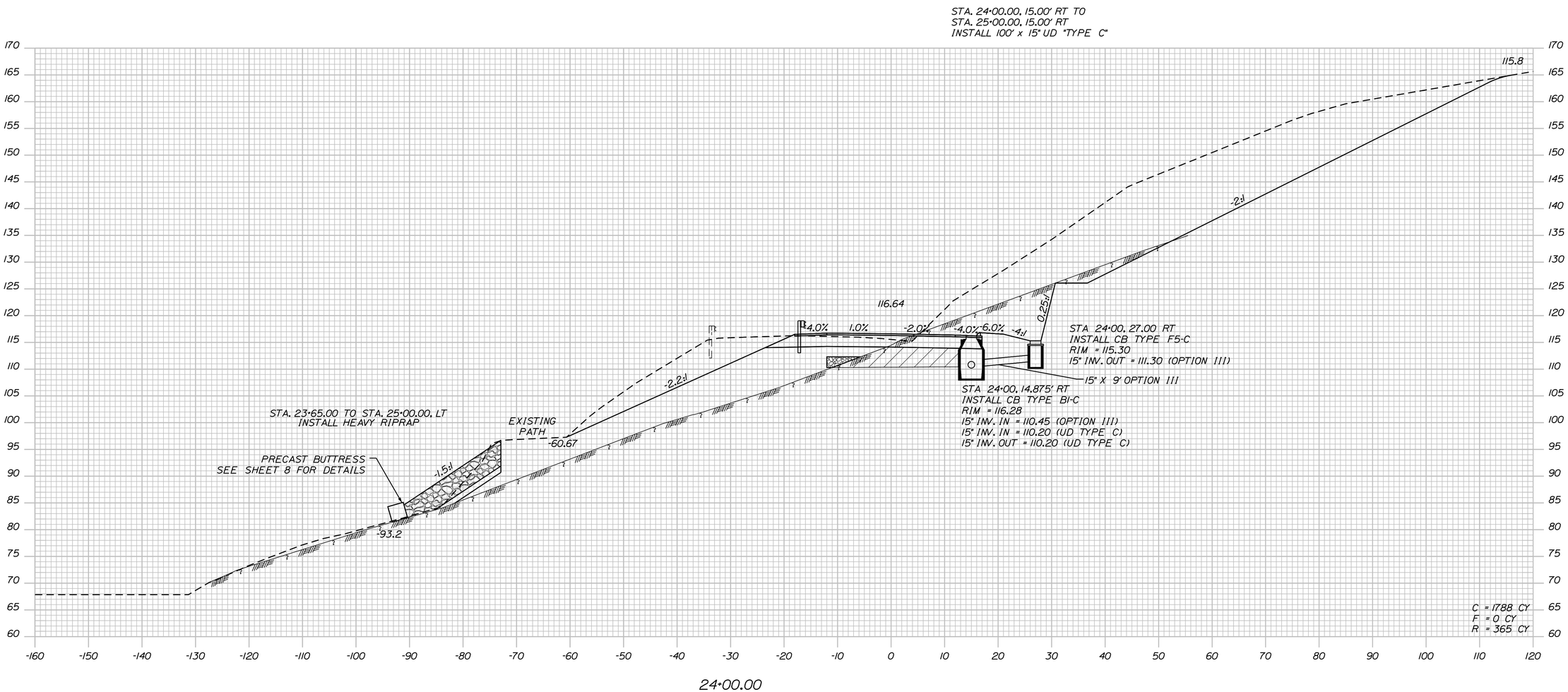

STATE OF MAINE
DEPARTMENT OF TRANSPORTATION

STP-1838(200)

WIN
18382.00

HIGHWAY PLANS

PROJ. MANAGER	E. MARTIN	BY	DATE
DESIGN-DETAILED	I. MAYNARD	I. MAYNARD	JUNE 2014
CHECKED-REVIEWED	G. SANTY	------	JUNE 2014
DESIGN2-DETAILED2	------	------	------
DESIGN3-DETAILED3	------	------	------
REVISIONS 1	------	------	------
REVISIONS 2	------	------	------
REVISIONS 3	------	------	------
REVISIONS 4	------	------	------
FIELD CHANGES	------	------	------

SIGNATURE

P.E. NUMBER

DATE

DURHAM
ROUTE 9

CROSS SECTIONS

SHEET NUMBER

44

OF 49

Filename: ...\00\HIGHWAY\MSTA1\xsect.dgn Division: HIGHWAY Username: common Date:7/16/2014

Sta. 24+00.00 to Sta. 24+00.00

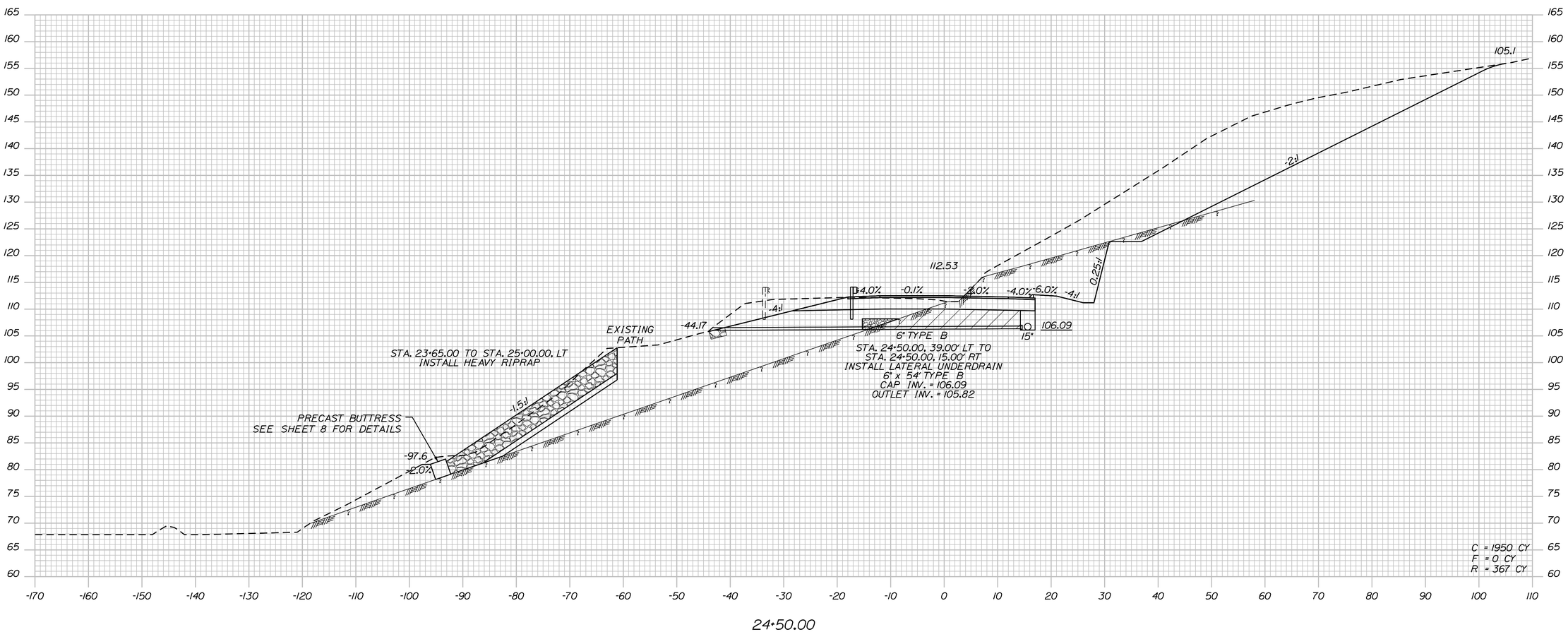

STATE OF MAINE
DEPARTMENT OF TRANSPORTATION

STP-1838(200)

WIN
18382.00

HIGHWAY PLANS

PROJ. MANAGER	E. MARTIN	BY	DATE
DESIGN-DETAILED	I. MAYNARD	I. MAYNARD	JUNE 2014
CHECKED-REVIEWED	G. SANTY	------	JUNE 2014
DESIGN2-DETAILED2	------	------	------
DESIGN3-DETAILED3	------	------	------
REVISIONS 1	------	------	------
REVISIONS 2	------	------	------
REVISIONS 3	------	------	------
REVISIONS 4	------	------	------
FIELD CHANGES	------	------	------

SIGNATURE

P.E. NUMBER

DATE

DURHAM
ROUTE 9

CROSS SECTIONS

SHEET NUMBER

45

OF 49

Filename: ...\00\HIGHWAY\MSTA\xsect.dgn Division: HIGHWAY Username: common Date:7/16/2014

Sta. 24+50.00 to Sta. 24+50.00

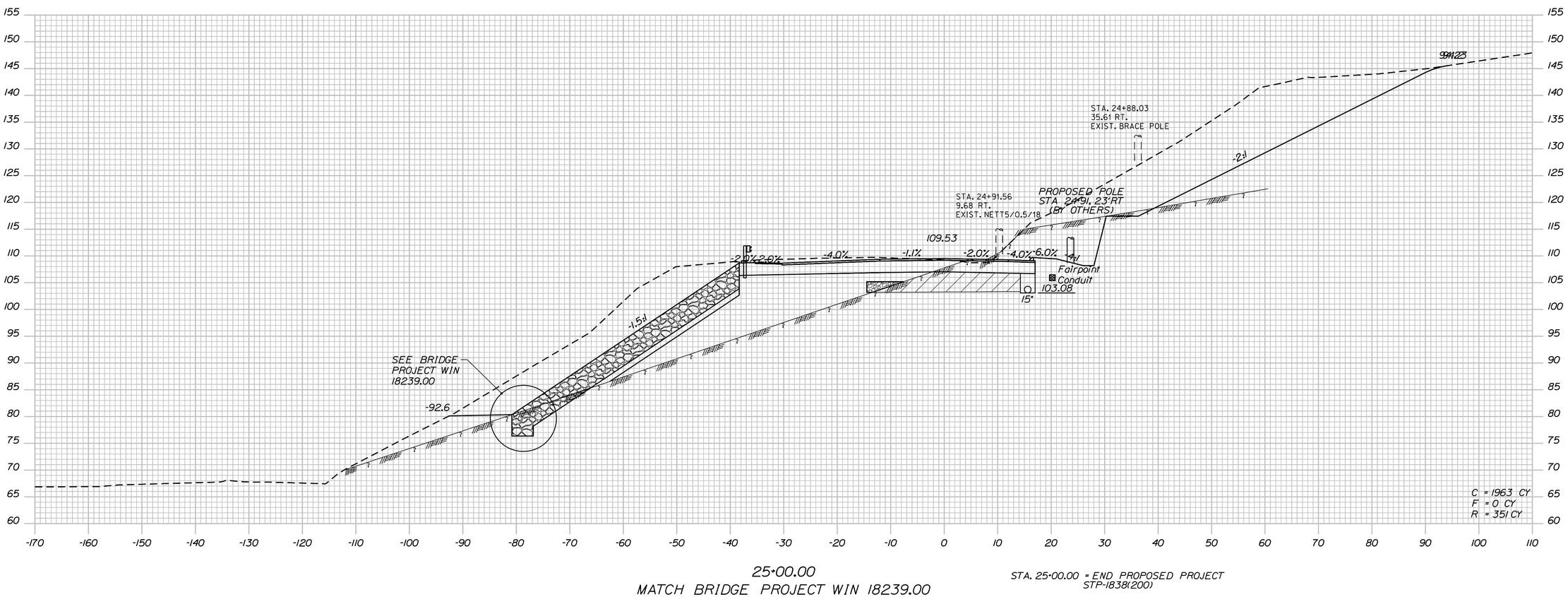

STATE OF MAINE
DEPARTMENT OF TRANSPORTATION

STP-1838(200)

WIN
18382.00

HIGHWAY PLANS

		BY	DATE
PROJ. MANAGER	E. MARTIN		
DESIGN-DETAILED	I. MAYNARD	I. MAYNARD	JUNE 2014
CHECKED-REVIEWED	G. SANTY	------	JUNE 2014
DESIGN2-DETAILED2	------	------	------
DESIGN3-DETAILED3	------	------	------
REVISIONS 1	------	------	------
REVISIONS 2	------	------	------
REVISIONS 3	------	------	------
REVISIONS 4	------	------	------
FIELD CHANGES	------	------	------

SIGNATURE

P.E. NUMBER

DATE

DURHAM
ROUTE 9

CROSS SECTIONS

SHEET NUMBER

46

OF 49

Filename: ...\00\HIGHWAY\MSTA\xsect.dgn Division: HIGHWAY Username: common Date:7/16/2014

Sta. 25+00.00 to Sta. 25+00.00

CONTROL INFORMATION

HORIZONTAL DATUM - US STATE PLANE NAD83(1996)
ZONE - MAINE 2000 WEST ZONE
VERTICAL DATUM - NAVD 88
COMBINED SCALE FACTOR - 0.9999829

FERC LICENSE NO. 3428
WORUMBO PROJECT
MILLER HYDRO GROUP

PI = 13+41.25
D = 7°44'34"
Δ = 32°40'10" LT.
R = 740.00'
L = 421.94'
T = 216.88'
E = 31.13

MILLER HYDRO GROUP

FERC BOUNDARY LINE

NOTE:
THE DEPICTION OF THE FEDERAL ENERGY REGULATORY COMMISSION (FERC) PROJECT BOUNDARY LINE AND PROPERTY LINE (P.L.) FOR MILLER HYDRO AND MILLER INDUSTRIES ARE BASED ON AN ELEVATION CONTOUR AS DETERMINED BY FIELD SURVEY AND AERIAL MAPPING. THESE LINES ARE APPROXIMATE AND AS SHOWN ON THIS PLAN ARE BASED ON THE NAVD 88 VERTICAL DATUM. THE ORIGINAL CREATION OF THE FERC BOUNDARY LINE AND THE PROPERTY LINE BETWEEN MILLER HYDRO AND MILLER INDUSTRIES WAS BASED ON THE NGVD 29 VERTICAL DATUM.

MILLER INDUSTRIES, INC.
ITEM NO. (2)
SLOPE EASE. = 0.53± AC. (2)
TEMP. CONST. RIGHTS = 0.05± AC. (2)
TOTAL AREA = VAST HOLDINGS

STATE AID HIGHWAY NO. 3 / ROUTE 9/NEWELL BROOK ROAD

ROUTE 9

POB STA. 10+00.00
P.C. STA. 11+24.37
P.T. STA. 15+46.31
10+00
11+00
12+00
13+00
14+00
15+00
16+00
17+00
TO SOUTHWEST BEND
BEGIN B.L. S60°40'59"E 24.37'
N 86°38'51" E 543.56
177'± (TOTAL = 1,510'±)
84'±
29'±
257.85'
421.64'
299'±
204'±
378'±
223'±
199'±
44.16'
54.61'
89.93'
317'±
122'±
488± S.F.
734± S.F.
0.05± AC.
0.51± AC.
0.07± AC.
0.06± AC.
0.22± AC.
0.13± AC.
SLOPE EASE. LIMITS
186± S.F.
TEMP. CONST.RIGHTS
150± S.F.
SLOPE EASE. LIMITS
CONST. LIMITS
TEMP. CONST. LIMITS
EASEMENT AGREEMENT FOR INGRESS AND EGRESS
A.C.R.D. BOOK 7542, PAGES 210 & 212

BRENDA H. CUSHING
PARCEL NO. (1)
LAND TAKEN = 200± S.F.
SLOPE EASE = 186± S.F. (1)
TEMP. CONST. RIGHTS = 150± S.F. (1)
TOTAL AREA = 9.0± AC. (PER TAX MAP)
REM. AREA = 8.99± AC.

DONALD J. THORNE
PARCEL NO. (3)
LAND TAKEN = 0.06± AC.
SLOPE EASE. = 0.07± AC.
TEMP. CONST. RIGHTS = 0.22± AC. (1)
TOTAL AREA = 11.9± AC. (PER TAX MAP)
REM. AREA = 11.84± AC.

DAVID L. EDWARDS
PARCEL NO. (4)
LAND TAKEN = 0.24± AC.
SLOPE EASE. = 0.07± AC. (2)
TEMP. CONST RIGHTS = 0.13± AC. (1)
TOTAL AREA = 2.48± AC.
REM. AREA = 2.24± AC.

GARY NEWDICK
SHERRY NEWDICK
PARCEL NO. (5)
LAND TAKEN = 0.20± AC.
SLOPE EASE = 0.13± AC. (1)
TEMP. CONST. RIGHTS = 0.47± AC. (1)
TOTAL AREA = 3.40± AC. (PER DEED)
REM. AREA = 3.20± AC.

STATE OF MAINE
REGISTRY OF DEEDS
COUNTY _____
RECEIVED _____, _____
at _____h_____m_____M and recorded in
Plan Book _____, Page _____
Attest: _____
REGISTER

WIN 18382.00

SYMBOLS
IP or ● P/P (IRON PIPE or PIN FOUND)
S.T. (SEPTIC TANK)
(ROW MONUMENT)
&BM (TRAVERSE POINT)
WELL
GRADING LIMIT LINE
CONS. PROPERTY LIMIT LINE
PROPERTY LINE
LIMITS OF TEMP. RIGHT OF PORTION (L.O.W.P.)
EXISTING RIGHT OF WAY
NEW RIGHT OF WAY
NEW ROW WITHIN EXIST. ROW
CONTROL OF ACCESS
WATER LINE
GAS LINE
ELECTRIC LINE
TELEPHONE LINE
SEWER LINE

ITEM	TECH	CHECKED
BASE MAP		
EXIST. R/W	G.L.L.	C.W.K.
PROP. LINES	G.L.L.	
AREAS	G.L.L.	

STATE OF MAINE
DEPARTMENT OF TRANSPORTATION
16 STATE HOUSE STATION - AUGUSTA, ME 04333-0016
DURHAM
RIGHT OF WAY MAP

REVISIONS

NO.	DATE	DESCRIPTION	BY

PLAN FILED IN PLAN BOOK PAGE COUNTY RECORD

NO.	GRANTOR	INSTRUMENT	DATE	BOOK	PAGE
	PART I	COND.	5/19/14	8913	243

DAVID BERNHARDT
COMMISSIONER
JOYCE NOEL TAYLOR
CHIEF ENGINEER
DATE

To the best of my knowledge and belief the Highway Right of Way lines depicted hereon are based upon a survey conforming to the Standards of Practice promulgated by the Maine Board of Licensure for Professional Land Surveyors 02-360 CMR, Chapter 90; Exceptions: (1) No separate survey report, (2) Monumentation only as shown on plan. See sheet X of this plan set for coordinates. (3) Other boundary lines, including lines between abutters are approximate and for general reference purposes only.

STATE AID HIGHWAY NO. 3
ROUTE 9 / NEWELL BROOK ROAD
DURHAM ANDROSCOGGIN COUNTY
FEDERAL AID PROJECT NO. STP-1838(200), PART II

FEBRUARY 2014 | RIGHT-OF-WAY MAP | D.O.T. FILE NO. 1-321
SCALE 1" = 25' | SHEET 1 OF 3

SHEET NUMBER
47
OF 49

Filename: ...\00\row\msta\047_RWPLAN1.dgn Division: ROW Username: guy.lodd Date:7/2/2014

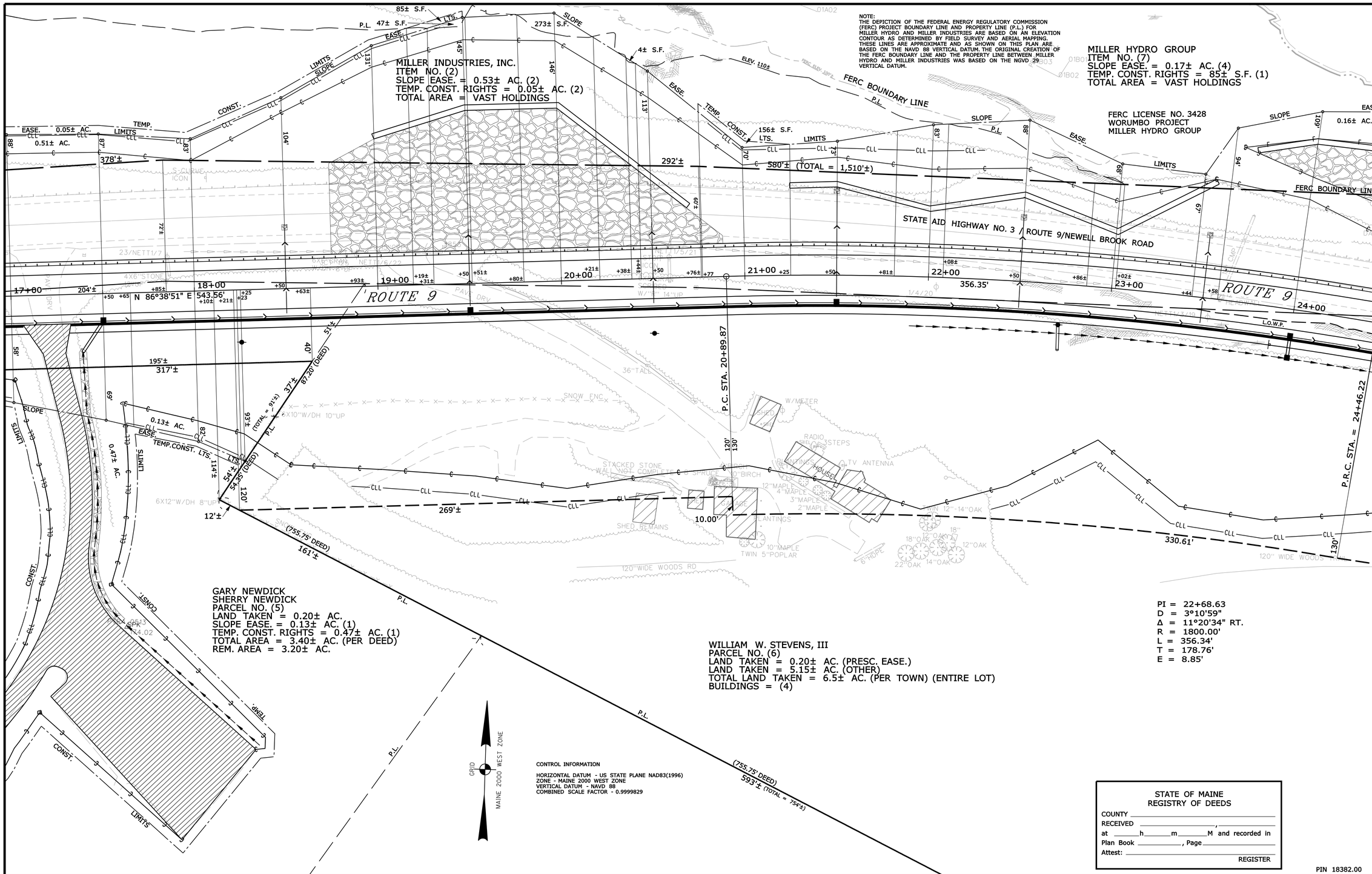

REVISIONS			
NO.	DATE	DESCRIPTION	BY

PLAN FILED IN PLAN BOOK PAGE COUNTY RECORD

NO.	GRANTOR	INSTRUMENT	DATE	BOOK	PAGE
	PART I	COND.	5/19/14	8913	243

DAVID BERNHARDT
COMMISSIONER
JOYCE NOEL TAYLOR
CHIEF ENGINEER
DATE

To the best of my knowledge and belief the Highway Right of Way lines depicted hereon are based upon a survey conforming to the Standards of Practice promulgated by the Maine Board of Licensure for Professional Land Surveyors 02-360 CMR, Chapter 90; Exceptions: (1) No separate survey report, (2) Monumentation only as shown on plan. See sheet X of this plan set for coordinates. (3) Other boundary lines, including lines between abutters are approximate and for general reference purposes only.

STATE AID HIGHWAY NO. 3
ROUTE 9 / NEWELL BROOK ROAD
DURHAM ANDROSCOGGIN COUNTY
FEDERAL AID PROJECT NO. STP-1838(200), PART I & II

FEBRUARY 2014	RIGHT-OF-WAY MAP	D.O.T. FILE NO. 1-321
SCALE 1" = 25'	SHEET 2 OF 3	

SHEET NUMBER
48
OF 49

Filename: ...\00\row\msto\048_RWPLAN2.dgn Division: ROW Username: guy.lodd Date:7/2/2014

Filename: ...\00\row\msta\049_RWPLAN3.dgn Division: ROW Date:7/2/2014 Username: guy.lodd

GRID
MAINE 2000 WEST ZONE

CONTROL INFORMATION

HORIZONTAL DATUM - US STATE PLANE NAD83(1996)
ZONE - MAINE 2000 WEST ZONE
VERTICAL DATUM - NAVD 88
COMBINED SCALE FACTOR - 0.9999829

PI = 22+68.63
D = 38°10'59" RT.
Δ = 11°20'34" RT.
R = 1800.00'
L = 356.34'
T = 178.76'
E = 8.85'

GENERAL SITE PLAN
WORUMBO HYDROELECTRIC PROJECT
LISBON FALLS, MAINE
BY E.C. JORDAN CO. AND COMBUSTION ENGINEERING
DATED - SEPTEMBER 11, 1986
LAST REVISION DATE - MAY 15, 1989
PROJECT NO. 4850-00

EXCAVATION PLAN - LOWER TAILRACE
WORUMBO HYDROELECTRIC PROJECT
LISBON FALLS, MAINE
BY E. C. JORDAN CO. & COMBUSTION ENGINEERING
DATED MARCH 25, 1987
LAST REVISION DATE - MAY 15, 1989
PROJECT NO. 4850-00

MILLER HYDRO GROUP
ITEM NO. (7)
SLOPE EASE. = 0.17± AC. (4)
TEMP. CONST. RIGHTS = 85± S.F. (1)
TOTAL AREA = VAST HOLDINGS

EXISTING DRAINAGE OUTLET
SEE D.O.T. FILE NO. 1-320

P.R.C. STA. = 24+46.22

P.T. STA. = 25+98.14

P.O.E. STA. = 26+07.34

EASEMENT FOR HIGHWAY PURPOSES

SEE D.O.T. FILE NO. 1-320
WIN 18239.00

N 14°23'54" E

N 73°07'12" E
9.20

P.T. STA. = 52+17.42

END B.L.
STA. 52+50.00

EASEMENT FOR HIGHWAY PURPOSES
SEE D.O.T. FILE NO. 1-320, WIN 18239.00

FERC LICENSE NO. 3428
WORUMBO PROJECT
MILLER HYDRO GROUP

FERC BOUNDARY LINE

STATE AID HIGHWAY NO. 67
ROUTE 9 & 125

ROUTE 9
PI = 25+23.40
D = 16°22'13"
Δ = 24°52'13" LT.
R = 350.00'
L = 151.92'
T = 77.18'
E = 8.41'

NOTE: PRESCRIPTIVE EASEMENT FOR HIGHWAY PURPOSES WITHIN LIMITS OF WROUGHT PORTION (L.O.W.P.)

WILLIAM W. STEVENS, III
PARCEL NO. (6)
LAND TAKEN = 0.20± AC. (PRESC. EASE.)
LAND TAKEN = 5.15± AC. (OTHER)
TOTAL LAND TAKEN = 6.5± AC. (PER TOWN) (ENTIRE LOT)
BUILDINGS = (4)

STA. 24+97± O/S 439'± RT.

546'± (DEED) P.L.
320'± (TOTAL = 426'±)

106'±

DEBORAH A. GILIKSON

EXISTING RIGHT OF WAY AND OTHER INFORMATION
1) TOWN OF DURHAM
A) ROUTE 9
1) ANDROSCOGGIN COUNTY COMMISSIONERS RECORDS
VOLUME 4, PAGE 488
1906 4 RODS WIDE (66')
2) ANDROSCOGGIN COUNTY COMMISSIONERS RECORDS
VOLUME 4, PAGE 18
1889 4 RODS WIDE (66')
3) STATE OF MAINE - DEPARTMENT OF TRANSPORTATION
RIGHT OF WAY MAP - STATE AID HIGHWAY NOS. 1, 3 & 67
ROUTES 125 & 9
PINKHAM BROOK ROAD / NEWELL BROOK ROAD / CANAL STREET
DURHAM / LISBON, ANDROSCOGGIN COUNTY
FEDERAL AID PROJECT NO. BH-1823(900), WIN 018239.00
DATED - JANUARY 2014
D.O.T. FILE NO. 1-320
ON FILE AT THE MAINE DEPARTMENT OF TRANSPORTATION AND TO BE RECORDED
4) PRESCRIPTIVE EASEMENT FOR HIGHWAY PURPOSES WITHIN LIMITS OF WROUGHT PORTION (L.O.W.P.)
B) ROUTE 125
1) ANDROSCOGGIN COUNTY COMMISSIONERS RECORDS
VOLUME 6, PAGE 199
1936 VARIOUS WIDTHS
2) ANDROSCOGGIN COUNTY COMMISSIONERS RECORDS
VOLUME 4, PAGE 417
1903 VARIOUS WIDTHS
3) CUMBERLAND COUNTY COMMISSIONERS RECORDS
VOLUME 4, PAGE 298 & VOLUME 4, PAGE 262
1821 4 RODS WIDE (66')
4) PLAN OF PROPOSED RELOCATION
STATE HIGHWAY NO. 1 & THIRD CLASS HIGHWAY NO. 2
DURHAM, ANDROSCOGGIN COUNTY
ACROSS THE LAND OF SUSAN K. VOJTKO
DATED JULY 1937
S.H.C. FILE NO. 1-37

AS-BUILT PLANS
A) DURHAM BRIDGE - BRIDGE NO. 3334
STATE HIGHWAY COMMISSION - BRIDGE DIVISION
DURHAM BRIDGE OVER ANDROSCOGGIN RIVER
BETWEEN THE TOWNS OF LISBON AND DURHAM, ANDROSCOGGIN COUNTY
BRIDGE AS-BUILT PLANS REEL 12, PLAN 31-51

TAX MAPS INFORMATION
B) DURHAM
TAX MAP 4

STATE OF MAINE
REGISTRY OF DEEDS
COUNTY _____
RECEIVED _____, _____
at _____h_____m_____M and recorded in
Plan Book _____, Page _____
Attest: _____
REGISTER

SEE S.H.C. FILE NO. 1-37
ALSO SEE EXCEPTING AND RESERVING
IN DEED RECORDED BOOK 751, PAGE 262

POB = 49+00.00

STATE AID HIGHWAY NO. 1 / ROUTE 125 / PINKHAM BROOK ROAD
N 64°25'42"W 179.85'

P.C. STA. = 50+79.85

ROUTES 125 & NEW 9/125
PI = 51+62.03
D = 57°17'44.8"
Δ = 78°49'36" RT.
R = 100.00'
L = 137.57'
T = 82.18'
E = 29.44'

NOTE: PRESCRIPTIVE EASEMENT FOR HIGHWAY PURPOSES WITHIN LIMITS OF WROUGHT PORTION (L.O.W.P.)

MILLER HYDRO GROUP

APPROX. AREA FOR EXCAVATED TAILRACE

TOWN OF LISBON
TOWN OF DURHAM

ANDROSCOGGIN RIVER
Flow

WIN 18382.00

SYMBOLS
IP or IPF (IRON PIPE or PIN FOUND)
ST. (SEPTIC TANK)
(ROW MONUMENT)
&BM (TRAVERSE POINT)
WELL
(WELL)
BEARING LIMIT LINE
CONSTRUCTION LIMIT LINE
PROPERTY LINE
LIMITS OF WROUGHT PORTION (L.O.W.P.)
WATER LINE
GAS LINE
ELECTRIC LINE
TELEPHONE LINE
SEWER LINE
NEW RIGHT OF WAY
NEW ROW WITHIN EXIST. ROW
CONTROL OF ACCESS

ITEM	TECH	CHECKED
BASE MAP		
EXIST. R/W	G.L.L.	C.W.K.
PROP. LINES	G.L.L.	
AREAS	G.L.L.	

STATE OF MAINE
DEPARTMENT OF TRANSPORTATION
16 STATE HOUSE STATION - AUGUSTA, ME 04333-0016
DURHAM
RIGHT OF WAY MAP

REVISIONS

NO.	DATE	DESCRIPTION	BY

PLAN NO.	FILED IN PLAN BOOK GRANTOR	PAGE INSTRUMENT	COUNTY RECORD DATE	BOOK	PAGE
	PART I	COND.	5/19/14	8913	243

DAVID BERNHARDT
COMMISSIONER
JOYCE NOEL TAYLOR
CHIEF ENGINEER
DATE

To the best of my knowledge and belief the Highway Right of Way lines depicted hereon are based upon a survey conforming to the Standards of Practice promulgated by the Maine Board of Licensure for Professional Land Surveyors 02-360 CMR, Chapter 90; Exceptions: (1) No separate survey report, (2) Monumentation only as shown on plan. See sheet X of this plan set for coordinates. (3) Other boundary lines, including lines between abutters are approximate and for general reference purposes only.

STATE AID HIGHWAY NO. 3
ROUTE 9 / NEWELL BROOK ROAD
DURHAM ANDROSCOGGIN COUNTY
FEDERAL AID PROJECT NO. STP-1838(200), PART I

FEBRUARY 2014 | RIGHT-OF-WAY MAP | D.O.T. FILE NO. 1-321
SCALE 1" = 25' | SHEET 3 OF 3

SHEET NUMBER
49
OF 49