STATE OF MAINE
DEPARTMENT OF TRANSPORTATION

SPECIFICATIONS

Design: Load and Resistance Factor Design per AASHTO LRFD Bridge Design Specifications, Sixth Edition 2012 and 2013 Interim Revisions.

DESIGN LOADING

Live Load ..... HL - 93 Modified for Strength I

TRAFFIC DATA

Current (2012) AADT	2,210
Future (2032) AADT	2,650
DHV - % of AADT	10%
Design Hour Volume	265
% Heavy Trucks (AADT)	12%
% Heavy Trucks (DHV)	6%
Directional Distribution (DHV)	55%
80 kN Equivalent P 2.0	332
80 kN Equivalent P 2.5	316
Design Speed (mph)	25 (40 SW of Bridge)

HYDROLOGIC DATA

Drainage Area	1,351 sq mi
Discharge (Q1.1)	8,650 cfs
Discharge (Q25)	29,741 cfs
Design Discharge (Q50)	33,705 cfs
Check Discharge (Q100)	37,735 cfs
Scour Check Discharge (Q500)	47,416 cfs
Record Flood Discharge (1936)	46,660 cfs
Headwater Elevation (Q1.1)	248.27 ft
Headwater Elevation (Q25)	259.16 ft
Headwater Elevation (Q50)	260.63 ft
Headwater Elevation (Q100)	262.07 ft
Headwater Elevation (Q500)	265.19 ft
Headwater Elevation (1936)	264.94 ft
Discharge Velocity (Q1.1)	5.48 fps
Discharge Velocity (Q50)	9.20 fps
Discharge Velocity (Q100)	9.65 fps
Discharge Velocity (Q500)	10.67 fps
Discharge Velocity (1936)	10.59 fps

MATERIALS

Concrete:

Structural Wearing Surface	Class "LP"
Barriers, Curbs, Sidewalks & transition Barriers	Class "LP"
Seals	Class "S"
Precast	Class "P"
Fill	"Fill"
All Other	Class "A"
Reinforcing Steel	ASTM A 615/A 615M, Grade 60
Glass Fiber Reinforced Polymer (GFRP)	CSA S807-10, ACI 440.1R-06

Structural Steel:

All Material (except as noted)	ASTM A 709, Grade 50 W
High Strength Bolts	ASTM A 325, Type 3

BASIC DESIGN STRESSES

Concrete	f ' c = 4,350 psi
Precast Concrete	f ' c = 4,350 psi
Reinforcing Steel	f y = 60,000 psi

Structural Steel:

ASTM A 709, Grade 50W	Fy = 50,000 psi
ASTM A 709, Grade 36	F y = 36,000 psi
ASTM A 325	F u = 120,000 psi

LIMINGTON/STANDISH
YORK/CUMBERLAND
STEEP FALLS BRIDGE
OVER
SACO RIVER

STATE ROUTE 11
(SOKOKIS AVENUE/MAIN STREET)

FEDERAL PROJECT # BH-1823(200)X

PROJECT LENGTH 0.153 mi.
BRIDGE NO. 3328

LIST OF DRAWINGS

Title Sheet	1
Estimated Quantities	2
General Notes	3
General Plans	4-5
Profiles	6-7
Boring Location Plan	8
Interpretive Subsurface Profile	9
Boring Logs	10
Detour Plan	11
Typical Sections	12-13
Highway Approach Cross Sections	14-20
Abutment 1	21-26
Abutment 2	27-33
Bearings	34
Structural Steel	35-36
Superstructure	37-39
Bridge Drains	40
Reinforcing Steel Schedule	41-43
Right of Way Map	44-45

UTILITIES

Central Maine Power
FairPoint Communications
Portland Water District
Time Warner Cable

MAINTENANCE OF TRAFFIC

Bridge shall be closed to traffic for a period of time specified in the special provisions

PROJECT LOCATION:	ON LIMINGTON - STANDISH TOWN LINE, ON ROUTE 11 OVER THE SACO RIVER LAT./LONG. 43°47' 21" N 70°39' 30" W
PROGRAM AREA:	HIGHWAY BRIDGES - TRADITIONAL
OUTLINE OF WORK:	BRIDGE REPLACEMENT IN EXISTING LOCATION AND ASSOCIATED ROADWAY CONSTRUCTION

TranSystems

STATE OF MAINE
DEPARTMENT OF TRANSPORTATION
APPROVED — DATE
COMMISSIONER: 2/3/14
CHIEF ENGINEER: 2-3-14

STATE OF MAINE — EVAN G. LOWELL — NO. 9065 — LICENSED PROFESSIONAL ENGINEER — 1-28-2014

PROJECT INFORMATION		SIGNATURE
PROGRAM	BRIDGE	
PROJECT MANAGER	M. PARLIN	9065
DESIGNER	C. GAMACHE	P.E. NUMBER
CONSULTANT	TRANSYSTEMS	1/28/2014
PROJECT RESIDENT		DATE
CONTRACTOR		
PROJECT COMPLETION DATE		

LIMINGTON/STANDISH STEEP FALLS BRIDGE

TITLE SHEET

WIN 18232.00

BH-1823(200)X

SHEET NUMBER 1 OF 45

Filename: ...\djwilk\dms28621\001_Title.dgn Division: BRIDGE Username: CAFUNSTON Date:1/27/2014

ESTIMATED QUANTITIES

	ITEM NO.	DESCRIPTION		QUANTITY	UNIT
	201.23	REMOVING SINGLE TREE TOP ONLY		3	EA
	201.24	REMOVE STUMP		5	EA
	202.19	REMOVING EXISTING BRIDGE	(360 T, 750 CY)	1	LS
	202.203	PAVEMENT BUTT JOINTS		260	SY
	203.20	COMMON EXCAVATION		2,450	CY
	203.21	ROCK EXCAVATION		10	CY
	203.24	COMMON BORROW		120	CY
	203.25	GRANULAR BORROW		1,800	CY
	206.082	STRUCTURAL EARTH EXCAVATION - MAJOR STRUCTURES		950	CY
	206.092	STRUCTURAL ROCK EXCAVATION - MAJOR STRUCTURES		330	CY
	304.10	AGGREGATE SUBBASE COURSE GRAVEL		1,800	CY
	403.207	HOT MIX ASPHALT, 19.0 MM BASE		300	T
	403.208	HOT MIX ASPHALT 12.5 MM HMA SURFACE		190	T
	403.209	HOT MIX ASPHALT 9.5 MM (INCIDENTALS)		5	T
	403.213	HOT MIX ASPHALT 12.5 MM BASE		190	T
	409.15	BITUMINOUS TACK COAT - APPLIED		110	G
	502.219	STRUCTURAL CONCRETE, ABUTMENTS AND RETAINING WALLS	(850 CY)	1	LS
	502.26	STRUCTURAL CONCRETE RD AND SW SLABS ON STEEL BRIDGE	(240 CY)	1	LS
	502.31	STRUCTURAL CONCRETE APPROACH SLABS	(25 CY)	1	LS
	502.49	STRUCTURAL CONCRETE CURBS AND SIDEWALKS	(52 CY)	1	LS
	502.72	FIBER REINFORCED POLYMER BRIDGE DRAIN - TYPE A		6	EA
	503.12	REINFORCING STEEL FABRICATED AND DELIVERED		91,100	LB
	503.13	REINFORCING STEEL PLACING		91,100	LB
	504.702	STRUCTURAL STEEL FABRICATED AND DELIVERED, WELDED	(383,000 LB)	1	LS
	504.71	STRUCTURAL STEEL ERECTION	(383,000 LB)	1	LS
	505.08	SHEAR CONNECTORS	(1,900 EA)	1	LS
	507.0821	STEEL BRIDGE RAILING, 3 BAR	(182 LF)	1	LS
	507.0831	STEEL BRIDGE RAILING, 4 BAR	(182 LF)	1	LS
	511.07	COFFERDAM: ABUTMENT NO. 2		1	LS
	512.081	FRENCH DRAINS	(200 LF)	1	LS
	515.21	PROTECTIVE COATING FOR CONCRETE SURFACES	(820 SY)	1	LS
	520.21	EXPANSION DEVICE - GLAND SEAL		1	EA
	523.52	BEARING INSTALLATION		10	EA
	523.5551	POT OR DISK BEARINGS, FIXED		5	EA
	523.5552	POT OR DISK BEARINGS, EXPANSION		5	EA
	526.301	TEMPORARY CONCRETE BARRIER TYPE 1	(80 LF)	1	LS
	526.34	PERMANENT CONCRETE TRANSITION BARRIER		4	EA
	530.30	GLASS FIBER REINF. POLYMER, FABRICATED & DELIVERED		54,100	LF
	530.31	GLASS FIBER REINFORCING POLYMER, PLACING		54,100	LF
	603.179	18" CULVERT PIPE OPTION III		132	LF
	604.076	60" CATCH BASIN TYPE A1-C		1	EA
	605.09	6" UNDERDRAIN TYPE B		260	LF
	606.1721	BRIDGE TRANSITION TYPE 1		4	EA
	606.23	GUARDRAIL TYPE 3C - SINGLE RAIL		357	LF
	606.232	GUARDRAIL TYPE 3C - OVER 15' RADIUS		88	LF
	606.265	TERMINAL END - SINGLE RAIL - GALVANIZED STEEL		3	EA
	606.352	REFLECTORIZED BEAM GUARDRAIL DELINEATORS		11	EA
	606.353	REFLECTORIZED FLEXIBLE GUARDRAIL MARKER		8	EA
	606.79	GUARDRAIL 350 FLARED TERMINAL		1	EA
	609.247	TERMINAL CURB TYPE 2 - 7'		2	EA
	610.08	PLAIN RIPRAP		260	CY
	610.18	STONE DITCH PROTECTION		70	CY
	613.319	EROSION CONTROL BLANKET		375	SY
	615.07	LOAM		120	CY
	618.1301	SEEDING METHOD NUMBER 1 - PLAN QUANTITY		4	UN
	618.1401	SEEDING METHOD NUMBER 2 - PLAN QUANTITY		3	UN
	618.1411	SEEDING METHOD NUMBER 3 - PLAN QUANTITY		5	UN
	619.1201	MULCH - PLAN QUANTITY		8	UN
	619.1401	EROSION CONTROL MIX		20	CY
	620.58	EROSION CONTROL GEOTEXTILE		400	SY
	627.309	8" SHOULDER PAVEMENT MARKING LINE - RED		825	LF
	627.733	4" WHITE OR YELLOW PAINTED PAVE MRK LINE		2,800	LF
*	629.05	HAND LABOR, STRAIGHT TIME		200	HR
*	631.12	ALL PURPOSE EXCAVATOR (INCLUDING OPERATOR)		100	HR
*	631.14	GRADER (INCLUDING OPERATOR)		150	HR
*	631.15	ROLLER EARTH BASE COURSE (INCLUDING OPERATOR)		40	HR
*	631.172	TRUCK - LARGE (INCLUDING OPERATOR)		200	HR
*	631.20	STUMP CHIPPER (INCLUDING OPERATOR)		8	HR
	639.18	FIELD OFFICE TYPE A		1	EA
	645.106	DEMOUNT REG, WRNG, CONF & RTE MARKER SIGN		12	EA
	645.116	REINST REG, WRNG, CONF & RTE MARKER SIGN		12	EA
	645.271	REG WARN CONF RTE SIGNS TYPE 1		13	SF
	645.55	RADAR SPEED SIGN - SOLAR POWERED		1	EA
	652.312	TYPE III BARRICADES		6	EA
	652.33	DRUM		20	EA
	652.34	CONE		30	EA
	652.35	CONSTRUCTION SIGNS		200	SF
	652.361	MAINTENANCE OF TRAFFIC CONTROL DEVICES	(215 CD)	1	LS
	652.38	FLAGGER		250	HR
	652.41	PORTABLE - CHANGEABLE MESSAGE SIGN		2	EA
	656.75	TEMPORARY SOIL EROSION AND WATER POLLUTION CONTROL		1	LS
	659.10	MOBILIZATION		1	LS

* UNDETERMINED LOCATION

TranSystems

STATE OF MAINE
DEPARTMENT OF TRANSPORTATION

BH-1823(200)X

WIN 18232.00

BRIDGE NO. 3328

BRIDGE PLANS

PROJ. MANAGER	M. PARLIN	BY	DATE
DESIGN-DETAILED	D. WILK	D. WILK	1/28/14
CHECKED-REVIEWED	T. SANDELL		
DESIGN2-DETAILED2			
DESIGN3-DETAILED3			
REVISIONS 1			
REVISIONS 2			
REVISIONS 3			
REVISIONS 4			
FIELD CHANGES			

SIGNATURE

P.E. NUMBER

DATE

STEEP FALLS BRIDGE
SACO RIVER
LIMINGTON/STANDISH YORK/CUMBERLAND

EATIMATED QUANTITIES

SHEET NUMBER

2

OF 45

GENERAL CONSTRUCTION NOTES

1. During construction, the existing roadway will close to traffic for a time period specified in the Special Provisions.

2. For easements, construction limits and right of way lines, refer to the General Plans.

3. The clearing limits as shown on the plans are approximate. The exact limits will be established in the field by the Resident. Payment for clearing will be considered incidental to Contract items.

4. All utility facilities shall be adjusted by the respective utilities unless otherwise noted.

5. Do not excavate for Aggregate Subbase Course where existing material is suitable as determined by the Resident.

6. All inslope and ditches in cut areas shall be graded as shown on the typicals or flatter, or as directed by the Resident.

7. Driveway fill side slopes shall be the same as the non-guardrail fill slopes unless otherwise noted on the plans.

8. All waste material not used on the project shall be disposed of off the project in waste areas approved by the Resident.

9. Loam shall be placed to a nominal depth of 4 inches in lawn areas and 2 inches in all other areas unless otherwise noted or directed.

10. Erosion Control Mix may be substituted in those areas normally receiving loam and seed as directed by the Resident. Placement shall be in accordance with Standard Specifications Section 619 , Mulch. Payment will be made under Item No. 619.1401. Erosion Control Mix.

11. Place a 24-in wide strip of Temporary Erosion Control Blanket on the side slopes along the top of the riprap and behind the wingwalls.

12. Existing inslopes steeper than 2:1 in proposed fill areas shall be benched as directed by the Resident.

13. Extended-use Erosion Control Blanket, seeded gutters, riprap downspouts, and other gutters lined with Stone Ditch Protection shall be constructed after paving and shoulder work is completed, where it is apparent that runoff will cause continual erosion. Payment will be made under the appropriate Contract Items.

14. When superelevation exceeds the slope of the low side shoulder, the shoulder pavement will have the same slope as the traveled way.

15. Project information referred to below may be accessed at the following MaineDOT web address:
http://www.maine.gov/mdot/comprehensive-list-projects/project-information.php.

16. The existing bridge plans may be accessed at the MaineDOT web address. The plans are reproductions of the original drawings as prepared for the construction of the bridge. It is very unlikely that the plans will show any construction field changes or any alterations which may have been made to the bridge during its life span.

17. The hydrologic report of the bridge site may be accessed at the MaineDOT web address. The hydrologic report is based on MaineDOT's Interpretation of the information obtained for the subject site. No assurance is given that the information of the conclusions of the report will be representative of actual conditions at the time of construction.

18. The bridge deck evaluation report of the existing bridge may be accessed at the MaineDOT web address. The report contains visual Inspection information and deck core data of the bridge. There is no assurance that the information or data is a true representation of the current conditions of the entire deck.

19. The project geotechnical report titled: "Geotechnical Design Report" dated December 9, 2013 may be accessed at the MaineDOT web address.

20. Geotechnical information furnished or referred to in this plan set is for the use of the Bidders and the Contractor. No assurance is given that the information or interpretations will be representative of actual subsurface conditions at the construction site. MaineDOT will not be responsible for the Bidder's or Contractor's interpretation of, or conclusions drawn from, the geotechnical information. The boring logs contained in the plan set present factual and interpretive subsurface information collected at discrete locations. Data provided may not be representative of the subsurface conditions between the boring locations.

21. Quantities included for pay items measured and paid for a Lump Sum are estimated quantities and are provided by MaineDOT for informational purposes only. Lump Sum pay items will be paid for at the Contract Bid amount, with no addition or reduction in payment to the Contractor if the actual final quantities are different from the MaineDOT provided estimated quantities, except as follows:

a. If a Lump Sum pay item is eliminated, the requirements of Standard Specifications Section 109.2. Elimination of Items, will take precedence.

b. If other Contract Documents specifically allow a change in payment for a Lump Sum pay item, those requirements will be followed.

c. If a design change results in changes to estimated quantities for Lump Sum pay items, price adjustments will be made in accordance with Standard Specifications Section 109.7. Equitable Adjustments to Compensation.

22. The Contractor shall submit a Bridge Demolition Plan to the Resident at least 10 business days prior to the start of demolition work. The plan shall outline the methods and equipment to be used to remove and dispose of all materials included in the existing bridge. No work related to the removal of the bridge shall be undertaken by the Contractor until MaineDOT has reviewed the Bridge Demolition Plan for appropriateness and completeness. Payment for all work necessary for developing, submitting and finalizing the Demolition Plan will be considered Incidental to the bridge removal pay item.

23. The existing bridge shall be removed by and become the property of the Contractor. The steel portions of the existing bridge are coated with a lead-based paint system. The Contractor is responsible for the containment, proper management and disposal of all lead-contaminated hazardous waste generated by the process of demolishing the bridge. The Contractor is responsible for implementing appropriate OSHA mandated personal protection standards related to this process. Once the existing bridge is removed, the Contractor is solely responsible for the care, custody and control of the components of the existing bridge and any hazardous waste generated as a result of the storage, recycling or disposal of the bridge components, including lead-coated steel. The Contractor shall recycle or reuse the steel in accordance with the Maine Department of Environmental Protection's "Maine Hazardous Waste Management regulations." Chapter 850. A copy of this regulation is available at MaineDOT's offices on Child Street in Augusta. Payment for all labor, materials, equipment and other costs required to remove and dispose of the existing bridge will be considered incidental to the bridge removal pay item.

24. Two Reflectorized Flexible Guardrail Markers (Item 606.353) shall be installed at each guardrail end.

25. Inlets and outlets of all culverts shall be riprapped unless otherwise noted on the plans or directed by the Resident.

26. Protective coating for Concrete Surfaces shall be applied to the following areas:

All exposed surfaces of concrete curbs and sidewalks.
Fascias down to the drip notch.
All exposed surfaces of Concrete Transition Barriers.
Top of abutment backwalls and to one foot below the top of backwalls on the back side.

27. All joints between existing and proposed hot bituminous pavement shall be butted. Payment shall be made under Item 202.203 Pavement Butt Joints.

28. Stumps have been estimated to be removed under Item 201.24 Remove Stump. However, where directed by the Resident, Item 631.20 Stump Chipper Rental, may be used to remove stumps.

29. Grubbing in fill areas has been shown on the cross sections and the quantitys noted. These limits are approximate and have been used for estimating purposes only. Actual Grubbing limits may vary based on field conditions as directed by the Resident. Estimated Grubbing depths are 6 inches.

30. Required ditch protection shown on the plans or in the construction notes is for estimating purposes only. The actual type and location of ditch protection may be altered by the Resident.

31. Residential paved entrances shall be constructed with: 2" Hot Mix Asphalt and 12" Aggregate Subbase Course Gravel.

32. Commercial paved entrances shall be constructed with: 3" Hot Mix Asphalt and 11" Aggregate Subbase Course Gravel.

33. Unpaved entrances shall be constructed with 14" Aggregate Subbase Course Gravel or 11" Aggregate Subbase Course Gravel and 3" untreated Aggregate Surface Course unless otherwise noted in the plans or directed by the Resident.

34. The following shall be incidental to the 603 Item(s).
- All pipe excavation including any cutting and removal of pavement.
- All ditching at pipe ends.
- Furnishing, placing, grading and compacting of any new gravel and/or fill material including granular borrow used under pipes during pipe installation (Excavation is also incidental).
- Granular borrow under the pipe shall meet the requirements for underwater backfill.
- Flow lines may be changed by 1.5 FT.
-Any necessary clearing of brush and non-pay trees at culvert ends.

35. Inlets and outlets of all culverts shall be riprapped unless otherwise noted on the plans or directed by the Resident.

36. Guardrail end treatments shall be installed concurrently with the placement of each section of beam guardrail.

37. Unless otherwise noted Seeding Method No. 1 shall be utilized on all lawns and developed areas; Seeding Method No. 2 shall be utilized on all non-guardrail slopes; Seeding Method No. 3 shall be utilized on all guardrail fill slopes, on long non-guardrail backslopes, Seeding Method No. 3 may be used instead of Method No. 2 if noted or directed by the Resident.

38. Any damage to the slopes caused by the Contractor's equipment, personnel, or operation shall be repaired to the satisfaction of the Resident. All work, equipment, and materials required to make repairs shall be at the Contractor's expense.

39. Stations referenced are approximate.

40. All work shall be done in accordance with the Maine Department of Transportation's Best Management Practices for erosion control & sediment control, February,2008.

TranSystems

STATE OF MAINE
DEPARTMENT OF TRANSPORTATION
BH-1823(200)X
WIN 18232.00
BRIDGE NO. 3328
BRIDGE PLANS

		BY	DATE
PROJ. MANAGER	M. PARLIN		
DESIGN-DETAILED	D. WILK	D. WILK	12/6/13
CHECKED-REVIEWED	D. WILK		
DESIGN2-DETAILED2	T. SANDELL		
DESIGN3-DETAILED3			
REVISIONS: 1			
REVISIONS: 2			
REVISIONS: 3			
REVISIONS: 4			
FIELD CHANGES			

SIGNATURE
P.E. NUMBER
DATE

STEEP FALLS BRIDGE
SACO RIVER
LIMINGTON/STANDISH YORK/CUMBERLAND

GENERAL NOTES

SHEET NUMBER
3
OF 45

Filename: ...\dms28621\003_GeneralNotes.dgn Division: BRIDGE Username: CAFUNSTON Date:2/4/2014

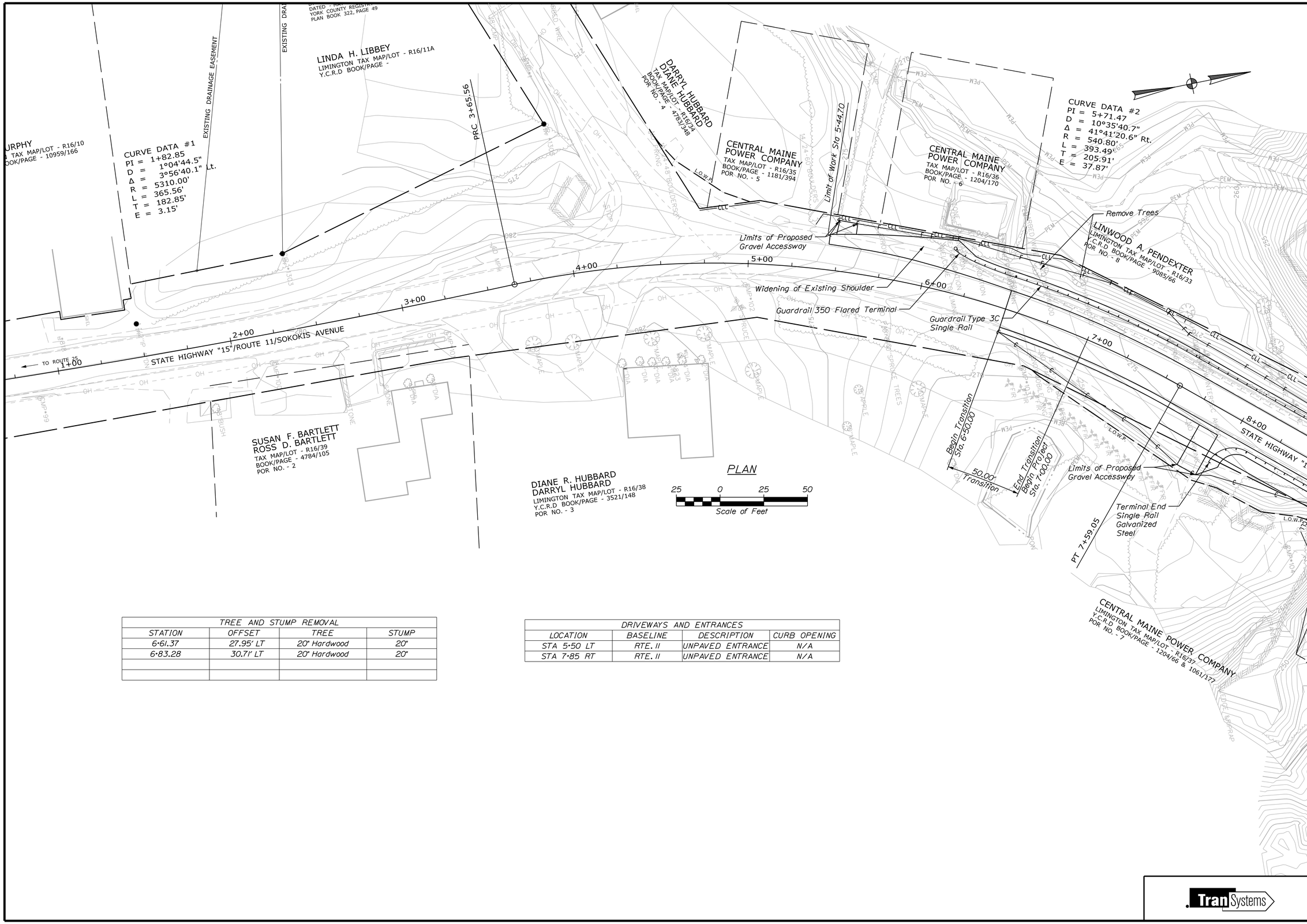

TREE AND STUMP REMOVAL			
STATION	OFFSET	TREE	STUMP
6+61.37	27.95' LT	20" Hardwood	20"
6+83.28	30.71' LT	20" Hardwood	20"

DRIVEWAYS AND ENTRANCES			
LOCATION	BASELINE	DESCRIPTION	CURB OPENING
STA 5+50 LT	RTE. 11	UNPAVED ENTRANCE	N/A
STA 7+85 RT	RTE. 11	UNPAVED ENTRANCE	N/A

STATE OF MAINE
DEPARTMENT OF TRANSPORTATION

BH-1823(200)X

WIN 18232.00

BRIDGE NO. 3328

BRIDGE PLANS

PROJ. MANAGER	M. P-ARLIN	BY	DATE
DESIGN-DETAILED	D. WILK	D. WILK	1/28/14
CHECKED-REVIEWED	D. WILK	T. SANDELL	
DESIGN2-DETAILED2			
DESIGN3-DETAILED3			
REVISIONS 1			
REVISIONS 2			
REVISIONS 3			
REVISIONS 4			
FIELD CHANGES			

SIGNATURE

P.E. NUMBER

DATE

STEEP FALLS BRIDGE
SACO RIVER
LIMINGTON/STANDISH YORK/CUMBERLAND

GENERAL PLAN 1

SHEET NUMBER

4

OF 45

TranSystems

Filename: ...\djwilk\dms28621\004_Plan1.dgn Division: BRIDGE Username: CAFUNSTON Date:2/4/2014

TREE AND STUMP REMOVAL			
STATION	OFFSET	TREE	STUMP
12+25±	26'± LT	12"	12"
12+69.46	26.78' LT	-	20"
12+97.41	25.29' LT	-	14"

DRIVEWAYS AND ENTRANCES			
LOCATION	BASELINE	DESCRIPTION	CURB OPENING
STA 11+68 LT	RTE. 11	UNPAVED ENTRANCE	N/A
STA 12+20 RT	RTE. 11	PAVED DRIVE	N/A

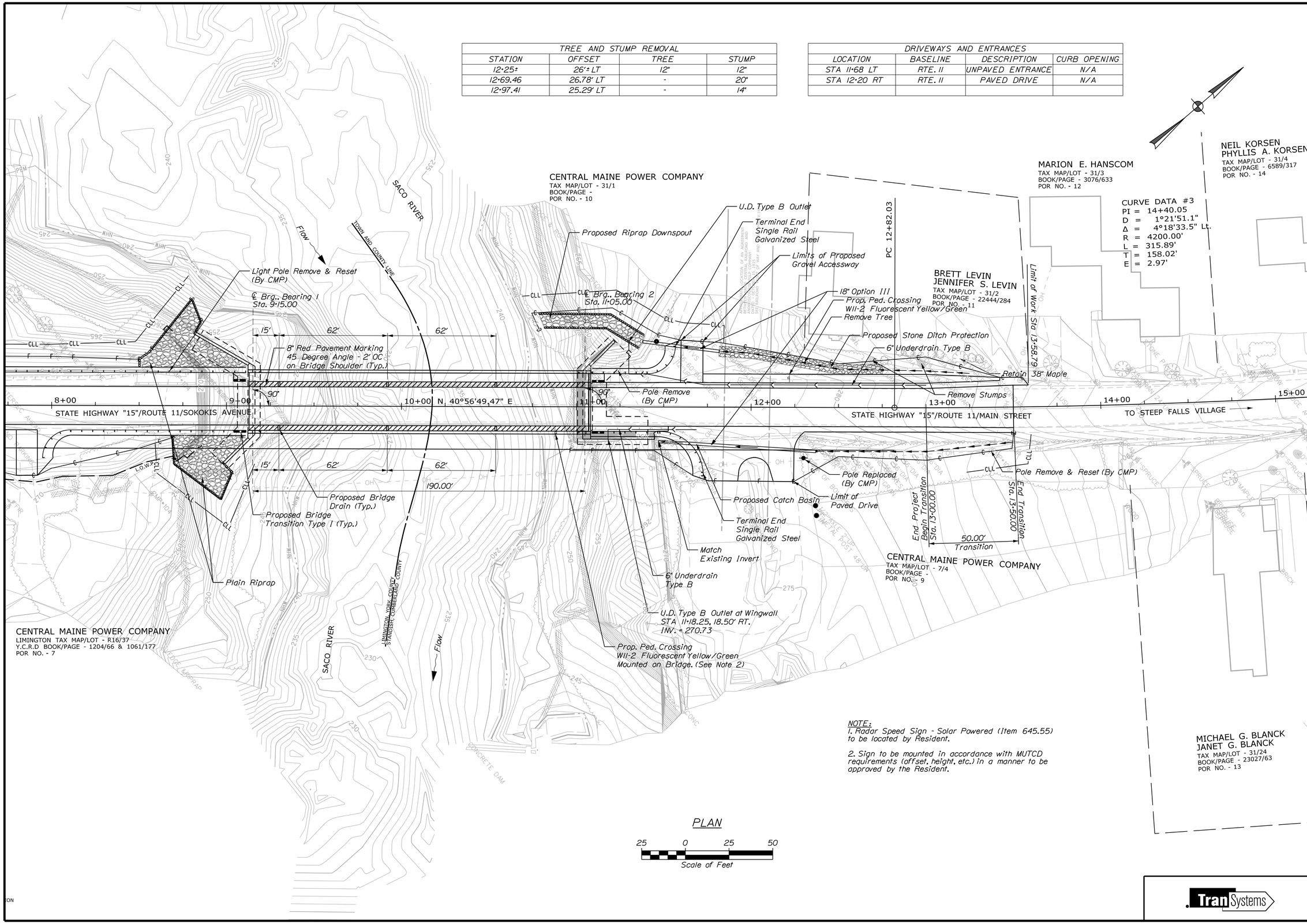

NOTE:
1. Radar Speed Sign - Solar Powered (Item 645.55) to be located by Resident.

2. Sign to be mounted in accordance with MUTCD requirements (offset, height, etc.) in a manner to be approved by the Resident.

STATE OF MAINE
DEPARTMENT OF TRANSPORTATION

BH-1823(200)X

WIN 18232.00

BRIDGE NO. 3328

BRIDGE PLANS

	BY	DATE
PROJ. MANAGER	M. P-ARLIN	
DESIGN-DETAILED	D. WILK	D. WILK	1/28/14
CHECKED-REVIEWED	T. SANDELL	
DESIGN2-DETAILED2		
DESIGN3-DETAILED3		
REVISIONS 1		
REVISIONS 2		
REVISIONS 3		
REVISIONS 4		
FIELD CHANGES		

SIGNATURE

P.E. NUMBER

DATE

STEEP FALLS BRIDGE
SACO RIVER
LIMINGTON/STANDISH YORK/CUMBERLAND

GENERAL PLAN 2

SHEET NUMBER

5

OF 45

TranSystems

Filename: ...\djwilk\dms28621\005_Plan2.dgn Division: BRIDGE Username: CAFUNSTON Date:2/4/2014

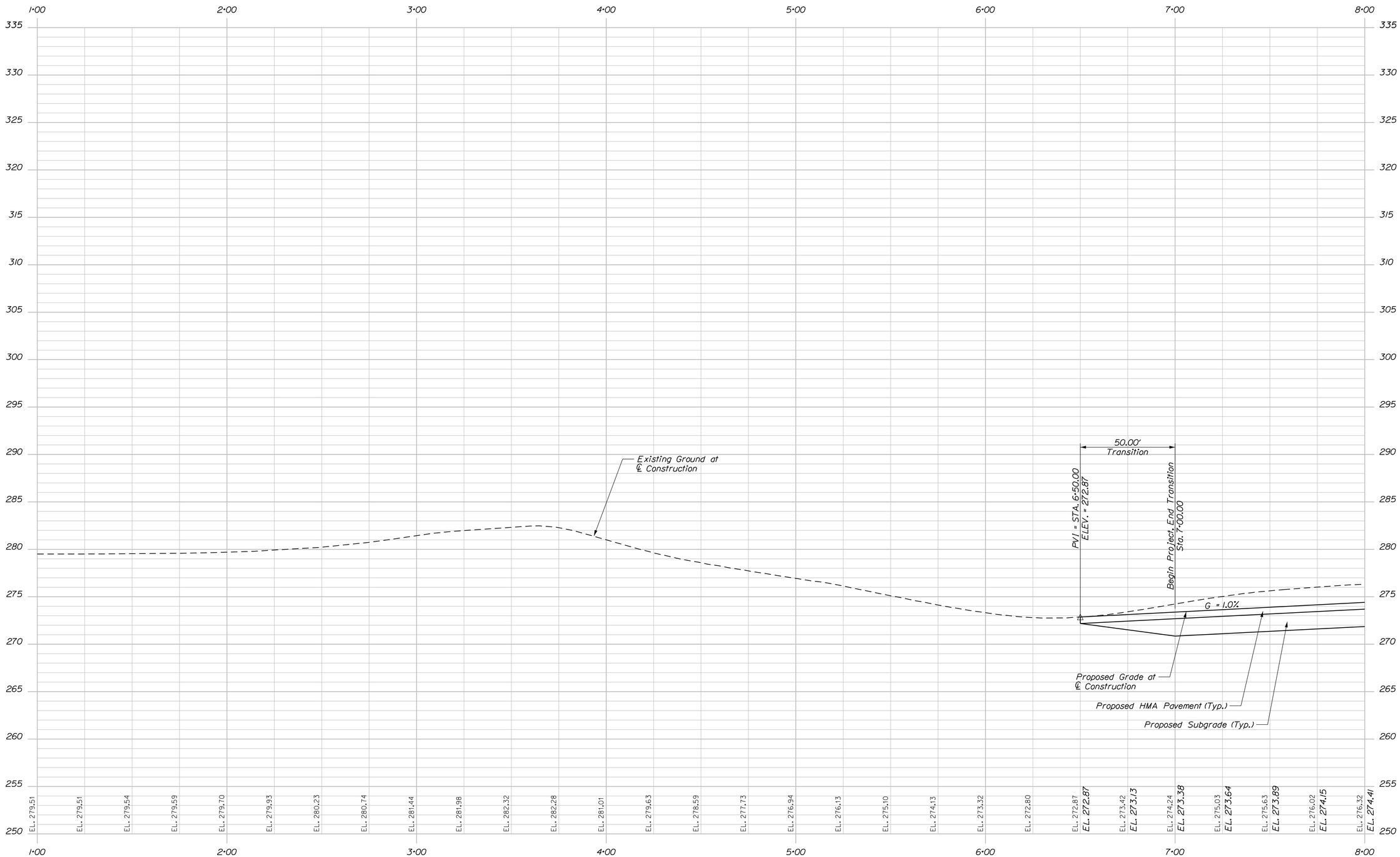

PROFILE

HORIZ. 25 0 25 50

VERT. 5 0 5 10

Scale of Feet

STATE OF MAINE
DEPARTMENT OF TRANSPORTATION

BH-1823(200)X

WIN 18232.00

BRIDGE NO. 3328

BRIDGE PLANS

PROJ. MANAGER	M. PARLIN	BY	DATE
DESIGN-DETAILED	D. WILK	D. WILK	1/28/14
CHECKED-REVIEWED	T. SANDELL		
DESIGN2-DETAILED2			
DESIGN3-DETAILED3			
REVISIONS 1			
REVISIONS 2			
REVISIONS 3			
REVISIONS 4			
FIELD CHANGES			

SIGNATURE

P.E. NUMBER

DATE

STEEP FALLS BRIDGE
SACO RIVER
LIMINGTON/STANDISH YORK/CUMBERLAND

PROFILE 1

SHEET NUMBER

6

OF 45

TranSystems

Filename: ...\dms28621\006_Profile1.dgn Division: BRIDGE Username: CAFUNSTON Date:2/4/2014

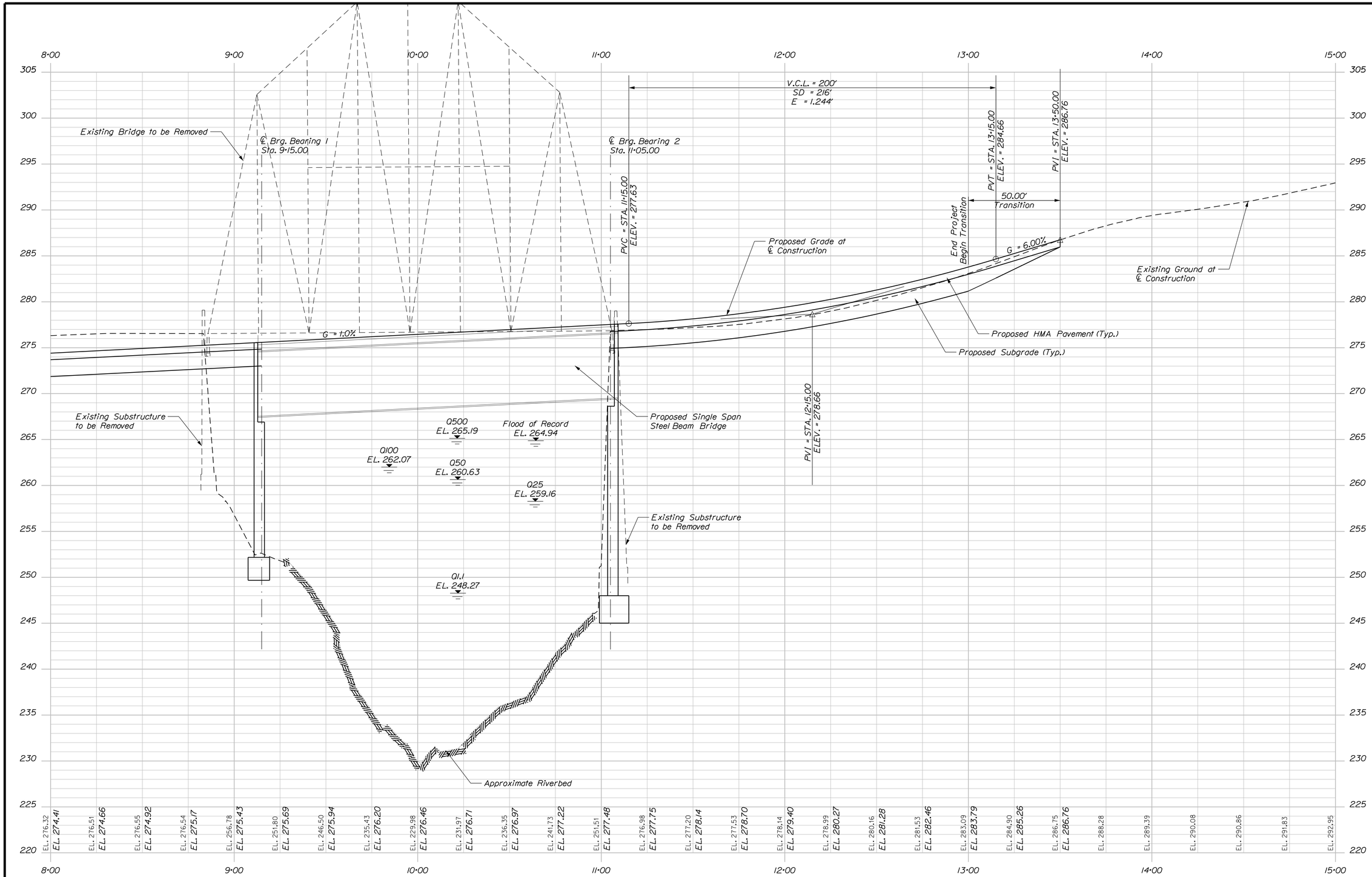

PROFILE

HORIZ. 25 0 25 50

VERT. 5 0 5 10

Scale of Feet

TranSystems

STATE OF MAINE
DEPARTMENT OF TRANSPORTATION

BH-1823(200)X

WIN 18232.00

BRIDGE NO. 3328

BRIDGE PLANS

PROJ. MANAGER	M. PARLIN	BY	DATE
DESIGN-DETAILED	D. WILK	D. WILK	1/28/14
CHECKED-REVIEWED	T. SANDELL		
DESIGN2-DETAILED2			
DESIGN3-DETAILED3			
REVISIONS 1			
REVISIONS 2			
REVISIONS 3			
REVISIONS 4			
FIELD CHANGES			

SIGNATURE

P.E. NUMBER

DATE

STEEP FALLS BRIDGE
SACO RIVER
LIMINGTON/STANDISH YORK/CUMBERLAND

PROFILE 2

SHEET NUMBER

7

OF 45

Filename: ...\dms28621\007_Profile2.dgn Division: BRIDGE Username: CAFUNSTON Date:2/4/2014

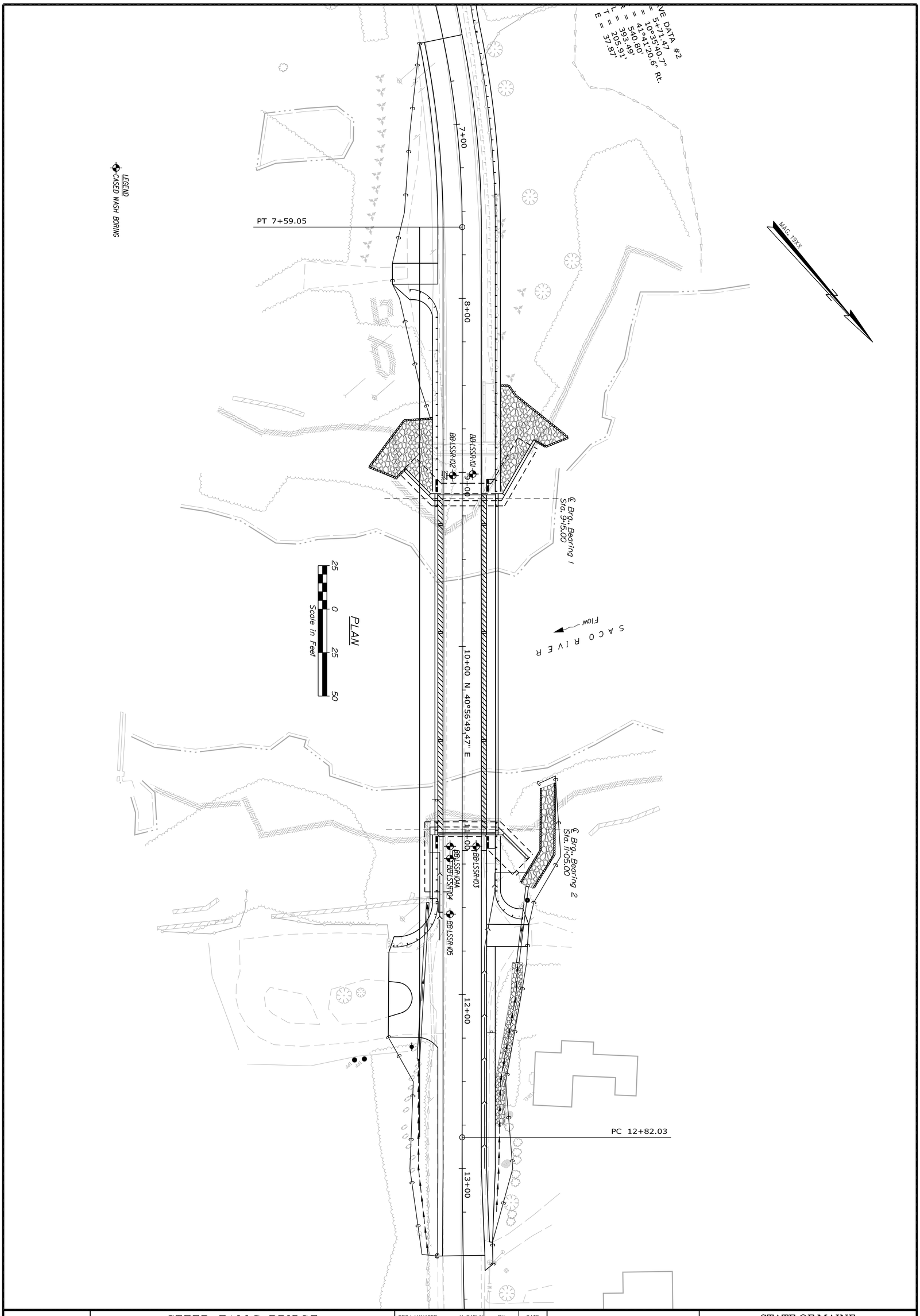

SHEET NUMBER 8 OF 45	STEEP FALLS BRIDGE SACO RIVER LIMINGTON-STANDISH CUMBERLAND CNTY BORING LOCATION PLAN	PROJ. MANAGER M. PARLIN BY DATE DESIGN-DETAILED CHECKED-REVIEWED DESIGN2-DETAILED2 K.MAGUIRE T.WHITE SEPT 2013 DESIGN3-DETAILED3 REVISIONS 1 REVISIONS 2 REVISIONS 3 REVISIONS 4 FIELD CHANGES	SIGNATURE P.E. NUMBER DATE	STATE OF MAINE DEPARTMENT OF TRANSPORTATION BH-1823(200)X BRIDGE NO. 3328 WIN 18232.00 BRIDGE PLANS

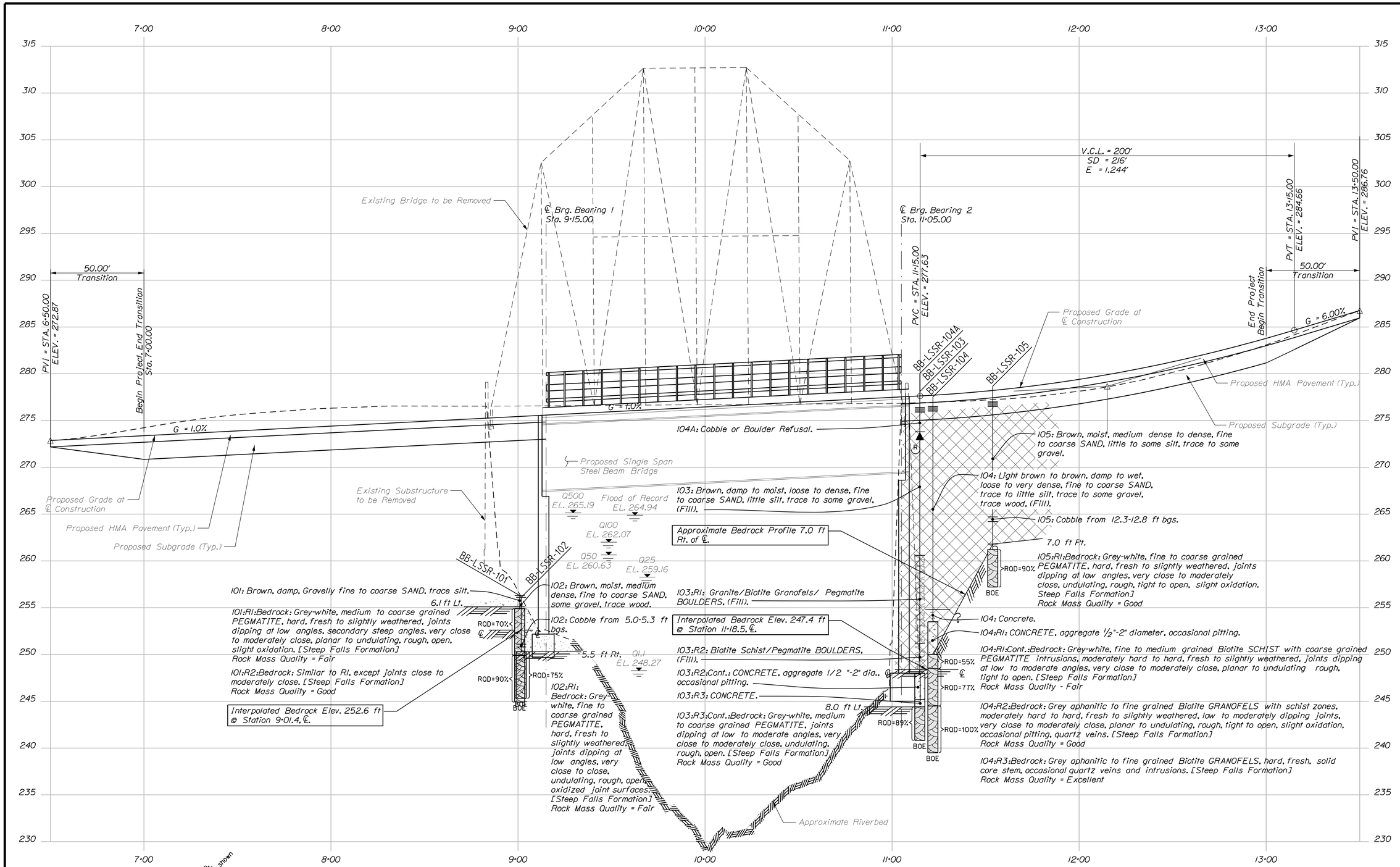

LEGEND

Boring No. Offset, if shown

Pavement Thickness if applicable

Strata Interface

Boring — ROD= Rock Quality Designation for Rock Core Sample

BOE= Bottom Of Exploration

PROFILE

HORIZ 25 0 25 50

VERT 5 0 5 10

Scale of Feet

Note: This generalized interpretive soil profile is intended to convey trends in subsurface conditions. The boundaries between strata are approximate and idealized, and have been developed by interpretations of widely spaced explorations and samples. Actual soil transitions may vary and are probably more erratic. For more specific information refer to the exploration logs.

STATE OF MAINE
DEPARTMENT OF TRANSPORTATION

BH-1823(200)X

WIN 18232.00

BRIDGE NO. 3328

BRIDGE PLANS

	BY	DATE
PROJ. MANAGER	M. P-ARLIN	
DESIGN-DETAILED		
CHECKED-REVIEWED		
DESIGN2-DETAILED2	K.MAGUIRE	
DESIGN3-DETAILED3	T.WHITE	SEPT 2013
REVISIONS 1		
REVISIONS 2		
REVISIONS 3		
REVISIONS 4		
FIELD CHANGES		

SIGNATURE

P.E. NUMBER

DATE

STEEP FALLS BRIDGE
SACO RIVER
LIMINGTON-STANDISH CUMBERLAND CNTY

INTERPRETIVE SUBSURFACE PROFILE

SHEET NUMBER

9

OF 45

Filename: ...\djwilk\dms28621\009_ISP1.dgn Division: BRIDGE Username: CAFUNSTON Date:2/4/2014

Filename: ...\dms28621\010_BORING LOGS1.dgn Division: BRIDGE Username: CAFUNSTON Date:2/4/2014

Maine Department of Transportation — Soil/Rock Exploration Log — US CUSTOMARY UNITS

Project: Steep Falls Bridge #3328 carries Route 11 over Saco River
Location: Limington-Standish, Maine

Boring No.: BB-LSSR-101
WIN: 18232.00

Driller:	MaineDOT	Elevation (ft.)	256.3	Auger ID/OD:	N/A
Operator:	Giles/Daggett	Datum:	NAVD88	Sampler:	Standard Split Spoon
Logged By:	B. Wilder	Rig Type:	CME 45C	Hammer Wt./Fall:	140#/30"
Date Start/Finish:	9/12/2013; 01:00-10:00	Drilling Method:	Cased Wash Boring	Core Barrel:	NQ-2
Boring Location:	9+00.5, 6.1 ft Lt.	Casing ID/OD:	NW	Water Level(ft):	None Observed
Hammer Efficiency Factor: 0.867		Hammer Type:	Automatic ☒ Hydraulic ☐	Rope & Cathead ☐	

Definitions:
D = Split Spoon Sample
MD = Unsuccessful Split Spoon Sample attempt
U = Thin Wall Tube Sample
MU = Unsuccessful Thin Wall Tube Sample attempt
V = Insitu Vane Shear Test, PP = Pocket Penetrometer
MV = Unsuccessful Insitu Vane Shear Test attempt
R = Rock Core Sample
SSA = Solid Stem Auger
HSA = Hollow Stem Auger
RC = Roller Cone
WOH = weight of 140lb. hammer
WOR/C = weight of rods or casing
WO1P = Weight of one person
S_u = Insitu Field Vane Shear Strength (psf)
T_v = Pocket Torvane Shear Strength (psf)
q_p = Unconfined Compressive Strength (ksf)
N-uncorrected = Raw Field SPT N-value
Hammer Efficiency Factor = Annual Calibration Value
N_{60} = SPT N-uncorrected corrected for hammer efficiency
N_{60} = (Hammer Efficiency Factor/60%)*N-uncorrected
$S_{u(lab)}$ = Lab Vane Shear Strength (psf)
WC = water content, percent
LL = Liquid Limit
PL = Plastic Limit
PI = Plasticity Index
G = Grain Size Analysis
C = Consolidation Test

Depth (ft.)	Sample No.	Pen./Rec. (in.)	Sample Depth (ft.)	Blows (/6 in.) Shear Strength (psf) or RQD (%)	N-uncorrected	N_{60}	Casing Blows	Elevation (ft.)	Visual Description and Remarks	Laboratory Testing Results/ AASHTO and Unified Class
0									Brown, damp, Gravelly fine to coarse SAND, trace silt, Spun Casing ahead to 1.4 ft bgs.	
	1D	13.2/9	0.00 - 1.10	2/7/30(12")	---		SPUN CASE			G243090 A-1-a, SW-SM WC=9.4%
	R1	60/60	1.40 - 6.40	RQD = 70%			NQ-2	255.10	1.20 — Top of Bedrock at Elev. 255.1 ft. R1:Bedrock: Grey-white, medium to coarse grained PEGMATITE, hard, fresh to slightly weathered, joints dipping at low angles, secondary steep angles, very close to moderately close, planar to undulating, rough, open, slight oxidation. [Steep Falls Formation] Rock Mass Quality = Fair R1:Core Times (minisec) 1.4-2.4 ft (4:52) 2.4-3.4 ft (4:19) 3.4-4.4 ft (4:40) 4.4-5.4 ft (4:20) 5.4-6.4 ft (5:20): 100% Recovery R2:Bedrock: Similar to R1, except joints close to moderately close. [Steep Falls Formation] Rock Mass Quality = Good R2:Core Times (minisec) 6.4-7.4 ft (4:55) 7.4-8.4 ft (5:58) 8.4-9.4 ft (5:58) 9.4-10.4 ft (6:00) 10.4-11.4 ft (6:00): 100% Recovery	
	R2	60/60	6.40 - 11.40	RQD = 90%				244.90	11.40 — Bottom of Exploration at 11.40 feet below ground surface.	

Remarks:
Bridge Deck (0.8 ft Concrete)
19.9 ft from Bridge Deck to Ground.
300-400 lbs down pressure on Core Barrel.

Stratification lines represent approximate boundaries between soil types; transitions may be gradual.
* Water level readings have been made at times and under conditions stated. Groundwater fluctuations may occur due to conditions other than those present at the time measurements were made.

Page 1 of 1 — Boring No.: BB-LSSR-101

Maine Department of Transportation — Soil/Rock Exploration Log — US CUSTOMARY UNITS

Project: Steep Falls Bridge #3328 carries Route 11 over Saco River
Location: Limington-Standish, Maine

Boring No.: BB-LSSR-102
WIN: 18232.00

Driller:	MaineDOT	Elevation (ft.)	256.1	Auger ID/OD:	N/A
Operator:	Giles/Daggett	Datum:	NAVD88	Sampler:	Standard Split Spoon
Logged By:	B. Wilder	Rig Type:	CME 45C	Hammer Wt./Fall:	140#/30"
Date Start/Finish:	9/19/2013; 01:00-11:00	Drilling Method:	Cased Wash Boring	Core Barrel:	NQ-2
Boring Location:	9+01.7, 5.5 ft Rt.	Casing ID/OD:	NW	Water Level(ft):	None Observed
Hammer Efficiency Factor: 0.867		Hammer Type:	Automatic ☒ Hydraulic ☐	Rope & Cathead ☐	

Depth (ft.)	Sample No.	Pen./Rec. (in.)	Sample Depth (ft.)	Blows (/6 in.) Shear Strength (psf) or RQD (%)	N-uncorrected	N_{60}	Casing Blows	Elevation (ft.)	Visual Description and Remarks	Laboratory Testing Results/ AASHTO and Unified Class
0	1D	24/16	0.00 - 2.00	6/5/4/8	9	13	15		Brown, moist, medium dense, fine to coarse SAND, some gravel, trace silt, trace wood.	G243091 A-1-b, SW-SM WC=8.7%
							12			
							38			
							56			
							90			
	2D R1	3.6/3 60/60	5.50 - 5.80 10.80	30(3.6"); RQD = 16%	---		NQ-2	250.30	Cobble from 5.0-5.3 ft bgs. Roller Coned ahead to 5.5 ft bgs. Similar to above. 5.80 — Top of Bedrock at Elev. 250.3 ft. R1:Bedrock: Grey-white, fine to coarse grained PEGMATITE, hard, fresh to slightly weathered, joints dipping at low angles, very close to close, undulating, rough, open, oxidized joint surfaces. [Steep Falls Formation] Rock Mass Quality = Fair R1:Core Times (minisec) 5.8-6.8 ft (4:29) 6.8-7.8 ft (4:54) 7.8-8.8 ft (4:50) 8.8-9.8 ft (5:50) 9.8-10.8 ft (5:00): 100% Recovery	
								245.30	10.80 — Bottom of Exploration at 10.80 feet below ground surface.	

Remarks:
20.2 ft from Bridge Deck to Ground.
Ledge Outcrop 3.0 ft South of Boring
300-400 lbs down pressure on Core Barrel.

Stratification lines represent approximate boundaries between soil types; transitions may be gradual.
* Water level readings have been made at times and under conditions stated. Groundwater fluctuations may occur due to conditions other than those present at the time measurements were made.

Page 1 of 1 — Boring No.: BB-LSSR-102

Maine Department of Transportation — Soil/Rock Exploration Log — US CUSTOMARY UNITS

Project: Steep Falls Bridge #3328 carries Route 11 over Saco River
Location: Limington-Standish, Maine

Boring No.: BB-LSSR-103
WIN: 18232.00

Driller:	MaineDOT	Elevation (ft.)	276.4	Auger ID/OD:	5" Solid Stem
Operator:	Giles/Daggett	Datum:	NAVD88	Sampler:	Standard Split Spoon
Logged By:	B. Wilder	Rig Type:	CME 45C	Hammer Wt./Fall:	140#/30"
Date Start/Finish:	9/12,16/2013	Drilling Method:	Cased Wash Boring	Core Barrel:	NQ-2
Boring Location:	11+14.6, 8.0 ft Lt.	Casing ID/OD:	NW	Water Level(ft):	None Observed
Hammer Efficiency Factor: 0.867		Hammer Type:	Automatic ☒ Hydraulic ☐	Rope & Cathead ☐	

Depth (ft.)	Sample No.	Pen./Rec. (in.)	Sample Depth (ft.)	Blows (/6 in.) Shear Strength (psf) or RQD (%)	N-uncorrected	N_{60}	Casing Blows	Elevation (ft.)	Visual Description and Remarks	Laboratory Testing Results/ AASHTO and Unified Class
0							SSA	275.90	0.50 — 6" Pavement	
	1D	24/20	1.50 - 3.50	11/8/8/7	16	23			Brown, damp, medium dense, fine to coarse SAND, little silt, trace gravel. (Fill).	G243092 A-2-4, SM WC=4.3%
5	2D	24/18	5.00 - 7.00	3/4/4/4	8	12			Brown, damp, medium dense, fine to coarse SAND, some gravel, little silt. (Fill).	G243093 A-1-b, SM WC=8.1%
10	3D	24/17	10.00 - 12.00	3/3/3/5	6	9	15		Brown, moist, loose, fine to coarse SAND, little gravel, little silt. (Fill).	G243094 A-1-b, SM WC=9.9%
							19			
							16			
							19			
15	4D	21.6/13	14.00 - 15.80	7/12/12/30(3.6")	24	35			Brown, moist, dense, Gravelly fine to coarse SAND, little silt. (Fill).	G243095 A-1-b, SM WC=10.8%
	R1	112.8/60	15.80 - 25.20				NQ-2	260.60	15.80 — R1: Granite/Biotite Granofels/Pegmatite BOULDERS. (Fill). R1:Core Times (minisec) 15.8-16.8 ft (4:10) 16.8-17.8 ft (3:00) 17.8-18.8 ft (1:00) 18.8-19.8 ft (0:30) 19.8-20.8 ft (1:00) 20.8-21.8 ft (1:00) 21.8-22.8 ft (0:30) 22.8-23.8 ft (2:00) 23.8-24.8 ft (1:00) 24.8-25.3 ft (0:45): 53% Recovery Core Barrel Full	
20										
25	R2	72/60	25.20 - 31.20					247.80	R2: Biotite Schist/Pegmatite BOULDERS. R2:Core Times (minisec) 25.2-26.2 ft (3:10) 26.2-27.2 ft (3:37) 27.2-28.2 ft (2:30) 5" Drop 28.2 — 28.2-29.2 ft (2:15) 5" Drop R2:Cont.: CONCRETE, aggregate .5"-2" diameter, occasional pitting. 29.2-30.2 ft (2:45) 30.2-31.2 ft (3:45) 83% Recovery	
30								244.40	R3: CONCRETE. R3: Core Times (minisec) 31.2-32.2 ft (3:15) 32.00 — Top of Bedrock at Elev. 244.4 ft. R3:Cont.:Bedrock: Grey-white, medium to coarse grained PEGMATITE, joints dipping at low to moderate angles, very close to moderately close, undulating, rough, open. [Steep Falls Formation] Rock Mass Quality = Good R3:Core Times (minisec) 32.2-33.2 ft (5:58) 33.2-34.2 ft (6:58) 34.2-35.2 ft (11:20) 35.2-35.7 ft (9:00): 100% Recovery	
	R3	54/54	31.20 - 35.70	RQD = 89%				240.70	35.70 — Bottom of Exploration at 35.70 feet below ground surface.	
35										
40										
45										
50										

Remarks:
300-400 lbs down pressure on Core Barrel.

Stratification lines represent approximate boundaries between soil types; transitions may be gradual.
* Water level readings have been made at times and under conditions stated. Groundwater fluctuations may occur due to conditions other than those present at the time measurements were made.

Page 1 of 1 — Boring No.: BB-LSSR-103

Maine Department of Transportation — Soil/Rock Exploration Log — US CUSTOMARY UNITS

Project: Steep Falls Bridge #3328 carries Route 11 over Saco River
Location: Limington-Standish, Maine

Boring No.: BB-LSSR-104
WIN: 18232.00

Driller:	MaineDOT	Elevation (ft.)	276.5	Auger ID/OD:	5" Solid Stem
Operator:	Giles/Daggett	Datum:	NAVD88	Sampler:	Standard Split Spoon
Logged By:	B. Wilder	Rig Type:	CME 45C	Hammer Wt./Fall:	140#/30"
Date Start/Finish:	9/18/2013; 07:30-12:00	Drilling Method:	Cased Wash Boring	Core Barrel:	NQ-2
Boring Location:	11+21.8, 7.0 ft Rt.	Casing ID/OD:	NW	Water Level(ft):	None Observed
Hammer Efficiency Factor: 0.867		Hammer Type:	Automatic ☒ Hydraulic ☐	Rope & Cathead ☐	

Depth (ft.)	Sample No.	Pen./Rec. (in.)	Sample Depth (ft.)	Blows (/6 in.) Shear Strength (psf) or RQD (%)	N-uncorrected	N_{60}	Casing Blows	Elevation (ft.)	Visual Description and Remarks	Laboratory Testing Results/ AASHTO and Unified Class
0							SSA	276.00	0.50 — 6" Pavement	
5	1D	24/13	5.00 - 7.00	3/5/3/3	8	12			Light brown, damp, medium dense, fine to coarse SAND, little silt, little gravel. (Fill).	G243096 A-2-4, SM WC=7.3%
10	2D	24/14	10.00 - 12.00	3/3/4/4	7	10	6		Brown, wet, loose, fine to coarse SAND, little silt, trace gravel, trace wood. (Fill).	G243097 A-1-b, SM WC=8.5%
							7			
							18			
							17			
							10			
15	3D	24/11	15.00 - 17.00	2/3/2/5	5	7	4		Brown, wet, loose, fine to coarse SAND, some gravel, trace silt. (Fill).	G243098 A-1-b, SW-SM WC=17.1%
							5			
							12			
							12			
							31			
20	4D	20.4/14	20.00 - 21.70	12/21/19/25(2.4)	40	58		254.80	Brown, wet, very dense, fine to coarse SAND, trace silt, trace gravel. (Fill). 21.70 — Roller Coned ahead to 23.0 ft bgs., in Concrete.	G243099 A-3, SP-SM WC=16.3%
25	R1	60/54	23.00 - 28.00				NQ-2		R1: CONCRETE, aggregate .5"-2" diameter, frequent pitting. R1:Core Times (minisec) 23.0-24.0 ft (8:05) 24.0-25.0 ft (10:24) No water return 25.0-26.0 ft (7:23)	
				RQD = 055%				250.00	26.50 — Top of Bedrock at Elev. 250.0 ft. R1:Cont.:Bedrock: Grey-white, fine to medium grained biotite SCHIST with coarse grained PEGMATITE intrusions, moderately hard to hard, fresh to slightly weathered, joints dipping at low to moderate angles, very close to moderately close, planar to undulating rough, tight to open. [Steep Falls Formation] Rock Mass Quality = Fair RQD based on Bedrock portion of run only. 26.0-27.0 ft (7:20) 27.0-28.0 ft (7:00): 90% Recovery R2:Bedrock: Grey aphanitic to fine grained biotite GRANOFELS with schist zones, moderately hard to hard, fresh to slightly weathered, low to moderately dipping joints, very close to moderately close, planar to undulating, rough, tight to open, slight oxidation, occasional pitting, quartz veins [Steep Falls Formation] Rock Mass Quality = Good R2:Core Times (minisec) 28.0-29.0 ft (4:10) No water return 29.0-30.0 ft (4:00) 30.0-31.0 ft (6:10) 31.0-32.0 ft (6:20) 100% Recovery Core Blocked R3:Bedrock: Grey aphanitic to fine grained biotite GRANOFELS, hard, fresh, solid core stem, occasional quartz veins and intrusions. [Steep Falls Formation] Rock Mass Quality = Excellent R3:Core Times (minisec) 32.0-33.0 ft (6:00) 33.0-34.0 ft (3:50) 34.0-35.0 ft (5:25) 35.0-36.0 ft (6:15) 36.0-37.0 ft (7:00): 100% Recovery	
30	R2	48/48	28.00 - 32.00	RQD = 77%						
35	R3	60/60	32.00 - 37.00	RQD = 100%				239.50		
40										
45										
50									37.00 — Bottom of Exploration at 37.00 feet below ground surface.	

Remarks:
300-400 lbs down pressure on Core Barrel.

Stratification lines represent approximate boundaries between soil types; transitions may be gradual.
* Water level readings have been made at times and under conditions stated. Groundwater fluctuations may occur due to conditions other than those present at the time measurements were made.

Page 1 of 1 — Boring No.: BB-LSSR-104

Maine Department of Transportation — Soil/Rock Exploration Log — US CUSTOMARY UNITS

Project: Steep Falls Bridge #3328 carries Route 11 over Saco River
Location: Limington-Standish, Maine

Boring No.: BB-LSSR-104A
WIN: 18232.00

Driller:	MaineDOT	Elevation (ft.)	276.5	Auger ID/OD:	5" Solid Stem
Operator:	Giles/Daggett	Datum:	NAVD88	Sampler:	Standard Split Spoon
Logged By:	B. Wilder	Rig Type:	CME 45C	Hammer Wt./Fall:	140#/30"
Date Start/Finish:	9/18/2013; 12:30-16:00	Drilling Method:	Cased Wash Boring	Core Barrel:	NQ-2
Boring Location:	11+53.6, 7.0 ft Rt.	Casing ID/OD:	NW	Water Level(ft):	None Observed
Hammer Efficiency Factor: 0.867		Hammer Type:	Automatic ☒ Hydraulic ☐	Rope & Cathead ☐	

Depth (ft.)	Sample No.	Pen./Rec. (in.)	Sample Depth (ft.)	Blows (/6 in.) Shear Strength (psf) or RQD (%)	N-uncorrected	N_{60}	Casing Blows	Elevation (ft.)	Visual Description and Remarks	Laboratory Testing Results/ AASHTO and Unified Class
0							SSA	273.90	Cobble or Boulder at 2.6 ft bgs.	
									2.60 — Bottom of Exploration at 2.60 feet below ground surface. Cobble or Boulder REFUSAL	

Remarks:

Stratification lines represent approximate boundaries between soil types; transitions may be gradual.
* Water level readings have been made at times and under conditions stated. Groundwater fluctuations may occur due to conditions other than those present at the time measurements were made.

Page 1 of 1 — Boring No.: BB-LSSR-104A

Maine Department of Transportation — Soil/Rock Exploration Log — US CUSTOMARY UNITS

Project: Steep Falls Bridge #3328 carries Route 11 over Saco River
Location: Limington-Standish, Maine

Boring No.: BB-LSSR-105
WIN: 18232.00

Driller:	MaineDOT	Elevation (ft.)	277.0	Auger ID/OD:	5" Solid Stem
Operator:	Giles/Daggett	Datum:	NAVD88	Sampler:	Standard Split Spoon
Logged By:	B. Wilder	Rig Type:	CME 45C	Hammer Wt./Fall:	140#/30"
Date Start/Finish:	9/18/2013; 12:30-16:00	Drilling Method:	Cased Wash Boring	Core Barrel:	NQ-2
Boring Location:	11+53.6, 7.0 ft Rt.	Casing ID/OD:	NW	Water Level(ft):	None Observed
Hammer Efficiency Factor: 0.867		Hammer Type:	Automatic ☒ Hydraulic ☐	Rope & Cathead ☐	

Depth (ft.)	Sample No.	Pen./Rec. (in.)	Sample Depth (ft.)	Blows (/6 in.) Shear Strength (psf) or RQD (%)	N-uncorrected	N_{60}	Casing Blows	Elevation (ft.)	Visual Description and Remarks	Laboratory Testing Results/ AASHTO and Unified Class
0							SSA	276.50	0.50 — 6" Pavement	
	1D	24/18	5.00 - 7.00	5/6/5/6	11	16			Brown, moist, medium dense, fine to coarse SAND, little silt, trace gravel.	G243100 A-2-4, SM WC=11.4%
5										
10	2D	24/19	10.00 - 12.00	5/5/24/31	29	42	28		Brown, moist, dense, fine to coarse SAND, some silt, some gravel.	G243051 A-2-4, SM WC=10.0%
							150			
							16		Cobble from 12.3-12.8 ft bgs.	
							35			
							140			
15	R1	48/45	15.80 - 19.80	RQD = 90%			NQ-2	261.80	15.20 — Top of Bedrock at Elev. 261.8 ft. Roller Coned ahead to 15.8 ft bgs. R1:Bedrock: Grey-white, fine to coarse grained PEGMATITE, hard, fresh to slightly weathered, joints dipping at low angles, very close to moderately close, undulating, rough, tight to open, slight oxidation. [Steep Falls Formation] Rock Mass Quality = Good R1:Core Times (minisec) 15.8-16.8 ft (4:16) 16.8-17.8 ft (14:16) 17.8-18.8 ft (14:52) 18.8-19.8 ft (24:22): 94% Recovery 3" core left in bottom of boring.	
20								257.20	19.80 — Bottom of Exploration at 19.80 feet below ground surface.	

Remarks:
400-600 lbs down pressure on Core Barrel.

Stratification lines represent approximate boundaries between soil types; transitions may be gradual.
* Water level readings have been made at times and under conditions stated. Groundwater fluctuations may occur due to conditions other than those present at the time measurements were made.

Page 1 of 1 — Boring No.: BB-LSSR-105

STATE OF MAINE
DEPARTMENT OF TRANSPORTATION

BH-1823(200)X

WIN 18232.00

BRIDGE NO. 3328

BRIDGE PLANS

	BY	DATE
PROJ. MANAGER	M. PARLIN	
DESIGN-DETAILED		
CHECKED-REVIEWED		
DESIGN2-DETAILED2	K.MADURE	OCT 2013
DESIGN3-DETAILED3	T.WHITE	
REVISIONS 1		
REVISIONS 2		
REVISIONS 3		
REVISIONS 4		
FIELD CHANGES		

SIGNATURE

P.E. NUMBER

DATE

STEEP FALLS BRIDGE
SACO RIVER
LIMINGTON-STANDISH CUMBERLAND CNTY

BORING LOGS

SHEET NUMBER
10
OF 45

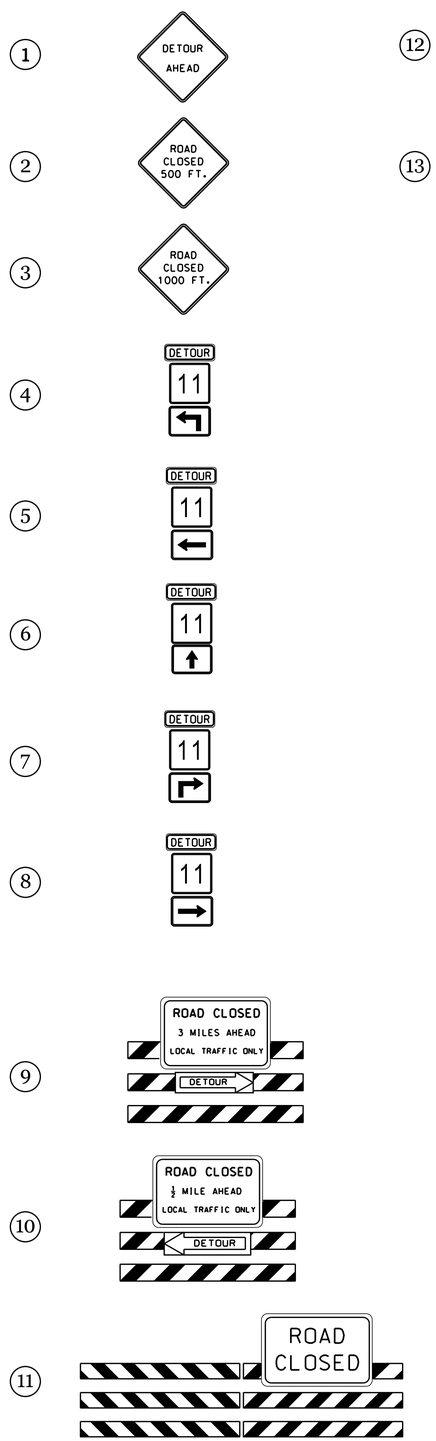

See Note 1.

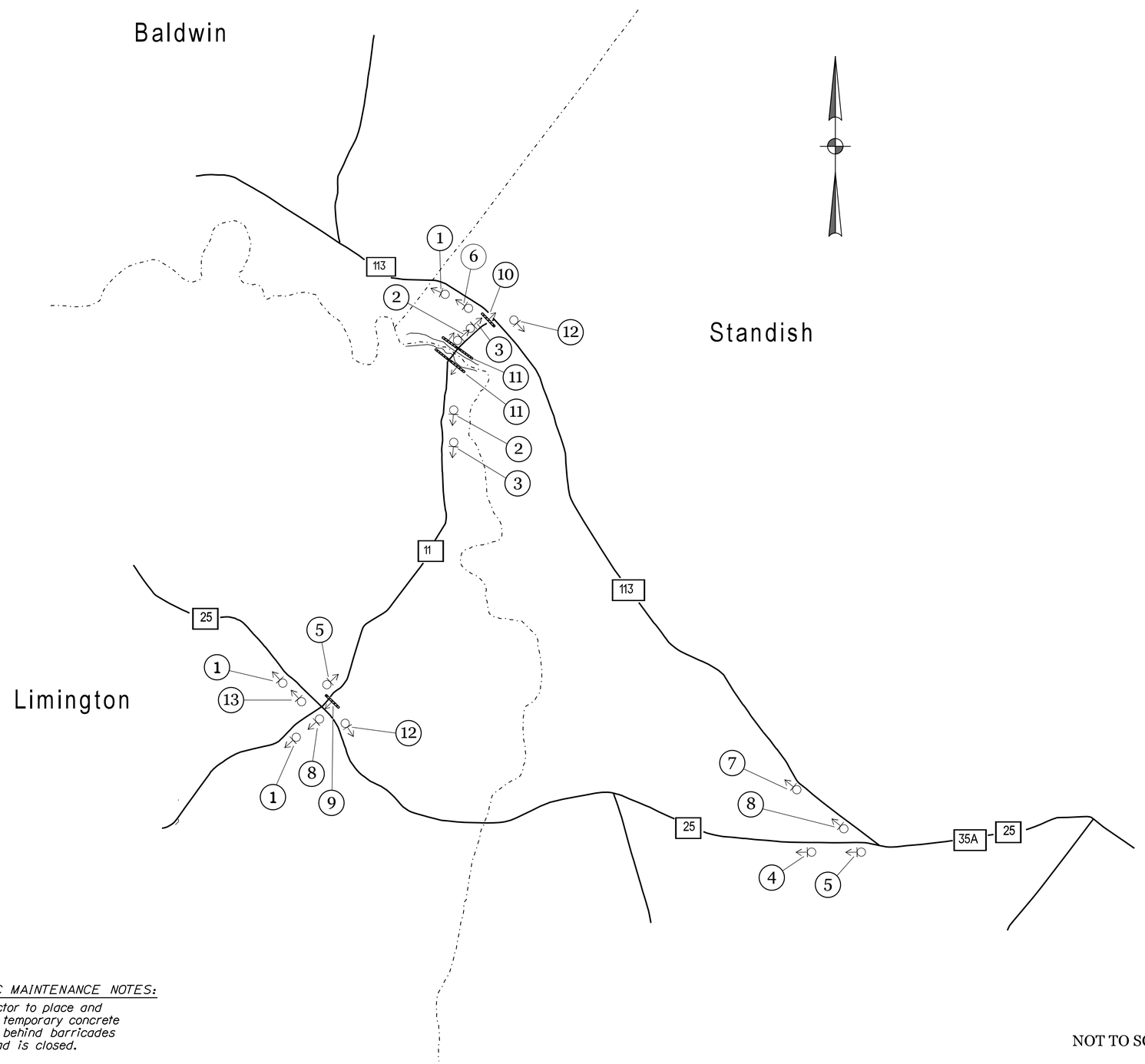

TRAFFIC MAINTENANCE NOTES:

1. Contractor to place and maintain temporary concrete barriers behind barricades while road is closed.

NOT TO SCALE

TranSystems

STATE OF MAINE
DEPARTMENT OF TRANSPORTATION

BH-1823(200)X

WIN 18232.00

BRIDGE NO. 3328

BRIDGE PLANS

PROJ. MANAGER	M. PARLIN	BY	DATE
DESIGN-DETAILED	D. WILK	D. WILK	1/28/14
CHECKED-REVIEWED	T. SANDELL		
DESIGN2-DETAILED2			
DESIGN3-DETAILED3			
REVISIONS 1			
REVISIONS 2			
REVISIONS 3			
REVISIONS 4			
FIELD CHANGES			

SIGNATURE

P.E. NUMBER

DATE

STEEP FALLS BRIDGE
SACO RIVER
LIMINGTON/STANDISH YORK/CUMBERLAND

DETOUR PLAN

SHEET NUMBER

11

OF 45

Filename: ...\dms28621\011_Detour Plan.dgn Division: BRIDGE Username: CAFUNSTON Date:2/4/2014

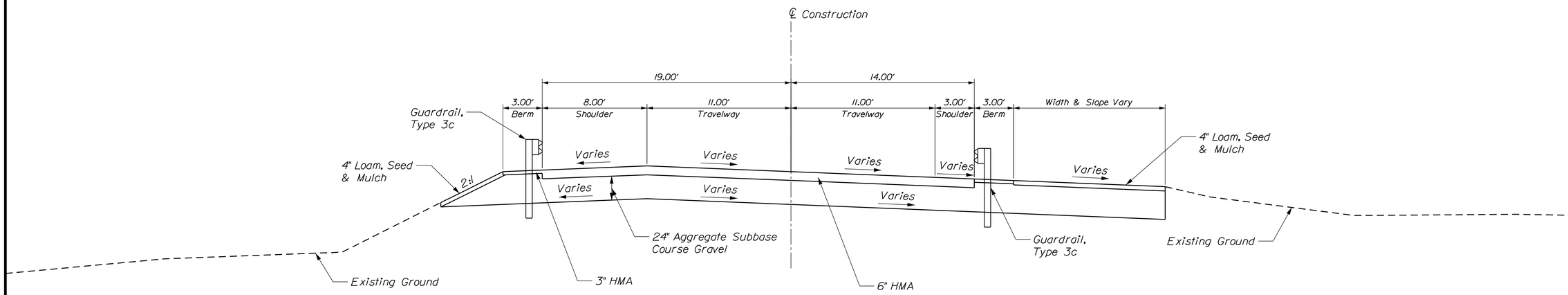

PROPOSED STATE ROUTE 11 TYPICAL SECTION
LIMINGTON APPROACH
STATION 7+90.00 TO BRIDGE

AGGREGATE SUBBASE COURSE GRAVEL		
LEFT SHOULDER 103.00 CY/100 LF	22 FT TRAVEL LANES 162.96 CY/100 LF	RIGHT SHOULDER VARIES CY/100 LF
STATION TO STATION	STATION TO STATION	STATION TO STATION
7+90 to Bridge	7+90 to Bridge	7+90 to Bridge

SUPERELEVATION TABLE

LT SHOULDER	LT TRAVELWAY	STATION	RT TRAVELWAY	RT SHOULDER
		START		
EXIST.	EXIST.	6+50	EXIST.	EXIST.
-2.0	6.0	7+00	-6.0	-6.0
-3.0	3.8	7+50	-3.8	-3.8
-3.0	1.5	8+00	-3.0	-3.0
-3.0	-0.8	8+50	-3.0	-3.0
-3.0	-3.0	9+00	-3.0	-3.0

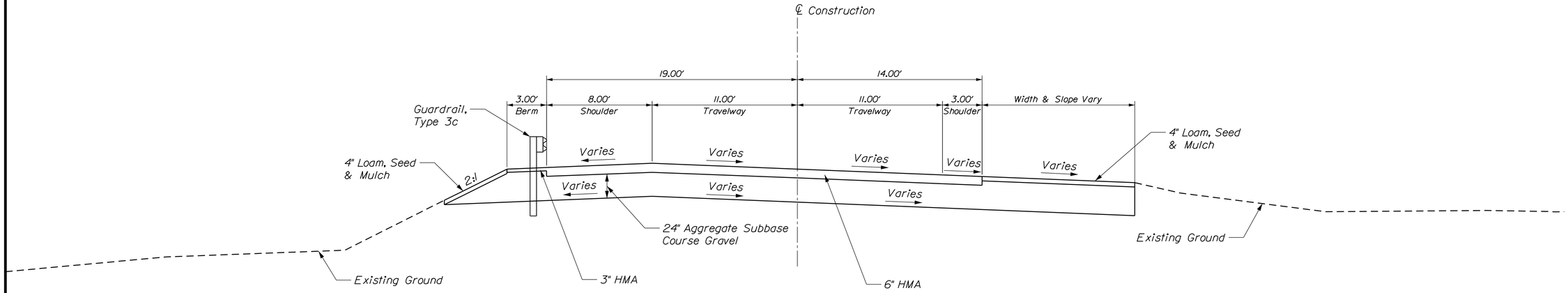

PROPOSED STATE ROUTE 11 TYPICAL SECTION
LIMINGTON APPROACH
STATION 6+50.00 TO 7+90.00

AGGREGATE SUBBASE COURSE GRAVEL		
LEFT SHOULDER 103.00 CY/100 LF	22 FT TRAVEL LANES 162.96 CY/100 LF	RIGHT SHOULDER VARIES CY/100 LF
STATION TO STATION	STATION TO STATION	STATION TO STATION
6+50 to 7+90	6+50 to 7+90	6+50 to 7+90

TranSystems

STATE OF MAINE
DEPARTMENT OF TRANSPORTATION
BH-1823(200)X
WIN 18232.00
BRIDGE NO. 3328
BRIDGE PLANS

	BY	DATE
PROJ. MANAGER	M. PARLIN	
DESIGN-DETAILED	D. WILK	1/28/14
CHECKED-REVIEWED	T. SANDELL	
DESIGN2-DETAILED2		
DESIGN3-DETAILED3		
REVISIONS 1		
REVISIONS 2		
REVISIONS 3		
REVISIONS 4		
FIELD CHANGES		

SIGNATURE
P.E. NUMBER
DATE

STEEP FALLS BRIDGE
SACO RIVER
LIMINGTON/STANDISH YORK/CUMBERLAND

ROADWAY TYPICAL SECTIONS

SHEET NUMBER
12
OF 45

Filename: ...\dms28621\012_TypSec1.dgn Division: BRIDGE Username: CAFUNSTON Date:2/4/2014

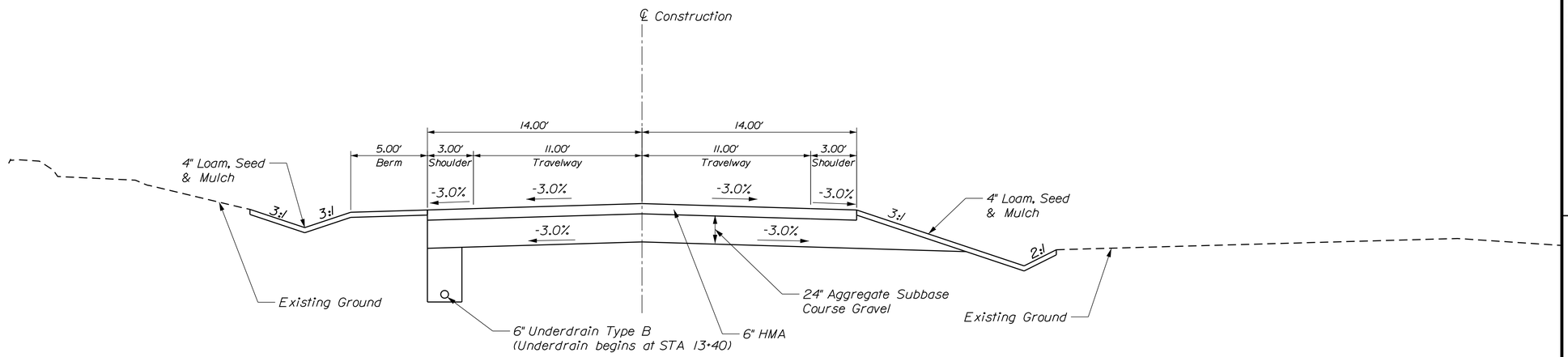

PROPOSED STATE ROUTE 11 TYPICAL SECTION
STANDISH APPROACH
STATION 11+75.00 TO 13+50.00

AGGREGATE SUBBASE COURSE GRAVEL		
LEFT SHOULDER 22.22 CY/100 LF	22 FT TRAVEL LANES 162.96 CY/100 LF	RIGHT SHOULDER 26.12 CY/100 LF
STATION TO STATION	STATION TO STATION	STATION TO STATION
11+75 to 13+00	11+75 to 13+50	11+75 to 13+00

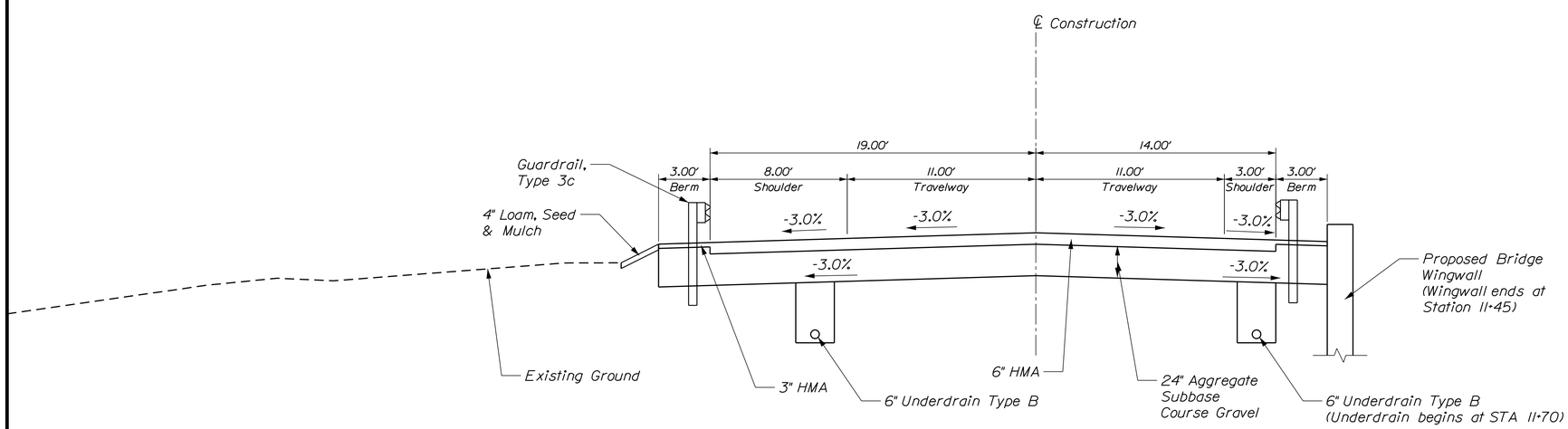

PROPOSED STATE ROUTE 11 TYPICAL SECTION
STANDISH APPROACH
BRIDGE TO STATION 11+75.00

AGGREGATE SUBBASE COURSE GRAVEL		
LEFT SHOULDER 84.25 CY/100 LF	22 FT TRAVEL LANES 162.96 CY/100 LF	RIGHT SHOULDER 47.22 CY/100 LF
STATION TO STATION	STATION TO STATION	STATION TO STATION
Bridge to 11+75	Bridge to 11+75	Bridge to 11+75

TranSystems

STATE OF MAINE
DEPARTMENT OF TRANSPORTATION

BH-1823(200)X

WIN 18232.00

BRIDGE NO. 3328

BRIDGE PLANS

PROJ. MANAGER	M. PARLIN	BY	DATE
DESIGN-DETAILED	D. WILK	D. WILK	1/28/14
CHECKED-REVIEWED	T. SANDELL		
DESIGN2-DETAILED2			
DESIGN3-DETAILED3			
REVISIONS 1			
REVISIONS 2			
REVISIONS 3			
REVISIONS 4			
FIELD CHANGES			

SIGNATURE

P.E. NUMBER

DATE

STEEP FALLS BRIDGE
SACO RIVER
LIMINGTON/STANDISH YORK/CUMBERLAND

ROADWAY TYPICAL SECTIONS

SHEET NUMBER

13

OF 45

Filename: ...\dms28621\013_TypSec2.dgn Division: BRIDGE Username: CAFUNSTON Date:2/4/2014

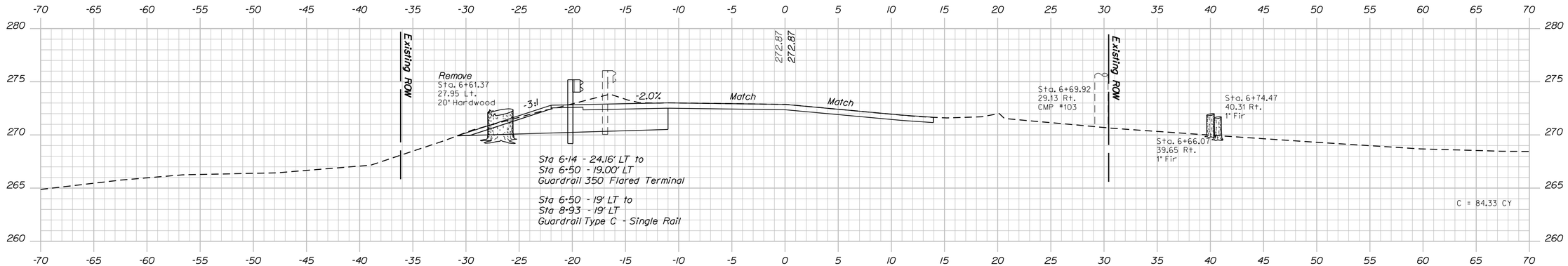

6+50.00
Begin Transition

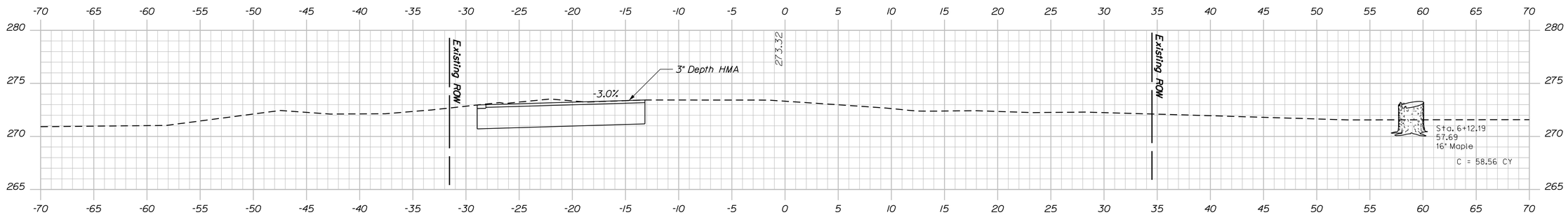

6+00.00

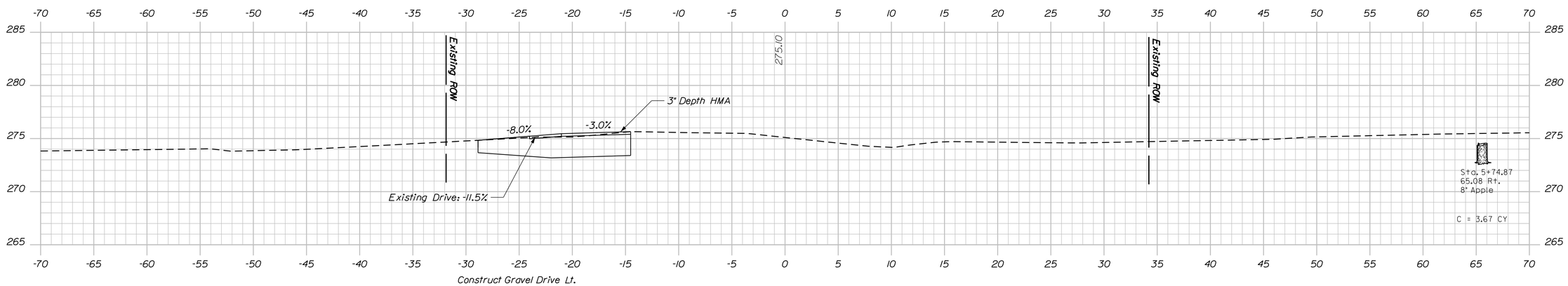

5+50.00 (Drive Lt.)
Limit of Work Sta. 5+44.70

STATE OF MAINE
DEPARTMENT OF TRANSPORTATION

BH-1823(200)X

WIN 18232.00

BRIDGE NO. 3328

BRIDGE PLANS

PROJ. MANAGER	M. PARLIN	BY	DATE
DESIGN-DETAILED	D. WILK	D. WILK	1/28/14
CHECKED-REVIEWED	T. SANDELL		
DESIGN2-DETAILED2			
DESIGN3-DETAILED3			
REVISIONS 1			
REVISIONS 2			
REVISIONS 3			
REVISIONS 4			
FIELD CHANGES			

SIGNATURE

P.E. NUMBER

DATE

STEEP FALLS BRIDGE
SACO RIVER
LIMINGTON/STANDISH YORK/CUMBERLAND

CROSS SECTIONS

SHEET NUMBER
14
OF 45

TranSystems

Filename: ...\djwilk\dms28621\014_xsec1.dgn Division: BRIDGE Username: CAFUNSTON Date:2/4/2014

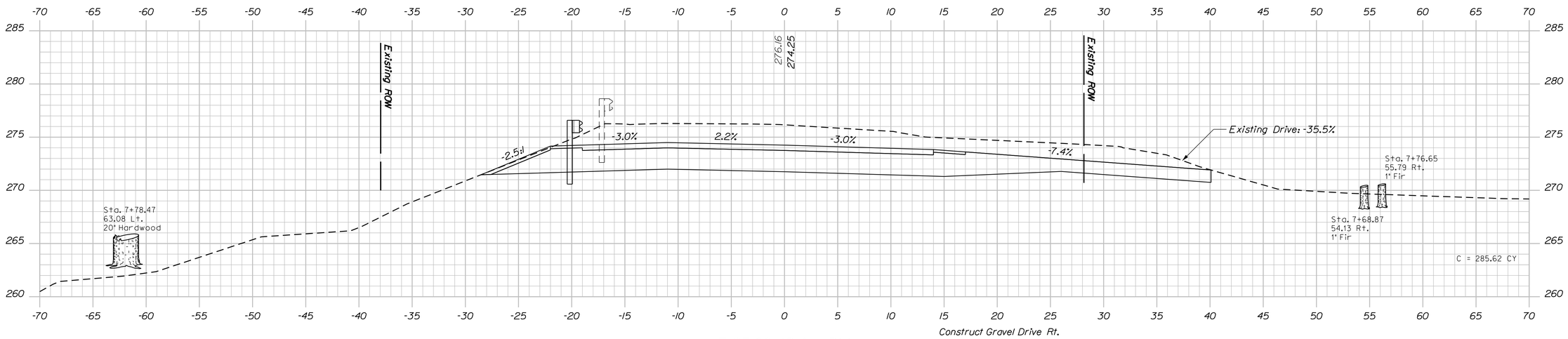

7+85.00 (Drive Rt.)

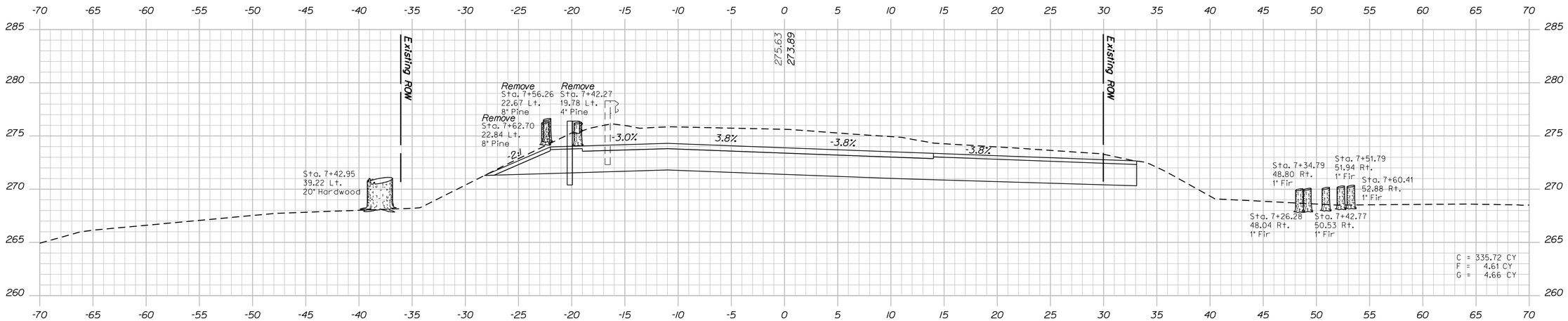

7+50.00

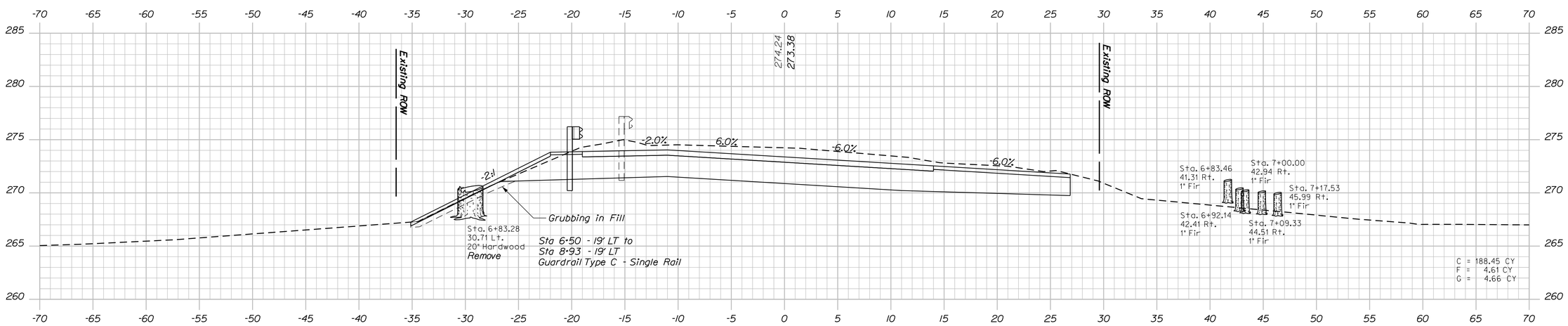

7+00.00
End Transition
Begin Project

TranSystems

STATE OF MAINE
DEPARTMENT OF TRANSPORTATION

BH-1823(200)X

WIN 18232.00

BRIDGE NO. 3328

BRIDGE PLANS

		BY	DATE
PROJ. MANAGER	M. P-ARLIN		
DESIGN-DETAILED	D. WILK	D. WILK	1/28/14
CHECKED-REVIEWED	T. SANDELL		
DESIGN2-DETAILED2			
DESIGN3-DETAILED3			
REVISIONS 1			
REVISIONS 2			
REVISIONS 3			
REVISIONS 4			
FIELD CHANGES			

SIGNATURE

P.E. NUMBER

DATE

STEEP FALLS BRIDGE
SACO RIVER
LIMINGTON/STANDISH YORK/CUMBERLAND

CROSS SECTIONS

SHEET NUMBER

15

OF 45

Filename: ...\djwilk\dms28621\015_xsec2.dgn Division: BRIDGE Username: CAFUNSTON Date:2/4/2014

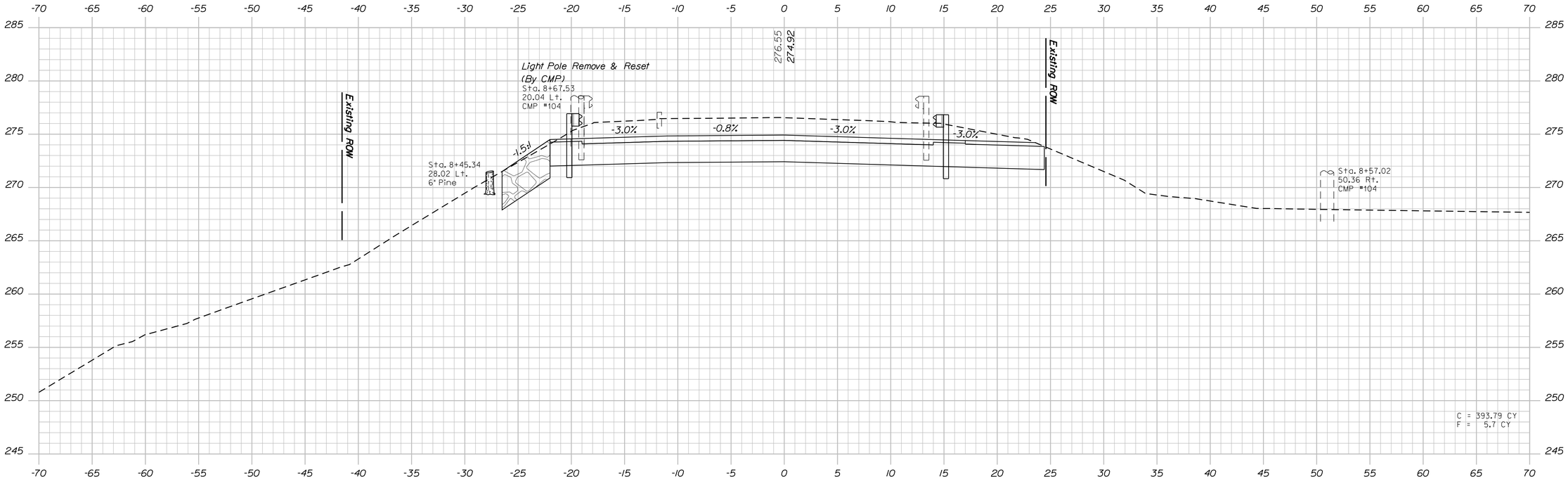

8+50.00

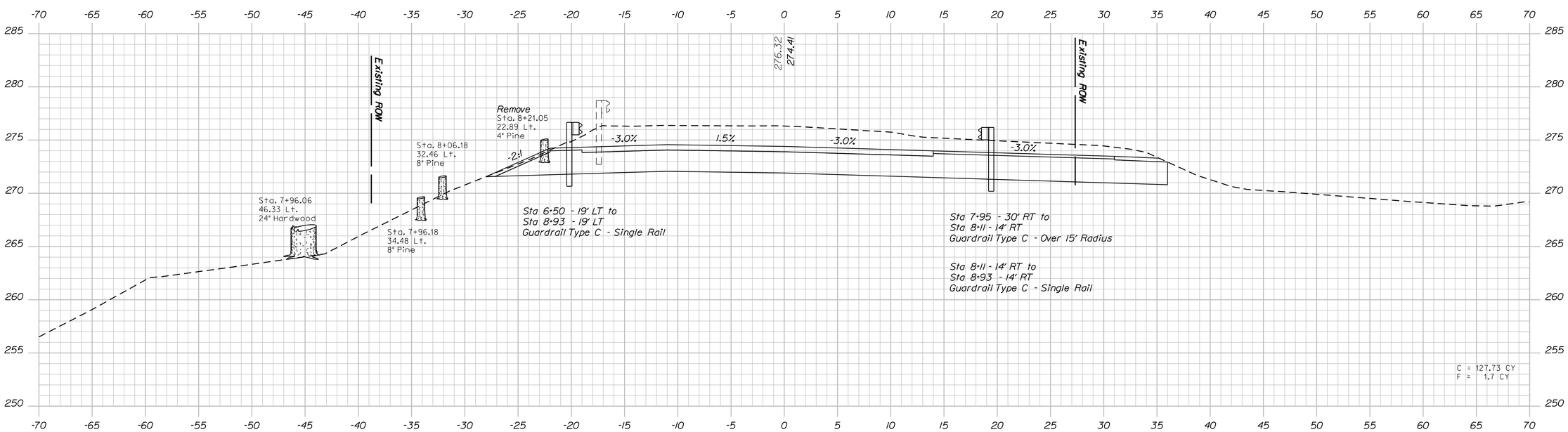

8+00.00

TranSystems

STATE OF MAINE
DEPARTMENT OF TRANSPORTATION

BH-1823(200)X

WIN 18232.00

BRIDGE NO. 3328

BRIDGE PLANS

PROJ. MANAGER	M. PARLIN			
DESIGN-DETAILED	D. WILK	BY	D. WILK	DATE 1/28/14
CHECKED-REVIEWED	D. WILK			
DESIGN2-DETAILED2	T. SANDELL			
DESIGN3-DETAILED3				
REVISIONS 1				
REVISIONS 2				
REVISIONS 3				
REVISIONS 4				
FIELD CHANGES				

SIGNATURE

P.E. NUMBER

DATE

STEEP FALLS BRIDGE
SACO RIVER
LIMINGTON/STANDISH YORK/CUMBERLAND

CROSS SECTIONS

SHEET NUMBER

16

OF 45

Filename: ...\djwilk\dms28621\016_xsec3.dgn Division: BRIDGE Username: CAFUNSTON Date:2/4/2014

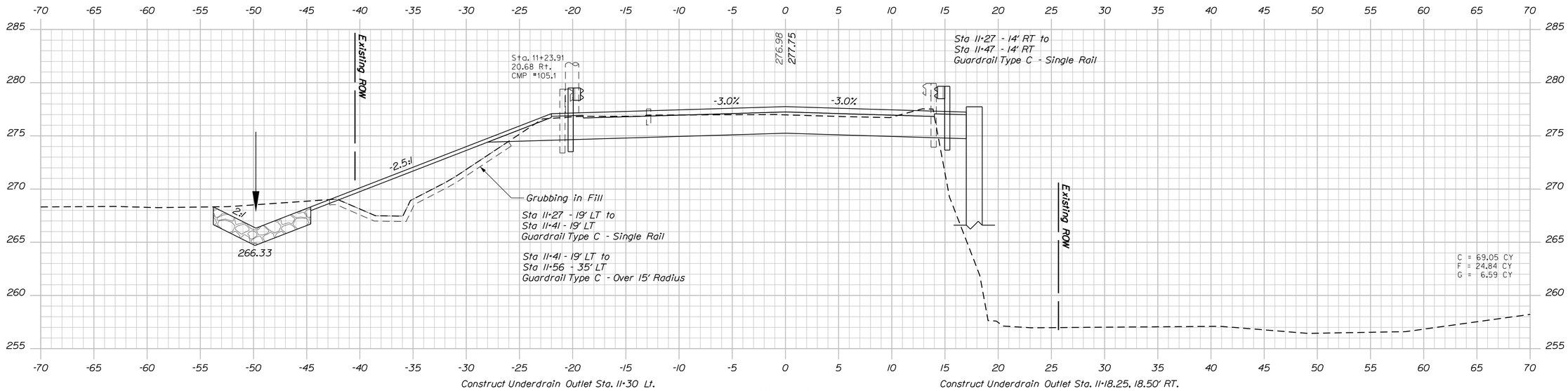

11+25.00
End Bridge Sta. 11+09.00

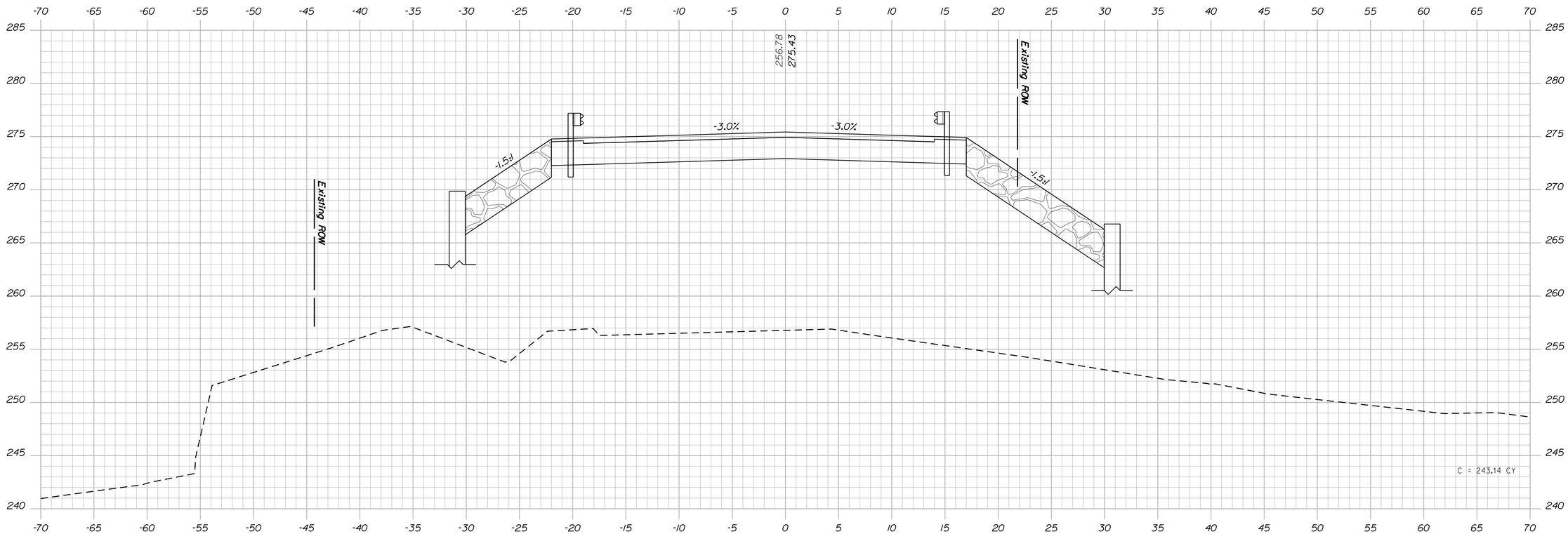

9+00.00
Begin Bridge Sta. 9+11.00

STATE OF MAINE
DEPARTMENT OF TRANSPORTATION

BH-1823(200)X

WIN 18232.00

BRIDGE NO. 3328

BRIDGE PLANS

SIGNATURE
P.E. NUMBER
DATE

PROJ. MANAGER	M. PARLIN	BY	DATE
DESIGN-DETAILED	D. WILK	D. WILK	1/28/14
CHECKED-REVIEWED	T. SANDELL		
DESIGN2-DETAILED2			
DESIGN3-DETAILED3			
REVISIONS 1			
REVISIONS 2			
REVISIONS 3			
REVISIONS 4			
FIELD CHANGES			

STEEP FALLS BRIDGE
SACO RIVER
LIMINGTON/STANDISH YORK/CUMBERLAND

CROSS SECTIONS

SHEET NUMBER
17
OF 45

TranSystems

Filename: ...\djwilk\dms28621\017_xsec4.dgn Division: BRIDGE Username: CAFUNSTON Date:2/4/2014

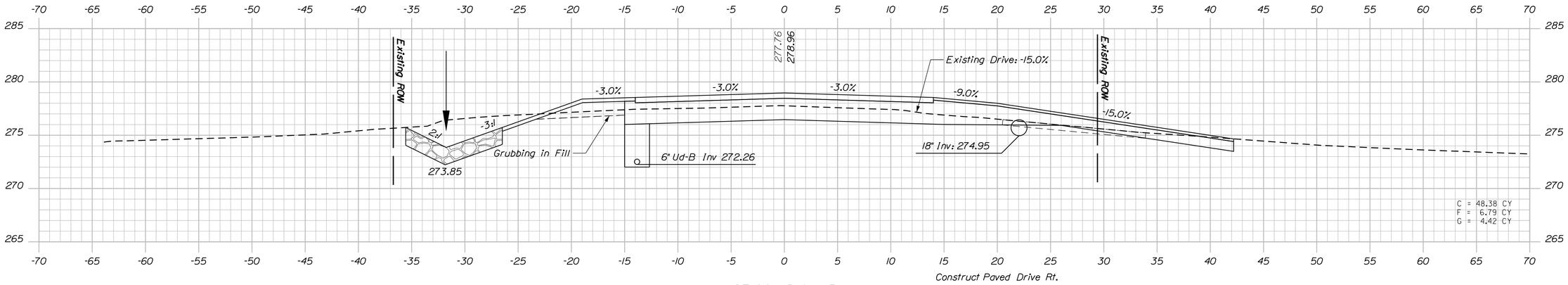

11+85.00 (Drive Rt.)

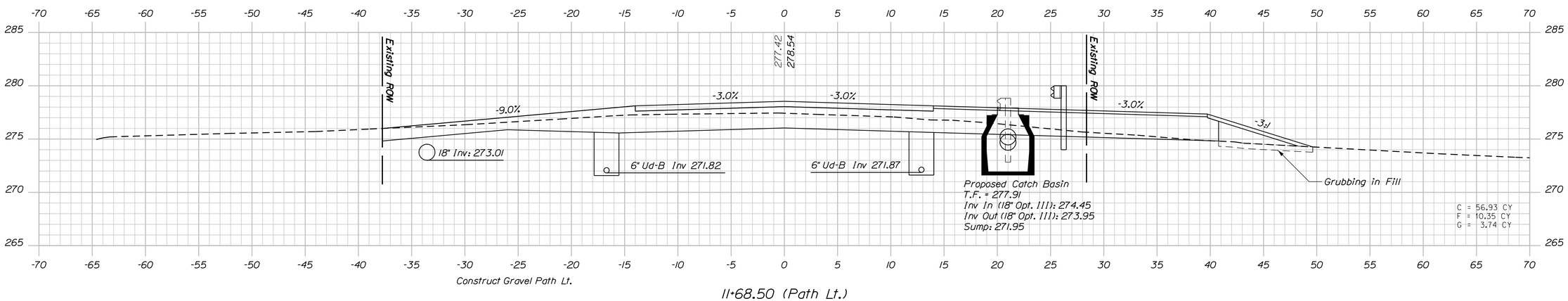

11+68.50 (Path Lt.)

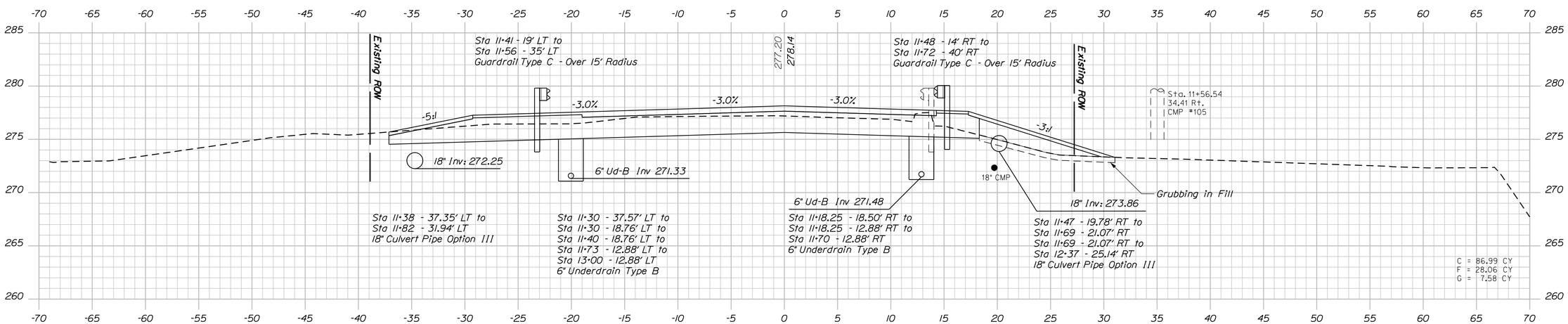

11+50.00

STATE OF MAINE
DEPARTMENT OF TRANSPORTATION

BH-1823(200)X

WIN 18232.00

BRIDGE NO. 3328

BRIDGE PLANS

	BY	DATE
PROJ. MANAGER	M. PARLIN	
DESIGN-DETAILED	D. WILK	1/28/14
CHECKED-REVIEWED	T. SANDELL	
DESIGN2-DETAILED2		
DESIGN3-DETAILED3		
REVISIONS 1		
REVISIONS 2		
REVISIONS 3		
REVISIONS 4		
FIELD CHANGES		

SIGNATURE

P.E. NUMBER

DATE

STEEP FALLS BRIDGE
SACO RIVER
LIMINGTON/STANDISH YORK/CUMBERLAND

CROSS SECTIONS

SHEET NUMBER

18

OF 45

TranSystems

Filename: ...\djwilk\dms28621\018_xsec5.dgn Division: BRIDGE Username: CAFUNSTON Date:2/4/2014

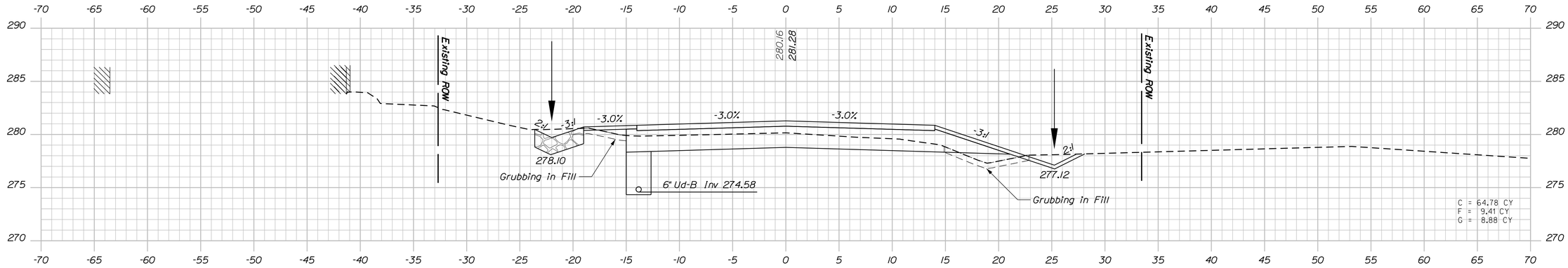

12+50.00

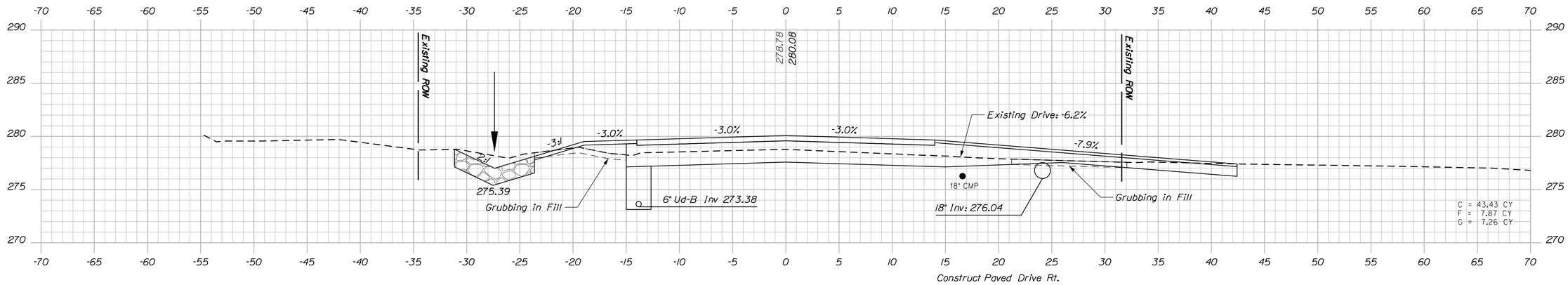

12+20.00 (Drive Rt.)

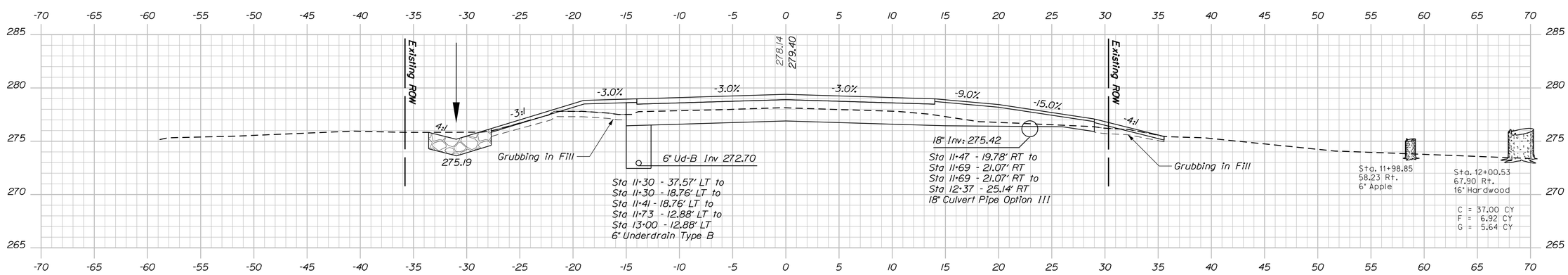

12+00.00

STATE OF MAINE
DEPARTMENT OF TRANSPORTATION

BH-1823(200)X

WIN 18232.00

BRIDGE NO. 3328

BRIDGE PLANS

PROJ. MANAGER	M. PARLIN	BY	DATE
DESIGN-DETAILED	D. WILK	D. WILK	1/28/14
CHECKED-REVIEWED	T. SANDELL		
DESIGN2-DETAILED2			
DESIGN3-DETAILED3			
REVISIONS 1			
REVISIONS 2			
REVISIONS 3			
REVISIONS 4			
FIELD CHANGES			

SIGNATURE

P.E. NUMBER

DATE

STEEP FALLS BRIDGE
SACO RIVER
LIMINGTON/STANDISH YORK/CUMBERLAND

CROSS SECTIONS

SHEET NUMBER

19

OF 45

TranSystems

Filename: ...\djwilk\dms28621\019_xsec6.dgn Division: BRIDGE Username: CAFUNSTON Date:2/4/2014

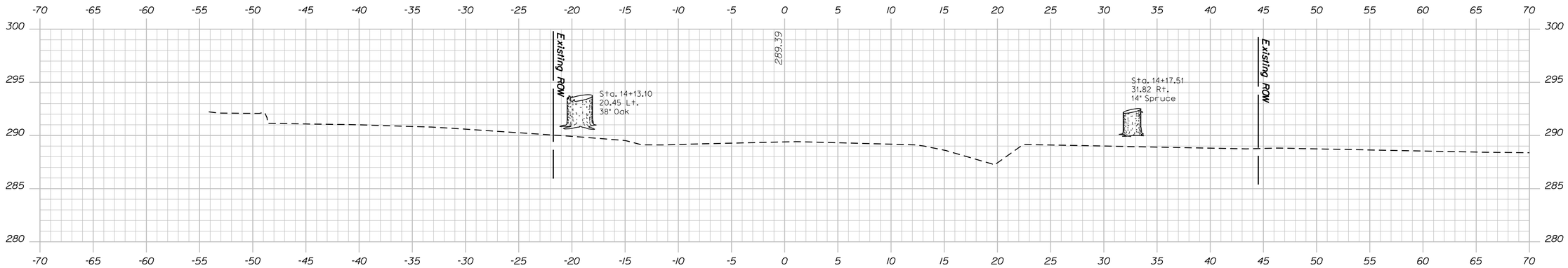

14+00.00

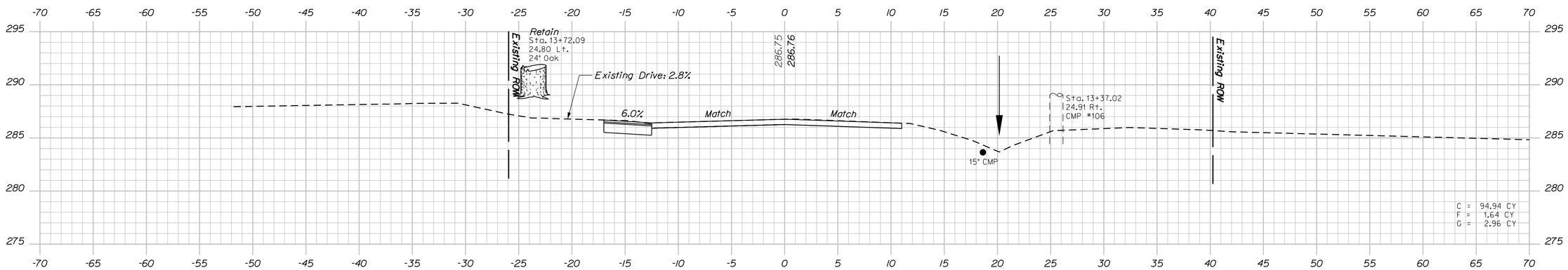

13+50.00 (Drive Lt.)
End Transition
Limit of Work Sta. 13+58.79

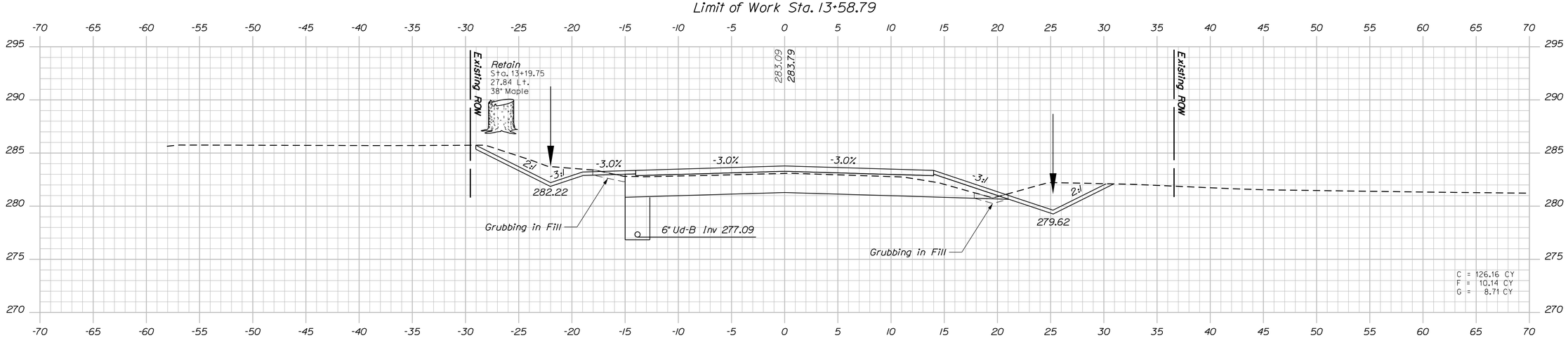

13+00.00
End Project
Begin Transition

STATE OF MAINE
DEPARTMENT OF TRANSPORTATION

BH-1823(200)X

WIN 18232.00

BRIDGE NO. 3328

BRIDGE PLANS

		BY	DATE
PROJ. MANAGER	M. PARLIN		
DESIGN-DETAILED	D. WILK	D. WILK	1/28/14
CHECKED-REVIEWED	T. SANDELL		
DESIGN2-DETAILED2			
DESIGN3-DETAILED3			
REVISIONS 1			
REVISIONS 2			
REVISIONS 3			
REVISIONS 4			
FIELD CHANGES			

SIGNATURE

P.E. NUMBER

DATE

STEEP FALLS BRIDGE
SACO RIVER
LIMINGTON/STANDISH YORK/CUMBERLAND

CROSS SECTIONS

TranSystems

SHEET NUMBER
20
OF 45

Filename: ...\djwilk\dms28621\020_xsec7.dgn Division: BRIDGE Username: CAFUNSTON Date:2/4/2014

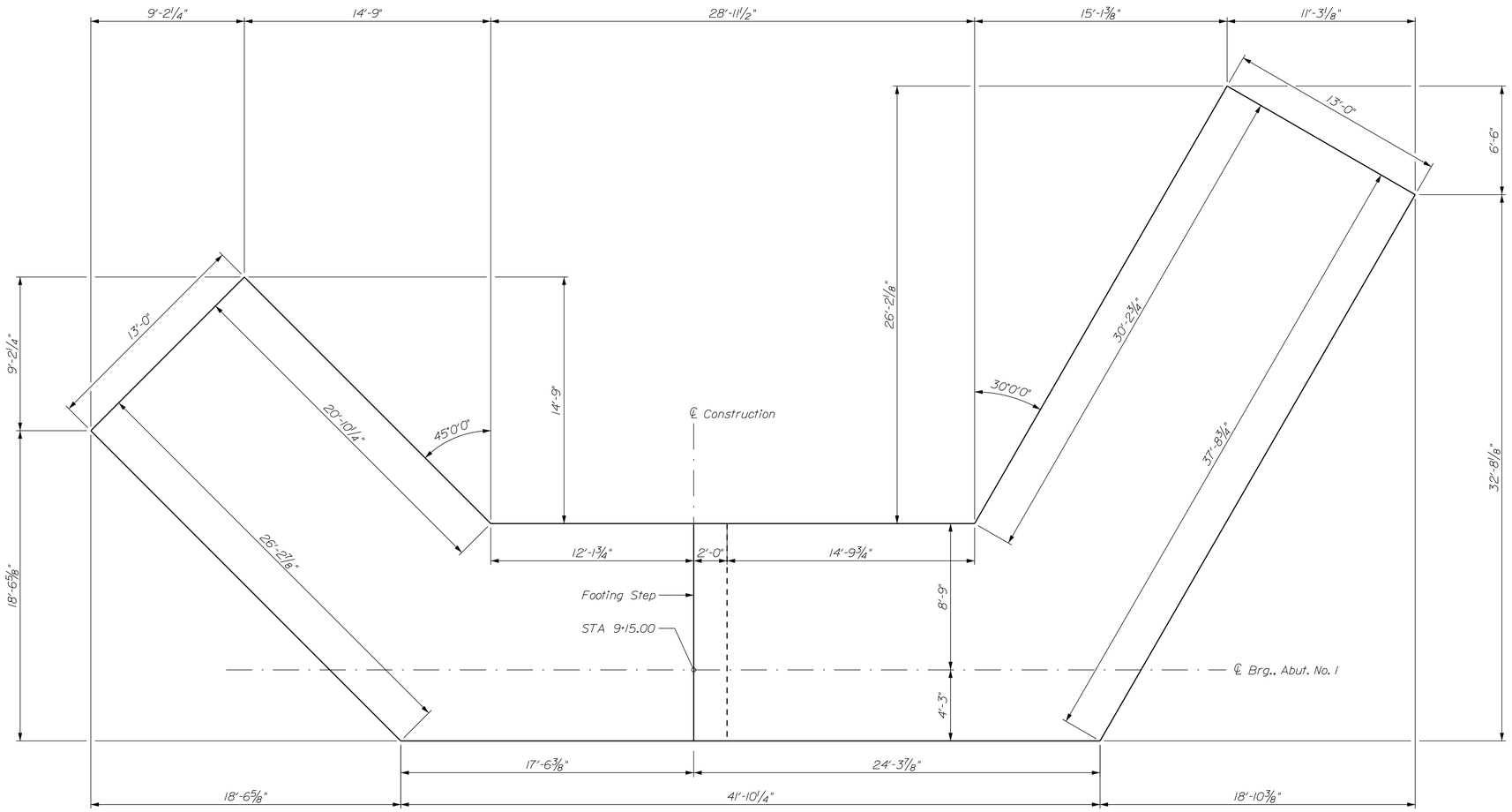

ABUTMENT NO. 1 FOOTING PLAN

ABUTMENT NOTES

1. The maximum factored applied footing pressure is 8.0 ksf.

2. Structural Earth Excavation, Abutments and Retaining Walls, required more than 12 inches below the bottom of the structure, will be paid for in accordance with Standard Specifications Section 206, Structural Excavation.

3. When the prepared bedrock surface is below the bottom of the footing elevation shown on the plans, concrete fill may be placed to fill the void. Concrete fill shall be Class "A" concrete. Alternatively, the footing thickness may be increased up to an additional 1 foot as approved by the Resident. If the footing thickness is increased, the top of the footing elevation shall be as shown on the plans.

4. Reinforcing steel shall have a minimum concrete cover of 2 inches in the walls and 3 inches in the footings unless otherwise noted.

5. Place 4-in. diameter drains in the breastwall and wingwalls at 10-ft maximum spacing. The exact location will be determined by the Resident.

6. Cover joints where waterstops are not required in accordance with Standard Details Section 502.

7. Construct French Drains behind the abutments and wingwalls in accordance with Standard Specifications Section 512, French Drains.

8. Abutments, wingwalls and their footings shall be backfilled with Granular Borrow. Pay limits will be the structural excavation limits in cut areas and a vertical plane located 10 feet behind the walls in fill areas.

FOUNDATION NOTES

1. The bedrock will vary in nature, slope, and degree of fracturing. After the foundation excavations are completed and all unsound bedrock removed, the Contractor shall survey the foundation bedrock and provide the exact bedrock elevations to the Resident.

2. If the bedrock elevations vary from the elevations assumed in the development of the plan set, the abutment and/or wing walls may need to be modified. The Contractor shall grant the Department seven Calendar Days to modify the plans from the date the Resident accepts the bedrock survey.

3. When bedrock protrudes above the bottom of the footing, the footing may be raised and vertical reinforcing may be cut in the field with the approval of the Resident. The minimum allowable footing thickness is shown on the plans. Payment for adjusting footing depth and adjusting reinforcing steel will be considered incidental to related contract items. No separate payment will be made.

4. At the option of the Resident, bedrock that protrudes above the bottom of footing elevation may be removed. Payment for bedrock removal will be made under Item No. 206.092, Structural Rock Excavation - Major Structures.

5. Foundation concrete shall be placed on sound bedrock cleaned of all weathered or fractured rock or loose soil. Prior to placing the footing, the bearing surface shall be washed with high pressure water and air, and smooth bedrock shall be roughened. Where the bedrock surface slope exceeds 4H:1V the bedrock surface shall be benched in level steps or made completely level. The bedrock bearing surface beneath the near face of abutments and walls shall have a level surface of 3 feet minimum, measured perpendicular to the face.

STATE OF MAINE
DEPARTMENT OF TRANSPORTATION

BH-1823(200)X

WIN 18232.00

BRIDGE NO. 3328

BRIDGE PLANS

PROJ. MANAGER	M. PARLIN		
DESIGN-DETAILED	J. MUCHA	BY	DATE
CHECKED-REVIEWED	C. GAMACHE	J. MUCHA	1/28/14
DESIGN2-DETAILED2	C. GAMACHE	C. GAMACHE	
DESIGN3-DETAILED3			
REVISIONS 1			
REVISIONS 2			
REVISIONS 3			
REVISIONS 4			
FIELD CHANGES			

SIGNATURE

P.E. NUMBER

DATE

STEEP FALLS BRIDGE
SACO RIVER
LIMINGTON/STANDISH YORK/CUMBERLAND

ABUTMENT 1
FOOTING PLAN

SHEET NUMBER

21

OF 45

Filename: ...\021 Abutment 1 Footing Plan.dgn Division: BRIDGE Username: CAFUNSTON Date:2/4/2014

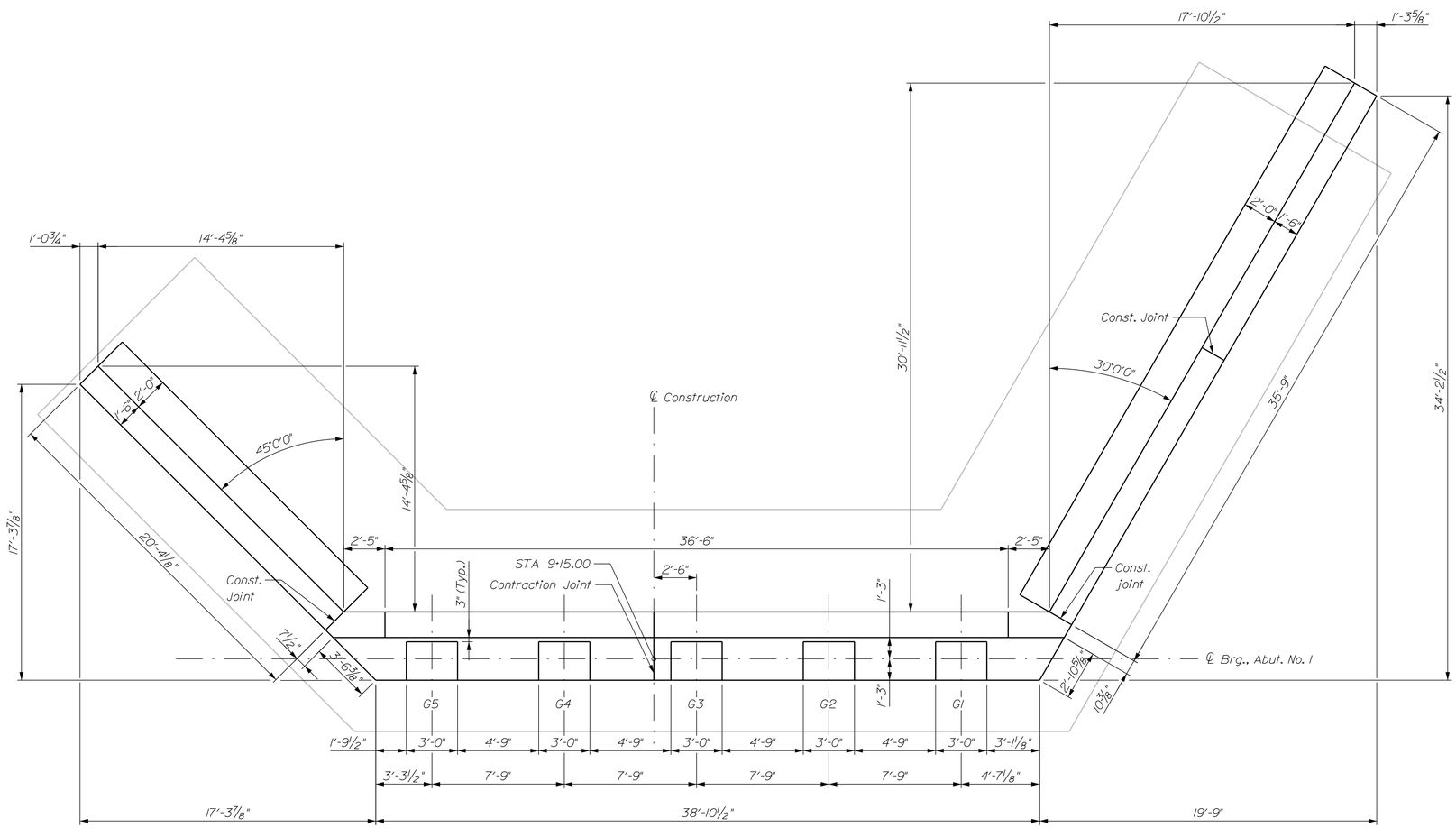

ABUTMENT NO. 1 PLAN

STATE OF MAINE
DEPARTMENT OF TRANSPORTATION

BH-1823(200)X

WIN 18232.00

BRIDGE NO. 3328

BRIDGE PLANS

PROJ. MANAGER	M. PARLIN	BY	DATE
DESIGN-DETAILED	J. MUCHA	J. MUCHA	1/28/14
CHECKED-REVIEWED	C. GAMACHE	C. GAMACHE	
DESIGN2-DETAILED2			
DESIGN3-DETAILED3			
REVISIONS: 1			
REVISIONS: 2			
REVISIONS: 3			
REVISIONS: 4			
FIELD CHANGES			

SIGNATURE

P.E. NUMBER

DATE

STEEP FALLS BRIDGE
SACO RIVER
LIMINGTON/STANDISH YORK/CUMBERLAND

ABUTMENT 1 PLAN

SHEET NUMBER

22

OF 45

Filename: ...\022 Abutment 1 Plan.dgn Division: BRIDGE Username: CAFUNSTON Date:2/4/2014

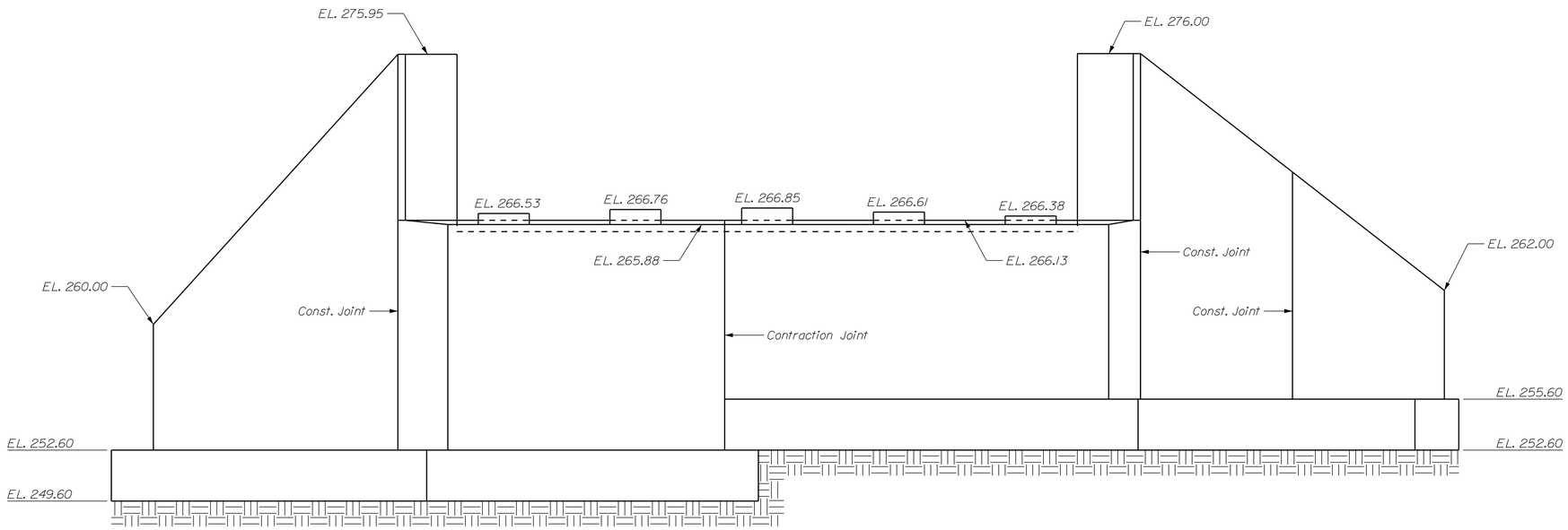

ABUTMENT NO. 1 ELEVATION

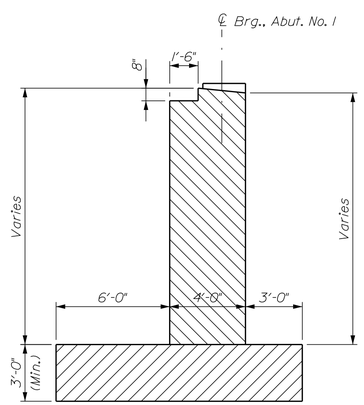

TYPICAL SECTION - ABUTMENT NO. 1

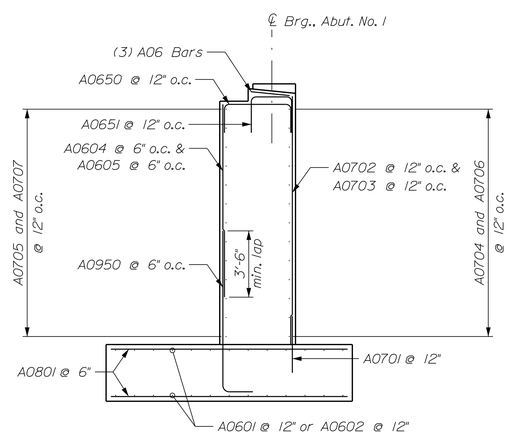

REINFORCING SECTION - ABUTMENT NO. 1

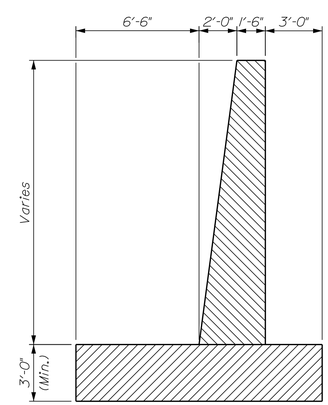

ABUTMENT NO. 1
WINGWALL TYPICAL SECTION

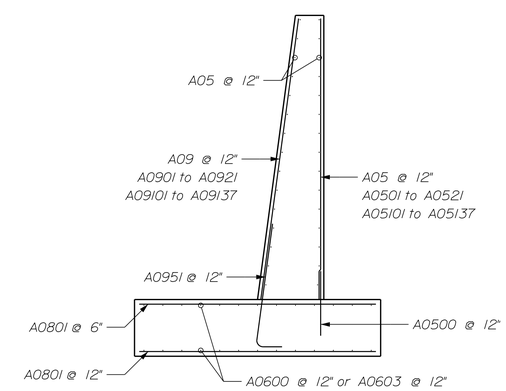

ABUTMENT NO. 1 WINGWALL
REINFORCING SECTION

STATE OF MAINE
DEPARTMENT OF TRANSPORTATION

BH-1823(200)X

WIN 18232.00

BRIDGE NO. 3328

BRIDGE PLANS

PROJ. MANAGER	M. PARLIN	BY	DATE
DESIGN-DETAILED	J. MUCHA	J. MUCHA	1/28/14
CHECKED-REVIEWED	C. GAMACHE	C. GAMACHE	
DESIGN2-DETAILED2			
DESIGN3-DETAILED3			
REVISIONS 1			
REVISIONS 2			
REVISIONS 3			
REVISIONS 4			
FIELD CHANGES			

SIGNATURE

P.E. NUMBER

DATE

STEEP FALLS BRIDGE
SACO RIVER
LIMINGTON/STANDISH YORK/CUMBERLAND

ABUTMENT 1
ELEVATION AND SECTIONS

SHEET NUMBER
23
OF 45

Filename: ...\023 Abutment 1 Elevation and Sections.dgn Division: BRIDGE Username: CAFUNSTON Date:2/4/2014

Filename: ...\024 Abutment No. 1 Footing Reinforcement.dgn Division: BRIDGE Username: CAFUNSTON Date:2/4/2014

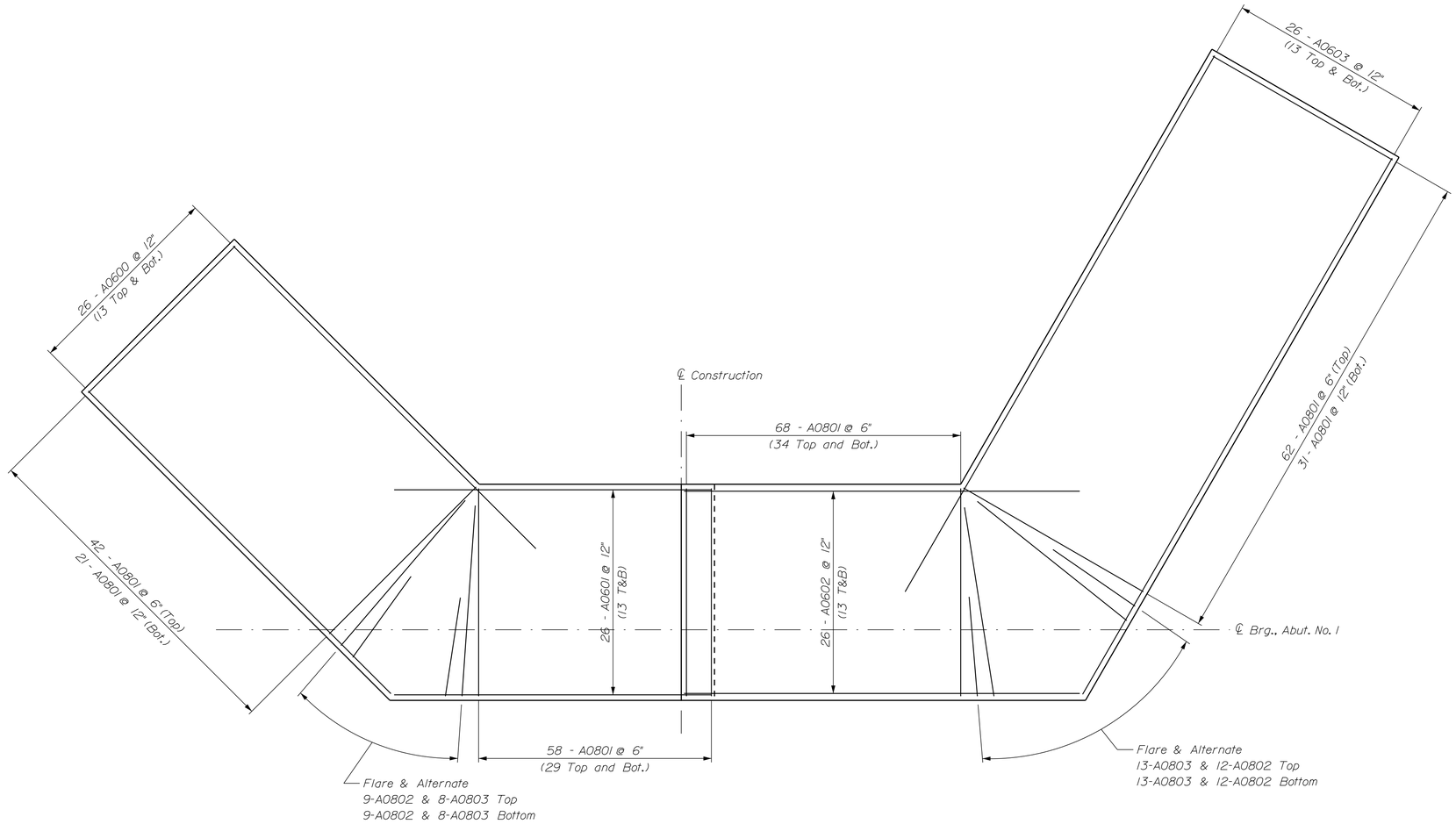

ABUTMENT NO. 1 FOOTING REINFORCING PLAN

STATE OF MAINE
DEPARTMENT OF TRANSPORTATION

BH-1823(200)X

WIN 18232.00

BRIDGE NO. 3328 BRIDGE PLANS

PROJ. MANAGER	M. PARLIN	BY	DATE
DESIGN-DETAILED	J. MUCHA	J. MUCHA	1/28/14
CHECKED-REVIEWED	C. GAMACHE	C. GAMACHE	
DESIGN2-DETAILED2			
DESIGN3-DETAILED3			
REVISIONS 1			
REVISIONS 2			
REVISIONS 3			
REVISIONS 4			
FIELD CHANGES			

SIGNATURE

P.E. NUMBER

DATE

STEEP FALLS BRIDGE
SACO RIVER
LIMINGTON/STANDISH YORK/CUMBERLAND

ABUTMENT 1 FOOTING
REINFORCEMENT PLAN

SHEET NUMBER

24

OF 45

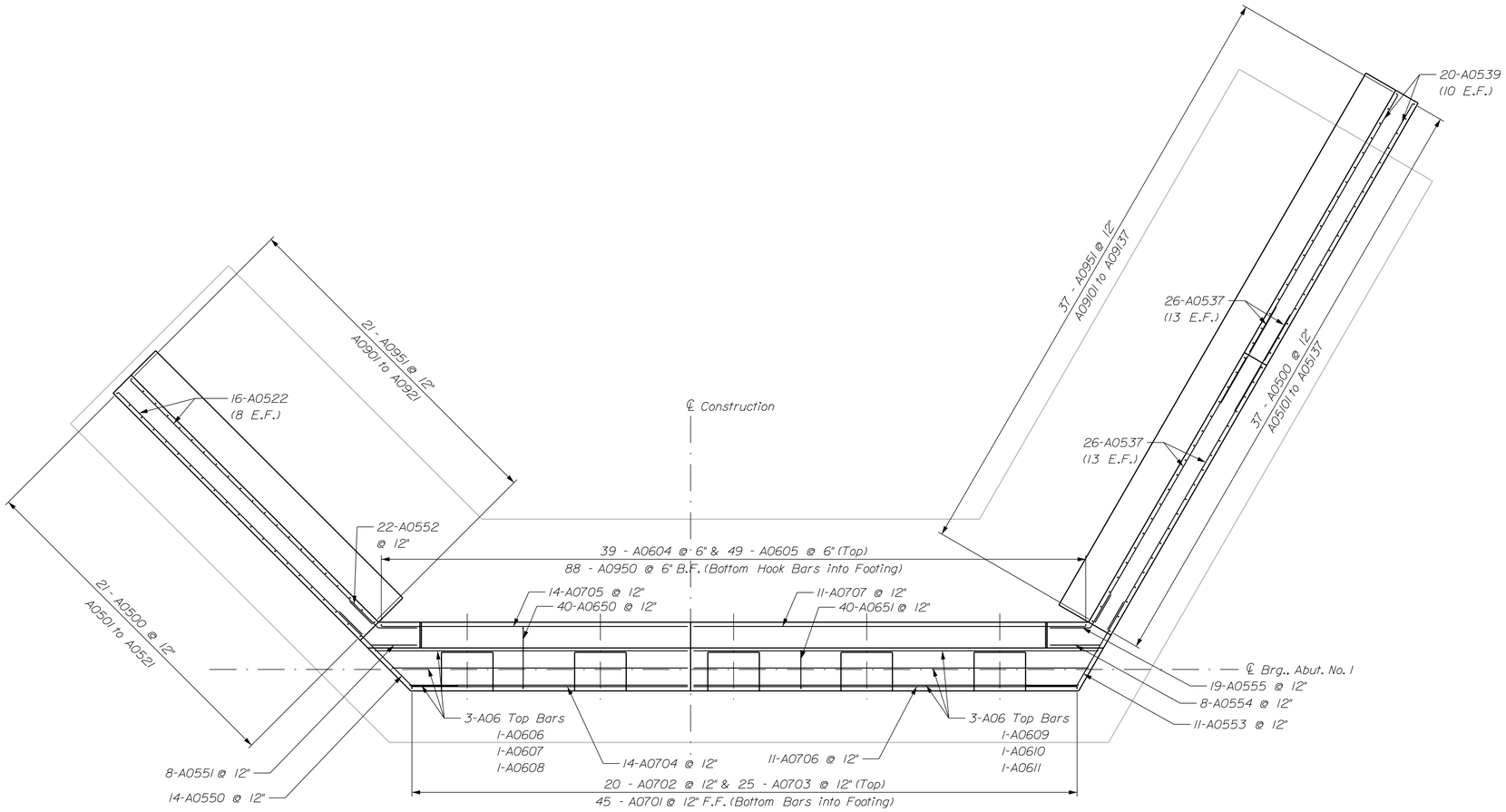

ABUTMENT NO. 1 REINFORCING PLAN

STATE OF MAINE
DEPARTMENT OF TRANSPORTATION

BH-1823(200)X

WIN 18232.00

BRIDGE NO. 3328

BRIDGE PLANS

PROJ. MANAGER	M. P-ARLIN	BY	DATE
DESIGN-DETAILED	J. MUCHA	J. MUCHA	1/28/14
CHECKED-REVIEWED	C. GAMACHE	C. GAMACHE	
DESIGN2-DETAILED2			
DESIGN3-DETAILED3			
REVISIONS 1			
REVISIONS 2			
REVISIONS 3			
REVISIONS 4			
FIELD CHANGES			

SIGNATURE

P.E. NUMBER

DATE

STEEP FALLS BRIDGE
SACO RIVER
LIMINGTON/STANDISH YORK/CUMBERLAND

ABUTMENT 1
REINFORCEMENT PLAN

SHEET NUMBER

25

OF 45

Filename: ...\025 Abutment No. 1 Reinforcement Plan.dgn Division: BRIDGE Username: CAFUNSTON Date:2/4/2014

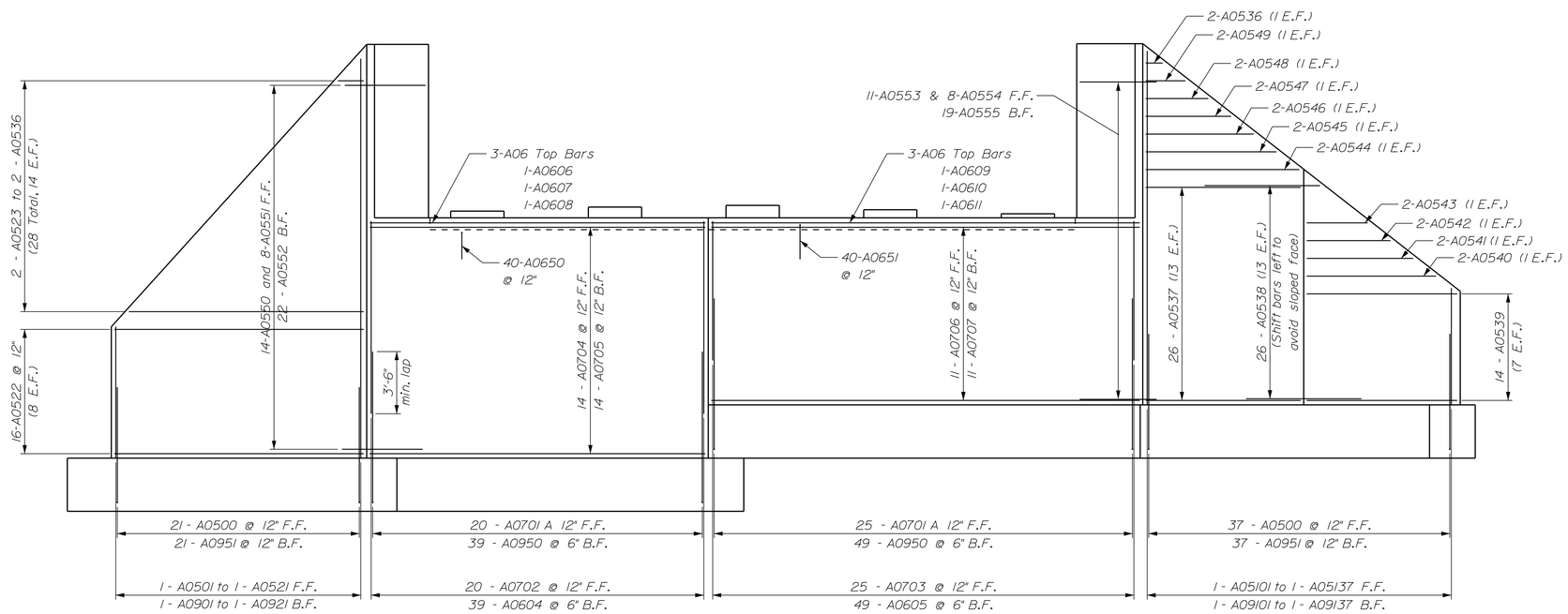

ABUTMENT NO. 1 REINFORCING ELEVATION

STATE OF MAINE
DEPARTMENT OF TRANSPORTATION

BH-1823(200)X

WIN 18232.00

BRIDGE NO. 3328

BRIDGE PLANS

PROJ. MANAGER	M. PARLIN	BY	DATE
DESIGN-DETAILED	J. MUCHA	J. MUCHA	1/28/14
CHECKED-REVIEWED	C. GAMACHE	C. GAMACHE	
DESIGN2-DETAILED2			
DESIGN3-DETAILED3			
REVISIONS 1			
REVISIONS 2			
REVISIONS 3			
REVISIONS 4			
FIELD CHANGES			

SIGNATURE

P.E. NUMBER

DATE

STEEP FALLS BRIDGE
SACO RIVER
LIMINGTON/STANDISH YORK/CUMBERLAND

ABUTMENT 1
REINFORCEMENT ELEVATION

SHEET NUMBER
26
OF 45

Filename: ...\026 Abutment No. 1 Reinforcement Elevation.dgn Division: BRIDGE Username: CAFUNSTON Date:2/4/2014

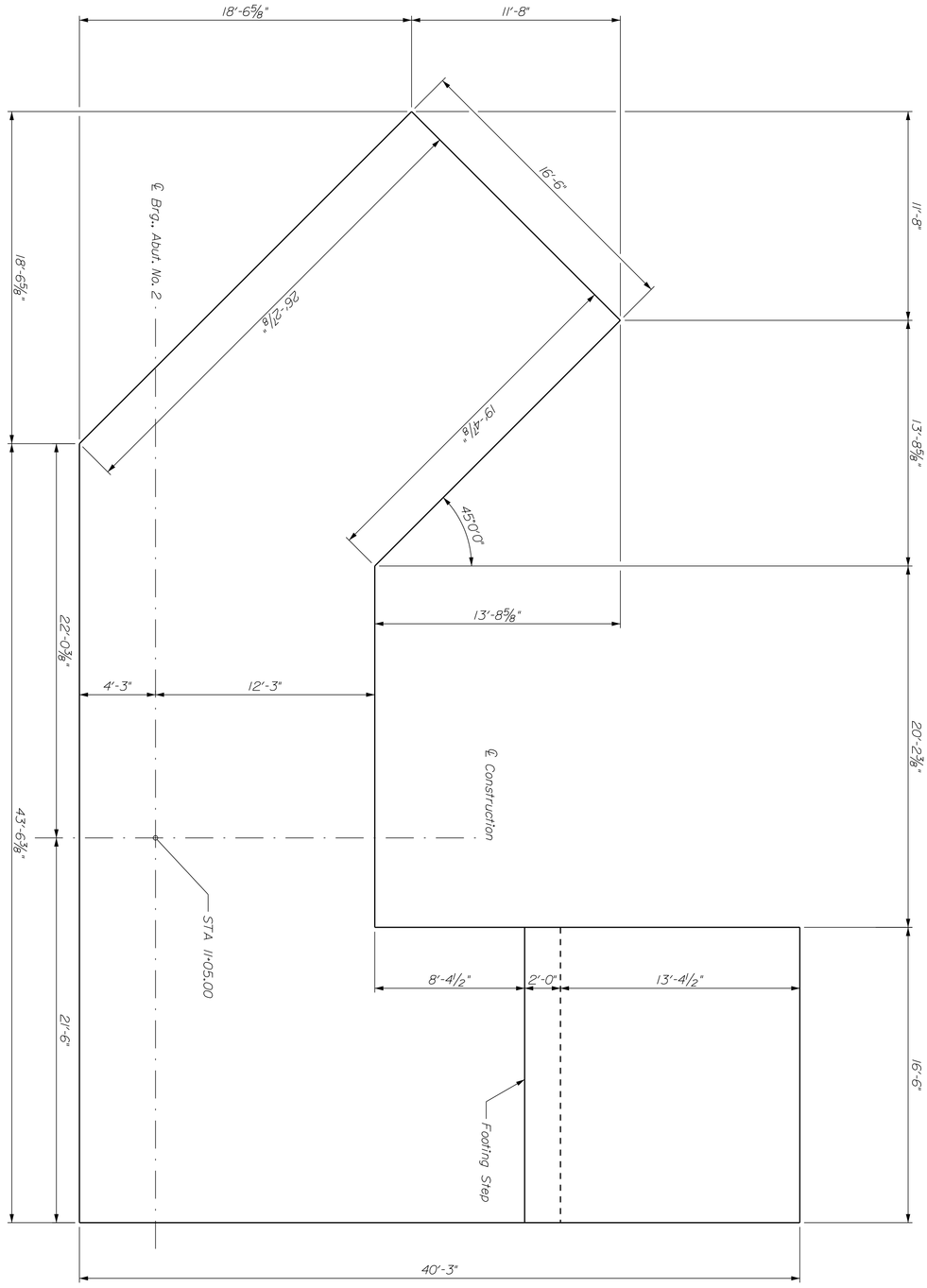

ABUTMENT NO. 2 FOOTING PLAN

PROJ. MANAGER	M. PARLIN	BY	DATE	
DESIGN-DETAILED	J. MUCHA	J. MUCHA	1/28/14	
CHECKED-REVIEWED	C. GAMACHE	C. GAMACHE		SIGNATURE
DESIGN2-DETAILED2				
DESIGN3-DETAILED3				P.E. NUMBER
REVISIONS 1				
REVISIONS 2				
REVISIONS 3				DATE
REVISIONS 4				
FIELD CHANGES				

STEEP FALLS BRIDGE
SACO RIVER
LIMINGTON/STANDISH YORK/CUMBERLAND

ABUTMENT 2 FOOTING PLAN

SHEET NUMBER 27 OF 45

STATE OF MAINE
DEPARTMENT OF TRANSPORTATION

BH-1823(200)X

BRIDGE NO. 3328 WIN 18232.00 BRIDGE PLANS

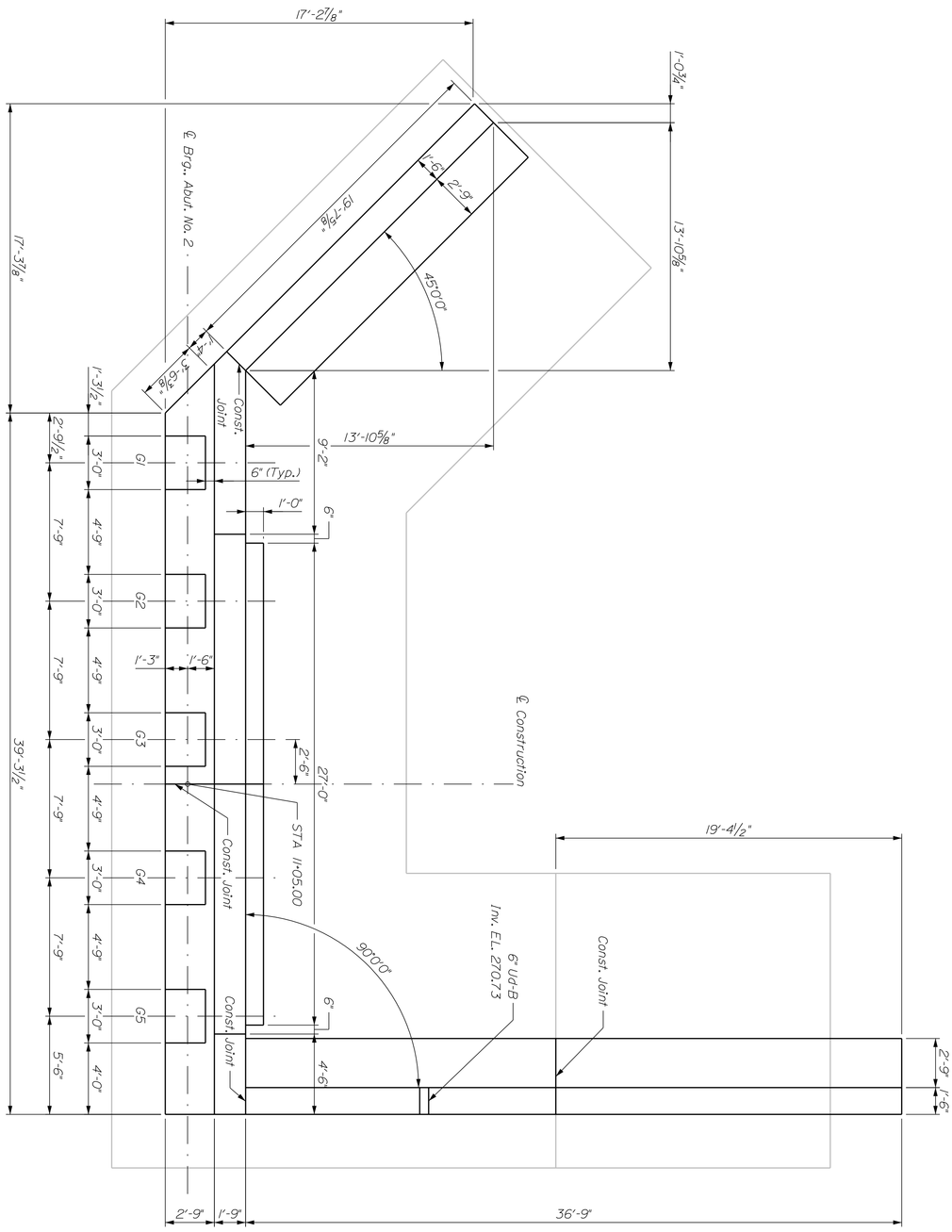

ABUTMENT NO. 2 PLAN

STEEP FALLS BRIDGE SACO RIVER LIMINGTON/STANDISH YORK/CUMBERLAND	PROJ. MANAGER	M. PARLIN	BY	DATE	STATE OF MAINE DEPARTMENT OF TRANSPORTATION
	DESIGN-DETAILED	J. MUCHA	J. MUCHA	1/28/14	BH-1823(200)X
	CHECKED-REVIEWED	C. GAMACHE	C. GAMACHE		SIGNATURE
	DESIGN2-DETAILED2				P.E. NUMBER
	DESIGN3-DETAILED3				DATE
ABUTMENT 2 PLAN	REVISIONS 1				BRIDGE NO. 3328 WIN 18232.00 BRIDGE PLANS
	REVISIONS 2				
	REVISIONS 3				
	REVISIONS 4				
	FIELD CHANGES				

SHEET NUMBER 28 OF 45

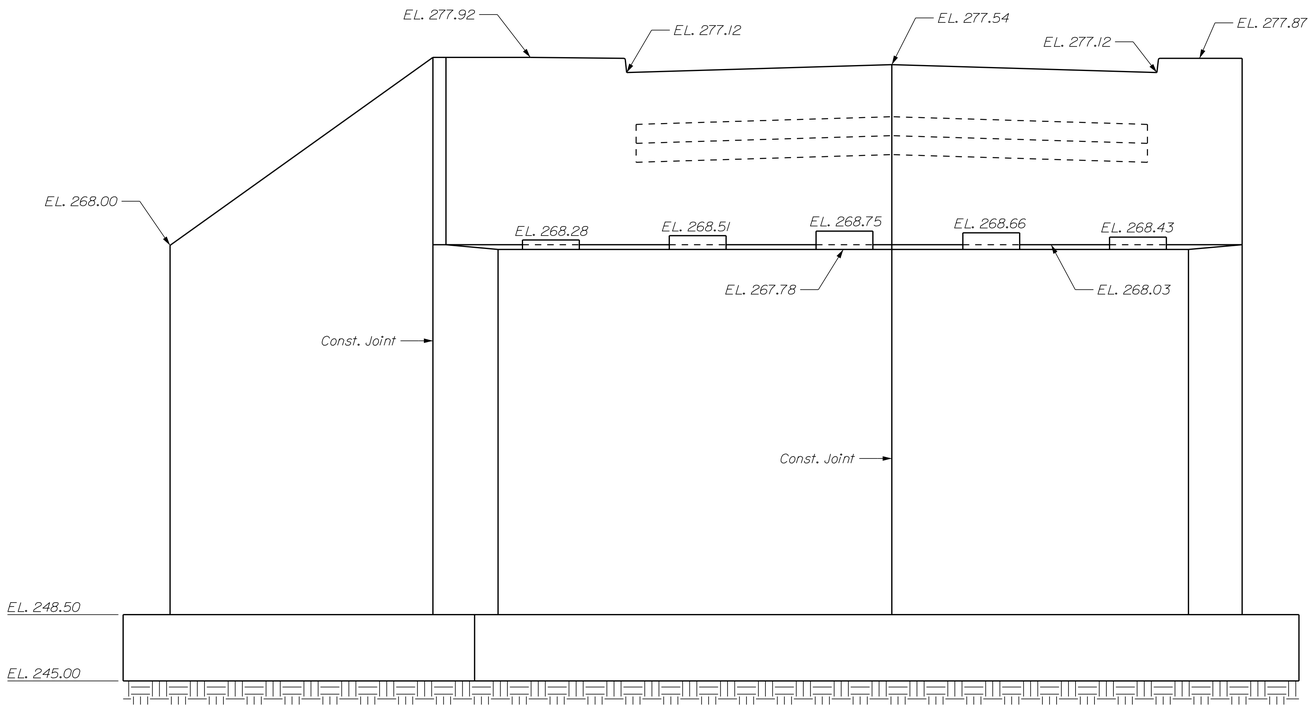

ABUTMENT NO. 2 ELEVATION

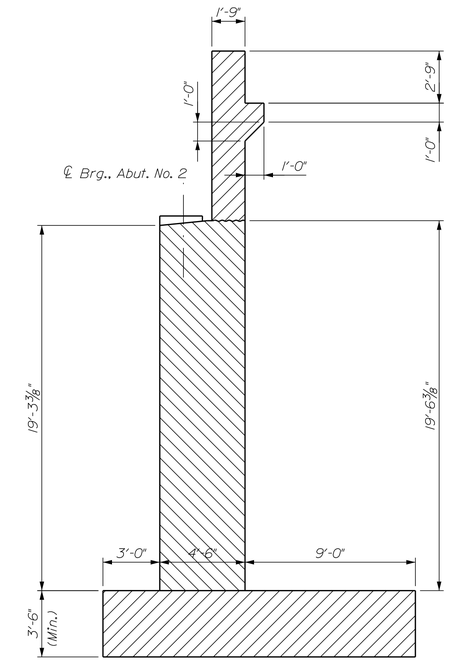

TYPICAL SECTION - ABUTMENT NO. 2

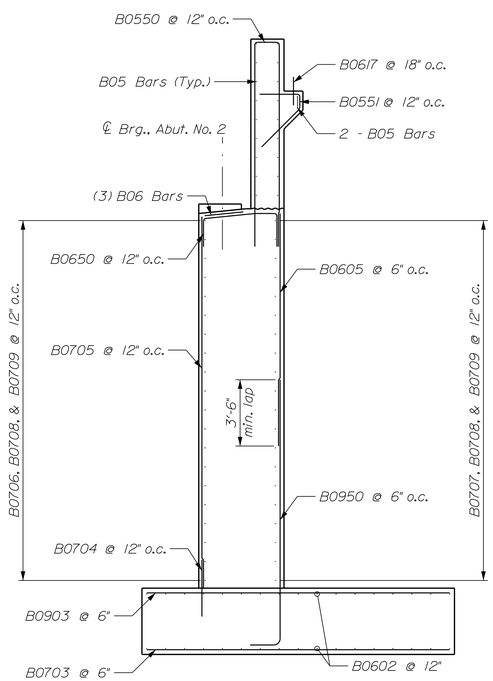

REINFORCING SECTION - ABUTMENT NO. 2

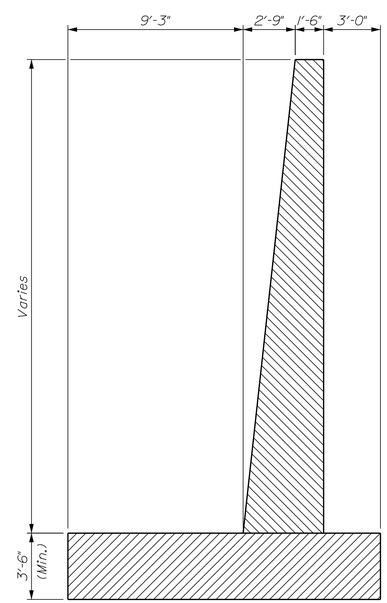

ABUTMENT NO. 2
WINGWALL TYPICAL SECTION

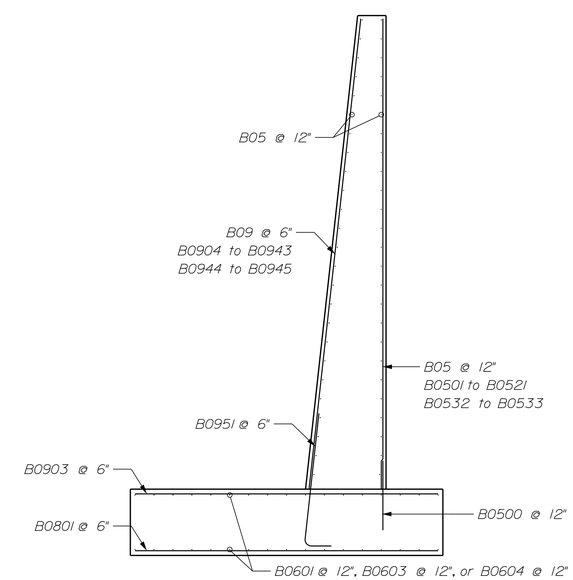

ABUTMENT NO. 2 WINGWALL
REINFORCING SECTION

STATE OF MAINE
DEPARTMENT OF TRANSPORTATION

BH-1823(200)X

WIN 18232.00

BRIDGE NO. 3328

BRIDGE PLANS

PROJ. MANAGER	M. PARLIN	BY	DATE
DESIGN-DETAILED	J. MUCHA	J. MUCHA	1/28/14
CHECKED-REVIEWED	C. GAMACHE	C. GAMACHE	
DESIGN2-DETAILED2			
DESIGN3-DETAILED3			
REVISIONS 1			
REVISIONS 2			
REVISIONS 3			
REVISIONS 4			
FIELD CHANGES			

SIGNATURE

P.E. NUMBER

DATE

STEEP FALLS BRIDGE
SACO RIVER
LIMINGTON/STANDISH YORK/CUMBERLAND

ABUTMENT 2
ELEVATION AND SECTIONS

SHEET NUMBER
29
OF 45

Filename: ...\029 Abutment 2 Elevation and Section.dgn Division: BRIDGE Username: CAFUNSTON Date:2/4/2014

Filename: ...\030 Abutment No. 2 Footing Reinforcement.dgn Design: BRIDGE Date: 2/4/2014 Username: CAFUNSTON

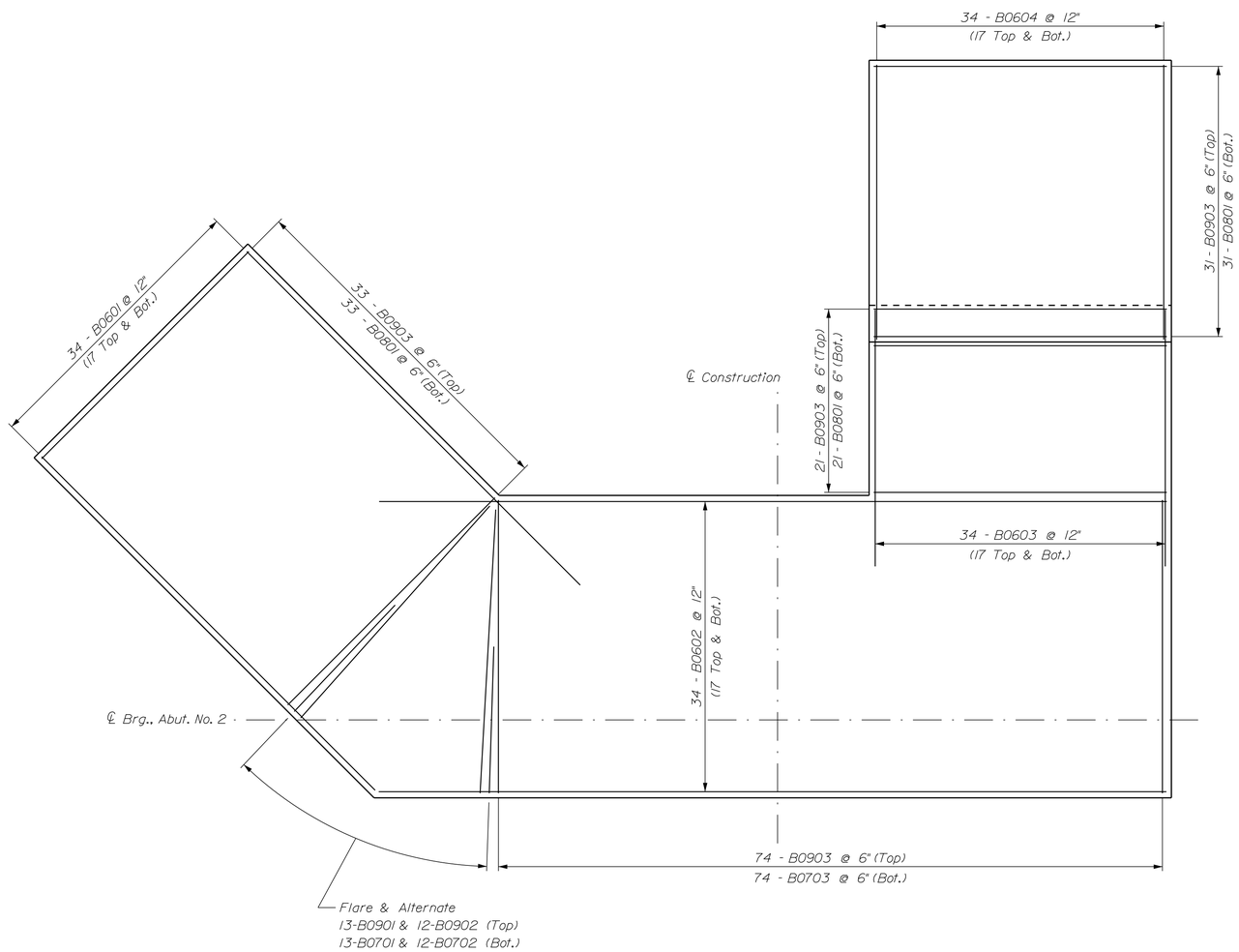

ABUTMENT NO. 2 FOOTING REINFORCING PLAN

STATE OF MAINE
DEPARTMENT OF TRANSPORTATION

BH-1823(200)X

WIN 18232.00

BRIDGE NO. 3328 BRIDGE PLANS

PROJ. MANAGER	M. PARLIN	BY	DATE
DESIGN-DETAILED	J. MUCHA	J. MUCHA	1/28/14
CHECKED-REVIEWED	C. GAMACHE	C. GAMACHE	
DESIGN2-DETAILED2			
DESIGN3-DETAILED3			
REVISIONS 1			
REVISIONS 2			
REVISIONS 3			
REVISIONS 4			
FIELD CHANGES			

SIGNATURE

P.E. NUMBER

DATE

STEEP FALLS BRIDGE
SACO RIVER
LIMINGTON/STANDISH YORK/CUMBERLAND

ABUTMENT 2
FOOTING REINFORCEMENT

SHEET NUMBER

30

OF 45

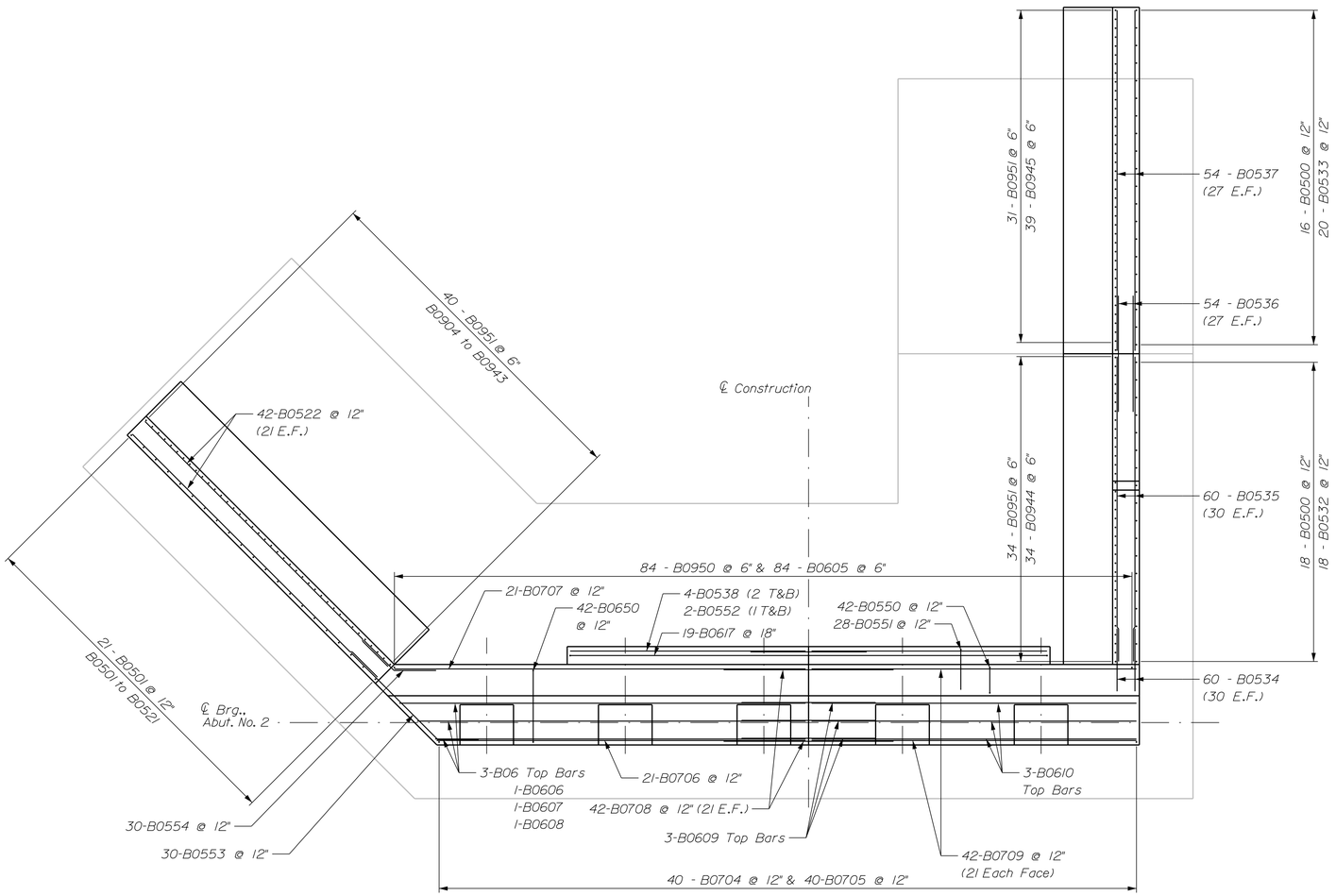

ABUTMENT NO. 2 REINFORCING PLAN

STATE OF MAINE
DEPARTMENT OF TRANSPORTATION

BH-1823(200)X

WIN 18232.00

BRIDGE NO. 3328

BRIDGE PLANS

PROJ. MANAGER	M. PARLIN	BY	DATE
DESIGN-DETAILED	J. MUCHA	J. MUCHA	1/28/14
CHECKED-REVIEWED	C. GAMACHE	C. GAMACHE	
DESIGN2-DETAILED2			
DESIGN3-DETAILED3			
REVISIONS 1			
REVISIONS 2			
REVISIONS 3			
REVISIONS 4			
FIELD CHANGES			

SIGNATURE

P.E. NUMBER

DATE

STEEP FALLS BRIDGE
SACO RIVER
LIMINGTON/STANDISH YORK/CUMBERLAND

ABUTMENT 2
REINFORCEMENT PLAN

SHEET NUMBER

31

OF 45

Filename: ...\031 Abutment No. 2 Reinforcement Plan.dgn Division: BRIDGE Username: CAFUNSTON Date:2/4/2014

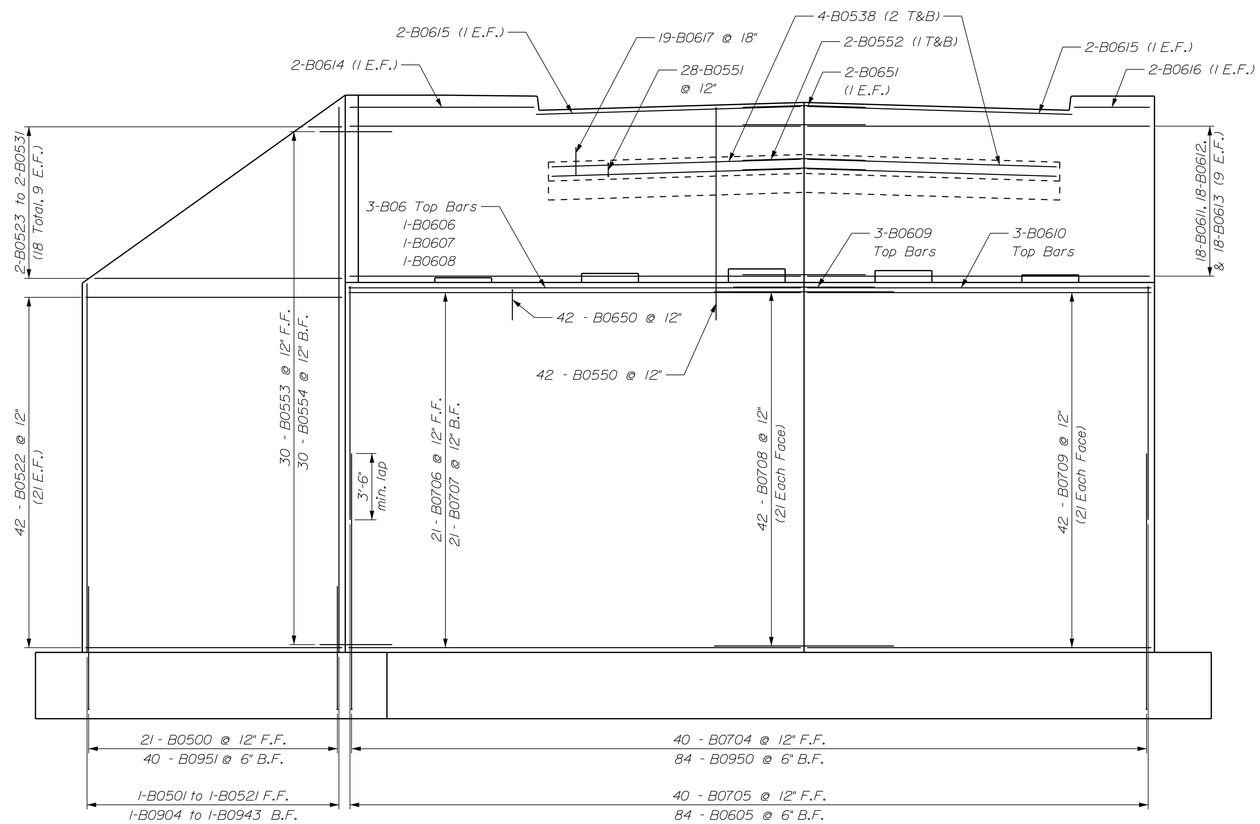

ABUTMENT NO. 2 REINFORCING ELEVATION

STATE OF MAINE
DEPARTMENT OF TRANSPORTATION

BH-1823(200)X

WIN 18232.00

BRIDGE NO. 3328

BRIDGE PLANS

		BY	DATE
PROJ. MANAGER	M. PARLIN		
DESIGN-DETAILED	J. MUCHA	J. MUCHA	1/28/14
CHECKED-REVIEWED	C. GAMACHE	C. GAMACHE	
DESIGN2-DETAILED2			
DESIGN3-DETAILED3			
REVISIONS 1			
REVISIONS 2			
REVISIONS 3			
REVISIONS 4			
FIELD CHANGES			

SIGNATURE

P.E. NUMBER

DATE

STEEP FALLS BRIDGE
SACO RIVER
LIMINGTON/STANDISH YORK/CUMBERLAND

ABUTMENT 2
REINFORCEMENT ELEVATION

SHEET NUMBER
32
OF 45

Filename: ...\032 Abutment No. 2 Reinforcement Elevation.dgn Division: BRIDGE Username: CAFUNSTON Date:2/4/2014

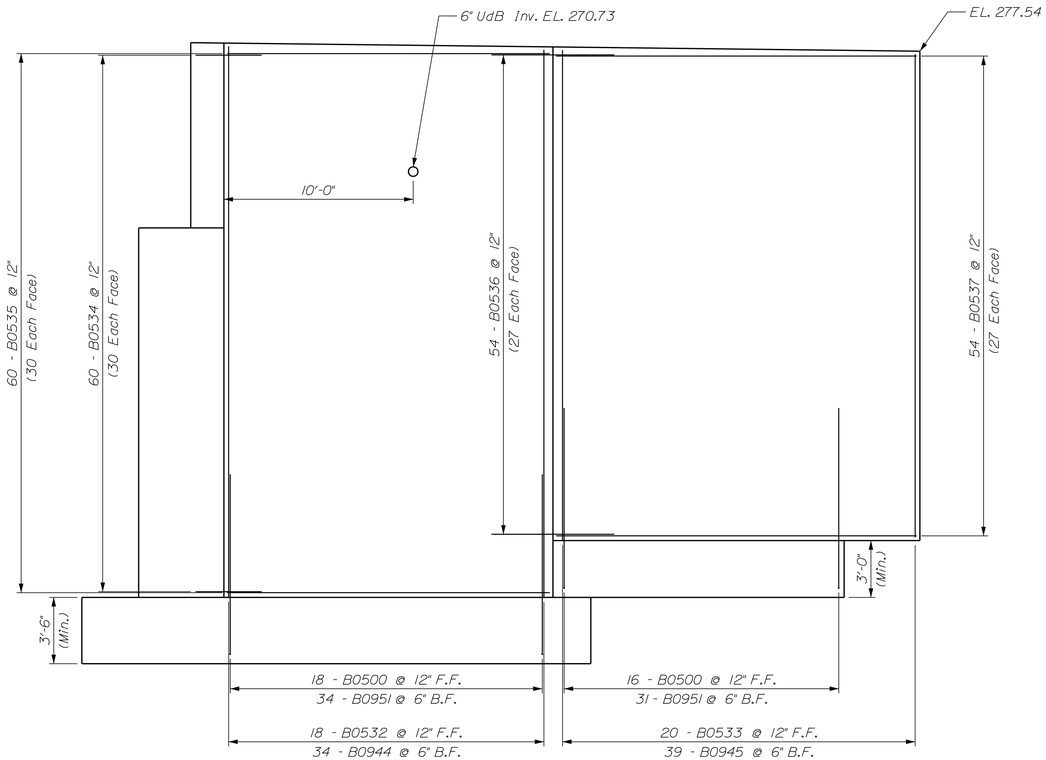

ABUTMENT NO. 2 U-WINGWALL REINFORCING ELEVATION

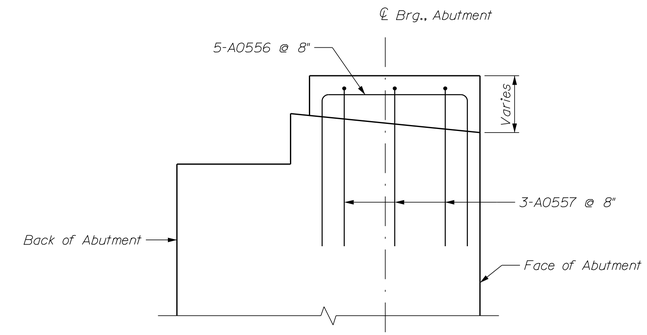

Note: Abutment No. 1 Pedestal Shown.
Abutment No. 2 Pedestals Similar

ABUTMENT PEDESTAL REINFORCING SECTION

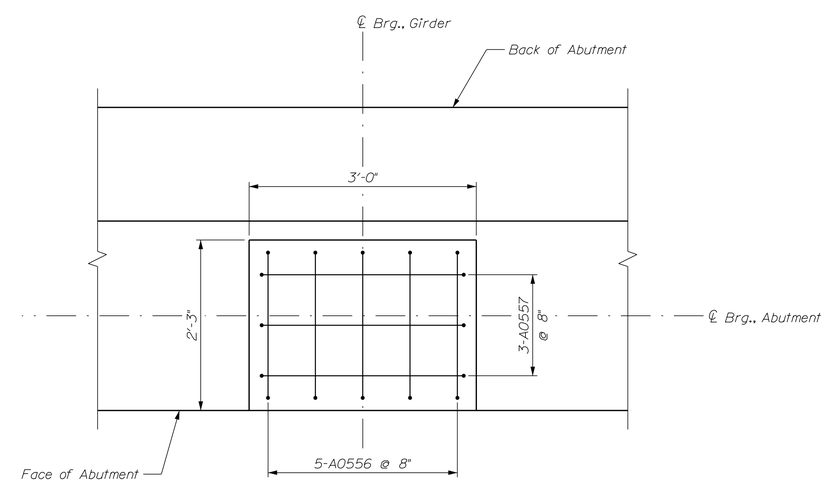

ABUTMENT PEDESTAL REINFORCING PLAN

STATE OF MAINE
DEPARTMENT OF TRANSPORTATION

BH-1823(200)X

WIN 18232.00

BRIDGE NO. 3328

BRIDGE PLANS

PROJ. MANAGER	M. P-ARLIN	BY	DATE
DESIGN-DETAILED	J. MUCHA	J. MUCHA	1/28/14
CHECKED-REVIEWED	C. GAMACHE	C. GAMACHE	
DESIGN2-DETAILED2			
DESIGN3-DETAILED3			
REVISIONS 1			
REVISIONS 2			
REVISIONS 3			
REVISIONS 4			
FIELD CHANGES			

SIGNATURE

P.E. NUMBER

DATE

STEEP FALLS BRIDGE
SACO RIVER
LIMINGTON/STANDISH YORK/CUMBERLAND

ABUTMENT 2
REINFORCEMENT ELEVATION

SHEET NUMBER
33
OF 45

Filename: ...\033 Abutment No. 2 Reinforcement Elevation.dgn Division: BRIDGE Username: CAFUNSTON Date: 2/4/2014

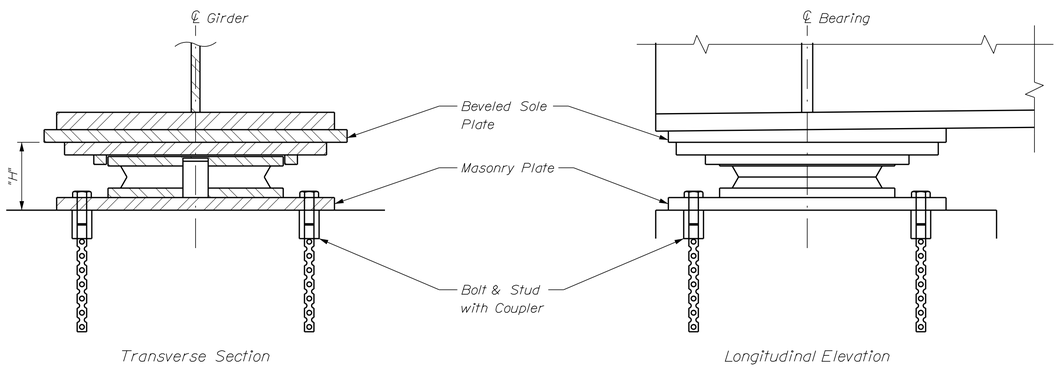

EXPANSION BEARING

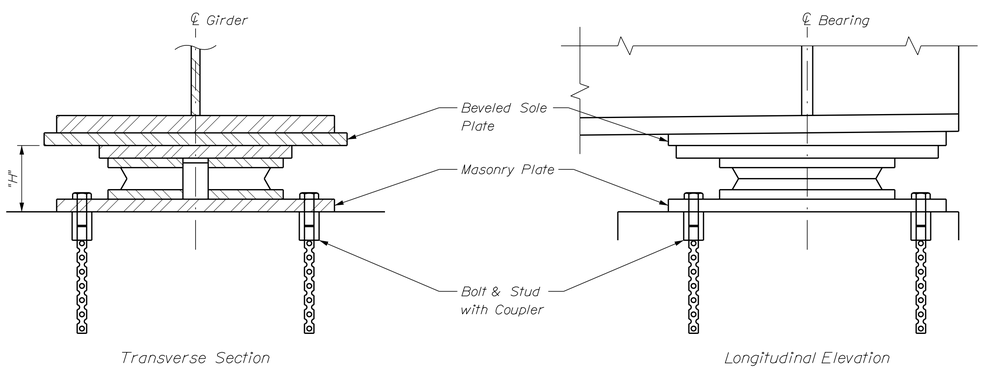

FIXED BEARING

Bearing Notes

1. Refer to the Special Provisions for design, materials, fabrication, and general construction requirements.

2. The actual dimension "H" shall be the responsibility of the Contractor. Dimensions and sizes of plates not shown are dependent on design loads, capacity and the manufacturer of the bearings. The shop drawings, prepared by the manufacturer, shall provide all pertinent bearing information. The final bridge seat elevations shall be determined by the Contractor and submitted with the shop drawings for approval prior to construction of the substructure units.

3. Masonry plates shall be placed on 1/8" thick preformed pads in accordance with the specifications.

4. All steel, unless otherwise specified, shall meet the requirements of ASTM A709, Grade 50W.

5. Anchor rods shall meet the requirements of ASTM F1554, Grade 105 and shall be swedged on the embedded portion of the rod.

6. Anchor bolts shall meet the requirements of ASTM A325, Type 3.

7. Heavy hex nuts for anchor rods shall meet the requirements of ASTM A563, Class 5.

8. Anchor bolts, rods, washers, nuts, and shear pins shall be galvanized to ASTM A153 or ASTM B695, Class 50, Type 1. Payment for galvanizing will be considered incidental to the disc bearing pay items.

9. Anchor rod spacing shall be coordinated with the bearing manufacturer.

10. Bearing installation shall be in strict conformance with the Special Provisions and the manufacturer's recommendations.

11. The abbreviation "PTFE" indicates polytetrofloureothylene.

12. All PTFE, including guide surfaces, shall be unfilled.

13. The average compressive stress on the disc shall be computed using the smallest unstressed plan area of the disc.

14. PTFE minimum bearing pressure shall be 3 ksi under total service loading.

15. The design temperature range shall be 125 °F (-20 °F to 105 °F).

16. For all bearings, all steel located below the PTFE sliding surface shall be coated in accordance with Special Provision, Section 506, Protective Coating - Steel (Thermal Spray Coating). All remaining steel shall be coated in accordance with Special Provisions, Section 506, Protective Coating - Steel (Zinc Rich Coating System). Payment for Coatings for Disc Bearings will be considered incidental to Item 523.5551, Pot or Disc Bearings, Fixed, or Item 523.5552, Pot or Disc Bearings, Expansion as applicable.

17. All bearings shall be marked prior to shipping. The marks shall include the bearing location on the bridge, and a direction arrow that points upstation. All marks shall be permanent and shall be visible after the bearing is installed.

18. Design of the sole plates and masonry plates is the responsibility of the Bearing Manufacturer. Payment for these shall be made under Item 523.5551, Pot or Disc Bearings, Fixed or Item 523.5552, Pot or Disc Bearings, Expansion as applicable.

19. Sole plate shall be beveled according to the grade defined at each substructure location in the Disc Bearing Design Table.

20. Strength Limit State rotations shown in the Disc Bearing Design Table do not include an allowance for uncertainties of 0.005 radians, as defined in AASHTO LRFD Bridge Design Specifications.

21. Bearings shall be designed with a thermal load factor of 1.0.

22. Longitudinal horizontal forces do not include friction forces.

Disc Bearing Design Table

Location	Bearing Type	Design Load Per Bearing (kip)							Dim "H" (in) (see Note No. 2)	Design Rotation (radians) (see Note No. 19)		Total Longitudinal Movement (in)	Sole Plate Bevel
		Vertical				Horizontal (Max.)							
		Strength	Ext. Event	Service		Strength	Ext. Event	Service					
		Total Load	Total Load	Dead Load	Total Load	Total Load	Total Load	Total Load		Dead Load	Total Load		
Abutment No. 1	Fixed	433.6	0	150.8	289.9	12.6	188.5	7.2	6	0.015	0.018	0	1%
Abutment No. 2	Expansion	433.6	0	150.8	289.9	0	188.5	3.3	6	0.015	0.018	2 3/8	1%

STATE OF MAINE
DEPARTMENT OF TRANSPORTATION

BH-1823(200)X

WIN 18232.00

BRIDGE NO. 3328

BRIDGE PLANS

		BY	DATE
PROJ. MANAGER	M. PARLIN		
DESIGN-DETAILED	J. MUCHA	J. MUCHA	12/05/13
CHECKED-REVIEWED	C. GAMACHE	C. GAMACHE	12/20/13
DESIGN2-DETAILED2			
DESIGN3-DETAILED3			
REVISIONS 1			
REVISIONS 2			
REVISIONS 3			
REVISIONS 4			
FIELD CHANGES			

SIGNATURE

P.E. NUMBER

DATE

STEEP FALLS BRIDGE
SACO RIVER
LIMINGTON/STANDISH YORK/CUMBERLAND

BEARINGS

SHEET NUMBER
34
OF 45

Filename: ...\dms28587\034 Bearings.dgn Division: BRIDGE Username: CAFUNSTON Date:2/4/2014

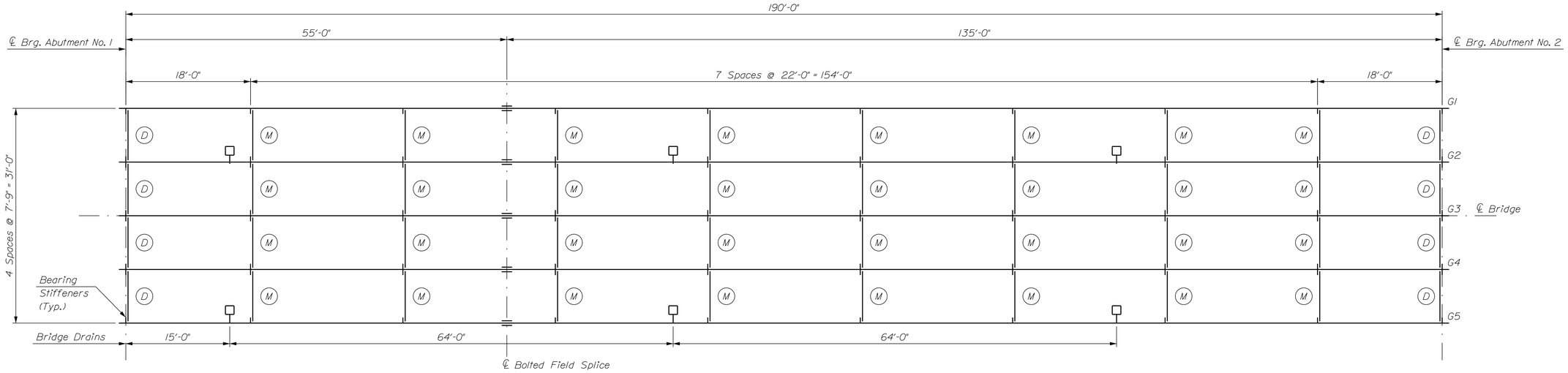

FRAMING PLAN

BOTTOM OF SLAB ELEVATIONS									
GIRDER	℄ Brg. Abut No. 1	1/8 PT.	1/4 PT.	3/8 PT.	1/2 PT.	5/8 PT.	3/4 PT.	7/8 PT.	℄ Brg. Abut No. 2
1	274.34	274.83	275.28	275.65	275.94	276.13	276.23	276.25	276.24
2	274.57	275.09	275.56	275.95	276.24	276.43	276.51	276.52	276.47
3	274.81	275.32	275.79	276.19	276.48	276.66	276.74	276.5	276.71
4	274.72	275.24	275.71	276.10	276.39	276.58	276.66	276.67	276.62
5	274.49	274.98	275.43	275.80	276.09	276.28	276.38	276.40	276.39

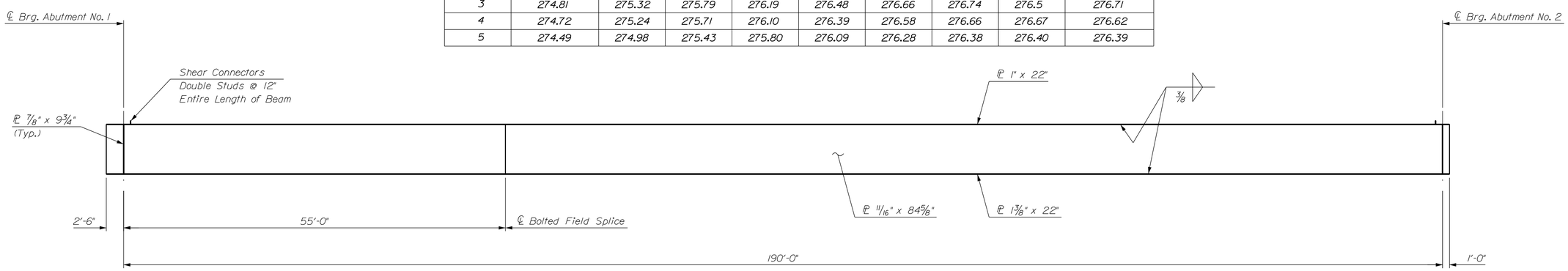

GIRDER ELEVATION

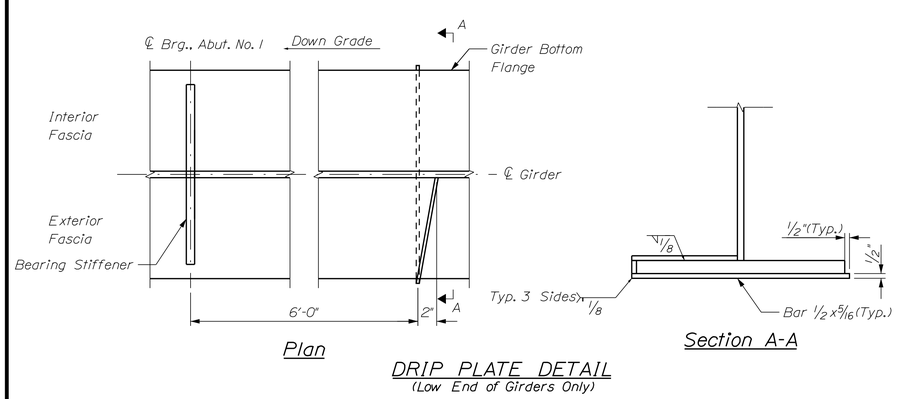

Plan

DRIP PLATE DETAIL
(Low End of Girders Only)

Section A-A

STRUCTURAL STEEL NOTES

1. Camber ordinates, as shown, are computed to compensate for all dead load deflections and for the curvature of the finished grade profile.

2. No transverse butt weld splices will be allowed in the flange plates or web plates within 10 feet or 10 percent of the span length (whichever is greater) from the point of maximum positive moment. Butt weld splices in flanges shall be not less than one foot from transverse butt welds in the web plates and no transverse web or flange butt welds shall be located within one foot of other transverse welds (e.g. connection plates to web welds) on either flange or web.

3. Sections of flange plates or web plates between transverse shop splices or between a transverse shop splice and a field splice shall be not less than 20 feet in length unless otherwise shown on the plans.

4. Bearing stiffeners shall be plumb after erection and dead loading of the structure. Intermediate web stiffeners may be either plumb or normal to the top flange.

5. Connection plates for all Type "M" crossframes shall have a thickness of 3/8 inch.

6. Crossframe or diaphragm connection plates may be either plumb or normal to the top flange.

7. All connection plates and bearing stiffeners shall be welded to the top and bottom flanges using a 5/16 inch weld.

8. Bolted field splice connections shall be made using 7/8 inch diameter ASTM A 325 H.S. bolts. Hole size shall be 15/16 inch diameter. Bolt threads shall be excluded from the shear plane of the field splice connections

9. Girder ends and end diaphragms shall be coated to a distance of 10 feet from the centerline of bearing at the abutments in accordance with Special Provisions Section 506, Protective Coating - Steel (Zinc Rich Coating System). The finish coat color shall match color chip No. 30045 of Federal Standard 595B.

STATE OF MAINE
DEPARTMENT OF TRANSPORTATION

BH-1823(200)X

WIN 18232.00

BRIDGE NO. 3328

BRIDGE PLANS

PROJ. MANAGER	M. P-ARLIN	BY	DATE
DESIGN-DETAILED	J. MUCHA	J. MUCHA	12/06/13
CHECKED-REVIEWED	C. GAMACHE	C. GAMACHE	12/20/13
DESIGN2-DETAILED2			
DESIGN3-DETAILED3			
REVISIONS 1			
REVISIONS 2			
REVISIONS 3			
REVISIONS 4			
FIELD CHANGES			

SIGNATURE

P.E. NUMBER

DATE

STEEP FALLS BRIDGE
SACO RIVER
LIMINGTON/STANDISH YORK/CUMBERLAND

STRUCTURAL STEEL

SHEET NUMBER
35
OF 45

Filename: ...\035 StructuralSteel.dgn Division: BRIDGE Username: CAFUNSTON Date:2/4/2014

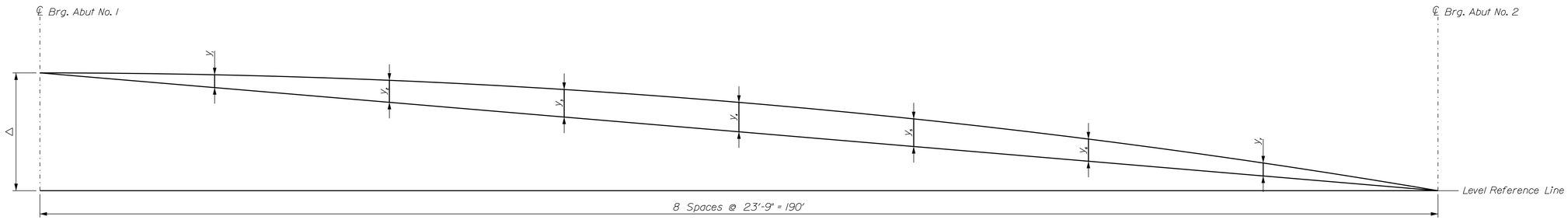

CAMBER DIAGRAM

CAMBER DIMENSIONS								
Girder	Δ	y_1	y_2	y_3	y_4	y_5	y_6	y_7
1	1.90"	4.22"	7.75"	10.07"	10.88"	10.07"	7.75"	4.22"
2	1.90"	4.56"	8.37"	10.88"	11.75"	10.88"	8.37"	4.56"
3	1.90"	4.56"	8.37"	10.88"	11.75"	10.88"	8.37"	4.56"
4	1.90"	4.56"	8.37"	10.88"	11.75"	10.88"	8.37"	4.56"
5	1.90"	4.22"	7.75"	10.07"	10.88"	10.07"	7.75"	4.22"

TABLE OF DEFLECTIONS									
	℄ Brg. Abut No. 1	1/8 PT.	1/4 PT.	3/8 PT.	1/2 PT.	5/8 PT.	3/4 PT.	7/8 PT.	℄ Brg. Abut No. 2
Steel Dead Load	0.00"	1.20"	2.20"	2.85"	3.08"	2.85"	2.20"	1.20"	0.00"
Fluid Dead Load (Interior)	0.00"	2.73"	5.01"	6.51"	7.03"	6.51"	5.01"	2.73"	0.00"
Fluid Dead Load (Exterior)	0.00"	2.36"	4.34"	5.63"	6.09"	5.63"	4.34"	2.36"	0.00"
Superimposed Dead Load (Interior)	0.00"	0.64"	1.17"	1.52"	1.64"	1.52"	1.17"	0.64"	0.00"
Superimposed Dead Load (Exterior)	0.00"	0.66"	1.22"	1.58"	1.71"	1.58"	1.22"	0.66"	0.00"

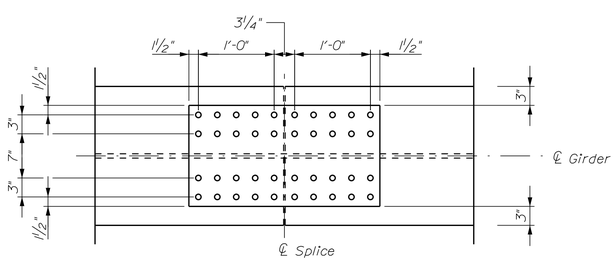

TOP FLANGE SPLICE

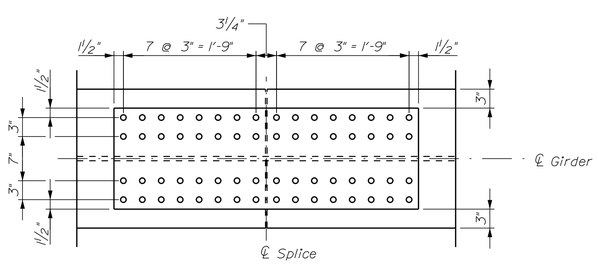

BOTTOM FLANGE SPLICE

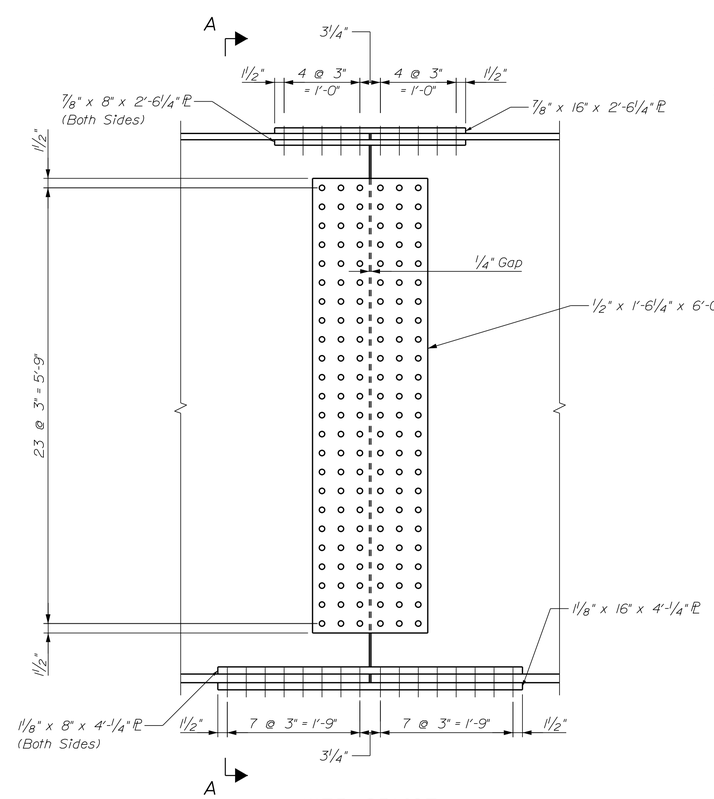

WEB SPLICE

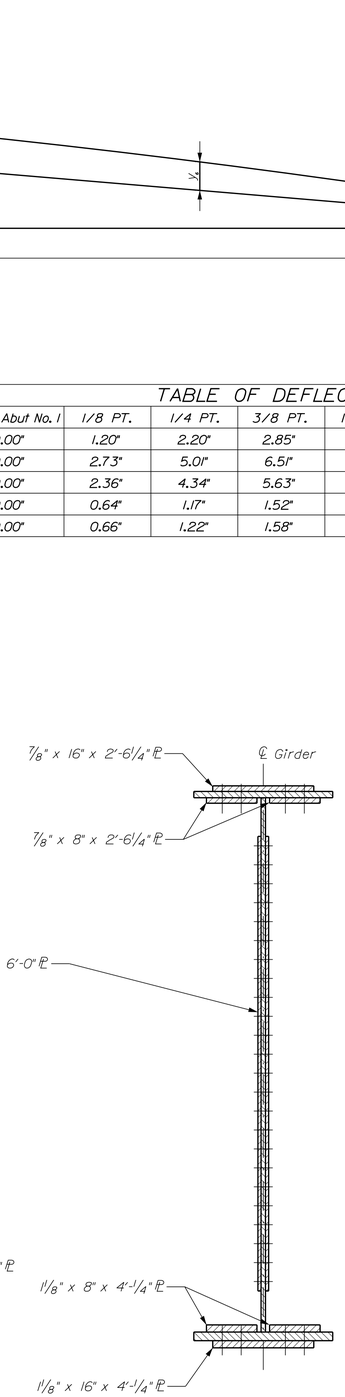

SECTION A-A

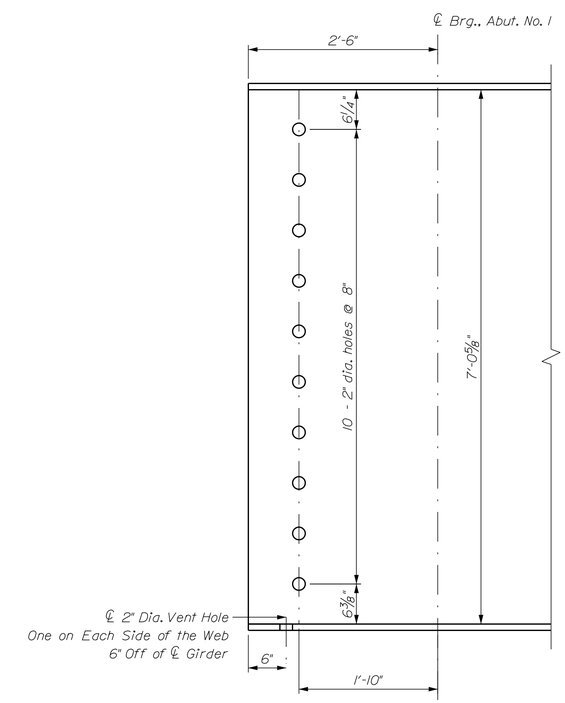

TYPICAL GIRDER END DETAIL

STATE OF MAINE
DEPARTMENT OF TRANSPORTATION

BH-1823(200)X

WIN 18232.00

BRIDGE NO. 3328

BRIDGE PLANS

PROJ. MANAGER	M. PARLIN	BY	DATE
DESIGN-DETAILED	J. MUCHA	J. MUCHA	12/06/13
CHECKED-REVIEWED	J. MUCHA	C. GAMACHE	12/20/13
DESIGN2-DETAILED2	C. GAMACHE		
DESIGN3-DETAILED3			
REVISIONS 1			
REVISIONS 2			
REVISIONS 3			
REVISIONS 4			
FIELD CHANGES			

SIGNATURE

P.E. NUMBER

DATE

STEEP FALLS BRIDGE
SACO RIVER
LIMINGTON/STANDISH YORK/CUMBERLAND

SUPERSTRUCTURE STEEL

SHEET NUMBER

36

OF 45

Filename: ...\036 Camber and Splice Details.dgn Division: BRIDGE Username: CAFUNSTON Date:2/4/2014

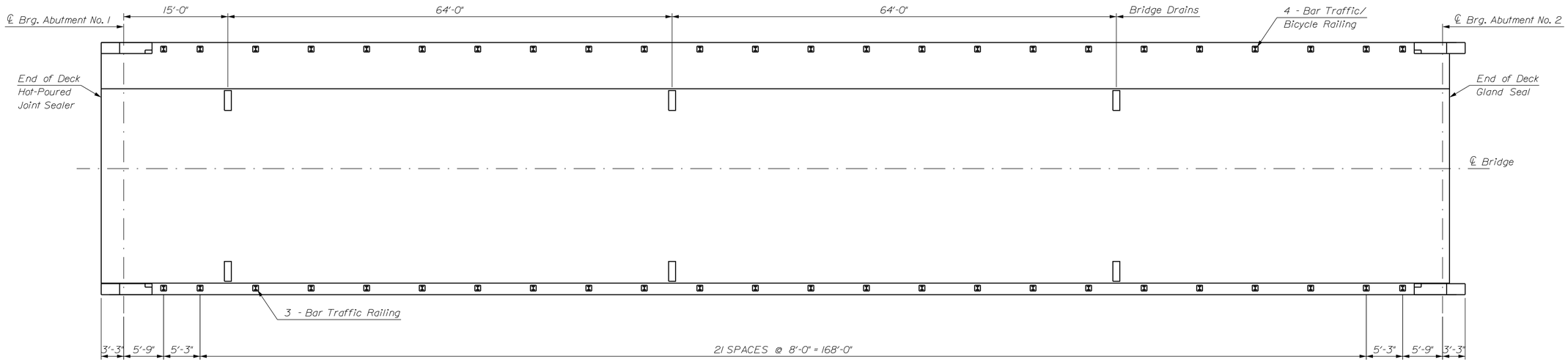

SUPERSTRUCTURE PLAN

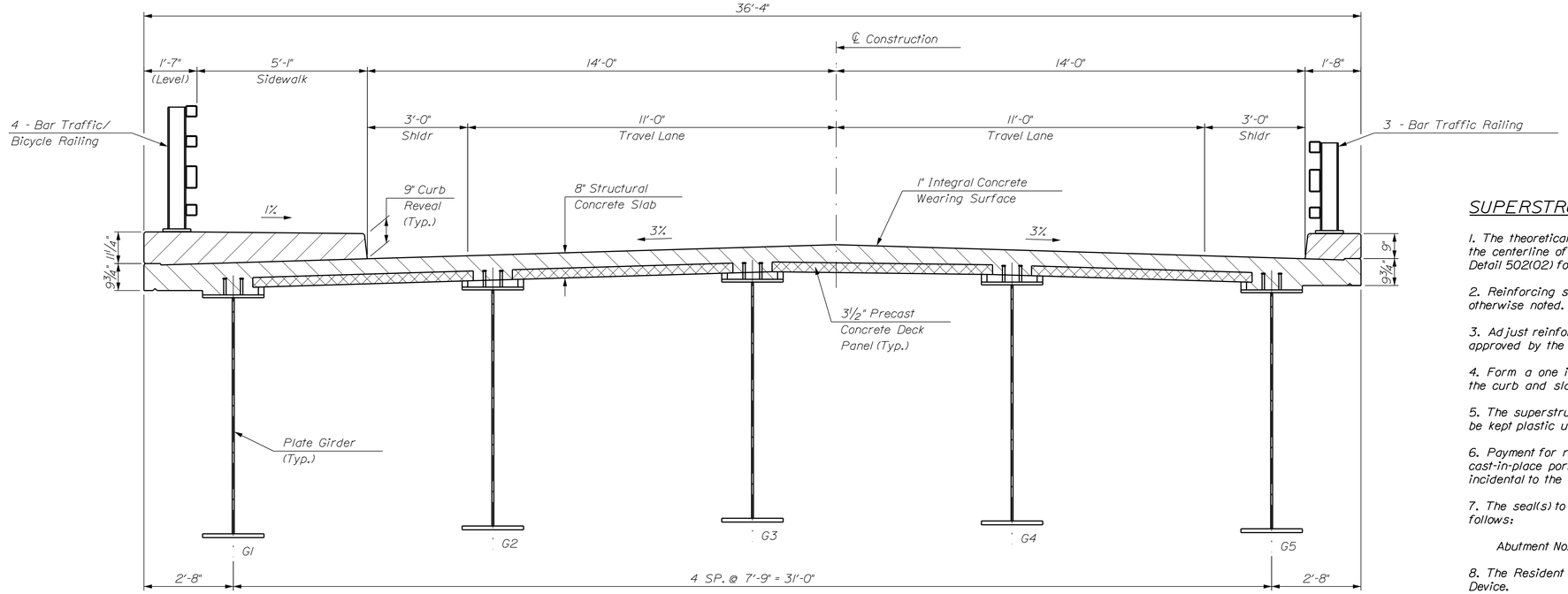

TRANSVERSE SECTION

SUPERSTRUCTURE NOTES

1. The theoretical blocking used for design of the structure is 3 inches at the centerline of bearing of the abutments. Refer to Standard Detail 502(02) for blocking details.

2. Reinforcing steel shall have a minimum concrete cover of 2 inches unless otherwise noted.

3. Adjust reinforcing steel to fit around the bridge drains in a manner approved by the Resident. Do not cut transverse reinforcing bars.

4. Form a one inch V-groove on the fascias at the horizontal joint between the curb and slab.

5. The superstructure slab concrete shall be placed continuously and shall be kept plastic until the entire placement has been made.

6. Payment for reinforcing steel fabricated, delivered, and placed in the cast-in-place portion of the structural concrete slab will be considered incidental to the appropriate Standard Specifications Section 502 pay item.

7. The seal(s) to be furnished shall have minimum Movement Rating(s) as follows:

   Abutment No. 2 = 2½ inches

8. The Resident shall approve the seals prior to fabrication of the Expansion Device.

9. Provide 3 additional stirrups in the curbs at each Transition Barrier location.

10. The Contractor shall install Transition Barrier vertical closed stirrups, as shown in Standard Details Section 526, prior to the placement of the curb or sidewalk concrete.

STATE OF MAINE
DEPARTMENT OF TRANSPORTATION

BH-1823(200)X

WIN 18232.00

BRIDGE NO. 3328

BRIDGE PLANS

		BY	DATE
PROJ. MANAGER	M. PARLIN		
DESIGN-DETAILED	J. MUCHA	J. MUCHA	12/06/13
CHECKED-REVIEWED	J. MUCHA	C. GAMACHE	12/20/13
DESIGN2-DETAILED2	C. GAMACHE		
DESIGN3-DETAILED3	C. GAMACHE		
REVISIONS 1			
REVISIONS 2			
REVISIONS 3			
REVISIONS 4			
FIELD CHANGES			

SIGNATURE

P.E. NUMBER

DATE

STEEP FALLS BRIDGE
SACO RIVER
LIMINGTON/STANDISH YORK/CUMBERLAND

SUPERSTRUCTURE

SHEET NUMBER

37

OF 45

Filename: ...\037 Superstructure.dgn Division: BRIDGE Username: CAFUNSTON Date:2/4/2014

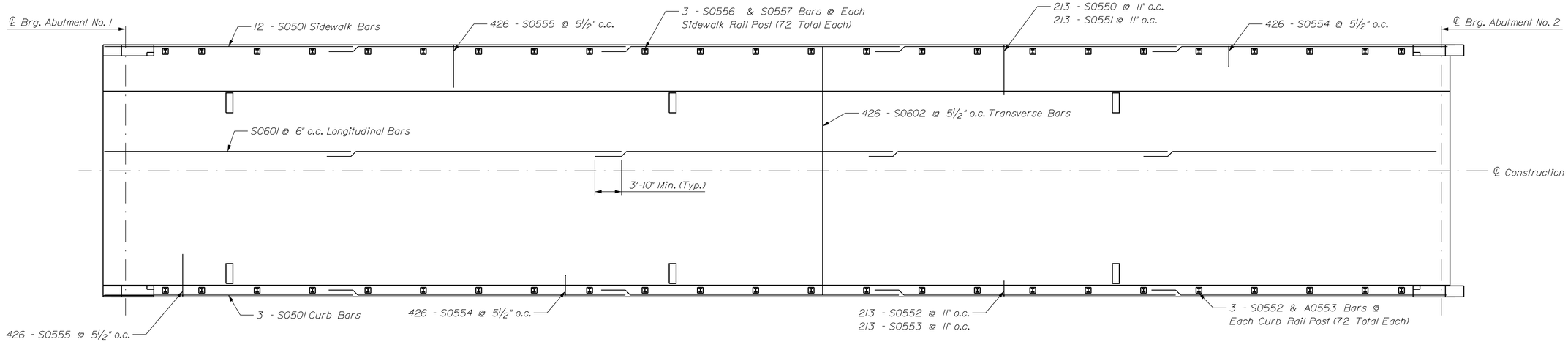

SUPERSTRUCTURE REINFORCING PLAN

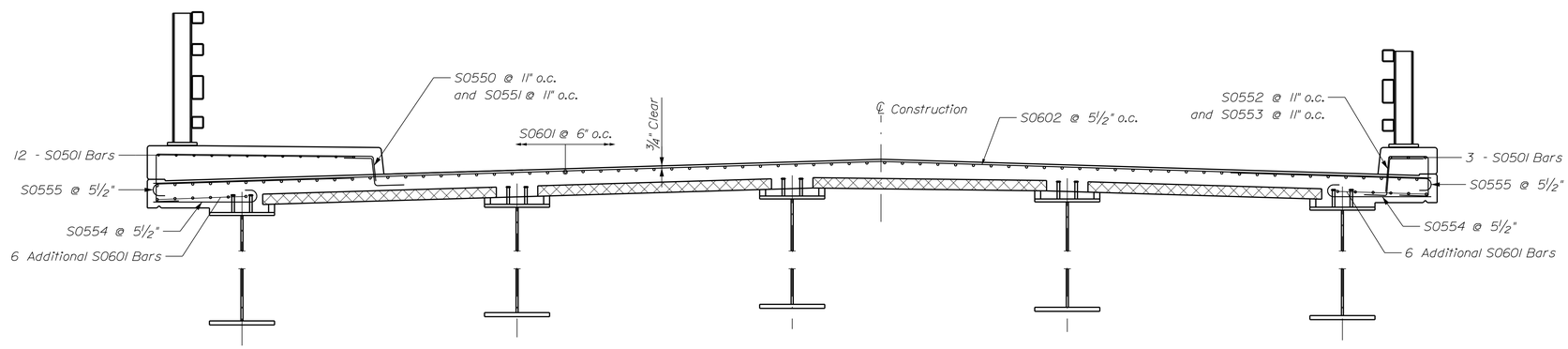

TRANSVERSE REINFORCING SECTION

REINFORCING NOTES

1. Superstructure reinforcing shall be glass fiber reinforced polymer (GFRP) with a minimum guaranteed tensile strength and a minimum tensile modulus of elasticity as follows:

Deck Bar	Tensile Strength (ksi) (Straight Portion)	Tensile Strength (ksi) (Bent Portion)	Elastic Modulus (ksi)
#5	105	65	6700
#6	100	--	6700
#7	95	65	6700
#8	90	--	6700

2. The minimum tensile strength for the bent portion of the S505 (curb reinforcing) shall meet or exceed 60 ksi.

3. GFRP Reinforcing minimum lap splices and development lengths shall be as follows:

Deck Bar	Minimum Lap Splice	Minimum Development Length
Top Transverse	3'-10"	3'-0"
Longitudinal	3'-10"	3'-0"

DECK DESIGN CRITERIA

1. Alternate deck reinforcing design (including lap splice lengths) are permitted, provided that the deck thickness, reinforcement cover, curb reveal and cross slope match what is shown on the plans. No alternate design of the rail post and curb/sidewalk reinforcing size or spacing is permitted.

2. Alternate deck designs shall meet the applicable provisions of the following:

a. AASHTO LRFD Bridge Design Guide Specificcations for GFRP - Reinforced Concrete Bridge Deck and Traffic Railings, 2009
b. MaineDOT Bridge Design Guide

3. Alternate deck reinforcing designs shall meet the following design criteria:

Load Case	Factored Design Moment (kip-ft)
Strength I	12.9
Service I	6.15

Deck overhang reinforcing designs shall meet the following design criteria:

Load Case	Factored Design Moment (kip-ft)	Factored Design Shear (kips)
Strength I	1.43	2.56
Extreme Event II	4.76	140.4

STATE OF MAINE
DEPARTMENT OF TRANSPORTATION

BH-1823(200)X

WIN 18232.00

BRIDGE NO. 3328

BRIDGE PLANS

PROJ. MANAGER	M. PARLIN		
DESIGN-DETAILED	J. MUCHA	BY	DATE
CHECKED-REVIEWED	C. GAMACHE	J. MUCHA	12/06/13
DESIGN2-DETAILED2		C. GAMACHE	12/20/13
DESIGN3-DETAILED3			
REVISIONS 1			
REVISIONS 2			
REVISIONS 3			
REVISIONS 4			
FIELD CHANGES			

SIGNATURE

P.E. NUMBER

DATE

STEEP FALLS BRIDGE
SACO RIVER
LIMINGTON/STANDISH YORK/CUMBERLAND

DECK REINFORCEMENT

SHEET NUMBER
38
OF 45

Filename: ...\038 Superstructure Reinf.dgn Division: BRIDGE Username: CAFUNSTON Date:2/4/2014

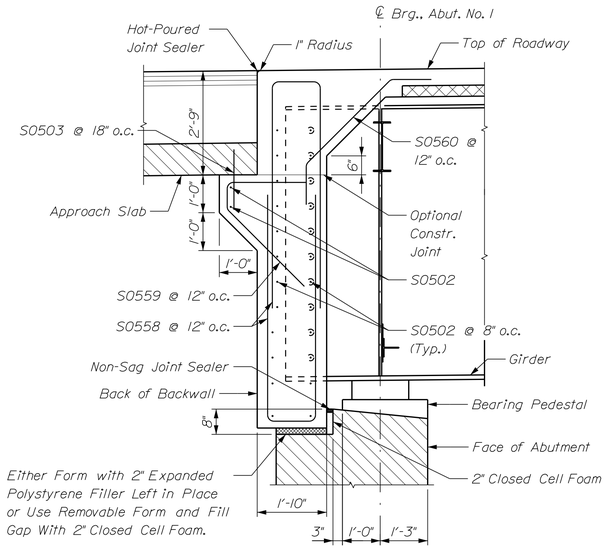

TYPICAL ROADWAY SECTION AT ABUTMENT NO. 1

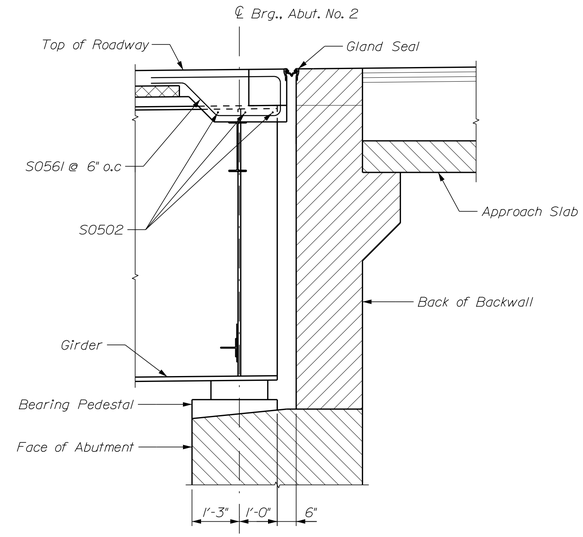

TYPICAL ROADWAY SECTION AT ABUTMENT NO. 2

STATE OF MAINE
DEPARTMENT OF TRANSPORTATION

BH-1823(200)X

WIN 18232.00

BRIDGE NO. 3328

BRIDGE PLANS

PROJ. MANAGER	M. PARLIN	BY	DATE
DESIGN-DETAILED	J. MUCHA	J. MUCHA	12/06/13
CHECKED-REVIEWED	C. GAMACHE	C. GAMACHE	12/20/13
DESIGN2-DETAILED2			
DESIGN3-DETAILED3			
REVISIONS 1			
REVISIONS 2			
REVISIONS 3			
REVISIONS 4			
FIELD CHANGES			

SIGNATURE

P.E. NUMBER

DATE

STEEP FALLS BRIDGE
SACO RIVER
LIMINGTON/STANDISH YORK/CUMBERLAND

SUPERSTRUCTURE DETAILS

SHEET NUMBER

39

OF 45

Filename: ...\039 Superstructure Details.dgn Division: BRIDGE Username: CAFUNSTON Date:2/4/2014

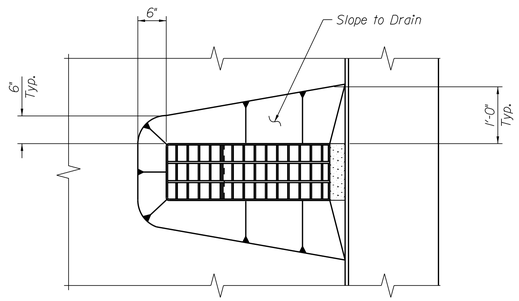

BRIDGE DRAIN PLAN

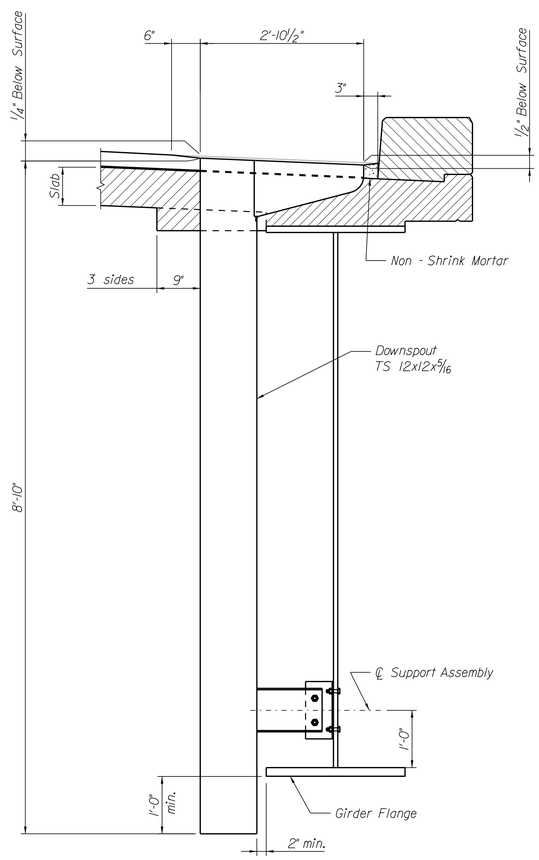

BRIDGE DRAIN ELEVATION

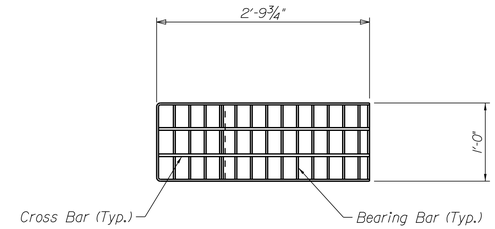

~ DRAIN TOP VIEW ~

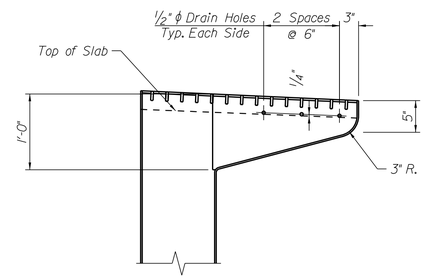

~ DRAIN SECTION ~

BRIDGE DRAIN

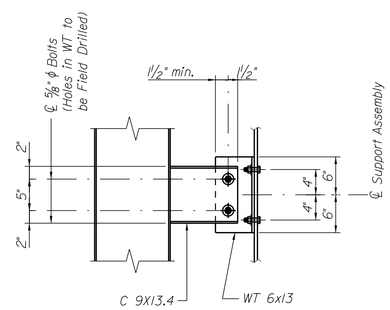

~ SUPPORT ASSEMBLY DETAIL ~

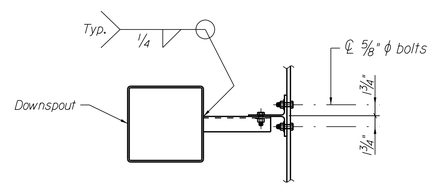

~ SUPPORT ASSEMBLY TOP VIEW ~

SUPPORT ASSEMBLY

BRIDGE DRAIN NOTES

1. FRP Bridge Drains shall be designed and detailed based on the dimensions for the bridge drain details shown, and in accordance with Special Provisions Section 502, Fiber Reinforced Polymer Bridge Drains and Downspouts.

2. Shear connectors welded to the top flange of steel beams may require adjustment to clear the bridge drains. No extra payment will be made for needed adjustments to the studs.

STATE OF MAINE
DEPARTMENT OF TRANSPORTATION

BH-1823(200)X

WIN 18232.00

BRIDGE NO. 3328

BRIDGE PLANS

PROJ. MANAGER	M. P-ARLIN		
DESIGN-DETAILED	J. MUCHA	BY	DATE
CHECKED-REVIEWED	C. GAMACHE	C. GAMACHE	12/06/13
DESIGN2-DETAILED2			12/20/13
DESIGN3-DETAILED3			
REVISIONS 1			
REVISIONS 2			
REVISIONS 3			
REVISIONS 4			
FIELD CHANGES			

SIGNATURE

P.E. NUMBER

DATE

STEEP FALLS BRIDGE
SACO RIVER
LIMINGTON/STANDISH YORK/CUMBERLAND

DOWNSPOUTS

SHEET NUMBER

40

OF 45

Filename: ...\dms28587\040 Bridge Drains.dgn Division: BRIDGE Username: CAFUNSTON Date:2/4/2014

TYPE - BENDING DIAGRAMS

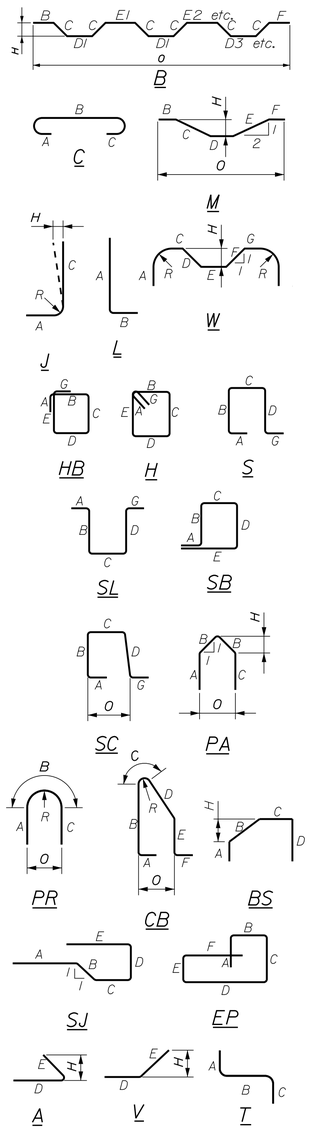

All dimensions are out-to-out of bar.

Bending details and hooks shall conform to the recommendations of the current revision of ACI Standard 318.

Reinforcing Bar: ASTM A615/A615M, Grade 420

GENERAL NOTES

1. The first two digits following the letter(s) of the mark indicate the size ofthe bar:

   Mark "A1602" = bar size #16
   Mark "P2501" = bar size #25
   Mark "S1950" = bar size #19

2. Each crank bar, Type B, may be replaced by two (2) straight bars (one top and one bottom) of the same bar size as the crank bar. Payment in either case shall be based on crank bars as schedule on the plans.

STRAIGHT BARS

MARK	QTY.	LENGTH	LOCATION	MARK	QTY.	LENGTH	LOCATION
			Abutment No. 1				Abutment No. 1
A0500	58	3'-0"	Wingwall F.F. into Footing	A05101	1	20'-1"	Vertical Bar F.F. Wingwall Stem
				A05102	1	19'-8"	Vertical Bar F.F. Wingwall Stem
A0501	1	7'-2"	Vertical Bar F.F. Wingwall Stem	A05103	1	19'-4"	Vertical Bar F.F. Wingwall Stem
A0502	1	8'-1"	Vertical Bar F.F. Wingwall Stem	A05104	1	18'-11"	Vertical Bar F.F. Wingwall Stem
A0503	1	8'-10"	Vertical Bar F.F. Wingwall Stem	A05105	1	18'-7"	Vertical Bar F.F. Wingwall Stem
A0504	1	9'-7"	Vertical Bar F.F. Wingwall Stem	A05106	1	18'-2"	Vertical Bar F.F. Wingwall Stem
A0505	1	10'-5"	Vertical Bar F.F. Wingwall Stem	A05107	1	17'-9"	Vertical Bar F.F. Wingwall Stem
A0506	1	11'-2"	Vertical Bar F.F. Wingwall Stem	A05108	1	17'-5"	Vertical Bar F.F. Wingwall Stem
A0507	1	12'-0"	Vertical Bar F.F. Wingwall Stem	A05109	1	17'-0"	Vertical Bar F.F. Wingwall Stem
A0508	1	12'-9"	Vertical Bar F.F. Wingwall Stem	A05110	1	16'-7"	Vertical Bar F.F. Wingwall Stem
A0509	1	13'-6"	Vertical Bar F.F. Wingwall Stem	A05111	1	16'-3"	Vertical Bar F.F. Wingwall Stem
A0510	1	14'-4"	Vertical Bar F.F. Wingwall Stem	A05112	1	15'-10"	Vertical Bar F.F. Wingwall Stem
A0511	1	15'-1"	Vertical Bar F.F. Wingwall Stem	A05113	1	15'-5"	Vertical Bar F.F. Wingwall Stem
A0512	1	15'-10"	Vertical Bar F.F. Wingwall Stem	A05114	1	15'-1"	Vertical Bar F.F. Wingwall Stem
A0513	1	16'-8"	Vertical Bar F.F. Wingwall Stem	A05115	1	14'-8"	Vertical Bar F.F. Wingwall Stem
A0514	1	17'-5"	Vertical Bar F.F. Wingwall Stem	A05116	1	14'-4"	Vertical Bar F.F. Wingwall Stem
A0515	1	18'-3"	Vertical Bar F.F. Wingwall Stem	A05117	1	13'-11"	Vertical Bar F.F. Wingwall Stem
A0516	1	19'-0"	Vertical Bar F.F. Wingwall Stem	A05118	1	13'-6"	Vertical Bar F.F. Wingwall Stem
A0517	1	19'-9"	Vertical Bar F.F. Wingwall Stem	A05119	1	13'-2"	Vertical Bar F.F. Wingwall Stem
A0518	1	20'-5"	Vertical Bar F.F. Wingwall Stem	A05120	1	12'-9"	Vertical Bar F.F. Wingwall Stem
A0519	1	21'-3"	Vertical Bar F.F. Wingwall Stem	A05121	1	12'-4"	Vertical Bar F.F. Wingwall Stem
A0520	1	22'-1"	Vertical Bar F.F. Wingwall Stem	A05122	1	12'-0"	Vertical Bar F.F. Wingwall Stem
A0521	1	22'-10"	Vertical Bar F.F. Wingwall Stem	A05123	1	11'-6"	Vertical Bar F.F. Wingwall Stem
				A05124	1	11'-3"	Vertical Bar F.F. Wingwall Stem
A0522	16	20'-0"	Horizontal Bar Wingwall Stem	A05125	1	10'-10"	Vertical Bar F.F. Wingwall Stem
A0523	2	18'-9"	Horizontal Bar Wingwall Stem	A05126	1	10'-5"	Vertical Bar F.F. Wingwall Stem
A0524	2	17'-7"	Horizontal Bar Wingwall Stem	A05127	1	10'-1"	Vertical Bar F.F. Wingwall Stem
A0525	2	16'-4"	Horizontal Bar Wingwall Stem	A05128	1	9'-8"	Vertical Bar F.F. Wingwall Stem
A0526	2	15'-0"	Horizontal Bar Wingwall Stem	A05129	1	9'-4"	Vertical Bar F.F. Wingwall Stem
A0527	2	13'-9"	Horizontal Bar Wingwall Stem	A05130	1	8'-11"	Vertical Bar F.F. Wingwall Stem
A0528	2	12'-6"	Horizontal Bar Wingwall Stem	A05131	1	8'-7"	Vertical Bar F.F. Wingwall Stem
A0529	2	11'-2"	Horizontal Bar Wingwall Stem	A05132	1	8'-2"	Vertical Bar F.F. Wingwall Stem
A0530	2	9'-11"	Horizontal Bar Wingwall Stem	A05133	1	7'-9"	Vertical Bar F.F. Wingwall Stem
A0531	2	8'-7"	Horizontal Bar Wingwall Stem	A05134	1	7'-5"	Vertical Bar F.F. Wingwall Stem
A0532	2	7'-3"	Horizontal Bar Wingwall Stem	A05135	1	7'-0"	Vertical Bar F.F. Wingwall Stem
A0533	2	6'-2"	Horizontal Bar Wingwall Stem	A05136	1	6'-8"	Vertical Bar F.F. Wingwall Stem
A0534	2	4'-10"	Horizontal Bar Wingwall Stem	A05137	1	6'-3"	Vertical Bar F.F. Wingwall Stem
A0535	2	3'-6"	Horizontal Bar Wingwall Stem				
A0536	4	2'-3"	Horizontal Bar Wingwall Stem	A0600	26	25'-9"	Footing T&B longitudinal bars
A0537	26	17'-9"	Horizontal Bar Wingwall Stem	A0601	26	19'-1"	Footing T&B longitudinal bars
A0538	26	6'-6"	Horizontal Bar Wingwall Stem	A0602	26	23'-9"	Footing T&B longitudinal bars
A0539	14	17'-3"	Horizontal Bar Wingwall Stem	A0603	26	37'-3"	Footing T&B longitudinal bars
A0540	2	14'-9"	Horizontal Bar Wingwall Stem				
A0541	2	12'-3"	Horizontal Bar Wingwall Stem	A0604	39	11'-0"	Vertical Bar B.F. Abutment Stem
A0542	2	9'-8"	Horizontal Bar Wingwall Stem	A0605	49	7'-9"	Vertical Bar B.F. Abutment Stem
A0543	2	7'-1"	Horizontal Bar Wingwall Stem				
A0544	2	17'-6"	Horizontal Bar Wingwall Stem	A0606	1	16'-2"	Top Horizontal Abutment Bars
A0545	2	14'-11"	Horizontal Bar Wingwall Stem	A0607	1	17'-2"	Top Horizontal Abutment Bars
A0546	2	12'-5"	Horizontal Bar Wingwall Stem	A0608	1	18'-2"	Top Horizontal Abutment Bars
A0547	2	9'-10"	Horizontal Bar Wingwall Stem	A0609	1	22'-5"	Top Horizontal Abutment Bars
A0548	2	7'-4"	Horizontal Bar Wingwall Stem	A0610	1	23'-0"	Top Horizontal Abutment Bars
A0549	2	4'-9"	Horizontal Bar Wingwall Stem	A0611	1	23'-6"	Top Horizontal Abutment Bars
				A0701	45	3'-0"	Vertical Bar Abutment Stem
				A0702	20	13'-1"	Vertical Bar Abutment Stem
				A0703	25	10'-1"	Vertical Bar Abutment Stem
				A0704	14	16'-1"	Horizontal Bar Abutment Stem
				A0705	14	17'-9"	Horizontal Bar Abutment Stem
				A0706	11	22'-4"	Horizontal Bar Abutment Stem
				A0707	11	22'-9"	Horizontal Bar Abutment Stem
				A0801	282	12'-6"	Footing T&B transverse bars
				A0802	42	11'-6"	Footing T&B trans. flare bars
				A0803	42	6'-0"	Footing T&B trans. flare bars
MARK	QTY.	LENGTH	LOCATION	MARK	QTY.	LENGTH	LOCATION

BENT BARS

MARK	QTY.	LENGTH	TYPE	A	B	C	D	E	F	G	H	O	R	LOCATION
								Abutment No. 1						
A0550	14	8'-8"	V	--	--	--	2'-8"	6'-0"	--	--	4'-3"	--	--	Wingwall to Abutment Bar
A0551	8	5'-4"	V	--	--	--	2'-8"	2'-8"	--	--	1'-10"	--	--	Wingwall to Abutment Bar
A0552	22	4'-6"	V	--	--	--	2'-3"	2'-3"	--	--	1'-7"	--	--	Wingwall to Abutment Bar
A0553	11	8'-6"	V	--	--	--	2'-11"	5'-7"	--	--	4'-10"	--	--	Wingwall to Abutment Bar
A0554	8	5'-9"	V	--	--	--	2'-11"	2'-10"	--	--	2'-5"	--	--	Wingwall to Abutment Bar
A0555	19	4'-7"	V	--	--	--	2'-4"	2'-3"	--	--	1'-11"	--	--	Wingwall to Abutment Bar
A0556	50	6'-11"	SL	--	2'-6"	1'-11"	2'-6"	--	--	--	--	--	--	Abutment Pedestal Bar
A0557	30	7'-8"	SL	--	2'-6"	2'-8"	2'-6"	--	--	--	--	--	--	Abutment Pedestal Bar
A0650	40	6'-5"	SL	--	1'-6"	3'-5"	1'-6"	--	--	--	--	--	--	Top of Abutment U-Bar
A0651	40	6'-0"	SL	--	2'-0"	2'-0"	2'-0"	--	--	--	--	--	--	Top of Abutment U-Bar
A0950	83	10'-0"	L	8'-6"	1'-6"	--	--	--	--	--	--	--	--	Abutment Stem to Footing Hook
A0951	58	8'-0"	L	7'-6"	1'-6"	--	--	--	--	--	--	--	--	Wingwall Stem to Footing Hook
MARK	QTY.	LENGTH	TYPE	A	B	C	D	E	F	G	H	O	R	LOCATION

STATE OF MAINE
DEPARTMENT OF TRANSPORTATION

BH-1823(200)X

WIN 18232.00

BRIDGE NO. 3328

BRIDGE PLANS

PROJ. MANAGER	M. P-ARLIN	BY	DATE
DESIGN-DETAILED	J. MUCHA	J. MUCHA	1/28/14
CHECKED-REVIEWED	C. GAMACHE	C. GAMACHE	
DESIGN2-DETAILED2			
DESIGN3-DETAILED3			
REVISIONS 1			
REVISIONS 2			
REVISIONS 3			
REVISIONS 4			
FIELD CHANGES			

SIGNATURE

P.E. NUMBER

DATE

STEEP FALLS BRIDGE
SACO RIVER
LIMINGTON/STANDISH YORK/CUMBERLAND

ABUTMENT 1 REINFORCING STEEL SCHEDULE

SHEET NUMBER

41

OF 45

Filename: ...\041 Reinforcing Steel Schedule.dgn Division: BRIDGE Username: CAFUNSTON Date:2/4/2014

TYPE - BENDING DIAGRAMS

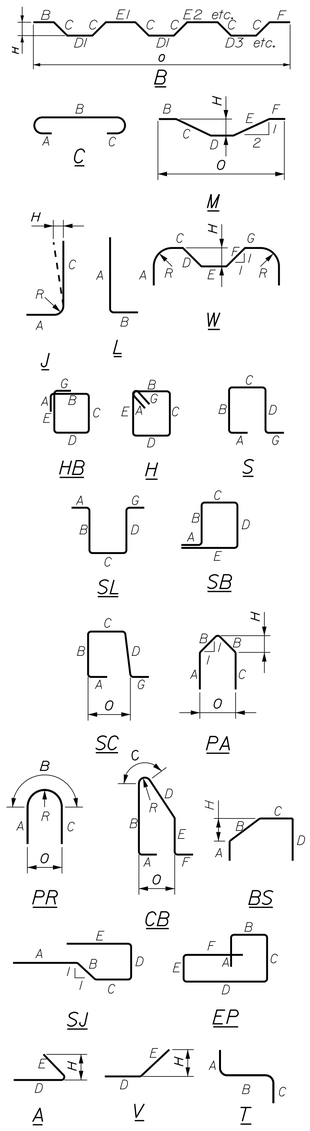

All dimensions are out-to-out of bar.

Bending details and hooks shall conform to the recommendations of the current revision of ACI Standard 318.

Reinforcing Bar: ASTM A615/A615M, Grade 420

GENERAL NOTES

1. The first two digits following the letter(s) of the mark indicate the size of the bar:

   Mark "A1602" = bar size #16
   Mark "P2501" = bar size #25
   Mark "S1950" = bar size #19

2. Each crank bar, Type B, may be replaced by two (2) straight bars (one top and one bottom) of the same bar size as the crank bar. Payment in either case shall be based on crank bars as schedule on the plans.

STRAIGHT BARS

MARK	QTY.	LENGTH	LOCATION	MARK	QTY.	LENGTH	LOCATION
			Deck				
S0501	75	44'-6"	Sidewalk/Curb Long. Bars				
S0502	29	36'-0"	Additional Deck Bars @ Abuts				
S0503	19	1'-6"	Approach Slab Dowel Bar				
S0601	420	44'-6"	Deck Top Longitudinal Bars				
S0602	426	36'-0"	Deck Top Transverse Bars				
			Approach Slabs				
AS0501	34	26'-8"	Transverse Bars				
AS0601	110	15'-4"	Longitudinal Bars				
			Abutment No. 1				
A0901	1	7'-2"	Vertical Bar B.F. Wingwall Stem				
A0902	1	8'-1"	Vertical Bar B.F. Wingwall Stem				
A0903	1	8'-10"	Vertical Bar B.F. Wingwall Stem				
A0904	1	9'-7"	Vertical Bar B.F. Wingwall Stem				
A0905	1	10'-5"	Vertical Bar B.F. Wingwall Stem				
A0906	1	11'-2"	Vertical Bar B.F. Wingwall Stem				
A0907	1	12'-0"	Vertical Bar B.F. Wingwall Stem				
A0908	1	12'-9"	Vertical Bar B.F. Wingwall Stem				
A0909	1	13'-6"	Vertical Bar B.F. Wingwall Stem				
A0910	1	14'-4"	Vertical Bar B.F. Wingwall Stem				
A0911	1	15'-1"	Vertical Bar B.F. Wingwall Stem				
A0912	1	15'-10"	Vertical Bar B.F. Wingwall Stem				
A0913	1	16'-8"	Vertical Bar B.F. Wingwall Stem				
A0914	1	17'-5"	Vertical Bar B.F. Wingwall Stem				
A0915	1	18'-3"	Vertical Bar B.F. Wingwall Stem				
A0916	1	19'-0"	Vertical Bar B.F. Wingwall Stem				
A0917	1	19'-9"	Vertical Bar B.F. Wingwall Stem				
A0918	1	20'-5"	Vertical Bar B.F. Wingwall Stem				
A0919	1	21'-3"	Vertical Bar B.F. Wingwall Stem				
A0920	1	22'-1"	Vertical Bar B.F. Wingwall Stem				
A0921	1	22'-10"	Vertical Bar B.F. Wingwall Stem				
A09101	1	20'-1"	Vertical Bar B.F. Wingwall Stem				
A09102	1	19'-8"	Vertical Bar B.F. Wingwall Stem				
A09103	1	19'-4"	Vertical Bar B.F. Wingwall Stem				
A09104	1	18'-11"	Vertical Bar B.F. Wingwall Stem				
A09105	1	18'-7"	Vertical Bar B.F. Wingwall Stem				
A09106	1	18'-2"	Vertical Bar B.F. Wingwall Stem				
A09107	1	17'-9"	Vertical Bar B.F. Wingwall Stem				
A09108	1	17'-5"	Vertical Bar B.F. Wingwall Stem				
A09109	1	17'-0"	Vertical Bar B.F. Wingwall Stem				
A09110	1	16'-7"	Vertical Bar B.F. Wingwall Stem				
A09111	1	16'-3"	Vertical Bar B.F. Wingwall Stem				
A09112	1	15'-10"	Vertical Bar B.F. Wingwall Stem				
A09113	1	15'-5"	Vertical Bar B.F. Wingwall Stem				
A09114	1	15'-1"	Vertical Bar B.F. Wingwall Stem				
A09115	1	14'-8"	Vertical Bar B.F. Wingwall Stem				
A09116	1	14'-4"	Vertical Bar B.F. Wingwall Stem				
A09117	1	13'-11"	Vertical Bar B.F. Wingwall Stem				
A09118	1	13'-6"	Vertical Bar B.F. Wingwall Stem				
A09119	1	13'-2"	Vertical Bar B.F. Wingwall Stem				
A09120	1	12'-9"	Vertical Bar B.F. Wingwall Stem				
A09121	1	12'-4"	Vertical Bar B.F. Wingwall Stem				
A09122	1	12'-0"	Vertical Bar B.F. Wingwall Stem				
A09123	1	11'-6"	Vertical Bar B.F. Wingwall Stem				
A09124	1	11'-3"	Vertical Bar B.F. Wingwall Stem				
A09125	1	10'-10"	Vertical Bar B.F. Wingwall Stem				
A09126	1	10'-5"	Vertical Bar B.F. Wingwall Stem				
A09127	1	10'-1"	Vertical Bar B.F. Wingwall Stem				
A09128	1	9'-8"	Vertical Bar B.F. Wingwall Stem				
A09129	1	9'-4"	Vertical Bar B.F. Wingwall Stem				
A09130	1	8'-11"	Vertical Bar B.F. Wingwall Stem				
A09131	1	8'-7"	Vertical Bar B.F. Wingwall Stem				
A09132	1	8'-2"	Vertical Bar B.F. Wingwall Stem				
A09133	1	7'-9"	Vertical Bar B.F. Wingwall Stem				
A09134	1	7'-5"	Vertical Bar B.F. Wingwall Stem				
A09135	1	7'-0"	Vertical Bar B.F. Wingwall Stem				
A09136	1	6'-8"	Vertical Bar B.F. Wingwall Stem				
A09137	1	6'-3"	Vertical Bar B.F. Wingwall Stem				
MARK	QTY.	LENGTH	LOCATION	MARK	QTY.	LENGTH	LOCATION

BENT BARS

MARK	QTY.	LENGTH	TYPE	A	B	C	D	E	F	G	H	O	R	LOCATION
						Deck								
S0550	213	9'-3"	SC	1'-0"	1'-4"	6'-0"	0'-11"	--	--	--	--	6'-3"	--	Sidewalk to Deck Bent Bar
S0551	213	2'-11"	SC	--	--	1'-0"	0'-11	--	--	1'-0"	--	1'-1"	--	Sidewalk to Deck Bent Bar
S0552	285	4'-5"	SC	1'-0"	1'-2"	1'-3"	1'-0"	--	--	--	--	1'-3"	--	Curb to Deck Bent Bar
S0553	285	3'-0"	SC	--	--	1'-0"	1'-0"	--	--	1'-0"	--	1'-1"	--	Curb to Deck Bent Bar
S0554	852	3'-8"	PR	2'-9"	0'-7"	0'-4"	--	--	--	--	--	0'-4"	0'-2"	Deck Overhang Bars
S0555	852	6'-5"	PR	5'-6"	0'-7"	0'-4"	--	--	--	--	--	0'-4"	0'-2"	Deck Overhang Bars
S0556	72	4'-9"	S	1'-0"	1'-4"	1'-3"	1'-2"	--	--	--	--	--	--	Sidewalk Bars at Rail Posts
S0557	72	3'-4"	T	1'-0"	1'-4"	1'-0"	--	--	--	--	--	--	--	Sidewalk Bars at Rail Posts
S0558	76	13'-3"	SL	--	6'-0"	1'-3"	6'-0"	--	--	--	--	--	--	Abutment 1 End Diaphragm
S0559	38	5'-10"	SJ	--	3'-0"	0'-9"	2'-1"	--	--	--	--	--	--	Abutment 1 End Diaphragm
S0560	38	5'-2"	W	--	--	--	1'-0"	3'-2"	1'-0"	--	0'-9"	--	--	Abutment 1 End Diaphragm
S0561	38	7'-11"	SJ	1'-0"	1'-1"	1'-6"	1'-0"	3'-4"	--	--	--	--	--	End of Deck at Abutment 2
MARK	QTY.	LENGTH	TYPE	A	B	C	D	E	F	G	H	O	R	LOCATION

STATE OF MAINE
DEPARTMENT OF TRANSPORTATION

BH-1823(200)X

WIN 18232.00

BRIDGE NO. 3328

BRIDGE PLANS

SIGNATURE

P.E. NUMBER

DATE

		BY	DATE
PROJ. MANAGER	M. PARLIN		
DESIGN-DETAILED	J. MUCHA	J. MUCHA	1/28/14
CHECKED-REVIEWED	C. GAMACHE	C. GAMACHE	
DESIGN2-DETAILED2			
DESIGN3-DETAILED3			
REVISIONS 1			
REVISIONS 2			
REVISIONS 3			
REVISIONS 4			
FIELD CHANGES			

STEEP FALLS BRIDGE
SACO RIVER
LIMINGTON/STANDISH YORK/CUMBERLAND

DECK REINFORCING STEEL SCHEDULE

SHEET NUMBER

42

OF 45

Filename: ...\042 Reinforcing Steel Schedule.dgn Division: BRIDGE Username: CAFUNSTON Date:2/4/2014

TYPE - BENDING DIAGRAMS

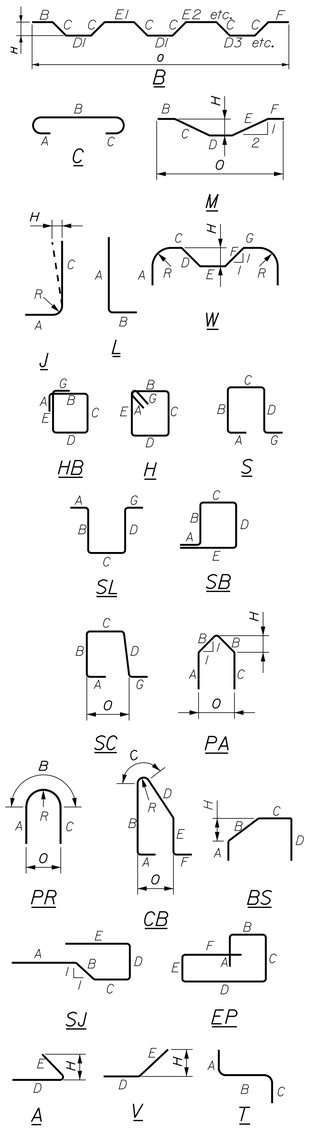

All dimensions are out-to-out of bar.

Bending details and hooks shall conform to the recommendations of the current revision of ACI Standard 318.

Reinforcing Bar: ASTM A615/A615M. Grade 420

GENERAL NOTES

1. The first two digits following the letter(s) of the mark indicate the size ofthe bar:

   Mark "A1602" = bar size #16
   Mark "P2501" = bar size #25
   Mark "S1950" = bar size #19

2. Each crank bar, Type B, may be replaced by two (2) straight bars (one top and one bottom) of the same bar size as the crank bar. Payment in either case shall be based on crank bars as schedule on the plans.

STRAIGHT BARS

MARK	QTY.	LENGTH	LOCATION	MARK	QTY.	LENGTH	LOCATION
			Abutment No. 2				Abutment No. 2
B0500	55	3'-0"	Wingwall F.F. into Footing	B0901	13	8'-0"	Footing Top trans. flare bars
				B0902	12	15'-6"	Footing Top trans. flare bars
B0501	1	19'-10"	Vertical Bar F.F. Wingwall Stem	B0903	159	16'-0"	Footing Top transverse bars
B0502	1	20'-4"	Vertical Bar F.F. Wingwall Stem				
B0503	1	20'-10"	Vertical Bar F.F. Wingwall Stem	B0904	1	19'-4"	Vertical Bar B.F. Wingwall Stem
B0504	1	21'-4"	Vertical Bar F.F. Wingwall Stem	B0905	1	19'-7"	Vertical Bar B.F. Wingwall Stem
B0505	1	21'-10"	Vertical Bar F.F. Wingwall Stem	B0906	1	19'-10"	Vertical Bar B.F. Wingwall Stem
B0506	1	22'-4"	Vertical Bar F.F. Wingwall Stem	B0907	1	20'-1"	Vertical Bar B.F. Wingwall Stem
B0507	1	22'-9"	Vertical Bar F.F. Wingwall Stem	B0908	1	20'-4"	Vertical Bar B.F. Wingwall Stem
B0508	1	23'-3"	Vertical Bar F.F. Wingwall Stem	B0909	1	20'-7"	Vertical Bar B.F. Wingwall Stem
B0509	1	23'-9"	Vertical Bar F.F. Wingwall Stem	B0910	1	20'-10"	Vertical Bar B.F. Wingwall Stem
B0510	1	24'-3"	Vertical Bar F.F. Wingwall Stem	B0911	1	21'-1"	Vertical Bar B.F. Wingwall Stem
B0511	1	24'-9"	Vertical Bar F.F. Wingwall Stem	B0912	1	21'-4"	Vertical Bar B.F. Wingwall Stem
B0512	1	25'-3"	Vertical Bar F.F. Wingwall Stem	B0913	1	21'-7"	Vertical Bar B.F. Wingwall Stem
B0513	1	25'-8"	Vertical Bar F.F. Wingwall Stem	B0914	1	21'-10"	Vertical Bar B.F. Wingwall Stem
B0514	1	26'-2"	Vertical Bar F.F. Wingwall Stem	B0915	1	22'-1"	Vertical Bar B.F. Wingwall Stem
B0515	1	26'-8"	Vertical Bar F.F. Wingwall Stem	B0916	1	22'-4"	Vertical Bar B.F. Wingwall Stem
B0516	1	27'-2"	Vertical Bar F.F. Wingwall Stem	B0917	1	22'-7"	Vertical Bar B.F. Wingwall Stem
B0517	1	27'-8"	Vertical Bar F.F. Wingwall Stem	B0918	1	22'-10"	Vertical Bar B.F. Wingwall Stem
B0518	1	28'-2"	Vertical Bar F.F. Wingwall Stem	B0919	1	23'-1"	Vertical Bar B.F. Wingwall Stem
B0519	1	28'-8"	Vertical Bar F.F. Wingwall Stem	B0920	1	23'-4"	Vertical Bar B.F. Wingwall Stem
B0520	1	29'-1"	Vertical Bar F.F. Wingwall Stem	B0921	1	23'-7"	Vertical Bar B.F. Wingwall Stem
B0521	1	29'-7"	Vertical Bar F.F. Wingwall Stem	B0922	1	23'-10"	Vertical Bar B.F. Wingwall Stem
				B0923	1	24'-1"	Vertical Bar B.F. Wingwall Stem
B0522	42	19'-3"	Horizontal Bar Wingwall Stem	B0924	1	24'-4"	Vertical Bar B.F. Wingwall Stem
B0523	2	18'-7"	Horizontal Bar Wingwall Stem	B0925	1	24'-7"	Vertical Bar B.F. Wingwall Stem
B0524	2	16'-7"	Horizontal Bar Wingwall Stem	B0926	1	24'-10"	Vertical Bar B.F. Wingwall Stem
B0525	2	14'-7"	Horizontal Bar Wingwall Stem	B0927	1	25'-1"	Vertical Bar B.F. Wingwall Stem
B0526	2	12'-7"	Horizontal Bar Wingwall Stem	B0928	1	25'-4"	Vertical Bar B.F. Wingwall Stem
B0527	2	10'-7"	Horizontal Bar Wingwall Stem	B0929	1	25'-7"	Vertical Bar B.F. Wingwall Stem
B0528	2	8'-8"	Horizontal Bar Wingwall Stem	B0930	1	25'-10"	Vertical Bar B.F. Wingwall Stem
B0529	2	6'-8"	Horizontal Bar Wingwall Stem	B0931	1	26'-1"	Vertical Bar B.F. Wingwall Stem
B0530	2	4'-8"	Horizontal Bar Wingwall Stem	B0932	1	26'-4"	Vertical Bar B.F. Wingwall Stem
B0531	2	2'-9"	Horizontal Bar Wingwall Stem	B0933	1	26'-7"	Vertical Bar B.F. Wingwall Stem
				B0934	1	26'-10"	Vertical Bar B.F. Wingwall Stem
B0532	18	29'-4"	Vertical Bar F.F. Wingwall Stem	B0935	1	27'-1"	Vertical Bar B.F. Wingwall Stem
B0533	20	26'-0"	Vertical Bar F.F. Wingwall Stem	B0936	1	27'-4"	Vertical Bar B.F. Wingwall Stem
B0534	60	3'-6"	Wingwall to Abutment Bar	B0937	1	27'-7"	Vertical Bar B.F. Wingwall Stem
B0535	60	17'-0"	Horizontal Bar Wingwall Stem	B0938	1	27'-10"	Vertical Bar B.F. Wingwall Stem
B0536	54	6'-6"	Horizontal Bar Wingwall Stem	B0939	1	28'-1"	Vertical Bar B.F. Wingwall Stem
B0537	54	19'-0"	Horizontal Bar Wingwall Stem	B0940	1	28'-4"	Vertical Bar B.F. Wingwall Stem
				B0941	1	28'-7"	Vertical Bar B.F. Wingwall Stem
B0538	4	13'-2"	Horiz. Bar Approach Slab Shelf	B0942	1	28'-10"	Vertical Bar B.F. Wingwall Stem
				B0943	1	29'-1"	Vertical Bar B.F. Wingwall Stem
B0601	34	25'-9"	Footing T&B Longitudinal Bars	B0944	34	28'-10"	Vertical Bar B.F. Wingwall Stem
B0602	34	43'-0"	Footing T&B Longitudinal Bars	B0945	39	25'-6"	Vertical Bar B.F. Wingwall Stem
B0603	34	14'-0"	Footing T&B Longitudinal Bars				
B0604	34	15'-0"	Footing T&B Longitudinal Bars				
B0605	84	12'-6"	Vertical Bar B.F. Abutment Stem				
B0606	1	20'-8"	Top Horizontal Abutment Bars				
B0607	1	21'-8"	Top Horizontal Abutment Bars				
B0608	1	22'-8"	Top Horizontal Abutment Bars				
B0609	3	7'-6"	Top Horizontal Abutment Bars				
B0610	3	18'-2"	Top Horizontal Abutment Bars				
B0611	18	22'-10"	Horizontal Backwall Bars				
B0612	18	6'-6"	Horizontal Backwall Bars				
B0613	18	18'-2"	Horizontal Backwall Bars				
B0614	2	9'-9"	Horizontal Backwall Bars				
B0615	4	14'-0"	Horizontal Backwall Bars				
B0616	2	4'-0"	Horizontal Backwall Bars				
B0617	19	1'-6"	Approach Slab Dowel Bar				
B0701	13	8'-0"	Footing Bot. trans. flare bars				
B0702	12	15'-6"	Footing Bot. trans. flare bars				
B0703	74	16'-0"	Footing Bot. transverse bars				
B0704	40	3'-0"	Vertical Bar Abutment Stem				
B0705	40	19'-7"	Vertical Bar Abutment Stem				
B0706	21	20'-7"	Horizontal Bar Abutment Stem				
B0707	21	23'-0"	Horizontal Bar Abutment Stem				
B0708	42	9'-6"	Horizontal Bar Abutment Stem				
B0709	42	18'-2"	Horizontal Bar Abutment Stem				
B0801	85	16'-0"	Footing Bottom Transverse bars				
MARK	QTY.	LENGTH	LOCATION	MARK	QTY.	LENGTH	LOCATION

BENT BARS

MARK	QTY.	LENGTH	TYPE	A	B	C	D	E	F	G	H	O	R	LOCATION
							Abutment No. 2							
B0550	42	24'-11"	SL	--	11'-9"	1'-5"	11'-9"	--	--	--	--	--	--	Backwall U-Bar
B0551	28	5'-7"	SJ	--	2'-9"	0'-10"	2'-0"	--	--	--	--	--	--	Approach Slab Shelf
B0552	2	6'-6"	V	--	--	--	3'-3"	3'-3"	--	--	0'-2"	--	--	Approach Slab Shelf
B0553	30	9'-2"	V	--	--	--	2'-4"	6'-10"	--	--	4'-10"	--	--	Wingwall to Abutment Bar
B0554	30	4'-8"	V	--	--	--	2'-4"	2'-4"	--	--	1'-8"	--	--	Wingwall to Abutment Bar
B0650	42	7'-1"	BS	1'-6"	2'-7"	1'-0"	2'-0"	--	--	--	--	--	--	Top Abutment Stem Bar
B0651	2	6'-6"	V	--	--	--	3'-3"	3'-3"	--	--	0'-2"	--	--	Top Horizontal Backwall Bar
B0950	84	15'-0"	L	13'-6"	1'-6"	--	--	--	--	--	--	--	--	Abutment Stem to Footing Hook
B0951	105	8'-0"	J	1'-6"	--	7'-6"	--	--	--	--	0'-9"	--	0'-6"	Wingwall Stem to Footing Hook
MARK	QTY.	LENGTH	TYPE	A	B	C	D	E	F	G	H	O	R	LOCATION

STATE OF MAINE
DEPARTMENT OF TRANSPORTATION

BH-1823(200)X

WIN 18232.00

BRIDGE NO. 3328

BRIDGE PLANS

		BY	DATE
PROJ. MANAGER	M. P-ARLIN		
DESIGN-DETAILED	J. MUCHA	J. MUCHA	1/28/14
CHECKED-REVIEWED	C. GAMACHE	C. GAMACHE	
DESIGN2-DETAILED2			
DESIGN3-DETAILED3			
REVISIONS 1			
REVISIONS 2			
REVISIONS 3			
REVISIONS 4			
FIELD CHANGES			

SIGNATURE

P.E. NUMBER

DATE

STEEP FALLS BRIDGE
SACO RIVER
LIMINGTON/STANDISH YORK/CUMBERLAND

ABUTMENT 2 REINFORCING STEEL SCHEDULE

SHEET NUMBER

43

OF 45

Filename: ...\043 Reinforcing Steel Schedule.dgn Division: BRIDGE Username: CAFUNSTON Date:2/4/2014

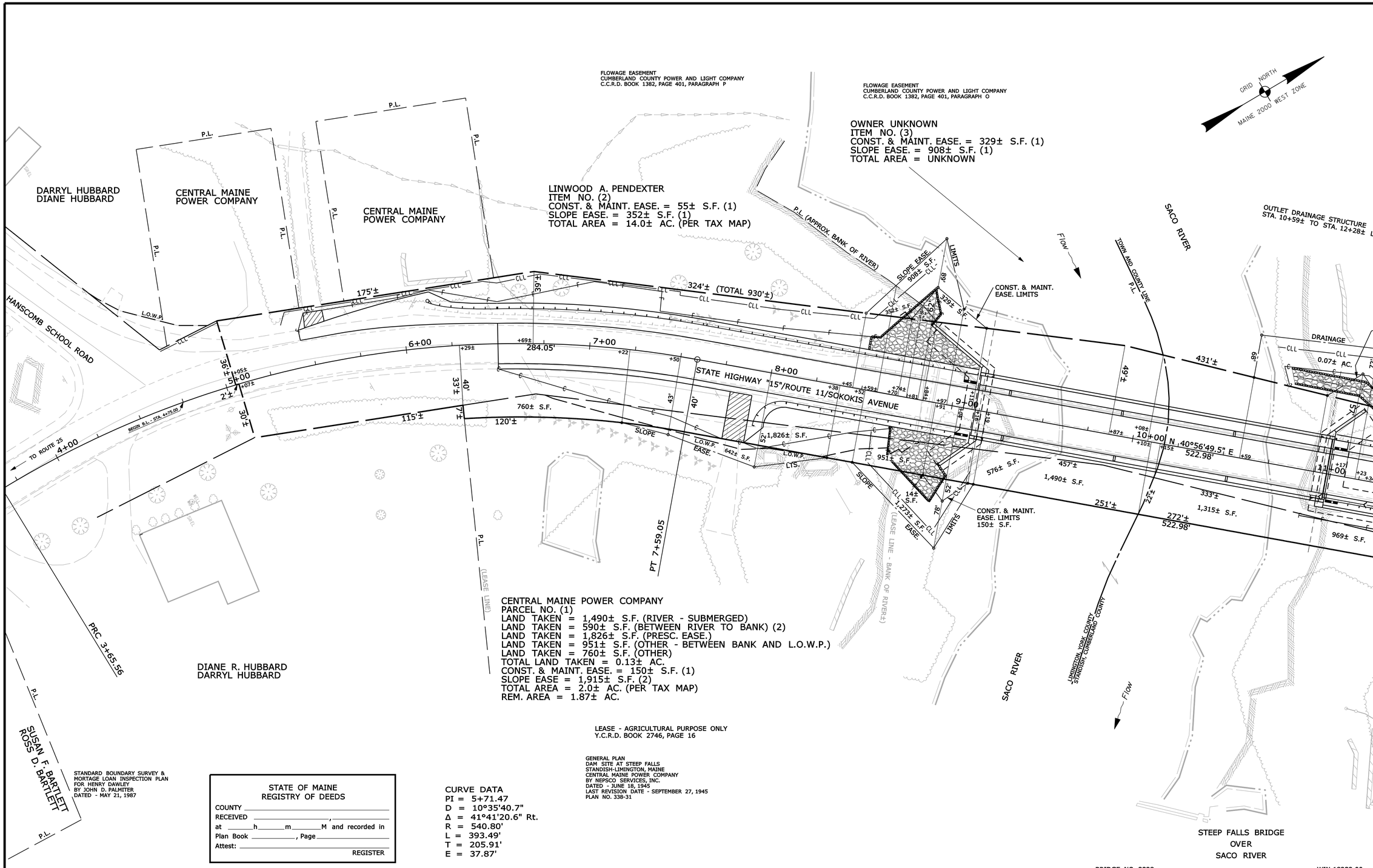

CENTRAL MAINE POWER COMPANY
PARCEL NO. (1)
LAND TAKEN = 1,490± S.F. (RIVER - SUBMERGED)
LAND TAKEN = 590± S.F. (BETWEEN RIVER TO BANK) (2)
LAND TAKEN = 1,826± S.F. (PRESC. EASE.)
LAND TAKEN = 951± S.F. (OTHER - BETWEEN BANK AND L.O.W.P.)
LAND TAKEN = 760± S.F. (OTHER)
TOTAL LAND TAKEN = 0.13± AC.
CONST. & MAINT. EASE. = 150± S.F. (1)
SLOPE EASE = 1,915± S.F. (2)
TOTAL AREA = 2.0± AC. (PER TAX MAP)
REM. AREA = 1.87± AC.

LEASE - AGRICULTURAL PURPOSE ONLY
Y.C.R.D. BOOK 2746, PAGE 16

GENERAL PLAN
DAM SITE AT STEEP FALLS
STANDISH-LIMINGTON, MAINE
CENTRAL MAINE POWER COMPANY
BY NEPSCO SERVICES, INC.
DATED - JUNE 18, 1945
LAST REVISION DATE - SEPTEMBER 27, 1945
PLAN NO. 338-31

STANDARD BOUNDARY SURVEY &
MORTAGE LOAN INSPECTION PLAN
FOR HENRY DAWLEY
BY JOHN D. PALMITER
DATED - MAY 21, 1987

STATE OF MAINE
REGISTRY OF DEEDS
COUNTY _____
RECEIVED _____, _____
at _____h_____m_____M and recorded in
Plan Book _____, Page _____
Attest: _____
REGISTER

CURVE DATA
PI = 5+71.47
D = 10°35'40.7"
Δ = 41°41'20.6" Rt.
R = 540.80'
L = 393.49'
T = 205.91'
E = 37.87'

BRIDGE NO. 3328 WIN 18232.00

SYMBOLS
- WELL
- BEARING LIMIT LINE
- CONSTRUCTION LIMIT LINE
- PROPERTY LINE
- LIMITS OF "RIGHT-OF-PORTION (L.O.W.P.)
- EXISTING RIGHT OF WAY
- NEW RIGHT OF WAY
- NEW ROW WITHIN EXIST. ROW
- CONTROL OF ACCESS
- IP or IPF (IRON PIPE or PIN FOUND)
- S.T. (SEPTIC TANK)
- (ROW MONUMENT)
- &BM (TRAVERSE POINT)
- WATER LINE
- GAS LINE
- ELECTRIC LINE
- TELEPHONE LINE
- SEWER LINE

ITEM	TECH	CHECKED
BASE MAP		
EXIST. R/W	G.L.L.	C.W.K.
PROP. LINES	G.L.L.	
AREAS	G.L.L.	N.T.A.

STATE OF MAINE
DEPARTMENT OF TRANSPORTATION
16 STATE HOUSE STATION - AUGUSTA, ME 04333-0016
LIMINGTON / STANDISH
RIGHT OF WAY MAP

REVISIONS

NO.	DATE	DESCRIPTION	BY

PLAN FILED IN PLAN BOOK PAGE COUNTY RECORD					
NO.	GRANTOR	INSTRUMENT	DATE	BOOK	PAGE
	YORK COUNTY R.O.D.	COND.	1/13/14	16762	321
	CUMBERLAND COUNTY R.O.D.	COND.	1/13/14	31282	105

DAVID BERNHARDT
COMMISSIONER
JOYCE NOEL TAYLOR
CHIEF ENGINEER
DATE

To the best of my knowledge and belief the Highway Right of Way lines depicted hereon are based upon a survey conforming to the Standards of Practice promulgated by the Maine Board of Licensure for Professional Land Surveyors 02-360 CMR, Chapter 90; Exceptions: (1) No separate survey report, (2) Monumentation only as shown on plan. See sheet X of this plan set for coordinates. (3) Other boundary lines, including lines between abutters are approximate and for general reference purposes only.

STATE HIGHWAY "15"
ROUTE 11 / SOKOKIS AVENUE
LIMINGTON YORK COUNTY
STANDISH CUMBERLAND COUNTY
FEDERAL AID PROJECT NO. BH-1823(200)X

NOVEMBER 2013 | RIGHT-OF-WAY MAP | D.O.T. FILE NO. 16-497
SCALE 1" = 25' | SHEET 1 OF 2 | D.O.T. FILE NO. 3-594

SHEET NUMBER
44
OF 45

Filename: ...\00\ROW\MSTA\044_RWPLAN1.dgn Division: BRIDGE Username: Brian.J.Nichols Date:1/16/2014

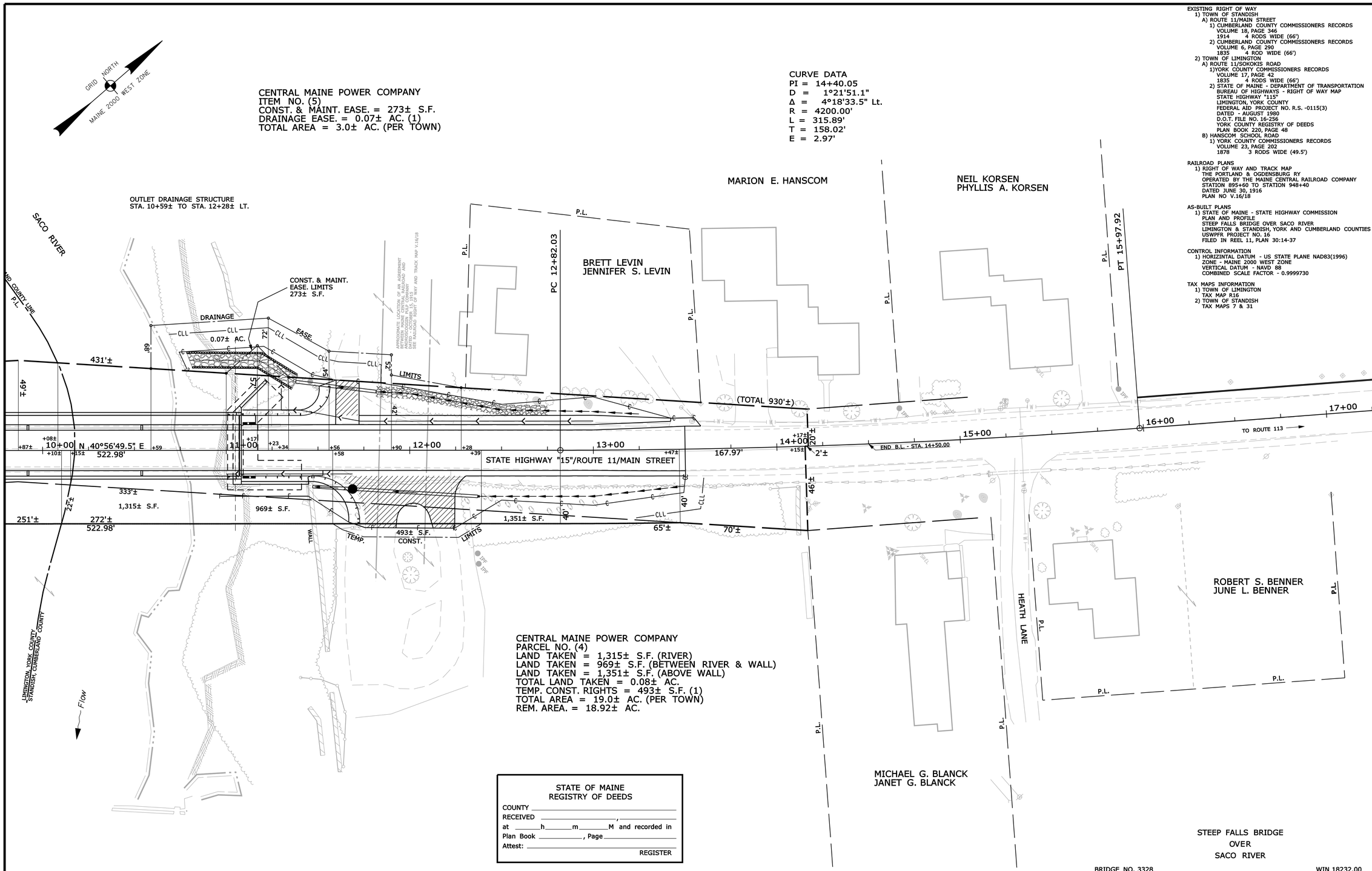

EXISTING RIGHT OF WAY
1) TOWN OF STANDISH
A) ROUTE 11/MAIN STREET
1) CUMBERLAND COUNTY COMMISSIONERS RECORDS
VOLUME 18, PAGE 346
1914 4 RODS WIDE (66')
2) CUMBERLAND COUNTY COMMISSIONERS RECORDS
VOLUME 6, PAGE 290
1835 4 ROD WIDE (66')
2) TOWN OF LIMINGTON
A) ROUTE 11/SOKOKIS ROAD
1)YORK COUNTY COMMISSIONERS RECORDS
VOLUME 17, PAGE 42
1835 4 RODS WIDE (66')
2) STATE OF MAINE - DEPARTMENT OF TRANSPORTATION
BUREAU OF HIGHWAYS - RIGHT OF WAY MAP
STATE HIGHWAY "115"
LIMINGTON, YORK COUNTY
FEDERAL AID PROJECT NO. R.S. -0115(3)
DATED - AUGUST 1980
D.O.T. FILE NO. 16-256
YORK COUNTY REGISTRY OF DEEDS
PLAN BOOK 220, PAGE 48
B) HANSCOM SCHOOL ROAD
1) YORK COUNTY COMMISSIONERS RECORDS
VOLUME 23, PAGE 202
1878 3 RODS WIDE (49.5')

RAILROAD PLANS
1) RIGHT OF WAY AND TRACK MAP
THE PORTLAND & OGDENSBURG RY
OPERATED BY THE MAINE CENTRAL RAILROAD COMPANY
STATION 895+60 TO STATION 948+40
DATED JUNE 30, 1916
PLAN NO V.16/18

AS-BUILT PLANS
1) STATE OF MAINE - STATE HIGHWAY COMMISSION
PLAN AND PROFILE
STEEP FALLS BRIDGE OVER SACO RIVER
LIMINGTON & STANDISH, YORK AND CUMBERLAND COUNTIES
USWPFR PROJECT NO. 16
FILED IN REEL 11, PLAN 30:14-37

CONTROL INFORMATION
1) HORIZINTAL DATUM - US STATE PLANE NAD83(1996)
ZONE - MAINE 2000 WEST ZONE
VERTICAL DATUM - NAVD 88
COMBINED SCALE FACTOR - 0.9999730

TAX MAPS INFORMATION
1) TOWN OF LIMINGTON
TAX MAP R16
2) TOWN OF STANDISH
TAX MAPS 7 & 31

SYMBOLS
- (WELL)
- GRADING LIMIT LINE
CONSTRUCTION LIMIT LINE
PROPERTY LINE
LIMITS OF "RIGHT OF WAY" PORTION (L.O.W.P.)
EXISTING RIGHT OF WAY
NEW RIGHT OF WAY
NEW ROW WITHIN EXIST. ROW
CONTROL OF ACCESS
• IP or ● IPF (IRON PIPE or PIN FOUND)
ST. (SEPTIC TANK)
(ROW MONUMENT)
(TRAVERSE POINT)
WATER LINE
GAS LINE
ELECTRIC LINE
TELEPHONE LINE
SEWER LINE

ITEM	TECH	CHECKED
BASE MAP		
EXIST. R/W	G.L.L.	C.W.K.
PROP. LINES	G.L.L.	
AREAS	G.L.L.	N.T.A.

STATE OF MAINE
DEPARTMENT OF TRANSPORTATION
16 STATE HOUSE STATION - AUGUSTA, ME 04333-0016
LIMINGTON / STANDISH
RIGHT OF WAY MAP

REVISIONS

NO.	DATE	DESCRIPTION	BY

PLAN FILED IN PLAN BOOK PAGE COUNTY RECORD

NO.	GRANTOR	INSTRUMENT	DATE	BOOK	PAGE
	YORK COUNTY R.O.D.	COND.	1/13/14	16762	321
	CUMBERLAND COUNTY R.O.D.	COND.	1/13/14	31282	105

DAVID BERNHARDT
COMMISSIONER
JOYCE NOEL TAYLOR
CHIEF ENGINEER
DATE

To the best of my knowledge and belief the Highway Right of Way lines depicted hereon are based upon a survey conforming to the Standards of Practice promulgated by the Maine Board of Licensure for Professional Land Surveyors 02-360 CMR, Chapter 90; Exceptions: (1) No separate survey report, (2) Monumentation only as shown on plan. See sheet X of this plan set for coordinates. (3) Other boundary lines, including lines between abutters are approximate and for general reference purposes only.

STATE HIGHWAY "15"
ROUTE 11 / MAIN STREET
LIMINGTON YORK COUNTY
STANDISH CUMBERLAND COUNTY
FEDERAL AID PROJECT NO. BH-1823(200)X

NOVEMBER 2013 | RIGHT-OF-WAY MAP | D.O.T. FILE NO. 16-497
SCALE 1" = 25' | SHEET 2 OF 2 | D.O.T. FILE NO. 3-594

SHEET NUMBER
45
OF 45

Filename: ...\00\row\msla\045_RWPLAN2.dgn Division: BRIDGE Username: Brian.J.Nichols Date:1/16/2014

STATE OF MAINE
DEPARTMENT OF TRANSPORTATION

SPECIFICATIONS

Design: Load and Resistance Factor Design per AASHTO LRFD Bridge Design Specifications, Sixth Edition 2012 with interim specifications through 2013.

DESIGN LOADING

Live Load ..... HL - 93 Modified

LIST OF DRAWINGS

Title Sheet 1
Quantities & Notes 2
Staged Construction Plan 3
Wearing Surface Replacement Details 4

LIMINGTON - STANDISH
YORK & CUMBERLAND COUNTIES
EAST LIMINGTON BRIDGE
OVER
SACO RIVER
ROUTE 25
PROJECT NO. STP-2047(300)
PROJECT LENGTH 0.07 mi.
BRIDGE NO. 2252

TRAFFIC DATA

Current (2013) AADT	7530
Future (2033) AADT	9040
DHV - % of AADT	10
Design Hour Volume	904
Heavy Trucks (% of AADT)	7
Heavy Trucks (% of DHV)	6
Directional Distribution (% of DHV)	65
18 kip Equivalent P 2.0	383
18 kip Equivalent P 2.5	365
Design Speed (mph)	50

MATERIALS

Concrete:
- Structural Wearing Surface ..... Class "LP"
- All Other ..... Class "A"

BASIC DESIGN STRESSES

Concrete ..... f 'c = 4,350 psi

MAINTENANCE OF TRAFFIC

2 phase staged construction consisting of one lane, two way alternating traffic using temporary traffic signals.

PROJECT LOCATION:	Route 25 on Limington-Standish town line. 43°44'00.62" N, 70°39'08.28" W
PROGRAM AREA:	Bridge
OUTLINE OF WORK:	Concrete Wearing Surface Replacement. Installation of new gland seals into extisting extrusions. Placement of elastomeric concrete adjactant to joint armor.

STATE OF MAINE
DEPARTMENT OF TRANSPORTATION
APPROVED
COMMISSIONER: DATE 2/3/14
CHIEF ENGINEER: DATE 2-3-14

STATE OF MAINE Roger M. Nadeau 9918 LICENSED PROFESSIONAL ENGINEER

SIGNATURE
P.E. NUMBER 9918
DATE JAN 13 2014

PROJECT INFORMATION
PROGRAM: BRIDGE
PROJECT MANAGER: MARK PARLIN
DESIGNER: DEVAN EATON
CONSULTANT:
PROJECT RESIDENT:
CONTRACTOR:
PROJECT COMPLETION DATE:

WIN 20473.00

STP-2047(300)

LIMINGTON - STANDISH
EAST LIMINGTON BRIDGE
TITLE SHEET

SHEET NUMBER
1
OF 4

Filename:\00\BRIDGE\MSTA\001_Title.dgn Division: BRIDGE Username: Brian.J.Nichols Date:1/13/2014

ESTIMATED QUANTITIES			
ITEM NO.	DESCRIPTION	QUANTITY	UNIT
202.202	REMOVING PAVEMENT SURFACE	250	SY
202.30	REMOVING EXISTING CONCRETE WEARING SURFACE (1500 SY)	1	LS
203.20	COMMON EXCAVATION	5	CY
304.10	AGGREGATE SUBBASE COURSE - GRAVEL	5	CY
403.208	HOT MIX ASPHALT 12.5 MM HMA SURFACE	18	T
403.213	HOT MIX ASPHALT 12.5 MM BASE	55	T
409.15	BITUMINOUS TACK COAT - APPLIED	15	G
502.29	STRUCTURAL CONCRETE WEARING SURFACE ON BRIDGES (145 CY)	1	LS
503.12	REINFORCING STEEL, FAB & DEL.	18,800	LBS
503.13	REINFORCING STEEL, PLACING	18,800	LBS
514.06	CURING BOX FOR CONCRETE CYLINDERS	1	EA
515.20	PROTECTIVE COATING FOR CONCRETE SURFACES (1500 SY)	1	LS
518.50	REP. OF UPWARD FACING SURF. - TO REINF. STEEL < 7.9 IN.	1400	SF
518.51	REP. OF UPWARD FACING SURF. - BELOW REINF. STEEL < 7.9 IN.	700	SF
518.60	REPAIR OF VERTICAL SURFACES < 7.9 IN.	50	SF
520.242	BRIDGE JOINT MODIFICATION TYPE 2	1	EA
520.247	BRIDGE JOINT MODIFICATION TYPE 7	1	EA
526.301	TEMPORARY CONCRETE BARRIER TYPE I (450 LF)	1	LS
527.34	WORK ZONE CRASH CUSHIONS	2	UN
627.733	4" WHITE OR YELLOW PAINTED PAVEMENT MARKING LINE	1350	LF
629.05	HAND LABOR, STRAIGHT TIME	40	HR
631.171	TRUCK - SMALL (INCLUDING OPERATOR)	20	HR
643.72	TEMPORARY TRAFFIC SIGNAL	1	LS
652.33	DRUM	20	EA
652.34	CONE	40	EA
652.35	CONSTRUCTION SIGNS	300	SF
652.361	MAINTENANCE OF TRAFFIC CONTROL DEVICES (60 CD)	1	LS
652.38	FLAGGER	140	HR
656.75	TEMPORARY SOIL EROSION AND WATER POLLUTION CONTROL	1	LS
659.10	MOBILIZATION	1	LS

GENERAL CONSTRUCTION NOTES

1. During construction, the road will be closed to traffic for a time period specified in the Special Provisions.

2. Protective Coating for Concrete Surfaces shall be applied to the new concrete wearing surface

3. The existing bridge plans may be accessed at the at the following MaineDOT web address: http://www.maine.gov/mdot/comprehensive-list-projects/project-information.php. The plans are reproductions of the original drawings as prepared for the construction of the bridge. It is very unlikely that the plans will show any construction field changes or any alterations which may have been made to the bridge during its life span.

4. Quantities included for pay items measured and paid for by Lump Sum are estimated quantities and are provided by MaineDOT for informational purposes only. Lump Sum pay items will be paid for at the Contract Bid amount, with no addition or reduction in payment to the Contractor if the actual final quantities are different from the MaineDOT provided estimated quantities, except as follows:

   a. If a Lump Sum pay item is eliminated, the requirements of Standard Specifications Section 109.2, Elimination of Items, will take precedence.

   b. If other Contract Documents specifically allow a change in payment for a Lump Sum pay item, those requirements will be followed.

   c. If a design change results in changes to estimated quantities for Lump Sum pay items, price adjustments will be made in accordance with Standard Specifications Section 109.7, Equitable Adjustments to Compensation.

5. Payment for Bridge Joint Modification - Type 2 shall be full compensation for all work necessary to install new compression seal in exting armor, including any removal and replacement of curb expansion dams, and for placement of elastomeric concrete to the limits shown on the plans. Removal of exsting concrete and any associatd excavation behind the backwall shall be paid for under their respective Pay Items.

6. Payment for Bridge Joint Modification - Type 7 shall be full compensation for all work necessary to install new gland seal into exting extrusions including any removal and replacement of curb expansion dams, and for placement of elastomeric concrete to the limits shown on the plans. Removal of exsting concrete and any associatd excavation behind the backwall shall be paid for under their respective Pay Items.

STATE OF MAINE
DEPARTMENT OF TRANSPORTATION

STP-2047(300)

WIN 20473.00

BRIDGE NO. 2252

BRIDGE PLANS

PROJ. MANAGER		MAP	BY	DATE
DESIGN-DETAILED	DCE		BJN	
CHECKED-REVIEWED	RMN		ADN	
DESIGN2-DETAILED2				
DESIGN3-DETAILED3				
REVISIONS 1				
REVISIONS 2				
REVISIONS 3				
REVISIONS 4				
FIELD CHANGES				

SIGNATURE

P.E. NUMBER

DATE

EAST LIMINGTON BRIDGE
SACO RIVER
LIMINGTON/STANDISH YORK/CUMBERLAND CTY

ESTIMATED QUANTITIES

SHEET NUMBER
2
OF 4

Filename: ...\BRIDGE\MSTA\002_Estimate.dgn Division: BRIDGE Username: Brian.J.Nichols Date:1/30/2014

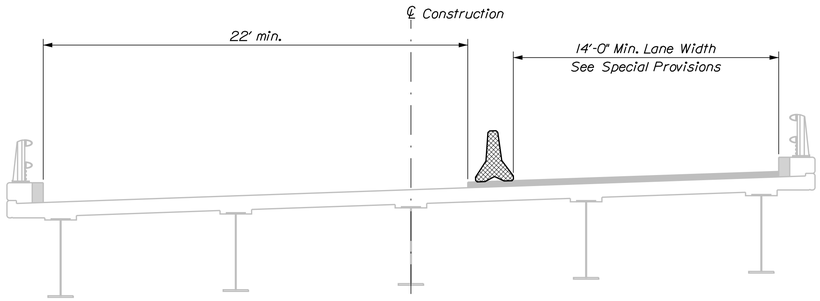

STAGE Ia
Flow

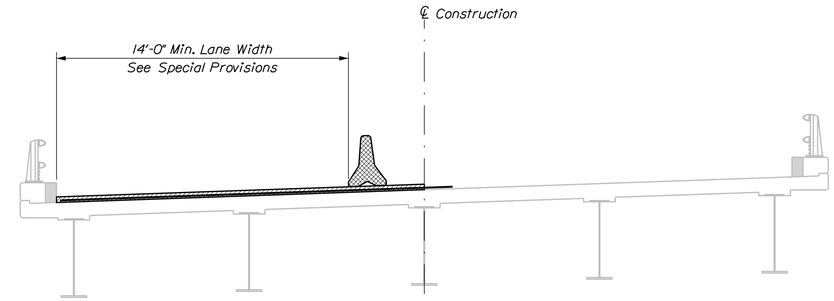

STAGE IIa
Flow

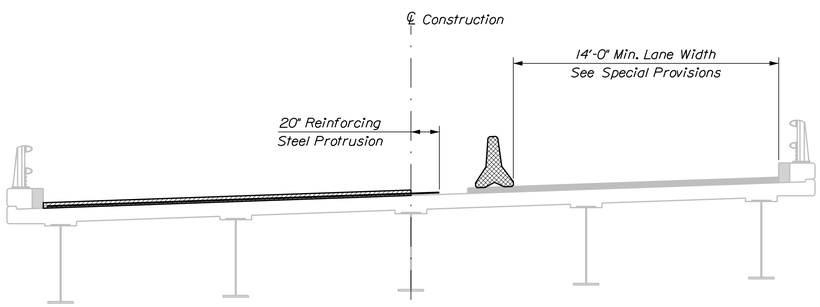

STAGE Ib
Flow

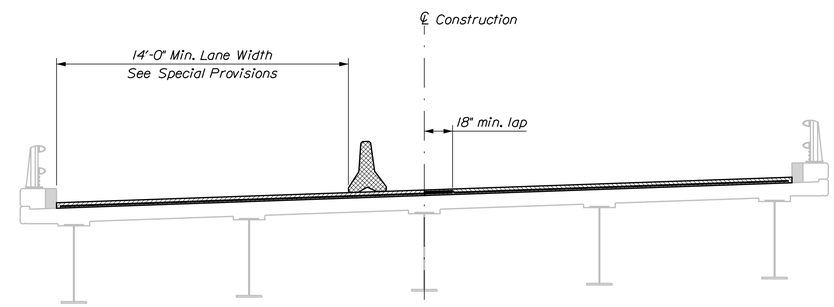

STAGE IIb
Flow

NOTES:

1. Contractor shall be permitted to construct stages 1 & 2 in reverse order.
2. See Special Provisions for additional information.

STATE OF MAINE
DEPARTMENT OF TRANSPORTATION

STP-2047(300)

WIN 20473.00

BRIDGE NO. 2252

BRIDGE PLANS

	MAP	BY	DATE
PROJ. MANAGER			
DESIGN-DETAILED	DCE	BJN	
CHECKED-REVIEWED	RMN	ADN	
DESIGN2-DETAILED2			
DESIGN3-DETAILED3			
REVISIONS 1			
REVISIONS 2			
REVISIONS 3			
REVISIONS 4			
FIELD CHANGES			

SIGNATURE

P.E. NUMBER

DATE

EAST LIMINGTON BRIDGE
SACO RIVER
LIMINGTON/STANDISH YORK/CUMBERLAND CTY

STAGED CONSTRUCTION PLANS

SHEET NUMBER
3
OF 4

Filename: ...\MSTA\003_StageConstr.dgn Division: BRIDGE Username: Brian.J.Nichols Date:1/30/2014

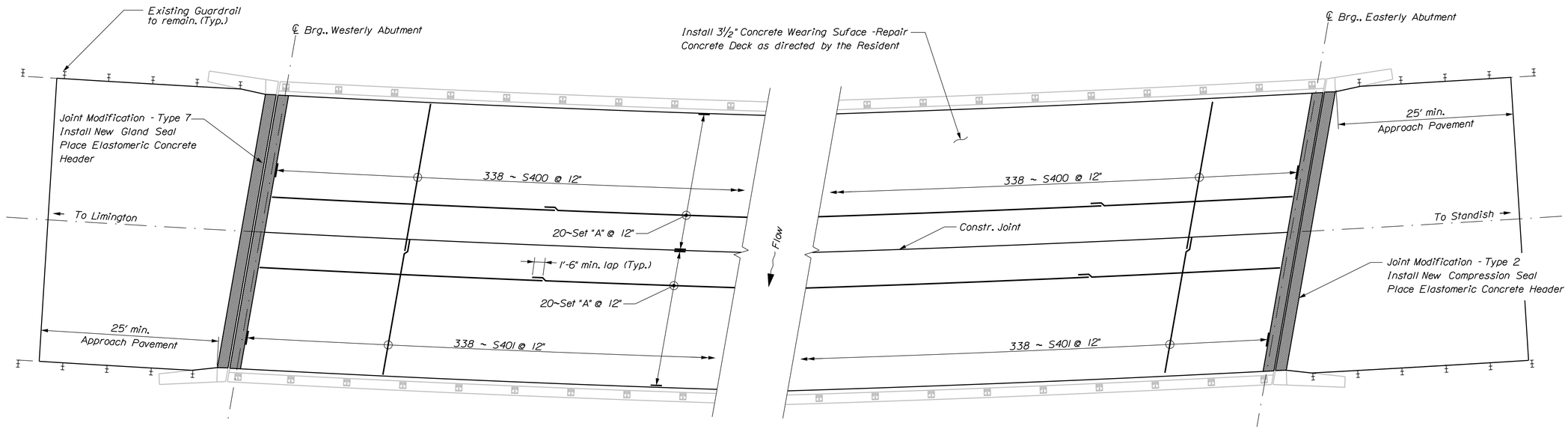

PARTIAL SUPERSTRUCTURE PLAN

Set "A" = 9~S402

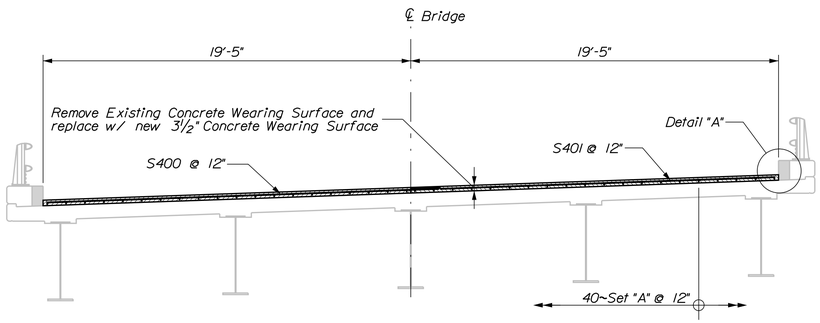

TRANSVERSE SECTION

Flow

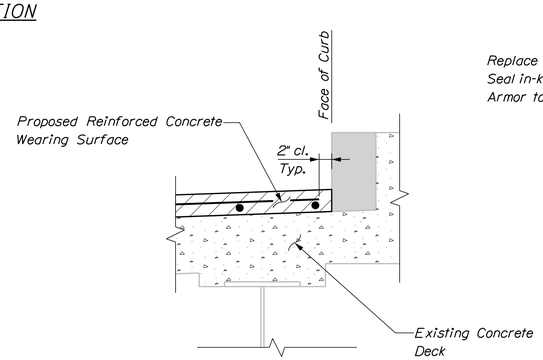

DETAIL "A"

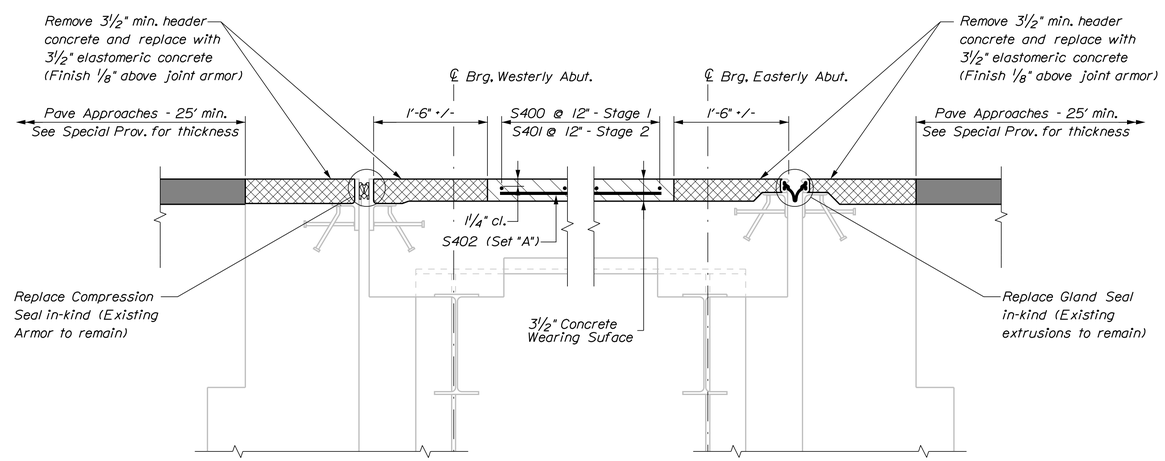

END OF SLAB SECTION

BRIDGE JOINT MODIFICATION - TYPE 2

END OF SLAB SECTION

BRIDGE JOINT MODIFICATION - TYPE 7

REINFORCING STEEL SCHEDULE

MARK	QTY.	LENGTH	LOCATION
S400	338	21'-1"	Wearing Surface - Transverse
S401	338	19'-5"	Wearing Surface - Transverse
S402	240	60'-0"	Wearing Surface - Longitudinal

STATE OF MAINE
DEPARTMENT OF TRANSPORTATION

STP-2047(300)

WIN 20473.00

BRIDGE NO. 2252

BRIDGE PLANS

	MAP	BY	DATE
PROJ. MANAGER			
DESIGN-DETAILED	DCE	BJN	
CHECKED-REVIEWED	RMN	ADN	
DESIGN2-DETAILED2			
DESIGN3-DETAILED3			
REVISIONS 1			
REVISIONS 2			
REVISIONS 3			
REVISIONS 4			
FIELD CHANGES			

SIGNATURE

P.E. NUMBER

DATE

EAST LIMINGTON BRIDGE
SACO RIVER
LIMINGTON/STANDISH YORK/CUMBERLAND CTY

WEARING SURFACE DETAILS

SHEET NUMBER

4

OF 4

Filename: ...\MSTA\004_Superstructure_1.dgn Division: BRIDGE Username: Brian.J.Nichols Date:1/30/2014