STATE OF MAINE
DEPARTMENT OF TRANSPORTATION

SPECIFICATIONS

Design: Load and Resistance Factor Design per AASHTO LRFD Bridge Design Specifications, Sixth Edition 2012.

DESIGN LOADING

Live Load ..... HL - 93 Modified

TRAFFIC DATA

Current (2010) AADT	1590
Future (2030) AADT	1910
DHV - % of AADT	15%
Design hour Volume	287
Heavy Trucks (% of AADT)	6%
Heavy Trucks (% of DHV)	5%
Directional Distrubution (% of DHV)	55%
18 kip Equivalent P 2.0	67
18 kip Equivalent P 2.5	61
Design Speed (mph)	25

TIDAL DATA

Highest Observed Water Level 02/07/1978	8.87'
Mean Highest High Water (M.H.H.W.)	4.73'
Mean High Water (M.H.W.)	4.33'
Mean Sea level (MSL)	-0.32'
Mean Tide Level (MTL)	5.05'
Mean Low Water (MLW)	-5.02'
Mean Lower Low Water (MLLW)	-5.40'
Lowest Observed Water Level 11/30/1955	-7.41'
Spring High Tide Range	10.15'

MATERIALS

Concrete

Seals	Class "S"
Precast	Class "P"
Fill	Fill
All Other	Class "A"

Reinforcing Steel ..... ASTM A 615, Grade 60, ASTM A1055 Coating

Structral Steel:

All Materials (except as noted)	ASTM A 709, Grade 50 (Metalized)
High Strength Bolts	ASTM A 325, Type 1
Threadbar - Tiebacks	ASTM A 722, Grade 150
Threadbar - Micropiles	ASTM A 615, Grade 75
Sturctural Casing - Micropiles	API 5CT N80 & ASTM A 252, Grade 3

BASIC DESIGN STRESSES

Concrete	f'c = 4,000 psi
Precast Concrete	f'c = 6,500 psi
Reinforcing Steel	f y = 60,000 psi
Structral Steel:	
ASTM A 709, Grade 50	F y = 50,000 psi
ASTM A 709, Grade 36	F y = 36,000 psi
ASTM A 325	F u = 120,000 psi
API 5CT N80 & ASTM A 252, Grade 3	F y = 80,000 psi
ASTM A 615	F y = 75,000 psi
ASTM A 722	F y = 150,000 psi

SOUTH BRISTOL
LINCOLN COUNTY
GUT BRIDGE
OVER
THE GUT
ROUTE 129
PROJECT NO. BH-1675(000)X
PROJECT LENGTH 400 ft.
BRIDGE NO. 2339

LIST OF DRAWINGS

Title Sheet	1
Estimate of Quantities	2
General Notes	3-4
General Plan	5
Profile	6
Boring Location Plan	7
Interpretive Subsurface Profiles	8
Boring Logs	9-15
Typical Sections	16-24
Retaining Wall	25-26
Temporary Staging	27-31
General Bridge Plan	32
General Bridge Elevation	33
Soldier Pile Wall Plans	34-48
Bridge Substructure Plans	41-57
Bridge Superstructure Plans	58-79
Approach Plans	80-83
Control House Plans	84-100
Machinery Plans	101-108
Electrical Plans	81-115, 109-140
Row Plans	141

UTILITIES

Central Maine Power Company
Tidewater Telecom
Time Warner Cable

MAINTENANCE OF TRAFFIC

Maintain one 11'-0" wide lane of alternating two - way traffic using traffic signals.

PROJECT LOCATION:	REPLACEMENT OF BRIDGE #2339 IN SOUTH BRISTOL WHICH CARRIES ROUTE 129 OVER THE "GUT"
PROGRAM AREA:	BRIDGE PROGRAM
OUTLINE OF WORK:	REPLACEMENT OF AN EXISTING BOBTAIL SWING BRIDGE WITH A NEW SINGLE LEAF, CABLE-STAYED BASCULE BRIDGE.

STATE OF MAINE
DEPARTMENT OF TRANSPORTATION

APPROVED

		DATE
COMMISSIONER:		1/27/14
CHIEF ENGINEER:		1-27-14

STATE OF MAINE · PETER ROGOV · NO. 13196 · PROFESSIONAL ENGINEER

	SIGNATURE	
	13196	P.E. NUMBER
	1-16-14	DATE

PROJECT INFORMATION

PROGRAM	BRIDGE
PROJECT MANAGER	STEPHEN BODGE
DESIGNER	HARDESTY & HANOVER
CONSULTANT	HARDESTY & HANOVER
PROJECT RESIDENT	
CONTRACTOR	
PROJECT COMPLETION DATE	

SOUTH BRISTOL
GUT BRIDGE

TITLE SHEET

SHEET NUMBER

1

OF 141

Filename: ...\CADD\00_Gen\001_title_cvr.dgn Division: BRIDGE Username: common Date:1/21/2014

Item #	Description	Quantity	Unit
202.08	Remove Building: Operator's House and 2 Out Buildings	1	LS
202.13	Remove Existing Railings - Retained By Department	94	LF
202.19	Remove Existing Bridge	1	LS
202.55	Remove And Dispose Advanced Warning Sign System	1	LS
203.20	Common Excavation	791	CY
203.21	Rock Excavation	20	CY
203.2311	2000 Gallon On Site Holding Tank	1	EA
203.24	Common Borrow	10	CY
203.25	Granular Borrow	760	CY
203.35	Crushed Stone Fill	1540	CY
206.082	Structural Earth Excavation - Major Structures, Plan Quantity	1820	CY
206.10	Structural Earth Excavation - Piers	690	CY
304.10	Aggregate Subbase Course-Gravel	500	CY
403.208	Hot Mix Asphalt 12.5 MM HMA Surface (1 1/2" Thick)	141	T
403.209	Hot Mix Asphalt 9.5 MM Nominal Maximum Size (Sidewalk)	6	T
403.213	Hot Mix Asphalt 12.5 MM Base (2 1/2" Thick)	160	T
409.15	Bituminous Tack Coat Applied	31	G
462.30	Ultra Thin Bonded Wearing Course	125	SY
501.220	Micropiles	26	EA
501.57	Steel W24x103 Piles, Delivered	1079	LF
501.571	Steel W24x103 Piles, In Place	1079	LF
501.802	Rock Socket (36" Dia.)	382	LF
501.804	Drilling Equipment Mobilization (Micropiles)	1	LS
502.21	Structural Concrete, Abutments And Retaining Walls	120	CY
502.22	Structural Concrete, Abutments And Retaining Walls (Place Underwater)	400	CY
502.23	Structural Concrete Piers	140	CY
502.24	Structural Concrete Piers (Placed Underwater)	52	CY
502.31	Structural Concrete Approach Slabs (110 CY)	1	LS
502.56	Concrete Fill	4	CY
503.171	Mechanical/ Welded Splice	1	LS
503.30	Corrosion Resistant Reinforcing System, Fabricated And Delivered	169,200	LB
503.31	Corrosion Resistant Reinforcing System, Placing	169,200	LB
504.60	Timber Fender System	1	LS
504.692	Furnish And Install Stay Cables	1	LS
504.693	Jacking Stay Cables	1	LS
504.701	Structural Steel, Fabricated And Delivered Rolled (5,700 lbs)	1	LS
504.702	Structural Steel, Fabricated And Delivered Welded (212,000 lbs)	1	LS
504.709	Bridge Hardware	1	LS
504.71	Structural Steel Erection	1	LS
504.9068	Permanent Grouted Tiebacks, Furnished, Installed, And Accepted	1	LS
504.9069	Performance Test For Grouted Tieback	4	EA
505.08	Shear Connectors (108 EA)	1	LS
506.9102	Zinc Rich Coating System (Shop Applied)(2100 SF)	1	LS
506.9103	Galvanizing	1	LS
506.9104	Thermal Spray Coating - Shop Applied (6100 SF)	1	LS
506.9105	Polyurea Elatomer Coating (9800 SF)	1	LS
507.084	Steel Pipe Hand Railing	320	LF
507.092	Aluminum Bridge Railing, 2 Bar (Foothills TL-2 Rail)	70	LF
508.14	High Performance Water Proofing Membrane (1150 SF)	1	LS
509.70	Composite Beam Sidewalk	1	LS

Item #	Description	Quantity	Unit
510.10	Special Detour 18' Roadway Width Vehicular And Pedestrian Traffic Not Separated	1	LS
511.07	Cofferdam 1	1	LS
511.07	Cofferdam 2	1	LS
511.07	Cofferdam 3	1	LS
511.07	Cofferdam 4	1	LS
511.07	Cofferdam 5	1	LS
512.081	French drains	1	LS
513.22	Crushed Stone Slope Protection	355	SY
514.06	Curing Box For Concrete Cylinders	1	EA
515.21	Protective Coating For Concrete Surfaces (2350 SY)	1	LS
520.2024	Closed Cell Seal	70	LF
520.232	Expansion Device - Asphaltic Plug Joint	52	LF
523.52	Bearing Installation	2	EA
523.5306	Bascule Girder Bearings, Fabricated And Delivered	2	EA
526.301	Temporary Concrete Barrier Type 1 (300 LF)	1	LS
526.321	Permenent Cancrete Barrier Type IIIa (140 LF)	1	LS
526.3401	Permanent Concrete Transition Barrier - Modified	4	EA
527.34	Work Zone Crash Cushion	4	EA
534.7602	Precast Pier (Bascule Piers) (92 CY)	1	LS
535.33	Precast Concrete Panel Lagging, Fabrication And Delivery	4640	SF
535.34	Precast Concrete Panel Lagging, Installed	4640	SF
606.23	Guardrail Type 3C-Single Rail	100	LF
606.231	Guardrail Type 3C-15 Foot Radius And Less	12.5	LF
606.265	Terminal End-Single Rail-Galvanized Steel	8	EA
606.353	Reflectorized Flexible Guardrail Marker	7	EA
607.19	Chain Link Fence - 8'	26	LF
607.2313	Chain Link Fence Gate 4 ft Wide x 8 ft Tall	1	EA
608.26	Curb Ramp Detectables Warning Field	16	SF
609.11	Vertical Curb Type 1	35	LF
609.12	Vertical Curb Type 1-Circular	13	LF
610.08	Plain Riprap	270	CY
610.16	Heavy Riprap	115	CY
615.07	Loam	5	CY
618.1301	Seeding Method Number 1 - Plan Quantity	1	UN
619.1201	Mulch - Plan Quantity	1	UN
619.1401	Erosion Control Mix	5	CY
620.58	Erosion Control Geotextile	400	SY
620.60	Separation Geotextile	570	SY
626.11	Precast Concrete Junction Box	3	EA
626.32	24" Foundation	2	EA
626.35	Controller Cabinet Foundation	1	EA
626.37	Special Foundation (Traffic Barrier And Pedestrian Gates)	6	EA
627.733	4" White Or Yellow Painted Pavement Marking Line	1200	LF
627.75	White Or Yellow Pavement And Curb Marking Stop Bar	52	SF
627.76	Temporary Pavement Marking Line, White Or Yellow	1	LS
627.77	Removing Pavement Markings	302	SF
629.05	Hand Labor, Straight Time	20	HR
631.12	All Purpose Excavator (Including Operator)	20	HR
631.14	Grader (Including Operator)	20	HR

Item #	Description	Quantity	Unit
631.15	Roller, Earth And Base Course (Including Operator)	20	HR
631.172	Truck - Large (Including Operator)	20	HR
634.160	Highway Lighting	1	LS
634.168	Pump Equipment And Wiring (Sump Pumps)	1	LS
634.2042	LED Luminaires	2	EA
635.31	Precast Concrete Block Gravity Wall	355	SF
635.40	Precast Aggregate-Filled Concrete Block Wall	355	SF
637.071	Dust Control	1	LS
638.02	Navigation Lights	1	LS
639.18	Field Office Type A	1	EA
643.01	Traffic Signals And Gates	1	LS
643.60	Flashing Beacon At North Approach	1	LS
643.60	Flashing Beacon At South Approach	1	LS
643.72	Temporary Traffic Signal	1	LS
643.80	Traffic Signals At North Approach	1	LS
643.80	Traffic Signals At South Approach	1	LS
643.92	Pedestal Pole	2	EA
643.94	Dual Purpose Pole, 22 ft Mast	1	EA
643.94	Dual Purpose Pole, 10 ft Mast	1	EA
643.96	Drawbridge Warning Sign	2	EA
645.51	Special Signing (13 SF)	1	LS
652.312	Type III Barricade	2	EA
652.33	Drum	30	EA
652.34	Cone	30	EA
652.35	Construction Signs	400	SF
652.361	Maintenance Of Traffic Control Devices (500 Calendar Days)	1	LS
652.38	Flagger	1000	HR
653.23	3" Poly Plastic Insulation	45	SY
655.01	Engine Generator System - Standby	1	LS
655.3001	Bridge Electrical And Control Systems	1	LS
656.75	Temporary Soil Erosion And Water Pollution Control	1	LS
659.10	Mobilization	1	LS
660.21	On The Job Training	1000	HR
815.00	Building: Control House	1	LS
841.48	Bollards	3	EA
845.20	Utility Access Door	1	LS
860.11	Bridge Operating Machinery Delivered	1	LS
860.12	Bridge Operating Machinery Installation	1	LS
860.13	Bridge Trunnion Machinery Delivered	1	LS
860.14	Bridge Trunnion Machinery Installation	1	LS
860.15	Bridge Span Lock Machinery Delivered	1	LS
860.16	Bridge Span Lock Machinery Installation	1	LS
880.02	Bridge Balancing	1	LS
880.031	Balance Block - Lead	1	LS
880.112	Counterweight - Concrete	1	LS
910.301	Special Work - Staff Gauges	1	LS
910.301	Special Work - Operation And Maintenance Manuals	1	LS
910.301	Special Work - Bridge Operator Training	1	LS
910.301	Special Work - Field Testing	1	LS

STATE OF MAINE
DEPARTMENT OF TRANSPORTATION

APPROVED | DATE

COMMISSIONER:

CHIEF ENGINEER:

PROJECT INFORMATION

PROGRAM	BRIDGE	
PROJECT MANAGER	STEPHEN BODGE	SIGNATURE
DESIGNER	HARDESTY & HANOVER	13196
CONSULTANT	HARDESTY & HANOVER	P.E. NUMBER
PROJECT RESIDENT		
CONTRACTOR		DATE
PROJECT COMPLETION DATE		

SOUTH BRISTOL
GUT BRIDGE

ESTIMATE OF QUANTITIES

SHEET NUMBER

2

OF 141

Filename: ... 002_estimate_quantities.dgn Division: BRIDGE Username: common Date:2/3/2014

GENERAL NOTES

SPECIFICATIONS

1. Design Specifications:
   -American Association of State Highway and Transportation Officials (AASHTO) LRFD Bridge Design Specifications, 6"edition, 2012. AASHTO LRFD
   -AAHSTO LRFD Movable Highway Bridge Design Specifications, 2"edition, 2007 with Interim Revisions through 2008, 2010 and 2012.
   -MaineDOT Bridge Design Guide 2003 with updates through 2008.

2. Standard Specifications: State of Maine Department of Transportation Standard Specifications, Revision of 2002.

LOADS:

1. Design Live Load: HL-93 as per AASHTO LRFD Bridge Design Specifications and modified as per MaineDOT Bridge Design Guide. Impact: Percentage of live load as per AASHTO LRFD Bridge Design Specifications; the floorbeams at the movable span joints are proportioned for full live load plus twice the normal impact.

2. Sidewalk Live Load: 75 psf as per AASHTO LRFD Bridge Design Specifications.

3. Wind Load: As per AASHTO LRFD Bridge Design Specifications

4. Ice Load: As per AASHTO LRFD Bridge Design Specifications

MOVABLE BRIDGE TERMS:

1. "Bridge Open" means span up to clear navigational vessels.

2. "Bridge Closed" means span seated to permit vehicular and pedestrian traffic.

STRUCTURAL STEEL - GENERAL:

1. All structural steel shall be in accordance with ASTM A709, Grade 50, unless otherwise noted.

2. All ASTM A709 structural steel as designated on the plans shall receive charpy v-notch testing in accordance with ASTM A709.

3. All bolted connections of structural steel shall be 7/8" diameter ASTM A325 Type I High Strength bolts, in 15/16" diameter holes, installed as Friction Type connections, unless otherwise noted. All faying surfaces of all connections shall be cleaned and painted with shop-applied inorganic zinc rich primer which meets RCSC Class B coefficient and creep testing requirements, unless otherwise noted. Bolt threads shall be excluded from the shear planes.

4. S.S. denotes stainless steel.

5. All structural steel designated as Fracture Critical Members (FCM) on the plans or in the specifications shall conform to the provisions of Chapter 12 of the AASHTO/AWS D1.5 Bridge Welding Code.

6. The Contractor shall coordinate all structural work, including structural steel fabrication and erection, with mechanical, electrical and other structural work. The Contractor shall coordinate the final details of machinery supports, electrical equipment and attachments with the actual machinery and electrical equipment approved for installation, subject to approval by the Resident.

7. Bearing stiffeners shall be plumb after erection and dead loading of the structure. Intermediate web stiffeners may be either plumb or normal to the top flange.

8. Filler plates may be steel conforming to the requirements of ASTM A709, Grade 36.

STRUCTURAL STEEL - WELDING:

1. All groove welds shall be complete penetration. Joint detail is optional with the fabricator, subject to AWS requirements. where backing bar strips are to be left in place, they shall be continuous for the full length of the weld. See detail this sheet. Backing bars shall meet all material and toughness requirements of the structural steel to which it is attached.

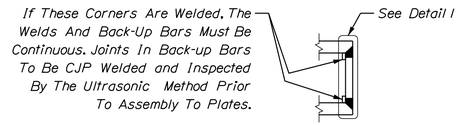

TYPICAL WELDING DETAIL FOR BOX MEMBERS

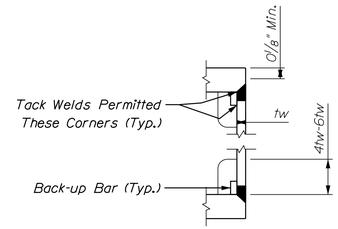

DETAIL 1

2. No transverse butt weld splices will be allowed in the flange plates or web plates within 10 ft or 10 percent of the span length (whichever is greater) from the points of maximum negative moment or maximum positive moment. No transverse butt weld splices will be allowed in areas of stress reversal.

3. Multiple pass welds inspected by the magnetic particle method shall have each pass or layer inspected and accepted before proceeding to the next pass or layer.

4. All welds that join at least one plate designated as Fracture Critical shall be considered FCM, regardless of the direction of stress, and shall meet the requirements of AWS D1.5 fracture critical control plan for non-redundant members.

5. No field welding is permitted unless shown on the plans.

6. Stainless Steel welding details, procedures and testing methods shall conform to AWS D1.6: 2007.

STRUCTURAL STEEL - PAINTING:

1. The structural steel shall be painted in accordance with the Special Provisions. The bridge components shall be painted as follows:

   -Bascule Girders - metalize and top coat outside faces of girders, 2 coat system interior faces.
   -Floor System - metalize plus top coat
   -Soldier Pile Wall - galvanize and polyurea coating

2. The structural steel shall be painted Federal Color No. 25630 or approved equal.

LADDERS, PLATFORMS AND RAILINGS:

1. Structural steel for ladders, platforms and railings shall confirm to ASTM A36 OR ASTM A992 and shall be hot-dip galvanized in accordance with ASTM A123, with the exception of the sidewalk railing, which shall be stainless steel ASTM A276 Type 316. Welding shall conform to AWS D1.1 and AWS D1.5.

CONCRETE:

1. All concrete shall be in accordance with Sections 502 and 701 of the Standard Specifications.

2. Concrete cover:
   -CIP Substructure = 3"
   -Precast substructure = 1 1/2"
   -Approach Barrier = 1 1/2"
   -Approach Spans= 1"
   -Bridge House Retaining Wall = 4"

3. Concrete covers shown on the plans do not include placement and fabrication tolerances unless shown as "minimum cover".

4. Concrete edges: 3/4" chamfer unless otherwise noted.

5. The Contractor shall allow 2 days to elapse between placement of adjacent casts for all substructure units unless approved by the Resident.

BEARING NOTES

1. Masonry plates, sole plates and shear pins shall meet the requirements of ASTM A709, Grade 50. Anchor rods shall meet the requirements of ASTM F1554, Grade 105 and shall be swedged on the embedded portion of the rod.

2. Masonry plates shall be galvanized in accordance with Section 506. Sole plates for steel superstructures shall be treated in the same manner as the structural steel. Anchor rods, washers, nuts and shear pins shall be galvanized to ASTM A 153 or ASTM B695, Class 50, Type 1.

3. All bearings shall be marked prior to shipping. The marks shall include the bearing location on the bridge and a direction arrow that points upstation. All marks shall be permanent and shall be visible after the bearing is installed.

4. Bearings shall be covered during transit.

5. The bearings are designed so that the superstructure may be erected when the ambient air temperature is within the range of 65°F and 90°F. If the ambient air temperature is outside this range, the bearings shall be reset as directed by the Resident.

DATUM:

1. North American Vertical Datum (NAVD) 1988.

PLAN DIMENSIONS:

1. All dimensions in these plans are measured in feet and inches either horizontally or vertically, unless otherwise noted.

U.S. COAST GUARD:

1. For additional information, the Contractor is directed to the requirements of the Coast Guard permit for this Contract.

2. A copy of the Contractor's plan, schedule and sequence of operations shall be submitted to the U.S. Coast Guard MSO and the construction Resident for approval 30 days prior to starting any work.

3. Upon completion of the bridge, an inspection of the waterway bottom shall be performed again to insure that all bridge construction waste materials have been completely removed. This inspection shall consist of both a fathometric survey (soundings) and a wire drag fathometric survey and shall be taken on a 10 ft grid, covering the area surveyed previously. The wire drag shall be performed after a review and comparison of the soundings have been made by the Coast Guard and when adequate manpower and equipment is available at the bridge site to locate and remove any waste materials or debris. The wire drag shall be conducted in the presence of a Coast Guard Representative. Arrangements shall be coordinated with the Coast Guard at least two weeks in advance of the desired date of inspection.

4. During the progress of work, should any material, machinery or equipment be lost, dumped, sunk or misplaced, that object must be removed immediately. The Contractor shall notify the U.S. Coast Guard and the Engineer immediately and file a report within 24 hours.

5. It shall be the responsibility of the Contractor to insure that channel depths are not affected by the work. Should it be suspected that channel depths may have been impaired or that an obstruction may exist from the work, the Contractor shall, upon request of the Coast Guard or Corps of Engineers, provide the necessary equipment and personnel to undertake a survey to determine the presence of any obstruction, objects, or silt that may have occured during construction. The cost for this work to be borne by the Contractor.

6. Contractor intending the use of a barge shall get proper permits from the Coast Guard and shall meet the following requirements:

   -Contractor shall notify the Coast Guard 14 days prior to placement of the barge.

   -All construction equipment in the waterway shall be lighted in accordance with the provisions as outlined in the navigation rules internation - inland.

   -If any barges or work floats are to be kept in place by anchors, the anchor lines must be marked by lighted buoys if the equipment will be at the work site overnight. Coast Guard must be advised of the method of screening silt form cofferdam de-watering operations.

BASCULE SPAN ERECTION NOTES:

1. The design of this structure assumes that the structural steel is assembled in a dead-load condition in accordance with the Bascule Span Erection Sequence on Sheet No. 67.

2. There shall be no separate payment for any temporary supports, temporary bracing or temporary balance material required throughout construction. The cost for the design, installation and removal shall be included in the various bid items of the project.

3. The Contractor shall employ a licensed Professional Engineer registered in the State of Maine to develop the proposed erection procedure, which shall be submitted to the Engineer for review no less than 30 days prior to the start of work.

4. The Contractor shall employ a licensed Professional Engineer registered in the State of Maine to design all temporary shoring, bracing, supports, falsework, jacking or any other temporary provision to allow for construction of the bascule span. All calculations shall be submitted to the Engineer for review.

STATE OF MAINE
DEPARTMENT OF TRANSPORTATION

APPROVED — DATE

COMMISSIONER:

CHIEF ENGINEER:

PROJECT INFORMATION

PROGRAM	BRIDGE		
PROJECT MANAGER	STEPHEN BODGE	SIGNATURE	
DESIGNER	HARDESTY & HANOVER	13196	
CONSULTANT	HARDESTY & HANOVER	P.E. NUMBER	
PROJECT RESIDENT			
CONTRACTOR		DATE	
PROJECT COMPLETION DATE			

SOUTH BRISTOL
GUT BRIDGE

GENERAL NOTES 1

SHEET NUMBER
3
OF 141

Filename: ...\003_general_notes_01.dgn Division: BRIDGE Username: common Date:1/29/2014

BASCULE SPAN ERECTION NOTES (CONT.)

5. For the Bascule Span Erection, the Contractor has the option to either erect the leaf in position or have the leaf delivered to the site partially or fully assembled.

6. If the Contractor proposes to deliver the leaf to the site either partially or fully assembled, he shall submit details that describe his proposed procedure, including complete details and calculations for proposed supports and required lifting operations during all phases of the work, including off-site erection, shipment to the site, and lifting into place to the engineer for review no less than 30 days prior to the start of erection. Proposed lifting points are to be identified. All procedures and calculations shall be prepared by a licensed Professional Engineer registered in the State of Maine.

7. Coordination between structural, mechanical and electrical work is required. It is recommended the Contractor perform shop machining and installation of the trunnion hubs and rack onto each bascule girder. Machine mill mating surfaces between the bascule girder and trunnion hub, and bascule girder and rack perpendicular to the trunnion centerline of rotation. In the steel fabrication shop, subdrill holes for these machinery components. An ANSI FN2 force fit is required between the trunnion hubs and bascule girder. Drill and ream holes for the trunnion hubs and install final bolts in the shop. The rack can be removed and shipped separately.

8. The actual field erection shall result in bascule girders which are straight and parallel to each other. Floorbeams shall be perpendicular to the girders. Ribs shall be parallel to the girders. webs of girders and floorbeams shall be vertical; ribs shall be normal to the deck plate.

9. A land surveyor licensed in the State of Maine shall perform all survey work required for Bascule Span Erection. The degree of accuracy of the work shall be of the first order. A written procedure of obtaining first order accuracy shall be submitted to the Engineer for review prior to the state of any survey work.

10. The Contractor shall submit, in detail, his proposed procedure and sequence for the installation and settings/final alignment of the toe joint, heel joint and span locks to the Engineer for review prior to the start of work.

BACULE SPAN ALIGNMENT NOTES AND PROCEDURE:

The following procedure should be used to set the elevation at the top of each steel support, and set the position in both the span longitudinal and lateral directions for the trunnion pedestal and the Bl pinion bearing to the specified elevation and span position in the Plans.

1. Bearing Bl support is aligned after final alignment of the trunnion support.

2. Degree of accuracy for surveying work required for Final Bascule Span Alignment shall be of the first order as defined by the Federal Geodetic Control Subcommittee Standards. A written procedure for obtaining first order accuracy shall be submitted to the Resident prior to start of this work.

A. Survey locations of bascule and rest piers with respect to the navigation channel width. Survey roadway elevation and alignment for establishing the position of the trunnion supports. Survey longitudinal centerline of each bascule girder relative to their bascule pier, and the trunnion centerline across both bascule piers. These centerlines must be perpendicular to each other.

B. Install trunnion supports centered on the trunnion centerline and set position of supports parallel to the Bascule Girder centerlines within +/- 1/8" of the dimension specified in the Plans.

C. Align inboard trunnion supports to the elevation specified in the Plans and level to each other within a tolerance of +/- 1/8". Align the outboard support to its adjacent inboard support within an elevation of +/- 0.05 inch. Allow for 1/2" nominal thickness of shims under trunnion pedestal.

D. Install Bearing Bl support relative to the position of the aligned trunnion support to the specified dimensions in the Plans at a vertical and horizontal tolerance of +/- 1/16". Allow for 1/2" nominal thickness of shims under bearing.

E. Top of trunnion and bearing Bl supports should be flat across its entire surface within a tolerance of +/- 0.03 inch.

F. Secure supports to reinforcement bars and threaded anchors, and tighten anchor nuts.

G. Pour pier concrete. Top of supports should be 2" above top of concrete. Leave pockets under top plate of each support for installing machinery componets turned bolts. Survey and scribe centerline marks on supports. Refer to 860.13 for trunnion installation and alignment.

GENERAL CONSTRUCTION NOTES

1. For easements, construction limits and right of way lines, refer to Right of Way Map.

2. All utility facilities shall be adjusted by the respective utilities unless otherwise noted.

3. Do not excavate for Aggregate Subbase Course where existing material is suitable as determined by the Resident.

4. All embankment material, except as otherwise shown, placed below EL. +6.0 shall be Crushed Stone meeting the requirements of Subsection 703.13 Crushed Stone.

5. Protective Coating for Concrete Surfaces shall be applied to the following areas:

-Abutments,
-Bascule piers

6. The outside surface of the bascule pier concrete shall be waterproofed. The waterproofing shall stop 6" below the ground surface. The waterproofing material shall meet the requirements of Section 702.12 and shall be installed per the Manufacturer's recommendations. This work shall be not be paid for directly, but shall be considered incidental to related Contract items.

7. Project information referred to below may be accessed at the following MaineDOT web address: http://www.maine.gov/mdot/comprehensive-list-projects/project-information.php.

8. The existing bridge plans may be accessed at the MaineDOT web address. The plans are reproductions of the original drawings as prepared for the construction of the bridge. It is very unlikely that the plans will show any construction field changes or any alterations which may have been made to the bridge during its life span.

9. The following project geotechnical reports may be accessed at the MaineDOT web address:

A. Soils Report 2001-31, "Report on Proposed Bridge Replacement, Route 129, South Bristol, Maine", Haley & Aldrich, Inc., July 2000.

B. Soils Report 2005-07, "Final Geotechnical Design Report for the Replacement of Gut Bridge", MaineDOT, May 2005.

C. Soils Report 2012-02C, "Final Geotechnical Design Report, Route 129 Bridge over The Gut, South Bristol, Maine", January 2012, GZA Geo Environmental, Inc. (GZA).

D. "Geophysical Investigation, Route 129 Top of Rock Profiling, South Bristol, Maine", August 2011, NDT Corporation.

E. Soils Report, 2012-17C, "Supplemental Geotechnical Data Summary, Route 129 Bridge over The Gut", July 2012, GZA.

F. Soils Report, 2013-30C, "Supplemental Geotechnical Data Summary, Route 129 Bridge over The Gut", August 2013, GZA.

10. Geotechnical information furnished or referred to in this plan set is for the use of the Bidders and the Contractor. No assurance is given that the information or interpretations will be representative of actual subsurface conditions at the construction site. MaineDOT will not be responsible for the Bidders' or Contractor's interpretations of, or conclusions drawn from, the geotechnical information. The boring logs contained in the plan set present factual and interpretive subsurface information collected at discrete locations. Data provided may not be representative of the subsurface conditions between the boring locations.

11. Quantities included for pay items measured and paid for by Lump Sum are estimated quantities and are provided by MaineDOT for informational purposes only. Lump Sum pay items will be paid for at the Contract Bid amount, with no addition or reduction in payment to the Contractor if the actual final quantities are different from the MaineDOT provided estimated quantities, except as follows:

A. If a Lump Sum pay item is eliminated, the requirements of Standard Specifications Section 109.2, Elimination of Items, will take precedence.

B. If other Contract Documents specifically allow a change in payment for a Lump Sum pay item, those requirements will be followed.

C. If a design change results in changes to estimated quantities for Lump Sum pay items, price adjustments will be made in accordance with Standard Specifications Section 109.7, Equitable Adjustments to Compensation.

GENERAL CONSTRUCTION NOTES (CONT.)

12. The Contractor shall submit a Bridge Demolition Plan to the Resident at least 10 business days prior to the start of demolition work. The plan shall outline the methods and equipment to be used to remove and dispose of all materials included in the existing bridge. No work related to the removal of the bridge shall be undertaken by the Contractor until MaineDOT has reviewed the Bridge Demolition Plan for appropriateness and completeness. Payment for all work necessary for developing, submitting and finalizing the Demolition Plan will be considered incidental to the bridge removal pay item.

13. The existing bridge shall be removed by and become the property of the Contractor. The steel portions of the existing bridge are coated with a lead-based paint system. The Contractor is responsible for the containment, proper management and disposal of all lead-contaminated hazardous waste generated by the process of demolishing the bridge. The Contractor is responsible for implementing appropriate OSHA mandated personal protection standards related to this process. Once the existing bridge is removed, the Contractor is solely responsible for the care, custody and control of the components of the existing bridge and any hazardous waste generated as a result of the storage, recycling or disposal of the bridge components, including lead-coated steel. The Contractor shall recycle or reuse the steel in accordance with the Maine Department of Environmental Protection's "Maine Hazardous Waste Management Regulations," Chapter 850. A copy of this regulation is available at MaineDOT's offices on Child Street in Augusta. Payment for all labor, materials, equipment and other costs required to remove and dispose of the existing bridge will be considered incidental to the bridge removal pay item.

14. A Maine Department of Transportation (MaineDOT) Environmental Office investigation associated with this project discovered data suggesting petroleum related contamination was present at roughly MaineDOT station 118+00 to roughly MaineDOT station 119+00. Subsequent on-site work confirmed petroleum contamination. However, based on the scope of work presented, available data suggests that this contamination may be deeper than and adjacent to any work proposed in this area. In light of MaineDOT's findings, the contractor shall employ appropriate health and safety measures to protect its workers against hazards associated with working near petroleum-impacted soils. Furthermore, the Contractor shall remain alert for any additional evidence of contamination. If the Contractor encounters evidence of soil or groundwater contamination, the Contractor shall secure the excavation, stop work in the contaminated area, and immediately notify the Resident. The Resident shall contact the Hydrogeologist in MDOT's Environmental Office at 207-624-3100 and the Maine Department of Environmental Protection at 800-482-0777. Work may only continue with authorization from the Resident.

15. The existing advanced warning signs shall be removed by the Contractor. The new advanced warning signs shall be located approximate where the existing signs are located. The exact location ofthe new signs shall be as directed by the Resident. Removal and disposal of the two existing advanced warning signs shall be paid for under items.

16. A 4"x4"x1/2" steel angle shall be attached to the exposed face of retaining wall between Sta. 115+04.78 right and station 115+58.50 right. The angle shall be hot dipped galvanized. The angle shall be attached to the wall using 3/4" diameter A325 bolts spaced at a 12" on center with the bolts embedded a minimum of 5". The grout used to embed the bolts shall be from MDOT's qualified products list. This angle is to support a future new deck on the front of the building owned by Diane Haas. The exact location of where the angle is to attached shall be determined in the field by the Resident.

17. There has been an extensive public process associated with this project. Through this process, the Departmend has made commitments to the local community to ensure that the bridge superstructure design, proportions and aesthetics do not vary from what is called for in the Contract documents. Consequently, the Department will not entertain any Value Engineering, or other alternate proposals that would substantially affect the overall design, proportions or aesthetics of the bridge superstructure.

STATE OF MAINE
DEPARTMENT OF TRANSPORTATION

APPROVED | DATE

COMMISSIONER:

CHIEF ENGINEER:

PROJECT INFORMATION

PROGRAM	BRIDGE		
PROJECT MANAGER	STEPHEN BODGE	SIGNATURE	
DESIGNER	HARDESTY & HANOVER	13196	
CONSULTANT	HARDESTY & HANOVER	P.E. NUMBER	
PROJECT RESIDENT			
CONTRACTOR		DATE	
PROJECT COMPLETION DATE			

SOUTH BRISTOL
GUT BRIDGE

GENERAL NOTES II

SHEET NUMBER

4

OF 141

Filename: ...\004_general_notes_02.dgn Division: BRIDGE Username: common Date:1/29/2014

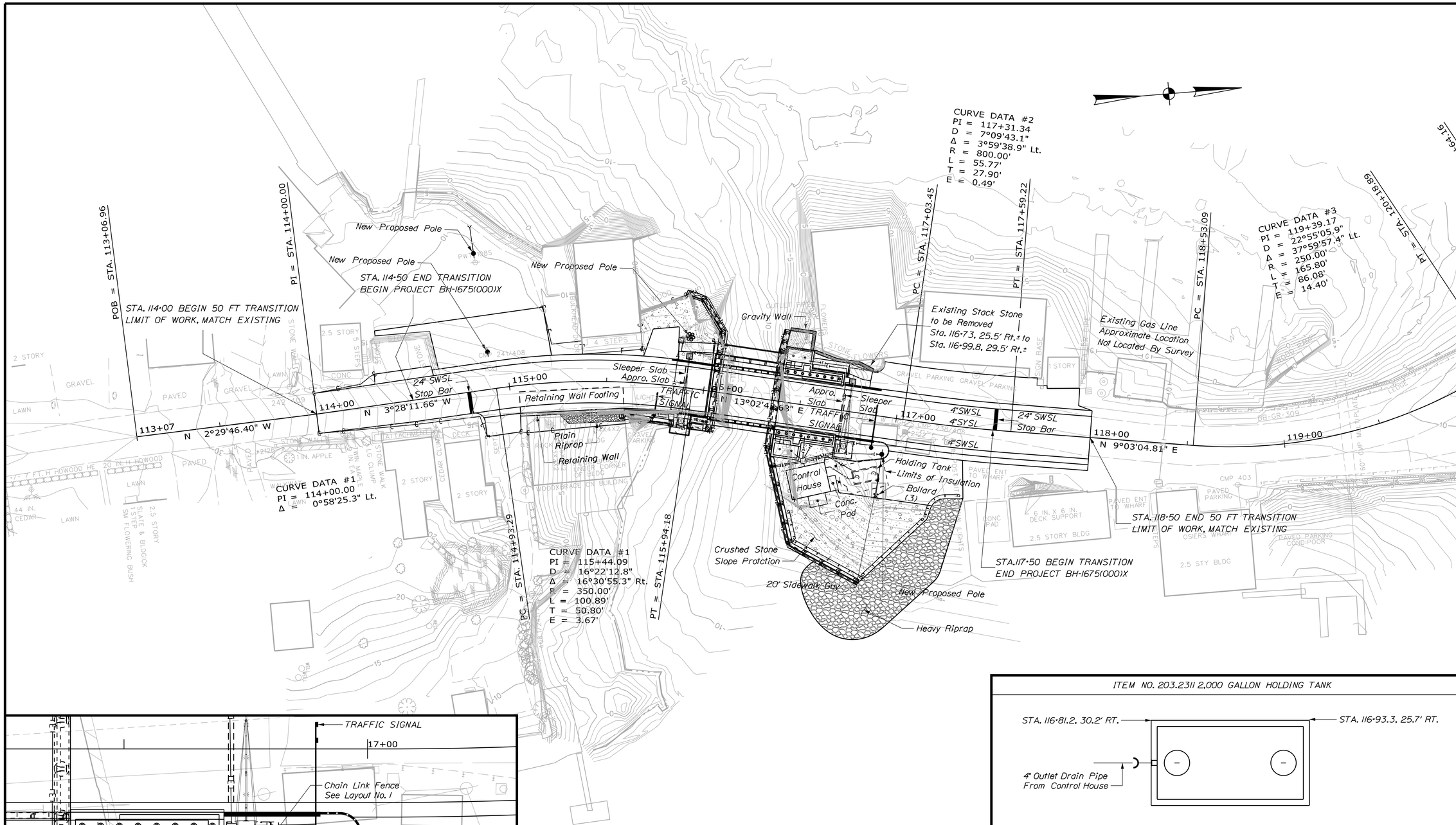

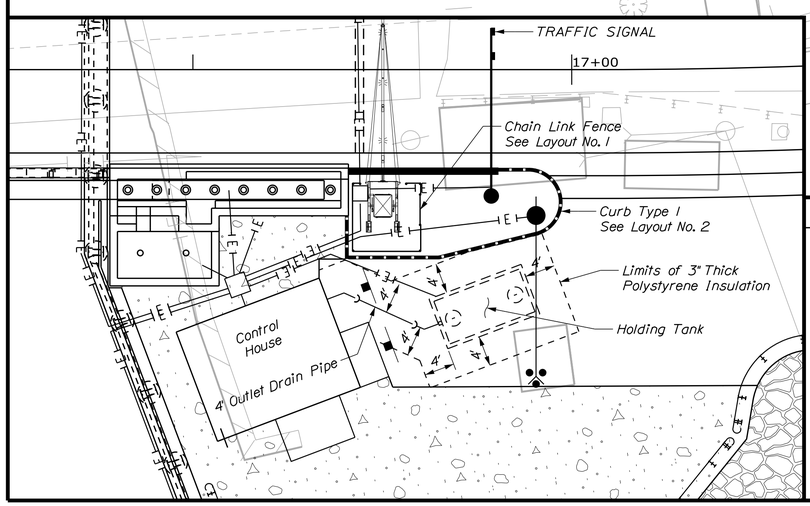

ITEM NO. 203.23 11 2,000 GALLON HOLDING TANK

ITEM NO. 607.19 & 607.2313 CHAIN LINK FENCE & GATE - 4FT WIDE x 8FT TALL

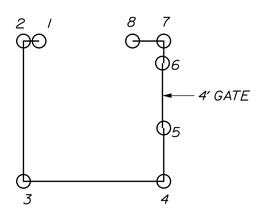

LAYOUT NO. 1

Point	Station	Offset
1	116+72.00	15.00' RT.
2	116+71.00	15.00' RT.
3	116+71.00	24.00' RT.
4	116+80.00	24.00' RT.
5	116+80.00	20.50' RT.
6	116+80.00	16.50' RT.
7	116+80.00	15.00' RT.
8	116+78.00	15.00' RT.

Pt to Pt	Length	Pt to Pt	Length
1 to 2	1.00'	6 to 7	1.5'
2 to 3	9.00'	7 to 8	2.00'
3 to 4	9.00'		
4 to 5	3.5'		
5 to 6	4.00'		

ITEM NO. 609.11 & 609.12 VERTICAL CURB TYPE 1 & CIRCULAR VERTICAL CURB TYPE 1

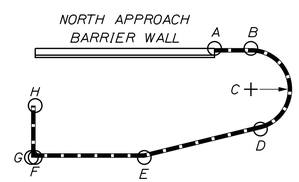

LAYOUT NO. 2

Point	Station	Offset
A	116+90.26	13.00' RT.
PC B	116+94.26	13.00' RT.
CC C	116+94.26	17.50' RT.
PT D	116+95.32	21.87' RT.
E	116+82.53	25.00' RT.
F	116+70.53	25.00' RT.
G	116+70.11	25.00' RT.
H	116+70.11	19.29' RT.

Pt to Pt	Length	Radius
A to B	4.00'	
B to D	13.00'	4.5'
D to E	13.20'	
E to F	12.00'	
G to H	5.70'	

STATE OF MAINE
DEPARTMENT OF TRANSPORTATION

BH-1675(000)X

PIN 16750.00

BRIDGE NO. 2339

BRIDGE PLANS

		BY	DATE
PROJ. MANAGER		S. BODGE	
DESIGN-DETAILED	XXX	MRP	MAY 2013
CHECKED-REVIEWED	-----	-----	-----
DESIGN2-DETAILED2	-----	-----	-----
DESIGN3-DETAILED3	-----	-----	-----
REVISIONS 1	-----	-----	-----
REVISIONS 2	-----	-----	-----
REVISIONS 3	-----	-----	-----
REVISIONS 4	-----	-----	-----
FIELD CHANGES	-----	-----	-----

SIGNATURE

P.E. NUMBER

DATE

GUT BRIDGE
THE GUT
SOUTH BRISTOL LINCOLN COUNTY

GENERAL PLANS

SHEET NUMBER

5

OF 141

Filename: ...\00\BRIDGE\MSTA\003_BDPlan1.dgn Division: BRIDGE Username: Mark.Poulin Date:1/30/2014

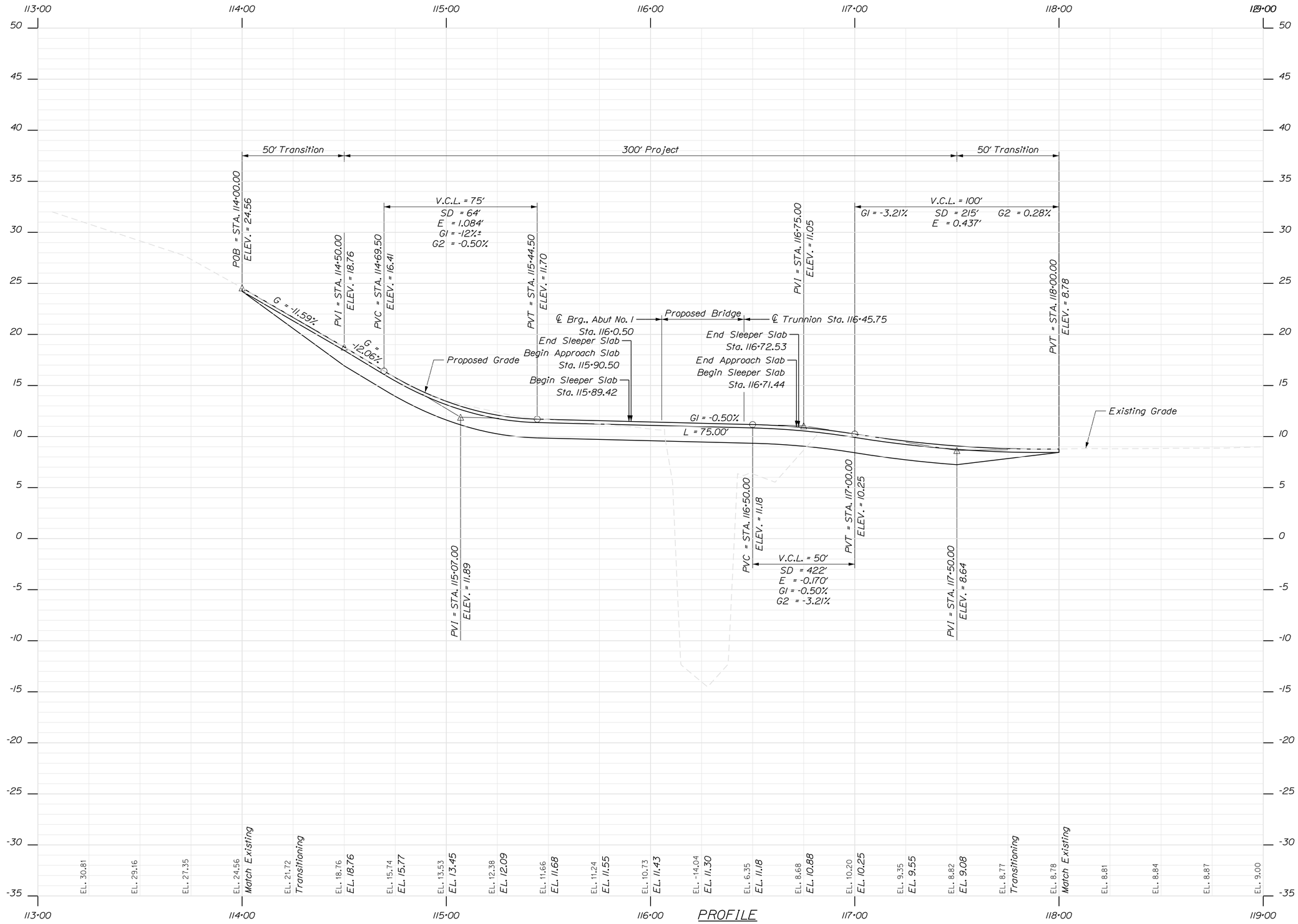

STATE OF MAINE
DEPARTMENT OF TRANSPORTATION

APPROVED | DATE

COMMISSIONER:

CHIEF ENGINEER:

PROJECT INFORMATION		
PROGRAM	BRIDGE	
PROJECT MANAGER	STEPHEN BODGE	SIGNATURE
DESIGNER	HARDESTY & HANOVER	13196
CONSULTANT	HARDESTY & HANOVER	P.E. NUMBER
PROJECT RESIDENT		
CONTRACTOR		DATE
PROJECT COMPLETION DATE		

SOUTH BRISTOL GUT BRIDGE

PROFILE

SHEET NUMBER

6

OF 141

Filename: ...\CADD\40_Hwy\006_profile.dgn Division: BRIDGE Username: common Date:1/29/2014

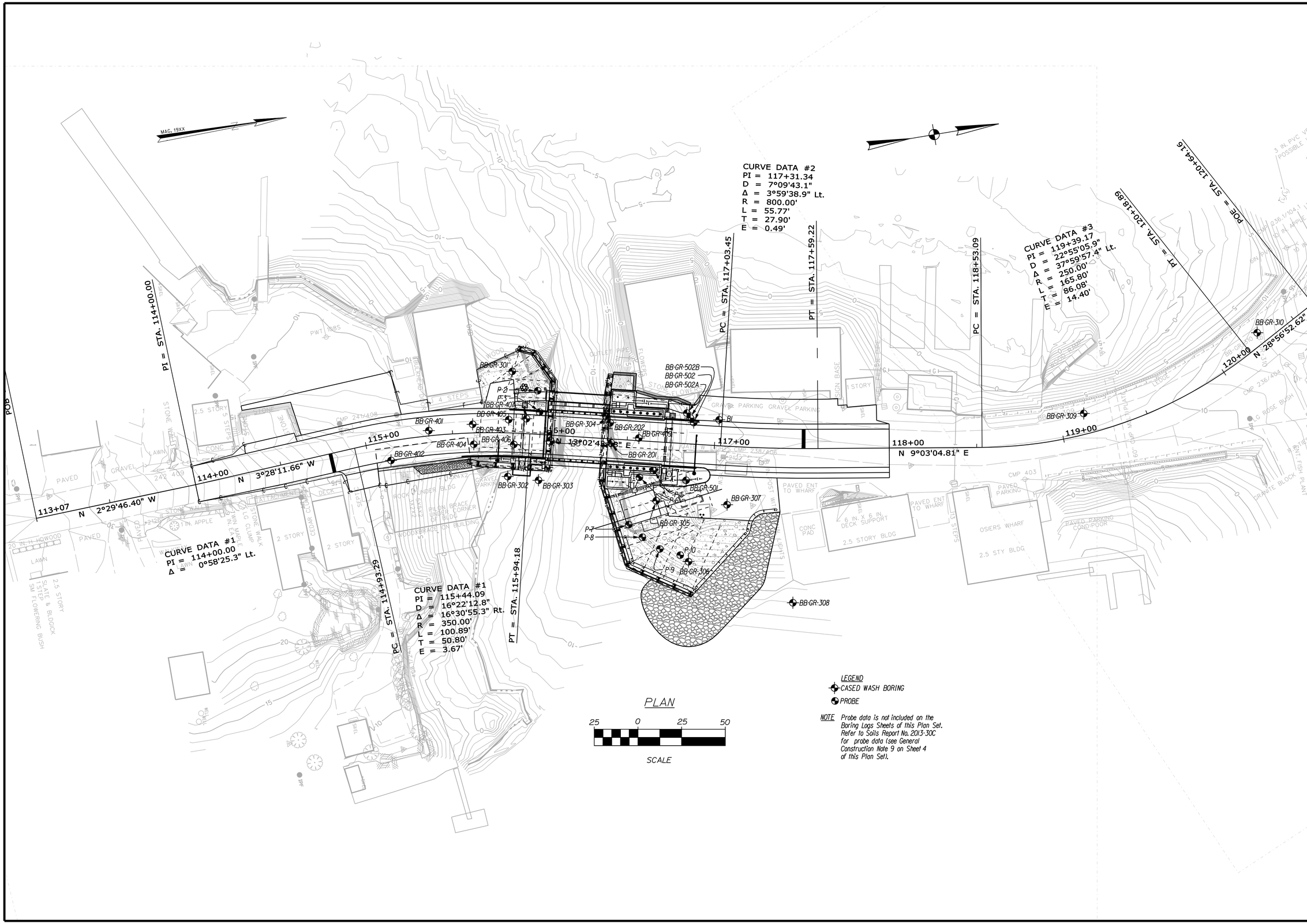

STATE OF MAINE
DEPARTMENT OF TRANSPORTATION

BH-1675(000)X

PIN 16750.00

BRIDGE NO. 2339

BRIDGE PLANS

PROJ. MANAGER			
DESIGN-DETAILED	BY	DATE	SIGNATURE
CHECKED-REVIEWED	L.KRUSINSKI	JUN 2011	
DESIGN2-DETAILED2	T. WHITE		P.E. NUMBER
DESIGN3-DETAILED3			DATE
REVISIONS 1			
REVISIONS 2			
REVISIONS 3			
REVISIONS 4			
FIELD CHANGES			

GUT BRIDGE
THE GUT
SOUTH BRISTOL LINCOLN COUNTY

BORING LOCATION PLAN

SHEET NUMBER

6

OF 7

Filename: ...\00\GEOTECH\MSTA\006_BLP1.dgn Division: HIGHWAY Username: common Date:1/28/2014

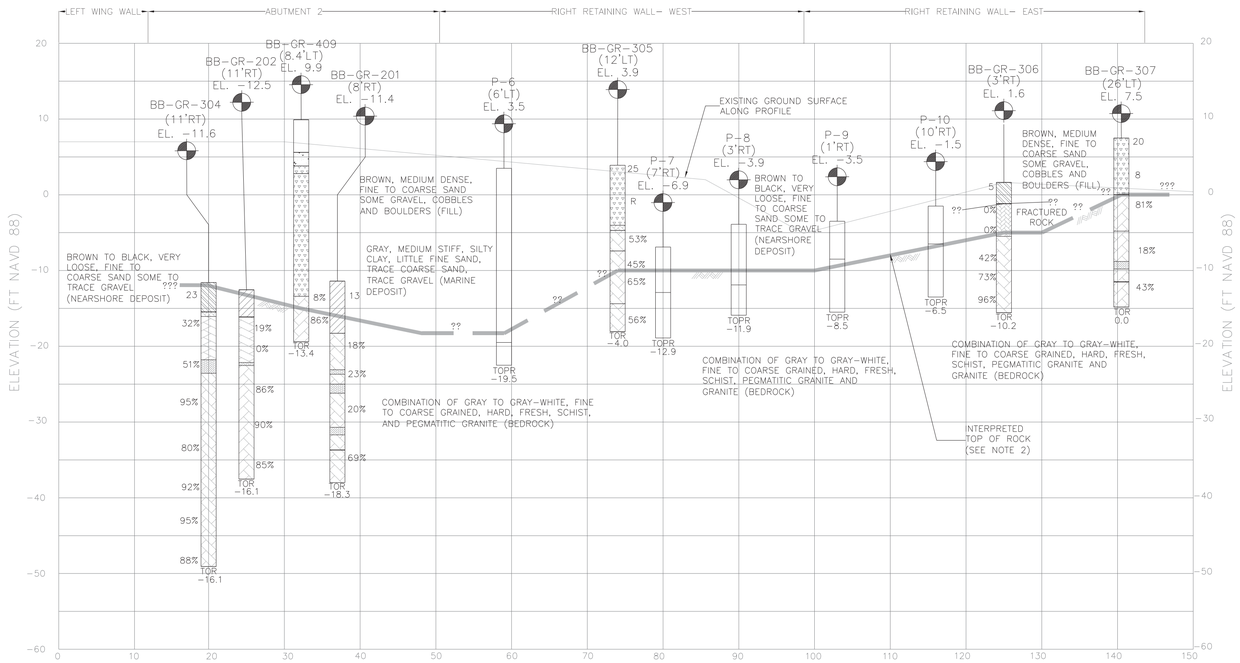

ABUTMENT 2 PROFILE

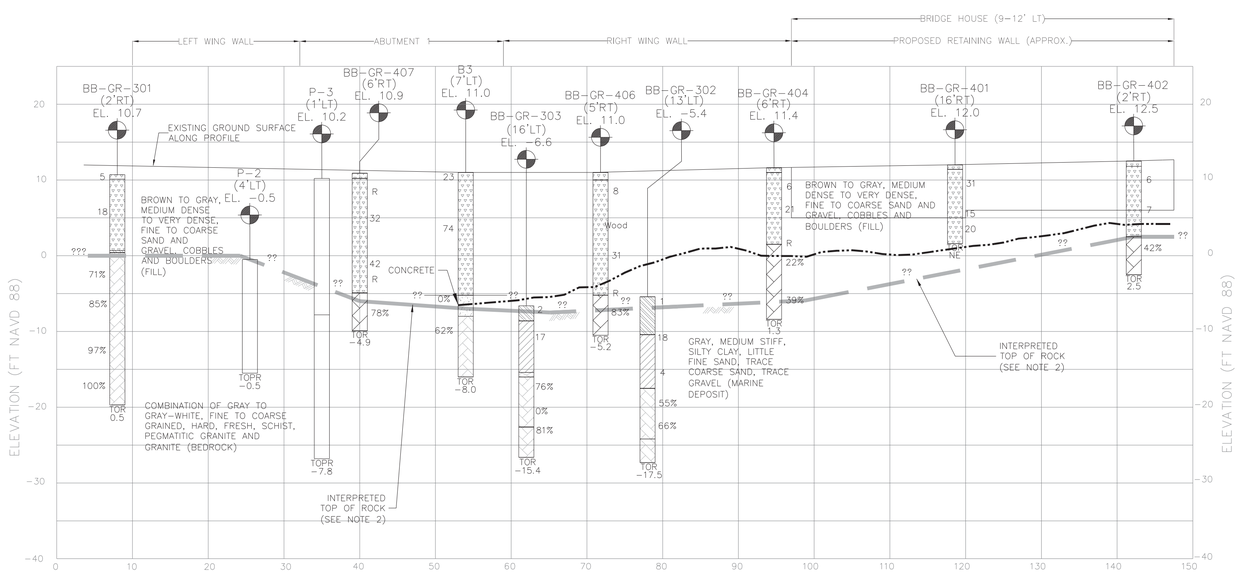

ABUTMENT 1 PROFILE

BB-GR-307 — BOREHOLE DESIGNATION
(26' LT) — OFFSET FROM PROFILE BASELINE
EL. 7.5 — GROUND SURFACE ELEVATION (FT NAVD 88)

11 — ENERGY CORRECTED STANDARD PENETRATION TEST (SPT) N-VALUE (N60)
R — SPLIT SPOON REFUSAL (>50 BLOWS FOR 1" PENETRATION)
32% — ROCK RQD
TOR — TOP OF CORED BEDROCK (FT-NAVD 1988)
TOPR — TOP OF PROBED BEDROCK (FT-NAVD 1988)
-11.5
▲ — BORING TERMINATED ON SPLIT SPOON REFUSAL

FILL
NEARSHORE DEPOSIT
MARINE DEPOSITS
CONCRETE
BEDROCK
HIGHLY TO COMPLETELY WEATHERED ROCK ZONE (BB-GR-201, BB-GR-202, BB-GR-304 & BB-GR-307)
SEISMIC LINE 2
SEISMIC LINE 3

0 5 10 20 30
SCALE IN FEET (VERT. AND HORIZ.)

NOTES:

1) REFER TO SHEET 22, BORING LOCATION PLAN, FOR ABUTMENT PROFILE BASELINES.

2) THE INTERPRETED TOP OF ROCK SHOULD BE CONSIDERED APPROXIMATE AND WAS DEVELOPED BASED ON EITHER: (1) CONTOURING THE TOP OF INTACT ROCK ELEVATION FROM THE BORINGS AND INTERPOLATING BETWEEN THE CONTOURS AT THE LOCATIONS SHOWN ON THE BORING LOCATION PLAN OR (2) INTERPRETATION OF SEISMIC REFRACTION DATA. DASHED WITH QUESTION MARKS INDICATE LACK OF SUPPORTING DATA FOR INTERPRETATION. THIS IS PROVIDED FOR PLANNING PURPOSES ONLY, AND VARIATIONS WILL BE ENCOUNTERED DURING CONSTRUCTION.

3) THIS GENERALIZED INTERPRETIVE SUBSURFACE PROFILE IS INTENDED TO CONVEY TRENDS IN SUBSURFACE CONDITIONS. THE BOUNDARIES BETWEEN STRATA ARE APPROXIMATE AND IDEALIZED, AND HAVE BEEN DEVELOPED BY INTERPRETATIONS OF WIDELY SPACED EXPLORATIONS AND SAMPLES. ACTUAL SOIL TRANSACTIONS MAY VARY AND ARE PROBABLY MORE ERRATIC. FOR MORE SPECIFIC INFORMATION REFER TO THE EXPLORATION LOGS.

4) DATA THAT IS RELATED TO EXISTING SURVEY IS SUBJECT TO CHANGE BASED ON SUPPLEMENTAL SURVEY DATA BY MAINE DOT.

5) UNLESS SPECIFICALLY STATED BY WRITTEN AGREEMENT, THIS DRAWING IS THE SOLE PROPERTY OF GZA GEOENVIRONMENTAL, INC. (GZA). THE INFORMATION SHOWN ON THE DRAWING IS SOLELY FOR USE BY GZA'S CLIENT OR THE CLIENT'S DESIGNATED REPRESENTATIVE FOR THE SPECIFIC PROJECT AND LOCATION IDENTIFIED ON THE DRAWING. THE DRAWING SHALL NOT BE TRANSFERRED, REUSED, COPIED, OR ALTERED IN ANY MANNER FOR USE AT ANY OTHER LOCATION OR FOR ANY OTHER PURPOSE WITHOUT THE PRIOR WRITTEN CONSENT OF GZA. ANY TRANSFER, REUSE, OR MODIFICATION TO THE DRAWING BY THE CLIENT OR OTHERS, WITHOUT THE PRIOR WRITTEN EXPRESS CONSENT OF GZA, WILL BE AT THE USER'S SOLE RISK AND WITHOUT ANY RISK OR LIABILITY TO GZA.

WIN 16750.00

STATE OF MAINE
DEPARTMENT OF TRANSPORTATION
APPROVED — DATE
COMMISSIONER:
CHIEF ENGINEER:

STATE OF MAINE — ANDREW R. BLAISDELL NO. 10957 — PROFESSIONAL ENGINEER

SIGNATURE
10957
P.E. NUMBER
01/16/2014
DATE

PROJECT INFORMATION

PROGRAM	BRIDGE
PROJECT MANAGER	STEPHEN BODGE
DESIGNER	GZA GEOENVIRONMENTAL, INC.
CONSULTANT	GZA GEOENVIRONMENTAL, INC.
PROJECT RESIDENT	
CONTRACTOR	
PROJECT COMPLETION DATE	

SOUTH BRISTOL
GUT BRIDGE

INTERPRETIVE
SUBSURFACE PROFILES

SHEET NUMBER
8
OF 141

Filename: ...\CADD\00_Geo\Sheet 08.dgn Division: BRIDGE Username: landi Date: 01/16/2014

Maine Department of Transportation
Soil/Rock Exploration Log
US CUSTOMARY UNITS

Project: The Gut Bridge over The Gut	Location: South Bristol, Maine	Boring No.: B1 — PIN: 16750.00
Driller: Maine Test Borings, Inc.	Elevation (ft.) 10.0	Auger ID/OD:
Operator: G. Rudnicki	Datum: NGVD	Sampler: Standard Split Spoon
Logged By: S. Wiercinski, H&A Rep.	Rig Type: B43 Mobile Trailer	Hammer Wt./Fall: 140#/30"
Date Start/Finish: 6/15/00-6/15/00	Drilling Method: Cased Wash Boring	Core Barrel: 2" NX
Boring Location: 117+01.7, 14.8 ft Lt.	Casing ID/OD: NW	Water Level*: Tidal

Definitions:
D = Split Spoon Sample
MD = Unsuccessful Split Spoon Sample attempt
U = Thin Wall Tube Sample
R = Rock Core Sample
V = Insitu Vane Shear Test
SSA = Solid Stem Auger

Definitions:
S_u = Insitu Field Vane Shear Strength (psf)
T_v = Pocket Torvane Shear Strength (psf)
q_p = Unconfined Compressive Strength (ksf)
$S_{u(lab)}$ = Lab Vane Shear Strength (psf)
WOH = weight of 140lb. hammer
WOR = weight of rods

Definitions:
WC = water content, percent
LL = Liquid Limit
PL = Plastic Limit
PI = Plasticity Index
G = Grain Size Analysis
C = Consolidation Test

Depth (ft.)	Sample No.	Pen./Rec. (in.)	Sample Depth (ft.)	Blows (/6 in.) Shear Strength (psf) or RQD (%)	N-value	Casing Blows	Elevation (ft.)	Visual Description and Remarks	Laboratory Testing Results/ AASHTO and Unified Class
0	S1	5/1	0.4 - 0.8	50(5")			9.60	-BITUMINOUS CONCRETE- (0.4)	
							9.10	Very dense brown coarse to medium SAND, some gravel and fine sand. -FILL- (0.9)	
								-CONCRETE- Note: augered through concrete from 0.9-3.5 ft.	
								Spun casing through concrete from 3.5-5.0 ft.	
5						NX		Cored concrete from 5.0-5.7 ft.	
							4.30	(5.7) Note: cored cobbles and gravelly fill from 5.7-9.1 ft. -FILL-	
	R1	60/47	9.7 - 14.7	RQD = 38%			0.90	(9.1) Top of Bedrock recovered with above cobbles and boulders. R1: Moderately hard to medium hard, fresh to moderately weathered blue-grey to grey SCHIST with extremely thin to very thin beds throughout. Primary joint set is low angle to high angle (predominantly moderately dipping), very close to moderate, rough, undulating, fresh to discolored, tight to open. 78% Recovery	
10									
15	R2	60/59	14.7 - 19.7	RQD = 73%				R2: same as R1. 98% Recovery	
20							-9.70	(19.7) Bottom of Exploration at 19.7 feet below ground surface.	
25									

Remarks:

Stratification lines represent approximate boundaries between soil types; transitions may be gradual.

* Water level readings have been made at times and under conditions stated. Groundwater fluctuations may occur due to conditions other than those present at the time measurements were made.

Page 1 of 1 — Boring No.: B1

Maine Department of Transportation
Soil/Rock Exploration Log
US CUSTOMARY UNITS

Project: The Gut Bridge over The Gut	Location: South Bristol, Maine	Boring No.: B3 — PIN: 16750.00
Driller: Maine Test Borings, Inc.	Elevation (ft.) 11.0	Auger ID/OD:
Operator: G. Rudnicki	Datum: NGVD	Sampler: Standard Split Spoon
Logged By: S. Wiercinski, H&A Rep.	Rig Type: B43 Mobile Trailer	Hammer Wt./Fall: 140#/30"
Date Start/Finish: 6/15/00-6/15/00	Drilling Method: Cased Wash Boring	Core Barrel: 2" NX
Boring Location: 116+06.1, 3.4 ft Rt.	Casing ID/OD: NW	Water Level*: 9.5 ft.

Definitions:
D = Split Spoon Sample
MD = Unsuccessful Split Spoon Sample attempt
U = Thin Wall Tube Sample
R = Rock Core Sample
V = Insitu Vane Shear Test
SSA = Solid Stem Auger

Definitions:
S_u = Insitu Field Vane Shear Strength (psf)
T_v = Pocket Torvane Shear Strength (psf)
q_p = Unconfined Compressive Strength (ksf)
$S_{u(lab)}$ = Lab Vane Shear Strength (psf)
WOH = weight of 140lb. hammer
WOR = weight of rods

Definitions:
WC = water content, percent
LL = Liquid Limit
PL = Plastic Limit
PI = Plasticity Index
G = Grain Size Analysis
C = Consolidation Test

Depth (ft.)	Sample No.	Pen./Rec. (in.)	Sample Depth (ft.)	Blows (/6 in.) Shear Strength (psf) or RQD (%)	N-value	Casing Blows	Elevation (ft.)	Visual Description and Remarks	Laboratory Testing Results/ AASHTO and Unified Class
0							10.50	-BITUMINOUS CONCRETE- (0.5)	
	S1	24/9	1.0 - 3.0	8/13/10/50(5")	23			Medium dense, brown gravelly coarse to fine SAND, trace silt. -FILL-	
								Cored through boulder from 3.1-6.0 ft., recovered 1.3 ft. Spun casing and washed out to 8.1 ft.	
5									
	S2	18/2	8.1 - 9.6	8/21/53	74			Very dense, brown gravelly coarse to fine SAND with cobbles and boulders.	
10	S3	18/2	10.0 - 11.5	8/6/50(4")	---			Medium dense to very dense, brown coarse to medium sandy GRAVEL. -FILL-	
						NX		Spun casing to 11.3 ft., washed out and cored from 11.3-13.3 ft., recovered 0.3 ft., Spun casing to 13.8 ft., cored from 13.7-16.6 ft., recovered 1.8 ft.	
						NX			
15	R1	69.6/a24	16.2 - 22.0	RQD = 0%		NX	-5.20	(16.2) Top of Concrete at 16.2 ft. -CONCRETE-	
							-7.80	(18.8) Gravelly material.	
							-8.00	(19.0) R1: Moderately hard to medium hard, fresh to moderately weathered, grey-green to grey fine grained to aphanitic SCHIST, extremely thin foliations throughout. Primary joint set is high angle to modrately dipping, extremely close to moderately close, planar to undulating, smooth to rough, fresh to decomposed, tight. a67% Recovery	
20	R2	60/54	22.0 - 27.0	RQD = 62%				R2: same as R1 except fresh to slightly weathered. 90% Recovery	
25							-16.00	(27.0) Bottom of Exploration at 27.0 feet below ground surface.	
30									

Remarks:

aRecovery and RQD percentages are calculated only on bedrock portion of core run, excludes concrete.

Stratification lines represent approximate boundaries between soil types; transitions may be gradual.

* Water level readings have been made at times and under conditions stated. Groundwater fluctuations may occur due to conditions other than those present at the time measurements were made.

Page 1 of 1 — Boring No.: B3

Maine Department of Transportation
Soil/Rock Exploration Log
US CUSTOMARY UNITS

Project: The Gut Bridge over The Gut	Location: South Bristol, Maine	Boring No.: BB-GR-201 — PIN: 16750.00
Driller: MaineDOT	Elevation (ft.) -3.0	Auger ID/OD: N/A
Operator: G. Lidstone	Datum: NGVD	Sampler: Standard Split Spoon
Logged By: L. Krusinski	Rig Type: CME 45C	Hammer Wt./Fall: 30"/140#
Date Start/Finish: 3/15/05-3/15/05	Drilling Method: Cased Wash Boring	Core Barrel: NX, 1.88 OD Core
Boring Location: 116+40.9, 2.3 ft Rt.	Casing ID/OD: HW	Water Level*: Tidal

Definitions:
D = Split Spoon Sample
MD = Unsuccessful Split Spoon Sample attempt
U = Thin Wall Tube Sample
R = Rock Core Sample
V = Insitu Vane Shear Test
SSA = Solid Stem Auger

Definitions:
S_u = Insitu Field Vane Shear Strength (psf)
T_v = Pocket Torvane Shear Strength (psf)
q_p = Unconfined Compressive Strength (ksf)
$S_{u(lab)}$ = Lab Vane Shear Strength (psf)
WOH = weight of 140lb. hammer
WOR = weight of rods

Definitions:
WC = water content, percent
LL = Liquid Limit
PL = Plastic Limit
PI = Plasticity Index
G = Grain Size Analysis
C = Consolidation Test

Depth (ft.)	Sample No.	Pen./Rec. (in.)	Sample Depth (ft.)	Blows (/6 in.) Shear Strength (psf) or RQD (%)	N-value	Casing Blows	Elevation (ft.)	Visual Description and Remarks	Laboratory Testing Results/ AASHTO and Unified Class
0						4			
						28			
						40			
	1D	24/11	3.0 - 5.0	18/9/4/6	13	60		Dark grey, damp, medium dense, sandy SILT, trace small rounded gravel.	
5						51			
						106			
						180	-9.90	Top of BEDROCK. (6.9)	
	aR1	62.4/ 62.4	7.1 - 12.3	RQD = 18%		NX		Roller cone ahead to 7.1' bgs. R1: Bedrock: Green-grey, very soft to moderately hard, completely weathered to moderately weathered, fine grained SCHIST with thin banding. Joint set steep, close, open with infilling. 2.5-5.0' very soft, decomposed white LIMONITE SCHIST. White pegmatitic granite 11.7-12.3'. Rock quality is very poor; very highly fractured.	
						CORE		R1: Core Times (min:sec)	
10	UCT	4/4	9.5 - 9.8	UCT-201-R1				7.1-8.1' (3:30) 8.1-9.1' (1:40) 9.1-10.1' (2:20) UCT-201-R1, 2.4-2.8 ft dbbs 10.1-11.1' (2:00) 11.1-12.3' (1:10)	
	aR2	60/60	12.3 - 17.3	RQD = 23%				R2: Green-grey, very soft to moderately hard, completely weathered to moderately weathered, fine grained SCHIST. Joint set steep, close, open and infilled with white-green, soft altered biotite (Limonite). Very soft, decomposed white LIMONITE SCHIST 13.6-14.8'. Rock quality is very poor; highly fractured.	
15	UCT	6/6	14.9 - 15.4	UCT-201-R2(a)				R2: Core Times (min:sec) 12.3-13.3' (3:00) 13.3-14.3' (1:20) 14.3-15.3' (3:00) UCT-201-R2(a), 7.8-8.3 ft dbbs 15.3-16.3' (2:00) UCT-201-R2(b) 8.6-9.4 ft dbbs 16.3-17.3' (2:05)	UCS=3,816 psi UCS=5,444 psi
	UCT	9.6/9.6	15.7 - 16.5	UCT-201-R2(b)					
	aR3	60/60	17.3 - 22.3	RQD = 20%				R3: Grey-green-white, very soft to moderately hard, decomposed to slightly weathered medium grained QUARTZ and fine grained SCHIST, Joints at low to steep angle, open with infilling, close. Completely weathered white LIMONITE SCHIST zone 19.3-20.3'. Rock quality is very poor; very highly fractured. R3: Core Times (min:sec) 17.3-18.3' (3:00) 18.3-19.3' (2:00) 19.3-20.3' (3:00) 20.3-21.3' (2:10) 21.3-22.3' (1:50) 80% Recovery	
20									
	bR4	51.6/ 51.6	22.3 - 26.6	RQD = 69%				R4: Green-white, moderately hard to very hard, fresh to slightly weathered, medium to large grained PEGMATITIC GRANITE. Joint set close, low angle, tight, no infilling. Some biotite veins. R4: Core Times (min:sec) 22.3-23.3' (4:20) 23.3-24.3' (4:00) 24.3-25.3' (3:00) 25.3-26.3' (3:40) 26.3-26.6' (2:50) Core Blocked	
25							-29.60	(26.6) Bottom of Exploration at 26.6 feet below ground surface.	
30									

Remarks:

aRecovery poor because lost a lot of the rock core in the wash water because it was decomposed.
bCore blocked at 26.6' bgs on R4.
Assumed Bridge Deck Elevation 10.6', 22.0' from Bridge Deck to River bed.

Stratification lines represent approximate boundaries between soil types; transitions may be gradual.

* Water level readings have been made at times and under conditions stated. Groundwater fluctuations may occur due to conditions other than those present at the time measurements were made.

Page 1 of 1 — Boring No.: BB-GR-201

Maine Department of Transportation
Soil/Rock Exploration Log
US CUSTOMARY UNITS

Project: The Gut Bridge over The Gut	Location: South Bristol, Maine	Boring No.: BB-GR-202 — PIN: 16750.00
Driller: MaineDOT	Elevation (ft.) 3.0	Auger ID/OD: N/A
Operator: G. Lidstone	Datum: NGVD	Sampler: Standard Split Spoon
Logged By: L. Krusinski	Rig Type: CME 45C	Hammer Wt./Fall: 30"/140#
Date Start/Finish: 3/16/05-3/16/05	Drilling Method: Cased Wash Boring	Core Barrel: NX, 1.88 OD Core
Boring Location: 116+39.6, 9.2 ft Lt.	Casing ID/OD: HW	Water Level*: Tidal

Definitions:
D = Split Spoon Sample
MD = Unsuccessful Split Spoon Sample attempt
U = Thin Wall Tube Sample
R = Rock Core Sample
V = Insitu Vane Shear Test
SSA = Solid Stem Auger

Definitions:
S_u = Insitu Field Vane Shear Strength (psf)
T_v = Pocket Torvane Shear Strength (psf)
q_p = Unconfined Compressive Strength (ksf)
$S_{u(lab)}$ = Lab Vane Shear Strength (psf)
WOH = weight of 140lb. hammer
WOR = weight of rods

Definitions:
WC = water content, percent
LL = Liquid Limit
PL = Plastic Limit
PI = Plasticity Index
G = Grain Size Analysis
C = Consolidation Test

Depth (ft.)	Sample No.	Pen./Rec. (in.)	Sample Depth (ft.)	Blows (/6 in.) Shear Strength (psf) or RQD (%)	N-value	Casing Blows	Elevation (ft.)	Visual Description and Remarks	Laboratory Testing Results/ AASHTO and Unified Class
0						37			
						42			
	1D	8.4/8.4	2.5 - 3.2	42/50(2.4")	---	50		Brown-grey, very dense, decomposed biotite schist, little gravel, trace sea shells. b155 blows for 0.6'.	
	R1	60/56	3.6 - 8.6	RQD = 19%		b155 NX	-0.60	(3.6) R1: Bedrock: Grey, moderately hard to soft, slightly to highly weathered, fine grained SCHIST with thin banding. Joint set at steep angle, very close to close, open, surfaces infilled with soft altered biotite (Limonite)(due to leaching by salt water). Rock quality is very poor; very highly fractured.	
5						CORE		R1: Core Times (min:sec) 3.6-4.6' (5:00) 4.6-5.6' (2:30) 5.6-6.6' (2:10) 6.6-7.6' (2:20) UCT-202-R1 3.6-4.0 dbbs 7.6-8.6' (2:40)	
	UCT	4.8/4.8	7.1 - 7.5	UCT-202-R1					UCS=3,440 psi
	aR2	16.8/ 16.8	8.6 - 10.0	RQD = 0%				R2: Same as R1 except, very highly fractured throughout. Last 4" is soft and decomposed. R2: Core Times (min:sec) 8.6-9.6' (2:40) 9.6-10.0' Core Blocked	
10	R3 UCT	62.4/ 62.4 12/12	10.0 - 15.2 10.8 - 11.8	RQD = 86% UCT-202-R3				R3: Grey-green-white, hard to very hard, moderately weathered to fresh, fine grained SCHIST with thin banding, moderately dipping to steep. Joints steep, close to wide, tight, no infilling. Rock quality is good; slightly fractured. R3: Core Times (min:sec) 10.0-11.0' (4:00) 11.0-12.0' (3:00) UCT-202-R3 7.2-8.2 dbbs 12.0-13.0' (3:15) 13.0-14.0' (2:55) 14.0-15.2' (3:50)	UCS=10,493 psi
15	R4	57.6/ 57.6	15.2 - 20.0	RQD = 90%				R4: Grey white, fine to medium grained, hard to very hard, slightly weathered to fresh SCHIST with thin banding. Joint set steep to vertical, tight to open, green-white soft infilling. Rock quality is good to excellent; slightly fractured to massive. R4: Core Times (min:sec) 15.2-16.2' (3:00) 16.2-17.2' (2:00) 17.2-18.2' (1:00) 18.2-19.2' (1:00) 19.2-20.0' (1:00)	
20	R5	60/60	20.0 - 25.0	RQD = 85%				R5: Grey white, hard to very hard, slightly weathered to fresh, fine grained SCHIST, thin banding. Primary joint set moderately dipping to steep, moderately close to widely spaced, tight to open with green-white soft infilling. Rock quality is good; slightly fractured. R5: Core Times (min:sec) 20.0-21.0' (3:44) 21.0-22.0' (2:15) 22.0-23.0' (1:30) 23.0-24.0' (2:00) 24.0-25.0' (1:00)	
25							-22.00	(25.0) Bottom of Exploration at 25.0 feet below ground surface.	
30									

Remarks:

aCore blocked at 1.4' bgs on R2.
Assumed Bridge Deck Elevation 10.6', 23.1' from Bridge Deck to River bed.

Stratification lines represent approximate boundaries between soil types; transitions may be gradual.

* Water level readings have been made at times and under conditions stated. Groundwater fluctuations may occur due to conditions other than those present at the time measurements were made.

Page 1 of 1 — Boring No.: BB-GR-202

WIN 16750.00

STATE OF MAINE
DEPARTMENT OF TRANSPORTATION
APPROVED — DATE
COMMISSIONER:
CHIEF ENGINEER:

STATE OF MAINE — ANDREW R. BLAISDELL — NO. 10957 — LICENSED — PROFESSIONAL ENGINEER

SIGNATURE
10957
P.E. NUMBER
01/16/2014
DATE

PROJECT INFORMATION

PROGRAM	BRIDGE
PROJECT MANAGER	STEPHEN BODGE
DESIGNER	GZA GEOENVIRONMENTAL, INC
CONSULTANT	GZA GEOENVIRONMENTAL, INC
PROJECT RESIDENT	
CONTRACTOR	
PROJECT COMPLETION DATE	

SOUTH BRISTOL GUT BRIDGE
BORING LOGS, SHEET 1 OF 7

SHEET NUMBER
9
OF 141

Filename: ...\CADD\00_Geo\Sheet 09.dgn   Division: BRIDGE   Username: landi   Date: 01/16/2014

Maine Department of Transportation
Soil/Rock Exploration Log
US CUSTOMARY UNITS

Project: Gut Bridge
Location: South Bristol, Maine
Boring No.: BB-GR-301
PIN: 16750.00

Driller:	Maine Test Borings	Elevation (ft.)	10.8	Auger ID/OD:	2"
Operator:	Brad Enos	Datum:	NAVD 88	Sampler:	Split Spoon
Logged By:	Kyle MacDonald	Rig Type:	Skid/Trailer CME-45	Hammer Wt./Fall:	140/30"
Date Start/Finish:	08/04/11-08/05/11	Drilling Method:	Spun Casing	Core Barrel:	NQ2
Boring Location:	N 375505, E 3113131	Casing ID/OD:	3"	Water Level*:	
Hammer Efficiency Factor: 0.6		Hammer Type:	Automatic ☐ Hydraulic ☐ Rope & Cathead ☒		

Definitions:
D = Split Spoon Sample
MD = Unsuccessful Split Spoon Sample attempt
U = Thin Wall Tube Sample
MU = Unsuccessful Thin Wall Tube Sample attempt
V = Insitu Vane Shear Test
MV = Unsuccessful Insitu Vane Shear Test attempt
R = Rock Core Sample
SSA = Solid Stem Auger
HSA = Hollow Stem Auger
RC = Roller Cone
WOH = weight of 140lb. hammer
WOR = weight of rods
WO1P = Weight of one person
S_u = Insitu Field Vane Shear Strength (psf) $S_{u(lab)}$ = Lab Vane Shear Strength (psf)
T_v = Pocket Torvane Shear Strength (psf)
q_p = Unconfined Compressive Strength (ksf)
N-uncorrected = Raw field SPT N-value
Hammer Efficiency Factor = Annual Calibration Value
N_{60} = SPT N-uncorrected corrected for hammer efficiency
N_{60} = (Hammer Efficiency Factor/60%)*N-uncorrected
WC = water content, %
LL = Liquid Limit
PL = Plastic Limit
PI = Plasticity Index
G = Grain Size Analysis
C = Consolidation Test

Depth (ft.)	Sample No.	Pen./Rec. (in.)	Sample Depth (ft.)	Blows (/6 in.) Shear Strength (psf) or RQD (%)	N-uncorrected	N60	Casing Blows	Elevation (ft.)	Laboratory Testing Results/ AASHTO and Unified Class
0	1D	24/4	0.3 - 2.3	1-1-4-2	5	5			
5	2D	24/2	5.0 - 7.0	9-10-8-21	18	18			
10	3D R1	3/3 55/55	10.0 - 10.3 10.8 - 15.4	50/3" RQD = 71%				0.8 0.5	q_p=15.1KSI
15	R2	60/60	15.4 - 20.4	RQD = 85%					
20	R3	60/60	20.4 - 25.4	RQD = 97%					
25	R4	60/60	25.4 - 30.4	RQD = 100%					
30								-19.6	
35									

Visual Description and Remarks:

Topsoil.
Loose, brown, fine to medium SAND and organic SILT, trace Gravel, dry.
-FILL-

Increased drilling resistance at 2' in cobbles/boulders.

Medium dense, white-gray, GRAVEL, shells, piece of wood. Gravel consisted of pieces of angular rock between 0.25" and 1.5" maximum particle size. (Probable Rockfill)
-FILL-

10.0

Brown, fine to coarse SAND, little Silt, trace Gravel, shells throughout, wet.
-NEARSHORE DEPOSIT-

10.3

See Remark

Very hard, fresh, coarse grained, white/gray, PEGMATITIC GRANITE. Joints are very close to moderately spaced, low angle, undulating, rough, fresh, open to partially open, silt infilling. Trace iron staining throughout. Dark gray, Biotite prevalent from 10.8' to 11.5'.
Rock Mass Quality - Fair
Rock Core Times (min): 10.8-11.8 (2), 11.8-12.8 (2), 12.8-13.8 (2), 13.8-14.8 (2), 14.8-15.4 (2)

Very hard, fresh, coarse grained, white / gray, PEGMATITIC GRANITE. Joints are very close to moderately spaced, low angle, undulating, rough, fresh, tight to partially open, silt infilling. Iron staining on joints and spotty iron staining throughout.
Rock Mass Quality= Good
Rock Core Times (min): 15.4-16.4 (2), 16.4-17.4 (2), 17.4-18.4 (2), 18.4-19.4 (2), 19.4-20.4 (2)

Very hard, fresh, coarse grained, white / gray, PEGMATITIC GRANITE. Joints are close to widely spaced, low angle, undulating, rough, fresh, tight to partially open, silt infilling. Iron staining at joints.
Rock Mass Quality= Excellent
Rock Core Times (min): 20.4-21.4 (2), 21.4-22.4 (2), 22.4-23.4 (2), 23.4-24.4 (2), 24.4-25.4 (2)

Very hard, fresh, coarse grained, white/gray, PEGMATITIC GRANITE. Joints are widely spaced, low angle, undulating, rough, fresh, tight. Iron staining at joints, occasional silt infilling.
Rock Mass Quality=Excellent
Rock Core Times (min): 25.4-26.4 (2), 26.4-27.4 (2), 27.4-28.4 (2), 28.4-29.4 (2), 29.4-30.4 (2)

30.4

Bottom of Exploration at 30.40 feet below ground surface.

Remarks:

Increased resistance on roller bit from 10.3' to 10.8', probable rock.

Stratification lines represent approximate boundaries between soil types; transitions may be gradual.
* Water level readings have been made at times and under conditions stated. Groundwater fluctuations may occur due to conditions other than those present at the time measurements were made.

Page 1 of 1
Boring No.: BB-GR-301

Maine Department of Transportation
Soil/Rock Exploration Log
US CUSTOMARY UNITS

Project: Gut Bridge
Location: South Bristol, Maine
Boring No.: BB-GR-302
PIN: 16750.00

Driller:	Maine Test Borings	Elevation (ft.)	-5.4	Auger ID/OD:	2"
Operator:	Brad Enos	Datum:	NAVD 88	Sampler:	Split Spoon
Logged By:	Kyle MacDonald	Rig Type:	Skid/Raft CME-45	Hammer Wt./Fall:	140/30"
Date Start/Finish:	08/10/11-08/10/11	Drilling Method:	Drive Casing	Core Barrel:	NX
Boring Location:	N 375493, E 3113190	Casing ID/OD:	3"	Water Level*:	
Hammer Efficiency Factor: 0.6		Hammer Type:	Automatic ☐ Hydraulic ☐ Rope & Cathead ☒		

Definitions:
D = Split Spoon Sample
MD = Unsuccessful Split Spoon Sample attempt
U = Thin Wall Tube Sample
MU = Unsuccessful Thin Wall Tube Sample attempt
V = Insitu Vane Shear Test
MV = Unsuccessful Insitu Vane Shear Test attempt
R = Rock Core Sample
SSA = Solid Stem Auger
HSA = Hollow Stem Auger
RC = Roller Cone
WOH = weight of 140lb. hammer
WOR = weight of rods
WO1P = Weight of one person
S_u = Insitu Field Vane Shear Strength (psf) $S_{u(lab)}$ = Lab Vane Shear Strength (psf)
T_v = Pocket Torvane Shear Strength (psf)
q_p = Unconfined Compressive Strength (ksf)
N-uncorrected = Raw field SPT N-value
Hammer Efficiency Factor = Annual Calibration Value
N_{60} = SPT N-uncorrected corrected for hammer efficiency
N_{60} = (Hammer Efficiency Factor/60%)*N-uncorrected
WC = water content, %
LL = Liquid Limit
PL = Plastic Limit
PI = Plasticity Index
G = Grain Size Analysis
C = Consolidation Test

Depth (ft.)	Sample No.	Pen./Rec. (in.)	Sample Depth (ft.)	Blows (/6 in.) Shear Strength (psf) or RQD (%)	N-uncorrected	N60	Casing Blows	Elevation (ft.)	Laboratory Testing Results/ AASHTO and Unified Class
0	1D	24/1	0.0 - 2.0	WOH-WOH-1-1	1	1			
5	2D	24/1	5.0 - 7.0	7-9-9-8	18	18		-10.4	
10	3D	24/12	10.0 - 12.0	1-2-2-24	4	4			
	R1	60/60	12.1 - 17.1	RQD = 55%				-17.4	q_p=2.8KSI
15									
	R2	58/56	17.1 - 21.9	RQD = 66%					
20								-27.3	
25									

Visual Description and Remarks:

Very loose, brown, GRAVEL, trace Silt, shells throughout. (Possible rock fill mixed with some medium to coarse Sand)
-FILL-

5.0

Spoon consists of gray Silty CLAY clumps and rock pieces. Possible transition from fill to natural soil.

Medium stiff, gray, Silty CLAY, little fine Sand, coarse Sand and little Gravel in bottom 2".
-MARINE DEPOSIT-

12.0

Hard, fresh, fine to medium grained, gray, SCHIST with flow banding. Primary joints are close to moderately spaced, high angle, planar, rough, fresh, tight to partially open. Secondary joints are close to moderately spaced, low angle to moderately dipping, planar, rough, fresh, tight to partially open.
14.9' to 16.2': Similar but very closely spaced.
Rock Mass Quality= Fair
Rock Core Times (min):
12.1-13.1 (3), 13.1-14.1 (2), 14.1-15.1 (2), 15.1-16.1 (1.5), 16.1-17.1 (2)

17.1' to 18.8': Similar to R1.

18.8' to 21.9': Hard, fresh, medium grained, gray, GRANITE. Joints are very close to moderately spaced, planar, rough, fresh, tight. Dark gray, Biotite from 21.7' to 21.9'.
Rock Mass Quality= Fair
Rock Core Times (min): 17.1-18.1 (2), 18.1-19.1 (2), 19.1-20.1 (1.75), 20.1-21.1 (1.75), 21.1-21.9 (1.75)

21.9

Bottom of Exploration at 21.90 feet below ground surface.

Remarks:

1. Black wash water with shells at 0' to 1'.
2. Chips of rock in wash water and heavy resistance from 12' to 12.1'.

Stratification lines represent approximate boundaries between soil types; transitions may be gradual.
* Water level readings have been made at times and under conditions stated. Groundwater fluctuations may occur due to conditions other than those present at the time measurements were made.

Page 1 of 1
Boring No.: BB-GR-302

Maine Department of Transportation
Soil/Rock Exploration Log
US CUSTOMARY UNITS

Project: Gut Bridge
Location: South Bristol, Maine
Boring No.: BB-GR-303
PIN: 16750.00

Driller:	Maine Test Borings	Elevation (ft.)	-6.6	Auger ID/OD:	2"
Operator:	Brad Enos	Datum:	NAVD 88	Sampler:	Split Spoon
Logged By:	Kyle MacDonald	Rig Type:	Skid/Raft CME-45	Hammer Wt./Fall:	140/30"
Date Start/Finish:	08/04/11-08/04/11	Drilling Method:	Drive Casing	Core Barrel:	NX
Boring Location:	N 375510, E 3113195	Casing ID/OD:	3"	Water Level*:	
Hammer Efficiency Factor: 0.6		Hammer Type:	Automatic ☐ Hydraulic ☐ Rope & Cathead ☒		

Definitions:
D = Split Spoon Sample
MD = Unsuccessful Split Spoon Sample attempt
U = Thin Wall Tube Sample
MU = Unsuccessful Thin Wall Tube Sample attempt
V = Insitu Vane Shear Test
MV = Unsuccessful Insitu Vane Shear Test attempt
R = Rock Core Sample
SSA = Solid Stem Auger
HSA = Hollow Stem Auger
RC = Roller Cone
WOH = weight of 140lb. hammer
WOR = weight of rods
WO1P = Weight of one person
S_u = Insitu Field Vane Shear Strength (psf) $S_{u(lab)}$ = Lab Vane Shear Strength (psf)
T_v = Pocket Torvane Shear Strength (psf)
q_p = Unconfined Compressive Strength (ksf)
N-uncorrected = Raw field SPT N-value
Hammer Efficiency Factor = Annual Calibration Value
N_{60} = SPT N-uncorrected corrected for hammer efficiency
N_{60} = (Hammer Efficiency Factor/60%)*N-uncorrected
WC = water content, %
LL = Liquid Limit
PL = Plastic Limit
PI = Plasticity Index
G = Grain Size Analysis
C = Consolidation Test

Depth (ft.)	Sample No.	Pen./Rec. (in.)	Sample Depth (ft.)	Blows (/6 in.) Shear Strength (psf) or RQD (%)	N-uncorrected	N60	Casing Blows	Elevation (ft.)	Laboratory Testing Results/ AASHTO and Unified Class
0	1D	24/6	0.0 - 2.0	1-1-1-4	2	2		-8.6	
5	2D	24/1	5.0 - 7.0	7-8-9-9	17	17		-15.4	
10	R1	55/55	9.4 - 14.0	RQD = 76%					q_p=14.7KSI
15	R2 R3	10/7 62/55	14.0 - 14.8 14.8 - 20.0	RQD = 0% RQD = 81%					
20								-26.6	
25									

Visual Description and Remarks:

Loose, brown-black, fine to coarse SAND, trace Silt, little Gravel, trace Glass. Organic odor.
-NEARSHORE DEPOSIT-

2.0

Cuttings consist of clay at 2'.

Very stiff, gray, Silty CLAY, some fine to coarse Sand, trace Gravel.
-MARINE DEPOSIT-

8.8

Increased drilling resistance at 8.8', probable rock.

Very hard, fresh, coarse to medium grained, white-gray, PEGMATITIC GRANITE. Primary joints are very close to moderately spaced, low angle to moderately dipping, planar, rough, fresh, tight to partially open. Dark gray, Biotite vein at 13.8'.
Rock Mass Quality= Good
Rock Core Times (min): 9.4-10.4 (5), 10.4-11.4 (3.5), 11.4-12.4 (4.5), 12.4-13.4 (4), 13.4-14 (3)
R2: Similar to R1. Short run due to rock jamming in the core barrel.
Rock Core Times (min): 14-14.8 (2)
R3: 14.8'-16': Similar to R1.

16'-20': Hard, fresh, fine to medium grained, gray, SCHIST with vertical flow banding. Joints are moderately spaced, moderately dipping to high angle, planar, rough, tight.
Rock Mass Quality= Good
Rock Core Times (min): 14.8-15.8 (2), 15.8-16.8 (2), 16.8-17.8 (2), 17.8-18.8 (1), 18.8-19.8 (1)

20.0

Bottom of Exploration at 20.00 feet below ground surface.

Remarks:

1. Gravel piece in tip of spoon for sample 1D.

Stratification lines represent approximate boundaries between soil types; transitions may be gradual.
* Water level readings have been made at times and under conditions stated. Groundwater fluctuations may occur due to conditions other than those present at the time measurements were made.

Page 1 of 1
Boring No.: BB-GR-303

Maine Department of Transportation
Soil/Rock Exploration Log
US CUSTOMARY UNITS

Project: Gut Bridge
Location: South Bristol, Maine
Boring No.: BB-GR-304
PIN: 16750.00

Driller:	Maine Test Borings	Elevation (ft.)	-11.6	Auger ID/OD:	2"
Operator:	Brad Enos	Datum:	NAVD 88	Sampler:	Split Spoon
Logged By:	Eric Baron	Rig Type:	Trailer CME-45	Hammer Wt./Fall:	140/30"
Date Start/Finish:	09/08/11-09/08/11	Drilling Method:	Drive/Spin/NQ2 Core	Core Barrel:	NQ2
Boring Location:	N 375554, E 3113165	Casing ID/OD:	4"/3"	Water Level*:	Tidal
Hammer Efficiency Factor: 0.6		Hammer Type:	Automatic ☐ Hydraulic ☐ Rope & Cathead ☒		

Definitions:
D = Split Spoon Sample
MD = Unsuccessful Split Spoon Sample attempt
U = Thin Wall Tube Sample
MU = Unsuccessful Thin Wall Tube Sample attempt
V = Insitu Vane Shear Test
MV = Unsuccessful Insitu Vane Shear Test attempt
R = Rock Core Sample
SSA = Solid Stem Auger
HSA = Hollow Stem Auger
RC = Roller Cone
WOH = weight of 140lb. hammer
WOR = weight of rods
WO1P = Weight of one person
S_u = Insitu Field Vane Shear Strength (psf) $S_{u(lab)}$ = Lab Vane Shear Strength (psf)
T_v = Pocket Torvane Shear Strength (psf)
q_p = Unconfined Compressive Strength (ksf)
N-uncorrected = Raw field SPT N-value
Hammer Efficiency Factor = Annual Calibration Value
N_{60} = SPT N-uncorrected corrected for hammer efficiency
N_{60} = (Hammer Efficiency Factor/60%)*N-uncorrected
WC = water content, %
LL = Liquid Limit
PL = Plastic Limit
PI = Plasticity Index
G = Grain Size Analysis
C = Consolidation Test

Depth (ft.)	Sample No.	Pen./Rec. (in.)	Sample Depth (ft.)	Blows (/6 in.) Shear Strength (psf) or RQD (%)	N-uncorrected	N60	Casing Blows	Elevation (ft.)	Laboratory Testing Results/ AASHTO and Unified Class
0	1D	24/8	0.5 - 2.5	12-11-12-8	23	23	HYD		
							PUSH		
							SPIN		
								-15.5	
5	R1	38/36	4.5 - 7.7	RQD = 32%					PLA=0.24 ksi PLD=0.10 ksi
	R2	57/52	7.7 - 12.5	RQD = 51%					PLA=0.38 ksi PLD=0.24 ksi PLA=0.27 ksi PLD=0.33 ksi
10								-21.8 -23.6	
	R3	60/60	12.5 - 17.5	RQD = 95%					
15									
	R4	60/60	17.5 - 22.5	RQD = 80%					
20									
	R5	60/60	22.5 - 27.5	RQD = 92%					
25									
	R6	60/60	27.5 - 32.5	RQD = 95%					
30									
	R7	60/60	32.5 - 37.5	RQD = 88%					
35									
								-49.1	
40									

Visual Description and Remarks:

Medium dense, brown/gray mottled, fine to medium SAND, little Silt, trace Gravel. Top 2": rock fragments (cobble/ gravel pieces)
-NEARSHORE DEPOSIT-

3.9

Increased drilling resistance at 3.9', probable rock.

Hard to medium hard, fresh, medium grained, gray, SCHIST. Primary joints are close, low angle, planar, rough, fresh to discolored, tight to partially open. Secondary joints are similar with a high angle.
Rock Mass Quality=Poor
Rock Core Times (min): 4.5-5.5 (2.25), 5.5-6.5 (2.5), 6.5-7.7 (2.25)
Hard to soft, fresh to moderately weathered, fine to medium grained, gray, SCHIST. Primary joints are close to very close, low angle to moderately dipping, planar, rough, fresh to decomposed, partially open to open.

10.2

Moderately weathered zone 10.2' to 12', sand and silt with latent rock structure.
Rock Mass Quality=Poor
Rock Core Times (min): 7.7-8.7 (2.5), 8.7-9.7 (3.25), 9.7-10.7 (2.25), 10.7-11.7 (2.25), 11.7-12.5 (2.5)

12.0

Hard, fresh, fine grained, gray, SCHIST. Primary joints are moderately spaced, low angle to horizontal, planar, rough, fresh, tight to partially open. One secondary joint at 16.8' is moderately dipping, planar, rough, fresh, partially open.
Rock Mass Quality=Excellent
Rock Core Times (min): 12.5-13.5 (2.5), 13.5-14.5 (2.75), 14.5-15.5 (3.0), 15.5-16.5 (3.0), 16.5-17.5 (3.25)

Hard, fresh, fine to medium grained, gray, SCHIST. Primary joints are close to moderately spaced, low angle, planar, fresh, rough, partially open. One secondary joint is moderately dipping, planar, rough fresh, partially open. Healed low angle and near vertical fractures.
Rock Mass Quality=Good
Rock Core Times (min): 17.5-18.5 (3.25), 18.5-19.5 (2.75), 19.5-20.5 (2.5), 20.5-21.5 (2.5), 21.5-22.5 (2.5)

Hard, fresh, fine grained, gray, SCHIST. Primary joints are close to moderately spaced, low angle, planar, rough, fresh to discolored, tight to partially open, Calcite on joints. One secondary joint at 23.5' is high angle, planar, rough, fresh, tight.
Rock Mass Quality=Excellent
Rock Core Times (min): 22.5-23.5 (2.25), 23.5-24.5 (2.0), 24.5-25.5 (2.25), 25.5-26.5 (2.25), 26.5-27.5 (2.25)

Same as R5. Primary joints are moderately spaced. Secondary joint at 34.6'.
Rock Mass Quality=Excellent
Rock Core Times (min): 27.5-28.5 (2.0), 28.5-29.5 (2.25), 29.5-30.5 (2.25), 30.5-31.5 (2.0), 31.5-32.5 (2.5)

Same as R6. Secondary joint at 40.5'.
Rock Mass Quality=Good
Rock Core Times (min): 32.5-33.5 (2.25), 33.5-34.5 (2.5), 34.5-35.5 (2.5), 35.5- 36.5 (2.25), 36.5-37.5 (2.0)

37.5

Bottom of Exploration at 37.50 feet below ground surface.

Remarks:

1. 2.2' from top of bridge deck to mudline. (Top of Rock at 26.1' below deck.)
2. Televiewer readings taken from top of casing. 3.55' top of casing to bridge deck.
3. R3- Inner barrel did not lock into wireline barrel, allowing greater than 60 inches of recovery, extra recovery left in hole from previous run. 4. Boring location and elevation are approximate and were estimated based on hand measurements from existing site features.

Stratification lines represent approximate boundaries between soil types; transitions may be gradual.
* Water level readings have been made at times and under conditions stated. Groundwater fluctuations may occur due to conditions other than those present at the time measurements were made.

Page 1 of 1
Boring No.: BB-GR-304

WIN 16750.00

STATE OF MAINE
DEPARTMENT OF TRANSPORTATION

APPROVED	DATE
COMMISSIONER:	
CHIEF ENGINEER:	

STATE OF MAINE ANDREW R. BLAISDELL NO. 10957 LICENSED PROFESSIONAL ENGINEER

SIGNATURE 10957
P.E. NUMBER 01/16/2014
DATE

PROJECT INFORMATION	
PROGRAM	BRIDGE
PROJECT MANAGER	STEPHEN BODGE
DESIGNER	GZA GEOENVIRONMENTAL, INC
CONSULTANT	GZA GEOENVIRONMENTAL, INC
PROJECT RESIDENT	
CONTRACTOR	
PROJECT COMPLETION DATE	

SOUTH BRISTOL
GUT BRIDGE

BORING LOGS, SHEET 2 OF 7

Filename: ...\CADD\00_Geo\Sheet 11.dgn Division: BRIDGE Username: landi Date: 01/16/2014

Maine Department of Transportation — Soil/Rock Exploration Log — US CUSTOMARY UNITS

Project: Gut Bridge — Location: South Bristol, Maine — Boring No. BB-GR-305 — PIN: 16750.00

Driller:	Maine Test Borings	Elevation (ft.) 3.9	Auger ID/OD 2"
Operator:	Brad Enos	Datum: NAVD 88	Sampler: Split Spoon
Logged By:	Kyle MacDonald	Rig Type: Skid/Trailer CME-45	Hammer Wt./Fall: 140/30"
Date Start/Finish:	08/04/11-08/04/11	Drilling Method: Spun Casing	Core Barrel: N/A
Boring Location:	N 375574, E 3113217	Casing ID/OD 3"	Water Level*:
Hammer Efficiency Factor: 0.6		Hammer Type: Automatic ☐ Hydraulic ☐ Rope & Cathead ☒	

Definitions:
D = Split Spoon Sample
MD = Unsuccessful Split Spoon Sample attempt
U = Thin Wall Tube Sample
MU = Unsuccessful Thin Wall Tube Sample attempt
V = Insitu Vane Shear Test
MV = Unsuccessful Insitu Vane Shear Test attempt
R = Rock Core Sample
ISA = Solid Stem Auger
HSA = Hollow Stem Auger
RC = Roller Cone
WOH = weight of 140lb. hammer
WOR = weight of rods
WO1P = weight of one person
S_u = Insitu Field Vane Shear Strength (psf)
$S_{u(lab)}$ = Lab Vane Shear Strength (psf)
T_v = Pocket Torvane Shear Strength (psf)
q_p = Unconfined Compressive Strength (ksf)
N uncorrected = Raw Field SPT N-value
Hammer Efficiency Factor = Annual Calibration Value
N_{60} = SPT N-uncorrected corrected for hammer efficiency
N_{60} = (Hammer Efficiency Factor/60%)*N-uncorrected
WC = water content, %
LL = Liquid Limit
PL = Plastic Limit
PI = Plasticity Index
G = Grain Size Analysis
C = Consolidation Test

Sample Information

Depth (ft.)	Sample No.	Pen./Rec. (in.)	Sample Depth (ft.)	Blows (/6 in.) Shear Strength (psf) q_p (ksf) (%)	N uncorrected	N60	Casing Blows	Elevation (ft.)	Visual Description and Remarks	Laboratory Testing Results/ AASHTO and Unified Class
0	1D	24/10	0.0 - 2.0	5-18-7-7	25	25			Medium dense, brown, fine to coarse SAND and GRAVEL, trace Silt, damp. (Probable rock fill) -FILL-	
									See Remark 1.	
									Stiff, brown-gray with black streaks, Silty CLAY, some Fine to coarse Sand, trace Gravel. -FILL- Drill action from 5.7' to 7.9' indicates cobbles/boulders.	
	2D	9/7	5.0 - 5.8	4-50/3"						
									Increased drilling resistance at 7.9', probable rock	
	R1	17/14	8.6 - 10.0	RQD = 53%					Hard, fresh, Fine grained, gray, SCHIST. Joints are very close to moderately spaced, low angle to moderately dipping, planar, rough, discolored, partially open to open, slight iron staining throughout. Coarse grained Pegmatitic Granite intrusion at 9.6' to 10.0' Rock Mass Quality= Fair Rock Core Times (min): 8.6-9.6 (1.5), 9.6-10 (2) (10'-11.3'): Very hard, fresh, Fine grained, blue-gray, SCHIST. Joints are very close to close, moderately dipping to high angle, planar, rough, fresh, tight to partially open.	q_p=13 KSI
	R2	60/41	10.0 - 15.0	RQD = 45%					(11.3'-15'): Very hard, fresh, coarse grained, gray-white, PEGMATITIC GRANITE. Joints are close to moderately spaced, low angle, undulating, rough, fresh to discolored, tight, iron staining at joints. Rock Mass Quality= Poor Rock Core Times (min): 10-11 (2.25), 11-12 (1.25), 12-13 (2), 13-14 (4), 14-15 (3) (15'-18.3'): Very hard, coarse grained, gray-white, PEGMATITIC GRANITE. Primary joints are close to moderately spaced, low angle, undulating, rough, fresh to discolored, tight, iron staining on joints. Secondary joints are close to moderately spaced, vertical to high angle, planar, rough, fresh to discolored, tight, iron staining on joints.	
	R3	54/52	15.0 - 19.5	RQD = 65%					(18.3'-19.5': Medium hard, fresh, Fine grained, blue-gray, SCHIST. Joints are very close to close, high angle to moderately dipping, planar, rough, fresh to weathered, tight, partially open, silt infilling. Pegmatite intrusions at 19.3' Rock Mass Quality= Fair Rock Core Times (min): 15-16 (3), 16-17 (3), 17-18 (3), 18-19 (3), 19-19.5 (2) Medium hard, fresh, Fine grained, blue gray, SCHIST. Joints are very close to closely spaced, moderately dipping to high angle, planar, rough, fresh, tight to partially open, silt infilling. Pegmatite intrusion at 19.8' Rock Mass Quality= Fair Rock Core Times (min): 19.5-20.5 (2), 20.5-21.5 (2), 21.5-22 (1)	
	R4	30/30	19.5 - 22.0	RQD = 56%						
35									Bottom of Exploration at 22.00 feet below ground surface.	

Remarks:
1. At 4', change in drill action; smoother drilling.

Stratification lines represent approximate boundaries between soil types; transitions may be gradual.
* Water level readings have been made at times and under conditions stated. Groundwater fluctuations may occur due to conditions other than those present at the time measurements were made.

Page 1 of 1 — Boring No.: BB-GR-305

Maine Department of Transportation — Soil/Rock Exploration Log — US CUSTOMARY UNITS

Project: Gut Bridge — Location: South Bristol, Maine — Boring No. BB-GR-306 — PIN: 16750.00

Driller:	Maine Test Borings	Elevation (ft.) 1.6	Auger ID/OD 2"
Operator:	Brad Enos	Datum: NAVD 88	Sampler: Split Spoon
Logged By:	Kyle MacDonald	Rig Type: Skid/Barge CME-45	Hammer Wt./Fall: 140/30"
Date Start/Finish:	08/11/11-08/11/11	Drilling Method: Drive Casing	Core Barrel: NX
Boring Location:	N 375587, E 3113255	Casing ID/OD 3"	Water Level*:
Hammer Efficiency Factor: 0.6		Hammer Type: Automatic ☐ Hydraulic ☐ Rope & Cathead ☒	

Definitions:
D = Split Spoon Sample
MD = Unsuccessful Split Spoon Sample attempt
U = Thin Wall Tube Sample
MU = Unsuccessful Thin Wall Tube Sample attempt
V = Insitu Vane Shear Test
MV = Unsuccessful Insitu Vane Shear Test attempt
R = Rock Core Sample
ISA = Solid Stem Auger
HSA = Hollow Stem Auger
RC = Roller Cone
WOH = weight of 140lb. hammer
WOR = weight of rods
WO1P = weight of one person
S_u = Insitu Field Vane Shear Strength (psf)
$S_{u(lab)}$ = Lab Vane Shear Strength (psf)
T_v = Pocket Torvane Shear Strength (psf)
q_p = Unconfined Compressive Strength (ksf)
N uncorrected = Raw Field SPT N-value
Hammer Efficiency Factor = Annual Calibration Value
N_{60} = SPT N-uncorrected corrected for hammer efficiency
N_{60} = (Hammer Efficiency Factor/60%)*N-uncorrected
WC = water content, %
LL = Liquid Limit
PL = Plastic Limit
PI = Plasticity Index
G = Grain Size Analysis
C = Consolidation Test

Sample Information

Depth (ft.)	Sample No.	Pen./Rec. (in.)	Sample Depth (ft.)	Blows (/6 in.) Shear Strength (psf) q_p (ksf) (%)	N uncorrected	N60	Casing Blows	Elevation (ft.)	Visual Description and Remarks	Laboratory Testing Results/ AASHTO and Unified Class
0	1D	24/5	0.0 - 2.0	5-3-2-1	5	5			Loose, black, Fine to coarse SAND and GRAVEL, little Silt, organics throughout. -NEARSHORE DEPOSIT-	
								-1.2		2.8
									Increased drilling resistance at 2.8', probable rock	
	R1	20/7	3.4 - 5.1	RQD = 0%					Hard, moderately weathered, medium to coarse grained, gray to white, SCHIST and PEGMATITIC GRANITE. Joints are extremely close to close, undulating, rough, discolored, open, sand infillings, iron staining throughout. Rock Mass Quality= Very Poor Rock Core Times (min): 3.4-4.4 (6), 4.4-5.1 (5) Hard, slightly to moderately weathered gray-white, PEGMATITIC GRANITE. Joints are extremely close to close, low angle, undulating, rough, discolored, open, heavy iron staining throughout. Rock Mass Quality= Very Poor Rock Core Times (min): 5.1-6.1 (3), 6.1-7.1 (2) Very hard, fresh, coarse grained, white to gray, PEGMATITIC GRANITE and SCHIST. Joints are extremely close to close, moderately dipping, undulating, rough, fresh, tightially open to open, trace silt infilling, iron staining at joints. Rock Mass Quality= Poor Rock Core Times (min): 7.1-8.1 (2), 8.1-9.1 (2) (9.1'-10.7': Very hard, fresh, coarse grained, white, PEGMATITIC GRANITE. Joints are close to moderately spaced, moderately dipping to near vertical, undulating, rough, discolored, tight to partially open, iron staining throughout.	
	R2	24/12	5.1 - 7.1	RQD = 0%						
	R3	24/21	7.1 - 9.1	RQD = 42%						
	R4	52/51	9.1 - 13.4	RQD = 73%						
	R5	46/46	13.4 - 17.2	RQD = 96%					(10.7'-13.4': Hard, fresh, Fine grained, gray, SCHIST. Primary joints are moderately spaced, low angle, planar, rough, fresh, tight to partially open. Secondary joint at 12.6' similar but high angle with silt infilling. Rock Mass Quality= Poor Rock Core Times (min): 9.1-10.1 (3), 10.1-11.1 (2), 11.1-12.1 (1.5), 12.1-13.4 (1) Hard, fresh, fine grained, gray, SCHIST with flow banding. Primary joints are close to moderately spaced, low angle, planar, rough, fresh, tight. Secondary joint at 15.9' is high angle, planar, rough, fresh, tight with iron staining and silt infilling. Rock Mass Quality= Poor Rock Core Times (min): 13.4-14.4 (1.5), 14.4-15.4 (1.5), 15.4-16.4 (1.5), 16.4-17.2 (1)	
								-15.6		17.2
35									Bottom of Exploration at 17.20 feet below ground surface.	

Remarks:
1. Increased resistance on roller bit from 2.8' to 4.3'.
2. Core barrel blocked at 5.1'.
3. Driller found stopper was broken in core barrel at 5.1'. Replaced.

Stratification lines represent approximate boundaries between soil types; transitions may be gradual.
* Water level readings have been made at times and under conditions stated. Groundwater fluctuations may occur due to conditions other than those present at the time measurements were made.

Page 1 of 1 — Boring No.: BB-GR-306

Maine Department of Transportation — Soil/Rock Exploration Log — US CUSTOMARY UNITS

Project: Gut Bridge — Location: South Bristol, Maine — Boring No. BB-GR-307 — PIN: 16750.00

Driller:	Maine Test Borings	Elevation (ft.) 7.5	Auger ID/OD 2"
Operator:	Brad Enos	Datum: NAVD 88	Sampler: Split Spoon
Logged By:	Kyle MacDonald	Rig Type: Skid CME-45	Hammer Wt./Fall: 140/30"
Date Start/Finish:	08/15/11-08/15/11	Drilling Method: Spun Casing	Core Barrel: N/A
Boring Location:	N 375614, E 3113226	Casing ID/OD 3"	Water Level*:
Hammer Efficiency Factor: 0.6		Hammer Type: Automatic ☐ Hydraulic ☐ Rope & Cathead ☒	

Definitions:
D = Split Spoon Sample
MD = Unsuccessful Split Spoon Sample attempt
U = Thin Wall Tube Sample
MU = Unsuccessful Thin Wall Tube Sample attempt
V = Insitu Vane Shear Test
MV = Unsuccessful Insitu Vane Shear Test attempt
R = Rock Core Sample
ISA = Solid Stem Auger
HSA = Hollow Stem Auger
RC = Roller Cone
WOH = weight of 140lb. hammer
WOR = weight of rods
WO1P = weight of one person
S_u = Insitu Field Vane Shear Strength (psf)
$S_{u(lab)}$ = Lab Vane Shear Strength (psf)
T_v = Pocket Torvane Shear Strength (psf)
q_p = Unconfined Compressive Strength (ksf)
N uncorrected = Raw Field SPT N-value
Hammer Efficiency Factor = Annual Calibration Value
N_{60} = SPT N-uncorrected corrected for hammer efficiency
N_{60} = (Hammer Efficiency Factor/60%)*N-uncorrected
WC = water content, %
LL = Liquid Limit
PL = Plastic Limit
PI = Plasticity Index
G = Grain Size Analysis
C = Consolidation Test

Sample Information

Depth (ft.)	Sample No.	Pen./Rec. (in.)	Sample Depth (ft.)	Blows (/6 in.) Shear Strength (psf) q_p (ksf) (%)	N uncorrected	N60	Casing Blows	Elevation (ft.)	Visual Description and Remarks	Laboratory Testing Results/ AASHTO and Unified Class
0	1D	24/11	0.3 - 2.3	8-9-11-8	20	20		7.2	Bituminous Pavement	-0.3
									Medium dense, brown, fine to coarse SAND, some Gravel, trace Silt, dry. -FILL-	
									No recovery. Probable rock fill (cobbles/boulders) to 7.5' based on drilling conditions.	
	2D	24/0	5.0 - 7.0	7-5-3-2	8	8				
	R1	57/57	7.5 - 12.3	RQD = 81%				0.0	Hard, fresh, fine to medium grained, blue gray, SCHIST. Primary joints are very close to moderately spaced, high angle, planar, rough, fresh, tight to partially open, silt infilling, iron staining at joints and healed fracture, flow banding throughout. Secondary joints are similar, low to moderately dipping. PEGMATITIC GRANITE from 12' to 12.3' Rock Mass Quality= Good Rock Core Times (min): 7.5-8.5 (3), 8.5-9.5 (2.75), 9.5-10.5 (1.75), 10.5-11.5 (2), 11.5-12.3 (2)	-7.5
	R2	60/55	12.3 - 17.3	RQD = 18%				-8.8	(12.3'-15.4': Very hard, slightly weathered, coarse grained, white-gray, PEGMATITIC GRANITE. Primary joints are extremely close to close, high angle, planar, rough, discolored, tight to partially open, silt infilling. Secondary joints are low angle, planar, rough, discolored, tight to partially open, silt infilling, occasional thin Biotite veins throughout core. (15.4'-16.3': Hard, moderately weathered, fine grained, white with green tint, PEGMATITIC GRANITE. Joints are very close, low angle, planar, rough, decomposed, open, moderately wide Rock Mass Quality= Very Poor Rock Core Times (min): 12.3-13.3 (3), 13.3-14.3 (3), 14.3-15.3 (3), 15.3-16.3 (2), 16.3-17.3 (2)	
	R3	60/58	17.3 - 22.3	RQD = 43%				-9.8	(16.3'-17.3': Severely weathered zone, fine to coarse SAND, trace Silt with latent rock structure	-16.3
									(17.3'-19': Hard, slightly weathered, Fine grained, white-gray, PEGMATITIC GRANITE and SCHIST. Joints are very close to close. Primary joints are high angle, planar, rough, discolored, partially open to open, trace silt infilling, heavy iron staining throughout. Secondary joints are similar, low angle.	-17.3
								-14.8	(19'-22.3': Very Hard, fresh, Fine grained, gray-white, GRANITE. Primary joints are close, high angle, planar, rough, fresh, tight to partially open with iron staining at joints. Secondary joints are close to moderately spaced, low angle, planar, rough, fresh, tight to partially open with trace silt infilling and iron staining. Rock Mass Quality= Poor Rock Core Times (min): 17.3-18.3 (2), 18.3-19.3 (2), 19.3-20.3 (3), 20.3-21.3 (3), 21.3-22.3 (3)	-22.3
35									Bottom of Exploration at 22.30 feet below ground surface.	

Remarks:

Stratification lines represent approximate boundaries between soil types; transitions may be gradual.
* Water level readings have been made at times and under conditions stated. Groundwater fluctuations may occur due to conditions other than those present at the time measurements were made.

Page 1 of 1 — Boring No.: BB-GR-307

Maine Department of Transportation — Soil/Rock Exploration Log — US CUSTOMARY UNITS

Project: Gut Bridge — Location: South Bristol, Maine — Boring No. BB-GR-308 — PIN: 16750.00

Driller:	Maine Test Borings	Elevation (ft.) -8.9	Auger ID/OD 2"
Operator:	Brad Enos	Datum: NAVD 88	Sampler: Split Spoon
Logged By:	Kyle MacDonald	Rig Type: Skid/Barge CME-45	Hammer Wt./Fall: 140/30"
Date Start/Finish:	08/10/11-08/10/11	Drilling Method: Drive Casing	Core Barrel: NX
Boring Location:	N 375642, E 3113088	Casing ID/OD 3"	Water Level*:
Hammer Efficiency Factor: 0.6		Hammer Type: Automatic ☐ Hydraulic ☐ Rope & Cathead ☒	

Definitions:
D = Split Spoon Sample
MD = Unsuccessful Split Spoon Sample attempt
U = Thin Wall Tube Sample
MU = Unsuccessful Thin Wall Tube Sample attempt
V = Insitu Vane Shear Test
MV = Unsuccessful Insitu Vane Shear Test attempt
R = Rock Core Sample
ISA = Solid Stem Auger
HSA = Hollow Stem Auger
RC = Roller Cone
WOH = weight of 140lb. hammer
WOR = weight of rods
WO1P = weight of one person
S_u = Insitu Field Vane Shear Strength (psf)
$S_{u(lab)}$ = Lab Vane Shear Strength (psf)
T_v = Pocket Torvane Shear Strength (psf)
q_p = Unconfined Compressive Strength (ksf)
N uncorrected = Raw Field SPT N-value
Hammer Efficiency Factor = Annual Calibration Value
N_{60} = SPT N-uncorrected corrected for hammer efficiency
N_{60} = (Hammer Efficiency Factor/60%)*N-uncorrected
WC = water content, %
LL = Liquid Limit
PL = Plastic Limit
PI = Plasticity Index
G = Grain Size Analysis
C = Consolidation Test

Sample Information

Depth (ft.)	Sample No.	Pen./Rec. (in.)	Sample Depth (ft.)	Blows (/6 in.) Shear Strength (psf) q_p (ksf) (%)	N uncorrected	N60	Casing Blows	Elevation (ft.)	Visual Description and Remarks	Laboratory Testing Results/ AASHTO and Unified Class
0	1D	14/8	0.0 - 1.2	WOH-27-100/1"					Medium dense, dark brown, fine to coarse SAND and SILT, little Gravel, organic odor. Upper 1" was organic silt. -NEARSHORE DEPOSIT-	
								-11.2		2.3
	R1	60/60	2.6 - 7.6	RQD = 77%					Increased drilling resistance at 2.3', probable rock. Hard, fresh, fine grained, gray, SCHIST with flow banding. Joints are close to moderately spaced. Primary joints are low angle, planar, rough, fresh, tight to partially open with silt infillings. Secondary joints are high angled, planar, rough, tight with silt infilling. Iron staining from 2.6' to 4.3' and iron staining at joints. Rock Mass Quality= Good Rock Core Times (min): 2.6-3.6 (2), 3.6-4.6 (1.25), 4.6-5.6 (1.25), 5.6-6.6 (1.25), 6.6-7.6 (1). Similar to R1. Rock Mass Quality= Excellent Rock Core Times (min): 7.6-8.6 (1), 8.6-9.6 (1), 9.6-10.6 (1), 10.6-11.6 (1), 11.6-12.6 (1)	
	R2	60/57	7.6 - 12.6	RQD = 95%				-21.5		12.6
35									Bottom of Exploration at 12.60 feet below ground surface.	

Remarks:

Stratification lines represent approximate boundaries between soil types; transitions may be gradual.
* Water level readings have been made at times and under conditions stated. Groundwater fluctuations may occur due to conditions other than those present at the time measurements were made.

Page 1 of 1 — Boring No.: BB-GR-308

STATE OF MAINE
DEPARTMENT OF TRANSPORTATION

APPROVED — DATE
COMMISSIONER:
CHIEF ENGINEER:

STATE OF MAINE — ANDREW R. BLASBERG — LICENSED PROFESSIONAL ENGINEER

PROJECT INFORMATION		
PROGRAM	BRIDGE	
PROJECT MANAGER	STEPHEN BODGE	SIGNATURE
DESIGNER	GZA GEOENVIRONMENTAL, INC	10957 — P.E. NUMBER
CONSULTANT	GZA GEOENVIRONMENTAL, INC	01/16/2014 — DATE
PROJECT RESIDENT		
CONTRACTOR		
PROJECT COMPLETION DATE		

SOUTH BRISTOL
GUT BRIDGE

BORING LOGS, SHEET 3 OF 7

WIN 16750.00

SHEET NUMBER
11
OF 141

Maine Department of Transportation — Soil/Rock Exploration Log — US CUSTOMARY UNITS

Project: Gut Bridge
Location: South Bristol, Maine
Boring No.: BB-GR-309
PIN: 16750.00

Driller:	Maine Test Borings	Elevation (ft.)	8.2	Auger ID/OD:	2"
Operator:	Brad Enos	Datum:	NAVD 88	Sampler:	Split Spoon
Logged By:	Kyle MacDonald	Rig Type:	Skid CME-45	Hammer Wt./Fall:	140/30"
Date Start/Finish:	08/3/11-08/3/11	Drilling Method:	Spun Casing	Core Barrel:	NQ2
Boring Location:	N 375823, E 3113209	Casing ID/OD:	3"	Water Level*:	
Hammer Efficiency Factor: 0.6		Hammer Type:	Automatic ☐ Hydraulic ☐ Rope & Cathead ☒		

Definitions:
D = Split Spoon Sample
MD = Unsuccessful Split Spoon Sample attempt
U = Thin Wall Tube Sample
MU = Unsuccessful Thin Wall Tube Sample attempt
V = Insitu Vane Shear Test
MV = Unsuccessful Insitu Vane Shear Test attempt
R = Rock Core Sample
SSA = Solid Stem Auger
HSA = Hollow Stem Auger
RC = Roller Cone
WOH = weight of 140lb. hammer
WOR = weight of rods
WO1P = Weight of one person
S_u = Insitu Field Vane Shear Strength (psf) $S_{u(lab)}$ = Lab Vane Shear Strength (psf)
T_v = Pocket Torvane Shear Strength (psf)
q_p = Unconfined Compressive Strength (ksf)
N-uncorrected = Raw field SPT N-value
Hammer Efficiency Factor = Annual Calibration Value
N_{60} = SPT N-uncorrected corrected for hammer efficiency
N_{60} = (Hammer Efficiency Factor/60%)*N-uncorrected
WC = water content, %
LL = Liquid Limit
PL = Plastic Limit
PI = Plasticity Index
G = Grain Size Analysis
C = Consolidation Test

Depth (ft.)	Sample No.	Pen./Rec. (in.)	Sample Depth (ft.)	Blows (/6 in.) Shear Strength (psf) or RQD (%)	N-uncorrected	N60	Casing Blows	Elevation (ft.)	Visual Description and Remarks	Laboratory Testing Results/AASHTO and Unified Class
0	1D	11/7	0.3 - 1.2	26-70/5"			SSA	7.9	Bituminous Pavement (0.3) / Very dense, brown-gray, fine to coarse SAND and GRAVEL, trace Silt, dry. -FILL- See Remark 1.	
5	2D	16/0	5.8 - 7.1	22-5-50/4"					No recovery. -FILL- (Probable Rock Fill)	
10	3D	15/3	10.0 - 11.3	8-4-50/3"					Light gray-tan, GRAVEL, trace shell fragments, consistent with parent rock, wet. -FILL- (Probable Rock Fill)	
15	4D	24/10	15.0 - 17.0	8-4-3-5	7	7		-6.6	Drilling resistance indicates bottom of cobbles/boulders at 14.8'. (14.8) Medium stiff to stiff, gray, Clayey SILT, shells throughout, wet. -MARINE DEPOSIT-	
20	5D	24/8	20.0 - 22.0	7-9-9-18	18	18			Very stiff, mottled brown-gray, Silty CLAY, trace fine to coarse Sand, trace Gravel, fine sand lenses throughout, wet.	
25	R1	35/32	24.1 - 27.0	RQD = 0%				-15.5	(23.7) Increased drilling resistance at 23.7', probable rock. Soft, fresh, fine grained, white-gray with green tint, SCHIST. Joints are extremely close to close, moderately dipping to high angle, planar, rough, fresh, open with trace silt infilling. Rock Mass Quality= Very Poor. Rock Core Times (min): 24.1-25.1 (0), 25.1-26.1 (3.5), 26.1-27 (2.5)	
	R2	37/37	27.0 - 30.1	RQD = 14%				-21.9	Soft, fresh, fine grained, white-gray with green tint, SCHIST. Joints are extremely close to close, moderately dipping to high angle, planar, rough, fresh, open, trace silt infilling. Highly weathered zone from 29' to 29.6'. Gray SCHIST from 29.8' to 30.1'. Rock Mass Quality= Very Poor. Rock Core Times (min): 27-28 (2.5), 28-29 (2.5), 29-30.1 (3.5) (30.1)	
30–35									Bottom of Exploration at 30.10 feet below ground surface.	

Remarks:
1. Lost wash water during drilling at 2.5' and 3.5'.

Stratification lines represent approximate boundaries between soil types; transitions may be gradual.
* Water level readings have been made at times and under conditions stated. Groundwater fluctuations may occur due to conditions other than those present at the time measurements were made.

Page 1 of 1 — Boring No.: BB-GR-309

Maine Department of Transportation — Soil/Rock Exploration Log — US CUSTOMARY UNITS

Project: Gut Bridge
Location: South Bristol, Maine
Boring No.: BB-GR-310
PIN: 16750.00

Driller:	Maine Test Borings	Elevation (ft.)	12.4	Auger ID/OD:	2"
Operator:	Brad Enos	Datum:	NAVD 88	Sampler:	Split Spoon
Logged By:	Kyle MacDonald	Rig Type:	Skid CME-45	Hammer Wt./Fall:	140/30"
Date Start/Finish:	08/4/11-08/4/11	Drilling Method:	Spun Casing	Core Barrel:	NX
Boring Location:	N 375929, E 3113179	Casing ID/OD:	3"	Water Level*:	
Hammer Efficiency Factor: 0.6		Hammer Type:	Automatic ☐ Hydraulic ☐ Rope & Cathead ☒		

Definitions: D = Split Spoon Sample; MD = Unsuccessful Split Spoon Sample attempt; U = Thin Wall Tube Sample; MU = Unsuccessful Thin Wall Tube Sample attempt; V = Insitu Vane Shear Test; MV = Unsuccessful Insitu Vane Shear Test attempt; R = Rock Core Sample; SSA = Solid Stem Auger; HSA = Hollow Stem Auger; RC = Roller Cone; WOH = weight of 140lb. hammer; WOR = weight of rods; WO1P = Weight of one person; S_u = Insitu Field Vane Shear Strength (psf) $S_{u(lab)}$ = Lab Vane Shear Strength (psf); T_v = Pocket Torvane Shear Strength (psf); q_p = Unconfined Compressive Strength (ksf); N-uncorrected = Raw field SPT N-value; Hammer Efficiency Factor = Annual Calibration Value; N_{60} = SPT N-uncorrected corrected for hammer efficiency; N_{60} = (Hammer Efficiency Factor/60%)*N-uncorrected; WC = water content, %; LL = Liquid Limit; PL = Plastic Limit; PI = Plasticity Index; G = Grain Size Analysis; C = Consolidation Test

Depth (ft.)	Sample No.	Pen./Rec. (in.)	Sample Depth (ft.)	Blows (/6 in.) Shear Strength (psf) or RQD (%)	N-uncorrected	N60	Casing Blows	Elevation (ft.)	Visual Description and Remarks	Laboratory Testing Results/AASHTO and Unified Class
0	1D	24/14	0.3 - 2.3	18-10-8-5	18	18		12.1	Bituminous Pavement (0.3) / Medium dense, brown, fine to coarse SAND, little Gravel, trace Silt, dry. -FILL-	
5	2D	24/0	5.3 - 7.3	5-18-6-3	24	24			See Remark 1. No recovery. Boulder. See Remark 2.	
10	3D	2/1	10.5 - 10.7	50/2"				1.7 / 1.0	Very dense, brown, GRAVEL and fine SAND, trace Silt, wet. -FILL- (probable rock fill) (10.7) Increased drilling resistance at 10.7', possible rock. (11.4)	
									Bottom of Exploration at 11.40 feet below ground surface.	

Remarks:
1. Change in wash water/cutting from 5.0' to 8.0'. Appears to be gray, fine sand and silt (possible reworked marine deposits).
2. Drilling indicates fine to coarse sand and gravel with cobbles/boulders from 9.5' to 10.7'.
3. At 10.7', cuttings are similar to limonite schist cored in BB-GR-309. Approximately 25 minutes to advance 0.7' with roller cone.

Stratification lines represent approximate boundaries between soil types; transitions may be gradual.
* Water level readings have been made at times and under conditions stated. Groundwater fluctuations may occur due to conditions other than those present at the time measurements were made.

Page 1 of 1 — Boring No.: BB-GR-310

Maine Department of Transportation — Soil/Rock Exploration Log — US CUSTOMARY UNITS

Project: Gut Bridge
Location: South Bristol, Maine
Boring No.: BB-GR-401
PIN: 16750.00

Driller:	Maine Test Borings	Elevation (ft.)	12.0	Auger ID/OD:	3.5"
Operator:	Mike Porter	Datum:	NAVD 88	Sampler:	Split Spoon
Logged By:	Mike Devoid	Rig Type:	Skid/Trailer CME-45	Hammer Wt./Fall:	140/30"
Date Start/Finish:	03/05/12 - 03/05/12	Drilling Method:	Solid Stem Auger	Core Barrel:	
Boring Location:	N 375453 E 3113157	Casing ID/OD:	-	Water Level*:	Dry
Hammer Efficiency Factor: 0.6		Hammer Type:	Automatic ☐ Hydraulic ☐ Rope & Cathead ☒		

Depth (ft.)	Sample No.	Pen./Rec. (in.)	Sample Depth (ft.)	Blows (/6 in.) Shear Strength (psf) or RQD (%)	N-uncorrected	N60	Casing Blows	Elevation (ft.)	Visual Description and Remarks	Laboratory Testing Results/AASHTO and Unified Class
0							SSA	11.4	Pavement (0.6)	
	1D	24/14	1.5 - 3.5	18-20-11-7	31	31			Dense, brown, fine to coarse SAND, little Gravel, trace Silt, dry. 3.0 - 3.2': Shell layer -FILL-	
5	2D	24/5	5.0 - 7.0	4-6-9-43	15	15			Medium dense, brown, GRAVEL and fine to coarse Sand, little Silt, moist. Rock stuck in tip. -FILL- See Remark 1.	G# 8 GP - GM WC = 14.7
	3D	24/2	7.6 - 9.6	20-17-3-2	20	20		1.6	Medium dense, brown, fine to coarse SAND, some Silt, trace Gravel, moist. -FILL- Drilled ahead to 10.4', possible void at 9.5 to 10.4' based on drill action. No refusal. (10.4)	
10									Bottom of Exploration at 10.40 feet below ground surface.	

Remarks:
1. 7.5-7.7': Possible cobble based on drill action.
2. Hole open to 10.4', dry at end of drilling. Possible void @ 9.9' to 10.4'. Gut water level at El. -5.1± near south abutment.

Page 1 of 1 — Boring No.: BB-GR-401

Maine Department of Transportation — Soil/Rock Exploration Log — US CUSTOMARY UNITS

Project: Gut Bridge
Location: South Bristol, Maine
Boring No.: BB-GR-402
PIN: 16750.00

Driller:	Maine Test Borings	Elevation (ft.)	12.5	Auger ID/OD:	3.5"
Operator:	Mike Porter	Datum:	NAVD 88	Sampler:	Split Spoon
Logged By:	Mike Devoid	Rig Type:	Skid/Trailer CME-45	Hammer Wt./Fall:	140/30"
Date Start/Finish:	02/27/12 - 02/27/12	Drilling Method:	Drive & Wash	Core Barrel:	NQ2
Boring Location:	N 375429 E 3113170	Casing ID/OD:	3"	Water Level*:	8.2
Hammer Efficiency Factor: 0.6		Hammer Type:	Automatic ☐ Hydraulic ☐ Rope & Cathead ☒		

Depth (ft.)	Sample No.	Pen./Rec. (in.)	Sample Depth (ft.)	Blows (/6 in.) Shear Strength (psf) or RQD (%)	N-uncorrected	N60	Casing Blows	Elevation (ft.)	Visual Description and Remarks	Laboratory Testing Results/AASHTO and Unified Class
0							SSA	11.8	Pavement (0.7)	
	1D	24/14	1.5 - 3.5	4-4-2-1	6	6			1.5 - 2.4': Loose, brown, fine to coarse SAND, little Gravel, trace Silt. -FILL- 2.4 - 2.7': Silty CLAY, trace fine to coarse Sand, 1" layer of Shells at transition based on wash, moist. -FILL-	
5	2D	24/4	5.0 - 7.0	1-4-3-7	7	7	7		Loose, brown, GRAVEL and fine to coarse Sand, trace Silt, moist. -FILL-	G# 9 GP-GM WC = 7.7
							9			
							38			
							58		See Remarks 1 and 2.	
							60			
10	R1	60/60	10.0 - 15.0	RQD = 42%			NQ2	2.5	(10.0) Hard, fresh, fine grained, gray SCHIST. Primary joints are very close to close, low angle, undulating, rough, fresh to discolored, partially open, silt and sand infillings. Secondary joints are high angle, planar, rough, fresh to discolored, partially open, silt and sand infillings. Rock Mass Quality = Poor. Rock Core Times (min): 10-11 (4), 11-12 (4), 12-13 (4), 14-15 (4)	
15								-2.5	(15.0) Bottom of Exploration at 15.00 feet below ground surface.	

Remarks:
1. Cobbles/Boulders @ 8.5 and 8.8' based on rate of casing advancement.
2. At 8.8', white wash water, possible till. At 9.8', brown wash water, possible weathered rock.
3. Water level measured 10 minutes after completion of drilling. Gut water level at El. 2.2±, near south abutment.

Page 1 of 1 — Boring No.: BB-GR-402

WIN 16750.00

STATE OF MAINE
DEPARTMENT OF TRANSPORTATION
APPROVED | DATE
COMMISSIONER:
CHIEF ENGINEER:

STATE OF MAINE — ANDREW R. BLAISDELL — NO. 10957 — LICENSED — PROFESSIONAL ENGINEER

SIGNATURE
10957
P.E. NUMBER
01/16/2014
DATE

PROJECT INFORMATION	
PROGRAM	BRIDGE
PROJECT MANAGER	STEPHEN BODGE
DESIGNER	GZA GEOENVIRONMENTAL, INC
CONSULTANT	GZA GEOENVIRONMENTAL, INC
PROJECT RESIDENT	
CONTRACTOR	
PROJECT COMPLETION DATE	

SOUTH BRISTOL GUT BRIDGE

BORING LOGS, SHEET 4 OF 7

SHEET NUMBER 12 OF 141

Date: 01/16/2014 Username: landi Division: BRIDGE Filename: ...\CADD\00_Geo\Sheet 12.dgn

Filename: ...\CADD\00_Geo\Sheet 13.dgn Division: BRIDGE Username: landi Date: 01/16/2014

Maine Department of Transportation — Soil/Rock Exploration Log — US CUSTOMARY UNITS

Project: Gut Bridge
Location: South Bristol, Maine
Boring No.: BB-GR-403
PIN: 16750.00

Driller:	Maine Test Borings	Elevation (ft.): 11.6	Auger ID/OD: 3.5"
Operator:	Mike Porter	Datum: NAVD 88	Sampler: Split Spoon
Logged By:	Mike Devoid	Rig Type: Skid/Trailer CME-45	Hammer Wt./Fall: 140/30"
Date Start/Finish:	03/05/12 - 03/05/12	Drilling Method: Solid Stem Auger	Core Barrel:
Boring Location:	N 375478 E 3113157	Casing ID/OD: -	Water Level*: Dry
Hanmer Efficiency Factor: 0.6		Hammer Type: Automatic ☐ Hydraulic ☐ Rope & Cathead ☒	

Definitions:
D = Split Spoon Sample
MD = Unsuccessful Split Spoon Sample attempt
U = Thin Wall Tube Sample
MU = Unsuccessful Thin Wall Tube Sample attempt
V = Insitu Vane Shear Test
MV = Unsuccessful Insitu Vane Shear Test attempt
R = Rock Core Sample
SSA = Solid Stem Auger
HSA = Hollow Stem Auger
RC = Roller Cone
WOH = weight of 140lb. hammer
WOR = weight of rods
WOP = Weight of one person
S_u = Insitu Field Vane Shear Strength (psf)$S_{u(lab)}$ = Lab Vane Shear Strength (psf
T_v = Pocket Torvane Shear Strength (psf)
q_p = Unconfined Compressive Strength (ksf)
N-uncorrected = Raw Field SPT N-value
Hanmer Efficiency Factor = Annual Calibration Value
N_{60} = SPT N-uncorrected corrected for hanmer efficiency
N_{60} = (Hanmer Efficiency Factor/60%)*N-uncorrected
WC = water content, %
LL = Liquid Limit
PL = Plastic Limit
PI = Plasticity Index
G = Grain Size Analysis
C = Consolidation Test

Depth (ft.)	Sample No.	Pen./Rec. (in.)	Sample Depth (ft.)	Blows (/6 in. Shear Strength (psf) or RQD (%)	N-uncorrected	N$_{60}$	Casing Blows	Elevation (ft.)	Graphic Log	Visual Description and Remarks	Laboratory Testing Results/ AASHTO and Unified Class
0							SSA	10.9		Pavement — 0.8	
	1D	24/17	1.5 - 3.5	20-15-9-7	24	24				1.5 - 2.3': Medium dense, brown, fine to coarse SAND, little Gravel, trace Silt, occasional clods of gray-brown Silty CLAY. 2.3 - 3.0': Medium dense, olive, fine to medium SAND and Silt, dry. -FILL-	
5	2D	5/1	5.0 - 5.4	55/5"				5.6		Recovery consists of 2 rock fragments (stuck in tip), and trace Sand. See Remark 1. No recovery. Drill action indicates possible boulder fill, auger and split spoon refusal at 6'. — 6.0	
	3D	0/0	6.0 - 6.0	50/0"						Bottom of Exploration at 6.00 feet below ground surface.	
10											
15											
20											
25											

Remarks:
1. 2D: 5 blows for 5", then 50/0".

Stratification lines represent approximate boundaries between soil types; transitions may be gradual.
* Water level readings have been made at times and under conditions stated. Groundwater fluctuations may occur due to conditions other than those present at the time measurements were made.

Page 1 of 1
Boring No.: BB-GR-403

Maine Department of Transportation — Soil/Rock Exploration Log — US CUSTOMARY UNITS

Project: Gut Bridge
Location: South Bristol, Maine
Boring No.: BB-GR-404
PIN: 16750.00

Driller:	Maine Test Borings	Elevation (ft.): 11.4	Auger ID/OD: 3.5"
Operator:	Mike Porter	Datum: NAVD 88	Sampler: Split Spoon
Logged By:	Mike Devoid	Rig Type: Skid/Trailer CME-45	Hammer Wt./Fall: 140/30"
Date Start/Finish:	02/28/12 - 02/28/12	Drilling Method: Drive & Wash/Spun Casing	Core Barrel: N02
Boring Location:	N 375477 E 3113169	Casing ID/OD: 3"	Water Level*: 9.8
Hanmer Efficiency Factor: 0.6		Hammer Type: Automatic ☐ Hydraulic ☐ Rope & Cathead ☒	

Definitions:
D = Split Spoon Sample
MD = Unsuccessful Split Spoon Sample attempt
U = Thin Wall Tube Sample
MU = Unsuccessful Thin Wall Tube Sample attempt
V = Insitu Vane Shear Test
MV = Unsuccessful Insitu Vane Shear Test attempt
R = Rock Core Sample
SSA = Solid Stem Auger
HSA = Hollow Stem Auger
RC = Roller Cone
WOH = weight of 140lb. hammer
WOR = weight of rods
WOP = Weight of one person
S_u = Insitu Field Vane Shear Strength (psf)$S_{u(lab)}$ = Lab Vane Shear Strength (psf
T_v = Pocket Torvane Shear Strength (psf)
q_p = Unconfined Compressive Strength (ksf)
N-uncorrected = Raw Field SPT N-value
Hanmer Efficiency Factor = Annual Calibration Value
N_{60} = SPT N-uncorrected corrected for hanmer efficiency
N_{60} = (Hanmer Efficiency Factor/60%)*N-uncorrected
WC = water content, %
LL = Liquid Limit
PL = Plastic Limit
PI = Plasticity Index
G = Grain Size Analysis
C = Consolidation Test

Depth (ft.)	Sample No.	Pen./Rec. (in.)	Sample Depth (ft.)	Blows (/6 in. Shear Strength (psf) or RQD (%)	N-uncorrected	N$_{60}$	Casing Blows	Elevation (ft.)	Graphic Log	Visual Description and Remarks	Laboratory Testing Results/ AASHTO and Unified Class
0							SSA	10.9		Pavement — 0.6	
	1D	24/11	1.5 - 3.5	3-3-3-3	6	6				Loose, brown, fine to coarse SAND, little Gravel, trace Silt, dry. Bottom 2': Silty CLAY with Shells, moist.	
5	2D	24/7	5.0 - 7.0	1-4-17-14	21	21	W			Medium dense, gray-brown, fine to coarse SAND, some Silt, little Gravel, moist. Rock stuck in tip of spoon. -FILL-	GR10 SM WC = 20.4
							21				
							28				
							16			Void at 9.0' - 9.7' based on casing advancement. No recovery. — 10.1	
10							4	1.3			
	3D R1	1/0 60/25	10.0 - 10.1 10.1 - 15.1	50/1" RQD = 32%			N02			Very hard, fresh, medium to coarse grained, white PEGMATITIC GRANITE. Joints are very close to close, low to moderate angle, undulating, rough, fresh, partially open, soil infillings. — Bottom 4": Hard, fresh, fine-grained, gray SCHIST (one piece), underlain by angular GRAVEL pieces, some silt (possible highly weathered/decomposed SCHIST).	
15	R2	59/59	15.1 - 20.0	RQD = 39%						Rock Mass Quality = Very Poor. Rock Core Times (min): 10.1-11.1 (4), 11.1-12.1 (5), 12.1-13.1 (4), 13.1-14.1(4), 14.1-15.1(4). — Possible highly weathered/decomposed SCHIST, see Remark 1 and 2. — Hard, fresh, fine to medium grained, gray SCHIST. Primary joints are very close to close, high angle, planar, rough, fresh, tight, silt and sand infilling, iron staining at joints. Secondary joints are very close to close, low, to moderate angle, undulating, rough, fresh, tight, silt and sand infilling, iron staining at joints. Rock Mass Quality = Poor. Rock Core Times (min): 15.1-16.1 (5), 16.1-17.1 (5), 17.1-18.1 (4), 18.1-19.1 (4), 19.1-20.0 (5).	
20								-8.6		Bottom of Exploration at 20.00 feet below ground surface. — 20.0	
25											

Remarks:
1. Lost drill water during coring for R1; spun casing to 15' to complete R2.
2. Based on casing spinning from 10-15', soft seam at 13.8-14.7'.
3. Water level measured 10 min. after completion of drilling, Gut water level at El. 1.64 near south abutment.

Stratification lines represent approximate boundaries between soil types; transitions may be gradual.
* Water level readings have been made at times and under conditions stated. Groundwater fluctuations may occur due to conditions other than those present at the time measurements were made.

Page 1 of 1
Boring No.: BB-GR-404

Maine Department of Transportation — Soil/Rock Exploration Log — US CUSTOMARY UNITS

Project: Gut Bridge
Location: South Bristol, Maine
Boring No.: BB-GR-405
PIN: 16750.00

Driller:	Maine Test Borings	Elevation (ft.): 11.1	Auger ID/OD: -
Operator:	Mike Porter	Datum: NAVD 88	Sampler: Split Spoon
Logged By:	Mike Devoid	Rig Type: Skid/Trailer CME-45	Hammer Wt./Fall: 140/30"
Date Start/Finish:	03/06/12 - 03/06/12	Drilling Method: Spun Casing	Core Barrel:
Boring Location:	N 375499 E 3113158	Casing ID/OD: 3"	Water Level*: Dry
Hanmer Efficiency Factor: 0.6		Hammer Type: Automatic ☐ Hydraulic ☐ Rope & Cathead ☒	

Definitions:
D = Split Spoon Sample
MD = Unsuccessful Split Spoon Sample attempt
U = Thin Wall Tube Sample
MU = Unsuccessful Thin Wall Tube Sample attempt
V = Insitu Vane Shear Test
MV = Unsuccessful Insitu Vane Shear Test attempt
R = Rock Core Sample
SSA = Solid Stem Auger
HSA = Hollow Stem Auger
RC = Roller Cone
WOH = weight of 140lb. hammer
WOR = weight of rods
WOP = Weight of one person
S_u = Insitu Field Vane Shear Strength (psf)$S_{u(lab)}$ = Lab Vane Shear Strength (psf
T_v = Pocket Torvane Shear Strength (psf)
q_p = Unconfined Compressive Strength (ksf)
N-uncorrected = Raw Field SPT N-value
Hanmer Efficiency Factor = Annual Calibration Value
N_{60} = SPT N-uncorrected corrected for hanmer efficiency
N_{60} = (Hanmer Efficiency Factor/60%)*N-uncorrected
WC = water content, %
LL = Liquid Limit
PL = Plastic Limit
PI = Plasticity Index
G = Grain Size Analysis
C = Consolidation Test

Depth (ft.)	Sample No.	Pen./Rec. (in.)	Sample Depth (ft.)	Blows (/6 in. Shear Strength (psf) or RQD (%)	N-uncorrected	N$_{60}$	Casing Blows	Elevation (ft.)	Graphic Log	Visual Description and Remarks	Laboratory Testing Results/ AASHTO and Unified Class
0							Spun	10.5		Pavement — 0.6	
	1D	24/8	1.7 - 3.7	17-8-7-18	15	15				Medium dense, brown, fine to coarse SAND, little Gravel, little Silt, trace Shells, moist. -FILL- See Remark 1.	
5	2D	24/5	5.5 - 7.5	3-8-4-5	12	12				Medium dense, brown, fine to coarse SAND and Gravel, trace Silt, wet. -FILL-	GR 11 SW-SM WC = 10.2
10	3D	24/6	9.0 - 11.0	17-40-26-15	66	66		0.1		Dense to very dense, brown, fine to coarse SAND, little Gravel, trace Silt, wet. -FILL- — 11.0	
15										Bottom of Exploration at 11.00 feet below ground surface.	
20											
25											

Remarks:
1. Drill action indicates possible cobbles/boulders at 1.5' - 1.7', 3.7' - 4.1', 4.5' - 4.6', and 5.0' - 5.3'.
2. Gut water level at El. -3.4' at completion of drilling near south abutment.

Stratification lines represent approximate boundaries between soil types; transitions may be gradual.
* Water level readings have been made at times and under conditions stated. Groundwater fluctuations may occur due to conditions other than those present at the time measurements were made.

Page 1 of 1
Boring No.: BB-GR-405

Maine Department of Transportation — Soil/Rock Exploration Log — US CUSTOMARY UNITS

Project: Gut Bridge
Location: South Bristol, Maine
Boring No.: BB-GR-406
PIN: 16750.00

Driller:	Maine Test Borings	Elevation (ft.): 11.0	Auger ID/OD: -
Operator:	Mike Porter	Datum: NAVD 88	Sampler: Split Spoon
Logged By:	Mike Devoid	Rig Type: Skid/Trailer CME-45	Hammer Wt./Fall: 140/30"
Date Start/Finish:	02/28/12 - 03/05/12	Drilling Method: Spun Casing	Core Barrel: N02
Boring Location:	N 375499 E 3113172	Casing ID/OD: 3"	Water Level*: 12.1' - 14.6'
Hanmer Efficiency Factor: 0.6		Hammer Type: Automatic ☐ Hydraulic ☐ Rope & Cathead ☒	

Definitions:
D = Split Spoon Sample
MD = Unsuccessful Split Spoon Sample attempt
U = Thin Wall Tube Sample
MU = Unsuccessful Thin Wall Tube Sample attempt
V = Insitu Vane Shear Test
MV = Unsuccessful Insitu Vane Shear Test attempt
R = Rock Core Sample
SSA = Solid Stem Auger
HSA = Hollow Stem Auger
RC = Roller Cone
WOH = weight of 140lb. hammer
WOR = weight of rods
WOP = Weight of one person
S_u = Insitu Field Vane Shear Strength (psf)$S_{u(lab)}$ = Lab Vane Shear Strength (psf
T_v = Pocket Torvane Shear Strength (psf)
q_p = Unconfined Compressive Strength (ksf)
N-uncorrected = Raw Field SPT N-value
Hanmer Efficiency Factor = Annual Calibration Value
N_{60} = SPT N-uncorrected corrected for hanmer efficiency
N_{60} = (Hanmer Efficiency Factor/60%)*N-uncorrected
WC = water content, %
LL = Liquid Limit
PL = Plastic Limit
PI = Plasticity Index
G = Grain Size Analysis
C = Consolidation Test

Depth (ft.)	Sample No.	Pen./Rec. (in.)	Sample Depth (ft.)	Blows (/6 in. Shear Strength (psf) or RQD (%)	N-uncorrected	N$_{60}$	Casing Blows	Elevation (ft.)	Graphic Log	Visual Description and Remarks	Laboratory Testing Results/ AASHTO and Unified Class
0								10.0		Pavement — 1.0	
	1D	24/11	1.0 - 3.0	4-4-4-9	8	8	Spun			Loose, brown, fine to coarse SAND, some Gravel, little Silt, dry. -FILL- Casing advancement indicates void at 4.9' - 5.7'.	GR 12 SM WC = 8.0
5	2D	24/4	5.7 - 7.7	1-27-26-6	53	53				Brown, fine to coarse SAND and Gravel, trace Silt, wood in tip, wet. -FILL- See Remark 1.	
10	3D	24/3	10.0 - 12.0	55-21-10-12	31	31				Dense, brown, fine to coarse GRAVEL, some fine to coarse Sand, trace Silt, wet. -FILL- See Remark 2.	GR 13 GW WC = 7.9
								-5.5		No Recovery, see Remark 3. — 16.2	
	4D R1	0/0 60/40	16.0 - 16.0 16.0 - 21.5	75/0" RQD = 83%			N02			See Remark 4. — 16.9 — Very hard, fresh, fine grained, gray SCHIST. Primary joints are very close to moderately spaced, high angle, planar, rough, fresh, tight, trace sand infillings. Secondary joints are very close to moderately spaced, low angle, undulating, rough, tight, trace sand infillings. Rock Mass Quality = Good. Rock Core Times (min): 16.5-17.5 (5), 17.5-18.5 (5), 18.5-19.5 (5), 19.5-20.5 (5), 20.5-21.5 (5).	
15											
20								-10.5		Bottom of Exploration at 21.50 feet below ground surface. — 21.5	
25											

Remarks:
1. Drill action indicates possible boulder at 8.9' - 10.1'.
2. Drill action indicates possible cobbles/boulders at 12.0' - 12.4', 13.4' - 13.9', and 14.1' - 14.4'.
3. Based on sound and bounce of spoon and drill action, possible wood at 16.0' - 16.2'.
4. Increased resistance on roller bit from 16.2' to 16.5', probable rock.
5. 1st water level measurement at 13.1' 10 minutes after drilling, Gut water level at El. -3.8'. 2nd water level meas.'t at 14.6' 1 hour after drilling. Gut water level at El. -4.7'.

Stratification lines represent approximate boundaries between soil types; transitions may be gradual.
* Water level readings have been made at times and under conditions stated. Groundwater fluctuations may occur due to conditions other than those present at the time measurements were made.

Page 1 of 1
Boring No.: BB-GR-406

STATE OF MAINE
DEPARTMENT OF TRANSPORTATION

APPROVED — DATE
COMMISSIONER:
CHIEF ENGINEER:

STATE OF MAINE — ANDREW R. BLAISDELL NO. 10957 — LICENSED PROFESSIONAL ENGINEER

SIGNATURE
P.E. NUMBER 10957
01/16/2014
DATE

PROJECT INFORMATION

PROGRAM	BRIDGE
PROJECT MANAGER	STEPHEN BOODE
DESIGNER	GZA GEOENVIRONMENTAL INC
CONSULTANT	GZA GEOENVIRONMENTAL INC
PROJECT RESIDENT	
CONTRACTOR	
PROJECT COMPLETION DATE	

SOUTH BRISTOL
GUT BRIDGE

BORING LOGS , SHEET 5 OF 7

WIN 16750.00

SHEET NUMBER
13
OF 141

Date: 01/16/2014 Username: landi Division: BRIDGE Filename:...\CADD\00_Geo\Sheet 14.dgn

Maine Department of Transportation — Soil/Rock Exploration Log — US CUSTOMARY UNITS

Project: Gut Bridge
Location: South Bristol, Maine
Boring No.: BB-GR-407
PIN: 16750.00

Driller:	Maine Test Borings	Elevation (ft.)	10.9	Auger ID/OD:	-
Operator:	Mike Porter	Datum:	NAVD 88	Sampler:	Split Spoon
Logged By:	Mike Devoid	Rig Type:	Skid/Trailer CME-45	Hammer Wt./Fall:	140/30"
Date Start/Finish:	03/06/12 - 03/06/12	Drilling Method:	Spun Casing	Core Barrel:	NQ2
Boring Location:	N 375509 E 3113159	Casing ID/OD:	3"	Water Level*:	14.5' -15.1'
Hammer Efficiency Factor: 0.6		Hammer Type:	Automatic ☐ Hydraulic ☐ Rope & Cathead ☒		

Definitions:
D = Split Spoon Sample
MD = Unsuccessful Split Spoon Sample attempt
U = Thin Wall Tube Sample
MU = Unsuccessful Thin Wall Tube Sample attempt
V = Insitu Vane Shear Test
MV = Unsuccessful Insitu Vane Shear Test attempt
R = Rock Core Sample
SSA = Solid Stem Auger
HSA = Hollow Stem Auger
RC = Roller Cone
WOH = weight of 140lb. hammer
WOR = weight of rods
WO1P = Weight of one person
S_u = Insitu Field Vane Shear Strength (psf) $S_{u(lab)}$ = Lab Vane Shear Strength (psf)
T_v = Pocket Torvane Shear Strength (psf)
q_p = Unconfined Compressive Strength (ksf)
N-uncorrected = Raw field SPT N-value
Hammer Efficiency Factor = Annual Calibration Value
N_{60} = SPT N-uncorrected corrected for hammer efficiency
N_{60} = (Hammer Efficiency Factor/60%)*N-uncorrected
WC = water content, %
LL = Liquid Limit
PL = Plastic Limit
PI = Plasticity Index
G = Grain Size Analysis
C = Consolidation Test

Sample Information

Sample No.	Pen./Rec. (in.)	Sample Depth (ft.)	Blows (/6 in.) Shear Strength (psf) or RQD (%)	N-uncorrected	N60	Casing Blows
						SPUN
1D	11/6	1.5 - 2.4	23 - 100/5"			
2D	24/1	5.0 - 7.0	13-7-25-9	32	32	
3D	24/12	10.0 - 12.0	15-21-21-16	42	42	
4D	13/6	12.5 - 13.6	3-12-50/0.1			
R1	17/11	14.4 - 15.8				NQ2
R2	60/60	15.8 - 20.8	RQD = 78%			

Visual Description and Remarks:

- 0 – 0.7 (El. 10.2): Pavement
- Very dense, brown, fine to coarse SAND some Gravel, little Silt, dry. -FILL- See Remark 1.
- Recovery consists of piece of gravel (stuck in tip). Drill action indicates persistent cobbles/ boulders from 5' to 10'.
- Recovery consists of wood with creosote odor, trace fine to coarse SAND and Gravel.
- Brown, fine to coarse SAND and Gravel, trace Silt, wet. -FILL- See Remark 2.
- 14.4': 3/8"-thick steel. 14.4' - 14.8': Cobbles/Boulders. 14.8' - 15.3': Fine to coarse SAND and Gravel, trace Silt.
- 15.8 (El. -4.9): Very hard, fresh, coarse grained, light gray PEGMATITIC GRANITE. Joints are very close to moderate spacing, low angle to moderately dipping, planar, rough, fresh, tight to partially open, iron staining on joints. See Remark 3. Rock Mass Quality = Good
- 20.8 (El. -9.9): Bottom of Exploration at 20.80 feet below ground surface.

Remarks:

1. Drill action indicates possible cobbles/boulders from 2.4' - 2.8', 3.1' - 3.3', and 4.6' - 4.8'.
2. Split spoon bouncing on possible wood at 13.6'.
3. Attempted core run at 20.8', but could not advance core barrel or casing past steel encountered at 14.4'. Boring terminated.
4. First water level measured 20 minutes after completion of drilling, Gut water level at El. -3.7'± near south abutment.

Stratification lines represent approximate boundaries between soil types; transitions may be gradual.
* Water level readings have been made at times and under conditions stated. Groundwater fluctuations may occur due to conditions other than those present at the time measurements were made.

Page 1 of 1 Boring No.: BB-GR-407

Maine Department of Transportation — Soil/Rock Exploration Log — US CUSTOMARY UNITS

Project: Gut Bridge
Location: South Bristol, Maine
Boring No.: BB-GR-409
PIN: 16750.00

Driller:	Maine Test Borings	Elevation (ft.)	9.9	Auger ID/OD:	-
Operator:	Mike Porter	Datum:	NAVD 88	Sampler:	Split Spoon
Logged By:	Mike Devoid	Rig Type:	Skid/Trailer CME-45	Hammer Wt./Fall:	140/30"
Date Start/Finish:	02/29/12 - 02/29/12	Drilling Method:	Spun Casing	Core Barrel:	NQ2
Boring Location:	N 375571 E 3113181	Casing ID/OD:	4"	Water Level*:	
Hammer Efficiency Factor: 0.6		Hammer Type:	Automatic ☐ Hydraulic ☐ Rope & Cathead ☒		

Definitions: D = Split Spoon Sample; MD = Unsuccessful Split Spoon Sample attempt; U = Thin Wall Tube Sample; MU = Unsuccessful Thin Wall Tube Sample attempt; V = Insitu Vane Shear Test; MV = Unsuccessful Insitu Vane Shear Test attempt; R = Rock Core Sample; SSA = Solid Stem Auger; HSA = Hollow Stem Auger; RC = Roller Cone; WOH = weight of 140lb. hammer; WOR = weight of rods; WO1P = Weight of one person; S_u = Insitu Field Vane Shear Strength (psf) $S_{u(lab)}$ = Lab Vane Shear Strength (psf); T_v = Pocket Torvane Shear Strength (psf); q_p = Unconfined Compressive Strength (ksf); N-uncorrected = Raw field SPT N-value; Hammer Efficiency Factor = Annual Calibration Value; N_{60} = SPT N-uncorrected corrected for hammer efficiency; N_{60} = (Hammer Efficiency Factor/60%)*N-uncorrected; WC = water content, %; LL = Liquid Limit; PL = Plastic Limit; PI = Plasticity Index; G = Grain Size Analysis; C = Consolidation Test

Sample Information

Sample No.	Pen./Rec. (in.)	Sample Depth (ft.)	Blows (/6 in.) Shear Strength (psf) or RQD (%)	N-uncorrected	N60	Casing Blows
						SPUN
R1	54/24	5.1 - 9.6				NQ2
R2	60/28	9.6 - 14.6				
R3	60/24	14.6 - 19.6				
R4	60/16	19.6 - 24.6	RQD = 8%			
R5	57/54	24.6 - 29.4	RQD = 86%			

Visual Description and Remarks:

- Bridge deck and void above surface of concrete layer
- 4.3 (El. 5.6): Spun HW casing into concrete to 5.1' and began coring. 5.1' - 6.1': Rebar and Concrete. Mix of Concrete and Boulders
- 7.1 (El. 2.8): Core Times (min): 5.1'-6.1' (4), 6.1'-7.1' (3), 7.1'-8.1' (2), 8.1'-9.1' (1), 9.1'-9.6' (1).
- Cobbles/Boulders. Voids at 11.5' - 12.1' and 13.8' - 14.2' based on coring action. -FILL- Core Times (min): 9.6'-10.6' (3), 10.6'-11.6' (4), 11.6'-12.6' (4), 12.6'-13.6' (3), 13.6'-14.6' (2).
- Cobbles/Boulders. 14.6 - 15.6': several 1" voids, 1-2" hard, 1" void. 16' - 16.6': Pieces of wood in core barrel. -FILL- See Remark 1. Core Times (min): 14.6-15.6' (3), 15.6' 16.6' (3), 16.6'-17.6' (2), 17.6'-18.6 (3), 18.6'-19.6' (3).
- See Remark 2.
- 23.3 (El. -13.4): Hard, fresh, fine grained, gray SCHIST. Joints are very close to closely spaced, high angle, planar, rough, fresh, tight, silt infillings, iron staining at joints. Core Times (min): 19.6'-20.6' (3), 20.6'-21.6' (3), 21.6'-22.6' (3), 22.6'- 23.6' (2).
- Very hard, fresh, fine grained, gray SCHIST. Primary joints are close to moderate spacing, high angle, planar, rough, fresh, tight, trace silt infilling. Secondary joints are very close to moderate spacing, low angle, planar, rough, fresh, tight, iron staining at joints. Rock Mass Quality = Good. Core Times (min): 24.6'-25.6' (3), 25.6'-26.6' (2), 26.6'-27.6' (3), 27.6'- 28.6' (2), 28.6'-29.3' (3).
- 29.3 (El. -19.4): Bottom of Exploration at 29.30 feet below ground surface.

Remarks:

1. Measurements and Depths from top of bridge deck, 4.3' from top of bridge deck to top of concrete.
2. Core barrel advancement through R2 and R3 indicates numerous probable voids as listed above. Recovery in R4 consists of parent rock; possible that upper material was finer rock fill that disintegrated during drilling. Estimate of rock at top of R4 recovery: 23.3'.

Stratification lines represent approximate boundaries between soil types; transitions may be gradual.
* Water level readings have been made at times and under conditions stated. Groundwater fluctuations may occur due to conditions other than those present at the time measurements were made.

Page 1 of 1 Boring No.: BB-GR-409

Maine Department of Transportation — Soil/Rock Exploration Log — US CUSTOMARY UNITS

Project: Gut Bridge
Location: South Bristol, Maine
Boring No.: BB-GR-501
PIN: 16750.00

Driller:	Maine Test Boring	Elevation (ft.)	7.2	Auger ID/OD:	2"
Operator:	Brad Enos	Datum:	NAVD 88	Sampler:	Split Spoon
Logged By:	Heidi Rizza	Rig Type:	CME 45	Hammer Wt./Fall:	140/30"
Date Start/Finish:	7/16/13-7/16/13	Drilling Method:	Spun Casing	Core Barrel:	NQ2
Boring Location:	N 375593, E 3113209	Casing ID/OD:	4"	Water Level*:	
Hammer Efficiency Factor: 0.6		Hammer Type:	Automatic ☐ Hydraulic ☐ Rope & Cathead ☒		

Definitions: D = Split Spoon Sample; MD = Unsuccessful Split Spoon Sample attempt; U = Thin Wall Tube Sample; MU = Unsuccessful Thin Wall Tube Sample attempt; V = Insitu Vane Shear Test; MV = Unsuccessful Insitu Vane Shear Test attempt; R = Rock Core Sample; SSA = Solid Stem Auger; HSA = Hollow Stem Auger; RC = Roller Cone; WOH = weight of 140lb. hammer; WOR = weight of rods; WO1P = Weight of one person; S_u = Insitu Field Vane Shear Strength (psf) $S_{u(lab)}$ = Lab Vane Shear Strength (psf); T_v = Pocket Torvane Shear Strength (psf); q_p = Unconfined Compressive Strength (ksf); N-uncorrected = Raw field SPT N-value; Hammer Efficiency Factor = Annual Calibration Value; N_{60} = SPT N-uncorrected corrected for hammer efficiency; N_{60} = (Hammer Efficiency Factor/60%)*N-uncorrected; WC = water content, %; LL = Liquid Limit; PL = Plastic Limit; PI = Plasticity Index; G = Grain Size Analysis; C = Consolidation Test

Sample Information

Sample No.	Pen./Rec. (in.)	Sample Depth (ft.)	Blows (/6 in.) Shear Strength (psf) or RQD (%)	N-uncorrected	N60	Casing Blows
1D	24/9	0.0 - 2.0	3-6-11-9			SPUN
2D	24/0	5.0 - 7.0	10-14-3-12			
3D	5/3	10.5 - 10.9	20/5"			
R1	60/55.2	11.1 - 16.1	RQD = 47%			NQ2

Visual Description and Remarks:

- Medium dense, brown, fine to coarse SAND, some Gravel, trace Silt. -FILL-
- No recovery. Steel fragment in spoon.
- Black, fine to medium SAND and Gravel, trace glass, steel fragment.
- 11.1 (El. -3.9): Moderately hard to hard, fresh to slightly weathered, fine grained, gray SCHIST. Joints are close to moderately spaced, horizontal to high angle, planar, rough, discolored, partially open to tight, occasional infilling. Rock Mass Quality = Poor. Rock Core Times (min/ft): 11.1-12.1 (1), 12.1-13.1 (3), 13.1-14.1 (2.5), 14.1-15.1 (2), 15.1-16.1 (3).
- 16.1 (El. -8.9): Bottom of Exploration at 16.10 feet below ground surface.

Remarks:

Split spoon refusal at 11.1'.

Stratification lines represent approximate boundaries between soil types; transitions may be gradual.
* Water level readings have been made at times and under conditions stated. Groundwater fluctuations may occur due to conditions other than those present at the time measurements were made.

Page 1 of 1 Boring No.: BB-GR-501

Maine Department of Transportation — Soil/Rock Exploration Log — US CUSTOMARY UNITS

Project: Gut Bridge
Location: South Bristol, Maine
Boring No.: BB-GR-502A
PIN: 16750.00

Driller:	Maine Test Boring	Elevation (ft.)	10.3	Auger ID/OD:	2"
Operator:	Brad Enos	Datum:	NAVD 88	Sampler:	Split Spoon
Logged By:	Heidi Rizza	Rig Type:	CME 45	Hammer Wt./Fall:	140/30"
Date Start/Finish:	7/15/13-7/16/13	Drilling Method:	Spun Casing	Core Barrel:	NQ2
Boring Location:	N 375600, E 3113171	Casing ID/OD:	4"	Water Level*:	
Hammer Efficiency Factor: 0.6		Hammer Type:	Automatic ☐ Hydraulic ☐ Rope & Cathead ☒		

Definitions: D = Split Spoon Sample; MD = Unsuccessful Split Spoon Sample attempt; U = Thin Wall Tube Sample; MU = Unsuccessful Thin Wall Tube Sample attempt; V = Insitu Vane Shear Test; MV = Unsuccessful Insitu Vane Shear Test attempt; R = Rock Core Sample; SSA = Solid Stem Auger; HSA = Hollow Stem Auger; RC = Roller Cone; WOH = weight of 140lb. hammer; WOR = weight of rods; WO1P = Weight of one person; S_u = Insitu Field Vane Shear Strength (psf) $S_{u(lab)}$ = Lab Vane Shear Strength (psf); T_v = Pocket Torvane Shear Strength (psf); q_p = Unconfined Compressive Strength (ksf); N-uncorrected = Raw field SPT N-value; Hammer Efficiency Factor = Annual Calibration Value; N_{60} = SPT N-uncorrected corrected for hammer efficiency; N_{60} = (Hammer Efficiency Factor/60%)*N-uncorrected; WC = water content, %; LL = Liquid Limit; PL = Plastic Limit; PI = Plasticity Index; G = Grain Size Analysis; C = Consolidation Test

Sample Information

Sample No.	Pen./Rec. (in.)	Sample Depth (ft.)	Blows (/6 in.) Shear Strength (psf) or RQD (%)	N-uncorrected	N60	Casing Blows
						SPUN
1D	24/12	2.0 - 4.0	3-4-4-2			
2D	24/7	5.0 - 7.0	3-1-3-25			

Visual Description and Remarks:

- 0 – 0.4 (El. 9.9): -PAVEMENT-
- Loose, brown, fine to coarse SAND and Gravel, trace Silt. -FILL-
- Loose, brown, fine to coarse SAND and Gravel, trace Silt. See Remarks.
- 7.0 (El. 3.3): Bottom of Exploration at 7.00 feet below ground surface.

Remarks:

From 0-7', steel fragments coming up persistently in cuttings. Could not spin casing through steel, moved location from side of road to center of travel lane; see BB-GR-502B.

Stratification lines represent approximate boundaries between soil types; transitions may be gradual.
* Water level readings have been made at times and under conditions stated. Groundwater fluctuations may occur due to conditions other than those present at the time measurements were made.

Page 1 of 1 Boring No.: BB-GR-502A

WIN 16750.00

STATE OF MAINE
DEPARTMENT OF TRANSPORTATION

APPROVED	DATE
COMMISSIONER:	
CHIEF ENGINEER:	

STATE OF MAINE ANDREW R. BLAISDELL NO. 10957 LICENSED PROFESSIONAL ENGINEER

SIGNATURE 10957
P.E. NUMBER 01/16/2014
DATE

PROJECT INFORMATION	
PROGRAM	BRIDGE
PROJECT MANAGER	STEPHEN BODGE
DESIGNER	GZA GEOENVIRONMENTAL, INC
CONSULTANT	GZA GEOENVIRONMENTAL, INC
PROJECT RESIDENT	
CONTRACTOR	
PROJECT COMPLETION DATE	

SOUTH BRISTOL GUT BRIDGE

BORING LOGS, SHEET 6 OF 7

Maine Department of Transportation

Soil/Rock Exploration Log
US CUSTOMARY UNITS

Project: Gut Bridge		Boring No.: BB-GR-502B	
Location: South Bristol, Maine		PIN: 16750.00	
Driller: Maine Test Boring	Elevation (ft.): 10.9	Auger ID/OD: 2"	
Operator: Brad Enos	Datum: NAVD 88	Sampler: Split Spoon	
Logged By: Heidi Rizzo	Rig Type: CME 45	Hammer Wt./Fall: 140/30"	
Date Start/Finish: 7/16/13-7/16/13	Drilling Method: Spun Casing	Core Barrel: NQ2	
Boring Location: N 375603, E 3113177	Casing ID/OD: 4"	Water Level*:	
Hammer Efficiency Factor: 0.6	Hammer Type: Automatic ☐ Hydraulic ☐ Rope & Cathead ☒		

Definitions:
D = Split Spoon Sample
MD = Unsuccessful Split Spoon Sample attempt
U = Thin Wall Tube Sample
MU = Unsuccessful Thin Wall Tube Sample attempt
V = Insitu Vane Shear Test
MV = Unsuccessful Insitu Vane Shear Test attempt
R = Rock Core Sample
SSA = Solid Stem Auger
HSA = Hollow Stem Auger
RC = Roller Cone
WOH = weight of 140lb. hammer
WOR = weight of rods
WOW = Weight of one person
S_u = Insitu Field Vane Shear Strength (psf)
$S_{u(lab)}$ = Lab Vane Shear Strength (psf)
T_v = Pocket Torvane Shear Strength (psf)
q_p = Unconfined Compressive Strength (ksf)
N-uncorrected = Raw Field SPT N-value
Hammer Efficiency Factor = Annual Calibration Value
N_{60} = SPT N-uncorrected corrected for hammer efficiency
N_{60} = (Hammer Efficiency Factor/60%)*N-uncorrected
WC = water content, %
LL = Liquid Limit
PL = Plastic Limit
PI = Plasticity Index
G = Grain Size Analysis
C = Consolidation Test

Sample Information

Depth (ft.)	Sample No.	Pen./Rec. (in.)	Sample Depth (ft.)	Blows (/6 in.) Shear Strength (psf) or RQD (%)	N-uncorrected	N_{60}	Casing Blows	Elevation (ft.)	Visual Description and Remarks	Laboratory Testing Results/ AASHTO and Unified Class
							SPLN	10.9	-PAVEMENT- 0.4	
5	1D R1	4/2 4/21	5.0 - 5.3 5.3 - 10.3	50/4"			N22		Very dense, brown, fine to coarse GRAVEL and Sand, with Rock fragments. -FILL- No recovery in core barrel, apparent cobbles/boulders. (Time 9 minutes total run)	
10	2D R2	1/1 57.6/30	10.0 - 10.1 10.1 - 14.9	10/1" RQD = 35%					Gray, GRAVEL, some fine to coarse Sand, trace fines. 10.1-13.5': 13" Boulder recovered.	
-2.6									13.5-14.9': Hard, slightly weathered, fine grained, gray SCHIST. Joints are very close to close, horizontal to moderately dipping, planar, rough, fresh to discolored, partially open to tight. Rock Mass Quality = Poor. Rock Core Times (min/ft): 10.1-11.1 (3), 11.1-12.1 (1), 12.1-13.1 (1), 13.1-14.1 (1.5), 14.1-14.9 (2).	
15	R3	60/57.6	14.9 - 19.9	RQD = 87%					Hard, slightly weathered, fine grained, gray SCHIST. Joints are close to moderately spaced, planar, rough, fresh to discolored, tight. Rock Mass Quality = Good. Rock Core Times (min/ft): 14.9-15.9 (2), 15.9-16.9 (2), 16.9-17.9 (1.5), 17.9-18.9 (1.5), 18.9-19.9 (1.5)	
-9.0									19.9 Bottom of Exploration at 19.90 feet below ground surface.	
20										
25										
30										

Remarks:
RQD for R2 calculated for rock portion only (13.5-14.9').

Stratification lines represent approximate boundaries between soil types, transitions may be gradual.
* water level readings have been made at times and under conditions stated. Groundwater fluctuations may occur due to conditions other than those present at the time measurements were made.

Page 1 of 1
Boring No.: BB-GR-502B

WIN 16750.00

STATE OF MAINE
DEPARTMENT OF TRANSPORTATION

APPROVED — DATE
COMMISSIONER:
CHIEF ENGINEER:

STATE OF MAINE — ANDREW R. BLASDELL — NO. 10957 — LICENSED PROFESSIONAL ENGINEER

SIGNATURE
10957
P.E. NUMBER
01/16/2014
DATE

PROJECT INFORMATION

PROGRAM	BRIDGE
PROJECT MANAGER	STEPHEN BODGE
DESIGNER	GZA GEOENVIRONMENTAL, INC.
CONSULTANT	GZA GEOENVIRONMENTAL, INC.
PROJECT RESIDENT	
CONTRACTOR	
PROJECT COMPLETION DATE	

SOUTH BRISTOL
GUT BRIDGE

BORING LOGS, SHEET 7 OF 7

SHEET NUMBER
15
OF 141

Filename: ...\CADD\00_Geo\Sheet 15.dgn Division: BRIDGE Username: landi Date: 01/16/2014

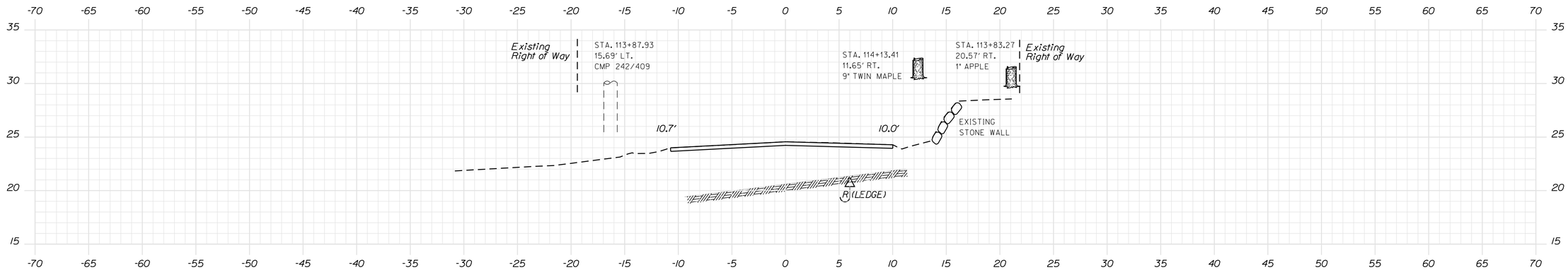

114+00.00
Match Existing

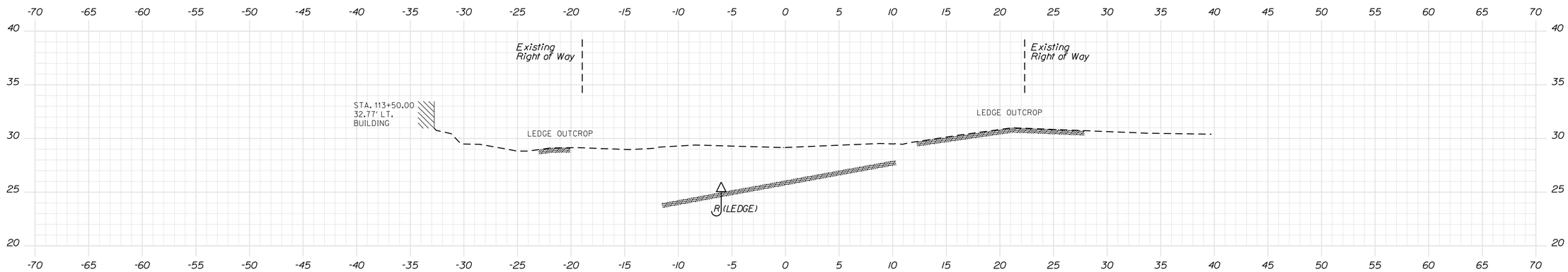

113+50.00

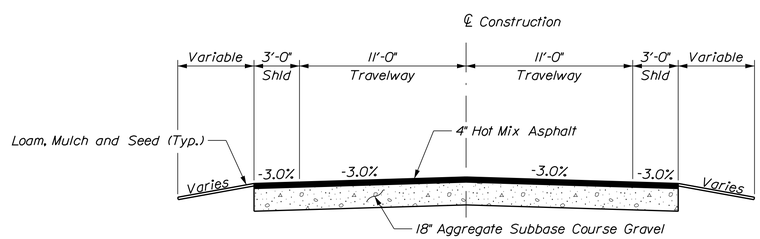

TYPICAL APPROACH SECTION

STATE OF MAINE
DEPARTMENT OF TRANSPORTATION

BH-1675(000)X

PIN 16750.00

BRIDGE PLANS

BRIDGE NO. 2339

PROJ. MANAGER	S. BODGE	BY	DATE
DESIGN-DETAILED	M. WIGHT	MRP/DES	JAN 2014
CHECKED-REVIEWED			
DESIGN2-DETAILED2			
DESIGN3-DETAILED3			
REVISIONS 1			
REVISIONS 2			
REVISIONS 3			
REVISIONS 4			
FIELD CHANGES			

SIGNATURE

P.E. NUMBER

DATE

GUT BRIDGE
THE GUT
SOUTH BRISTOL LINCOLN COUNTY

CROSS SECTIONS

SHEET NUMBER
16
OF 141

Sta. 113+50.00 to Sta. 114+00.00

Filename: ...\016_XSECT_113-50-114+00.dgn Division: BRIDGE Username: common Date:1/29/2014

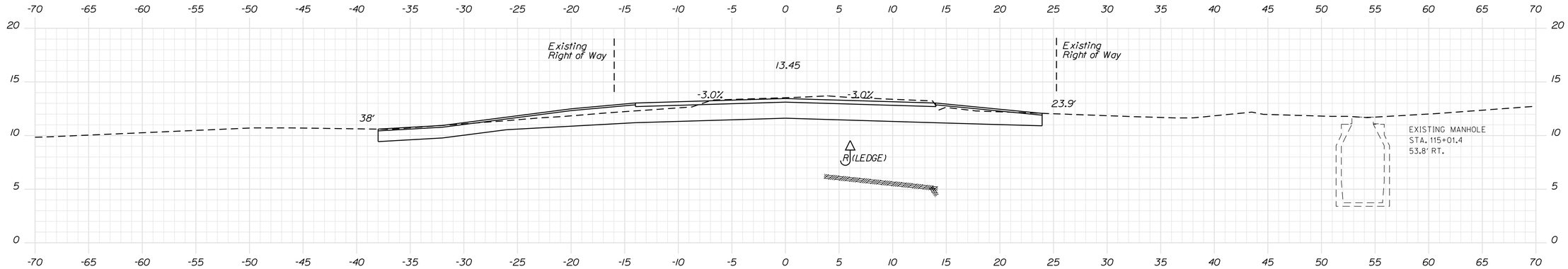

115+00.00

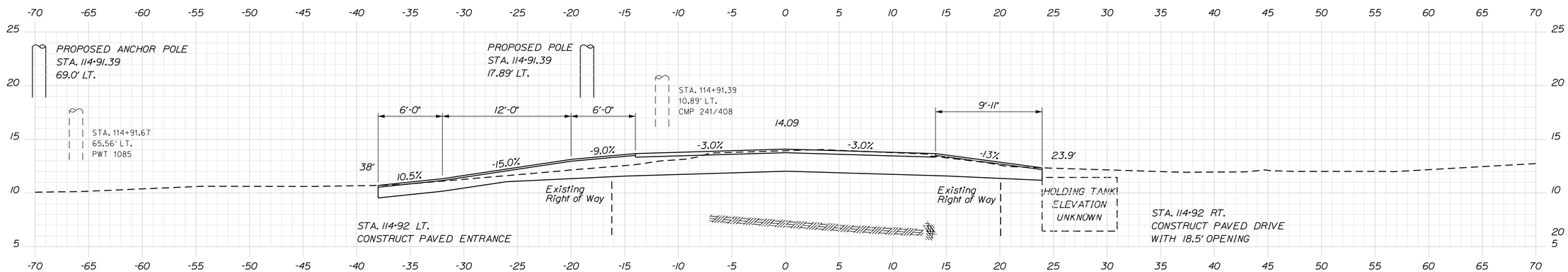

114+92.00

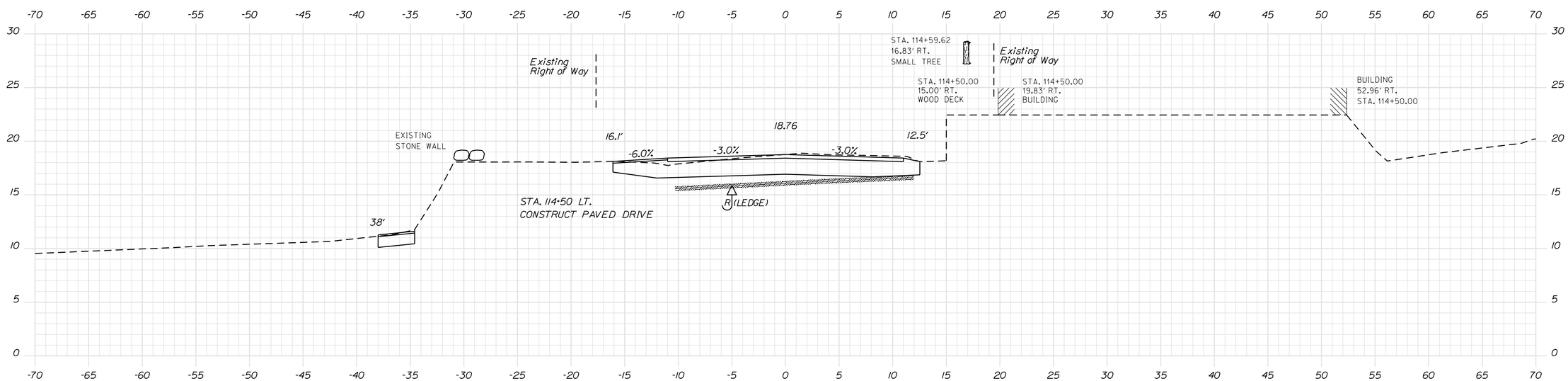

114+50.00
Begin Project

STATE OF MAINE
DEPARTMENT OF TRANSPORTATION

BH-1675(000)X

PIN 16750.00

BRIDGE NO. 2339

BRIDGE PLANS

		BY	DATE
PROJ. MANAGER	S. BOOGE		
DESIGN-DETAILED	M. WIGHT	MRP/DES	JAN 2014
CHECKED-REVIEWED			
DESIGN2-DETAILED2			
DESIGN3-DETAILED3			
REVISIONS 1			
REVISIONS 2			
REVISIONS 3			
REVISIONS 4			
FIELD CHANGES			

SIGNATURE

P.E. NUMBER

DATE

GUT BRIDGE
THE GUT
SOUTH BRISTOL LINCOLN COUNTY

CROSS SECTIONS

SHEET NUMBER
17
OF 141

Sta. 114+50.00 to Sta. 115+00.00

Filename: ...\017_XSECT_114+50-115+00.dgn Division: BRIDGE Username: common Date:1/29/2014

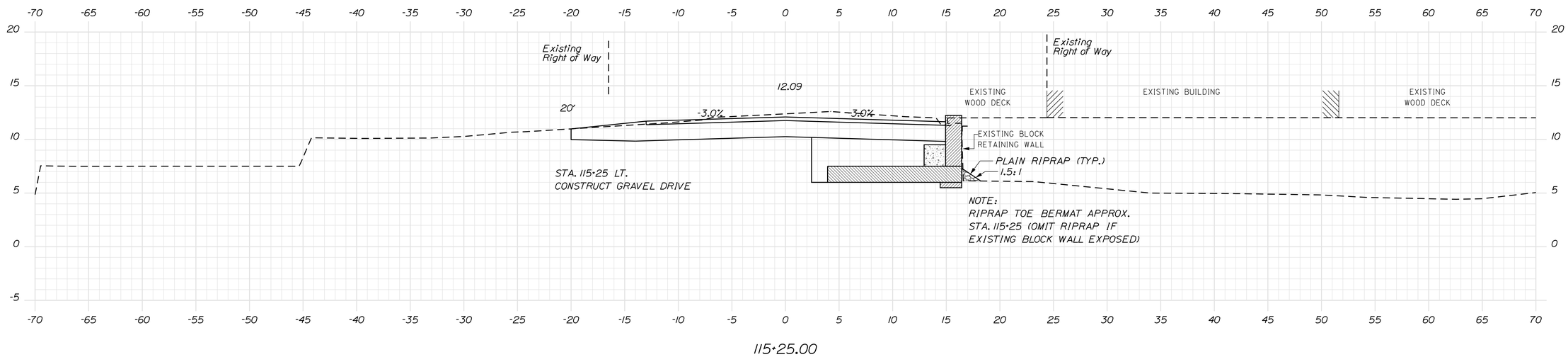

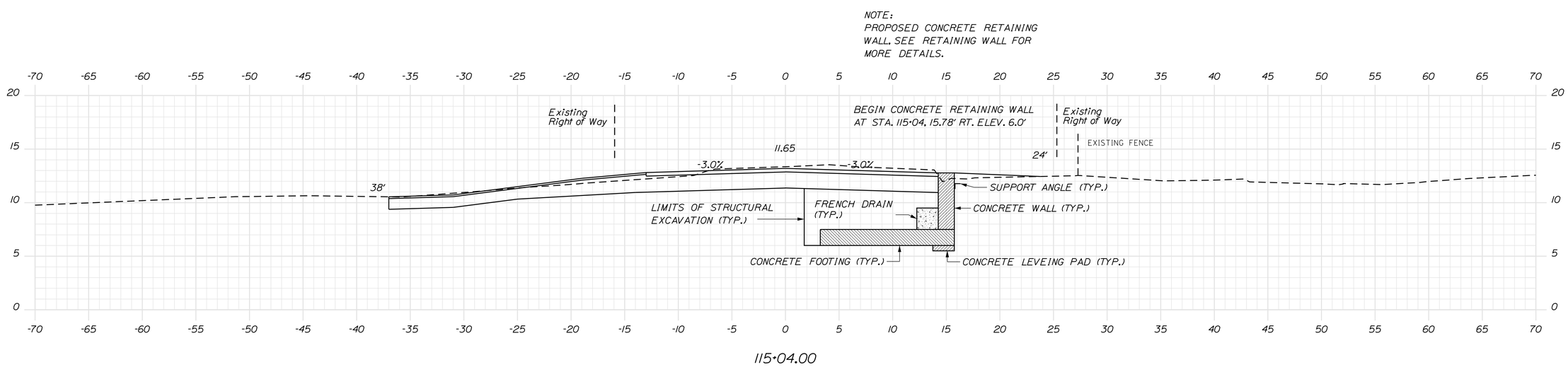

STATE OF MAINE
DEPARTMENT OF TRANSPORTATION

BH-1675(000)X

PIN 16750.00

BRIDGE NO. 2339

BRIDGE PLANS

SIGNATURE

P.E. NUMBER

DATE

PROJ. MANAGER	S. BOOGE	BY	DATE
DESIGN-DETAILED	M. WIGHT	MRP/DES	JAN 2014
CHECKED-REVIEWED			
DESIGN2-DETAILED2			
DESIGN3-DETAILED3			
REVISIONS 1			
REVISIONS 2			
REVISIONS 3			
REVISIONS 4			
FIELD CHANGES			

GUT BRIDGE
THE GUT
SOUTH BRISTOL LINCOLN COUNTY

CROSS SECTIONS

SHEET NUMBER

18

OF 141

Sta. 115+04.00.00 to Sta. 115+25.00

Filename: ...\018_XSECT_115+04-115+25.dgn Division: BRIDGE Username: common Date:1/29/2014

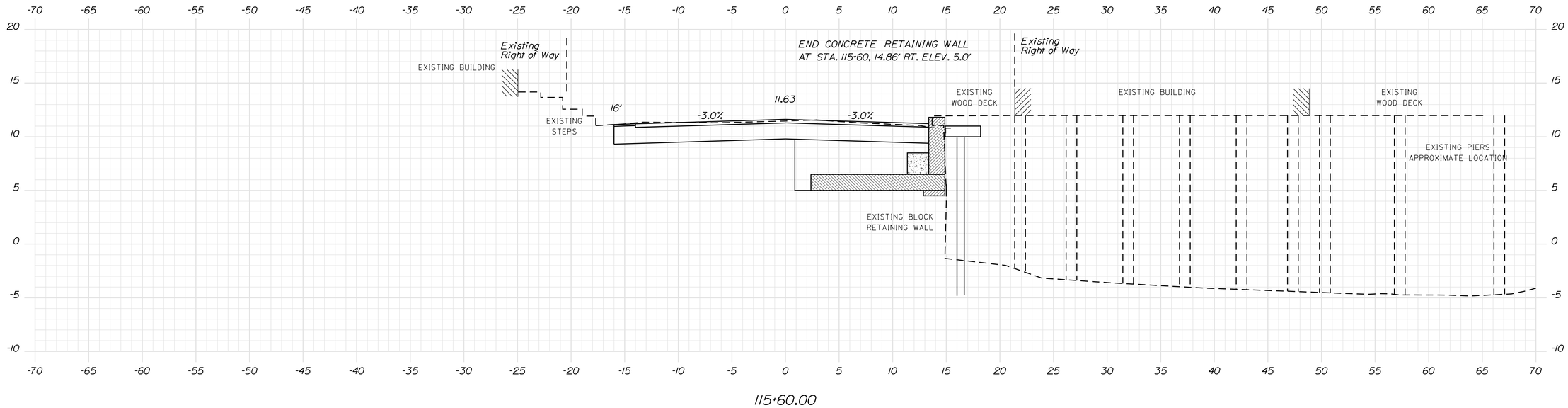

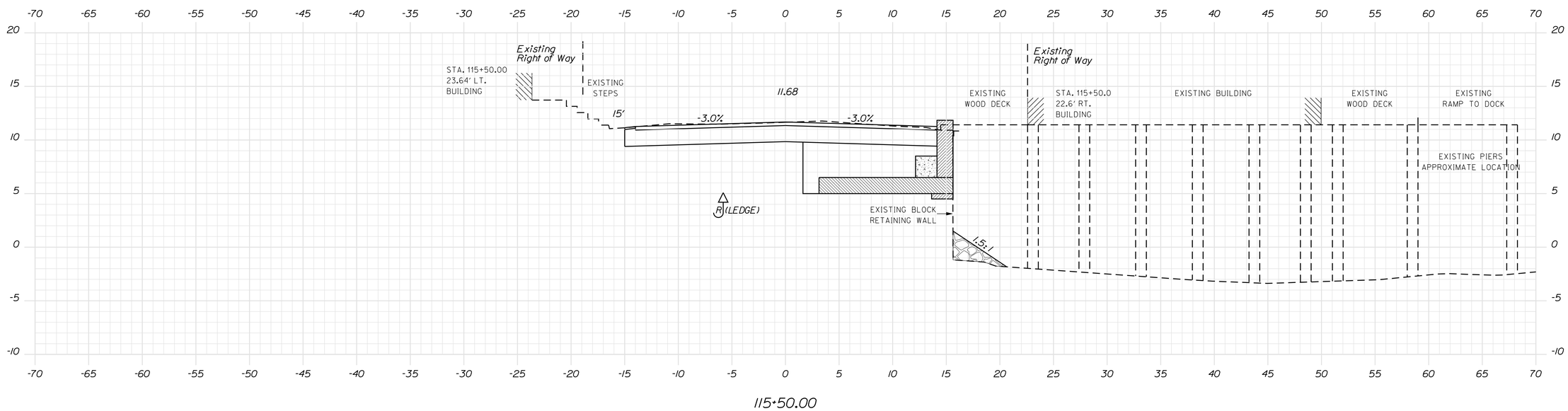

STATE OF MAINE
DEPARTMENT OF TRANSPORTATION

BH-1675(000)X

PIN 16750.00

BRIDGE PLANS

BRIDGE NO. 2339

PROJ. MANAGER	S. BOOGE	BY	DATE
DESIGN-DETAILED	M. WIGHT	MRP/DES	JAN 2014
CHECKED-REVIEWED			
DESIGN2-DETAILED2			
DESIGN3-DETAILED3			
REVISIONS 1			
REVISIONS 2			
REVISIONS 3			
REVISIONS 4			
FIELD CHANGES			

SIGNATURE

P.E. NUMBER

DATE

GUT BRIDGE
THE GUT
SOUTH BRISTOL LINCOLN COUNTY

CROSS SECTIONS

SHEET NUMBER

19

OF 141

Sta. 115+50.00 to Sta. 115+60.00

Filename: ...\019_XSECT_115+50-115+60.dgn Division: BRIDGE Username: common Date:1/29/2014

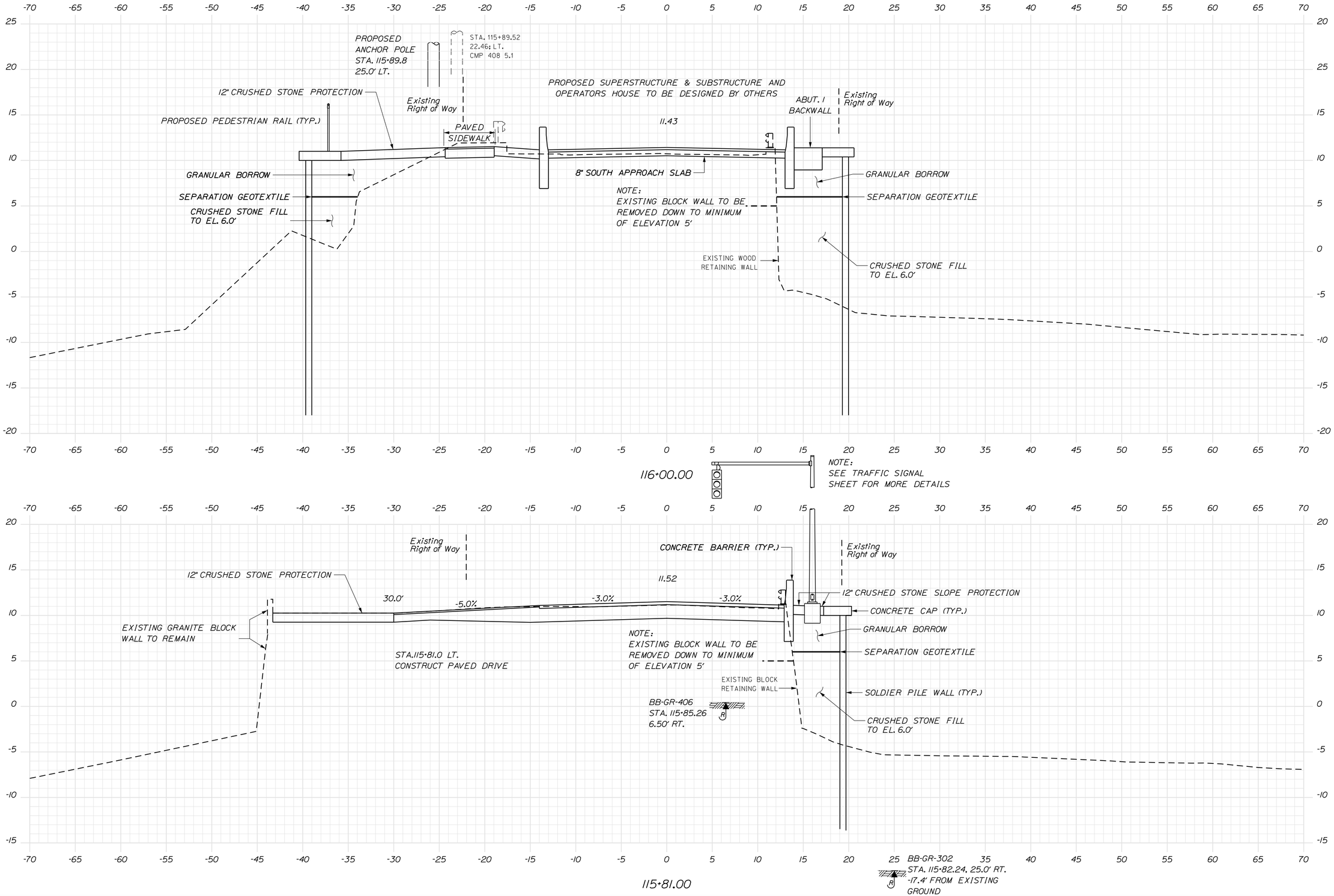

STATE OF MAINE
DEPARTMENT OF TRANSPORTATION

BH-1675(000)X

PIN 16750.00

BRIDGE PLANS

BRIDGE NO. 2339

PROJ. MANAGER	S. BOOGE	BY	DATE
DESIGN-DETAILED	M. WIGHT	MRP/DES	JAN 2014
CHECKED-REVIEWED			
DESIGN2-DETAILED2			
DESIGN3-DETAILED3			
REVISIONS 1			
REVISIONS 2			
REVISIONS 3			
REVISIONS 4			
FIELD CHANGES			

SIGNATURE

P.E. NUMBER

DATE

GUT BRIDGE
THE GUT
SOUTH BRISTOL LINCOLN COUNTY

CROSS SECTIONS

SHEET NUMBER
20
OF 141

Sta. 115+81.00 to Sta. 116+00.00

Filename: ...\020_XSECT_115+81_116+00.dgn Division: BRIDGE Username: common Date:1/29/2014

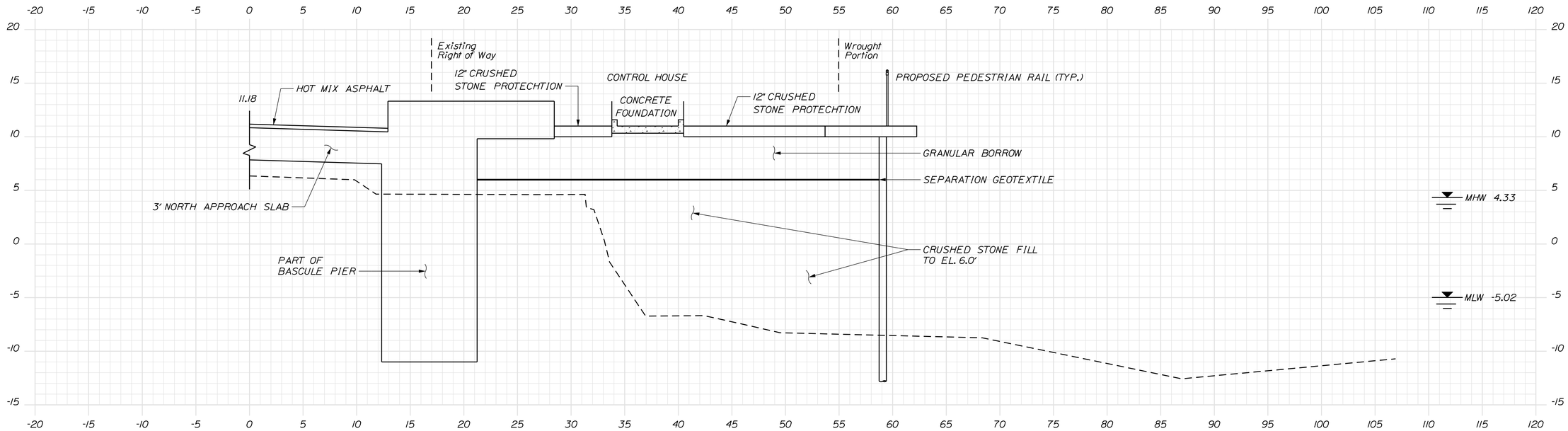

116+50.00 RT.

Sta. 116+52.9±, 55.7± Ft. Rt. to Sta. 116+57.3±, 67.3± Ft. Rt.
Install 12.5 L.F. of Type 3C Guardrail with a Terminal End on each end

Sta. 116+58.3±, 69.6± Ft. Rt. to Sta. 116+93.4±, 82.6± Ft. Rt.
Install 37.5 L.F. of Type 3C Guardrail with a Terminal End on each end

Sta. 116+94.6±, 81.0± Ft. Rt. to Sta. 117+19.1±, 49.5± Ft. Rt.
Install 40.625 L.F. of Type 3C Guardrail with a Terminal End on each end

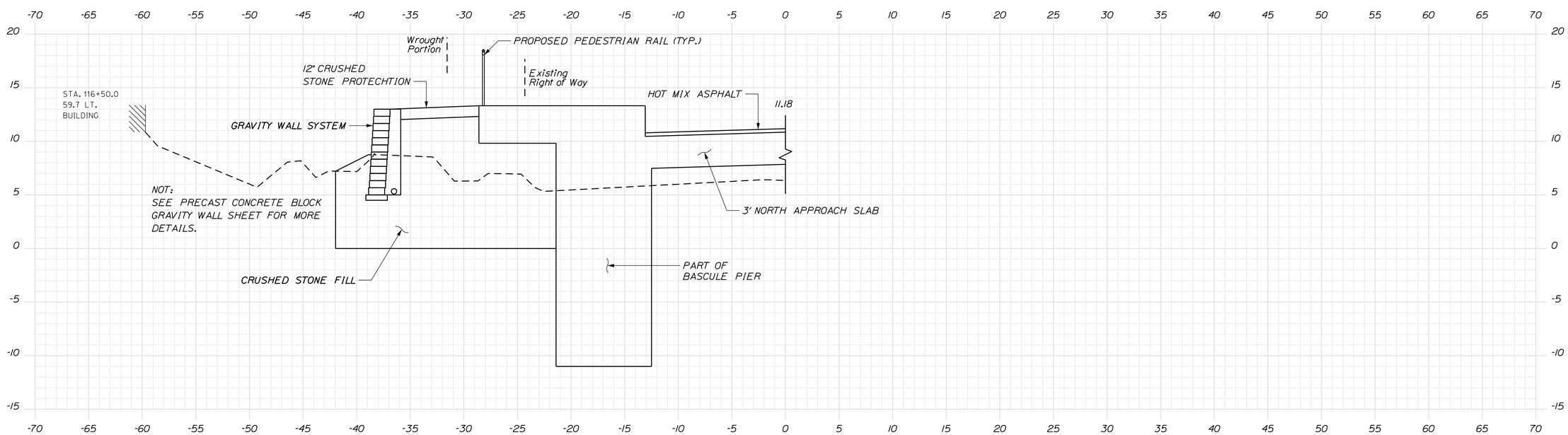

116+50.00 LT.

STATE OF MAINE
DEPARTMENT OF TRANSPORTATION

BH-1675(000)X

PIN 16750.00

BRIDGE NO. 2339

BRIDGE PLANS

PROJ. MANAGER	S. BOOGE	BY	DATE
DESIGN-DETAILED	M. WIGHT	MRP/DES	JAN 2014
CHECKED-REVIEWED			
DESIGN2-DETAILED2			
DESIGN3-DETAILED3			
REVISIONS 1			
REVISIONS 2			
REVISIONS 3			
REVISIONS 4			
FIELD CHANGES			

SIGNATURE

P.E. NUMBER

DATE

GUT BRIDGE
THE GUT
SOUTH BRISTOL LINCOLN COUNTY

CROSS SECTIONS

SHEET NUMBER
21
OF 141

Sta. 116+50.00

Filename: ...\021_XSECT_116+50 LT_116+50 RT.dgn Division: BRIDGE Username: common Date:1/29/2014

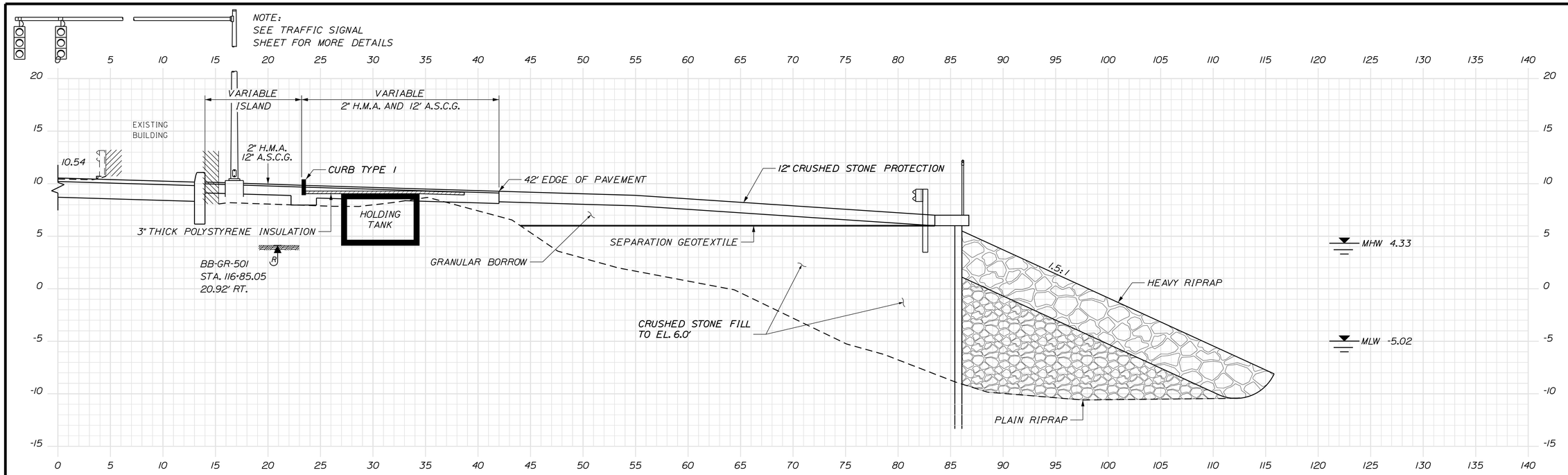

116+90.00 RT.

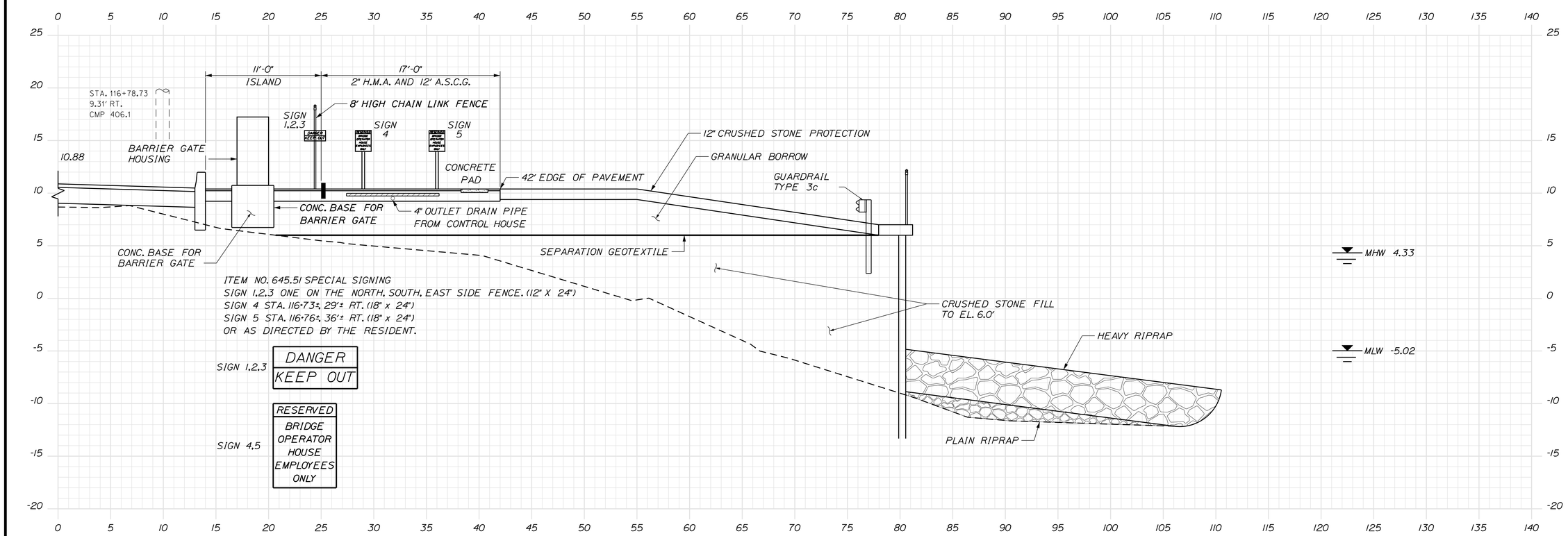

116+75.00 RT.

STATE OF MAINE
DEPARTMENT OF TRANSPORTATION

BH-1675(000)X

PIN
16750.00

BRIDGE NO. 2339

BRIDGE PLANS

PROJ. MANAGER	S. BOOGE	BY	DATE
DESIGN-DETAILED	M. WIGHT	MRP/DES	JAN 2014
CHECKED-REVIEWED			
DESIGN2-DETAILED2			
DESIGN3-DETAILED3			
REVISIONS 1			
REVISIONS 2			
REVISIONS 3			
REVISIONS 4			
FIELD CHANGES			

SIGNATURE

P.E. NUMBER

DATE

GUT BRIDGE
THE GUT
SOUTH BRISTOL LINCOLN COUNTY

CROSS SECTIONS

SHEET NUMBER
22
OF 141

Sta. 116+75 RT. to Sta. 116+90 RT.

Date:1/29/2014 Username: common Division: BRIDGE Filename: ...\40_Hwy\022_XSECT_116+75 RT.dgn

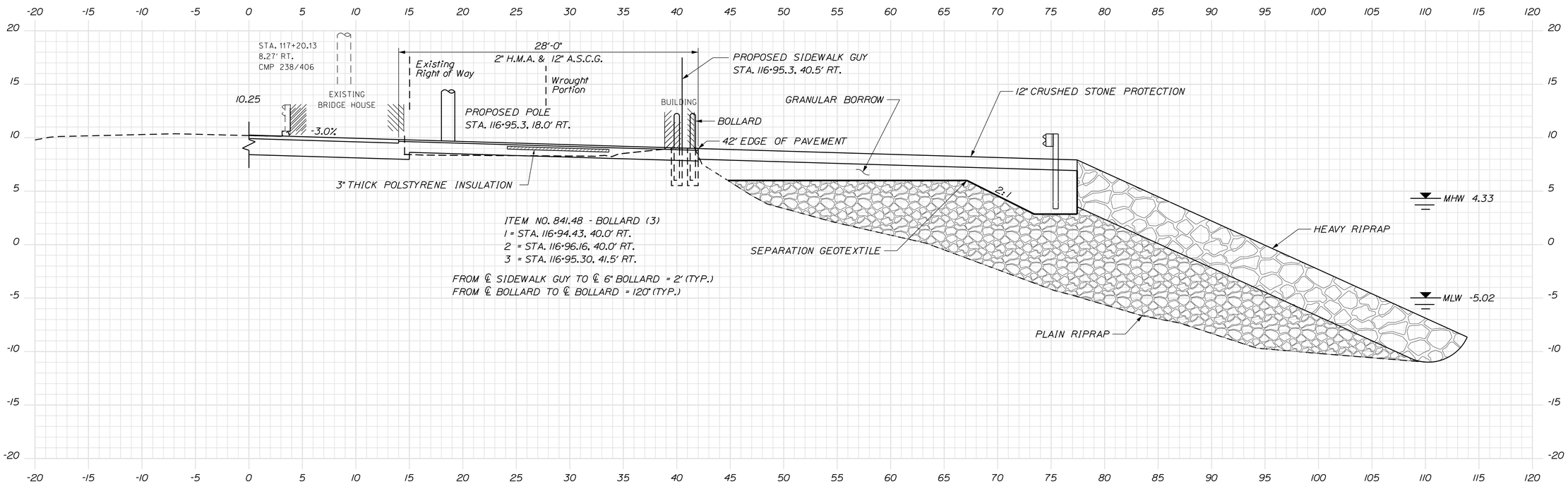

117+00.00 RT

Sta. 117+20.5±, 46.6±Ft. Rt. to Sta. 117+21.0±, 43.5± Ft. Rt.
Install 3.125 L.F. of Type 3C Guardrail with Terminal End at the beginning
Sta. 117+21.0±, 43.5± Ft. Rt. to Sta. 117+29.1±, 35.5± Ft. Rt.
Install 12.5 L.F. of Type 3C Guardrail with 10 Ft. Radius
Sta. 117+29.1±, 35.5± Ft. Rt. to Sta. 117+35.1±, 34.8± Ft. Rt.
Install 6.25 L.F. of Type 3C Guardrail with a Terminal End at the end

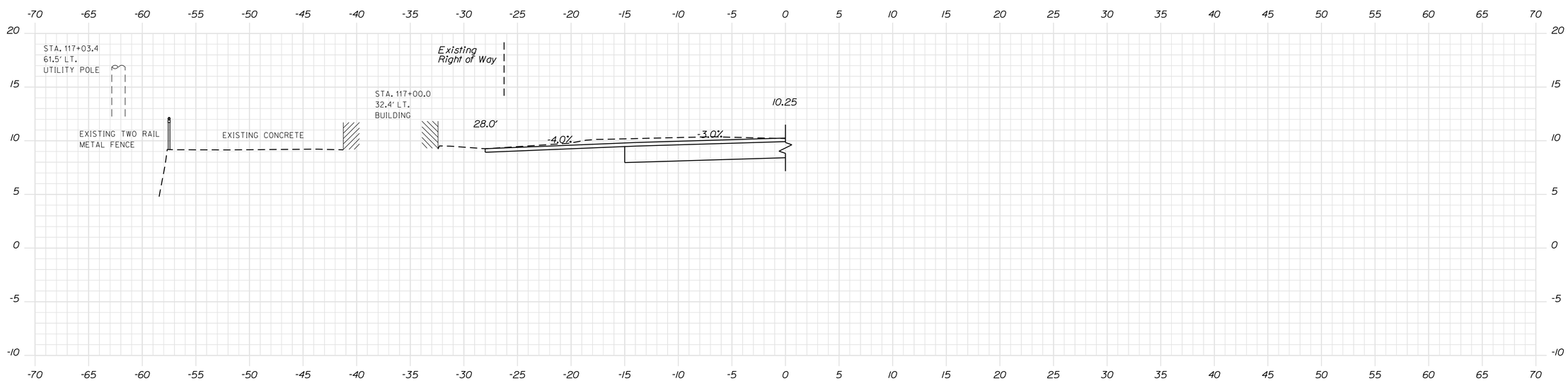

117+00.00 LT.

STATE OF MAINE
DEPARTMENT OF TRANSPORTATION

BH-1675(000)X

PIN 16750.00

BRIDGE NO. 2339

BRIDGE PLANS

PROJ. MANAGER	S. BOOGE	BY	DATE
DESIGN-DETAILED	M. WIGHT	MRP/DES	JAN. 2014
CHECKED-REVIEWED			
DESIGN2-DETAILED2			
DESIGN3-DETAILED3			
REVISIONS 1			
REVISIONS 2			
REVISIONS 3			
REVISIONS 4			
FIELD CHANGES			

SIGNATURE

P.E. NUMBER

DATE

GUT BRIDGE
THE GUT
SOUTH BRISTOL LINCOLN COUNTY

CROSS SECTIONS

SHEET NUMBER
23
OF 141

Sta. 117+00.00

Filename: ...\023_XSECT-117-00 LT_117-00 RT.dgnDivision: BRIDGE Username: common Date:1/29/2014

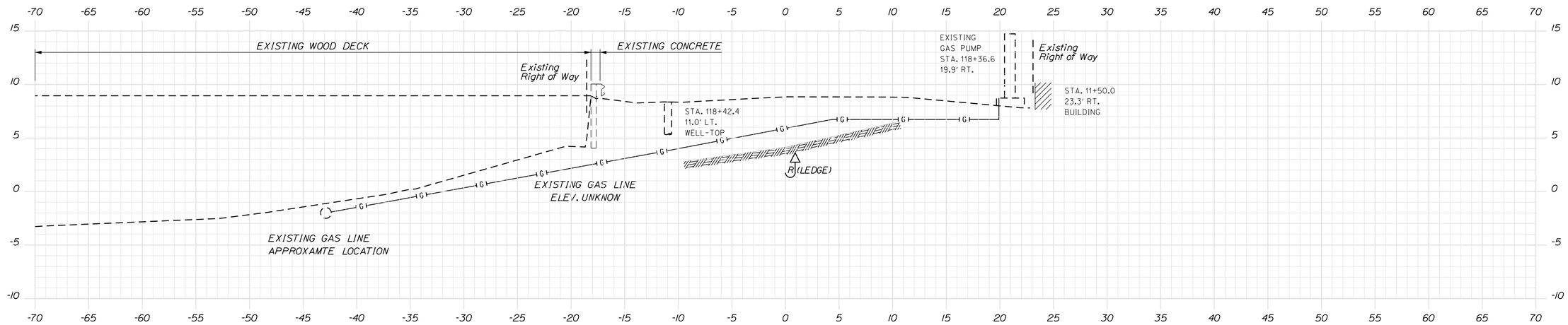

118+50.00

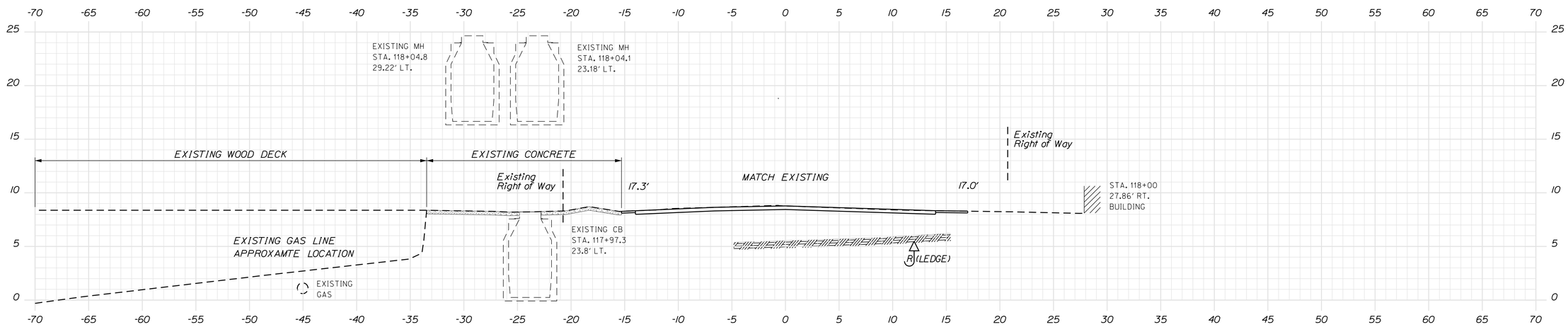

118+00.00
MATCH EXISTING

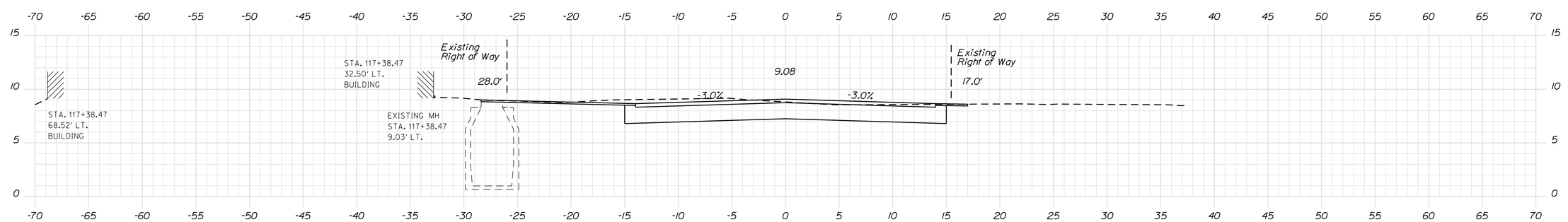

117+50.00
END PROJECT

STATE OF MAINE
DEPARTMENT OF TRANSPORTATION

BH-1675(000)X

PIN 16750.00

BRIDGE PLANS

BRIDGE NO. 2339

PROJ. MANAGER	S. BODGE	BY	DATE
DESIGN-DETAILED	M. WIGHT	MRP/DES	JAN 2014
CHECKED-REVIEWED			
DESIGN2-DETAILED2			
DESIGN3-DETAILED3			
REVISIONS 1			
REVISIONS 2			
REVISIONS 3			
REVISIONS 4			
FIELD CHANGES			

SIGNATURE

P.E. NUMBER

DATE

GUT BRIDGE
THE GUT
SOUTH BRISTOL LINCOLN COUNTY

CROSS SECTIONS

SHEET NUMBER
24
OF 141

Sta. 117+50.00 to Sta. 118+50.00

Filename: ...\024_XSECT-117+50_118+50.dgn Division: BRIDGE Username: common Date:1/29/2014

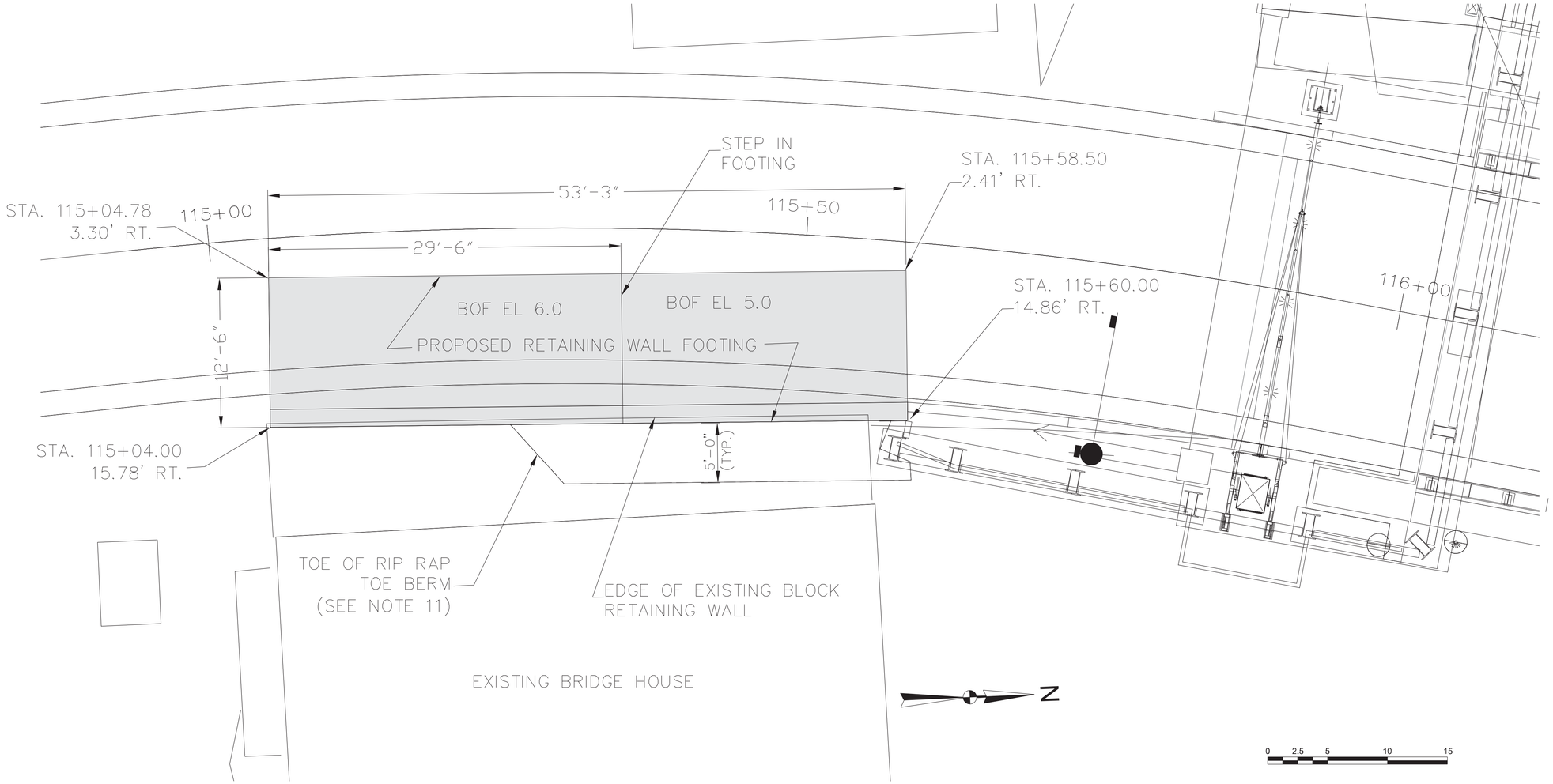

NOTES:

1) BASE MAP DEVELOPED FROM ELECTRONIC FILES PROVIDED BY HARDESTY & HANOVER ON OCTOBER 28, 2013 (FILES INCLUDED 032_BRIDGE_PLAN.DGN, TOPO.DGN, ALIGNMENTS.DGN, SUPERSTRUCTURE.DGN, SUBSTRUCTURE.DGN, Z_HIGHWAY_ROUTE 129.DGN AND BULKHEAD WALL PLAN.DGN).

2) THE CONTRACTOR SHALL COMPLETE THE WORK IN A MANNER THAT DOES NOT DISTURB OR DAMAGE THE EXISTING DRY-LAID BLOCK RETAINING WALL LOCATED BENEATH THE NEW CONCRETE RETAINING WALL.

3) THE CONTRACTOR SHALL CONSTRUCT A CONCRETE CLOSURE POUR FOR THE TRANSITION FROM THE CONCRETE RETAINING WALL TO THE BRIDGE ABUTMENT. THE BEARING SURFACE FOR THE CLOSURE POUR SHALL CONSIST OF BEDROCK SIMILAR TO THE BEARING SURFACE FOR THE LAGGING.

4) REINFORCING STEEL SHALL HAVE 4 INCHES COVER IN THE WALLS AND 4 INCHES COVER IN THE FOOTINGS UNLESS OTHERWISE NOTED.

5) RETAINING WALL SHALL BE BACKFILLED WITH GRANULAR BORROW FOR UNDERWATER BACKFILL (MAINE DOT 703.19).

6) A CONCRETE LEVELING PAD SHALL BE PLACED AS NEEDED ALONG THE TOP OF THE EXISTING BLOCK WALL AND PROPOSED HEEL AREA TO FILL VOIDS.

7) CHAMFER EXPOSED CONCRETE EDGES ¾ IN. BY ¾ IN.

8) PLACE 4 INCH DIAMETER WEEP HOLES IN RETAINING WALL AT 10 FEET MAXIMUM SPACING. EXACT LOCATION TO BE DETERMINED BY THE RESIDENT IN THE FIELD.

9) CONSTRUCT FRENCH DRAINS BEHIND THE RETAINING WALL IN ACCORDANCE WITH STANDARD SPECIFICATION SECTION 512, FRENCH DRAINS, EXCEPT STONE FOR FRENCH DRAINS (SECTION 703.24) SHALL BE REPLACED WITH TYPE C UNDERDRAIN BACKFILL MATERIAL (SECTION 703.22)

10) WALL SHALL BE CONSTRUCTED WITH TOP OF WALL FLUSH WITH THE PAVEMENT AT THE SOUTH END (El. 12.77), TRANSITIONING TO 7" ABOVE FINISH GRADE AT STA. 115+14.5 TO THE NORTH END OF THE WALL (El. 11.81).

11) RIP RAP TOE BERM SHALL EXTEND 5 FEET FROM FACE OF PROPOSED RETAINING WALL WHERE EXISTING STONE RETAINING WALL IS EXPOSED BELOW.

12) REPOINT EXISTING STONE BLOCK RETAINING WALL AS DIRECTED BY THE RESIDENT. COST OF REPOINTING WILL BE CONSIDERED INCIDENTAL TO RELATED PAY ITEMS.

STATE OF MAINE
DEPARTMENT OF TRANSPORTATION

APPROVED | DATE

COMMISSIONER:

CHIEF ENGINEER:

STATE OF MAINE
ANDREW R. BLAISDELL
NO. 10957
PROFESSIONAL ENGINEER

SIGNATURE

10957
P.E. NUMBER

01/29/14
DATE

PROJECT INFORMATION

PROGRAM	BRIDGE
PROJECT MANAGER	STEPHEN BODGE
DESIGNER	GZA GEOENVIRONMENTAL, INC.
CONSULTANT	GZA GEOENVIRONMENTAL, INC.
PROJECT RESIDENT	
CONTRACTOR	
PROJECT COMPLETION DATE	

WIN 16750.00

SOUTH BRISTOL GUT BRIDGE

RETAINING WALL

SHEET NUMBER

25

OF 141

Filename: ...\CADD\00_Geo\Sheet 25.dgn Division: BRIDGE Username: landi Date: 01/29/2014

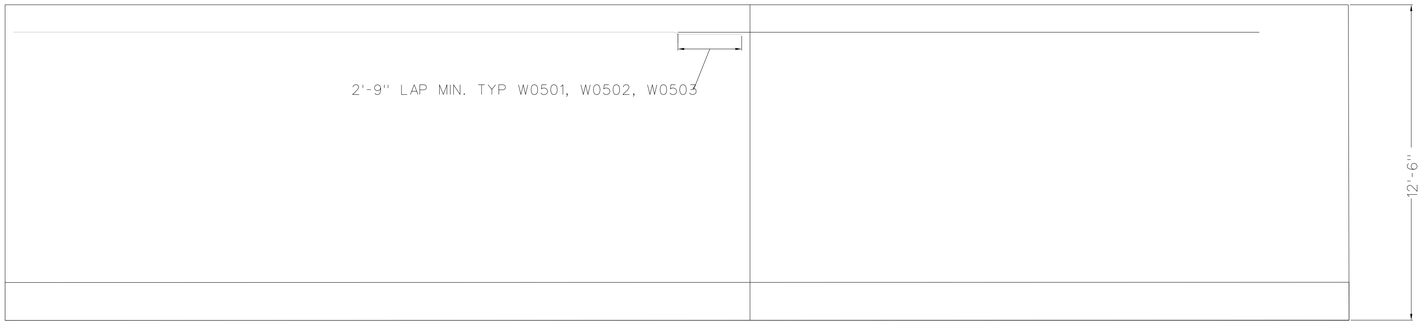

RETAINING WALL-PLAN

0 1.5 3 6 9
SCALE IN FEET

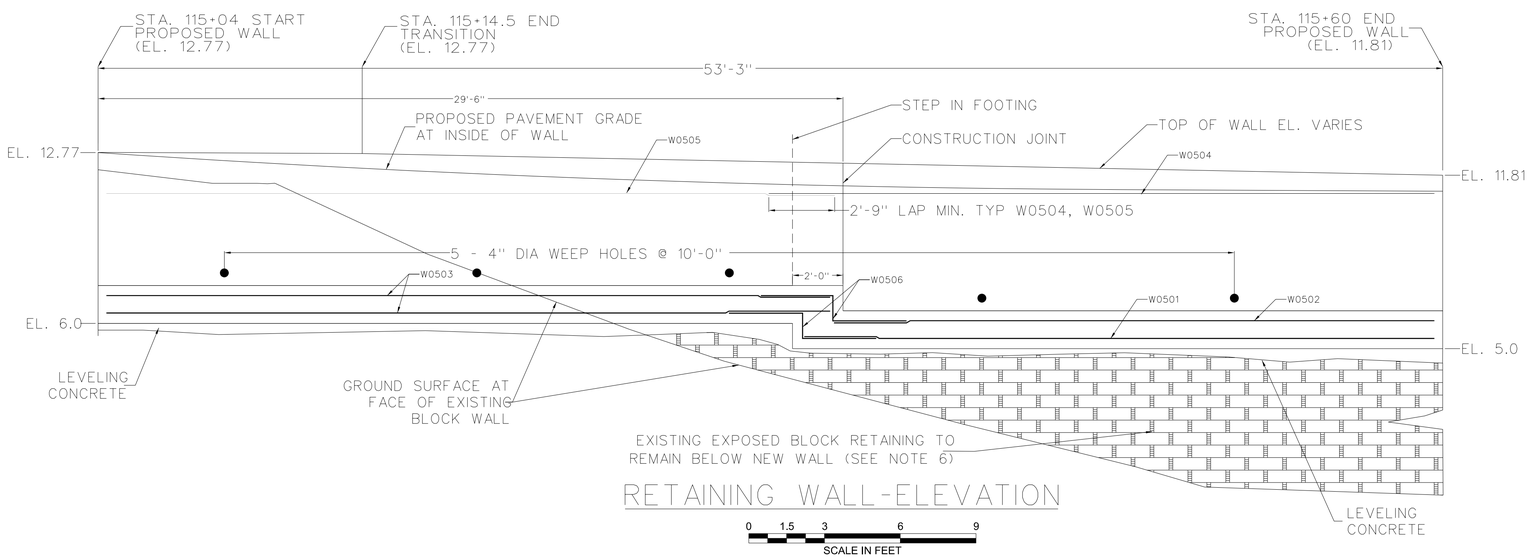

RETAINING WALL-ELEVATION

0 1.5 3 6 9
SCALE IN FEET

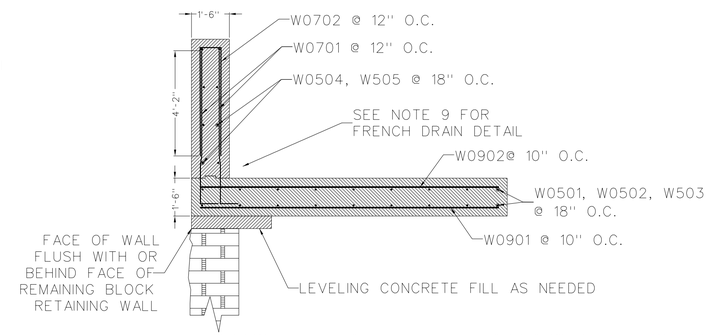

RETAINING WALL SECTION (TYP)

0 1.5 3 6 9
SCALE IN FEET

STRAIGHT BARS				BENT BARS														
MARK	QTY.	LENGTH	LOCATION	MARK	QTY.	LENGTH	TYPE	A	B	C	D	E	F	G	H	O	R	LOCATION
W0501	9	25'-1"	TRANSVERSE BASE	W0701	108	7'-0"	L	6'3"	11"									LONGITUDINAL STEM
W0502	9	23'-9"	TRANSVERSE BASE	W0702	81	9'-4"	CF		4'-2"	10"	4'-2"				0			TOP STEM
W0503	18	28'-10"	TRANSVERSE BASE	W0506	18	6'-10"	T	2'-11"	1'-0"	2'-11"								BASE STEP
W0504	8	26'-8"	TRANSVERSE STEM															
W0505	8	28'-10"	TRANSVERSE STEM															
W0901	66	11'-10"	LONGITUDINAL BASE BOTTOM															
W0902	64	11'-10"	LONGITUDINAL BASE TOP															

REINFORCING SCHEDULE

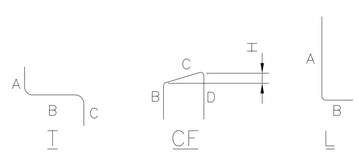

REINFORCING DETAILS

NOTES:

1) VERTICAL BARS IN STEM TO BE FIELD TRIMMED FOR SHORTER WALL HEIGHTS TO MAINTAIN MIN 4" COVER.

2) ALL DIMENSIONS OF REINFORCING BAR SCHEDULE ARE OUT-TO-OUT OF BAR.

3) BENDING DETAILS AND HOOKS SHALL CONFORM TO THE RECOMMENDATIONS OF THE CURRENT REVISION OF ACI STANDARD 315 AND ACI STANDARD 318.

4) REINFORCING BAR: ASTM A615/A615M, GRADE 60.

5) THE FIRST TWO DIGITS FOLLOWING THE LETTER(S) OF THE MARK INDICATE THE SIZE OF THE BAR:

MARK "W0503 = BAR SIZE #5
MARK "W0703 = BAR SIZE #7
MARK "W0901 = BAR SIZE #9

6) LIMITS OF EXISTING BLOCK WALL ARE SHOWN FOR EXPOSED WALL ONLY, ACTUAL LIMITS OF BLOCK WALL BELOW EXISTING GROUND SURFACE ARE UNKNOWN.

7) ADDITIONAL W0702 BARS SHOULD BE INSTALLED AT 6 INCHES ON CENTER EXTENDING 18 INCHES IN EACH DIRECTION FROM CENTER LINE OF GUARDRAIL POST LOCATIONS FOR GUARDRAIL POST ANCHORING. GUARDRAIL LOCATIONS AND ANCHOR DETAILS TO BE DETERMINED BY OTHERS. QUANTITIES ASSUME POSTS AT 8 FT ON CENTER.

WIN 16750.00

STATE OF MAINE
DEPARTMENT OF TRANSPORTATION
APPROVED
DATE
COMMISSIONER:
CHIEF ENGINEER:

STATE OF MAINE ANDREW B. BLASDELL NO. 10957 LICENSED PROFESSIONAL ENGINEER

SIGNATURE
P.E. NUMBER 10957
DATE

PROJECT INFORMATION

PROGRAM	BRIDGE
PROJECT MANAGER	STEPHEN BODGE
DESIGNER	GZA GEOENVIRONMENTAL, INC.
CONSULTANT	GZA GEOENVIRONMENTAL, INC.
PROJECT RESIDENT	
CONTRACTOR	
PROJECT COMPLETION DATE	

SOUTH BRISTOL
GUT BRIDGE

RETAINING WALL

SHEET NUMBER
26
OF 141

Filename: ...\CADD\00_Geo\Sheet 26.dgn Division: BRIDGE Username: landi Date: 01/16/2014

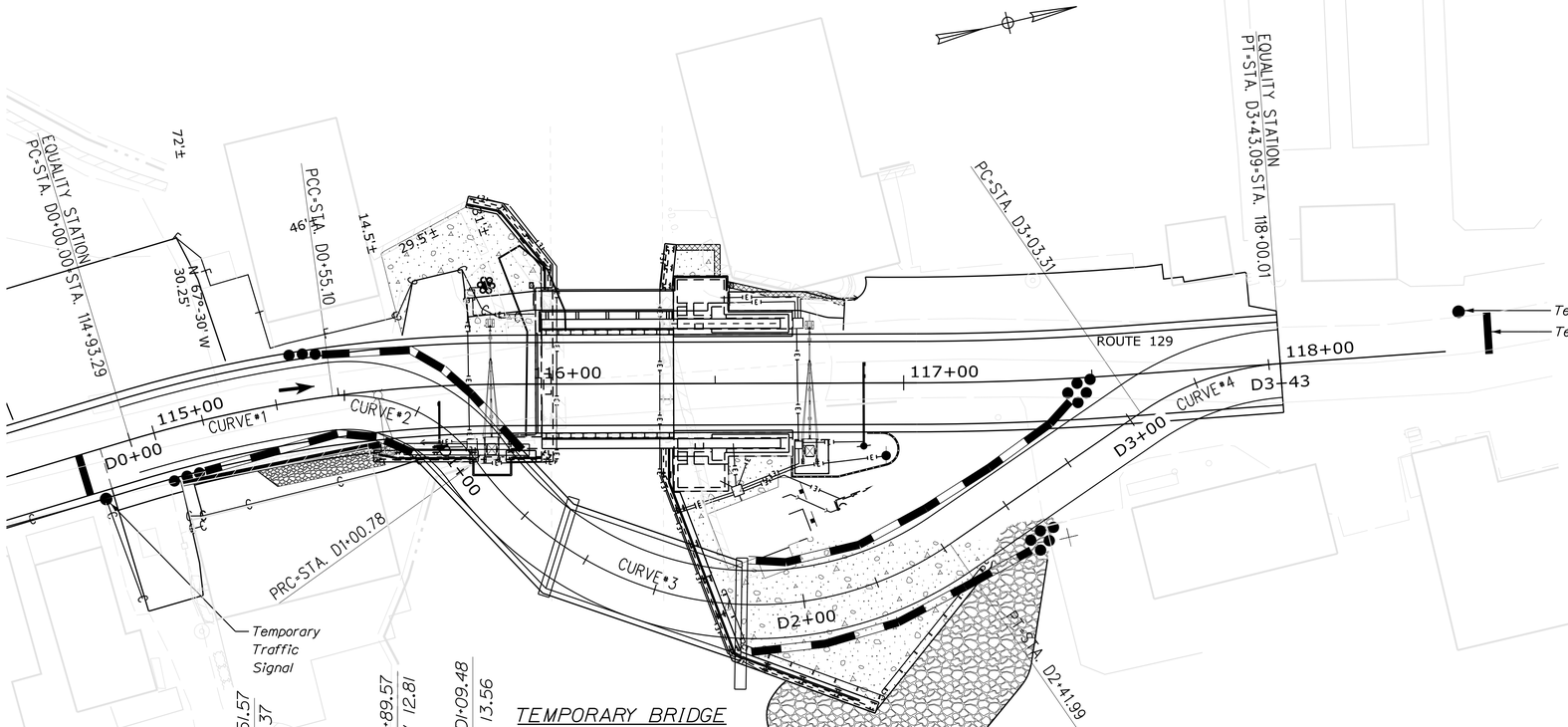

CURVE DATA #1
PI = 0+27.61
D = 16°22'12.80"
Δ = 9°01'12.09" Rt.
R = 350.00'
L = 55.10'
T = 27.607'
E = 1.087'

CURVE DATA #2
PI = 0+80.50
D = 136°25'06.68"
Δ = 62°19'03.64" Rt.
R = 42.00'
L = 45.681'
T = 25.395'
E = 7.081'

CURVE DATA #3
PI = 1+90.06
D = 62°57'44.62"
Δ = 88°54'28.82" Lt.
R = 91.00'
L = 141.208'
T = 89.282'
E = 36.484'

CURVE DATA #4
PI = 3+23.68
D = 76°23'39.74"
Δ = 30°23'10.41" Rt.
R = 75.00'
L = 39.775'
T = 20.367'
E = 2.716'

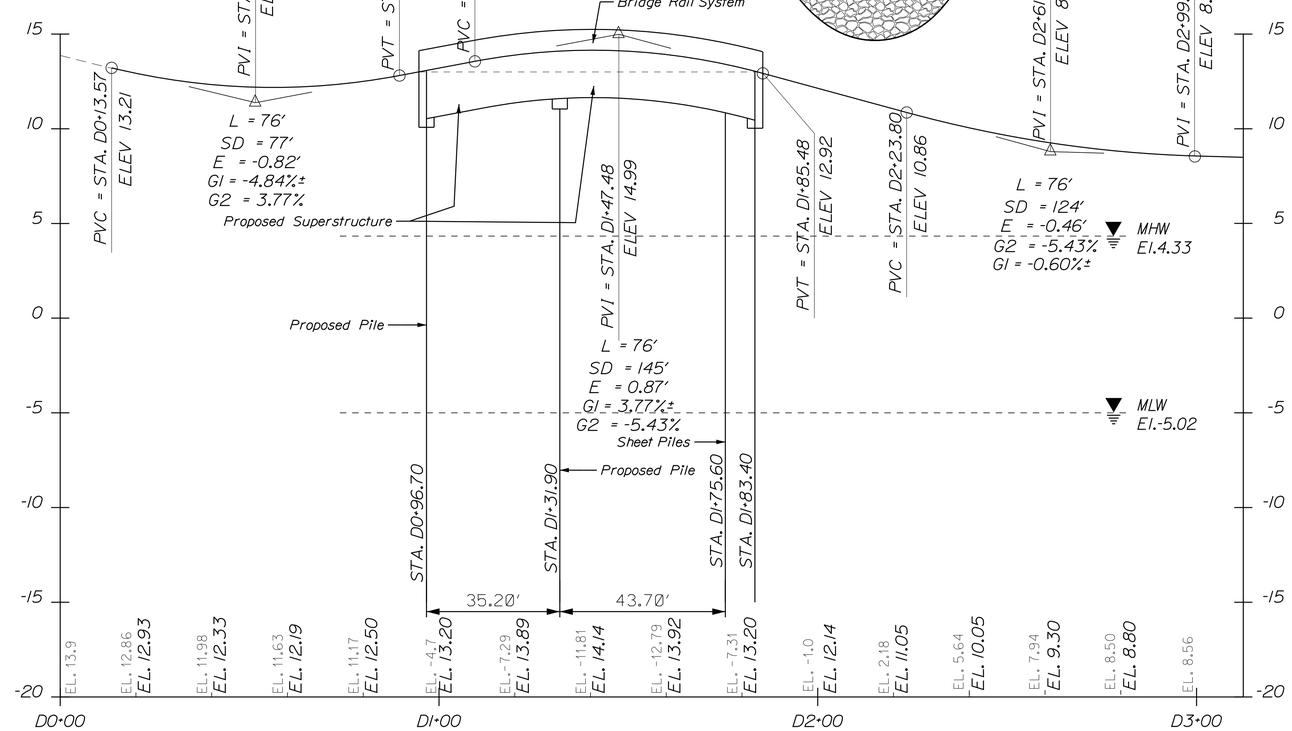

TEMPORARY BRIDGE PROFILE

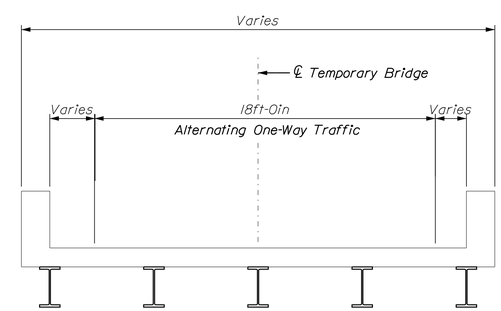

TYPICAL TEMPORARY BRIDGE CROSS SECTION

1'0 4' 8'
1/4" = 1'-0"

NOTES:

1. Temporary Traffic Signals for Stages 1, 2 and 2 shall be set according to MUTCD Part 4 "Highway Traffic Signals" Chapter 4G and Section 4D.20.

2. The structural design of the temporary detour is the responsibility of the Contractor. The profile shown is for illustrative purposes only.

3. Provide drainage pockets (openings) in temporary concrete barrier from Sta. D0+50 to Sta. D0+70

STATE OF MAINE
DEPARTMENT OF TRANSPORTATION

APPROVED | DATE
COMMISSIONER:
CHIEF ENGINEER:

PROJECT INFORMATION		SIGNATURE
PROGRAM	BRIDGE	
PROJECT MANAGER	STEPHEN BODGE	
DESIGNER	HARDESTY & HANOVER	13196
CONSULTANT	HARDESTY & HANOVER	P.E. NUMBER
PROJECT RESIDENT		
CONTRACTOR		DATE
PROJECT COMPLETION DATE		

SOUTH BRISTOL
GUT BRIDGE

TEMPORARY BRIDGE DETAILS

SHEET NUMBER
27
OF 141

Filename: ...\027_TEMPORARY_BRIDGE_PLAN _AND_PROFILE.dgn Division: BRIDGE Username: common Date:1/29/2014

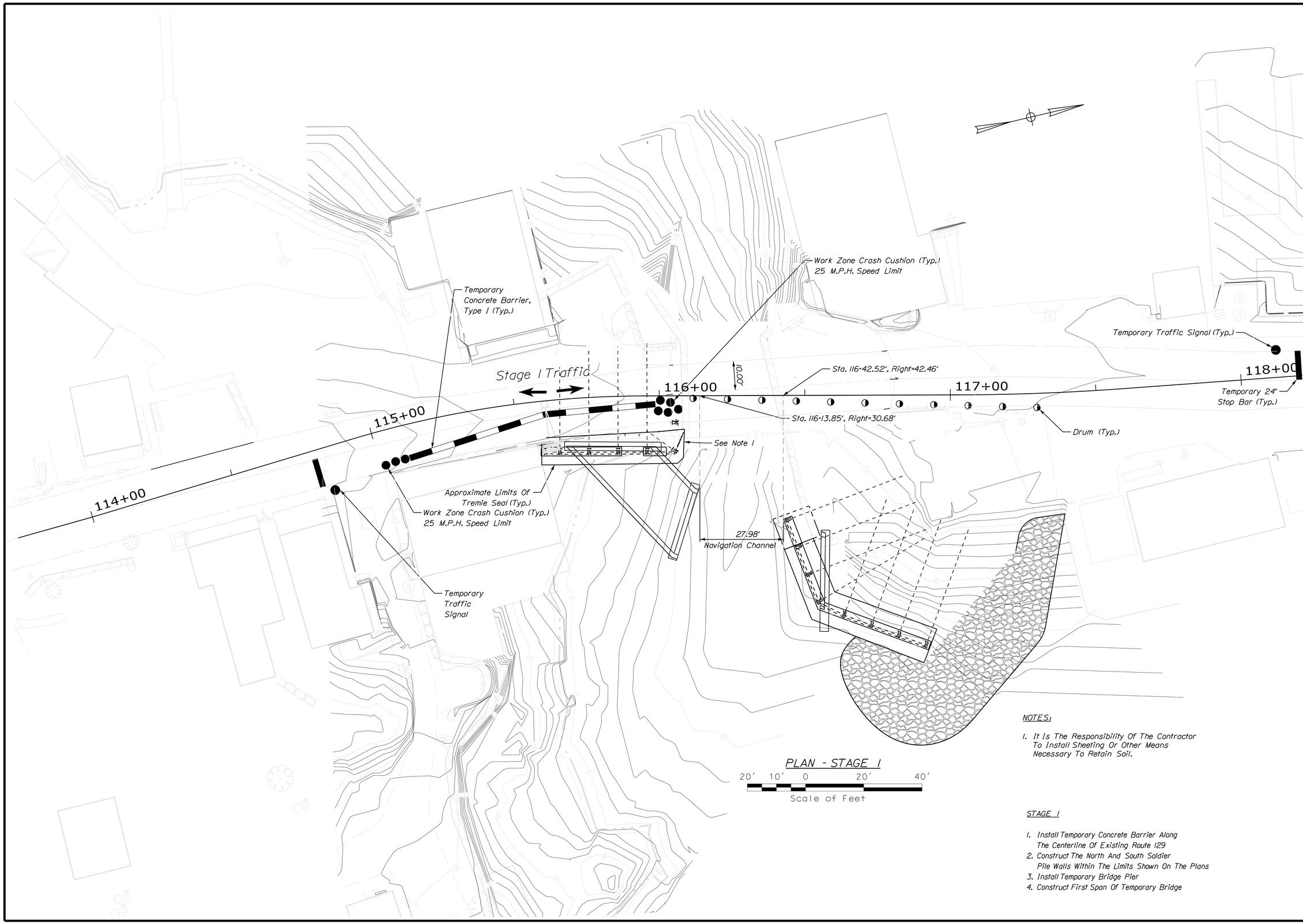

NOTES:

1. It Is The Responsibility Of The Contractor To Install Sheeting Or Other Means Necessary To Retain Soil.

STAGE 1

1. Install Temporary Concrete Barrier Along The Centerline Of Existing Route 129
2. Construct The North And South Soldier Pile Walls Within The Limits Shown On The Plans
3. Install Temporary Bridge Pier
4. Construct First Span Of Temporary Bridge

STATE OF MAINE
DEPARTMENT OF TRANSPORTATION

APPROVED

	DATE
COMMISSIONER:	
CHIEF ENGINEER:	

PROJECT INFORMATION

PROGRAM	BRIDGE	
PROJECT MANAGER	STEPHEN BODGE	SIGNATURE
DESIGNER	HARDESTY & HANOVER	13196
CONSULTANT	HARDESTY & HANOVER	P.E. NUMBER
PROJECT RESIDENT		
CONTRACTOR		DATE
PROJECT COMPLETION DATE		

SOUTH BRISTOL
GUT BRIDGE

BRIDGE STAGING PLANS I

SHEET NUMBER

28

OF 141

Filename: ...\028_BRIDGE_STAGING_PLANS_I.dgn Division: BRIDGE Username: common Date:1/29/2014

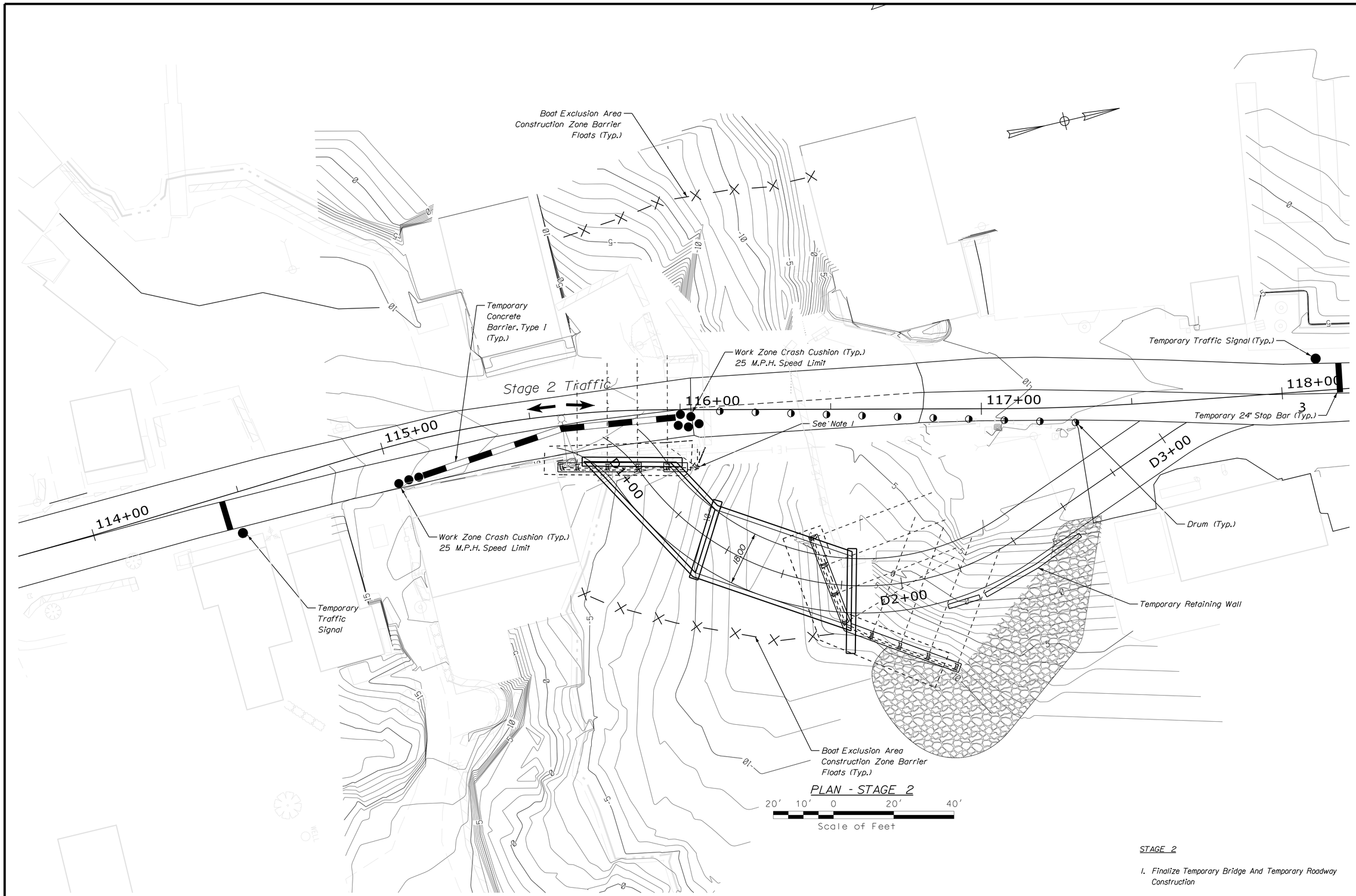

PLAN - STAGE 2

20' 10' 0 20' 40'

Scale of Feet

STAGE 2

1. Finalize Temporary Bridge And Temporary Roadway Construction

STATE OF MAINE
DEPARTMENT OF TRANSPORTATION

APPROVED

	DATE
COMMISSIONER:	
CHIEF ENGINEER:	

	SIGNATURE	
	13196	
	P.E. NUMBER	
	DATE	

PROJECT INFORMATION

PROGRAM	BRIDGE	
PROJECT MANAGER	STEPHEN BODGE	
DESIGNER	HARDESTY & HANOVER	
CONSULTANT	HARDESTY & HANOVER	
PROJECT RESIDENT		
CONTRACTOR		
PROJECT COMPLETION DATE		

SOUTH BRISTOL
GUT BRIDGE

BRIDGE STAGING PLANS II

SHEET NUMBER

29

OF 141

Filename: ...\029_BRIDGE_STAGING_PLANS_II.dgn Division: BRIDGE Username: common Date:1/29/2014

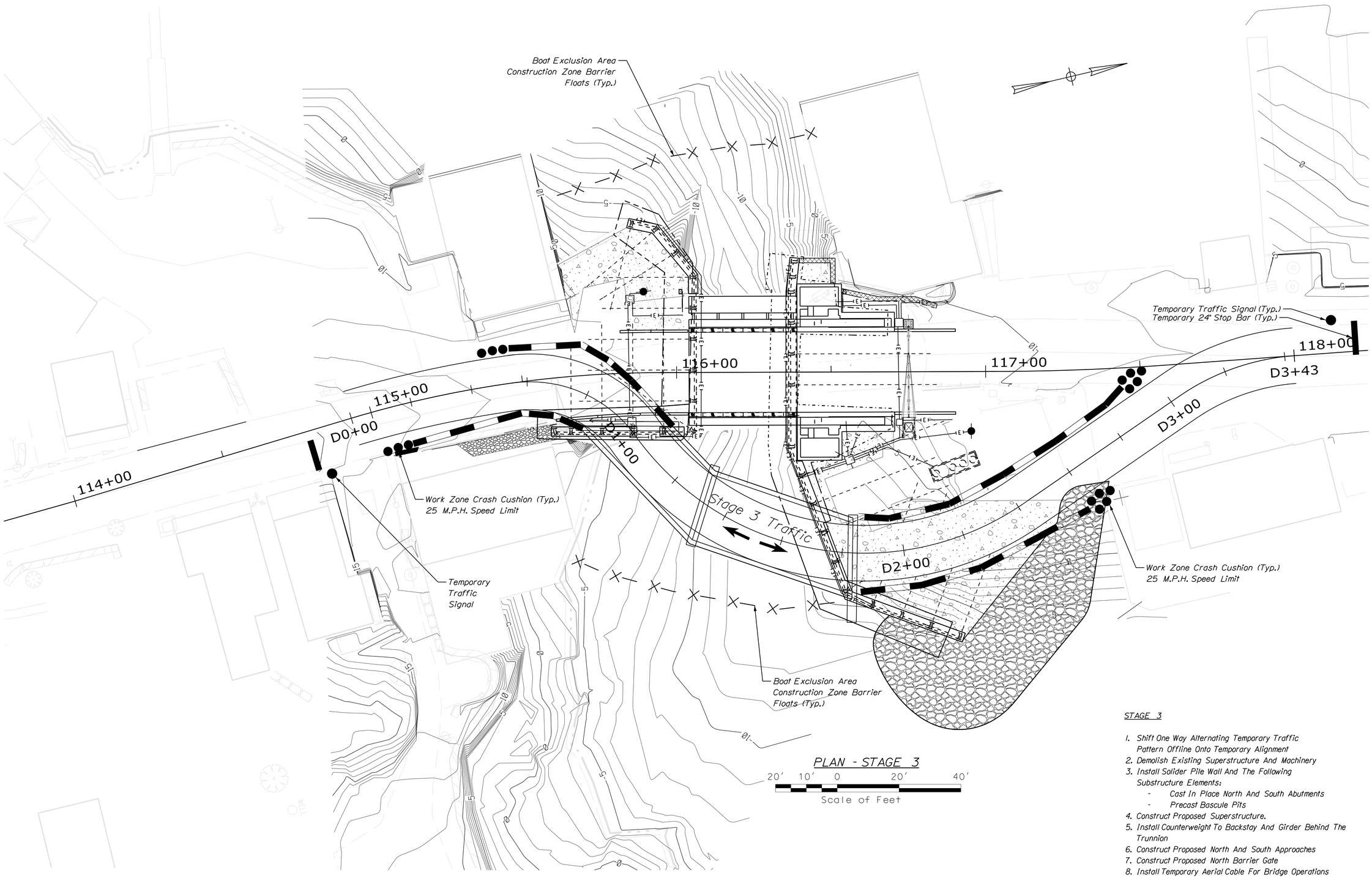

PLAN - STAGE 3

STAGE 3

1. Shift One Way Alternating Temporary Traffic Pattern Offline Onto Temporary Alignment
2. Demolish Existing Superstructure And Machinery
3. Install Solider Pile Wall And The Following Substructure Elements:
   - Cast In Place North And South Abutments
   - Precast Bascule Pits
4. Construct Proposed Superstructure.
5. Install Counterweight To Backstay And Girder Behind The Trunnion
6. Construct Proposed North And South Approaches
7. Construct Proposed North Barrier Gate
8. Install Temporary Aerial Cable For Bridge Operations
9. Install Proposed Machinery And Enclosure Access
10. Install North Traffic Signal.

STATE OF MAINE
DEPARTMENT OF TRANSPORTATION

APPROVED	DATE
COMMISSIONER:	
CHIEF ENGINEER:	

		SIGNATURE
		13196
		P.E. NUMBER
		DATE

PROJECT INFORMATION

	BRIDGE
PROGRAM	
PROJECT MANAGER	STEPHEN BODGE
DESIGNER	HARDESTY & HANOVER
CONSULTANT	HARDESTY & HANOVER
PROJECT RESIDENT	
CONTRACTOR	
PROJECT COMPLETION DATE	

SOUTH BRISTOL GUT BRIDGE

BRIDGE STAGING PLANS III

SHEET NUMBER

30

OF 141

Filename: ... 030_BRIDGE_STAGING_PLANS_III.dgn Division: BRIDGE Username: common Date:2/3/2014

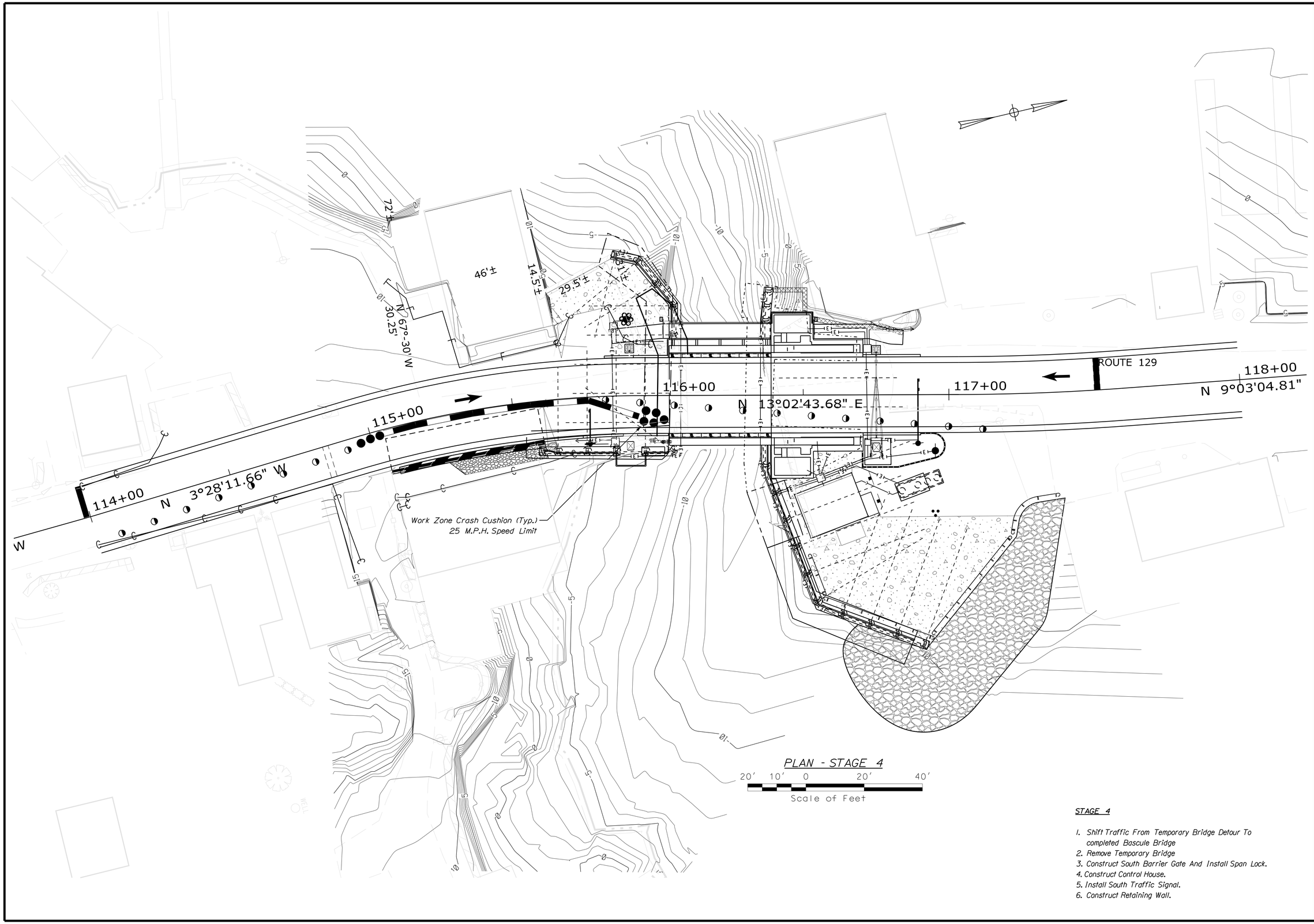

STAGE 4

1. *Shift Traffic From Temporary Bridge Detour To completed Bascule Bridge*
2. *Remove Temporary Bridge*
3. *Construct South Barrier Gate And Install Span Lock.*
4. *Construct Control House.*
5. *Install South Traffic Signal.*
6. *Construct Retaining Wall.*

STATE OF MAINE
DEPARTMENT OF TRANSPORTATION

APPROVED	DATE
COMMISSIONER:	
CHIEF ENGINEER:	

PROJECT INFORMATION		
PROGRAM	BRIDGE	
PROJECT MANAGER	STEPHEN BODGE	SIGNATURE
DESIGNER	HARDESTY & HANOVER	13196
CONSULTANT	HARDESTY & HANOVER	P.E. NUMBER
PROJECT RESIDENT		
CONTRACTOR		DATE
PROJECT COMPLETION DATE		

SOUTH BRISTOL
GUT BRIDGE

BRIDGE STAGING PLANS IV

SHEET NUMBER

31

OF 141

Filename: ...\031_BRIDGE_STAGING_PLANS_IV.dgn Division: BRIDGE Username: common Date:1/29/2014

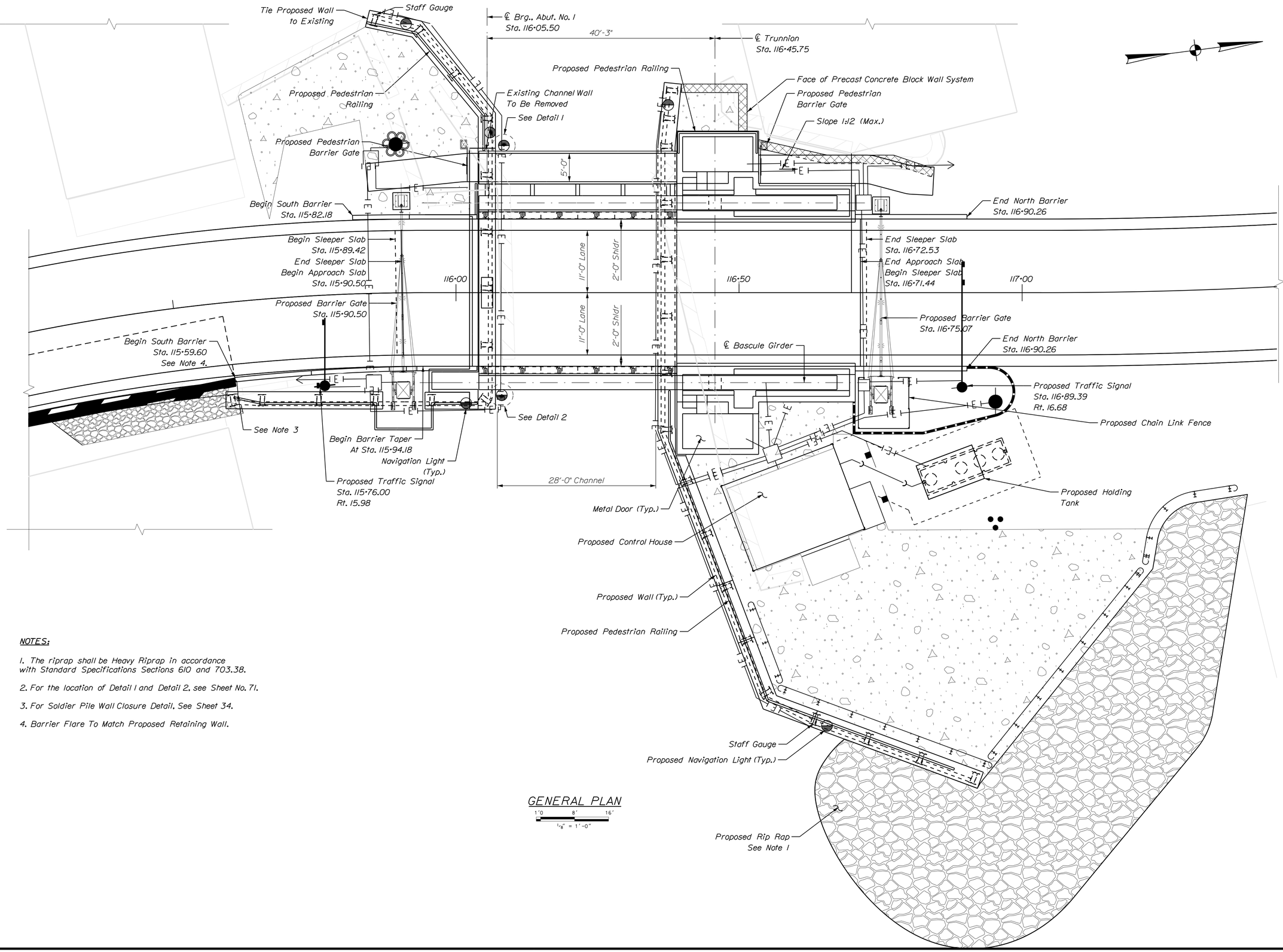

NOTES:

1. The riprap shall be Heavy Riprap in accordance with Standard Specifications Sections 610 and 703.38.
2. For the location of Detail 1 and Detail 2, see Sheet No. 71.
3. For Soldier Pile Wall Closure Detail, See Sheet 34.
4. Barrier Flare To Match Proposed Retaining Wall.

STATE OF MAINE
DEPARTMENT OF TRANSPORTATION

APPROVED | DATE

COMMISSIONER:

CHIEF ENGINEER:

PROJECT INFORMATION

PROGRAM	BRIDGE	SIGNATURE	
PROJECT MANAGER	STEPHEN BODGE		
DESIGNER	HARDESTY & HANOVER	13196	
CONSULTANT	HARDESTY & HANOVER	P.E. NUMBER	
PROJECT RESIDENT			
CONTRACTOR		DATE	
PROJECT COMPLETION DATE			

SOUTH BRISTOL GUT BRIDGE

GENERAL BRIDGE PLAN

SHEET NUMBER

32

OF 141

Filename: ...\10_Str\032_bridge_plan.dgn Division: BRIDGE Username: common Date:1/29/2014

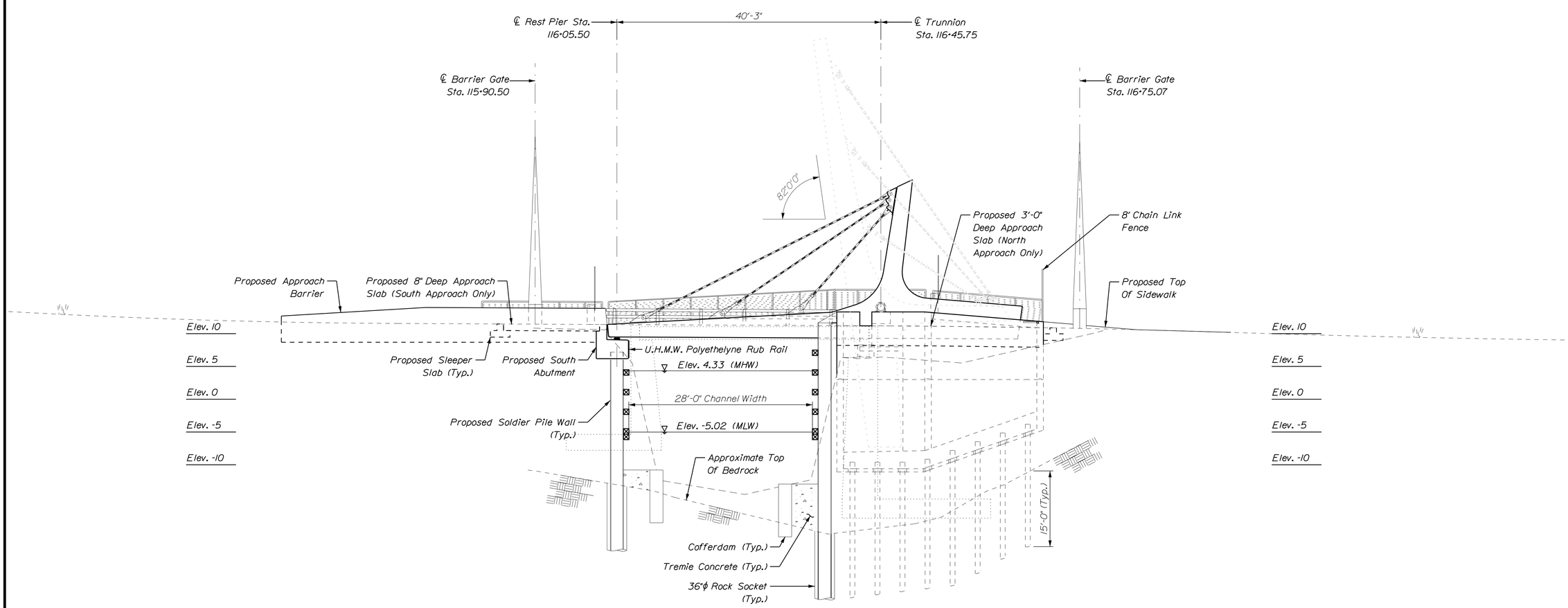

GENERAL ELEVATION

1'0 8' 16'

1/8" = 1'-0"

STATE OF MAINE
DEPARTMENT OF TRANSPORTATION

APPROVED | DATE

COMMISSIONER:

CHIEF ENGINEER:

PROJECT INFORMATION		
PROGRAM	BRIDGE	
PROJECT MANAGER	STEPHEN BODGE	SIGNATURE
DESIGNER	HARDESTY & HANOVER	13196
CONSULTANT	HARDESTY & HANOVER	P.E. NUMBER
PROJECT RESIDENT		
CONTRACTOR		DATE
PROJECT COMPLETION DATE		

SOUTH BRISTOL
GUT BRIDGE

GENERAL BRIDGE ELEVATION

SHEET NUMBER

33

OF 141

Filename: ...\10_Str\033_bridge_elev.dgn Division: BRIDGE Username: common Date:1/29/2014

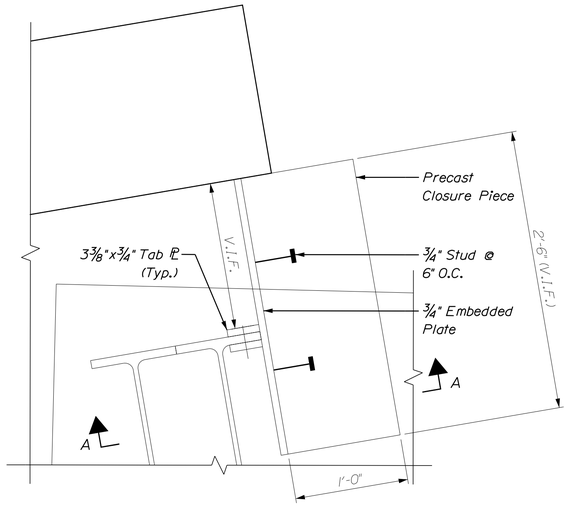

CLOSURE DETAIL

1' 9" 6" 3" 0 1'

1½" = 1'-0"

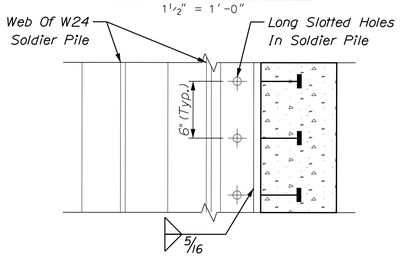

SECTION A-A

1' 9" 6" 3" 0 1'

1½" = 1'-0"

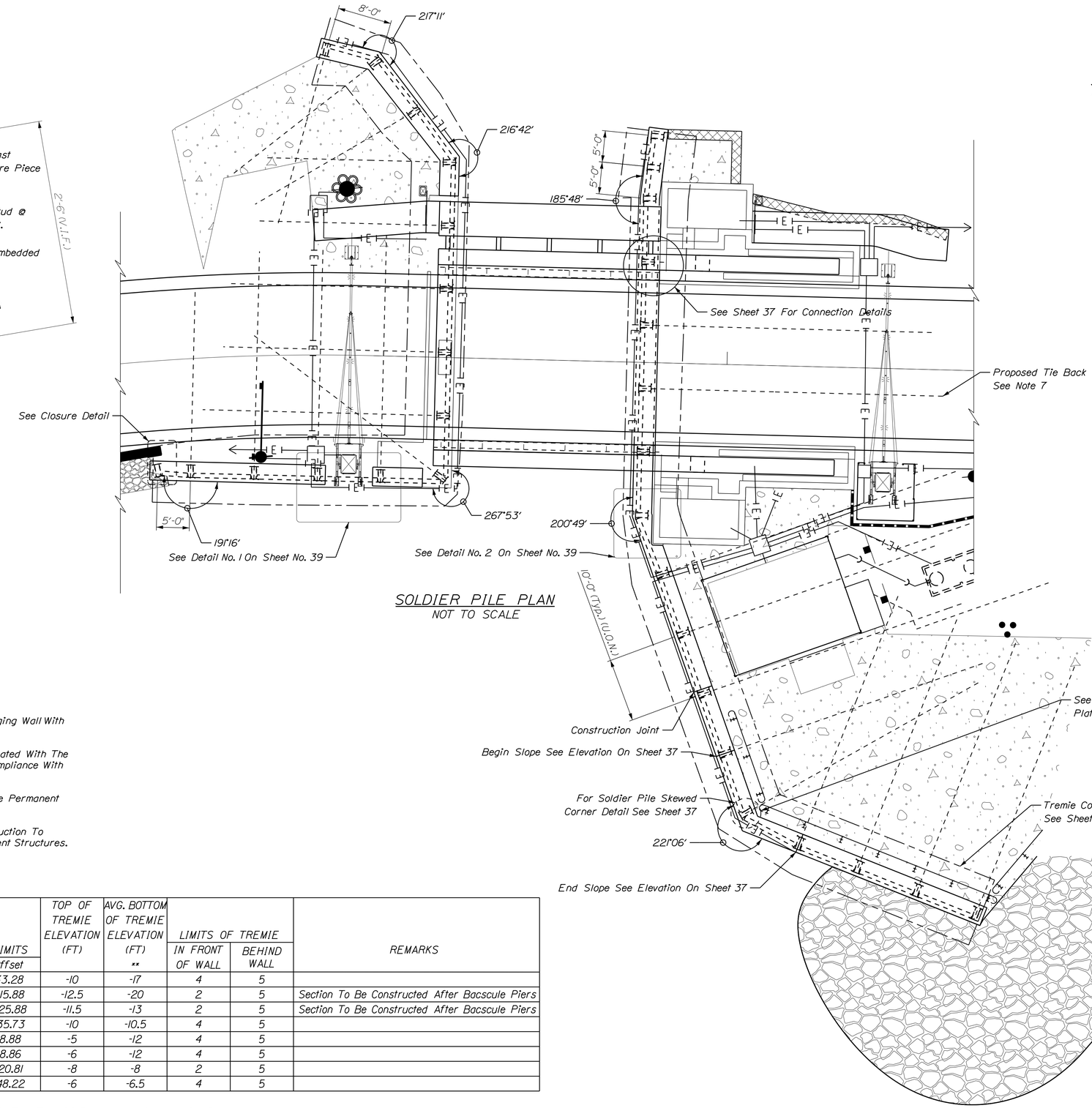

SOLDIER PILE PLAN

NOT TO SCALE

NOTES:

1. Construct Permanent Anchored Wall System (Soldier Pile And Lagging Wall With Tiebacks) At The Limits Shown On This Sheet.
2. Construction of Permanent Anchored Wall System Shall Be Coordinated With The General Construction Sequence Of Bridge Construction And In Compliance With Project Environmental Permits And/Or Restrictions.
3. Excavation Or Opening-Up Of The Entire Area Designated For The Permanent Anchored Wall System at once is not permitted.
4. Exercise Caution During Permanent Anchored Wall System Construction To Prevent Undermining The Foundations Supporting Existing Adjacent Structures.
5. For Tie Back Details, See Sheet No. 38.

ABUTMENT	SECTION (See Sheet 37)	BEGIN LOCATION / LIMITS		END LOCATION / LIMITS		TOP OF TREMIE ELEVATION (FT)	AVG. BOTTOM OF TREMIE ELEVATION (FT) **	LIMITS OF TREMIE		REMARKS
		Station	Offset	Station	Offset			IN FRONT OF WALL	BEHIND WALL	
North	1	116+91.45	85.66	116+40.66	33.28	-10	-17	4	5	
	2	116+40.66	33.28	116+37.18	-15.88	-12.5	-20	2	5	Section To Be Constructed After Bacscule Piers
	3	116+37.18	-15.88	116+37.18	-25.88	-11.5	-13	2	5	Section To Be Constructed After Bacscule Piers
	4	116+37.18	-25.88	116+38.18	-35.73	-10	-10.5	4	5	
South	1	115+59.22	16.35	115+85.33	18.88	-5	-12	4	5	
	2	115+85.33	18.88	116+05.22	18.86	-6	-12	4	5	
	3	116+05.22	18.86	116+05.45	-20.81	-8	-8	2	5	
	4	116+05.45	-20.81	115+86.63	-48.22	-6	-6.5	4	5	

** Excavate To The Elevation Shown Or To The Top Of Bedrock Whichever Is Deeper

STATE OF MAINE
DEPARTMENT OF TRANSPORTATION

APPROVED — DATE

COMMISSIONER:

CHIEF ENGINEER:

PROJECT INFORMATION		SIGNATURE
PROGRAM	BRIDGE	
PROJECT MANAGER	STEPHEN BODGE	
DESIGNER	HARDESTY & HANOVER	13196 P.E. NUMBER
CONSULTANT	HARDESTY & HANOVER	
PROJECT RESIDENT		
CONTRACTOR		DATE
PROJECT COMPLETION DATE		

SOUTH BRISTOL
GUT BRIDGE

PERMANENT ANCHORED WALL LIMITS

SHEET NUMBER

34

OF 141

Filename: ...\034_soldier_pile_plan.dgn Division: BRIDGE Username: common Date:1/29/2014

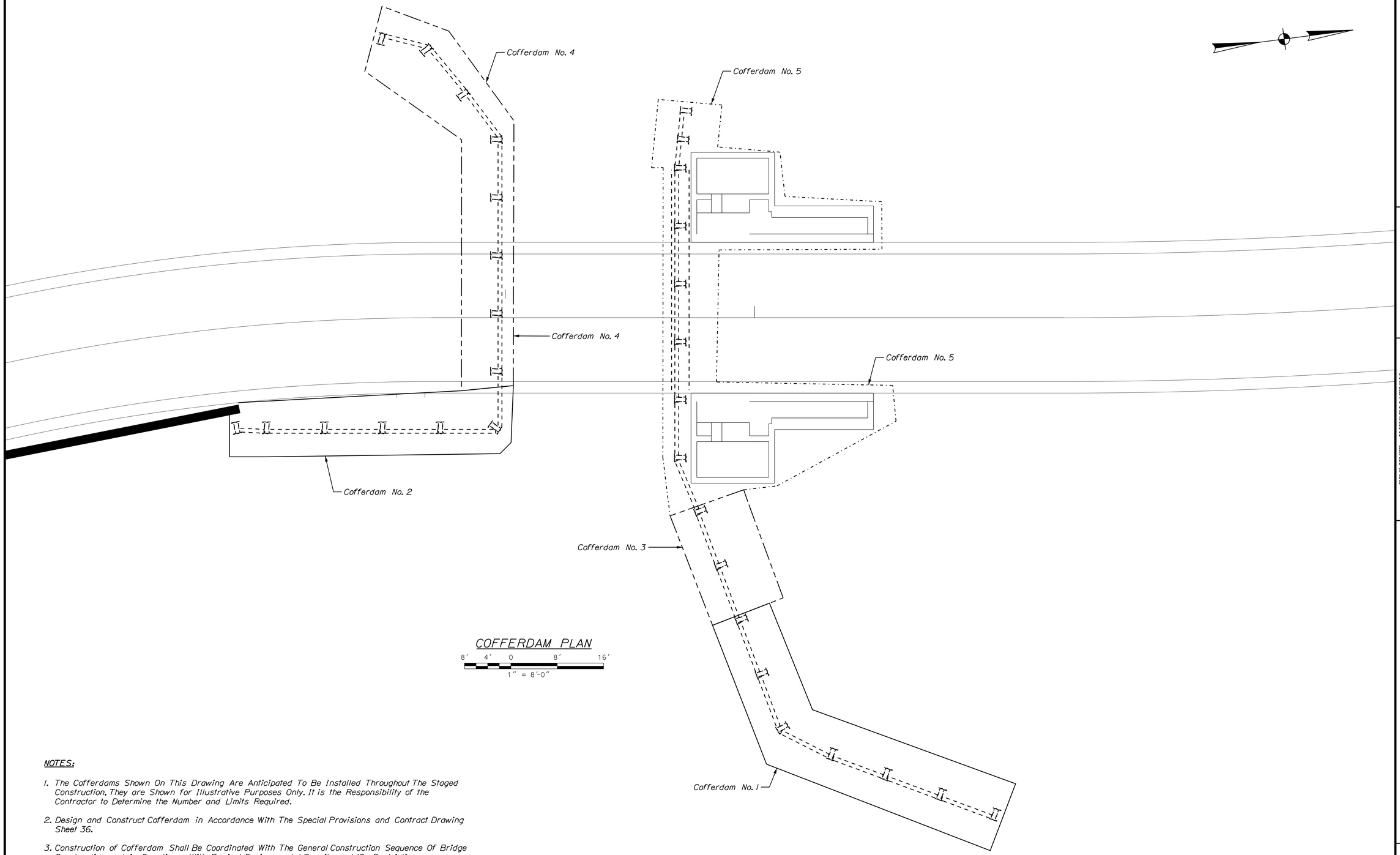

NOTES:

1. The Cofferdams Shown On This Drawing Are Anticipated To Be Installed Throughout The Staged Construction. They are Shown for Illustrative Purposes Only. It is the Responsibility of the Contractor to Determine the Number and Limits Required.
2. Design and Construct Cofferdam in Accordance With The Special Provisions and Contract Drawing Sheet 36.
3. Construction of Cofferdam Shall Be Coordinated With The General Construction Sequence Of Bridge Construction and in Compliance With Project Environmental Permits and/Or Restrictions.
4. Exercise Caution During Cofferdam Installation To Prevent Undermining the Foundations Supporting Existing Adjacent Structures.

STATE OF MAINE
DEPARTMENT OF TRANSPORTATION

APPROVED | DATE

COMMISSIONER:

CHIEF ENGINEER:

PROJECT INFORMATION

PROGRAM	BRIDGE	
PROJECT MANAGER	STEPHEN BODGE	SIGNATURE
DESIGNER	HARDESTY & HANOVER	13196
CONSULTANT	HARDESTY & HANOVER	P.E. NUMBER
PROJECT RESIDENT		
CONTRACTOR		DATE
PROJECT COMPLETION DATE		

SOUTH BRISTOL
GUT BRIDGE

PERMANENT ANCHORED WALL
COFFERDAM LAYOUT

SHEET NUMBER

35

OF 141

Filename: ...\10_Str\035_cofferdam_plan.dgn Division: BRIDGE Username: common Date:1/29/2014

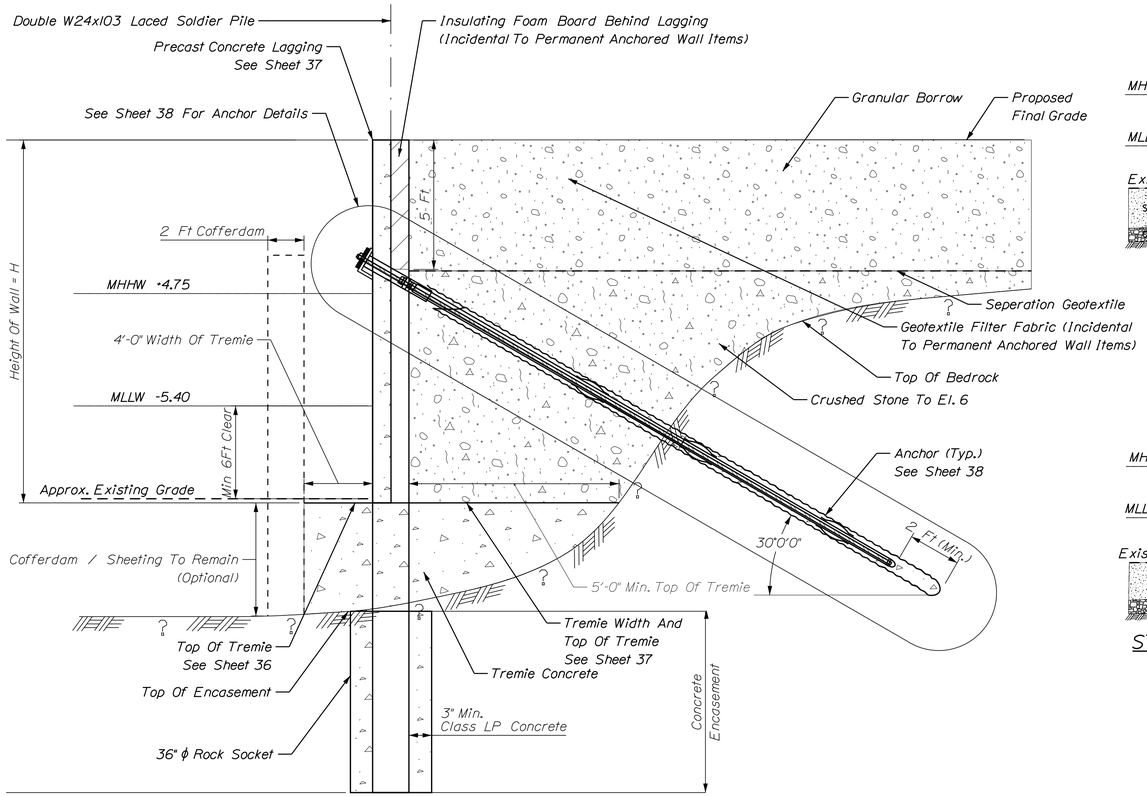

TYPICAL SECTION
(N.T.S)

*** See Sheet 37 For Permanent Anchored Wall Elements Details

CONCEPTUAL CONSTRUCTION SEQUENCE

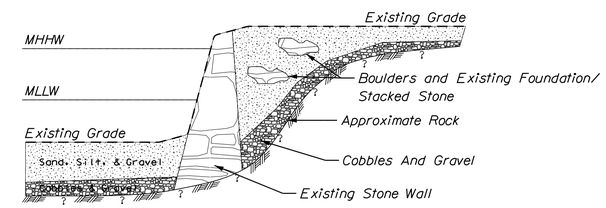

STAGE 0 - EXISTING CONDITION
(N.T.S)

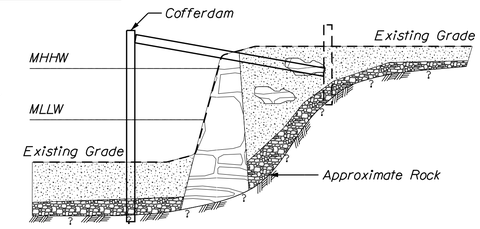

STAGE 1 - INSTALL TEMPORARY COFFERDAM
(N.T.S)

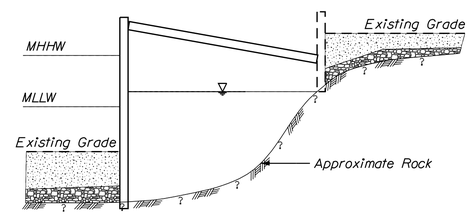

STAGE 2 - WET EXCAVATE TO BEDROCK
(N.T.S)

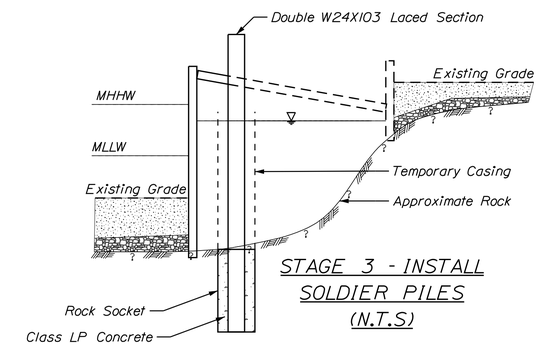

STAGE 3 - INSTALL SOLDIER PILES
(N.T.S)

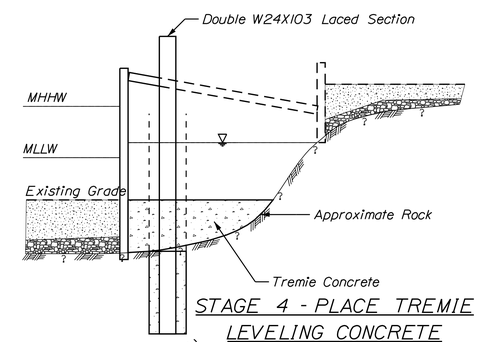

STAGE 4 - PLACE TREMIE LEVELING CONCRETE
(N.T.S)

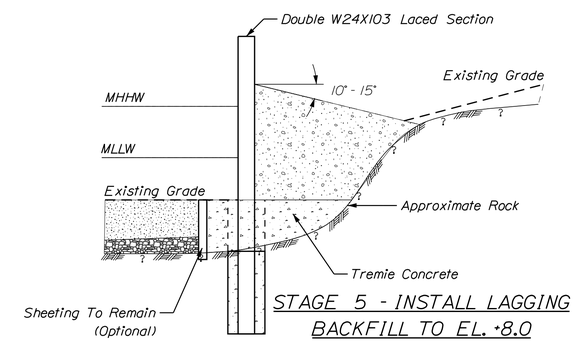

STAGE 5 - INSTALL LAGGING BACKFILL TO EL. +8.0
(N.T.S)

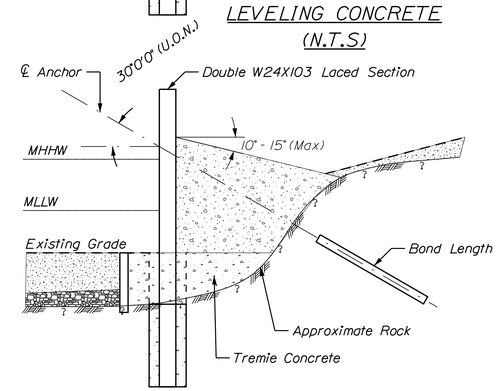

STAGE 6 - INSTALL AND TEST ANCHORS
(N.T.S)

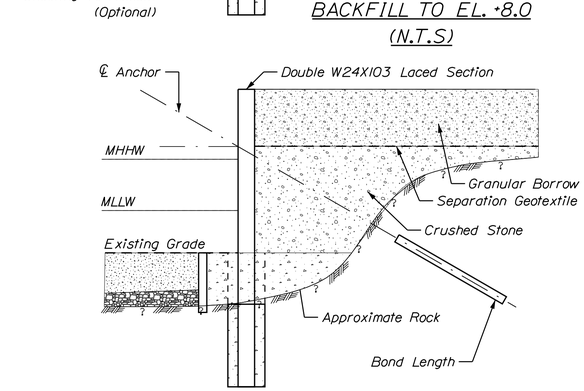

STAGE 7 - BACKFILL TO FINAL GRADE
(N.T.S)

CONSTRUCTION SEQUENCE:

1. Install Temporary Cofferdam As Per Approved Working Drawings.
2. Remove Overburden Material To The Top Of Bedrock And To The Limits Shown On Drawing Sheet No. 36.
3. Use A Temporary Casing To Install Soldier Pile Per Sheet Nos. 36-38.
4. Place Tremie Concrete To The Elevation And The Limits Shown On Sheet Nos. 34 And 36.
5. Cut Temporary Casing To Top Of Tremie Concrete And Install Precast Concete Lagging To Final Elevation.
6. Backfill Behind Lagging To Elevation +8.0 & Maintain A Backslope Of 10 to 15 Degrees And Install Rock Anchors As Per Sheet No. 38.
7. Backfill Behind Remaining Portion Of Lagging To The Final Elevation.

NOTES:

1. For Details On Permanent Anchored Wall, See Sheet Nos 34-39.
2. Revision To The Above Shown Construction Staging Of The Permanent Anchored Wall System Is Permitted As Approved By The Resident.
3. Permanent Anchored Wall Construction Staging Is Subject To Resident Review and Approval.
4. Temporary Cofferdam Shall Be Designed By The Contractor And Submitted To The Resident For Review And Approval.
5. After The Construction Of The Permanent Anchored Wall System, If The Temporary Sheet Shall Be Left In Place, Cut Sheeting 2 Feet Below Mudline And Abandon. No Additional Payment Shall Be Made For Sheeting Left In Place.

STATE OF MAINE
DEPARTMENT OF TRANSPORTATION

APPROVED | DATE
COMMISSIONER:
CHIEF ENGINEER:

PROJECT INFORMATION			
PROGRAM	BRIDGE	SIGNATURE	
PROJECT MANAGER	STEPHEN BODGE	13196	
DESIGNER	HARDESTY & HANOVER	P.E. NUMBER	
CONSULTANT	HARDESTY & HANOVER		
PROJECT RESIDENT		DATE	
CONTRACTOR			
PROJECT COMPLETION DATE			

SOUTH BRISTOL
GUT BRIDGE

PERMANENT ANCHORED WALL
TYPICAL SECTION AND STAGING

SHEET NUMBER
36
OF 141

Filename: ...\036_soldier_pile_staging.dgn
Division: BRIDGE
Username: common
Date:1/29/2014

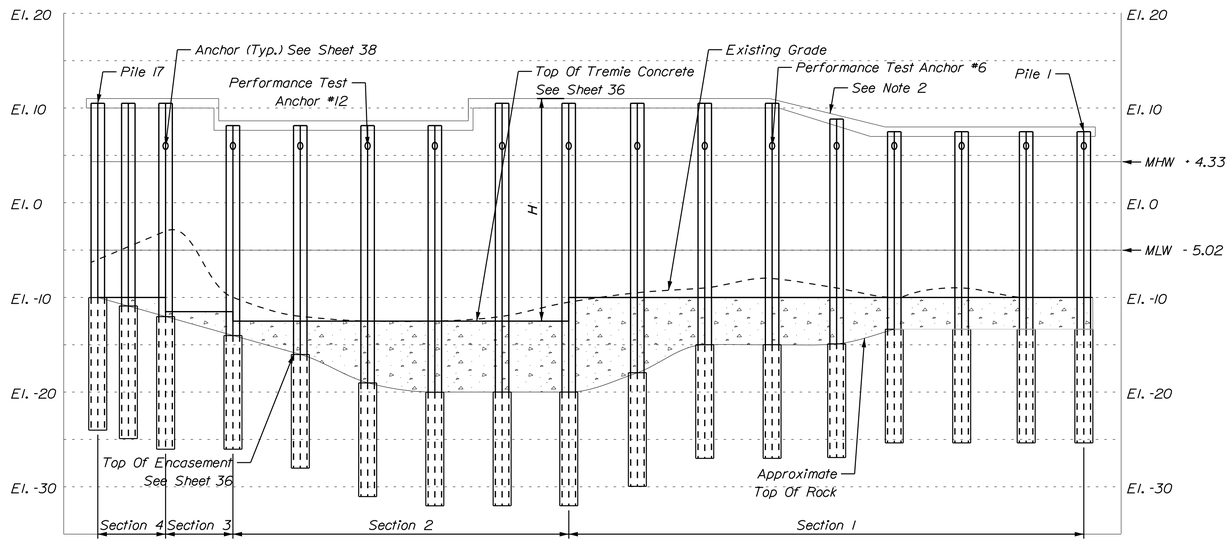

NORTH ABUTMENT DEVELOPED ELEVATION
VIEW NORTH
N.T.S

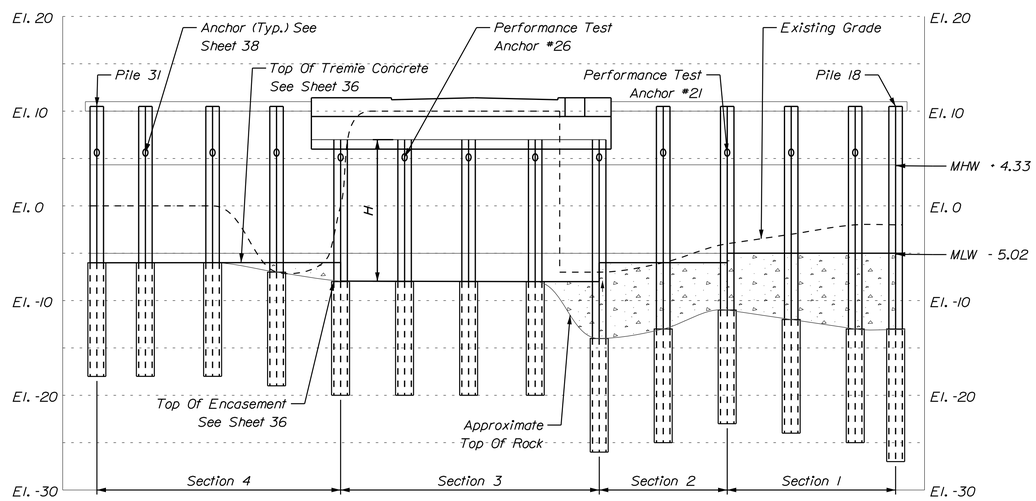

SOUTH ABUTMENT DEVELOPED ELEVATION
VIEW NORTH
N.T.S

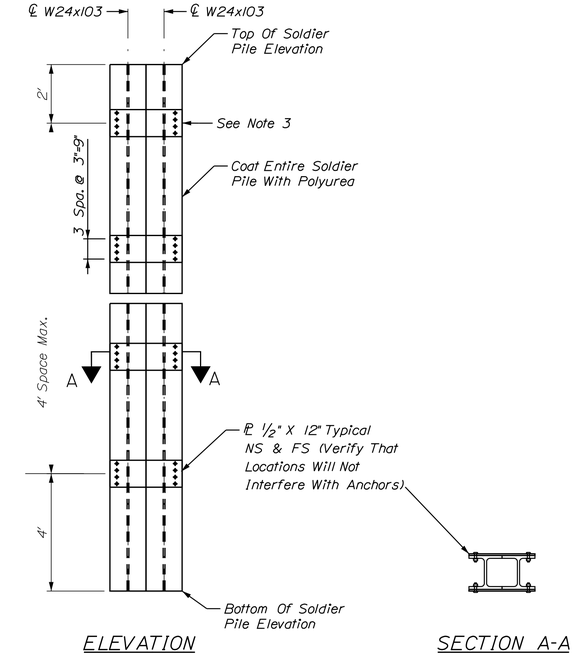

TYPICAL SOLDIER PILE LACING DETAILS
(SOLDIER PILE WALL)
N.T.S.

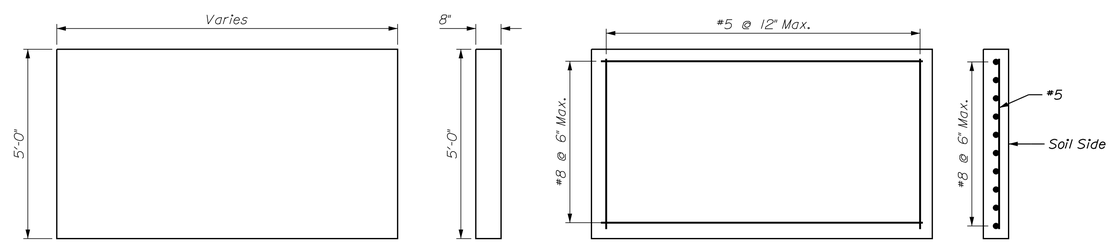

SOLDIER PILE LAGGING DETAILS
N.T.S.

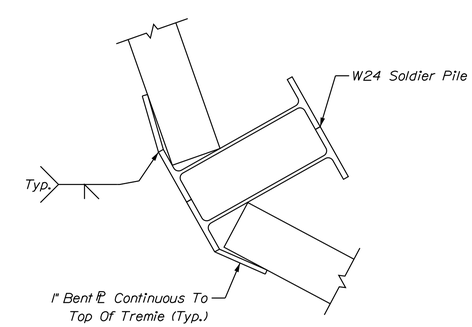

SOLDIER PILE BENT PLATE DETAIL

DESIGN SPECIFICATIONS:

1. AASHTO LRFD Bridge Design Specification For Service And Strength Limit States.
2. Post Tensioning Institute "Recommendations For Prestressed Rock And Soil Anchors" Latest Edition.

CONSTRUCTION SPECIFICATIONS:

1. Latest Edition Of MaineDOT Standard Specification For Road And Bridge Construction, As Modified By The Special Provisions.
2. Post Tensioning Institute "Recommendations For Prestressed Rock And Soil Anchors" Latest Edition.

NOTES:

1. Refer To Sheet 34 For Wall Section Limit Stations.
2. Soldier Pile Wall Pile Cap Requires A Minimum 6" Embedment Of The Soldier Pile And A Minimum Of 3" Of Cover At The Top.
3. Soldier Pile Walers Will Be Notched As Necessary To Accomodate The Soldier Pile Lacing.

STATE OF MAINE
DEPARTMENT OF TRANSPORTATION

APPROVED — DATE

COMMISSIONER:

CHIEF ENGINEER:

PROJECT INFORMATION

PROGRAM	BRIDGE
PROJECT MANAGER	STEPHEN BODGE
DESIGNER	HARDESTY & HANOVER
CONSULTANT	HARDESTY & HANOVER
PROJECT RESIDENT	
CONTRACTOR	
PROJECT COMPLETION DATE	

SIGNATURE

13196
P.E. NUMBER

DATE

SOUTH BRISTOL
GUT BRIDGE

PERMANENT ANCHORED WALL
DEVELOPED ELEVATION AND DETAILS

SHEET NUMBER
37
OF 141

Filename: ... 037_soldier_pile_elev.dgn Division: BRIDGE Username: common Date:2/3/2014

Abutment	Section Limit (See Sheet 34)	Pile Number	TGL vs Station At Center of Pile	Offset To Center Of Pile From TGL	Pile Top Elevation	Estimated Pile Tip Elevation	Estimated Pile Length	Soldier Pile Section	Minimum Diameter of Rock Socket	Minimum Socket Length	Anchor Level One Elevation	Design Load	Minimum Free Length	Bonded Length	Anchor Inclination	Axial Load	As-Built Pile Length
				(ft)	(ft)	(ft)	(ft)		(ft)	(ft)	(ft)	(kips)	(ft)	(ft)	(deg.)	(kips)	(ft)
North	1	1	116+91.45	85.66	7	-27	34	2 - W24x103	3	12	5.5	160	15	15	30	N/A	
		2	116+82.08	82.19	7	-27	34	2 - W24x103	3	12	5.5	160	15	15	25	N/A	
		3	116+72.70	78.72	7	-27	34	2 - W24x103	3	12	5.5	160	15	15	20	N/A	
		4	116+63.32	75.25	7	-27	34	2 - W24x103	3	12	5.5	160	15	15	20	N/A	
		5	116+54.81	70.69	9	-27	36	2 - W24x103	3	12	5.5	160	15	15	27	N/A	
		6	116+51.28	61.34	11	-27	38	2 - W24x103	3	12	6	160	15	15	30	N/A	
		7	116+47.74	51.99	11	-27	38	2 - W24x103	3	12	6	160	15	15	30	N/A	
		8	116+44.2	42.63	11	-29	40	2 - W24x103	3	12	6	160	15	15	30	N/A	
		9	116+40.66	33.28	11	-32	43	2 - W24x103	3	12	6	160	15	15	25	N/A	
	2	10	116+37.18	24.11	11	-32	43	2 - W24x103	3	12	N/A	N/A	N/A	N/A	N/A	N/A	
		11	116+37.18	14.09	9	-32	41	2 - W24x103	3	12	N/A	N/A	N/A	N/A	N/A	N/A	
		12	116+37.18	4.11	9	-31	40	2 - W24x103	3	12	6	160	15	15	30	N/A	
		13	116+37.18	-5.89	9	-28	37	2 - W24x103	3	12	6	160	15	15	30	N/A	
		14	116+37.18	-15.89	9	-28	37	2 - W24x103	3	14	N/A	N/A	N/A	N/A	N/A	N/A	
	3	15	116+37.18	-25.89	11	-26	37	2 - W24x103	3	14	N/A	N/A	N/A	N/A	N/A	N/A	
	4	16	116+37.68	-30.81	11	-25	36	2 - W24x103	3	14	N/A	N/A	N/A	N/A	N/A	N/A	
		17	116+38.18	-35.73	11	-24	35	2 - W24x103	3	14	N/A	N/A	N/A	N/A	N/A	N/A	
South	1	18	115+58.79	17.29	11	-27	38	2 - W24x103	3	14	N/A	N/A	N/A	N/A	N/A	N/A	
		19	115+64.25	17.78	11	-25	36	2 - W24x103	3	12	6	160	15	15	30	N/A	
		20	115+74.77	18.48	11	-24	35	2 - W24x103	3	12	6	160	15	15	25	N/A	
		21	115+85.33	18.88	11	-23	34	2 - W24x103	3	12	6	160	15	15	30	N/A	
	2	22	115+95.78	18.99	11	-25	36	2 - W24x103	3	12	5	160	15	15	30	N/A	
		23	116+05.22	18.87	8	-26	34	2 - W24x103	3	12	5	160	15	15	30	317	
	3	24	116+05.45	9.19	8	-20	28	2 - W24x103	3	12	5	160	15	15	20	317	
		25	116+05.45	-0.81	8	-20	28	2 - W24x103	3	12	5	160	15	15	20	317	
		26	116+05.45	-10.81	8	-20	28	2 - W24x103	3	12	5	160	15	15	20	317	
		27	116+05.45	-20.81	8	-20	28	2 - W24x103	3	12	5	160	15	15	20	317	
	4	28	116+05.45	-30.81	11	-19	30	2 - W24x103	3	12	5.5	160	15	15	30	N/A	
		29	115+99.68	-38.56	11	-18	29	2 - W24x103	3	12	5.5	160	15	15	24	N/A	
		30	115+93.44	-46.28	11	-18	29	2 - W24x103	3	12	5.5	160	15	15	30	N/A	
		31	115+86.63	-48.22	11	-18	29	2 - W24x103	3	12	6	160	15	15	30	N/A	

ANCHOR TESTING:

1. Anchor Testing Shall Be In Conformance With The Project Specifications.
2. Performance Test The Anchors At The Following Pile Locations: 6, 12, 21, and 26.
3. Proof Tests Shall Be Performed At All Anchors Not Performance Tested.

NOTE:

1. No Construction Equipment Load Shall Be Transferred To The Permanent Anchored Wall.
2. The Permanent Anchored Wall Is Not Designed To Support Any Construction Surcharge And/Or Any Loading From The Temporary Bridge.
3. Prior To The Placement Of The Soldier Piles In The Hole, The Contractor Shall Verify The Quality Of The Rock Socket Sidewalls And Bottom Cleanliness, Using An Approved Inspection Device, To The Satisfaction Of The Engineer.
4. Prior To Soldier Pile Placement, Clean The Hole So A Minimum Of 50% Of The Bottom Of The Hole Has Less Than 0.5 Inch Of Sediment At The Time Of Pile And Concrete Placement. Ensure The Maximum Depth Of Sediments And Any Other Debris Does Not Exceed 1.5 Inches.
5. Prior To The Placement Of The Tremie Concrete The Contractor Shall Demonstrate Reaching The Top Of Bedrock To The Satisfaction Of The Engineer Using A Weighted Sounding Tape Approach.
6. Provide Corrosion Protection For Anchors In Accordance With The Special Provisions.
7. Anchor Bonded Zone Shall Be Located In Competent Bedrock Under The Supervision Of A Qualified Professional Engineer Hired By The Contractor.
8. Free Length Shall Be The Minimum Shown In The Table Or The Anticipated Free Length, Whichever Is Greater.

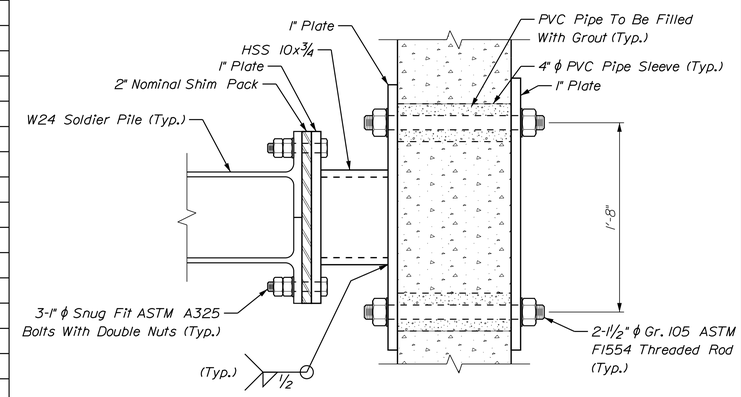

SOLDIER PILE TO BASCULE PIER STRUT
(MACHINERY ENCLOSURE STRUT SIMILAR)

1' 9" 6" 3" 0 1'
1 1/2" = 1'-0"

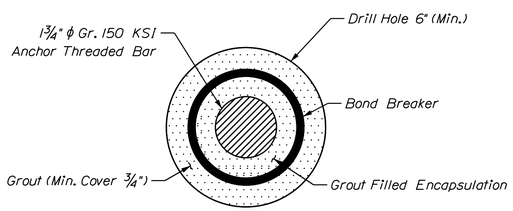

SECTION A-A
NOT TO SCALE

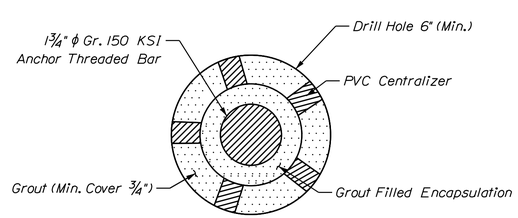

SECTION B-B
NOT TO SCALE

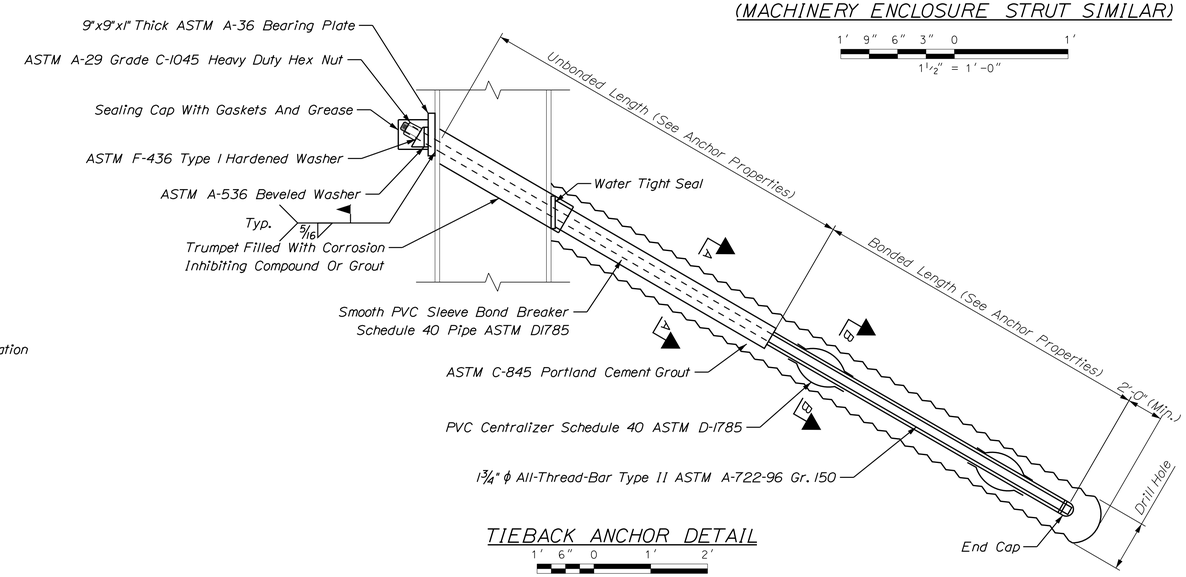

TIEBACK ANCHOR DETAIL

1' 6" 0 1' 2'
3/4" = 1'-0"

STATE OF MAINE
DEPARTMENT OF TRANSPORTATION

APPROVED — DATE
COMMISSIONER:
CHIEF ENGINEER:

PROJECT INFORMATION

PROGRAM	BRIDGE	
PROJECT MANAGER	STEPHEN BODGE	SIGNATURE
DESIGNER	HARDESTY & HANOVER	13196
CONSULTANT	HARDESTY & HANOVER	P.E. NUMBER
PROJECT RESIDENT		
CONTRACTOR		DATE
PROJECT COMPLETION DATE		

SOUTH BRISTOL
GUT BRIDGE

PERMANENT PILE CHART
AND ANCHOR DETAILS

SHEET NUMBER
38
OF 141

Filename: ...\038_soldier_pile_chart.dgn Division: BRIDGE Username: common Date:1/29/2014

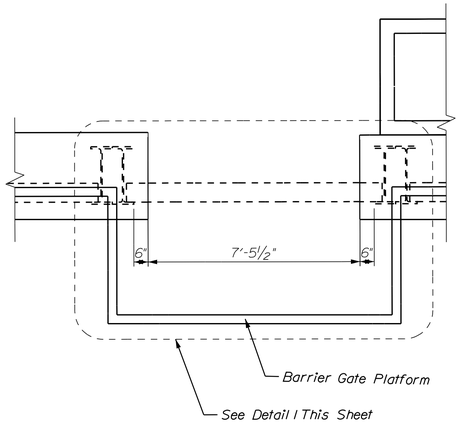

BARRIER GATE PILE CAP CUTOUT

1' 0 2' 4'
3/8" = 1'-0"

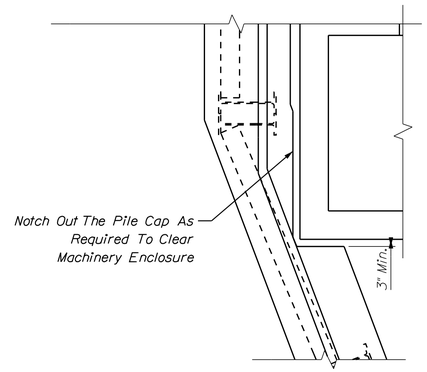

MACHINERY ENCLOSURE PILE CAP CUTOUT

1' 0 2' 4'
3/8" = 1'-0"

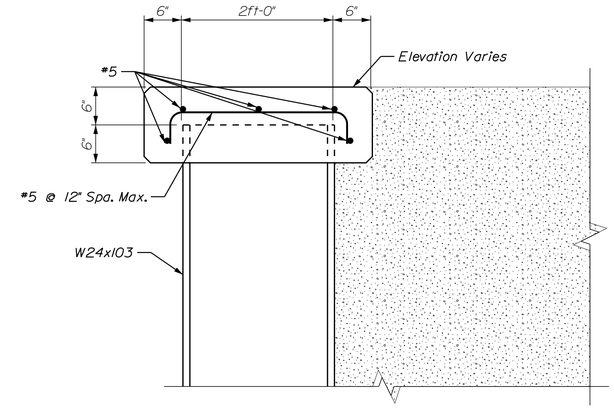

TYPICAL PILE CAP SECTION

1' 6" 0 1' 2'
1" = 1'-0"

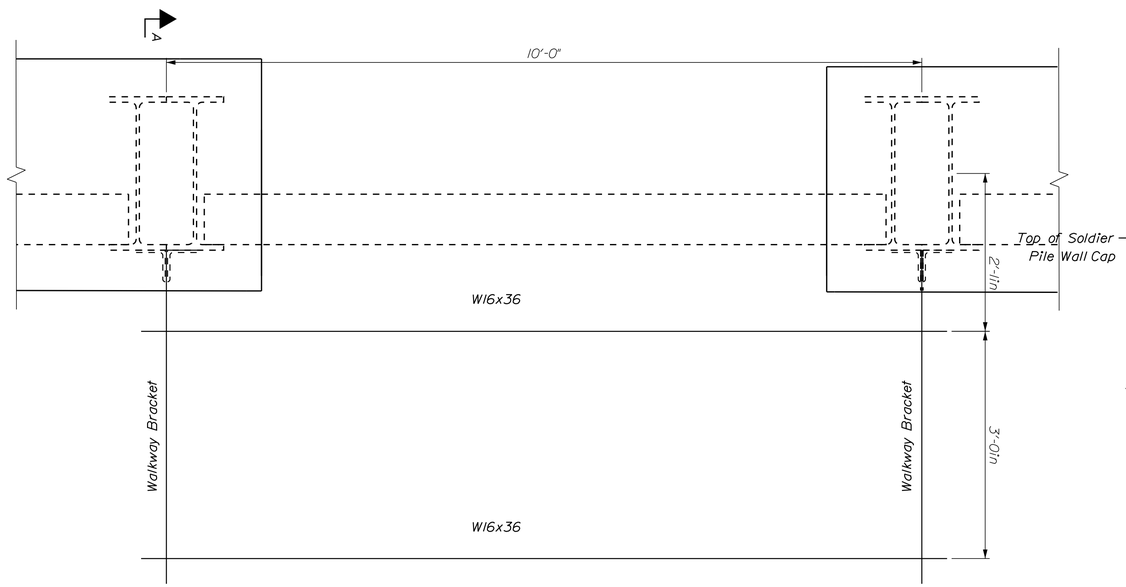

DETAIL I

(PEDESTRIAN RAILING AND FIBER REINFORCED POLYMER DECKING NOT SHOWN)

1' 6" 0 1' 2'
1" = 1'-0"

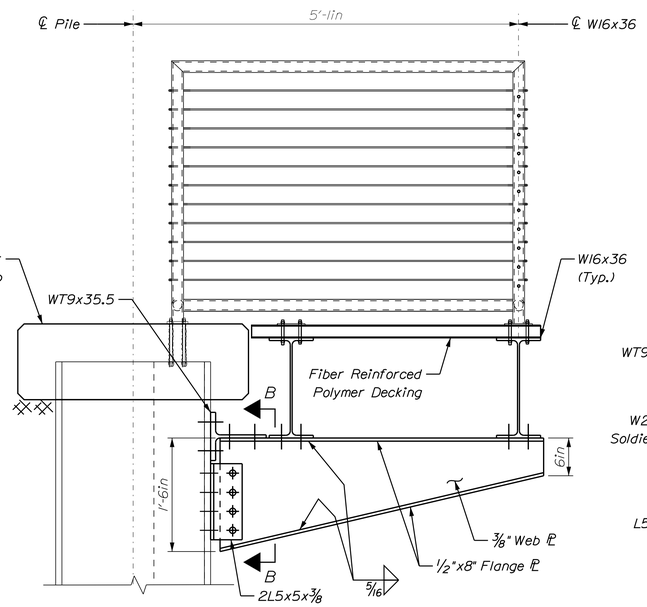

SECTION A-A

1' 6" 0 1' 2'
1" = 1'-0"

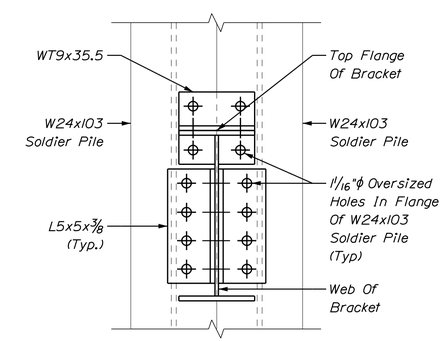

SECTION B-B

1' 9" 6" 3" 0 1'
1½" = 1'-0"

NOTES:

1. For the railing post layout, refer to Sheet No. 74.

STATE OF MAINE
DEPARTMENT OF TRANSPORTATION

APPROVED | DATE

COMMISSIONER:

CHIEF ENGINEER:

PROJECT INFORMATION		
PROGRAM	BRIDGE	
PROJECT MANAGER	STEPHEN BODGE	SIGNATURE
DESIGNER	HARDESTY & HANOVER	13196
CONSULTANT	HARDESTY & HANOVER	P.E. NUMBER
PROJECT RESIDENT		
CONTRACTOR		DATE
PROJECT COMPLETION DATE		

SOUTH BRISTOL
GUT BRIDGE

PERMANENT ANCHORED WALL
SECTIONS AND DETAILS II

SHEET NUMBER

39

OF 141

Filename: ...\039_soldier_pile_details.dgn Division: BRIDGE Username: common Date:1/29/2014

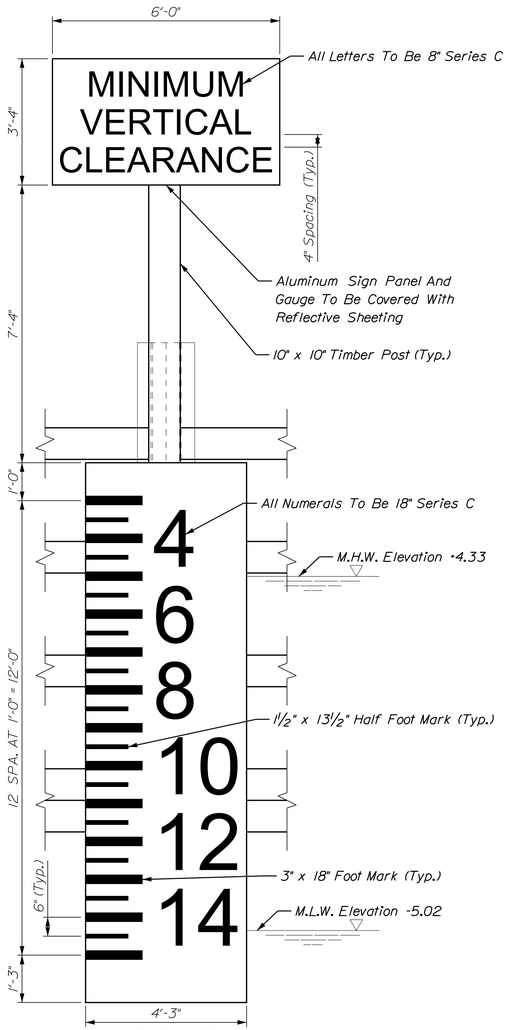

ELEVATION

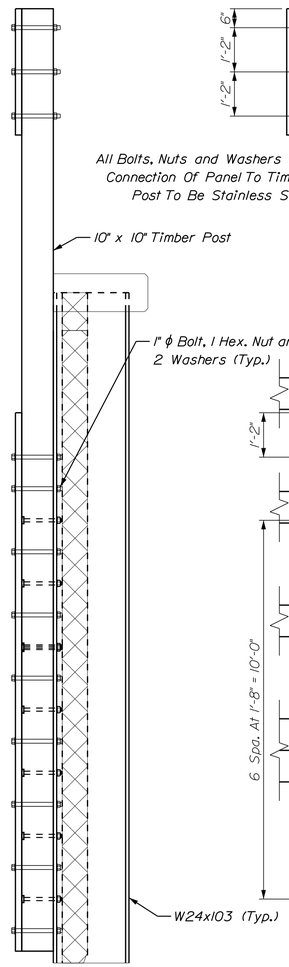

SECTION
CLEARANCE GAUGE DETAILS

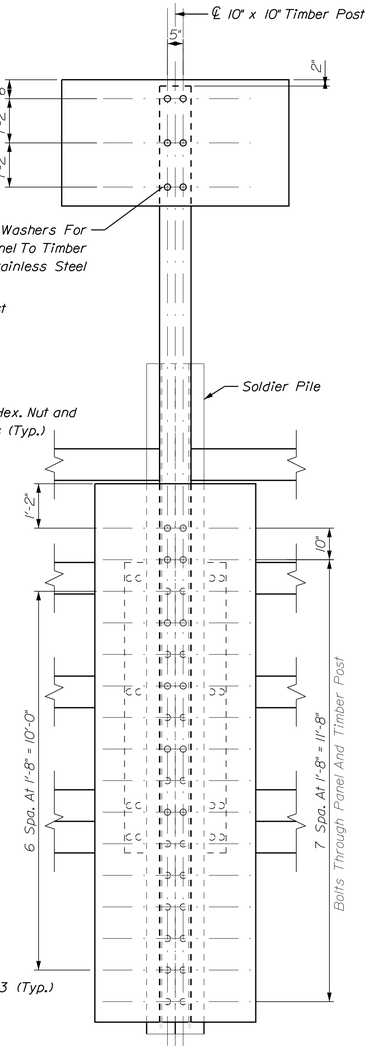

POST AND PANEL
ATTACHMENT PATTERN
(GRAPHICS NOT SHOWN
FOR CLARITY)

1' 6" 0 1' 2'
½" = 1'-0"

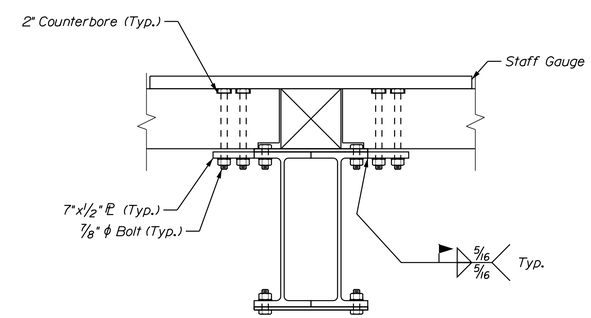

TIMBER POST CONNECTION DETAIL

1' 6" 0 1' 2'
1" = 1'-0"

STATE OF MAINE
DEPARTMENT OF TRANSPORTATION

APPROVED | DATE

COMMISSIONER:

CHIEF ENGINEER:

PROJECT INFORMATION		
PROGRAM	BRIDGE	
PROJECT MANAGER	STEPHEN BODGE	SIGNATURE
DESIGNER	HARDESTY & HANOVER	13196
CONSULTANT	HARDESTY & HANOVER	P.E. NUMBER
PROJECT RESIDENT		
CONTRACTOR		DATE
PROJECT COMPLETION DATE		

SOUTH BRISTOL
GUT BRIDGE

PERMANENT ANCHORED WALL
SECTIONS AND DETAILS II

SHEET NUMBER

40

OF 141

Filename: ...\040_soldier_pile_details_II.dgn Division: BRIDGE Username: common Date:1/29/2014

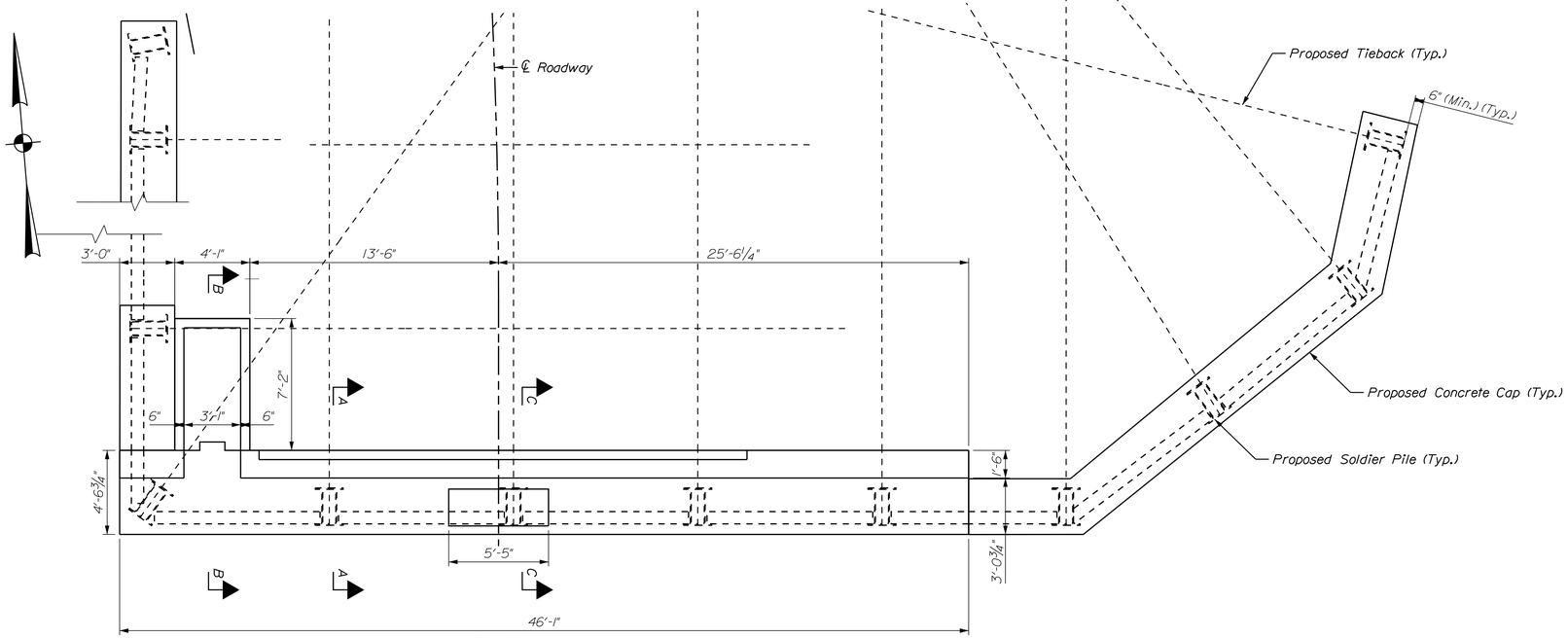

PLAN
(WALERS NOT SHOWN FOR CLARITY)

1" = 4'-0"

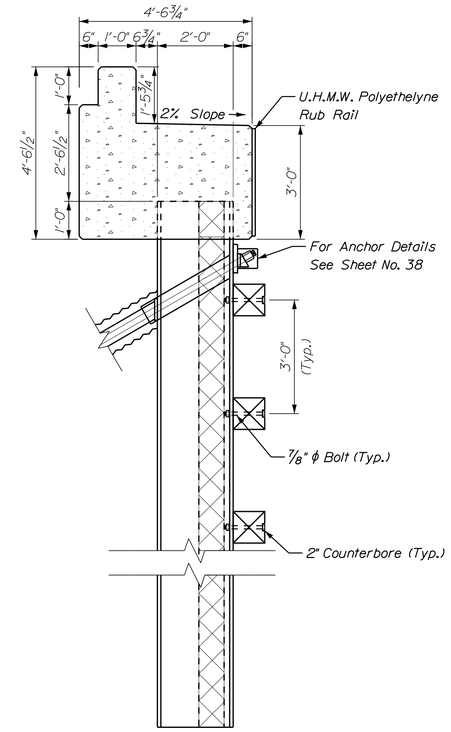

SECTION A-A

2' 1' 0 2' 4'
1" = 2'-0"

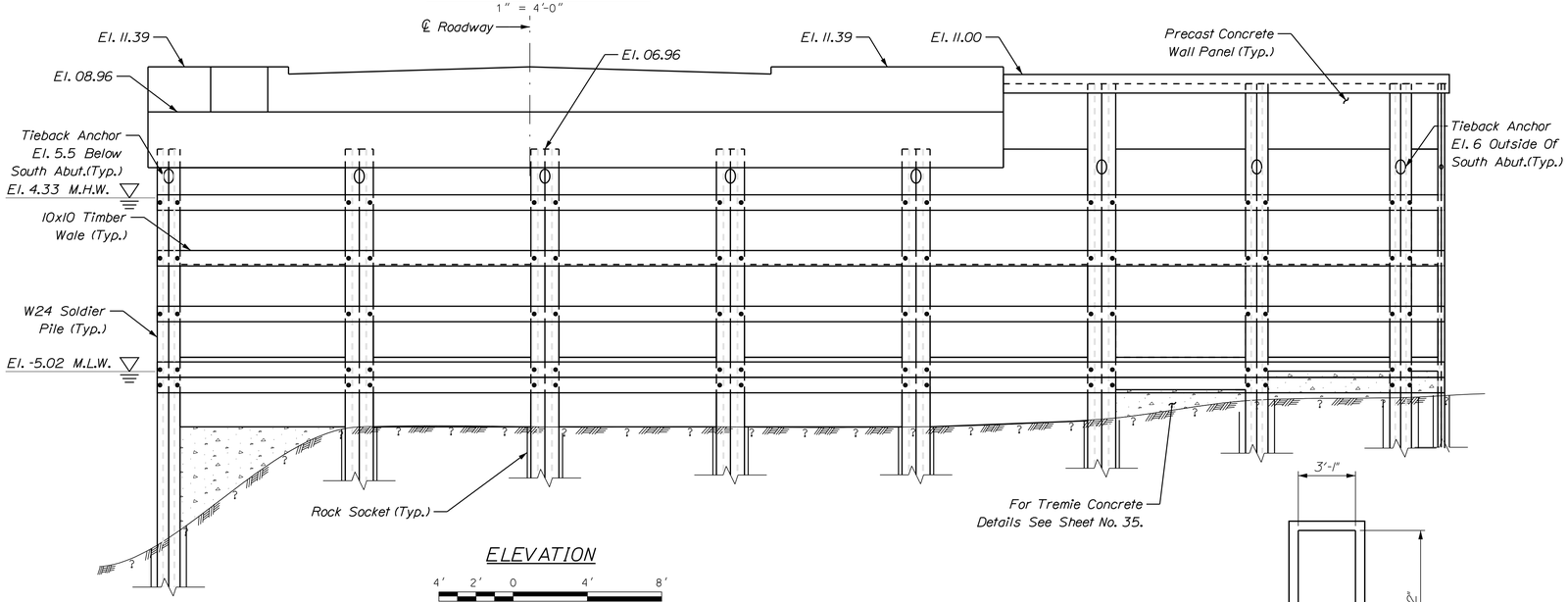

ELEVATION

4' 2' 0 4' 8'
1" = 4'-0"

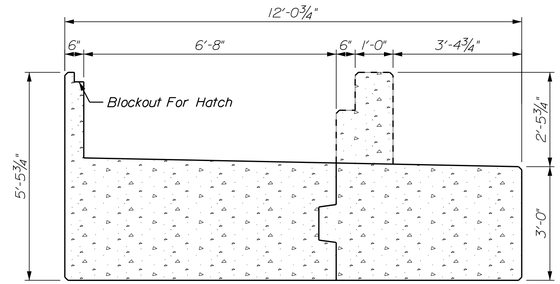

SECTION B-B

2' 1' 0 2' 4'
1" = 2'-0"

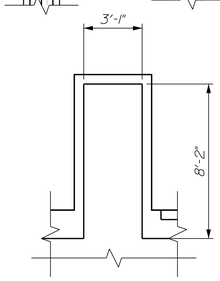

SPAN LOCK ACCESS HATCH

1'0 4' 8'
¼" = 1'-0"

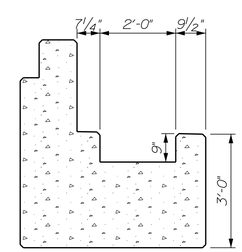

SECTION C-C
(SEE CENTERING DEVICE, SHEET NO. 63)

2' 1' 0 2' 4'
1" = 2'-0"

STATE OF MAINE
DEPARTMENT OF TRANSPORTATION

APPROVED | DATE
COMMISSIONER:
CHIEF ENGINEER:

PROJECT INFORMATION

PROGRAM	BRIDGE	
PROJECT MANAGER	STEPHEN BODGE	SIGNATURE
DESIGNER	HARDESTY & HANOVER	13196
CONSULTANT	HARDESTY & HANOVER	P.E. NUMBER
PROJECT RESIDENT		DATE
CONTRACTOR		
PROJECT COMPLETION DATE		

SOUTH BRISTOL
GUT BRIDGE

ABUTMENT NO. 1
PLAN AND ELEVATION

SHEET NUMBER
41
OF 141

Filename: ...\CADD\10_Str\041_south_abut.dgn Division: BRIDGE Username: common Date:1/29/2014

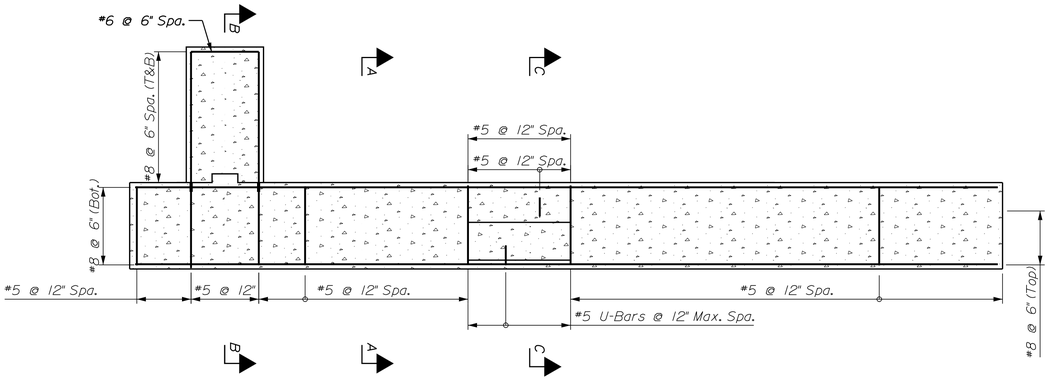

ABUTMENT SEAT REINFORCEMENT PLAN

4' 2' 0 4' 8'
1" = 4'-0"

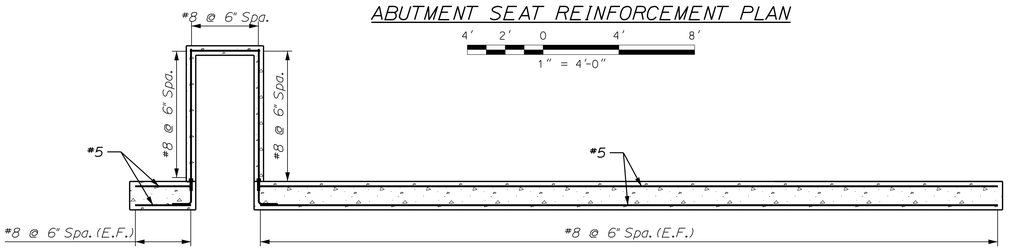

BACKWALL REINFORCEMENT PLAN

4' 2' 0 4' 8'
1" = 4'-0"

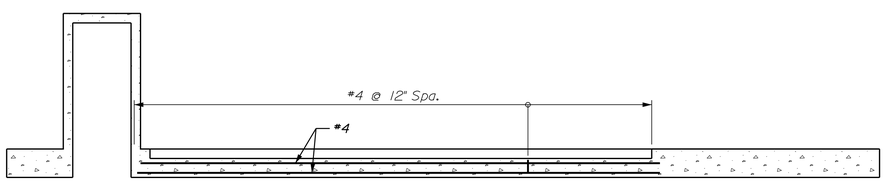

HEADER REINFORCEMENT PLAN

4' 2' 0 4' 8'
1" = 4'-0"

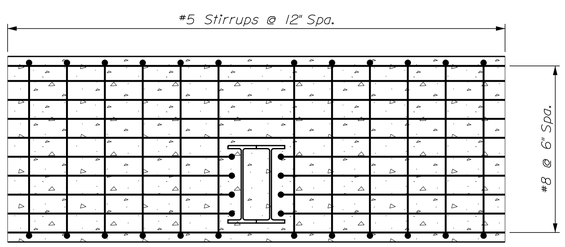

TYPICAL BOT. REINFORCEMENT PLAN AT PILE

2' 1' 0 2' 4'
1" = 2'-0"

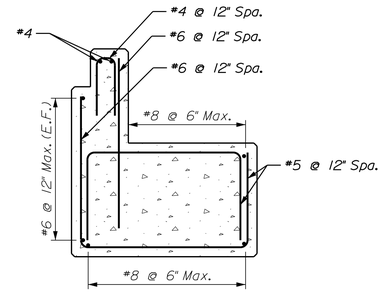

SECTION A-A

2' 1' 0 2' 4'
1" = 2'-0"

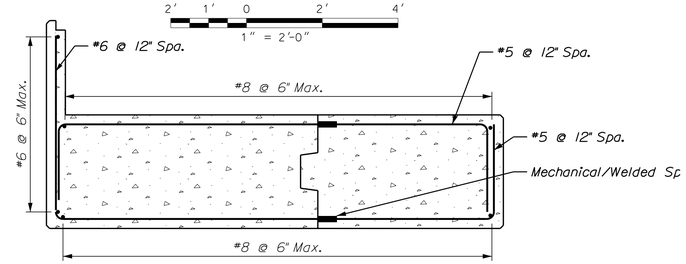

SECTION B-B

2' 1' 0 2' 4'
1" = 2'-0"

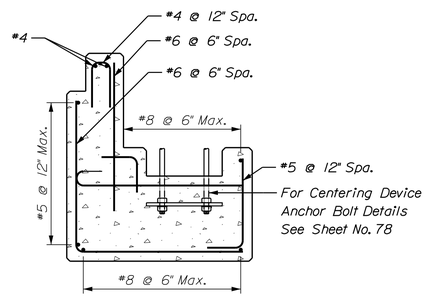

SECTION C-C

2' 1' 0 2' 4'
1" = 2'-0"

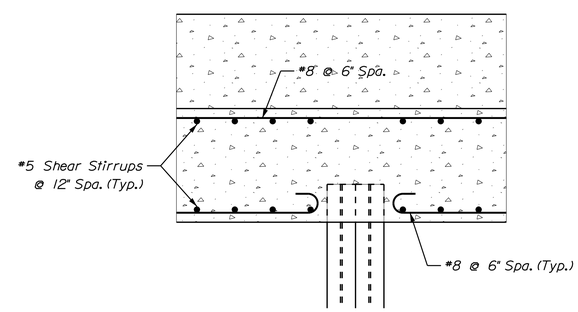

TYPICAL REINFORCEMENT AT PILE

2' 1' 0 2' 4'
1" = 2'-0"

STATE OF MAINE
DEPARTMENT OF TRANSPORTATION

APPROVED | DATE
COMMISSIONER:
CHIEF ENGINEER:

PROJECT INFORMATION		
PROGRAM	BRIDGE	
PROJECT MANAGER	STEPHEN BODGE	SIGNATURE
DESIGNER	HARDESTY & HANOVER	13196
CONSULTANT	HARDESTY & HANOVER	P.E. NUMBER
PROJECT RESIDENT		
CONTRACTOR		DATE
PROJECT COMPLETION DATE		

SOUTH BRISTOL
GUT BRIDGE

ABUTMENT NO.1 REINFORCEMENT
PLAN AND ELEVATION

SHEET NUMBER
42
OF 141

Filename: ... 042_south_abut_reinf.dgn Division: BRIDGE Username: common Date:2/3/2014

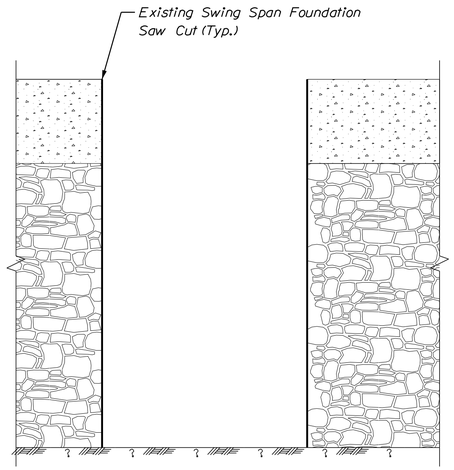

STAGE 1: EXCAVATE TO BEDROCK

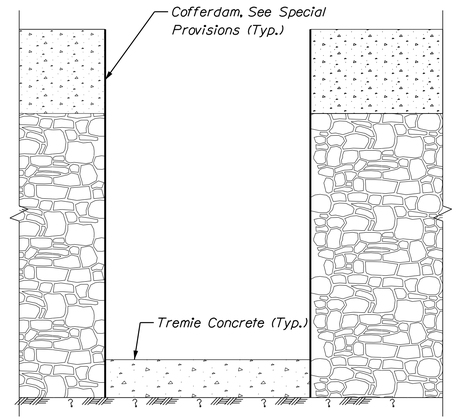

STAGE 2: POUR 2' OF TREMIE CONCRETE

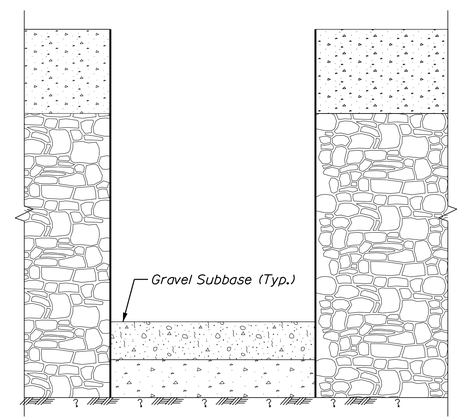

STAGE 3: ADD GRAVEL SUBBASE

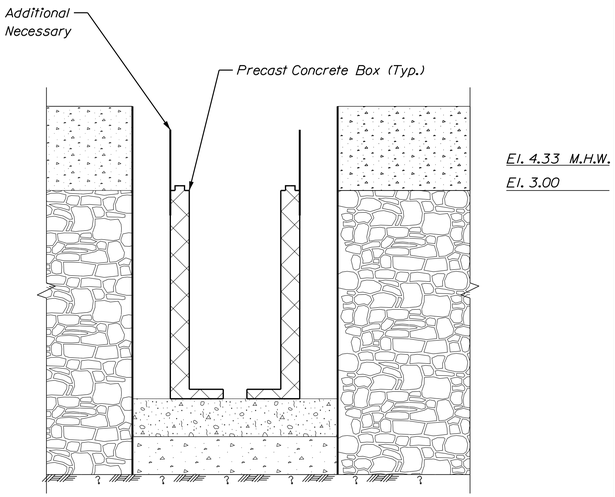

STAGE 4: PLACE PRECAST CONCRETE BOX

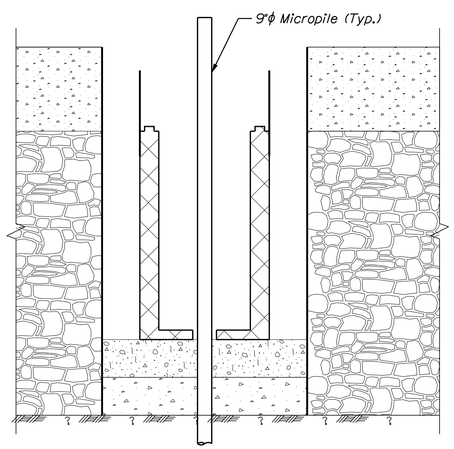

STAGE 5: INSTALL 9"ϕ MICROPILE

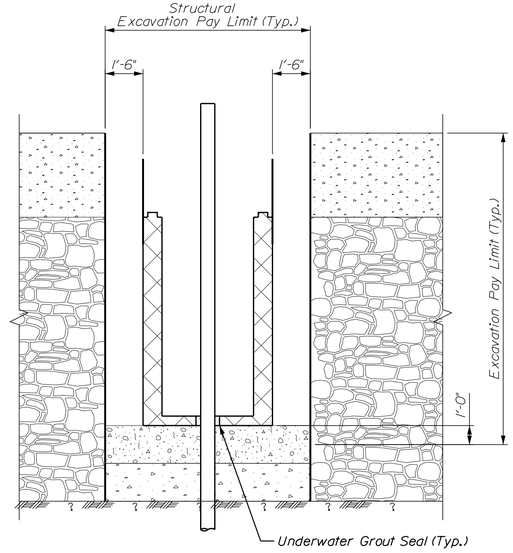

STAGE 6: SEAL PRECAST BOX

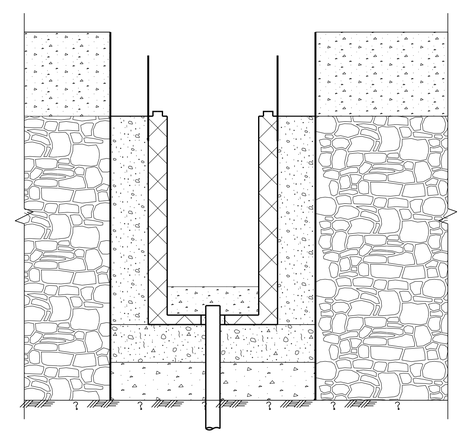

STAGE 7: CUT PILE OFF AT EL. 9.09, POUR PILE CAP AND BACK FILL TO TOP OF PRECAST PORTION

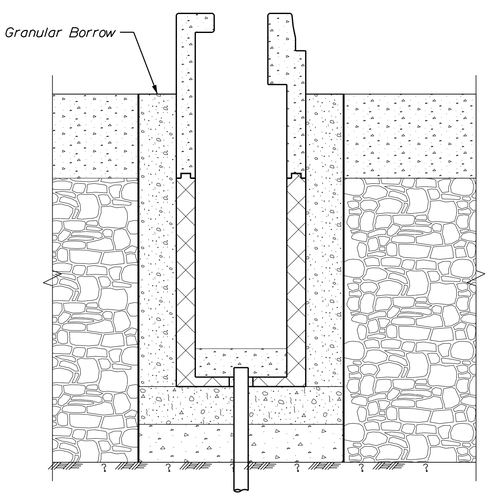

STAGE 8: POUR CAST-IN-PLACE PORTION OF BOX AND COMPLETE BACKFILL

STATE OF MAINE
DEPARTMENT OF TRANSPORTATION

APPROVED | DATE
COMMISSIONER:
CHIEF ENGINEER:

SIGNATURE
13196
P.E. NUMBER
DATE

PROJECT INFORMATION

PROGRAM	BRIDGE
PROJECT MANAGER	STEPHEN BODGE
DESIGNER	HARDESTY & HANOVER
CONSULTANT	HARDESTY & HANOVER
PROJECT RESIDENT	
CONTRACTOR	
PROJECT COMPLETION DATE	

SOUTH BRISTOL
GUT BRIDGE

BASCULE PIER
CONSTRUCTION SCHEMATIC

SHEET NUMBER
43
OF 141

Filename: ...\043_bascule_pier_const_schematic.dgn Division: BRIDGE Username: common Date:1/29/2014

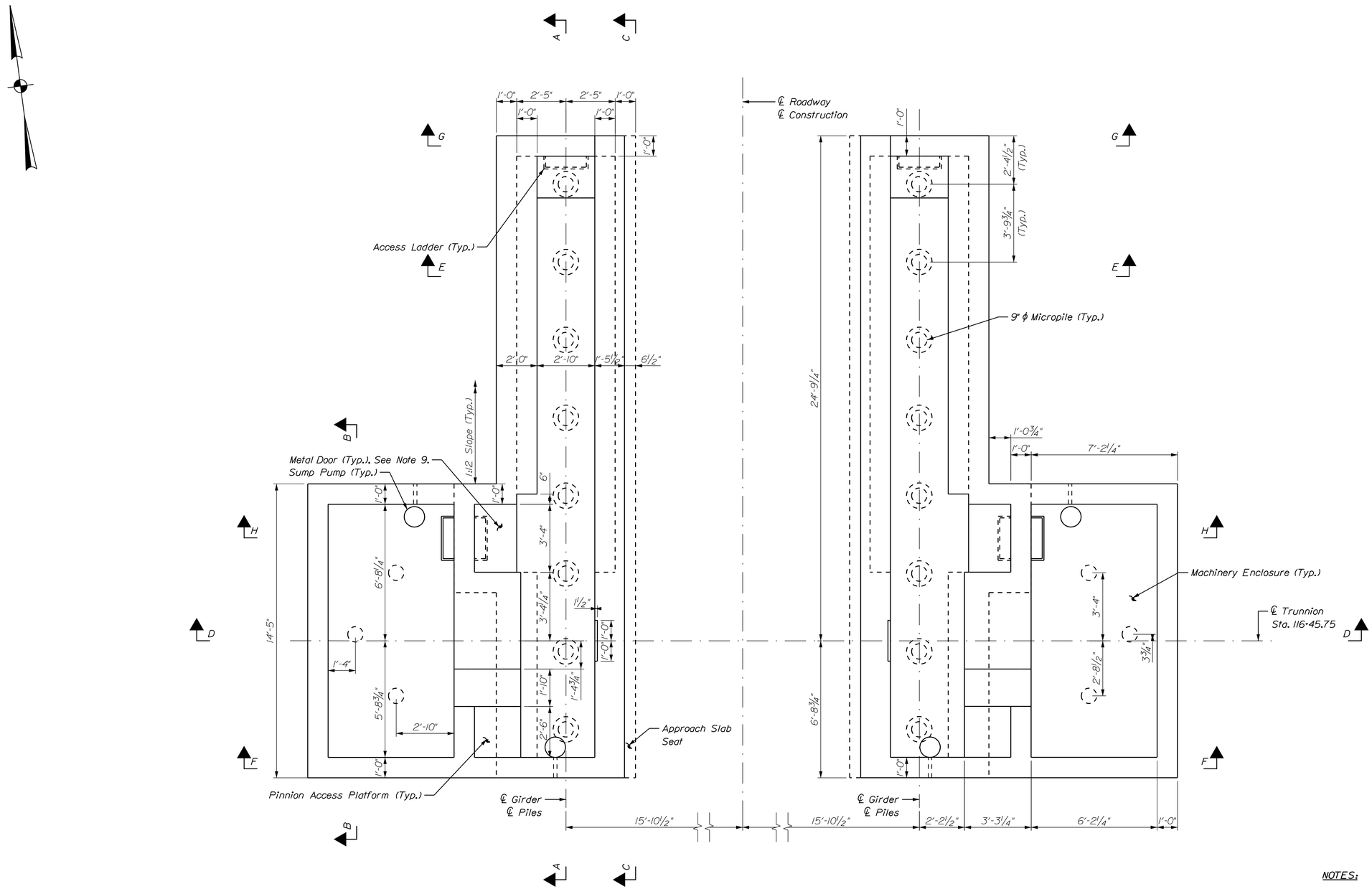

BASCULE PIER PLAN

1' 0 2' 4'

3/8" = 1'-0"

NOTES:

1. For Section A-A, See Sheet No. 46.
2. For Section B-B, See Sheet No. 46.
3. For Section C-C, See Sheet No. 47.
4. For Section D-D, See Sheet No. 48.
5. For Section E-E, See Sheet No. 48.
6. For Section F-F, See Sheet No. 49.
7. For Section G-G, See Sheet No. 49.
8. For Section H-H And Access Details, See Sheet No. 56.
9. For Detailed Requirements, See The Special Provisions.

STATE OF MAINE
DEPARTMENT OF TRANSPORTATION

APPROVED	DATE
COMMISSIONER:	
CHIEF ENGINEER:	

PROJECT INFORMATION		
PROGRAM	BRIDGE	
PROJECT MANAGER	STEPHEN BODGE	SIGNATURE
DESIGNER	HARDESTY & HANOVER	13196
CONSULTANT	HARDESTY & HANOVER	P.E. NUMBER
PROJECT RESIDENT		
CONTRACTOR		DATE
PROJECT COMPLETION DATE		

SOUTH BRISTOL
GUT BRIDGE

BASCULE PIER PLAN

SHEET NUMBER

44

OF 141

Filename: ...\044_bascule_pier_plan.dgn Division: BRIDGE Username: common Date:1/29/2014

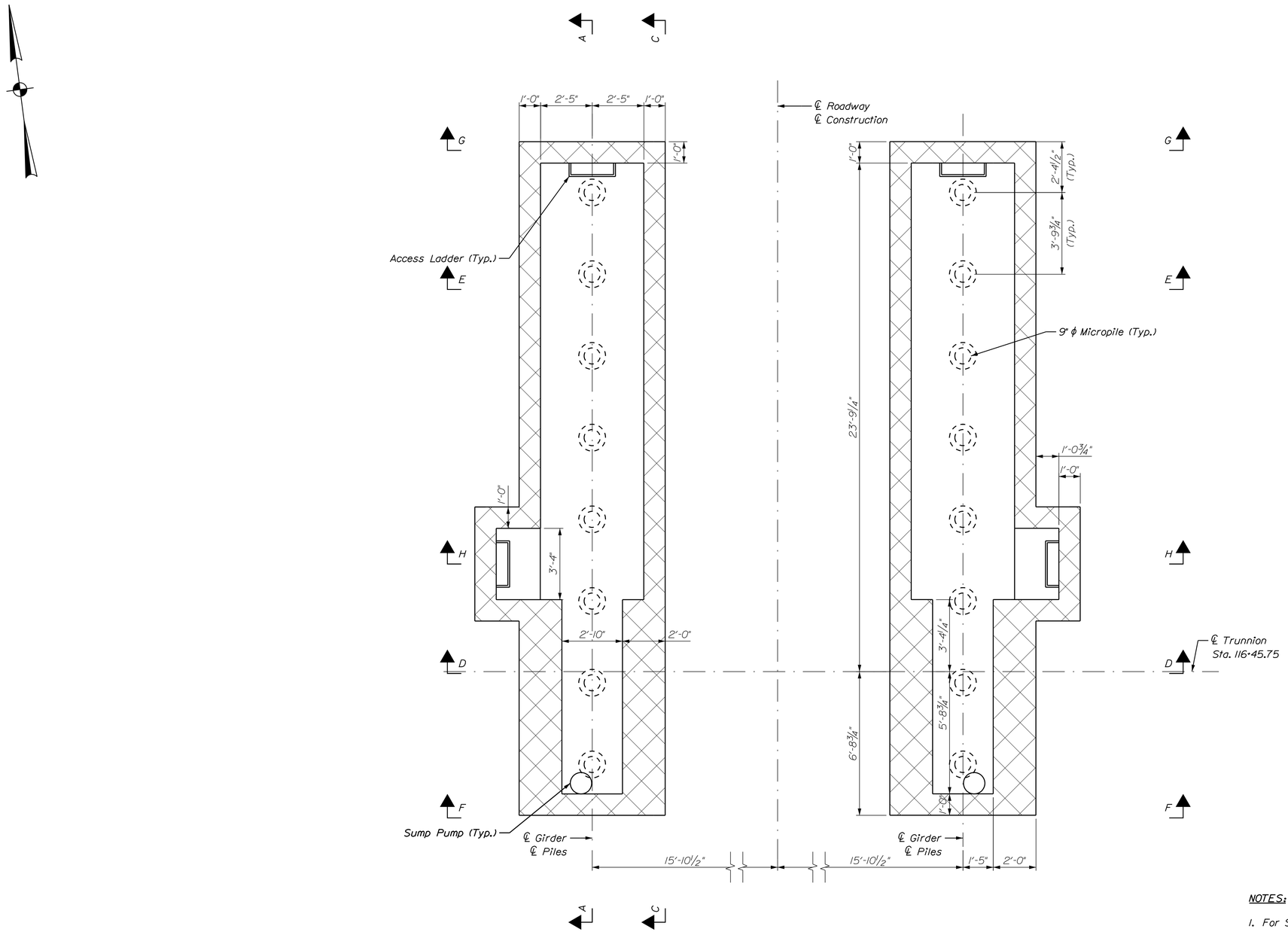

BASCULE PIER PLAN @ EL. 1.00

1' 0 2' 4'

⅜" = 1'-0"

NOTES:

1. For Section A-A, See Sheet No. 46.
2. For Section C-C, See Sheet No. 47.
3. For Section D-D, See Sheet No. 48.
4. For Section E-E, See Sheet No. 48.
5. For Section F-F, See Sheet No. 49.
6. For Section G-G, See Sheet No. 49.
7. For Section H-H And Access Details, See Sheet No. 56.
8. The Contractor Has The Option To Cast-In-Place The Bascule Pier By Using Pre-Assembled Forms. All 1' Thick Wall Sections Shall Be 1'-6" Minimum If They Are Cast-In-Place (Excluding Machinery Enclosure.)

STATE OF MAINE
DEPARTMENT OF TRANSPORTATION

APPROVED | DATE

COMMISSIONER:

CHIEF ENGINEER:

PROJECT INFORMATION

PROGRAM	BRIDGE	
PROJECT MANAGER	STEPHEN BODGE	SIGNATURE
DESIGNER	HARDESTY & HANOVER	13196
CONSULTANT	HARDESTY & HANOVER	P.E. NUMBER
PROJECT RESIDENT		
CONTRACTOR		DATE
PROJECT COMPLETION DATE		

SOUTH BRISTOL
GUT BRIDGE

BASCULE PIER PLAN
AT EL. 1.00

SHEET NUMBER

45

OF 141

Filename: ...\045_bascule_pier_plan_at_elev_1.dgn Division: BRIDGE Username: common Date:1/29/2014

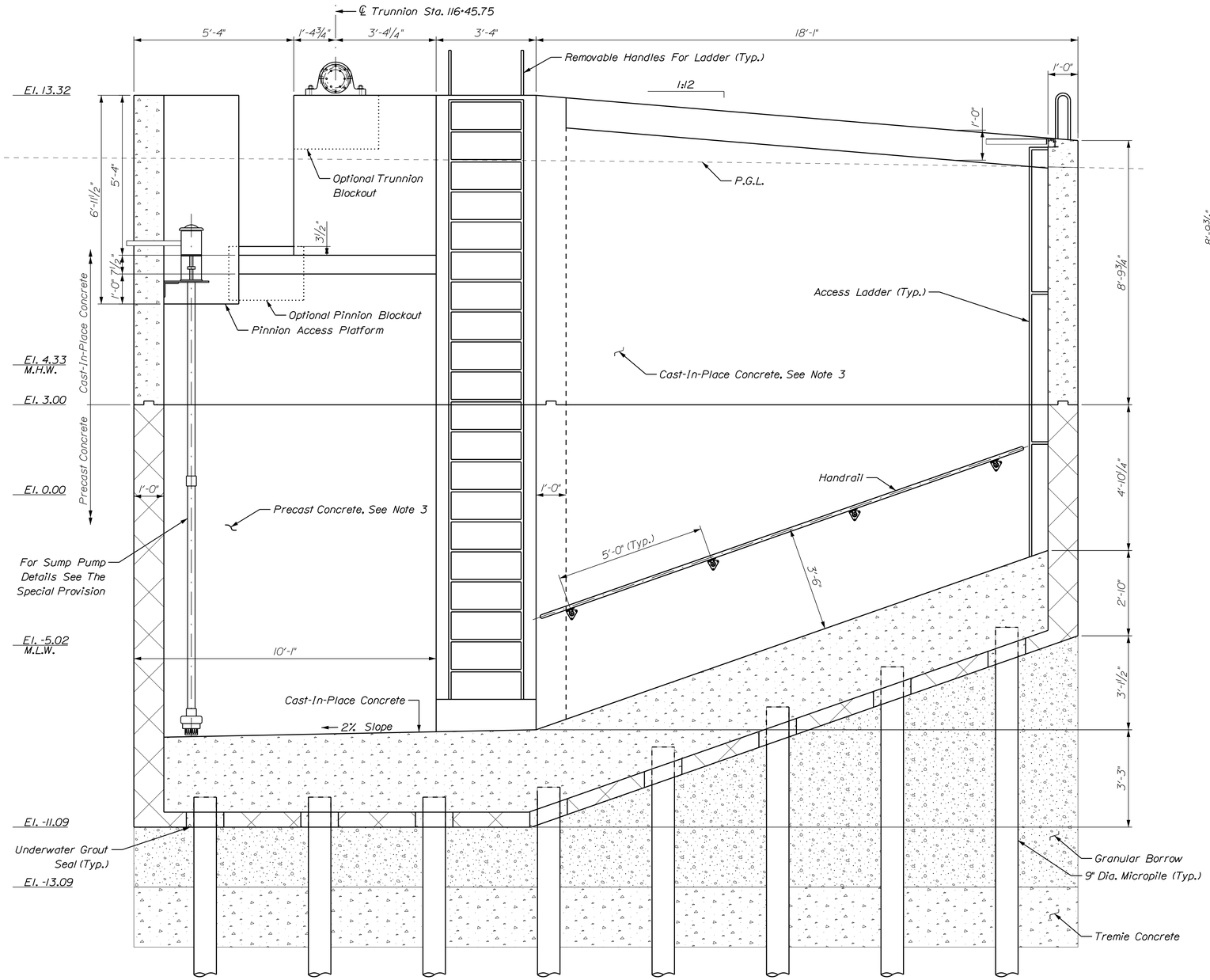

SECTION A-A

1' 6" 0 1' 2'

1/2" = 1'-0"

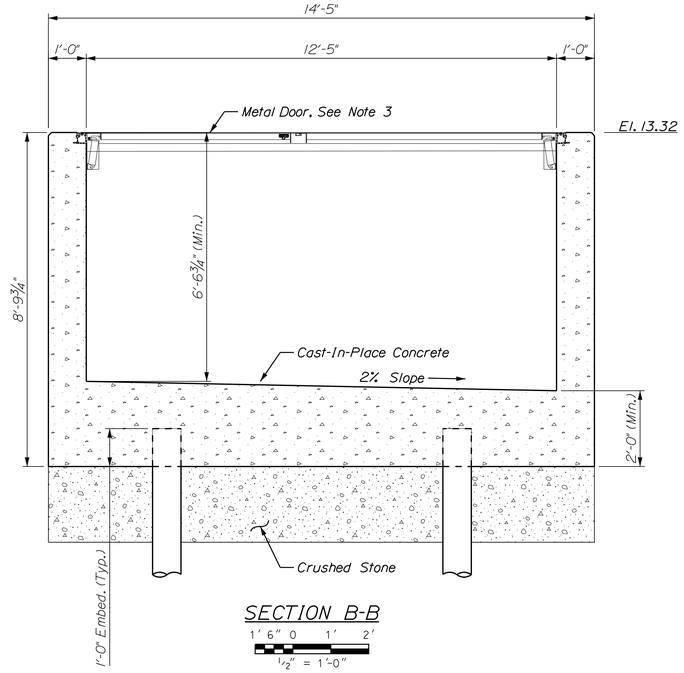

SECTION B-B

1' 6" 0 1' 2'

1/2" = 1'-0"

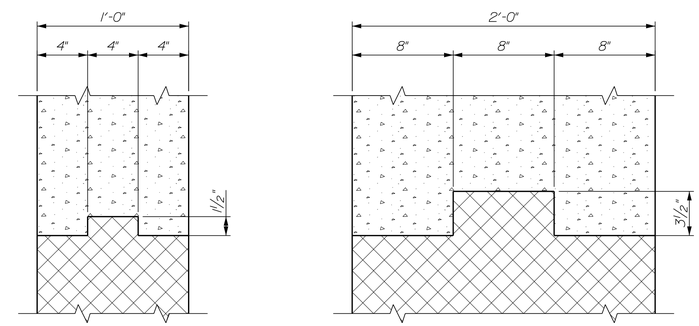

TYPICAL SHEAR KEY DETAILS

2' 1' 0 2'

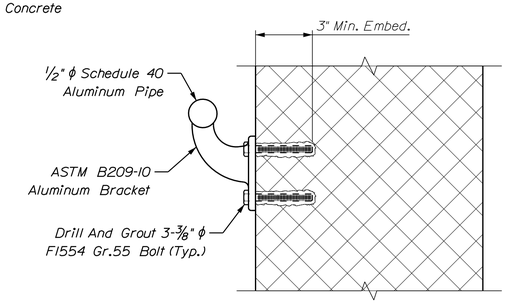

HANDRAIL CONNECTION DETAIL

0 3" 6" 9" 12"

SCALE IN INCHES

NOTES:

1. For Location Of Section A-A, See Sheet No. 44.
2. For Location Of Section B-B, See Sheet No. 44.
3. For Detailed Requirements, See The Special Provisions.
4. The Horizontal Joint At Elevation 3' Between The Precast Pier Section And The Cast In Place Section Shall Have A PVC Waterstop As Shown On The Details On Top Of Sheet 502(01) In The MaineDOT Standard Details.

STATE OF MAINE
DEPARTMENT OF TRANSPORTATION

APPROVED | DATE

COMMISSIONER:

CHIEF ENGINEER:

PROJECT INFORMATION		
PROGRAM	BRIDGE	
PROJECT MANAGER	STEPHEN BODGE	SIGNATURE
DESIGNER	HARDESTY & HANOVER	13196
CONSULTANT	HARDESTY & HANOVER	P.E. NUMBER
PROJECT RESIDENT		
CONTRACTOR		DATE
PROJECT COMPLETION DATE		

SOUTH BRISTOL
GUT BRIDGE

BASCULE PIER SECTIONS I

SHEET NUMBER

46

OF 141

Filename: ...\046_bascule_pier_sections_01.dgn Division: BRIDGE Username: common Date:1/29/2014

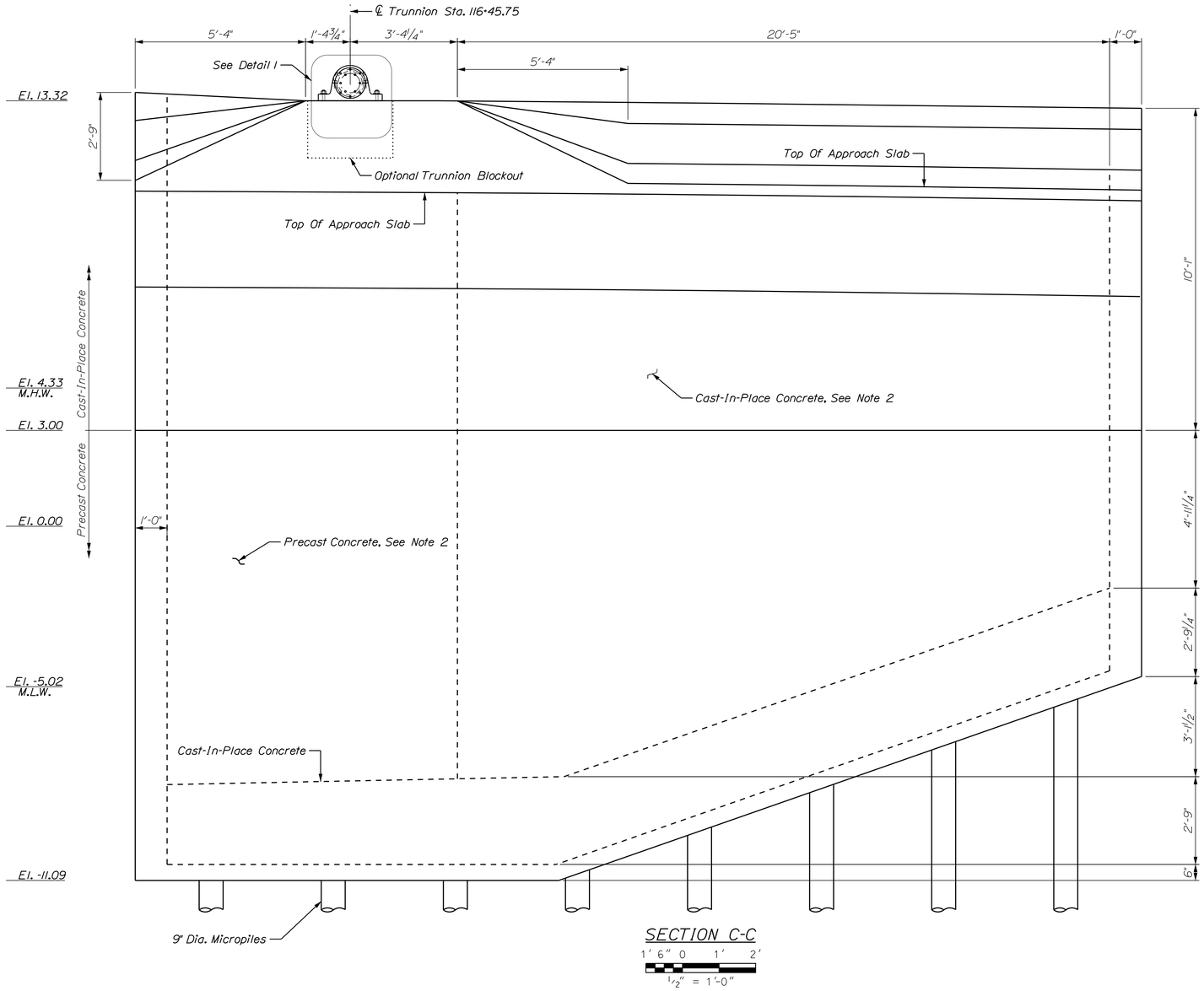

SECTION C-C

1' 6" 0 1' 2'

1/2" = 1'-0"

NOTES:

1. For Location Of Section C-C, See Sheet No. 44.
2. For Detailed Requirements, See The Special Provisions.

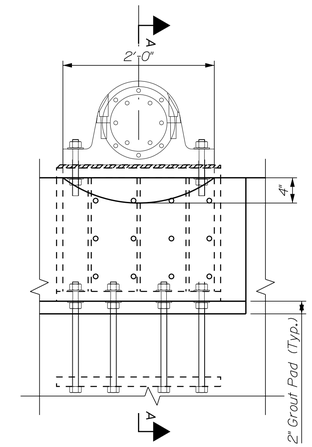

DETAIL 1

1' 6" 0 1' 2'

1" = 1'-0"

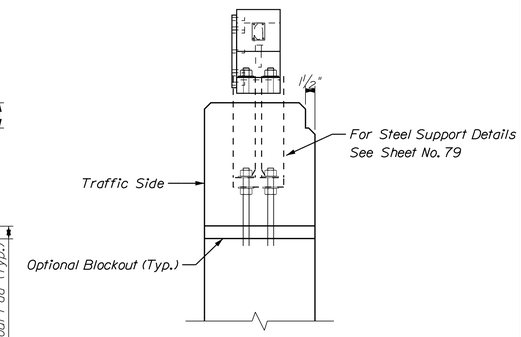

SECTION A-A

1' 6" 0 1' 2'

1" = 1'-0"

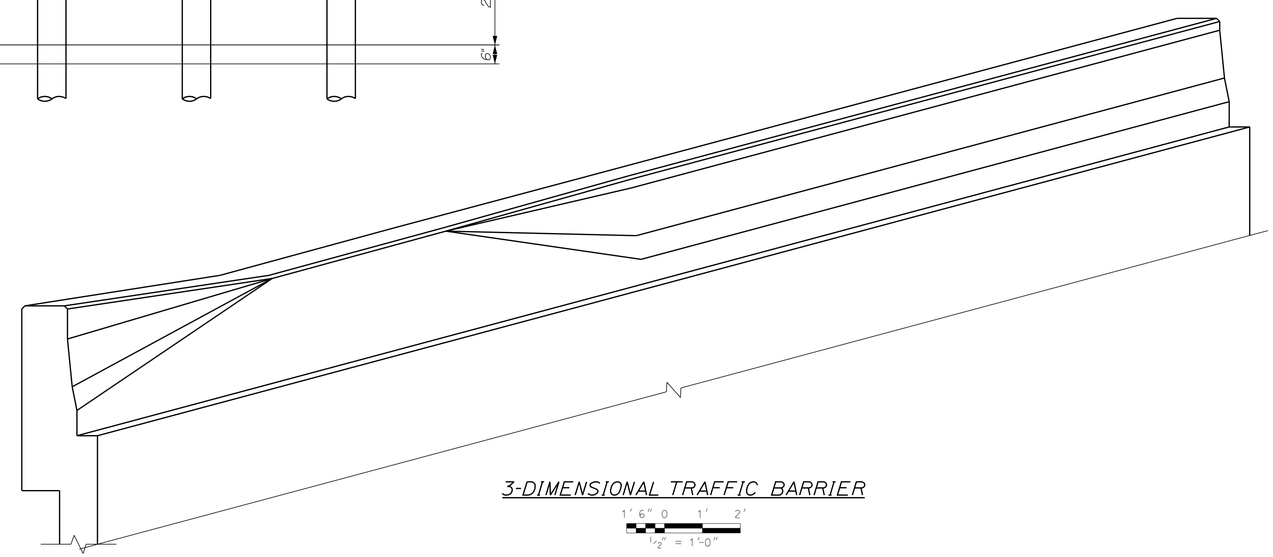

3-DIMENSIONAL TRAFFIC BARRIER

1' 6" 0 1' 2'

1/2" = 1'-0"

STATE OF MAINE
DEPARTMENT OF TRANSPORTATION

APPROVED

	DATE
COMMISSIONER:	
CHIEF ENGINEER:	

PROJECT INFORMATION		SIGNATURE
PROGRAM	BRIDGE	
PROJECT MANAGER	STEPHEN BODGE	
DESIGNER	HARDESTY & HANOVER	13196
CONSULTANT	HARDESTY & HANOVER	P.E. NUMBER
PROJECT RESIDENT		
CONTRACTOR		DATE
PROJECT COMPLETION DATE		

SOUTH BRISTOL
GUT BRIDGE

BASCULE PIER SECTIONS II

SHEET NUMBER

47

OF 141

Filename: ...\047_bascule_pier_sections_02.dgn Division: BRIDGE Username: common Date:1/29/2014

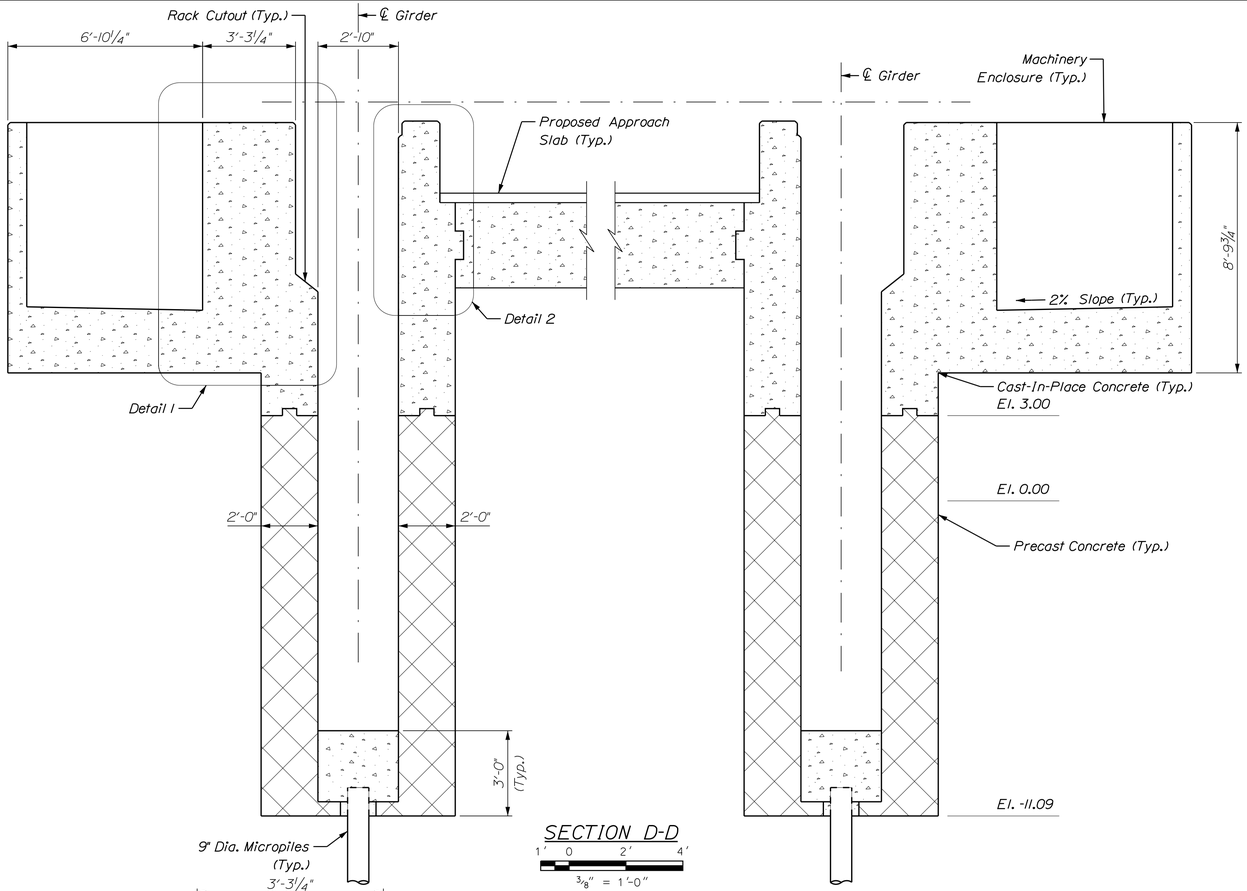

SECTION D-D

1' 0 2' 4'
3/8" = 1'-0"

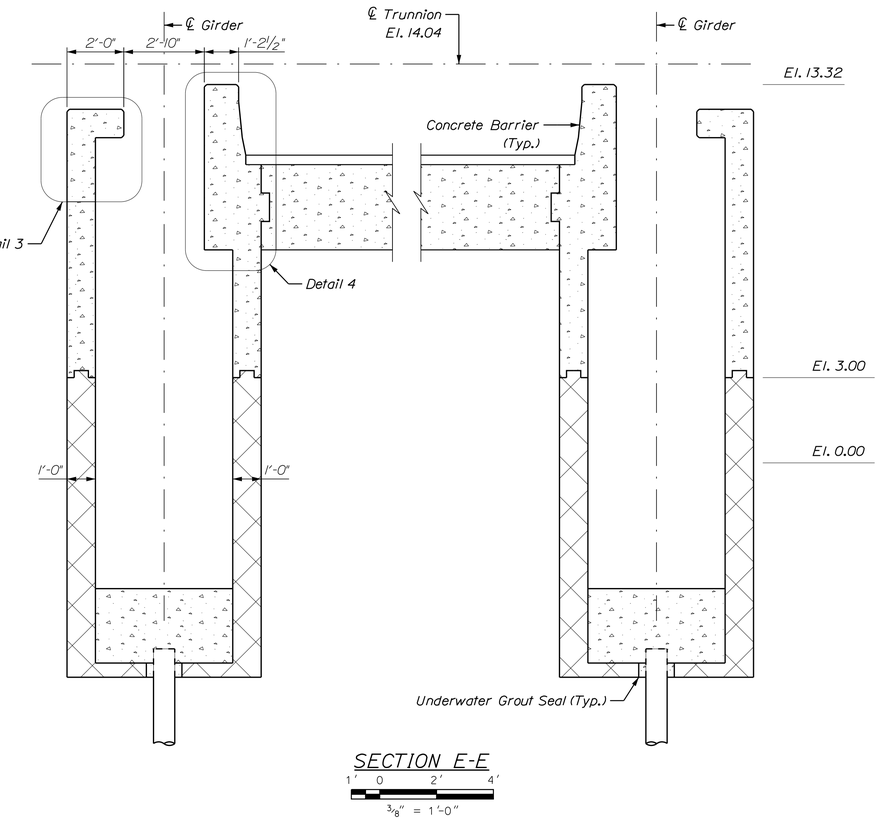

SECTION E-E

1' 0 2' 4'
3/8" = 1'-0"

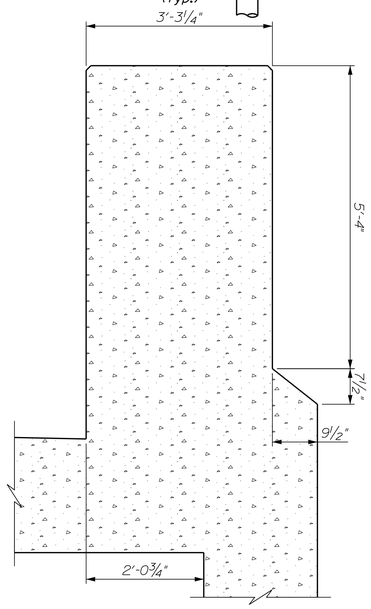

DETAIL 1

1' 6" 0 1' 2'
3/4" = 1'-0"

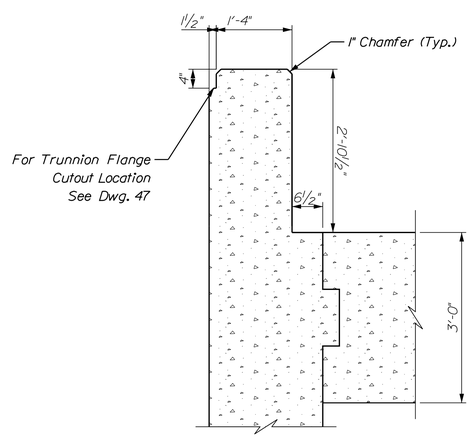

DETAIL 2

1' 6" 0 1' 2'
3/4" = 1'-0"

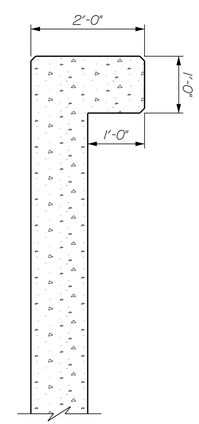

DETAIL 3

1' 6" 0 1' 2'
3/4" = 1'-0"

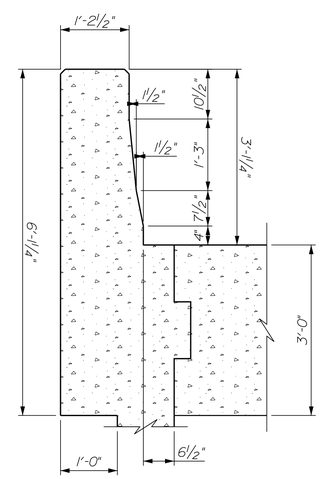

DETAIL 4 (FULL HEIGHT SECTION)

1' 6" 0 1' 2'
3/4" = 1'-0"

NOTES:

1. For Section D-D, See Sheet No. 44.
2. For Section E-E, See Sheet No. 44.

STATE OF MAINE
DEPARTMENT OF TRANSPORTATION

APPROVED | DATE
COMMISSIONER:
CHIEF ENGINEER:

SIGNATURE
13196
P.E. NUMBER
DATE

PROJECT INFORMATION

PROGRAM	BRIDGE
PROJECT MANAGER	STEPHEN BODGE
DESIGNER	HARDESTY & HANOVER
CONSULTANT	HARDESTY & HANOVER
PROJECT RESIDENT	
CONTRACTOR	
PROJECT COMPLETION DATE	

SOUTH BRISTOL
GUT BRIDGE

BASCULE PIER SECTIONS III

SHEET NUMBER
48
OF 141

Filename: ...\048_bascule_pier_sections_03.dgn Division: BRIDGE Username: common Date:1/29/2014

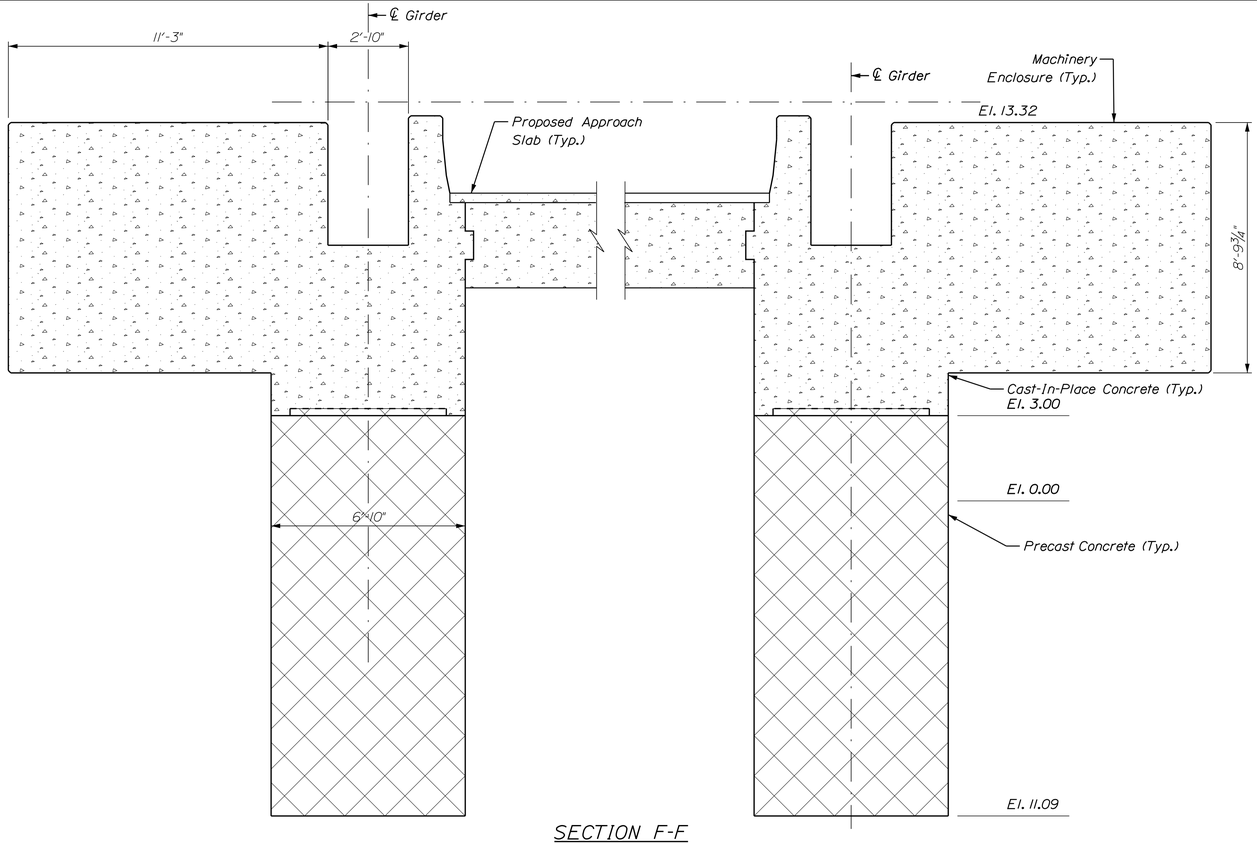

SECTION F-F

1' 0 2' 4'

3/8" = 1'-0"

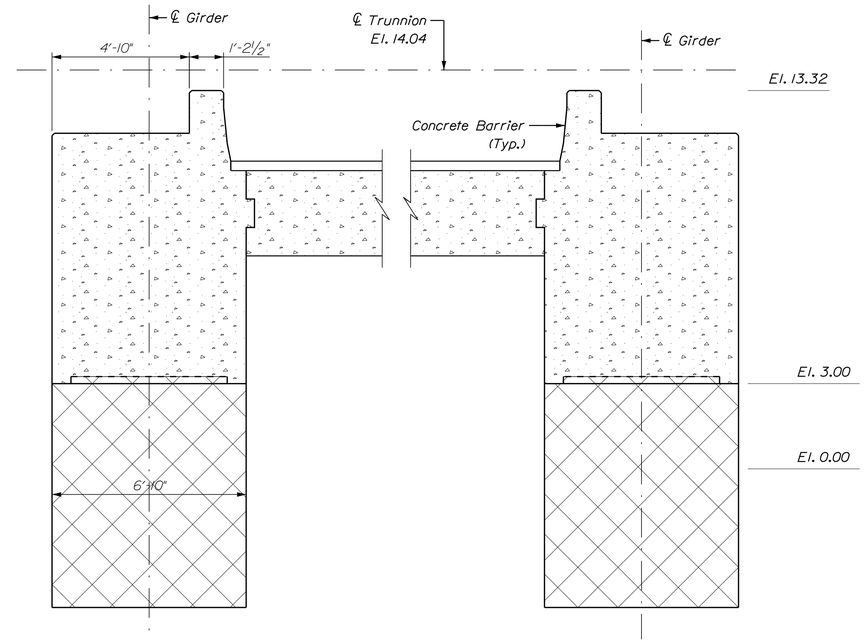

SECTION G-G

1' 0 2' 4'

3/8" = 1'-0"

NOTES:

1. For Section F-F, See Sheet No. 44.
2. For Section G-G, See Sheet No. 44.

STATE OF MAINE
DEPARTMENT OF TRANSPORTATION

APPROVED

DATE

COMMISSIONER:

CHIEF ENGINEER:

SIGNATURE

13196
P.E. NUMBER

DATE

PROJECT INFORMATION

PROGRAM	BRIDGE
PROJECT MANAGER	STEPHEN BODGE
DESIGNER	HARDESTY & HANOVER
CONSULTANT	HARDESTY & HANOVER
PROJECT RESIDENT	
CONTRACTOR	
PROJECT COMPLETION DATE	

SOUTH BRISTOL
GUT BRIDGE

BASCULE PIER SECTIONS IV

SHEET NUMBER

49

OF 141

Filename: ...\049_bascule_pier_sections_04.dgn Division: BRIDGE Username: common Date:1/29/2014

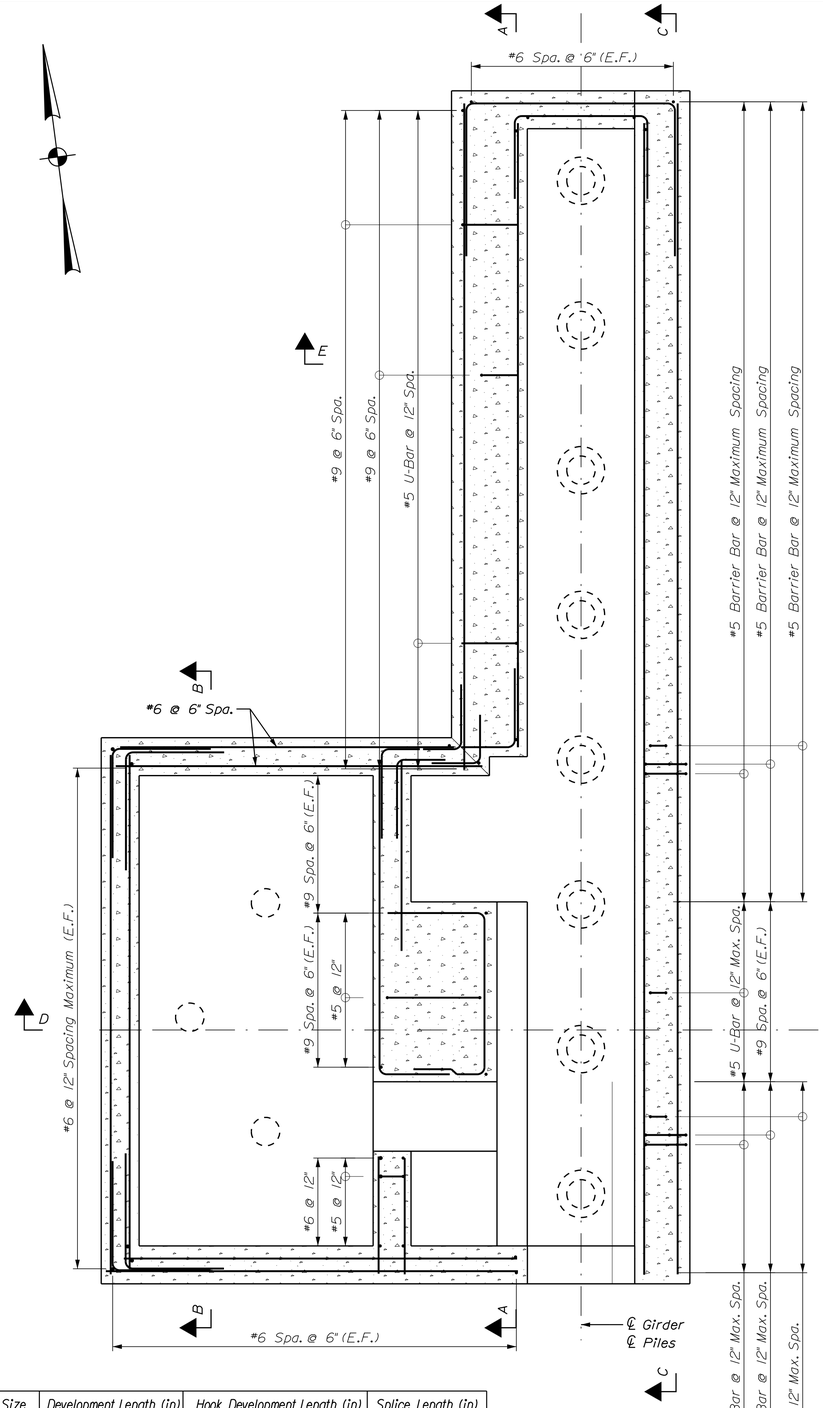

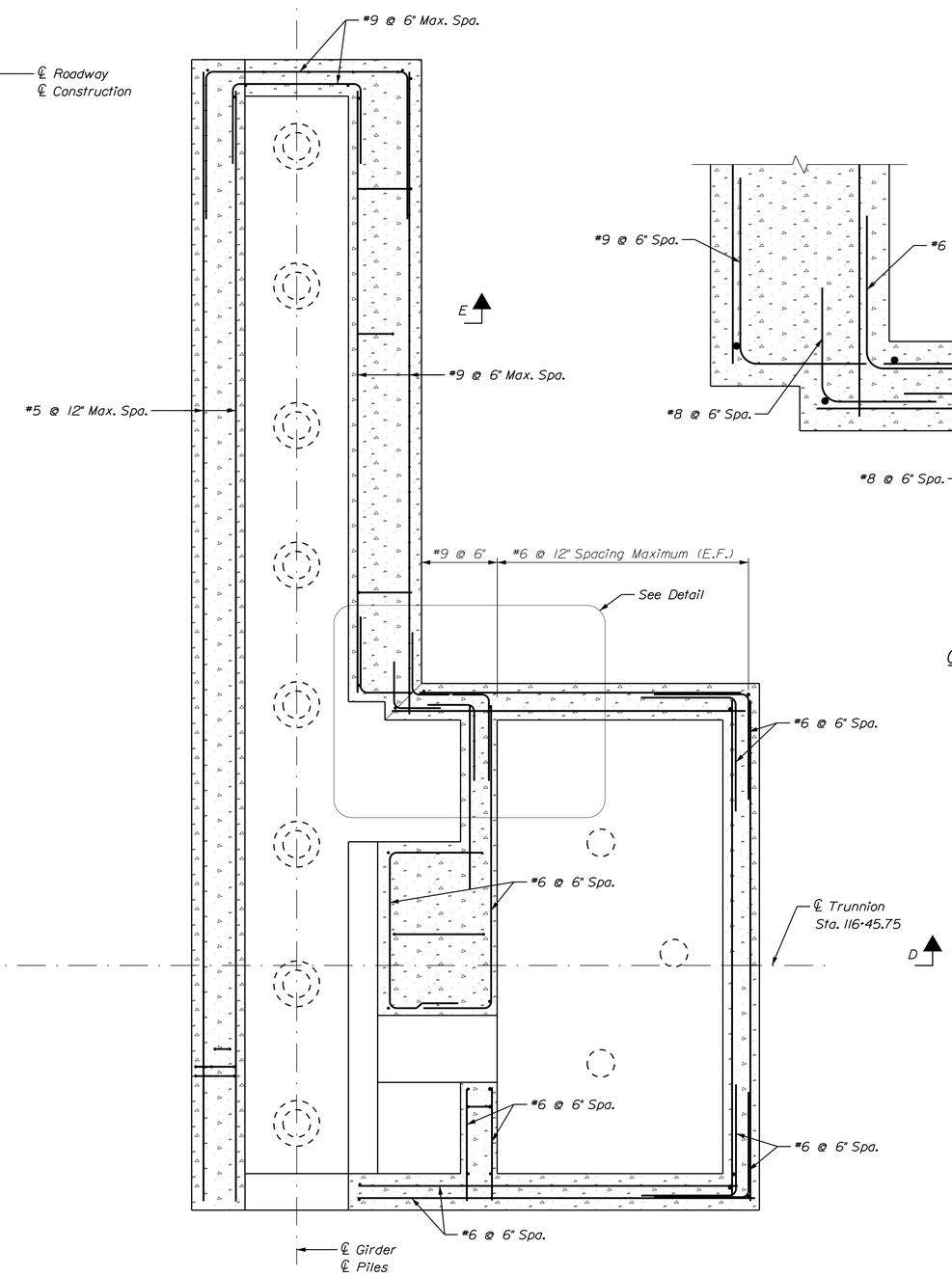

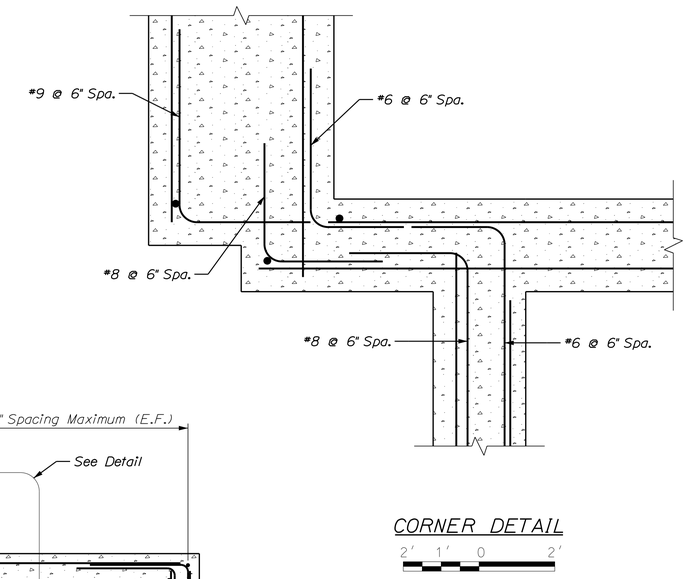

Bar Size	Development Length (in)	Hook Development Length (in)	Splice Length (in)
5	15	10	20
6	18	12	24
7	22	14	29
8	29	16	38
9	45	19	59

BASCULE PIER SECTION @ EL. 12.00

1' 0 2' 4'
3/8" = 1'-0"

NOTES:

1. For Section A-A, See Sheet No. 53.
2. For Section B-B, See Sheet No. 53.
3. For Section C-C, See Sheet No. 54.
4. For Section D-D, See Sheet No. 55.
5. For Section E-E, See Sheet No. 55.

STATE OF MAINE
DEPARTMENT OF TRANSPORTATION

APPROVED | DATE
COMMISSIONER:
CHIEF ENGINEER:

PROJECT INFORMATION

PROGRAM	BRIDGE		
PROJECT MANAGER	STEPHEN BODGE	SIGNATURE	
DESIGNER	HARDESTY & HANOVER	13196	P.E. NUMBER
CONSULTANT	HARDESTY & HANOVER		
PROJECT RESIDENT			
CONTRACTOR		DATE	
PROJECT COMPLETION DATE			

SOUTH BRISTOL
GUT BRIDGE
BASCULE PIER REINFORCEMENT
SECTIONS I

SHEET NUMBER
50
OF 141

Filename: ...\050_bascule_pier_reinf_sections_01.dgn Division: BRIDGE Username: common Date:1/29/2014

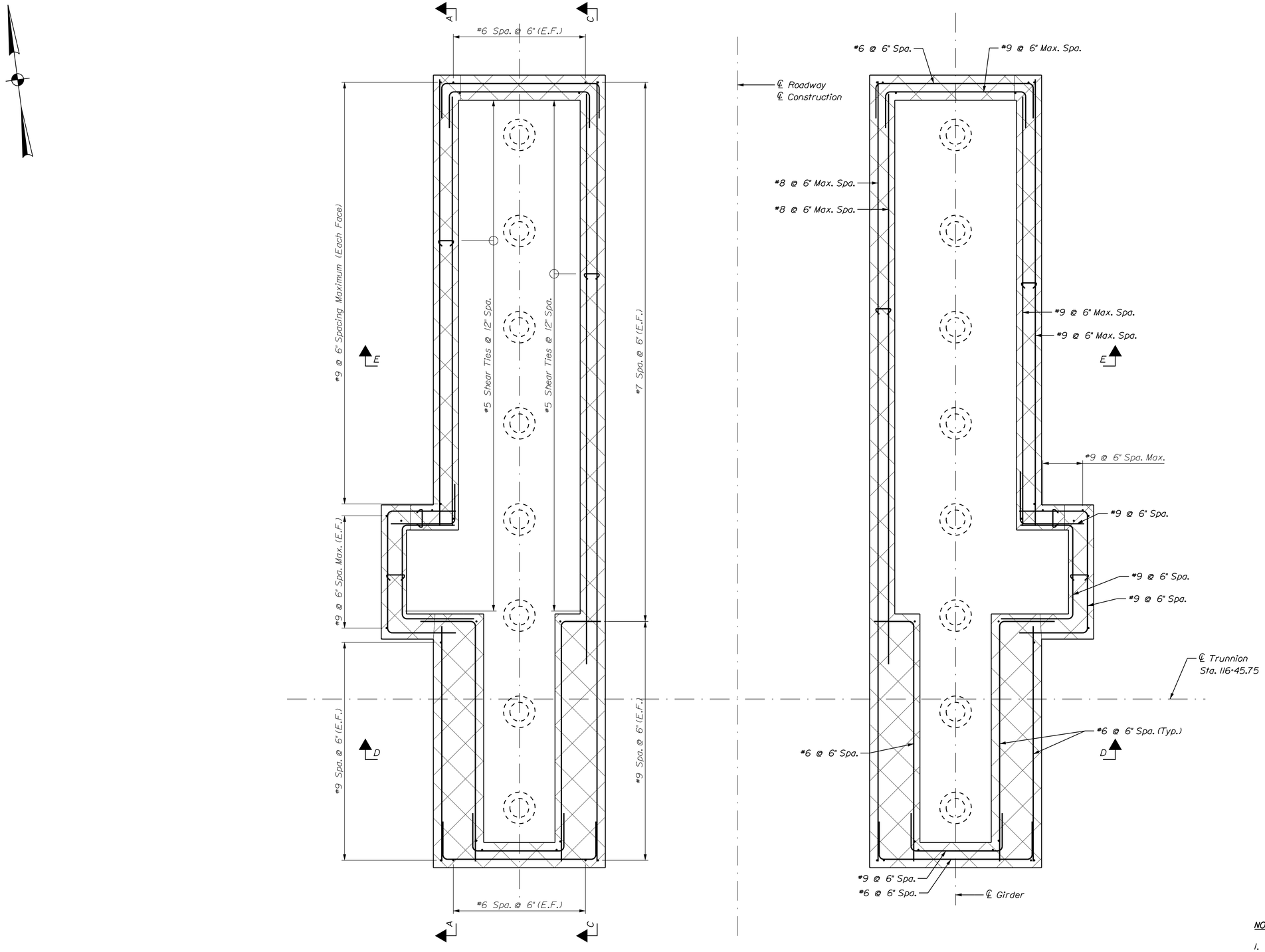

BASCULE PIER SECTION @ EL. 1.00

1' 0 2' 4'

3/8" = 1'-0"

NOTES:

1. For Section A-A, See Sheet No. 53.
2. For Section C-C, See Sheet No. 54.
3. For Section D-D, See Sheet No. 55.
4. For Section E-E, See Sheet No. 55.

STATE OF MAINE
DEPARTMENT OF TRANSPORTATION

APPROVED | DATE

COMMISSIONER:

CHIEF ENGINEER:

PROJECT INFORMATION		
PROGRAM	BRIDGE	
PROJECT MANAGER	STEPHEN BODGE	SIGNATURE
DESIGNER	HARDESTY & HANOVER	13196
CONSULTANT	HARDESTY & HANOVER	P.E. NUMBER
PROJECT RESIDENT		
CONTRACTOR		DATE
PROJECT COMPLETION DATE		

SOUTH BRISTOL GUT BRIDGE

BASCULE PIER REINFORCEMENT SECTIONS II

SHEET NUMBER

51

OF 141

Filename: ...\051_bascule_pier_reinf_sections_02.dgn Division: BRIDGE Username: common Date:1/29/2014

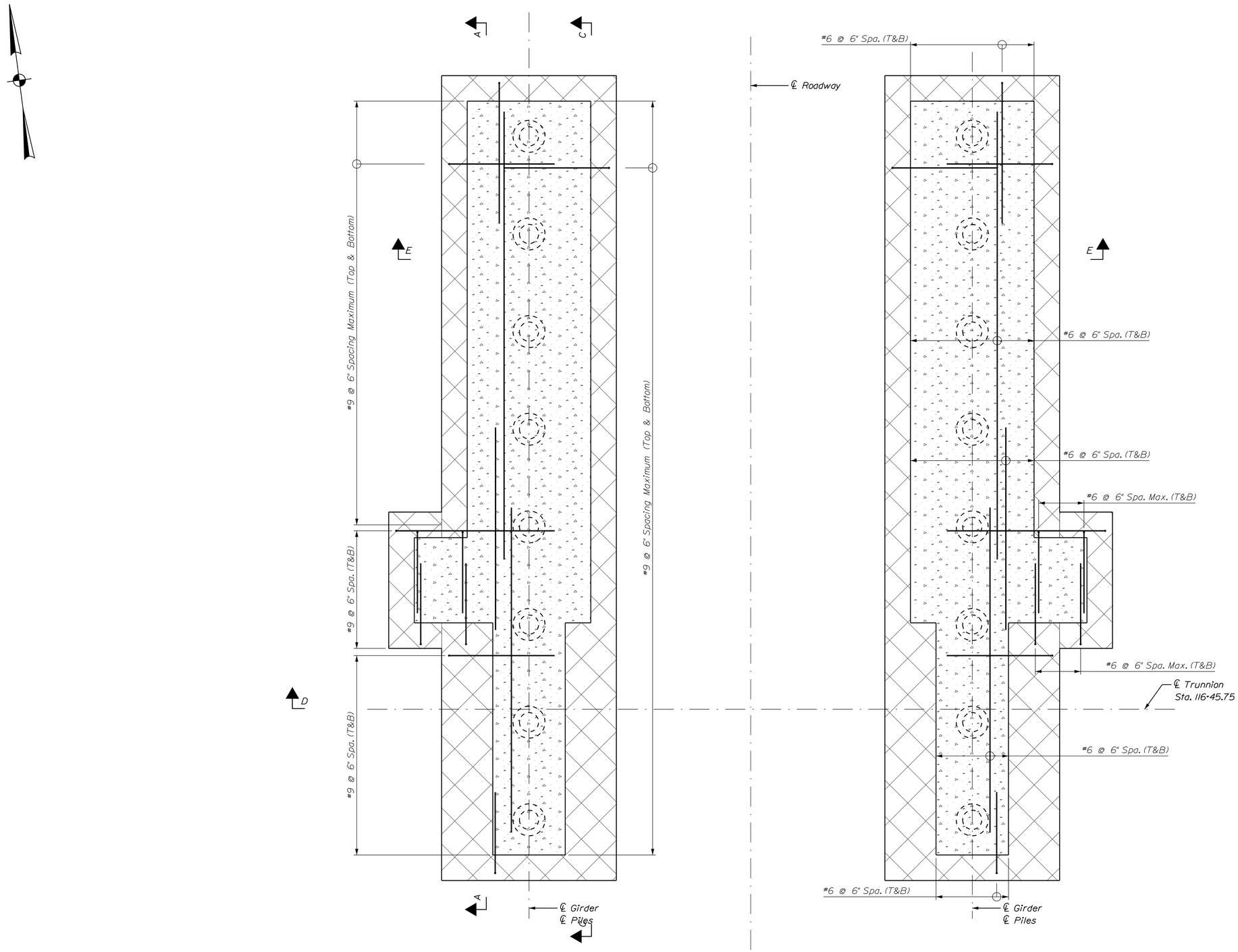

BASCULE PIER SECTION ALONG TOP OF FOOTING

1' 0 2' 4'

3/8" = 1'-0"

NOTES:

1. For Section A-A, See Sheet No. 53.
2. For Section C-C, See Sheet No. 54.
3. For Section D-D, See Sheet No. 55.
4. For Section E-E, See Sheet No. 55.

STATE OF MAINE
DEPARTMENT OF TRANSPORTATION

APPROVED | DATE

COMMISSIONER:

CHIEF ENGINEER:

PROJECT INFORMATION

PROGRAM	BRIDGE	
PROJECT MANAGER	STEPHEN BODGE	SIGNATURE
DESIGNER	HARDESTY & HANOVER	13196 P.E. NUMBER
CONSULTANT	HARDESTY & HANOVER	
PROJECT RESIDENT		DATE
CONTRACTOR		
PROJECT COMPLETION DATE		

SOUTH BRISTOL
GUT BRIDGE

BASCULE PIER REINFORCEMENT
SECTIONS III

SHEET NUMBER

52

OF 141

Filename: ...\052_bascule_pier_reinf_sections_03.dgn Division: BRIDGE Username: common Date:1/29/2014

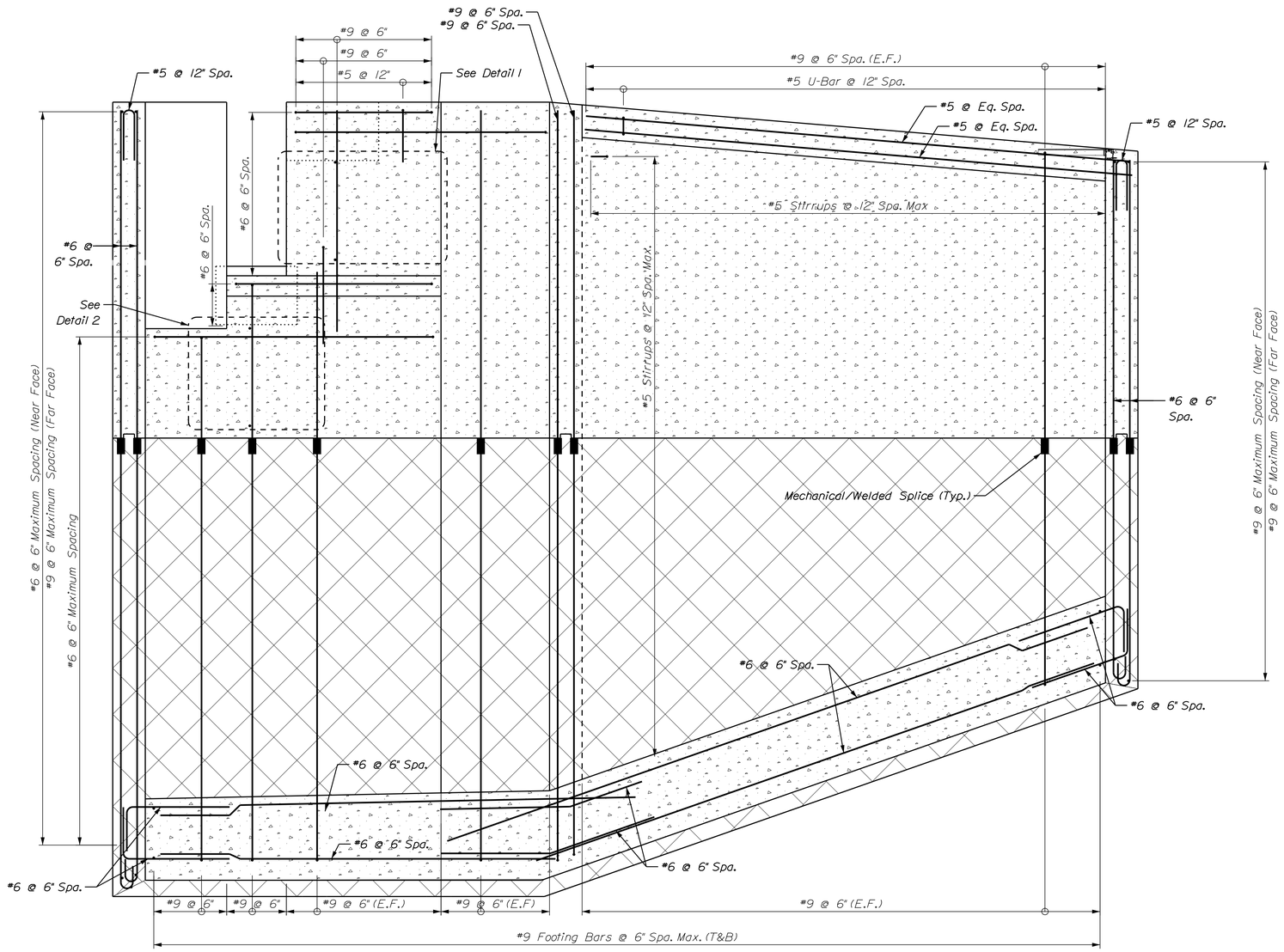

SECTION A-A

1' 6" 0 1' 2'
1/2" = 1'-0"

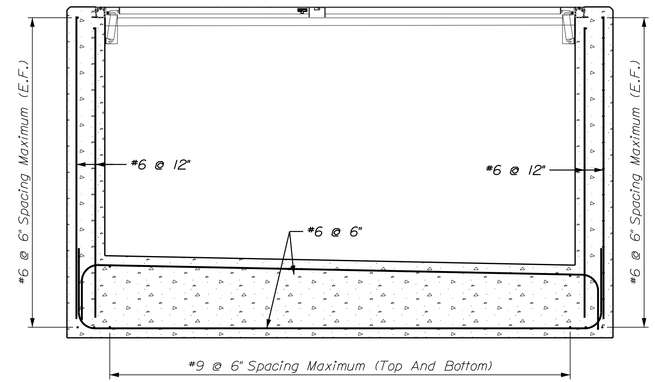

SECTION B-B

1' 6" 0 1' 2'
1/2" = 1'-0"

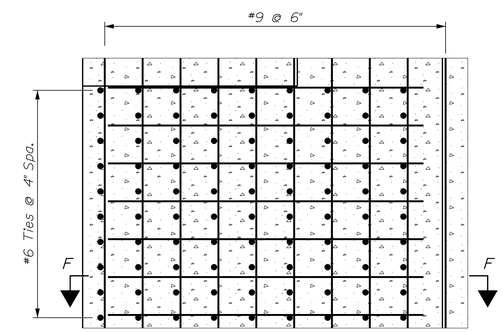

DETAIL 1

1' 6" 0 1' 2'
1" = 1'-0"

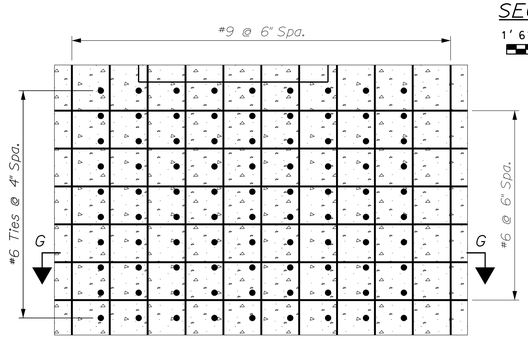

DETAIL 2

1' 6" 0 1' 2'
1" = 1'-0"

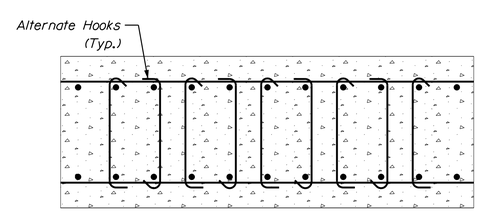

SECTION G-G

1' 6" 0 1' 2'
1" = 1'-0"

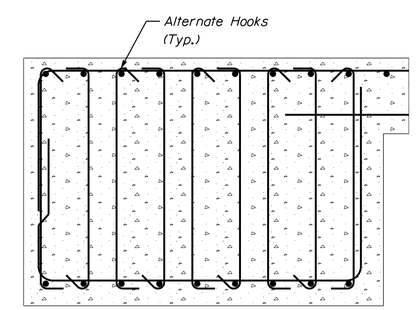

SECTION F-F

1' 6" 0 1' 2'
1" = 1'-0"

NOTES:

1. For Location Of Section A-A, See Sheet Nos. 50-52.
2. For Location Of Section B-B, See Sheet No. 50.

STATE OF MAINE
DEPARTMENT OF TRANSPORTATION

APPROVED | DATE
COMMISSIONER:
CHIEF ENGINEER:

PROJECT INFORMATION

PROGRAM	BRIDGE		
PROJECT MANAGER	STEPHEN BODGE	SIGNATURE	
DESIGNER	HARDESTY & HANOVER	13196	P.E. NUMBER
CONSULTANT	HARDESTY & HANOVER		
PROJECT RESIDENT			
CONTRACTOR		DATE	
PROJECT COMPLETION DATE			

SOUTH BRISTOL
GUT BRIDGE

BASCULE PIER REINFORCEMENT
SECTIONS IV

SHEET NUMBER
53
OF 141

Filename: ... 053_bascule_pier_reinf_sections_04.dgn Division: BRIDGE Username: common Date:2/3/2014

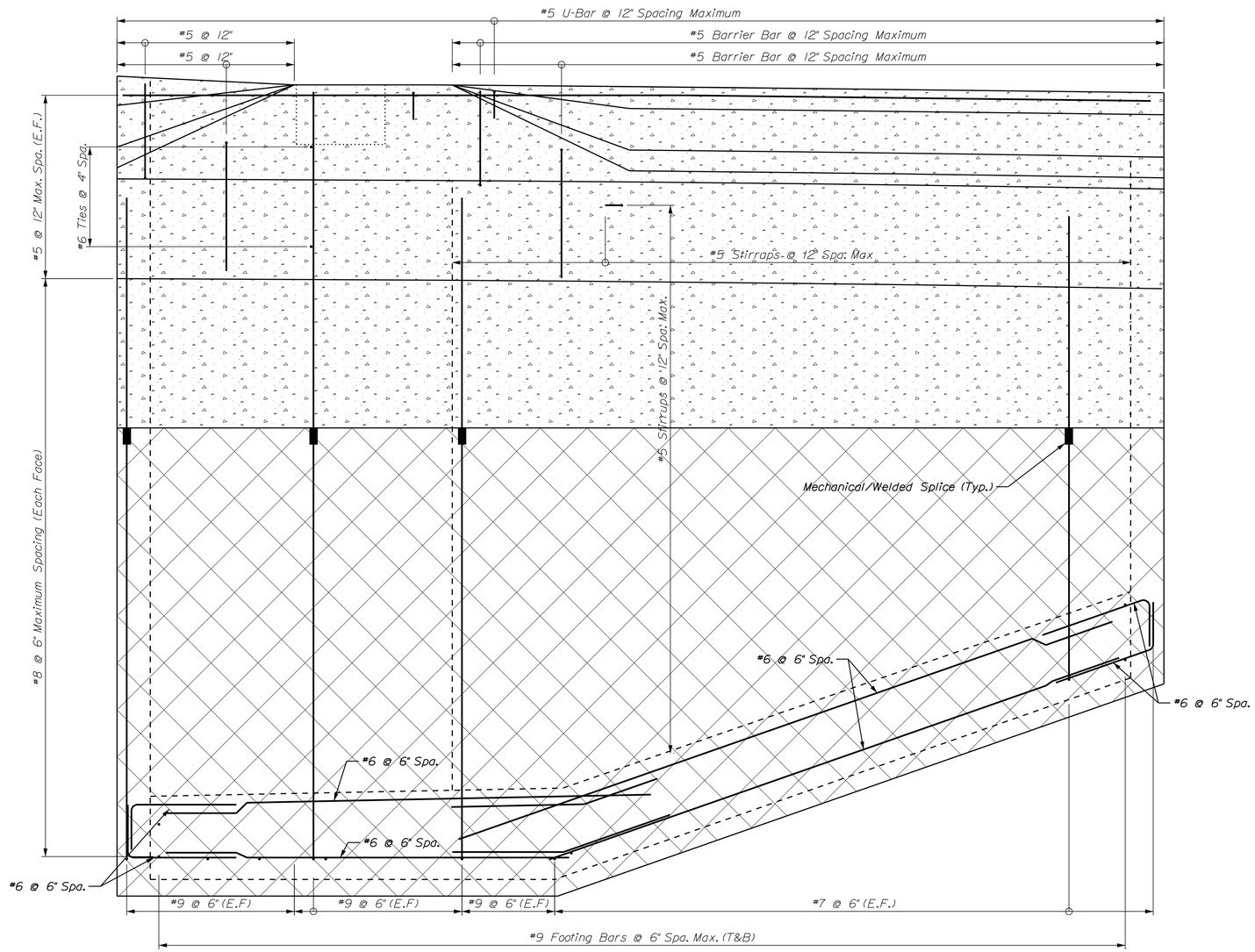

SECTION C-C

NOTES:

1. For Location Of Section C-C, See Sheet Nos. 50-52.
2. The Contractor Has The Option To Construct The Bascule Pier As Shown On The Plans, Or To Cast-In-Place Or Precast The Entire Bascule Pier By Using Pre-assembled Forms.
3. For Detailed Requirements, See The Special Provisions.

STATE OF MAINE
DEPARTMENT OF TRANSPORTATION

APPROVED | DATE

COMMISSIONER:

CHIEF ENGINEER:

PROJECT INFORMATION

PROGRAM	BRIDGE
PROJECT MANAGER	STEPHEN BODGE
DESIGNER	HARDESTY & HANOVER
CONSULTANT	HARDESTY & HANOVER
PROJECT RESIDENT	
CONTRACTOR	
PROJECT COMPLETION DATE	

SIGNATURE

13196
P.E. NUMBER

DATE

SOUTH BRISTOL
GUT BRIDGE

BASCULE PIER REINFORCEMENT
SECTIONS V

SHEET NUMBER

54

OF 141

Filename: ... 054_bascule_pier_reinf_sections_05.dgn Division: BRIDGE Username: common Date:2/3/2014

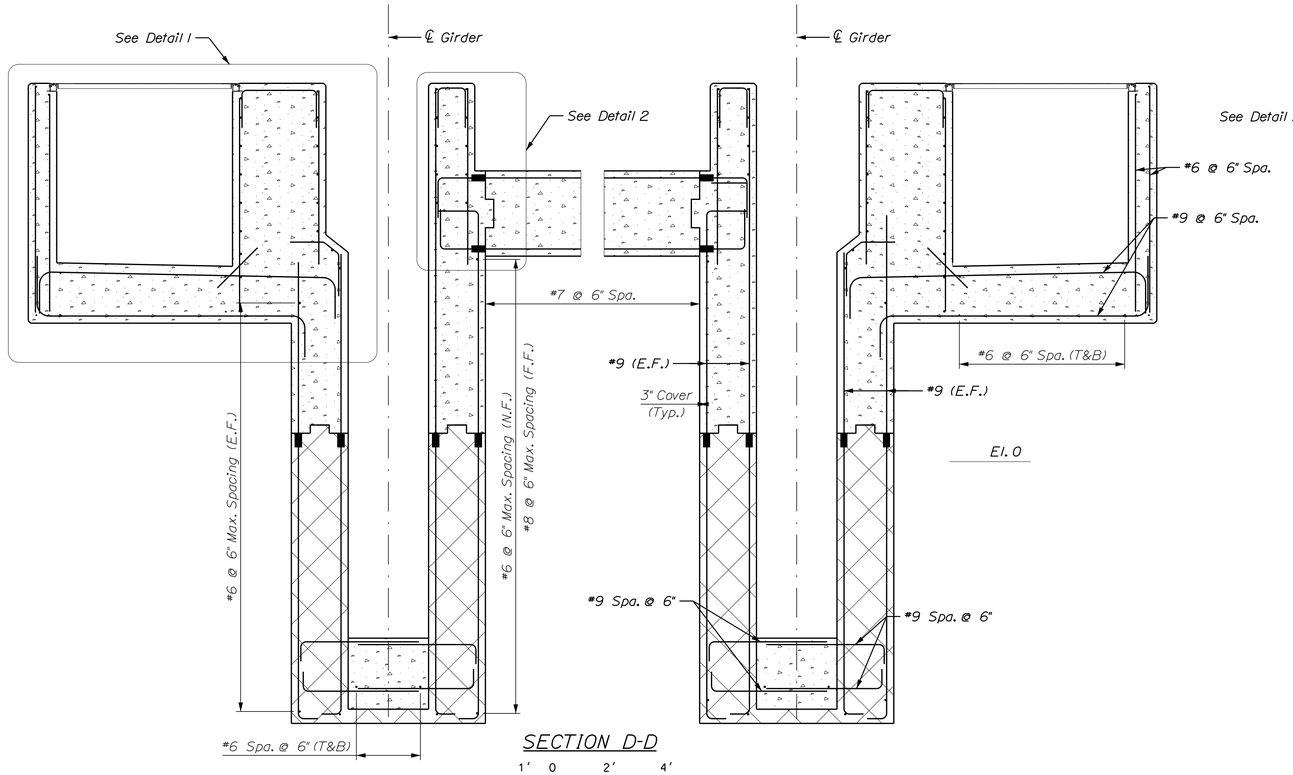

SECTION D-D

1' 0 2' 4'
3/8" = 1'-0"

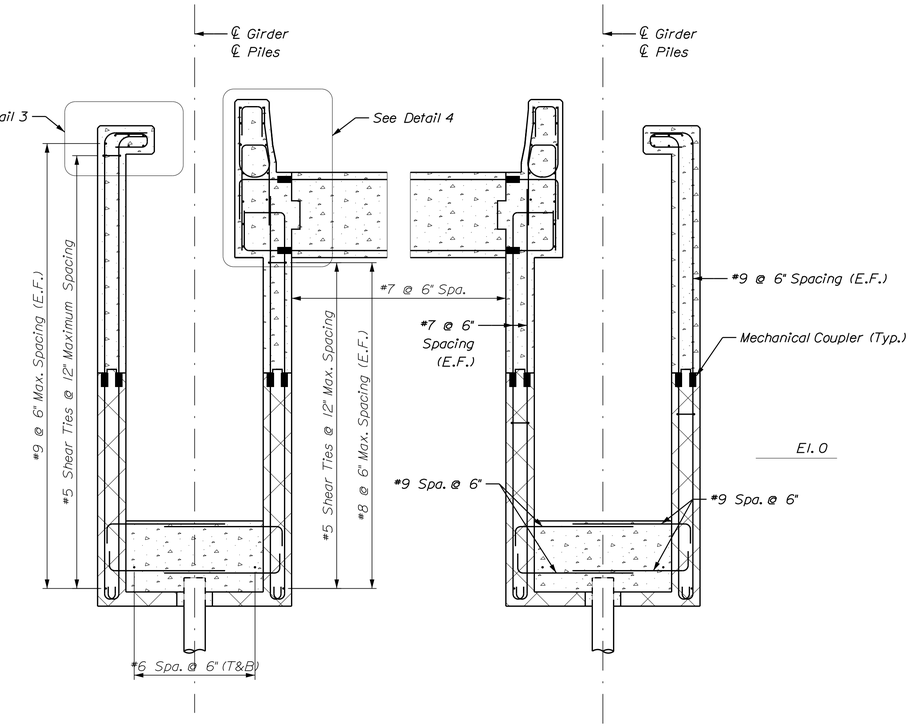

SECTION E-E

1' 0 2' 4'
3/8" = 1'-0"

NOTES:

1. For Location Of Section D-D, See Sheet Nos. 50-52.
2. For Location Of Section E-E, See Sheet Nos. 50-52.

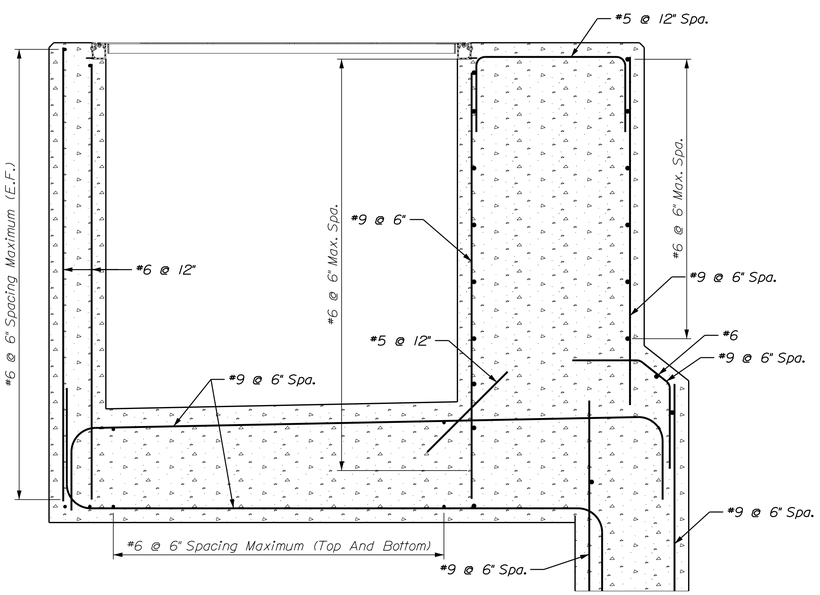

DETAIL 1

1' 6" 0 1' 2'
3/4" = 1'-0"

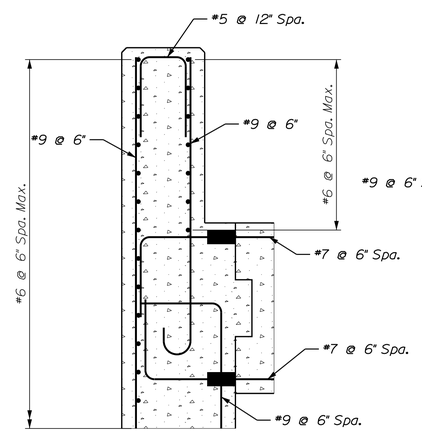

DETAIL 2

1' 6" 0 1' 2'
3/4" = 1'-0"

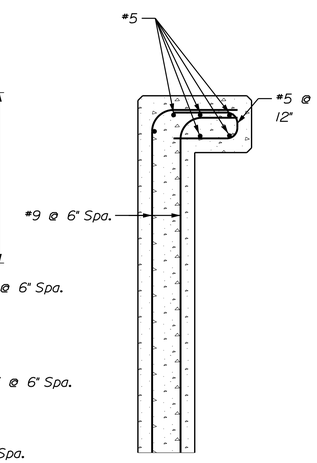

DETAIL 3

1' 6" 0 1' 2'
3/4" = 1'-0"

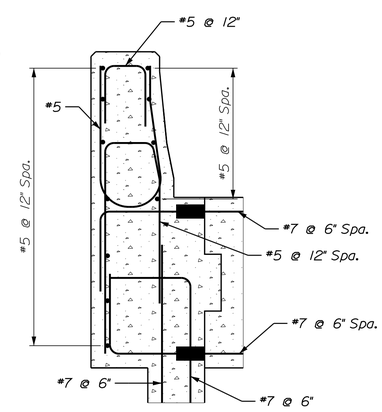

DETAIL 4

1' 6" 0 1' 2'
3/4" = 1'-0"

STATE OF MAINE
DEPARTMENT OF TRANSPORTATION

APPROVED | DATE
COMMISSIONER:
CHIEF ENGINEER:

SIGNATURE
13196
P.E. NUMBER
DATE

PROJECT INFORMATION

PROGRAM	BRIDGE
PROJECT MANAGER	STEPHEN BODGE
DESIGNER	HARDESTY & HANOVER
CONSULTANT	HARDESTY & HANOVER
PROJECT RESIDENT	
CONTRACTOR	
PROJECT COMPLETION DATE	

SOUTH BRISTOL
GUT BRIDGE

BASCULE PIER REINFORCEMENT
SECTIONS VI

SHEET NUMBER
55
OF 141

Filename: ... 055_bascule_pier_reinf_sections_06.dgn Division: BRIDGE Username: common Date:2/3/2014

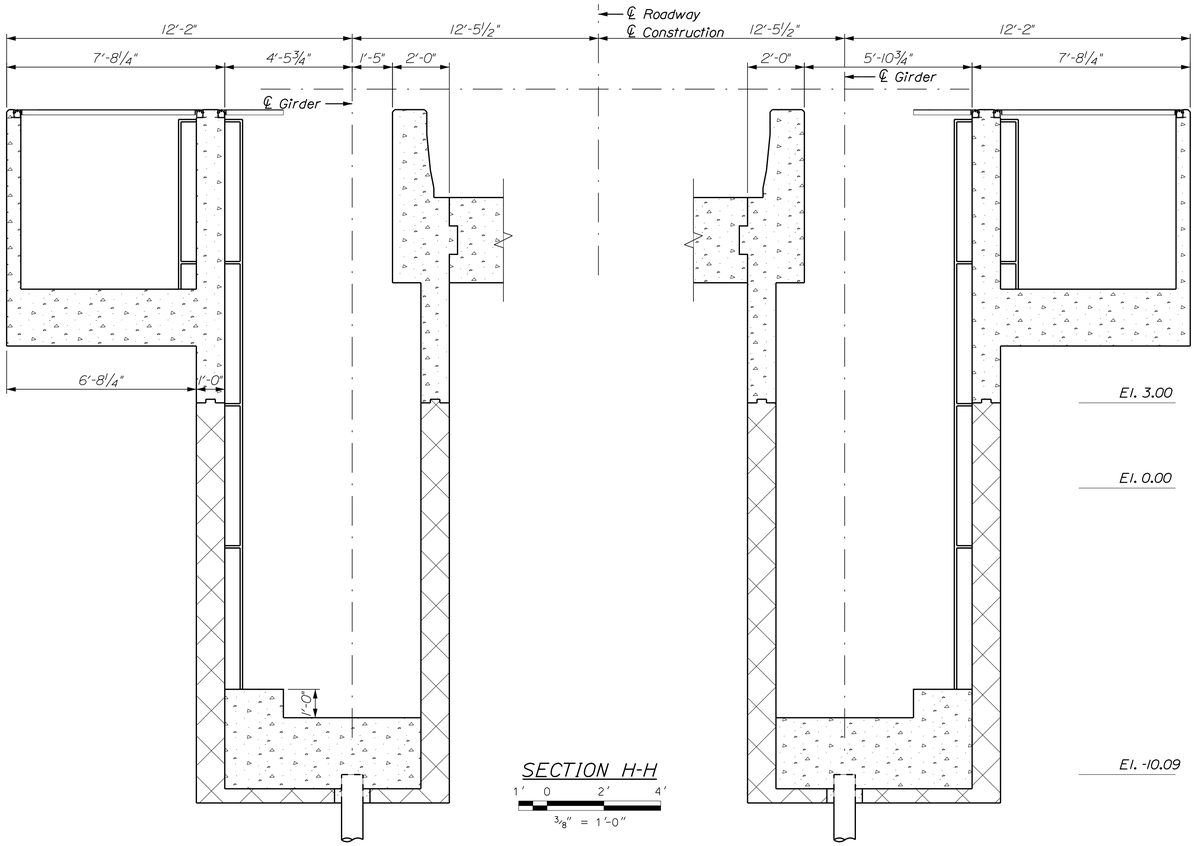

SECTION H-H

1' 0 2' 4'
⅜" = 1'-0"

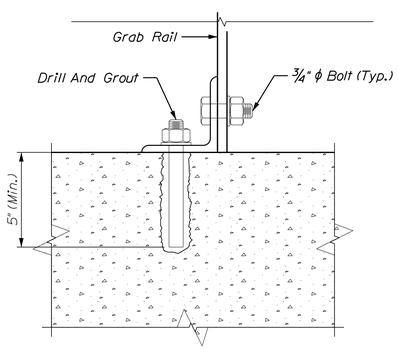

DETAIL 1

0 3" 6"
3" = 1'-0"

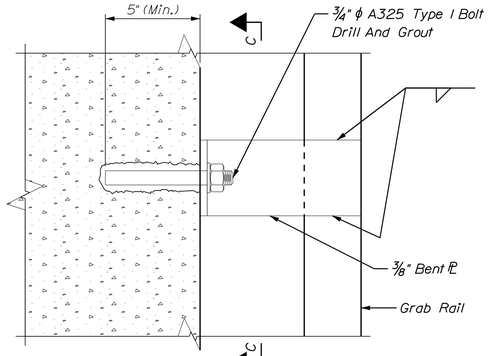

DETAIL 2

0 3" 6"
3" = 1'-0"

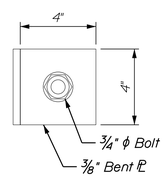

SECTION C-C

0 3" 6"
3" = 1'-0"

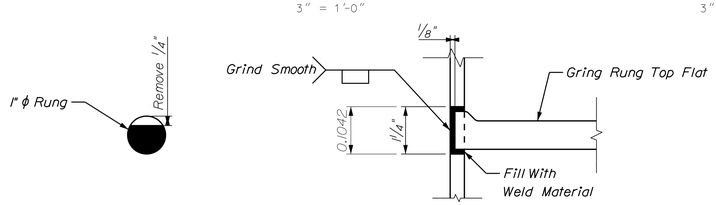

TYPICAL RUNG DETAIL

0 6" 1'
6" = 1'-0"

NOTES:

1. For Access Ladder Locations, See Sheet No. 50.

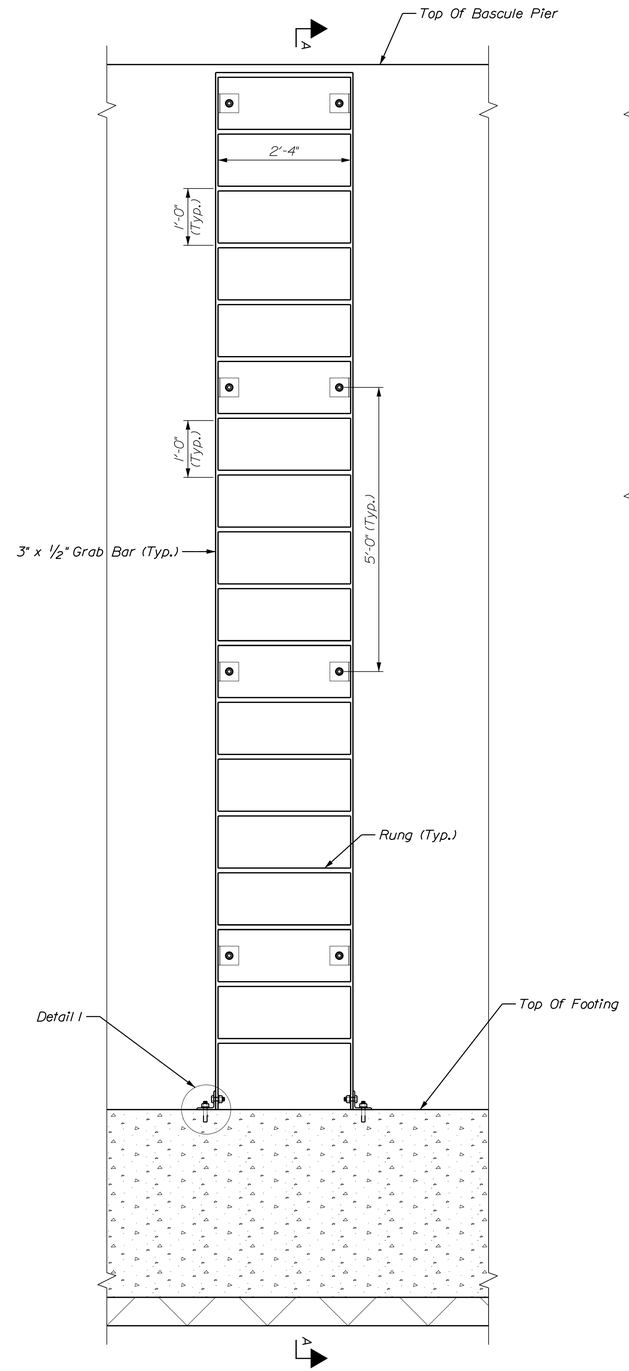

TYPICAL LADDER
(BASCULE PIER SHOWN,
MACHINERY ENCLOSURE SIMILAR)

1' 6" 0 1' 2'
¾" = 1'-0"

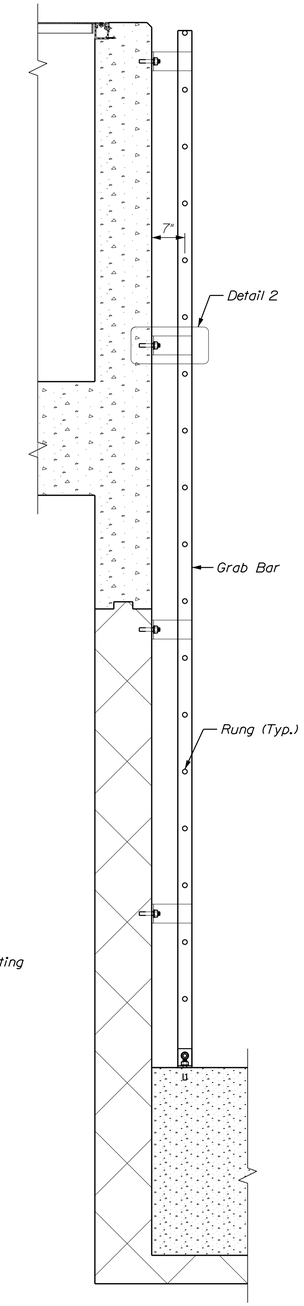

SECTION A-A

1' 6" 0 1' 2'
¾" = 1'-0"

STATE OF MAINE
DEPARTMENT OF TRANSPORTATION

APPROVED | DATE

COMMISSIONER:

CHIEF ENGINEER:

PROJECT INFORMATION		
PROGRAM	BRIDGE	
PROJECT MANAGER	STEPHEN BODGE	SIGNATURE
DESIGNER	HARDESTY & HANOVER	13196
CONSULTANT	HARDESTY & HANOVER	P.E. NUMBER
PROJECT RESIDENT		
CONTRACTOR		DATE
PROJECT COMPLETION DATE		

SOUTH BRISTOL
GUT BRIDGE

BASCULE PIER ACCESS DETAILS

SHEET NUMBER

56

OF 141

Filename: ...\056_bascule_pier_access_details.dgn Division: BRIDGE Username: common Date:1/29/2014

MICROPILES NOTES:

1. Micropiles Shall Be Installed By The Contractor According To Item 501.220 For A Factored Axial Compression Capacity Of 250 Kips And A Minimum Factored Uplift Capacity Of 50 Kips Or As Shown On The Plans. The Required Nominal Resistance is 500 Kips In Compression And 100 Kips In Uplift.
2. For The Installation Of The First Micropile The Geotechnical Engineer Of Record Shall Be Present To Record The Progress And Inspect The Procedures.
3. Micropiles Shall Have A Tip Elevation That Is A Minimum Of 15 Feet Into Bedrock With RQD Greater Than 50%, Which Shall Be Within The Grout Zone Length.
4. The Contractor's Submittal Shall Include Casing Connection Details And Methods Of Advance. Permanent Casing Shall Be Type N80 (FY = 80 KSI) Pipe, Of Size Shown On Drawings, Uncoated, With Flush Joint Threads. Permanent Casing Shall Be Installed From The Cut Off Elevation To The Top Of The Bond Zone. Terminating Casing Above The Bond Zone Shall Not Be Permitted Unless Approved In Writing By The Professional Engineer Hired By The Contractor Based On Review Of The Contractor's Proposed Methods To Stabilize The Open Hole And Maintain Minimum Cover For Reinforcing Steel, And Is Subject To Resident Approval.
5. Center Threadbars For All Production And Temporary Micropiles Shall Be Installed For The Full Pile Length And Of Size Shown On The Drawings. Threadbars Shall Conform To The Requirements Of Astm A615, Grade 75. Couplers Shall Be Utilized Where Required. Provide Nuts In Accordance With The Threadbar Manufacturer's Recommendations.
6. Provide Centralizers For Threadbars At 10 Feet Maximum Spacing.
7. Grout Mix Shall Consist Of Potable Water And Type II Cement. Grout Shall Have A Minimum 28 Day Compressive Strength Of 5000 psi Grout Proportions Shall Be As Shown In The Approved Grout Mix Submittal.
8. Micropiles That Encounter Existing Concrete, Masonry, Timber, Boulders, Or Bedrock Shall Be Drilled Through These Obstacles To Achieve The Required Design Capacities.
9. Construct Micropiles In Compliance With The Contract Documents Requirements Under The Supervision Of A Qualified Professional Engineer Hired By The Contractor.
10. The Engineer Will Review The Records Of Advance Of The Micropiles And Use Them And Other Subsurface Data To Establish Acceptance Criteria For Production Installation.
11. The Adequacy of Each Production Micropile Will Be Determined Solely By The Engineer Based In Part On Observation of Advance Of The Bond Zone Into Rock, The Cuttings, Installation And Concreting, Concrete Test Results, And Other Subsurface Data.
12. The Construction Sequence For The Bascule Pit Footings And The Operators House Foundation Shall Be Coordinated With The General Construction Sequence.
13. For Estimating Purposes The Cased Length At The Bascule Pier Locations Can Be Considered 10 Feet.
14. For Estimating Purposes The Cased Length At The Machinery Enclosure Can Be Considered 26 Feet.
15. For Estimating Purposes The Cased Length At The Operator House Can Be Considered 32 Feet.

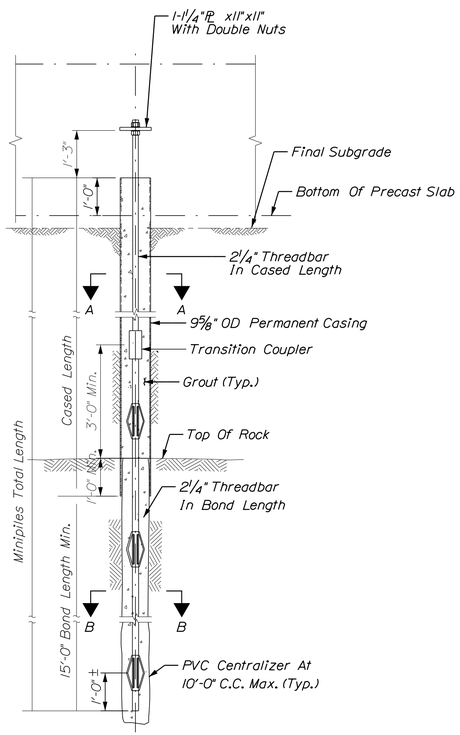

BASCULE PIER PILE SECTION

1'6" 0 1' 2'
½" = 1'-0"

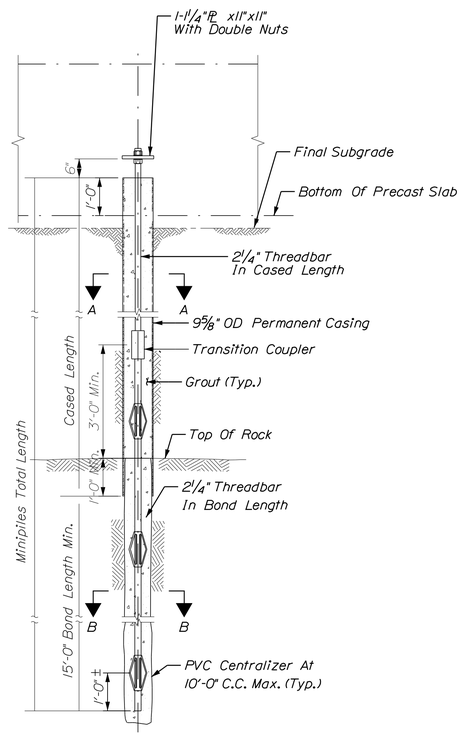

MACHINERY ENCLOSURE PILE SECTION

1'6" 0 1' 2'
½" = 1'-0"

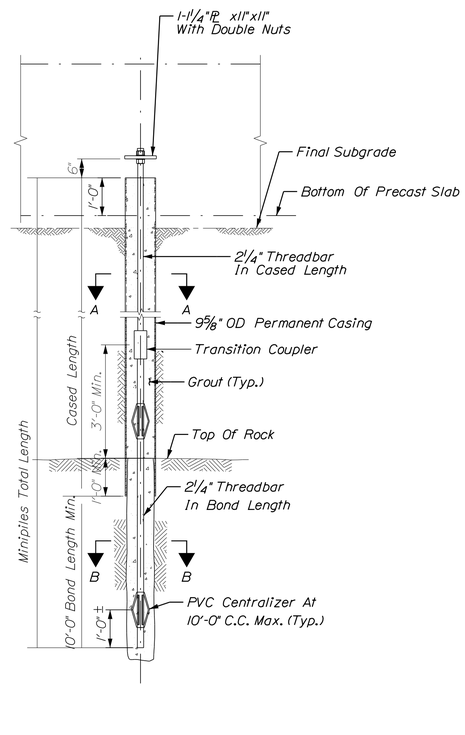

OPERATOR HOUSE PILE SECTION

1'6" 0 1' 2'
½" = 1'-0"

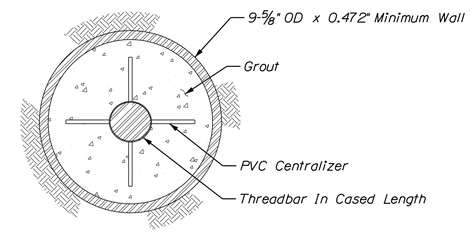

SECTION A-A

1'0 8' 16'
⅛" = 1'-0"

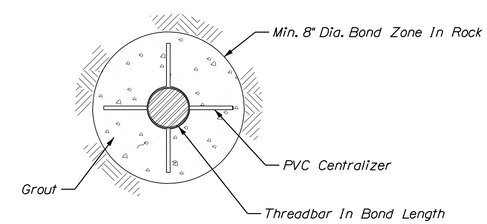

SECTION B-B

1'0 8' 16'
⅛" = 1'-0"

STATE OF MAINE
DEPARTMENT OF TRANSPORTATION

APPROVED — DATE

COMMISSIONER:

CHIEF ENGINEER:

PROJECT INFORMATION

PROGRAM	BRIDGE	
PROJECT MANAGER	STEPHEN BODGE	SIGNATURE
DESIGNER	HARDESTY & HANOVER	13196
CONSULTANT	HARDESTY & HANOVER	P.E. NUMBER
PROJECT RESIDENT		
CONTRACTOR		DATE
PROJECT COMPLETION DATE		

SOUTH BRISTOL
GUT BRIDGE

MICROPILE SECTIONS AND DETAILS

SHEET NUMBER

57

OF 141

Filename: ...\057_micropile_section_and_detail.dgn Division: BRIDGE Username: common Date:1/29/2014

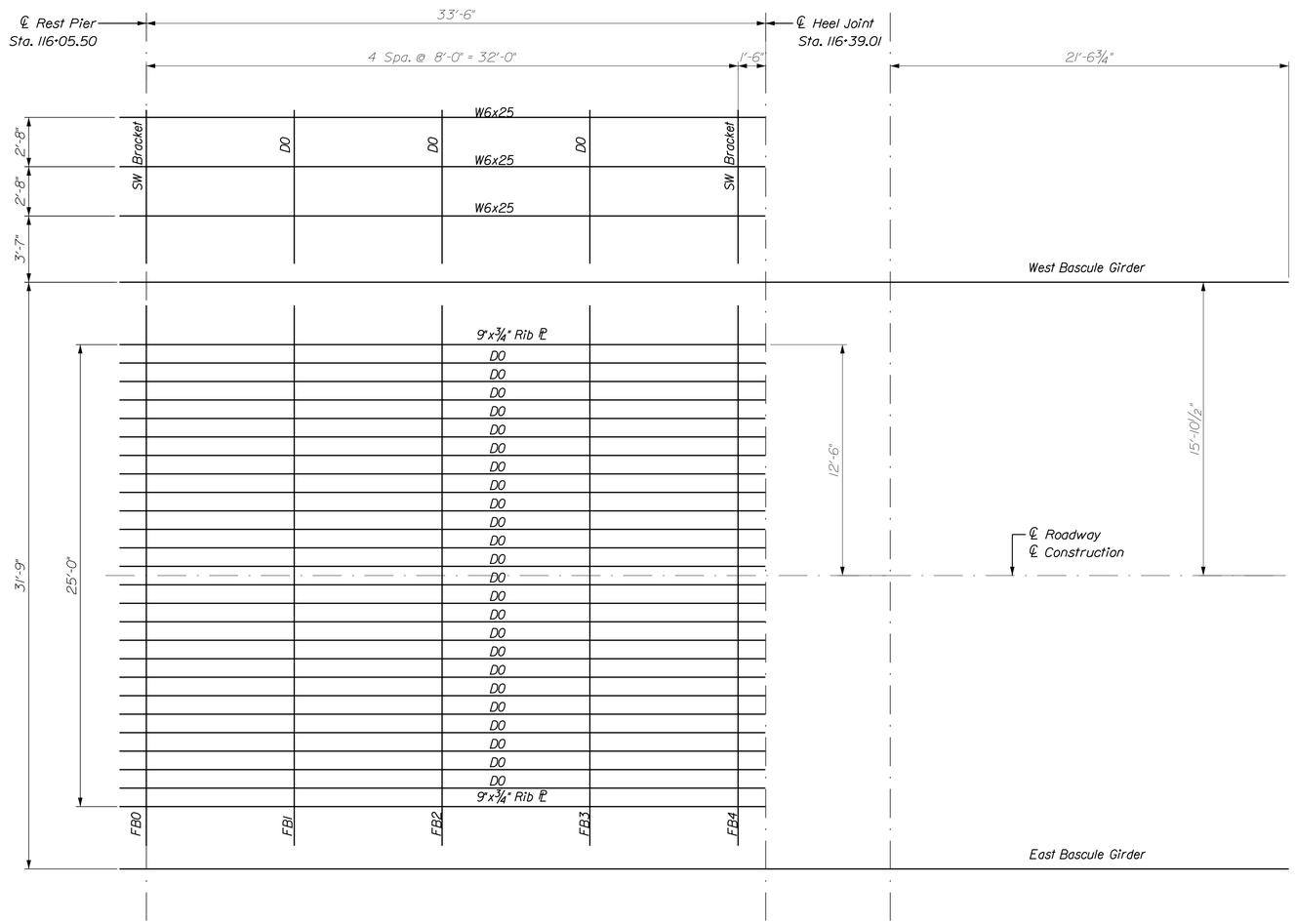

BASCULE SPAN FRAMING PLAN

1' 0 4' 8'

¼" = 1'-0"

STATE OF MAINE
DEPARTMENT OF TRANSPORTATION

APPROVED | DATE

COMMISSIONER:

CHIEF ENGINEER:

SIGNATURE

13196
P.E. NUMBER

DATE

PROJECT INFORMATION

PROGRAM	BRIDGE
PROJECT MANAGER	STEPHEN BODGE
DESIGNER	HARDESTY & HANOVER
CONSULTANT	HARDESTY & HANOVER
PROJECT RESIDENT	
CONTRACTOR	
PROJECT COMPLETION DATE	

SOUTH BRISTOL
GUT BRIDGE

BASCULE SPAN FRAMING PLAN

SHEET NUMBER

58

OF 141

Filename: ...\058_bascule_span_framing_plan.dgn Division: BRIDGE Username: common Date:1/29/2014

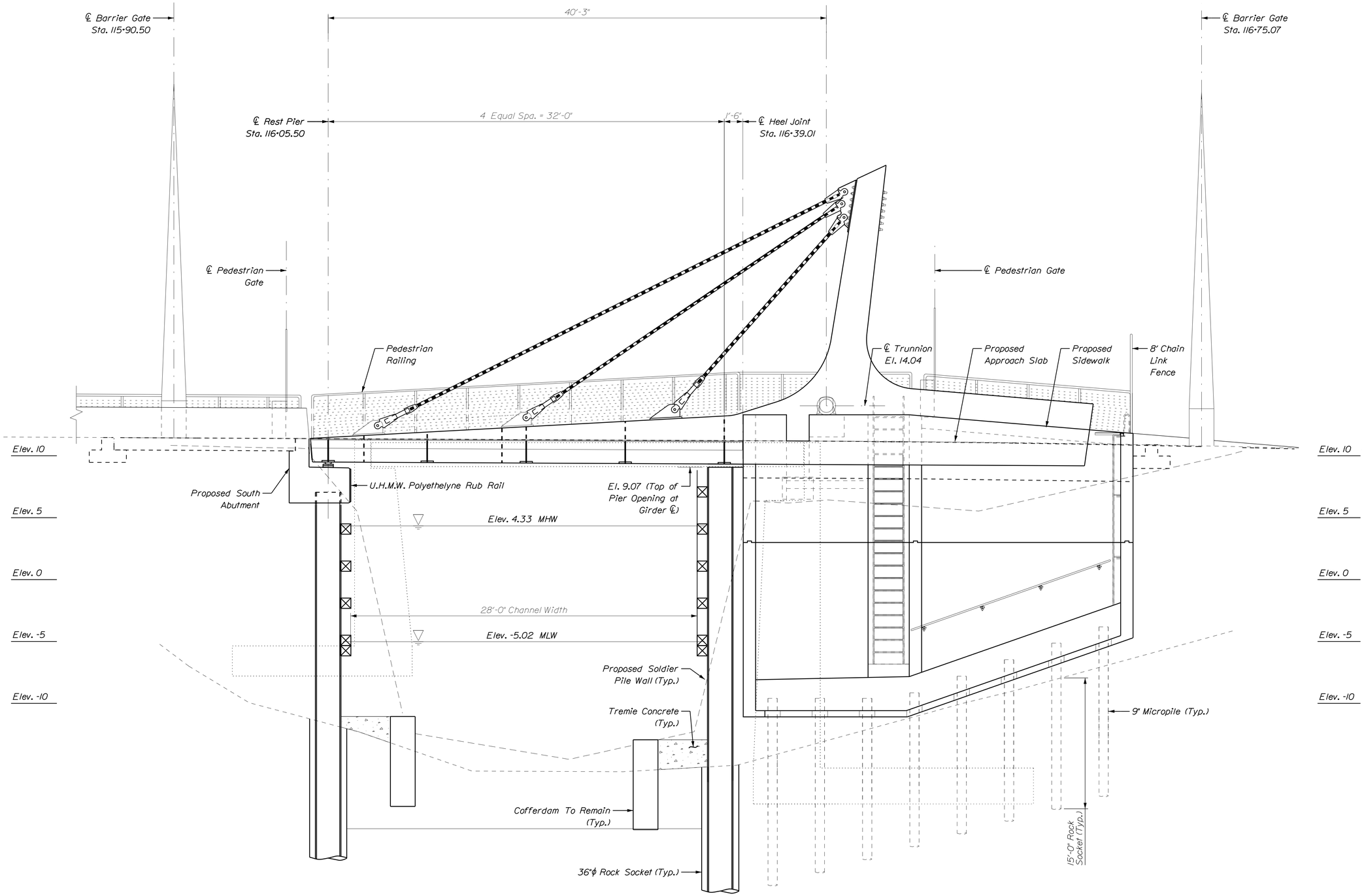

LONGITUDINAL SECTION (WEST BASCULE GIRDER)

1'0 4' 8'

1/4" = 1'-0"

STATE OF MAINE
DEPARTMENT OF TRANSPORTATION

APPROVED	DATE
COMMISSIONER:	
CHIEF ENGINEER:	

PROJECT INFORMATION

PROGRAM	BRIDGE		
PROJECT MANAGER	STEPHEN BODGE	SIGNATURE	
DESIGNER	HARDESTY & HANOVER	13196	
CONSULTANT	HARDESTY & HANOVER	P.E. NUMBER	
PROJECT RESIDENT			
CONTRACTOR		DATE	
PROJECT COMPLETION DATE			

SOUTH BRISTOL
GUT BRIDGE

BASCULE SPAN
LONGITUDINAL SECTION

SHEET NUMBER

59

OF 141

Filename: ...\059_bascule_span_long_section.dgn Division: BRIDGE Username: common Date:1/29/2014

BASCULE SPAN GIRDERS

SHEAR		UNIT	AT FB0	AT CABLE 1	AT FB1	AT FB2 / CABLE 2	AT FB3	AT CABLE 3	AT FB4	AT CL SPLICE
DEAD LOAD	DC	K	7	9	10	34	51	53	59	60
	DW	K	0	0	0	1	2	2	2	2
	Do = DC + DW	K	7	9	11	35	52	54	61	62
	DAD = 0.20 X Do	K	1	2	2	7	10	11	12	12
	STAY CABLES	K	1	-13	-13	-31	-34	-96	-82	-78
LIVE LOAD (MAXIMUM)	1.25 X HL-93 TRUCK	K	0	0	0	30	43	39	56	55
	HL-93 TRUCK	K	0	0	0	24	34	31	45	44
	HL-93 TANDEM	K	0	0	0	26	48	44	68	67
	HL-93 LANE	K	-11	-10	-10	2	7	7	11	11
	FATIGUE TRUCK	K	0	0	0	10	17	15	20	20
LIVE LOAD (MINIMUM)	1.25 X HL-93 TRUCK	K	-63	-58	-58	0	0	0	-1	-1
	HL-93 TRUCK	K	-50	-47	-47	0	0	0	0	0
	HL-93 TANDEM	K	-48	-44	-44	-21	-6	-7	-1	-1
	HL-93 LANE	K	-11	-10	-10	2	7	7	11	11
	FATIGUE TRUCK	K	-21	-19	-19	0	0	0	0	0
LIVE LOAD IMPACT	MAX. (STRENGTH)	K	0	0	0	10	16	15	22	22
	MIN. (STRENGTH)	K	-21	-19	-19	-7	-2	-2	0	0
	MAX. (SERVICE)	K	0	0	0	9	16	15	22	22
	MIN. (SERVICE)	K	-17	-15	-15	-7	-2	-2	0	0
	MAX. (FATIGUE)	K	0	0	0	1	2	2	3	3
	MIN. (FATIGUE)	K	-3	-3	-3	0	0	0	0	0
WEB AREA FURNISHED		IN²	20.90	23.74	26.57	32.24	37.91	40.74	43.58	51.74
STRENGTH BV-1										
ACTUAL SHEAR		KSI	16	4	1	19	47	52	21	12
ALLOWABLE SHEAR		KSI	606	688	771	875	871	810	757	638
STRENGTH I										
ACTUAL SHEAR (MAX)		KSI	45	59	57	158	233	154	234	238
ACTUAL SHEAR (MIN)		KSI	156	161	159	126	134	166	129	121
ALLOWABLE STRESS		KSI	606	688	771	875	871	810	757	638

BASCULE SPAN GIRDERS

MOMENT		UNIT	AT FB0	AT CABLE 1	AT FB1	AT FB2 / CABLE 2	AT FB3	AT CABLE 3	AT FB4	AT CL SPLICE
DEAD LOAD	DC	K-FT	0	-32	-70	-243	-531	-737	-955	-1120
	DW	K-FT	0	-1	-2	-7	-16	-23	-29	-34
	Do = DC + DW	K-FT	0	-33	-72	-251	-547	-760	-985	-1154
	DAD = 0.20 X Do	K-FT	0	-7	-14	-50	-109	-152	-197	-231
	STAY CABLES	K-FT	0	48	100	262	513	786	1171	1398
LIVE LOAD (MAXIMUM)	1.25 X HL-93 TRUCK	K-FT	3	236	468	607	545	429	317	175
	HL-93 TRUCK	K-FT	2	188	375	484	435	342	252	139
	HL-93 TANDEM	K-FT	3	179	355	533	511	406	421	256
	HL-93 LANE	K-FT	0	39	78	112	98	70	43	12
	FATIGUE TRUCK	K-FT	1	78	154	215	202	156	112	58
LIVE LOAD (MINIMUM)	1.25 X HL-93 TRUCK	K-FT	-1	0	0	-4	-5	-6	-48	-101
	HL-93 TRUCK	K-FT	-1	0	0	-3	-4	-5	-38	-81
	HL-93 TANDEM	K-FT	-1	0	0	-11	-13	-16	-47	-122
	HL-93 LANE	K-FT	0	39	78	112	98	70	43	12
	FATIGUE TRUCK	K-FT	-1	0	-1	-2	-1	-1	-11	-33
LIVE LOAD IMPACT	MAX. (STRENGTH)	K-FT	1	78	155	200	180	142	139	84
	MIN. (STRENGTH)	K-FT	0	0	0	-4	-4	-5	-16	-40
	MAX. (SERVICE)	K-FT	1	62	124	176	169	134	139	84
	MIN. (SERVICE)	K-FT	0	0	0	-4	-4	-5	-15	-40
	MAX. (FATIGUE)	K-FT	0	12	23	32	30	23	17	9
	MIN. (FATIGUE)	K-FT	0	0	0	0	0	0	-2	-5
SECTION	WEB	IN	2-20.9" x 0.5"	2-23.7" x 0.5"	2-26.6" x 0.5"	2-32.2" x 0.5"	2-37.9" x 0.5"	2-40.7" x 0.5"	2-43.6" x 0.5"	2-51.7" x 0.5"
	FLANGES	IN	2-30" x 1.5"	2-30" x 1.5"	2-30" x 1.5"	2-30" x 1.5"	2-30" x 1.5"	2-30" x 1.5"	2-30" x 1.5"	2-30" x 1.5"
STRENGTH BV-1										
FLANGE STRESS		KSI	0.08	0.53	0.63	1.20	2.22	2.46	1.48	1.63
ALLOWABLE STRESS		KSI	50.00	50.00	50.00	50.00	50.00	50.00	50.00	50.00
STRENGTH I										
FLANGE STRESS (MAX)		KSI	0.34	5.99	10.76	11.05	8.49	6.32	7.91	4.54
FLANGE STRESS (MIN)		KSI	-0.12	-2.03	-3.54	-3.24	-2.77	-3.69	-5.38	-3.52
ALLOWABLE STRESS		KSI	49.92	49.97	49.97	49.88	49.89	49.90	49.90	49.93
SERVICE I										
FLANGE STRESS (MAX)		KSI	0.18	3.49	6.24	6.82	5.31	3.83	4.86	2.87
FLANGE STRESS (MIN)		KSI	-0.04	-1.16	-1.90	-1.96	-1.47	-2.12	-2.97	-1.97
ALLOWABLE STRESS		KSI	40.00	40.00	40.00	40.00	40.00	40.00	40.00	40.00
FATIGUE I										
STRESS RANGE		KSI	0.14	1.75	3.12	3.16	2.24	1.76	1.52	0.88

STATE OF MAINE
DEPARTMENT OF TRANSPORTATION

APPROVED — DATE

COMMISSIONER:

CHIEF ENGINEER:

SIGNATURE

13196
P.E. NUMBER

DATE

PROJECT INFORMATION

PROGRAM	BRIDGE
PROJECT MANAGER	STEPHEN BODGE
DESIGNER	HARDESTY & HANOVER
CONSULTANT	HARDESTY & HANOVER
PROJECT RESIDENT	
CONTRACTOR	
PROJECT COMPLETION DATE	

SOUTH BRISTOL
GUT BRIDGE

BASCULE SPAN STRESS SHEET

SHEET NUMBER

60

OF 141

Filename: ...\060_bascule_span_stress_tables.dgn Division: BRIDGE Username: common Date:1/29/2014

BASCULE SPAN BALANCE				
ITEM		Weight (KIPS)	Moment At Trunnion (FT-K)	
			Horizontal	Vertical
Forward Of Centerline Trunnion	Bascule Girders	57	917	-153
	Deck System (Incl. FBs And Rail)	81	1999	-258
	Sidewalk Grating And Railing	6	143	-8
	Cables	1	13	8
	Forward Total	145	3072	-411
Rear Of Centerline Trunnion	Structural Steel	89	-711	185
	Counterweight	190	-1886	123
	Balance Blocks (Lead)	18	-321	-10
	Rear Total	297	-2918	298
Total Leaf Excluding Counterweights		234	2362	-226
Total Counterweight		208	-2207	114
Total Leaf and Counterweight		442	155	-112

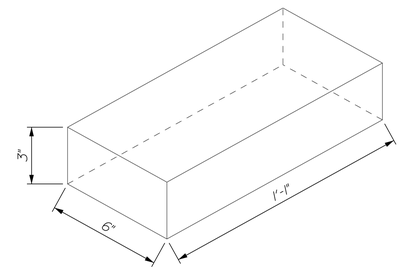

LEAD ADJUSTMENT BALANCE BLOCK

Weight Of One Block is 93 LBS
(Balance Block Dimensions Shown
Are For Lead Only. Each Block
Shall Be Coated. See Specifications)

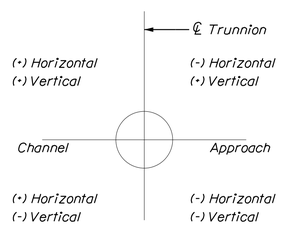

SCHEMATIC MOMENT
SIGN CONVENTION

BALANCE AND COUNTERWEIGHT NOTES

1. Work This Sheet With Counterweight Details Sheet 68.

2. Values Shown In The Balance Table Are For The Balance In The Span Closed Position And In Accordance With The Schematic Moment Sign Convention Shown On This Drawing.

3. The Contractor Shall Prepare And Submit Balance Computations In Accordance With The Specifications And In The Format Shown.

4. The Locations And Quantities Of The Balance Material Shown On Sheet 68 Are Approximate. The Exact Quantity, Location, And Size Of Balance Material Shall Be Determined And Documented By The Contractor In Accordance With The Specifications. The Lead Blocks Shown on Sheet 68 Shall Be Larger Than The Adjustment Balance Blocks Detailed Above. The Larger Lead Blocks Are To Permanently Remain In The Counterweight.

5. Lead Adjustment Balance Blocks, As Detailed On This Drawing, Shall Be Used To Adjust Final Span Balance. Each Layer Of Balance Blocks Shall Be Arranged In Such A Manner As To Prevent Shifting Of Blocks During Bridge Operation. In Order To Account For Final Pocket Widths And The Possibility Of Varying Balance Block Dimensions, The Installation Of Smaller Lead Bars May Be Required To Ensure Tight Fit Of Blocks In Each Pocket. Such Blocks Shall Be Provided By The Contractor And Meet All Balance Block Specifications.

6. In Addition To Balance Blocks Located In The Counterweight Pockets, A Minimum Of 22 Spare Adjustment Balance Blocks Shall Be Provided. Spare Adjustment Blocks Shall Be Stored At A Loaction Directed By The Engineer.

STATE OF MAINE
DEPARTMENT OF TRANSPORTATION

APPROVED | DATE
COMMISSIONER:
CHIEF ENGINEER:

SIGNATURE
13196
P.E. NUMBER
DATE

PROJECT INFORMATION

PROGRAM	BRIDGE
PROJECT MANAGER	STEPHEN BODGE
DESIGNER	HARDESTY & HANOVER
CONSULTANT	HARDESTY & HANOVER
PROJECT RESIDENT	
CONTRACTOR	
PROJECT COMPLETION DATE	

SOUTH BRISTOL
GUT BRIDGE

BASCULE SPAN BALANCE TABLES

SHEET NUMBER
61
OF 141

Filename: ...\061_bascule_span_balance_table.dgn Division: BRIDGE Username: common Date:1/29/2014

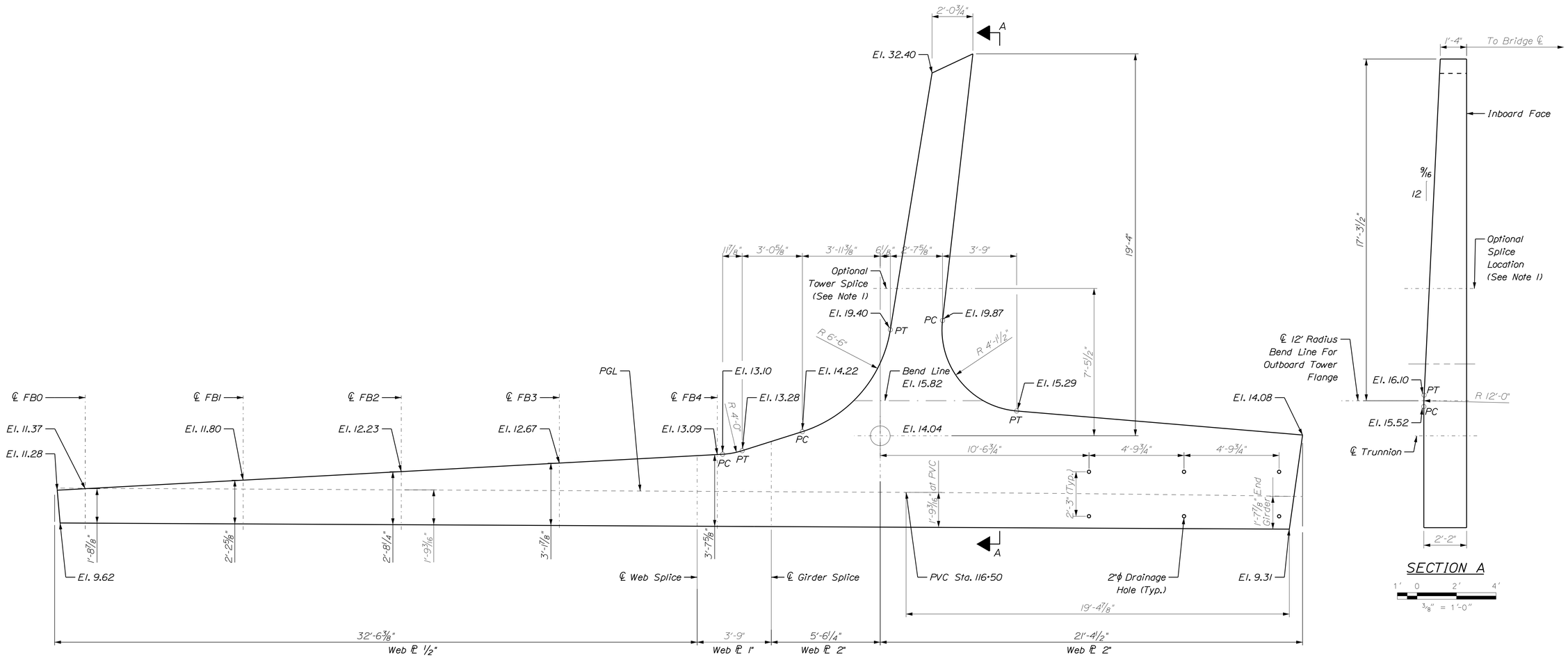

SECTION A

BASCULE GIRDER WEB GEOMETRY

NOTES:

1. The bascule girder geometry shown on this sheet, as well as Sheet Nos. 63-66 is both the initial fabricated geometry and the final geometry after cable jacking. For information on the jacking sequence, refer to Sheet No. 67.

2. For Details Of Optional Splice, See Sheet No. 65.

STATE OF MAINE
DEPARTMENT OF TRANSPORTATION

APPROVED	DATE
COMMISSIONER:	
CHIEF ENGINEER:	

PROJECT INFORMATION		SIGNATURE
PROGRAM	BRIDGE	
PROJECT MANAGER	STEPHEN BODGE	13196
DESIGNER	HARDESTY & HANOVER	P.E. NUMBER
CONSULTANT	HARDESTY & HANOVER	
PROJECT RESIDENT		DATE
CONTRACTOR		
PROJECT COMPLETION DATE		

SOUTH BRISTOL
GUT BRIDGE

BASCULE SPAN
GIRDER WEB GEOMETRY

SHEET NUMBER
62
OF 141

Filename: ...\062_bascule_span_gir_geometry.dgn Division: BRIDGE Username: common Date:1/29/2014

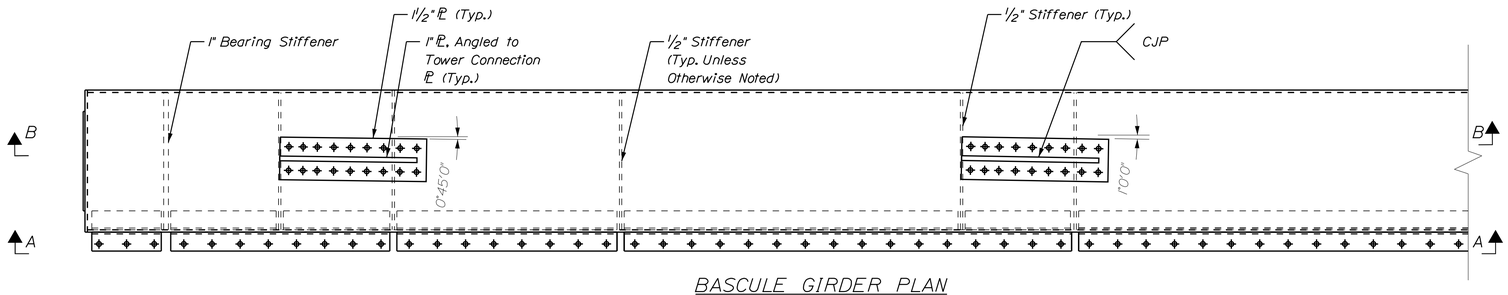

BASCULE GIRDER PLAN

1' 6" 0 1' 2'
3/4" = 1'-0"

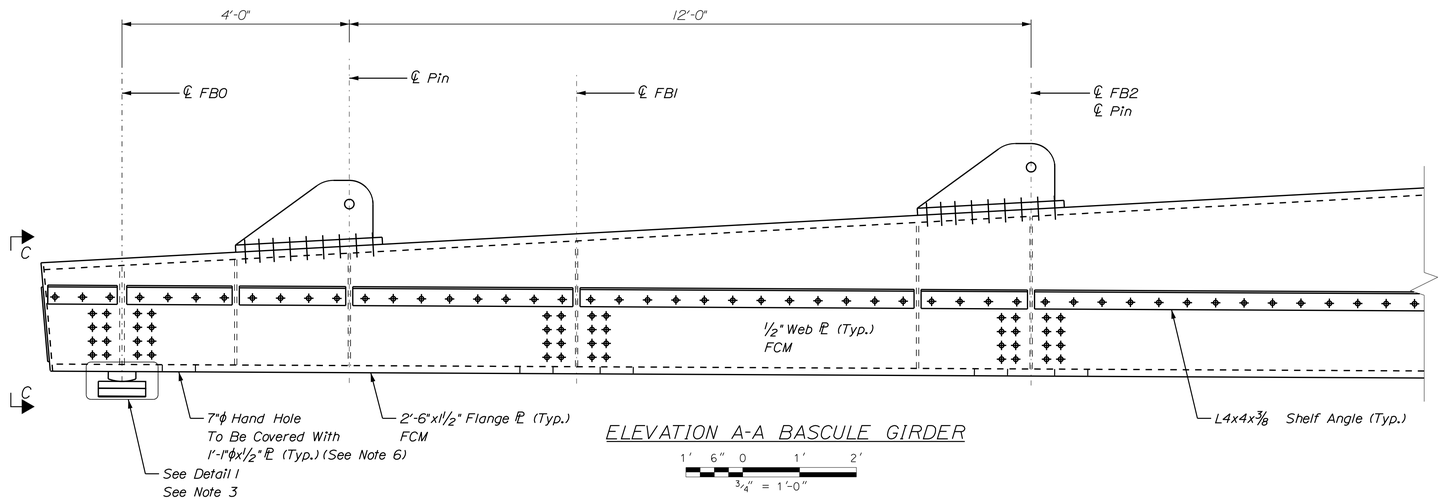

ELEVATION A-A BASCULE GIRDER

1' 6" 0 1' 2'
3/4" = 1'-0"

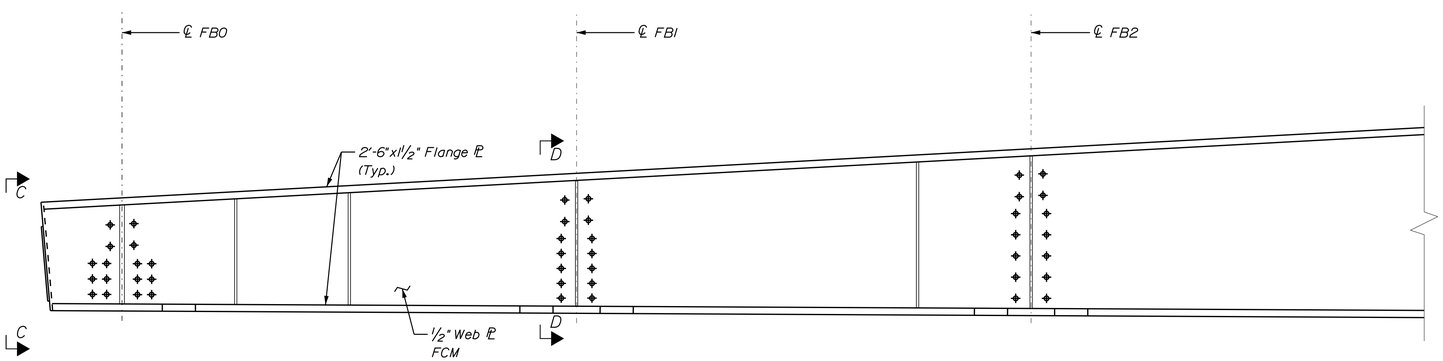

SECTION B-B BASCULE GIRDER

(WEST GIRDER ONLY)

1' 6" 0 1' 2'
3/4" = 1'-0"

NOTES:

1. For Counterweight Details, See Sheet No. 68.
2. For Sections C-C and D-D, See Sheet No. 66.
3. For Detail 1, See Sheet No. 65.
4. For Cable Anchorage Details, See Sheet No. 67.
5. The Bascule Girder Is Designated As Fracture Critical Material. Refer To Sheet No. 3 For Detailed Requirements.
6. Bolt Spacing And Edge Distances Shall Meet AASHTO Requirements.

STATE OF MAINE
DEPARTMENT OF TRANSPORTATION

APPROVED | DATE

COMMISSIONER:

CHIEF ENGINEER:

PROJECT INFORMATION

PROGRAM	BRIDGE	
PROJECT MANAGER	STEPHEN BODGE	SIGNATURE
DESIGNER	HARDESTY & HANOVER	13196
CONSULTANT	HARDESTY & HANOVER	P.E. NUMBER
PROJECT RESIDENT		
CONTRACTOR		DATE
PROJECT COMPLETION DATE		

SOUTH BRISTOL
GUT BRIDGE

BASCULE SPAN GIRDER DETAILS I

SHEET NUMBER

63

OF 141

Filename: ...\063_bascule_span_gir_details_01.dgn Division: BRIDGE Username: common Date:1/29/2014

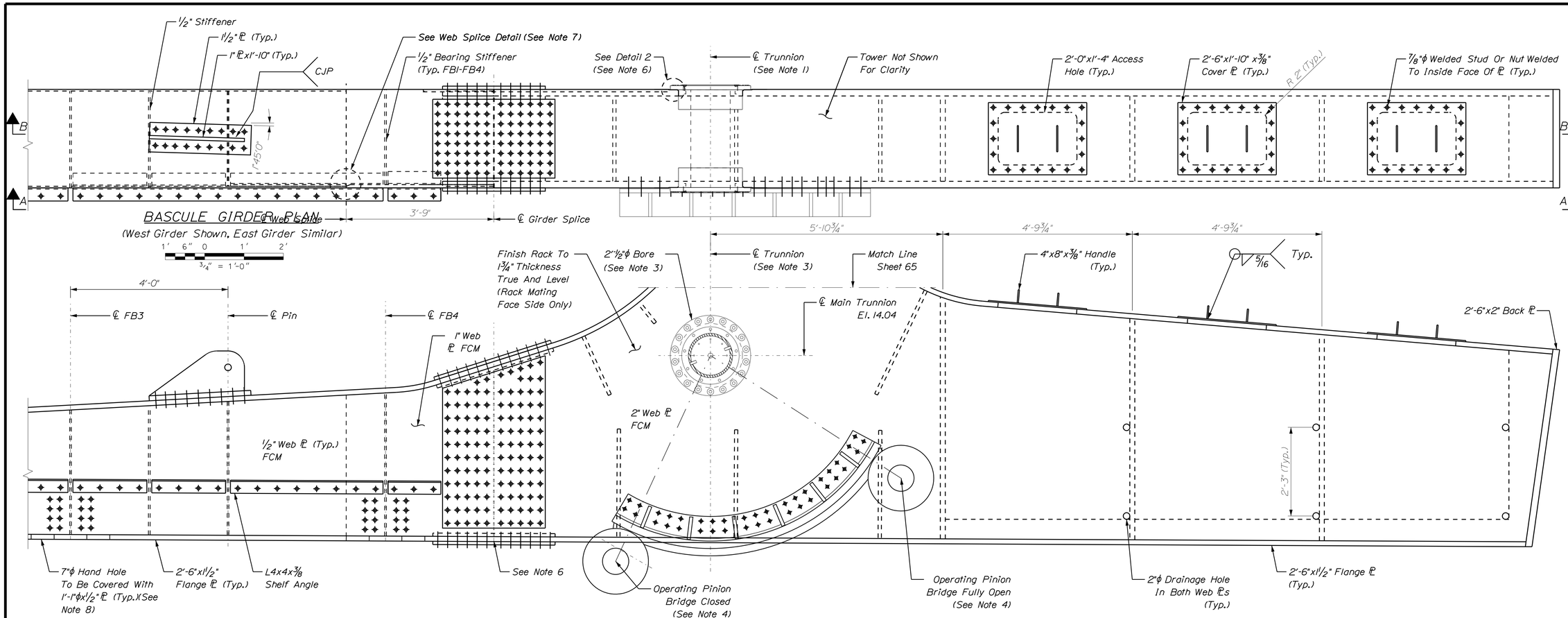

BASCULE GIRDER PLAN

(West Girder Shown, East Girder Similar)

1' 6" 0 1' 2'
3/4" = 1'-0"

ELEVATION A-A BASCULE GIRDER

1' 6" 0 1' 2'
3/4" = 1'-0"

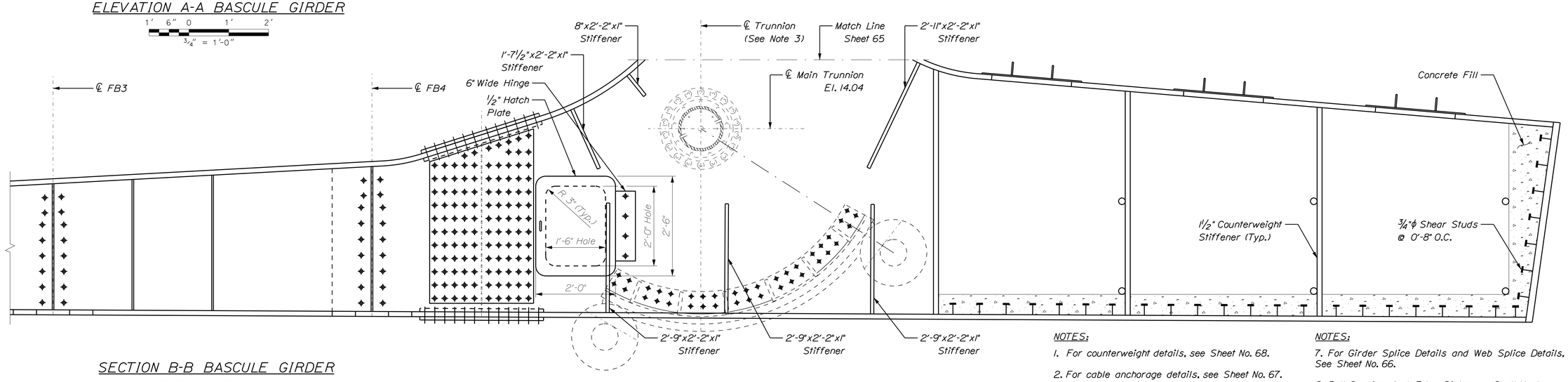

SECTION B-B BASCULE GIRDER

(WEST GIRDER ONLY)

1' 6" 0 1' 2'
3/4" = 1'-0"

NOTES:

1. For counterweight details, see Sheet No. 68.
2. For cable anchorage details, see Sheet No. 67.
3. For trunnion details, see Sheet No. 102.
4. For pinnion and rack details, see Sheet No. 104.
5. The bascule girder is designated as Fracture Critical Material. Refer to Sheet No. 3 for detailed requirements.
6. For Detail 2, See Sheet No. 65.

NOTES:

7. For Girder Splice Details and Web Splice Details, See Sheet No. 66.
8. Bolt Spacing And Edge Distances Shall Meet AASHTO Requirements.

STATE OF MAINE
DEPARTMENT OF TRANSPORTATION

APPROVED | DATE
COMMISSIONER:
CHIEF ENGINEER:

SIGNATURE
13196
P.E. NUMBER
DATE

PROJECT INFORMATION

PROGRAM	BRIDGE
PROJECT MANAGER	STEPHEN BODGE
DESIGNER	HARDESTY & HANOVER
CONSULTANT	HARDESTY & HANOVER
PROJECT RESIDENT	
CONTRACTOR	
PROJECT COMPLETION DATE	

SOUTH BRISTOL
GUT BRIDGE

BASCULE SPAN GIRDER DETAILS II

SHEET NUMBER
64
OF 141

Date:1/29/2014
Username: common
Division: BRIDGE
Filename: ...\064_bascule_span_gir_details_02.dgn

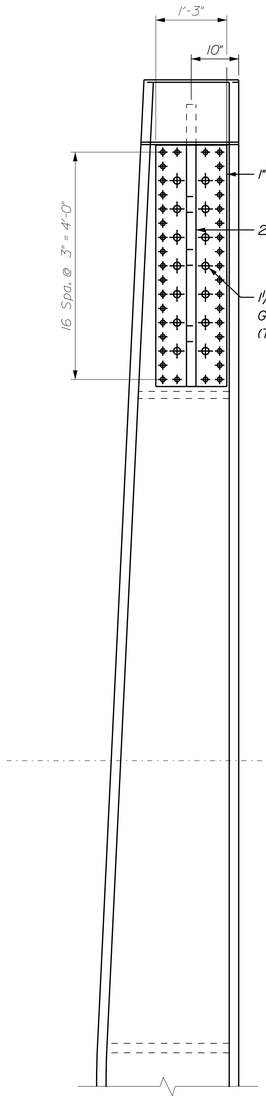

SECTION A-A

1' 6" 0 1' 2'
¾" = 1'-0"

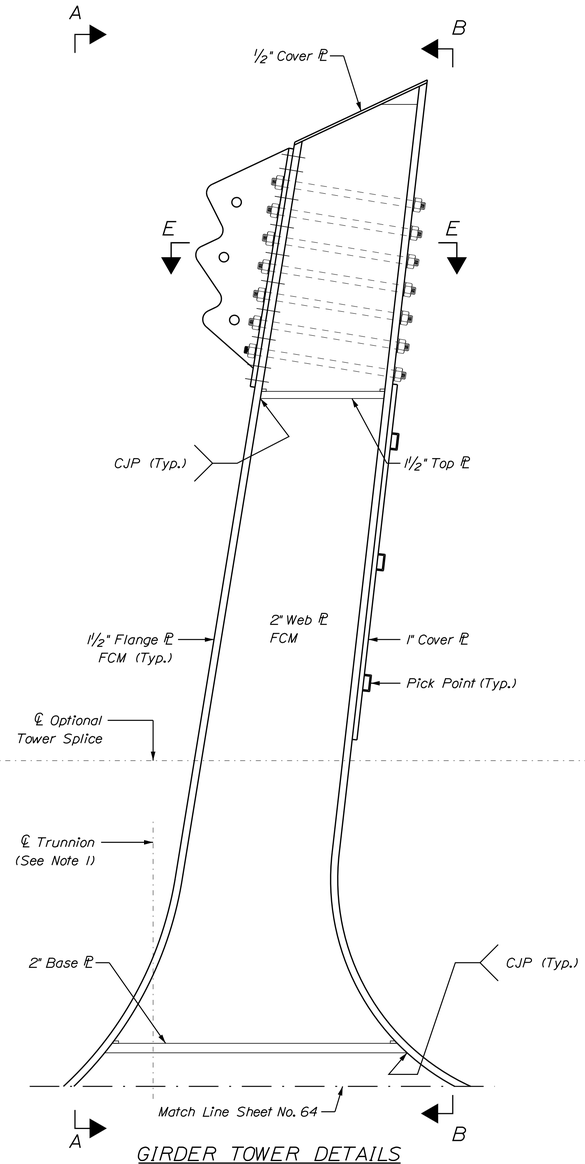

GIRDER TOWER DETAILS

(West Girder Shown, East Girder Similar)

1' 6" 0 1' 2'
¾" = 1'-0"

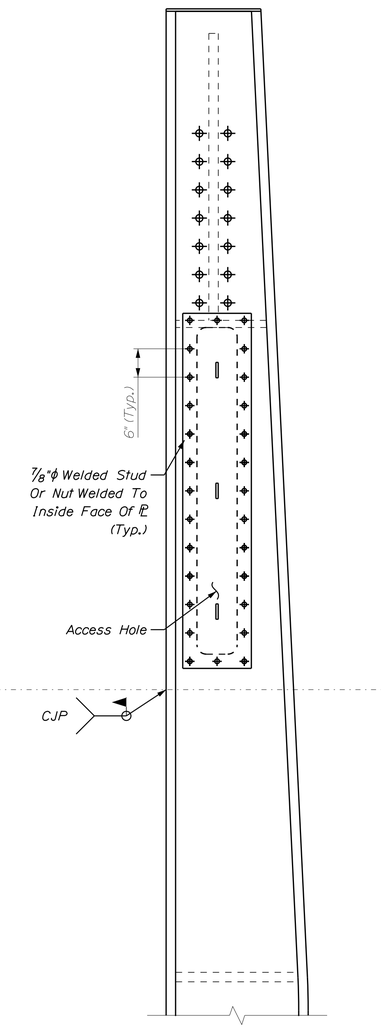

SECTION B-B

1' 6" 0 1' 2'
¾" = 1'-0"

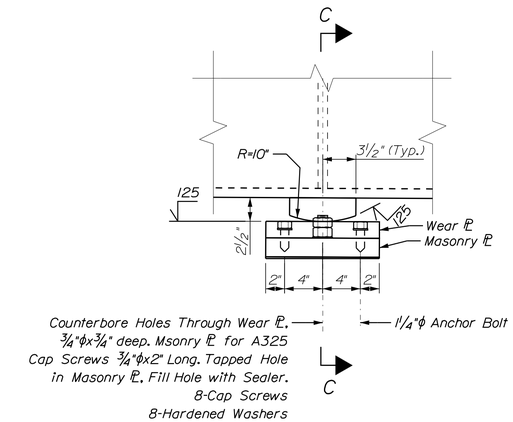

DETAIL 1

1' 9" 6" 3" 0 1'
1½" = 1'-0"

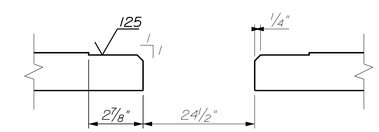

DETAIL 2

(NOT TO SCALE)

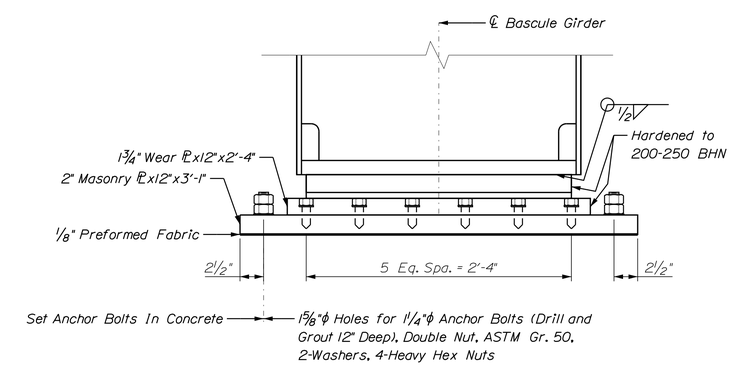

SECTION C-C

1' 9" 6" 3" 0 1'
1½" = 1'-0"

NOTES:

1. For The Location Of Detail 1, See Sheet No. 63.

2. For The Location On Section E-E, See Sheet No. 66.

3. The Bascule Girder Is Designated As Fracture Critical Material. Refer To Sheet No. 3 For Detailed Requirements.

STATE OF MAINE
DEPARTMENT OF TRANSPORTATION

APPROVED | DATE

COMMISSIONER:

CHIEF ENGINEER:

PROJECT INFORMATION

PROGRAM	BRIDGE
PROJECT MANAGER	STEPHEN BODGE
DESIGNER	HARDESTY & HANOVER
CONSULTANT	HARDESTY & HANOVER
PROJECT RESIDENT	
CONTRACTOR	
PROJECT COMPLETION DATE	

SIGNATURE

13196
P.E. NUMBER

DATE

SOUTH BRISTOL
GUT BRIDGE

BASCULE SPAN GIRDER DETAILS III

SHEET NUMBER

65

OF 141

Filename: ...\065_bascule_span_gir_details_03.dgn Division: BRIDGE Username: common Date:1/29/2014

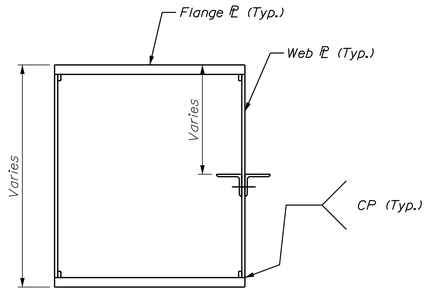

TYPICAL GIRDER SECTION

1' 6" 0 1' 2'
1" = 1'-0"

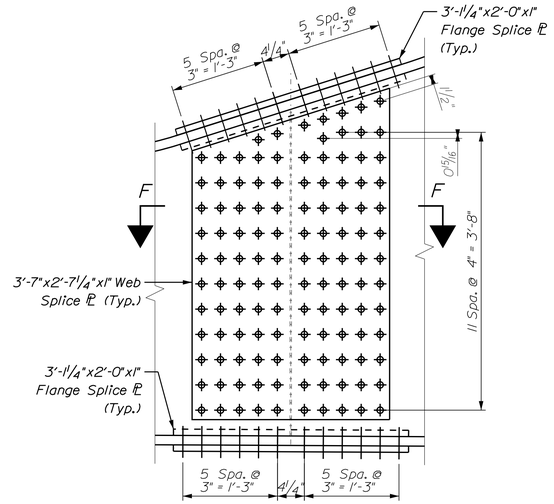

GIRDER SPLICE DETAIL

1' 6" 0 1' 2'
1" = 1'-0"

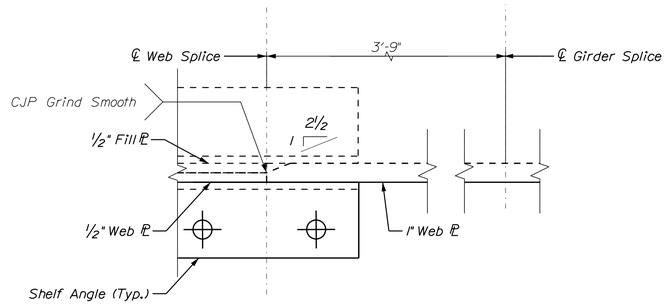

WEB SPLICE DETAIL

0 3" 6"
3" = 1'-0"

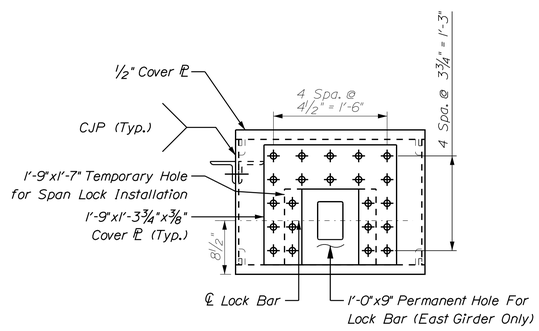

SECTION C-C

1' 6" 0 1' 2'
1" = 1'-0"

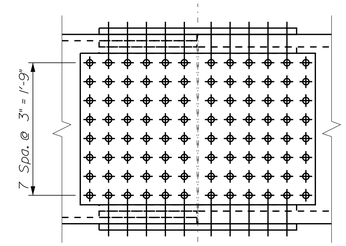

TOP & BOTTOM FLANGES

1' 6" 0 1' 2'
1" = 1'-0"

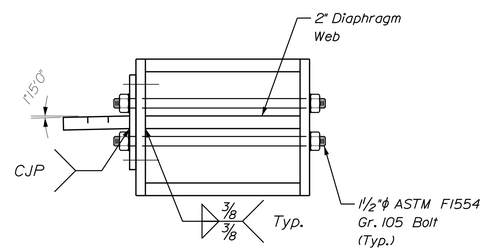

SECTION E-E

1' 6" 0 1' 2'
1" = 1'-0"

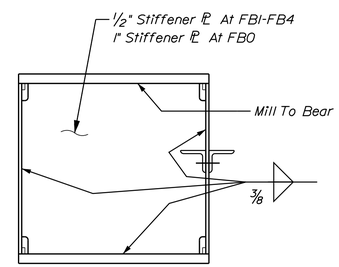

SECTION D-D

1' 6" 0 1' 2'
1" = 1'-0"

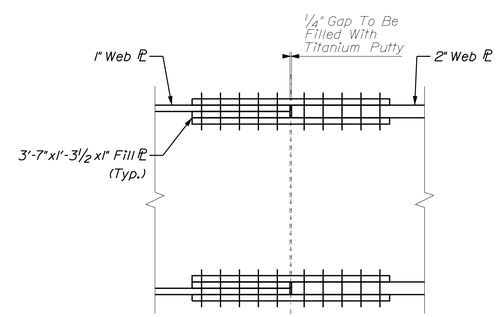

SECTION F-F

1' 6" 0 1' 2'
1" = 1'-0"

NOTES:

1. For The Location Of Sections C-C And D-D, See Sheet No. 63.

2. For The Location Of The Girder And Web Splice Detail, See Sheet No. 64.

3. For The Location of Section E-E, See Sheet No. 65.

4. The Bascule Girder Is Designated As Fracture Critical Material. Refer To Sheet No. 3 For Detailed Requirements.

STATE OF MAINE
DEPARTMENT OF TRANSPORTATION

APPROVED | DATE

COMMISSIONER:

CHIEF ENGINEER:

PROJECT INFORMATION

PROGRAM	BRIDGE	SIGNATURE
PROJECT MANAGER	STEPHEN BODGE	
DESIGNER	HARDESTY & HANOVER	13196
CONSULTANT	HARDESTY & HANOVER	P.E. NUMBER
PROJECT RESIDENT		
CONTRACTOR		DATE
PROJECT COMPLETION DATE		

SOUTH BRISTOL
GUT BRIDGE

BASCULE SPAN GIRDER DETAILS IV

SHEET NUMBER

66

OF 141

Filename: ...\066_bascule_span_gir_details_04.dgn Division: BRIDGE Username: common Date:1/29/2014

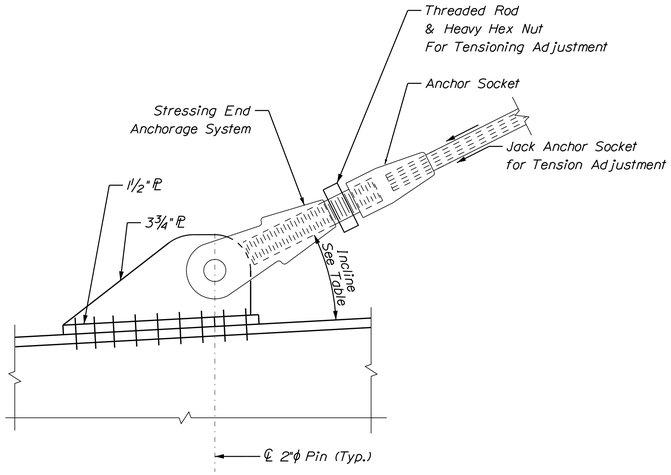

STRESSING END ANCHORAGE DETAIL

1' 0 1' 2'

SCALE: 1"=1'-0"

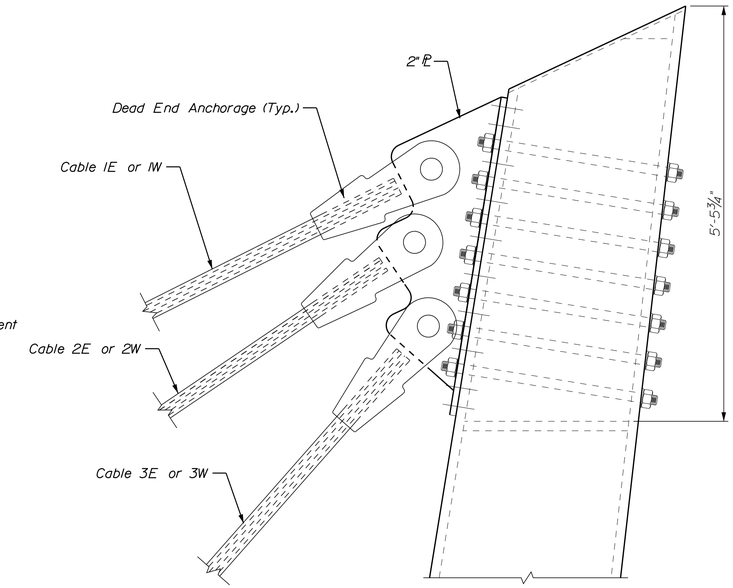

DEAD END ANCHORAGE DETAIL

1' 0 1' 2'

SCALE: 1"=1'-0"

BASCULE SPAN ERECTION SEQUENCE:

1. Install bascule span with full component dead load and counterweight material.
2. With bascule span and each girder with a maximum of 2 kip downward force at the toe, under full dead load deflection, install stay cables.
3. Jack shortest cable at a 20 kip initial load for each girder as per the table on this Sheet.
4. Jack the middle cable at a 20 kip initial load for each girder as per the table on this Sheet.
5. Jack longest cable at a 20 kip initial load for each girder as per the table on this Sheet.
6. Measure end deflection of each girder.
7. Repeat Steps 1 through 6 with the jacking load at 5 kip increments until final girder profile is achieved or maximum jacking force is reached.
8. Record loads in cables.

CABLE	TYPE	DIA.	AREA	THEORETICAL LENGTH C.L. PIN TO C.L. PIN (SEE NOTE 1)	PERMANENT LOADS		LIVE LOAD · IMPACT						THERMAL		WIND (OPEN)	D · LL · I		D · LL·I · T		D · WIND	FATIGUE TRUCK STRESS RANGE
							HL-93 LANE		1.25 x HL-93 TRUCK		FATIGUE TRUCK										
					SPAN OPEN	SPAN CLOSED	MAX.	MIN.	MAX.	MIN.	MAX.	MIN.	MAX.	MIN.		MAX.	MIN.	MAX.	MIN.		
		IN	IN²	FT	KIPS	KIPS	KIPS	KIPS	KIPS	KIPS	KIPS	KIPS	KIPS	KIPS	KIPS	KIPS	KIPS	KIPS	KIPS	KIPS	KSI
1W	ASTM A586	2"	2.40	42.646	33.02	31.60	-2.00	-0.97	0.09	-15.79	0.04	-3.92	0.04	-0.08	8.21	29.70	14.84	29.74	14.76	41.23	1.65
2W				31.148	33.01	32.16	-0.52	-0.21	0.76	-5.09	0.23	-1.53	0.41	-0.79	6.51	32.40	26.86	32.81	26.07	39.52	0.73
3W				20.676	83.63	83.72	1.01	-0.34	5.35	-1.07	1.88	-1.03	1.60	-3.03	0.76	90.08	82.31	91.68	79.28	84.39	1.21
1E				42.616	27.99	28.01	-2.01	-0.98	0.09	-15.37	0.04	-3.87	0.05	-0.11	6.32	26.09	11.66	26.14	11.55	34.31	1.63
2E				31.128	35.79	35.80	-0.52	-0.21	1.50	-4.78	0.42	-1.45	0.42	-0.81	4.97	36.78	30.81	37.21	30.01	40.76	0.78
3E				20.669	29.90	29.91	1.02	-0.35	5.21	-1.08	1.91	-1.04	1.58	-2.98	0.54	36.13	28.48	37.71	25.50	30.45	1.23

NOTES:

1. The Contractor shall perform a high-precision survey to determine the length of each installed cable from ℄ Pin or as per the Manufacturer's requirements.
2. The Contractor shall submit cable installation procedures for approval to the Engineer.
3. For superstructure sequence of construction notes, see Sheet Nos. 3 and 4.
4. Stay cable details are schematic. See the Special Provisions for detail requirements.
5. Stay cable consists of 2"ϕ ASTM A586 Spiral Strand.

STATE OF MAINE
DEPARTMENT OF TRANSPORTATION

APPROVED | DATE

COMMISSIONER:

CHIEF ENGINEER:

PROJECT INFORMATION

PROGRAM	BRIDGE	
PROJECT MANAGER	STEPHEN BODGE	SIGNATURE
DESIGNER	HARDESTY & HANOVER	13196
CONSULTANT	HARDESTY & HANOVER	P.E. NUMBER
PROJECT RESIDENT		
CONTRACTOR		DATE
PROJECT COMPLETION DATE		

SOUTH BRISTOL
GUT BRIDGE

BASCULE SPAN CABLE DETAILS

SHEET NUMBER

67

OF 141

Filename: ...\067_bascule_span_cable_details.dgn Division: BRIDGE Username: common Date:1/29/2014

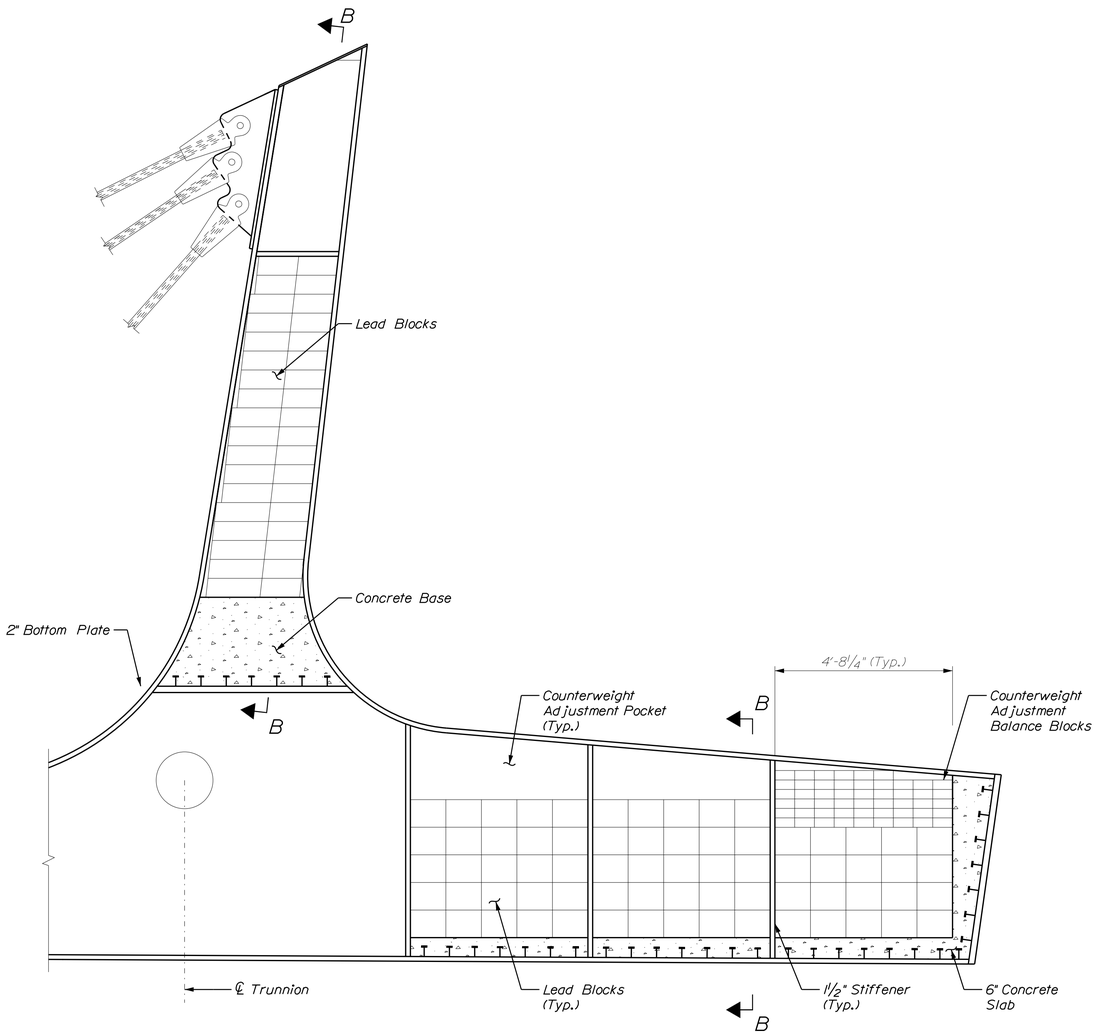

COUNTERWEIGHT DETAILS
(WEST GIRDER SHOWN)
(Inside Of Box Shown For Clarity)
1' 6" 0 1' 2'
1/2" = 1'-0"

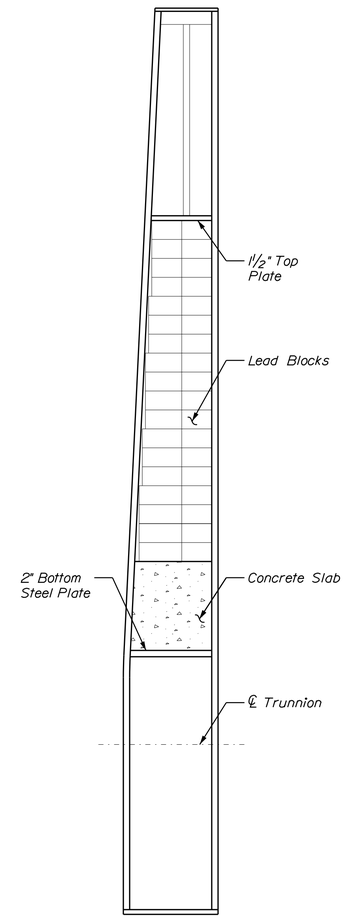

SECTION A
1' 6" 0 1' 2'
1/2" = 1'-0"

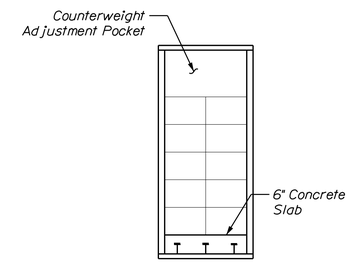

SECTION B
1' 6" 0 1' 2'
1/2" = 1'-0"

STATE OF MAINE
DEPARTMENT OF TRANSPORTATION

APPROVED

	DATE
COMMISSIONER:	
CHIEF ENGINEER:	

PROJECT INFORMATION

PROGRAM	BRIDGE
PROJECT MANAGER	STEPHEN BODGE
DESIGNER	HARDESTY & HANOVER
CONSULTANT	HARDESTY & HANOVER
PROJECT RESIDENT	
CONTRACTOR	
PROJECT COMPLETION DATE	

SIGNATURE
13196
P.E. NUMBER
DATE

SOUTH BRISTOL
GUT BRIDGE

BASCULE SPAN
COUNTERWEIGHT DETAILS

SHEET NUMBER
68
OF 141

Filename: ...\068_bascule_span_ctwt_details.dgn Division: BRIDGE Username: common Date:1/29/2014

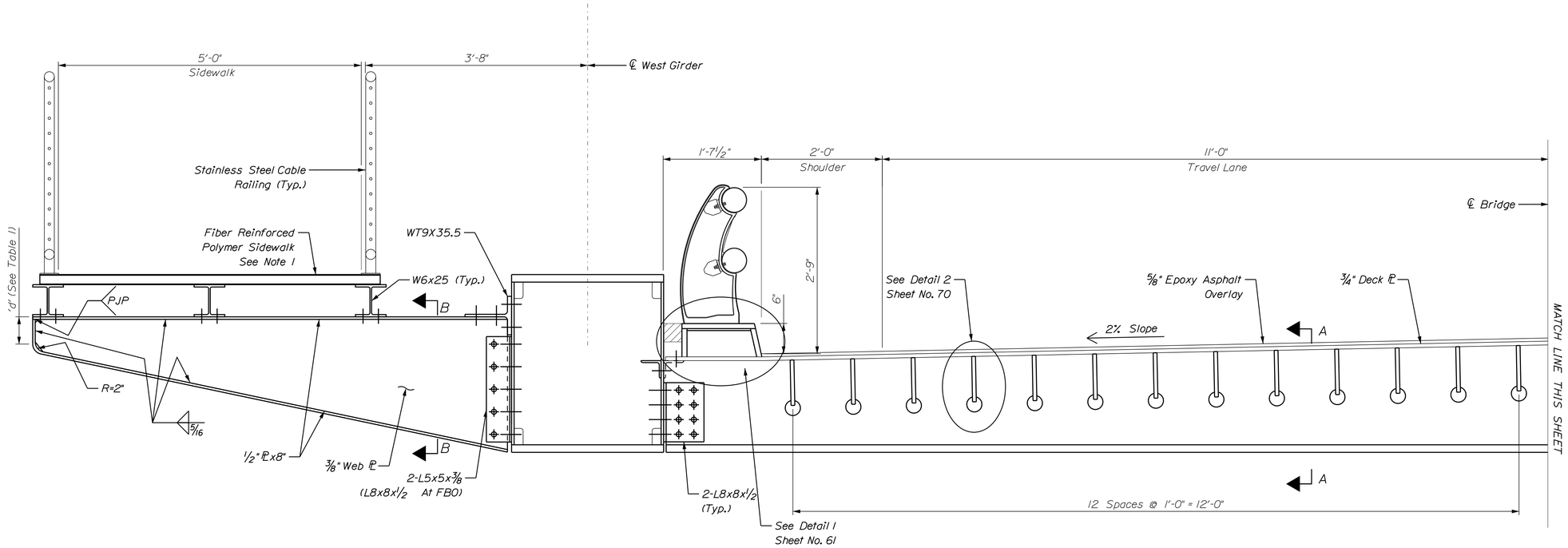

FLOORBEAM FB2
(OTHER FLOORBEAMS SIMILAR)
1' 6" 0 1' 2'

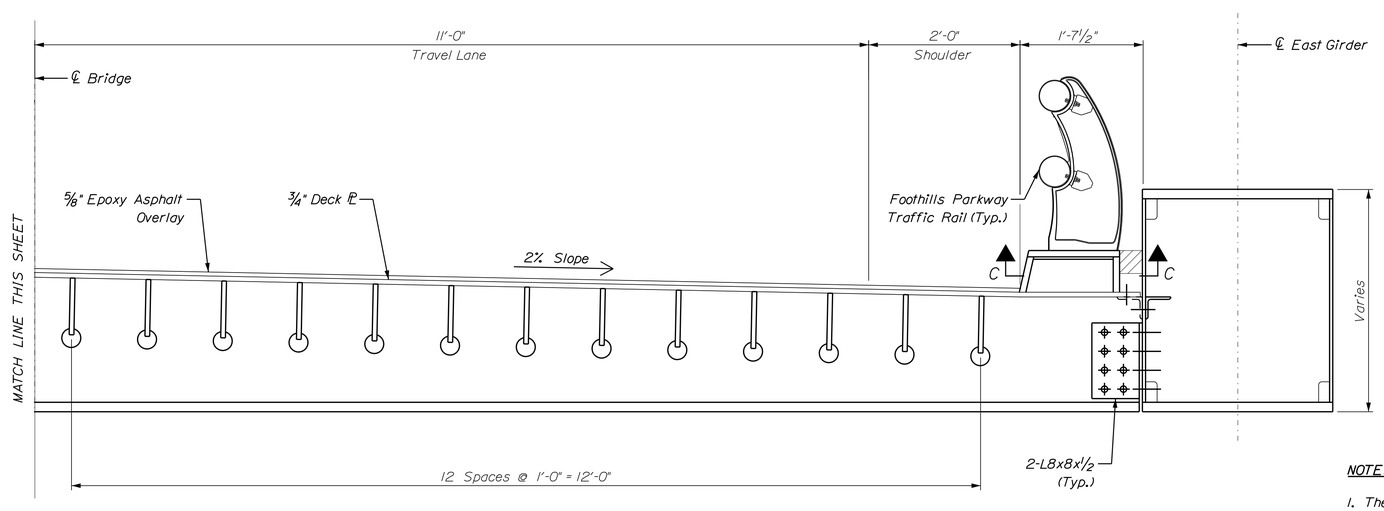

FLOORBEAM FB2
(OTHER FLOORBEAMS SIMILAR)
1' 6" 0 1' 2'
1" = 1'-0"

Floorbeam	'd'
FB0	5"
FB1	8"
FB2	11"
FB3	1'-2"
FB4	1'-5"

NOTES:

1. The Fiber Reinforced Polymer sidewalk follows the top slope of the bascule girder. The top of sidewalk is equal to the top of bascule girder elevation at all times. For bascule girder geometry, see Sheet No. 62.

2. For Section A-A, see Sheet No. 70.

3. For Details 1 and 2, see Sheet No. 70.

4. For Section B-B, see Sheet No. 70.

5. For Section C-C, see Sheet No. 70.

STATE OF MAINE
DEPARTMENT OF TRANSPORTATION

APPROVED | DATE

COMMISSIONER:

CHIEF ENGINEER:

SIGNATURE

13196
P.E. NUMBER

DATE

PROJECT INFORMATION

PROGRAM	BRIDGE
PROJECT MANAGER	STEPHEN BODGE
DESIGNER	HARDESTY & HANOVER
CONSULTANT	HARDESTY & HANOVER
PROJECT RESIDENT	
CONTRACTOR	
PROJECT COMPLETION DATE	

SOUTH BRISTOL
GUT BRIDGE

BASCULE SPAN
FLOORBEAM DETAILS 1

SHEET NUMBER
69
OF 141

Filename: ...\069_bascule_span_fb_details_01.dgn Division: BRIDGE Username: common Date:2/3/2014

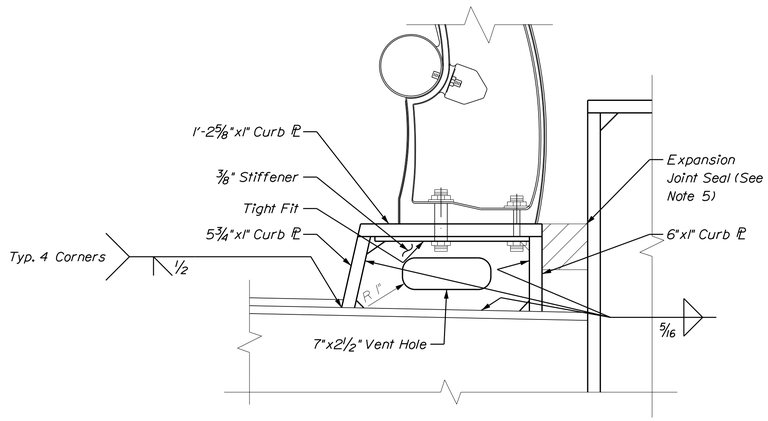

DETAIL 1

2' 1' 0 2'

2" = 1'-0"

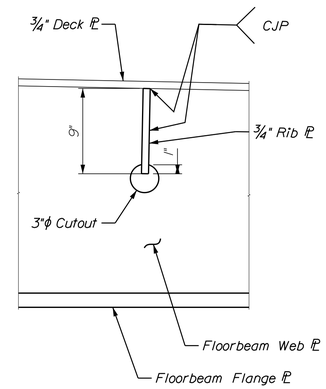

DETAIL 2

1' 9" 6" 3" 0 1'

1 1/2" = 1'-0"

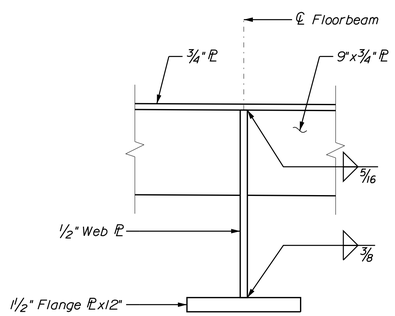

SECTION A-A

1' 9" 6" 3" 0 1'

1 1/2" = 1'-0"

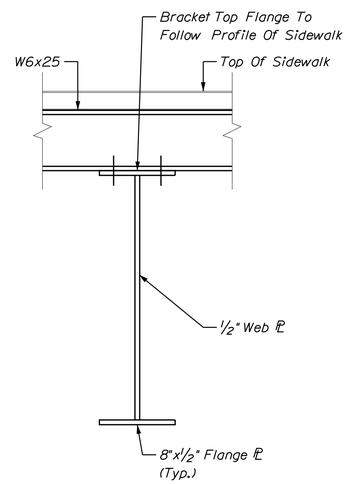

SECTION B-B

1' 9" 6" 3" 0 1'

1 1/2" = 1'-0"

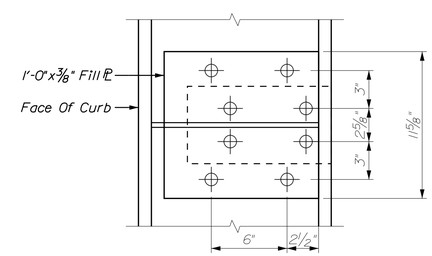

SECTION C-C

2' 1' 0 2'

2" = 1'-0"

NOTES:

1. For The Location Of Details 1 And 2, See Sheet No. 69.

2. For The Location Of Section A-A, See Sheet No. 69.

3. For The Location Of Section B-B, See Sheet No. 69.

4. For Detail Requirements Of The Fiber Reinforced Polymer Sidewalk, See The Special Provisions. The Fiber Reinforced Polymer Ribs Are To Run Transversely Along The Length Of The Sidewalk. See Sheet Nos. 69 and 74.

5. For Detail Requirements Of The Expansion Joint Seal, See The Special Provisions.

STATE OF MAINE
DEPARTMENT OF TRANSPORTATION

APPROVED | DATE

COMMISSIONER:

CHIEF ENGINEER:

PROJECT INFORMATION

PROGRAM	BRIDGE
PROJECT MANAGER	STEPHEN BODGE
DESIGNER	HARDESTY & HANOVER
CONSULTANT	HARDESTY & HANOVER
PROJECT RESIDENT	
CONTRACTOR	
PROJECT COMPLETION DATE	

SIGNATURE

13196
P.E. NUMBER

DATE

SOUTH BRISTOL
GUT BRIDGE

BASCULE SPAN
FLOORBEAM DETAILS II

SHEET NUMBER

70

OF 141

Filename: ...\070_bascule_span_fb_details_02.dgn Division: BRIDGE Username: common Date:2/3/2014

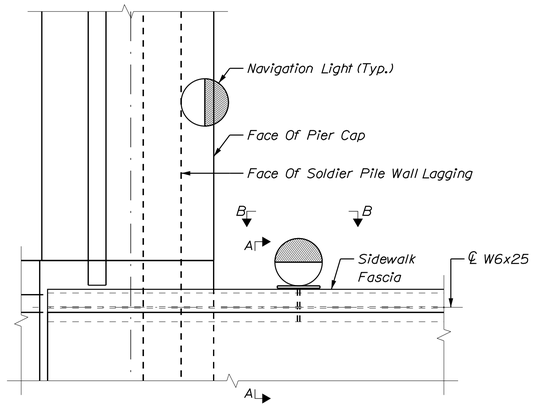

DETAIL 1

1′ 6″ 0 1′ 2′
3/4″ = 1′-0″

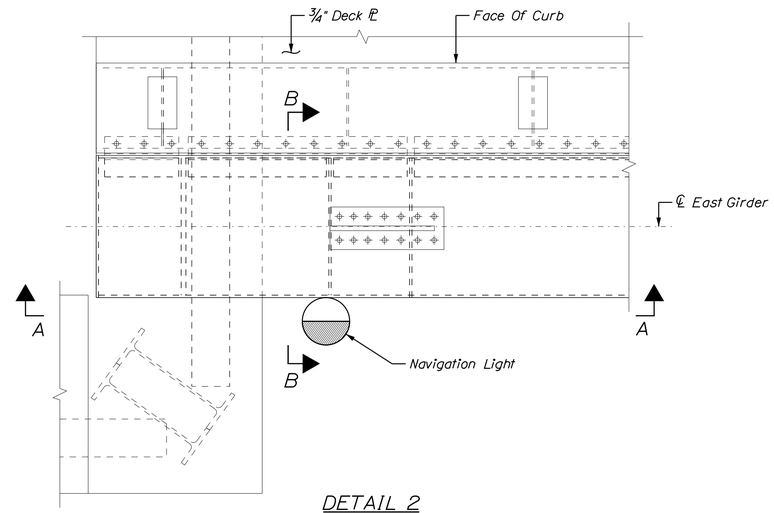

DETAIL 2

1′ 6″ 0 1′ 2′
3/4″ = 1′-0″

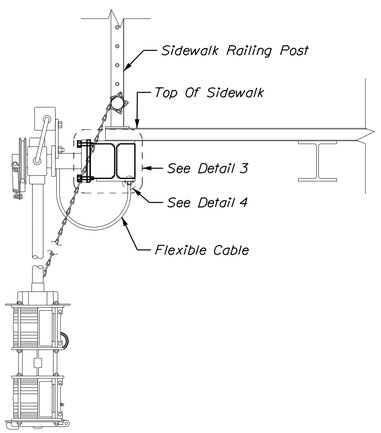

SECTION A

1′ 6″ 0 1′ 2′
1″ = 1′-0″

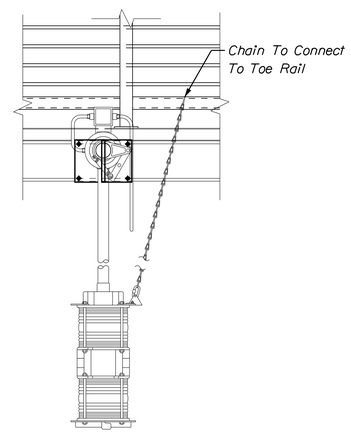

SECTION B

1′ 6″ 0 1′ 2′
1″ = 1′-0″

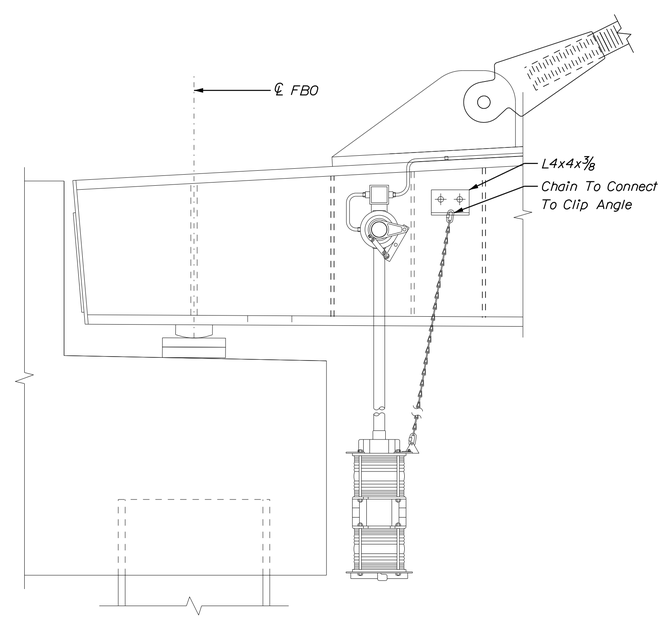

SECTION A

1′ 6″ 0 1′ 2′
1″ = 1′-0″

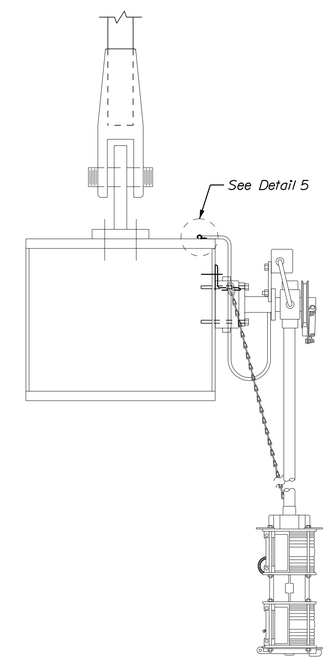

SECTION B

1′ 6″ 0 1′ 2′
1″ = 1′-0″

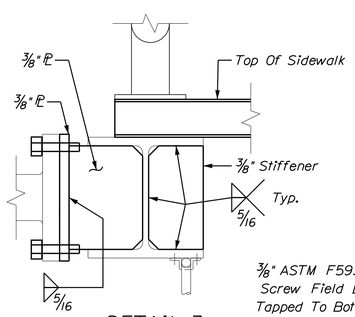

DETAIL 3

0 3″ 6″
3″ = 1′-0″

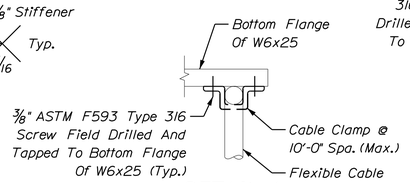

DETAIL 4

(NOT TO SCALE)

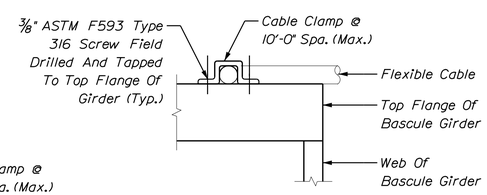

DETAIL 5

(NOT TO SCALE)

NOTES:

1. For the location of Detail 1 and Detail 2, see Sheet No. 32.

STATE OF MAINE
DEPARTMENT OF TRANSPORTATION

APPROVED | DATE

COMMISSIONER:

CHIEF ENGINEER:

SIGNATURE

13196
P.E. NUMBER

DATE

PROJECT INFORMATION

PROGRAM	BRIDGE
PROJECT MANAGER	STEPHEN BODGE
DESIGNER	HARDESTY & HANOVER
CONSULTANT	HARDESTY & HANOVER
PROJECT RESIDENT	
CONTRACTOR	
PROJECT COMPLETION DATE	

SOUTH BRISTOL
GUT BRIDGE

BASCULE SPAN
MISCELLANEOUS DETAILS

SHEET NUMBER

71

OF 141

Filename: ...\071_bascule_span_nav_lights.dgn Division: BRIDGE Username: common Date:1/29/2014

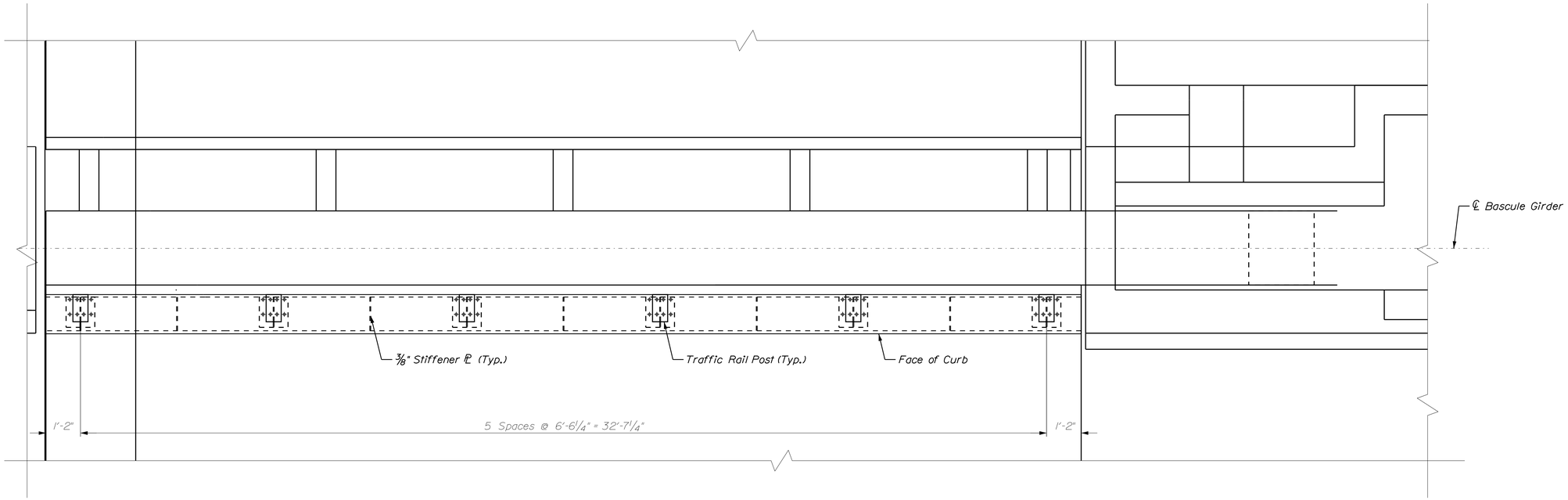

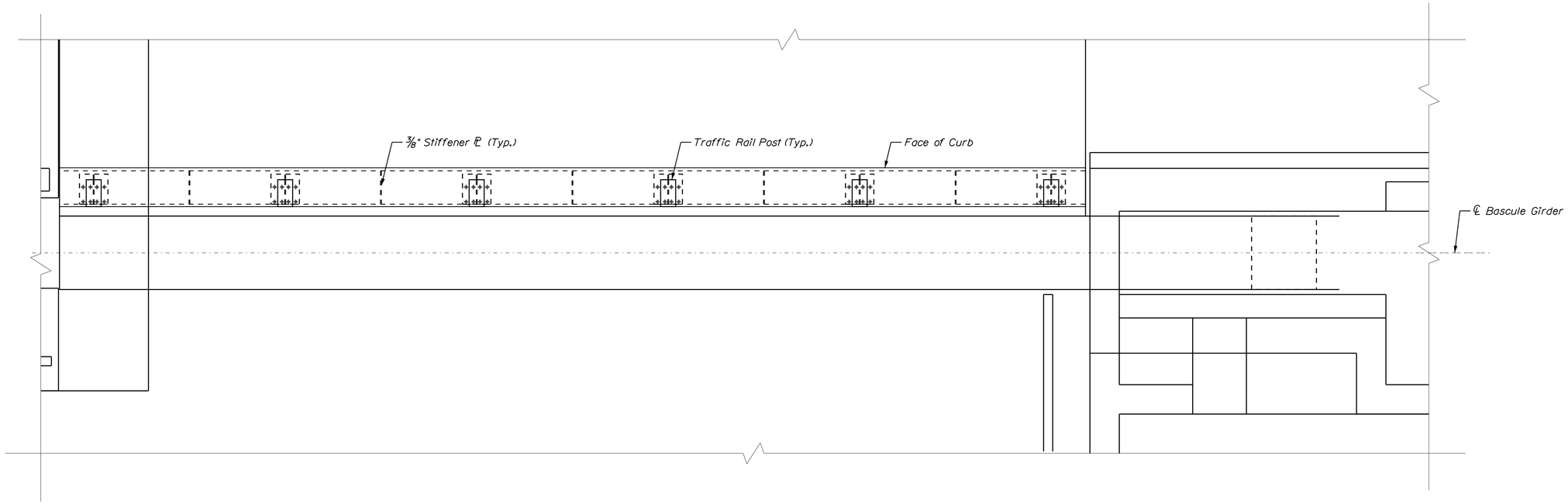

RAILING POST LAYOUT

1' 0 2' 4'

3/8" = 1'-0"

STATE OF MAINE
DEPARTMENT OF TRANSPORTATION

APPROVED | DATE

COMMISSIONER:

CHIEF ENGINEER:

PROJECT INFORMATION		
PROGRAM	BRIDGE	
PROJECT MANAGER	STEPHEN BODGE	SIGNATURE
DESIGNER	HARDESTY & HANOVER	13196
CONSULTANT	HARDESTY & HANOVER	P.E. NUMBER
PROJECT RESIDENT		
CONTRACTOR		DATE
PROJECT COMPLETION DATE		

SOUTH BRISTOL
GUT BRIDGE

BASCULE SPAN TRAFFIC RAILING
POST LAYOUT

SHEET NUMBER

72

OF 141

Filename: ...\072_bascule_span_railing_layout.dgn Division: BRIDGE Username: common Date:1/29/2014

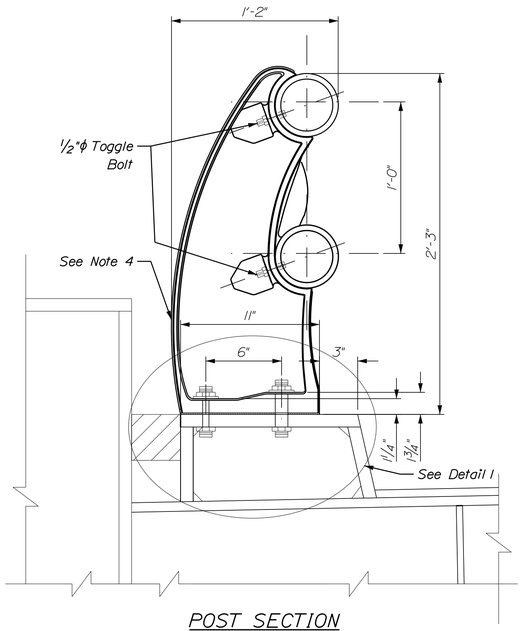

POST SECTION

1' 6" 0' 1'

2" = 1'-0"

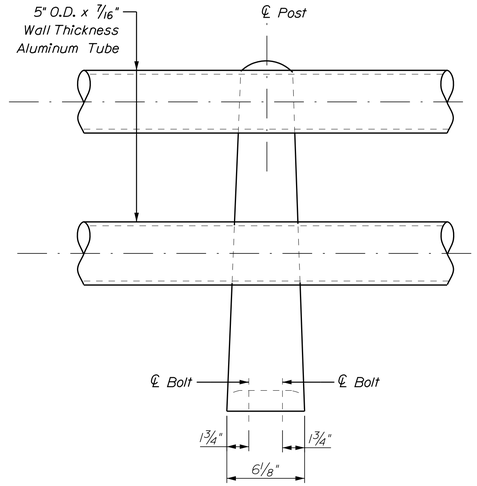

POST ELEVATION

1' 6" 0' 1'

2" = 1'-0"

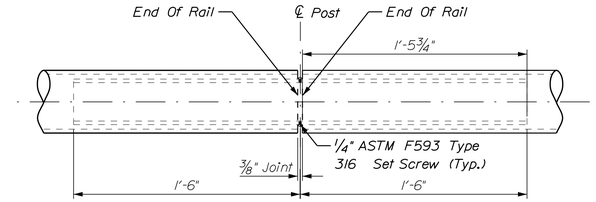

RAILING SPLICE DETAIL

(SEE NOTE 3)

1' 6" 0' 1'

2" = 1'-0"

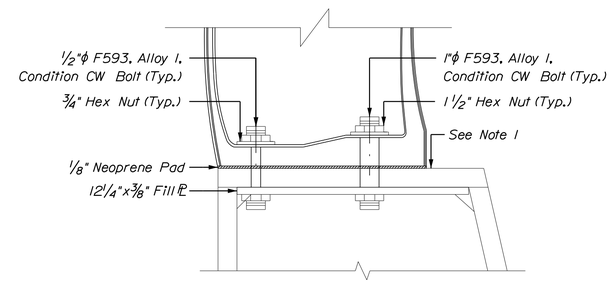

DETAIL 1

0 3" 6"

3" = 1'-0"

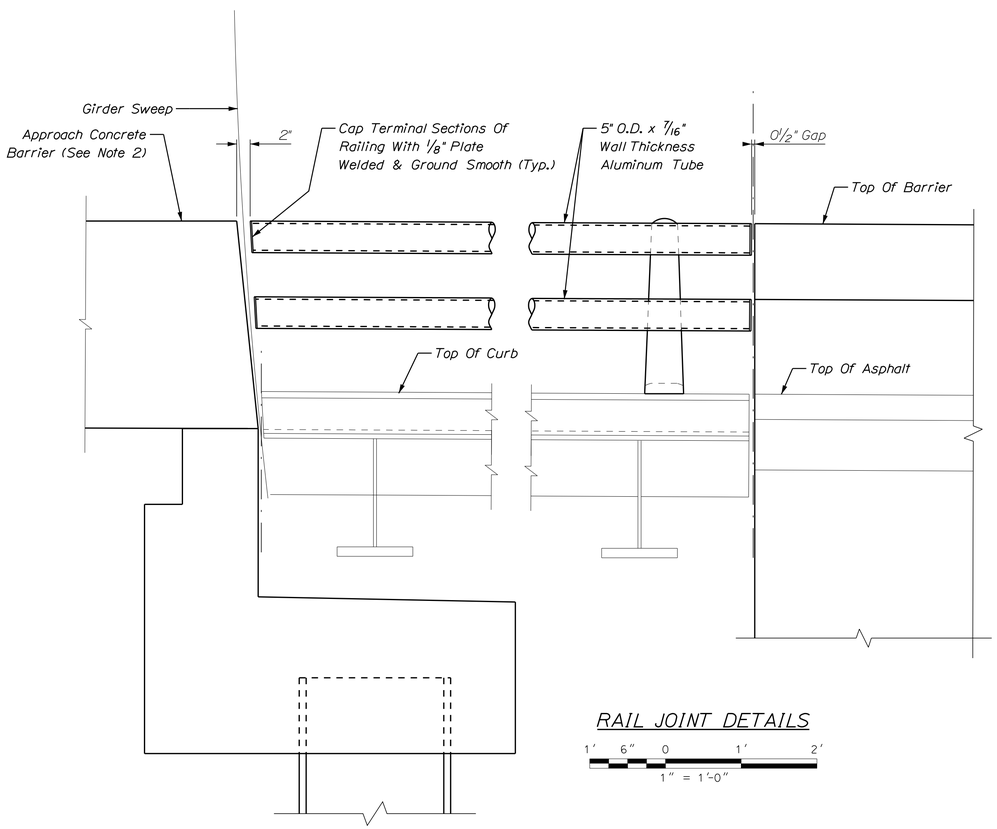

RAIL JOINT DETAILS

1' 6" 0 1' 2'

1" = 1'-0"

POST AND RAILING NOTES:

1. For Steel Curb Details, See Sheet No. 70.

2. For Approach Barrier Details, See Sheet Nos. 81-82.

3. Rail Splices Shall Be Centered In Panel Only One Rail Splice Per Panel Is Permitted.

4. The Post Furnished May Deviate Slightly From The Coniguration Shown, Except For Height In Order That An Available Commecial Casting May Be Used. The Casting Must Confom With The Requirements Of The Design Specification. The Contractor Shall Submit For Approval Prior To Fabrication.

5. Conform To The Following:

   Permanent Mold Cast Aluminum Posts:
   ASTM B-108, Alloy A444-T4.

   Aluminum Extruded Tube For Railing And Rail Splices:
   ASTM B-221, Alloy 6061-T6.

   Steel Anchor And Toggle Bolts:
   ASTM F593, Alloy 1, Condition CW

   Steel Hex Nuts And Washers:
   ASTM F594, Alloy 304.

6. Seat Posts On Neoprene 1/8" Thick Bearing Pads, Having A Minimum Durometer Or Hardness Of 60. Provide Pads That Conform To Post Base Dimensions.

7. Provide Aluminum Shims As Required For Alignment Of Posts. Set Post Normal To Grade. Provide Railing Splices Located At 1/8 Points ±4".

8. Railing Is To Be Continuous Over 3 Or More Posts.

9. Shop Bend Rails On Curved Alignments To The Required Radius.

10. Apply A Field Applied No. 60 Grit Sandblaster Finish To All Exposed Surfaces Of Post And Rail.

STATE OF MAINE
DEPARTMENT OF TRANSPORTATION

APPROVED — DATE

COMMISSIONER:

CHIEF ENGINEER:

PROJECT INFORMATION

PROGRAM	BRIDGE	
PROJECT MANAGER	STEPHEN BODGE	SIGNATURE
DESIGNER	HARDESTY & HANOVER	13196 P.E. NUMBER
CONSULTANT	HARDESTY & HANOVER	
PROJECT RESIDENT		DATE
CONTRACTOR		
PROJECT COMPLETION DATE		

SOUTH BRISTOL
GUT BRIDGE

BASCULE SPAN
TRAFFIC RAILING DETAILS

SHEET NUMBER

73

OF 141

Filename: ...\073_bascule_span_railing_details.dgn Division: BRIDGE Username: common Date:1/29/2014

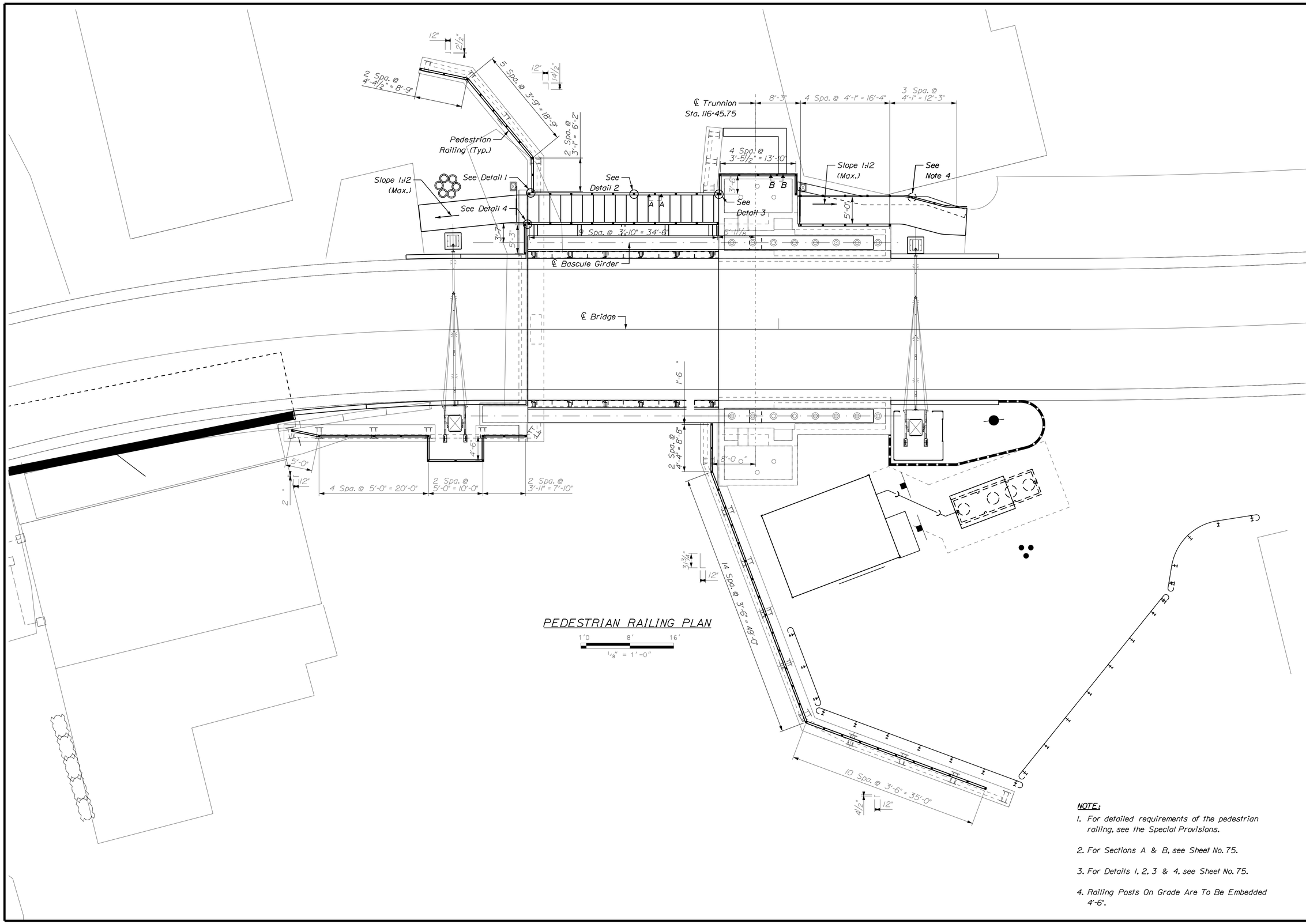

NOTE:

1. For detailed requirements of the pedestrian railing, see the Special Provisions.
2. For Sections A & B, see Sheet No. 75.
3. For Details 1, 2, 3 & 4, see Sheet No. 75.
4. Railing Posts On Grade Are To Be Embedded 4'-6".

STATE OF MAINE
DEPARTMENT OF TRANSPORTATION

APPROVED	DATE
COMMISSIONER:	
CHIEF ENGINEER:	

PROJECT INFORMATION		
PROGRAM	BRIDGE	
PROJECT MANAGER	STEPHEN BODGE	SIGNATURE
DESIGNER	HARDESTY & HANOVER	13196
CONSULTANT	HARDESTY & HANOVER	P.E. NUMBER
PROJECT RESIDENT		
CONTRACTOR		DATE
PROJECT COMPLETION DATE		

SOUTH BRISTOL GUT BRIDGE

PEDESTRIAN RAILING POST LAYOUT

SHEET NUMBER

74

OF 141

Filename: ... 074_pedestrian_rail_layout.dgn Division: BRIDGE Username: common Date:2/3/2014

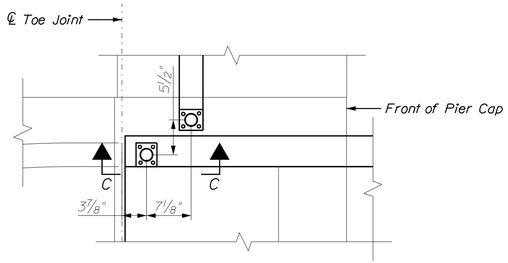

DETAIL 1

1' 6" 0 1' 2'
1" = 1'-0"

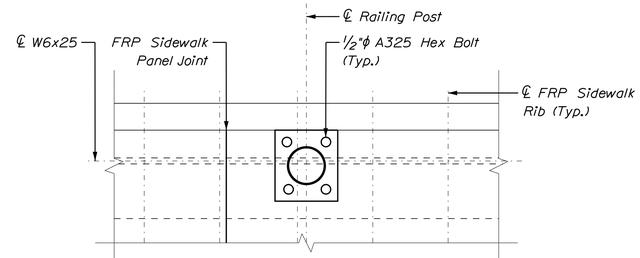

DETAIL 2

0 3" 6"
3" = 1'-0"

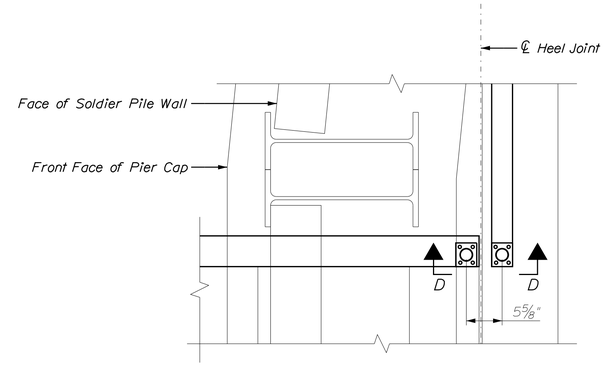

DETAIL 3

1' 6" 0 1' 2'
1" = 1'-0"

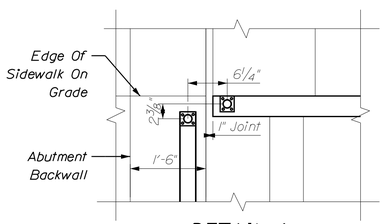

DETAIL 4

1' 6" 0 1' 2'
1" = 1'-0"

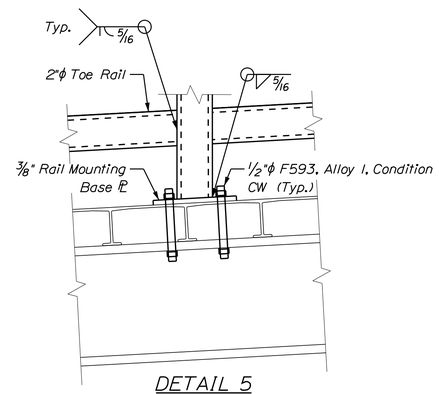

DETAIL 5

0 3" 6"
3" = 1'-0"

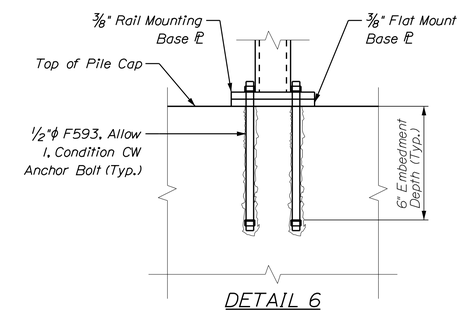

DETAIL 6

0 3" 6"
3" = 1'-0"

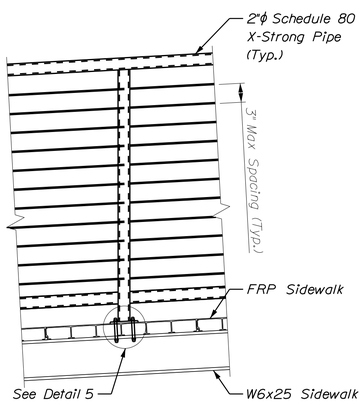

SECTION A

1' 6" 0 1' 2'
1" = 1'-0"

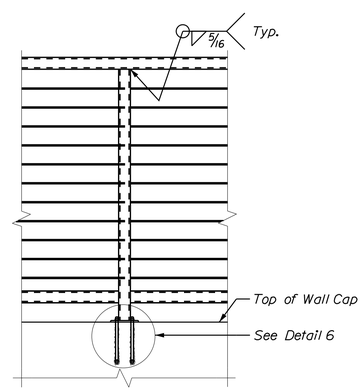

SECTION B

1' 6" 0 1' 2'
1" = 1'-0"

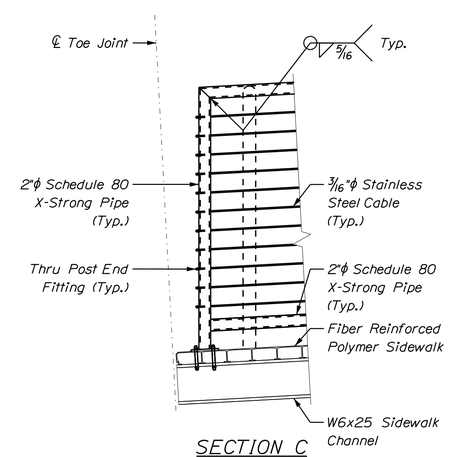

SECTION C

1' 6" 0 1' 2'
1" = 1'-0"

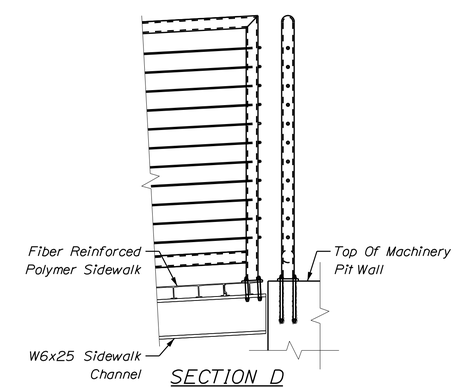

SECTION D

1' 6" 0 1' 2'
1" = 1'-0"

NOTE:

1. For detailed requirements of the pedestrian railing, see the Special Provisions.
2. For the location of Sections A & B, see Sheet No. 74.
3. For the location of Details 1, 2, 3 & 4, see Sheet No. 74.

STATE OF MAINE
DEPARTMENT OF TRANSPORTATION

APPROVED — DATE

COMMISSIONER:

CHIEF ENGINEER:

PROJECT INFORMATION

PROGRAM	BRIDGE		
PROJECT MANAGER	STEPHEN BODGE	SIGNATURE	
DESIGNER	HARDESTY & HANOVER	13196	
CONSULTANT	HARDESTY & HANOVER	P.E. NUMBER	
PROJECT RESIDENT			
CONTRACTOR		DATE	
PROJECT COMPLETION DATE			

SOUTH BRISTOL
GUT BRIDGE

PEDESTRIAN RAILING
SECTIONS AND DETAILS

SHEET NUMBER
75
OF 141

Filename: ...\075_pedestrian_rail_details.dgn Division: BRIDGE Username: common Date:1/29/2014

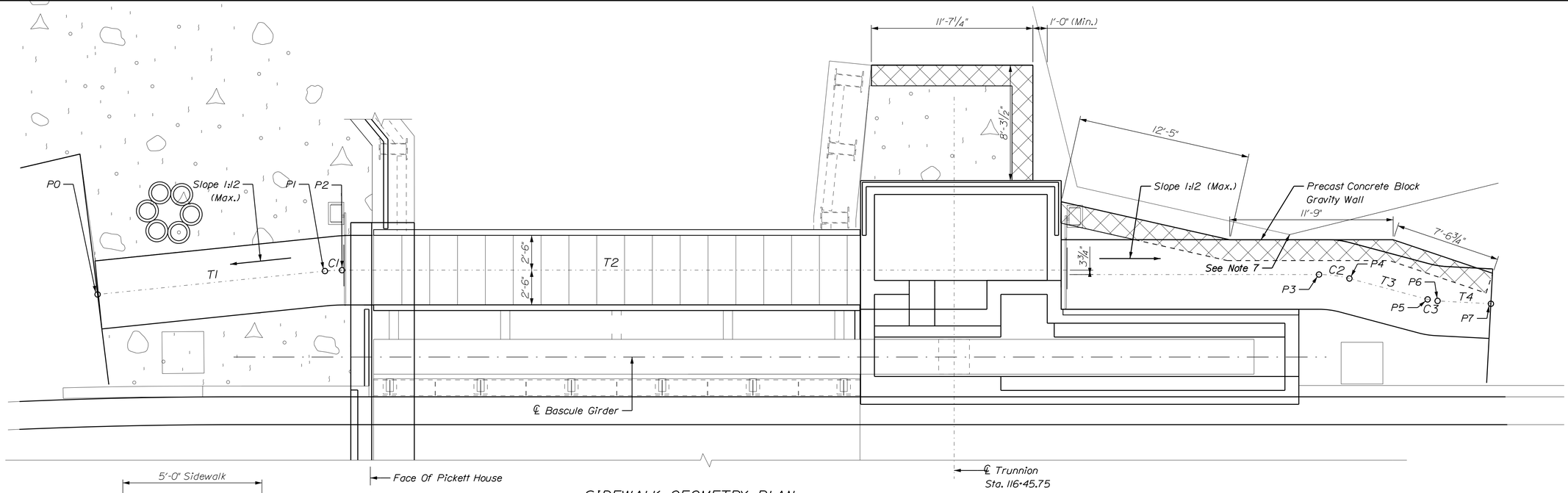

SIDEWALK GEOMETRY PLAN

1'0 4' 8'
1/4" = 1'-0"

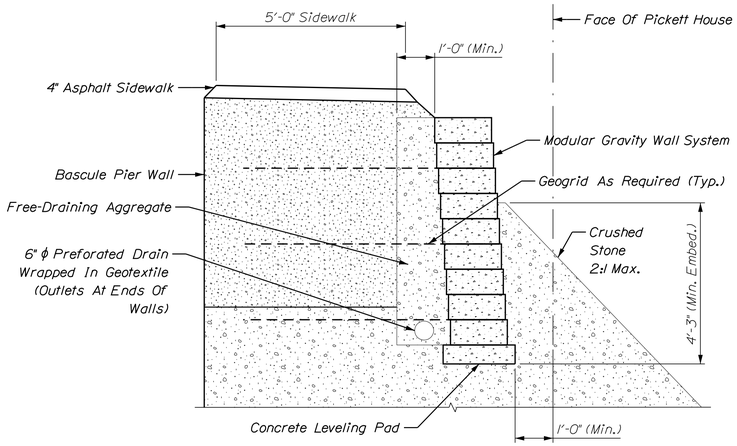

TYPICAL SIDEWALK SECTION AT NORTH APPROACH

1' 6" 0 1' 2'
1/2" = 1'-0"

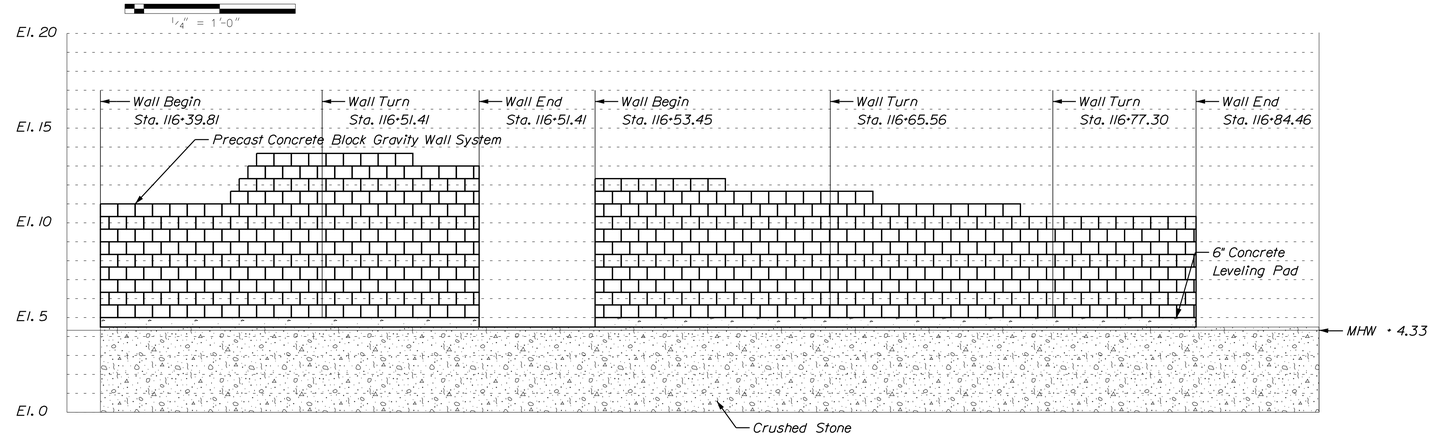

PRECAST CONCRETE BLOCK GRAVITY WALL DEVELOPED ELEVATION

1'0 4' 8'
1/4" = 1'-0"

Notes:

1. The Contractor Shall Provide A Precast Concrete Block Gravity Wall Or A Precast Aggregate-Filled Concrete Block Wall In Accordance With Special Provision 635 For The Relevant Wall System. Precast Concrete Block Gravity Walls Shall Be Designed And Stamped By A Licensed Professional Engineer And The Design And Shop Drawings Shall Be Submitted To The Resident For Review. Plan Details Are Shown For Estimating Purposes Only.

2. The Precast Concrete Block Gravity Wall System Shall Be Redi-Rock, Strong Stone Or Redi Scapes As Produced By A Licensed Manufacturer.

3. Backfill and Foundation Soil Parameters For Use In The Submitted Design Shall Be In Accordance With Special Provision 635.

4. For The Strength Limit State The Applied Factored Bearing Pressure For Precast Concrete Block Gravity Wall Shall Not Exceed A Factored Bearing Resistance Of 1.25 ksf.

5. All Blocks At The Ends Of The Wall(s) Must Be Finished On Three Sides: The Front, The Top And The Exposed End. Blocks With Exposed Surfaces At The Ends And Top Of The Wall Must Be Manufactured For This Purpose And Must Be Finished To Match The Face Of The Blocks.

6. Piped Drainage Shall Be Included In The Design Of The Walls. Wall Drainage Will Be Incidental To Construction Of The Wall.

7. Contractor Shall Make Every Effort To Provide A 1'-0" Min. Clear Distance To The Pickett House At This Location Of The Wall. 1'-0" Min. Clear Is Required Along The Remainder Of The Wall.

Line Name	Name	Start		Name	End		
		Sta.	Offset from Bridge CL		Sta.	Offset from Bridge CL	
T1	P0	115+84.20	20'-4 5/8"	P1	116+00.53	22'-0 3/4"	NA
C1	P1	116+00.41	22'-0 3/4"	P2	116+01.76	22'-11 1/2"	12'-0"
T2	P2	116+01.76	22'-11 1/2"	P3	116+71.97	21'-9 3/4"	NA
C2	P3	116+71.97	21'-9 3/4"	P4	116+74.16	21'-6 1/4"	6'-0"
T3	P4	116+74.16	21'-6 1/4"	P5	116+79.78	20'-0 1/4"	NA
C3	P5	116+79.78	20'-0 1/4"	P6	116+80.49	19'-10 7/8"	6'-0"
T4	P6	116+80.49	19'-10 7/8"	P7	116+84.33	19'-8 1/2"	NA

STATE OF MAINE
DEPARTMENT OF TRANSPORTATION

APPROVED | DATE
COMMISSIONER:
CHIEF ENGINEER:

PROJECT INFORMATION

PROGRAM	BRIDGE
PROJECT MANAGER	STEPHEN BODGE
DESIGNER	HARDESTY & HANOVER
CONSULTANT	HARDESTY & HANOVER
PROJECT RESIDENT	
CONTRACTOR	
PROJECT COMPLETION DATE	

SIGNATURE
13196
P.E. NUMBER
DATE

SOUTH BRISTOL
GUT BRIDGE

SIDEWALK LAYOUT AND SECTIONS

SHEET NUMBER
76
OF 141

Filename: ...\076_bascule_span_sidewalk_geo_layout.dgn Username: common Division: BRIDGE Date:1/29/2014

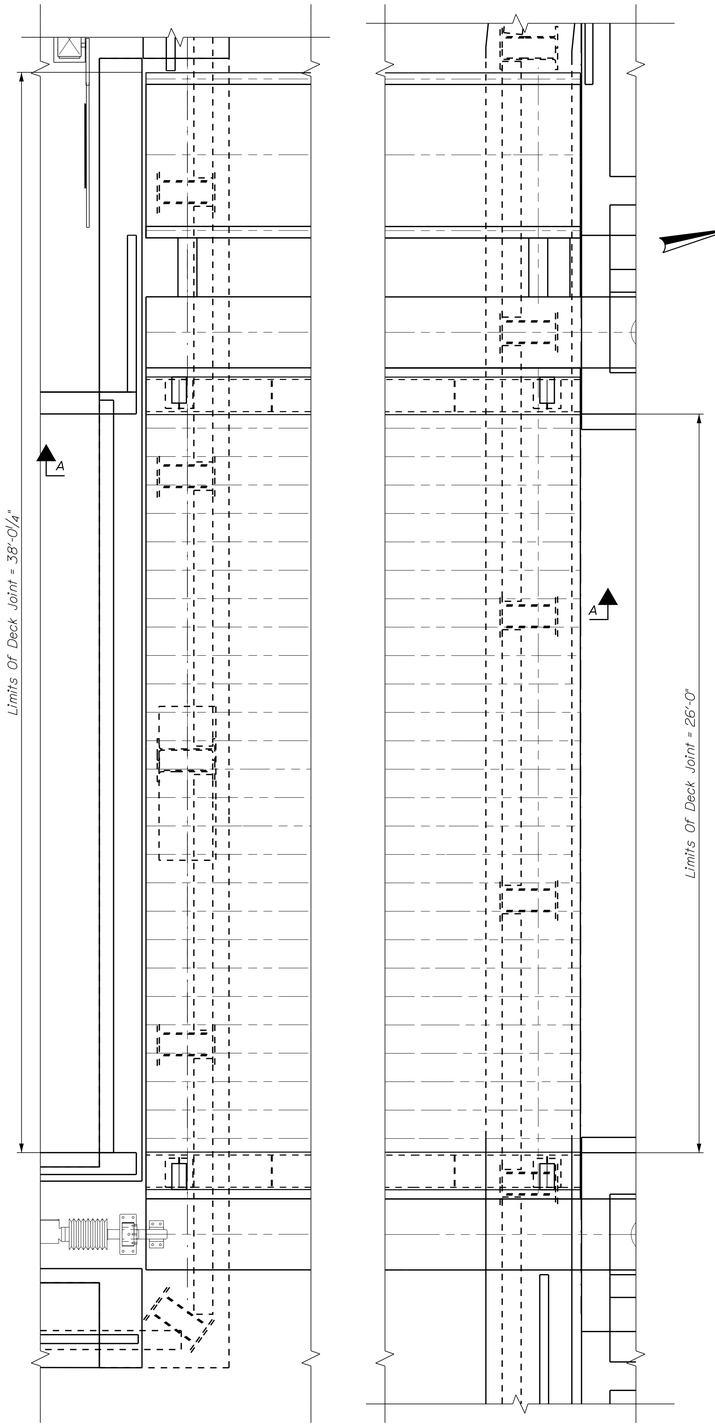

DECK JOINT PLAN

1' 0 2' 4'

3/8" = 1'-0"

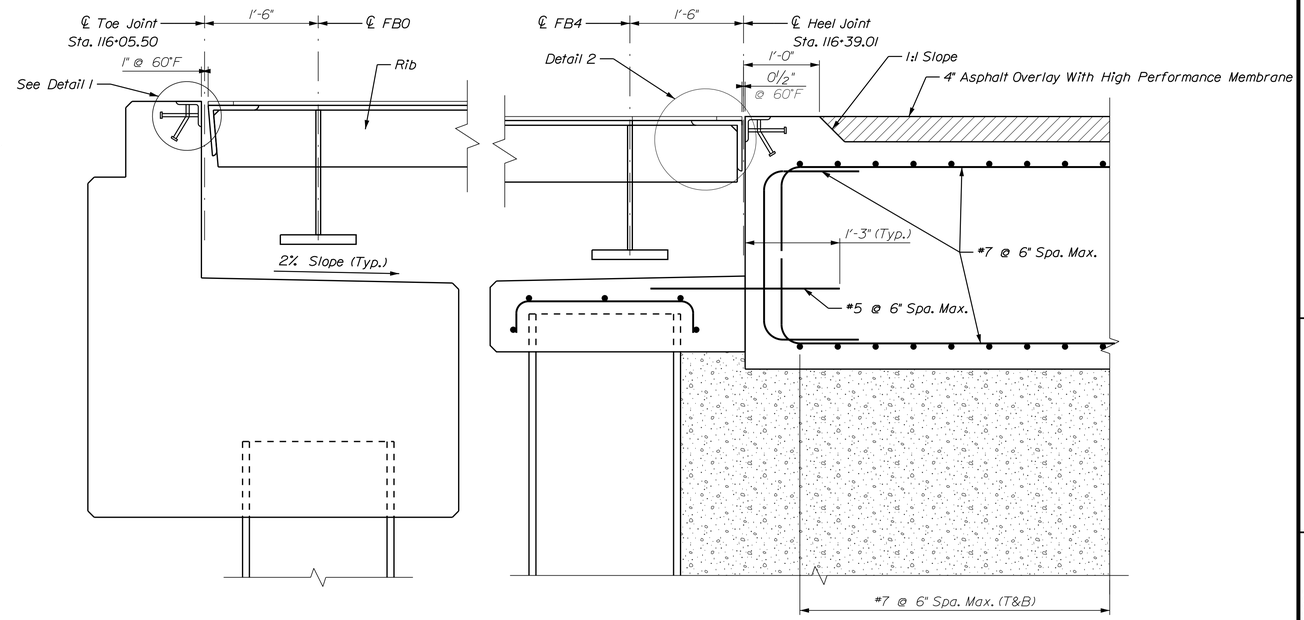

SECTION A-A

1' 6" 0 1' 2'

1" = 1'-0"

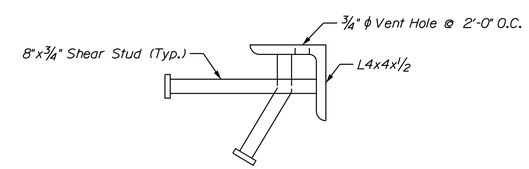

DETAIL 1

0 3" 6"

3" = 1'-0"

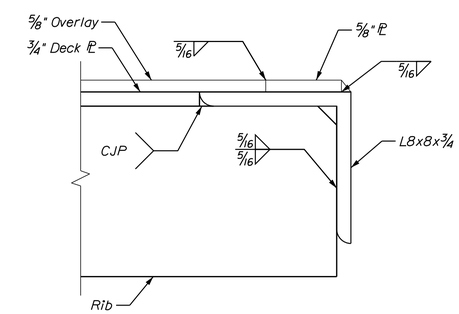

DETAIL 2

0 3" 6"

3" = 1'-0"

STATE OF MAINE
DEPARTMENT OF TRANSPORTATION

APPROVED | DATE

COMMISSIONER:

CHIEF ENGINEER:

PROJECT INFORMATION		
PROGRAM	BRIDGE	
PROJECT MANAGER	STEPHEN BODGE	SIGNATURE
DESIGNER	HARDESTY & HANOVER	13196
CONSULTANT	HARDESTY & HANOVER	P.E. NUMBER
PROJECT RESIDENT		
CONTRACTOR		DATE
PROJECT COMPLETION DATE		

SOUTH BRISTOL
GUT BRIDGE

BASCULE SPAN DECK JOINT
PLAN AND DETAILS

SHEET NUMBER

77

OF 141

Filename: ...\077_boscule_span_joint_details.dgn Division: BRIDGE Username: common Date:1/29/2014

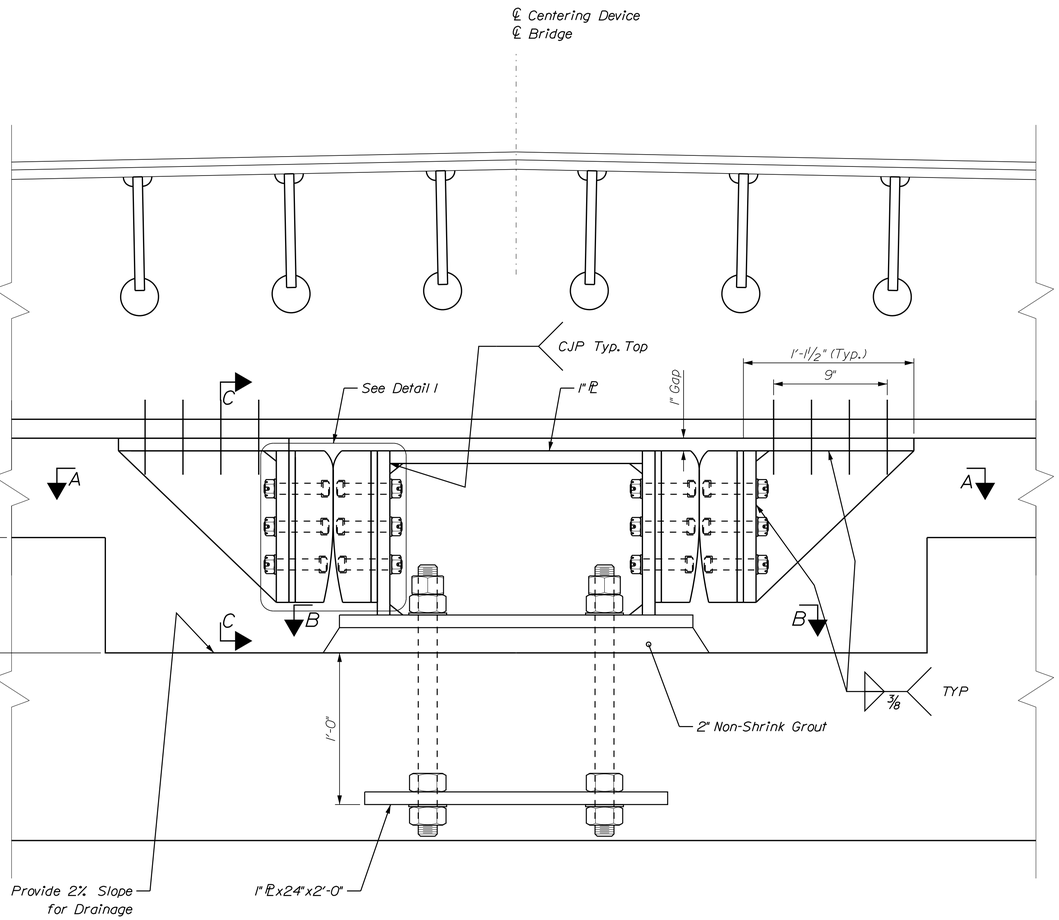

CENTERING DEVICE ELEVATION

0 3" 6" 1'
2" = 1'-0"

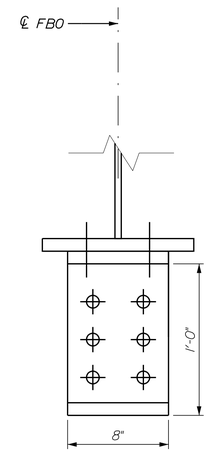

SECTION C-C

0 3" 6" 1'
2" = 1'-0"

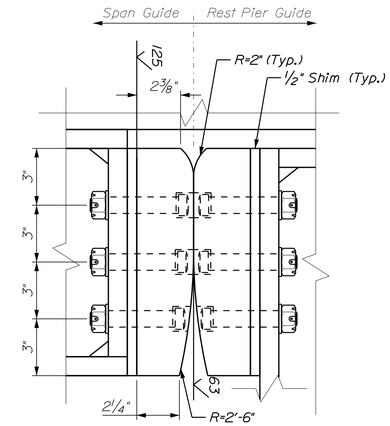

DETAIL 1

0 3" 6"
3" = 1'-0"

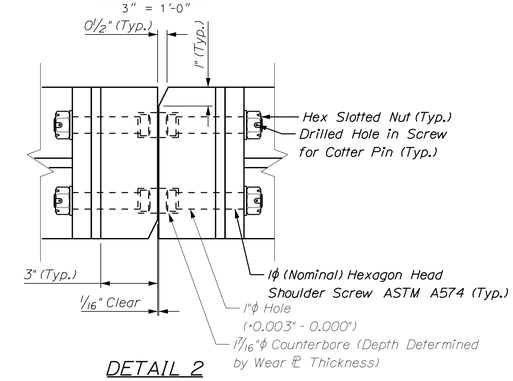

DETAIL 2

0 3" 6"
3" = 1'-0"

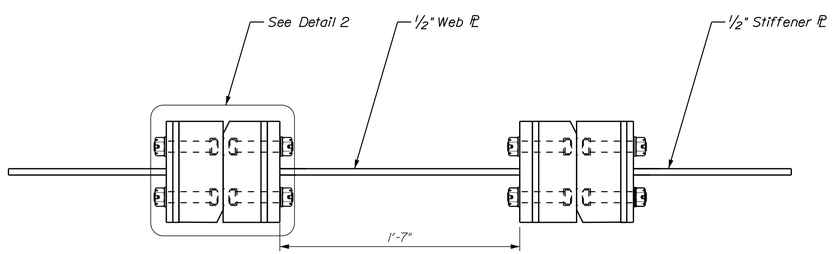

SECTION A-A

0 3" 6" 1'
2" = 1'-0"

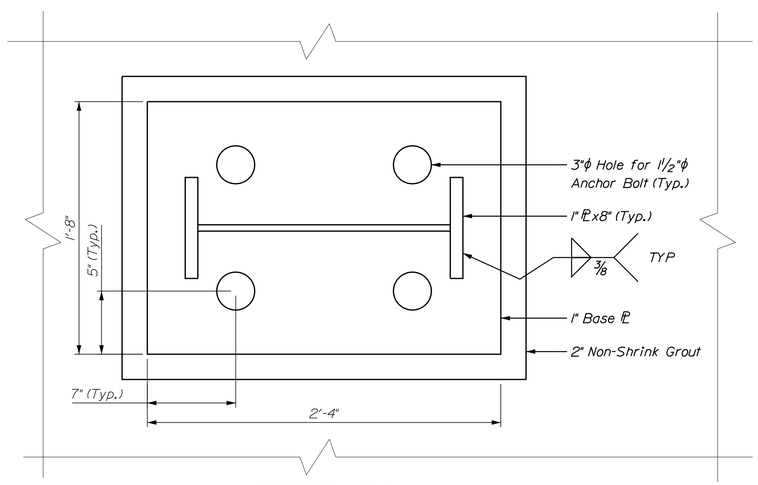

SECTION B-B

0 3" 6" 1'
2" = 1'-0"

STATE OF MAINE
DEPARTMENT OF TRANSPORTATION

APPROVED | DATE
COMMISSIONER:
CHIEF ENGINEER:

PROJECT INFORMATION		
PROGRAM	BRIDGE	SIGNATURE
PROJECT MANAGER	STEPHEN BODGE	
DESIGNER	HARDESTY & HANOVER	13196
CONSULTANT	HARDESTY & HANOVER	P.E. NUMBER
PROJECT RESIDENT		
CONTRACTOR		DATE
PROJECT COMPLETION DATE		

SOUTH BRISTOL
GUT BRIDGE

BASCULE SPAN CENTERING
DEVICE DETAILS

SHEET NUMBER
78
OF 141

Filename: ...\078_bascule_span_center_device.dgn
Division: BRIDGE
Username: common
Date:1/29/2014

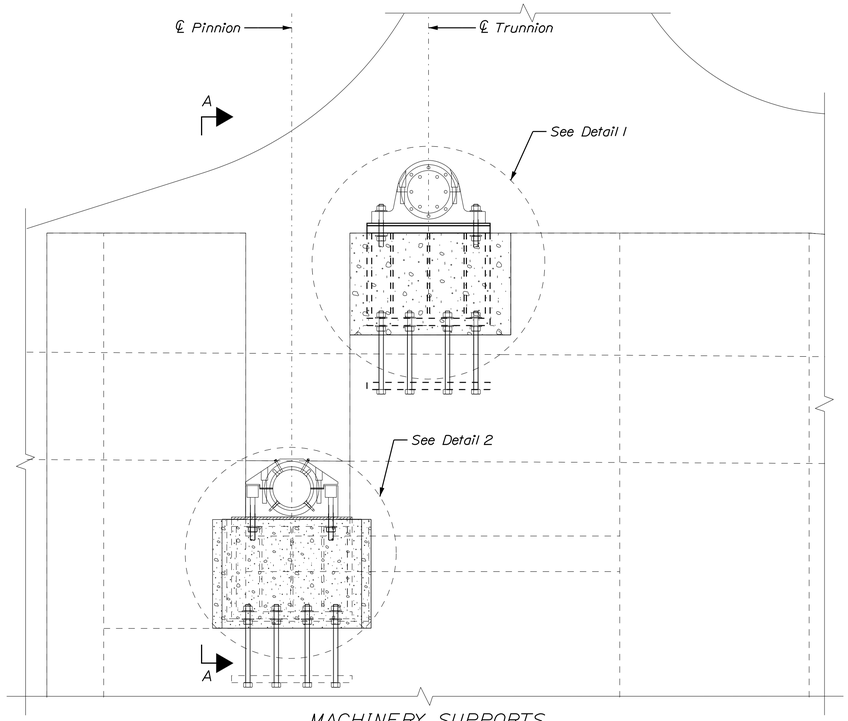

MACHINERY SUPPORTS

1' 6" 0 1' 2'
3/4" = 1'-0"

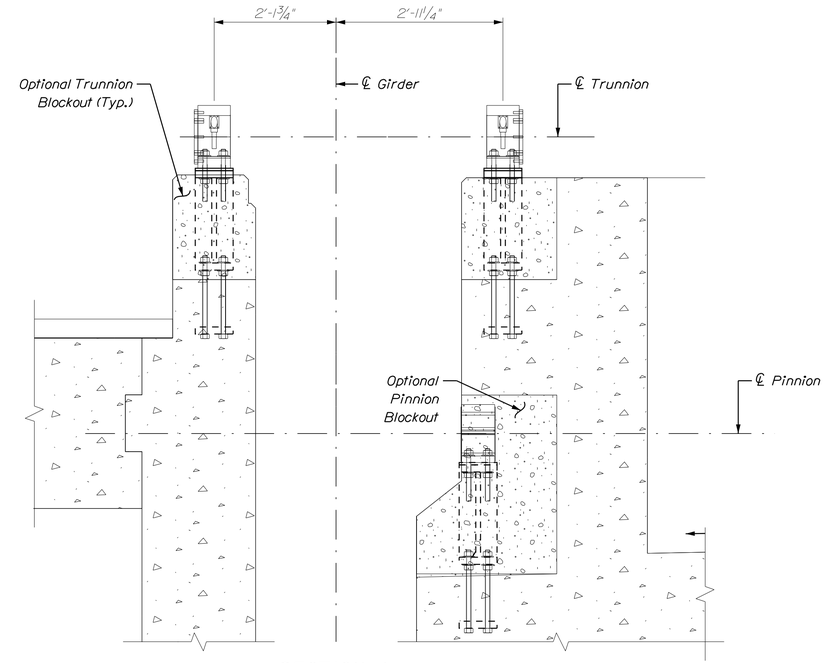

SECTION A

1' 6" 0 1' 2'
3/4" = 1'-0"

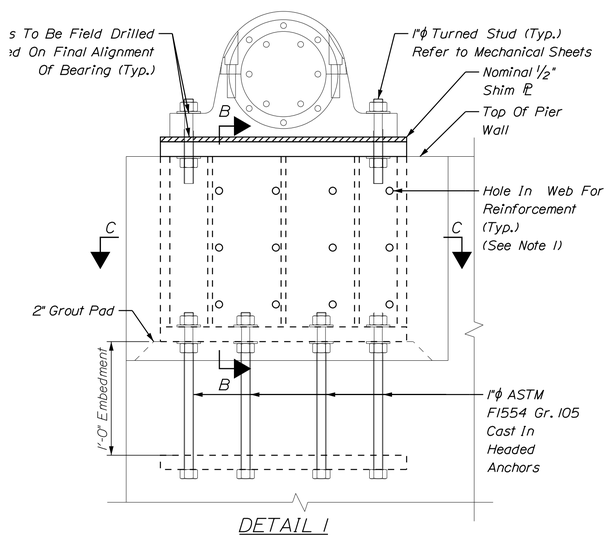

DETAIL 1

1' 9" 6" 3" 0 1'
1 1/2" = 1'-0"

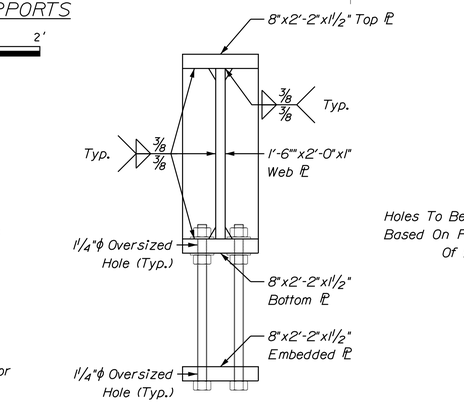

SECTION B

(Concrete and Bearing Not Shown For Clarity)

1' 9" 6" 3" 0 1'
1 1/2" = 1'-0"

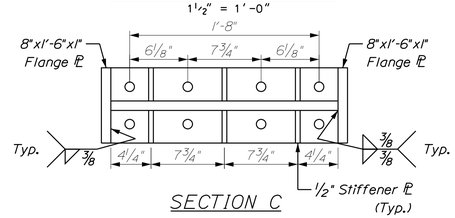

SECTION C

(Concrete Not Shown For Clarity)

1' 9" 6" 3" 0 1'
1 1/2" = 1'-0"

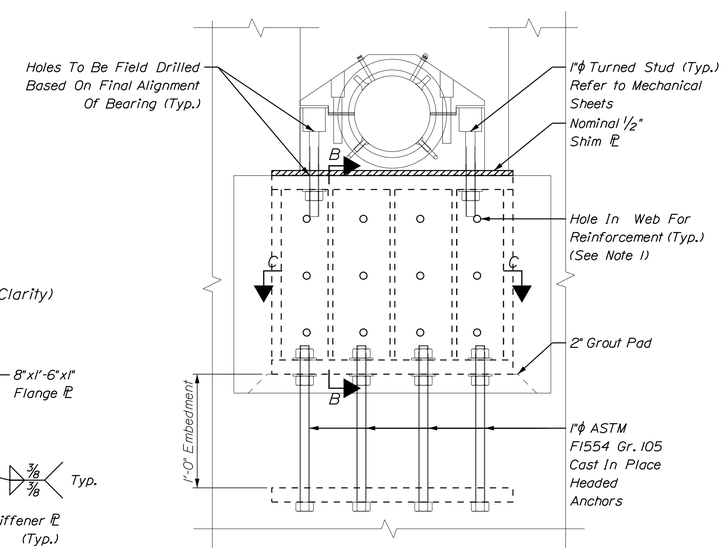

DETAIL 2

1' 9" 6" 3" 0 1'
1 1/2" = 1'-0"

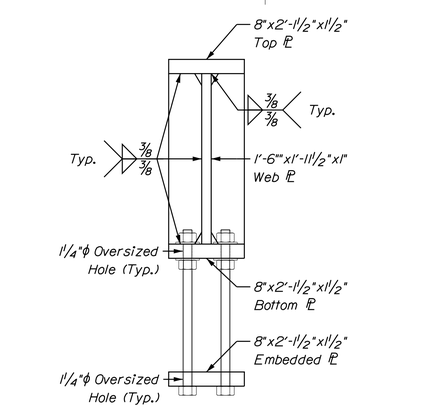

SECTION B

(Concrete and Bearing Not Shown For Clarity)

1' 9" 6" 3" 0 1'
1 1/2" = 1'-0"

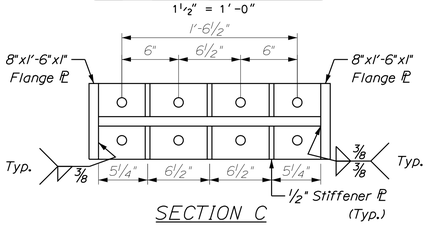

SECTION C

(Concrete Not Shown For Clarity)

1' 9" 6" 3" 0 1'
1 1/2" = 1'-0"

NOTES:

1. Holes For Reinforcement Shall Be 1/8" Greater Than The Bar Diameter. For Reinforcement Details, See Sheet Nos. 50-55.

STATE OF MAINE
DEPARTMENT OF TRANSPORTATION

APPROVED | DATE
COMMISSIONER:
CHIEF ENGINEER:

PROJECT INFORMATION		
PROGRAM	BRIDGE	
PROJECT MANAGER	STEPHEN BODGE	SIGNATURE
DESIGNER	HARDESTY & HANOVER	13196
CONSULTANT	HARDESTY & HANOVER	P.E. NUMBER
PROJECT RESIDENT		
CONTRACTOR		DATE
PROJECT COMPLETION DATE		

SOUTH BRISTOL
GUT BRIDGE

TRUNNION AND PINNION SUPPORTS

SHEET NUMBER
79
OF 141

Filename: ...\079_trunnion_pinnion_supports.dgn Division: BRIDGE Username: common Date:1/29/2014

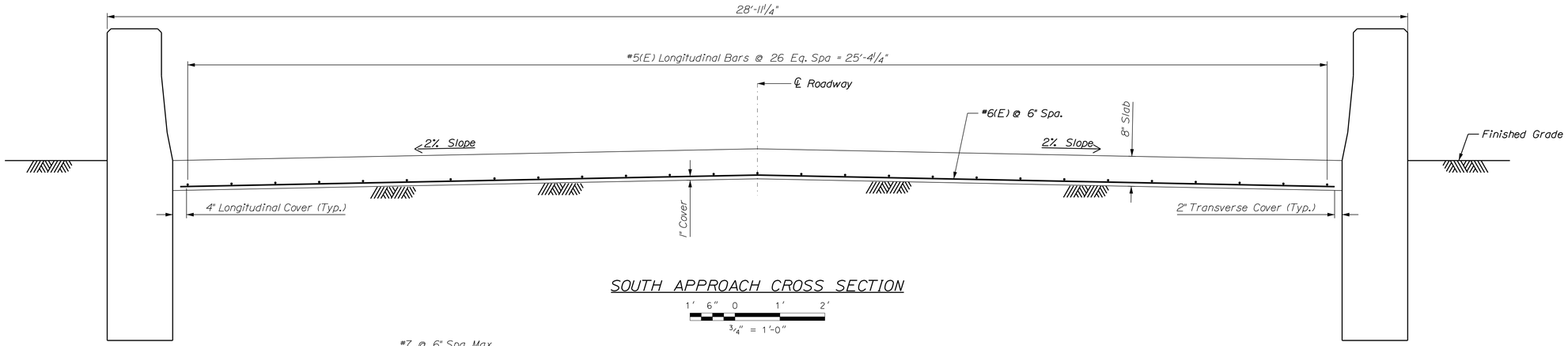

SOUTH APPROACH CROSS SECTION

1' 6" 0 1' 2'
3/4" = 1'-0"

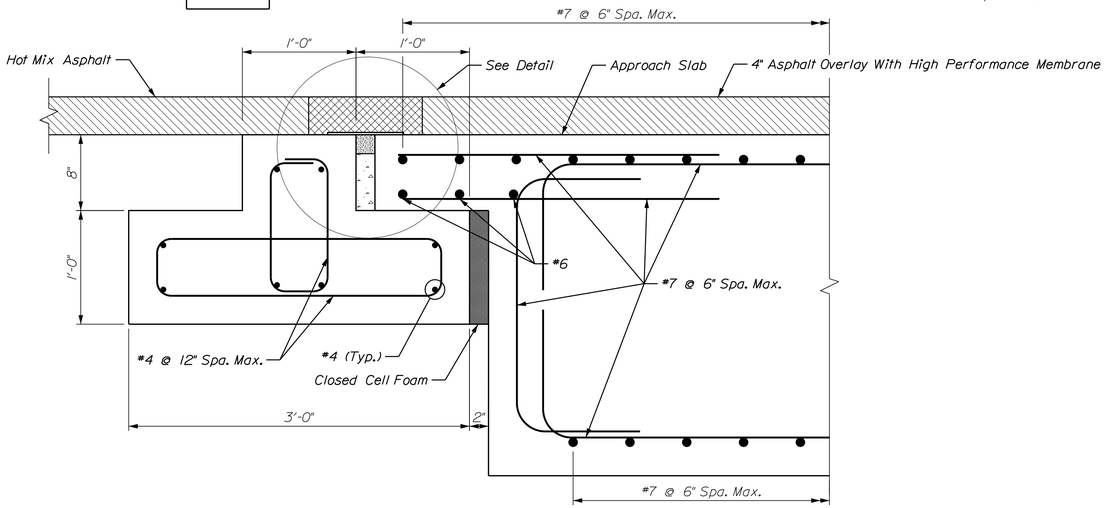

NORTH APPROACH SLEEPER SLAB DETAIL

0 3" 6" 9" 12"
1 1/2" = 1'-0"

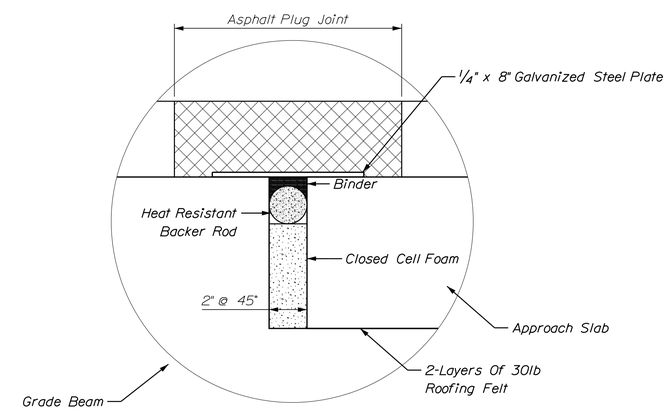

DETAIL

0 3" 6"
3" = 1'-0"

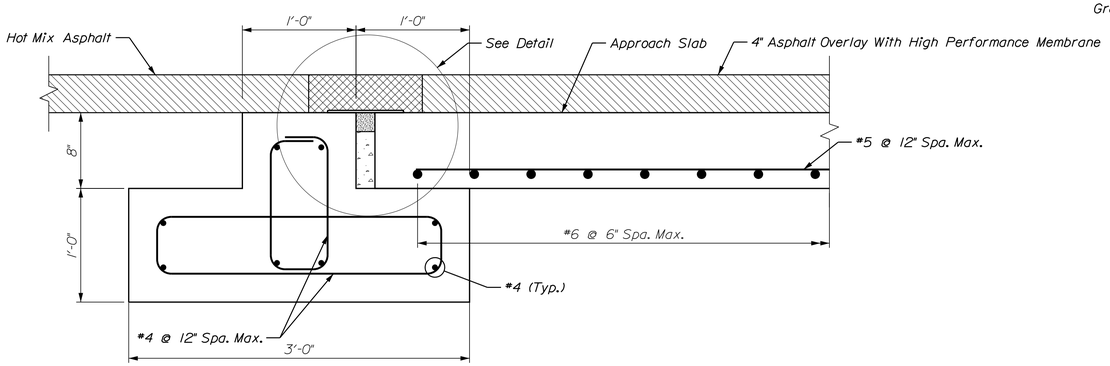

SOUTH APPROACH SLEEPER SLAB DETAIL

0 3" 6" 9" 12"
1 1/2" = 1'-0"

Notes

1. For Limits of Approach Spans, See Sheet No. 32.

STATE OF MAINE
DEPARTMENT OF TRANSPORTATION

APPROVED — DATE

COMMISSIONER:

CHIEF ENGINEER:

PROJECT INFORMATION

PROGRAM	BRIDGE
PROJECT MANAGER	STEPHEN BODGE
DESIGNER	HARDESTY & HANOVER
CONSULTANT	HARDESTY & HANOVER
PROJECT RESIDENT	
CONTRACTOR	
PROJECT COMPLETION DATE	

SIGNATURE

13196 P.E. NUMBER

DATE

SOUTH BRISTOL
GUT BRIDGE

APPROACH SPANS
DECK REINFORCEMENT
PLAN AND SECTIONS

SHEET NUMBER

80

OF 141

Filename: ...\10_Str\080_approach_slab.dgn Division: BRIDGE Username: common Date:1/29/2014

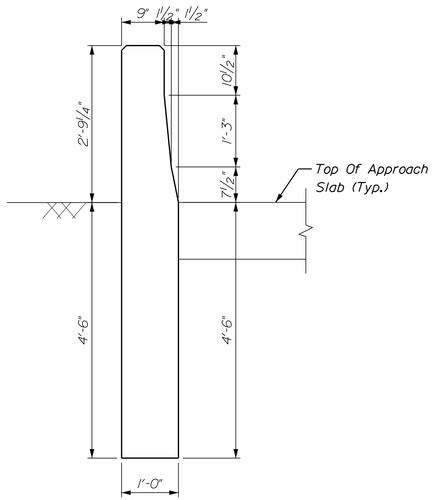

SECTION A-A

1' 6" 0 1'

SCALE: ¾" = 1'-0"

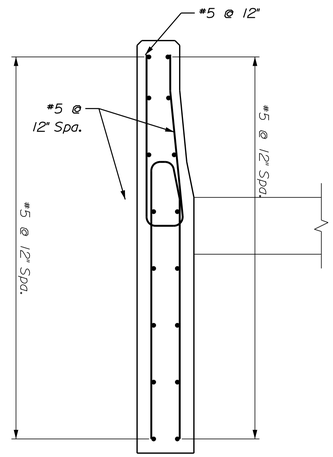

SECTION A-A

1' 6" 0 1'

SCALE: ¾" = 1'-0"

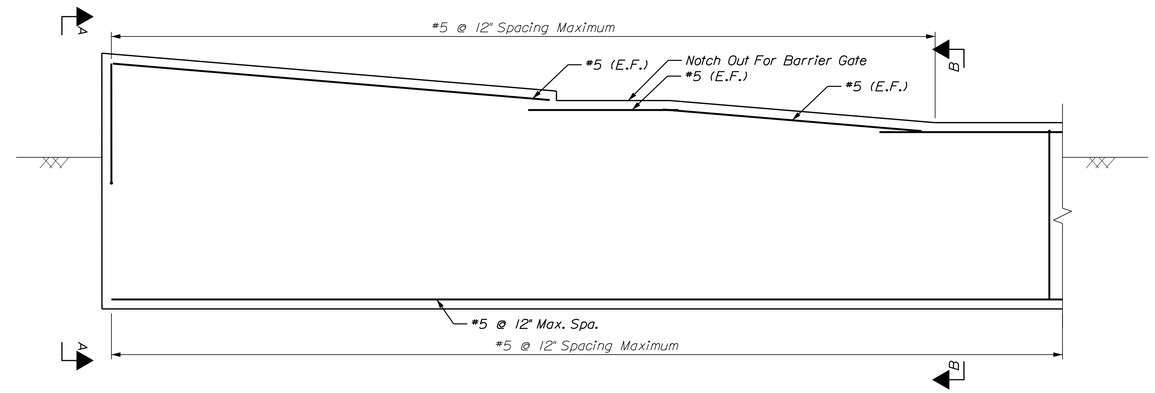

ELEVATION

2' 1' 0 2'

SCALE: ½" = 1'-0"

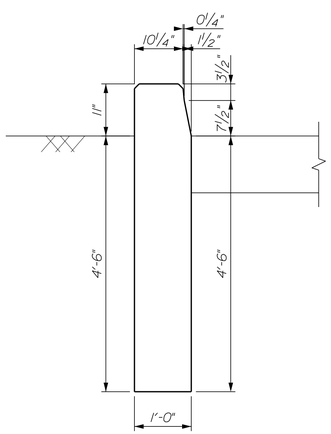

SECTION B-B

1' 6" 0 1'

SCALE: ¾" = 1'-0"

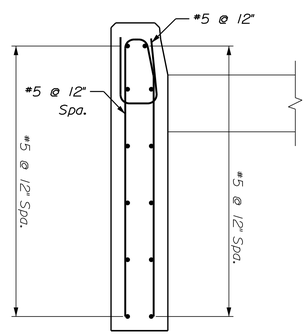

SECTION B-B

1' 6" 0 1'

SCALE: ¾" = 1'-0"

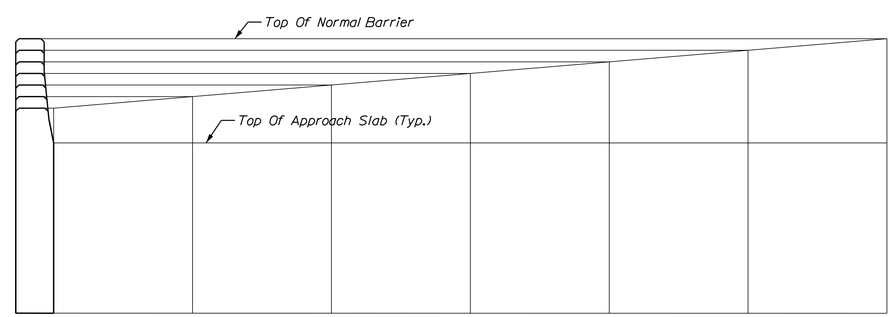

CONCRETE BARRIER TERMINAL DETAIL

2' 1' 0 2'

SCALE: ½" = 1'-0"

STATE OF MAINE
DEPARTMENT OF TRANSPORTATION

APPROVED | DATE

COMMISSIONER:

CHIEF ENGINEER:

SIGNATURE

13196
P.E. NUMBER

DATE

PROJECT INFORMATION

PROGRAM	BRIDGE
PROJECT MANAGER	STEPHEN BODGE
DESIGNER	HARDESTY & HANOVER
CONSULTANT	HARDESTY & HANOVER
PROJECT RESIDENT	
CONTRACTOR	
PROJECT COMPLETION DATE	

SOUTH BRISTOL
GUT BRIDGE

SOUTH APPROACH BARRIER DETAILS

SHEET NUMBER

81

OF 141

Filename: ...\081_south_approach_barrier.dgn Division: BRIDGE Username: common Date:1/29/2014

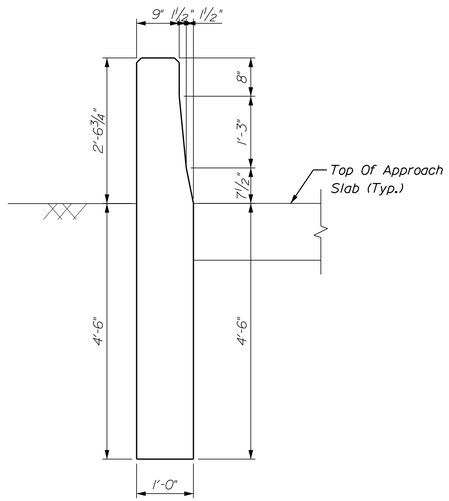

SECTION A-A

1' 6" 0 1'

SCALE: 3/4" = 1'-0"

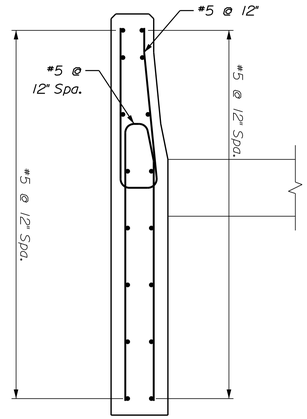

SECTION A-A

1' 6" 0 1'

SCALE: 3/4" = 1'-0"

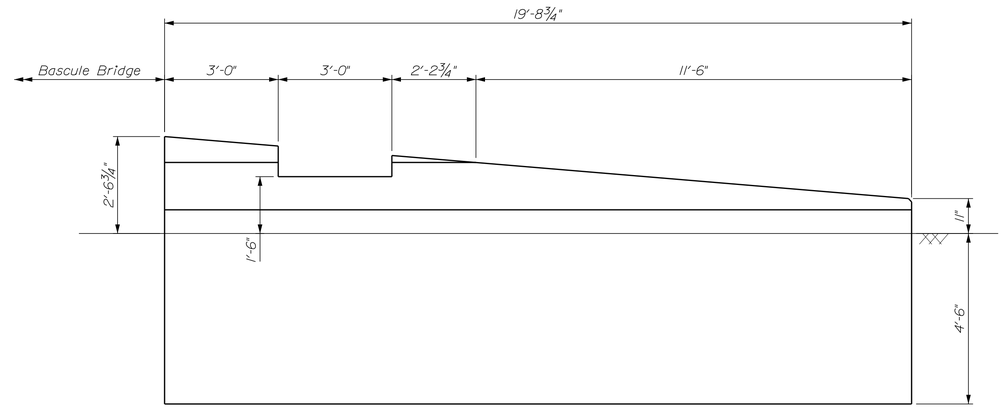

ELEVATION

2' 1' 0 2'

SCALE: 1/2" = 1'-0"

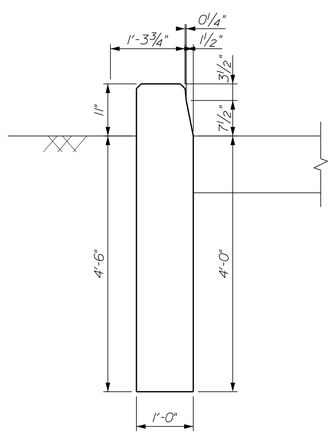

SECTION B-B

1' 6" 0 1'

SCALE: 3/4" = 1'-0"

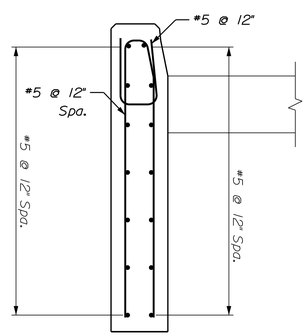

SECTION B-B

1' 6" 0 1'

SCALE: 3/4" = 1'-0"

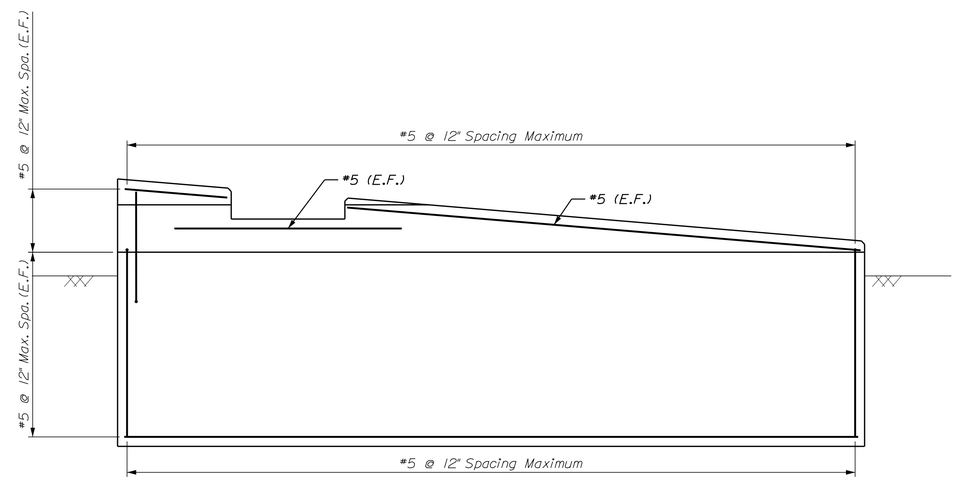

REINFORCEMENT ELEVATION

2' 1' 0 2'

SCALE: 1/2" = 1'-0"

STATE OF MAINE
DEPARTMENT OF TRANSPORTATION

APPROVED | DATE

COMMISSIONER:

CHIEF ENGINEER:

PROJECT INFORMATION		
PROGRAM	BRIDGE	
PROJECT MANAGER	STEPHEN BODGE	SIGNATURE
DESIGNER	HARDESTY & HANOVER	13196
CONSULTANT	HARDESTY & HANOVER	P.E. NUMBER
PROJECT RESIDENT		
CONTRACTOR		DATE
PROJECT COMPLETION DATE		

SOUTH BRISTOL
GUT BRIDGE

NORTH APPROACH BARRIER DETAILS

SHEET NUMBER

82

OF 141

Filename: ...\082_north_approach_barrier.dgn Division: BRIDGE Username: common Date:1/29/2014

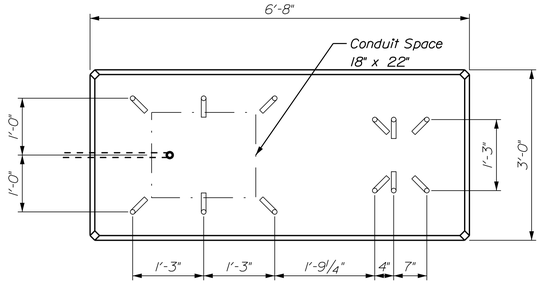

BARRIER GATE PLAN

1' 6" 0 1' 2'
3/4" = 1'-0"

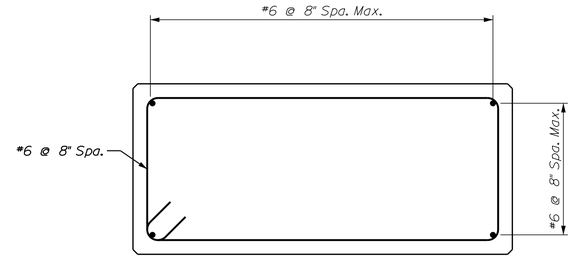

BARRIER GATE REINFORCEMENT PLAN

1' 6" 0 1' 2'
3/4" = 1'-0"

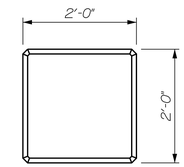

PEDESTRIAN GATE PLAN

1' 6" 0 1' 2'
3/4" = 1'-0"

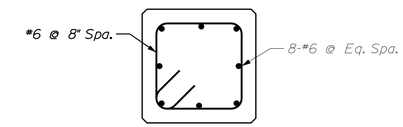

PEDESTRIAN GATE REINFORCEMENT PLAN

1' 6" 0 1' 2'
3/4" = 1'-0"

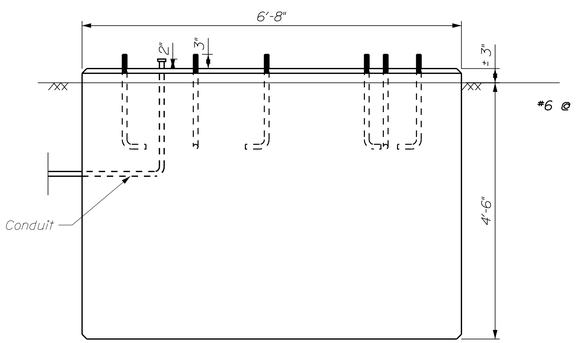

BARRIER GATE ELEVATION

1' 6" 0 1' 2'
3/4" = 1'-0"

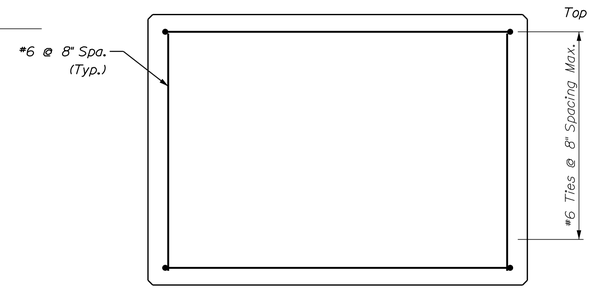

BARRIER GATE REINFORCEMENT ELEVATION

1' 6" 0 1' 2'
3/4" = 1'-0"

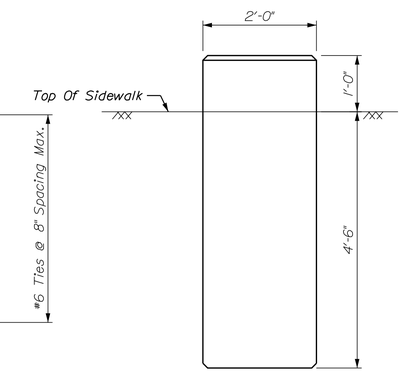

PEDESTRIAN GATE ELEVATION

1' 6" 0 1' 2'
3/4" = 1'-0"

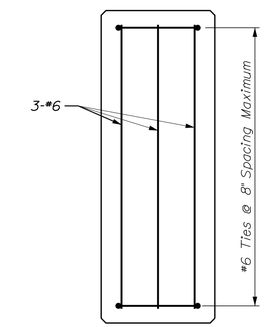

PEDESTRIAN GATE REINFORCEMENT ELEVATION

1' 6" 0 1' 2'
3/4" = 1'-0"

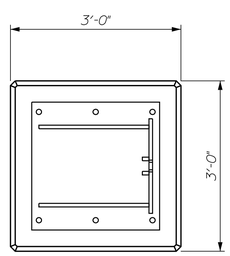

BARRIER GATE RECEIVER PLAN

1' 6" 0 1' 2'
3/4" = 1'-0"

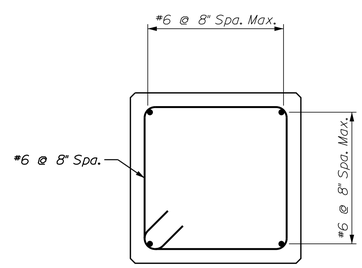

BARRIER GATE RECEIVER REINFORCEMENT PLAN

1' 6" 0 1' 2'
3/4" = 1'-0"

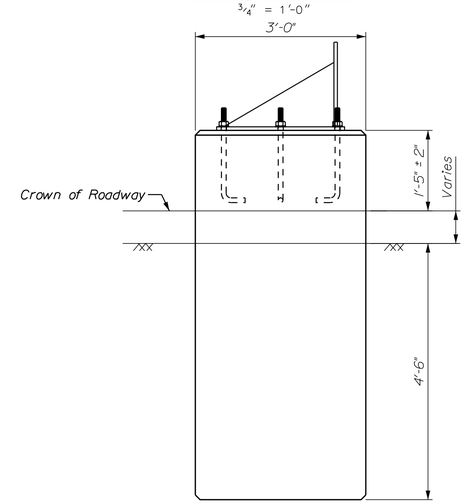

BARRIER GATE RECEIVER ELEVATION

1' 6" 0 1' 2'
3/4" = 1'-0"

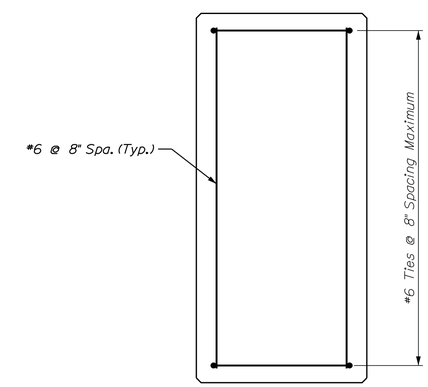

BARRIER GATE RECEIVER REINFORCEMENT ELEVATION

1' 6" 0 1' 2'
3/4" = 1'-0"

STATE OF MAINE
DEPARTMENT OF TRANSPORTATION

APPROVED | DATE

COMMISSIONER:

CHIEF ENGINEER:

SIGNATURE

13196
P.E. NUMBER

DATE

PROJECT INFORMATION

PROGRAM	BRIDGE
PROJECT MANAGER	STEPHEN BODGE
DESIGNER	HARDESTY & HANOVER
CONSULTANT	HARDESTY & HANOVER
PROJECT RESIDENT	
CONTRACTOR	
PROJECT COMPLETION DATE	

SOUTH BRISTOL
GUT BRIDGE

BARRIER GATE FOUNDATION DETAILS

SHEET NUMBER

83

OF 141

Filename: ...\083_barrier_gate_foundation.dgn Division: BRIDGE Username: common Date:1/29/2014

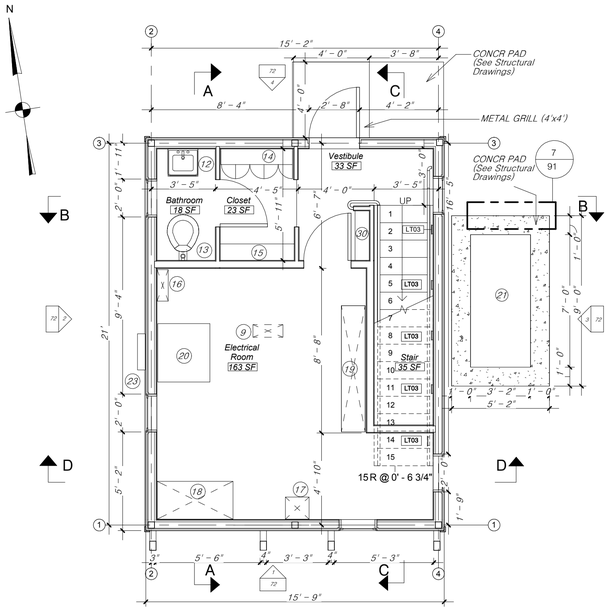

FIRST FLOOR

1/4" = 1'-0"

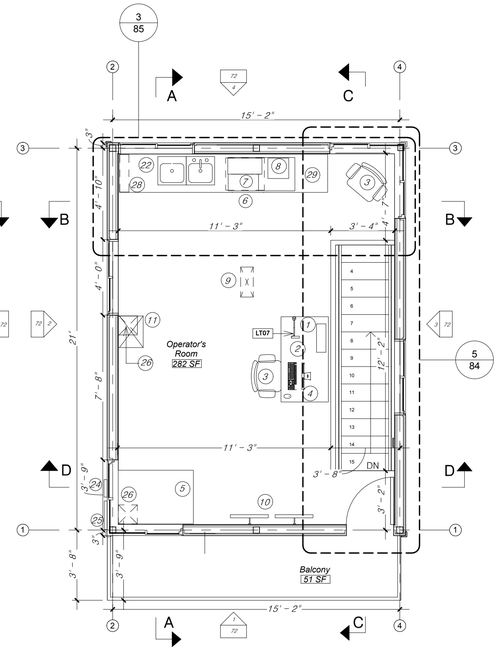

SECOND FLOOR

1/4" = 1'-0"

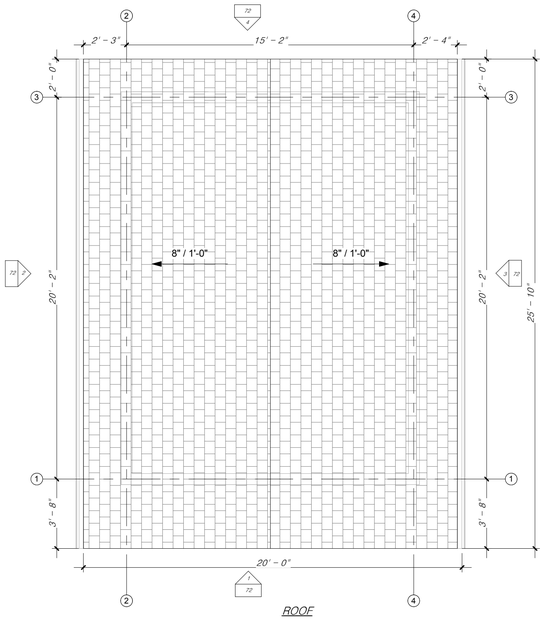

ROOF

1/4" = 1'-0"

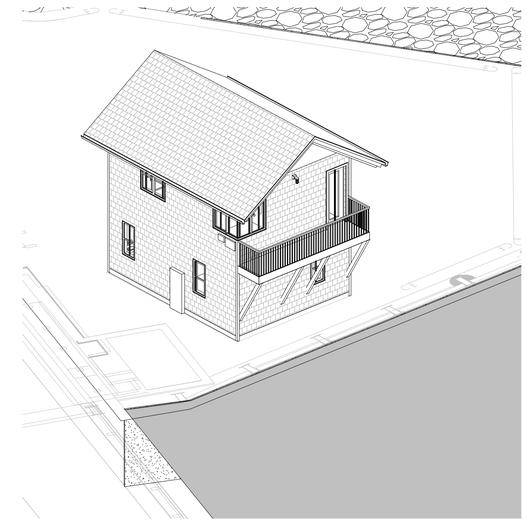

AXONOMETRIC

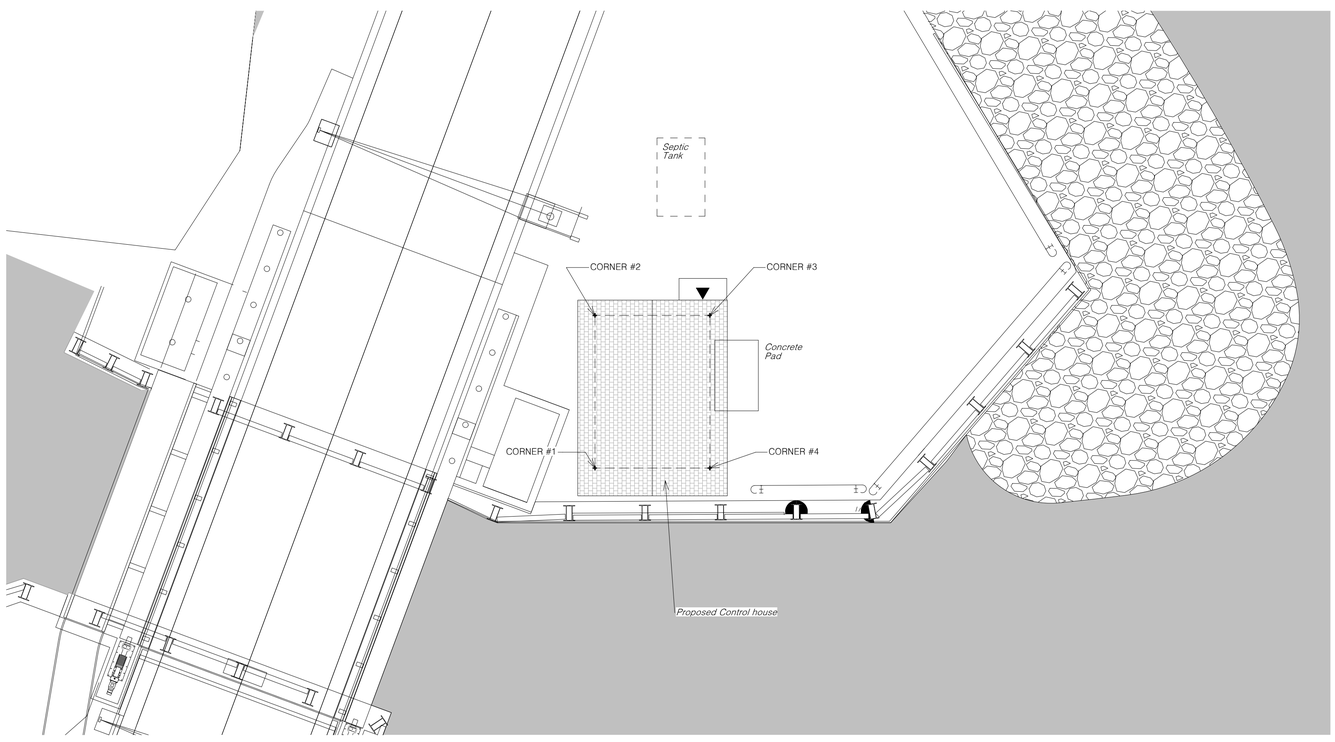

SITE

1" = 10'-0"

ROOM SCHEDULE

ROOM	AREA	FLOOR
FIRST FLOOR		
Bathroom	18 SF	FIRST FLOOR
Closet	23 SF	FIRST FLOOR
Vestibule	33 SF	FIRST FLOOR
Stair	35 SF	FIRST FLOOR
Electrical Room	163 SF	FIRST FLOOR
SECOND FLOOR		
Balcony	51 SF	SECOND FLOOR
Operator's Room	282 SF	SECOND FLOOR

LIGTHING SPECIFICATIONS

LT01 Suspended direct/indirect 12' linear fluorescent pendant

LT02 Surface mounted 5.3'square LED fixture with polished pressed glass shade suitable for wet locations

LT03 Wall recessed LED steplight with rectangular aperture

LT04 Ceiling mounted nominal 4' linear fluorescent strip with white acrylic lens

LT05 Wall mounted nominal 2' linear fluorescent strip with white acrylic lens

LT06 Wall mounted cast bronze caged sconce rated for maritime exterior conditions

LT07 Table mounted LED task light with double articulated arm and weighted base

EQUIPMENT SCHEDULE

1. RADIO AND TEL. COMM. EQUIP.
2. 30"X54" DESK
3. DESK CHAIRS-2 REQ'D
4. P.C./LAPTOP COMPUTER
5. CONTROL DESK

KITCHEN APPLIANCES:

6. REFRIGERATOR (21"W 18"D 30"H) Fihish: MTL-01
7. MICROWAVE (21"W 16"D 12"H) Finish: MTL-01
8. WATER COOLER (13"D 13"W x 18.5"H) Finish: MTL-01

9. CEILING MOUNTED UNIT HEATER (TBD MEP)
10. CCTV - MONITORS - 2 REQ'D
11. CCTV CABINET
12. LAVATORY (SINK)
13. MARINE TYPE TOILET
14. COAT CLOSET
15. BENCH
16. TRANSFORMER LIGHTING PANEL/ LIGHTING PANEL
17. AUTOMATIC TRANSFER SWITCH
18. NORTH CONTROL CABINET
19. MOTOR CONTROL CENTER
20. DYNAMIC BRAKING RESISTORS
21. STANDBY GENERATOR
22. KITCHENETTE UNIT
23. JUNCTION BOX
24. PHOTOELECTRIC CELL
25. AIR HORN
26. CHASE THROUGH CEILING 12"X12"
27. WIREWAY 12"X12"
28. SHELF
29. EATING TABLE
30. CLOSET/SHAFT
31. KITCHENETTE CABINET
32. SINK
33. COUNTERTOPS WITH 4" BACKSPLASH

HORIZONTAL ALIGNMENT DATA REPORT

Point Type	Station / Distance	Direction	Northing	Easting
POB-CORNER #1	0+00.00 21.193	N 7° 40' 16.25" W	375552.978	3113213.074
PI-CORNER #2	0+21.19 16.193	N 82° 19' 43.75" E	375573.981	3113210.245
PI-CORNER #3	0+37.39 21.193	S 7° 40' 16.25" E	375576.143	3113226.293
PI-CORNER #4	0+58.58 16.193	S 82° 19' 43.75" W	375555.14	3113229.122
POE	0+74.77		375552.978	3113213.074

STATE OF MAINE
DEPARTMENT OF TRANSPORTATION

APROVED	DATE
COMMISSIONER:	
CHIEF ENGINEER:	

	SIGNATURE
	P.E.NUMBER
	DATE

PROJECT INFORMATION

PROGRAM	Bridge
PROJECT MANAGER	Stephen Bodge
DESIGNER	I3D, Inc.
CONSULTANT	I3D, Inc.
PROJECT RESIDENT	
CONTRACTOR	
PROJECT COMPLETION DATE	

SOUTH BRISTOL
GUT BRIDGE

CONTROL HOUSE
PLANS

SHEET NUMBER

84

OF 141

Filename $file$ Division: $wkgroup$ Username: $user$ Date: $date$

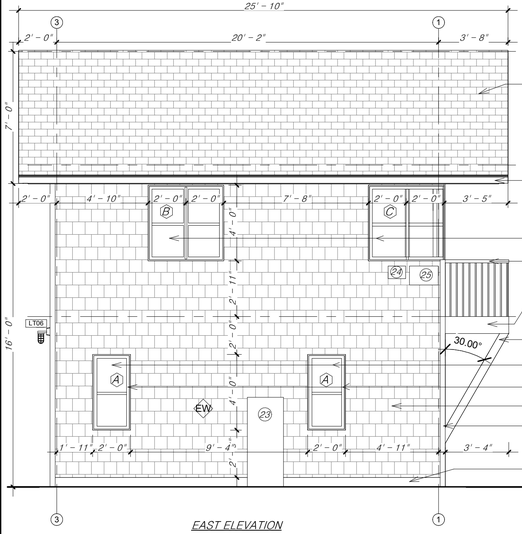

EAST ELEVATION

1/4" = 1'-0"

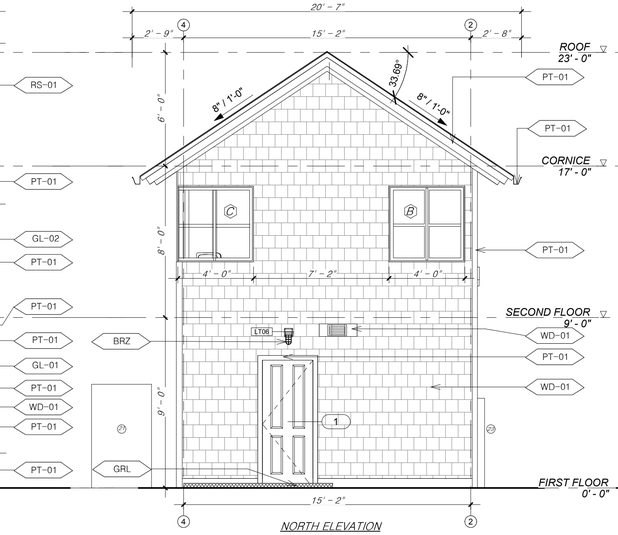

NORTH ELEVATION

1/4" = 1'-0"

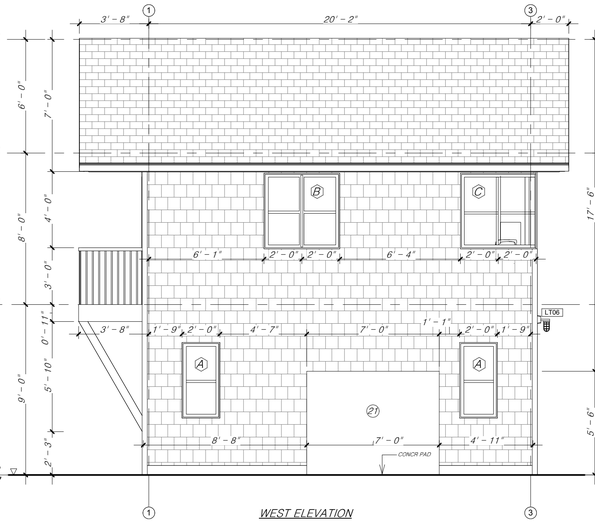

WEST ELEVATION

1/4" = 1'-0"

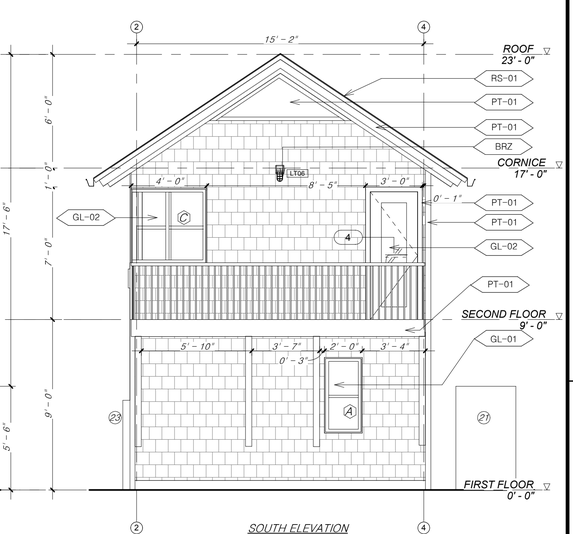

SOUTH ELEVATION

1/4" = 1'-0"

WINDOWS SCHEDULE: TYPES AND DIMENSIONS

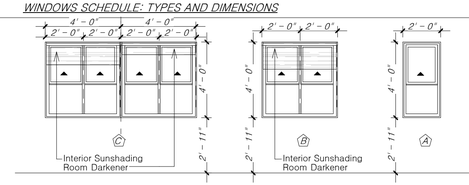

DOORS SCHEDULE: TYPES AND DIMENSIONS

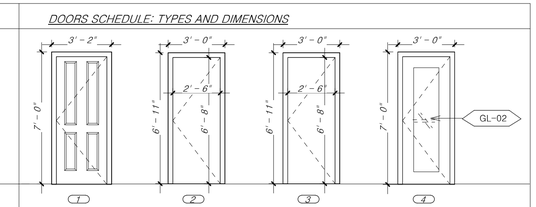

WINDOWS TYPES	DOOR TYPES	WALL TYPES
A — WINDOW TYPE A (1 PANE) / DOUBLE HUNG	1 — ADR 01: ACCESS DOOR	EW — EXTERIOR WALL
B — WINDOW TYPE B (2 PANE) / DOUBLE HUNG	2 — AF 01: TOILET DOOR	P1 — 1HR PARTITION WALL
C — WINDOW TYPE C (CORNER WINDOW) (4 PANE) / DOUBLE HUNG	3 — AF 02: ELECTRICAL ROOM DOOR	P2 — 2HR PARTITION WALL
	4 — AF 03: BALCONY DOOR	

MATERIAL CODES

CODE	DESCRIPTION
BRZ	Natural Cast Bronze
CONCR-01	Concrete in Foundation
CONCR-02	Steel Trowel Finish + Seal
GL-01	Glass Frosted
GL-02	Clear Glass
GRL	Metal Foot Grill
MTL-01	Stainless Steel
PL-01	Plastic Laminate in Black Color
PT-01	Exterior White Paint

MATERIAL CODES

CODE	DESCRIPTION
PT-02	Interior White Paint
PT-03	Interior White Paint in Bathroom
PT-04	Interior White Paint in Cabinet
RS-01	Charcoal Color Architectural Shingles
SH-01	Sheetrock + PT-02
WD-01	Cedar Shingles In Bleaching Oil
WD-02	Door and Window Frame in White Oak
WD-03	Wood in Interior Handrail in White Oak
WDF-01	Floor Wood, Wood Stair in White Oak

BUILDING ENERGY CODES PROGRAM
2009 IECC IN MAINE

R=49	CEILING
R=20	WALL
R=30	FLOORS
R=15	FOUNDATIONS
U=0.35	WINDOWS, DOOR

EQUIPMENT SCHEDULE

1. RADIO AND TEL. COMM. EQUIP.
2. 30"X54" DESK
3. DESK CHAIRS-2 REQ'D
4. P.C./LAPTOP COMPUTER
5. CONTROL DESK
6. REFRIGERATOR
7. MICROWAVE
8. CCTV – MONITORS – 2 REQ'D
9. CEILING MOUNTED UNIT HEATER (TBD MEP)
10. WATER COOLER
11. CCTV CABINET
12. LAVATORY (SINK)
13. MARINE TYPE TOILET
14. COAT CLOSET
15. BENCH
16. TRANSFORMER LIGHTING PANEL/ LIGHTING PANEL
17. AUTOMATIC TRANSFER SWITCH
18. NORTH CONTROL CABINET
19. MOTOR CONTROL CENTER
20. DYNAMIC BRAKING RESISTORS
21. STANDBY GENERATOR
22. KITCHENETTE UNIT
23. JUNCTION BOX
24. PHOTOELECTRIC CELL
25. AIR HORN
26. CHASE THROUGH CEILING 12"X12"
27. WIREWAY 12"X12"
28. SHELF
29. EATING TABLE
30. CLOSET/SHAFT

LIGTHING SPECIFICATIONS

LT01 Suspended direct/indirect 12' linear fluorescent pendant

LT02 Surface mounted 5.3"square LED fixture with polished pressed glass shade suitable for wet locations

LT03 Wall recessed LED steplight with rectangular aperture

LT04 Ceiling mounted nominal 4' linear fluorescent strip with white acrylic lens

LT05 Wall mounted nominal 2' linear fluorescent strip with white acrylic lens

LT06 Wall mounted cast bronze caged sconce rated for maritime exterior conditions

LT07 Table mounted LED task light with double articulated arm and weighted base

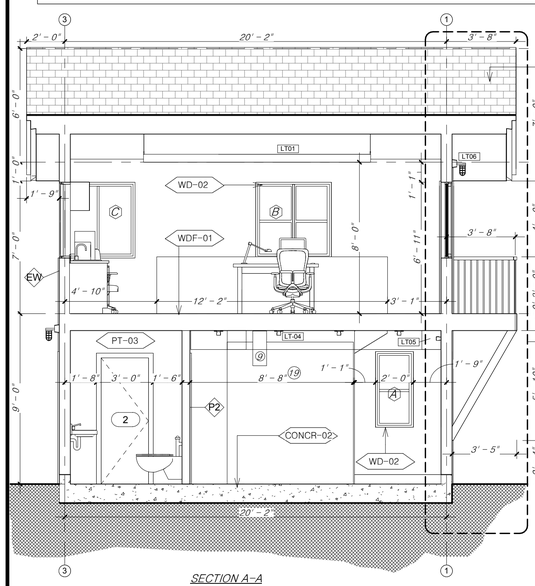

SECTION A-A

1/4" = 1'-0"

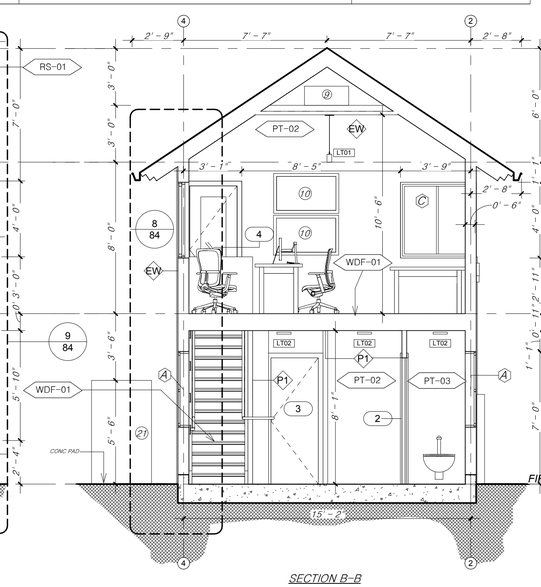

SECTION B-B

1/4" = 1'-0"

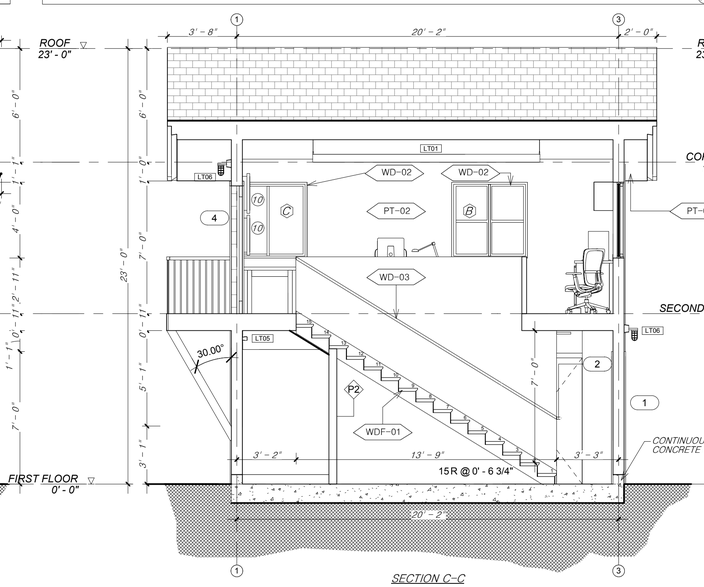

SECTION C-C

1/4" = 1'-0"

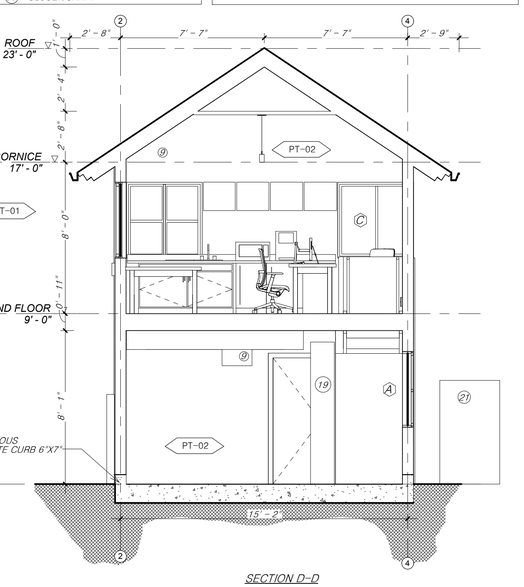

SECTION D-D

1/4" = 1'-0"

STATE OF MAINE
DEPARTMENT OF TRANSPORTATION

APROVED | DATE

COMMISSIONER:

CHIEF ENGINEER:

SIGNATURE

P.E.NUMBER

DATE

PROJECT INFORMATION

PROGRAM	Bridge
PROJECT MANAGER	Stephen Bodge
DESIGNER	I3D, Inc.
CONSULTANT	I3D, Inc.
PROJECT RESIDENT	
CONTRACTOR	
PROJECT COMPLETION DATE	

SOUTH BRISTOL
GUT BRIDGE

CONTROL HOUSE
ELEVATIONS AND SECTIONS

SHEET NUMBER

85

OF 141

Filename $file$ Division: $wkgroup$ Username: $user$ Date: $date$

MATERIAL CODES	
CODE	DESCRIPTION
BRZ	Natural Cast Bronze
CONCR-01	Concrete in Foundation
CONCR-02	Steel Trowel Finish + Seal
GL-01	Glass Frosted
GL-02	Clear Glass
GRL	Metal Foot Grill
MTL-01	Stainless Steel
PL-01	Plastic Laminate in Black Color
PT-01	Exterior White Paint

MATERIAL CODES	
CODE	DESCRIPTION
PT-02	Interior White Paint
PT-03	Interior White Paint in Bathroom
PT-04	Interior White Paint in Cabinet
RS-01	Charcoal Color Architectural Shingles
SH-01	Sheetrock + PT-02
WD-01	Cedar Shingles In Bleaching Oil
WD-02	Door and Window Frame in White Oak
WD-03	Wood in Interior Handrail in White Oak
WDF-01	Floor Wood, Wood Stair in White Oak

LIGTHING SPECIFICATIONS

LT01 Suspended direct/indirect 12' linear fluorescent pendant

LT02 Surface mounted 5.3"square LED fixture with polished pressed glass shade suitable for wet locations

LT03 Wall recessed LED steplight with rectangular aperture

LT04 Ceiling mounted nominal 4' linear fluorescent strip with white acrylic lens

LT05 Wall mounted nominal 2' linear fluorescent strip with white acrylic lens

LT06 Wall mounted cast bronze caged sconce rated for maritime exterior conditions

LT07 Table mounted LED task light with double articulated arm and weighted base

WALL TYPES		WINDOWS TYPES	
EW	EXTERIOR WALL	A	WINDOW TYPE A (1 PANE) / CASSEMENT
P1	1HR PARTITION WALL	B	WINDOW TYPE B (2 PANE) / HORIZONTAL SLIDER
P2	2HR PARTITION WALL	C	WINDOW TYPE C (CORNER WINDOW) (4 PANE) / HORIZONTAL SLIDER

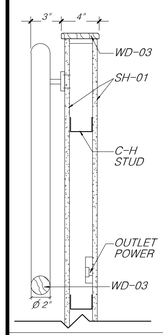

19 STAIR HANDRAIL
1 1/2" = 1'-0"

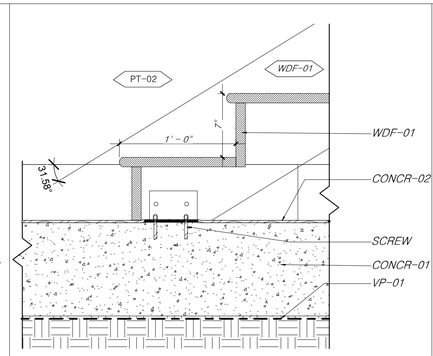

15 STAIR DETAIL A
1 1/2" = 1'-0"

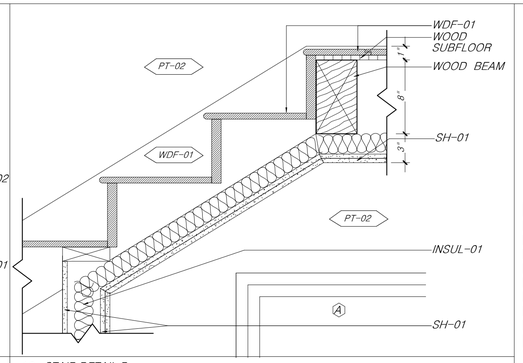

16 STAIR DETAIL B
1 1/2" = 1'-0"

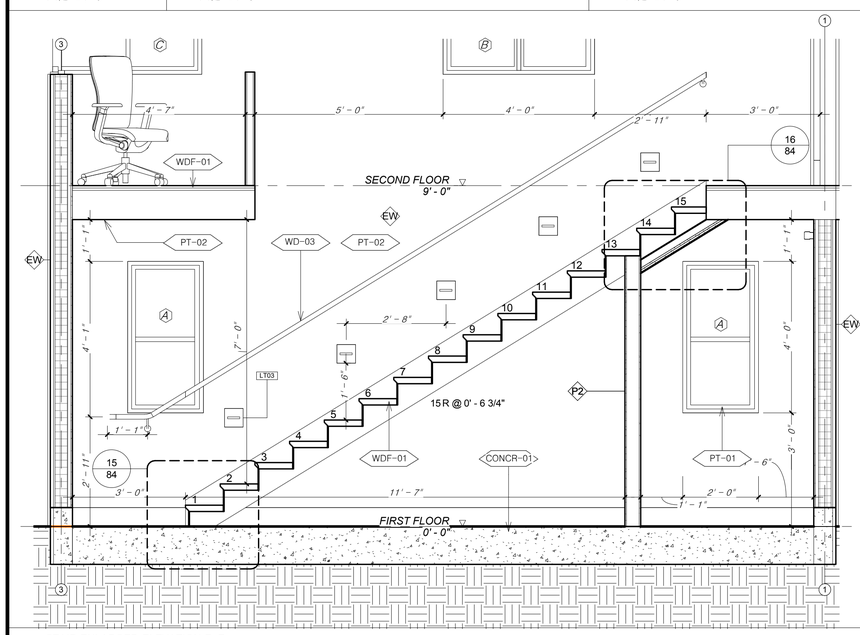

6 STAIR ENLARGED ELEVATION F-F
1/2" = 1'-0"

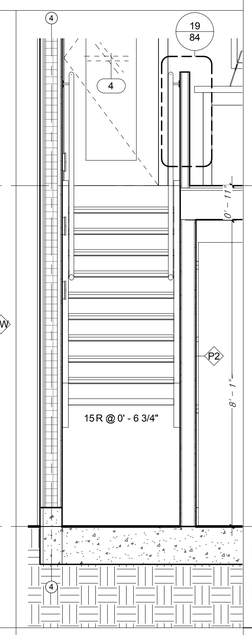

7 SECTION E-E
1/2" = 1'-0"

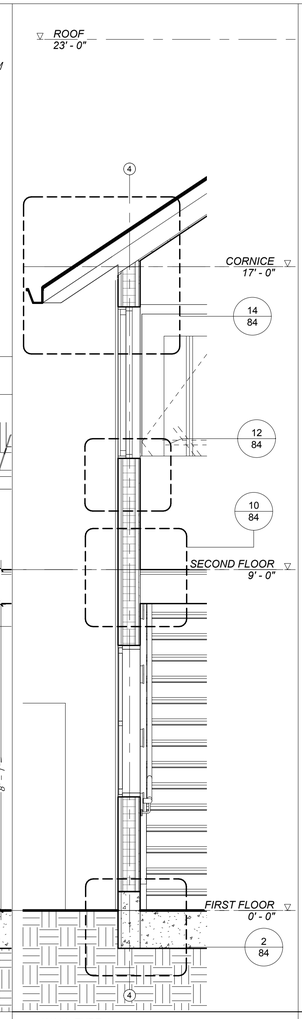

8 WALL TYPE 1
1/2" = 1'-0"

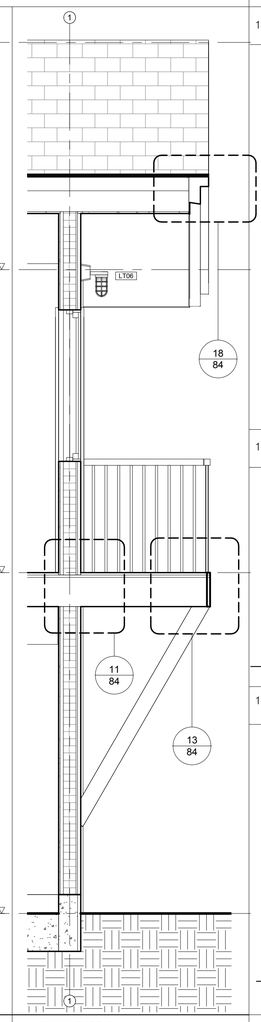

9 WALL TYPE 2
1/2" = 1'-0"

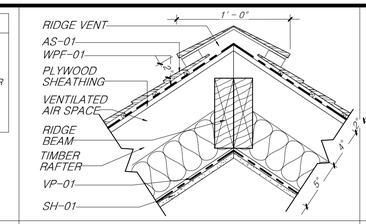

17 ROOF RIDGE DETAIL
1 1/2" = 1'-0"

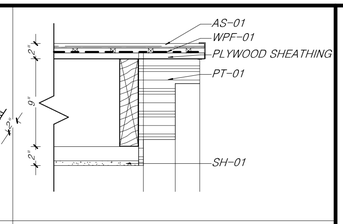

18 ROOF EDGE DETAIL
1 1/2" = 1'-0"

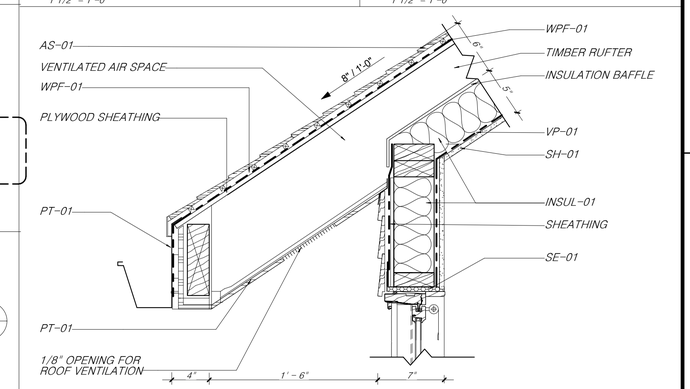

14 ROOF AND WALL DETAIL
1 1/2" = 1'-0"

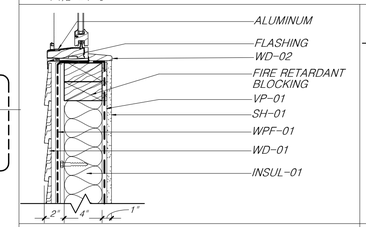

12 SILL DETAIL
1 1/2" = 1'-0"

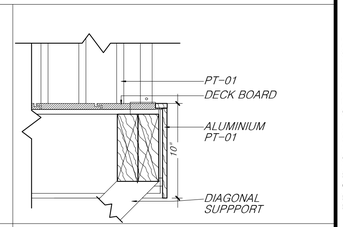

13 BALCONY EDGE DETAIL
1 1/2" = 1'-0"

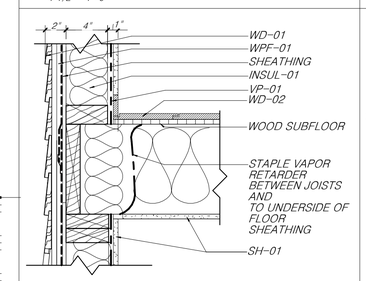

10 WALL AND FLOOR DETAIL
1 1/2" = 1'-0"

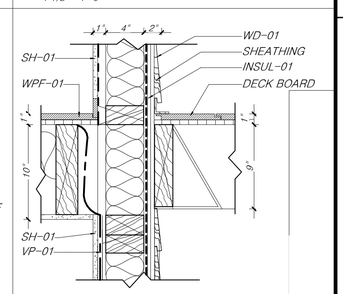

11 WALL/FACADE/BALCONY DETAIL
1 1/2" = 1'-0"

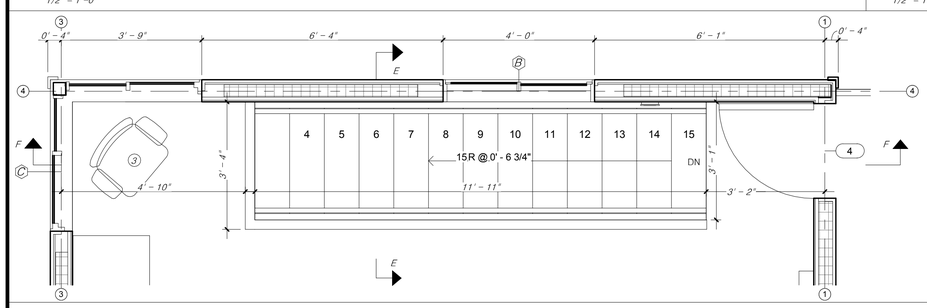

5 STAIR SECOND FLOOR PLAN
1/2" = 1'-0"

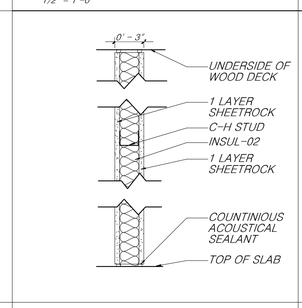

4 1HR PARTITION WALL
1 1/2" = 1'-0"

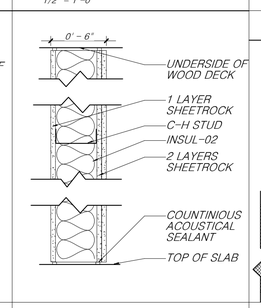

3 2HR PARTITION WALL
1 1/2" = 1'-0"

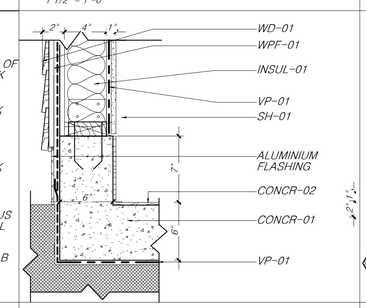

2 FOUNDATION WALL DETAIL
1 1/2" = 1'-0"

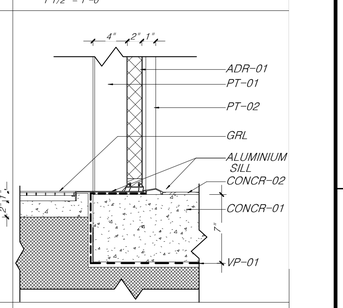

1 METALDOOR ENTRANCE DETAIL
1 1/2" = 1'-0"

STATE OF MAINE
DEPARTMENT OF TRANSPORTATION

	DATE
APROVED	
COMMISSIONER:	
CHIEF ENGINEER:	

	SIGNATURE
	P.E.NUMBER
	DATE

PROJECT INFORMATION

PROGRAM	Bridge
PROJECT MANAGER	Stephen Bodge
DESIGNER	I3D, Inc.
CONSULTANT	I3D, Inc.
PROJECT RESIDENT	
CONTRACTOR	
PROJECT COMPLETION DATE	

SOUTH BRISTOL
GUT BRIDGE
CONTROL HOUSE
DETAILS

SHEET NUMBER
86
OF 141

Filename $file$ Division: $wkgroup$ Username: $user$ Date: $date$

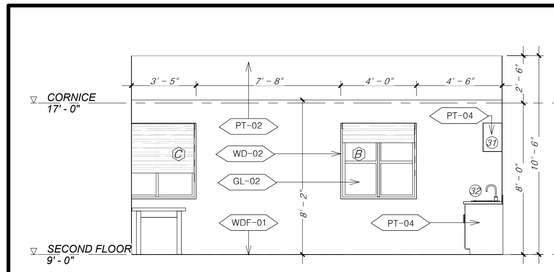

29 OPERATOR'S ROOM WEST ELEVATION
1/4" = 1'-0"

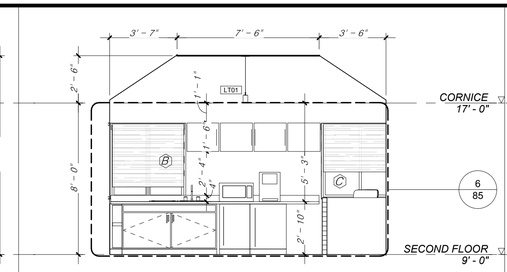

28 OPERATOR'S ROOM NORTH ELEVATION
1/4" = 1'-0"

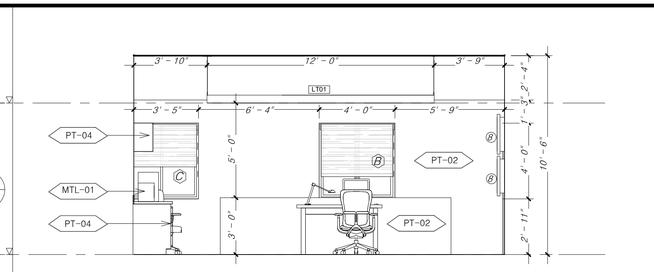

26 OPERATOR'S ROOM EAST ELEVATION
1/4" = 1'-0"

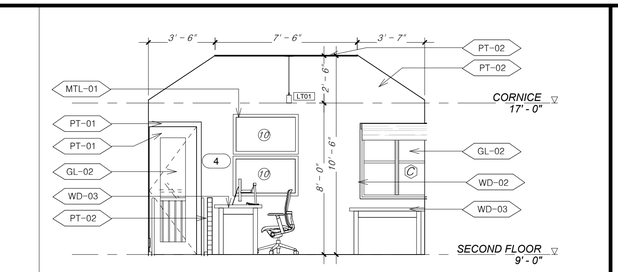

25 OPERATOR'S ROOM SOUTH ELEVATION
1/4" = 1'-0"

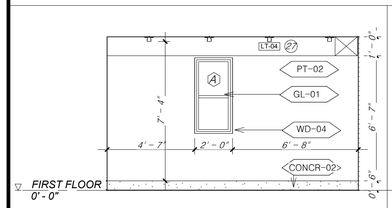

17 ELECTRICAL ROOM EAST ELEVATION
1/4" = 1'-0"

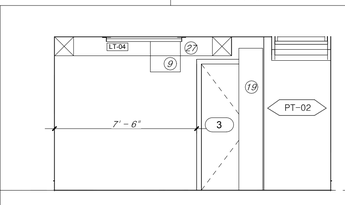

18 ELECTRICAL ROOM NORTH ELEVATION
1/4" = 1'-0"

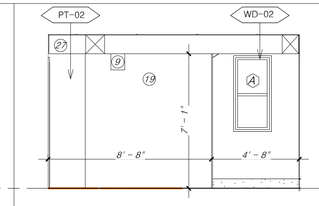

19 ELECTRICAL ROOM WEST ELEVATION
1/4" = 1'-0"

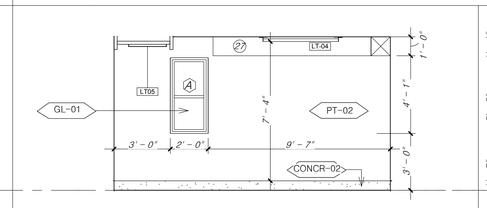

20 EECTRICAL ROOM SOUTH ELEVATION
1/4" = 1'-0"

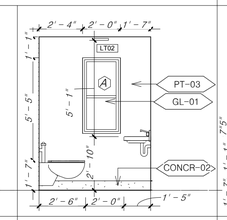

21 BATHROOM E. ELEV.
1/4" = 1'-0"

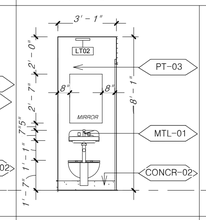

22 BATH. NORTH ELV.
1/4" = 1'-0"

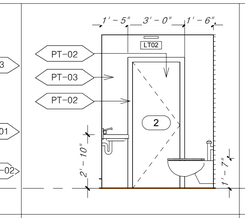

23 BATHROOM W. ELEV.
1/4" = 1'-0"

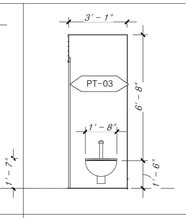

24 BATHROOM S. ELEV.
1/4" = 1'-0"

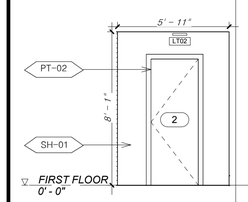

16 CLOSET WEST ELEVATION
1/4" = 1'-0"

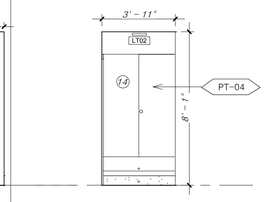

15 CLOSET NORTH ELEVATION
1/4" = 1'-0"

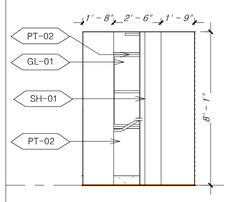

14 CLOSET EAST ELEVATION
1/4" = 1'-0"

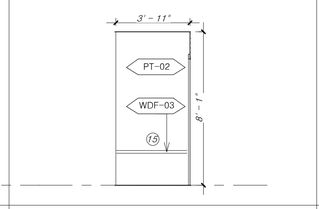

13 CLOSET SOUTH ELEVATION
1/4" = 1'-0"

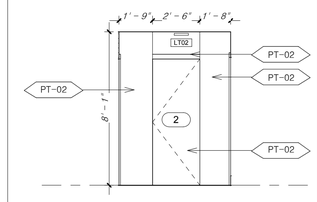

12 VESTIBULE EAST ELEVATION
1/4" = 1'-0"

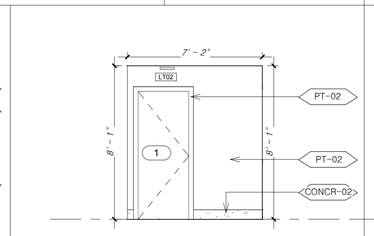

11 VESTIBULE NORTH ELEVATION
1/4" = 1'-0"

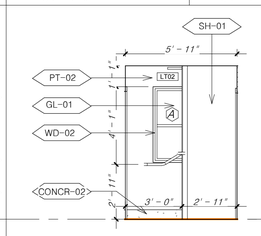

10 VESTIBULE WEST ELEV.
1/4" = 1'-0"

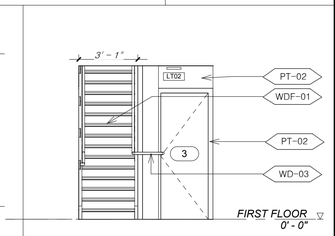

9 VESTIBULE SOUTH ELEVATION
1/4" = 1'-0"

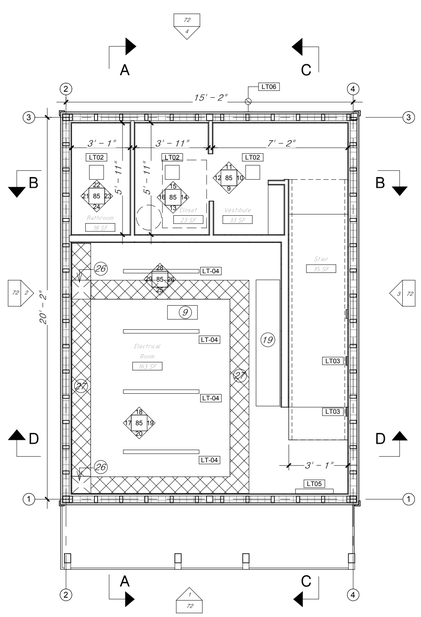

5 RCP FIRST FLOOR
1/4" = 1'-0"

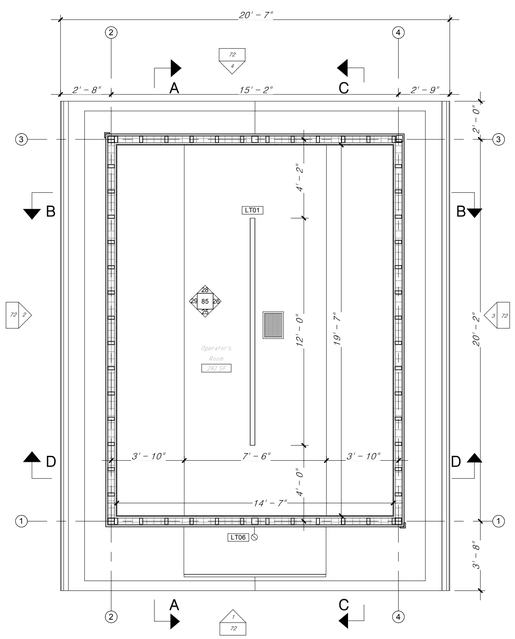

4 RCP SECOND FLOOR
1/4" = 1'-0"

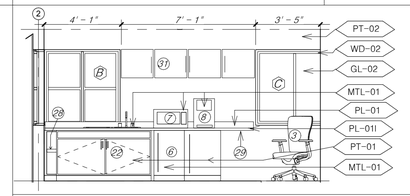

6 KITCHEN ELEVATION
1/4" = 1'-0"

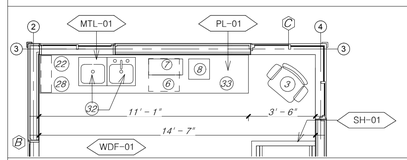

3 KITCHEN ENLARGED PLAN
1/4" = 1'-0"

7 OPERATOR'S ROOM INTERIOR VIEW SOUTH– WEST CORNER

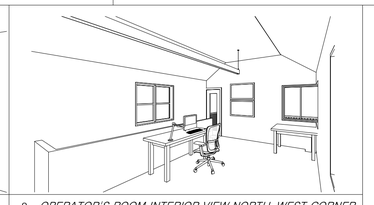

8 OPERATOR'S ROOM INTERIOR VIEW NORTH–WEST CORNER

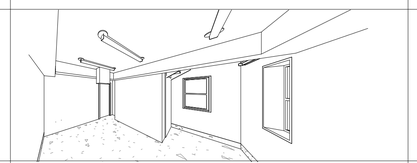

2 ELECTRICAL ROOM INTERIOR VIEW SOUTH WEST VIEW

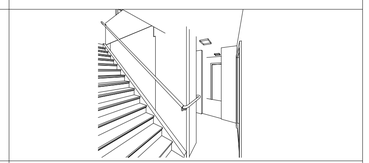

1 VIEW TO THE STAIRS

MATERIAL CODES

CODE	DESCRIPTION
BRZ	Natural Cast Bronze
CONCR-01	Concrete in Foundation
CONCR-02	Steel Trowel Finish + Seal
GL-01	Glass Frosted
GL-02	Clear Glass
GRL	Metal Foot Grill
MTL-01	Stainless Steel
PL-01	Plastic Laminate in Black Color
PT-01	Exterior White Paint

MATERIAL CODES

CODE	DESCRIPTION
PT-02	Interior White Paint
PT-03	Interior White Paint in Bathroom
PT-04	Interior White Paint in Cabinet
RS-01	Charcoal Color Architectural Shingles
SH-01	Sheetrock + PT-02
WD-01	Cedar Shingles In Bleaching Oil
WD-02	Door and Window Frame in White Oak
WD-03	Wood in Interior Handrail in White Oak
WDF-01	Floor Wood, Wood Stair in White Oak

LIGTHING SPECIFICATIONS

LT01 Suspended direct/indirect 12' linear fluorescent pendant

LT02 Surface mounted 5.3'square LED fixture with polished pressed glass shade suitable for wet locations

LT03 Wall recessed LED steplight with rectangular aperture

LT04 Ceiling mounted nominal 4' linear fluorescent strip with white acrylic lens

LT05 Wall mounted nominal 2' linear fluorescent strip with white acrylic lens

LT06 Wall mounted cast bronze caged sconce rated for maritime exterior conditions

LT07 Table mounted LED task light with double articulated arm and weighted base

WINDOWS TYPES

A WINDOW TYPE A

B WINDOW TYPE B

C WINDOW TYPE C

EQUIPMENT SCHEDULE

1. RADIO AND TEL. COMM. EQUIP.
2. 30"X54" DESK
3. DESK CHAIRS–2 REQ'D
4. P.C./LAPTOP COMPUTER
5. CONTROL DESK

KITCHEN APPLIANCES:

6. REFRIGERATOR (21"W 18"D 30"H) Fihish: MTL–01
7. MICROWAVE (21"W 16"D 12"H) Finsh: MTL–01
8. WATER COOLER (13"D 13"W x 18.5"H) Finish: MTL–01

9. CEILING MOUNTED UNIT HEATER (TBD MEP)
10. CCTV – MONITORS – 2 REQ'D
11. CCTV CABINET
12. LAVATORY (SINK)
13. MARINE TYPE TOILET
14. COAT CLOSET
15. BENCH
16. TRANSFORMER LIGHTING PANEL/ LIGHTING PANEL
17. AUTOMATIC TRANSFER SWITCH
18. NORTH CONTROL CABINET
19. MOTOR CONTROL CENTER
20. DYNAMIC BRAKING RESISTORS
21. STANDBY GENERATOR
22. KITCHENETTE UNIT
23. JUNCTION BOX
24. PHOTOELECTRIC CELL
25. AIR HORN
26. CHASE THROUGH CEILING 12"X12"
27. WIREWAY 12"X12"
28. SHELF
29. EATING TABLE
30. CLOSET/SHAFT
31. KITCHENETTE CABINET
32. SINK
33. COUNTERTOPS WITH 4" BACKSPLASH

1' 5' 10' 15' 20'

SCALE BAR 1/4"=1'-0"

STATE OF MAINE
DEPARTMENT OF TRANSPORTATION

APROVED | DATE

COMMISSIONER:

CHIEF ENGINEER:

	SIGNATURE
	P.E.NUMBER
	DATE

PROJECT INFORMATION

PROGRAM	Bridge
PROJECT MANAGER	Stephen Bodge
DESIGNER	I3D, Inc.
CONSULTANT	I3D, Inc.
PROJECT RESIDENT	
CONTRACTOR	
PROJECT COMPLETION DATE	

SOUTH BRISTOL
GUT BRIDGE

CONTROL HOUSE
ENLARGED RCP

SHEET NUMBER

87

OF 141

Date: $date$
Username: $user$
Division: $wkgroup$
Filename $file$

CODES

1. THE INTERNATIONAL CODE COMMITTEE FAMILY OF CODES, 2009, INCLUDING ALL LOCAL AMENDMENTS.
2. AMERICAN FOREST & PAPER ASSOCIATION "NATIONAL DESIGN SPECIFICATION FOR WOOD CONSTRUCTION", 2005 ("AF&PA").

MATERIAL

UNLESS OTHERWISE SHOWN OR NOTED ON DRAWINGS:

1. WOOD CONNECTORS, SCREWS, ETC.:	SIMPSON STRONG-TIE UNLESS SUBMITTED & APPROVED BY E.O.R.
2. WOOD - ENGINEERED LUMBER:	Fb >= 2000 psi MATCH E VALUES SPECIFIED ON DWGS
3. DIMENSIONAL LUMBER / WOOD - S4S:	DOUGLAS-FIR LARCH #1 OR BETTER
4. ANCHOR BOLTS, U.O.N.:	ASTM F1554

GENERAL

1. NOTES, TYPICAL DETAILS AND SCHEDULES APPLY TO ALL STRUCTURAL WORK UNLESS OTHERWISE NOTED. FOR CONDITIONS NOT SPECIFICALLY SHOWN, PROVIDE DETAILS OF A SIMILAR NATURE. VERIFY APPLICABILITY BY SUBMITTING SHOP DRAWINGS FOR REVIEW.
2. STRUCTURAL DRAWINGS SHALL BE USED IN CONJUNCTION WITH THE ARCHITECTURAL AND MECHANICAL DRAWINGS. IF THERE IS A DISCREPANCY BETWEEN DRAWINGS IT IS THE CONTRACTOR'S RESPONSIBILITY TO NOTIFY THE ENGINEER PRIOR TO PERFORMING WORK.
3. DO NOT SCALE DRAWINGS TO OBTAIN DIMENSIONAL INFORMATION.
4. SEE ARCHITECTURAL DRAWINGS AND SPECIFICATIONS FOR WATER/DAMPROOFING AND FIREPROOFING DETAILS AND REQUIREMENTS.
5. DO NOT CUT OR ALTER ANY STRUCTURAL MEMBERS WITHOUT WRITTEN AUTHORIZATION OF THE ENGINEER.
6. THESE DRAWINGS DO NOT DEFINE SCOPE OF CONTRACTS. SEE CONTRACT DOCUMENTS.
7. AT ALL TIMES THE CONTRACTOR SHALL BE SOLELY RESPONSIBLE FOR THE CONDITIONS OF THE JOBSITE INCLUDING SAFETY OF PERSONS AND PROPERTY. THE ARCHITECT'S OR ENGINEER'S PRESENCE OR REVIEW OF WORK DOES NOT INCLUDE THE ADEQUACY OF THE CONTRACTOR'S MEANS OR METHODS OF CONSTRUCTION.
8. SHORING, BRACING AND PROTECTION OF EXISTING AND ADJACENT STRUCTURES DURING CONSTRUCTION IS THE SOLE RESPONSIBILITY OF THE CONTRACTOR. PROTECT AND MAINTAIN THE INTEGRITY OF ADJACENT STREETS, BUILDINGS AND STRUCTURES.
9. ALL EXISTING DIMENSIONS AND LOCATIONS OF EXISTING CONDITIONS SHOWN ON THE DRAWINGS SHALL BE VERIFIED BY FIELD MEASUREMENTS PRIOR TO DETAILING OF SHOP DRAWINGS. FIELD-VERIFIED DIMENSIONS ONLY ARE TO BE USED FOR PREPARING SHOP DRAWINGS. ANY DISCREPANCIES SHALL BE REPORTED TO THE ENGINEER.
10. DRAWINGS HAVE BEEN PREPARED BASED ON AVAILABLE KNOWLEDGE OF EXISTING CONDITIONS. PRIOR TO PREPARATION OF SHOP DRAWINGS, CONTRACTOR SHALL VERIFY AND/OR DETERMINE SIZE, LOCATION, CONFIGURATION, ETC. OF EXISTING SITE EVERY PLACE WHERE NEW WORK IS TO ABUT, ATTACH, CLEAR, ETC. NOTIFY ENGINEER IN WRITING OF ANY AND ALL CONDITIONS WHICH DIFFER FROM THOSE SHOWN ON DRAWINGS.
11. REUSE OF SALVAGED MATERIALS IS NOT PERMITTED UNLESS SPECIFICALLY APPROVED BY ENGINEER IN WRITING.

TIMBER CONSTRUCTION

1. ALL TIMBER TO BE FREE OF DEFECTS AND MEET THE REQUIREMENTS OF THE GENERAL NOTES AND THE SPECIFICATIONS CALLED OUT ON PLAN.
2. USE SIMPSON JOIST HANGERS AT ALL TIMBER TO TIMBER CONNECTIONS UNLESS OTHERWISE SPECIFIED ON DRAWINGS. JOIST HANGERS CHOSEN MUST BE APPROVED BY THE ENGINEER OF RECORD.
3. MINIMUM NAILING, U.O.N. ON INCLUDED FASTENER SCHEDULE, SHALL CONFORM TO TABLE 2304.9.1 OF THE INTERNATIONAL BUILDING CODE.
4. PROVIDE PLATE 1/4x2x2 WASHERS UNDER THE HEADS AND NUTS OF ALL BOLTS AND LAG SCREWS BEARING ON WOOD.
5. TWO STUDS MINIMUM SHALL BE PROVIDED AT THE END OF EACH WALL AND AT EACH SIDE OF ALL WALL OPENINGS, U.O.N.
6. TWO 2x8 INSULATED HEADERS SHALL BE PROVIDED OVER ALL OPENINGS, U.O.N.
7. ALL FRAMING LUMBER SHALL BE GRADE MARKED AT MILL AND SHALL BE SURFACED DRY. NEW JOISTS SHALL COMPLY WITH PS20-70 FOR SIZES. ALL FACTORY MANUFACTURED GLUE-LAMINATED WOOD FRAMING MEMBERS SHALL BE PARALAM BEAMS AS MANUFACTURED BY TRUSJOIST (iLEVEL) OR APPROVED EQUAL.
8. AT FLOOR LEVEL SUPPORTS WHERE RIM OR BAND JOISTS ARE NOT FOUND, PROVIDE FULL DEPTH BLOCKING BETWEEN ALL JOISTS AND STUDS.
9. ALL SILLS OR PLATES RESTING ON CONCRETE OR MASONRY, WHICH IS IN CONTACT WITH EARTH OR RESTING ON FOUNDATIONS, SHALL BE PRESSURE TREATED DOUGLAS FIR-LARCH.
10. TOP PLATES OF ALL WOOD STUD WALLS TO BE (2)-2x(SAME WIDTH AS STUDS), U.O.N.
11. ALL BOLT HOLES IN WOOD SHALL BE DRILLED NO MORE THAN 1/8" DIAMETER LARGER THAN NORMAL BOLT DIAMETERS.
12. ALL FRAMING ANCHORS, POST CAPS, BASES, HANGERS, STRAPS, ETC., SHALL BE AS MANUFACTURED BY SIMPSON STRONG-TIE OR ENGINEER OF RECORD APPROVED EQUIVALENT.
13. MOISTURE CONTENT (MC) OF WOOD AT TIME OF CONSTRUCTION SHALL NOT EXCEED 19%. WOOD MUST BE STORED IN CLEAN, DRY CONDITIONS

PLYWOOD

1. ALL PLYWOOD FLOOR SHEATHING SHALL BE PRESSURE TREATED, FIRE RETARDANT TREATED APA RATED SHEATHING STURD-I-FLOOR EXPOSURE 1
   - BOTTOM LAYER - TOUCH-SANDED C-D PLUGGED PANELS
   - TOP LAYER - TOUCH-SANDED C-C PLUGGED PANELS
2. ROOF SHEATHING SHALL BE 1/2" (NOM) WITH SPAN RATING 24/0
   FLOOR SHEATHING SHALL BE 3/4" (NOM) WITH SPAN RATING 48/24
   WALL SHEATHING SHALL BE 1/2" (NOM) WITH SPAN RATING 24/0
   SHEAR WALL SHEATHING SHALL BE 1/2" (NOM) WITH SPAN RATING 24/0
3. PLYWOOD ROOF AND FLOOR SHEATHING TO BE LAID UP WITH GRAIN PERPENDICULAR TO SUPPORTS AND NAILED WITH 8d NAILS AT 6" O.C. TO FRAMED PANEL EDGES AND OVER STUD WALLS AND AT 12" O.C. TO INTERMEDIATE SUPPORTS U.O.N.
4. BLOCK ALL UNSUPPORTED SHEET EDGES WITH 2X6 FLAT BLOCKING. FIT BLOCKING TIGHTLY AT ENDS BETWEEN FRAMING AND FASTEN WITH 2-10D TOENAILS AT EACH END.
5. PLYWOOD SHEETS SHALL BE INSTALLED WITH 1/8" MIN 1/4" MAX SPACING AT ALL EDGES, USE PLY CLIPS OR OTHER EDGE SUPPORT AS REQUIRED.
6. MINIMUM PLYWOOD SHEET WIDTH SHALL BE 8".
7. ALL SCREWS SHALL BE #12-14 KWIK PRO SELF DRILLING SCREWS BY HILTI OR EQUAL (SUBMIT PRODUCT INFORMATION FOR ENGINEER'S APPROVAL IF OTHER MANUFACTURER IS USED) .

ABBREVIATIONS & SYMBOLS

1.	U.O.N.	UNLESS OTHERWISE NOTED
2.	T.O.	TOP OF
3.	B.O.	BOTTOM OF
4.	O.C.	ON CENTER
5.	EL.	ELEVATION
6.	VIF	VERIFY IN FIELD
7.	E.O.R.	ENGINEER OF RECORD
8.	N.T.S.	NOT TO SCALE
9.	S.O.G.	SLAB ON GRADE
10.	WWF	WELDED WIRE FABRIC
11.	E.W.	EACH WAY
12.	T&B	TOP AND BOTTOM
13.	DN	POST OR COLUMN STARTS AT FLOOR
14.	UP	POST OR COLUMN ENDS AT FLOOR

DESIGN LOADS

1. LIVE LOADS

A. RESIDENTIAL	50 PSF
B. BALCONY	60 PSF
C. UNOCCUPIED ROOF	20 PSF

2. SUPERIMPOSED LOADS

CEILING	3 PSF
MEP	3 PSF
FLOOR FINISHES	4 PSF
ROOFING	
- INSULATION AND WATERPROOFING	7 PSF

3. WIND LOADS

WIND LOADS ARE DETERMINED IN ACCORDANCE WITH ASCE 7-05 SECTION 6.4.1, SIMPLIFIED PROCEDURE FOR MAIN WIND-FORCE RESISTING SYSTEMS USING THE FOLLOWING PARAMETERS:

BASIC WIND SPEED	110 MPH
MEAN ROOF HEIGHT	20 FT
BUILDING CATEGORY	II
IMPORTANCE FACTOR	1.0
EXPOSURE	B
BASE SHEAR	9.63 KIPS

4. SNOW LOADS

SNOW LOADS ARE DETERMINED IN ACCORDANCE WITH ASCE 7-05 SECTION 7.4, USING ON THE FOLLOWING PARAMETERS:

GROUND SNOW LOAD (PSF)	50
IMPORTANCE FACTOR	1.0
EXPOSURE	B
SNOW EXPOSURE FACTOR	CE=1.0
THERMAL FACTOR	Ct=1.0
FLAT ROOF SNOW LOAD (PSF)	50
SLOPED ROOF SNOW LOAD (PSF)	50

5. SEISMIC LOADS

THE STRUCTURE IS DESIGNED TO MEET THE SEISMIC LOAD REQUIREMENTS OF ASCE 7-05 SECTION 12.14.1. THE SEISMIC LOAD INCLUDES DEAD LOAD AND SUPERIMPOSED DEAD LOAD.

ANALYSIS PROCEDURE - SIMPLIFIED ALTERNATIVE STRUCTURAL DESIGN PROCEDURE
TYPE OF LATERAL SYSTEM - LIGHT-FRAME WALLS SHEATHED WITH WOOD STRUCTURAL PANELS RATED FOR SHEAR RESISTANCE

IMPORTANCE FACTOR	1.00
SEISMIC DESIGN CATEGORY	B
SITE CLASS (VERIFY WITH GEOTECHNICAL REPORT)	B
MAPPED SPECTRAL RESPONSE ACCELERATION AT SHORT PERIODS	0.275
MAPPED SPECTRAL RESPONSE ACCELERATION AT 1 SECOND	0.070
DESIGN SPECTRAL RESPONSE ACCELERATION AT SHORT PERIODS ADJUSTED FOR SITE CLASS EFFECTS	0.183
DESIGN SPECTRAL RESPONSE ACCELERATION AT 1 SECOND ADJUSTED FOR SITE CLASS EFFECTS	0.047
SEISMIC COEFFICIENT	1.1
STATIC BASE SHEAR	1.2 KIPS
RESPONSE MODIFICATION COEFFICIENT	6.5

STATE OF MAINE
DEPARTMENT OF TRANSPORTATION

APROVED | DATE
COMMISSIONER:
CHIEF ENGINEER:

SIGNATURE
P.E.NUMBER
DATE

PROJECT INFORMATION

PROGRAM	Bridge
PROJECT MANAGER	Stephen Bodge
DESIGNER	I3D, Inc.
CONSULTANT	I3D, Inc.
PROJECT RESIDENT	
CONTRACTOR	
PROJECT COMPLETION DATE	

SOUTH BRISTOL
GUT BRIDGE

CONTROL HOUSE
STRUCTURAL NOTES

SHEET NUMBER
88
OF 141

Filename $file$ Division: $wkgroup$ Username: $user$ Date: $date$

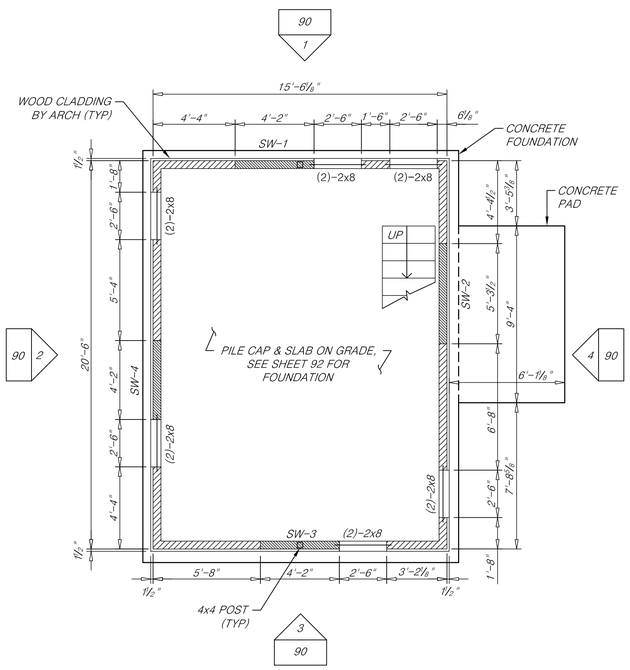

FIRST FLOOR

1/4" = 1'-0"

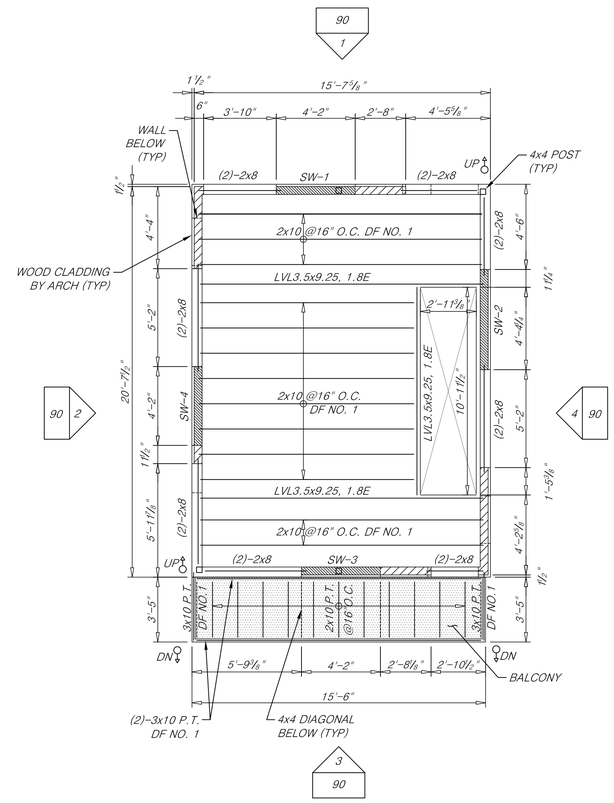

SECOND FLOOR

1/4" = 1'-0"

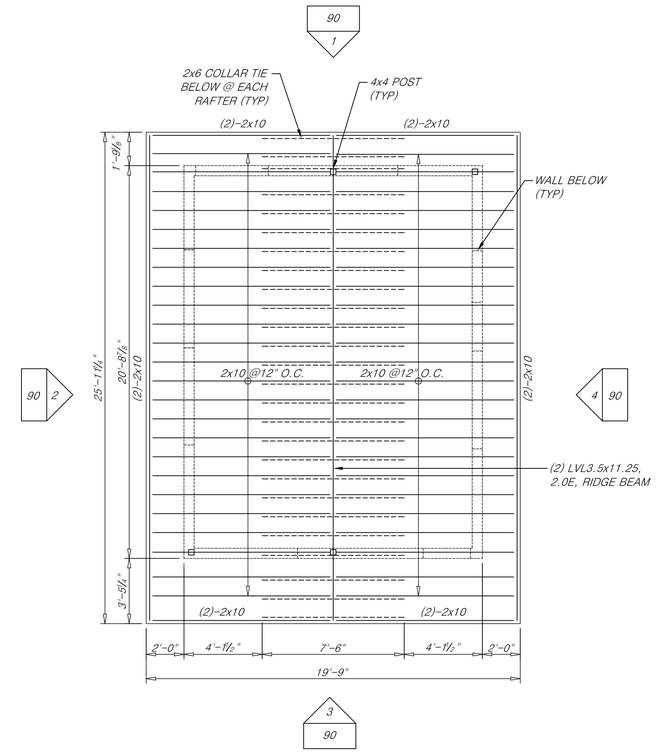

ROOF

1/4" = 1'-0"

NOTES:

1. WOOD BEARING WALL CONTINUING UP, U.O.N.
2. WOOD SHEAR WALL CONTINUING UP, U.O.N.
3. CONCRETE FOUNDATION, U.O.N.
4. WOOD POST, U.O.N.
5. WOOD BEAM, U.O.N.
6. "SW-_" : WOOD SHEAR WALL SEE SHEET 9 2 FOR DETAILS
7. ALL WALL STUDS TO BE 2x4 DOUGLAS FIR-LARCH NO. 2 OR BETTER @ 16" O.C., U.O.N
8. ALL WOOD MEMBERS TO BE DOUGLAS FIR-LARCH NO. 2 OR BETTER, U.O.N
9. SEE SHEET 9 1 FOR TYPICAL DETAILS
10. SEE ARCHITECTURAL DRAWINGS FOR FURTHER INFORMATION

NOTES:

1. WOOD BEARING WALL CONTINUING UP, U.O.N.
2. WOOD SHEAR WALL CONTINUING UP, U.O.N.
3. WOOD SHEAR OR BEARING WALL BELOW, U.O.N.
4. BALCONY / ELEVATED PORCH
5. WOOD POST, U.O.N.
6. WOOD BEAM, U.O.N.
7. "SW-_" : WOOD SHEAR WALL SEE SHEET 92 FOR DETAILS
8. "P.T." : PRESSURE TREATED
9. ALL WALL STUDS TO BE 2x4 DOUGLAS FIR-LARCH NO. 2 OR BETTER @ 16" O.C., U.O.N
10. ALL WOOD MEMBERS TO BE DOUGLAS FIR-LARCH NO. 2 OR BETTER, U.O.N.
11. SEE SHEET 9 1 FOR TYPICAL DETAILS
12. SEE ARCHITECTURAL DRAWINGS FOR FURTHER INFORMATION

NOTES:

1. WOOD BEARING WALL CONTINUING UP, U.O.N.
2. WOOD SHEAR WALL CONTINUING UP, U.O.N.
3. WOOD SHEAR OR BEARING WALL BELOW, U.O.N.
4. WOOD POST, U.O.N.
5. WOOD BEAM, U.O.N.
6. "SW-_" : WOOD SHEAR WALL SEE SHEET 91 FOR DETAILS
7. ALL WOOD MEMBERS TO BE PRESSURE TREATED DOUGLAS FIR-LARCH NO. 2 OR BETTER, U.O.N
8. SEE SHEET 9 1 FOR TYPICAL DETAI LS
9. SEE ARCHITECTURAL DRAWINGS FOR FURTHER INFORMATION

STATE OF MAINE
DEPARTMENT OF TRANSPORTATION

APROVED	DATE
COMMISSIONER:	
CHIEF ENGINEER:	

	SIGNATURE	
	P.E.NUMBER	
	DATE	

PROJECT INFORMATION

PROGRAM	Bridge
PROJECT MANAGER	Stephen Bodge
DESIGNER	I3D, Inc.
CONSULTANT	I3D, Inc.
PROJECT RESIDENT	
CONTRACTOR	
PROJECT COMPLETION DATE	

SOUTH BRISTOL
GUT BRIDGE

CONTROL HOUSE
STRUCTURAL PLANS

SHEET NUMBER

89

OF 141

Filename $file$ Division: $wkgroup$ Username: $user$ Date: $date$

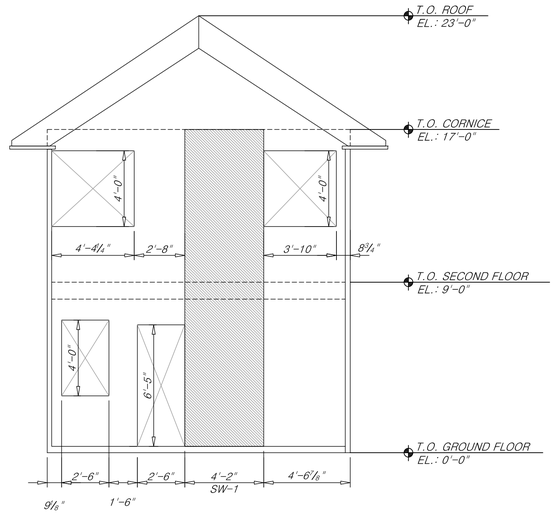

1. NORTH ELEVATION

1/4" = 1'-0"

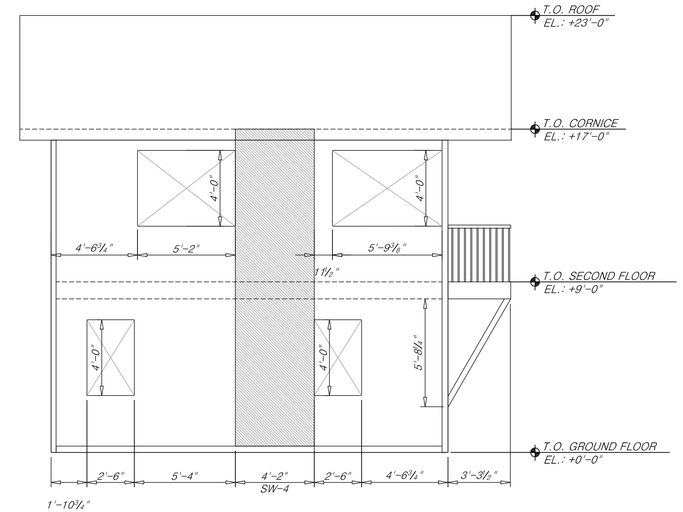

2. WEST ELEVATION

1/4" = 1'-0"

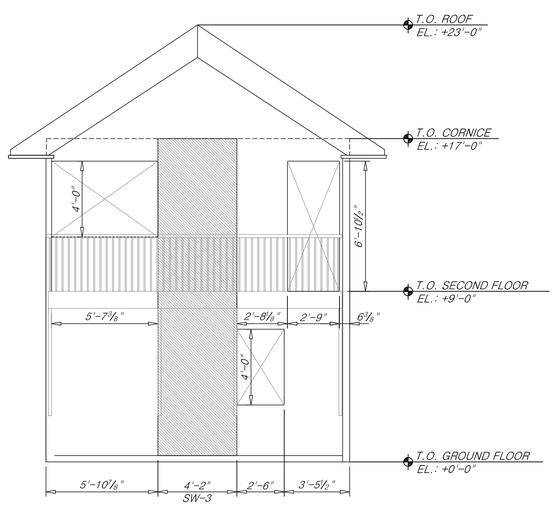

3. SOUTH ELEVATION

1/4" = 1'-0"

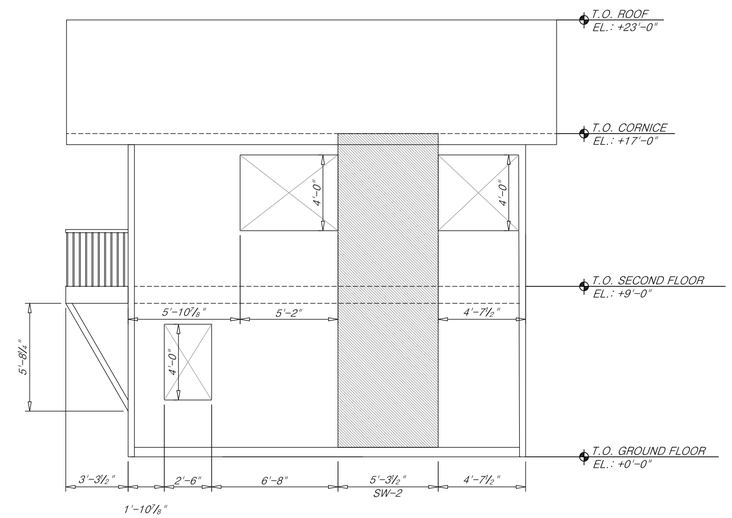

4. EAST ELEVATION

1/4" = 1'-0"

STATE OF MAINE
DEPARTMENT OF TRANSPORTATION

APROVED | DATE

COMMISSIONER:

CHIEF ENGINEER:

SIGNATURE

P.E.NUMBER

DATE

PROJECT INFORMATION

PROGRAM	Bridge
PROJECT MANAGER	Stephen Bodge
DESIGNER	I3D, Inc.
CONSULTANT	I3D, Inc.
PROJECT RESIDENT	
CONTRACTOR	
PROJECT COMPLETION DATE	

SOUTH BRISTOL
GUT BRIDGE

CONTROL HOUSE
STRUCTURAL ELEVATIONS

SHEET NUMBER

90

OF 141

Filename $file$ Division: $wkgroup$ Username: $user$ Date: $date$

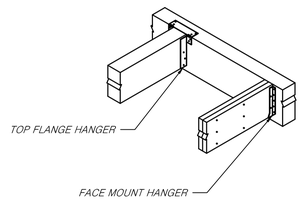

NOTES:

1. SEE CURRENT SIMPSON STRONG-TIE LITERATURE FOR FRAMING CONNECTIONS
2. HANGER HEIGHT MUST BE A MINIMUM OF 60% OF JOIST DEPTH

1 WOOD BEAM-TO-BEAM DETAIL
N.T.S.

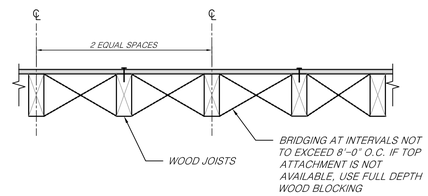

2 WOOD BRIDGING DETAIL
N.T.S.

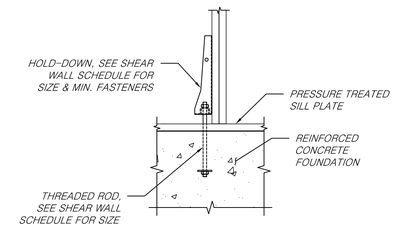

NOTES:

1. SEE CURRENT SIMPSON STRONG-TIE LITERATURE FOR FURTHER INFORMATION
2. THREADED ANCHORS TO BE CAST IN CONCRETE FOUNDATION

3 HOLD-DOWN ANCHORS AT FOUNDATION DETAIL
N.T.S.

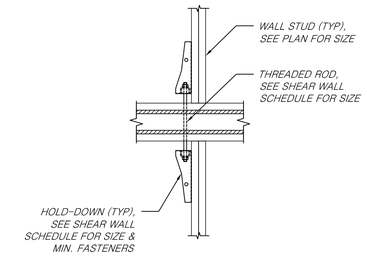

NOTE:

1. SEE CURRENT SIMPSON STRONG-TIE LITERATURE FOR FURTHER INFORMATION

4 HOLD-DOWN ANCHOR BETWEEN FLOORS DETAIL
N.T.S.

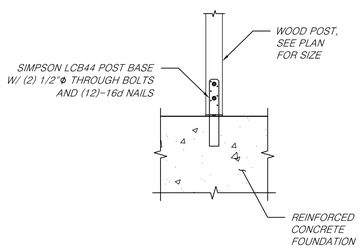

AXONOMETRIC VIEW

NOTE: CONCRETE AND FASTENERS NOT SHOWN FOR CLARITY

NOTES:

1. SEE CURRENT SIMPSON STRONG-TIE LITERATURE FOR FURTHER INFORMATION
2. THREADED ANCHORS TO BE CAST IN CONCRETE FOUNDATION

5 WOOD POST BASE DETAIL
N.T.S.

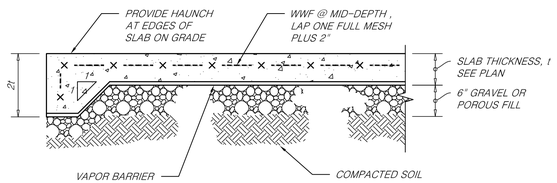

6 SLAB ON GRADE DETAIL
N.T.S.

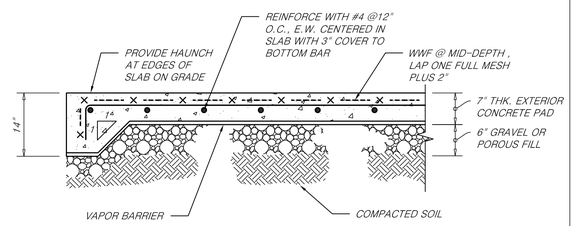

7 EXTERIOR CONCRETE PAD DETAIL
N.T.S.

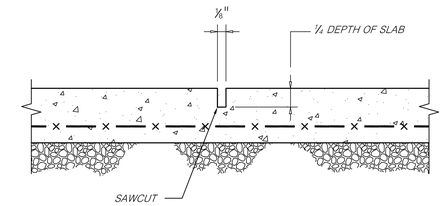

8 TYPICAL SAWCUT DETAIL FOR SLABS ON GRADE
N.T.S.

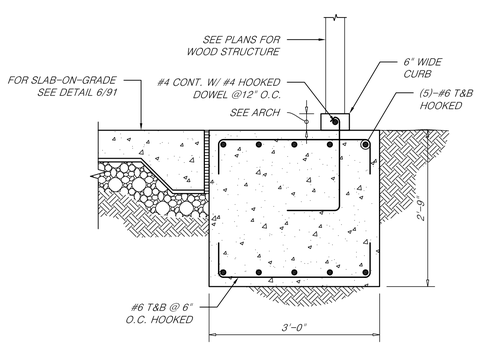

9 FOUNDATION DETAIL
N.T.S.

STATE OF MAINE
DEPARTMENT OF TRANSPORTATION

APROVED	DATE
COMMISSIONER:	
CHIEF ENGINEER:	

PROJECT INFORMATION		SIGNATURE
PROGRAM	Bridge	
PROJECT MANAGER	Stephen Bodge	
DESIGNER	I3D, Inc.	P.E.NUMBER
CONSULTANT	I3D, Inc.	
PROJECT RESIDENT		
CONTRACTOR		DATE
PROJECT COMPLETION DATE		

SOUTH BRISTOL
GUT BRIDGE

CONTROL HOUSE
STRUCTURAL DETAILS

SHEET NUMBER
91
OF 141

Filename $file$ Division: $wkgroup$ Username: $user$ Date: $date$

NOTES:

1. WOOD BEARING WALL
2. WOOD SHEAR/BEARING WALL
3. CONCRETE FOUNDATION
4. "SW-_" : WOOD SHEAR WALL SEE DETAIL 2 FOR SHEATHING, FASTENER, CHORD AND HOLD-DOWN INFORMATION.
5. "P": MAX. UNFACTORED APPLIED AXIAL LOAD PER UNIT LENGTH OF WALL (UNITS AS NOTED)
6. "V": MAX. UNFACTORED APPLIED BASE SHEAR DUE TO WIND AT SHEAR WALL SEGMENT (UNITS AS NOTED)
7. "M": MAX. UNFACTORED APPLIED OVERTURNING MOMENT DUE TO WIND AT SHEAR WALL SEGMENT (UNITS AS NOTED)
8. ALL WOOD WALL STUDS TO BE 2x4 DOUGLAS FIR-LARCH NO. 2 @ 16" O.C., EXCEPT SHEAR WALL CHORDS (EDGE STUDS) ARE TO BE 2x4 DOUGLAS FIR-LARCH SELECT STRUCTURAL, SEE SHEAR WALL SCHEDULE IN DETAIL 2 FOR MORE INFORMATION.
9. "R": MAXIMUM AND MINIMUM FACTORED PILE LOADS (UNITS AS NOTED)

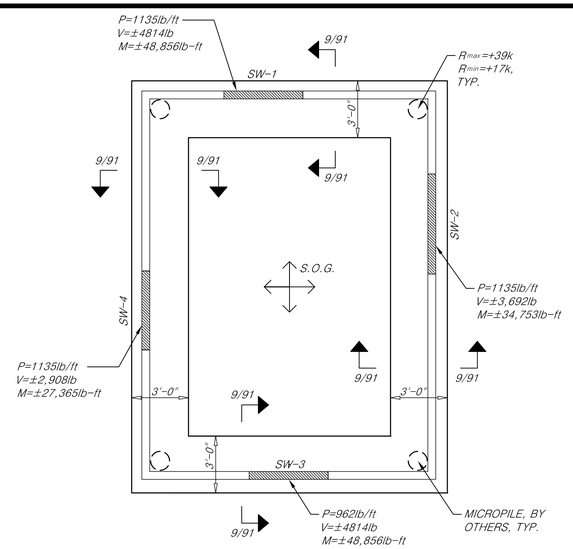

1 SHEAR WALL & FOUNDATION PLAN
N.T.S.

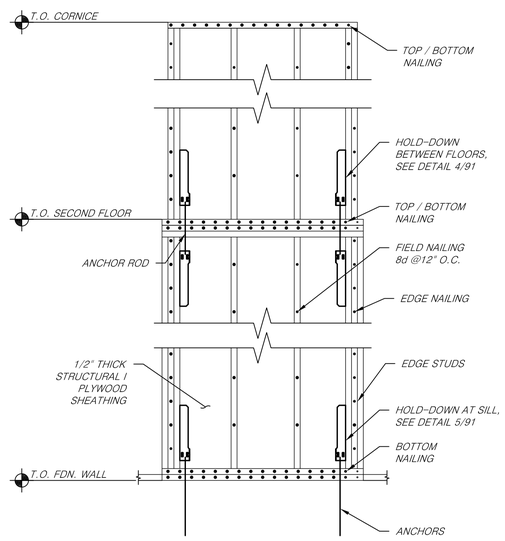

NOTES:

1. SEE SCHEDULE FOR FASTENERS / CONNECTORS NOT NOTED.

SHEAR WALL SCHEDULE			
FLOORS	HOLD-DOWNS / STRAPS	ROD Ø	SDS SCREWS
FIRST TO FND	HDU14-SDS2.5	1"	36-SDS $\frac{1}{4}$"x$2\frac{1}{2}$"
SECOND	HDU4-SDS2.5	5/8"	10-SDS $\frac{1}{4}$"x$2\frac{1}{2}$"
ROOF	HDU2-SDS2.5	5/8"	6-SDS $\frac{1}{4}$"x$2\frac{1}{2}$"
TOP, BOTTOM & EDGE NAILING			
FIRST FLOOR	10d @ 3"		
SECOND FLOOR	10d @ 6"		
EDGE STUDS	FIRST STORY: (3)-2x4 DF SELECT STRUCTURAL, EACH CHORD SECOND STORY: (2)-2x4 DF SELECT STRUCTURAL, EACH CHORD		

2 PLYWOOD SHEAR WALL & SCHEDULE
N.T.S.

FASTENER SCHEDULE	
SILL PLATE TO FOUNDATION	$\frac{1}{2}$" ANCHOR BOLT @ 18" O.C. W/ 3" PLATE WASHER: 9" MIN. EMBEDMENT
ROOF SHEATHING	8d @ 6" O.C. EDGE / 12" O.C. FIELD (TYPICAL PANELS) 8d @ 6" O.C. EDGE / 6" O.C. FIELD (PERIMETER PANELS)
WALL SHEATHING	8d @ 6" O.C. EDGE / 12" O.C. FIELD
FLOOR SHEATHING	12d RING OR SPIRAL NAILS @ 6" O.C. EDGE / 12" O.C. FIELD
POST BASES ON CONCRETE	SIMPSON LCB OR CB
SLOPED RAFTER HANGERS AT RIDGE BEAMS WHERE COLLAR TIES ARE NOT PROVIDED	SIMSPON LSU
JOIST HANGERS	SIMPSON LUS (MATCH JOIST SIZE)
JOIST BEARING ON SILL, TOP PLATE OR GIRDER	4 - 8d (TOENAILED)
BRIDGING / BLOCKING TO JOIST	2 - 8d (TOENAILED)
BLOCKING TO SILL / TOP PLATE	3 - 16d (TOENAILED)
2"x2" LEDGER STRIP TO BEAM	3 - 16d (FACENAILED @ $2\frac{1}{2}$" SPACING UNDER EACH JOIST)
JOIST ON LEDGER TO BEAM	3 - 8d (TOENAILED)
BAND / RIM JOIST TO JOIST	3 - 16d (END NAILED)
RIM JOIST TO SILL / TOP PLATE	2 - 16d PER FOOT
TOP PLATE TO TOP PLATE	2 - 16d PER FOOT
TOP PLATES AT INTERSECTION	4 - 16d EACH SIDE
STUD TO STUD	1 - 16d @ 12" O.C.
HEADER TO HEADER	16d @ 16" O.C. ALONG EDGES
TOP OR BOTTOM PLATE TO STUD	2 -16d
BOTTOM PLATE TO FLOOR JOIST, RIM JOIST, END JOIST, OR BLOCKING	2 - 16d PER FOOT
RAFTER TO TOP PLATE	RAFTER SPACING UP TO 16": 2 - 8d (TOENAILED) RAFTER SPACING 24": 3 - 8d (TOENAILED)
CEILING JOIST TO TOP PLATE	3 - 8d (TOENAILED)
BLOCKING TO RAFTER	3 - 8d EACH END
BAND JOIST TO RAFTER	2 - 16d EACH END
RAFTER-TO-RAFTER TENSION STRAP OVER RIDGE BEAM (SLOPE > 6:12)	SIMPSON LSTA-9 OR EQUAL ALT: 1x COLLAR TIE IN UPPER $\frac{1}{3}$ OF RAFTER SPAN WITH 4 - 10d EA. SIDE

3 FASTENER SCHEDULE
N.T.S.

STATE OF MAINE
DEPARTMENT OF TRANSPORTATION

APROVED	DATE
COMMISSIONER:	
CHIEF ENGINEER:	

	SIGNATURE	
	P.E.NUMBER	
	DATE	

PROJECT INFORMATION

PROGRAM	Bridge
PROJECT MANAGER	Stephen Bodge
DESIGNER	I3D, Inc.
CONSULTANT	I3D, Inc.
PROJECT RESIDENT	
CONTRACTOR	
PROJECT COMPLETION DATE	

SOUTH BRISTOL
GUT BRIDGE

CONTROL HOUSE FOUNDATION,
SHEAR WALL & FASTENER SCHEDULE

SHEET NUMBER
92
OF 141

Filename $file$ Username: $user$ Division: $wkgroup$ Date: $date$

BUIDING DEPARTMENT NOTES

BUILDING DEPARTMENT NOTES

All work shall comply with the applicable sections of the Maine Building, Mechanical, Plumbing, Fuel Gas and ASHRAE 90.1, Maine Building Department, Local County Fire Marshal and all amendments and rules and regulations of the department of buildings to date.

A. The following work items, components, materials, capacities, etc. shall comply with the referenced code sub-chapter and/or reference standard:

a. Heating Capacity - ASHRAE 90.1

b. Duct Construction, Support, MC Chapter 6
c. Exhaust Systems MC Chapter 5
d. Ventilation MC Chapter 4
e. NEC 2008 or must current version accepted by the State of Maine

f. Minimum temperature to be maintained in occupied spaces during heating season: 70øF. Using the design conditions stipulated in the ASHRAE and the State of Maine

g. The ventilation air for all areas complies with the minimum code requirements per Chapters 4 and 5 MC. All calculations of the ventilation rates are made without taking any credit for natural ventilation in air conditioned areas.

h. All toilet rooms to be ventilated in accordance with MC Chapter 5

i. Upon completion of the ventilation system, a test shall be conducted in the presence of and under the direction of a licensed professional engineer or registered architect qualified to conduct such tests. For systems of or less than 5,000 CFM, the inspection may be by a person having not less than five years experience supervising installation of ventilating systems. The contractor will be required to retain the service of the proper person to conduct the test. The tests shall show compliance with the code requirements for ventilation and the proper functioning of all smoke detection, fire protection and operating devices before the system is approved.

The licensed professional engineer or registered architect who conducts the tests shall file a certificate as to whether the system complies with the applicable laws. He shall also file with this certification a report of the test. The test and report shall be made in a manner satisfactory to the superintendent.

j. Refer to architectural drawings for required fire rated wall and smoke wall construction and location.

k. These plans are approved only for the work indicated on the application specification sheet. All other matters shown are not to be relied upon or to be considered as either being approved or in accordance with applicable codes.

l. To the best of the applicant's knowledge, belief and professional judgement, these plans are in compliance with ASHRAE 90.1 and Maine rules and regulations.

HVAC GENERAL NOTES

A. GENERAL

1. ALL AIR TESTING & BALANCING SHALL BE PERFORMED IN THE PRESENCE OF THE ENGINEER. REFER TO DRAWING SPECIFICATIONS FOR REQUIREMENTS.
2. ALL CONTROL WORK MUST BE PERFORMED BY TECHNICIANS AND ORGANIZATIONS WITH AT LEAST 5 YEARS OF EXPERIENCE AND WITH FULL FACTORY AUTHORIZATION AND CURRENT CERTIFICATION FOR ALL THE COMPONENTS OF THE SYSTEM.
3. DUCT DIMENSIONS SHOWN ON THE CONTRACT DRAWINGS CLEAR INTERIOR DIMENSION WHERE DUCTS ARE INDICATED AS ACOUSTICALLY LINED, THE DUCT DIMENSIONS SHALL BE INCREASED AS OUTLINED IN THE HVAC SPECIFICATIONS.
4. BALANCE ALL CEILING DIFFUSERS IN THE AREA OF WORK TO THE REQUIRED CFM'S AS INDICATED ON THE HVAC DRAWINGS.

HVAC DUCTWORK LEGEND

SINGLE LINE	DESCRIPTION	DOUBLE LINE
	SUPPLY DUCT UP	
	SUPPLY DUCT DOWN	
	STANDARD RADIUS ELBOW (R = W) SUPPLY/ RETURN/ EXHAUST	R W
	MITERED ELBOWS W/ VANES	
OR	BULLHEAD SPLIT SUPPLY	VD NK GOOD FOR TAKEOFF TO RING DUCT VD
	CEILING DUCT MTD. DIFF/GRILLE	VD
	RETURN/EXHAUST DUCT UP	
	RETURN/EXHAUST DUCT DOWN	
	HORIZONTAL OFFSET SUPPLY/RETURN /EXHAUST	
R/D	RISE OR DROP SUPPLY/RETURN/ EXHAUST	RISE/DROP
	45° TAP TAKE-OFF	
	90° TAP TAKE-OFF	ROUND DUCT
	BULLHEAD CONVERGE RETURN/EXHAUST	VD VD

HVAC SYMBOL LIST

	NEW DUCTWORK-SEE SPECIFICATIONS FOR CONTRUCTION TYPE AND INTERNAL LINING
	NEW SUPPLY CEILING DIFFUSER (4-WAY BLOW)
	NEW RETURN CEILING GRILLE OR REGISTER
(500)A	DIFFUSER TYPE AND CFM (CUBIC FEET PER MINUTE). REFER TO SCHEDULE.
CFM	CUBIC FEET PER MINUTE
Sp	SWITCH W/PILOT LIGHT
SD	DUCT SMOKE DETECTOR
	PUMP
(48 MBH)A	EQUIPMENT TYPE AND CAPACITY - REFER TO SCHEDULE
	UNDERCUT DOOR
M.A.	MAKE-UP AIR
T	THERMOSTAT

HVAC DRAWING LIST

91	CONTROL HOUSE MECHANICAL SYMBOLS, NOTES, AND ABBREVIATIONS
92	CONTROL HOUSE MECHANICAL FLOOR PLANS AND DETAILS
93	CONTROL HOUSE MECHANICAL SCHEDULES

STATE OF MAINE
DEPARTMENT OF TRANSPORTATION

APROVED — DATE
COMMISSIONER:
CHIEF ENGINEER:

SIGNATURE
P.E.NUMBER
DATE

PROJECT INFORMATION

PROGRAM	Bridge
PROJECT MANAGER	Stephen Bodge
DESIGNER	I3D, Inc.
CONSULTANT	I3D, Inc.
PROJECT RESIDENT	
CONTRACTOR	
PROJECT COMPLETION DATE	

SOUTH BRISTOL
GUT BRIDGE

CONTROL HOUSE
MECHANICAL SYMBOLS & NOTES

SHEET NUMBER
93
OF 141

Filename $file$ Division: $wkgroup$ Username: $user$ Date: $date$

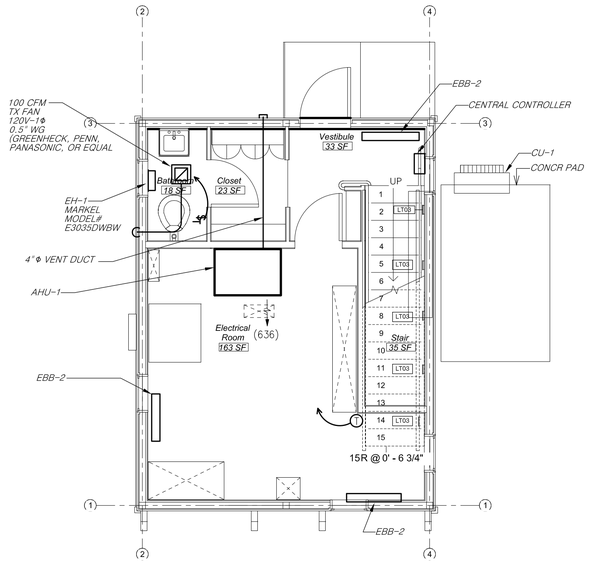

2. GROUND FLOOR
(ELECTRICAL ROOM)

1/4" = 1'-0"

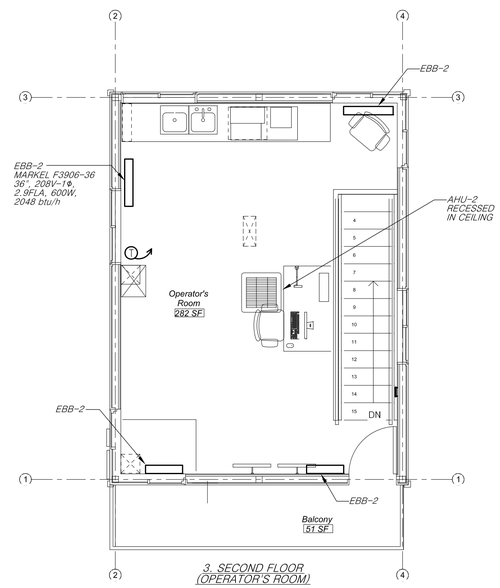

3. SECOND FLOOR
(OPERATOR'S ROOM)

1/4" = 1'-0"

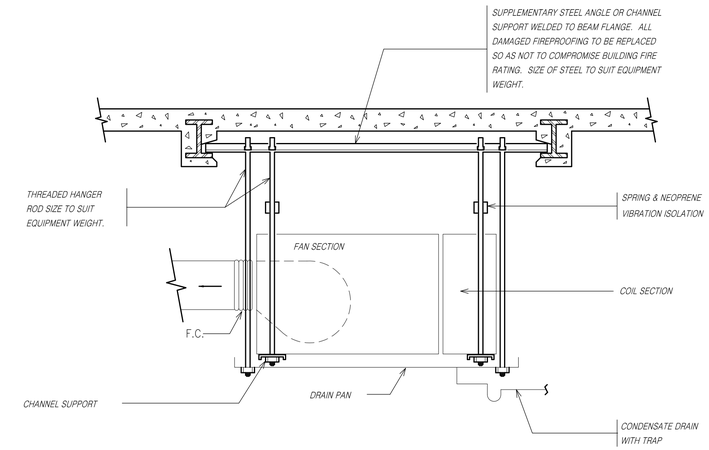

4 HANGING DETAIL HVAC EQUPMENT

NOT TO SCALE

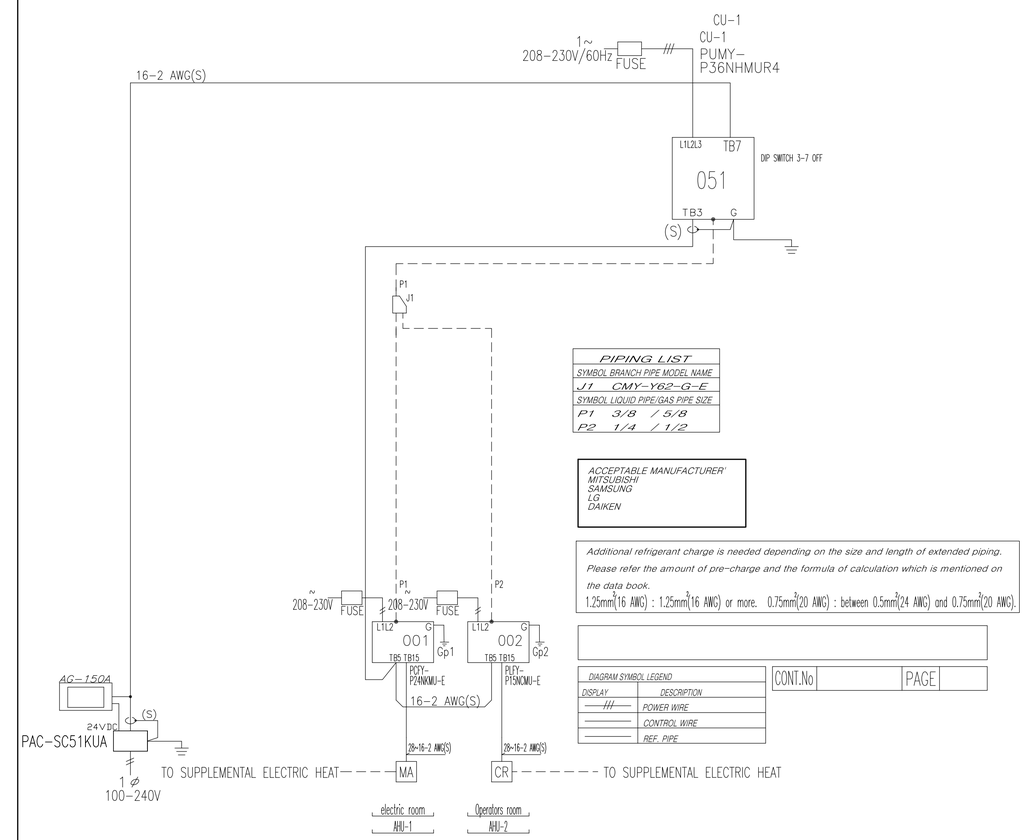

1 SYSTEM SCHEMATI DRAWING

NOT TO SCALE

STATE OF MAINE
DEPARTMENT OF TRANSPORTATION

APROVED	DATE
COMMISSIONER:	
CHIEF ENGINEER:	

SIGNATURE	
P.E.NUMBER	
DATE	

PROJECT INFORMATION

PROGRAM	Bridge
PROJECT MANAGER	Stephen Bodge
DESIGNER	I3D, Inc.
CONSULTANT	I3D, Inc.
PROJECT RESIDENT	
CONTRACTOR	
PROJECT COMPLETION DATE	

SOUTH BRISTOL
GUT BRIDGE

CONTROL HOUSE
MECHANICAL PLANS & DETAILS

SHEET NUMBER

94

OF 141

Filename $file$ Division: $wkgroup$ Username: $user$ Date: $date$

MITSUBISHI CITY MULTI VRF INDOOR UNIT SCHEDULE (ALTERNATE MFG DAIKN, LG,SAMSUNG

System Tag	Room Name	Tag Reference	Model	Type	Remote Sensor	Nominal Cooling Capacity (BTU/h)	Nominal Heating Capacity (BTU/h)	Cooling Design Entering Temp DB/WB (°F) / [Water in temp]	Heating Design Entering Temp DB/WB (°F) / [Water in temp]	Corrected Capacity: Cooling Diversity Full/Partial (See Note 5, 6)	Corrected Capacity: Cooling Total Capacity (BTU/h)	Corrected Capacity: Cooling Sensible Capacity (BTU/h)	Corrected Capacity: Heating Diversity Full/Partial (See Note 5, 6)	Corrected Capacity: Heating Capacity (BTU/h)	Estimated Cooling Coil LAT (°F) / [LWT]	Estimated Heating Coil LAT (°F) / [LWT]	Refrig Pipe Dim Liquid/Suction (inch)	Peak Fan Airflow (cfm) / [Design gpm G(US)/min]	Max Fan ESP Setting 208V/230V (IN WG)	Sound Pressure Per Fan Speed 208V/230V (dBA)	Voltage / Phase	Power Cooling 208V/230V (kW/h)	Power Heating 208V/230V (kW/h)	Electrical MCA/MFS	Notes / Options
CU-1	electric room	AHU-1	PCFY-P24NKMU-E	Ceiling type (suspended)		24,000.0	27,000.0	76.0/65.0	70.0	FULL DEMAND	22,119.2	14,207.8	FULL DEMAND	13,304.0	55.0	89.4	3/8 / 5/8	636		31-33-35-37	208/230V/1-phase	0.41	0.41	0.52/0.52/15	1, 2, 3, 4, 5, 6
CU-1	Operators room	AHU-2	PLFY-P15NCMU-E	Ceiling cassette (4-way airflow) type	Yes	15,000.0	17,000.0	76.0/65.0	70.0	FULL DEMAND	13,824.5	8,973.8	FULL DEMAND	8,376.6	54.4	89.9	1/4 / 1/2	390		31-35-40	208/230V/1-phase	0.28	0.28	0.35/15	1, 2, 3, 4, 5, 6

Notes & Options:
1 Nominal cooling capacities are based on indoor coil EAT of 80/67°F (DB/WB), outdoor of 95°F (DB)
2 Nominal heating capacities are based on indoor coil EAT of 70°F (DB), outdoor of 43°F (WB)
3 See outdoor unit schedule for outdoor ambient conditions, connected capacity, and other factors associated with corrected
4 See schematic piping/control diagram for indication of required indoor unit remote controllers, system controllers, and
Full demand corrected capacity includes de-rate associated with indoor vs. outdoor connected capacity indicated on outdoor unit schedule for associated system. Partial corrected capacity assumes sufficient diversity exists such that the connected capacity de-rate does not apply. It is the designer's responsibility to ensure "Diamond System Builder" is set in the
5 appropriate output capacity setting (full demand/partial demand) prior to generating this schedule.
6 It is recommended to always base heating corrected capacity on full demand.

MITSUBISHI CITY MULTI VRF OUTDOOR UNIT SCHEDULE (ALTERNATE MFG DAIKIN, LG, SAMSUNG)

System Tag	Tag Reference	M-Net Address	Model Number	Modules	Nominal Cooling Capacity (BTU/h)	Nominal Heating Capacity (BTU/h)	Cooling Efficiency IEER/EER [or SEER]	Heating COP @ 47°F [or HSPF]	Nom System Connected Capacity (% of NOM)	Design Cooling Outdoor Temp DB (°F)	Design Heating Outdoor Temp WB (°F)	Max Pipe Length from BC or 1st Joint (feet)	Refrig Pipe Dim High/Low Pressure (inch) (See Note 4)	Corrected Cooling Total Capacity (BTU/h)	Corrected Heating Capacity (BTU/h)	Sound Pressure (dBA)	Inverter Driven Compressor Type / Quantity	Preliminary Added Field Charge (See Note 5)	Voltage / Phase	Electrical-Per Module 208/230 or 460: MCA	RFS	MFS	Notes / Options
CU-1	CU-1	51	PUMY-P36NHMUR4-BS	P36	36,000.0	40,000.0	0 / 0	0.0	108.3%	87.0	-6.5	28.9	3/8 / 5/8	35,943.7	21,680.6	49/51	SCROLL/1	0.0	208-230V / 1-phase	26/26	30	30	1, 2, 3, 4, 5, 6

Notes & Options:
1 Nominal cooling capacities are based on indoor coil EAT of 80/67°F (DB/WB), outdoor of 95°F (DB)
2 Nominal heating capacities are based on indoor coil EAT of 70°F (DB), outdoor of 43°F (WB)
3 Efficiency values for EER, IEER, COP are based on AHRI 1230 test method for mixture of ducted & non-ducted indoor units.
4 For systems with multiple modules, refrigerant pipe dimensions indicate total system combined piping downstream of module
5 Added field charge listed is in addition to factory charge, this must be updated based upon final as-built piping layout.
6 Corrected capacities shown are based on lowest guaranteed outdoor temperature, temperatures below this are not guaranteed.
7 Include low ambient hood kit with associated wind baffles for 100% low ambient cooling down to minus (-) 10°F.

UNIT CABINET HEATER SCHEDULE — *ALTERNATE- INDEED, QMARK TPI*

DESIGNATION	LOCATION	SERVICE	TYPE	HEATING CAPACITY (MBH)	EAT DB (°F)	LAT DB (°F)	CFM	ELECTRICAL: KW	ELECTRICAL: NO. OF STAGES	ELECTRICAL: FLA	MOTOR (HP)	ELECTRICAL V/.)/Hz	MANUFACTURER/ MODEL	REMARKS
EH-1	SEE PLAN	BATHS	WALL HEATER	5.12	60	107	100	1.5	2	13	"	120/1/60	MARKEL E3035DWBW	-
EBB-2	SEE PLAN	SPACE HEAT	ELECTRIC BASEBOARD	2.1	50	112	NA	0.6	1	2.9	"	208/1/60	MARKEL F3906-36	-
EBB-1	SEE PLAN	SPACE HEAT	ELECTRIC BASEBOARD	3.4	50	112	NA	1.0	1	4.8	"	208/1/60	MARKEL F3906-48	

EQUIPMENT SCHEDULE ALTERNATE - PENN, PANASONIC, BROAN

Ceiling Exhaust Fan — *MARK: TX-1*

Qty	GREENHECK MODEL	VOLUME (CFM)	External SP Total SP (in wg)	FRPM	OPERATING POWER (hp)	WEIGHT (Lb.)	MOTOR INFORMATION: SIZE (hp)	V/C/P	ENCL:	MOTOR RPM	WINDINGS	FLA
10	SP-B110	75	0.5	801	NA	11	NA	115/60/1	OP	950SP	NA	NA
			0.5									

STATE OF MAINE
DEPARTMENT OF TRANSPORTATION

APROVED — DATE
COMMISSIONER:
CHIEF ENGINEER:

SIGNATURE
P.E.NUMBER
DATE

PROJECT INFORMATION

PROGRAM	Bridge
PROJECT MANAGER	Stephen Bodge
DESIGNER	I3D, Inc.
CONSULTANT	I3D, Inc.
PROJECT RESIDENT	
CONTRACTOR	
PROJECT COMPLETION DATE	

SOUTH BRISTOL
GUT BRIDGE

CONTROL HOUSE
MECHANICAL SCHEDULES

SHEET NUMBER
95
OF 141

Filename $file$ Division: $wkgroup$ Username: $user$ Date: $date$

PLUMBING NOTES

A. THE PLUMBING SYSTEMS (SANITARY, WASTE, VENT AND WATER DISTRIBUTION) AND ALL ASSOCIATED EQUIPMENT WILL BE INSTALLED AND MAINTAINED IN ACCORDANCE WITH THE FULL REQUIREMENTS OF THE STATE OF MAINE.

B. THE SANITARY SYSTEM SHALL BE PROVIDED IN FULL ACCORDANCE WITH GENERAL PROVISIONS OF THE PLUMBING CODE

C. THE MATERIALS USED IN THE PLUMBING SYSTEMS WILL BE PROVIDED IN FULL ACCORDANCE WITH THE PLUMBING CODE.

D. EQUIPMENT HOOK-UP AND THE JOINING OF PIPING WILL BE IN FULL COMPLIANCE WITH THE PLUMBING CODE.

E. THE INSTALLATION OF FIXTURES WILL BE IN FULL ACCORDANCE WITH THE PLUMBING CODE

F. TRAPS FOR FIXTURES AND DRAIN LINES WILL BE PROVIDED AND CLEANOUTS INSTALLED IN FULL COMPLIANCE WITH PLUMBING CODE

G. VERTICAL AND HORIZONTAL PIPING WILL BE HUNG AND SUPPORTED AS DIRECTED IN SPECIFICATIONS AND WITH THE FULL COMPLIANCE WITH THE PLUMBING CODE.

H. THE WATER SUPPLY SYSTEMS OF THE SUBJECT BUILDING SHALL BE INSTALLED AND MAINTAINED IN FULL COMPLIANCE WITH PLUMBING CODE AND LOCAL WATER DISTRICT.

I. THE SANITARY DRAINAGE SYSTEM WILL BE SIZED AND INSTALLED IN FULL COMPLIANCE WITH THE PLUMBING CODE.

J. THE VENT PIPING FOR THE SANITARY DRAINAGE SYSTEM OF THE SUBJECT BUILDING WILL BE INSTALLED IN FULL COMPLIANCE WITH PLUMBING CODE

K. FURNISH AND INSTALL STOP VALVES ON WATER PIPING TO ALL FIXTURES AND EQUIPMENT.

L. DOMESTIC WATER PIPE: TYPE "L" COPPER TUBING WITH WROUGHT COPPER FITTINGS. ALL JOINTS WITH 95-5 SOLDER.

M. INSULATION: COLD WATER: 1/2" THICK, ONE PIECE FIBERGLASS OR PIPE ELASTOMERIC INSULATION WITH ALL SERVICE JACKET. HOT WATER: 1/2" THICK, ONE PIECE FIBERGLASS PIPE INSULATION WITH ALL SERVICE JACKET. FITTINGS AND VALVES SHALL HAVE PRE-MOLDED INSULATION. (FLAME SPREAD RATING NOT GREATER THAN 25 SMOKE DEVELOPED RATING 50).

N. SHUT-OFF: NIBCO FIG. S-580 TWO-PIECE BRONZE BALL VALVES WITH SOLDER ENDS.

O. PIPE PASSING THROUGH WALL SHALL HAVE A TRIM OPENING CUT NO GREATER THAN NECESSARY FOR THE INSULATION OF A SLEEVE SECURED THEREIN. SLEEVE SHALL BE 1/2" IN DIAMETER LARGER THAN THE OUTSIDE DIAMETER OF THE PIPE OR REQUIRED INSULATION PASSING THROUGH AND OF SUFFICIENT LENGTH TO BE FLUSH WITH THE FINISHED WALL SURFACE. ALL FLOOR PENETRATIONS SHALL BE CORE DRILLED. ANNULAR SPACES BETWEEN PIPING AND SLEEVES OR CORE DRILLED FLOOR OPENINGS SHALL BE PACKED WITH THERMAFIBER AND SEALED TO RETAIN THE FIRE INTEGRITY OF THE WALLS AND FLOORS WITH A NON-HARDENING COMPOUND SIMILAR AND EQUAL TO DUXSEAL BY J.M. CLIPPER CO.

P. THE COMPLETE PLUMBING INSTALLATION, METHOD OF HANGING, TESTING, ETC. SHALL COMPLY WITH ALL PROVISIONS OF THE NEW YORK STATE PLUMBING CODE AND THE NEW YORK STATE ENERGY CONSERVATION CODE.

Q. ROUTING OF PIPING SHOWN ON DRAWINGS IS DIAGRAMMATIC ONLY. THE EXACT ROUTING MUST BE DETERMINED IN THE FIELD AND COORDINATED WITH ALL EXISTING CONDITIONS, I.E. STRUCTURAL, DUCTWORK, LIGHT FIXTURES, PIPING).

PLUMBING SYMBOL LIST

	CLEAN OUT DECK PLATE
	FLOOR DRAIN
	CHECK VALVE
	O.S & Y VALVE
	GATE VALVE
	PLUG VALVE
	BALL VALVE
S	SOLENOID VALVE
	VALVE WITH HOSE BIBB
	CLEANOUT
	TOP CONNECTION
	BOTTOM CONNECTION
	PIPE DROP
	PIPE UP
	PLUG OUTLET
	CAP
	SHOCK ABSORBER (S.A.)
	TRAP
	VACUUM BREAKER
	VACUUM BREAKER

PLUMBING DRAWING LIST

94	CONTROL HOUSE PLUMBING SYMBOLS & NOTES
95	CONTROL HOUSE PLUMBING PLANS
96	CONTROL HOUSE PLUMBING DETAILS

LEGEND

	SANITARY OR WASTE ABOVE FLOOR (SAN. OR W.)
	SANITARY OR WASTE BELOW FLOOR (SAN. OR W.)
	VENT PIPING (V.)
	COLD WATER (C.W.)
	HOT WATER (H.W.)
	CONNECT NEW PIPING TO EXISTING
H.B.	HOSE BIBB
C.O.D.P.	CLEANOUT DECKPLATE
C.O.	CLEANOUT
V.B.	VACUUM BREAKER
I.E.	INVERT ELEVATION
H.C.	HANDICAPPED
F.U.	FIXTURE UNIT
FD	FLOOR DRAIN
FS	FLOOR SINK
FFD	FUNNEL FLOOR DRAIN
G.I.	GREASE INTERCEPTOR
A.F.F.	ABOVE FINISHED FLOOR
H.C. W.C.	HANDICAPPED WATER CLOSET
LAV.	LAVATORY
	BALL VALVE
	CHECK VALVE

STATE OF MAINE
DEPARTMENT OF TRANSPORTATION

APROVED | DATE

COMMISSIONER:

CHIEF ENGINEER:

PROJECT INFORMATION

		SIGNATURE
PROGRAM	Bridge	
PROJECT MANAGER	Stephen Bodge	
DESIGNER	I3D, Inc.	P.E.NUMBER
CONSULTANT	I3D, Inc.	
PROJECT RESIDENT		DATE
CONTRACTOR		
PROJECT COMPLETION DATE		

SOUTH BRISTOL
GUT BRIDGE

CONTROL HOUSE
PLUMBING SYMBOLS & NOTES

SHEET NUMBER

96

OF 141

Filename $file$ Division: $wkgroup$ Username: $user$ Date: $date$

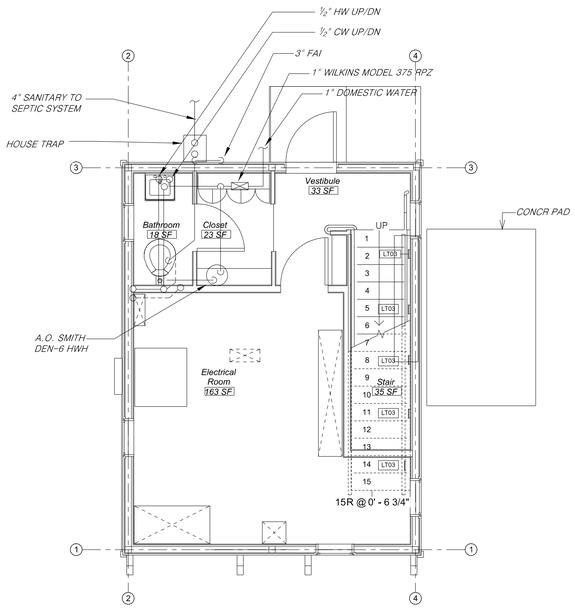

2. GROUND FLOOR (ELECTRICAL ROOM)

1/4" = 1'-0"

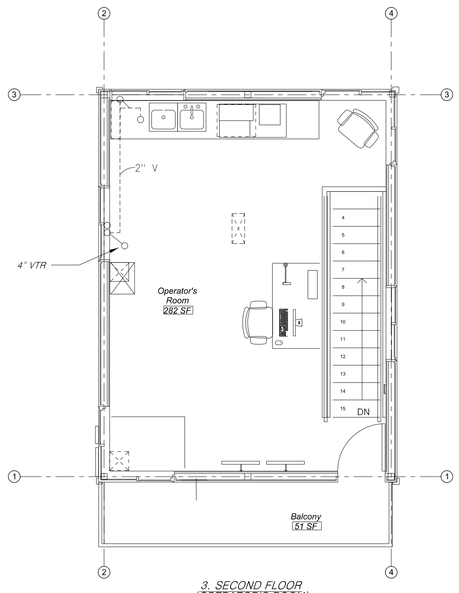

3. SECOND FLOOR (OPERATOR'S ROOM)

1/4" = 1'-0"

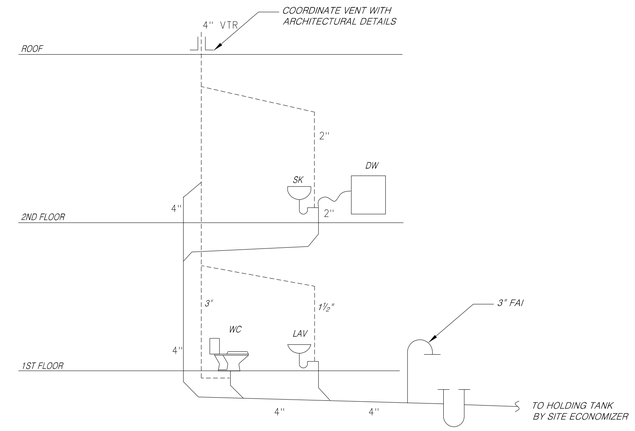

4 SANITARY RISER DIAGRAM

NOT TO SCALE

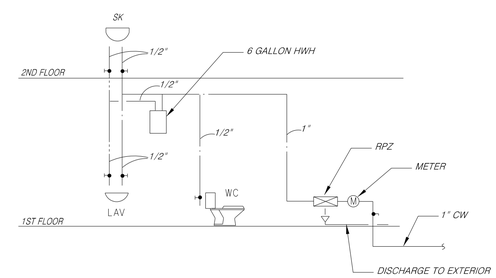

1 DOMESTIC WATER RISER DIAGRAM

NOT TO SCALE

STATE OF MAINE
DEPARTMENT OF TRANSPORTATION

APROVED | DATE

COMMISSIONER:

CHIEF ENGINEER:

SIGNATURE

P.E.NUMBER

DATE

PROJECT INFORMATION

PROGRAM	Bridge
PROJECT MANAGER	Stephen Bodge
DESIGNER	I3D. Inc
CONSULTANT	I3D. Inc
PROJECT RESIDENT	
CONTRACTOR	
PROJECT COMPLETION DATE	

SOUTH BRISTOL
GUT BRIDGE

CONTROL HOUSE
PLUMBING PLANS

SHEET NUMBER

97

OF 141

Filename $file$ Division: $wkgroup$ Username: $user$ Date: $date$

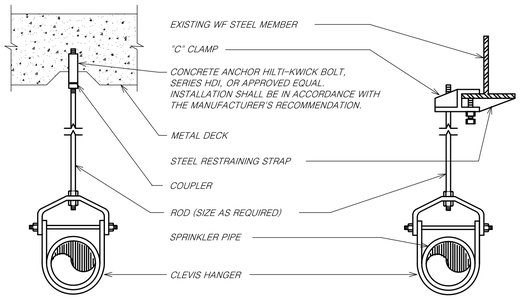

NOTES:

1. CLEVIS HANGERS REQUIRED ON PIPING LARGER THAN 1"
2. GENERAL PURPOSE HANGERS MAY BE USED ON 1" SPRINKLER PIPING ONLY.

4 TYPICAL HANGER DETAILS
NOT TO SCALE

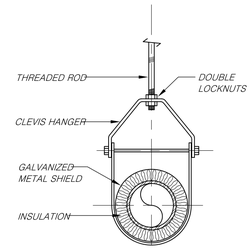

WITH INCOMPRESSIBLE INSULATING BLOCK AT HANGER		
PIPE DIAMETER	SHIELD LENGTH	SHIELD THICKNESS
UP TO 3"	6"	18 USSG
4" TO 6"	8"	16 USSG
8" & LARGER	12"	16 USSG

WITHOUT INCOMPRESSIBLE INSULATING BLOCK AT HANGER		
PIPE DIAMETER	SHIELD LENGTH	SHIELD THICKNESS
UP TO 3"	12"	18 USSG
4"	15"	16 USSG
5"	18"	16 USSG
6"	21"	16 USSG
8" & LARGER	24"	14 USSG

NOTE:
HANGER, ROD AND INSERT SHALL BE DIPPED IN ZINC CHROMATE PRIMER PRIOR TO INSTALLATION

5 TYPICAL INSULATED PIPE SUPPORT DETAIL
NOT TO SCALE

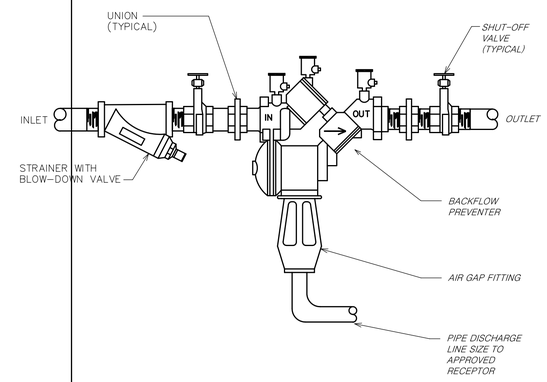

6 BACKFLOW PREVENTER (RPD)
NOT TO SCALE

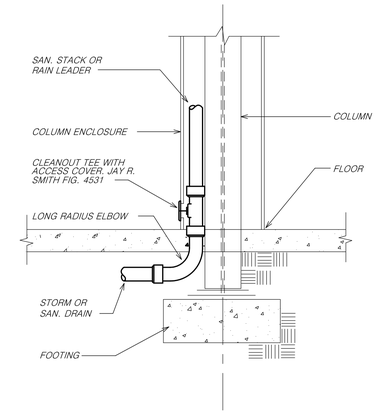

7 DETAIL OF LEADER OR SANITARY STACK BASE
NOT TO SCALE

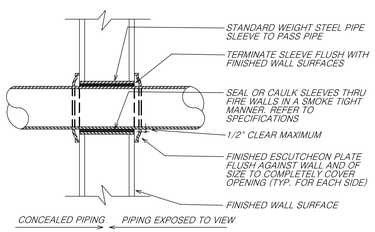

SLEEVES ANS ESCUTCHEONS
A. SLEEVES FOR PIPING THROUGH MASONRY WALLS SHALL BE SCHEDULE 40, STANDARD GALVANIZED STEEL PIPE. IN FRAMED PARTITIONS SHALL BE 20 GAUGE SHEET METAL. THE SPACE BETWEEN THE PIPE AND ITS SLEEVE SHALL NOT EXCEED ONE-HALF INCH. THE SLEEVE SHALL HAVE A SUFFICIENT LENGTH TO BE FLUSH WITH THE FINISHED WALL SURFACE.
B. EXPOSED PIPING PASSING THROUGH WALLS, FLOORS OR CEILING SHALL BE FITTED WITH CHROMIUM-PLATED CAST BRASS ESCUTCHEONS WITH FASTENING SET SCREWS.

CUTTING AND PATCHING
A. PIPING PASSING THROUGH WALLS SHALL HAVE A TRIM OPENING CUT NO GREATER THAN NECESSARY FOR THE INSTALLATION OF A SLEEVE SECURED THEREIN.
B. PIPING PASSING THROUGH CONCRETE FLOORS SHALL HAVE AN OPENING CORE DRILLED SO THAT THE SPACE BETWEEN THE OPENING AND THE PIPE SHALL NOT EXCEED ONE-HALF INCH.
C. ANNULAR SPACES BETWEEN PIPING AND SLEEVES OR CORE DRILLED FLOOR OPENINGS SHALL BE PACKED WITH MINERAL WOOL AND SEALED, TO RETAIN THE FIRE INTEGRITY OF THE WALLS AND FLOORS, WITH A NON-HARDENING COMPOUND SIMMILAR OR EQUAL TO DUXSEAL AS MANUFACTURED BY THE J.M. CLIPPER CORP.

3 TYPICAL OF PIPE INSTALLATION THRU RATED WALL
NOT TO SCALE

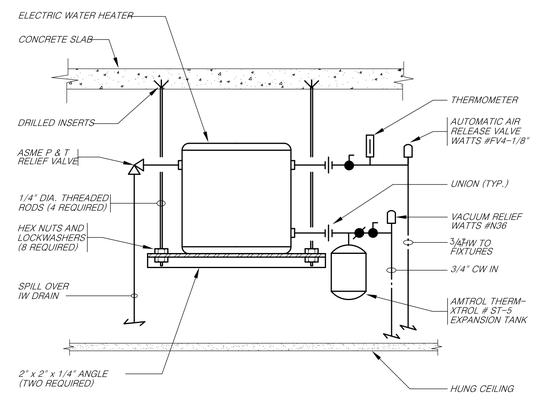

2 DOMESTIC WATER HEATER SUSPENDED FROM SLAB
NOT TO SCALE

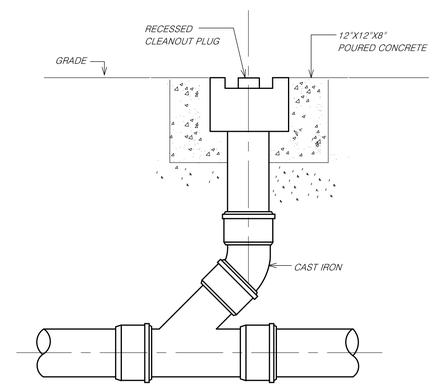

1 CLEANOUT DETAIL
NOT TO SCALE

HOT WATER HEATER SCHEDULE							
ITEM	QNT.	SERVICE	LOCATION	ELEMENT	TANK	WEIGHT	MANUFACTURER & MODEL NO.
HWH-1	1	GROUND FLOOR	GROUND FLOOR	1	6 GALLON	35#	A.O. SMITH 6 GPH @100° F RISE, 3.0 KW, 208/1
							6 YEAR TANK WARRANTY

ALTERNATE MFG- RUUD, RHEEM, STATE, BRADFORD WHITE

STATE OF MAINE
DEPARTMENT OF TRANSPORTATION

		DATE
APROVED		
COMMISSIONER:		
CHIEF ENGINEER:		

		SIGNATURE
PROJECT INFORMATION		
PROGRAM	Bridge	
PROJECT MANAGER	Stephen Bodge	
DESIGNER	I3D, Inc.	P.E.NUMBER
CONSULTANT	I3D, Inc.	
PROJECT RESIDENT		
CONTRACTOR		DATE
PROJECT COMPLETION DATE		

SOUTH BRISTOL
GUT BRIDGE

CONTROL HOUSE
PLUMBING DETAILS

SHEET NUMBER
98
OF 141

Filename $file$ Division: $wkgroup$ Username: $user$ Date: $date$

CONTROL ELECTRICAL NOTES

1. DRAWINGS ARE DIAGRAMMATIC AND INDICATE THE GENERAL ARRANGEMENT OF SYSTEMS AND WORK. CONTRACTOR SHALL FURNISH ALL NECESSARY OUTLETS, SUPPORTS, FITTINGS AND ACCESSORIES TO FULFILL APPLICABLE CODES, REGULATIONS, BUILDING STANDARDS AND THE BEST PRACTICES OF THE TRADE FOR INSTALLATION OF ELECTRICAL WORK.

2. THE EXACT LOCATION AND ELEVATION OF ALL LIGHTING FIXTURES, RECEPTACLES, ETC. SHALL BE DETERMINED FROM THE ARCHITECTURAL DRAWINGS.

3. THE CONTRACTOR SHALL COORDINATE WITH THE GENERAL CONTRACTOR, THE ARCHITECT AND THE OWNER PRIOR TO SUBMISSION OF BID TO DETERMINE WHAT WORK MUST BE PERFORMED AFTER NORMAL BUSINESS HOURS. UNLESS OTHERWISE DIRECTED ANY NOISY WORK (CHOPPING, CORE DRILLING, HAMMERING, ETC.) AND BUILDING POWER INTERRUPTIONS SHALL BE PERFORMED OUTSIDE OF NORMAL BUSINESS HOURS. CONFIRM NORMAL BUSINESS HOURS WITH BUILDING MANAGEMENT.

5. ALL CONTROL WIRING ASSOCIATED WITH MECHANICAL EQUIPMENT IS THE RESPONSIBILITY OF THE MECHANICAL CONTRACTOR.

6. OPENINGS AROUND ELECTRICAL PENETRATIONS THROUGH FIRE RESISTANCE RATED WALLS, PARTITIONS, FLOORS, OR CEILINGS SHALL BE FIRE STOPPED USING APPROVED METHODS. ALL SLEEVES MUST HAVE BUSHINGS. SEALANT SHALL BE 3 HOUR FIRE BARRIER #CP-25 (NO LESS THAN 3" THICK BACKED UP WITH MINERAL WOOL).

7. PREPARE "AS-BUILT" DRAWINGS SHOWING WIRE SIZE, CIRCUIT NUMBERING, CIRCUIT ROUTING, EQUIPMENT LOCATIONS AND ELECTRICAL WORK AS ACTUALLY INSTALLED.

8. ALL WORK SHALL OCCUR BETWEEN THE HOURS OF 9:00AM AND 5:00PM MONDAY THROUGH FRIDAY. NO WORK SHALL BE PERFORMED ON SATURDAYS, SUNDAYS OR HOLIDAYS WITHOUT AN OVERTIME WORK PERMIT AND PRE APPROVAL BY THE OWNER.

ABBREVIATIONS

AWG	AMERICAN WIRE GAUGE	EOL	END OF LINE DEVICE	N.T.S.	NOT TO SCALE
C	CONDUIT	GFI	GROUND FAULT INTERRUPTER	P	POLES
CB	CIRCUIT BREAKER	I.G.	ISOLATED GROUND	PNL	PANEL
CKT.	CIRCUIT	MCB	MAIN CIRCUIT BREAKER	TYP	TYPICAL
EC	ELECTRICAL CONTRACTOR	MLO	MAIN LUGS ONLY	UON	UNLESS OTHERWISE NOTED
E.G.	EQUIPMENT GROUND	MTD	MOUNTED	WP	WEATHERPROOF
EM	EMERGENCY	NL	NIGHT LIGHT	Ø/PH	PHASE
CONV	CONVENIENCE	PC	PERSONEL COMPUTER	RECEP	RECEPTACLE

ELECTRICAL DRAWING LIST

97	.....	CONTROL HOUSE ELECTRICAL SYMBOL LISTS & NOTES
98	.....	CONTROL HOUSE ELECTRICAL POWER AND LIGHTING PLANS

GENERAL ELECTRICAL SYMBOL LIST

	SURFACE MOUNTED PANELBOARD
	FLUSH MOUNTED PANELBOARD
J	JUNCTION BOX
100	UNFUSED DISCONNECT SWITCH 3 POLE, 250 V INDICATES SIZE
	FUSED DISCONNECT SWITCH 3 POLE, 250 V
	CONDUIT TURNING UP
	CONDUIT TURNING DOWN
	NEW CONDUIT, WIRING OR EQUIPMENT TO BE INSTALLED
	EXISTING FEEDER / EQUIPMENT TO REMAIN, U.O.N.
3 / 3,4 / 3,4,5	HOMERUN TO DESIGNATED PANEL
	MOTOR (PROVIDED BY OTHERS, WIRED BY ELECTRICAL CONTRACTOR)
S_T	SWITCH WITH THERMAL OVERLOAD PROTECTION
#	SINGLE POLE SWITCH (# DENOTES ZONE INTERRUPTION NUMBER) EX-EXISTING
S	SMOKE DETECTOR

POWER-COMM. LEGEND

	NEW DUPLEX OUTLET @ 15" A.F.F. U.O.N.
GFI	G.F.I.C. OUTLET @15" A.F.F. U.O.N.
CA	NEW POWER AND DATA/COMM. RECPT. FOR CAMERAS TO BE COORDINATED WITH OWNER- N.I.C.
	DUPLEX CEILING MOUNTED RECEPTACLE
	TELEPHONE OUTLET REFER TO TELECOMMUNICATIONS DRAWINGS
	TELE/DATA OUTLET
+XX"	OUTLET ELEVATION (IN.) A.F.F.
	TELE/DATA & POWER OUTLET @ FLOOR

STATE OF MAINE
DEPARTMENT OF TRANSPORTATION

APROVED — DATE

COMMISSIONER:

CHIEF ENGINEER:

SIGNATURE

P.E.NUMBER

DATE

PROJECT INFORMATION

PROGRAM	Bridge
PROJECT MANAGER	Stephen Bodge
DESIGNER	I3D, Inc.
CONSULTANT	I3D, Inc.
PROJECT RESIDENT	
CONTRACTOR	
PROJECT COMPLETION DATE	

SOUTH BRISTOL
GUT BRIDGE

CONTROL HOUSE
ELECTRICAL SYMBOLS & NOTES

SHEET NUMBER
99
OF 141

Filename $file$ Division: $wkgroup$ Username: $user$ Date: $date$

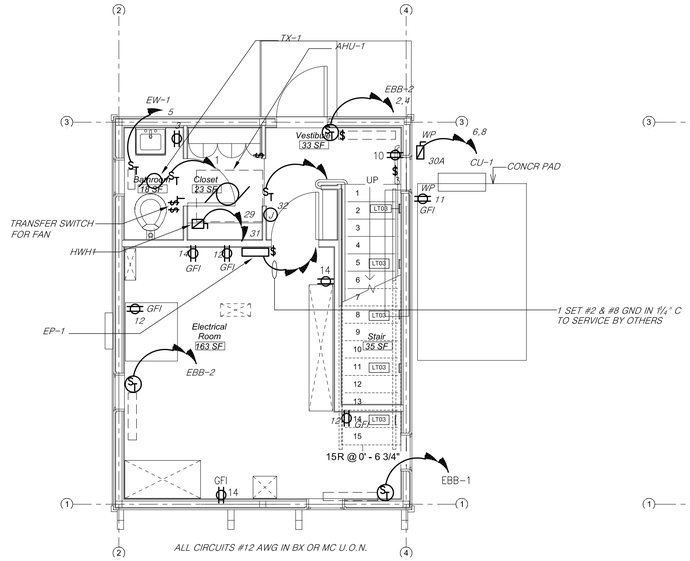

3. POWER
GROUND FLOOR
(ELECTRICAL ROOM)

1/4" = 1'-0"

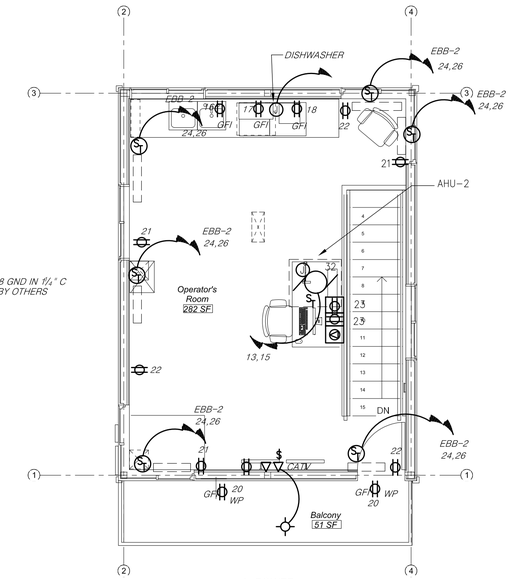

4. POWER
SECOND FLOOR
(OPERATOR'S ROOM)

1/4" = 1'-0"

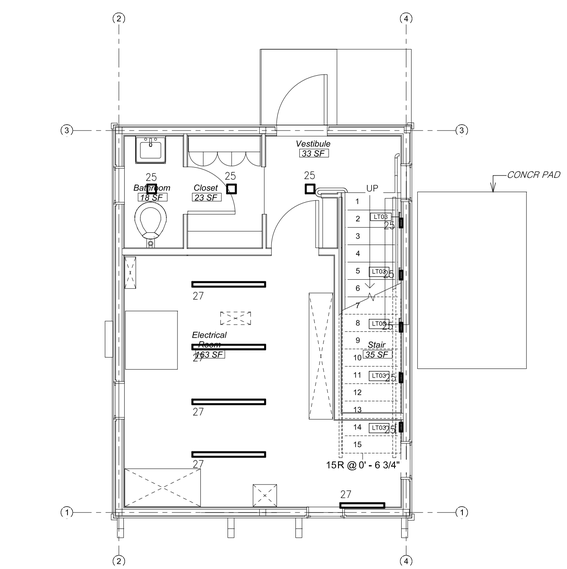

2. LIGHTING
GROUND FLOOR
(ELECTRICAL ROOM)

1/4" = 1'-0"

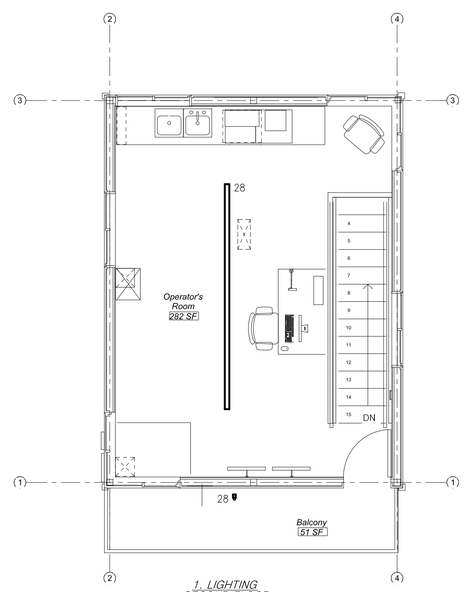

1. LIGHTING
SECOND FLOOR
(OPERATOR'S ROOM)

1/4" = 1'-0"

PANEL NO. _____ SECTION _____ GUT BRIDGE
VOLTS _____ PH 3 W _____ G _____
MAIN CB _____ BUS _____ MIN. INTERRUPTING RATING _____ SYMM.

CKT. NO.	TRIP AMPS	EQUIPMENT	LOAD KW	PER PHASE (VA) A	B	C	LOAD KW	EQUIPMENT	TRIP AMPS	CKT. NO.
1	15	TX-1	0.2	0.7			0.5	EBB-2	15	2
3	20	BATH GFI	0.8		1.3		0.5	ENTRY	2P	4
5	20	EW-1	1.5			3.5	2.0	CU-1	30	6
7	20	EBB-1	0.6	2.3			2.0		2P	8
9	2P	ELEC ROOM	0.6		1.0		0.4	CONV. RECEP-1ST	15	10
11	20	OUTDOOR GFI	0.8			1.6	0.8	ELEC ROOM CONV.	20	12
13	20	AHU-1&2	0.3	1.1			0.8	ELEC ROOM CONV.	20	14
15	2P		0.3		1.5		1.2	KITCHEN COUNTER	20	16
17	20	KITCHEN COUNTER	1.2			2.4	0.8	MICROWAVE	20	18
19	20	DISHWASHER	1.2	2.0			1.2	BALCONY GFI	20	20
21	20	OPERATORS CONV	1.2		2.4		1.2	OPERATORS CONV.	20	22
23	20	OPERATORS WORKSTATION	1.0			2.5	1.5	EBB-2	20	24
25	15	1ST FLOOR LIGHTS	0.5	2.0			1.5		2P	26
27	15	ELECTRIC ROOM LIGHTS	0.5		1.0		0.5	2ND FLOOR LIGHTS	15	28
29	20	HWH	1.5			2.0	0.5	EXTERIOR LIGHTS	15	30
31	2P		1.5	1.5			0.8	CONTROLS COND. PUMP	15	32
33	15	AIR HORN	2		2.8		0.8	MACHINERY RECEPTACLES	15	34
35	2P		2			2.1	0.1	SPETIC TANK OVERFLOW ALARM	15	36
37	15	CCTV POWER	2.4	2.6			0.2	PIT SUMP PUMPS	15	38
39	15	NORTH GATE FLASHERS/GONGS	1.2		1.4		0.2	MACHINERY SUMP PUMPS	15	40
41	15	NORTH GATE REC./HEATERS	0.4			0.4		CISTERN PUMPS		42
TOTAL LIGHTING		2.0 x 1.0 DEM=	2.0	TOTAL VA BY PHASE	12.2	11.4	13.5	TOTAL DEMAND	22.6 x 1.25 SPARE=	28.3
TOTAL RECEPTACLES		25.8 1.5X DEM=	20.6					TOTAL LOAD	28.3 KVA	78.6 AMPS

STATE OF MAINE
DEPARTMENT OF TRANSPORTATION

APROVED — DATE

COMMISSIONER:

CHIEF ENGINEER:

SIGNATURE

P.E.NUMBER

DATE

PROJECT INFORMATION

PROGRAM	Bridge
PROJECT MANAGER	Stephen Bodge
DESIGNER	I3D, Inc.
CONSULTANT	I3D, Inc.
PROJECT RESIDENT	
CONTRACTOR	
PROJECT COMPLETION DATE	

SOUTH BRISTOL
GUT BRIDGE

CONTROL HOUSE
POWER /LIGHTING PLAN & SCHEDULE

SHEET NUMBER

100

OF 141

Filename $file$ Division: $wkgroup$ Username: $user$ Date: $date$

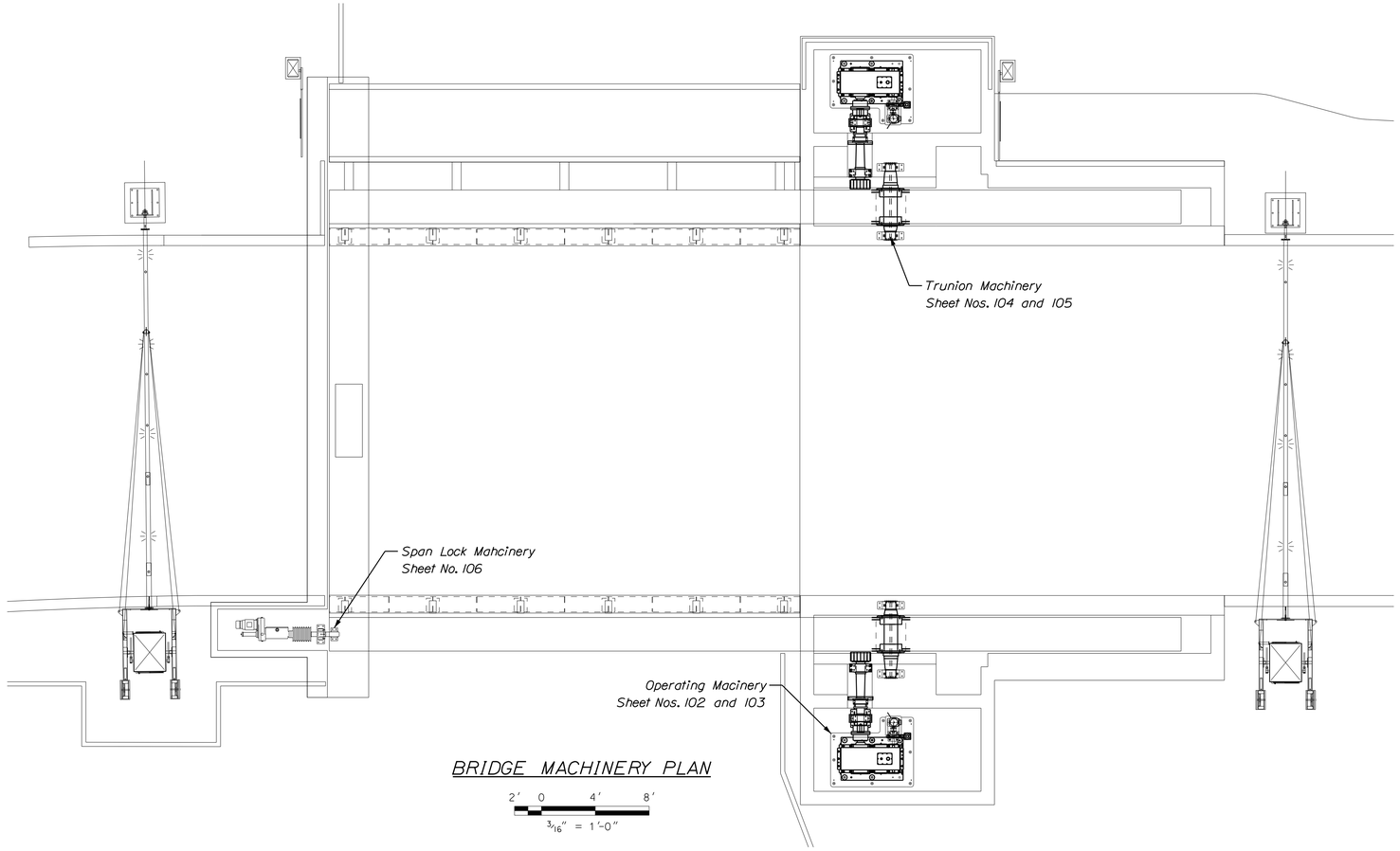

BRIDGE MACHINERY PLAN

2' 0 4' 8'
3/16" = 1'-0"

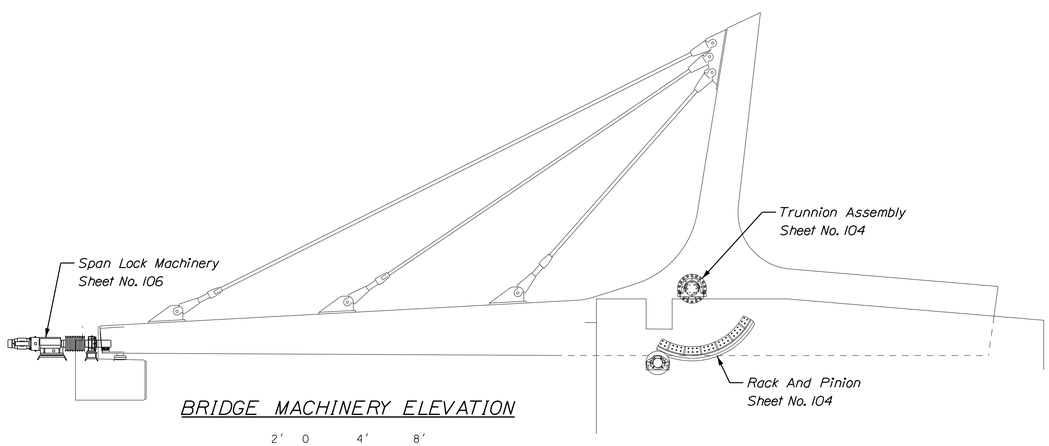

BRIDGE MACHINERY ELEVATION

2' 0 4' 8'
3/16" = 1'-0"

General Machinery Notes:

Refer to the following Technical Special Provision Sections:

1. Bridge Operating Machinery 860.10
2. Trunnion Machinery 860.20
3. Span Lock Machinery 860.30
4. General Requirements for Machinery 860.40

Work to be done in accordance with the 2007 LRFD Standard Specifications for Movable Highway Bridges published by the American Association of State Highway and Transportation Officials, 2008, 2010 and 2012 revisions, unless otherwise shown on plans.

Planning and Coordination:

1. All rigging, scaffolding, measurements, alignment, and installation tools required for the job are considered part of the work. It is anticipated that several iterations will be required to achieve final alignment and assembly of machinery. The final machinery installment shall result in the proper function through out the complete range of operation.

2. The contractor shall prepare and submit detailed shop and assembly drawings based on the contractor drawings and specifications for approval. It will be the contractor's responsibility to detail, coordinate and verify the relationship and assembly of all parts for a complete working system. All required machining, special shimming, lubrication, panting, testing, and assembly shall be considered part of the work.

Dimensions and Workmanship:

1. Machinery dimensions shown on drawings are dimensions after machining.

2. Details shown herein with dimensions dependant on manufactured items are to be sized based on actual manufactured items purchased by the contractor.

3. Model numbers and details of motors, couplings, reducers, and other standard components are based on manufacturer's catalog data current at the time the plans were prepared. Mention of a manufacturer's name or model number does not represent a preference, but is used to set a standard.

4. Contractor shall field verify dimensions with existing conditions, and coordinate mechanical work with structural and electrical work.

5. The edges and corners of all machinery parts shall be detailed and machined with suitable fillets and chamfers. In general the minimum edge or corner, radius or chamfers shall be 1/8" if the part thickness is less than 1" and 1/4" if equal to or greater, unless otherwise noted. In the case of mating parts, edge and corner clearance allowance shall be provided. Such details shall be shown on shop drawings.

Operation Performance and Parameters

Total time of span operation: 80 sec. (each direction)
Time of span accel/decel: 5 sec.
Time of span lock drive/retract: 6 sec. (each direction)
Span drive total speed reduction: 9760
Maximum permissible wind speed during span normal operation: 60 mph
Emergency span operation total time: 160 sec.
(each direction using one drive)

STATE OF MAINE
DEPARTMENT OF TRANSPORTATION

APPROVED | DATE

COMMISSIONER:

CHIEF ENGINEER:

SIGNATURE

13196
P.E. NUMBER

DATE

PROJECT INFORMATION

PROGRAM	BRIDGE
PROJECT MANAGER	STEPHEN BODGE
DESIGNER	HARDESTY & HANOVER
CONSULTANT	HARDESTY & HANOVER
PROJECT RESIDENT	
CONTRACTOR	
PROJECT COMPLETION DATE	

SOUTH BRISTOL
GUT BRIDGE

BRIDGE MACHINERY
LAYOUT AND NOTES

SHEET NUMBER

101

OF 141

Filename: ...\101_Bridge_Machinery_Layout_and_Notes.dgn Division: BRIDGE Username: common Date:1/29/2014

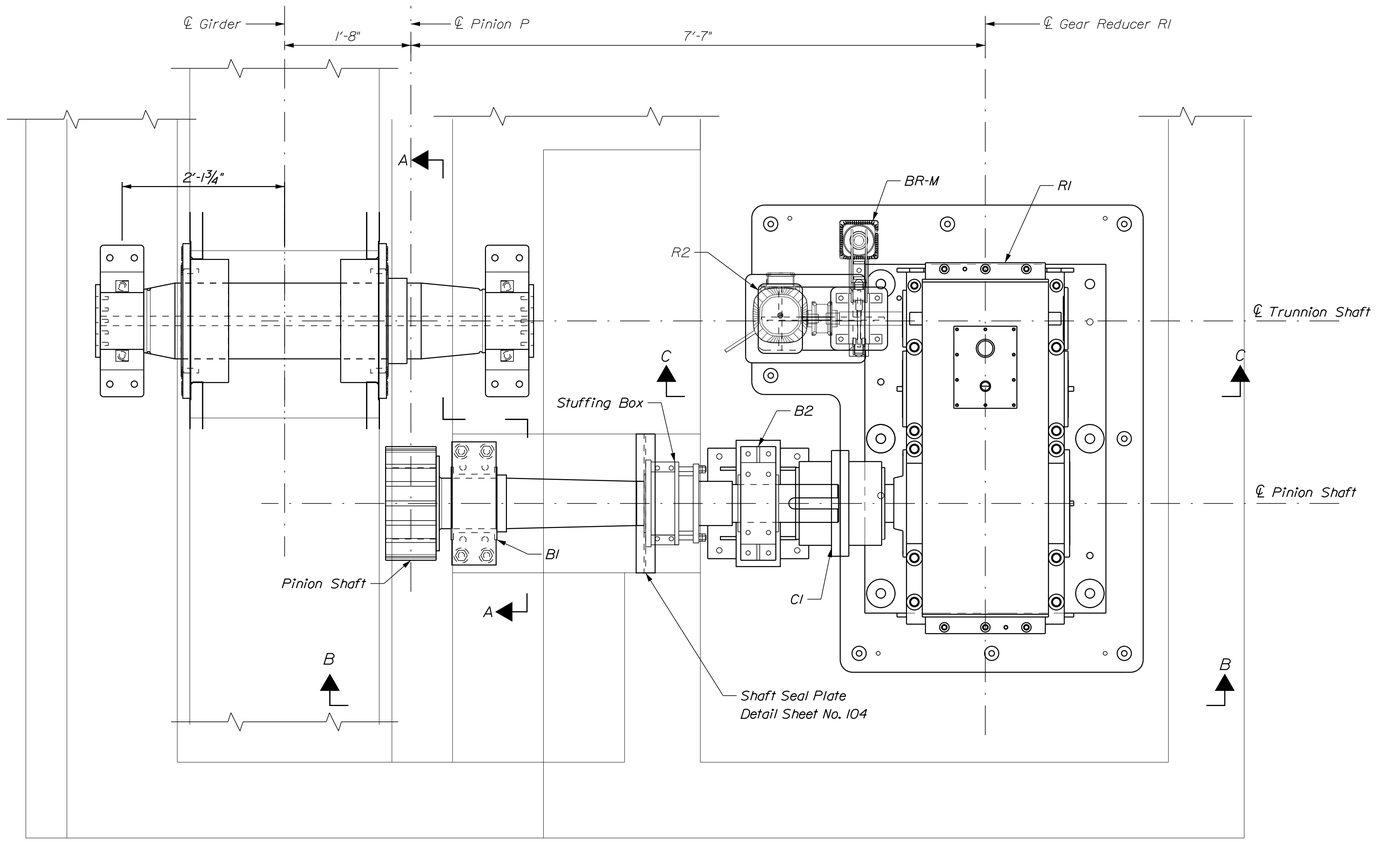

OPERATING MACHINERY - PLAN VIEW

1' 6" 0 1' 2'
1" = 1'-0"

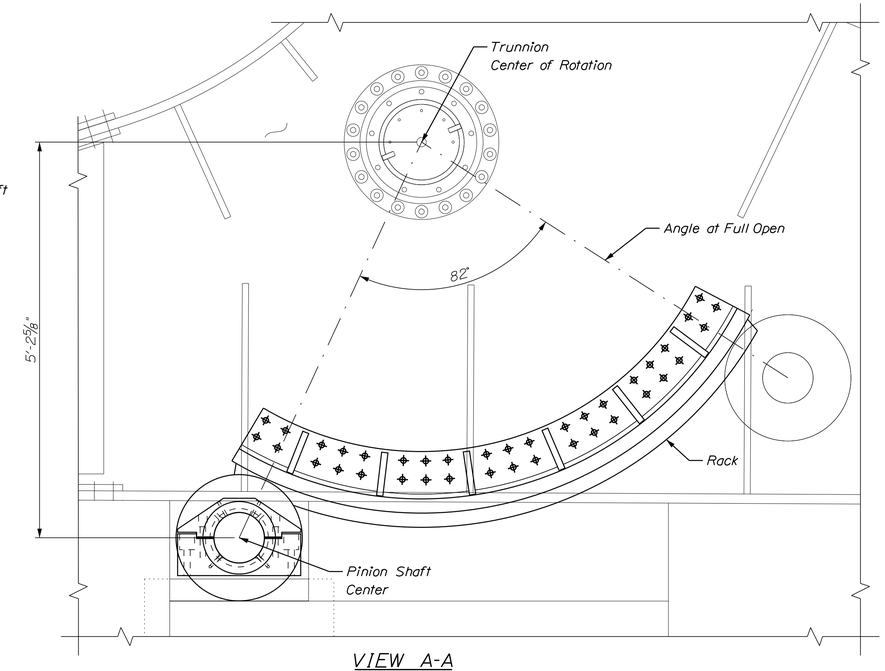

VIEW A-A

1' 6" 0 1' 2'
1" = 1'-0"

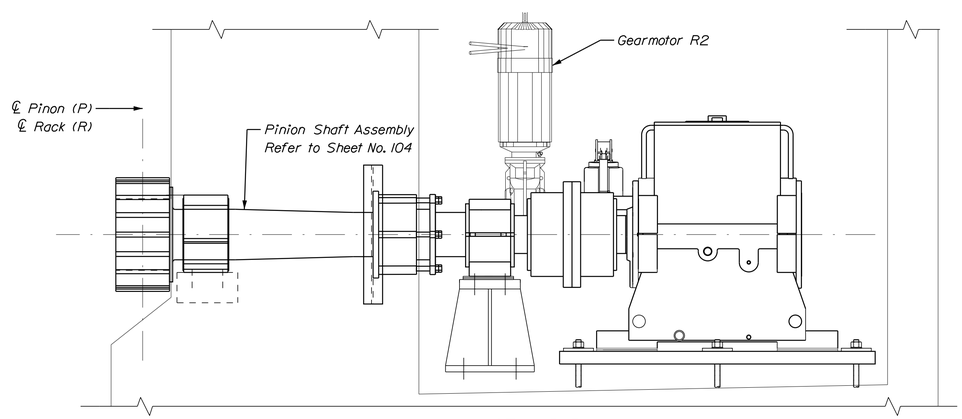

VIEW B-B

1' 6" 0 1' 2'
1" = 1'-0"

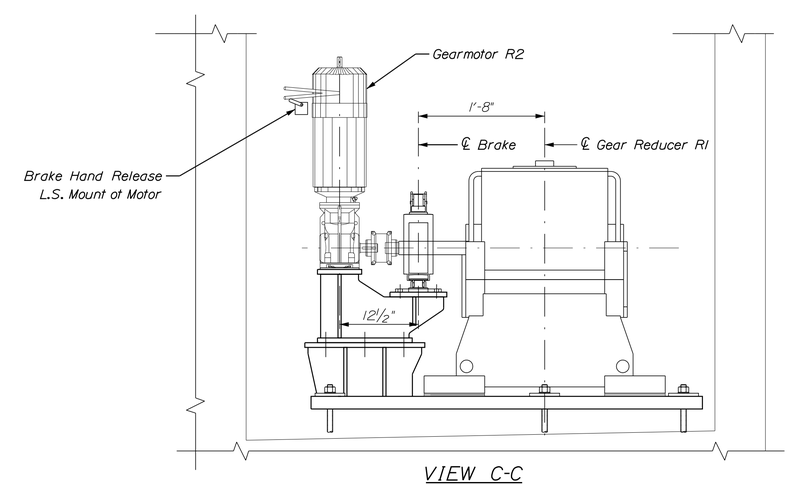

VIEW C-C

1' 6" 0 1' 2'
1" = 1'-0"

STATE OF MAINE
DEPARTMENT OF TRANSPORTATION

APPROVED | DATE

COMMISSIONER:

CHIEF ENGINEER:

SIGNATURE

13196
P.E. NUMBER

DATE

PROJECT INFORMATION

PROGRAM	BRIDGE
PROJECT MANAGER	STEPHEN BODGE
DESIGNER	HARDESTY & HANOVER
CONSULTANT	HARDESTY & HANOVER
PROJECT RESIDENT	
CONTRACTOR	
PROJECT COMPLETION DATE	

SOUTH BRISTOL
GUT BRIDGE

OPERATING MACHINERY ASSEMBLY

SHEET NUMBER

102

OF 141

Filename: ...\102_Operating_Machinery_Assembly.dgn Division: BRIDGE Username: common Date:1/29/2014

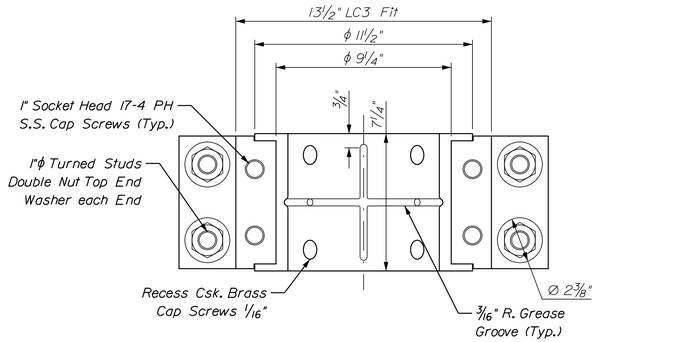

BEARING CAP REMOVED

0 3" 6"
3" = 1'-0"

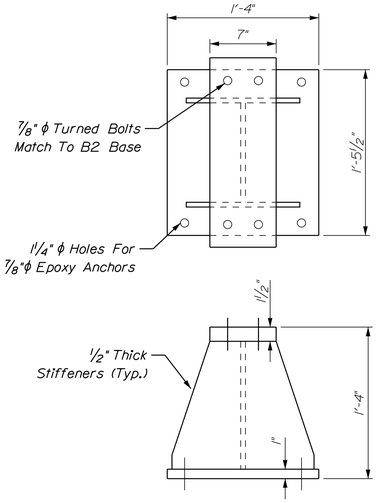

B2-BEARING SUPPORT

1' 9" 6" 3" 0 1'
1½" = 1'-0"

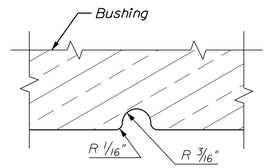

TYPICAL GREASE GROOVE DETAIL

Full Scale

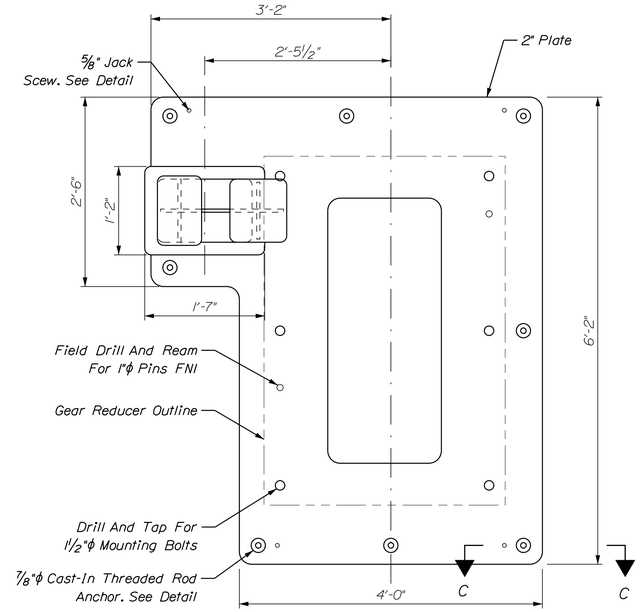

PLAN VIEW

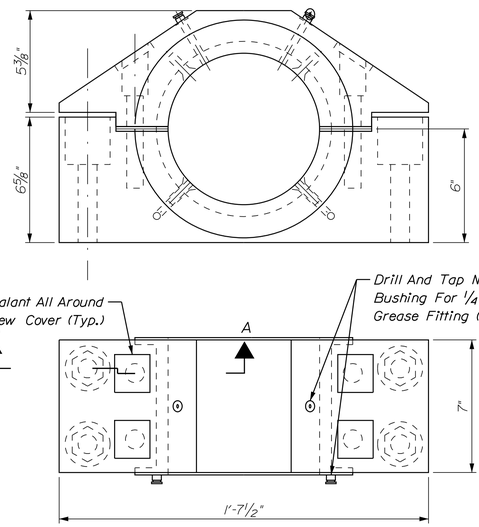

BI-BEARING DETAIL

0 3" 6"
3" = 1'-0"

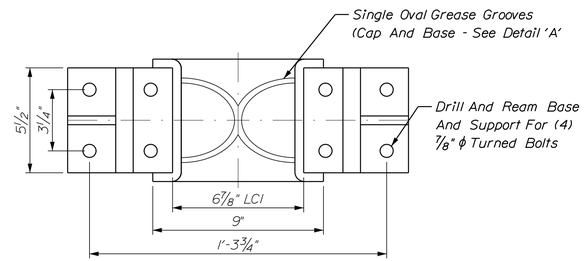

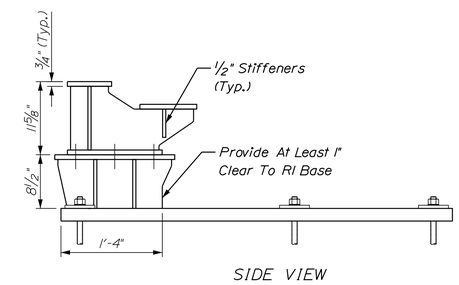

SIDE VIEW

GEAR REDUCER MOUNTING PLATE

1' 6" 0 1' 2'
1" = 1'-0"

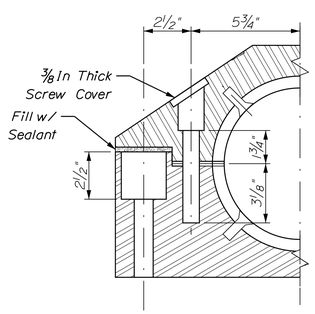

SECTION A-A

0 3" 6"
3" = 1'-0"

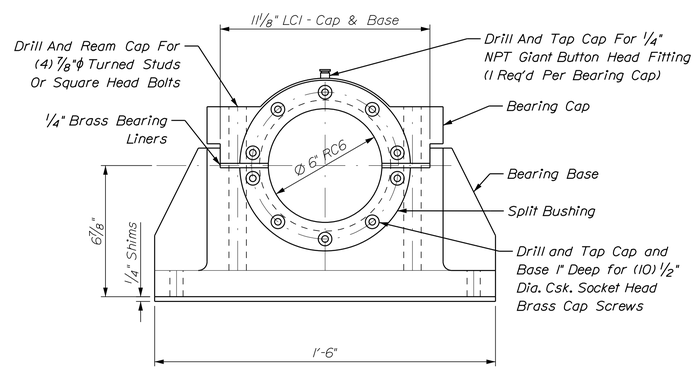

B2-BEARING DETAIL

0 3" 6"
3" = 1'-0"

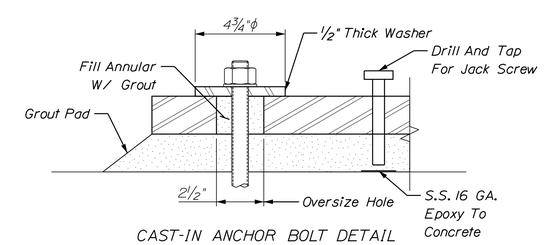

CAST-IN ANCHOR BOLT DETAIL

SECTION C-C

0 3" 6"
3" = 1'-0"

STATE OF MAINE
DEPARTMENT OF TRANSPORTATION

APPROVED | DATE
COMMISSIONER:
CHIEF ENGINEER:

PROJECT INFORMATION

PROGRAM	BRIDGE	SIGNATURE	
PROJECT MANAGER	STEPHEN BODGE		
DESIGNER	HARDESTY & HANOVER	13196	P.E. NUMBER
CONSULTANT	HARDESTY & HANOVER		
PROJECT RESIDENT		DATE	
CONTRACTOR			
PROJECT COMPLETION DATE			

SOUTH BRISTOL
GUT BRIDGE

OPERATING MACHINERY DETAILS

SHEET NUMBER
103
OF 141

Filename: ...\103_Operating_Machinery_Details.dgn Division: BRIDGE Username: common Date:1/29/2014

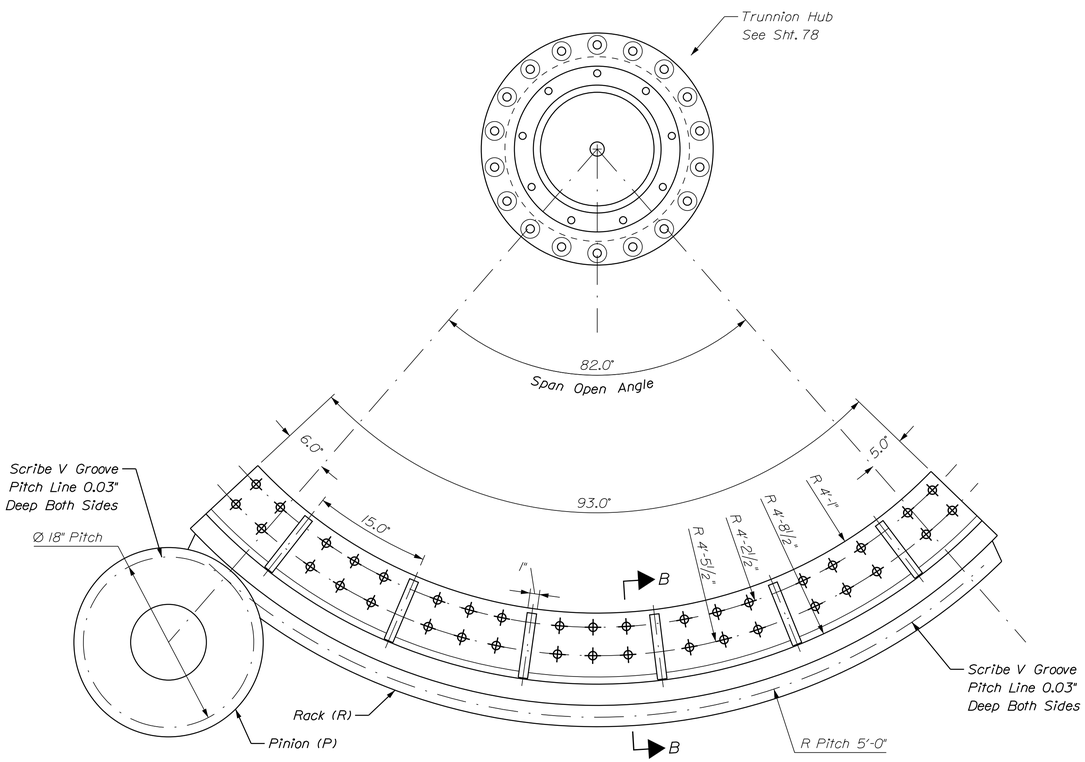

RACK AND PINION DETAIL

1' 9" 6" 3" 0 1'

1½" = 1'-0"

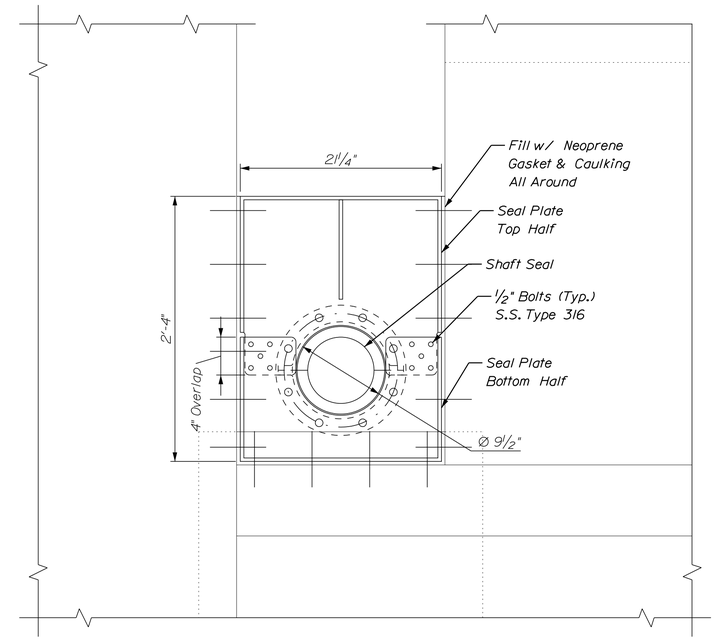

SHAFT SEAL PLATE DETAIL

1' 9" 6" 3" 0 1'

1½" = 1'-0"

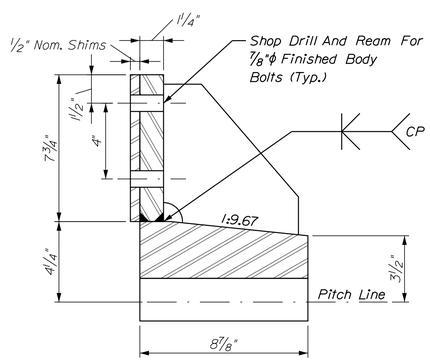

SECTION B-B

0 3" 6"

3" = 1'-0"

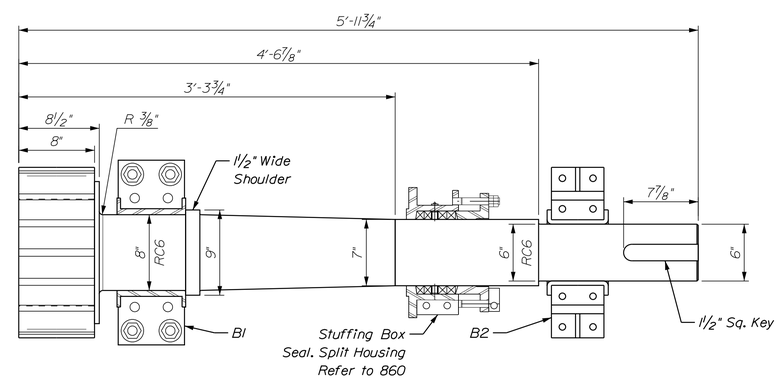

PINION SHAFT DETAIL

1' 9" 6" 3" 0 1'

1½" = 1'-0"

STATE OF MAINE
DEPARTMENT OF TRANSPORTATION

APPROVED | DATE

COMMISSIONER:

CHIEF ENGINEER:

PROJECT INFORMATION

PROGRAM	BRIDGE	
PROJECT MANAGER	STEPHEN BODGE	SIGNATURE
DESIGNER	HARDESTY & HANOVER	13196
CONSULTANT	HARDESTY & HANOVER	P.E. NUMBER
PROJECT RESIDENT		
CONTRACTOR		DATE
PROJECT COMPLETION DATE		

SOUTH BRISTOL
GUT BRIDGE

TRUNNION ASSEMBLY, RACK
AND PINION

SHEET NUMBER

104

OF 141

Filename: ...\104_Trunnion_Assembly_Rack_and_Pinion.dgn Division: BRIDGE Username: common Date:1/29/2014

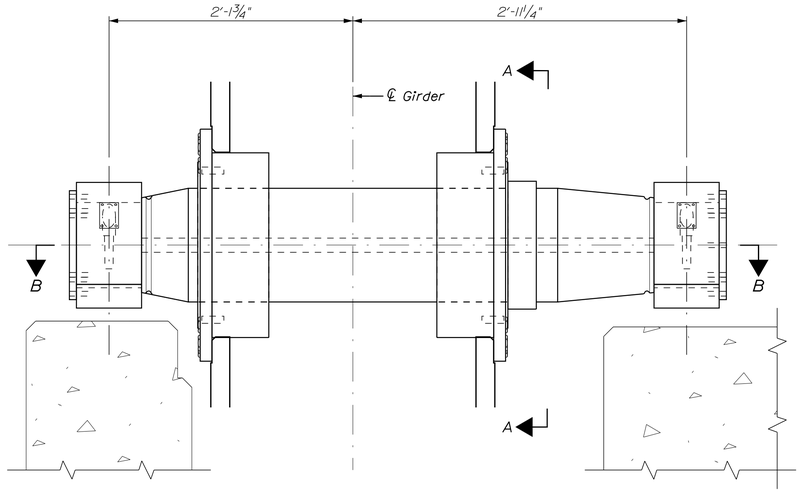

TRUNNION BEARING ASSEMBLY

1' 9" 6" 3" 0 1'
1 1/2" = 1'-0"

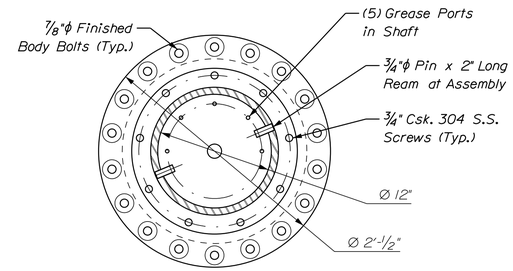

SECTION A-A

1' 9" 6" 3" 0 1'
1 1/2" = 1'-0"

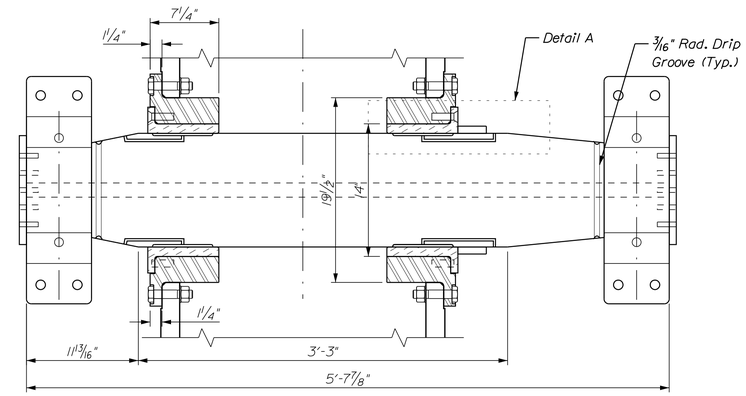

SECTION B-B

1' 9" 6" 3" 0 1'
1 1/2" = 1'-0"

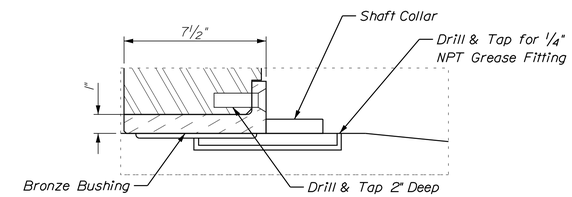

DETAIL A

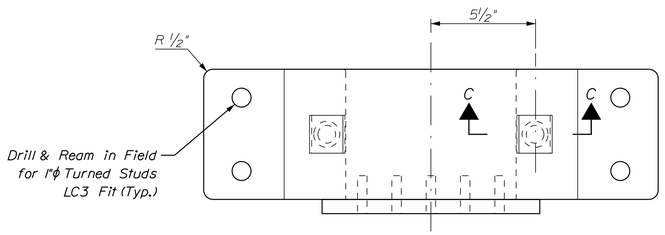

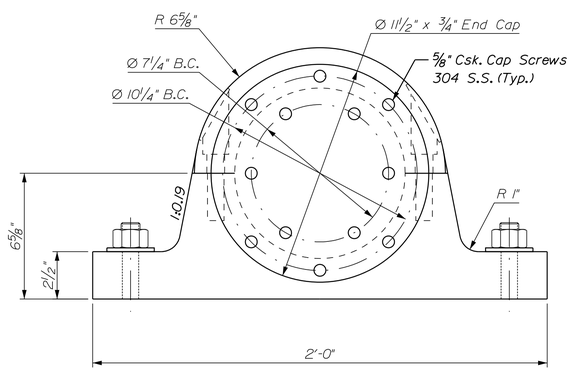

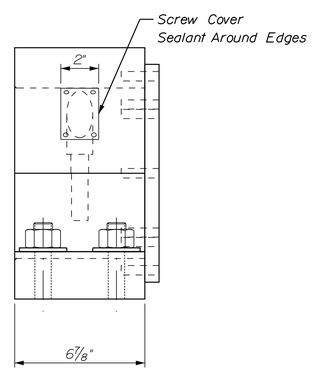

TRUNNION PEDESTAL

0 3" 6"
3" = 1'-0"

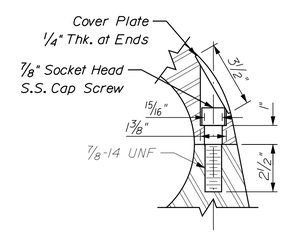

SECTION DETAIL C-C

0 3" 6"
3" = 1'-0"

STATE OF MAINE
DEPARTMENT OF TRANSPORTATION

APPROVED | DATE

COMMISSIONER:

CHIEF ENGINEER:

SIGNATURE

13196
P.E. NUMBER

DATE

PROJECT INFORMATION

PROGRAM	BRIDGE
PROJECT MANAGER	STEPHEN BODGE
DESIGNER	HARDESTY & HANOVER
CONSULTANT	HARDESTY & HANOVER
PROJECT RESIDENT	
CONTRACTOR	
PROJECT COMPLETION DATE	

SOUTH BRISTOL
GUT BRIDGE

TRUNNION BEARING DETAILS

SHEET NUMBER
105
OF 141

Filename: ...\105_Trunnion_Assembly_Details.dgn Division: BRIDGE Username: common Date:1/29/2014

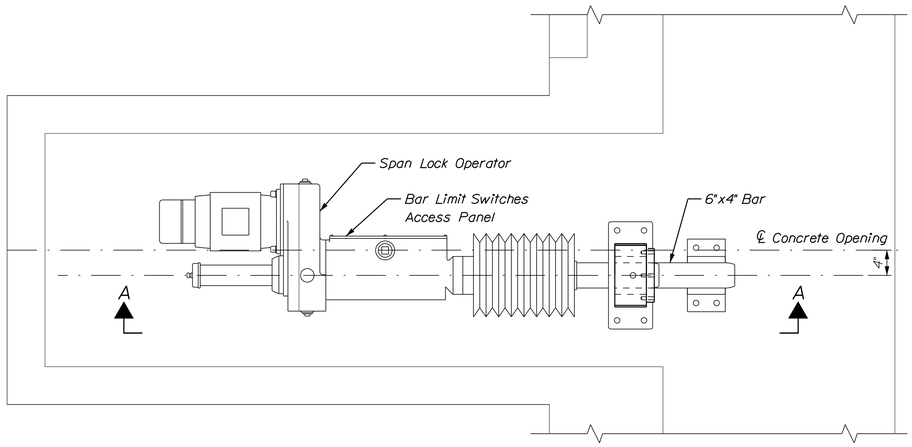

PLAN VIEW

1' 6" 0 1' 2'
1" = 1'-0"

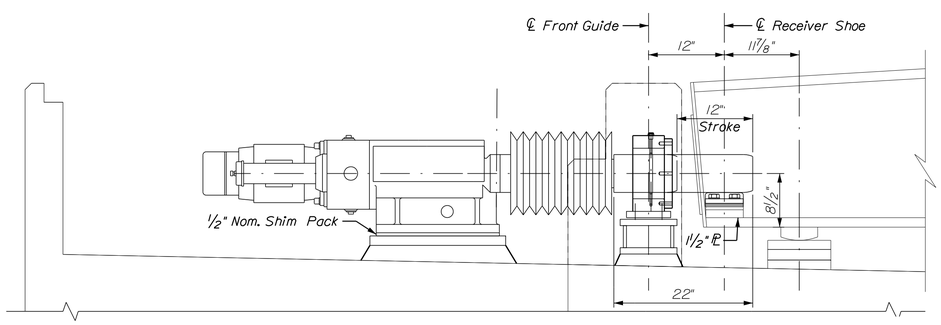

ELEVATION A-A

1' 6" 0 1' 2'
1" = 1'-0"

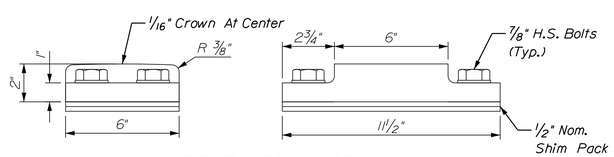

RECEIVER SHOE

0 3" 6"
3" = 1'-0"

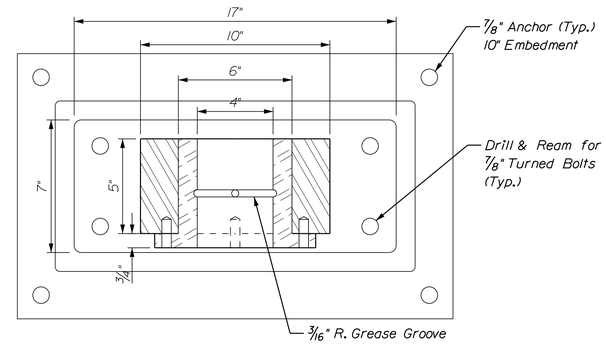

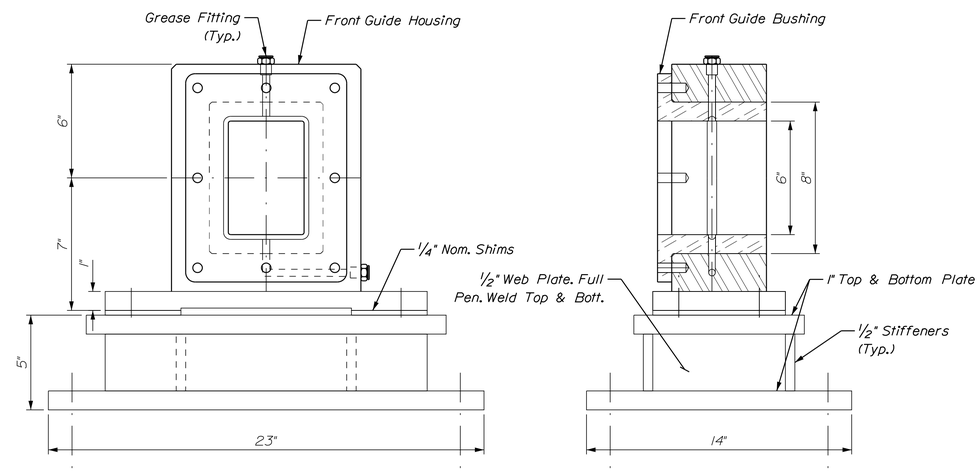

FRONT LOCK BAR GUIDE ASSEMBLY

0 3" 6"
3" = 1'-0"

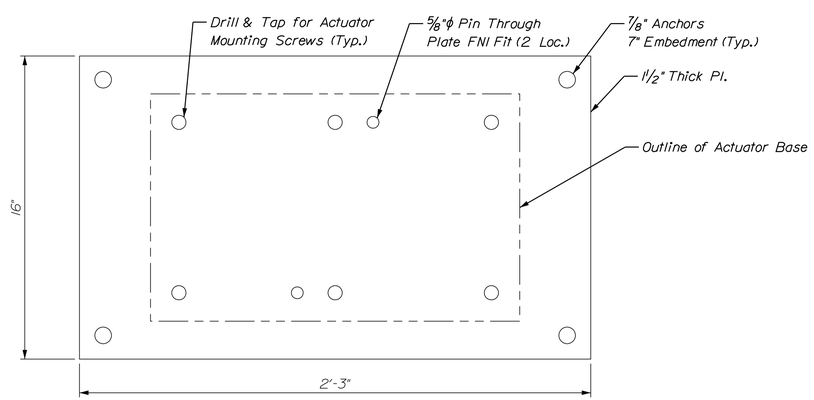

ACTUATOR MASONRY PLATE

0 3" 6"
3" = 1'-0"

STATE OF MAINE
DEPARTMENT OF TRANSPORTATION

APPROVED | DATE
COMMISSIONER:
CHIEF ENGINEER:

PROJECT INFORMATION		SIGNATURE
PROGRAM	BRIDGE	
PROJECT MANAGER	STEPHEN BODGE	
DESIGNER	HARDESTY & HANOVER	13196 P.E. NUMBER
CONSULTANT	HARDESTY & HANOVER	
PROJECT RESIDENT		DATE
CONTRACTOR		
PROJECT COMPLETION DATE		

SOUTH BRISTOL
GUT BRIDGE

LOCK MACHINERY ASSEMBLY AND DETAILS

SHEET NUMBER
106
OF 141

Filename: ...\106_Lock_Mach_Assembly_and_Details.dgn Division: BRIDGE Username: common Date:1/29/2014

TABLE OF OPERATING MACHINERY OPEN GEARING

MARK	RATIO	QTY.	DESCRIPTION		TORQUE RATING	MATERIAL
RACK (R)	6.67	2	1" Diametral Ditch Full Depth 20° Involute	30 Teeth 8.5" Face Width 60.000" Pitch Rad.	5.270 In-Kips Output	AISI 4340 Q And T (Min. 330 BHN)
PINION (P)		2		18 Tteeth 8.0" Face Width 18.000" Pitch Dia.		AISI 4340 Q And T (Min. 370 BHN)

TABLE OF OPERATING MACHINERY GEAR REDUCERS

MARK	RATIO	QTY.	DESCRIPTION	HP	INPUT RPM	SERVICE FACTOR	OUTPUT TORQUE
R1	312	2	Quadruple Reduction, Parallel Shaft Horizontal Orientation, Through Hardened Gearing	10	372	1.5	790,000 In-Lbs
R2	4.69	2	Right Angle Bevel Gearmotor Intergral Brake With Hand Release Integral Encoder	10	1750	1.5	2,530 In-Lbs

TABLE OF OPERATING MACHINERY BEARINGS

MARK	QTY.	DESCRIPTION	DYNAMIC LOAD	NOM. SHAFT DIA.	MATERIAL	
					BUSHING	HOUSING
B1	2	Bronze Sleeve Bearing, Forged Housing, Self-lubricated And Greased Groove Lubrication 1/4 Nom. Laminated Brass Liners	117 KIPS	8.00"	ASTM B-22 Alloy 91100 Solid Synthetic Lubricant	ASTM A668 Cl. G Galvanized And Painted
B2	2	Bronze Sleeve Bearing, Weldment Housing, Self-lubricated And Greased Groove Lubrication 1/4 Nom. Laminated Brass Liners	24.0 KIPS	6.00"	ASTM B-22 Alloy 91100 Solid Synthetic Lubricant	ASTM A 36 Painted

MACHINERY BRAKES

MARK	QTY.	DESCRIPTION & FEATURES	BRAKEWHEEL RPM	AISE-NEMA TORGUE RATING (FT.-LBS	TORQUE SETTING (FT.-LBS	SUPPLY
BR-M	2	Thruster Released Spring Set	372	100	65 Min.	460 Vac. 3 PH. 60 HZ

COUPLINGS

MARK	QTY.	MIN. TORQUE RATING	TYPE	DRIVING HALF			DRIVEN HALF		
				NOMINAL BORE	KEY (IN. x IN.)	R = RIGID F = FLEX		KEY (IN. x IN.)	NOMINAL BORE
C1	2	670 In-Kips	Double Engage Gear, Alloy Steel Hubs	6.00"	1 1/2 x 1 1/2	F	F	1 1/2 x 1 1/2	6.00
C2	2	4,000 In-Lbs	Grid	1.375"	1/2 x 1/2	F	F	1/2 x 1/2	1.375"

MACHINE MATERIALS TABLE

PART	MATERIAL	DESIGNATION	SPECIAL PROVISIONS
Rack Flange	Carbon Steel	ASTM A709 Gr 50	-
Trunnion Shaft	Forged Alloy Steel	AISI 4140 Annealed	Tensile 95 Ksi, Yield 60 Ksi
Trunnion Hub	Forged Steel	AISI 1030 Normalized	Tensile 75 Ksi, Yield 50 Ksi
Trunnion Pedestal	Forged Steel	AISI 1030 Normalized	Tensile 75 Ksi, Yield 50 Ksi Hot-Dip Galvanized ASTM A123
Trunnion Bushing	Cast Bronze	ASTM B22 Alloy 91100	Self-Lubricated Solid Synthetic Lubricant
Turned Bolts	Alloy Steel Q & T	ASTM A193 Gr B7	-
Supports	Carbon Steel	ASTM A709 Gr 50	Hot-Dip Galvanized ASTM A123
Seal Plate	Stainless Steel	AISI Type 304	-
Lock Bar	Forged Alloy Steel	AISI 4140 Q & T	Tensile 110 Ksi, Yield 95 Ksi
Guide Housing	Carbon Steel	ASTM A36	Hot-Dip Galvanized ASTM A123
Guide Bushing	Cast Bronze	ASTM B505 Alloy 91100	-
Receiver Shoe	Cast Bronze	ASTM B505 Alloy 91100	-

Turned Bolts for B1 Bearing and Trunnion Bearing are to be ASTM A193 Class 2 Grade B8 and Nuts to be ASTM A194 Grade 8, Stainless Steel AISI 304 Solution Treaded and Strain Hardened.

Standard Fits and Finishes:

Unless Otherwise Indicated Fits And Finishes For Machinery Shall Be As Follows:

Surface	Fit	Finish
Machinery Base On Steel	-	250
Machinery Base On Masonry	-	500
Machinery Parts In Fixed Contact	-	125
Shaft Journal	RC6	16
Journal Bushings	RC6	16
Split Bushing In Base Or Cap	LC1	125
Solid Bushing In Base (To 1/4" Wall)	FN1	63
Solid Bushing In Base (Over 1/4" Wall)	FN2	63
Finished Body Bolts In Reamed Holes	LC8	63
Turned Bolts In Reamed Holes	Varies	63
Hubs On Shafts (Over 2" Bore)	FN2	63
Teeth Of Open Spur Gears	-	125

The Above Fits For Cylindrical Parts Shall Also Apply To The Major Dimensions Of Non-Cylindrical Parts.

Trunnion Bearing Maximum Permitted Load:

(As Per AASHTO LRFD Movable Highway Bridge Design Specification, 2nd Edition 2007, 6.6.2.3) Load Based On AASHTO Allowable Bearing Stress Of Bushing Material And Size.

Load Case	Max. Permitted Load (per trunnion)
Span In Motion	270 kips
Span At Rest	360 kips

Tolerances:

Dimensionsn To Structural Surfaces Are ±1/16" (UON). Dimensions Between Machined Surfaces Shall Have A tolerance Of 0.010" (UON).

General Geometric Tolerances For Machinery Parts:

Straightness:	— 0.05
Flatness:	⏥ 0.005
Parallelism (Per Linear Foot):	// 0.005 -
Perpendicularity (Per Linear Foot):	⊥ 0.005 -
Angularity (Per Linear Foot):	∠ 0.02 -
Position (Features Within A Component):	⌖ 0.02 -
Concentricity:	◎ 0.005 -
Circular Runout (Per Linear Foot):	↗ 0.005 -

STATE OF MAINE
DEPARTMENT OF TRANSPORTATION

APPROVED — DATE

COMMISSIONER:

CHIEF ENGINEER:

SIGNATURE

13196 P.E. NUMBER

DATE

PROJECT INFORMATION

PROGRAM	BRIDGE
PROJECT MANAGER	STEPHEN BODGE
DESIGNER	HARDESTY & HANOVER
CONSULTANT	HARDESTY & HANOVER
PROJECT RESIDENT	
CONTRACTOR	
PROJECT COMPLETION DATE	

SOUTH BRISTOL
GUT BRIDGE

OPERATING MACHINERY TABLES

SHEET NUMBER

107

OF 141

Filename: ...\107_Operating Machinery Tables.dgn Division: BRIDGE Username: common Date:1/29/2014

DESCRIPTION OF ELECTRICAL WORK

ELECTRIC POWER
Electric Power For The Bridge Shall Be Provided By A Dedicated 480 Volt Alternating Current Utility Service On The North Side. A Backup Generator Shall Be Installed On The North Side And Have The Capacity To Operate The Span In Case Of Utility Failure.

MOVABLE SPAN CONTROL
The Bascule Span Shall Be Normally Operated By Two 10 Horsepower Motors Controlled By Two Variable Frequency Flux Vector Drives. Drives Will Be Operated In Master-Follower Mode, Such That The Motor Shafts Will Be Synchronized Turn For Turn.

SEQUENCE INTERLOCKING
Control Operations For The Span And Its Auxiliaries Shall Be Interlocked So That They Can Only Take Place In The Proper Sequence. Bypass Switches Shall Be Installed On The Control Desk To Permit Bypassing Of Any Interlock In An Emergency.

LOGIC CONTROL
The Bridge Shall Be Controlled By Means Of An Ethernet Interconnected Programmable Logic Controller (PLC) System. The System Shall Have Redundant Processors In Cold Backup And A Human Machine Interface (HMI) Screen Located At The Control Desk For Diagnostics. PLC Input/Output Drops And Ethernet Hubs Shall Be Installed On The North And South Side. Span Drives Shall Be Controlled Via Ethernet. Communication Between The North And South Side Shall Be Done Via A Redundant Fiber Optic Connection.

SPAN LOCK MOTORS
One Span Lock Motor Shall Be Installed On The South Side Of The Bridge. It Shall Be A 480 Volt Alternating Current, 60 Hertz, 1.5 Horsepower, 1675 Rotation Per Minute, Design D Squirrel Cage Motor.

TRAFFIC CONTROL EQUIPMENT
Two New Traffic Signals And Two New Advance Warning Signs Shall Be Installed For Oncoming Traffic On The North And South Sides Of The Bridge. Two New Pedestrian Gates And Two New Resistance Type Barrier Gates, One Each On The North Side And One Each On The South Side, Shall Be Installed. The Gate Arms Shall Have With Alternately Flashing Lights Mounted On The Arms. When Lowered, The Ends Of The Barrier Gates Shall Lock Into Mounts On The Opposite Of The Roadway, And Will Light Indicators On The Control Desk Using Proximity Sensors When Latched.

LIMIT SWITCHES
The Bascule Leaf Shall Be Provided With An Inclinometer For Angular Position Indication. Digital Encoders On The Motors Shall Provide Speed And Angular Positioning To The PLC. The Bascule Leaf Shall Be Provided With Redunant Proximity Sensors To Indicate The Span Fully Closed, Nearly Closed, Nearly Open, Fully Open, And Over Travel Positions And To Perform Deceleration Check Functions.

CABLES, WIRING, CONDUITS, AND JUNCTION BOXES
All Existing Cables, Wiring, Conduits, And Junction Boxes Shall Be Disconnected, Removed, And Properly Disposed Of. New Cables, Wiring, Conduits, And Junction Boxes Shall Be Furnished And Installed In Accordance With The Most Current National Electric Code (NEC) And Any Local Codes.

AERIAL CABLES ACROSS CHANNEL
Aerial Cables Shall Be Installed At The Same Proximity And Height As The Utility Poles Crossing The Waterway. Three Phase Power Will Be Carried To The South Side Barrier Gate, Span Locks, And PLC Control Panel Via #10 AWG Wiring. The Aerial Cable Shall Carry Emergency Stop, Traffic Signal, And Navigational Wiring, As Well As A Fiber Optic Cable To Connect The North And South Side PLC Panels.

CONTROL CABINETS
Relays, Contactors, PLC Drops, Circuit Breakers, Flux Vector Drives, And Any Other Control Related Devices Shall Be Front Connected And Mounted On Enclosed Panels. Panels Located In A Climate Controlled Space Shall Be Stainless Steel NEMA 12, Panels Located In A Non-Climate Controlled Space Shall Be Stainless Steel NEMA 4X.

CONTROL DESK
A Operator Control Desk Shall Be Installed In The Operator's Room. The Desk Shall Contain Switches, Pushbuttons, Indicating Lights, Meters, Position Indicators, HMIs, And Any Other Devices Necessary To Safely Govern The Operation Of The Bridge.

NAVIGATION CONTROL
Navigation Lights And Signal Horns Shall Be Provided And Installed In Accordance With The Rules And Regulations Of The United States Coast Guard. Three Red Navigation Lights Shall Be Installed On Each Fender System. Two Pendulum Type Bascule Alternate Red/Green Channel Navigation Lights Shall Be Installed On The Bascule Leaf.

CCTV SYSTEM
A Closed Circuit Television (CCTV) System Shall Be Installed. The System Shall Provide Additional Sight Support For Areas Of The Channel And Roadway Not Clearly Visible To The Operator, And To Areas Around The Operator's House For Security Purposes.

DESCRIPTION OF ELECTRICAL WORK (CONT'D)

TEMPORARY OPERATING SYSTEM
The Contractor Shall Be Responsible For The Maintenance And Operation Of The Bridge During Construction, Including The Temporary Operating System, Roadway Traffic Control, And Navigable Traffic Control.

CONTROL HOUSE
See Architectural Drawings For Operator House Layout, Including Electrical Equipment, Lighting, Receptacles, And Lighting Panel Schedule.

GENERAL ELECTRICAL NOTES

1. All Electrical Work Shall Be In Accordance With State Standard Specifications, The Requirements Of The National Electrical Code (NEC), And The Electrical Requirements Of The American Association Of State Highway Transportation Officials (AASHTO) Standard Specifications.
2. All Electrical Work Shall Be Coordinated With The Work Of Other Trades And Shall Be Scheduled Consistent With The Overall Construction Staging Sequence.
3. The Plans Are Diagrammatic And Are Not To Be Scaled. The Locations Of Equipment And Routing Of Conduits Shown On The Contract Drawings Are Approximate. The Contractor Shall Be Responsible For Verifying All Dimensions In The Field And Preparing Scaled Shop Drawings.
4. All Electrical Components And Material Shown On The Contract Drawings Are New Unless Otherwise Noted.
5. All New Conduit And Fittings Shall Be 3/4" Minimum PVC Coated Hot Dipped Galvanized Rigid Steel Unless Otherwise Noted, And Shall Meet All The Additional Requirements For Material, Construction, And Installation Contained In The Specification.
6. The Location And Number Of Raceways And Junction Boxes Shown On The Plans Are Of Schematic Type And Do Not Purport To Be Exact. The Contractor Shall Furnish And Install All Required Raceways, Junction Boxes, Conduit Fittings, Elbows, And Hardware For A Complete Installation In Accordance With The NEC Whether Or Not They Are Explicitly Shown Or Indicated On The Contract Drawings.
7. The Contractor Shall Furnish And Install Expansion Fittings Of The Approved Type Wherever Conduits Pass Through Structural Expansion Joints. Deflection Fittings Shall Also Be Furnished And Installed As Necessary.
8. Structural Steel Shall Not Be Cut, Drilled, Or Welded To Except As May Be Explicitly Authorized By The Engineer In Writing.
9. Exact Conduit Stub-Up Locations Are To Be Determined By The Contractor Based On Certified Manufacturers' Drawings Of The Respective Equipment. Install Conduit To Agree With Equipment Furnished.
10. The Contractor Shall Provide And Install A Hard Neoprene Gasket 1/8" Minimum Thickness Between Any Installed Cabinet And The Concrete Floor Or Structure.
11. Use Sealtight Flexible Conduit For Final Connections To Motors And Limit Switches.
12. The Contractor Shall Provide An In-Sight Disconnect Switch, Either Single Pole, Double Pole Or Three Pole, As Required, For Each Electrical Appliance Such As Electrical Water Heater, Water Cooler, Bathroom Exhaust Fan, Ventilation Fan, Etc.
13. New Electrical Conductors Shall Be Minimum Size No. 12 AWG Stranded Type XHHW, Except For Internal Wiring In Control Cabinets And Control Desk Which Shall Be Minimum Size No. 14 AWG Type SIS Except Where Noted Elsewhere. All Wires And Cables Shall Meet All The Additional Requirements For Material, Construction And Installation Contained In The Relevant Specifications.
14. All New Conductors Installed In Conduit Shall Be Installed With Ground Conductors. Ground Conductors Shall Be Provided In All New Flexible Cables. Minimum Size Ground Conductor Shall Be No. 12 AWG. All Cabinets, Terminal And Junction Boxes Shall Be Grounded In Accordance With The NEC.
15. All Conductors Shall Be Connected To Terminal Blocks Or Devices. Splices Shall Not Be Permitted Within Equipment Enclosures, Boxes, Or Conduit Fittings.
16. All Switches, Relays, Contactors And Starters Are Shown On The Drawings As De-Energized And With The Span Fully Closed, Gates Raised, And Traffic Signals Green, Open To Vehicular Traffic.
17. Electrical Loads Shall Be Equally Distributed On All Three Phases.
18. Upon Completion Of Electrical Installation, The Contractor Shall Test The Complete Electrical System For Short Circuits, Grounds And Proper Operation In The Presence Of The Engineer.

ABBREVIATIONS

ADV	Advance Warning Sign	JB	Junction Box	PFR	Phase Failure Relay
AH	Air Horn	L	Lower/Lowered	PM	Power Monitor
AM	Ammeter	LP	Lighting Panelboard	PL	Pilot Light
ATS	Automatic Transfer Switch	LS	Limit Switch	PLC	Programmable Logic Controller
BP	Bypass	LT	(Street) Light	PRI	Transformer Primary
CB	Circuit Breaker	M	Magnetic Contactor	PS	Proximity Sensor
CT	Current Transformer	MA	Machinery Brake	R	Raise/Raised
D	Drive/Driven	MCC	Motor Control Cabinet	REL	Released
DB	Door Back	MCP	Motor Circuit Protector	RES	(Dynamic Braking) Resistor
DRV	Flux Vector (Drive)	MM	Main Motor	S	South
DF	Door Front	MO	Motor Brake	SE	South East
DS	Disconnect Switch	MOI	Manually Operated Interlock	SEC	Transformer Secondary
E	East	N	North	SL	Span Lock
FO	Fully Open / Fiber Optic	NAV	Navigation	SP	Span
FR	Frequency Sensing Relay	NE	North East	SS	Selector Switch
FS	Fully Seated	NO	Nearly Open	STD	Seated
FU	Fuse	NS	Nearly Seated	SW	South West
FVD	Flux Vector Drive	NW	North West	TB	Terminal Block
FVNR	Full Voltage Non Reversing	OL	Overload Relay	TS	Traffic Signal
FVR	Full Voltage Reversing	P	Pull/Pulled	TSP	Twisted Shielded Pair (Conductor)
GR	Group (Raise)	PB	Pushbutton	TVSS	Transient Voltage Surge Supressor
HR	Hand Released	PEC	Photoelectric Cell	UVR	Undervoltage Relay
HTR	Heater	PED	Pedestrian Gate	W	West
				XFMR	Transformer

SYMBOLS

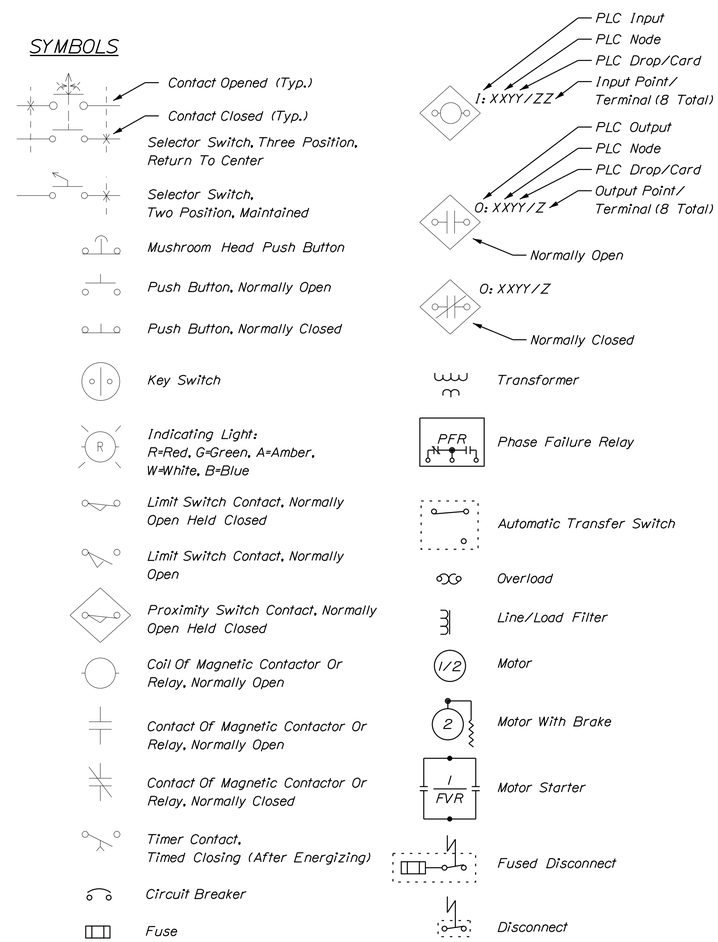

STATE OF MAINE
DEPARTMENT OF TRANSPORTATION

APPROVED — DATE
COMMISSIONER:
CHIEF ENGINEER:

PROJECT INFORMATION		SIGNATURE
PROGRAM	BRIDGE	
PROJECT MANAGER	STEPHEN BODGE	
DESIGNER	HARDESTY & HANOVER	13196
CONSULTANT	HARDESTY & HANOVER	P.E. NUMBER
PROJECT RESIDENT		
CONTRACTOR		DATE
PROJECT COMPLETION DATE		

SOUTH BRISTOL
GUT BRIDGE

GENERAL ELECTRICAL NOTES, SYMBOLS, AND ABBREVIATIONS

SHEET NUMBER
108
OF 141

Filename: ...\108_General_Electrical_Notes_Symbols_And_Abbreviations.dgn Division: BRIDGE Username: common Date:1/29/2014

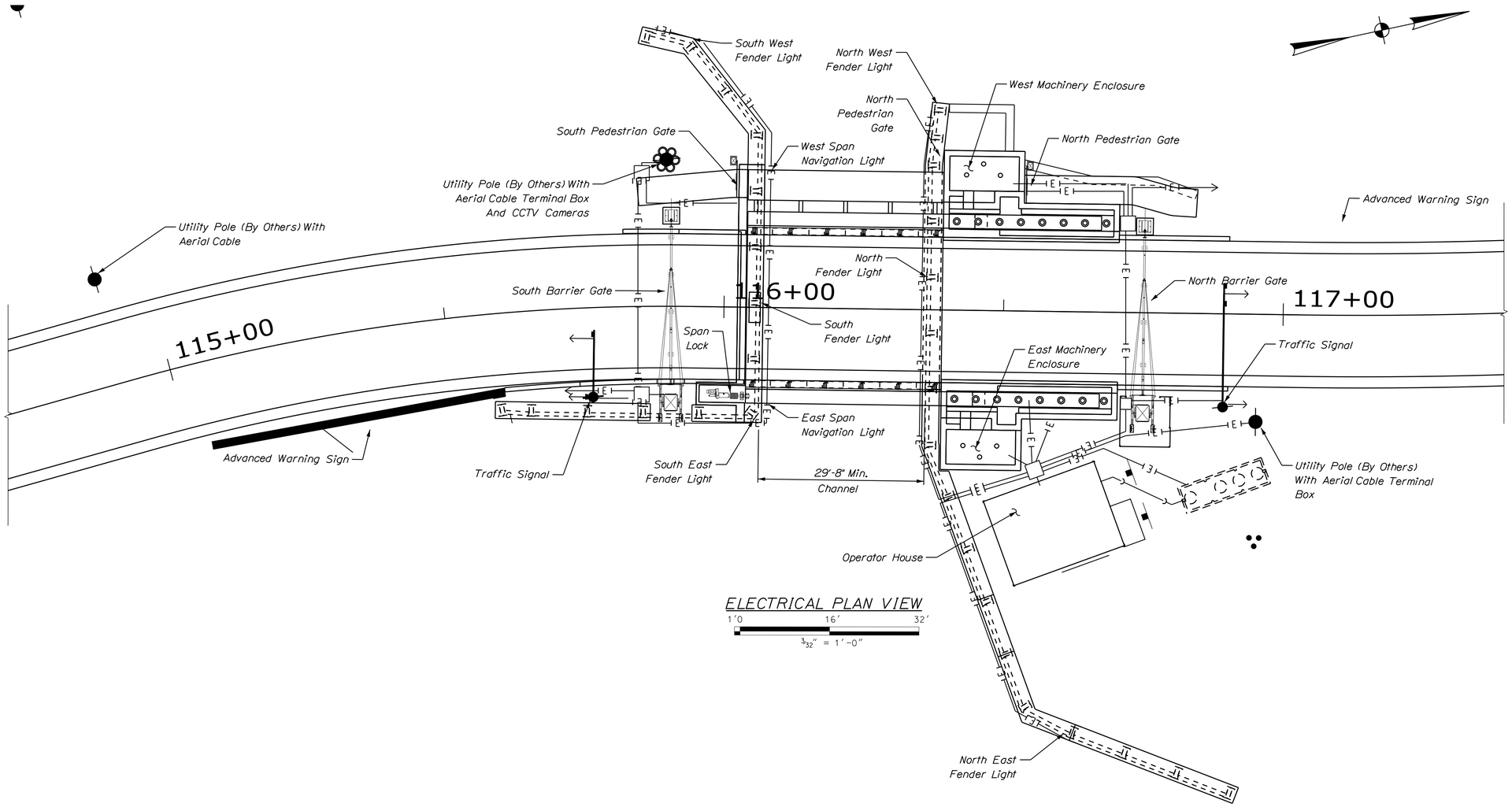

ELECTRICAL PLAN VIEW

1'0 16' 32'

3/32" = 1'-0"

NOTES:

1. See Conduit Routing Sheet 114 For Conduit Placement.
2. See Aerial Cable Sheet 134 For Aerial Cable Placement.

STATE OF MAINE
DEPARTMENT OF TRANSPORTATION

APPROVED	DATE
COMMISSIONER:	
CHIEF ENGINEER:	

PROJECT INFORMATION

PROGRAM	BRIDGE	
PROJECT MANAGER	STEPHEN BODGE	SIGNATURE
DESIGNER	HARDESTY & HANOVER	13196
CONSULTANT	HARDESTY & HANOVER	P.E. NUMBER
PROJECT RESIDENT		
CONTRACTOR		DATE
PROJECT COMPLETION DATE		

SOUTH BRISTOL
GUT BRIDGE

GENERAL ELECTRICAL PLAN

SHEET NUMBER

109

OF 141

Filename: ...\109_General_Electrical_Plan.dgn Division: BRIDGE Username: common Date:1/29/2014

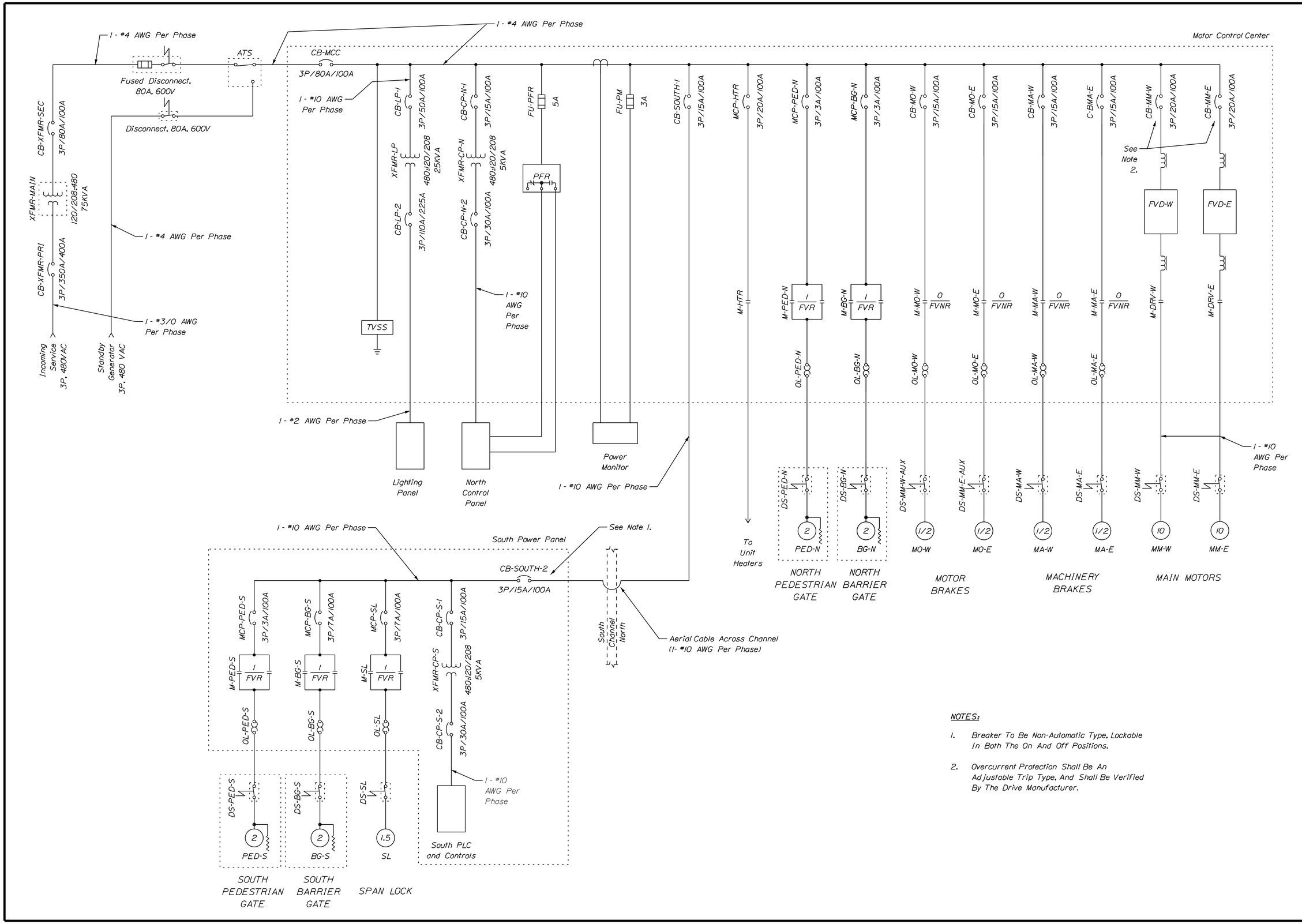

NOTES:

1. Breaker To Be Non-Automatic Type, Lockable In Both The On And Off Positions.
2. Overcurrent Protection Shall Be An Adjustable Trip Type, And Shall Be Verified By The Drive Manufacturer.

STATE OF MAINE
DEPARTMENT OF TRANSPORTATION

APPROVED	DATE
COMMISSIONER:	
CHIEF ENGINEER:	

PROJECT INFORMATION			
PROGRAM	BRIDGE		
PROJECT MANAGER	STEPHEN BODGE	SIGNATURE	
DESIGNER	HARDESTY & HANOVER	13196	
CONSULTANT	HARDESTY & HANOVER	P.E. NUMBER	
PROJECT RESIDENT		DATE	
CONTRACTOR			
PROJECT COMPLETION DATE			

SOUTH BRISTOL GUT BRIDGE

ONE LINE DIAGRAM

SHEET NUMBER

110

OF 141

Filename: ...\110_One_Line_Diagram.dgn Division: BRIDGE Username: common Date:1/29/2014

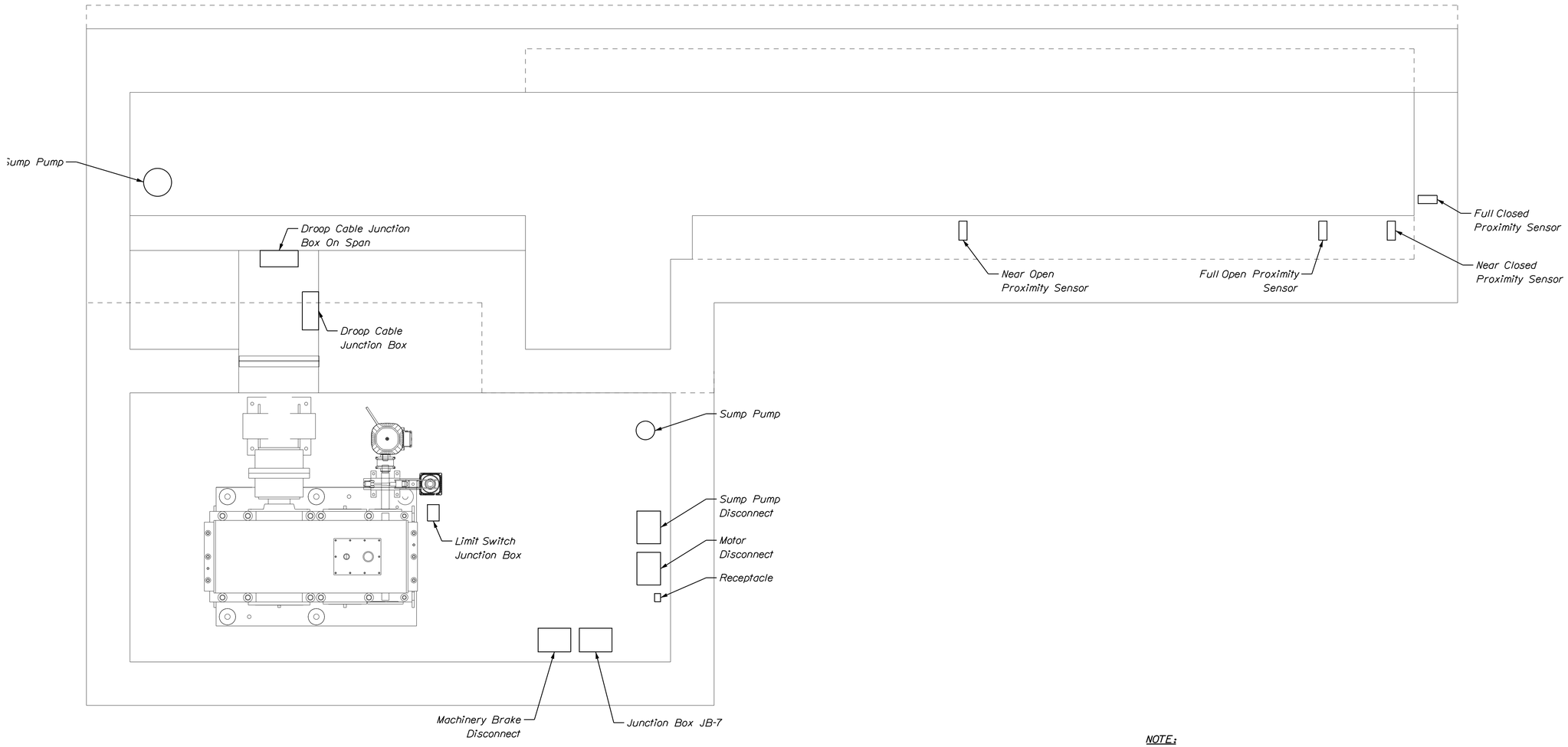

MACHINERY ENCLOSURE PLAN VIEW

1' 6" 0 1' 2'

3/4" = 1'-0"

East Side Shown, West Side Similar.
Conduit Not Shown. See Note 1.

NOTE:

1. Conduit Shall Be Routed Through The Concrete Floor And Stub Up To The Appropriate Electrical Equipment.
2. Proximity Sensors Are To Be Mounted In Concrete Notches And Are To Be Triggered By Magnets Mounted To The Mast.

STATE OF MAINE
DEPARTMENT OF TRANSPORTATION

APPROVED | DATE

COMMISSIONER:

CHIEF ENGINEER:

PROJECT INFORMATION		SIGNATURE
PROGRAM	BRIDGE	
PROJECT MANAGER	STEPHEN BODGE	
DESIGNER	HARDESTY & HANOVER	13196 P.E. NUMBER
CONSULTANT	HARDESTY & HANOVER	
PROJECT RESIDENT		DATE
CONTRACTOR		
PROJECT COMPLETION DATE		

SOUTH BRISTOL
GUT BRIDGE

MACHINERY ENCLOSURES
ELECTRICAL PLAN

SHEET NUMBER

111

OF 141

Filename: ...\111_Machinery_Enclosures_Electrical_Plan.dgn Division: BRIDGE Username: common Date:1/29/2014

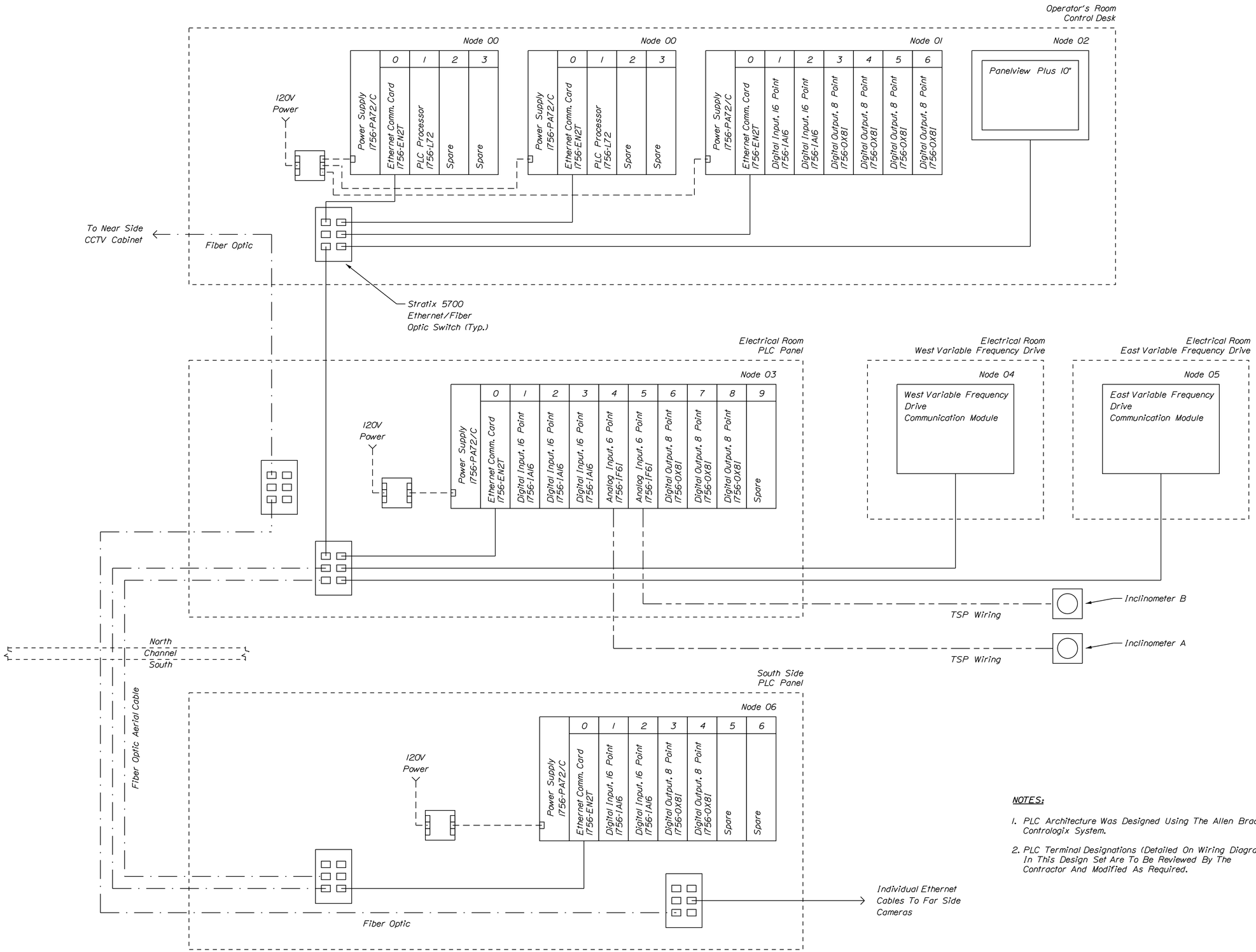

NOTES:

1. PLC Architecture Was Designed Using The Allen Bradley Contrologix System.
2. PLC Terminal Designations (Detailed On Wiring Diagrams) In This Design Set Are To Be Reviewed By The Contractor And Modified As Required.

STATE OF MAINE
DEPARTMENT OF TRANSPORTATION

APPROVED | DATE

COMMISSIONER:

CHIEF ENGINEER:

PROJECT INFORMATION

PROGRAM	BRIDGE
PROJECT MANAGER	STEPHEN BODGE
DESIGNER	HARDESTY & HANOVER
CONSULTANT	HARDESTY & HANOVER
PROJECT RESIDENT	
CONTRACTOR	
PROJECT COMPLETION DATE	

SIGNATURE

13196
P.E. NUMBER

DATE

SOUTH BRISTOL
GUT BRIDGE

PLC ARCHITECTURE

SHEET NUMBER

112

OF 141

Filename: ...\112_PLC_Architecture.dgn Division: BRIDGE Username: common Date:1/29/2014

RAISING BASCULE LEAF

BEGIN → Turn "Bridge Control Power" On → Enable Advance Warning Signals Controls → Turn "Advance Warning Signals" On → Turn On Gate Flashers And Gongs; Enable Pedestrian Gates Controls → One At A Time, Turn And Hold N & S Pedestrian Gate Selector Switches Until Pedestrian Gates Are Lowered → Enable Traffic Signal Controls → Turn "Traffic Signal" Selector Switch To Stop; Operate Navigation Horn → Turn Traffic Signals To Amber (Yellow); After 5 Seconds, Traffic Signals Turn Red → Enable Barrier Gates Controls → One At A Time, Turn And Hold N & S Barrier Gate Selector Switches Until Barrier Gates Are Lowered → Turn Off Gongs; Enable Span Lock Control → Turn And Hold "Span Lock" Selector Switch Until Span Lock Is Pulled → Enable Variable Frequency Drives And Span Control → Turn And Hold "Span Control" To Raise Leaf → Machinery And Motor Brakes Release, Drive Motor Accelerates To Full Speed To Raise Leaf, And Reduces To Creep Speed At Nearly Open Position → At Fully Open, Drive Motor Stops, Machinery And Motor Brakes Set, And Navigation Lights Turn From Red To Green → Operate Navigation Horn → END

See Mechanical Drawings For Span Speed Vs. Position

LOWERING BASCULE LEAF

BEGIN → Turn And Hold "Span Control" To Lower Leaf → Navigation Lights Turn From Green To Red, Machinery And Motor Brakes Release, Drive Motor Accelerates To Full Speed To Lower Leaf, And Reduces To Creep Speed At Nearly Seated Position → At Fully Seated, Drive Motor Enters Reduced Speed Operation, Machinery And Motor Brakes Set, Drive Motor Stops; Enable Span Lock Control → Turn And Hold "Span Lock" Selector Switch Until Span Lock Is Driven → Turn On Gongs; Enable Gate Group Raise, Barrier Gates, And Pedestrian Gates Controls → Press Group Raise Button, Barrier Gates And Pedestrian Gates Are Raised / One At A Time, Turn And Hold N & S Barrier Gate And N & S Pedestrian Gate Selector Switches Until Gates Are Raised → Turn Off Gate Flashers And Gongs; Enable Traffic Signals → Turn "Traffic Signal" Selector Switch To Go → Turn Traffic Signals To Green; Turn Off Advance Warning Signals → Turn "Bridge Control Power" Off → END

See Mechanical Drawings For Span Speed Vs. Position

SYMBOL KEY

Bridge Operator Action → PLC Action

Direction Of Operations

NOTES:

1. The PLC Action Shall Illuminate The Corresponding Indicating Light On The Control Desk For The Action, Equipment State, Or Bridge Position.
2. The PLC Shall Display The Service Power, Span Position, And Drive Motor Current At All Times That Control Power Is On.
3. The Pier Lighting Shall Be Controlled By The PLC And Shall Be Either On Or Off, Or Automatically Turned On By Photoelectric Cells.
4. The PLC Trouble Pilot Light Shall Light If There Are Any PLC Errors, And Shall Be Cleared By The Alarm Acknowledge Push Button.
5. The Emergency Stop Button Stops All Actions. The PLC Shall Not Initiate Any Operation Until The Operator Activates The Desk Controls.
6. The Group Raise Stop Button Stops The Actions Performed By The Group Raise Button.
7. Hand Released Operation, Manual Operation Interlock And Motor Overloads Are To Be Shown On The PLC Panel View.
8. One Machinery Brake And One Motor Brake May Be Hand Released. If Both Machinery Or Both Motor Brakes Are Hand Released, The PLC Shall Not Initiate Span Operations.
9. If Communication Failure Between The North And South PLC Processors Occurs:

   -The South Processor Shall Stop Any Operation And Maintain The State Of Lights And Gongs. If The South Processor Loses Communication, The Processor Shall Not Initiate Any Operation.

   -If The Span Lock Is Not Pulled, The North Processor Shall Not Initiate Any New Action Until Communication Is Restored. If The North PLC Has Initiated Any Raise Or Lower Operation, Then The PLC Shall Complete The Operations To Raise Or Lower The Span Until The Span Is In The Completely Seated Position.

STATE OF MAINE
DEPARTMENT OF TRANSPORTATION

APPROVED — DATE
COMMISSIONER:
CHIEF ENGINEER:

PROJECT INFORMATION	
PROGRAM	BRIDGE
PROJECT MANAGER	STEPHEN BODGE
DESIGNER	HARDESTY & HANOVER
CONSULTANT	HARDESTY & HANOVER
PROJECT RESIDENT	
CONTRACTOR	
PROJECT COMPLETION DATE	

SIGNATURE
13196 P.E. NUMBER
DATE

SOUTH BRISTOL
GUT BRIDGE

PLC SEQUENCE OF OPERATION

SHEET NUMBER
113
OF 141

Filename: ...\113_PLC_Sequence_Of_Operation.dgn Division: BRIDGE Username: common Date:1/29/2014

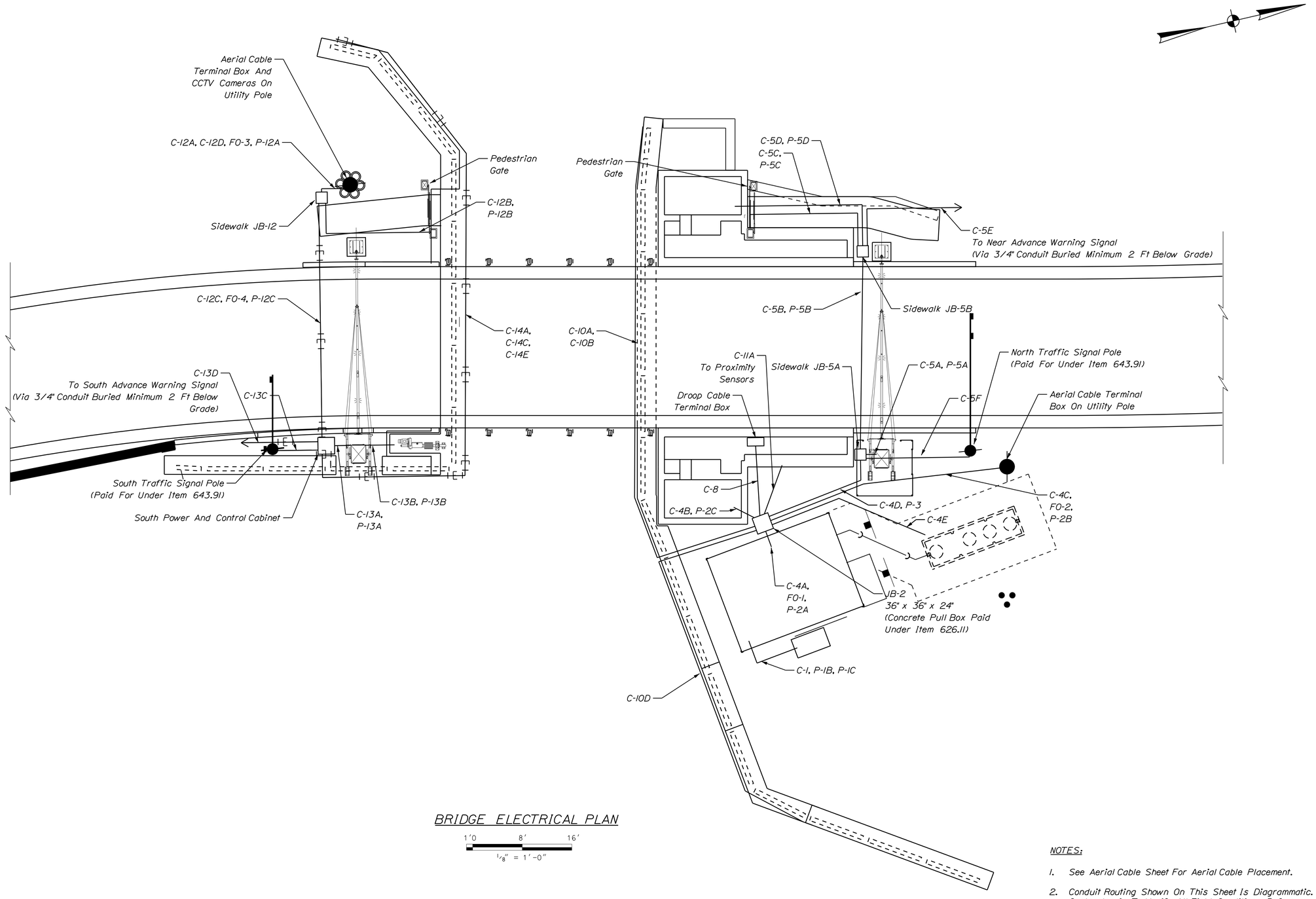

BRIDGE ELECTRICAL PLAN

1'0 8' 16'

1/8" = 1'-0"

NOTES:

1. See Aerial Cable Sheet For Aerial Cable Placement.
2. Conduit Routing Shown On This Sheet Is Diagrammatic. Contractor Is To Verify All Field Conditions Before Installing Conduit And Provide All Junction Boxes Required To Comply With The National Electric Code.
3. The Four Tricolor Signal Heads, With All Mounting Brackets And Hardware To Be Paid Under Item 643.80.

STATE OF MAINE
DEPARTMENT OF TRANSPORTATION

APPROVED | DATE

COMMISSIONER:

CHIEF ENGINEER:

PROJECT INFORMATION		
PROGRAM	BRIDGE	
PROJECT MANAGER	STEPHEN BODGE	SIGNATURE
DESIGNER	HARDESTY & HANOVER	13196
CONSULTANT	HARDESTY & HANOVER	P.E. NUMBER
PROJECT RESIDENT		
CONTRACTOR		DATE
PROJECT COMPLETION DATE		

SOUTH BRISTOL
GUT BRIDGE

CONDUIT LAYOUT

SHEET NUMBER

114

OF 141

Filename: ...\30_Elec\114_Conduit_Layout.dgn Division: BRIDGE Username: common Date:1/29/2014

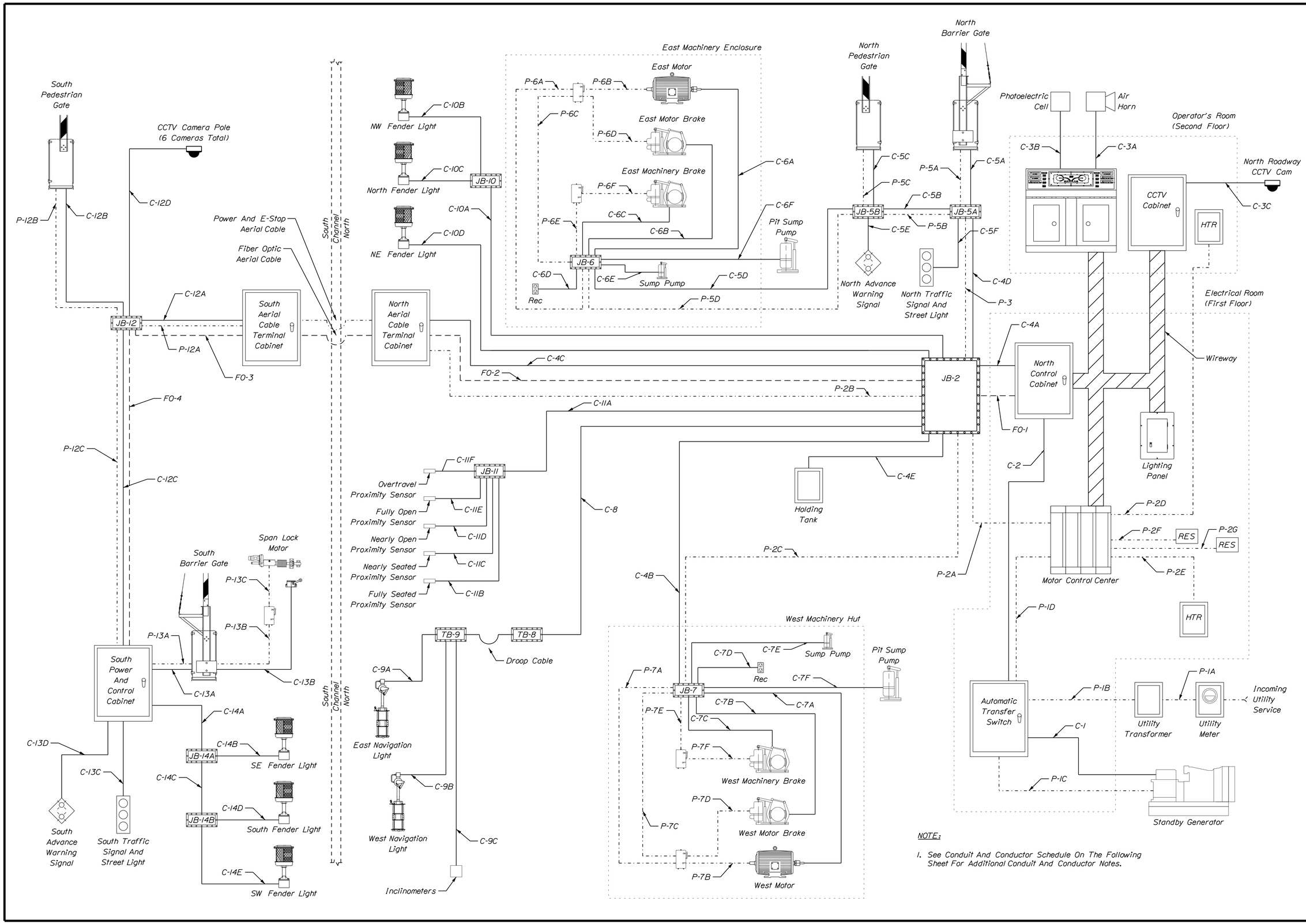

NOTE:

1. See Conduit And Conductor Schedule On The Following Sheet For Additional Conduit And Conductor Notes.

STATE OF MAINE
DEPARTMENT OF TRANSPORTATION

APPROVED | DATE

COMMISSIONER:

CHIEF ENGINEER:

SIGNATURE

13196
P.E. NUMBER

DATE

PROJECT INFORMATION

PROGRAM	BRIDGE
PROJECT MANAGER	STEPHEN BODGE
DESIGNER	HARDESTY & HANOVER
CONSULTANT	HARDESTY & HANOVER
PROJECT RESIDENT	
CONTRACTOR	
PROJECT COMPLETION DATE	

SOUTH BRISTOL GUT BRIDGE

CONDUIT BLOCK DIAGRAM

SHEET NUMBER

115

OF 141

Filename: ...\115_Conduit_Block_Diagram.dgn Division: BRIDGE Username: common Date:1/29/2014

COND.	FROM	TO	SIZE	CONDUCTORS (AWG)	SPARES	GROUND
C-1	Standby Generator	Automatic Transfer Switch	3/4"	(4) #12	(1) #12	#12
C-2	Automatic Transfer Switch	North Control Cabinet	1"	(8) #12	(2) #12	#12
C-3A	Control Desk	Air Horn	3/4"	(2) #12	(1) #12	#12
C-3B	Control Desk	Photoelectric Cell	3/4"	(3) #12	(1) #12	#12
C-3C	CCTV Cabinet	North Roadway CCTV Camera	3/4"	(1) Ethernet	(1) Ethernet	#12
C-4A	North Control Cabinet	JB-2	4"	(101) #12, (4) #10, (6) 3PR #18 TSP	(26) #12, (2) #10, (4) 3PR #18 TSP	#10
C-4B	JB-2	JB-7	2"	(19) #12, (2) 3PR #18 TSP	(5) #12, (1) 3PR #18 TSP	#12
C-4C	JB-2	North Aerial Cable Terminal Cabinet	3/4"	(2) #10	(1) #10	#10
C-4D	JB-2	JB-5A	2.5"	(59) #12, (2) #10, (2) 3PR #18 TSP	(12) #12, (1) #10, (1) 3PR #18 TSP	#10
C-4E	JB-2	Holding Tank	3/4"	(2) #12	(1) #12	#12
C-5A	JB-5A	North Barrier Gate	1.5"	(18) #12	(2) #12	#12
C-5B	JB-5A	JB-5B	2"	(37) #12, (2) 3PR #18 TSP	(9) #12, (1) 3PR #18 TSP	#12
C-5C	JB-5B	North Pedestrian Gate	1"	(16) #12	(2) #12	#12
C-5D	JB-5B	JB-6	2"	(19) #12, (2) 3PR #18 TSP	(5) #12, (1) 3PR #18 TSP	#12
C-5E	JB-5B	North Advance Warning Signal	3/4"	(2) #12	(1) #12	#12
C-5F	JB-5A	North Traffic Signal	1"	(4) #12, (2) #10	(1) #12, (1) #10	#10
C-6A	JB-6	East Motor	1.5"	(2) 3PR #18 TSP	(1) 3PR #18 TSP	#12
C-6B	JB-6	East Motor Brake	1"	(6) #12	(1) #12	#12
C-6C	JB-6	East Machinery Brake	1"	(6) #12	(1) #12	#12
C-6D	JB-6	East Machinery Receptacle	3/4"	(3) #12	(1) #12	#12
C-6E	JB-6	East Machinery Sump Pump	3/4"	(2) #12	(1) #12	#12
C-6F	JB-6	East Pit Sump Pump	3/4"	(2) #12	(1) #12	#12
C-7A	JB-7	West Motor	1.5"	(2) 3PR #18 TSP	(1) 3PR #18 TSP	#12
C-7B	JB-7	West Motor Brake	1"	(6) #12	(1) #12	#12
C-7C	JB-7	West Machinery Brake	1"	(6) #12	(1) #12	#12
C-7D	JB-7	West Machinery Receptacle	3/4"	(2) #12	(1) #12	#12
C-7E	JB-7	West Machinery Sump Pump	3/4"	(2) #12	(1) #12	#12
C-7F	JB-7	West Pit Sump Pump	3/4"	(3) #12	(1) #12	#12
C-8	JB-2	JB-8	1.5"	(3) #12, (2) 3PR #18 TSP	(1) #12, (2) 3PR #18 TSP	#12
C-9A	JB-9	East Navigation Light	1"	(6) #12	(2) #12	#12
C-9B	JB-9	West Navigation Light	3/4"	(4) #12	(1) #12	#12
C-9C	JB-9	Inclinometers	1.5"	(2) 3PR #18 TSP	(2) 3PR #18 TSP	#12
C-10A	JB-2	JB-10	3/4"	(2) #12	(1) #12	#12
C-10B	JB-10	Northwest Fender Light	3/4"	(2) #12	(1) #12	#12
C-10C	JB-10	North Fender Light	1"	(4) #12	(2) #12	#12
C-10D	JB-2	Northeast Fender Light	3/4"	(2) #12	(1) #12	#12
C-11A	JB-2	JB-11	1"	(10) #12	(5) #12	#12
C-11B	JB-11	Fully Seated Proximity Sensor	3/4"	(2) #12	(1) #12	#12
C-11C	JB-11	Nearly Seated Proximity Sensor	3/4"	(2) #12	(1) #12	#12
C-11D	JB-11	Nearly Open Proximity Sensor	3/4"	(2) #12	(1) #12	#12
C-11E	JB-11	Fully Open Proximity Sensor	3/4"	(2) #12	(1) #12	#12
C-11F	JB-11	Overtravel Proximity Sensor	3/4"	(2) #12	(1) #12	#12
C-12A	South Aerial Cable Terminal Cabinet	JB-12	3/4"	(2) #10	(1) #10	#10
C-12B	JB-12	South Pedestrian Gate	1"	(16) #12	(2) #12	#12
C-12C	JB-12	South Power And Control Cabinet	2"	(16) #12, (2) #10, (6) Ethernet	(2) #12, (1) #10, (6) Ethernet	#10
C-12D	JB-12	CCTV Camera Pole	1.5"	(6) Ethernet	(6) Ethernet	#12
C-13A	South Power And Control Cabinet	South Barrier Gate	1.5"	(24) #12	(3) #12	#12
C-13B	South Barrier Gate	Span Lock Motor	1"	(6) #12	(1) #12	#12
C-13C	South Power And Control Cabinet	South Traffic Signal	1"	(4) #12, (2) #10	(1) #12, (1) #10	#10
C-13D	South Power And Control Cabinet	South Advance Warning Signal	3/4"	(2) #12	(1) #12	#12
C-14A	South Power And Control Cabinet	JB-14A	3/4"	(2) #12	(1) #12	#12
C-14B	JB-14A	Southeast Fender Light	1"	(4) #12	(2) #12	#12
C-14C	JB-14A	JB-14B	3/4"	(2) #12	(1) #12	#12
C-14D	JB-14B	South Fender Light	1"	(4) #12	(2) #12	#12
C-14E	JB-14B	Southwest Fender Light	3/4"	(2) #12	(1) #12	#12
FO-1	North Control Cabinet	JB-2	1"	(1) Fiber Optic Cable		
FO-2	JB-2	North Aerial Cable Terminal Cabinet	1"	(1) Fiber Optic Cable		
FO-3	South Aerial Cable Terminal Cabinet	JB-12	1"	(1) Fiber Optic Cable		
FO-4	JB-12	South Power And Control Cabinet	1"	(1) Fiber Optic Cable		
				WIREWAYS		
	Motor Control Center	North Control Cabinet		(19) #12, (2) Ethernet, (4) 3PR #18 TSP	(2) #12, (1) Ethernet, (2) 3PR #18 TSP	#12
	North Control Cabinet	Lighting Panel		(30) #12, (2) #10	(10) #12, (1) #10	#10
	North Control Cabinet	Control Desk		(22) #12, (1) Ethernet	(5) #12, (1) Ethernet	#12
	North Control Cabinet	CCTV Cabinet		(5) Ethernet	(5) Ethernet	#12
	Motor Control Center	North Control Cabinet		(2) #10	(1) #10	#10
	Motor Control Center	Lighting Panel		(4) #2	(1) #2	#8
	Lighting Panel	CCTV Cabinet		(3) #12	(1) #12	#12

CONDUIT AND CONDUCTOR NOTES:

1. The Number Of Wires And Sizes Of Conductors Shown In Conduits And Cable Are Based On The Contract Wiring Diagrams. The Contractor Shall Provide Additional Conductors Of Sufficient Number And Size, Including Ten Percent Spares, As May Be Required For The Installation In Accordance With The Final Wiring Diagrams On His Approved Working Drawings.

2. The Schematic Conduit Diagrams Do Not Purport To Show All Pull And Terminal Boxes That May Be Required. The Contractor Shall Furnish And Install Any Additional Boxes Required To Conform With The Specified Requirements Governing The Allowable Number Of Conduit Bends Between Boxes And Cabinets.

3. The Schematic Conduit Diagrams Show Only The Circuits Concerned With Operation Of The Bridge And Its Auxiliaries. Other Circuits Required To Be Installed, But Not Shown On The Diagrams Include At Least The Service Lighting, Heat Trace, Local Telephone Service, Fire/Security Alarm System, And Equipment Ground Conductors.

4. Sections Of Flexible Conduit Required For Connections To Equipment Subject To Vibration Are Not Indicated. The Contractor Shall Provide Sections Of Flexible Conduit Per The Specifcation For The Span Motors, Position And Speed Transmitters, Fully Seated Limit Switches, Span Lock Limit Switches, And At Other Locations Designated By The Engineer.

5. The Wireways In The Control House Is To Be A 12" x 12" NEMA 12 Wireway.

STATE OF MAINE
DEPARTMENT OF TRANSPORTATION

APPROVED | DATE

COMMISSIONER:

CHIEF ENGINEER:

PROJECT INFORMATION

PROGRAM	BRIDGE	
PROJECT MANAGER	STEPHEN BODGE	SIGNATURE
DESIGNER	HARDESTY & HANOVER	13196
CONSULTANT	HARDESTY & HANOVER	P.E. NUMBER
PROJECT RESIDENT		
CONTRACTOR		DATE
PROJECT COMPLETION DATE		

SOUTH BRISTOL
GUT BRIDGE

CONDUIT AND CONDUCTOR
SCHEDULE I

SHEET NUMBER

116

OF 141

Filename: ...\116_Conduit_and_Conductor_Schedule_1.dgn Division: BRIDGE Username: common Date:1/29/2014

COND.	FROM	TO	SIZE	CONDUCTORS (AWG)	SPARES	GROUND
P-1A	Incoming Utility Service	Utility Meter	2"	(3) #3/0	(1) #3/0	#2
P-1B	Utility Meter	Automatic Transfer Switch	1.5"	(3) #2	(1) #2	#8
P-1C	Standby Generator	Automatic Transfer Switch	1.5"	(3) #2	(1) #2	#8
P-1D	Automatic Transfer Switch	Motor Control Center	1.5"	(3) #2	(1) #2	#8
P-2A	Motor Control Center	JB-2	2"	(9) #10, (16) #12	(3) #10, (6) #12	#10
P-2B	JB-2	North Aerial Cable Terminal Cabinet	1"	(3) #10	(1) #10	#10
P-2C	JB-2	JB-7	1"	(3) #10, (5) #12	(1) #10, (2) #12	#10
P-2D	Motor Control Center	Operator's Room Heater	1"	(3) #10	(1) #10	#10
P-2E	Motor Control Center	Electrical Room Heater	1"	(3) #10	(1) #10	#10
P-2F	Motor Control Center	West Dynamic Braking Resistor	As Per Manufacturer			
P-2G	Motor Control Center	East Dynamic Braking Resistor	As Per Manufacturer			
P-3	JB-2	JB-5A	1.5"	(3) #10, (11) #12	(1) #10, (4) #12	#10
P-5A	JB-5A	North Barrier Gate	3/4"	(3) #12	(1) #12	#12
P-5B	JB-5A	JB-5B	1.5"	(3) #10, (8) #12	(1) #10, (3) #12	#10
P-5C	JB-5B	North Pedestrian Gate	3/4"	(3) #12	(1) #12	#12
P-5D	JB-5B	JB-6	1"	(3) #10, (5) #12	(1) #10, (2) #12	#10
P-6A	JB-6	East Motor Disconnect	3/4"	(3) #10	(1) #10	#10
P-6B	East Motor Disconnect	East Motor	3/4"	(3) #10	(1) #10	#10
P-6C	JB-6	East Motor Disconnect	3/4"	(2) #12	(1) #12	#12
P-6D	East Motor Disconnect	East Motor Brake	3/4"	(2) #12	(1) #12	#12
P-6E	JB-6	East Machinery Brake Disconnect	3/4"	(3) #12	(1) #12	#12
P-6F	East Machinery Brake Disconnect	East Machinery Brake	3/4"	(3) #12	(1) #12	#12
P-7A	JB-7	West Motor Disconnect	3/4"	(3) #10	(1) #10	#10
P-7B	West Motor Disconnect	West Motor	3/4"	(3) #10	(1) #10	#10
P-7C	JB-7	West Motor Disconnect	3/4"	(2) #12	(1) #12	#12
P-7D	West Motor Disconnect	West Motor Brake	3/4"	(2) #12	(1) #12	#12
P-7E	JB-7	West Machinery Brake Disconnect	3/4"	(3) #12	(1) #12	#12
P-7F	West Machinery Brake Disconnect	West Machinery Brake	3/4"	(3) #12	(1) #12	#12
P-12A	South Aerial Cable Terminal Cabinet	JB-12	3/4"	(3) #10	(1) #12	#12
P-12B	JB-12	South Pedestrian Gate	3/4"	(3) #12	(1) #12	#12
P-12C	JB-12	South Power And Control Cabinet	1"	(3) #10, (6) #12	(1) #10, (2) #12	#10
P-13A	South Power And Control Cabinet	South Barrier Gate	1"	(6) #12	(2) #12	#12
P-13B	South Barrier Gate	Span Lock Motor Disconnect	3/4"	(3) #12	(1) #12	#12
P-13C	Span Lock Motor Disconnect	Span Lock Motor	3/4"	(3) #12	(1) #12	#12

NOTE:

1. See Conduit And Conductor Schedule On The Previous Sheet For Additional Conduit And Conductor Notes.

STATE OF MAINE
DEPARTMENT OF TRANSPORTATION

APPROVED | DATE

COMMISSIONER:

CHIEF ENGINEER:

PROJECT INFORMATION

PROGRAM	BRIDGE
PROJECT MANAGER	STEPHEN BODGE
DESIGNER	HARDESTY & HANOVER
CONSULTANT	HARDESTY & HANOVER
PROJECT RESIDENT	
CONTRACTOR	
PROJECT COMPLETION DATE	

SIGNATURE

13196
P.E. NUMBER

DATE

SOUTH BRISTOL
GUT BRIDGE

CONDUIT AND CONDUCTOR
SCHEDULE II

SHEET NUMBER

117

OF 141

Filename: ...\117_Conduit_and_Conductor_Schedule_2.dgn Division: BRIDGE Username: common Date:1/29/2014

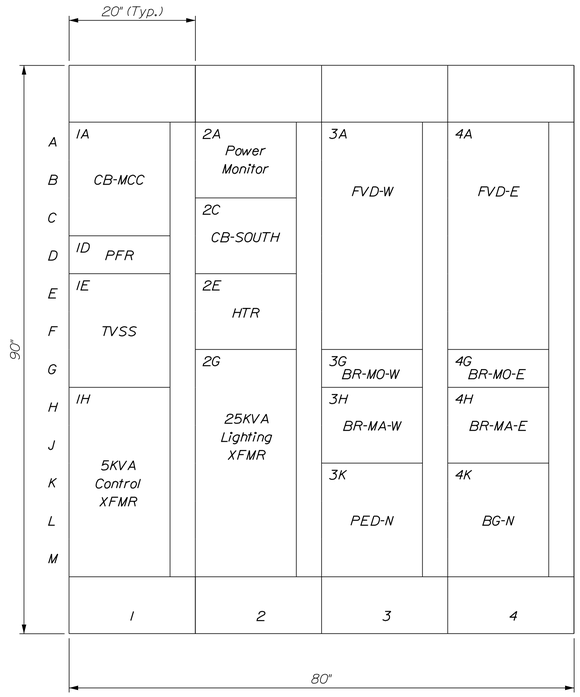

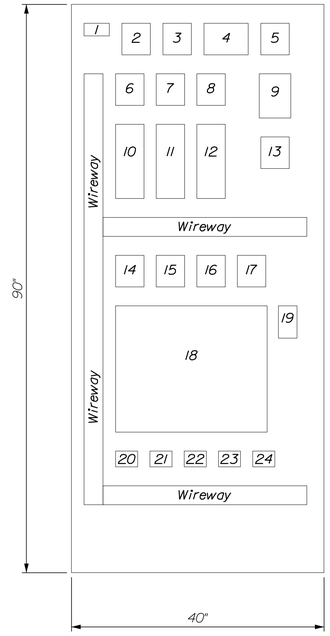

MOTOR CONTROL CENTER SCHEDULE

Cubicle	Designation	Device
1A	CB-MCC	Incoming Line Circuit Breaker
1D	PFR	Phase Failure Relay
1E	TVSS	Transient Voltage Surge Supressor
1H	5KVA Control XFMR	5KVA Control Transformer
2A	Power Monitor	Power Monitor
2C	CB-SOUTH	South Side Power Feeder
2E	HTR	Heating Circuit Breaker
2G	25KVA Lighting XFMR	25KVA Lighting Transformer
3A	FVD-W	West Flux Vector Drive
3G	BR-MO-W	West Motor Brake Starter
3H	BR-MA-W	West Machinery Brake Starter
3K	PED-N	North Pedestrian Gate Starter
4A	FVD-E	East Flux Vector Drive
4G	BR-MO-E	East Motor Brake Starter
4H	BR-MA-E	East Machinery Brake Starter
4K	BG-N	North Barrier Gate Starter

SOUTH SIDE POWER AND CONTROL CABINET SCHEDULE

Mark	Designation	Device
1	Lugs	Incoming Power Lugs
2	CB-SOUTH-2	Main Circuit Breaker
3	CB-CP-S-1	Control Transformer Line Breaker
4	XFMR-CP-S	Control Transformer
5	CB-CP-S-2	Control Transformer Load Breaker
6	MCP-PED-S	South Pedestrian Gate Protector
7	MCP-BG-S	South Barrier Gate Protector
8	MCP-SL	Span Lock Protector
9	M-ESTOP-S	South E-Stop Contactor
10	M-PED-S	South Pedestrian Gate Starter
11	M-BG-S	South Barrier Gate Starter
12	M-SL	Span Lock Starter
13	CB-OUT-S	South PLC Outputs Breaker
14	CB-PLC	South PLC Breaker
15	CB-GATE-S-1	South Flashers/Gongs Breaker
16	CB-GATE-S-2	South Gate Breaker
17	CB-TS-S	South Traffic Signal Breaker
18	PLC Node 6	South PLC Chassis
19	Network Hub	Stratix 5700 Network Hub
20	FU-SOUTH-A	South PLC Input Fuse A
21	FU-SOUTH-B	South PLC Input Fuse B
22	FU-SOUTH-C	South PLC Input Fuse C
23	FU-NAV-S	South Navigation Lighting Fuse
24	FU-STREET-LT	South Street Light Fuse

NOTES:

1. The Contractor Shall Provide Specific Wiring Diagrams And Terminal Layouts For Motor Control Center Buckets. The Wiring Diagrams And Terminal Layouts Shall Not Be Generic Layouts, But Shall Use The Actual Device Names, Actual Wire Numbers, And Loads.
2. The Contractor Shall Provide Copies Of The Final Motor Control Center Wiring Diagrams And Terminal Layouts On 11 By 17 Inch Sheets In A Central Location In The Actual Motor Control Center.
3. All Cabinets Are 15" Deep.
4. All MCC Buckets Shall Be Provided With Pilot Lights On The Door That Will Indicate That The Contactors Are Energized And Pilot Lights To Indicate Tripped Overloads And Circuit Breakers.
5. Brake Starter Buckets Shall Be Provided With Spring Return-To-Off Test Switches.

STATE OF MAINE
DEPARTMENT OF TRANSPORTATION

APPROVED | DATE
COMMISSIONER:
CHIEF ENGINEER:

SIGNATURE
13196
P.E. NUMBER
DATE

PROJECT INFORMATION

PROGRAM	BRIDGE
PROJECT MANAGER	STEPHEN BODGE
DESIGNER	HARDESTY & HANOVER
CONSULTANT	HARDESTY & HANOVER
PROJECT RESIDENT	
CONTRACTOR	
PROJECT COMPLETION DATE	

SOUTH BRISTOL
GUT BRIDGE

MOTOR CONTROL CENTER LAYOUT
POWER PANEL LAYOUT

SHEET NUMBER
118
OF 141

Filename: ...\118_Motor_Control_Center_And_Power_Panel_Layout.dgn Division: BRIDGE Username: common Date:1/29/2014

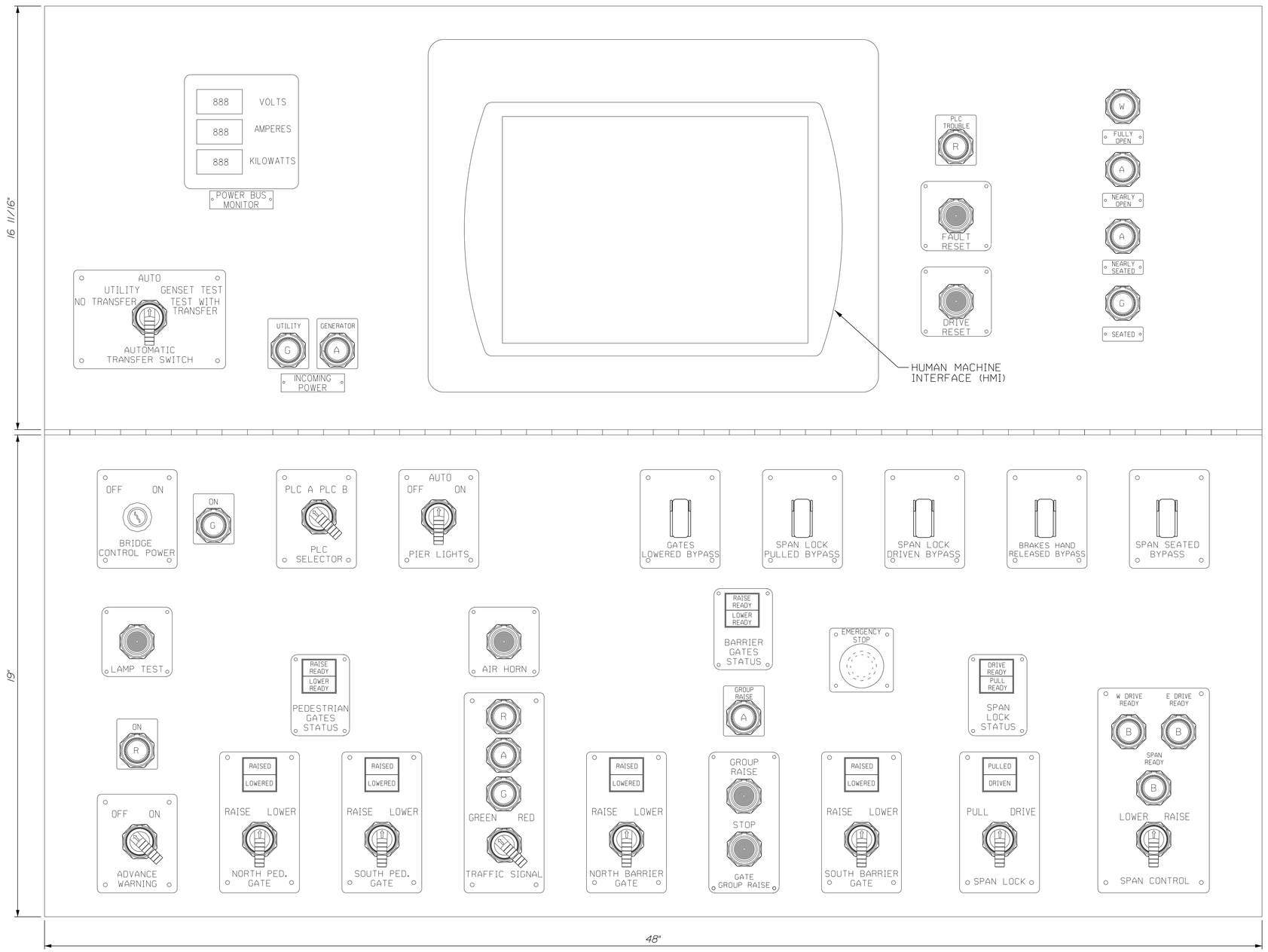

CONTROL DESK LAYOUT

NOTES FOR CONTROL DESK CONSTRUCTION:

1. Pushbuttons, Selector Switches, Tumbler Switches, And Indicating Lights Shall Be Of Heavy Duty, Oil Tight Construction Furnished With Nameplate Per Contract Documents. Indicator Lights Shall Consist Of A Candelabra Screw Base Socket With Screw Terminal, Screw Cap, And Flat Glass Lens With Color And Legend As Shown On Drawing. Switches, Pushbuttons, And Indicating Lights Shall Be Similar To Cutler Hammer 1250T Or Approved Equal. All Indicating Lamps Shall Be LED Type, Rated 120 Volts.

2. Dual Field Lights Colors Are As Follows:
   Status "Ready" Lights: Blue
   Gate Raised Lights: Green
   Span Lock Driven Light: Green
   Gate Lowered Lights: White
   Span Lock Pulled Light: White

3. See Following Sheet For Control Desk Elevation Details.

STATE OF MAINE
DEPARTMENT OF TRANSPORTATION

APPROVED | DATE
COMMISSIONER:
CHIEF ENGINEER:

PROJECT INFORMATION

PROGRAM	BRIDGE	SIGNATURE
PROJECT MANAGER	STEPHEN BODGE	
DESIGNER	HARDESTY & HANOVER	13196 P.E. NUMBER
CONSULTANT	HARDESTY & HANOVER	
PROJECT RESIDENT		DATE
CONTRACTOR		
PROJECT COMPLETION DATE		

SOUTH BRISTOL
GUT BRIDGE

CONTROL DESK LAYOUT

SHEET NUMBER
119
OF 141

Filename: ...\119_ControlDesk_Layout.dgn Division: BRIDGE Username: common Date:1/29/2014

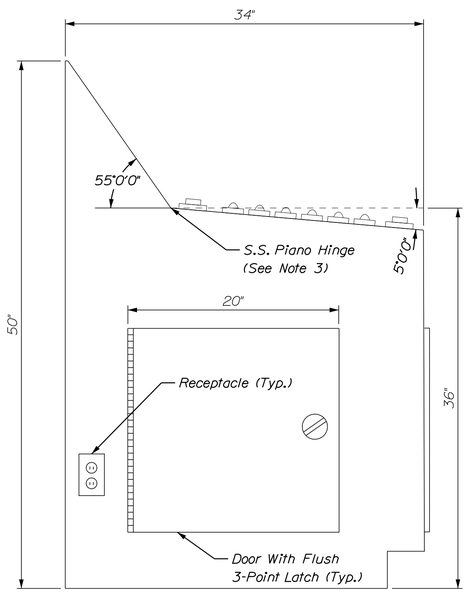

CONTROL DESK SIDE VIEW

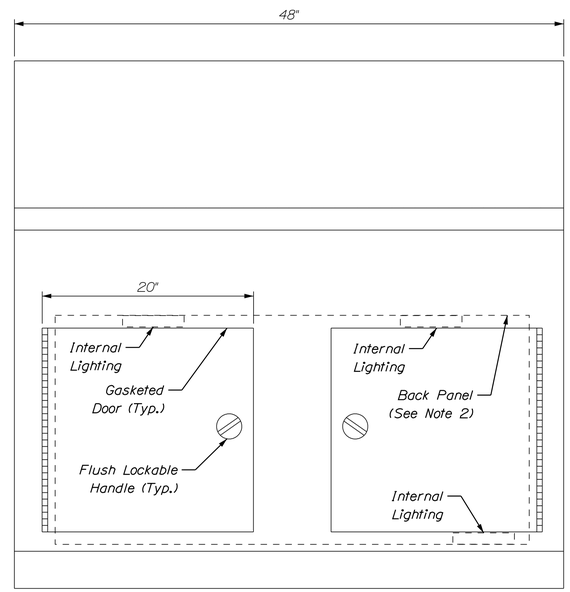

CONTROL DESK FRONT VIEW

NOTES FOR CONTROL DESK CONSTRUCTION:

1. Control Desk Frames Shall Be Fabricated From 11 Gauge Sheet Steel Properly Formed And Suitably Reinforced To Provide Adequate Strength.
2. The Inclined Meter Panel And Desk Top Shall Be Fabricated From 11 Gauge Stainless Steel With A Non-Glare Satin Finish.
3. Control Desk Doors Shall Be Secured By Flush Handles And A 3-Point Locking Bar Mechanism.
4. Control Desk Interior Shall Contain Thermo-Statically Controlled Heater With Disconnect Means: Specification Grade, 125-Volt, 20-Amp Duplex Receptacle And Interior Light Controlled By Specification Grade Single Pole, Toggle Switch With Lighted Handle.
5. Include Provision To Hold Desk Top Open For Maintenance Purposes.
6. Provide Handles To Open Desk Top.
7. See Previous Sheet For Control Desk Details.

STATE OF MAINE
DEPARTMENT OF TRANSPORTATION

APPROVED | DATE
COMMISSIONER:
CHIEF ENGINEER:

PROJECT INFORMATION

PROGRAM	BRIDGE	SIGNATURE
PROJECT MANAGER	STEPHEN BODGE	
DESIGNER	HARDESTY & HANOVER	13196
CONSULTANT	HARDESTY & HANOVER	P.E. NUMBER
PROJECT RESIDENT		
CONTRACTOR		DATE
PROJECT COMPLETION DATE		

SOUTH BRISTOL
GUT BRIDGE

CONTROL DESK ELEVATION

SHEET NUMBER
120
OF 141

Filename: ...\120_Control_Desk_Elevation.dgn Division: BRIDGE Username: common Date:1/29/2014

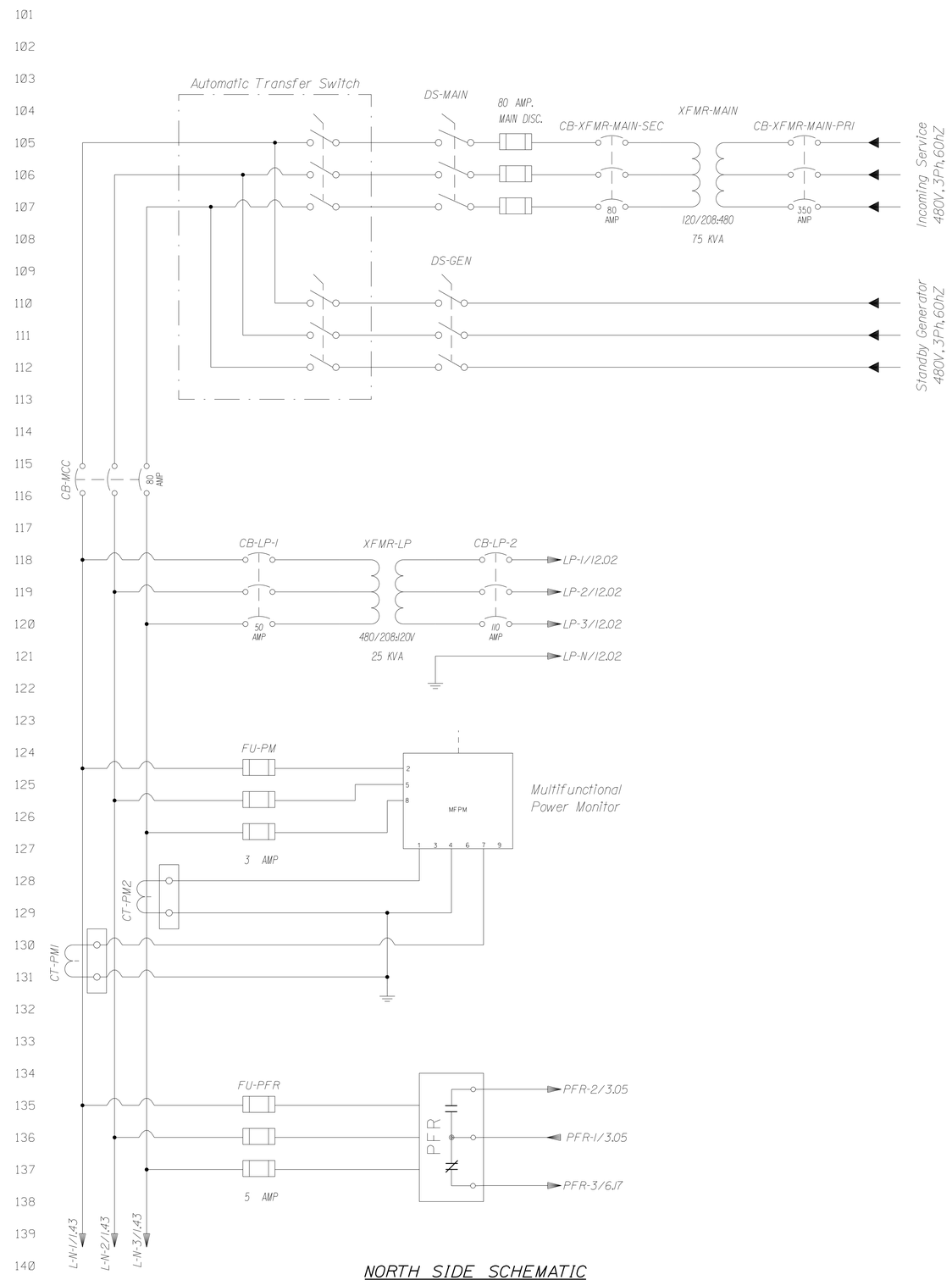

NORTH SIDE SCHEMATIC

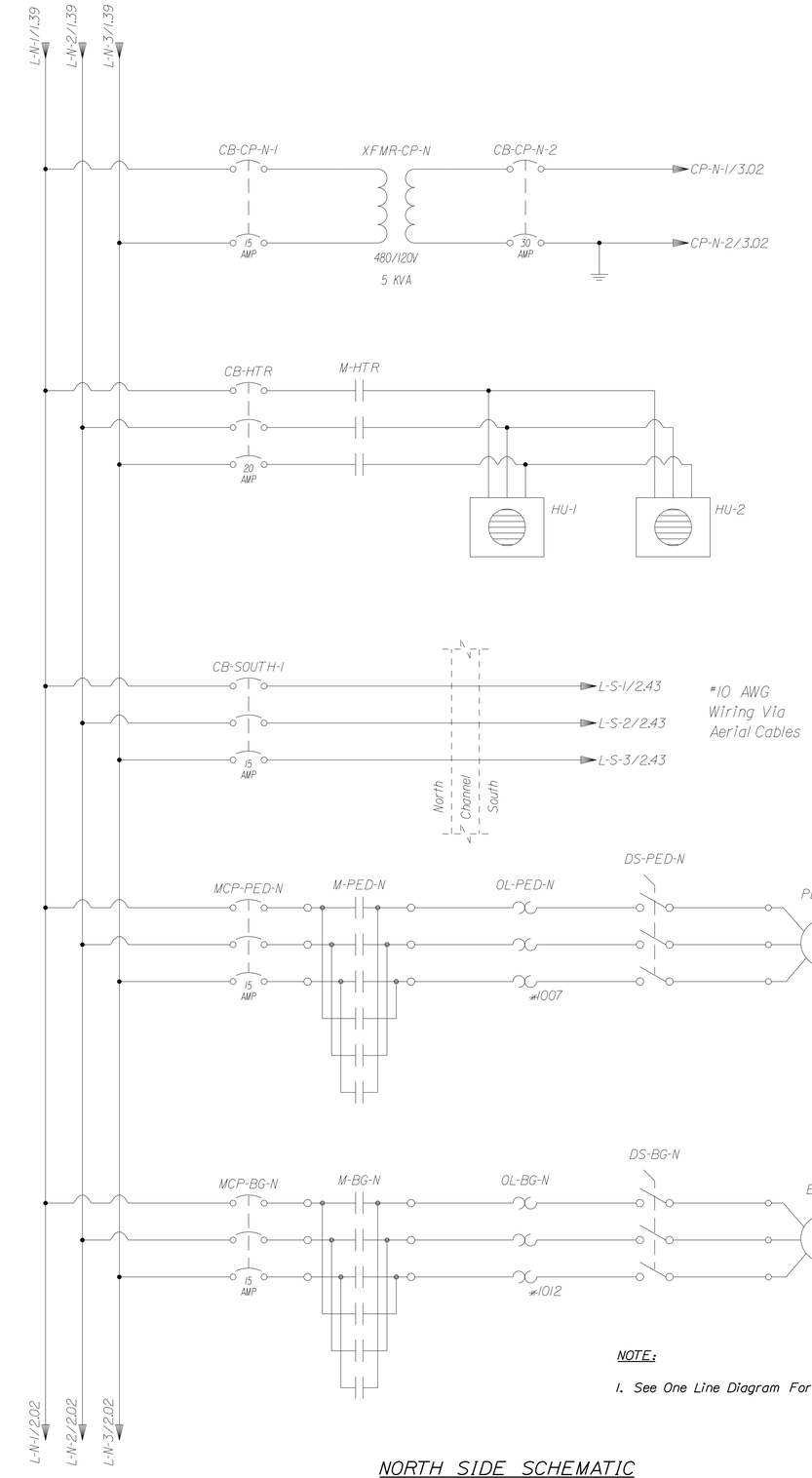

NOTE:

1. See One Line Diagram For Feeder Wire Sizing.

NORTH SIDE SCHEMATIC

STATE OF MAINE
DEPARTMENT OF TRANSPORTATION

APPROVED | DATE

COMMISSIONER:

CHIEF ENGINEER:

SIGNATURE

13196 P.E. NUMBER

DATE

PROJECT INFORMATION

PROGRAM	BRIDGE
PROJECT MANAGER	STEPHEN BODGE
DESIGNER	HARDESTY & HANOVER
CONSULTANT	HARDESTY & HANOVER
PROJECT RESIDENT	
CONTRACTOR	
PROJECT COMPLETION DATE	

SOUTH BRISTOL
GUT BRIDGE

WIRING DIAGRAM
POWER DISTRIBUTION I

SHEET NUMBER

121

OF 141

Filename: ...\121_Wiring_Diagram-_Power_Distribution_1.dgn Division: BRIDGE Username: common Date:1/29/2014

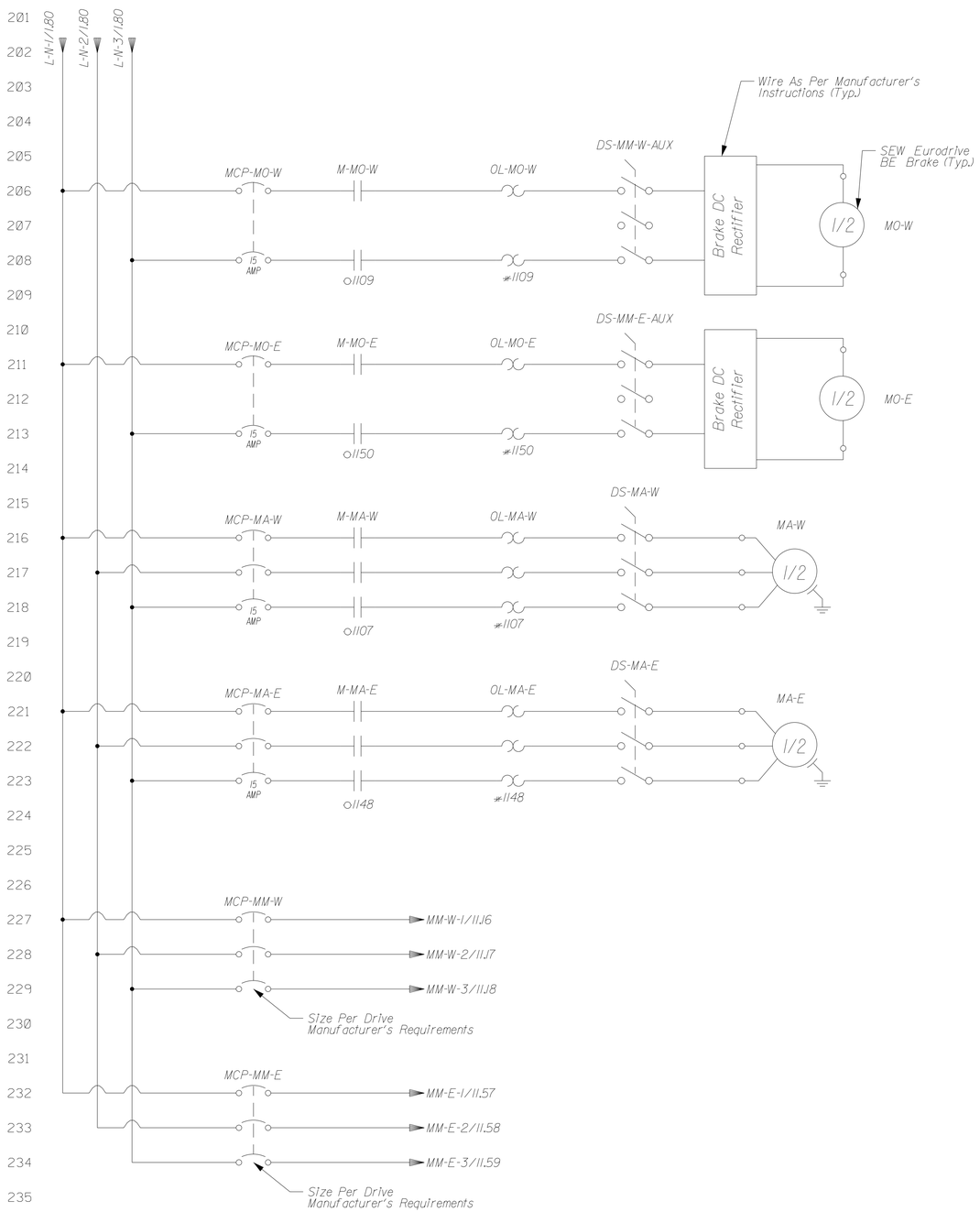

NORTH SIDE SCHEMATIC

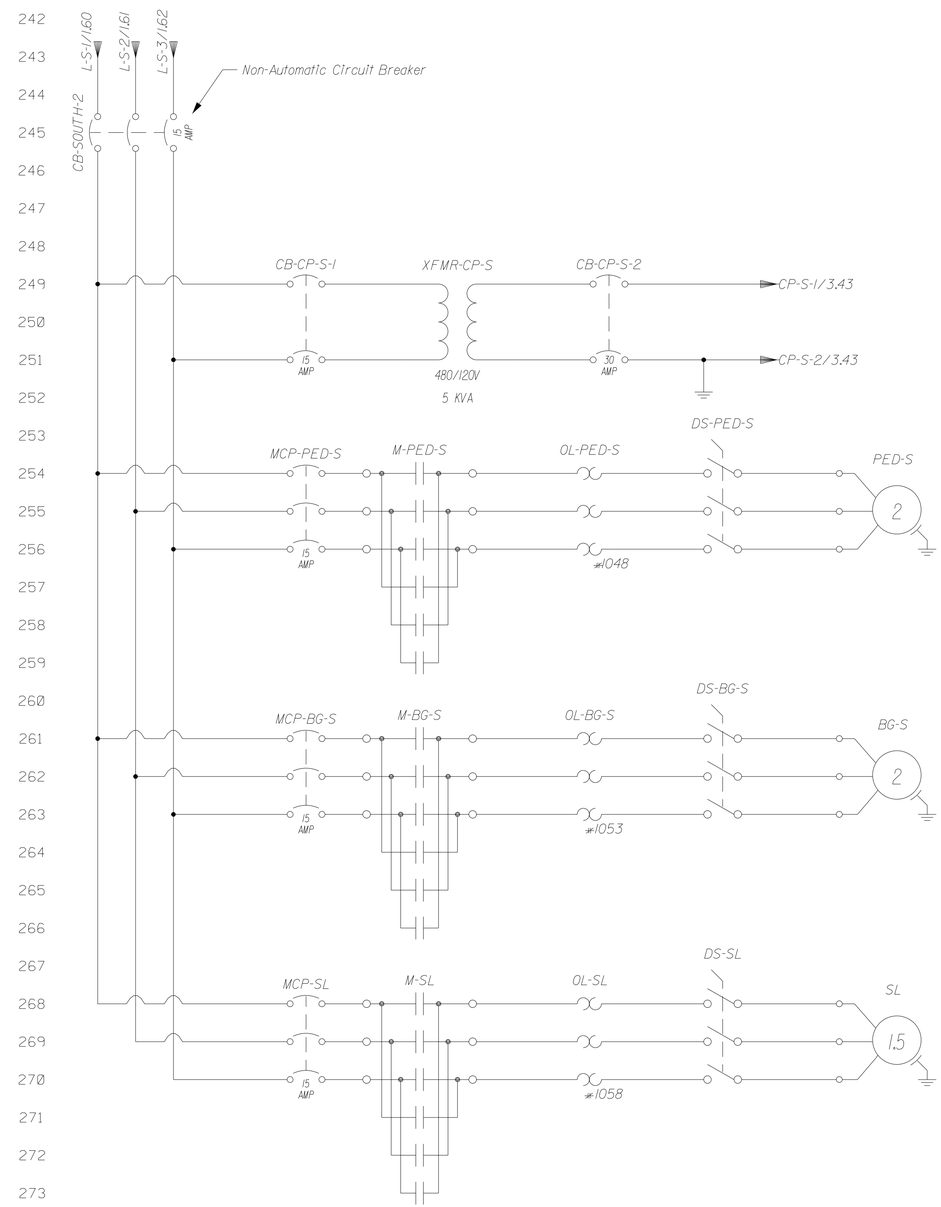

NOTE:

1. See One Line Diagram For Feeder Wire Sizing.

SOUTH SIDE SCHEMATIC

STATE OF MAINE
DEPARTMENT OF TRANSPORTATION

APPROVED | DATE

COMMISSIONER:

CHIEF ENGINEER:

PROJECT INFORMATION

PROGRAM	BRIDGE
PROJECT MANAGER	STEPHEN BODGE
DESIGNER	HARDESTY & HANOVER
CONSULTANT	HARDESTY & HANOVER
PROJECT RESIDENT	
CONTRACTOR	
PROJECT COMPLETION DATE	

SIGNATURE

13196
P.E. NUMBER

DATE

SOUTH BRISTOL
GUT BRIDGE

WIRING DIAGRAM
POWER DISTRIBUTION II

SHEET NUMBER

122

OF 141

Filename: ...\122_Wiring_Diagram-_Power_Distribution_2.dgn Division: BRIDGE Username: common Date:1/29/2014

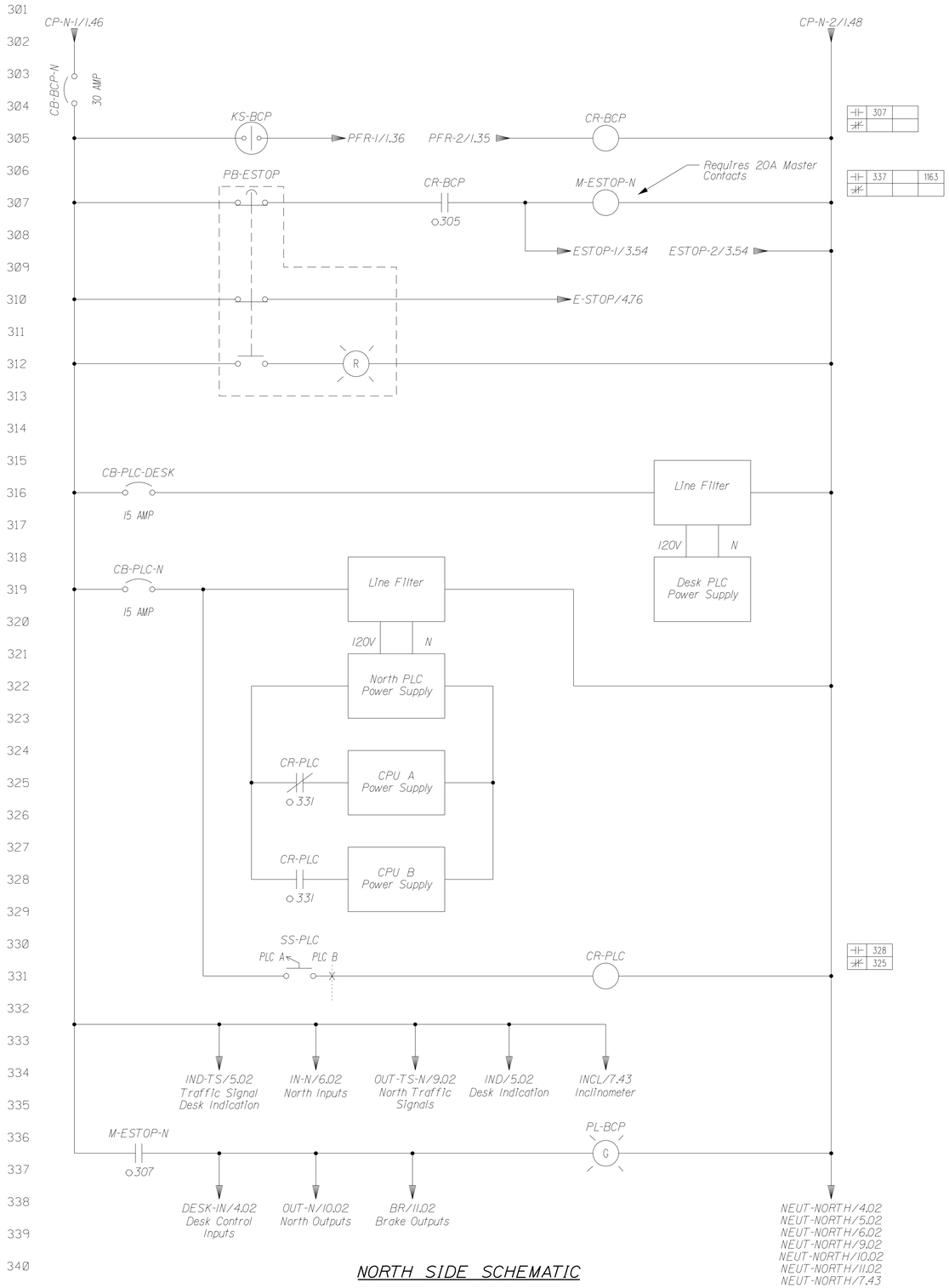

NORTH SIDE SCHEMATIC

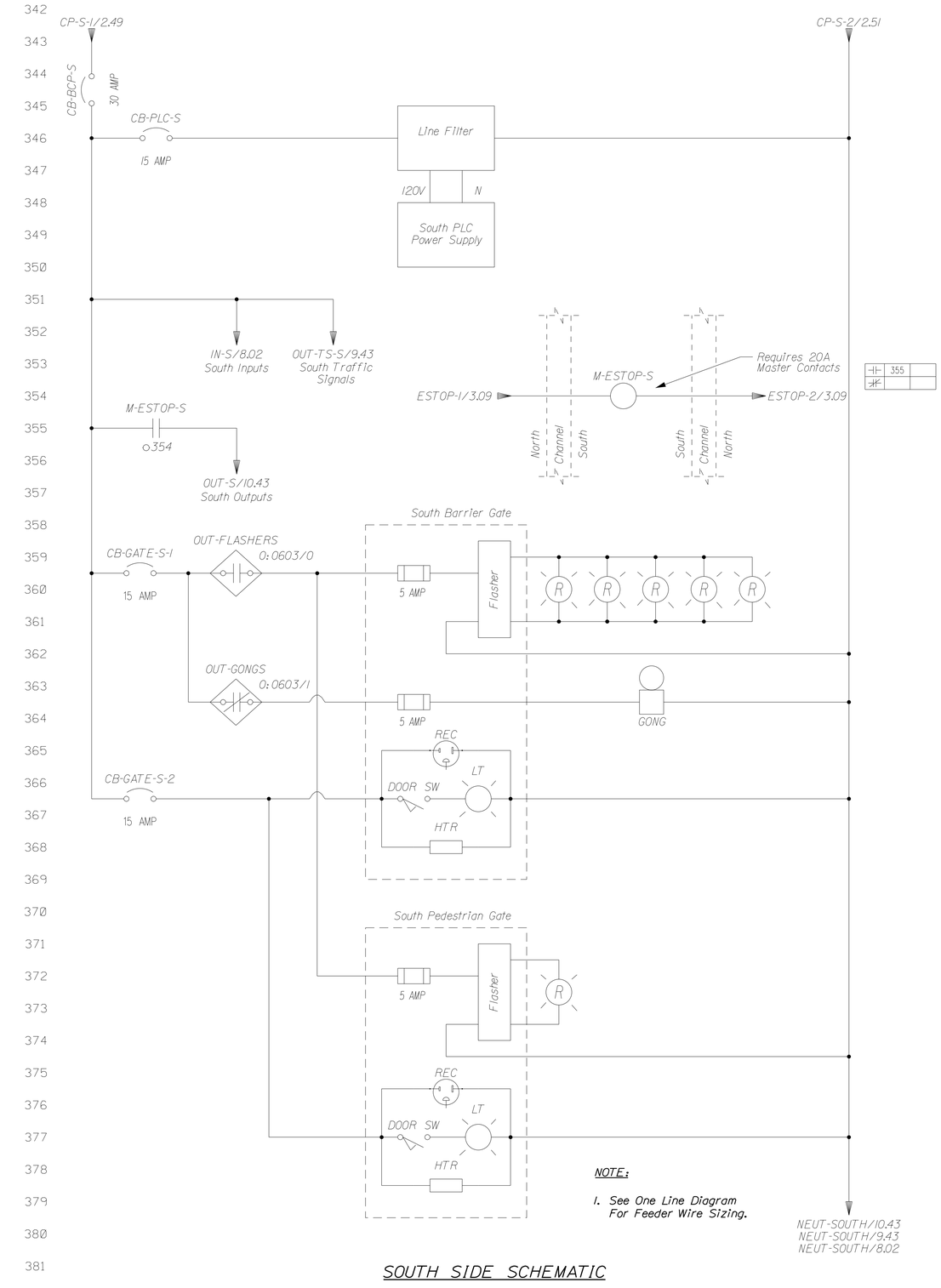

SOUTH SIDE SCHEMATIC

STATE OF MAINE
DEPARTMENT OF TRANSPORTATION

APPROVED | DATE

COMMISSIONER:

CHIEF ENGINEER:

SIGNATURE

13196
P.E. NUMBER

DATE

PROJECT INFORMATION

PROGRAM	BRIDGE
PROJECT MANAGER	STEPHEN BODGE
DESIGNER	HARDESTY & HANOVER
CONSULTANT	HARDESTY & HANOVER
PROJECT RESIDENT	
CONTRACTOR	
PROJECT COMPLETION DATE	

SOUTH BRISTOL
GUT BRIDGE

WIRING DIAGRAM
BRIDGE CONTROL POWER

SHEET NUMBER
123
OF 141

Filename: ...\123_Wiring_Diagram-_Bridge_Control_Power.dgn Division: BRIDGE Username: common Date:1/29/2014

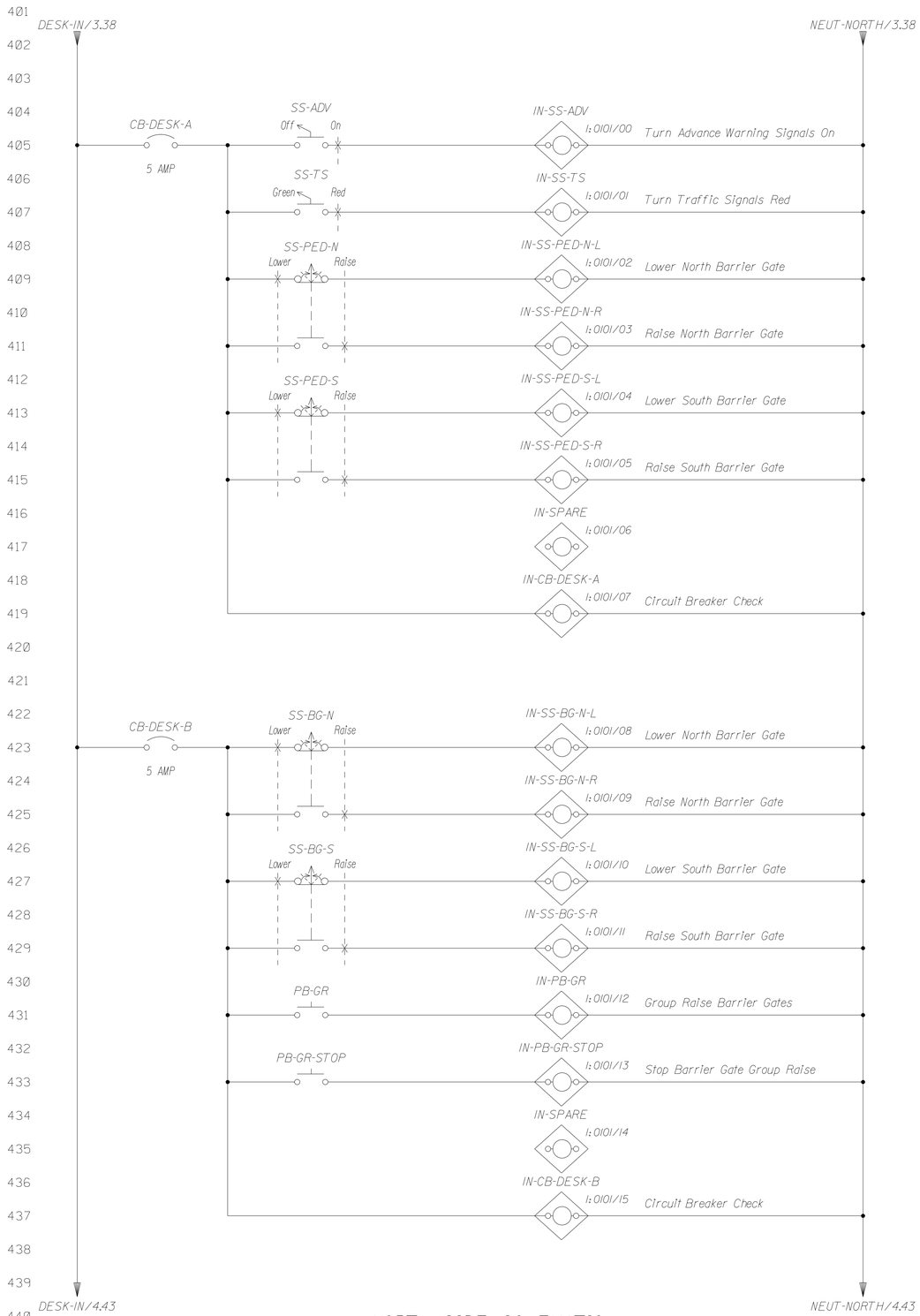

NORTH SIDE SCHEMATIC

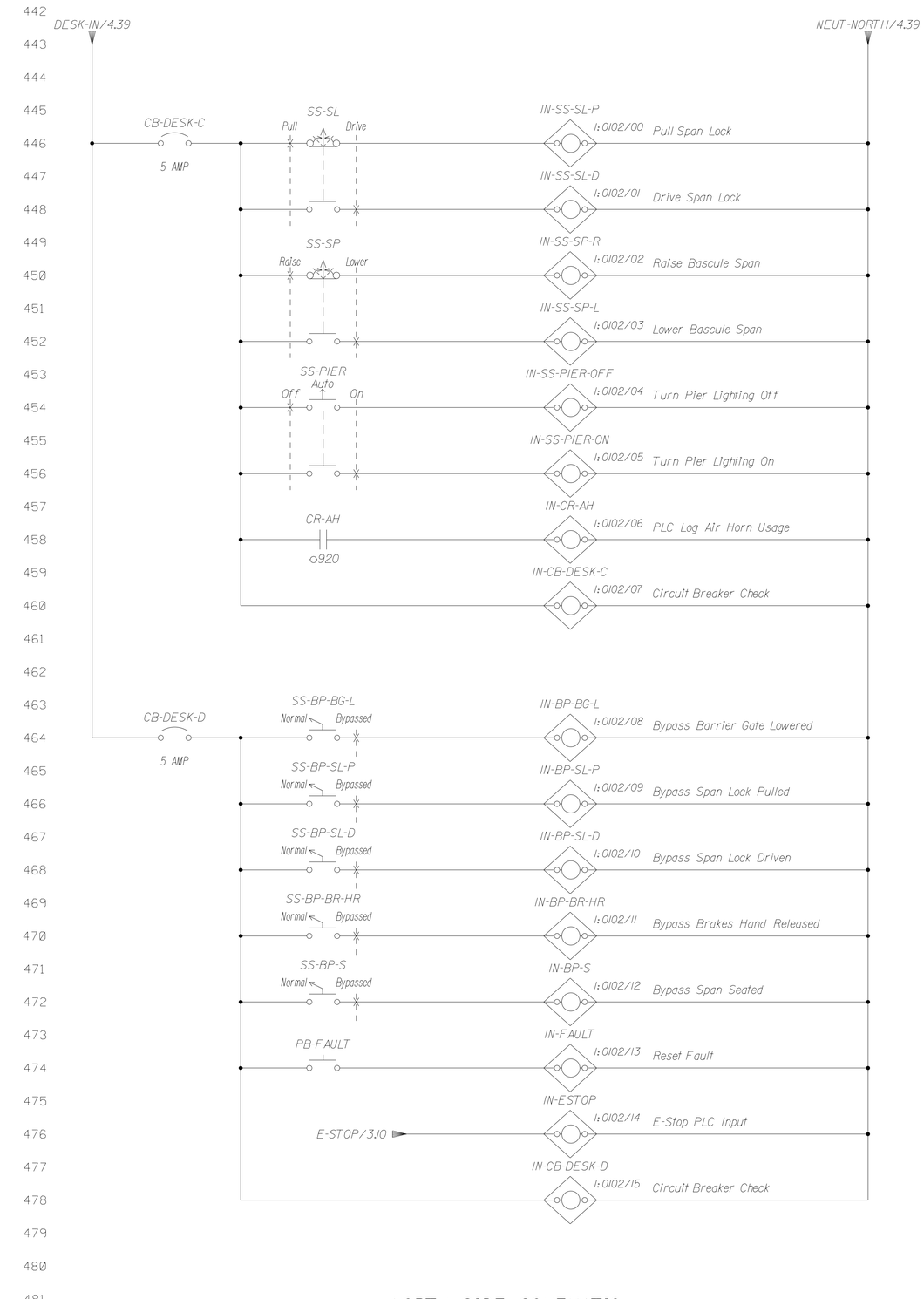

NORTH SIDE SCHEMATIC

STATE OF MAINE
DEPARTMENT OF TRANSPORTATION

APPROVED

	DATE
COMMISSIONER:	
CHIEF ENGINEER:	

	SIGNATURE
	13196
	P.E. NUMBER
	DATE

PROJECT INFORMATION

PROGRAM	BRIDGE
PROJECT MANAGER	STEPHEN BODGE
DESIGNER	HARDESTY & HANOVER
CONSULTANT	HARDESTY & HANOVER
PROJECT RESIDENT	
CONTRACTOR	
PROJECT COMPLETION DATE	

SOUTH BRISTOL
GUT BRIDGE

WIRING DIAGRAM
CONTROL DESK INPUTS

SHEET NUMBER

124

OF 141

Filename: ...\124_Wiring_Diagram-_Control_Desk_Inputs.dgn Division: BRIDGE Username: common Date:1/29/2014

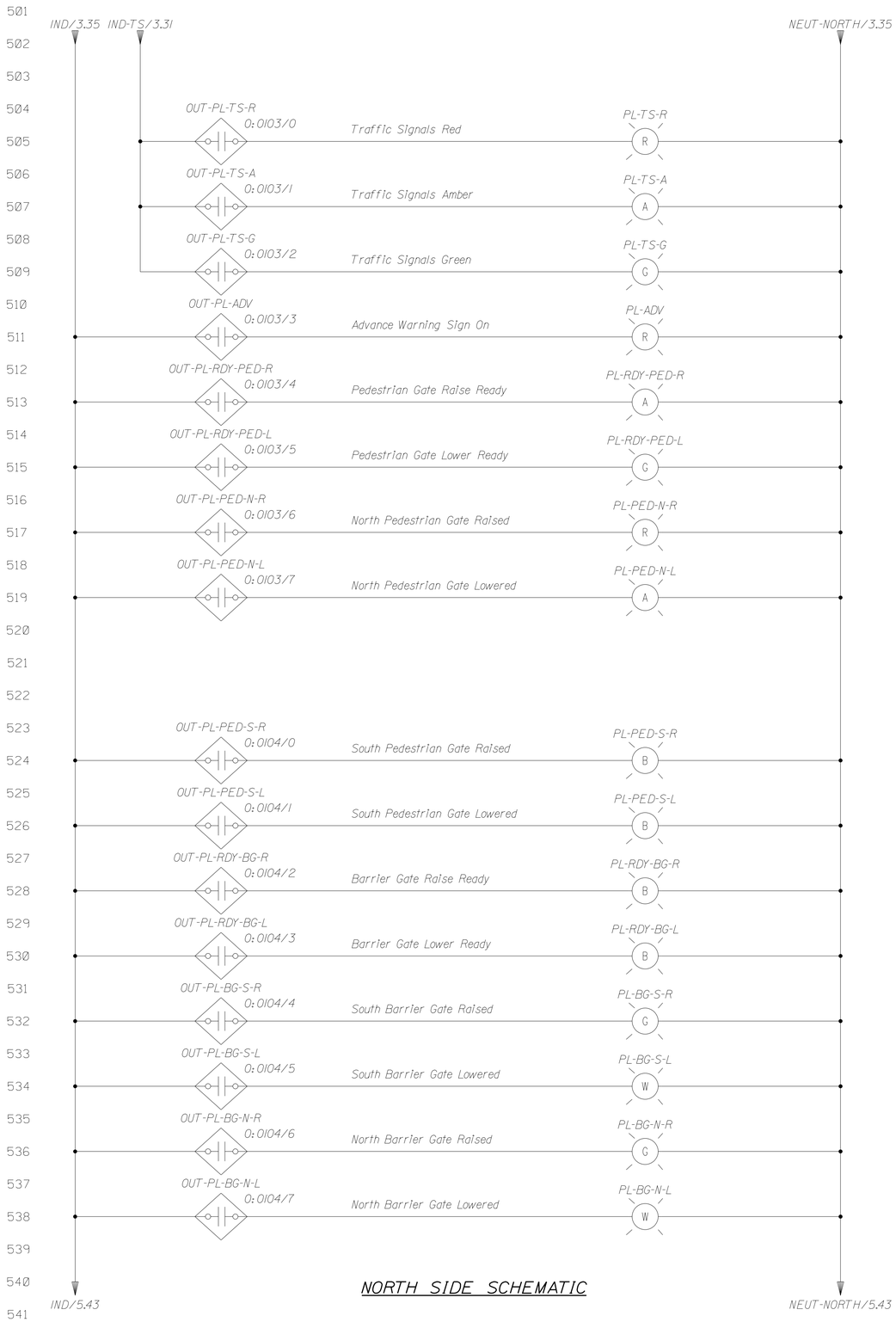

NORTH SIDE SCHEMATIC

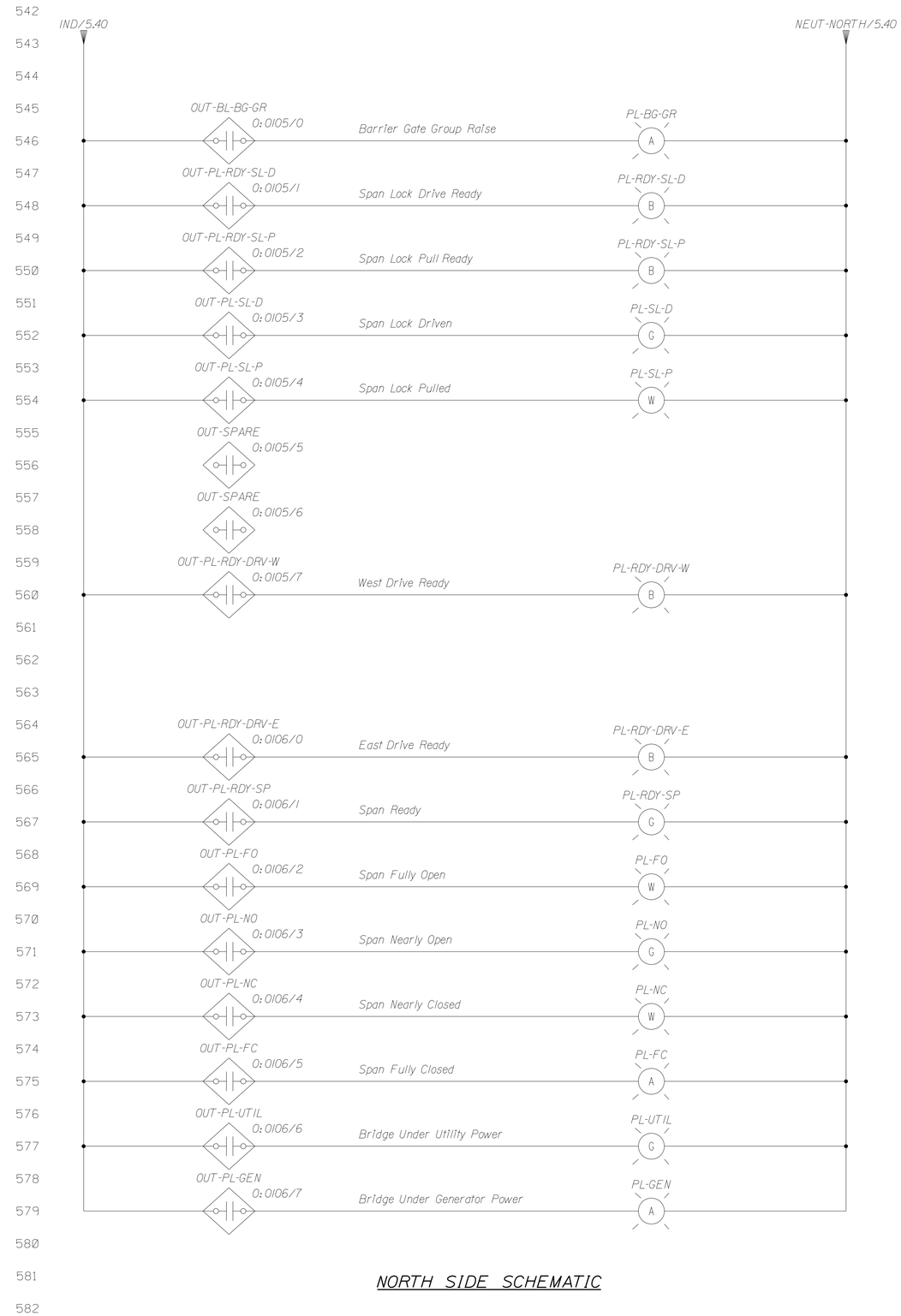

NORTH SIDE SCHEMATIC

STATE OF MAINE
DEPARTMENT OF TRANSPORTATION

APPROVED | DATE

COMMISSIONER:

CHIEF ENGINEER:

SIGNATURE

13196
P.E. NUMBER

DATE

PROJECT INFORMATION

PROGRAM	BRIDGE
PROJECT MANAGER	STEPHEN BODGE
DESIGNER	HARDESTY & HANOVER
CONSULTANT	HARDESTY & HANOVER
PROJECT RESIDENT	
CONTRACTOR	
PROJECT COMPLETION DATE	

SOUTH BRISTOL
GUT BRIDGE

WIRING DIAGRAM
CONTROL DESK OUTPUTS

SHEET NUMBER

125

OF 141

Filename: ...\125_Wiring_Diagram-_Control_Desk_Outputs.dgn Division: BRIDGE Username: common Date:1/29/2014

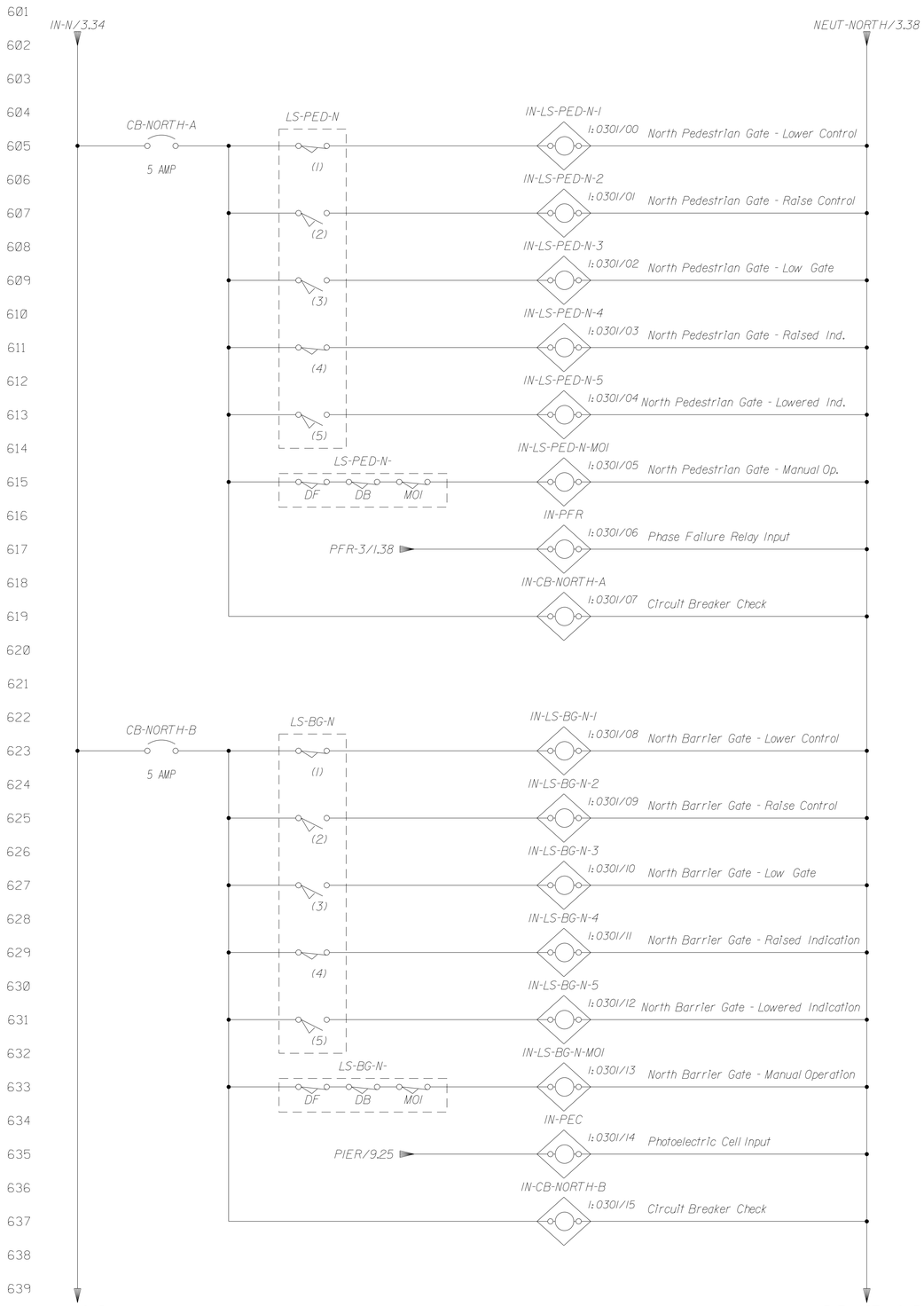

NORTH SIDE SCHEMATIC

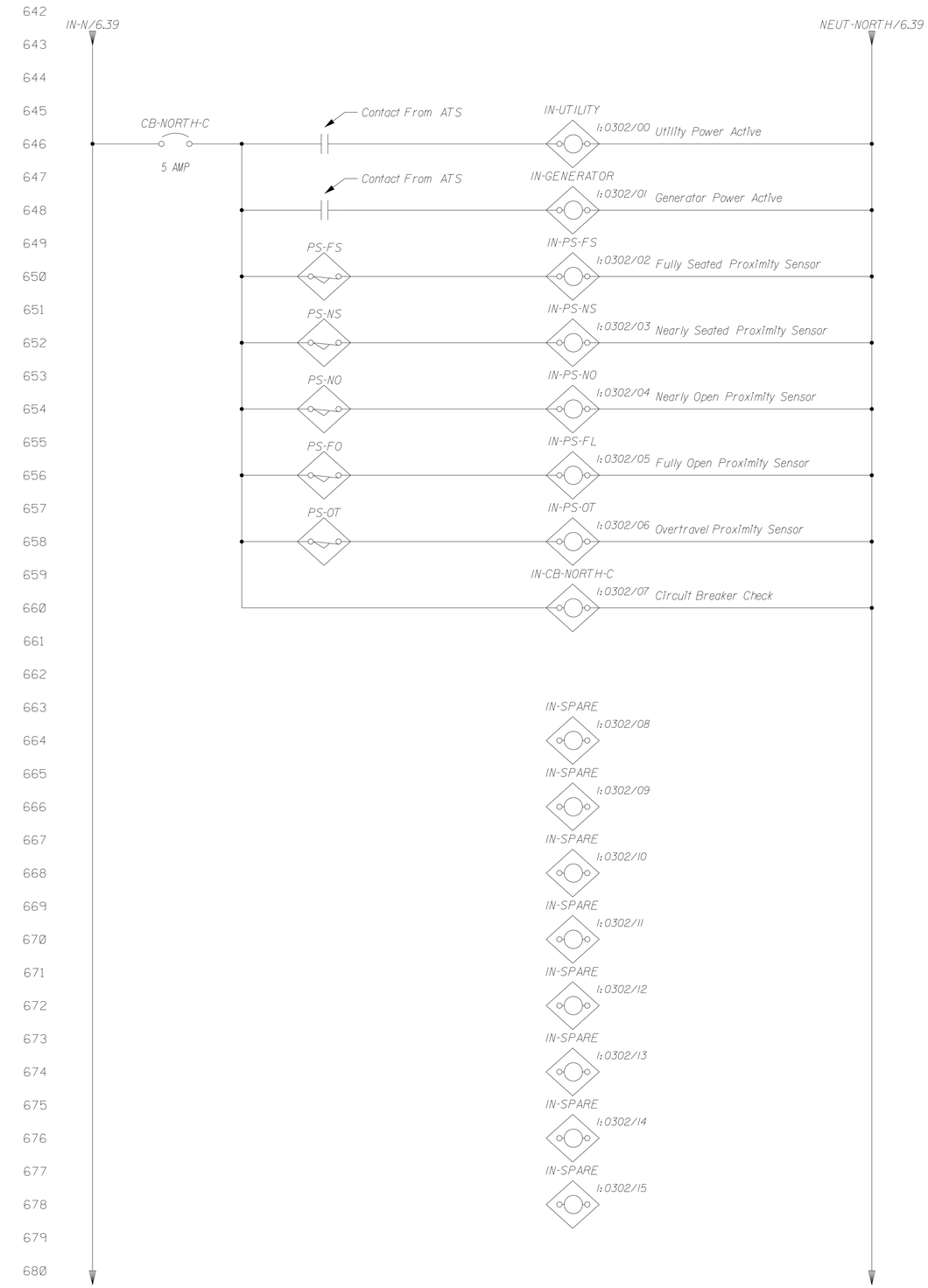

NORTH SIDE SCHEMATIC

STATE OF MAINE
DEPARTMENT OF TRANSPORTATION

APPROVED | DATE

COMMISSIONER:

CHIEF ENGINEER:

SIGNATURE

13196
P.E. NUMBER

DATE

PROJECT INFORMATION

PROGRAM	BRIDGE
PROJECT MANAGER	STEPHEN BODGE
DESIGNER	HARDESTY & HANOVER
CONSULTANT	HARDESTY & HANOVER
PROJECT RESIDENT	
CONTRACTOR	
PROJECT COMPLETION DATE	

SOUTH BRISTOL
GUT BRIDGE

WIRING DIAGRAM NORTH
PLC INPUTS I

SHEET NUMBER
126
OF 141

Filename: ...\126_Wiring_Diagram-_North_PLC_Inputs_1.dgn Division: BRIDGE Username: common Date:1/29/2014

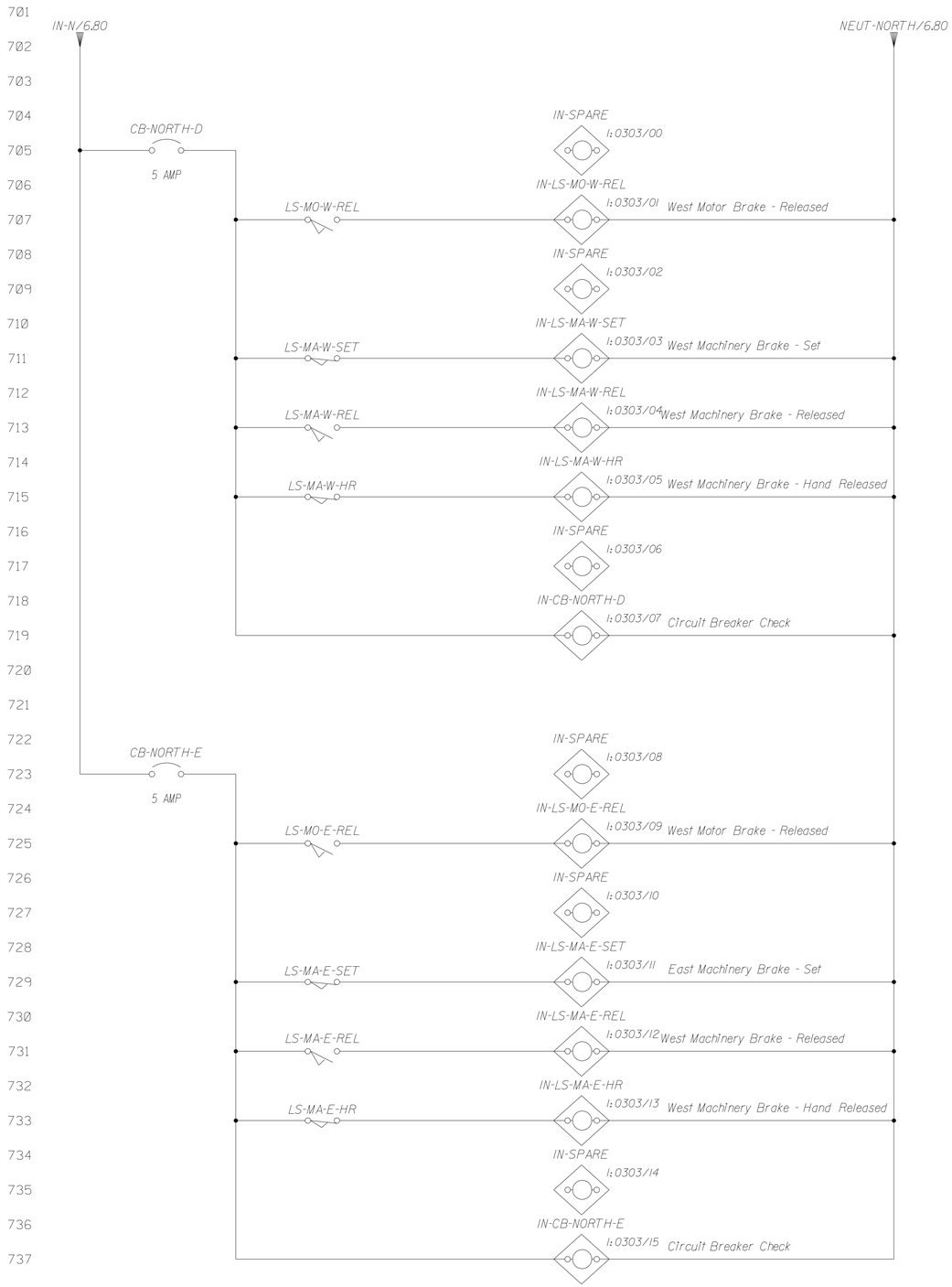

NORTH SIDE SCHEMATIC

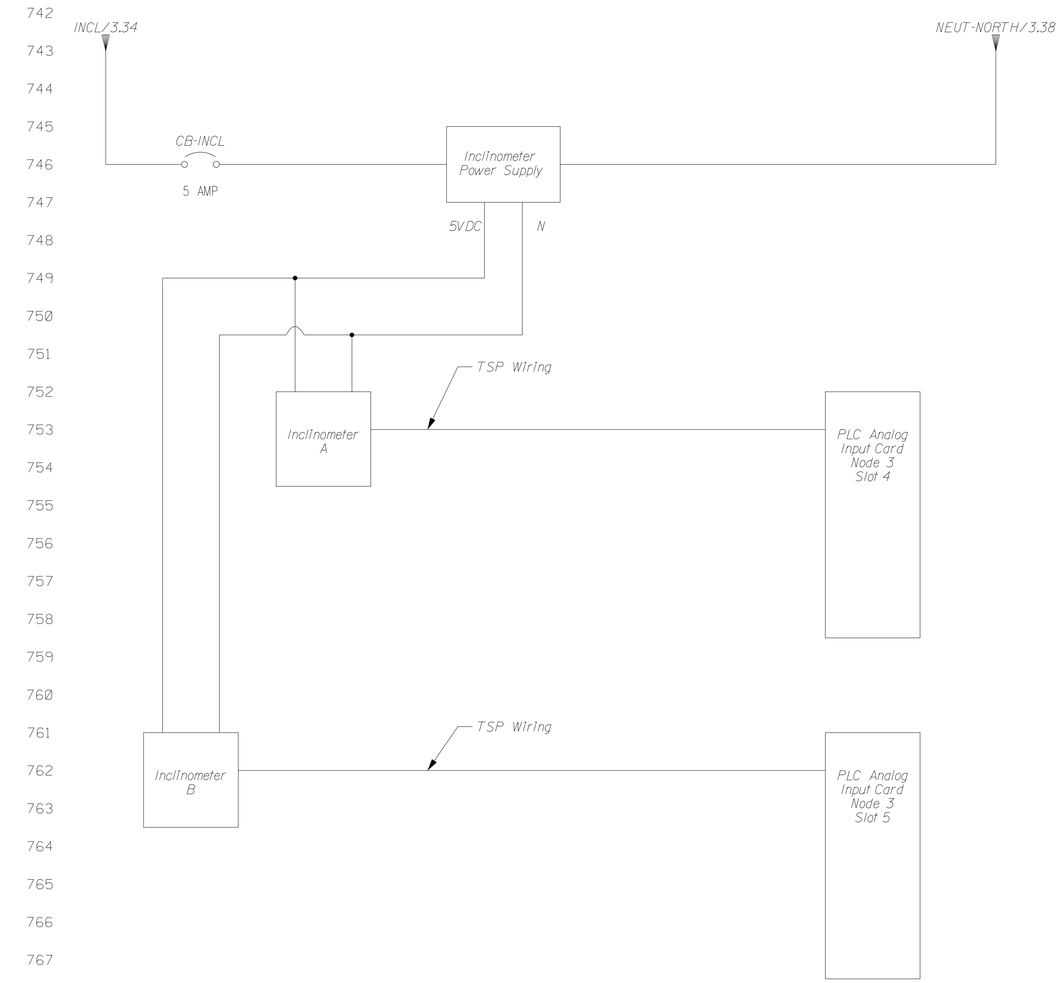

NORTH SIDE SCHEMATIC

STATE OF MAINE
DEPARTMENT OF TRANSPORTATION

APPROVED | DATE
COMMISSIONER:
CHIEF ENGINEER:

SIGNATURE
13196
P.E. NUMBER
DATE

PROJECT INFORMATION

PROGRAM	BRIDGE
PROJECT MANAGER	STEPHEN BODGE
DESIGNER	HARDESTY & HANOVER
CONSULTANT	HARDESTY & HANOVER
PROJECT RESIDENT	
CONTRACTOR	
PROJECT COMPLETION DATE	

SOUTH BRISTOL
GUT BRIDGE

WIRING DIAGRAM NORTH
PLC INPUTS II

SHEET NUMBER
127
OF 141

Filename: ...\127_Wiring_Diagram-_North_PLC_Inputs_2.dgn Division: BRIDGE Username: common Date:1/29/2014

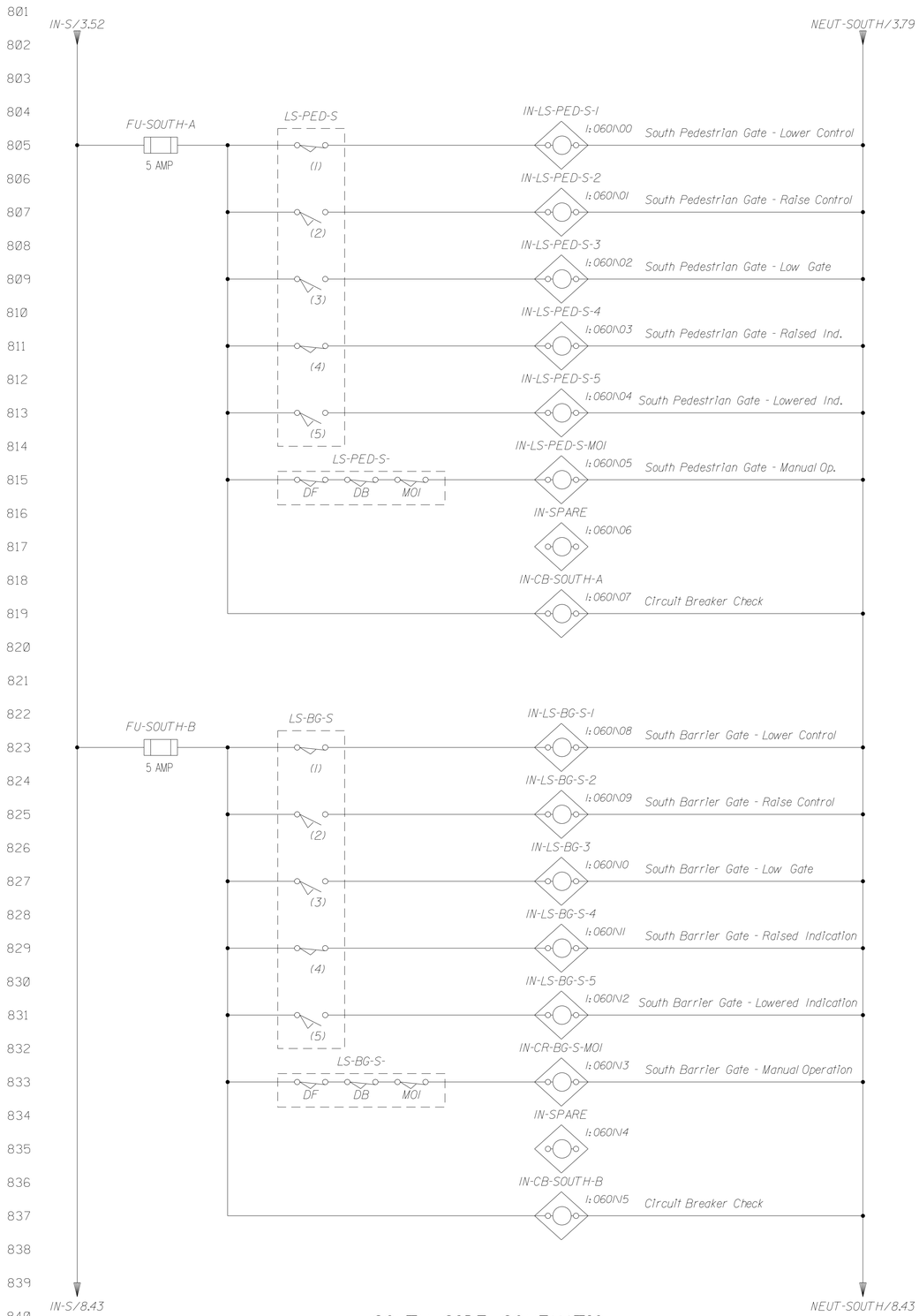

SOUTH SIDE SCHEMATIC

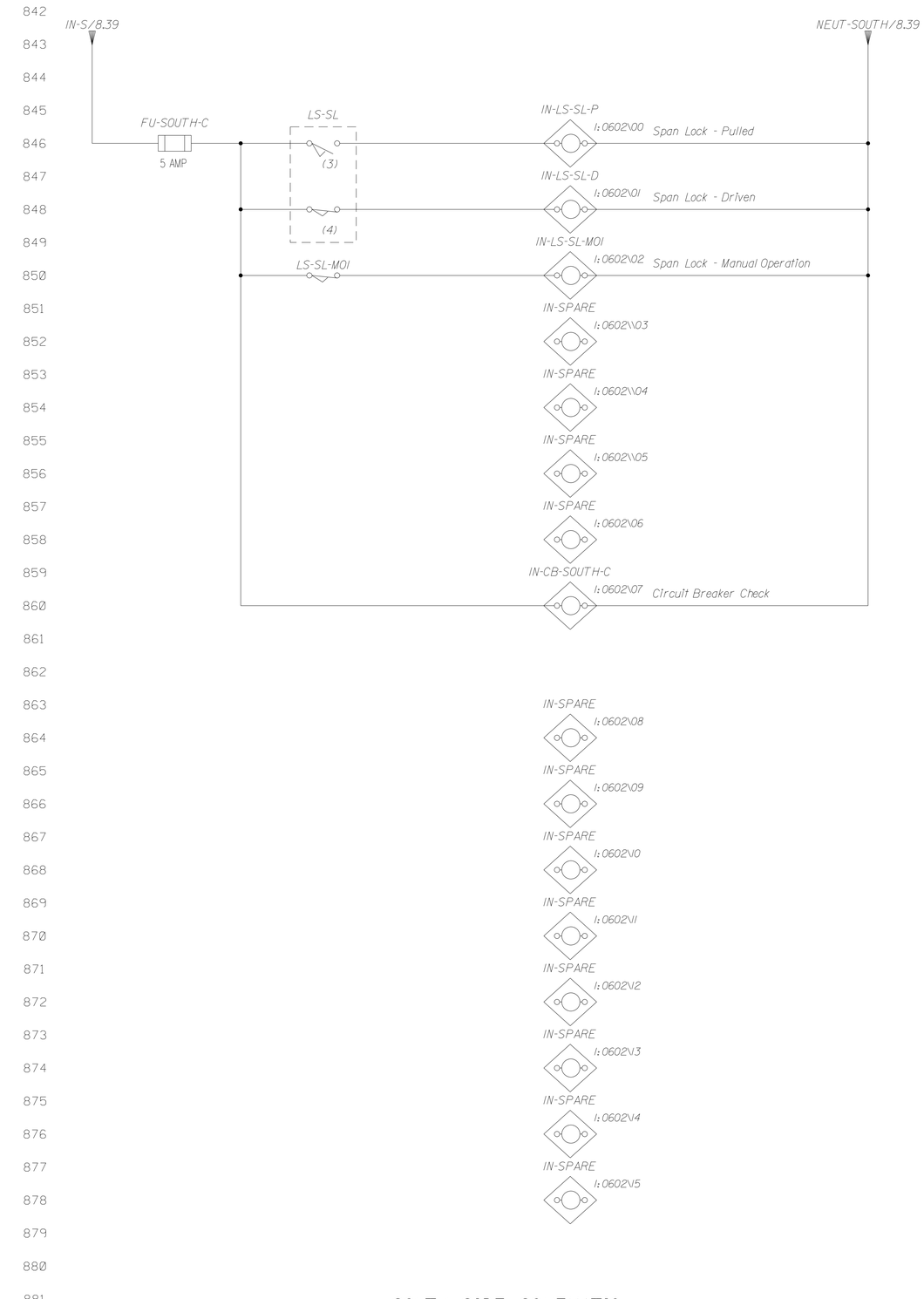

SOUTH SIDE SCHEMATIC

STATE OF MAINE
DEPARTMENT OF TRANSPORTATION

APPROVED | DATE

COMMISSIONER:

CHIEF ENGINEER:

SIGNATURE

13196
P.E. NUMBER

DATE

PROJECT INFORMATION	
PROGRAM	BRIDGE
PROJECT MANAGER	STEPHEN BODGE
DESIGNER	HARDESTY & HANOVER
CONSULTANT	HARDESTY & HANOVER
PROJECT RESIDENT	
CONTRACTOR	
PROJECT COMPLETION DATE	

SOUTH BRISTOL
GUT BRIDGE

WIRING DIAGRAM SOUTH
PLC INPUTS

SHEET NUMBER

128

OF 141

Filename: ...\128_Wiring_Diagram-_Sourth_PLC_Inputs.dgn Division: BRIDGE Username: common Date:1/29/2014

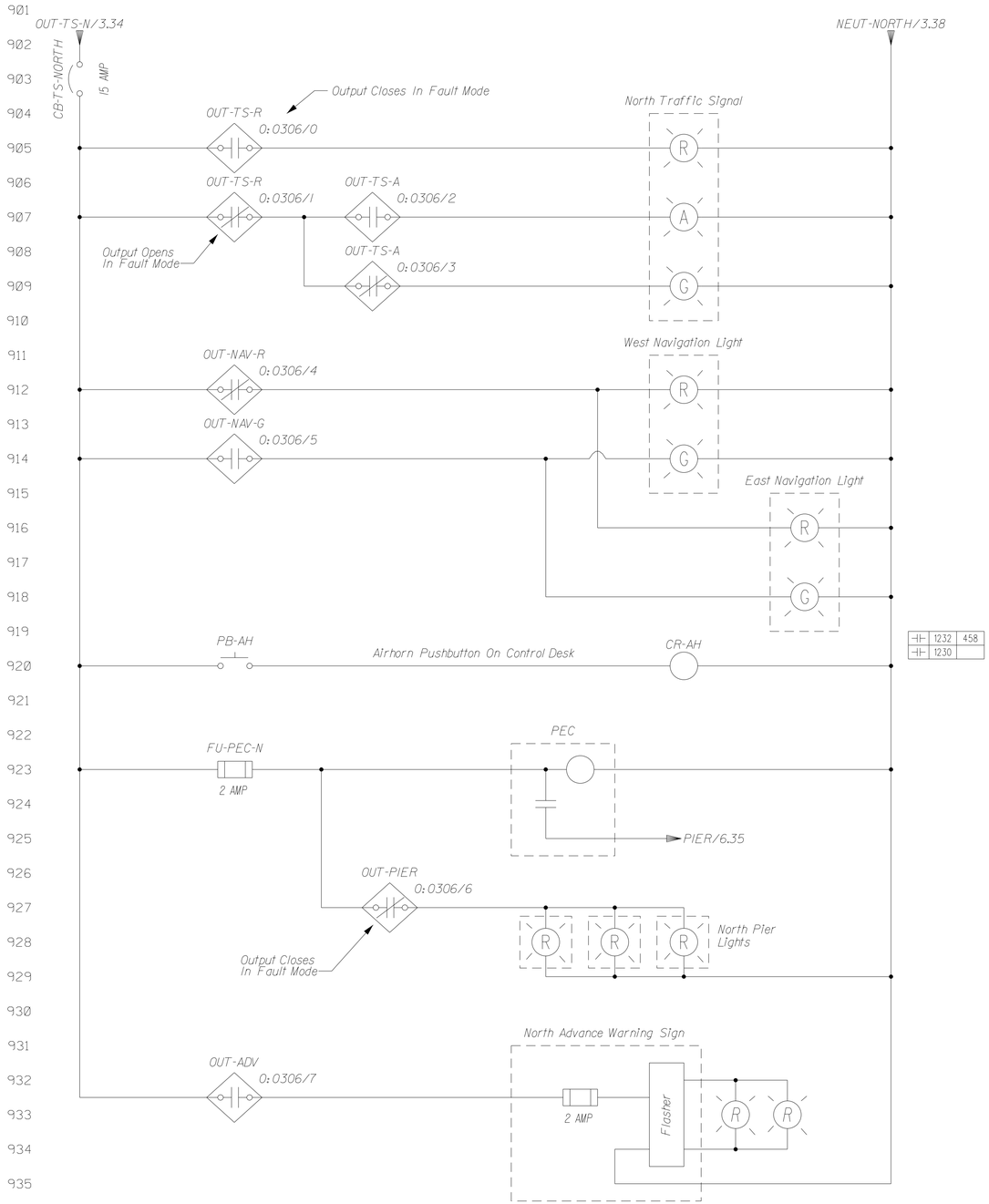

NORTH SIDE SCHEMATIC

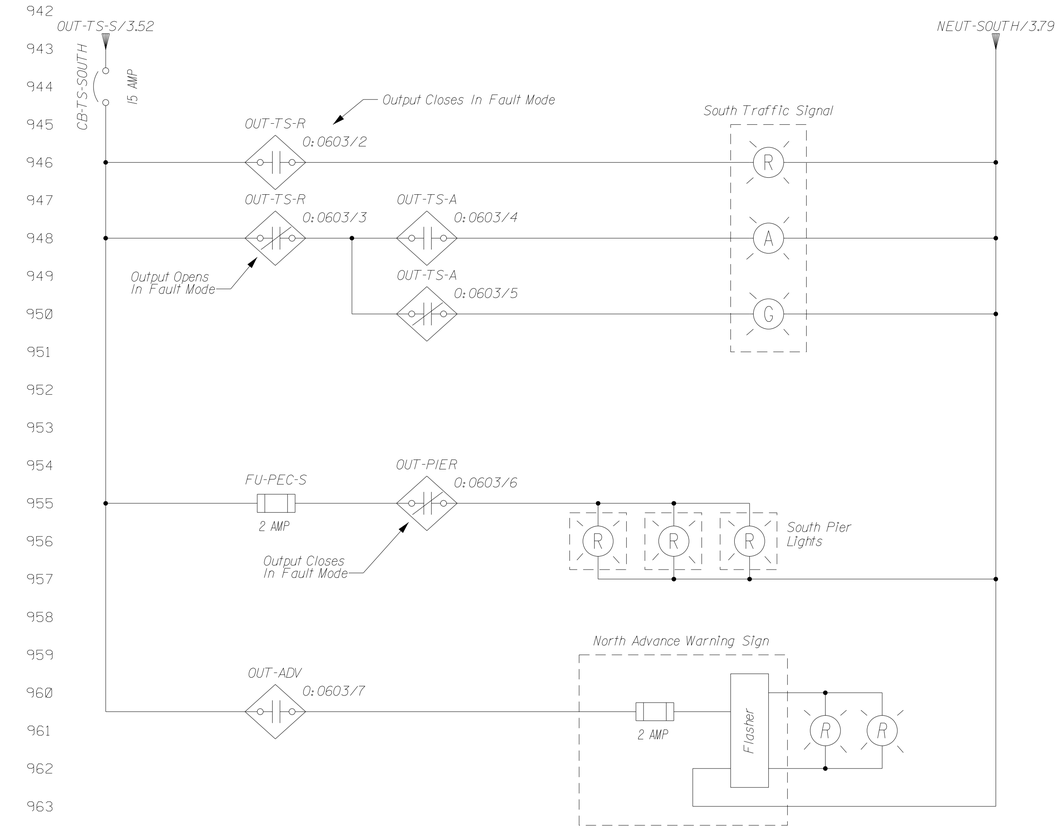

SOUTH SIDE SCHEMATIC

STATE OF MAINE
DEPARTMENT OF TRANSPORTATION

APPROVED | DATE

COMMISSIONER:

CHIEF ENGINEER:

SIGNATURE

13196 P.E. NUMBER

DATE

PROJECT INFORMATION

PROGRAM	BRIDGE
PROJECT MANAGER	STEPHEN BODGE
DESIGNER	HARDESTY & HANOVER
CONSULTANT	HARDESTY & HANOVER
PROJECT RESIDENT	
CONTRACTOR	
PROJECT COMPLETION DATE	

SOUTH BRISTOL
GUT BRIDGE

WIRING DIAGRAM TRAFFIC AND
NAVIGATION CONTROL LOGIC

SHEET NUMBER

129

OF 141

Filename: ...\129_Wiring_Diagram-_Traffic_And_Navigation_Control_Logic.dgn Division: BRIDGE Username: common Date:1/29/2014

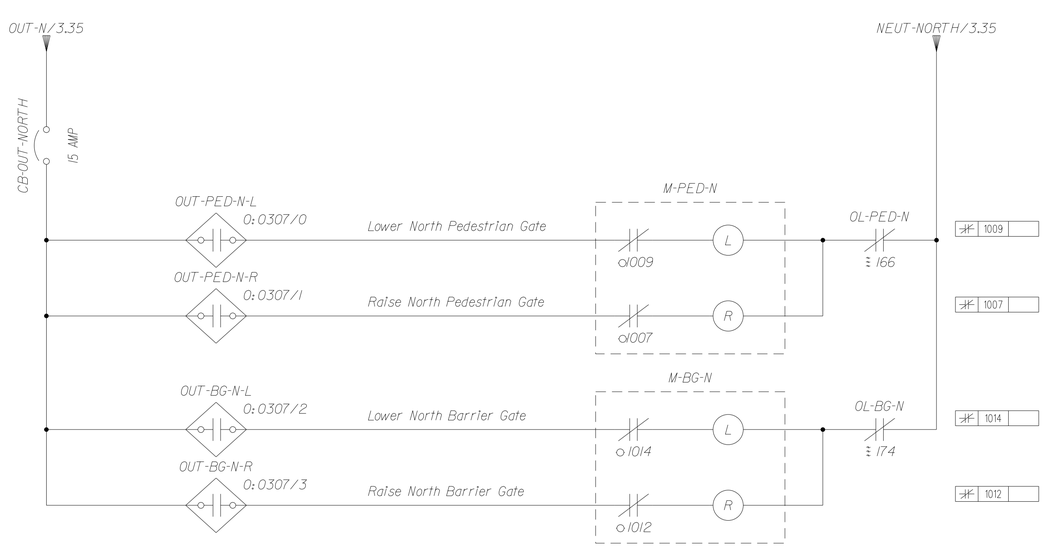

NORTH SIDE SCHEMATIC

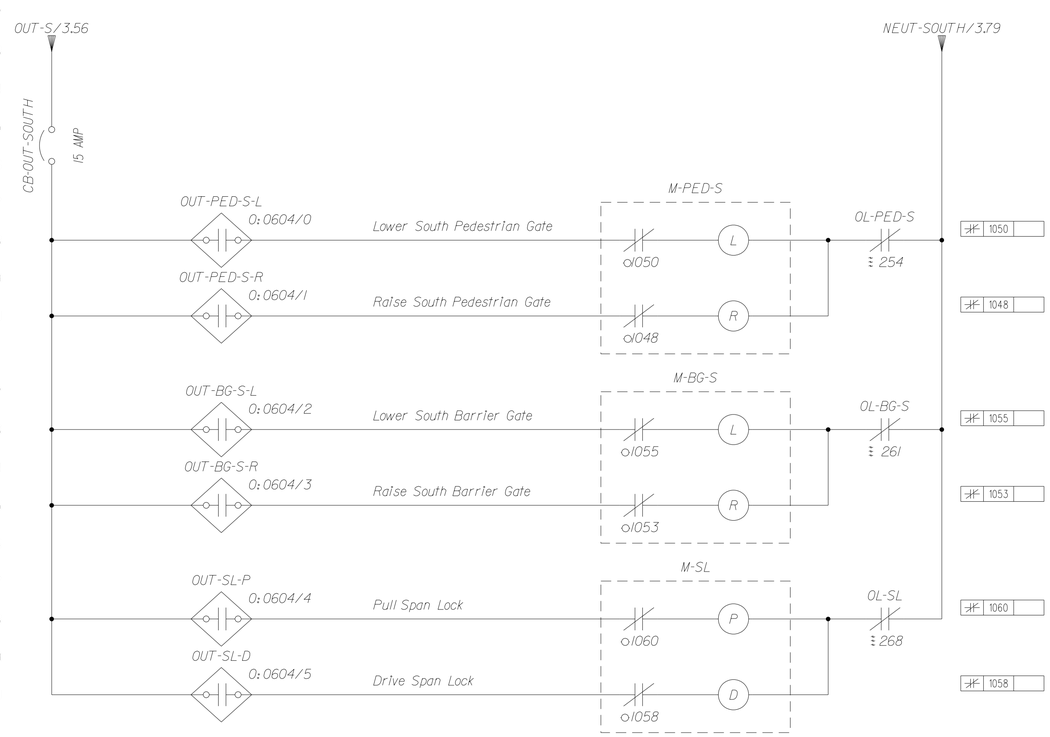

SOUTH SIDE SCHEMATIC

STATE OF MAINE
DEPARTMENT OF TRANSPORTATION

APPROVED	DATE
COMMISSIONER:	
CHIEF ENGINEER:	

SIGNATURE	
13196	P.E. NUMBER
DATE	

PROJECT INFORMATION

PROGRAM	BRIDGE
PROJECT MANAGER	STEPHEN BODGE
DESIGNER	HARDESTY & HANOVER
CONSULTANT	HARDESTY & HANOVER
PROJECT RESIDENT	
CONTRACTOR	
PROJECT COMPLETION DATE	

SOUTH BRISTOL
GUT BRIDGE

WIRING DIAGRAM GATES AND
SPAN LOCKS CONTROL LOGIC

SHEET NUMBER
130
OF 141

Filename: ...\130_Wiring_Diagram-_Gates_And_Span_Locks_Control_Logic.dgn Division: BRIDGE Username: common Date:1/29/2014

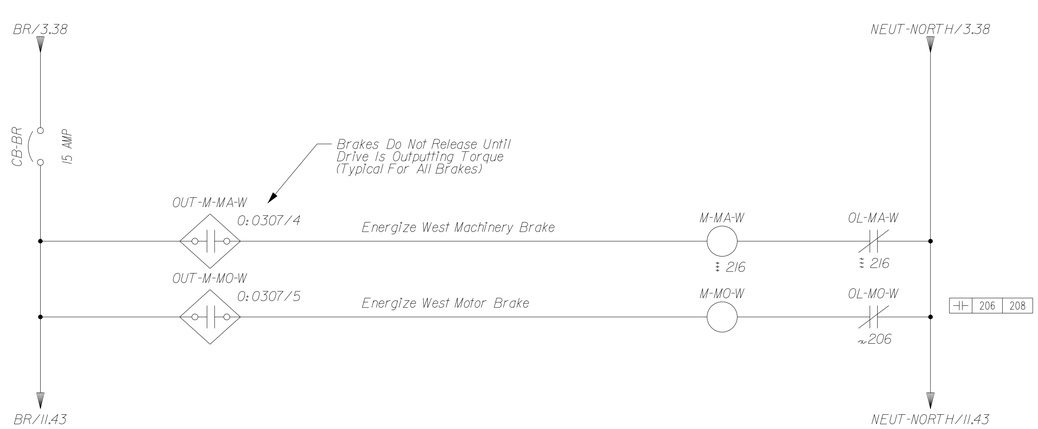

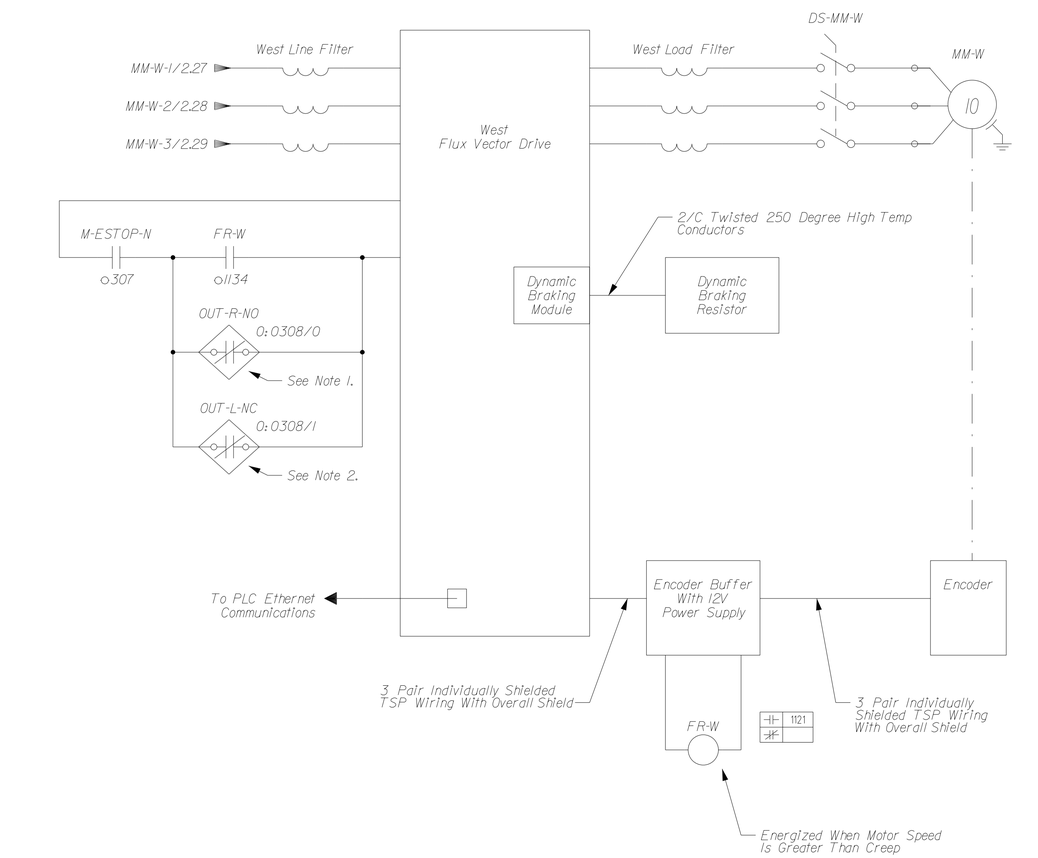

NORTH SIDE SCHEMATIC

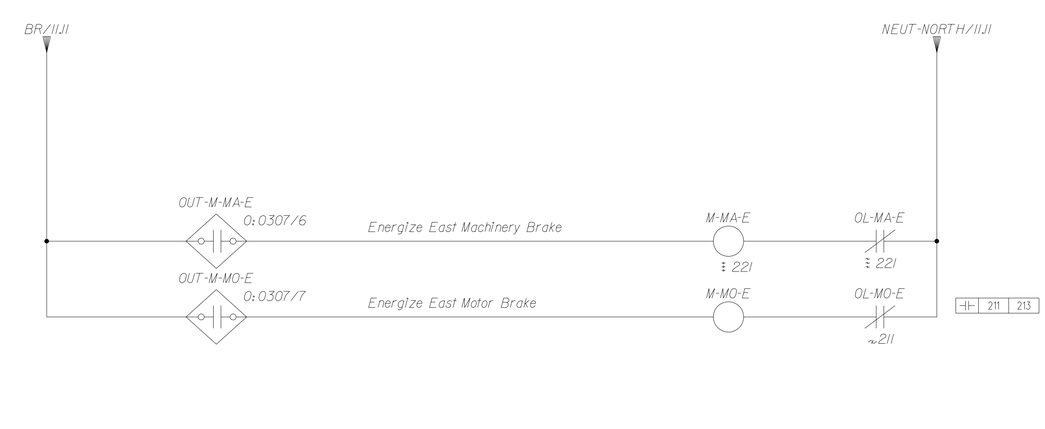

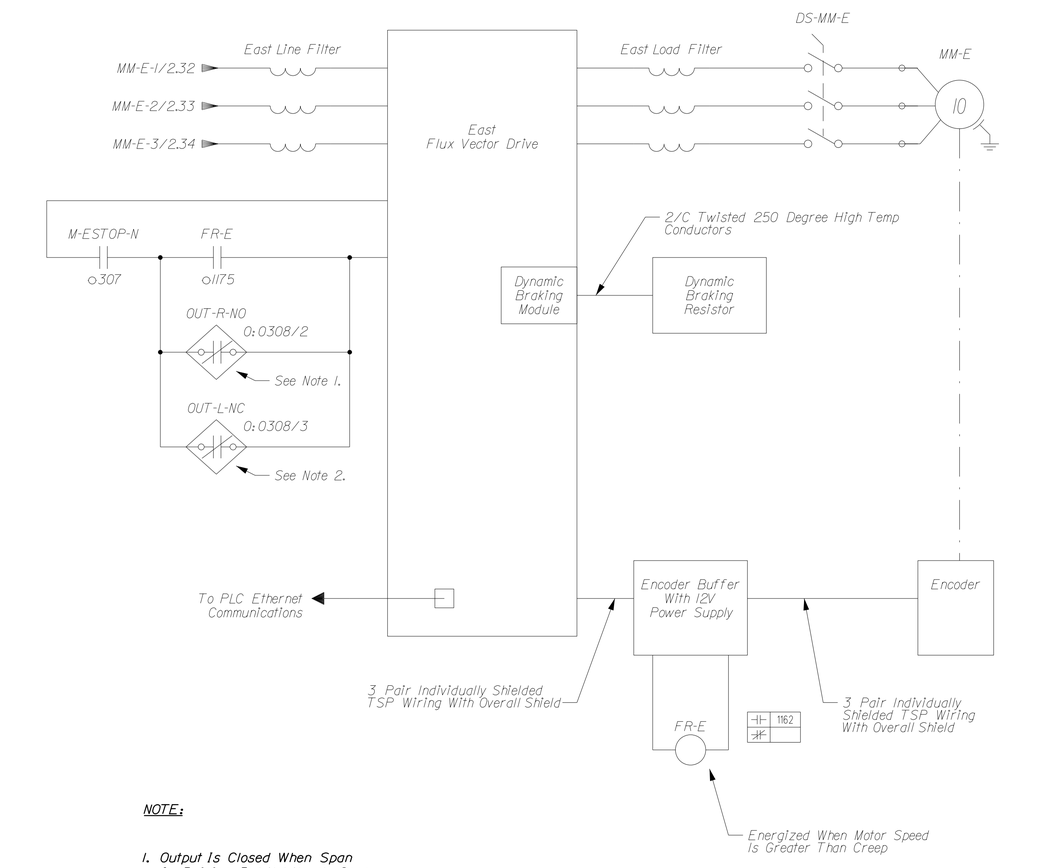

NOTE:

1. Output Is Closed When Span Is Raising But Not Nearly Open.
2. Output Is Closed When Span Is Lowering But Not Nearly Closed.

NORTH SIDE SCHEMATIC

STATE OF MAINE
DEPARTMENT OF TRANSPORTATION

APPROVED | DATE
COMMISSIONER:
CHIEF ENGINEER:

PROJECT INFORMATION

PROGRAM	BRIDGE	SIGNATURE	
PROJECT MANAGER	STEPHEN BODGE		
DESIGNER	HARDESTY & HANOVER	13196	P.E. NUMBER
CONSULTANT	HARDESTY & HANOVER		
PROJECT RESIDENT		DATE	
CONTRACTOR			
PROJECT COMPLETION DATE			

SOUTH BRISTOL
GUT BRIDGE

WIRING DIAGRAM
SPAN CONTROL LOGIC

SHEET NUMBER
131
OF 141

Filename: ...\131_Wiring_Diagram-_Span_Control_Logic.dgn Division: BRIDGE Username: common Date:1/29/2014

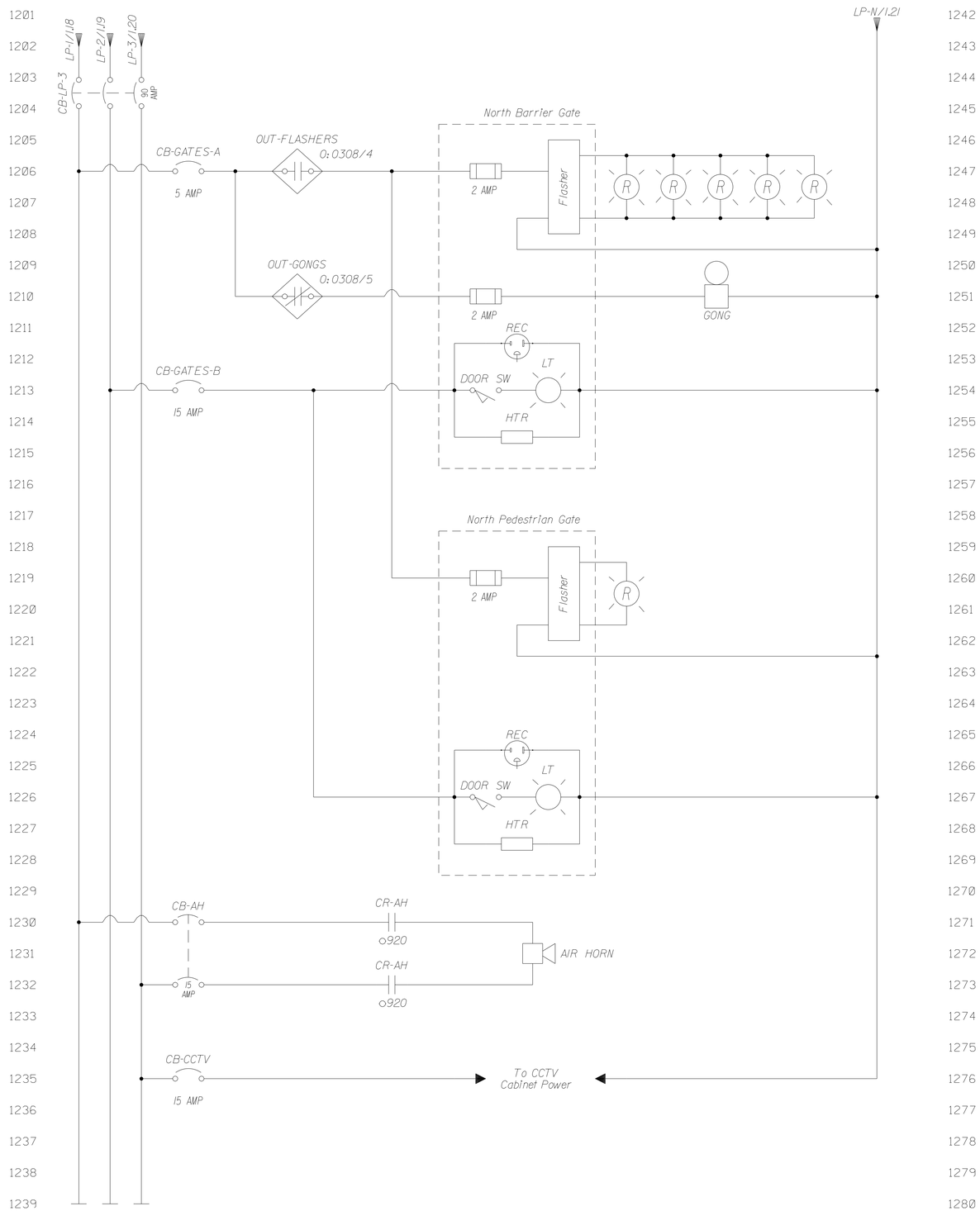

NORTH SIDE SCHEMATIC

NORTH SIDE SCHEMATIC

STATE OF MAINE
DEPARTMENT OF TRANSPORTATION

APPROVED | DATE

COMMISSIONER:

CHIEF ENGINEER:

PROJECT INFORMATION		
PROGRAM	BRIDGE	
PROJECT MANAGER	STEPHEN BODGE	SIGNATURE
DESIGNER	HARDESTY & HANOVER	13196
CONSULTANT	HARDESTY & HANOVER	P.E. NUMBER
PROJECT RESIDENT		
CONTRACTOR		DATE
PROJECT COMPLETION DATE		

SOUTH BRISTOL
GUT BRIDGE

WIRING DIAGRAM
LIGHTING PANEL

SHEET NUMBER

132

OF 141

Filename: ...\132_Wiring_Diagram-_Lighting_Panel.dgn Division: BRIDGE Username: common Date:1/29/2014

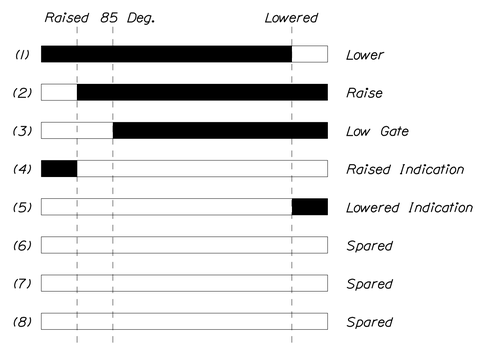

BARRIER GATES & PEDESTRIAN GATES LIMIT SWITCH DEVELOPMENT

(LS-BG-N, LS-BG-S)

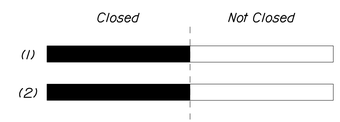

BARRIER GATES & PEDESTRIAN GATES DOOR SWITCH DEVELOPMENT

(LS-BG-N-DF, -DB, LS-BG-S-DF, -DB)

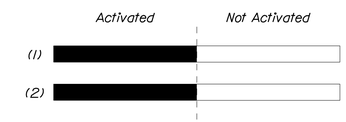

SPAN POSITION PROXIMITY SENSOR DEVELOPMENT

(PS-FS, PS-NS, PS-NO, PS-FO, PS-OT)

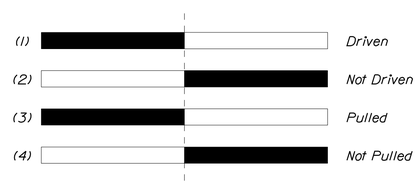

SPAN LOCK LIMIT SWITCH DEVELOPMENT

(LS-SL)

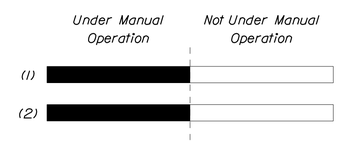

BARRIER GATES, PEDESTRIAN GATES & SPAN LOCK MANUAL OPERATION INTERLOCK DEVELOPMENT

(LS-BG-N-MOI, -S-MOI, LS-SL-W-MOI, -E-MOI)

STATE OF MAINE
DEPARTMENT OF TRANSPORTATION

APPROVED | DATE

COMMISSIONER:

CHIEF ENGINEER:

SIGNATURE

13196
P.E. NUMBER

DATE

PROJECT INFORMATION

PROGRAM	BRIDGE
PROJECT MANAGER	STEPHEN BODGE
DESIGNER	HARDESTY & HANOVER
CONSULTANT	HARDESTY & HANOVER
PROJECT RESIDENT	
CONTRACTOR	
PROJECT COMPLETION DATE	

SOUTH BRISTOL
GUT BRIDGE

LIMIT SWITCH DEVELOPMENTS

SHEET NUMBER

133

OF 141

Filename: ...\133_Limit_Switch_Developments.dgn Division: BRIDGE Username: common Date:1/29/2014

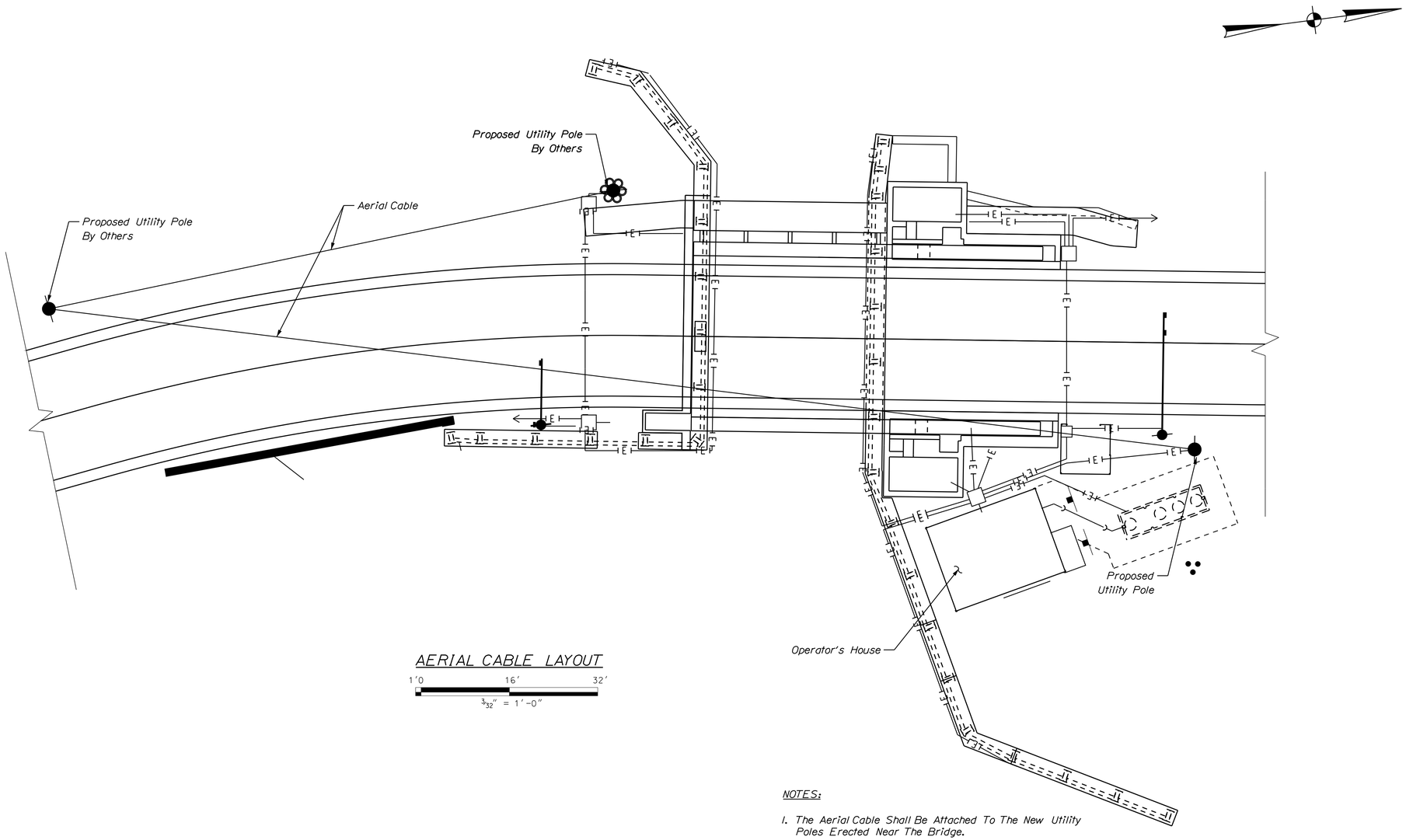

AERIAL CABLE LAYOUT

1'0 16' 32'

3/32" = 1'-0"

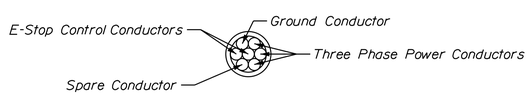

COPPER AERIAL CABLE CROSS-SECTIONAL DETAIL

N.T.S.

NOTES:

1. The Aerial Cable Shall Be Attached To The New Utility Poles Erected Near The Bridge.
2. The Aerial Cable Shall Consist Of One 7/C #10 AWG Cable And One Fiber Optic Cable. The #10 AWG Wire Will Carry Electrical Power And The E-Stop Control Wiring. The Fiber Optic Cable Will Allow The North And South Side PLC's To Communicate With Each Other.
3. The Fiber Optic Cable Shall Be Installed By Qualified Personnel And As Per The Manufacturer's Recommended Methods. Special Care Must Be Taken Into Consideration Regarding Fiber Optic Cable Bend Radius, Wire Tension, And Pulling Methods.
4. The Aerial Cable Shall Be Minimum 55 Ft Over The Mean Water Height, As Per Coast Guard Regulations.
5. Provide Separate Fibers For PLC Ethernet And CCTV Communications.
6. Contractor Must Verify Field Conditions Of Aerial Cable, Including Bridge Movable Span And Adjacent Building Clearance.
7. See Mechanical Drawings For Aerial Cable Connection To Utility Poles.

STATE OF MAINE
DEPARTMENT OF TRANSPORTATION

APPROVED | DATE

COMMISSIONER:

CHIEF ENGINEER:

PROJECT INFORMATION

PROGRAM	BRIDGE	
PROJECT MANAGER	STEPHEN BODGE	SIGNATURE
DESIGNER	HARDESTY & HANOVER	13196
CONSULTANT	HARDESTY & HANOVER	P.E. NUMBER
PROJECT RESIDENT		
CONTRACTOR		DATE
PROJECT COMPLETION DATE		

SOUTH BRISTOL
GUT BRIDGE

AERIAL CABLE DETAILS

SHEET NUMBER

134

OF 141

Filename: ...\134_Aerial_Cable_Details.dgn Division: BRIDGE Username: common Date:1/29/2014

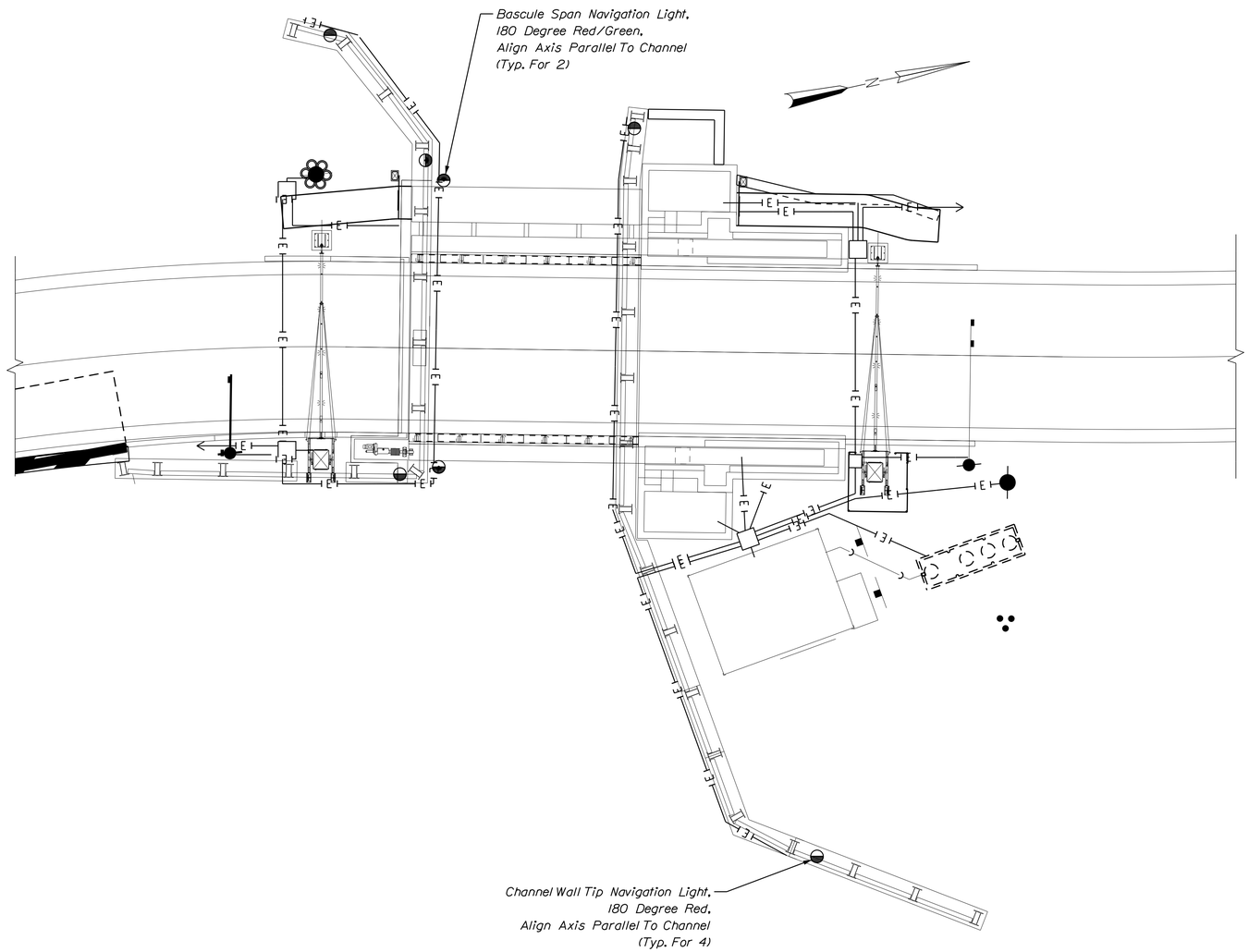

NAVIGATION LIGHTING DETAILS

1'0 16' 32'

3/32" = 1'-0"

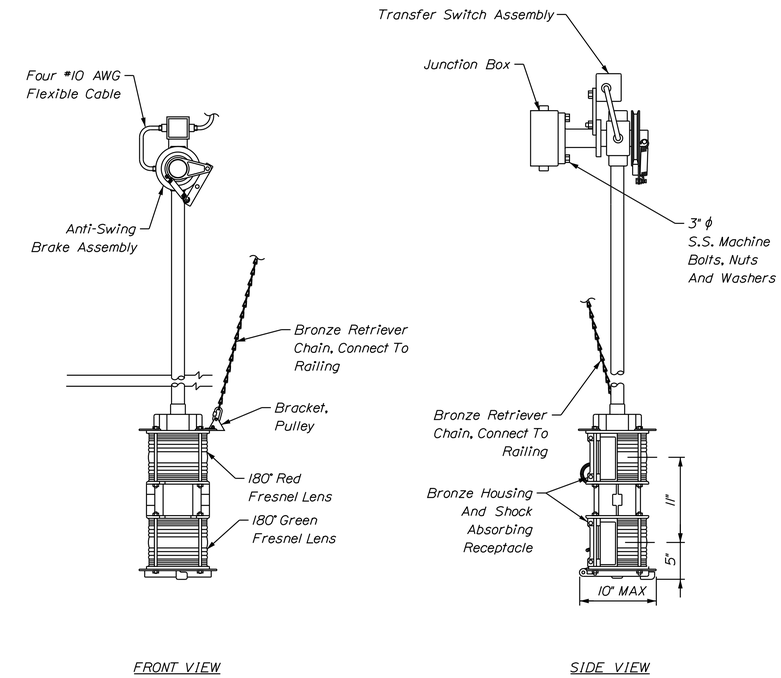

SPAN NAVIGATION LIGHT

N.T.S.

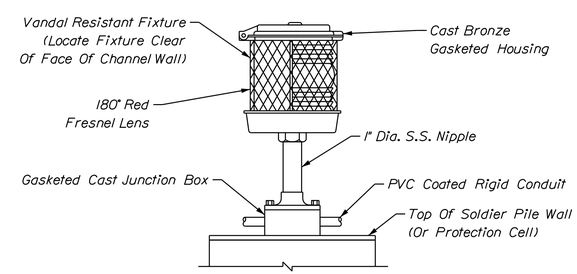

CHANNEL WALL NAVIGATION LIGHT

N.T.S.

STATE OF MAINE
DEPARTMENT OF TRANSPORTATION

APPROVED

	DATE
COMMISSIONER:	
CHIEF ENGINEER:	

PROJECT INFORMATION

PROGRAM	BRIDGE	SIGNATURE	
PROJECT MANAGER	STEPHEN BODGE		
DESIGNER	HARDESTY & HANOVER	13196	
CONSULTANT	HARDESTY & HANOVER	P.E. NUMBER	
PROJECT RESIDENT			
CONTRACTOR		DATE	
PROJECT COMPLETION DATE			

SOUTH BRISTOL
GUT BRIDGE

NAVIGATION LIGHTING DETAILS

SHEET NUMBER

135

OF 141

Filename: ...\135_Navigation_Lighting_Details.dgn Division: BRIDGE Username: common Date:1/29/2014

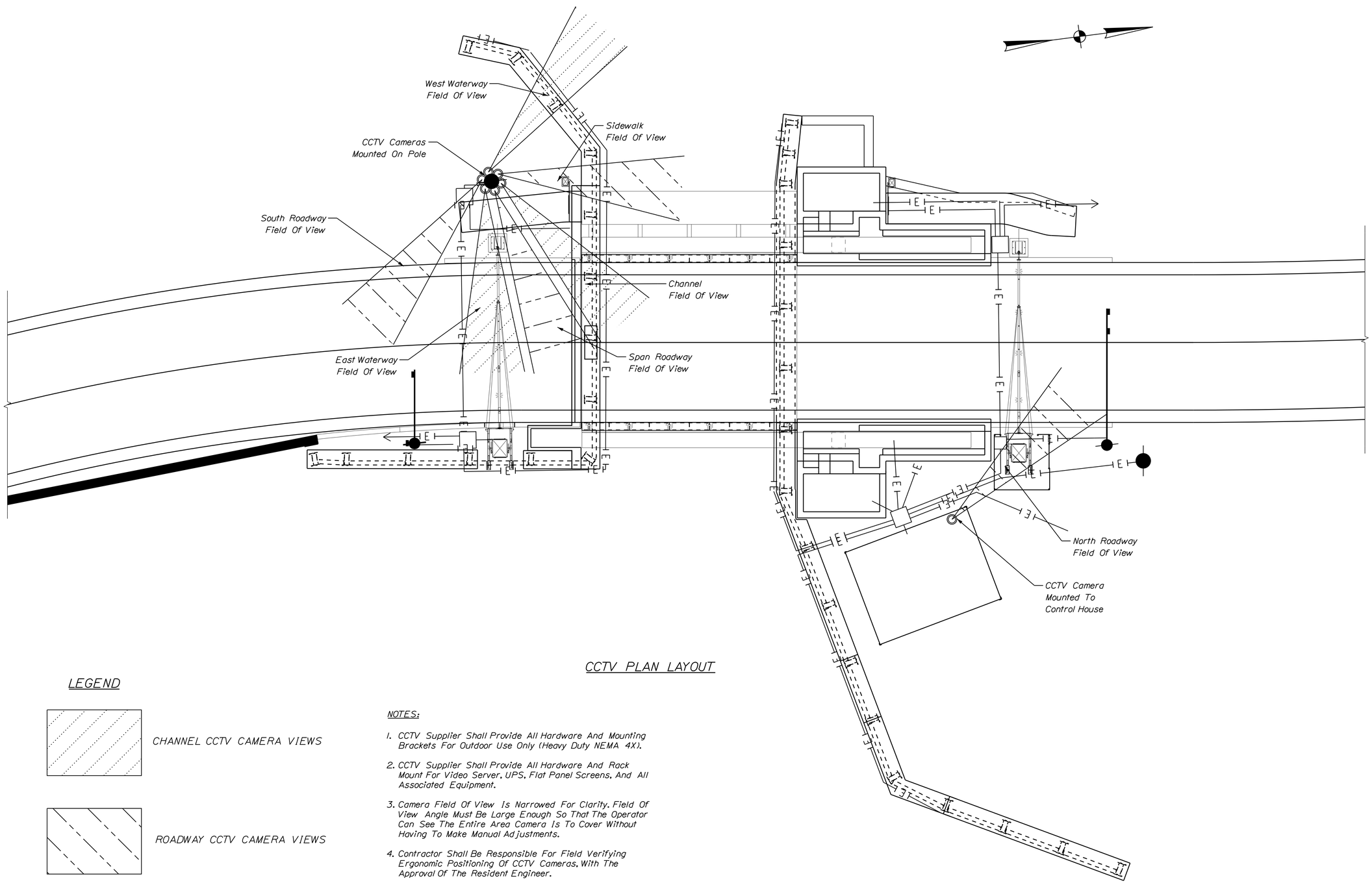

CCTV PLAN LAYOUT

LEGEND

CHANNEL CCTV CAMERA VIEWS

ROADWAY CCTV CAMERA VIEWS

NOTES:

1. CCTV Supplier Shall Provide All Hardware And Mounting Brackets For Outdoor Use Only (Heavy Duty NEMA 4X).
2. CCTV Supplier Shall Provide All Hardware And Rack Mount For Video Server, UPS, Flat Panel Screens, And All Associated Equipment.
3. Camera Field Of View Is Narrowed For Clarity. Field Of View Angle Must Be Large Enough So That The Operator Can See The Entire Area Camera Is To Cover Without Having To Make Manual Adjustments.
4. Contractor Shall Be Responsible For Field Verifying Ergonomic Positioning Of CCTV Cameras, With The Approval Of The Resident Engineer.
5. See Following Sheet For CCTV Schematic.

STATE OF MAINE
DEPARTMENT OF TRANSPORTATION

APPROVED

	DATE
COMMISSIONER:	
CHIEF ENGINEER:	

PROJECT INFORMATION

PROGRAM	BRIDGE	
PROJECT MANAGER	STEPHEN BODGE	SIGNATURE
DESIGNER	HARDESTY & HANOVER	13196
CONSULTANT	HARDESTY & HANOVER	P.E. NUMBER
PROJECT RESIDENT		
CONTRACTOR		DATE
PROJECT COMPLETION DATE		

SOUTH BRISTOL
GUT BRIDGE

CCTV DETAILS I

SHEET NUMBER

136

OF 141

Filename: ...\30_Elec\136_CCTV_Details 1.dgn Division: BRIDGE Username: common Date:1/29/2014

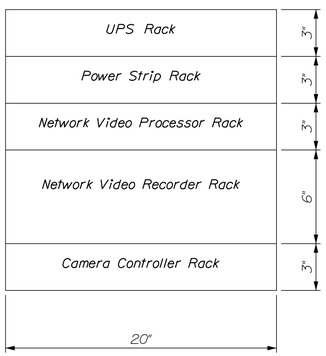

CCTV CABINET

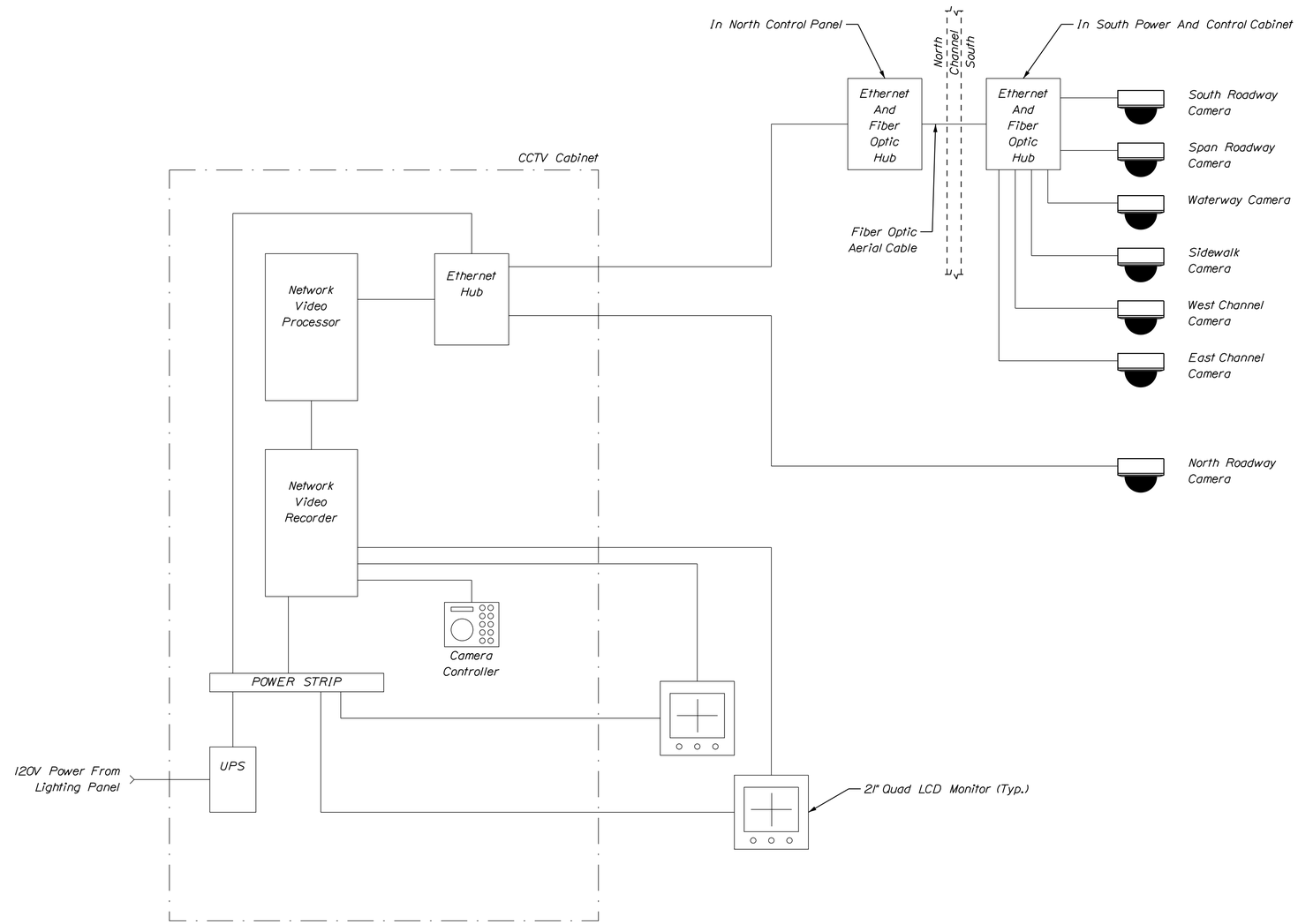

CCTV SCHEMATIC

NOTES:

1. CCTV Cameras Shall Be Power Over Ethernet Network IP Type Cameras.
2. South Side CCTV Cameras Shall Be Connected To The North Side Via The Fiber Optic Aerial Cable.
3. CCTV Cabinet And Rack Layout To Be Verified By Manufacturer.
4. See Previous Sheet For CCTV Plan View.

STATE OF MAINE
DEPARTMENT OF TRANSPORTATION

APPROVED | DATE
COMMISSIONER:
CHIEF ENGINEER:

PROJECT INFORMATION

PROGRAM	BRIDGE
PROJECT MANAGER	STEPHEN BODGE
DESIGNER	HARDESTY & HANOVER
CONSULTANT	HARDESTY & HANOVER
PROJECT RESIDENT	
CONTRACTOR	
PROJECT COMPLETION DATE	

SIGNATURE
13196
P.E. NUMBER
DATE

SOUTH BRISTOL
GUT BRIDGE

CCTV DETAILS II

SHEET NUMBER
137
OF 141

Filename: ...\30_Elec\137_CCTV_Details 2.dgn Division: BRIDGE Username: common Date:1/29/2014

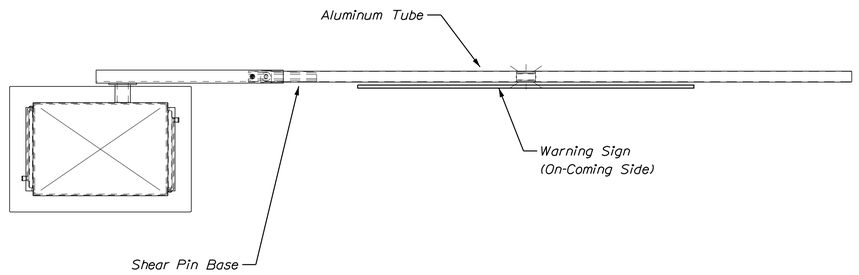

PEDESTRIAN GATE PLAN VIEW
N.T.S.

NO PEDESTIRANS ALLOWED
BEYOND THIS POINT WHILE
GATE IS LOWERED

WARNING SIGN DETAIL

Black Letters And Border On White
Reflective Background

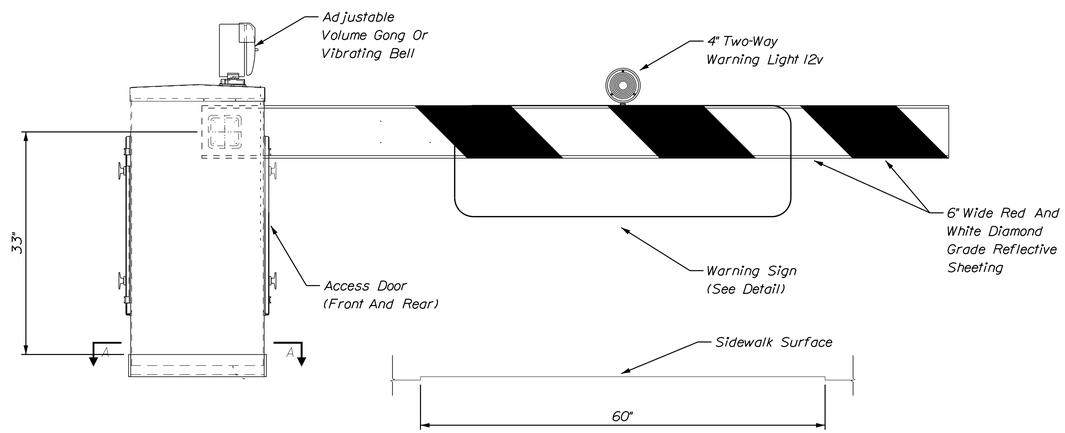

PEDESTRIAN GATE ELEVATION
N.T.S.

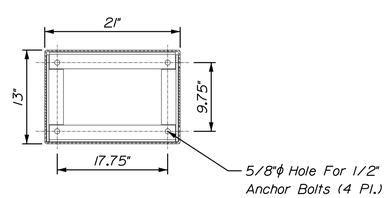

SECTION A-A
N.T.S.

NOTES:

1. Contractor To Verify All Dimensions.
2. As Per AASHTO, Gates Shall Be Specified To Operate Reliably At The Maximum Wind Velocities And Ice Build Up On Gate Arms For Which The Movable Bridge Is Considered Operational.
3. Housing And Side Arm Channel To Be Hot Dipped Galvanized Steel. External Fasteners Shall Be Galvanized Steel Or Stainless Steel.
4. Hot Dipped Galvanized Anchor Bolts And Template Supplied By Manufacturer.
5. (2) Pedestrian Gates Required.
6. For Pedestrian Gate Foundation Details, See Sheet No. 83.

STATE OF MAINE
DEPARTMENT OF TRANSPORTATION

APPROVED — DATE

COMMISSIONER:

CHIEF ENGINEER:

PROJECT INFORMATION

PROGRAM	BRIDGE	
PROJECT MANAGER	STEPHEN BODGE	SIGNATURE
DESIGNER	HARDESTY & HANOVER	13196
CONSULTANT	HARDESTY & HANOVER	P.E. NUMBER
PROJECT RESIDENT		
CONTRACTOR		DATE
PROJECT COMPLETION DATE		

SOUTH BRISTOL
GUT BRIDGE

PEDESTRIAN GATE DETAILS

SHEET NUMBER

138

OF 141

Filename: ...\138_Pedestrian_Gate_Details.dgn Division: BRIDGE Username: common Date:1/29/2014

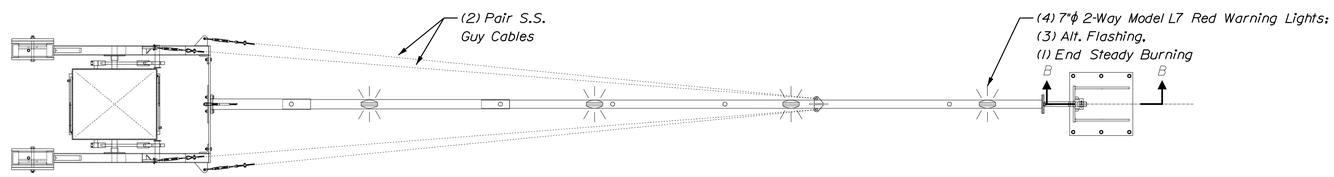

BARRIER GATE PLAN VIEW
N.T.S.

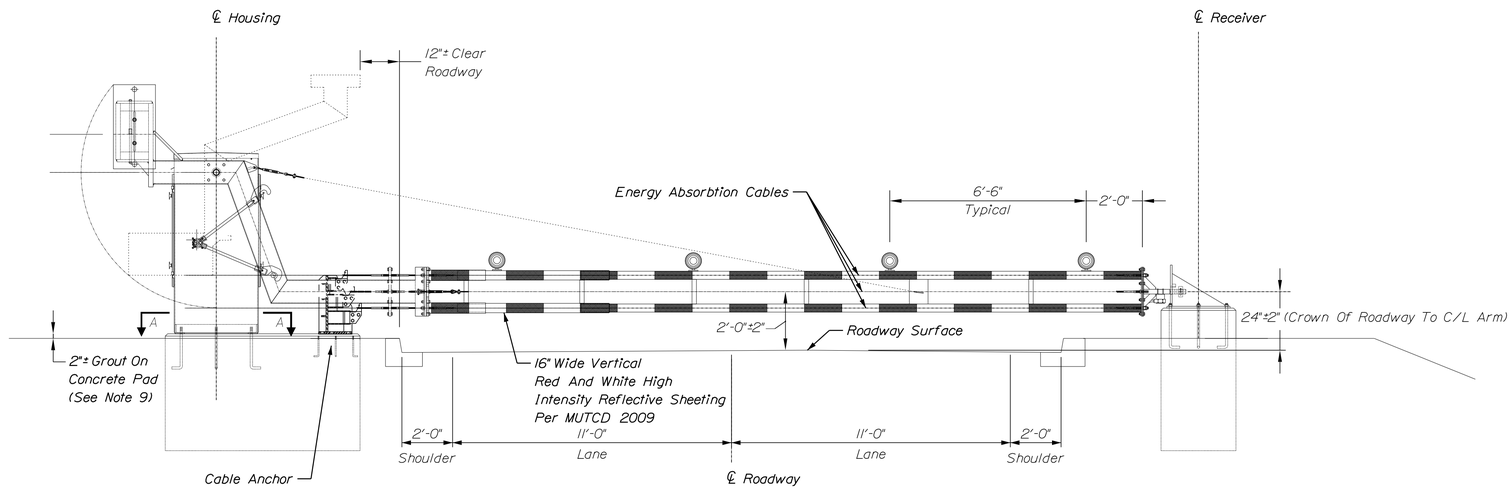

BARRIER GATE ELEVATION VIEW
N.T.S.

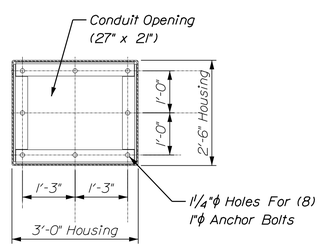

SECTION A-A
MOUNTING DIMENSION

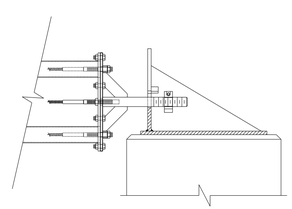

SECTION B-B
MALE END LOCK AND FEMALE
RECEIVER SOCKET
SCALE: 2X

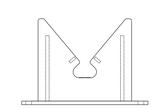

END VIEW OF FEMALE RECEIVER
MOUNTING PATTERN
SCALE: 2X

NOTES:

1. Contractor To Verify All Dimensions.
2. Barrier Gates Are To Be Standard Double Rail Arm With Resistance Cables. The Vehicular Crash Penetration Distance Of The Gate Shall Be No Greater Than 13'-3".
3. As Per AASHTO, Gates Shall Be Specified To Operate Reliably At The Maximum Wind Velocities And Ice Build Up On Gate Arms For Which The Movable Bridge Is Considered Operational.
4. Operator Housing, Receiver, Side Arm Tubes, And Counterweights To Be Hot Dipped Galvanized Steel.
5. Doors To Be Hinged, Removable, Lockable, And Keyed Alike.
6. (2) Barrier Gates Required As Shown.
7. Locate Gate Housing & Receiver Plates At Elevation Such That Arm Centerline Height Above Roadway Surface Of 24" ±2" Is Maintained.
8. Manufacturer To Furnish Template For Setting Anchor Bolts. Bolts Per Project Engineer Specifications (For Each Gate). Contractor To Furnish Anchor Bolts.
9. Gate Housing And Anchorage Must Be On Flat And Level Surface With Base Of Housing Approximately 8" Above Crown Of Roadway Surface.
10. For Barrier Gate Foundation Details, See Sheet No. 83.

STATE OF MAINE
DEPARTMENT OF TRANSPORTATION

APPROVED | DATE
COMMISSIONER:
CHIEF ENGINEER:

PROJECT INFORMATION

PROGRAM	BRIDGE	
PROJECT MANAGER	STEPHEN BODGE	SIGNATURE
DESIGNER	HARDESTY & HANOVER	13196
CONSULTANT	HARDESTY & HANOVER	P.E. NUMBER
PROJECT RESIDENT		
CONTRACTOR		DATE
PROJECT COMPLETION DATE		

SOUTH BRISTOL
GUT BRIDGE

BARRIER GATE DETAILS

SHEET NUMBER
139
OF 141

Filename: ...\139_Barrier_Gate_Details.dgn Division: BRIDGE Username: common Date:1/29/2014

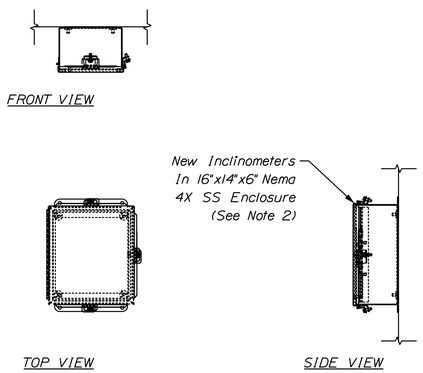

INCLINOMETER ENCLOSURE DETAIL
N.T.S.

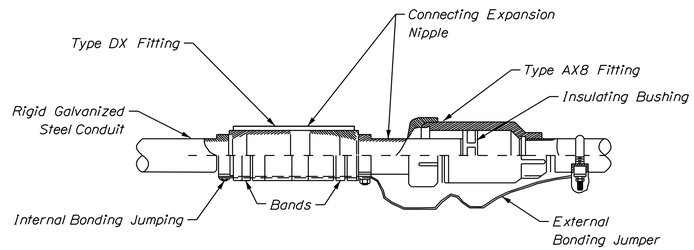

TYPICAL DEFLECTION AND EXPANSION FITTINGS
N.T.S.

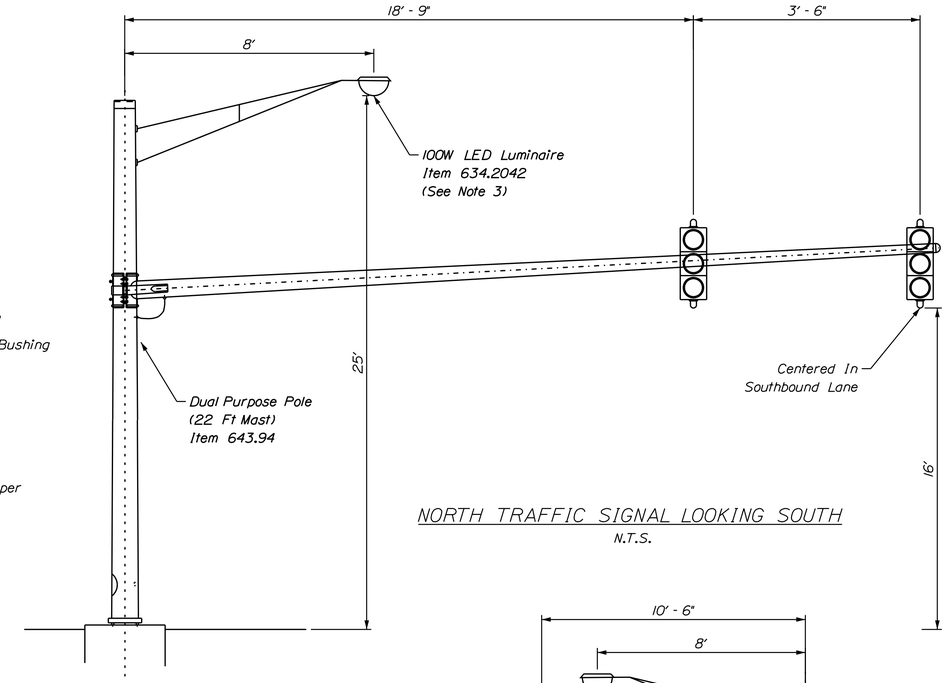

NORTH TRAFFIC SIGNAL LOOKING SOUTH
N.T.S.

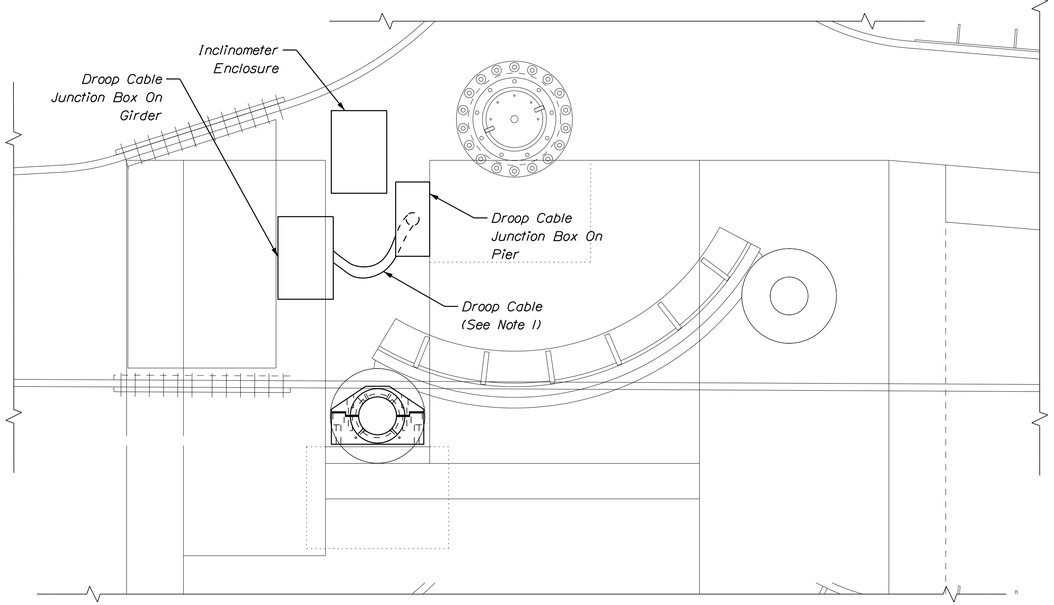

DROOP CABLE JUNCTION BOX DETAIL
N.T.S.

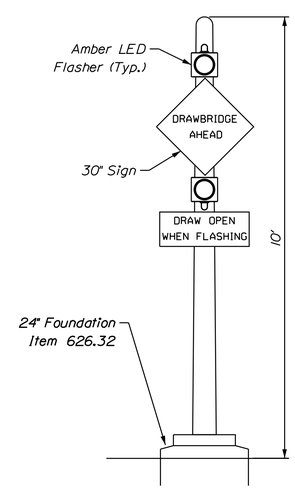

ADVANCE WARNING SIGNAL DETAIL
N.T.S.

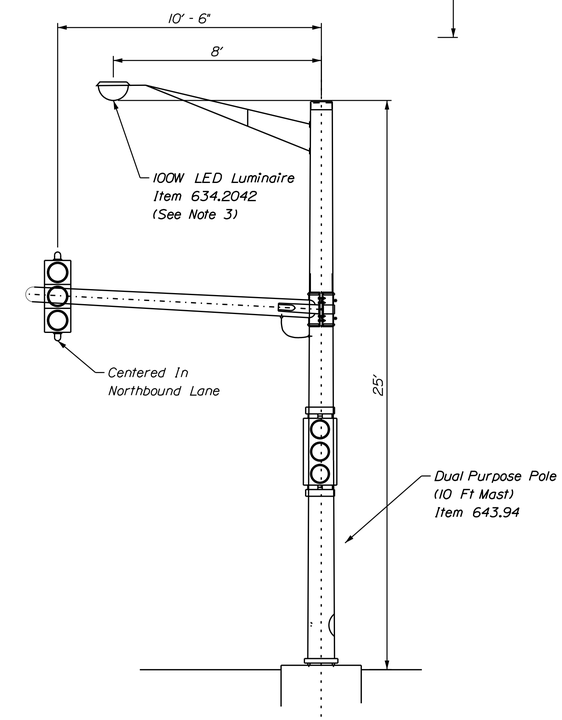

SOUTH TRAFFIC SIGNAL LOOKING NORTH
N.T.S.

NOTES:

1. Droop Cable Between West Side Of Pier Junction Box And North Side Of Girder Junction Box
2. Two Inclinometers Are To Be Installed In One Enclosure.
3. Luminaire Shall Have In Line Circuit Protection In The Handhole At The Base Of The Pole. Ground Wire To Be Run Up To The Luminaire. Luminaire Is To Be Paid For Under MaineDOT Pay Item 634.2042 - LED Luminaries.

STATE OF MAINE
DEPARTMENT OF TRANSPORTATION

APPROVED | DATE
COMMISSIONER:
CHIEF ENGINEER:

PROJECT INFORMATION		SIGNATURE
PROGRAM	BRIDGE	
PROJECT MANAGER	STEPHEN BODGE	
DESIGNER	HARDESTY & HANOVER	13196
CONSULTANT	HARDESTY & HANOVER	P.E. NUMBER
PROJECT RESIDENT		
CONTRACTOR		DATE
PROJECT COMPLETION DATE		

SOUTH BRISTOL
GUT BRIDGE

MISCELLANEOUS
ELECTRICAL DETAILS

SHEET NUMBER
140
OF 141

Filename: ...\140_Miscellaneous_Electrical_Details.dgn Division: BRIDGE Username: common Date:2/3/2014

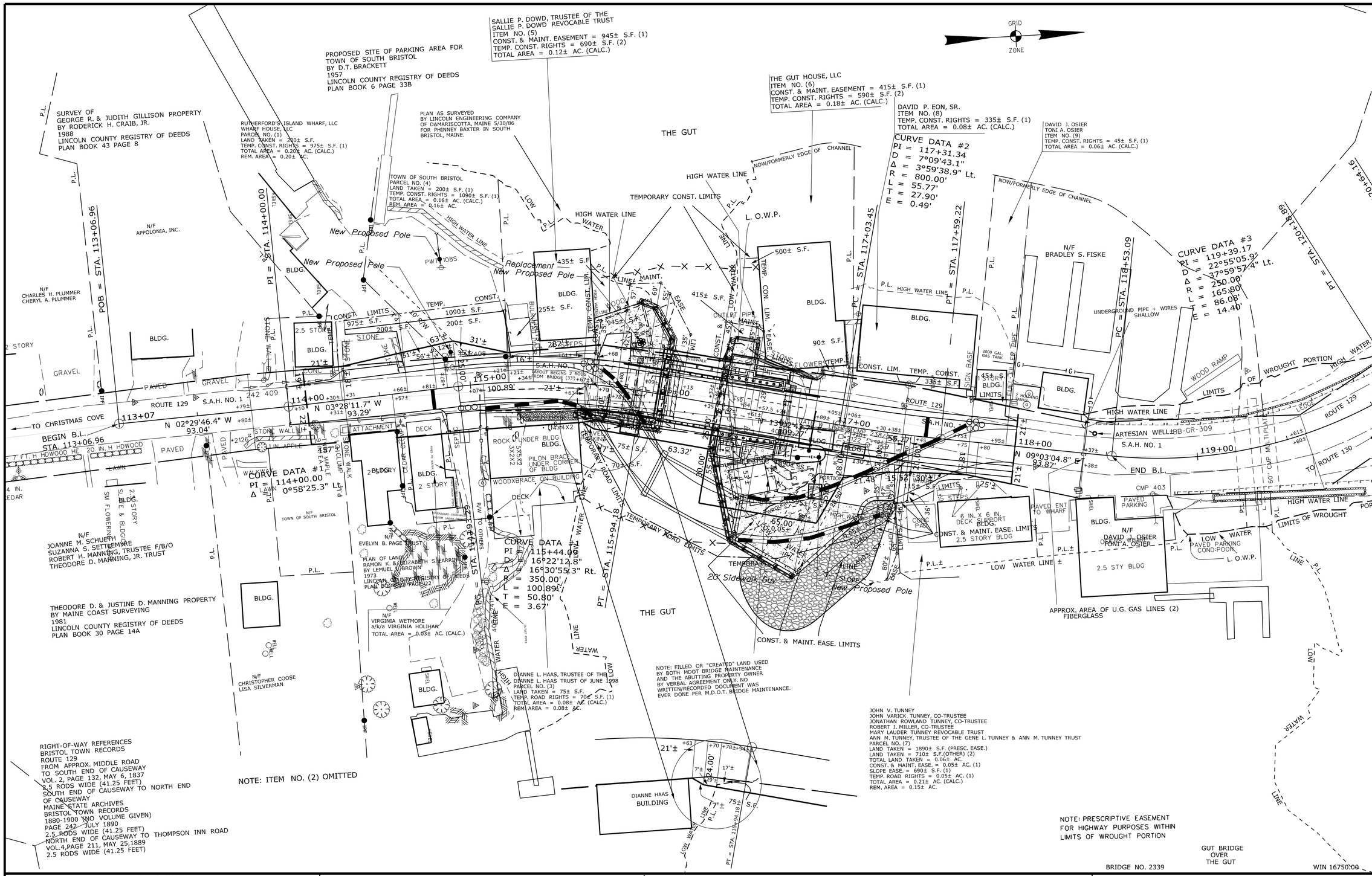

THIS PLAN WAS PREPARED IN CONNECTION WITH THE DEPARTMENT'S ACQUISITION OF REAL PROPERTY FOR TRANSPORTATION PURPOSES. IT CANNOT BE USED TO ESTABLISH LEGAL BOUNDARIES BETWEEN ABUTTING PROPERTY OWNERS.

SYMBOLS

- (WELL) — GROUNDING (ART LINE)
- CONSTRUCTION LIMIT LINE
- PROPERTY LIMIT LINE
- LIMITS OF WROUGHT PORTION (L.O.W.P.)
- EXISTING RIGHT OF WAY
- NEW RIGHT OF WAY
- NEW ROW WITHIN EXIST. ROW
- CONTROL OF ACCESS
- IP or ⊕ IPF (IRON PIPE or PIN FOUND)
- ST. (SEPTIC TANK)
- (ROW MONUMENT)
- ▲BM (TRAVERSE POINT)
- WATER LINE
- GAS LINE
- ELECTRIC LINE
- TELEPHONE LINE
- SEWER LINE

ITEM	TECH	CHECKED
BASE MAP		
EXIST. R/W	P.A.T.-D.W.B.	
PROP. LINES	D.W.B.	
AREAS	D.W.B.	P.N.S.

STATE OF MAINE
DEPARTMENT OF TRANSPORTATION
16 STATE HOUSE STATION - AUGUSTA, ME 04333-0016
SOUTH BRISTOL
RIGHT OF WAY MAP

REVISIONS			
NO.	DATE	DESCRIPTION	BY

PLAN FILED IN PLAN BOOK		PAGE	COUNTY RECORD			
NO.	GRANTOR	INSTRUMENT	DATE	BOOK	PAGE	

DAVID BERNHARDT
COMMISSIONER
JOYCE NOEL TAYLOR
CHIEF ENGINEER
DATE

STATE AID HIGHWAY NO. 1
ROUTE 129
SOUTH BRISTOL LINCOLN COUNTY
FEDERAL AID PROJECT NO. BH-1675(000)X

NOVEMBER 2013 | RIGHT-OF-WAY MAP | D.O.T. FILE NO. 8-175
SCALE 1" = 25' | SHEET 1 OF 1

SHEET NUMBER
141
OF 141

Filename: ...\00\ROW\MSTA\001_RWPLAN1.dgn Division: BRIDGE Username: Mark.Poulin Date:2/3/2014