STATE OF MAINE
DEPARTMENT OF TRANSPORTATION

BANGOR
PENOBSCOT COUNTY
UNION STREET BRIDGE
OVER
INTERSTATE 95
UNION STREET

FEDERAL AID PROJECT NO. IM-1668(100)E
PROJECT LENGTH 0.099 mi.

BRIDGE NO. 5797

SPECIFICATIONS

Design: Load And Resistance Factor Design Per AASHTO LRFD Bridge Design Specifications Fifth Edition 2010.

DESIGN LOADING

Live Load ..... HL-93 Modified For Strength I

TRAFFIC DATA - UNION STREET

Current (2010) AADT	17,350
Future (2030) AADT	20,820
DHV - % of AADT	9%
Design Hour Volume	1,874
% Heavy Trucks (AADT)	3%
% Heavy Trucks (DHV)	1%
Directional Distribution (DHV)	67%
18 kip Equivalent P 2.0	200
18 kip Equivalent P 2.5	191
Design Speed (mph)	25

MATERIALS

Concrete:	
Sidewalks and Transition Barriers	Class "LP"
All Other	Class "A"
Reinforcing:	
Plain	ASTM A 615/A 615M, Grade 60
Epoxy Coated	ASTM A 775/A 775M, Grade 60
Stainless Steel	ASTM A 955/A 955M, Grade 60
Galvanized Steel	ASTM A 767/A 767M, Grade 60

BASIC DESIGN STRESSES

Concrete:	f 'c = 4,350 psi
Reinforcing Steel	
Grade 60	fy = 60,000 psi

UTILITIES

Bangor Hydro-Electric Company
Bangor Water District
City of Bangor (Sewer)
City of Bangor (Traffic Signals)
Northern New England Telephone Operators, LLC
Time Warner Cable
Bangor Gas Company
University of Maine System
Oxford Networks
Eastern Maine Healthcare Systems

MAINTENANCE OF TRAFFIC

Maintain two 11'-0" wide lanes on Union Street, one lane in each direction, and one 5'-0" wide sidewalk at all times using stage construction.

Maintain two 12'-0" wide lanes of traffic and two 2'-0" wide shoulders in each direction on Interstate 95 during construction utilizing shoulders for lane shifts.

Limited night closures and lane closures will be permitted to allow for existing bridge removal and superstructure construction.

STATE OF MAINE
DONALD G. ETTINGER, JR.
No. 9244
LICENSED
PROFESSIONAL ENGINEER
12/31/13

Gorrill-Palmer Consulting Engineers, Inc.
Responsible For Roadway/Approach Plans

LIST OF DRAWINGS

Title Sheet	1
Estimated Quantities	2
General Construction Notes	3
General Plan	4
Ramp A Plan & Profile	5
Profiles	6-7
Boring Location Plan	8
Interpretive Subsurface Profile	9
Boring Logs	10-11
Striping Plan	12
Guardrail Layout	13
Signal Plans	14-15
Geometric Layout & Curbing Plan	16
Typical Sections	17
Cross Sections	18-32
Stage Construction	33-34
Abutment No. 1	35-40
Abutment No. 2	41-46
Pier	47-51
Bearings	52
Framing Plan	53
Hybrid Composite Beam Details	54-58
Utility Support Details	59
Pier Diaphragm	60-62
Superstructure Plan	63
Superstructure Reinforcement	64
Superstructure Details	65-67
Approach Slabs Details	68
Snow Fence Details	69
Slope Protection Details	70
Reinforcing Steel Schedule	71-72
Detour Plans	73-79
Sunset Ave. Detour Location Map	80
Connector Road Detour	81
Connector Road Detour Cross Sections	82
Signing Plan	83
Utility Support Details	84-86
Right Of Way Maps	87-93

PROJECT LOCATION:	Union Street Bridge #5797 over Interstate 95, located 0.04 miles south of Ohio Street, 44°48'36" N, 68°47'36" W
PROGRAM AREA:	Urban & Federal Bridge Program
OUTLINE OF WORK:	Bridge Replacement

STATE OF MAINE
DEPARTMENT OF TRANSPORTATION

APPROVED

COMMISSIONER: DATE 12/6/13

CHIEF ENGINEER: DATE 12-6-13

STATE OF MAINE
BRYSON T WELCH
No. 11799
LICENSED
PROFESSIONAL ENGINEER

P.E. NUMBER 11799
DATE 12/31/2013

PROJECT INFORMATION

PROGRAM	BRIDGE PROGRAM
PROJECT MANAGER	STEPHEN BOODEE
DESIGNER	BRYSON WELCH
CONSULTANT	BECKER STRUCTURAL
PROJECT RESIDENT	
CONTRACTOR	
PROJECT COMPLETION DATE	

WIN: 16681.00

IM-1668(100)E

BANGOR
UNION STREET OVER I-95

TITLE SHEET

SHEET NUMBER 1 OF 93

CALDERWOOD ENGINEERING
20 Rivers Road
RICHMOND, ME 04357
PH. (207) 737-2001 FAX (207) 737-2008

GP Gorrill-Palmer Consulting Engineers, Inc.
PO Box 1237 — 15 Shaker Road — Gray, ME 04039
Engineering Excellence Since 1998
207-657-6910 FAX: 207-657-6912
E-Mail: mailbox@gorrillpalmer.com

BECKER STRUCTURAL ENGINEERS
75 York Street, Portland, Maine 04101
207.879.1838 • beckerstructural.com

Date:12/31/2013
Username: CADD
Division: BRIDGE
Filename:\00\BRIDGE\MSTA\001_Title.dgn

Filename: ...\BRIDGE\MSTA\002_Estimate.dgn Division: BRIDGE Username: CADD Date:1/2/2014

ESTIMATED QUANTITIES			
ITEM NO.	DESCRIPTION	QUANTITY	UNIT
202.15	REM MANHOLE OR CATCH BASIN	12	EA
202.19	REMOVING EXISTING BRIDGE (780 CY/680,500 LB)	1	LS
202.202	REMOVING PAVEMENT SURFACE	11,000	SY
203.20	COMMON EXCAVATION	6,000	CY
203.24	COMMON BORROW	800	CY
203.25	GRANULAR BORROW	2,900	CY
206.082	STR EA EXC - MAJOR STRUCTURES	3,350	CY
206.10	STR EARTH EXC - PIERS	380	CY
304.10	AGGR SUBB COURSE - GRAVEL	4,500	CY
403.207	HOT MIX ASPHALT 19.0 MM HMA	810	T
403.208	HOT MIX ASPHALT 12.5 MM HMA SURFACE	100	T
403.2081	12.5 MM POLYMER MODIFIED HMA	1,570	T
403.209	HOT MIX ASPHALT 9.5 MM HMA (INCID.)	50	T
403.210	HOT MIX ASPHALT 9.5 MM	55	T
403.211	HOT MIX ASPHALT (SHIM)	20	T
403.213	HOT MIX ASPHALT 12.5 MM BASE	50	T
403.2131	12.5 MM POLYMER MODIFIED HMA BASE	615	T
409.15	BITUMINOUS TACK COAT - APPLIED	636	G
461.131	TEMPORARY PAVEMENT	9	T
502.219	STRUCTURAL CONCRETE, ABUT & RET WALLS (909 CY)	1	LS
502.239	STR CONC PIERS (225 CY)	1	LS
502.25	STR CONC SUPERSTR SLAB (496 CY)	1	LS
502.31	STRUCTURAL CONCRETE APPROACH SLAB (45 CY)	1	LS
502.49	STRUCTURAL CONCRETE CURBS AND SIDEWALKS (115 CY)	1	LS
502.74	FRP BRIDGE DRAIN - TYPE C	8	EA
503.12	REINFORCING STEEL, FABRICATED/DELIVERED	79,427	LB
503.13	REINFORCING STEEL, PLACING	79,427	LB
503.14	EPOXY-COATED REINF STEEL, FAB'D/DELIV'D	8,803	LB
503.15	EPOXY-COATED REINF STEEL, PLACING	8,803	LB
503.17	MECHANICAL WELDED SPLICE - NON COATED	128	EA
503.17	MECHANICAL WELDED SPLICE - STAINLESS	158	EA
503.26	STAINLESS STEEL REINFORCEMENT - FAB & DEL	35,350	LB
503.27	STAINLESS STEEL REINFORCEMENT - PLACING	35,350	LB
507.0831	STEEL BRIDGE RAILING, 4-BAR (357 LF)	1	LS
507.13	TEMPORARY BRIDGE RAIL	194	LF
508.14	HIGH PERFORMANCE WATERPROOFING MEMBRANE (1250 SY)	1	LS
509.70	COMPOSITE BEAM (14 EA)	1	LS
510.10	SPECIAL DETOUR - SUNSET AVE	1	LS
511.07	COFFERDAM - ABUTMENT NO. 1	1	LS
511.07	COFFERDAM - ABUTMENT NO. 2	1	LS
511.07	COFFERDAM - PIER	1	LS
512.081	FRENCH DRAINS (620 LF)	1	LS
513.09	SLOPE PROT - PORT CEM CONC	670	SY
514.06	CURING BOX FOR CONC CYL	1	EA
515.21	PROT COAT FOR CONC SURFACES (540 SY)	1	LS
520.22	EXPANSION DEVICE - COMPRESSION SEAL	2	EA
523.52	BEARING INSTALLATION	56	EA
523.5401	LAMINATED ELASTOMERIC BEARINGS, FIXED	28	EA
523.5402	LAMINATED ELASTOMERIC BEARINGS, EXPANSION	28	EA
526.301	TEMPORARY CONC BARRIER TYPE I (2,070 L.F.)	1	LS
526.34	PERMANENT CONC TRANSITION BARRIER	4	EA
527.303	ENERGY ABSORBING SYSTEM (ET-PLUS)	3	EA
527.34	WORK ZONE CRASH CUSHIONS	8	UN
603.159	12" CULV PIPE OPTION III	37	LF
603.169	15" CULV PIPE OPTION III	212	LF
603.179	18" CULV PIPE OPTION III	58	LF
603.199	24" CULV PIPE OPTION III	108	LF
604.072	CATCH BASIN TYPE A1-C	3	EA
604.092	CATCH BASIN TYPE B1-C	1	EA
604.15	MANHOLE	2	EA
604.18	ADJUST MANHOLE OR CB TO GRADE	2	EA
604.252	CATCH BASIN TYPE A5-C	10.5	EA
604.262	CATCH BASIN TYPE B5-C	5.2	EA
605.09	6" UNDERDRAIN TYPE B	600	LF
605.11	12" UNDERDRAIN TYPE C	750	LF

ESTIMATED QUANTITIES			
ITEM NO.	DESCRIPTION	QUANTITY	UNIT
606.1721	BRIDGE TRANSITION - TYPE 1	4	EA
606.23	GR TY 3C - SINGLE RAIL	38	LF
606.231	GR TY 3C - 15 FOOT RADIUS AND LESS	25	LF
606.232	GR TY 3C - OVER 15 FOOT RADIUS	88	LF
606.24	GR TY 3D - SINGLE RAIL	588	LF
606.265	TERM END- SGL RAIL- GALV STEEL	1	EA
606.353	REFLECTORIZED FLEXIBLE GUARDRAIL MARKER	8	EA
606.356	UNDERDRAIN DELINEATOR POST	3	EA
606.363	GR REMOVE AND DISPOSE	618	LF
606.369	GUARDRAIL, REMOVED AND STACKED	500	LF
606.48	SINGLE GALVANIZED STEEL POST	184	EA
606.63	THRIE BEAM RAIL BEAM	700	LF
606.64	GR - THRIE BEAM - DBL RAIL	200	LF
606.65	GR - THRIE BEAM - SGL RAIL	300	LF
606.66	TERMINAL END THRIE BEAM	2	EA
607.163	CHAIN LINK FENCE - 4' P.V.C. COATED	40	LF
607.184	CHAIN LINK SNOW FENCE 3'	344	LF
607.24	REMOVE AND RESET FENCE	50	LF
607.421	SCREENING FENCE	250	LF
608.26	CURB RAMP DETECTABLE WARNING FIELD	230	SF
609.11	VERT CURB TYPE 1	1,270	LF
609.12	VERT CURB TYPE 1- CIRCULAR	215	LF
609.234	TERMINAL CURB TYPE 1 - 4 FOOT	8	EA
609.238	TERMINAL CURB TYPE 1 - 8'	20	EA
609.441	CURBING REMOVED AND STACKED	1,610	LF
610.08	PLAIN RIPRAP	27	CY
610.18	STONE DITCH PROTECTION	20	CY
613.319	EROSION CONTROL BLANKET	1,100	SY
615.07	LOAM	425	CY
615.081	COMPOST BLANKET	150	CY
618.1301	SEEDING METHOD NUMBER 1 - PLAN QUANTITY	75	UN
618.1411	SEEDING METHOD NUMBER 3 - PLAN QUANTITY	22	UN
619.1201	MULCH - PLAN QUANTITY	97	UN
619.1401	EROSION CONTROL MIX	50	CY
620.58	EROSION CONTROL GEOTEXTILE	145	SY
626.11	PRECAST CONCRETE JUNCTION BOX	12	EA
626.22	NON-METALLIC CONDUIT	1,060	LF
626.27	4 INCH DIA UTILITY CONDUIT SYSTEM (1,450 LF)	1	LS
626.32	24" FOUNDATION	10	EA
626.34	SIGNAL POLE FOUNDATION	5	EA
626.35	CONTROLLER CABINET FOUNDATION	2	EA
627.18	12" SOLID WHITE PAVEMENT MARKING LINE	500	LF
627.733	4" WHITE OR YELLOW PAINTED PAVE MARKING LINE	2,550	LF
627.744	6" WHITE OR YELLOW PAINTED PAVE MARKING LINE	9,400	LF
627.75	WHITE OR YELLOW PVMT AND CURB MARKING	1,720	SF
627.76	TEMPORARY PVMT. MARK LINE, W OR YELLOW (19,650 LF)	1	LS
627.77	REMOVING PAVEMENT MARKINGS	3,350	SF
629.05	HAND LABOR, STRAIGHT TIME	100	HR
631.10	AIR COMPRESSOR (INC OPERATOR)	40	HR
631.11	AIR TOOL (INCLUDING OPERATOR)	40	HR
631.12	ALL-PURPOSE EXCAVATOR (INC OPERATOR)	80	HR
631.14	GRADER (INCLUDING OPERATOR)	40	HR
631.172	TRUCK-LARGE (INC OPERATOR)	40	HR
631.18	CHAIN SAW RENTAL(INC OPERATOR)	40	HR
631.20	STUMP CHIPPER (INCLUDING OPERATOR)	10	HR
631.21	ROAD BROOM (INCLUDING OPERATOR & HAULER)	20	HR
631.32	CULVERT CLEANER (INC OPERATOR)	80	HR
634.160	HIGHWAY LIGHTING	1	LS
634.208	REMOVE & RESET LIGHT STANDARDS	1	EA
634.2082	REMOVE EXISTING LIGHT STANDARDS	1	EA
637.071	DUST CONTROL	1	LS
639.18	FIELD OFFICE TYPE A	1	EA
643.6004	TEMP SOLAR POWERED LED PED CROSSWALK BEACON	4	EA
643.71	TRAFFIC SIGNAL MODIFICATION: UNION ST AND RAMP A	1	LS
643.71	TRAFFIC SIGNAL MODIFICATION: UNION ST AND RAMP G	1	LS

ESTIMATED QUANTITIES			
ITEM NO.	DESCRIPTION	QUANTITY	UNIT
643.712	PREEMPTIVE SYSTEM	1	LS
643.83	VIDEO DETECTION SYSTEM	1	LS
643.90	INTERCONNECT WIRE BETWEEN	1	LS
643.91	MAST ARM POLE W/ 20FT MAST ARM	1	EA
643.92	PEDESTAL POLE	9	EA
643.94	DUAL PURPOSE POLE W/ 15FT & 35FT MAST ARMS	1	EA
643.94	DUAL PURPOSE POLE W/ 25FT & 30FT MAST ARMS	1	EA
643.94	DUAL PURPOSE POLE W/ 35FT MAST ARM	1	EA
643.94	DUAL PURPOSE POLE W/ 40FT MAST ARM	1	EA
645.106	DEMOUNT REG,WRN,CON,&RTE SGN	28	EA
645.108	DEMOUNT POLE	28	EA
645.116	REINST REG WRN CONF & RTE SIGN	28	EA
645.118	REINSTALL POLE	28	EA
652.30	FLASHING ARROW BOARD	6	EA
652.312	TYPE III BARRICADE	80	EA
652.33	DRUM	550	EA
652.34	CONE	200	EA
652.343	TEMPORARY MODULAR DELINEATOR CURB	1,200	LF
652.35	CONSTRUCTION SIGNS	3,200	SF
652.36	MAINT OF TRAFF CONTROL DEVICES	630	CD
652.38	FLAGGER	7,500	HR
652.381	TRAFFIC OFFICERS	560	HR
652.41	PORTABLE - CHANGE MESSAGE SIGN	8	EA
656.75	TEMP. SOIL EROS. AND WATER POLLUTION CONTROL	1	LS
659.10	MOBILIZATION	1	LS
660.21	ON-THE-JOB TRAINING (BID)	1,000	HR
802.171	16" DIAMETER INSULATION	190	LF
827.331	TRENCH INSULATION	7	SY
830.10	WATER MAIN BR CROSSING (220 LF)	1	LS
845.10	STRUCTURAL STEEL UTILITY SUPPORT - BANGOR WATER DISTRICT (6295 LB)	1	LS
845.10	STRUCTURAL STEEL UTILITY SUPPORT - FAIRPOINT (2415 LB)	1	LS
845.10	STRUCTURAL STEEL UTILITY SUPPORT - MAINE DOT (1405 LB)	1	LS

STATE OF MAINE
DEPARTMENT OF TRANSPORTATION

IM-1668(100)E

WIN 16681.00

BRIDGE NO. 5797

BRIDGE PLANS

	BY	DATE
PROJ. MANAGER STEPHEN BODGE		
DESIGN-DETAILED	D. BURGESS	05-22-13
CHECKED-REVIEWED	B. WELCH	05-22-13
DESIGN2-DETAILED2		
DESIGN3-DETAILED3		
REVISIONS 1		
REVISIONS 2		
REVISIONS 3		
REVISIONS 4		
FIELD CHANGES		

SIGNATURE

P.E. NUMBER

DATE

UNION STREET BRIDGE
OVER INTERSTATE 95
BANGOR PENOBSCOT COUNTY

ESTIMATED QUANTITIES

SHEET NUMBER

2

OF 93

GP Corrill-Palmer Consulting Engineers, Inc.
PO Box 1237 15 Shaker Road Gray, ME 04039
Engineering Excellence Since 1998
207-657-6910 FAX: 207-657-6912
E-Mail: mailbox@gorrillpalmer.com

BECKER STRUCTURAL ENGINEERS
75 York Street, Portland, Maine 04101
207.879.1838 • beckerstructural.com

Filename: ...\msto\003_notes_general.dgn Division: BRIDGE Username: CADD Date:1/2/2014

GENERAL CONSTRUCTION NOTES

1. For easements, construction limits and right of way lines, refer to Right of Way Map.

2. The clearing and selective clearing and thinning lines shown on the plans are for estimating purposes only. The actual lines for clearing and thinning shall be established in the field by the contractor and approved by the Resident.

3. Grubbing in fill areas has been shown on the cross sections and the quantities noted. These limits are approximate and have been used for estimating purposes only. Actual grubbing limits may vary based on field conditions as directed by the Resident. Estimated grubbing depths are 6 inches in field areas and 12 inches in wooded areas.

4. All utility facilities shall be adjusted by the respective utilities unless otherwise noted.

5. The location of the existing utilities and drainage shown on the plans and cross sections were compiled from field survey and various other sources. Locations are approximate and not guaranteed to be accurate nor is it guaranteed that all utilities are shown. No separate or additional compensation will be allowed to the Contractor due to any variance between the data shown on the plans and the actual field conditions encountered.

6. The installation of proposed utility poles and utility manhole adjustments as required for the project shall be completed by others. See Special Provision 104.

7. Do not excavate for Aggregate Subbase Course where existing material is suitable as determined by the Resident.

8. In areas where the Resident directs the Contractor not to excavate to the subgrade line shown on the plans, payment for removing existing pavement, grubbing, shaping, ditching, and compacting the existing subbase and layers of new subbase 6 inches or less thick will be made under appropriate equipment rental items.

9. No separate payment for Superintendent or Foreman shall be made for the supervision of equipment being paid for under the equipment rental items.

10. During construction, Interstate 95 will be closed to traffic for a time period specified in the Special Provisions.

11. Except as otherwise shown, backfill within ten feet of the back of wing walls and abutment walls below elevation 150.0 shall be Granular Borrow meeting the requirements of Subsection 703.19, Material for Underwater Backfill.

12. Entrances shall be constructed with:
Residential Paved: 2" Hot Mix Asphalt -Grading 9.5mm
12" Aggregate Subbase Course - Gravel

13. Existing culverts to remain shall be cleaned as directed by the Resident. Payment shall be made under item 631.32 Culvert Cleaner (Including operators).

14. Any necessary cutting of existing pipes to fit in areas of proposed catch basins and modifying existing catch basins to fit new pipes shall not be paid for separately and shall be considered incidental to 604 pay items.

15. Catch basin and rim elevations noted on the cross sections are the top of grate elevations at the center of grate. Catch basin offset locations are measured to the center of the grate.

16. Removal of existing drainage pipes, as noted on the plans, shall be considered incidental to item 203.20, Common Excavation.

17. Any damage to the existing roads, slopes, pipes or drainage structures caused by the Contractor's equipment, personnel or operation shall be repaired to tthe satisfaction of the Resident. All work, equipment and materials required to make repairs shall be at the Contractor's expense.

18. All pedestrian ramps shall be 6 feet wide.

19. Pedestrian ramp Detectable Warning devices shall be used at all crosswalk locations.

20. The contractor shall install Detectable Warning Pavers on pedestrian ramps at street crossings and intersections, in accordance with the Special Details and Special Provision 608, "Detectable Warning Pavers". Coordinate work with the Resident.

21. Payment Markings shall be in accordance with the 'Manual on Uniform Traffic Control Devices for Streets and Highways" U.S.D.O.T.F.H.W.A. lates edition. Pavement Marking pay items are listed on the Quantitiy Sheet.

22. Place loam 2 inches deep on all new or reconstructed sideslopes or as directed by the Resident.

23. At locations indicated, guardrail posts shall be modified from the indicated length of 6 feet, as shown in the Standard Details, to a length of 7 feet with an embedment of 4.5 feet. Payment will be considered incidental to the guardrail pay items.

24. An NCHRP350 compliant guardrail end treatment shall be installed concurrently with the placement of each section of beam guardrail.

25. Protective Coating for Concrete Surfaces shall be applied to the following areas:

All exposed surfaces of concrete curbs and sidewalks.
Fascias down to the drip notch.
All exposed surfaces of concrete transition barriers.
Top of abutment backwalls and to one foot below the top of abutment backwalls on the back side.

26. Project information referred to below may be accessed at the following MaineDOT web address: http://www.maine.gov/mdot/contractors/.

27. The existing bridge plans may be accessed at the MaineDOT web address. The plans are reproductions of the original drawings as prepared for the construction of the bridge. It is very unlikely that the plans will show any construction field changes and alterations which may have been made to the bridge during its life span.

28. The project geotechnical report titled: Geotechnical Design Report for the Replacement of Union Street Bridge over Interstate 95, Bangor, Maine, Soils Report No. 2011-10, March 12, 2011 may be accessed at the MaineDOT web address.

29. Geotechnical information furnished or referred to in this plan set is for the use of the Bidders and the Contractor. No assurance is given that the information or interpretations will be representative of actual subsurface conditions at the construction site. MaineDOT will not be responsible for the Bidders' or Contractor's interpretations of, or conclusions drawn from, the geotechnical information. The boring logs contained in the plan set present factual and interpretive subsurface information collected at discrete locations. Data provided may not be representative of the subsurface conditions between the boring locations.

30. Quantities included for pay items measured and paid for by Lump Sum are estimated quantities and are provided by MaineDOT for informational purposes only. Lump Sum pay items will be paid for at the Contract Bid amount, with no addition or reduction in payment to the Contractor if the actual final quantities are different from the MaineDOT provided estimated quantities, except as follows:

a. If a Lump Sum pay item is eliminated, the requirements of Standard Specifications Section 109.2, Elimination of Items, will take precedence.

b. If other Contract Documents specifically allow a change in payment for a Lump Sum pay item, those requirements will be followed.

c. If a design change results in changes to estimated quantities for Lump Sum pay items, price adjustments will be made in accordance with Standard Specifications Section 109.7, Equitable Adjustments to Compensation.

31. The Contractor shall submit a Bridge Demolition Plan to the Resident at least 10 business days prior to the start of demolition work. The plan shall outline the methods and equipment to be used to remove and dispose of all materials included in the existing bridge. No work related to the removal of the bridge shall be undertaken by the Contractor until MaineDOT has reviewed the Bridge Demolition Plan for appropriateness and completeness. Payment for all work necessary for developing, submitting and finalizing the Demolition Plan will be considered incidental to the bridge removal pay item.

32. All aluminum bridge rail, rail posts, and associated hardware which are to be removed shall be carefully salvaged by the Contractor and will remain the property of the Department. Payment will be considered incidental to related Contract items.

33. The existing bridge shall be removed and become the property of the Contractor. The steel portions of the existing bridge are coated with a lead-based paint system. The Contractor is responsible for the containment, proper management and disposal of all lead-contaminated hazardous waste generated by the process of demolition of the bridge. The Contractor is responsible for implementing appropriate OSHA mandated personal protection standards is solely responsible for the care, custody and control of the components of the existing bridge and any hazardous waste generated as a result of the storage, recycling or disposal of the bridge components, including lead-coated steel. The Contractor shall recycle or reuse the steel in accordance with the Maine Department of Environmental Protection's "Maine Hazardous Waste Management Regulations," Chapter 850. A copy of this regulation is available at MaineDOT's offices on Child Street in Augusta. Payment for all labor, materials, equipment and other costs required to remove and dispose of the existing bridge will be considered incidental to the bridge removal pay item.

34. Where pavement under this contract joins an existing pavement, the existing pavement shall be saw cut along a smooth line to a neat, even vertical joint, as directed by the Resident. Broken or raveled edges will not be permitted. All work necessary for the preparation of this joint will be considered incidental to the related contract items.

35. All waste material not used on the project shall be disposed of off the project in waste areas approved by the Resident.

36. Any necessary cleaning of existing pavement prior to paving shall be incidental to the related paving items.

37. No existing drainage shall be abandoned, removed or plugged without prior approval of the Resident. Abandoned structures to remain shall be plugged with brick and mortar, incidental to 'Drainage Items'.

38. Inlets and outlets of all culverts shall be riprapped unless otherwise noted on the plans or directed by the Resident.

39. Any necessary cutting of existing catch basins to allow for proposed pipe connections will not be paid for separately and will be considered incidental to Item 603 or 605.

40. All underdrain not labeled on the cross sections will have a flow line of 5.0 feet below finish grade directly above the underdrain. All underdrain shown on the cross sections will have the flow line scaled from the cross sections. All flow line elevations are subject to approval by the Resident.

41. Two Reflectorized Flexible G.R. Markers (Item 606.353) will be installed at each guardrail end. A delineator post (Item 606.356) will be installed at each underdrain outlet.

42. Connections for proposed guardrail to existing guardrail will be considered incidental to Item 606.

43. Erosion Control Mix may be substituted in those areas normally receiving loam and seed as directed by the Resident. Placement shall be in accordance with Standard Specifications Section 619, Mulch. Payment will be made under Item No.619.1401, Erosion Control Mix.

44. Unless otherwise noted Seeding Method No. 1 shall be utilized on all lawns and developed areas. Seeding Method No. 2 shall be utilized on all non-guardrail slopes. Seeding Method No. 3 shall be utilized on all guardrail fill slopes. On long guardrail backslopes, Seeding Method No. 3 may be used instead of Method No. 2 if noted or directed by the Resident.

45. Median thrie beam guardrail proposed from Sta. 102+25 to Sta. 105+50 (both single rail and double rail) shall include a double nested thrie beam rail beam. Pay Item for additional rail beam shall be made under Item 606.63. Double rail joints shall be staggered.

46. The post spacing for the median thrie beam guardrail proposed from Sta. 102+25 to Sta. 105.50 shall vary from 6'-3" to 3'-1 1/2" to 1'-6 3/4". The rail shall be attached to posts spaced at 3'-1 1/2" or greater. Additional posts will be paid for under item 606.48. The post spacing shall be as follows:

Sta. 102+25 to Sta. 102+50, RT	6'-3"	Spacing
Sta. 102+50 to Sta. 103+00, RT	3'-1 1/2"	Spacing
Sta. 103+00 to Sta. 104+75, RT	1'-6 3/4"	Spacing
Sta. 103+00 to Sta. 104+75, LT	1'-6 3/4"	Spacing
Sta. 104+75 to Sta. 105+25, LT	3'-1 1/2"	Spacing
Sta. 105+25 to Sta. 105+50, LT	6'-3"	Spacing

47. Transition 7 inch approach curb reveal to 9 inch bridge curb reveal from Sta. 12+90.50 to Sta. 13+05.50 and Sta. 14+94.50 to Sta. 15+09.50 and transition curb vertical face to 1 inch bridge curb batter from Sta. 13+00.50 to Sta. 13+05.50 and Sta. 14+94.50 to Sta. 14+99.50 (typical both sides).

48. Contractor shall maintain existing highway lighting during construction. The project includes 400 LF of Lighting Conduit (Pay Item 626.22) at undetermined locations to be used to replace conduit sections impacted by the project. Work will be paid for under item 626.22 and 634.16. Coordinate work with Resident.

49. Remove and reset light standard Sta. 71+25 LT. The new foundation shall meet or exceed the existing foundation size. Payment shall be made under Item 626.32, 24" Foundation. Coordinate work with Resident.

50. Where directed by the Resident, winter sand (outside paved areas) shall be removed from the edges of shoulders and placed in designated areas or disposed of. Payment will be made under the appropriate hourly rental items. The disposal of all waste (including but not limited to obtaining waste permits, grading, mulching and seeding) shall be considered incidental to the related rental items.

51. Hot mix asphalt shall be placed along exposed joints at ramps (milled and paved surfaces) on a 12:1 taper to maintain traffic to the width specified by the Resident. Placement, maintenance and removal of these tapers will be considered incidental to 403 Items.

52. All joints between existing and proposed hot mix asphalt shall be butted. Payment shall be made under Item 202.202.

53. When milling the lane adjacent to the newly placed pavement, the milling machine shall mill into the newly placed pavement by 3"+/- or as directed by the Resident.

54. "Undetermined Locations" shall be determined by the Resident.

55. All work shall be done in accordance with the Maine Department of Transportation's Best Management Practices for Erosion & Sedimentation Control, latest edition.

56. Milling widths/depths may be adjusted by the Resident.

57. The paved gore areas between the on/off ramps and the mainline shall have an edge line of 12 inch white pavement marking line, Item 627.18, as directed by the Resident.

58. Cleaning of the pavement following rental work will be considered incidental to the rental items. Cleaning will be done daily and to the satisfaction of the Resident prior to the Contractor leaving the project for the day.

59. Existing catch basins will be cleaned as directed by the Resident. Payment for catch basin cleaning shall be under Item 631.32.

60. All pavement grindings/millings will become property of the Contractor.

61. Weepers will be milled on shoulders to allow for water run-off as directed by the Resident. Payment will be made under Item 202.202.

62. All clearing shall be considered incidental to the contract and no separate payment will be made. The actual lines for clearing shall be established in the field by the contractor as indicated on the plans and approved by the Resident.

STATE OF MAINE
DEPARTMENT OF TRANSPORTATION
IM-1668(100)E
WIN 16681.00
BRIDGE NO. 5797 BRIDGE PLANS

PROJ. MANAGER STEPHEN BODGE		BY	DATE
DESIGN-DETAILED	B. WELCH	D. BURGESS	05-22-13
CHECKED-REVIEWED	B. WELCH	J. BURGESS	05-22-13
DESIGN2-DETAILED2	-------	-------	-------
DESIGN3-DETAILED3	-------	-------	-------
REVISIONS 1	-------	-------	-------
REVISIONS 2	-------	-------	-------
REVISIONS 3	-------	-------	-------
REVISIONS 4	-------	-------	-------
FIELD CHANGES	-------	-------	-------

SIGNATURE
P.E. NUMBER
DATE

UNION STREET BRIDGE
OVER INTERSTATE 95
BANGOR PENOBSCOT COUNTY

GENERAL CONSTRUCTION NOTES

SHEET NUMBER
3
OF 93

GP Gorrill-Palmer Consulting Engineers, Inc.
PO Box 1237 Engineering Excellence Since 1998 207-657-6910
15 Shaker Road FAX: 207-657-6912
Gray, ME 04039 E-Mail: mailbox@gorrillpalmer.com

BECKER STRUCTURAL ENGINEERS
75 York Street, Portland, Maine 04101
207.879.1838 • beckerstructural.com

Filename: ...\BRIDGE\MSTA\004_BDPlan_01.dgn Division: BRIDGE Username: CADD Date:1/6/2014

See Next Sheet For Additional Information on Ramp A

DRIVES & ENTRANCES
STATIONS TYPE
STA. 61+00 RT. PAVED

ITEM 607.163 - CHAIN LINK FENCE - 4' P.V.C. COATED
FROM 70+90 - 71+30, 26' RT 40 LF

CLEARING
STA. 12+53 TO STA. 13+08 RT.
STA. 70+86 TO STA. 73+00 RT.
STA. 70+60 TO STA. 73+00 LT.
STA. 14+74 TO STA. 15+08 LT.

ITEM 610.08 - PLAIN RIPRAP
STA.12+70, 61' TO STA 13+11, 95' LT.

REMOVE TREE
STA. 15+34.31, 69.54' RT.
STA. 91+01.01, 28.44' RT.
STA. 91+01.74, 30.58' RT.

REMOVE STUMP
STA. 15+34.31, 69.54' RT.
STA. 91+01.01, 28.44' RT.
STA. 91+01.74, 30.58' RT.

Sta 109+50
Limit of Highway Resurfacing
Match I-95 NB/SB Resurfacing
Project WIN 20380.00

Sta 106+00, Lt
Limit of Ramp C
Highway Resurfacing

Sta 70+89, Lt to Sta 71+30, Lt
Remove Chain Link Fence
(Incidental to Item 203.20)
Install Chain Link Fence
(with Top Rail)

Sta 80+50
Limit of Work
Match NB On-Ramp
Project WIN 19256.00

Sta 12+60.42 Union Street =
Sta 70+00.00 Ramp A

Limit of Work
Match Existing
Pavement
Sta 11+25

Remove Exist.
Light Pole

Limit of Sawcut
I-95 Median
Reconstruction

℄ Brg (Exp.)
Abut. No. 1
Sta 13+08.00

℄ Pier (Fixed)
Sta 14+00.00

℄ Brg (Exp.)
Abut. No. 2
Sta 14+92.00

92.00'

90°00'00"
(Typ.)

Sta 16+98.29 Union Street =
Sta 60+00.00 15th Street (N)

Sta 15+48.58 Union Street =
Sta 80+00.00 Ramp G

Adjust CB to Grade

Connect to Exist. CB

Match
Existing
Pavement
Sta 61+25

Sta 11+07, 20.7' Rt
Connect to Exist. CB

Proposed
Utility Pole

Sta 12+31.00 Union Street =
Sta 64+40.00 Sunset Avenue

Remove Manhole
(Incidental to
Item 203.20)

Sta 14+00.00
Union Street =
Sta 103+83.82
Interstate 95

℄ Construction

Concrete
Slope Protection
(Typ.)

Connect to Exist. MH

Riprap Downspout

Approach
Slab (typ.)

Sta 16+19, Rt. to
Sta 16+55, Rt.
Remove Wood Fence
(Incidental to 203.20)

To Bangor
Waterfront

Proposed Utility Pole
Provide 4' Passage for
Sidewalk around Pole

Match
Existing
Pavement
Sta 51+00

Limit of Work
Match Existing
Pavement
Sta 17+50

Limit of I-95
1.5" Pavement
Mill and Overlay

Match Existing
Pavement, Curb
and Guardrail
Sta 92+09

Sta 98+00
Limit of Highway Resurfacing
Match I-95 NB/SB Resurfacing
Project WIN 20380.00

PLAN

Scale of Feet: 25 0 25 50

MELISSA J. CASTERLINE

ABIGAIL M. RIVERS
GRANT D. BAILEY

RONALD C. MUDIE
ITEM NO. (2)
TEMP. CONST. RIGHTS = 220± S.F.(1)
TOTAL AREA = 10,456± S.F.
(SURVEY)

RONALD C. MUDIE

D&K PROPERTIES, LLC
PARCEL NO. (1)
LAND TAKEN = 1204± S.F.
TOTAL AREA = 34,630± S.F.(DEED
REM. AREA = 33,426± S.F.

D & K PROPERTIES, LLC
POR NO. 16
TAX MAP 4 LOT 14

JOHN W. CRANE
ANNA R. CRANE
POR NO. 11
TAX MAP 10 LOT 76

KENNETH J. FERNALD
POR NO. 6
TAX MAP 20 LOT 1-B

KENNETH J. FERNALD

ESTATE OF JEAN M. BLACK,
CHRISTOPHER R. BLACK, CO-PERSONAL
LISA M. BLACK REPRESENTATIVES
PARCEL NO. (3)
LAND TAKEN = 243± S.F.
TEMP. CONST. RIGHTS = 460± S.F.(1)
TOTAL AREA = 10,405± S.F.(CALC.)
REM. AREA = 10,162± S.F.

AARON J. NOBLE
MY T. NOBLE
WILLIAM R. NOBLE
ITEM NO. (5)
TEMP. CONST. RIGHTS =
75± S.F.(1)
TOTAL AREA =
5500± S.F.(DEED)

MICHAEL G. LAMBERT
DIANA L. LAMBERT
MEGHAN D. LAMBERT
Sta 15+66.61 Union Street =
Sta 90+00.00 Ramp J
Sta 17+11.74 Union Street =
Sta 50+00.00 15th Street (S.)
PARCEL NO. (4)
LAND TAKEN = 536± S.F.
TEMP. CONST. RIGHTS =
100± S.F.(1)
TOTAL AREA =
8613± S.F.(CALC.)
REM. AREA = 8077± S.F.

ALICE V. LIBBEY
PARCEL NO. (6)
LAND TAKEN = 51±
TEMP. CONST. RIGHTS
335± S.F.(1)
TOTAL AREA =
7824± S.F.(CALC.)
REM. AREA = 7773±

ANTHONY A. LAURITANO
SUSAN S. LAURITANO
ANTHONY A. LAURITANO
SUSAN S. LAURITANO
POR NO. 8
TAX MAP 11

LOT 46

16TH STREET

RAMP A (SB OFF)

RAMP C (SB ON)

RAMP G (NB ON)

15TH STREET (NORTH)

UNION STREET

SUNSET AVE

INTERSTATE 95 SOUTHBOUND

INTERSTATE 95 NORTHBOUND

RAMP J (NB OFF)

15TH STREET (SOUTH)

EXISTING C.O.A.

12" UD Type 'C'

15" Opt III

24" Option III

Proposed Utility Pole

Limit of Work
Match Existing
Pavement
Sta 11+25

Sta 63+50

Sta 61+99

Sta 50+00

Sta 51+32

Sta 64+40

Sta 62+00

Sta 63+00

Sta 64+00

Sta 70+00

Sta 71+00

Sta 72+00

Sta 80+00

Sta 81+00

Sta 82+00

Sta 90+00

Sta 91+00

Sta 92+00

Sta 102+00

Sta 103+00

Sta 104+00

Sta 105+00

Sta 106+00

11+00

12+00

13+00

14+00

15+00

16+00

17+00

Sta 50+00

Sta 51+00

Sta 60+00

Sta 61+00

Sta 69+00

Sta 80+00

Sta 90+00

Sta 91+00

Sta 92+00

Sta 102+00

Sta 103+00

Sta 104+00

Sta 105+00

Sta 106+00

P.L.

To BIA

GP Gorrill-Palmer Consulting Engineers, Inc.
PO Box 1237 Engineering Excellence Since 1998
15 Shaker Road
Gray, ME 04039
207-657-6910
FAX: 207-657-6912
E-Mail: mailbox@gorrillpalmer.com

BECKER STRUCTURAL ENGINEERS
75 York Street, Portland, Maine 04101
207.879.1838 • beckerstructural.com

STATE OF MAINE
DEPARTMENT OF TRANSPORTATION

IM-1668(100)E

WIN 16681.00

BRIDGE NO.: 5797

BRIDGE PLANS

	DATE	BY
PROJ. MANAGER: STEPHEN BODGE		
DESIGN-DETAILED	07-09-13	D.BURGESS
CHECKED-REVIEWED	07-09-13	J.BURGESS
DESIGN2-DETAILED2		
DESIGN3-DETAILED3		
REVISIONS 1		
REVISIONS 2		
REVISIONS 3		
REVISIONS 4		
FIELD CHANGES		

SIGNATURE

P.E. NUMBER

DATE

UNION STREET BRIDGE
OVER INTERSTATE 95
BANGOR PENOBSCOT COUNTY

GENERAL PLAN

SHEET NUMBER
4
OF 93

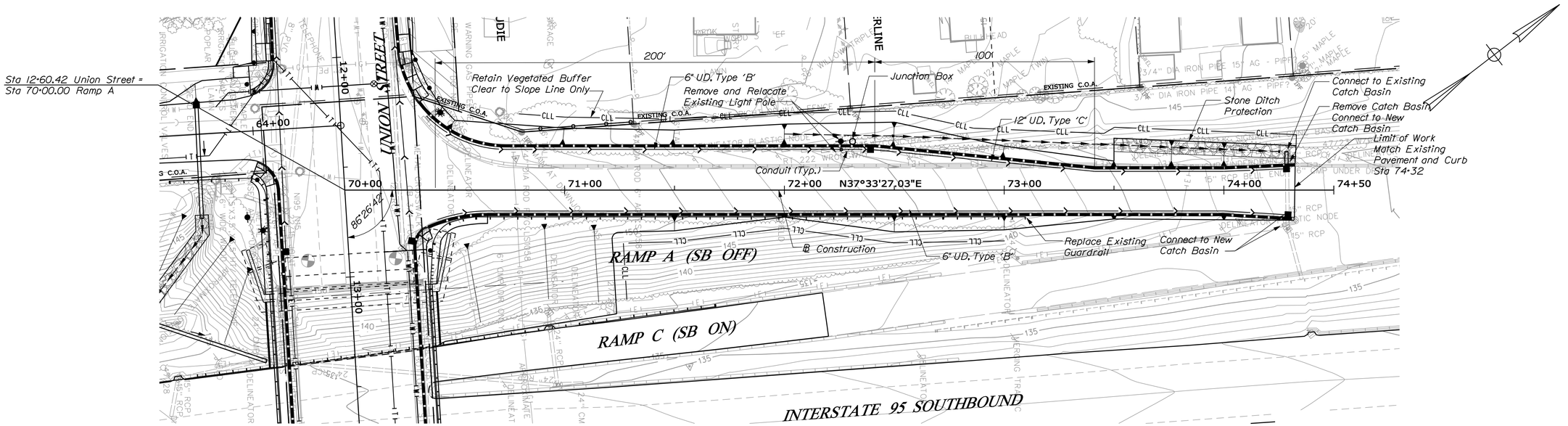

RAMP A (SB OFF) PLAN

25 0 25 50

Scale of Feet

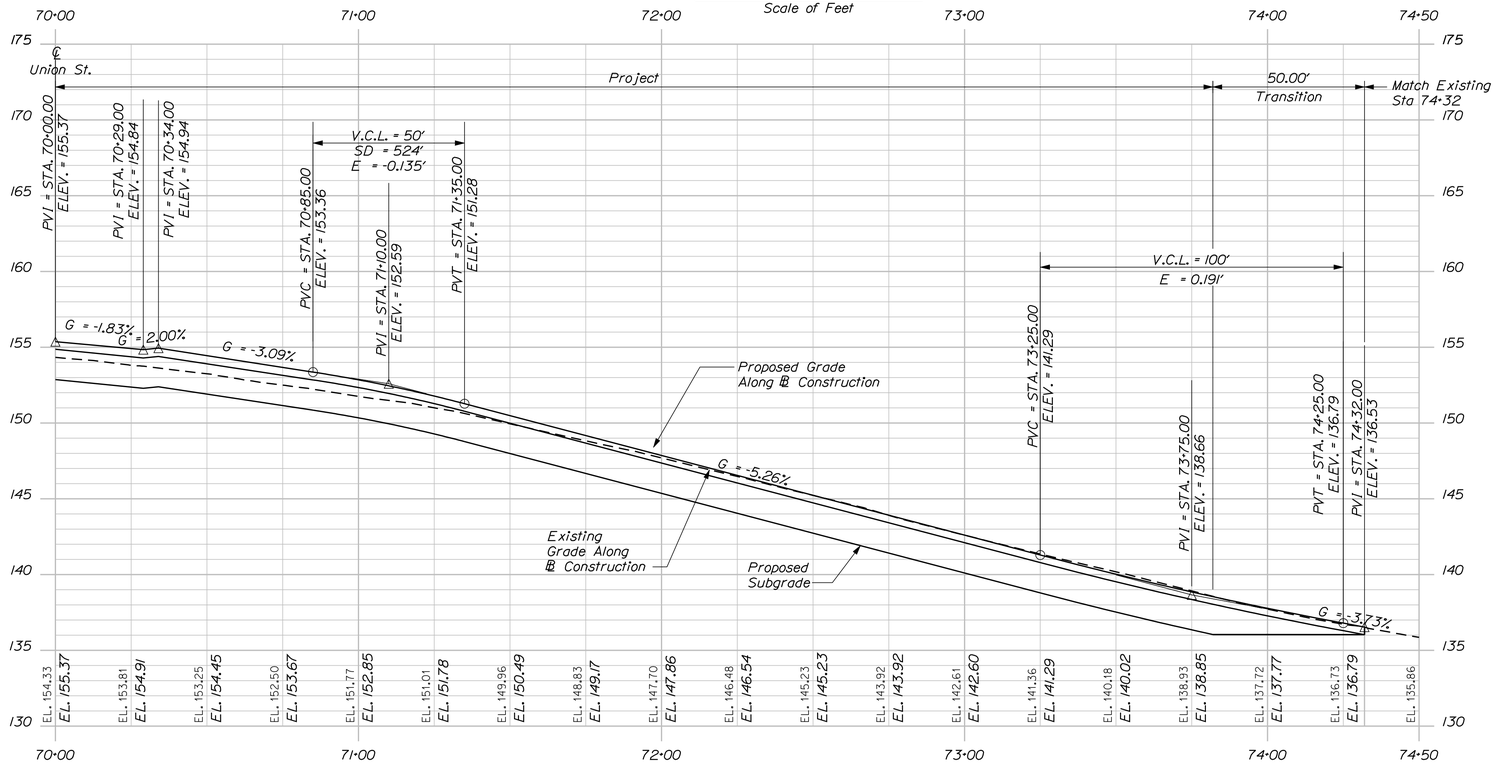

RAMP A (SB OFF) PROFILE

Horiz. 25 0 25 50

Vert. 5 0 5 10

Scale of Feet

STATE OF MAINE
DEPARTMENT OF TRANSPORTATION

IM-1668(100)E

WIN 16681.00

BRIDGE NO. 5797

BRIDGE PLANS

	BY	DATE
PROJ. MANAGER: STEPHEN BODGE		
DESIGN-DETAILED	B. WELCH	07-09-13
CHECKED-REVIEWED	B. WELCH	07-09-13
DESIGN2-DETAILED2		
DESIGN3-DETAILED3		
REVISIONS 1		
REVISIONS 2		
REVISIONS 3		
REVISIONS 4		
FIELD CHANGES		

SIGNATURE

P.E. NUMBER

DATE

UNION STREET BRIDGE
OVER INTERSTATE 95
BANGOR PENOBSCOT COUNTY

RAMP A PLAN & PROFILE

SHEET NUMBER

5

OF 93

GP Gorrill-Palmer Consulting Engineers, Inc.
PO Box 1237 15 Shaker Road Gray, ME 04039
Engineering Excellence Since 1998
207-657-6910 FAX: 207-657-6912
E-Mail: mailbox@gorrillpalmer.com

BECKER STRUCTURAL ENGINEERS
75 York Street, Portland, Maine 04101
207.879.1838 ▪ beckerstructural.com

Filename: ...\bridge\vmsto\005_BDPlan_02.dgn Division: BRIDGE Username: CADD Date:1/2/2014

Filename: ...\bridge\msta\006_PROFILE_01.dgn Division: BRIDGE Username: CADD Date:1/2/2014

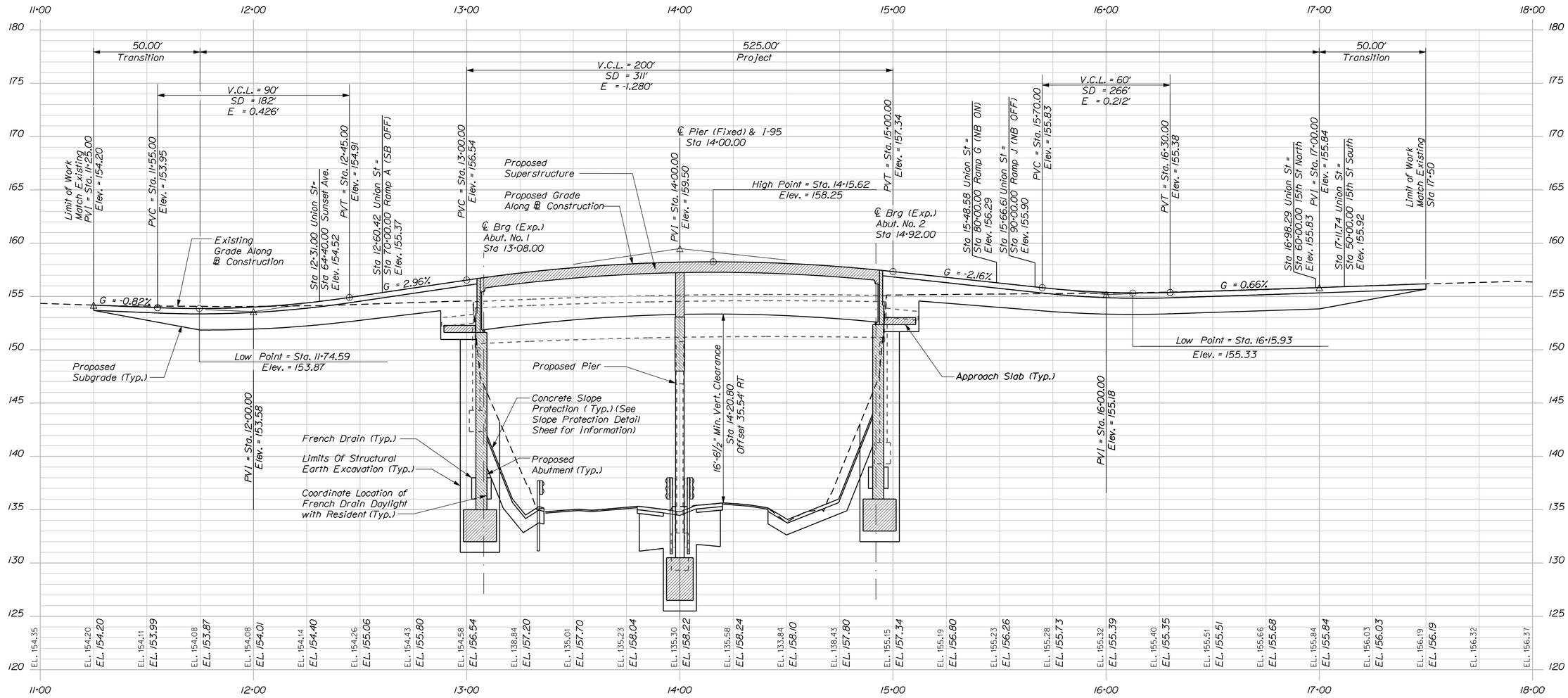

UNION STREET PROFILE

Horiz. 25 0 25 50

Vert. 5 0 5 10

Scale of Feet

GP Gorrill-Palmer Consulting Engineers, Inc.
PO Box 1237 Engineering Excellence Since 1998
15 Shaker Road
Gray, ME 04039
207-657-6910
FAX: 207-657-6912
E-Mail: mailbox@gorrillpalmer.com

BECKER STRUCTURAL ENGINEERS
75 York Street, Portland, Maine 04101
207.879.1838 ■ beckerstructural.com

STATE OF MAINE
DEPARTMENT OF TRANSPORTATION

IM-1668(100)E

WIN 16681.00

BRIDGE NO. 5797

BRIDGE PLANS

	BY	DATE
PROJ. MANAGER STEPHEN BOSSE		
DESIGN-DETAILED	D. BURGESS	07-09-13
CHECKED-REVIEWED	B. WELCH	J. BURGESS 07-09-13
DESIGN2-DETAILED2	----------	---------- ----------
DESIGN3-DETAILED3	----------	---------- ----------
REVISIONS 1	----------	---------- ----------
REVISIONS 2	----------	---------- ----------
REVISIONS 3	----------	---------- ----------
REVISIONS 4	----------	---------- ----------
FIELD CHANGES	----------	---------- ----------

SIGNATURE

P.E. NUMBER

DATE

UNION STREET BRIDGE
OVER INTERSTATE 95
BANGOR PENOBSCOT COUNTY

PROFILES

SHEET NUMBER

6

OF 93

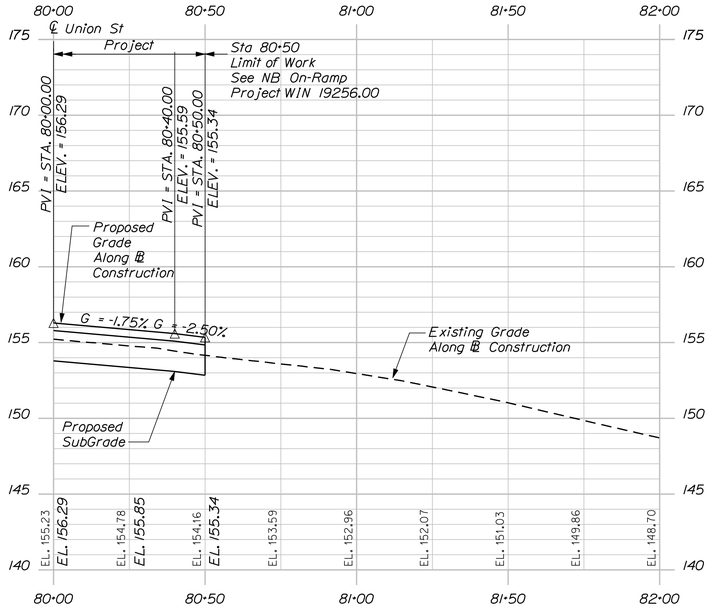

RAMP G (NB ON) PROFILE

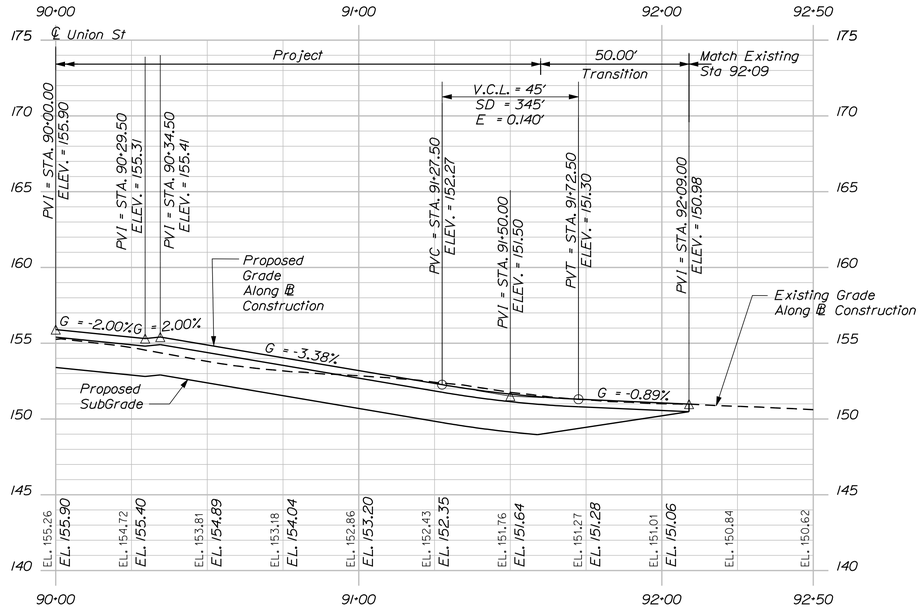

RAMP J (NB OFF) PROFILE

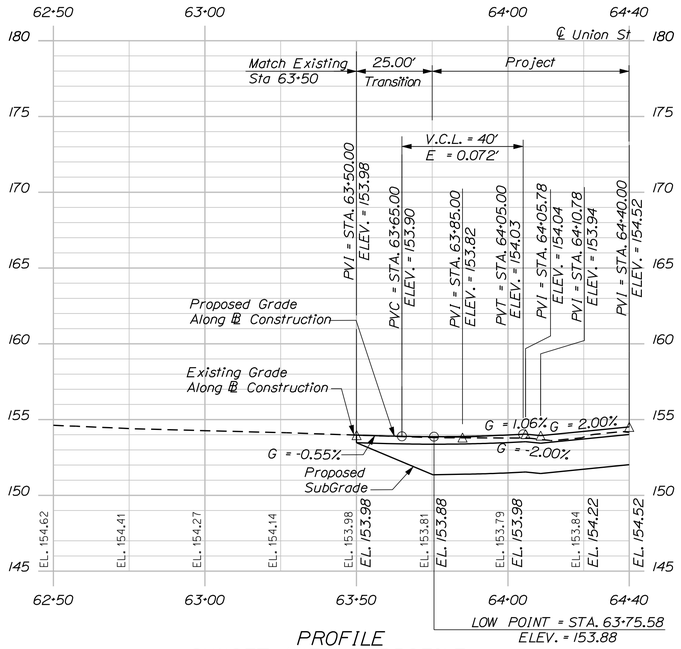

PROFILE
SUNSET AVENUE PROFILE

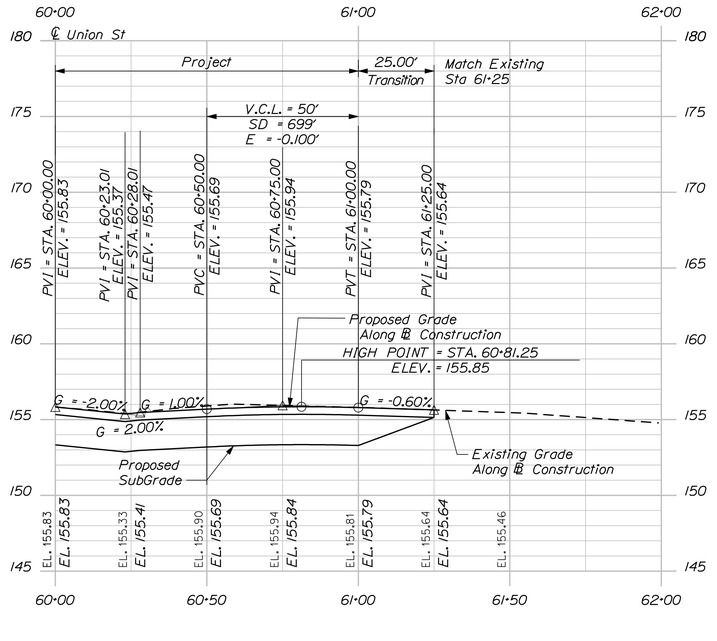

15TH STREET (NORTH) PROFILE

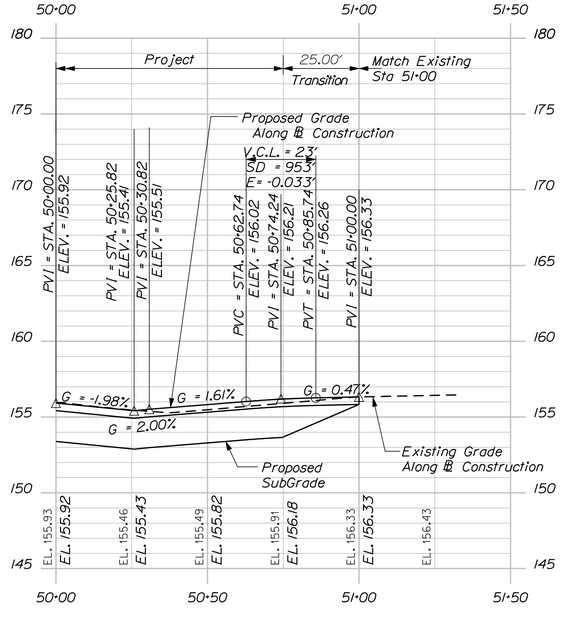

15TH STREET (SOUTH) PROFILE

Horiz. 25 0 25 50
Vert. 5 0 5 10
Scale of Feet

GP Gorrill-Palmer Consulting Engineers, Inc.
Engineering Excellence Since 1998
PO Box 1237
15 Shaker Road
Gray, ME 04039
207-657-6910
FAX: 207-657-6912
E-Mail: mailbox@gorrillpalmer.com

BECKER STRUCTURAL ENGINEERS
75 York Street, Portland, Maine 04101
207.879.1838 ■ beckerstructural.com

STATE OF MAINE
DEPARTMENT OF TRANSPORTATION

IM-1668(100)E

WIN 16681.00
BRIDGE NO. 5797
BRIDGE PLANS

PROJ. MANAGER STEPHEN BODGE	BY	DATE
DESIGN-DETAILED	B. WELCH	05-22-13
CHECKED-REVIEWED	B. WELCH	05-22-13
DESIGN2-DETAILED2		
DESIGN3-DETAILED3		
REVISIONS 1		
REVISIONS 2		
REVISIONS 3		
REVISIONS 4		
FIELD CHANGES		

SIGNATURE

P.E. NUMBER

DATE

UNION STREET BRIDGE
OVER INTERSTATE 95
BANGOR PENOBSCOT COUNTY

PROFILES

SHEET NUMBER
7
OF 93

Filename: ...\BRIDGE\MSTA\007_PROFILE_02.dgn Division: BRIDGE Username: CADD Date:1/3/2014

Filename: ...\00\GEOTECH\MSTA\008_BLP1.dgn Division: BRIDGE Username: david.shaw Date:1/2/2014

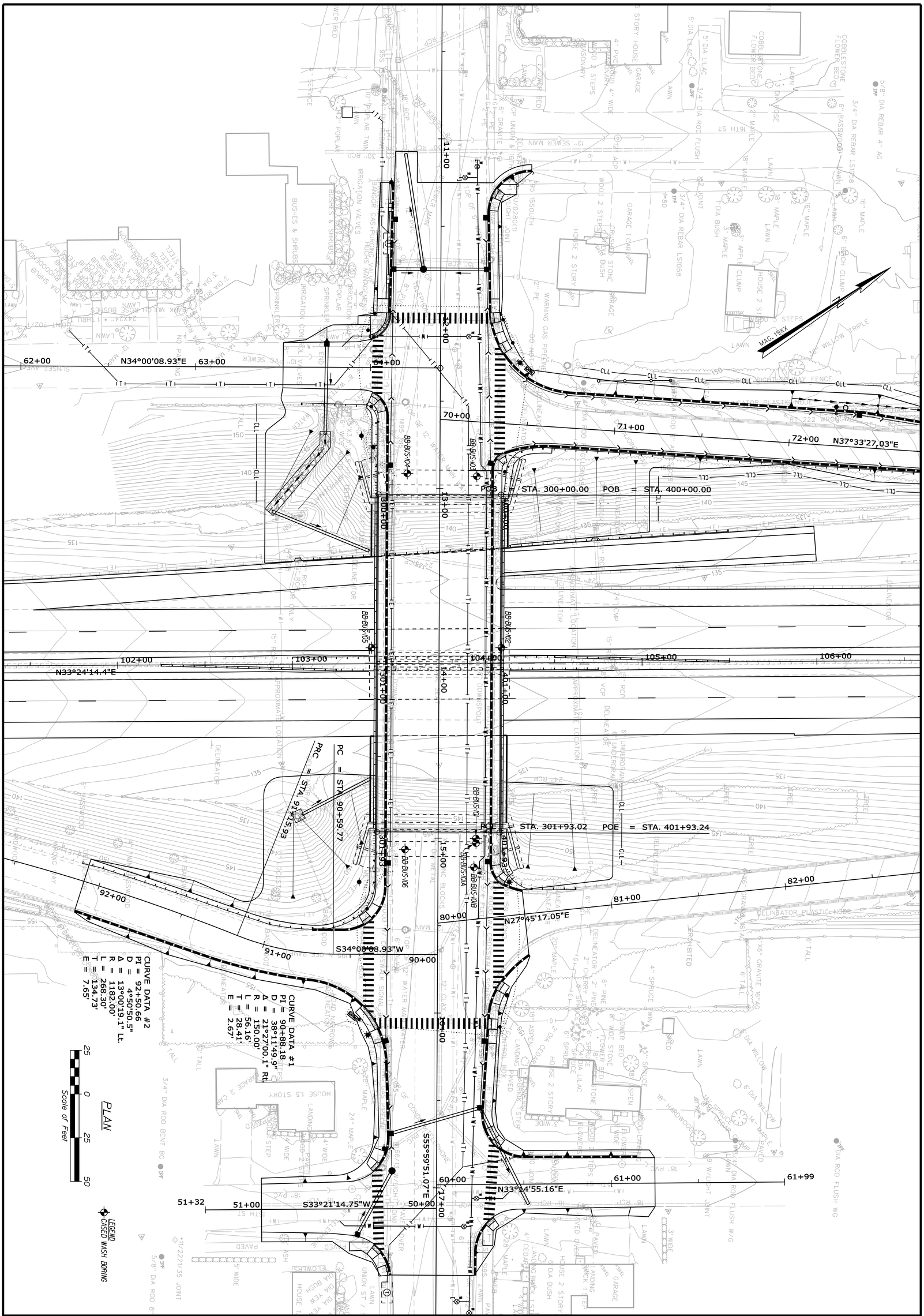

UNION STREET BRIDGE
OVERPASS I-95
BANGOR PENOBSCOT COUNTY

BORING LOCATION PLAN

SHEET NUMBER 8 OF 93

PROJ. MANAGER		BY	DATE
DESIGN-DETAILED	M.MOREAU	T.WHITE	OCT 2009
CHECKED-REVIEWED			
DESIGN2-DETAILED2			
DESIGN3-DETAILED3			
REVISIONS 1			
REVISIONS 2			
REVISIONS 3			
REVISIONS 4			
FIELD CHANGES			

SIGNATURE

P.E. NUMBER

DATE

STATE OF MAINE
DEPARTMENT OF TRANSPORTATION

IM-1668(100)E

BRIDGE NO. 5797 PIN 16681.00 BRIDGE PLANS

Filename: ...\00\geotech\vmsto\009_ISP1.dgn Division: BRIDGE Username: dovid.show Date:1/2/2014

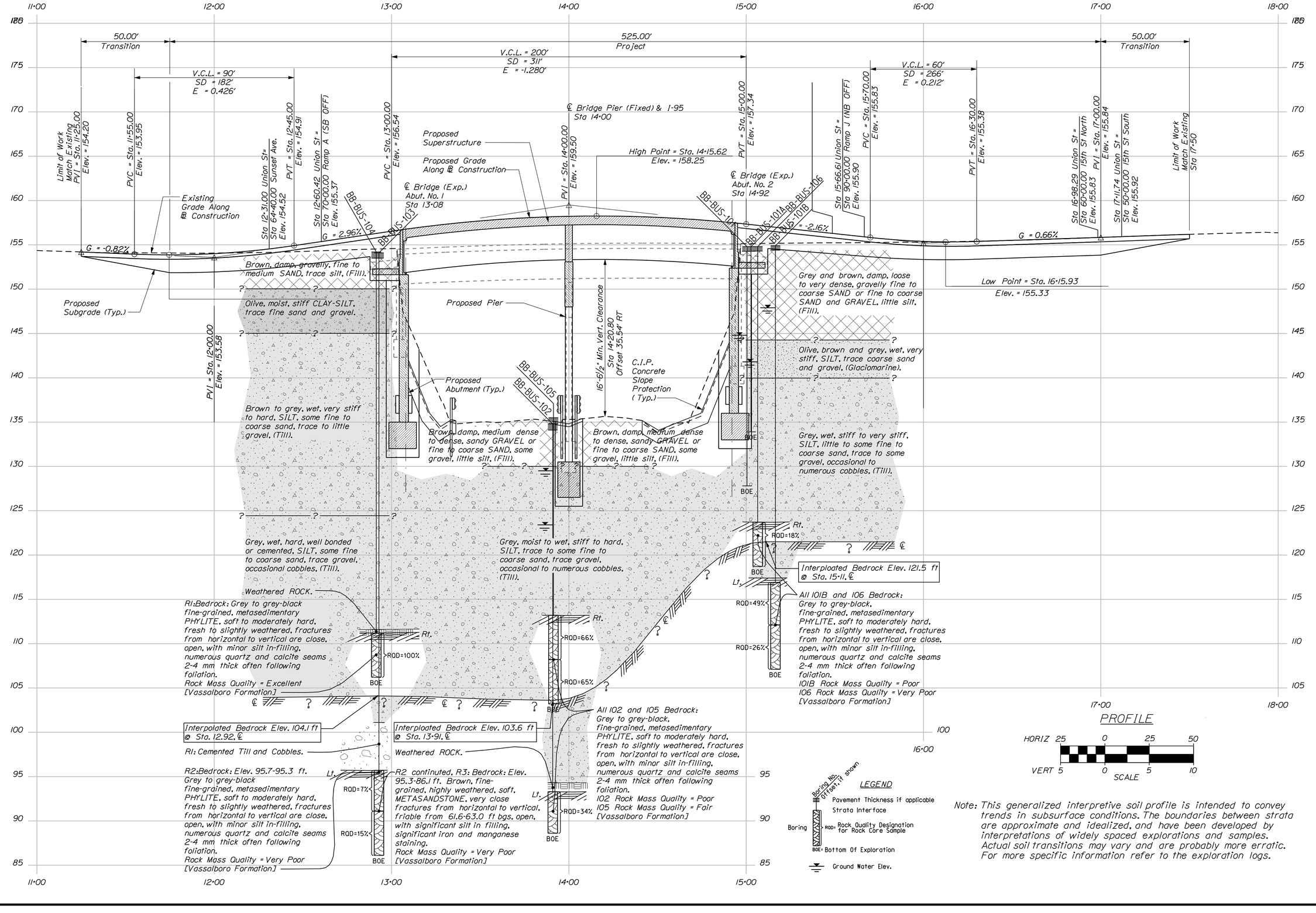

PROFILE

HORIZ 25 0 25 50

VERT 5 0 5 10

SCALE

LEGEND

Boring No. Offset, ft shown

Pavement Thickness if applicable

Strata Interface

Boring

RQD= Rock Quality Designation for Rock Core Sample

BOE= Bottom Of Exploration

Ground Water Elev.

Note: This generalized interpretive soil profile is intended to convey trends in subsurface conditions. The boundaries between strata are approximate and idealized, and have been developed by interpretations of widely spaced explorations and samples. Actual soil transitions may vary and are probably more erratic. For more specific information refer to the exploration logs.

STATE OF MAINE
DEPARTMENT OF TRANSPORTATION

IM-1668(100)E

PIN 16681.00

BRIDGE NO. 5797

BRIDGE PLANS

	BY	DATE
PROJ. MANAGER		
DESIGN-DETAILED	T. WHITE	MAY 2011
CHECKED-REVIEWED	M.MOREAU	
DESIGN2-DETAILED2		
DESIGN3-DETAILED3		
REVISIONS 1		
REVISIONS 2		
REVISIONS 3		
REVISIONS 4		
FIELD CHANGES		

SIGNATURE

P.E. NUMBER

DATE

UNION STREET BRIDGE
OVERPASS I-95
BANGOR PENOBSCOT COUNTY

INTERPRETIVE SUBSURFACE PROFILE

SHEET NUMBER

9

OF 93

Filename: ...\msta\010_BORING LOGS1.dgn   Division: BRIDGE   Username: david.shaw   Date:1/2/2014

Maine Department of Transportation — Soil/Rock Exploration Log — US CUSTOMARY UNITS

Project: Union Street Overpass I-95 **Location:** Bangor, Maine **Boring No.:** BB-BUS-103 **PIN:** 16681.00

Driller:	MaineDOT	Elevation (ft.)	154.1	Auger ID/OD:	5" Solid Stem
Operator:	E. Giguere/C. Giles	Datum:	NAVD 88	Sampler:	Standard Split Spoon
Logged By:	B. Wilder/M. Moreau	Rig Type:	CME 45C	Hammer Wt./Fall:	140#/30"
Date Start/Finish:	5/19/09-5/21/09	Drilling Method:	Cased Wash Boring	Core Barrel:	NQ-2"
Boring Location:	12+92.9, 21.1 Lt.	Casing ID/OD:	NW	Water Level*:	None Observed
Hammer Efficiency Factor: 0.84		Hammer Type:	Automatic ☒ Hydraulic ☐	Rope & Cathead ☐	

Definitions:
D = Split Spoon Sample
MD = Unsuccessful Split Spoon Sample attempt
U = Thin Wall Tube Sample
MU = Unsuccessful Thin Wall Tube Sample attempt
V = Insitu Vane Shear Test, PP = Pocket Penetrometer
MV = Unsuccessful Insitu Vane Shear Test attempt
R = Rock Core Sample
SSA = Solid Stem Auger
HSA = Hollow Stem Auger
RC = Roller Cone
WOH = weight of 140lb. hammer
WOR/C = weight of rods or casing
WO1P = Weight of one person
S_u = Insitu Field Vane Shear Strength (psf)
T_v = Pocket Torvane Shear Strength (psf)
q_p = Unconfined Compressive Strength (ksf)
N-uncorrected = Raw field SPT N-value
Hammer Efficiency Factor = Annual Calibration Value
N_{60} = SPT N-uncorrected corrected for hammer efficiency
N_{60} = (Hammer Efficiency Factor/60%)*N-uncorrected
$S_{u(lab)}$ = Lab Vane Shear Strength (psf)
WC = water content, percent
LL = Liquid Limit
PL = Plastic Limit
PI = Plasticity Index
G = Grain Size Analysis
C = Consolidation Test

Depth (ft.)	Sample No.	Pen./Rec. (in.)	Sample Depth (ft.)	Blows (/6 in.) Shear Strength (psf) or RQD (%)	N-uncorrected	N_{60}	Casing Blows	Laboratory Testing Results/ AASHTO and Unified Class
0							SSA	
5	1D	24/17	5.00 - 7.00	5/4/4/6	8	11		G#209243 A-4, CL WC=20.5% LL=31 PL=22 PI=9
7	MV		7.00 - 7.00					
10	2D	24/24	10.00 - 12.00	5/4/8/8	12	17	20	G#209244 A-4, ML WC=13.0%
11							32	
12	MV		12.00 - 12.00				53	
13							88	
14							21	
15	3D	24/16	15.00 - 17.00	25/16/14/16	30	42	43	G#209245 A-4, ML WC=10.7%
16							55	
17							69	
18							69	
19							45	
20	4D	24/5	20.00 - 22.00	6/6/7/9	13	18	43	
21							42	
22							43	
23							44	
24							21	
25	5D	24/20	25.00 - 27.00	9/8/9/9	17	24	26	G#209246 A-4, ML WC=12.8%
26							27	
27							27	
28							27	
29							21	
30	6D	24/5	30.00 - 32.00	10/13/14/21	27	38	25	
31							27	
32							29	
33							34	
34							32	
35	7D	21.6/20	35.00 - 36.80	11/17/23/50(3.6)	40	56	43	
36							50	
37							49	
38							50	
39							41	
40	8D	24/10	40.00 - 42.00	20/32/40/45	72	101	44	
41							39	
42							40	
43							45	
44							85	
45	9D	24/15	45.30 - 47.30	11/17/19/50	36	50	63	
46							65	
47							131	
48							184	
49							53	
50	10D	24/18	50.00 - 52.00	11/43/29/26	72	101	43	
51							52	
52							100	
53	R1	45.6/27	53.00 - 56.80	RQD = N/A%			91 NQ-2	
54							69	
55							212	
56							131	
57							110	
58	R2	55.2/55.2	58.40 - 63.00	RQD = 7%			a20 NQ-2	
63	R3	60/60	63.00 - 68.00	RQD = 15%				

Depth (ft.)	Elevation (ft.)	Visual Description and Remarks
0 - 0.60	153.50	PAVEMENT.
0.60 - 1.10	153.00	Brown, damp, gravelly, fine to medium SAND, trace silt.
1.10 - 2.00	152.10	Concrete with re-bar from 1.1-2.0' bgs.
2.00 - 4.50	149.60	Brown, damp, gravelly, fine to medium SAND, trace silt.
4.50 - 9.00	145.10	Olive, moist, stiff, CLAY-SILT, trace fine sand, trace fine gravel, (Glaciomarine). Failed 16x32 mm vane attempt, would not push.
9.00 - 20.00	134.10	Brown, wet, very stiff to hard, SILT, some fine to coarse sand, trace to little gravel, (Till). Failed 16x32 mm vane attempt, would not push.
20.00 - 30.00	124.10	Grey, wet, very stiff, SILT, some fine to coarse sand, trace gravel, (Till). Roller Coned ahead to 25.0' bgs. Grey, wet, very stiff, SILT, some fine to coarse sand, trace gravel, (Till). Roller Coned ahead to 6D,7D,8D,9D and 10D, took samples, then drove casing to 53.0' bgs.
30.00 - 53.00	101.10	Grey, wet, hard, well bonded or cemented, SILT, some fine to coarse sand, trace gravel, with occasional cobbles, (Till). Similar to above. Cobble from 36.8-37.0' bgs. Similar to above. Cobble from 45.0-45.3' bgs. Similar to above. Grey, wet, hard, well bonded or cemented, SILT, some fine to coarse sand, trace gravel, with occasional cobbles, (Till). Roller Coned ahead to 53.0' bgs.
53.00 - 58.40	95.70 / 95.30	R1:Cemented Till and Cobbles. R1:Core Times (min:sec) 53.0-54.0' (3:15) 54.0-55.0' (3:08) 55.0-56.0' (3:28) 56.0-56.8' (2:52) 60% Recovery Core Blocked. a20 blows for 0.2'. Casing REFUSAL at 58.2' bgs. Washed ahead to 58.4' bgs.
58.40 - 58.80		Top of Bedrock at Elev. 95.7'. R2 Bedrock at 58.4' to 58.8' bgs: Grey, fine-grained PHYLLITE, moderately hard, slightly weathered, fractures from horizontal to vertical, close, open, with minor silt in-filling, numerous quartz and calcite seams 2-5 mm thick often along foliation. Rock Mass Quality is Very Poor. [Vassalboro Formation]
58.80 - 68.00	86.10	R2 Bedrock at 58.8' to 63.0' bgs: Brown, fine-grained, highly weathered, soft, METASANDSTONE, very close fractures from horizontal to vertical, friable from 61.6'-63.0' bgs, open, with significant silt in filling, significant iron and manganese staining. Rock Mass Quality is Very Poor. [Vassalboro Formation] R2:Core Times (min:sec) 58.4-59.4' (5:52) 59.4-60.4' (5:16) 60.4-61.4' (4:34) 61.4-62.4' (4:33) 62.4-63.0' (6:44) 100% Recovery. R3 Bedrock: Same as above, but no friable zone, less silt in-filling. Rock Mass Quality is Very Poor. [Vassalboro Formation] R3:Core Times (min:sec) 63.0-64.0' (7:53) 64.0-65.0' (3:43) 65.0-66.0' (7:03) 66.0-67.0' (5:39) 67.0-68.0' (5:38) 100% Recovery
68.00		Bottom of Exploration at 68.00 feet below ground surface.

Remarks:
Less than 100 psi down pressure on core barrel.

Stratification lines represent approximate boundaries between soil types; transitions may be gradual.
* Water level readings have been made at times and under conditions stated. Groundwater fluctuations may occur due to conditions other than those present at the time measurements were made.

Page 1 of 1 Boring No.: BB-BUS-103

Maine Department of Transportation — Soil/Rock Exploration Log — US CUSTOMARY UNITS

Project: Union Street Overpass I-95 **Location:** Bangor, Maine **Boring No.:** BB-BUS-104 **PIN:** 16681.00

Driller:	MaineDOT	Elevation (ft.)	154.2	Auger ID/OD:	5" Solid Stem
Operator:	E. Giguere/C. Giles	Datum:	NAVD 88	Sampler:	Standard Split Spoon
Logged By:	B. Wilder	Rig Type:	CME 45C	Hammer Wt./Fall:	140#/30"
Date Start/Finish:	5/18/09-5/18/09	Drilling Method:	Cased Wash Boring	Core Barrel:	NQ-2"
Boring Location:	12+91.4, 18.7 Rt.	Casing ID/OD:	NW	Water Level*:	None Observed
Hammer Efficiency Factor: 0.84		Hammer Type:	Automatic ☒ Hydraulic ☐	Rope & Cathead ☐	

Definitions: D = Split Spoon Sample; MD = Unsuccessful Split Spoon Sample attempt; U = Thin Wall Tube Sample; MU = Unsuccessful Thin Wall Tube Sample attempt; V = Insitu Vane Shear Test, PP = Pocket Penetrometer; MV = Unsuccessful Insitu Vane Shear Test attempt; R = Rock Core Sample; SSA = Solid Stem Auger; HSA = Hollow Stem Auger; RC = Roller Cone; WOH = weight of 140lb. hammer; WOR/C = weight of rods or casing; WO1P = Weight of one person; S_u = Insitu Field Vane Shear Strength (psf); T_v = Pocket Torvane Shear Strength (psf); q_p = Unconfined Compressive Strength (ksf); N-uncorrected = Raw field SPT N-value; Hammer Efficiency Factor = Annual Calibration Value; N_{60} = SPT N-uncorrected corrected for hammer efficiency; N_{60} = (Hammer Efficiency Factor/60%)*N-uncorrected; $S_{u(lab)}$ = Lab Vane Shear Strength (psf); WC = water content, percent; LL = Liquid Limit; PL = Plastic Limit; PI = Plasticity Index; G = Grain Size Analysis; C = Consolidation Test

Depth (ft.)	Sample No.	Pen./Rec. (in.)	Sample Depth (ft.)	Blows (/6 in.) Shear Strength (psf) or RQD (%)	N-uncorrected	N_{60}	Casing Blows	Laboratory Testing Results/ AASHTO and Unified Class
0							SSA	
1	1D	12/12	1.00 - 2.00	13/50	---			
5	2D	24/18	5.00 - 7.00	4/3/2/2	5	7		G#209247 A-4, ML WC=13.4%
10	V1 3D	24/20	10.00 - 10.11 / 10.00 - 12.00	Su=4323 psf push thru vane WOH/3/4/5	7	10	6	G#209248 A-4, ML WC=16.2%
11							18	
12							64	
13							72	
14							29	
15	4D	24/20	15.00 - 17.00	8/8/8/12	16	22	23	
16							21	
17							19	
18							21	
19							18	
20	5D	24/24	20.00 - 22.00	7/10/12/18	22	31	20	G#209249 A-4, ML WC=11.1%
21							24	
22							18	
23							24	
24							22	
25	6D	24/18	25.00 - 27.00	9/8/10/16	18	25	30	
26							28	
27							32	
28							38	
29							25	
30	7D	24/16	30.00 - 32.00	7/12/13/17	25	35	30	G#209250 A-4, ML WC=11.8%
31							31	
32							42	
33							48	
34							OPEN HOLE	
35	8D	24/18	35.00 - 37.00	14/20/35/52	55	77		
40	9D	24/24	40.00 - 42.00	12/22/29/38	51	71		G#246276 A-4, ML WC=11.2%
43	R1	60/60	43.00 - 48.00	RQD = 100%			NQ-2	

Depth (ft.)	Elevation (ft.)	Visual Description and Remarks
0 - 0.70	153.50	PAVEMENT.
0.70 - 2.00	152.20	Brown, damp, gravelly, fine to coarse SAND, little silt, (Fill).
2.00 - 2.80	151.40	Concrete with re-bar from 2.0-2.8' bgs.
2.80 - 4.50	149.70	Brown, damp, gravelly, fine to coarse SAND, little silt (Fill).
4.50 - 18.50	135.70	Olive, moist to wet, medium stiff to hard, SILT, trace to some fine to coarse sand, trace to little gravel, (Till). 16x32 mm raw torque readings: V1: 27.5 ft-lbs. Went Open Hole, took samples every 5.0': 4D,5D,6D and 7D then drove casing to 35.0' bgs.
18.50 - 42.60	111.60	Grey, wet, very stiff to hard, well bonded, SILT, some fine to coarse sand, trace to little gravel, (Till). Grey, wet, very stiff to hard, well bonded, SILT, some fine to coarse sand, trace to little gravel, (Till). Similar to above. Similar to above. Similar to above.
42.60 - 43.00	111.20	Weathered ROCK.
43.00 - 48.00	106.20	Top of Intact Bedrock at Elev. 111.2'. R1 Bedrock: Grey to grey-black fine-grained, metasedimentary PHYLLITE, soft to moderately hard, slightly weathered, fractures are moderately close, from horizontal to vertical, with minor silt in-filling, quartz and calcite seams 2-4 mm thick. Rock Mass Quality is Excellent. [Vassalboro Formation] R1:Core Times (min:sec) 43.0-44.0' (2:47) 44.0-45.0' (2:00) 45.0-46.0' (2:30) 46.0-47.0' (2:35) 47.0-48.0' (2:46) 100% Recovery
48.00		Bottom of Exploration at 48.00 feet below ground surface.

Remarks:

Stratification lines represent approximate boundaries between soil types; transitions may be gradual.
* Water level readings have been made at times and under conditions stated. Groundwater fluctuations may occur due to conditions other than those present at the time measurements were made.

Page 1 of 1 Boring No.: BB-BUS-104

Maine Department of Transportation — Soil/Rock Exploration Log — US CUSTOMARY UNITS

Project: Union Street Overpass I-95 **Location:** Bangor, Maine **Boring No.:** BB-BUS-102 **PIN:** 16681.00

Driller:	Northern Test Boring, Inc.	Elevation (ft.)	134.8	Auger ID/OD:	5" Solid Stem
Operator:	Nick, Mike	Datum:	NAVD 88	Sampler:	Standard Split Spoon
Logged By:	M. Moreau	Rig Type:	Dietrich D-50 Trailer	Hammer Wt./Fall:	140#/30"
Date Start/Finish:	5/20/09-5/20/09	Drilling Method:	Cased Wash Boring	Core Barrel:	NQ-2"
Boring Location:	13+90.9, 35.6 Lt.	Casing ID/OD:	HW	Water Level*:	11.4' bgs.
Hammer Efficiency Factor: 0.68		Hammer Type:	Automatic ☒ Hydraulic ☐	Rope & Cathead ☐	

Definitions: D = Split Spoon Sample; MD = Unsuccessful Split Spoon Sample attempt; U = Thin Wall Tube Sample; MU = Unsuccessful Thin Wall Tube Sample attempt; V = Insitu Vane Shear Test, PP = Pocket Penetrometer; MV = Unsuccessful Insitu Vane Shear Test attempt; R = Rock Core Sample; SSA = Solid Stem Auger; HSA = Hollow Stem Auger; RC = Roller Cone; WOH = weight of 140lb. hammer; WOR/C = weight of rods or casing; WO1P = Weight of one person; S_u = Insitu Field Vane Shear Strength (psf); T_v = Pocket Torvane Shear Strength (psf); q_p = Unconfined Compressive Strength (ksf); N-uncorrected = Raw field SPT N-value; Hammer Efficiency Factor = Annual Calibration Value; N_{60} = SPT N-uncorrected corrected for hammer efficiency; N_{60} = (Hammer Efficiency Factor/60%)*N-uncorrected; $S_{u(lab)}$ = Lab Vane Shear Strength (psf); WC = water content, percent; LL = Liquid Limit; PL = Plastic Limit; PI = Plasticity Index; G = Grain Size Analysis; C = Consolidation Test

Depth (ft.)	Sample No.	Pen./Rec. (in.)	Sample Depth (ft.)	Blows (/6 in.) Shear Strength (psf) or RQD (%)	N-uncorrected	N_{60}	Casing Blows	Laboratory Testing Results/ AASHTO and Unified Class
0							SSA	
2	1D	24/12	2.00 - 4.00	15/15/23/10	38	43		G#209238 A-1-b, SM WC=5.3%
5	2D/AB	24/20	5.00 - 7.00	10/13/13/15	26	29		G#209239 A-4, ML WC=10.2%
10	3D	24/15	10.00 - 12.00	6/5/6/7	11	12	62	G#209240 A-4, ML WC=12.8%
11							67	
12							99	
13							112	
14							121	
15	4D	24/17	15.00 - 17.00	8/7/12/36	19	22	53	
16							90	
17							128	
18							137	
19							145	
20	5D	24/24	20.00 - 22.00	16/15/20/31	35	40	49	G#209241 A-4, ML WC=11.8%
21							84	
22							97	
23							91	
24							118	
25	6D	24/7	25.00 - 27.00	11/30/46/63	76	86	145	
26							243	
27							277	
28							262	
29							OPEN HOLE	
30	7D	24/8	30.00 - 32.00	15/20/29/39	49	56		G#209242 A-4, SM WC=9.3%
35	MD	2/0	35.00 - 35.17	50(1.2")	---			
40							RC	
41	R1	56.4/41	41.50 - 46.20	RQD = 34%			NQ-2	

Depth (ft.)	Elevation (ft.)	Visual Description and Remarks
0 - 0.70	134.10	PAVEMENT.
0.70 - 5.90	128.90	Brown, damp, medium dense to dense, fine to coarse SAND, some gravel, little silt, (Fill). (2D/A) 5.0-5.9 bgs.
5.90 - 14.50	120.30	(2D/B) 5.9-7.0' bgs. Grey, moist, stiff to very stiff SILT, some fine to coarse sand, trace gravel, mottled, (Till). Same as above, but wet after 11.4' bgs.
14.50 - 40.50	94.30	Same as above but numerous cobbles and boulders after 14.5' bgs. Washed ahead to 20.0' bgs, then drove casing. Grey, wet, hard, well bonded, SILT, trace fine to coarse sand and gravel, (Till). Washed ahead to 25.0' and 30.0', took samples, then drove casing to 29.0' bgs. Grey, wet, hard, well bonded, SILT, trace fine to coarse sand and gravel, (Till). Grey, wet, hard, well bonded, SILT, some fine to coarse sand and gravel, (Till). Very dense cemented Till at 32.8' bgs, as evidenced by drill attitude. Failed sample attempt. Washed ahead to bedrock at 40.5' bgs.
40.50 - 41.50	93.30	Roller Coned ahead through Weathered BEDROCK from 40.5-41.5' bgs.
41.50 - 46.20	88.60	Top of Intact Bedrock at Elev. 93.3'. R1 Bedrock: Grey, fine-grained, metasedimentary PHYLLITE, moderately hard, slightly weathered, but highly weathered with iron and manganese staining between 42.6-43.6', fractures from horizontal to vertical, close, open, with minor silt in-filling, numerous quartz and calcite seams 2-5 mm thick along foliation. Rock Mass Quality is Poor. [Vassalboro Formation] R1: Core Times (min:sec) 41.5-42.5' (3:55) 42.5-43.5' (2:29) may be mud seam 43.5-44.5' (4:29) 44.5-45.5' (7:10) 45.5-46.2' (4:40) 73% Recovery
46.20		Bottom of Exploration at 46.20 feet below ground surface.

Remarks:
Auto Hammer #149

Stratification lines represent approximate boundaries between soil types; transitions may be gradual.
* Water level readings have been made at times and under conditions stated. Groundwater fluctuations may occur due to conditions other than those present at the time measurements were made.

Page 1 of 1 Boring No.: BB-BUS-102

Maine Department of Transportation — Soil/Rock Exploration Log — US CUSTOMARY UNITS

Project: Union Street Overpass I-95 **Location:** Bangor, Maine **Boring No.:** BB-BUS-105 **PIN:** 16681.00

Driller:	MaineDOT	Elevation (ft.)	135.5	Auger ID/OD:	5" Solid Stem
Operator:	E. Giguere/C. Giles	Datum:	NAVD 88	Sampler:	Standard Split Spoon
Logged By:	B. Wilder	Rig Type:	CME 45C	Hammer Wt./Fall:	140#/30"
Date Start/Finish:	5/20/09; 10:00-14:30	Drilling Method:	Cased Wash Boring	Core Barrel:	NQ-2"
Boring Location:	13+91.3, 38.6 Rt.	Casing ID/OD:	NW	Water Level*:	6.0' bgs.
Hammer Efficiency Factor: 0.84		Hammer Type:	Automatic ☒ Hydraulic ☐	Rope & Cathead ☐	

Definitions: D = Split Spoon Sample; MD = Unsuccessful Split Spoon Sample attempt; U = Thin Wall Tube Sample; MU = Unsuccessful Thin Wall Tube Sample attempt; V = Insitu Vane Shear Test, PP = Pocket Penetrometer; MV = Unsuccessful Insitu Vane Shear Test attempt; R = Rock Core Sample; SSA = Solid Stem Auger; HSA = Hollow Stem Auger; RC = Roller Cone; WOH = weight of 140lb. hammer; WOR/C = weight of rods or casing; WO1P = Weight of one person; S_u = Insitu Field Vane Shear Strength (psf); T_v = Pocket Torvane Shear Strength (psf); q_p = Unconfined Compressive Strength (ksf); N-uncorrected = Raw field SPT N-value; Hammer Efficiency Factor = Annual Calibration Value; N_{60} = SPT N-uncorrected corrected for hammer efficiency; N_{60} = (Hammer Efficiency Factor/60%)*N-uncorrected; $S_{u(lab)}$ = Lab Vane Shear Strength (psf); WC = water content, percent; LL = Liquid Limit; PL = Plastic Limit; PI = Plasticity Index; G = Grain Size Analysis; C = Consolidation Test

Depth (ft.)	Sample No.	Pen./Rec. (in.)	Sample Depth (ft.)	Blows (/6 in.) Shear Strength (psf) or RQD (%)	N-uncorrected	N_{60}	Casing Blows	Laboratory Testing Results/ AASHTO and Unified Class
0							SSA	
2	1D	24/15	2.00 - 4.00	5/6/7/7	13	18		G#246277 A-1-a, GP-GM WC=2.4%
5	2D	24/16	5.00 - 7.00	7/9/14/11	23	32		G#246278 A-4, ML WC=11.1%
10	3D	24/14	10.00 - 12.00	5/13/14/14	27	38	22	G#246279 A-4, ML WC=11.8%
11							36	
12							60	
13							73	
14							61	
15	4D	24/24	15.00 - 17.00	5/13/16/24	29	41	65	
16							139	
17							203	
18							370	
19	5D	24/24	19.00 - 21.00	13/18/27/30	45	63	104	
20							156	
21							117	
22	R1	60/60	22.30 - 27.30	RQD = 66%			NQ-2	
27	R2	60/60	27.30 - 32.30	RQD = 65%				

Depth (ft.)	Elevation (ft.)	Visual Description and Remarks
0 - 0.70	134.80	PAVEMENT.
0.70 - 4.50	131.00	Brown, damp, medium dense, fine to coarse sandy GRAVEL, trace silt, (Fill).
4.50 - 9.00	126.50	Grey, wet, hard, SILT, some fine to coarse sand, trace gravel, (Till).
9.00 - 21.80	113.70	Grey, wet, hard, SILT, some fine to coarse sand, little gravel, (Till). Similar to above. Roller Coned ahead to 19.0' bgs. Similar to above. Roller Coned ahead to 22.3' bgs. Bedrock encountered at 21.8' bgs.
21.80 - 32.30	103.20	Top of Bedrock at Elev. 113.7'. R1 and R2 Bedrock: Grey to grey-black fine-grained, metasedimentary PHYLLITE, soft to moderately hard, fresh, fractures are close, from horizontal to vertical, with minor silt in-filling and iron staining. Two large calcite seams approximately 5 cm thick between 22.3' and 23.2' bgs, two 3 cm thick calcite seams at 30.0' and 30.3' bgs, otherwise numerous quartz and calcite seams 2-4 mm thick often following foliation. Rock Mass Quality is Fair. [Vassalboro Formation] R1:Core Times (min:sec) 22.3-23.3' (4:15) 23.3-24.3' (4:00) 24.3-25.3' (4:03) 25.3-26.3' (3:55) 26.3-27.3' (3:10) 100% Recovery. R2:Core Times (min:sec) 27.3-28.3' (3:03) 28.3-29.3' (3:05) 29.3-30.3' (3:07) 30.3-31.3' (3:57) 31.3-32.3' (3:50) 100% Recovery
32.30		Bottom of Exploration at 32.30 feet below ground surface.

Remarks:
300-400 psi down pressure on core barrel.

Stratification lines represent approximate boundaries between soil types; transitions may be gradual.
* Water level readings have been made at times and under conditions stated. Groundwater fluctuations may occur due to conditions other than those present at the time measurements were made.

Page 1 of 1 Boring No.: BB-BUS-105

STATE OF MAINE
DEPARTMENT OF TRANSPORTATION

IM-1668(100)E

PIN 16681.00

BRIDGE PLANS

BRIDGE NO. 5797

	BY	DATE
PROJ. MANAGER		
DESIGN-DETAILED	M.MOREAU	T.WHITE MAY 2011
CHECKED-REVIEWED		
DESIGN2-DETAILED2		
DESIGN3-DETAILED3		
REVISIONS 1		
REVISIONS 2		
REVISIONS 3		
REVISIONS 4		
FIELD CHANGES		

SIGNATURE

P.E. NUMBER

DATE

UNION STREET BRIDGE
OVERPASS I-95
BANGOR PENOBSCOT COUNTY

BORING LOGS

SHEET NUMBER 10 OF 93

Maine Department of Transportation
Soil/Rock Exploration Log
US CUSTOMARY UNITS

Project: Union Street Overpass I-95	Location: Bangor, Maine	Boring No.: BB-BUS-101	PIN: 16681.00
Driller: Northern Test Boring, Inc.	Elevation (ft.) 154.8	Auger ID/OD: 5" Solid Stem	
Operator: Nick, Mike	Datum: NAVD 88	Sampler: Standard Split Spoon	
Logged By: M. Moreau	Rig Type: Dietrich D-50 Trailer	Hammer Wt./Fall: 140#/30"	
Date Start/Finish: 5/19/09-5/19/09	Drilling Method: Cased Wash Boring	Core Barrel: N/A	
Boring Location: 15+00.5, 21.6 Lt.	Casing ID/OD: HW	Water Level*: 10.0' bgs.	
Hammer Efficiency Factor: 0.68	Hammer Type: Automatic ☒ Hydraulic ☐ Rope & Cathead ☐		

Definitions:
D = Split Spoon Sample
MD = Unsuccessful Split Spoon Sample attempt
U = Thin Wall Tube Sample
MU = Unsuccessful Thin Wall Tube Sample attempt
V = Insitu Vane Shear Test, PP = Pocket Penetrometer
MV = Unsuccessful Insitu Vane Shear Test attempt
R = Rock Core Sample
SSA = Solid Stem Auger
HSA = Hollow Stem Auger
RC = Roller Cone
WOH = weight of 140lb. hammer
WOR/C = weight of rods or casing
WO1P = Weight of one person
S_u = Insitu Field Vane Shear Strength (psf)
T_v = Pocket Torvane Shear Strength (psf)
q_p = Unconfined Compressive Strength (ksf)
N-uncorrected = Raw field SPT N-value
Hammer Efficiency Factor = Annual Calibration Value
N_{60} = SPT N-uncorrected corrected for hammer efficiency
N_{60} = (Hammer Efficiency Factor/60%)*N-uncorrected
$S_{u(lab)}$ = Lab Vane Shear Strength (psf)
WC = water content, percent
LL = Liquid Limit
PL = Plastic Limit
PI = Plasticity Index
G = Grain Size Analysis
C = Consolidation Test

Depth (ft.)	Sample No.	Pen./Rec. (in.)	Sample Depth (ft.)	Blows (/6 in.) Shear Strength (psf) or RQD (%)	N-uncorrected	N_{60}	Casing Blows	Elevation (ft.)	Visual Description and Remarks	Laboratory Testing Results/ AASHTO and Unified Class.
0							SSA	154.27	PAVEMENT. (0.53)	
								153.00	Brown, gravelly SAND, little silt, (Fill). (1.80)	
								151.60	Concrete Approach Slab. (3.20)	
									Brown, damp, medium dense, fine to coarse SAND, some gravel to gravelly, little silt, (Fill).	
5	1D	24/3	5.00 - 7.00	8/8/7/7	15	17	58			
							54			
							54			
							70			
							52			
10	2D	24/4	10.00 - 12.00	8/8/5/6	13	15	37		Same as above, but siltier and wet after 11.0' bgs.	
							37			
							28			
							21	141.50	(13.30)	
							21			
15	3D	24/20	15.00 - 17.00	4/7/9/9	16	18	23		Grey, wet, very stiff, SILT, some fine to coarse sand, trace gravel, occasional cobbles, (Till).	G#209232 A-4, ML WC=16.1%
							26			
	4D	24/16	17.50 - 19.50	9/12/14/15	26	29	23		Cobble obstruction at 18.6' bgs, back out casing to 15.0' bgs, and continued with open hole to 25.0' bgs, then drove casing to 20.0' bgs.	G#209233 A-4, ML WC=14.5%
							105			
							71			
20	5D	24/18	20.00 - 22.00	10/13/10/17	23	26	31		More frequent cobbles between 18.0-25.0' bgs.	G#209234 A-4, ML WC=14.5%
							α79 OPEN		α79 blows for 0.6'.	
							HOLE			
25	6D	24/20	25.00 - 27.00	14/9/14/20	23	26			Grey, wet, very stiff, SILT, some fine to coarse sand, trace gravel, occasional cobbles, (Till).	
								127.80	(27.00) Bottom of Exploration at 27.00 feet below ground surface. Casing broke during advance to 25.0', moved to Boring BB-BUS-101A	
30 – 50										

Remarks:
Auto Hammer #149

Stratification lines represent approximate boundaries between soil types; transitions may be gradual.
* Water level readings have been made at times and under conditions stated. Groundwater fluctuations may occur due to conditions other than those present at the time measurements were made.

Page 1 of 1 — Boring No.: BB-BUS-101

Maine Department of Transportation
Soil/Rock Exploration Log
US CUSTOMARY UNITS

Project: Union Street Overpass I-95	Location: Bangor, Maine	Boring No.: BB-BUS-101A	PIN: 16681.00
Driller: Northern Test Boring, Inc.	Elevation (ft.) 154.8	Auger ID/OD: 5" Solid Stem	
Operator: Nick, Mike	Datum: NAVD 88	Sampler: Standard Split Spoon	
Logged By: M. Moreau	Rig Type: Dietrich D-50 Trailer	Hammer Wt./Fall: 140#/30"	
Date Start/Finish: 5/19/09-5/19/09	Drilling Method: Cased Wash Boring	Core Barrel: N/A	
Boring Location: 15+02.7, 21.7 Lt.	Casing ID/OD: NX - 3 in	Water Level*: None Observed	
Hammer Efficiency Factor: 0.68	Hammer Type: Automatic ☒ Hydraulic ☐ Rope & Cathead ☐		

Depth (ft.)	Elevation (ft.)	Visual Description and Remarks
0		Augered through Pavement, Soil, Concrete and Approach Slab, drove and washed to 15.0' bgs.
15		Attempted to wash ahead to 20.0' bgs.
18.00	136.80	Rubble Fill and Cobbles from 18.0-20.9' bgs.
20.90	133.90	Bottom of Exploration at 20.90 feet below ground surface. Could not advance boring. No Refusal.

Remarks:
Auto Hammer #149

Stratification lines represent approximate boundaries between soil types; transitions may be gradual.
* Water level readings have been made at times and under conditions stated. Groundwater fluctuations may occur due to conditions other than those present at the time measurements were made.

Page 1 of 1 — Boring No.: BB-BUS-101A

Maine Department of Transportation
Soil/Rock Exploration Log
US CUSTOMARY UNITS

Project: Union Street Overpass I-95	Location: Bangor, Maine	Boring No.: BB-BUS-101B	PIN: 16681.00
Driller: Northern Test Boring, Inc.	Elevation (ft.) 154.9	Auger ID/OD: 5" Solid Stem	
Operator: Nick, Mike	Datum: NAVD 88	Sampler: Standard Split Spoon	
Logged By: M. Moreau/B. Wilder	Rig Type: Dietrich D-50 Trailer	Hammer Wt./Fall: 140#/30"	
Date Start/Finish: 5/19/09, 5/21/09	Drilling Method: Cased Wash Boring	Core Barrel: NQ-2"	
Boring Location: 15+16.5, 20.6 Lt.	Casing ID/OD: NW	Water Level*: 7.0' bgs.	
Hammer Efficiency Factor: 0.68	Hammer Type: Automatic ☒ Hydraulic ☐ Rope & Cathead ☐		

Depth (ft.)	Sample No.	Pen./Rec. (in.)	Sample Depth (ft.)	Blows (/6 in.) Shear Strength (psf) or RQD (%)	N-uncorrected	N_{60}	Casing Blows	Elevation (ft.)	Visual Description and Remarks	Laboratory Testing Results/ AASHTO and Unified Class.
0							SSA	154.40	PAVEMENT. (0.50)	
									Gravelly SAND, (Fill).	
									Auger through pavement, soil, concrete approach slab, and drive and wash casing to 15.0'.	
7								147.90	(7.00) Olive brown, wet, SILT, (Glaciomarine).	
13								141.90	(13.00)	
15	1D	24/13	15.00 - 17.00	15/11/14/15	25	28	13		Grey, wet, very stiff, SILT, some fine to coarse sand and gravel, (Till).	G#209235 A-4, ML WC=10.0%
							31			
							69			
							94			
							110			
20	2D	24/17	20.00 - 22.00	10/10/15/18	25	28	72		Grey, wet, very stiff, SILT, little fine to coarse sand and gravel, (Till). Roller Coned ahead to 25.0' bgs.	G#209236 A-4, ML WC=11.8%
							73			
							66			
							68		Grey, wet, very stiff to hard, SILT, little to some fine to coarse sand and gravel, (Till).	
							65			
25	3D	24/18	25.00 - 27.00	6/7/7/11	14	16	42		Grey, wet, very stiff to hard, SILT, little to some fine to coarse sand and gravel, (Till). Roller Coned ahead to 30.0' bgs.	
							59			
							60			
							58			
							55			
30	4D	24/4	30.00 - 32.00	5/19/36/10	55	62	49		Roller Coned ahead to 35.0' bgs.	G#209237 A-4, ML WC=11.5%
							54			
							79			
							78			
							75			
35	5D	3.6/3	35.00 - 35.30	55(3.6")	---			119.90	(35.00) Similar to above, but with cobbles. Roller Coned ahead to 38.0' bgs. Bedrock encountered at 37.5' bgs.	
37.5								117.40	(37.50) Top of Bedrock at Elev. 117.4'. R1 and R2 Bedrock: Grey to grey-black fine-grained, metasedimentary PHYLLITE, soft to moderately hard, slightly weathered, fractures are close, from horizontal to vertical, with minor silt in-filling, numerous quartz and calcite seams 2-4 mm thick often following foliation. Rock Mass Quality is Poor. [Vassalboro Formation]	
	R1	57.6/53	38.00 - 42.80	RQD = 49%			NQ-2		R1:Core Times (min:sec) 38.0-39.0' (5:30) 39.0-40.0' (4:20) 40.0-41.0' (4:40) 41.0-42.0' (5:50) 42.0-42.8' (4:20) 92% Recovery Core Blocked.	
	R2	60/60	42.80 - 47.80	RQD = 26%					R2:Core Times (min:sec) 42.8-43.8' (5:50) 43.8-44.8' (6:30) 44.8-45.8' (6:15) 45.8-46.8' (8:50) 46.8-47.8' (7:00) 100% Recovery	
47.8								107.10	(47.80) Bottom of Exploration at 47.80 feet below ground surface.	

Remarks:
Auto Hammer #149
400 lbs down pressure on Core Barrel.

Stratification lines represent approximate boundaries between soil types; transitions may be gradual.
* Water level readings have been made at times and under conditions stated. Groundwater fluctuations may occur due to conditions other than those present at the time measurements were made.

Page 1 of 1 — Boring No.: BB-BUS-101B

Maine Department of Transportation
Soil/Rock Exploration Log
US CUSTOMARY UNITS

Project: Union Street Overpass I-95	Location: Bangor, Maine	Boring No.: BB-BUS-106	PIN: 16681.00
Driller: Northern Test Boring, Inc.	Elevation (ft.) 154.8	Auger ID/OD: 5" Solid Stem	
Operator: Nick, Mike	Datum: NAVD 88	Sampler: Standard Split Spoon	
Logged By: M. Moreau	Rig Type: Dietrich D-50 Trailer	Hammer Wt./Fall: 140#/30"	
Date Start/Finish: 5/18/09-5/18/09	Drilling Method: Cased Wash Boring	Core Barrel: NQ-2	
Boring Location: 15+06.5, 18.9 Rt.	Casing ID/OD: HW	Water Level*: 13.0' bgs.	
Hammer Efficiency Factor: 0.68	Hammer Type: Automatic ☒ Hydraulic ☐ Rope & Cathead ☐		

Depth (ft.)	Sample No.	Pen./Rec. (in.)	Sample Depth (ft.)	Blows (/6 in.) Shear Strength (psf) or RQD (%)	N-uncorrected	N_{60}	Casing Blows	Elevation (ft.)	Visual Description and Remarks	Laboratory Testing Results/ AASHTO and Unified Class.
0	1D	14.4/8	0.50 - 1.70	40/29/31(2.4")	---		SSA	154.30	PAVEMENT. (0.50) Grey and brown, damp, loose to very dense, fine to coarse SAND and GRAVEL, little silt, (Fill).	
								153.10	(1.70) Concrete Approach Slab from 1.7-2.8' bgs.	
							139	152.00	(2.80)	
							17			
							61			
5	2D	24/9	5.00 - 7.00	7/10/9/12	19	22	40		Same as above, but all brown.	
							37			
							48			
							44			
							38			
10	3D	24/3	10.00 - 12.00	2/2/3/4	5	6	39		Same as above.	
							53			
							72			
							73	141.80	(13.00) Grey, wet, very stiff, SILT, trace coarse sand and gravel, (Glaciomarine).	
	4D	24/12	14.70 - 16.70	6/8/11/11	19	22	α58 OPEN		qp=2.2 ksf Tv=0.65x2.5=1.625 psf α58 blows for 0.7'.	G#246280 A-4, ML WC=17.5%
15							HOLE			
								137.30	(17.50) Grey, wet, stiff to very stiff, SILT, some fine to coarse sand, trace gravel, (Till).	
	5D	24/12	18.00 - 20.00	5/6/6/10	12	14				G#246281 A-4, ML WC=13.5%
20	6D	24/4	20.00 - 22.00	4/5/6/8	11	12				
25	7D	24/18	25.00 - 27.00	7/9/11/21	20	23			Grey, wet, stiff to very stiff, SILT, some fine to coarse sand, trace gravel, (Till). Roller Cone ahead to 30.0' bgs. Bedrock encountered at 29.6' bgs.	G#246282 A-4, ML WC=12.6%
								125.20	(29.60) Spoon REFUSAL at 30.1' bgs. Weathered ROCK in spoon tip. Roller Coned ahead into weathered rock to 31.1' bgs.	
30	8D	1.2/1	30.00 - 30.10	64(1.2")	---		RC			
	R1	60/60	31.10 - 36.10	RQD = 18%			NQ-2	123.70	(31.10) Top of Intact Bedrock at Elev. 123.7'. R1 Bedrock: Grey, fine-grained, moderately hard, PHYLLITE, slightly weathered, fractures horizontal to vertical, close, tight to open with minor silt in-filling. Rock Mass Quality is Very Poor. [Vassalboro Formation] R1:Core Times (min:sec) 31.1-32.1' (5:44) 32.1-33.1' (5:14) 33.1-34.1' (4:45) 34.1-35.1' (4:42) 35.1-36.1' (4:30) 100% Recovery	
36.1								118.70	(36.10) Bottom of Exploration at 36.10 feet below ground surface.	

Remarks:
Auto Hammer #149

Stratification lines represent approximate boundaries between soil types; transitions may be gradual.
* Water level readings have been made at times and under conditions stated. Groundwater fluctuations may occur due to conditions other than those present at the time measurements were made.

Page 1 of 1 — Boring No.: BB-BUS-106

STATE OF MAINE
DEPARTMENT OF TRANSPORTATION
IM-1668(100)E
PIN 16681.00
BRIDGE NO. 5797
BRIDGE PLANS

	BY	DATE
PROJ. MANAGER		
DESIGN-DETAILED	M.MOREAU	
CHECKED-REVIEWED	T.WHITE	MAY 2011
DESIGN2-DETAILED2		
DESIGN3-DETAILED3		
REVISIONS 1		
REVISIONS 2		
REVISIONS 3		
REVISIONS 4		
FIELD CHANGES		

SIGNATURE
P.E. NUMBER
DATE

UNION STREET BRIDGE
OVERPASS I-95
BANGOR PENOBSCOT COUNTY

BORING LOGS

SHEET NUMBER
11
OF 93

Filename: ...\msta\011_BORING LOGS2.dgn Division: BRIDGE Username: david.shaw Date:1/2/2014

Filename: ...\bridge\vmsto\012_SSPlan_01.dgn Division: BRIDGE Username: CADD Date:1/2/2014

LEGEND

4"SWLL	4" SOLID WHITE LANE LINE	STRAIGHT ARROW PAVEMENT MARKING
4"BWLL	4" BROKEN WHITE LANE LINE	
4"SYLL	4" SOLID YELLOW LANE LINE	
4"DYCL	4" DOUBLE YELLOW CENTER LINE	LEFT ARROW PAVEMENT MARKING
6"SWLL	6" SOLID WHITE LANE LINE	
6"SYLL	6" SOLID YELLOW LANE LINE	
6"BWLL	6" BROKEN WHITE LANE LINE	RIGHT ARROW PAVEMENT MARKING
12"SYL	12" SOLID YELLOW LINE	
12"SWLL	12" SOLID WHITE LANE LINE	SHARED STRAIGHT & RIGHT/LEFT ARROW PAVEMENT MARKING
CW	CROSS WALK (SEE DETAIL)	
SL	STOP LINE (24")	ONLY "ONLY" PAVEMENT MARKING

Match Existing Striping Sta 74+32

MATCH LINE SEE THIS SHEET

MATCH LINE SEE THIS SHEET

Sta 106+00 Match Existing Striping

Sta 109+50 Match Existing Striping

RAMP A (SB OFF)

RAMP C (SB ON)

RAMP G (NB ON)

Match Existing Striping Sta 80+50

16TH STREET

UNION STREET

15TH STREET (NORTH)

Limit of Work Match Existing Striping Sta 11+25

12" SYL Spaced at 10' o.c. @ 45°

Limit of Work Match Existing Striping Sta 17+50

12" SYL Spaced at 10' o.c. @ 45°

INTERSTATE 95 SOUTHBOUND

INTERSTATE 95 NORTHBOUND

RAMP J (NB OFF)

Sta 98+00 Match Existing Striping

Match Existing Striping Sta 92+09

PLAN

Scale of Feet

Non-Slip White Crosswalk Striping Reflective Paint

CROSSWALK STRIPING
Not to Scale

GP Gorrill-Palmer Consulting Engineers, Inc.
PO Box 1237 Engineering Excellence Since 1998 207-657-6910
15 Shaker Road FAX: 207-657-6912
Gray, ME 04039 E-Mail: mailbox@gorrillpalmer.com

BECKER STRUCTURAL ENGINEERS
75 York Street, Portland, Maine 04101
207.879.1838 ● beckerstructural.com

STATE OF MAINE
DEPARTMENT OF TRANSPORTATION

IM-1668(100)E

WIN 16681.00

BRIDGE NO.: 5797

BRIDGE PLANS

	BY	DATE
PROJ. MANAGER STEPHEN BODGE		
DESIGN-DETAILED	D.ETTINGER	07-09-13
CHECKED-REVIEWED	D.BURGESS	07-09-13
DESIGN2-DETAILED2	D.ETTINGER	------
DESIGN3-DETAILED3	T.GORRILL	------
REVISIONS 1	------	------
REVISIONS 2	------	------
REVISIONS 3	------	------
REVISIONS 4	------	------
FIELD CHANGES	------	------

SIGNATURE

P.E. NUMBER

DATE

UNION STREET BRIDGE
OVER INTERSTATE 95
BANGOR PENOBSCOT COUNTY

STRIPING PLAN

SHEET NUMBER

12

OF 93

Filename: ...\bridge\mslo\013_GRPlan_01.dgn Division: BRIDGE Username: CADD Date:1/2/2014

ITEM 527.303-ENERGY ABSORBING SYSTEM(ET-PLUS)

STATION TO STATION	LENGTH
12+52.34 - 63+60.45, RT.	37.50 LF
72+71.98 - 73+09.48, RT.	37.50 LF
105+12.50 - 105+50.00, LT.	37.50 LF

ITEM 606.265 - TERMINAL END - SINGLE RAIL- GALVANIZED STEEL

STA. 103+00, LT.

ITEM 606.64 - GUARDRAIL THRIE BEAM - DOUBLE RAIL ✳

STATION TO STATION	LENGTH
102+25.00, 0.0' RT. - 103+25.00, 4.0' RT.	100.00 LF
104+50.00, 4.0' LT. - 105+50, 0.0' LT.	100.00 LF

ITEM 606.65 - GUARDRAIL THRIE BEAM - SINGLE RAIL ✳

STATION TO STATION	LENGTH
103+25.00 - 104+75.00, 4.0' RT.	150.00 LF
103+00.00 - 104+50.00, 4.0' LT.	150.00 LF

ITEM 606.66 - TERMINAL END THRIE BEAM ✳

STATION TO STATION
103+00.00, 4.0' LT.
104+75.00, 4.0' RT.

✳ SEE GENERAL NOTES

ITEM 606.23 - GUARDRAIL TYPE 3C - SINGLE RAIL

STATION TO STATION	LENGTH
12+62.35 - 12+87.35, RT.	25.0 LF
15+12.65 - 15+25.15, RT.	12.5 LF

ITEM 606.24 - GUARDRAIL TYPE 3D - SINGLE RAIL

STATION TO STATION	LENGTH
70+59.48- 72+71.98, RT.	212.50 LF
80+55.85 - 80+80.74, LT.	25.00 LF
90+99.70 - 92+12.59, RT	112.50 LF
103+12.50 - 105+12.5, LT	200.00 LF

ITEM 606.232 - GUARDRAIL TYPE 3C - OVER 15' RADIUS

STATION	QUANTITY	RADIUS
70+47.31 - 70+59.48, RT	12.5 LF	50.00 FT
15+25.15 - 15+46.19, RT	25.0 LF	25.00 FT
90+47.49 - 90+72.44, RT	25.0 LF	40.00 FT
90+72.44 - 90+99.70, RT	25.0 LF	130.00 FT
15+12.61 - 15+29.31, LT	25.0 LF	20.00 FT

ITEM 606.231 - GUARDRAIL TYPE 3C - 15' RADIUS & LESS

STATION	QUANTITY	RADIUS
12+52.34- 12+62.35, RT.	12.50 LF	10.00 FT
12+78.26 - 12+87.49 LT.	12.50 LF	15.00 FT

ITEM 606.363 - GUARDRAIL - REMOVE & DISPOSE

STATION TO STATION	LENGTH
12+54 - 13+03 RT.	49 LF
70+32 - 73+03 RT.	271 LF
12+90 - 13+03 LT.	14 LF
14+97 - 15+47 RT	50 LF
90+47 - 92+23 RT.	177 LF
14+97 - 15+28 LT	57 LF

ITEM 606.369 - GUARDRAIL - REMOVE & STACK

STATION TO STATION	LENGTH
102+25 - 104+75 RT.	250 LF
103+00 - 105+50 LT.	250 LF

ITEM 606.1721 - BRIDGE TRANSITION TYPE I

STA. 12+87.35 - 13+07.83, RT.
STA. 12+87.49 - 13+07.83, LT.
STA. 14+92.17 - 15+12.65, RT.
STA. 14+92.17 - 15+12.61, LT.

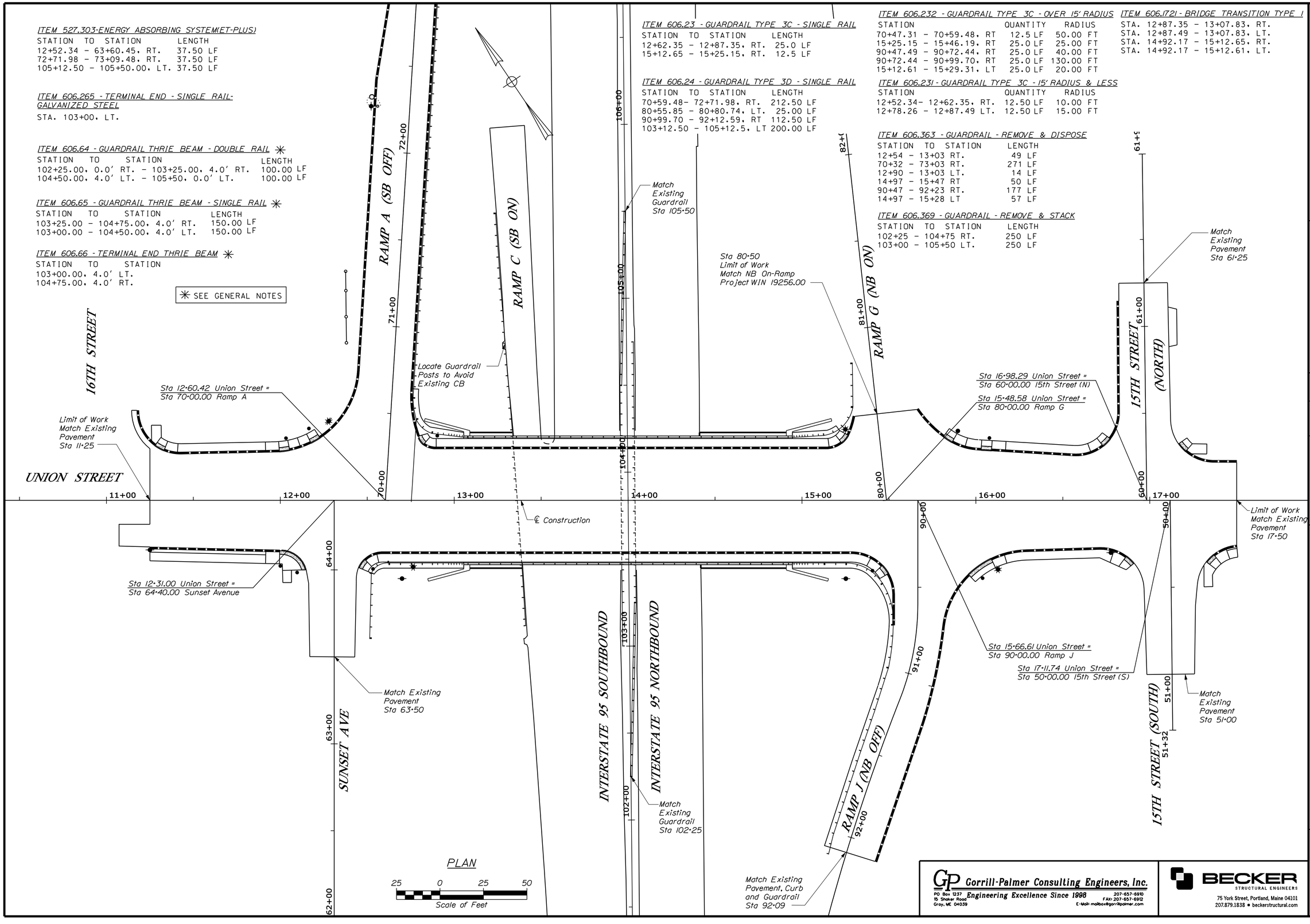

PLAN

25 0 25 50

Scale of Feet

STATE OF MAINE
DEPARTMENT OF TRANSPORTATION

IM-1668(100)E

WIN 16681.00

BRIDGE NO.: 5797

BRIDGE PLANS

	BY	DATE
PROJ. MANAGER STEPHEN BODGE		
DESIGN-DETAILED	D.BURGESS	07-09-13
CHECKED-REVIEWED	B.WELCH	J.BURGESS 07-09-13
DESIGN2-DETAILED2	B.WELCH	
DESIGN3-DETAILED3		
REVISIONS 1		
REVISIONS 2		
REVISIONS 3		
REVISIONS 4		
FIELD CHANGES		

SIGNATURE

P.E. NUMBER

DATE

UNION STREET BRIDGE
OVER INTERSTATE 95
BANGOR PENOBSCOT COUNTY

GUARDRAIL LAYOUT PLAN

SHEET NUMBER

13

OF 93

GP Gorrill-Palmer Consulting Engineers, Inc.
PO Box 1237 Engineering Excellence Since 1998 207-657-6910
15 Shaker Road FAX: 207-657-6912
Gray, ME 04039 E-Mail: mailbox@gorrillpalmer.com

BECKER STRUCTURAL ENGINEERS
75 York Street, Portland, Maine 04101
207.879.1838 • beckerstructural.com

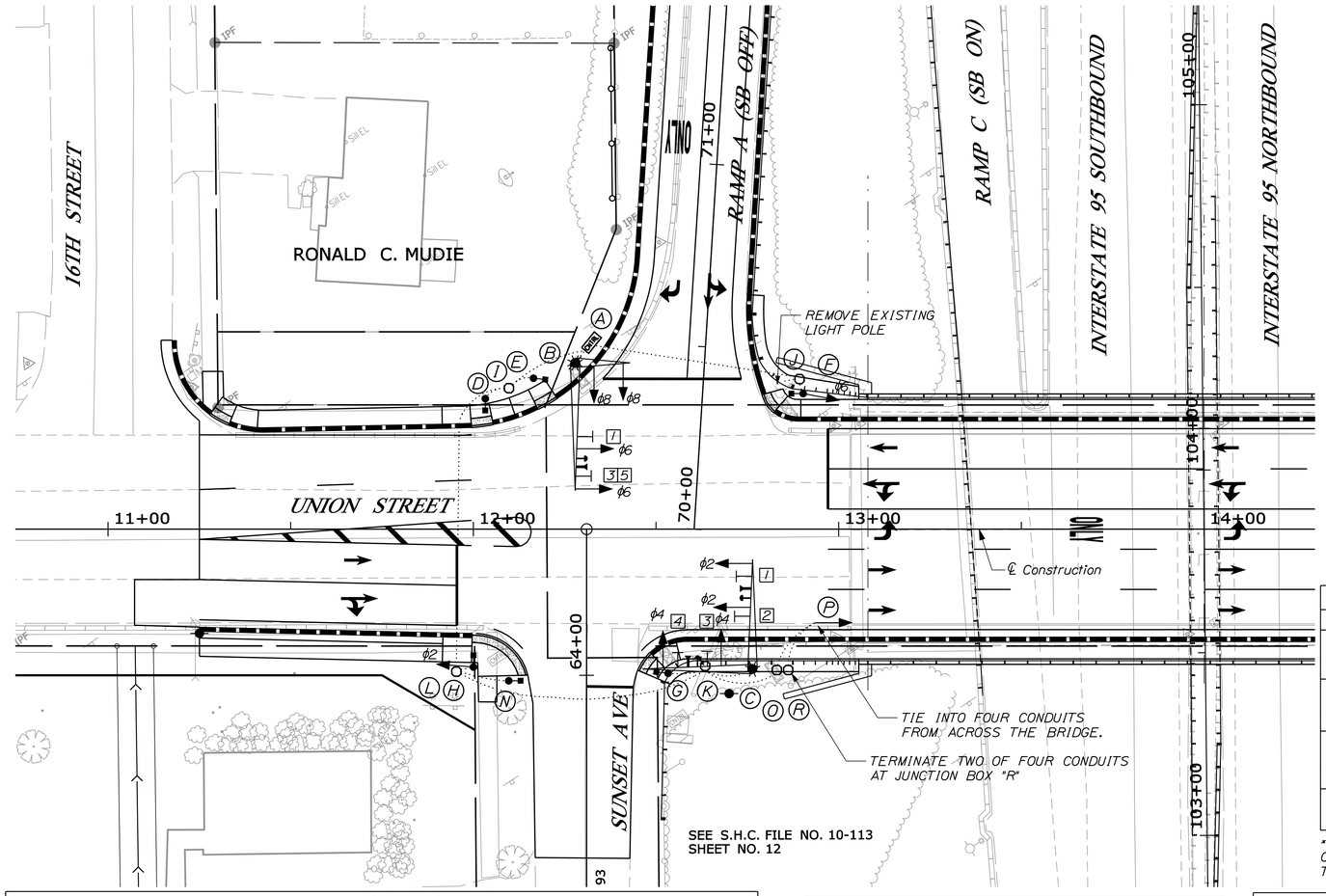

Notes:

1. The Contractor must meet all utility requirements for the service connection.

2. All splices will be made in the cabinets, poles or juntion boxes meeting MaineDOT Specifications.

3. The bottom of the housing of the signal face shall be at least 16 feet but not more than 19 feet above the pavement grade at the center of the roadway.

4. All materials and work completed under this contract shall conform to the Mainedot Standard Specifications, Supplemental Specifications and Standard Details and with the Federal Highway Administration "Manual on Uniform Traffic Control Devices".

5. Two copies of the signal controller manual and two copies of record drawings shall be left in the controller cabinet.

6. Contractor shall provide and install all junction boxes.

7. Utility locations shown are approximate only and the Contractor is responsible for finding exact locations of utilities prior to construction. Contractor shall contact Dig Safe at 1-888-dig-safe.

8. Contractor shall contact and coordinate with utilities upon award of the contract. Contractor shall coordinate with utility companies so that the traffic signal installation is done after the utilities have been relocated by the respective utility companies.

9. Contractor is responsible for obtaining MaineDOT and City opening permits, if necessary.

10. It is the intent of this work to have a complete operational, tested and accepted traffic signal upon completion of this contract.

11. The proposed traffic signal timing and phasing plan shall be input by the Contractor under observation by the Engineer. The contractor shall provide 48 hours notice to the Engineer. Existing signal coordination timing shall be transferred to the new controller.

12. All push buttons shall be located within 1 foot from the edge of the sidewalk. if placed greater than 1 foot from the sidewalk, Contractor shall pave an apron to the button for a distance not to exceed 5 feet.

13. All traffic signals shall be 12 inch diameter with L.E.D. lenses and shall have 5 inch louvered back plates.

14. Mast poles B, C and M shall be on foundations sized in accordance with Special Provision 643. Size of foundation to be verified prior to construction.

15. Pedestal poles shall be on 24 inch foundations.

16. Foundations shall be constructed with LP concrete and acceptance method shall be type 'C'.

17. All traffic signal equipment be painted federal black. Mast poles/arms shall be galvanized with a federal black powdercoat finish.

18. The cost of the overhead lane use signs shall be incidental to item 643.71.

19. All traffic signal equipment shall be new.

20. Contractor shall remove the existing traffic signal once the new one is operational.

21. Union Street - advance detection shall be two Wavetronix Smart Sensor Advance with Safe Arrival Technology at each intersection and be aimed 500 feet from the STOP bar. No substitutions shall be allowed.

22. Side streets/Ramp - Video detection system shall provide presence detection for each lane. Video detection system shall include all video detectors, control boards and other incidentals necessary for a fully functional video detection system.

23. All Timings and Phasings shall be field adjusted by the Contractor per the direction of the Resident, City or MaineDOT.

24. Crosswalk striping not shown for clarity. See Striping Plan for crosswalk striping requirements.

COORDINATION DATA			
	PLAN 1	PLAN 2	PLAN 3
CYCLE LENGTH(SEC.)	70	70	
OFFSET(SEC.)	0	0	
SPLIT TIME ϕ1	0	0	
SPLIT TIME ϕ2	36	34	
SPLIT TIME ϕ3	0	0	
SPLIT TIME ϕ4	34	36	
SPLIT TIME ϕ5	0	0	
SPLIT TIME ϕ6	36	34	
SPLIT TIME ϕ7	0	0	
SPLIT TIME ϕ8	34	36	

OFFSETS REFERENCED TO BEGINNING OF ϕ2 AND ϕ6 GREEN

DAILY AND WEEKLY COORDINATION PROGRAM	
	MONDAY - FRIDAY
PLAN 1 70 SEC. CYCLE AM	7:00AM - 9:00AM
PLAN 2 70 SEC. CYCLE PM	3:00PM - 6:00PM
PLAN 3 X SEC. CYCLE WEEKEND	
* FREE OPERATION	

* CONTROLLERS SHALL OPERATE IN THE FREE OPERATION MODE FOR TIMES OTHER THAN THOSE NOTED ABOVE

EQUIPMENT SCHEDULE				
DESIGNATION	FATIGUE CATEGORY	ITEM	DESCRIPTION	STATION, OFFSET
A		CONTROLLER CABINET		STA 12+32, 51' LT
B	II	35' DUAL PURPOSE POLE WITH 15' & 35' MAST ARMS	SIGNAL HEADS, SIGNS, OVERHEAD ILLUMINATION	STA 12+28, 45' LT
C	II	35' DUAL PURPOSE POLE WITH 25' & 30' MAST ARMS	SIGNAL HEADS, SIGNS, OVERHEAD ILLUMINATION	STA 12+76, 38' RT
D, E, G, N		10' PEDESTAL POLE	PEDESTRIAN HEAD, PUSH BUTTON AND SIGN	FIELD LOCATED *
I, J, K, L, O,R		JUNCTION BOX	PRECAST CONCRETE	FIELD LOCATED *
P			TIE INTO FOUR CONDUITS FROM ACROSS BRIDGE	STA 12+95, 27' RT
F, H		10' PEDESTAL POLE	PEDESTRIAN HEAD, PUSH BUTTON, SIGN AND SIGNAL HEAD	FIELD LOCATED *

* TO BE FIELD LOCATED BY THE RESIDENT IN COORDINATION WITH THE CONTRACTOR. CONTRACTOR RESPONSIBLE FOR FIELD LOCATING POTENTIAL FIELD CONFLICTS.

SIGN LEGEND

TRAFFIC SIGNAL HEADS

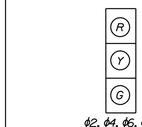

ALL NEW SIGNAL HEADS 12" L.E.D. WITH BACK PLATES

SIGNAL PHASING

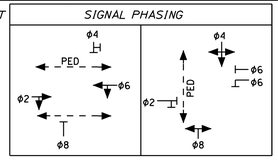

CONDUIT SCHEDULE		
RUN	CENTER TO CENTER (LINEAR FEET)	COMMENTS
A-B	6'	
A-I	25'	2 CONDUITS
E-I	7'	
D-I	7'	
I-L	90'	2 CONDUITS
L-H	5'	
L-K	67'	2 CONDUITS
K-G	10'	
K-C	13'	
A-J	59'	
J-F	4'	
H-N	15'	
K-O	29'	2 CONDUITS
O-P	11'	2 CONDUITS
R-P	11'	2 CONDUITS

ALL PVC SCHEDULE 80, 3 INCH

SIGNAL TIMING								
PHASE	1	2	3	4	5	6	7	8
MINIMUM INITIAL		4		4		4		4
PASSAGE TIME		3		3		3		3
MAXIMUM GREEN		28		30		28		30
MAX II								
YELLOW		4		4		4		4
ALL RED		2		2		2		2
FLASH		Y		R		Y		R
PHASE RECALL		SOFT				SOFT		
WALK		5		5		5		
PEDESTRIAN CLEARANCE		10		17		17		
MEMORY								
DETECTOR MODE		PR*		PR		PR*		PR
DETECTOR DELAY								

* SEE NOTE 21 THIS SHEET

ACCESSIBLE PEDESTRIAN SIGNALS (APS)

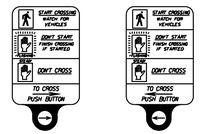

CAMPBELL COMPANY ADVISOR APS A912 OR APPROVED EQUAL. SIGNAL SHALL BE PROGRAMMED WITH VOICE MESSAGES.

PEDESTRIAN SIGNAL HEADS

ALL SIGNAL HEADS SHALL BE GELCORE MODEL NO. PS7-CFC9-01A OR TASSIMCO MODEL* PLS-160 OR APPROVED EQUAL

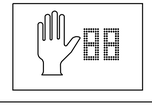

LEGEND

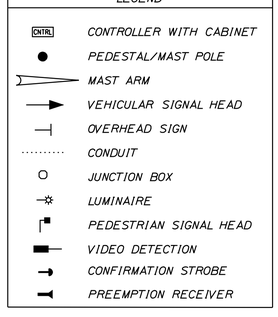

DESIGN HOUR VOLUMES

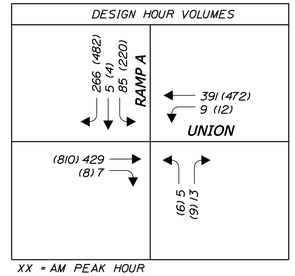

XX = AM PEAK HOUR
(XX) = PM PEAK HOUR
VOLUMES PROVIDED BY MAINE DOT

PLAN

20 0 20 40

Scale of Feet

STATE OF MAINE
DEPARTMENT OF TRANSPORTATION

IM-1668(100)E

WIN 16681.00

BRIDGE NO. 5787

BRIDGE PLANS

PROJ. MANAGER STEPHEN BODGE	BY	DATE
DESIGN-DETAILED	D. BURGESS	07-09-13
CHECKED-REVIEWED	T. GORRILL	07-09-13
DESIGN2-DETAILED2	-------	-------
DESIGN3-DETAILED3	-------	-------
REVISIONS 1	-------	-------
REVISIONS 2	-------	-------
REVISIONS 3	-------	-------
REVISIONS 4	-------	-------
FIELD CHANGES	-------	-------

SIGNATURE

P.E. NUMBER

DATE

UNION STREET BRIDGE
OVER INTERSTATE 95
BANGOR PENOBSCOT COUNTY

SIGNAL PLAN

SHEET NUMBER

14

OF 93

Gorrill-Palmer Consulting Engineers, Inc.
Engineering Excellence Since 1998
PO Box 1237, 15 Shaker Road, Gray, ME 04039
207-657-6910 FAX: 207-657-6912
E-Mail: mailbox@gorrillpalmer.com

BECKER STRUCTURAL ENGINEERS
75 York Street, Portland, Maine 04101
207.879.1838 ■ beckerstructural.com

Filename: ...\bridge\mst\0\014_SIGNAL_01.dgn Division: BRIDGE Username: CADD Date:1/2/2014

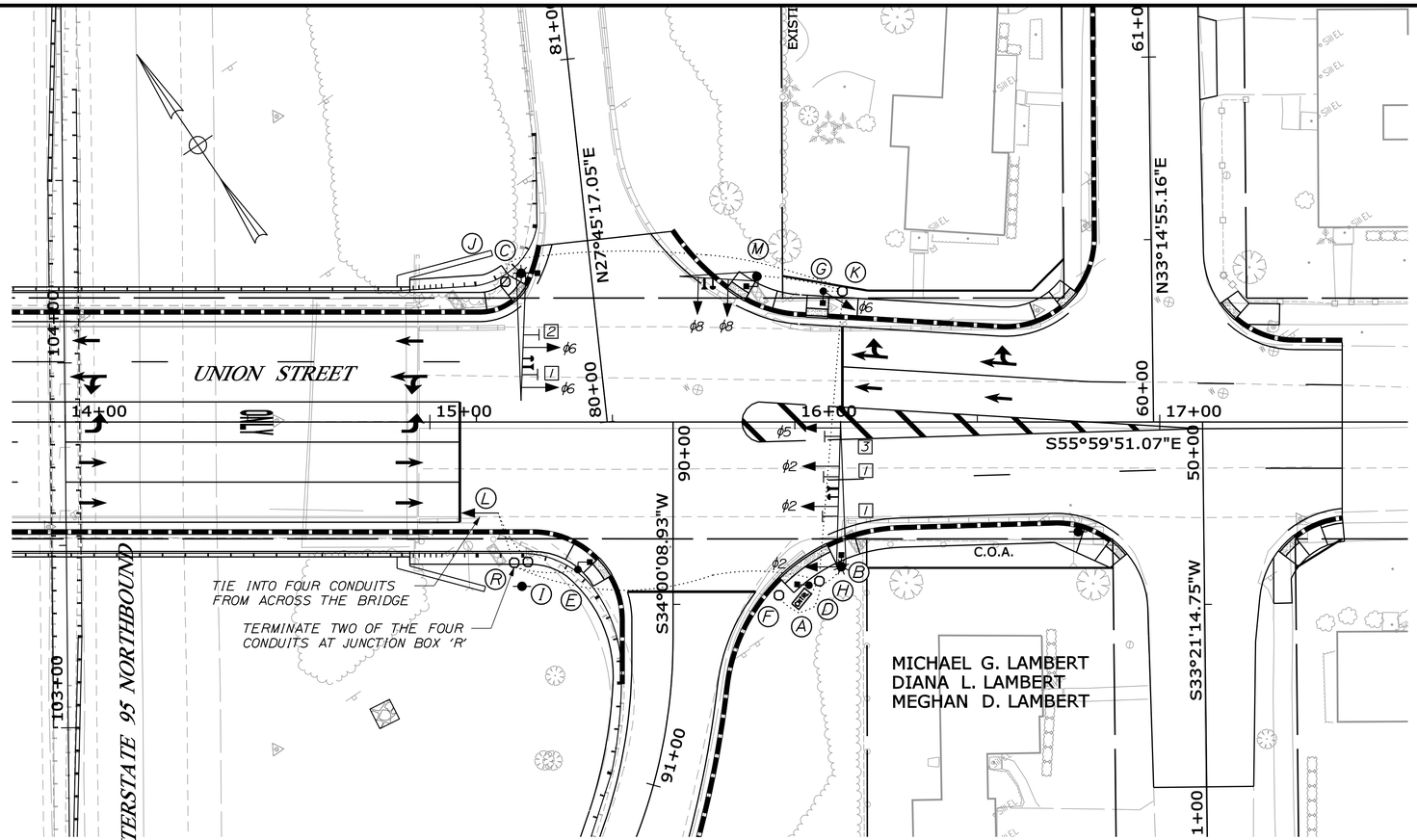

Notes:

1. See Sheet 14 for Signal Notes.

EQUIPMENT SCHEDULE				
DESIGNATION	FATIGUE CATEGORY	ITEM	DESCRIPTION	STATION, OFFSET
A		CONTROLLER CABINET		STA 16+02, 48' RT
B	II	35' DUAL PURPOSE POLE WITH 40' MAST ARM	SIGNAL HEADS, SIGNS, PED HEAD, PUSH BUTTON OVERHEAD ILLUMINATION	STA 16+13, 40' RT
C	II	35' DUAL PURPOSE POLE WITH 35' MAST ARM	SIGNAL HEADS, SIGNS, PED HEAD, PUSH BUTTON OVERHEAD ILLUMINATION	STA 15+25, 41' LT
M	II	21' MAST POLE WITH 20' MAST ARM	SIGNAL HEADS, SIGNS, PED HEAD, PUSH BUTTON	STA 15+90 40' LT
D		10' PEDESTAL POLE	PEDESTRIAN HEAD, PUSH BUTTON AND SIGN	FIELD LOCATED *
H, I, J, K, R		JUNCTION BOX	PRECAST CONCRETE	FIELD LOCATED *
L			TIE INTO FOUR CONDUITS FROM ACROSS BRIDGE	STA 15+05, 27' RT
E		10' PEDESTAL POLE	PEDESTRIAN HEAD, PUSH BUTTON, SIGN	STA 15+40, 40' RT
G		10' PEDESTAL POLE	PEDESTRIAN HEAD, PUSH BUTTON, SIGN & SIGNAL HEAD	STA 16+08, 36' LT

* TO BE FIELD LOCATED BY THE RESIDENT IN COORDINATION WITH THE CONTRACTOR. CONTRACTOR RESPONSIBLE FOR FIELD LOCATING POTENTIAL FIELD CONFLICTS.

CONDUIT SCHEDULE		
RUN	CENTER TO CENTER (LINEAR FEET)	COMMENTS
A-H	5'	
H-D	3'	
H-B	7'	
H-K	80'	
K-G	5'	
K-J	93'	
J-C	5'	
H-I	91'	2 CONDUITS
I-L	13'	2 CONDUITS
M-K	24'	
H-F	12'	
R-L	13'	2 CONDUITS

ALL PVC SCHEDULE 80, 3 INCH

SIGNAL PHASING

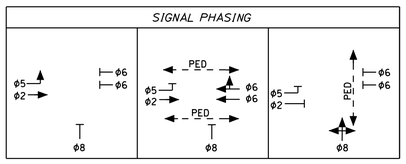

SIGNAL TIMING								
PHASE	1	2	3	4	5	6	7	8
MINIMUM INITIAL		4			4	4		4
PASSAGE TIME		3			3	3		3
MAXIMUM GREEN		35			8	21		23
MAX II								
YELLOW		4			4	4		4
ALL RED		2			2	2		2
FLASH		Y			R	Y		R
PHASE RECALL		SOFT				SOFT		
WALK		4				4		4
PEDESTRIAN CLEARANCE		15				17		18
MEMORY								
DETECTOR MODE		PR*			PR	PR*		PR
DETECTOR DELAY								

* SEE NOTE 21 ON SHEET 14

TRAFFIC SIGNAL HEADS

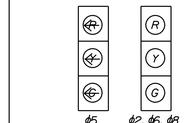

ALL NEW SIGNAL HEADS
12" L.E.D. WITH BACK PLATES

SIGN LEGEND

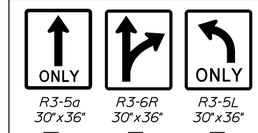

DESIGN HOUR VOLUMES

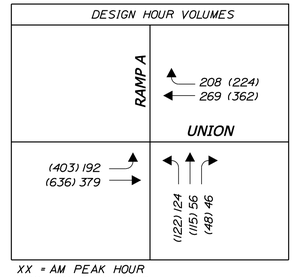

XX = AM PEAK HOUR
(XX) = PM PEAK HOUR
VOLUMES PROVIDED BY MAINEDOT

COORDINATION DATA			
	PLAN 1	PLAN 2	PLAN 3
CYCLE LENGTH(SEC.)	70	70	
OFFSET(SEC.)	68	34	
SPLIT TIME ϕ1	0	0	
SPLIT TIME ϕ2	27	27	
SPLIT TIME ϕ3	0	0	
SPLIT TIME ϕ4	0	0	
SPLIT TIME ϕ5	14	14	
SPLIT TIME ϕ6	27	27	
SPLIT TIME ϕ7	0	0	
SPLIT TIME ϕ8	29	29	

OFFSETS REFERENCED TO BEGINNING OF ϕ2 AND ϕ6 GREEN

ACCESSIBLE PEDESTRIAN SIGNALS (APS)

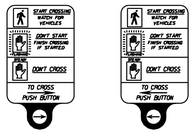

CAMPBELL COMPANY ADVISOR APS A912 OR APPROVED EQUAL. SIGNAL SHALL BE PROGRAMMED WITH VOICE MESSAGES.

PEDESTRIAN SIGNAL HEADS

ALL SIGNAL HEADS SHALL BE GELCORE MODEL NO. PS7-CFC9-01A OR TASSIMCO MODEL* PLS-160 OR APPROVED EQUAL

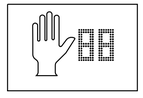

LEGEND

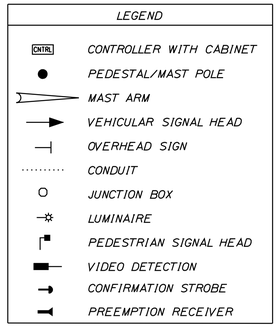

PLAN

20 0 20 40

Scale of Feet

STATE OF MAINE
DEPARTMENT OF TRANSPORTATION

IM-1668(100)E

WIN 16681.00

BRIDGE NO. 5797 BRIDGE PLANS

PROJ. MANAGER	STEPHEN BODGE	BY	DATE
DESIGN-DETAILED	R.DUNTON	D. BURGESS	07-09-13
CHECKED-REVIEWED	R.DUNTON	T.GORRILL	07-09-13
DESIGN2-DETAILED2			
DESIGN3-DETAILED3			
REVISIONS 1			
REVISIONS 2			
REVISIONS 3			
REVISIONS 4			
FIELD CHANGES			

SIGNATURE

P.E. NUMBER

DATE

UNION STREET BRIDGE
OVER INTERSTATE 95
BANGOR PENOBSCOT COUNTY

SIGNAL PLAN

SHEET NUMBER

15

OF 93

GP Gorrill-Palmer Consulting Engineers, Inc.
PO Box 1237 Engineering Excellence Since 1998 207-657-6910
15 Shaker Road FAX: 207-657-6912
Gray, ME 04039 E-Mail: mailbox@gorrillpalmer.com

BECKER STRUCTURAL ENGINEERS
75 York Street, Portland, Maine 04101
207.879.1838 • beckerstructural.com

Filename: ...\bridge\mrsto\015_SIGNAL_02.dgn Division: BRIDGE Username: CADD Date:1/2/2014

Filename: ...\msto\016_CurbPlan_01.dgn Division: BRIDGE Username: CADD Date:1/2/2014

CONTROL POINTS FOR CURBING				
POINT	STATION	OFFSET	X-COORD	Y-COORD
100	11+25.00	26.79' RT	1726258.193	477439.003
100A	11+44.13	27.23' RT	1726273.804	477427.944
100B	11+48.13	27.32' RT	1726277.067	477425.632
100C	11+72.57	27.91' RT	1726296.997	477411.469
100D	11+76.57	28.01' RT	1726300.261	477409.157
101	11+91.68	28.32' RT	1726312.617	477400.448
102	11+99.68	28.50' RT	1726319.145	477395.823
110	12+48.34	33.70' RT	1726356.579	477364.297
111	12+55.28	29.91' RT	1726364.450	477363.562
112	12+58.75	29.50' RT	1726367.558	477361.957
112A	13+05.50	29.50' RT	1726406.312	477335.815
112B	14+94.50	29.50' RT	1726562.998	477230.119
112C	12+84.75	29.50' RT	1726389.112	477347.417
112D	12+88.75	29.50' RT	1726392.428	477345.181
113	15+28.33	29.50' RT	1726591.041	477211.202
113A	15+12.33	29.50' RT	1726577.777	477220.150
113B	15+16.33	29.50' RT	1726581.093	477217.913
114	15+40.00	32.39' RT	1726599.101	477202.275
115	15+46.37	37.19' RT	1726601.694	477194.743
116	90+41.97	16.64' RT	1726602.002	477188.765
117	90+45.58	14.93' RT	1726601.410	477184.813
118	90+54.50	13.28' RT	1726597.786	477176.496
118A	90+64.18	13.22' RT	1726592.587	477168.789
119	90+72.93	12.75' RT	1726588.113	477162.157
120	92+09.13	17.12' LT	1726502.742	477055.916
121	91+24.02	16.68' LT	1726569.464	477106.751
122	90+71.44	14.67' LT	1726610.438	477146.169
123	90+45.41	26.18' LT	1726635.583	477161.962
124	90+42.51	28.93' LT	1726639.486	477162.832
125	16+08.67	33.30' RT	1726655.519	477163.125
126	16+16.12	30.40' RT	1726663.313	477161.360
127	16+28.94	28.33' RT	1726675.101	477155.911
128A	16+67.02	27.18' RT	1726707.314	477135.570
128	16+71.02	27.06' RT	1726710.696	477133.434
129	16+79.61	28.31' RT	1726717.123	477127.591
130	16+86.68	31.98' RT	1726720.931	477120.594
134	17+36.70	31.06' RT	1726762.909	477093.386
135	17+43.64	27.15' RT	1726769.873	477092.966
136	17+50.00	25.71' RT	1726776.929	477090.381

CONTROL POINTS FOR CURBING				
POINT	STATION	OFFSET	X-COORD	Y-COORD
200	11+17.49	51.71' LT	1726295.864	477508.276
200A	11+32.41	51.20' LT	1726292.473	477501.068
201	11+22.17	36.99' LT	1726291.511	477493.459
202	11+27.78	31.34' LT	1726293.001	477485.634
203	11+33.01	28.42' LT	1726295.703	477480.293
204	11+40.77	26.61' LT	1726301.123	477474.455
205	11+43.00	26.55' LT	1726302.942	477473.162
206	11+47.00	26.64' LT	1726306.302	477470.992
206A	11+72.57	27.20' LT	1726327.821	477457.162
206B	11+76.57	27.28' LT	1726331.182	477454.992
207	11+91.51	27.54' LT	1726343.705	477446.848
208	11+99.50	27.78' LT	1726350.469	477442.579
209	12+05.44	28.60' LT	1726355.854	477439.940
210	12+11.71	30.29' LT	1726361.997	477437.832
211	12+17.71	32.78' LT	1726368.362	477436.537
212	70+33.35	39.64' LT	1726374.342	477436.084
213	70+35.87	36.53' LT	1726378.339	477436.182
214	70+73.56	19.50' LT	1726414.819	477455.678
215A	72+37.20	19.50' LT	1726514.569	477585.405
215	72+41.20	19.50' LT	1726517.008	477588.576
216	73+41.20	9.50' LT	1726585.891	477661.755
217	74+00.00	9.50' LT	1726621.732	477708.367
218A	74+26.43	10.59' LT	1726636.973	477729.982
218B	74+30.42	10.76' LT	1726639.278	477733.252
218	74+32.42	10.84' LT	1726640.431	477734.886
219	74+32.07	12.45' RT	1726658.684	477720.412
219A	74+31.08	12.39' RT	1726658.029	477719.657
219B	74+27.08	12.16' RT	1726655.409	477716.635
220	73+98.97	10.50' RT	1726636.957	477695.356
221	70+64.98	10.50' RT	1726433.371	477430.589
222	70+41.60	14.71' RT	1726422.458	477409.488
223	70+37.89	16.22' RT	1726421.395	477405.632
224	12+82.19	31.85' LT	1726421.299	477399.710
225	12+89.63	29.50' LT	1726426.154	477393.599
226	13+05.50	29.50' LT	1726439.304	477384.728
226A	14+94.50	29.50' LT	1726595.993	477279.031
227A	15+09.75	29.50' LT	1726608.629	477270.507
227B	15+13.75	29.50' LT	1726611.945	477268.270
227	15+15.74	29.63' LT	1726613.673	477267.265
228	15+23.02	32.71' LT	1726621.431	477265.745

CONTROL POINTS FOR CURBING				
POINT	STATION	OFFSET	X-COORD	Y-COORD
229	80+39.40	17.52' LT	1726627.170	477267.353
230	80+40.77	16.66' LT.	1726628.575	477268.172
231	80+46.54	13.96' LT.	1726633.652	477272.016
232	80+50.00	12.76' LT	1726636.325	477274.519
233	80+50.00	22.96' RT.	1726667.936	477257.885
234	80+38.42	30.83' RT.	1726669.506	477243.970
235	80+32.66	36.38' RT.	1726671.730	477236.290
236	15+86.21	33.14' LT.	1726674.057	477230.765
237	15+93.60	30.11' LT.	1726678.485	477224.123
238	15+95.09	29.73' LT.	1726679.504	477222.971
239	16+00.99	28.86' LT.	1726683.918	477218.947
240	16+03.01	28.74' LT	1726685.524	477217.716
241	16+09.00	28.38' LT	1726690.287	477214.067
242	16+16.99	27.89' LT	1726696.637	477209.202
243A	16+52.17	25.77' LT	1726724.612	477187.770
243	16+56.16	25.53' LT	1726727.787	477185.337
244	16+66.38	27.05' LT	1726737.110	477180.884
245	16+73.31	30.98' LT	1726745.056	477180.268
246	60+35.53	20.33' LT	1726750.916	477181.472
247	60+38.86	18.11' LT	1726754.592	477183.037
248	60+50.86	14.96' LT	1726763.811	477191.344
248A	61+06.72	14.65' LT		
249	61+14.81	14.55' LT	1726799.214	477244.608
250	17+20.51	27.99' LT	1726782.514	477151.385
251	17+27.27	23.77' LT	1726785.754	477144.108
252	17+36.88	21.81' LT	1726792.628	477137.110
253	17+50.00	21.76' LT	1726803.477	477129.736

ITEM 609.11 CURB TYPE 1		
POINT	LENGTH	RADIUS
100 TO 100A	19.13'	-
100B TO 100C	24.45'	-
100D TO 101	15.12'	-
112 TO 112C	26.00'	-
112D TO 112A	16.74'	-
112B TO 113A	17.83'	-
113B TO 113	12.00'	-
118 TO 118A	9.30'	-
120 TO 121	83.88'	-
121 TO 122	56.94'	295.82'
127 TO 128A	38.10'	-
206 TO 206A	25.58'	-
206B TO 207	14.94'	-
214 TO 215A	163.64'	-
215 TO 216	100.50'	-
216 TO 217	58.80'	-
217 TO 218A	26.45'	-
218B TO 218	2.00'	-
219 TO 219A	1.00'	-
219B TO 220	28.16'	-
220 TO 221	333.99'	-
221 TO 222	23.88'	67.00'
225 TO 226	15.86'	-
226A TO 227A	15.24'	-
242 TO 243A	35.24'	-
248 TO 248A	55.96'	-
252 TO 253	13.12'	-

ITEM 609.238 TERMINAL CURB TYPE 1, 8 FOOT		
POINT	LENGTH	RADIUS
101 TO 102	8.00'	-
110 TO 111	8.00'	15.00'
114 TO 115	8.00'	25.00'
118A TO 119	8.00'	-
125 TO 126	8.00'	50.00'
129 TO 130	8.00'	25.00'
134 TO 135	8.00'	25.00'
200 TO 200A	8.00'	25.00'
201 TO 202	8.00'	25.00'
203 TO 204	8.00'	25.00'
207 TO 208	8.00'	-
209 TO 210	6.50'	50.00' *
210 TO 211	6.50'	50.00' *
224 TO 225	8.00'	12.00'
227 TO 228	8.00'	15.00'
229 TO 230	1.63'	15.00'
230 TO 231	6.37	48.00'
234 TO 235	8.00'	65.00'
236 TO 237	8.00'	35.00'
238 TO 239	5.98'	35.00'
239 TO 240	2.02'	-
241 TO 242	8.00'	-
244 TO 245	8.00'	25.00'
248A TO 249	8.00'	-
250 TO 251	8.00'	25.00'

* NON-FULL HEIGHT CURB REVEAL. MAINTAIN STANDARD RAMP SLOPE

ITEM 609.234 TERMINAL CURB TYPE 1, 4 FOOT		
POINT	LENGTH	RADIUS
116 TO 117	4.00'	25.00'
123 TO 124	4.00'	50.00'
212 TO 213	4.00'	50.00'
222 TO 223	4.00'	67.00'
229 TO 231	4.00'	48.00'
234 TO 235	4.00'	55.00'
246 TO 247	4.00'	25.00'

ITEM 609.12 CURB TYPE 1-CIRCULAR		
POINT	LENGTH	RADIUS
111 TO 112	3.51'	15.00'
113 TO 114	12.15'	25.00'
117 TO 118	9.12'	25.00'
122 TO 123	30.15'	50.00'
126 TO 127	13.02'	50.00'
128 TO 129	8.73'	25.00'
135 TO 136	6.54'	25.00'
200A TO 201	7.70'	25.00'
204 TO 205	2.23'	25.00'
213 TO 214	42.64'	50.00'
227B TO 227	2.00'	15.00'
231 TO 232	3.66'	48.00'
233 TO 234	14.03	65.00'
237 TO 238	1.54'	35.00'
243 TO 244	10.41'	25.00'
247 TO 248	12.54'	25.00'
251 TO 252	9.87'	25.00'

CURVE DATA #1
PI = 90+88.18
D = 38°11'49.9"
Δ = 21°27'00.1" Rt.
R = 150.00'
L = 56.16'
T = 28.41'
E = 2.67'

CURVE DATA #2
PI = 92+50.66
D = 4°50'50.5"
Δ = 13°00'19.1" Lt.
R = 1182.00'
L = 268.30'
T = 134.73'
E = 7.65'

PLAN
25 0 25 50
Scale of Feet

GP Gorrill-Palmer Consulting Engineers, Inc.
Engineering Excellence Since 1998
PO Box 1237, 15 Shaker Road, Gray, ME 04039
207-657-6910 FAX: 207-657-6912 E-Mail: mailbox@gorrillpalmer.com

BECKER STRUCTURAL ENGINEERS
75 York Street, Portland, Maine 04101
207.879.1838 • beckerstructural.com

STATE OF MAINE
DEPARTMENT OF TRANSPORTATION
IM-1668(100)E
WIN 16681.00
BRIDGE NO.: 5797
BRIDGE PLANS

	BY	DATE
PROJ. MANAGER: STEPHEN BODGE		
DESIGN-DETAILED	D.ETTINGER	05-22-13
CHECKED-REVIEWED	D.BURGESS	05-22-13
DESIGN2-DETAILED2	D.ETTINGER	------
DESIGN3-DETAILED3	T.GORRILL	------
REVISIONS 1		------
REVISIONS 2		------
REVISIONS 3		------
REVISIONS 4		------
FIELD CHANGES		------

SIGNATURE
P.E. NUMBER
DATE

UNION STREET BRIDGE
OVER INTERSTATE 95
BANGOR PENOBSCOT COUNTY

GEOMETRIC LAYOUT AND CURBING PLAN

SHEET NUMBER
16
OF 93

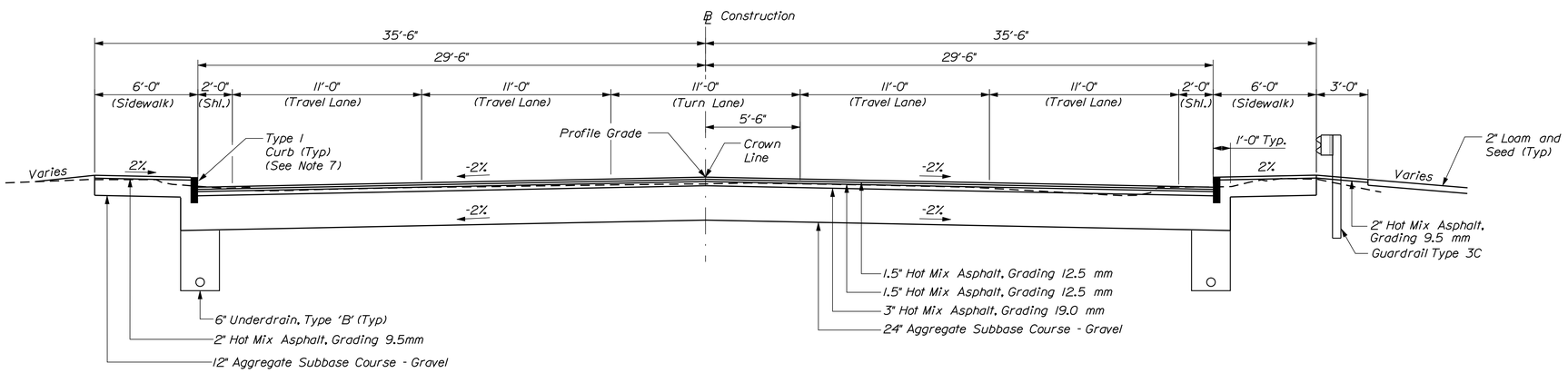

UNION STREET APPROACH TYPICAL SECTION

Sta 12+50 to Sta 15+50

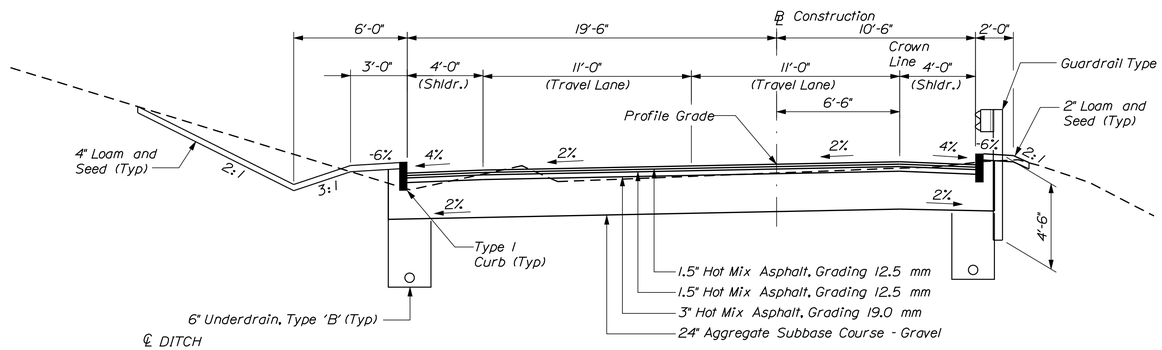

RAMP A TYPICAL SECTION

Sta 70+50 to Sta 72+40

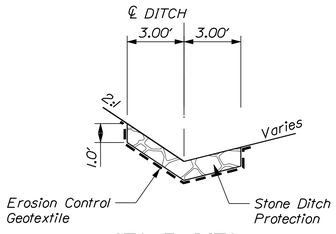

STONE DITCH PROTECTION DETAIL

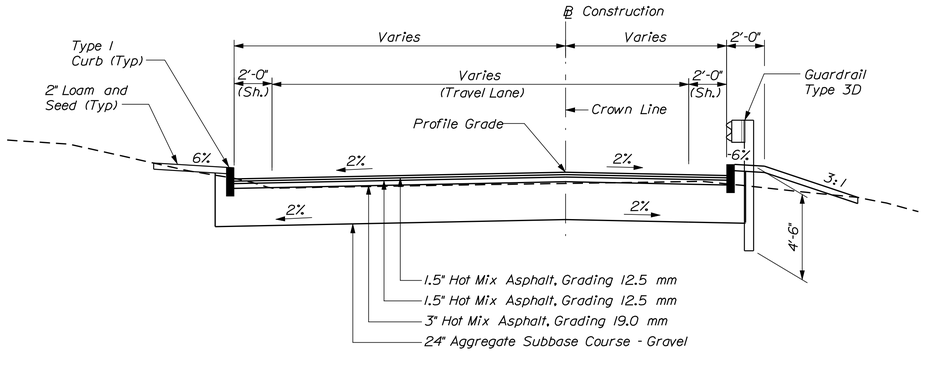

RAMP J TYPICAL SECTION

Sta 90+50 to Sta 92+09

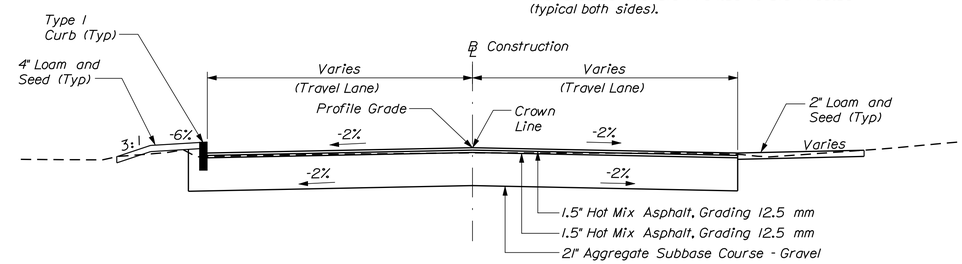

15th STREET NORTH TYPICAL SECTION

Sta 60+25 to Sta 61+25

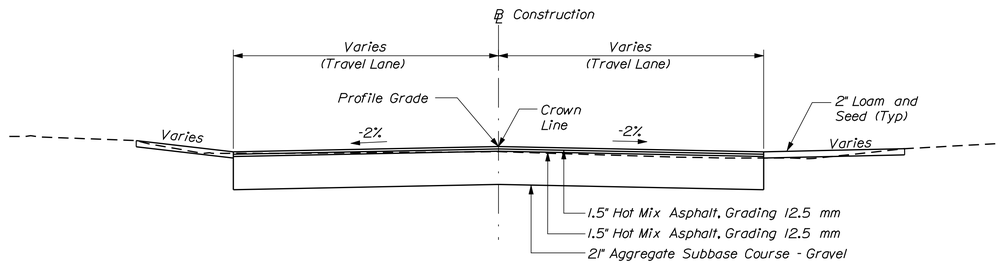

15th STREET SOUTH & SUNSET AVE. TYPICAL SECTION

Sta 50+25 to Sta 51+00
Sta 63+50 to Sta 64+00

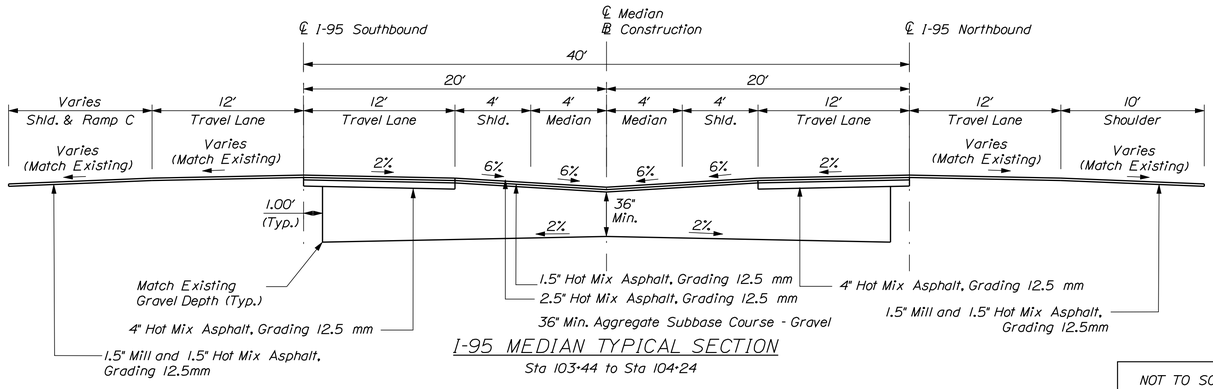

I-95 MEDIAN TYPICAL SECTION

Sta 103+44 to Sta 104+24

I-95 MILL AND OVERLAY

Sta 98+00 to Sta 109+50, Lt & Rt

NOTE:

1. The pavement, base and subbase depths as shown on the plans are intended to be nominal.

2. When superelevation exceeds the slope of the low side shoulder, the low side shoulder shall have the same slope as the travelway.

3. Crowns for both normal and superelevation sections for all courses of subbase and pavement shall be straight.

4. The gravel quantity calculation is based on a 2" loam or dirty borrow depth. The actual depth may vary. See the general notes.

5. The algebraic difference between the shoulder and travelway cross slopes "rollover" shall not exceed 8%.

6. The stationing shown under each typical is approximate.

7. Transition 7 inch approach curb reveal to 9 inch bridge curb reveal from Sta 12+90.50 to Sta 13+05.50 and Sta 14+94.50 to Sta 15+09.50 and transition curb vertical face to 1 inch bridge curb batter from Sta 13+00.50 to Sta 13+05.50 and Sta 14+94.50 to Sta 14+99.50 (typical both sides).

NOT TO SCALE

STATE OF MAINE
DEPARTMENT OF TRANSPORTATION

IM-1668(100)E

WIN 16681.00

BRIDGE NO. 5797

BRIDGE PLANS

	BY	DATE
PROJ. MANAGER STEPHEN BODGE		
DESIGN-DETAILED	D.ETTINGER	07-09-13
CHECKED-REVIEWED	D.ETTINGER	07-09-13
DESIGN2-DETAILED2	-------	------
DESIGN3-DETAILED3	-------	------
REVISIONS 1	-------	------
REVISIONS 2	-------	------
REVISIONS 3	-------	------
REVISIONS 4	-------	------
FIELD CHANGES	-------	------

SIGNATURE

P.E. NUMBER

DATE

UNION STREET BRIDGE
OVER INTERSTATE 95
BANGOR PENOBSCOT COUNTY

TYPICAL SECTIONS

SHEET NUMBER 17 OF 93

Gorrill-Palmer Consulting Engineers, Inc.
PO Box 1237 Engineering Excellence Since 1998 207-657-6910
15 Shaker Road FAX: 207-657-6912
Gray, ME 04039 E-Mail: mailbox@gorrillpalmer.com

BECKER STRUCTURAL ENGINEERS
75 York Street, Portland, Maine 04101
207.879.1838 ■ beckerstructural.com

Filename: ...\bridge\msto\017_TYPICAL_01.dgn Division: BRIDGE Username: CADD Date:1/2/2014

Filename: ...\msta\018_XSECT_11+00_001.dgn Username: CADD Division: BRIDGE Date:1/2/2014

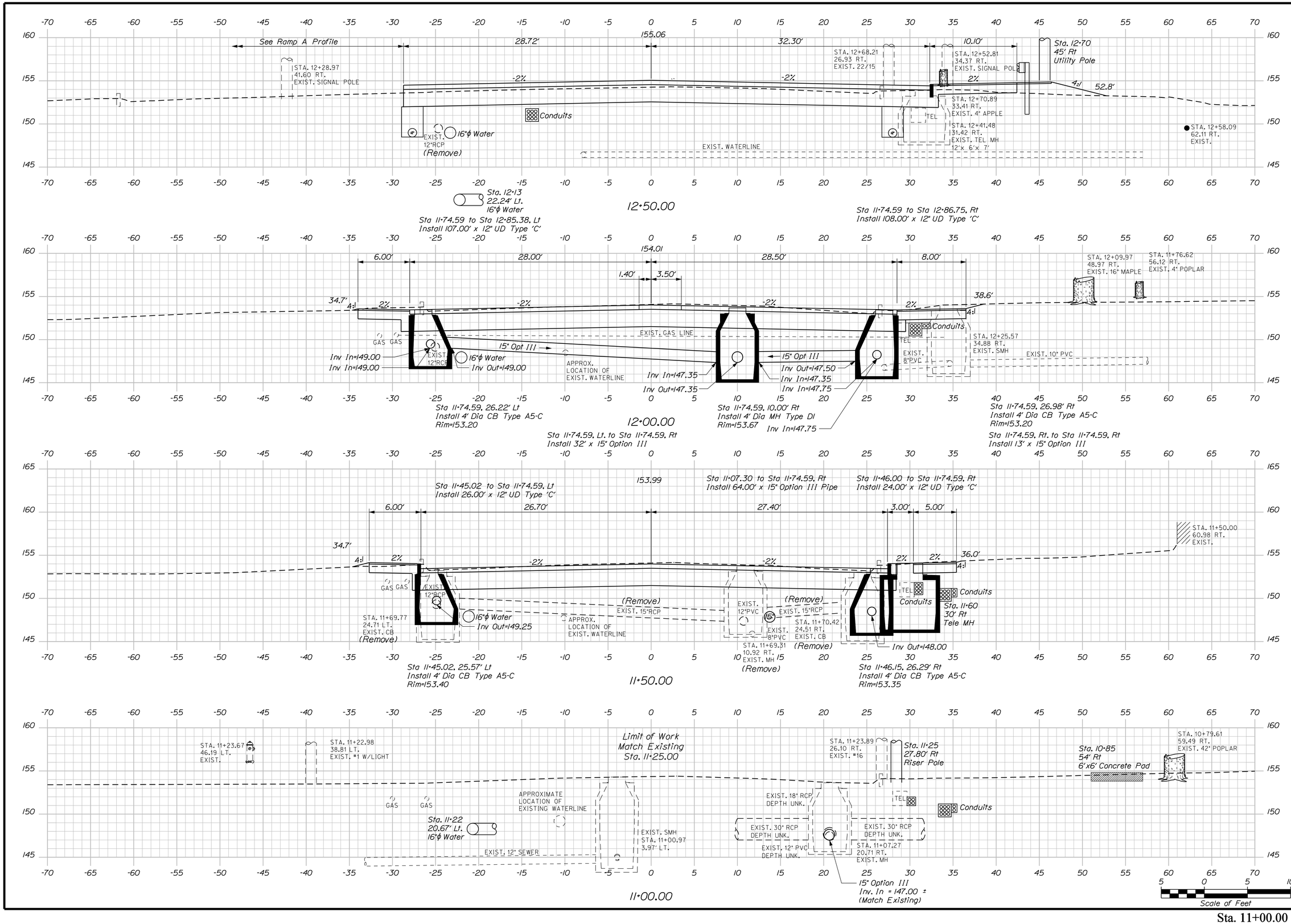

STATE OF MAINE
DEPARTMENT OF TRANSPORTATION

IM-1668(100)E

WIN 16681.00

BRIDGE NO.: 5797

BRIDGE PLANS

	BY	DATE
PROJ. MANAGER: STEPHEN BODGE		
DESIGN-DETAILED	D.ETTINGER	05-22-13
CHECKED-REVIEWED	D.ETTINGER	05-22-13
DESIGN2-DETAILED2		
DESIGN3-DETAILED3		
REVISIONS 1		
REVISIONS 2		
REVISIONS 3		
REVISIONS 4		
FIELD CHANGES		

SIGNATURE

P.E. NUMBER

DATE

UNION STREET BRIDGE
OVER INTERSTATE 95
BANGOR PENOBSCOT COUNTY

CROSS SECTIONS

SHEET NUMBER
18
OF 93

Sta. 11+00.00 to Sta. 12+50.00

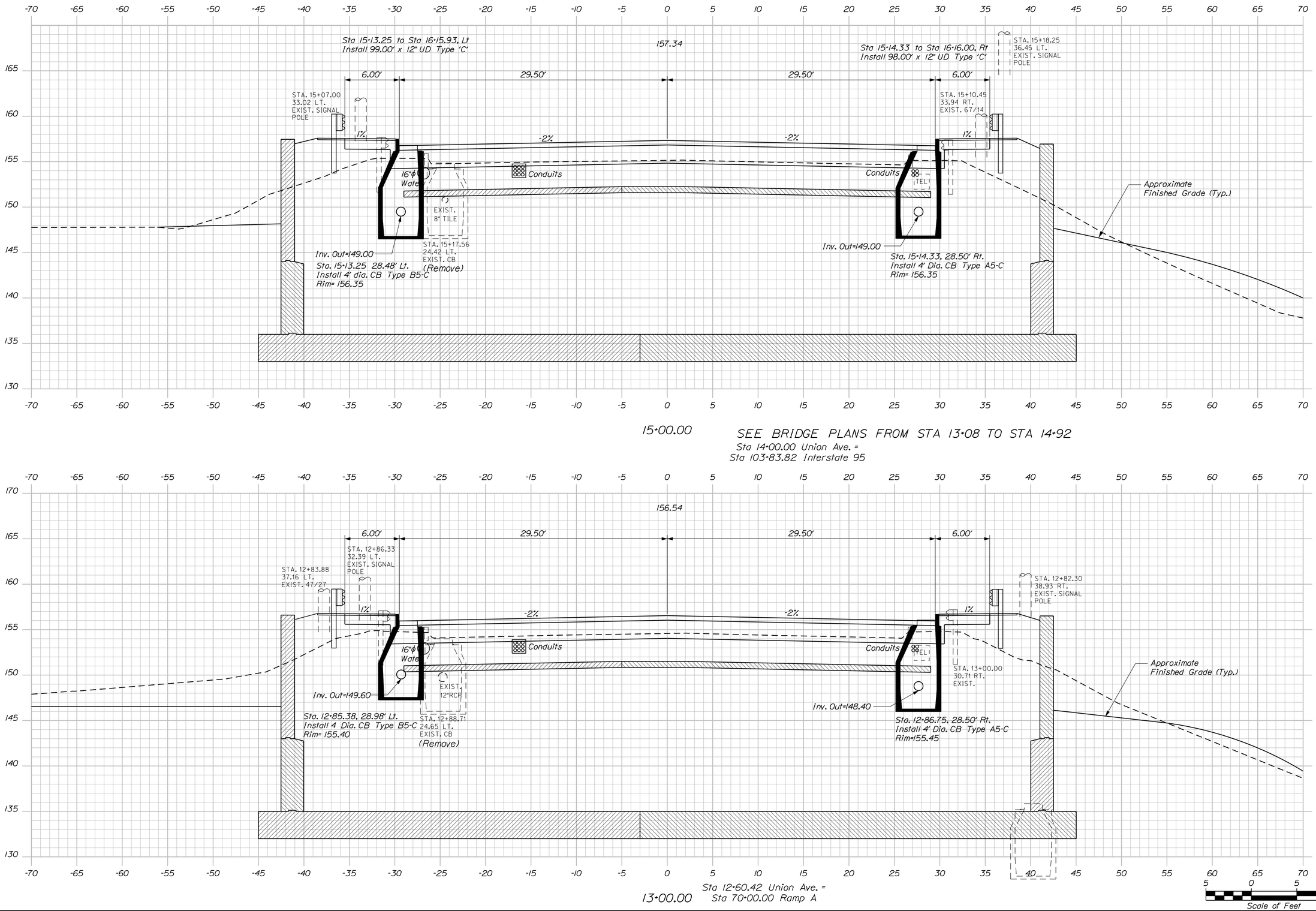

STATE OF MAINE
DEPARTMENT OF TRANSPORTATION

IM-1668(100)E

WIN 16681.00

BRIDGE NO.: 5797

BRIDGE PLANS

	BY	DATE
PROJ. MANAGER STEPHEN BODGE		
DESIGN-DETAILED	D.ETTINGER	05-22-13
CHECKED-REVIEWED	D.ETTINGER	05-22-13
DESIGN2-DETAILED2		
DESIGN3-DETAILED3		
REVISIONS 1		
REVISIONS 2		
REVISIONS 3		
REVISIONS 4		
FIELD CHANGES		

SIGNATURE

P.E. NUMBER

DATE

UNION STREET BRIDGE
OVER INTERSTATE 95
BANGOR PENOBSCOT COUNTY

CROSS SECTIONS

SHEET NUMBER

19

OF 93

Filename: ...\msto\019_XSECT_13+00_002.dgn Username: CADD Division: BRIDGE Date:1/2/2014

Sta. 13+00.00 and Sta. 15+00.00

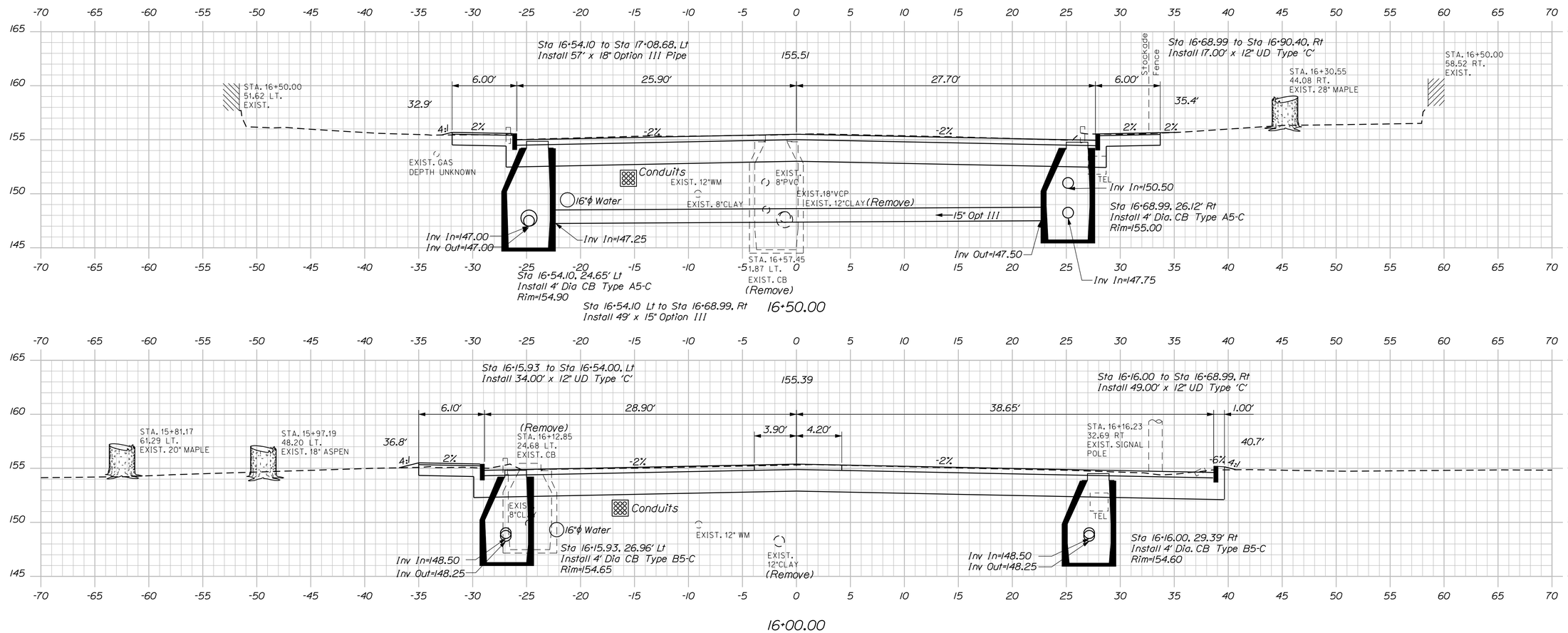

STATE OF MAINE
DEPARTMENT OF TRANSPORTATION

IM-1668(100)E

WIN 16681.00

BRIDGE NO.: 5797

BRIDGE PLANS

	BY	DATE
PROJ. MANAGER STEPHEN BODGE		
DESIGN-DETAILED	D.ETTINGER	05-22-13
CHECKED-REVIEWED	D.ETTINGER	05-22-13
DESIGN2-DETAILED2		
DESIGN3-DETAILED3		
REVISIONS 1		
REVISIONS 2		
REVISIONS 3		
REVISIONS 4		
FIELD CHANGES		

SIGNATURE

P.E. NUMBER

DATE

UNION STREET BRIDGE
OVER INTERSTATE 95
BANGOR PENOBSCOT COUNTY

CROSS SECTIONS

SHEET NUMBER
20
OF 93

Sta. 15+50.00 to Sta. 16+50.00

Filename: ...\msta\020_XSECT_15+50_003.dgn Division: BRIDGE Username: CADD Date:1/2/2014

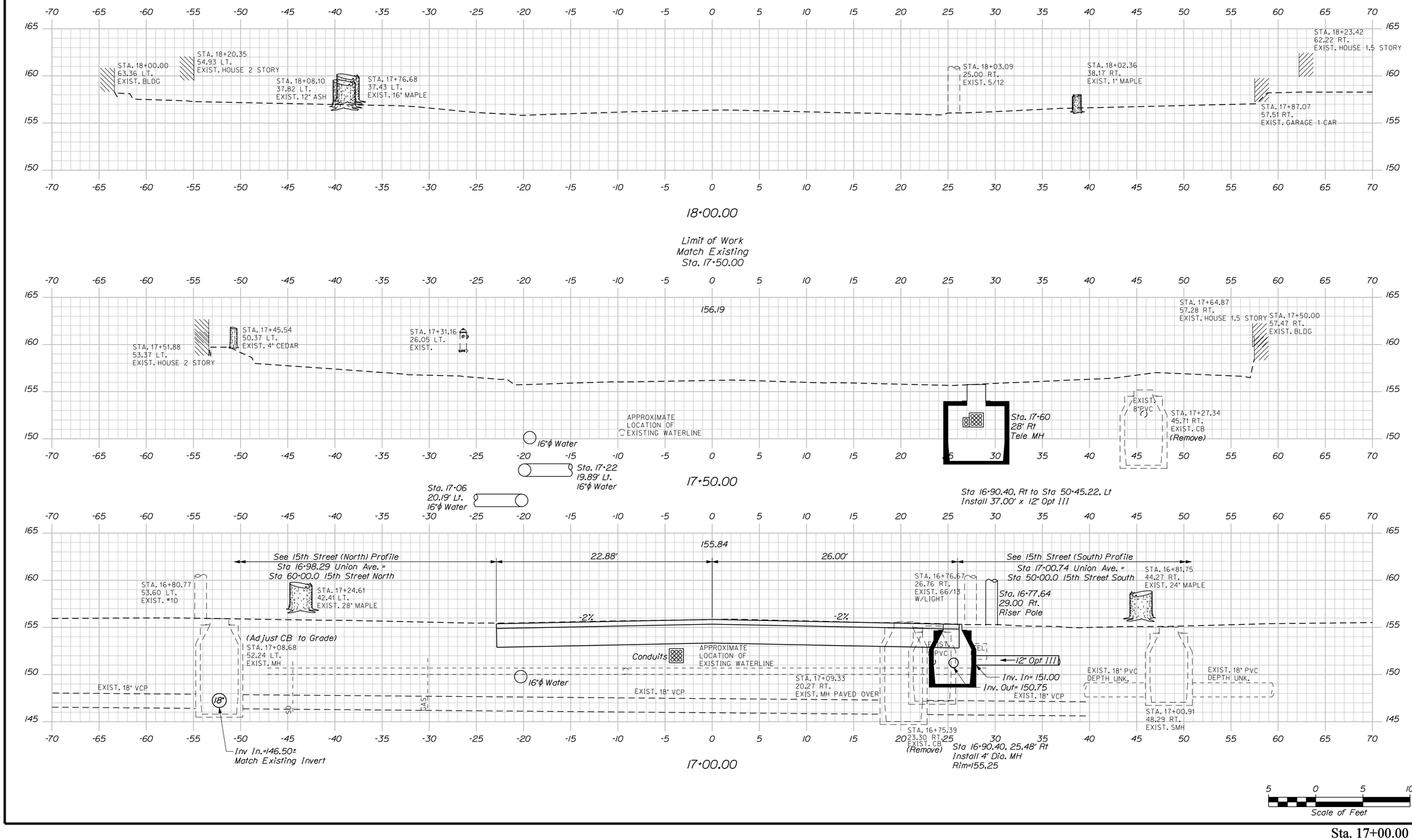

STATE OF MAINE
DEPARTMENT OF TRANSPORTATION

IM-1668(100)E

WIN 16681.00

BRIDGE NO.: 5797

BRIDGE PLANS

	BY	DATE
PROJ. MANAGER STEPHEN BODGE		
DESIGN-DETAILED	D.ETTINGER	05-22-13
CHECKED-REVIEWED	D.ETTINGER	05-22-13
DESIGN2-DETAILED2		
DESIGN3-DETAILED3		
REVISIONS 1		
REVISIONS 2		
REVISIONS 3		
REVISIONS 4		
FIELD CHANGES		

SIGNATURE

P.E. NUMBER

DATE

UNION STREET BRIDGE
OVER INTERSTATE 95
BANGOR PENOBSCOT COUNTY

CROSS SECTIONS

SHEET NUMBER

21

OF 93

Sta. 17+00.00 to Sta. 18+00.00

Filename: ...\mslo\021_XSECT_17+00_004.dgn Username: CADD Division: BRIDGE Date:1/2/2014

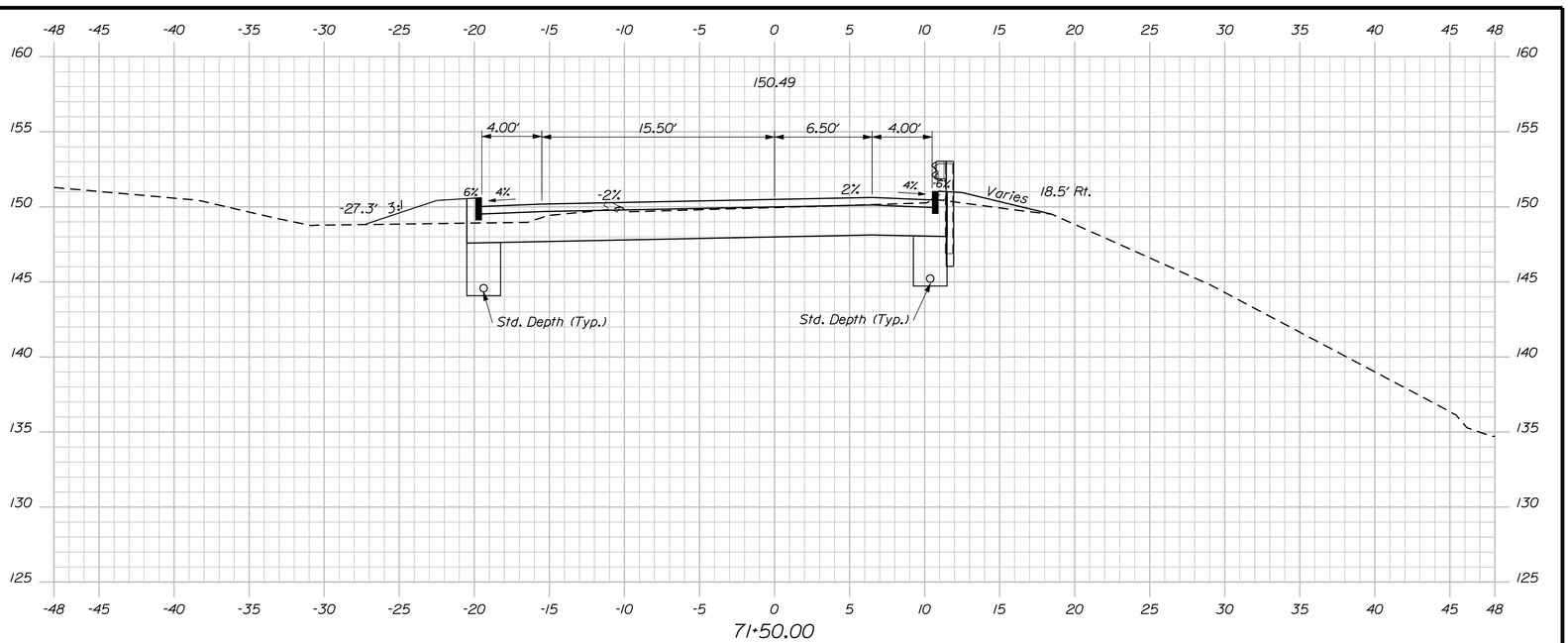

71+50.00

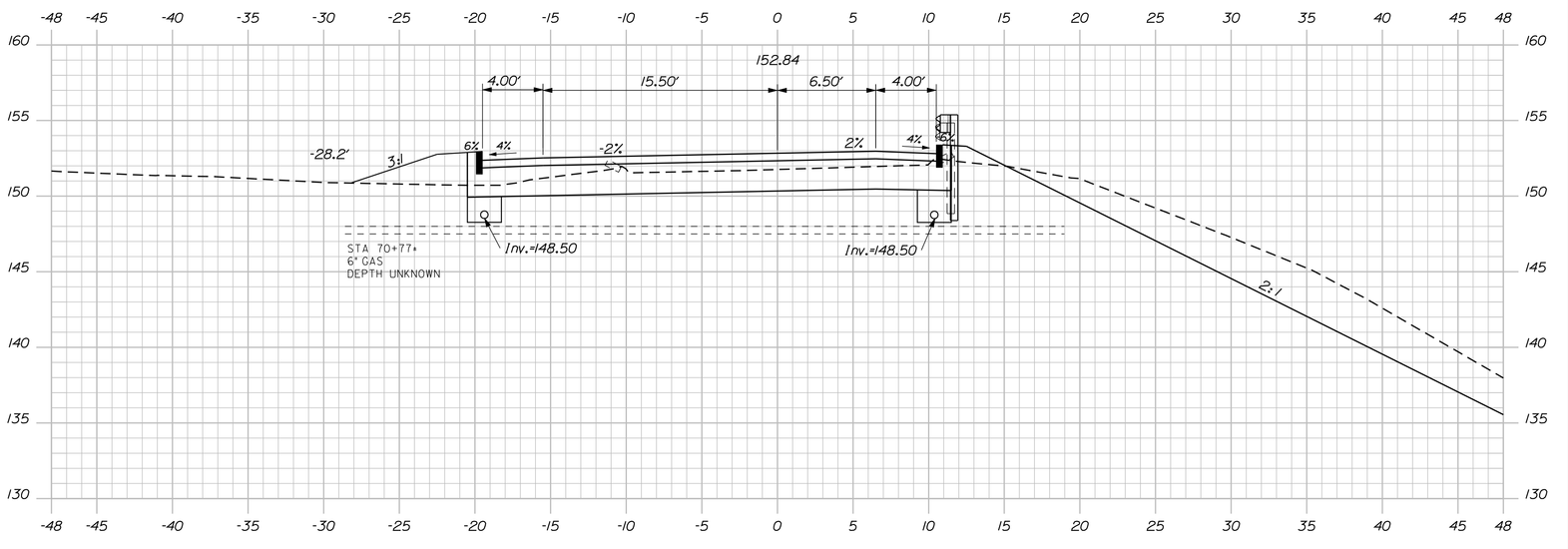

71+00.00

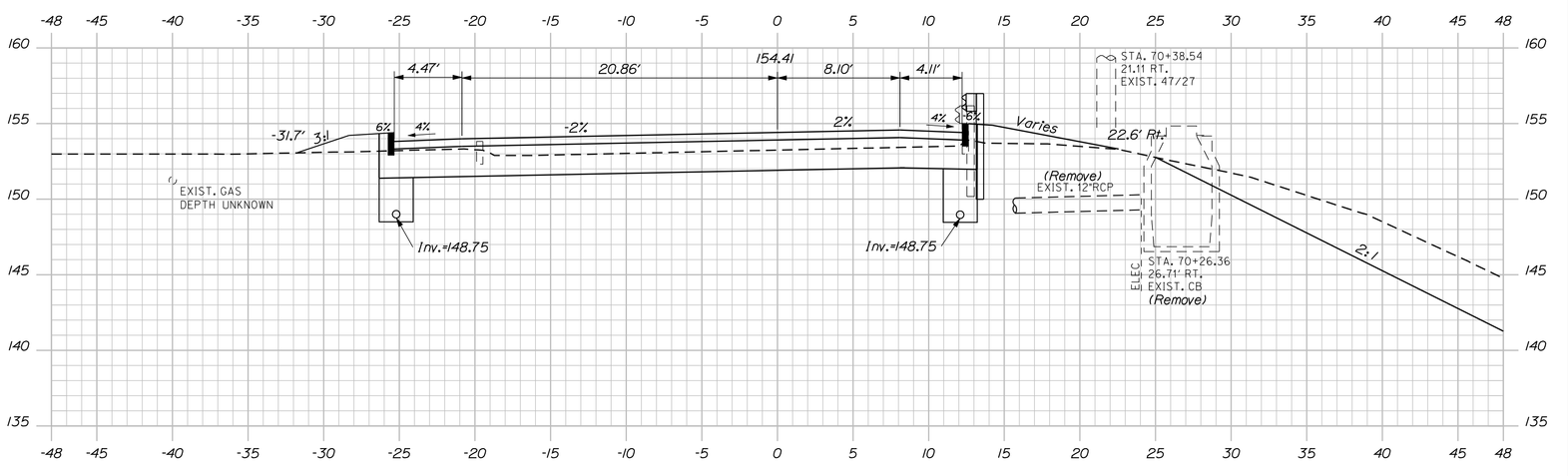

Sta. 70+37.21 to Sta.72+39.20 Lt.
Install 204 LF x 6" UD Type 'B'

70+50.00

Sta. 70+42.02 to Sta.74+29.14 Rt.
Install 386 LF x 6" UD Type 'B'

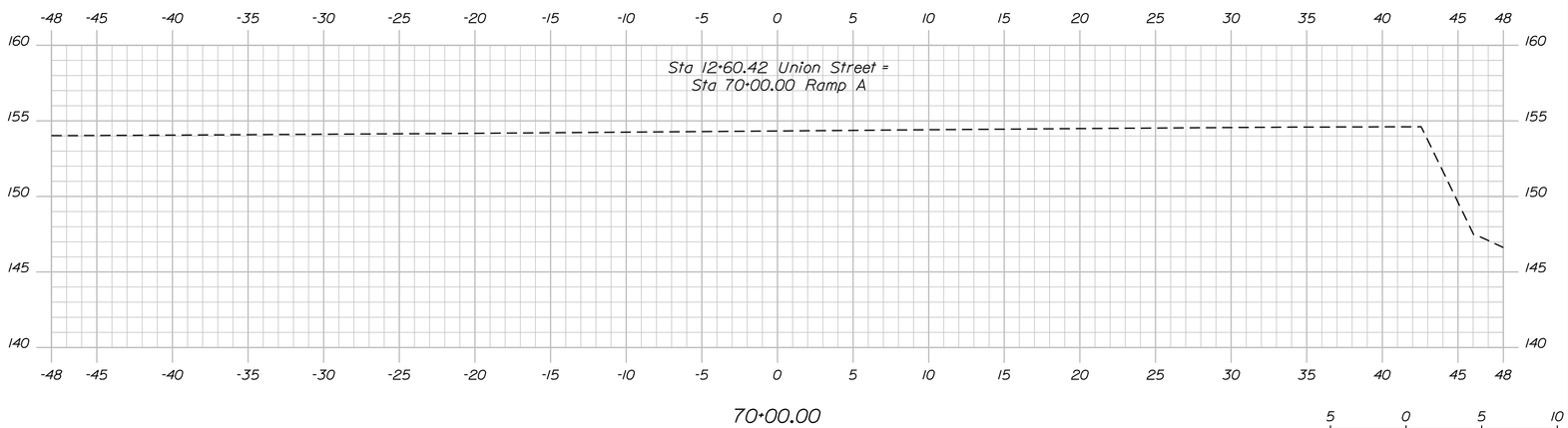

70+00.00

5 0 5 10
Scale of Feet

Sta. 70+00.00 to Sta. 71+50.00

SHEET NUMBER 22 OF 93

UNION STREET BRIDGE
OVER INTERSTATE 95
BANGOR PENOBSCOT COUNTY

RAMP A
CROSS SECTIONS

PROJ. MANAGER STEPHEN BODGE		BY	DATE
DESIGN-DETAILED	D.ETTINGER	D. BURGESS	07-09-13
CHECKED-REVIEWED	D.ETTINGER	T.GORRILL	07-09-13
DESIGN2-DETAILED2			
DESIGN3-DETAILED3			
REVISIONS 1			
REVISIONS 2			
REVISIONS 3			
REVISIONS 4			
FIELD CHANGES			

SIGNATURE

P.E. NUMBER

DATE

STATE OF MAINE
DEPARTMENT OF TRANSPORTATION

IM-1668(100)E

BRIDGE NO.: 5797 WIN 16681.00 BRIDGE PLANS

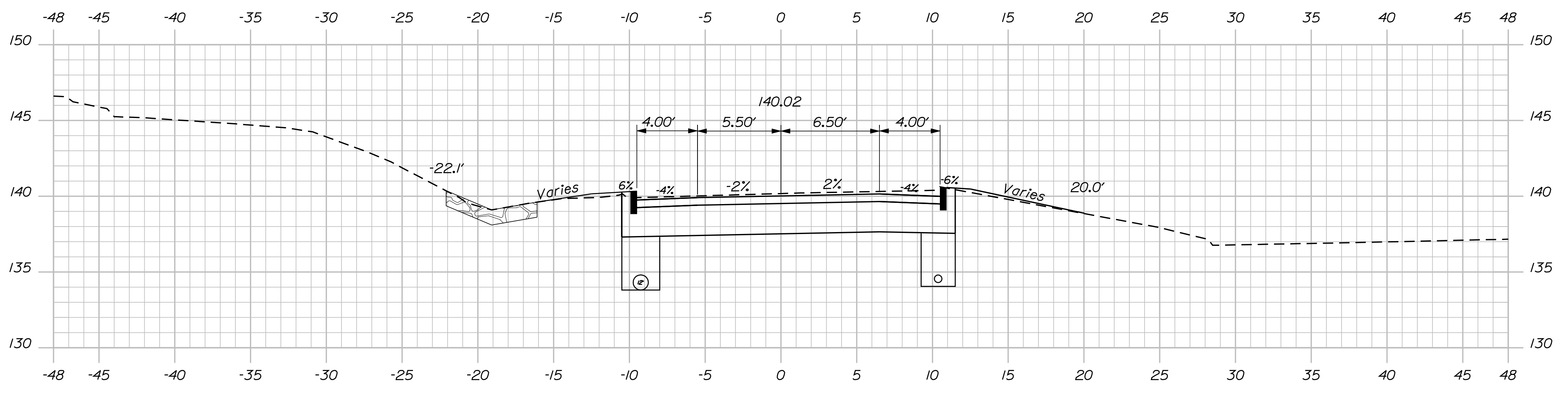

73+50.00

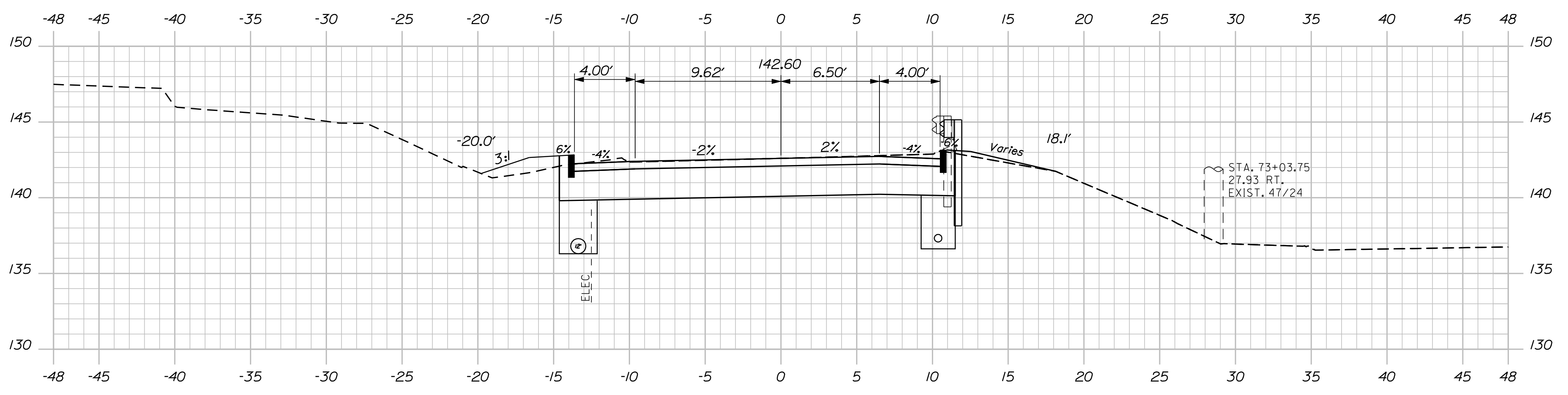

Sta. 72+39.20 to Sta.74+28.47 Lt.
Install 186 LF x 12" UD Type 'C'

73+00.00

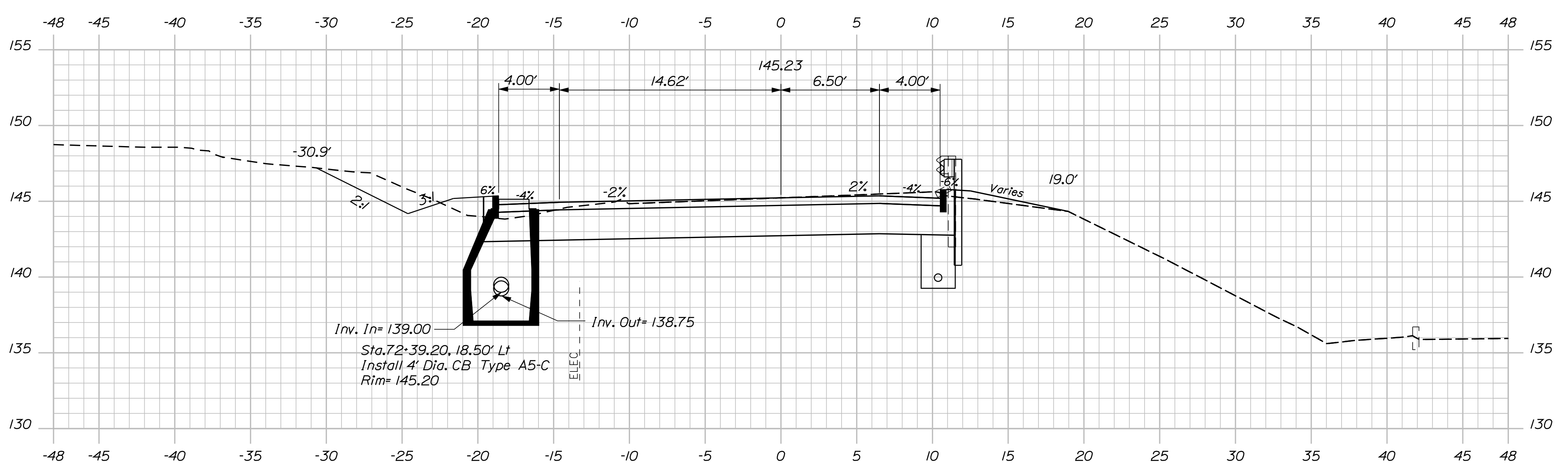

72+50.00

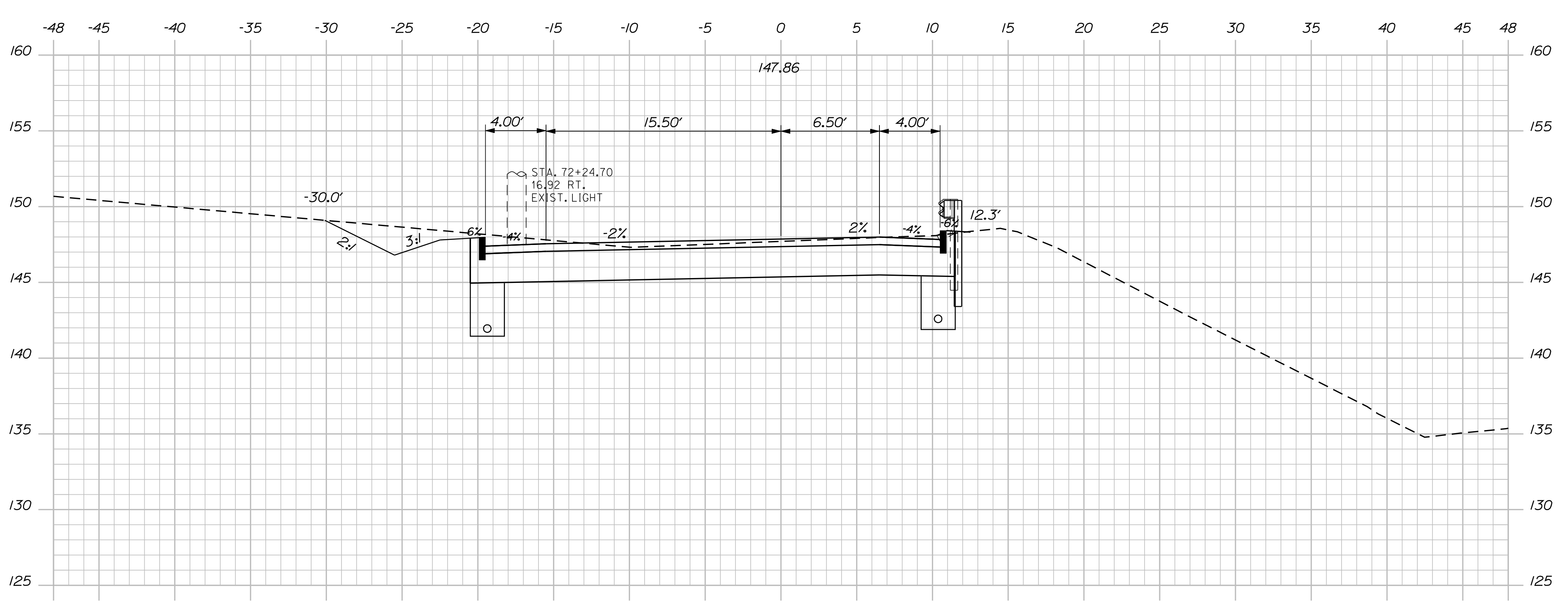

72+00.00

5 0 5 10
Scale of Feet

Sta. 72+00.00 to Sta. 73+50.00

SHEET NUMBER 23 OF 93

UNION STREET BRIDGE
OVER INTERSTATE 95
BANGOR PENOBSCOT COUNTY

RAMP A
CROSS SECTIONS

PROJ. MANAGER STEPHEN BODGE		BY	DATE
DESIGN-DETAILED	D.ETTINGER	D. BURGESS	07-09-13
CHECKED-REVIEWED	D.ETTINGER	T.GORRILL	07-09-13
DESIGN2-DETAILED2			
DESIGN3-DETAILED3			
REVISIONS 1			
REVISIONS 2			
REVISIONS 3			
REVISIONS 4			
FIELD CHANGES			

SIGNATURE

P.E. NUMBER

DATE

STATE OF MAINE
DEPARTMENT OF TRANSPORTATION

IM-1668(100)E

BRIDGE NO.: 5797 WIN 16681.00 BRIDGE PLANS

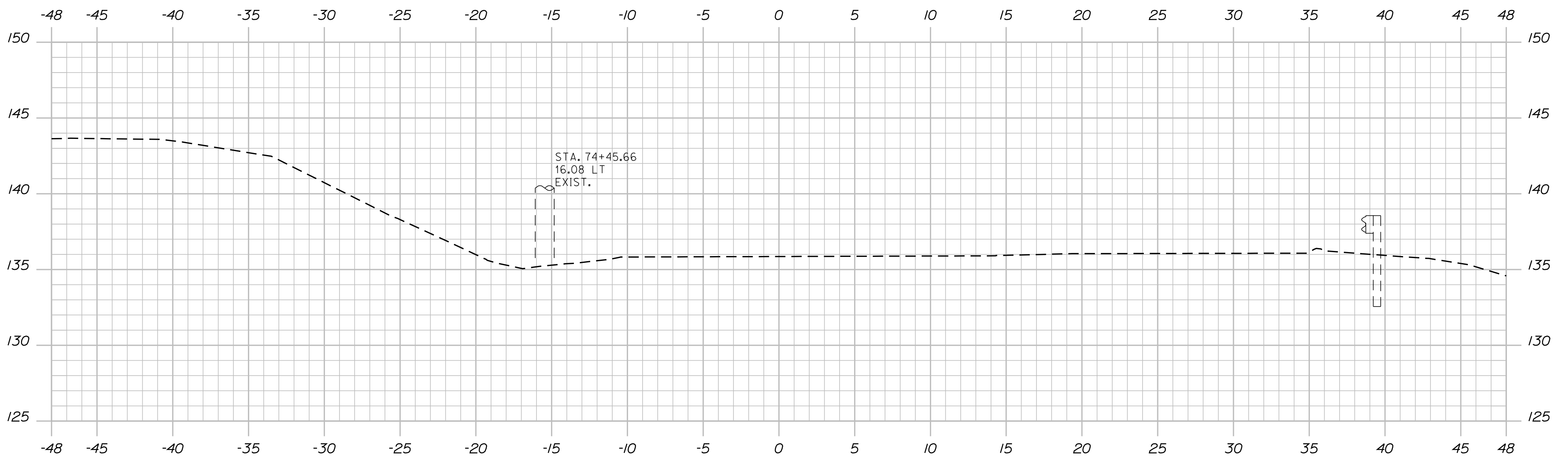

74+50.00

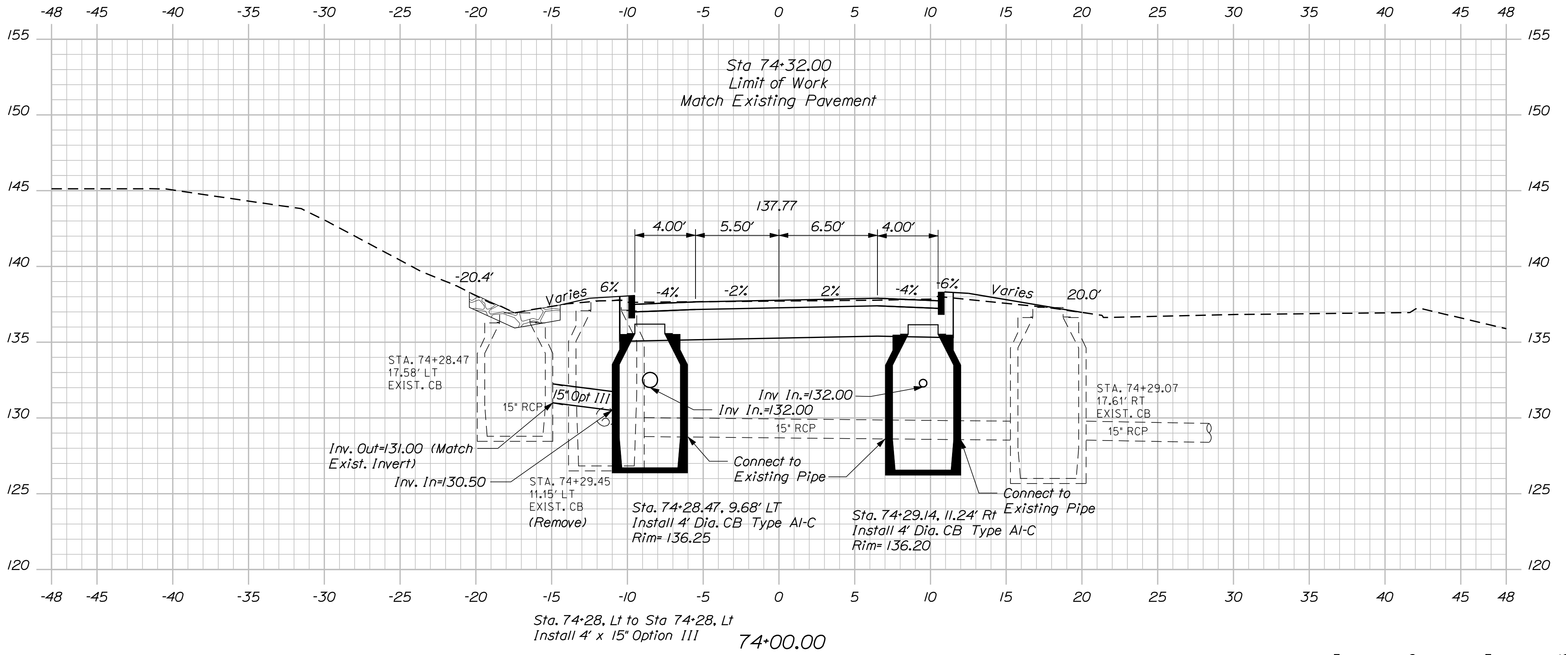

74+00.00

5 0 5 10
Scale of Feet

Sta. 74+00.00 to Sta. 74+00.00

SHEET NUMBER 24 OF 93

UNION STREET BRIDGE
OVER INTERSTATE 95
BANGOR PENOBSCOT COUNTY

RAMP A
CROSS SECTIONS

PROJ. MANAGER STEPHEN BODGE		BY	DATE
DESIGN-DETAILED	D.ETTINGER	D. BURGESS	07-09-13
CHECKED-REVIEWED	D.ETTINGER	T.GORRILL	07-09-13
DESIGN2-DETAILED2			
DESIGN3-DETAILED3			
REVISIONS 1			
REVISIONS 2			
REVISIONS 3			
REVISIONS 4			
FIELD CHANGES			

SIGNATURE

P.E. NUMBER

DATE

STATE OF MAINE
DEPARTMENT OF TRANSPORTATION

IM-1668(100)E

BRIDGE NO.: 5797 WIN 16681.00 BRIDGE PLANS

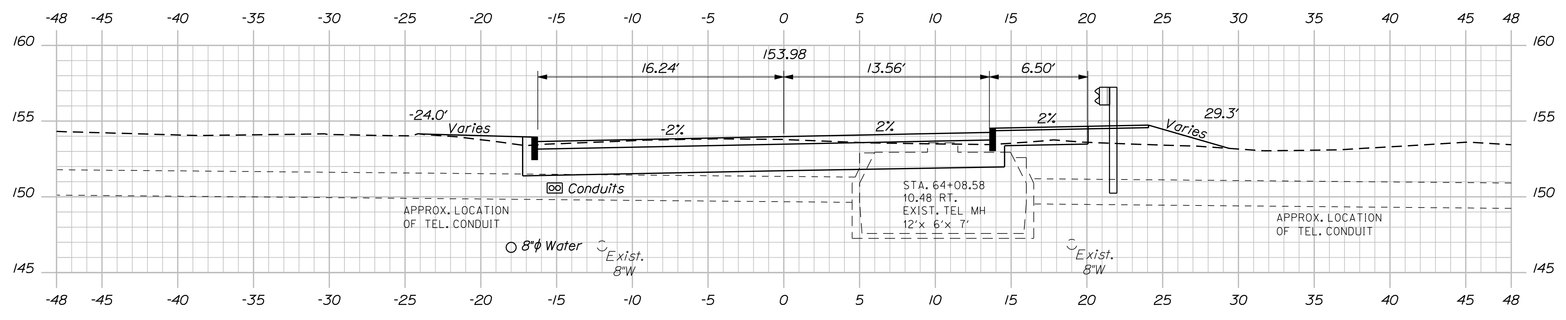

64+00.00

Sta. 63+75.00 Lt to Sta. 63+74.32 Rt.
Install 50.00 LF x 15" Option III Pipe

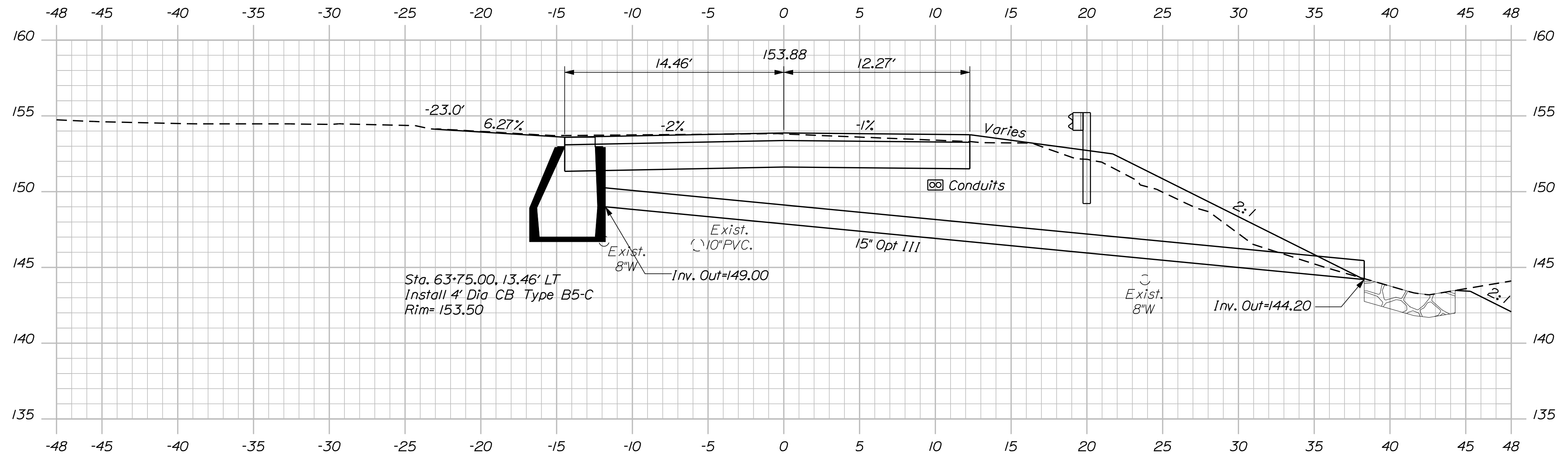

63+75.00

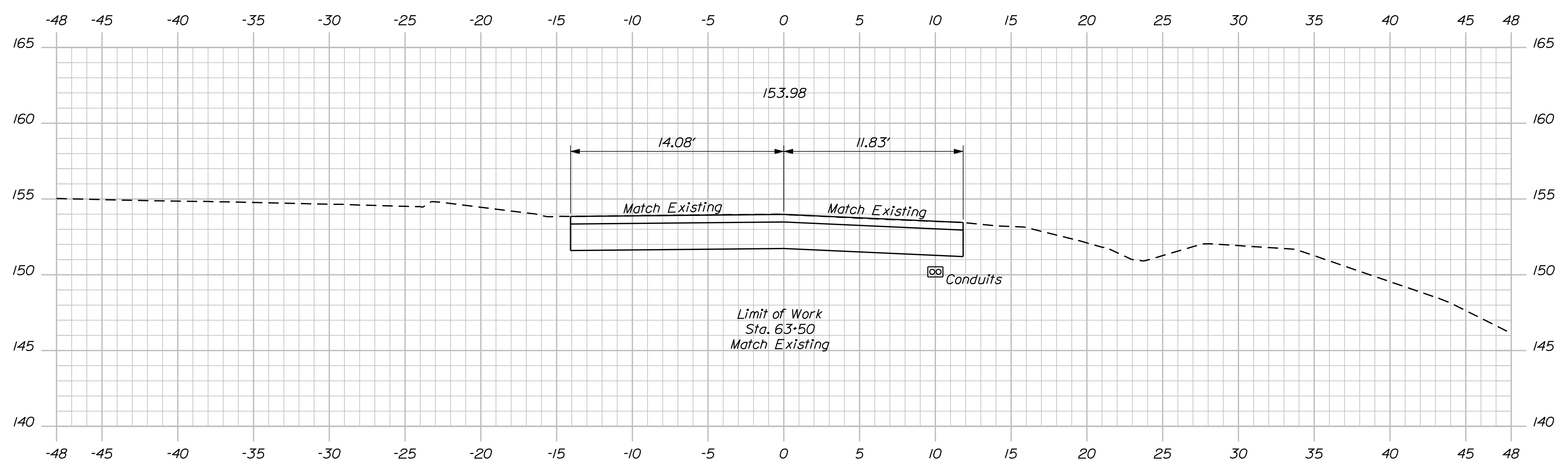

63+50.00

5 0 5 10
Scale of Feet

Sta. 63+50.00 to Sta. 64+00.00

SHEET NUMBER 25 OF 93

UNION STREET BRIDGE
OVER INTERSTATE 95
BANGOR PENOBSCOT COUNTY

SUNSET AVENUE CROSS SECTIONS

PROJ. MANAGER STEPHEN BODGE		BY	DATE
DESIGN-DETAILED	D. ETTINGER	L. NEWHOUSE	05-22-13
CHECKED-REVIEWED	D.ETTINGER	T. GORRILL	05-22-13
DESIGN2-DETAILED2	------	------	------
DESIGN3-DETAILED3	------	------	------
REVISIONS 1	------		------
REVISIONS 2	------		------
REVISIONS 3	------		------
REVISIONS 4	------		------
FIELD CHANGES	------		------

SIGNATURE

P.E. NUMBER

DATE

STATE OF MAINE
DEPARTMENT OF TRANSPORTATION

IM-1668(100)E

BRIDGE NO.: 5797 WIN 16681.00 BRIDGE PLANS

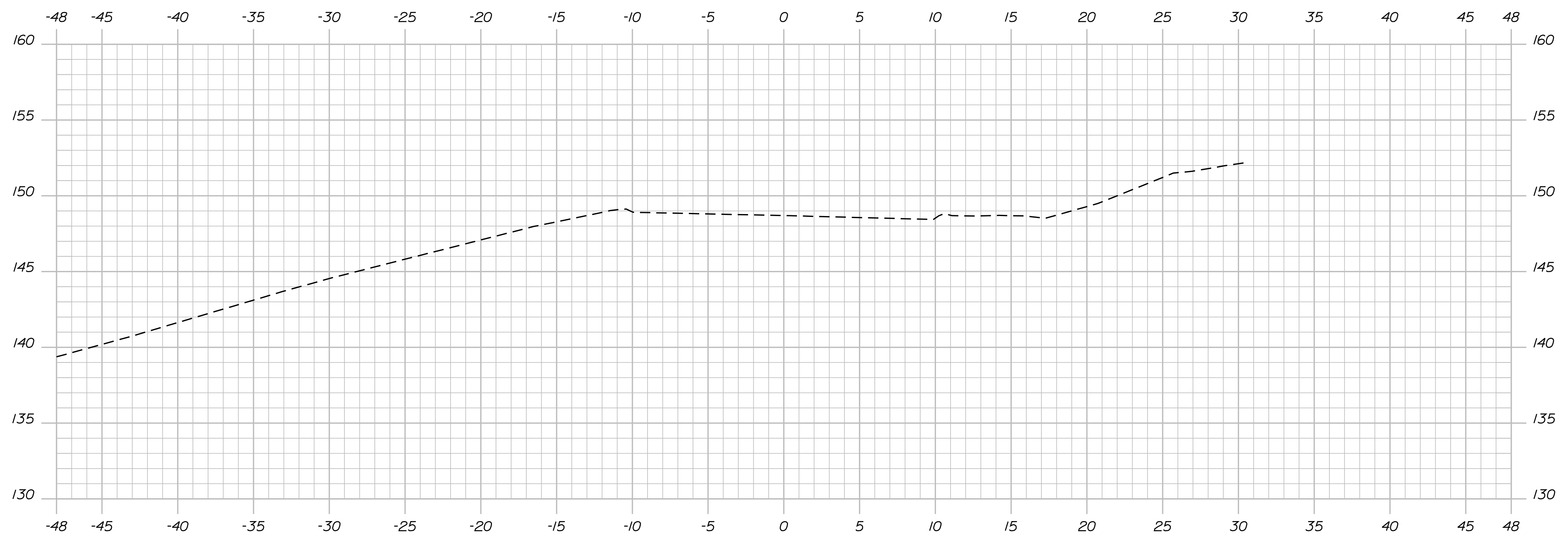

82+00.00

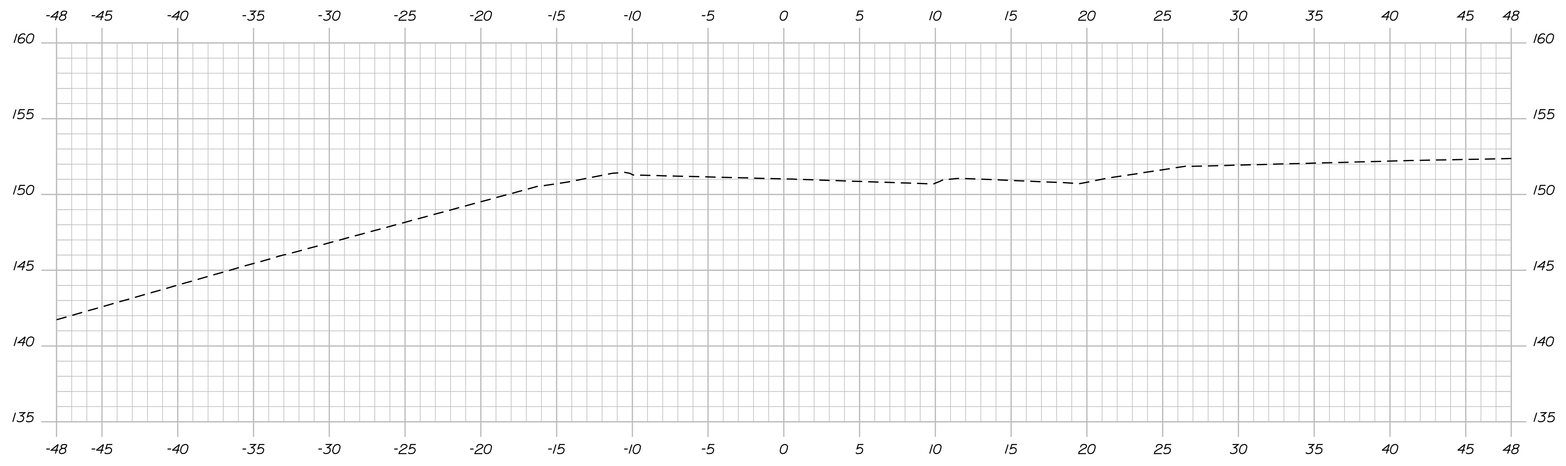

81+50.00

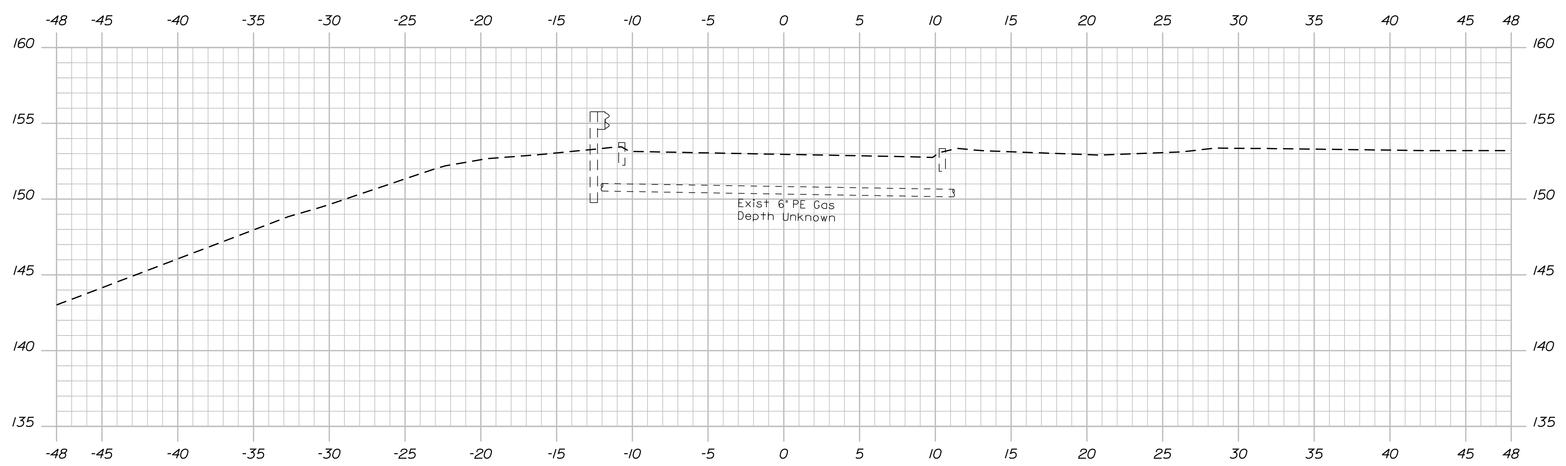

81+00.00

Sta 8+50.00
Limit of Work
See NB On-Ramp
Project WIN 19256.00

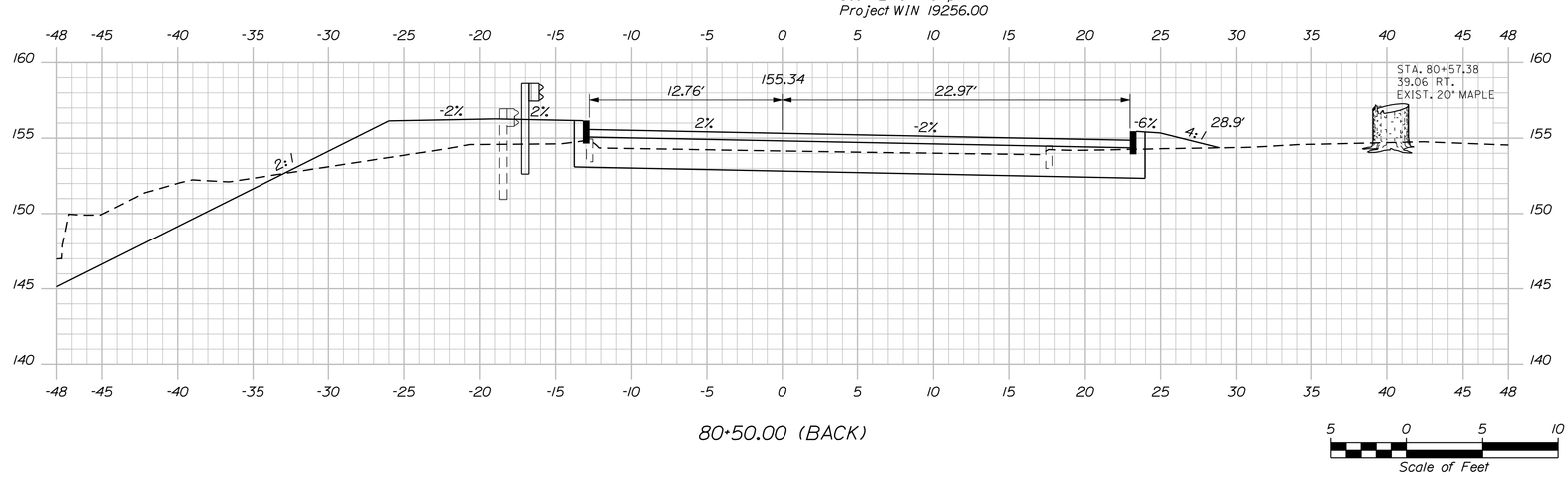

80+50.00 (BACK)

5 0 5 10
Scale of Feet

Sta. 80+50.00 to Sta. 82+00.00

SHEET NUMBER 26 OF 93

UNION STREET BRIDGE
OVER INTERSTATE 95
BANGOR PENOBSCOT COUNTY

RAMP G CROSS SECTIONS

	PROJ. MANAGER STEPHEN BODGE	BY	DATE
DESIGN-DETAILED	D. ETTINGER	L. NEWHOUSE	05-22-13
CHECKED-REVIEWED	D.ETTINGER	T. GORRILL	05-22-13
DESIGN2-DETAILED2	------	------	------
DESIGN3-DETAILED3	------	------	------
REVISIONS 1	------		------
REVISIONS 2	------		------
REVISIONS 3	------		------
REVISIONS 4	------		------
FIELD CHANGES	------		------

SIGNATURE

P.E. NUMBER

DATE

STATE OF MAINE
DEPARTMENT OF TRANSPORTATION

IM-1668(100)E

BRIDGE NO.: 5797 WIN 16681.00 BRIDGE PLANS

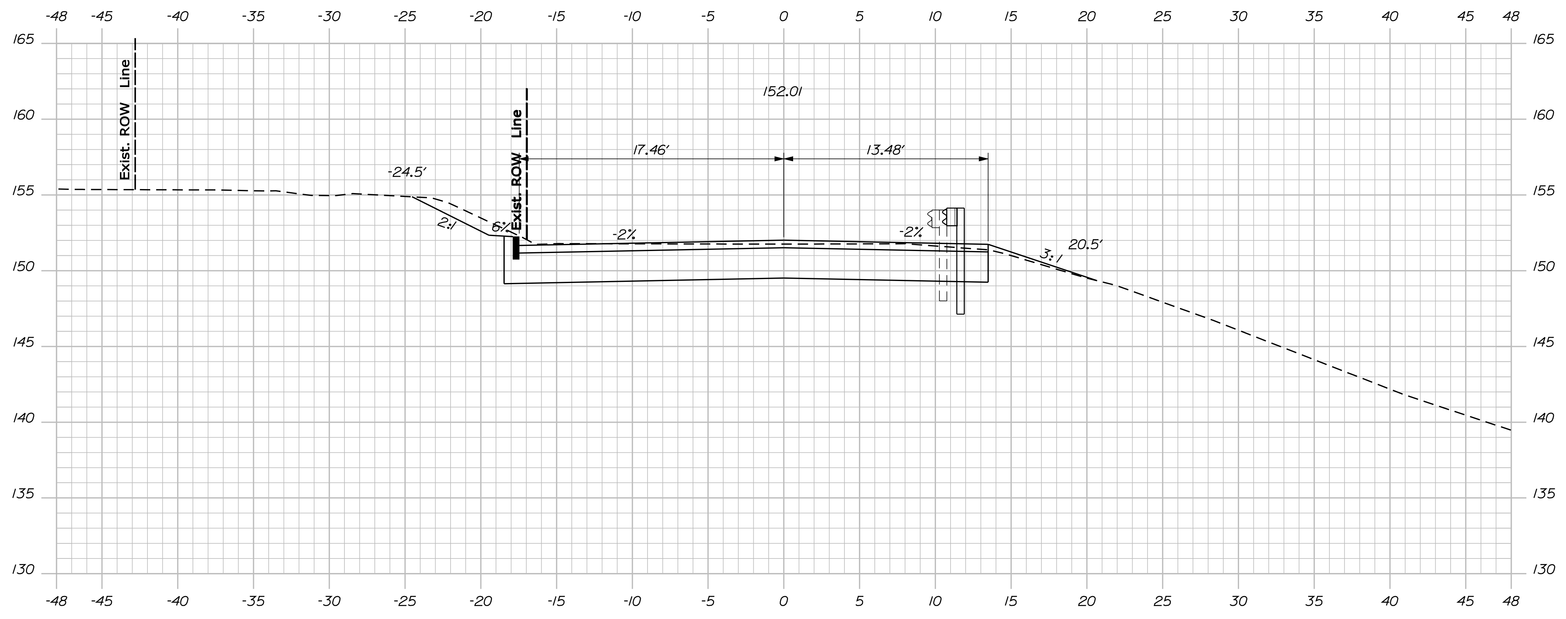

91+50.00

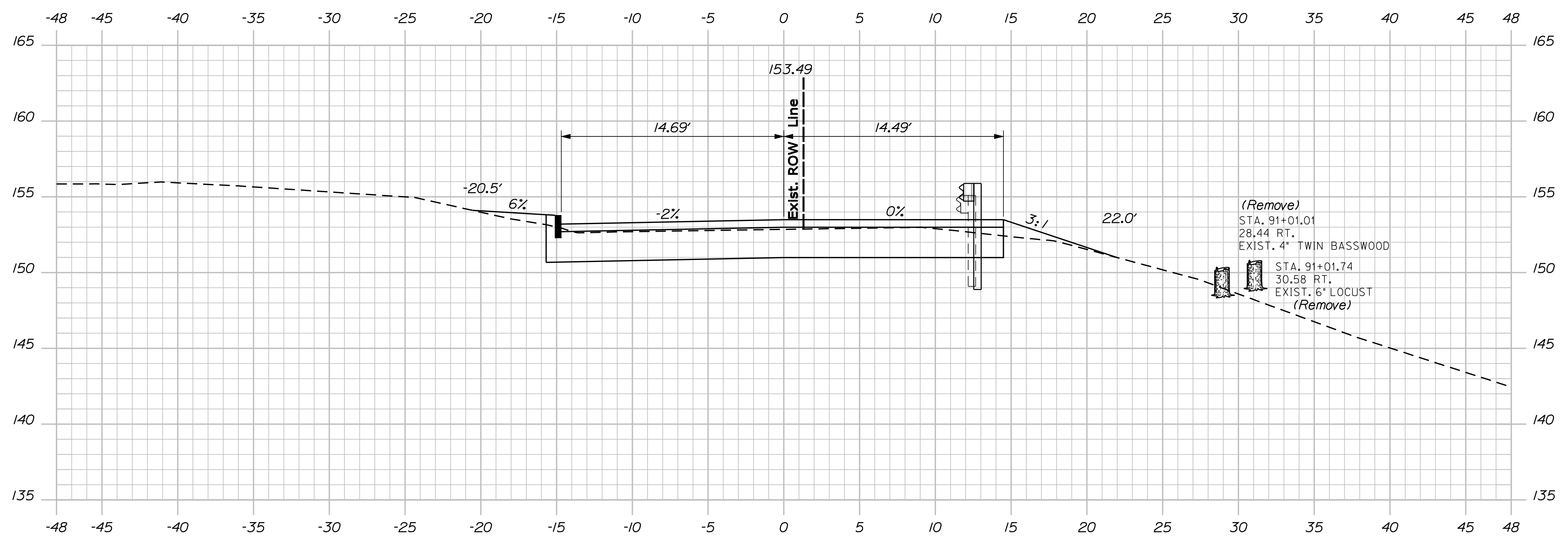

91+00.00

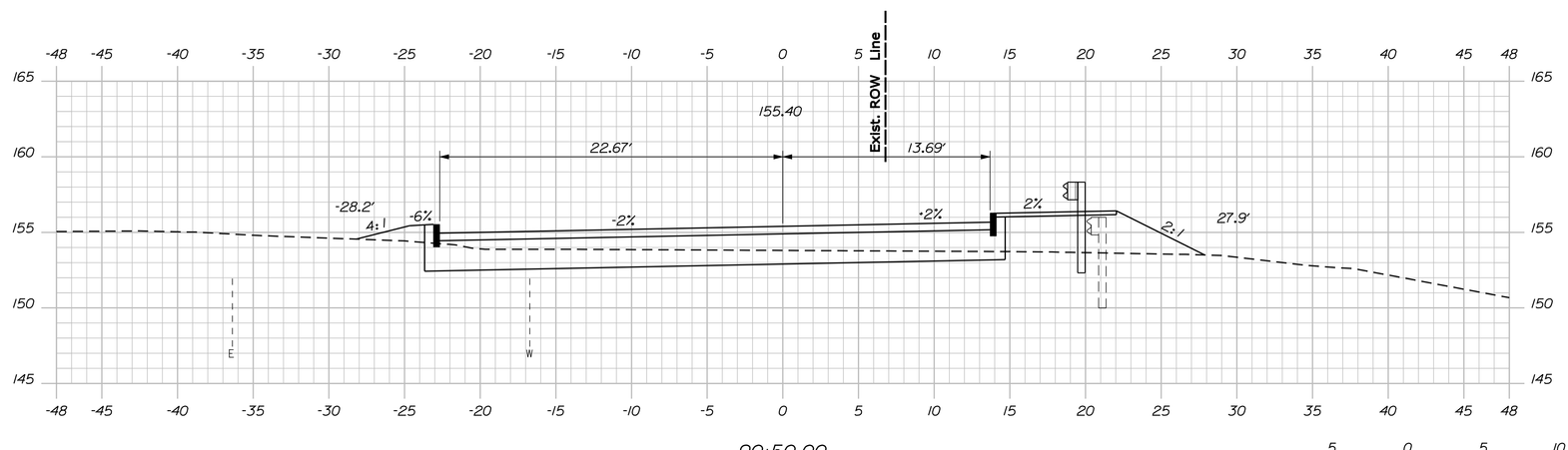

90+50.00

5 0 5 10
Scale of Feet

Sta. 90+50.00 to Sta. 91+50.00

SHEET NUMBER 27 OF 93

UNION STREET BRIDGE
OVER INTERSTATE 95
BANGOR PENOBSCOT COUNTY

RAMP J CROSS SECTIONS

PROJ. MANAGER STEPHEN BODGE		BY	DATE
DESIGN-DETAILED	D. ETTINGER	L. NEWHOUSE	05-22-13
CHECKED-REVIEWED	D.ETTINGER	T. GORRILL	05-22-13
DESIGN2-DETAILED2	-------	-------	-------
DESIGN3-DETAILED3	-------	-------	-------
REVISIONS 1	-------		-------
REVISIONS 2	-------		-------
REVISIONS 3	-------		-------
REVISIONS 4	-------		-------
FIELD CHANGES	-------		-------

SIGNATURE

P.E. NUMBER

DATE

STATE OF MAINE
DEPARTMENT OF TRANSPORTATION

IM-1668(100)E

BRIDGE NO.: 5797 WIN 16681.00 BRIDGE PLANS

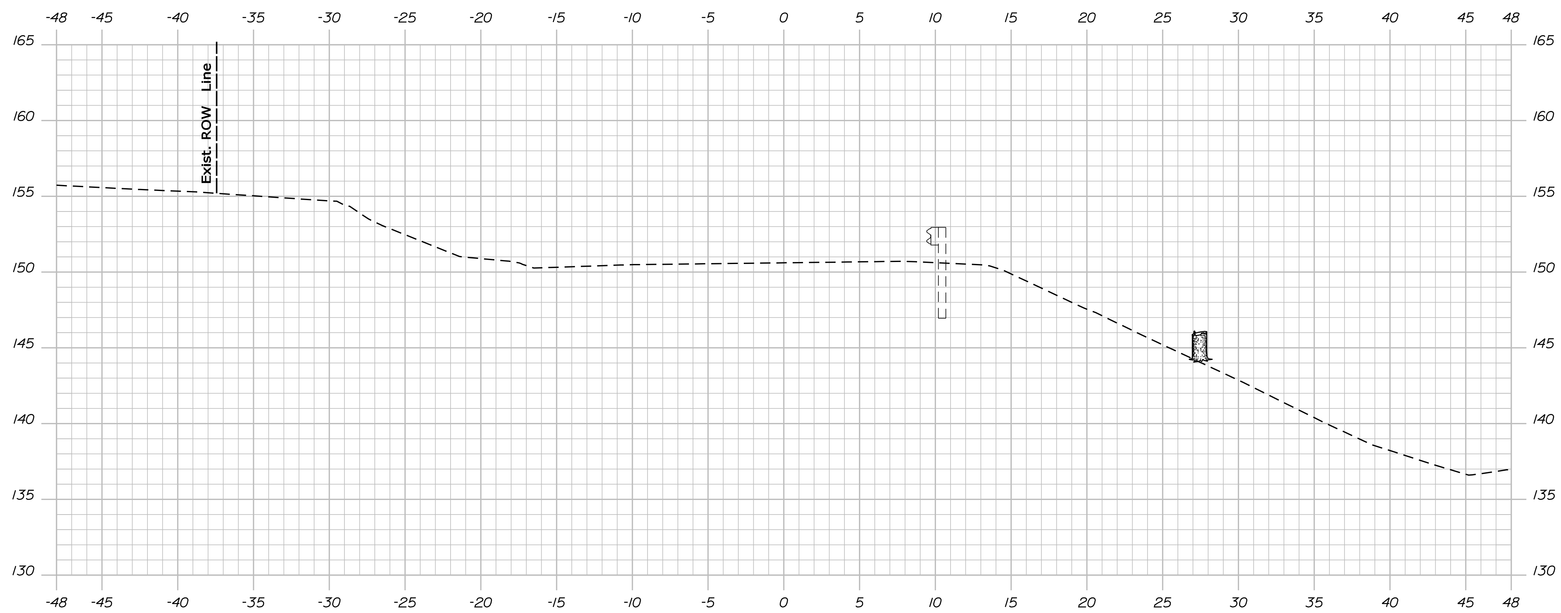

92+50.00

Limit of Work
Match Existing
Sta. 92+09

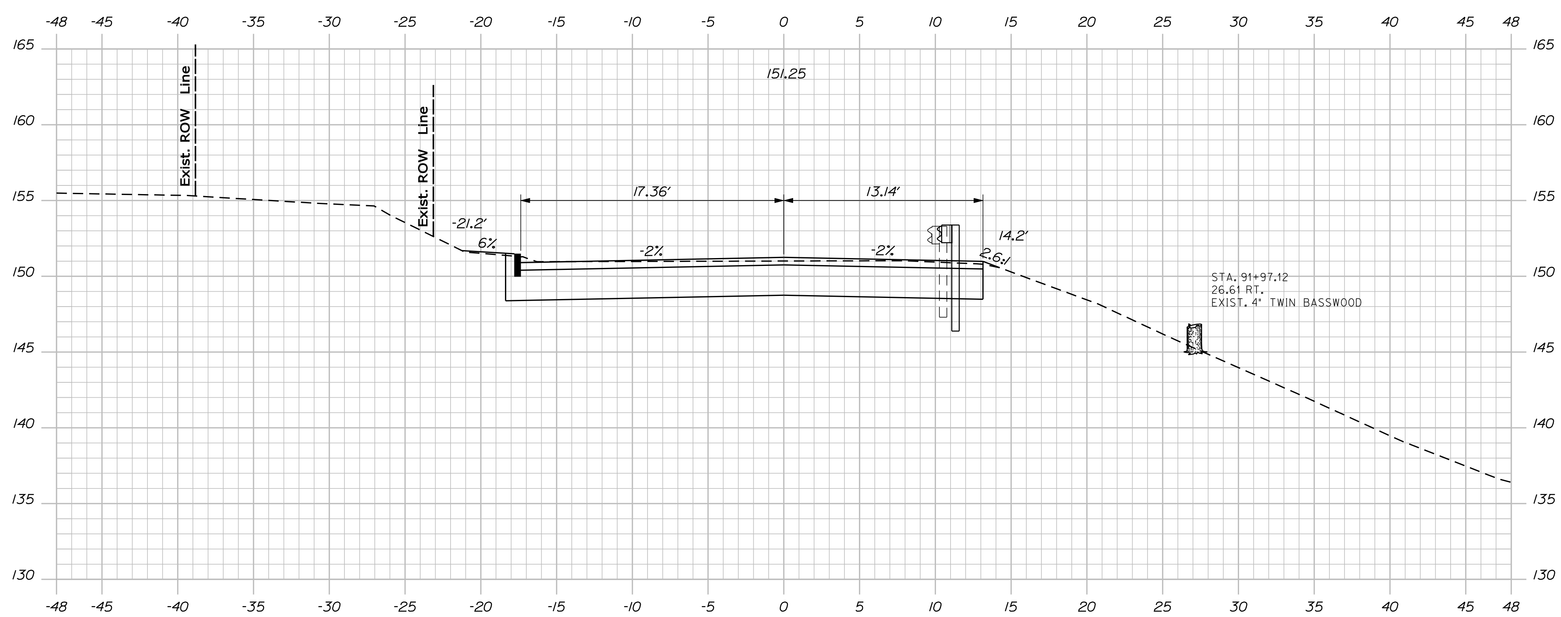

92+00.00

5 0 5 10
Scale of Feet

Sta. 92+00.00 to Sta. 92+50.00

SHEET NUMBER 28 OF 93

UNION STREET BRIDGE
OVER INTERSTATE 95
BANGOR PENOBSCOT COUNTY

RAMP J CROSS SECTIONS

	PROJ. MANAGER STEPHEN BODGE	BY	DATE
DESIGN-DETAILED	D. ETTINGER	L. NEWHOUSE	05-22-13
CHECKED-REVIEWED	D.ETTINGER	T. GORRILL	05-22-13
DESIGN2-DETAILED2	------	------	------
DESIGN3-DETAILED3	------	------	------
REVISIONS 1	------		------
REVISIONS 2	------		------
REVISIONS 3	------		------
REVISIONS 4	------		------
FIELD CHANGES	------		------

SIGNATURE

P.E. NUMBER

DATE

STATE OF MAINE
DEPARTMENT OF TRANSPORTATION

IM-1668(100)E

BRIDGE NO.: 5797 WIN 16681.00 BRIDGE PLANS

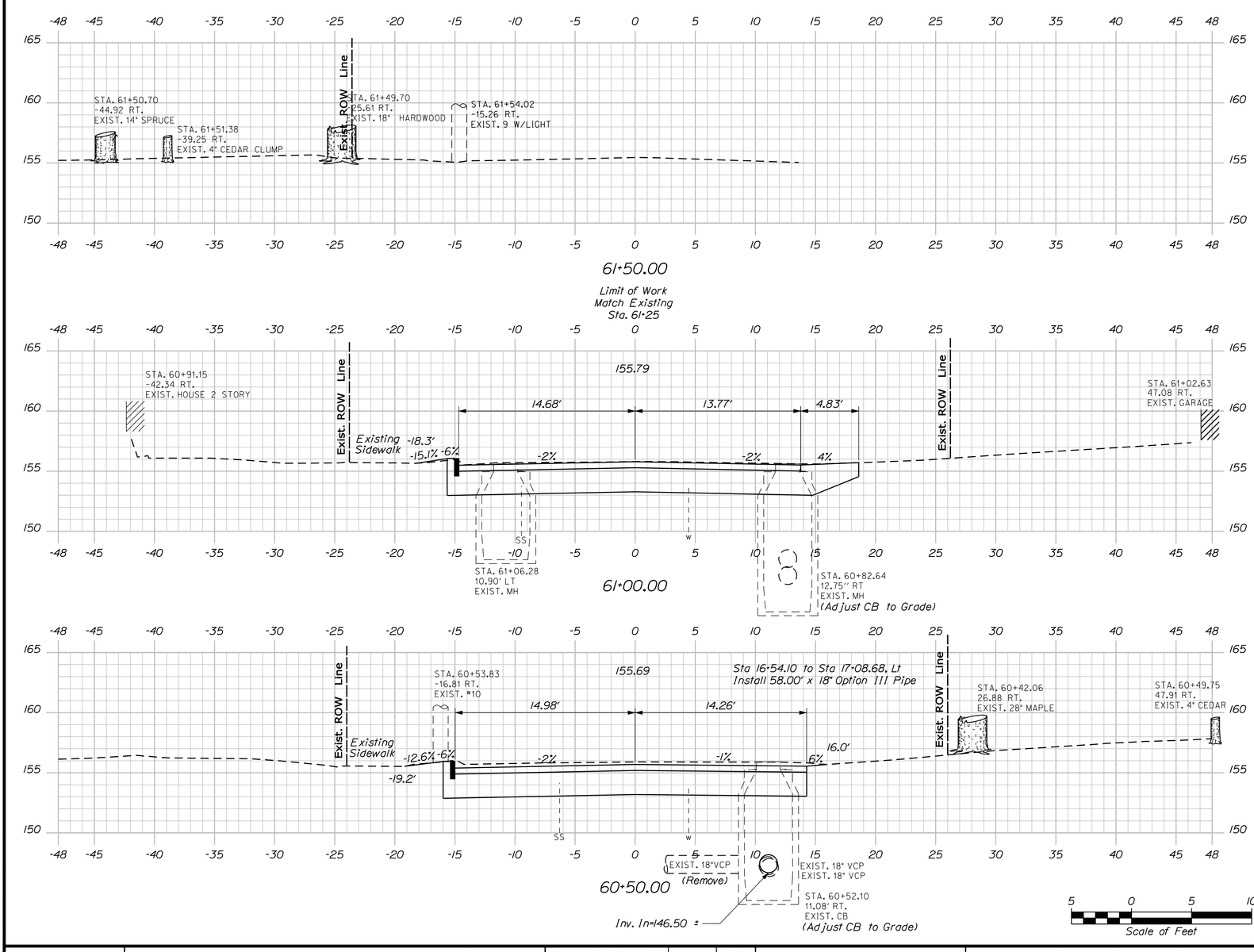

Sta. 60+50.00 to Sta. 61+50.00

PROJ. MANAGER	STEPHEN BODGE	BY	DATE
DESIGN-DETAILED	D. ETTINGER	L. NEWHOUSE	05-22-13
CHECKED-REVIEWED	D.ETTINGER	T. GORRILL	05-22-13
DESIGN2-DETAILED2	------	------	------
DESIGN3-DETAILED3	------	------	------
REVISIONS 1	------		------
REVISIONS 2	------		------
REVISIONS 3	------		------
REVISIONS 4	------		------
FIELD CHANGES	------		------

SIGNATURE

P.E. NUMBER

DATE

UNION STREET BRIDGE
OVER INTERSTATE 95
BANGOR PENOBSCOT COUNTY
15TH ST. NORTH CROSS SECTIONS

SHEET NUMBER 29 OF 93

STATE OF MAINE
DEPARTMENT OF TRANSPORTATION

IM-1668(100)E

BRIDGE NO.: 5797 WIN 16681.00 BRIDGE PLANS

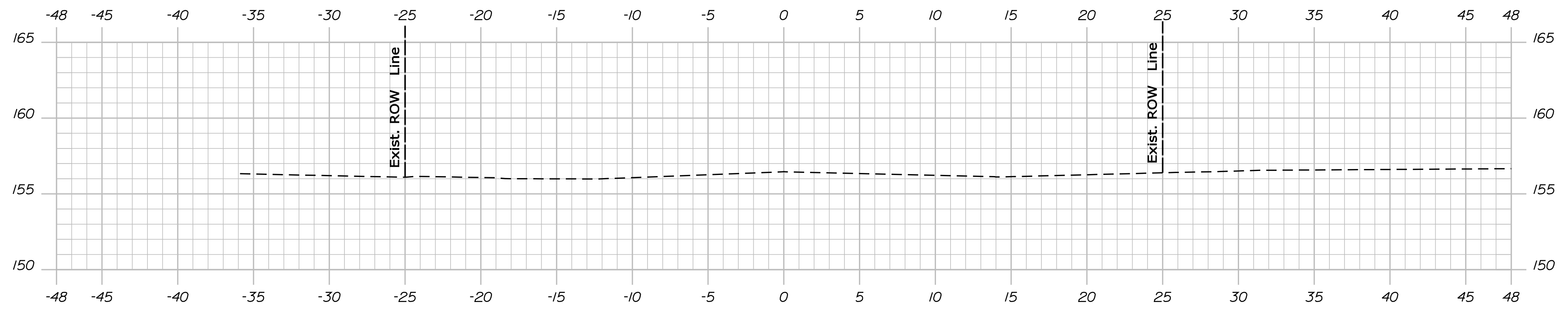

51+32.00

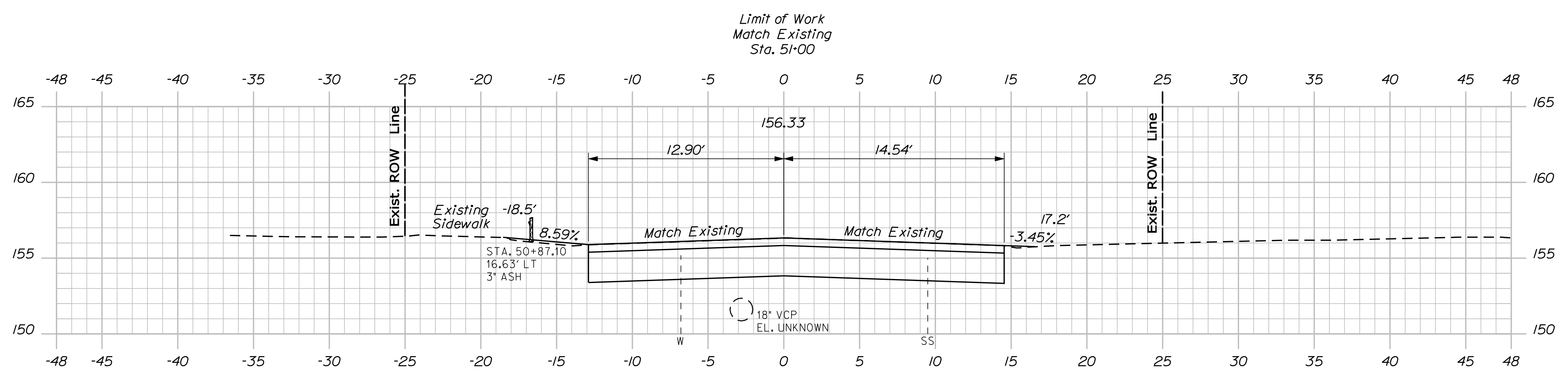

51+00.00

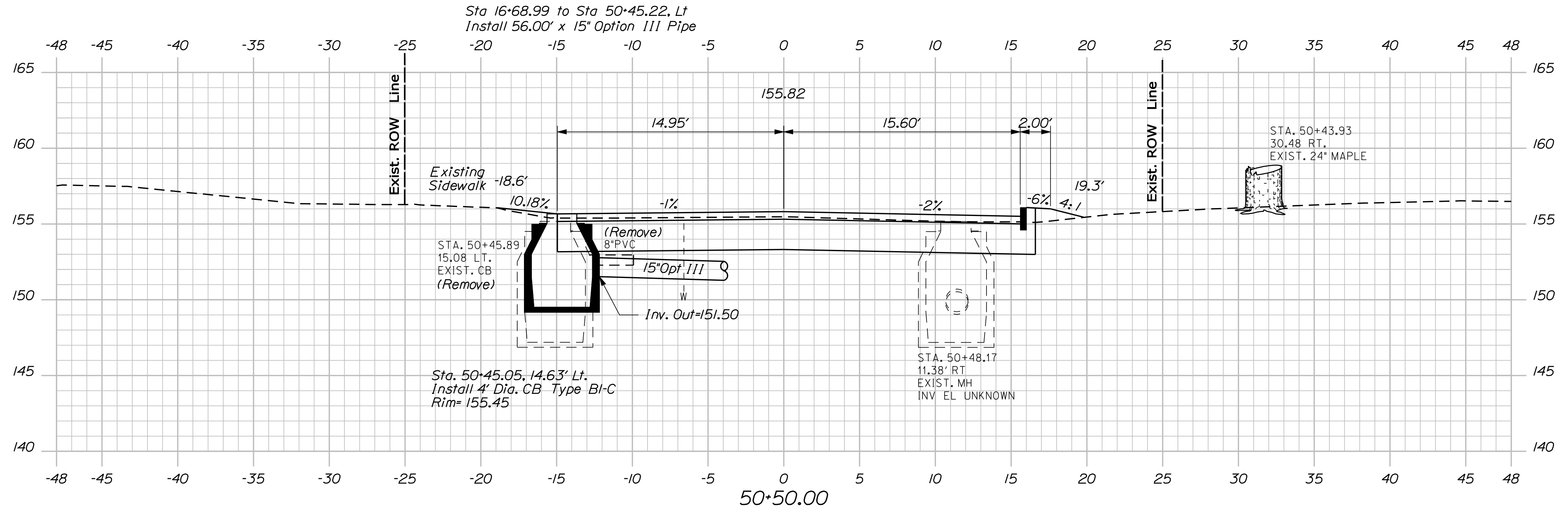

50+50.00

5 0 5 10
Scale of Feet

Sta. 50+50.00 to Sta. 51+32.00

SHEET NUMBER 30 OF 93

UNION STREET BRIDGE
OVER INTERSTATE 95
BANGOR PENOBSCOT COUNTY
15TH ST. SOUTH CROSS SECTIONS

PROJ. MANAGER STEPHEN BODGE		BY	DATE
DESIGN-DETAILED	D. ETTINGER	L. NEWHOUSE	05-22-13
CHECKED-REVIEWED	D.ETTINGER	T. GORRILL	05-22-13
DESIGN2-DETAILED2	-------	-------	-------
DESIGN3-DETAILED3	-------	-------	-------
REVISIONS 1	-------		-------
REVISIONS 2	-------		-------
REVISIONS 3	-------		-------
REVISIONS 4	-------		-------
FIELD CHANGES	-------		-------

SIGNATURE
P.E. NUMBER
DATE

STATE OF MAINE
DEPARTMENT OF TRANSPORTATION
IM-1668(100)E
BRIDGE NO.: 5797 WIN 16681.00 BRIDGE PLANS

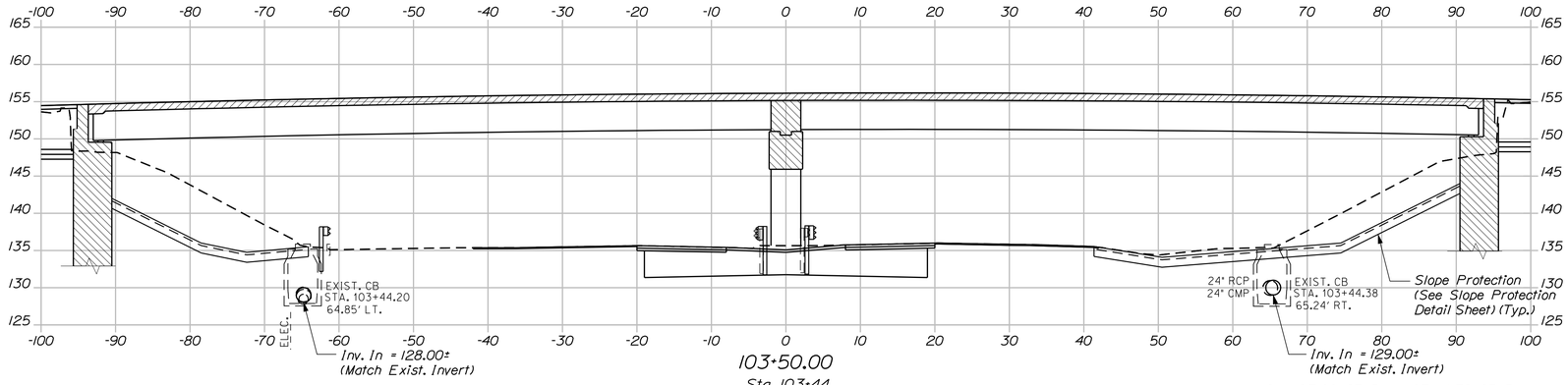

103+50.00

Sta 103+44
Limit of I-95 Median
Reconstruction

Sta 102+85, 84' Lt to 103+44, 64' Lt
Install 60' x 24" Option III
Riprap Inlet

Sta 103+00, 85' Rt to 103+44.38, 65' Rt
Install 48' x 24" Option III
Riprap Inlet

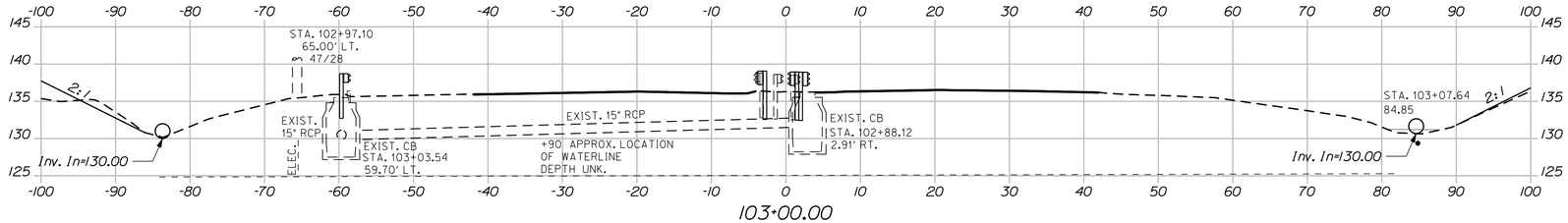

103+00.00

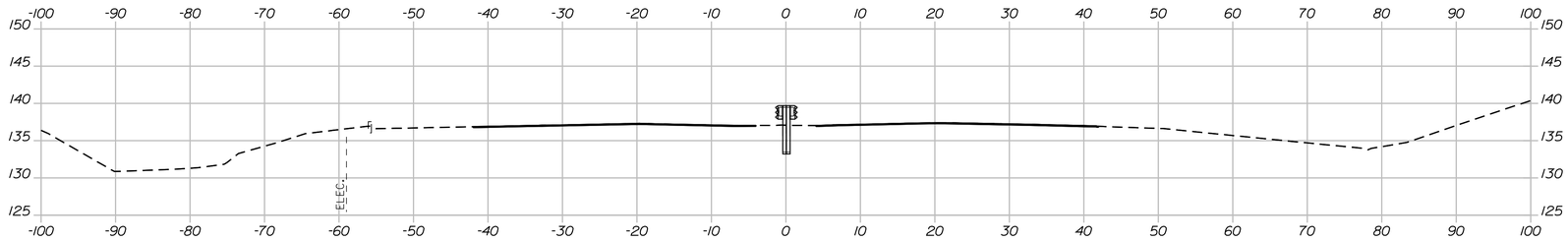

102+50.00

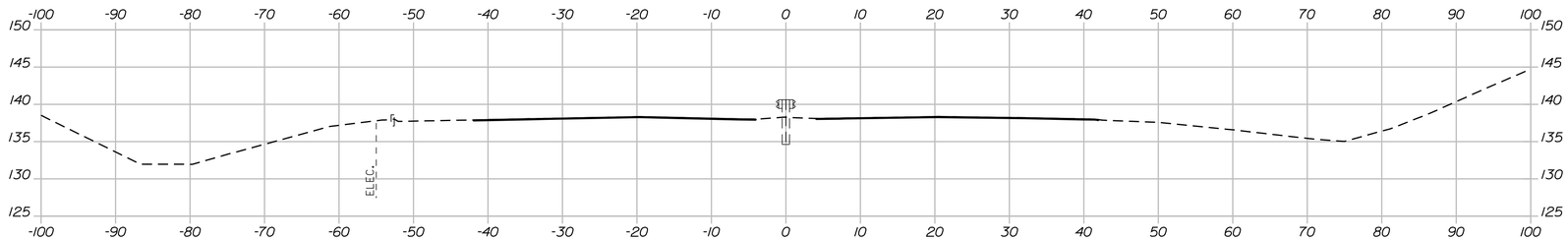

102+00.00

Sta 98+00
Limit of Highway Resurfacing
Match I-95 NB/SB Resurfacing
Project WIN 20380.00

10 0 10 20
Scale of Feet

STATE OF MAINE
DEPARTMENT OF TRANSPORTATION

IM-1668(100)E

WIN 16681.00

BRIDGE NO.: 5797

BRIDGE PLANS

	BY	DATE
PROJ. MANAGER STEPHEN BODGE		
DESIGN-DETAILED D.ETTINGER	L.NEWHOUSE	07-09-13
CHECKED-REVIEWED D.ETTINGER	T.CORRILL	07-09-13
DESIGN2-DETAILED2 ----------	----------	------
DESIGN3-DETAILED3 ----------	----------	------
REVISIONS 1 ----------	----------	------
REVISIONS 2 ----------	----------	------
REVISIONS 3 ----------	----------	------
REVISIONS 4 ----------	----------	------
FIELD CHANGES ----------	----------	------

SIGNATURE

P.E. NUMBER

DATE

UNION STREET BRIDGE
OVER INTERSTATE 95
BANGOR PENOBSCOT COUNTY

INTERSTATE 95
CROSS SECTIONS

SHEET NUMBER

31

OF 93

Sta. 102+00.00 to Sta. 103+50.00

Filename: ...\mstoV031_XSECT_102+00_001.dgn Division: BRIDGE Username: CADD Date:1/2/2014

Sta 109+50
Limit of Highway Resurfacing
Match I-95 NB/SB Resurfacing
Project WIN 20380.00

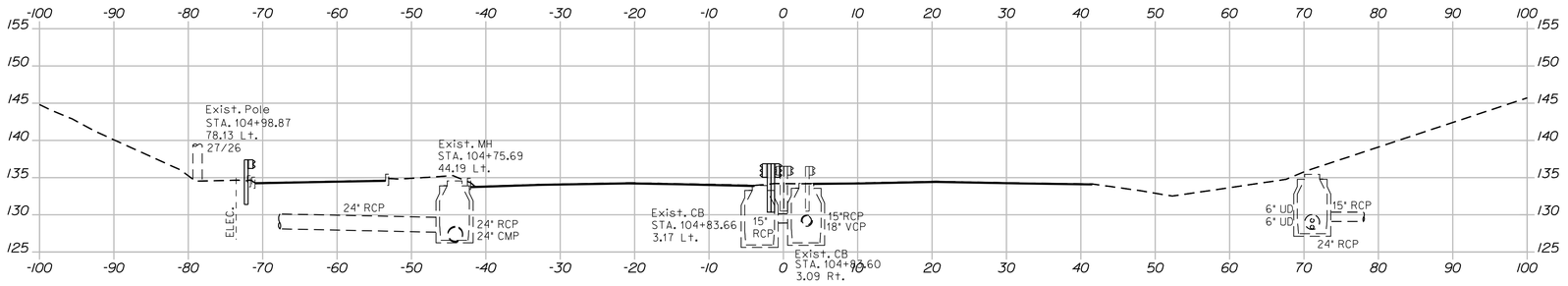

105+00.00

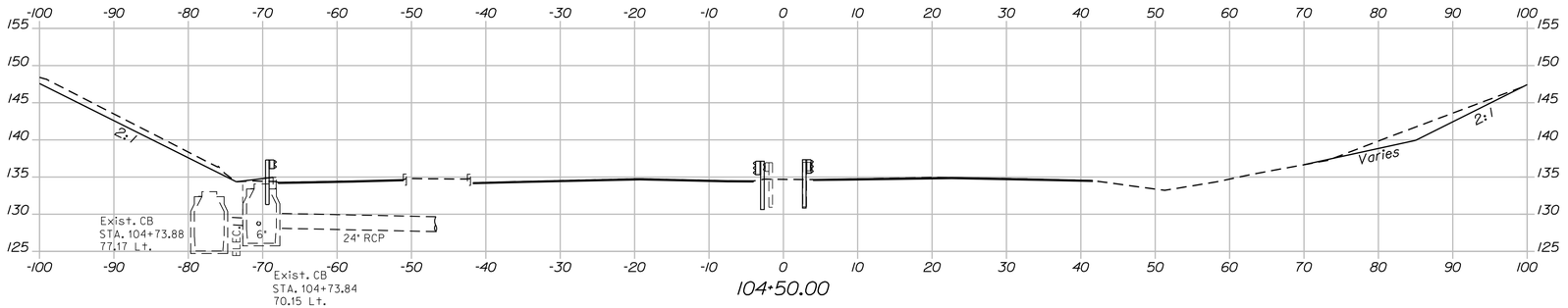

104+50.00

Sta 104+24
Limit of I-95 Median
Reconstruction

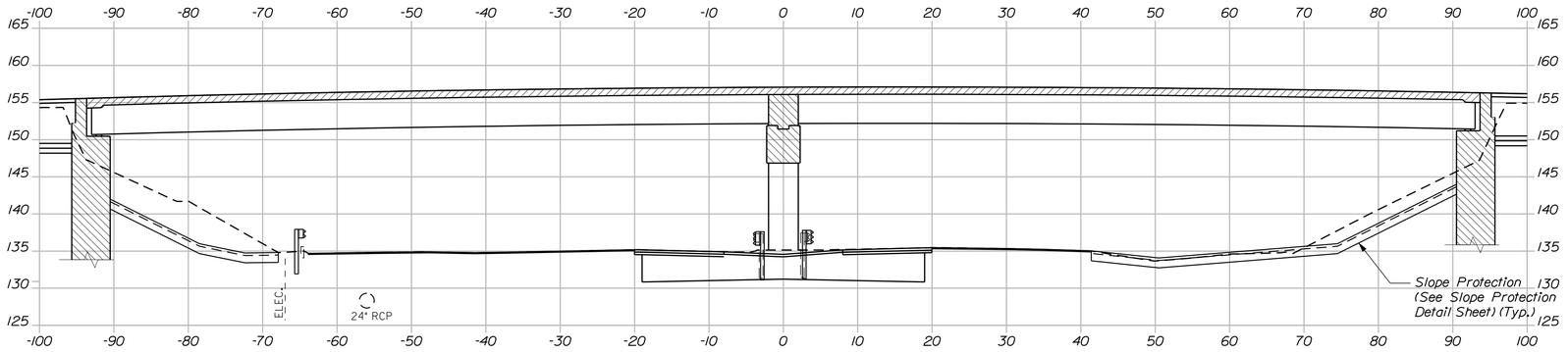

104+00.00

STATE OF MAINE
DEPARTMENT OF TRANSPORTATION

IM-1668(100)E

WIN 16681.00

BRIDGE NO.: 5797

BRIDGE PLANS

	BY	DATE
PROJ. MANAGER STEPHEN BODGE		
DESIGN-DETAILED	D.ETTINGER	L.NEWHOUSE 07-09-13
CHECKED-REVIEWED	D.ETTINGER	T.CORRILL 07-09-13
DESIGN2-DETAILED2	-------	------- -------
DESIGN3-DETAILED3	-------	------- -------
REVISIONS 1	------	------ ------
REVISIONS 2	------	------ ------
REVISIONS 3	------	------ ------
REVISIONS 4	------	------ ------
FIELD CHANGES	------	------ ------

SIGNATURE

P.E. NUMBER

DATE

UNION STREET BRIDGE
OVER INTERSTATE 95
BANGOR PENOBSCOT COUNTY

INTERSTATE 95
CROSS SECTIONS

SHEET NUMBER

32

OF 93

Filename: ...\msta\032_XSECT_104+00_002.dgn Division: BRIDGE Username: CADD Date:1/2/2014

Sta. 104+00.00 to Sta. 105+00.00

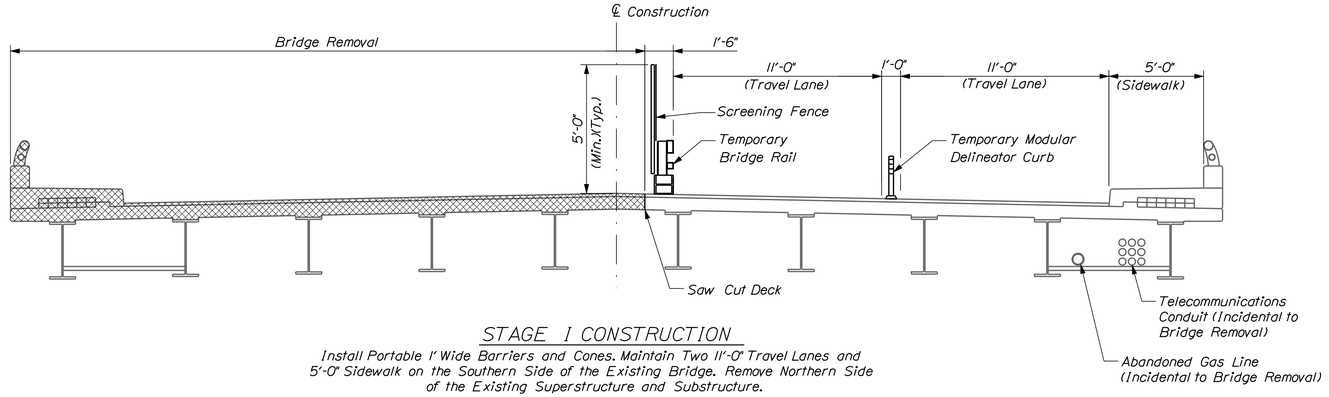

STAGE I CONSTRUCTION

Install Portable 1' Wide Barriers and Cones. Maintain Two 11'-0" Travel Lanes and 5'-0" Sidewalk on the Southern Side of the Existing Bridge. Remove Northern Side of the Existing Superstructure and Substructure.

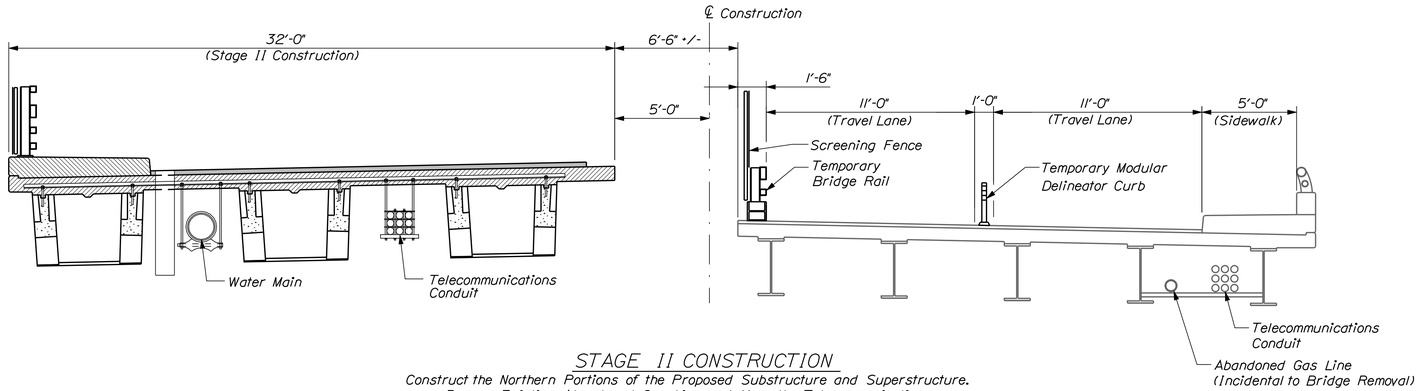

STAGE II CONSTRUCTION

Construct the Northern Portions of the Proposed Substructure and Superstructure. Remove Existing Abandoned Gas Line and Move the Telecommunication Conduits and Water Main to the Northern Side of the New Bridge. Install 1½" Base Lift and Temporary Pavement.

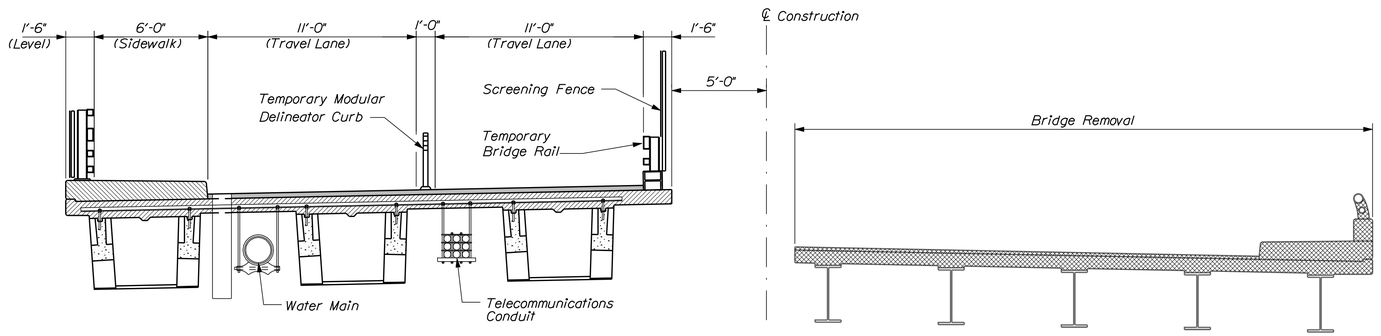

STAGE III CONSTRUCTION

Install Portable 1' Wide Barriers and Cones. Maintain Two 11'-0" Travel Lanes and 6'-0" Sidewalk on the Northern Side of the New Bridge. Remove Southern Side of the Existing Superstructure and Substructure.

TEMPORARY PAVING NOTES

1. Temporary pavement payment shall be made under Item 461.131 - "Temporary Pavement".

2. Temporary pavement shall be placed prior to opening stage III construction to traffic.

3. Temporary paving shall be placed at both abutments to the limits shown below and shall extend to the full roadway width.

4. Temporary pavement shall be removed entirely prior to placement of the final 1½" lift of pavement.

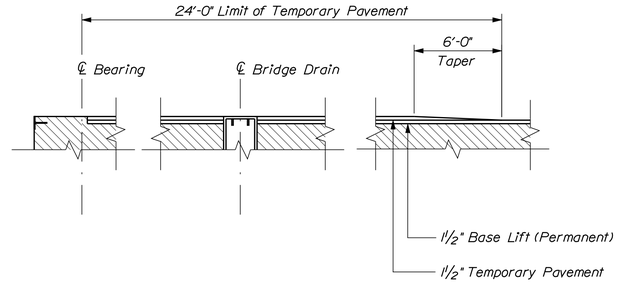

TEMPORARY PAVING DETAIL

TEMPORARY BRIDGE RAIL NOTES

1. The temporary bridge rail on the existing and new bridge deck shall be positively attached to the bridge deck. The attachment shall meet the requirements of AASHTO LRFD TL-4 loading condition. The method of attachment shall be designed and stamped by a Professional Engineer licensed in the State of Maine and approved by the Resident. Payment for attachment shall be considered incidental to item 507.13 Temporary Bridge Rail. The attachment shall be cut off and ground flush to concrete deck after use.

STATE OF MAINE
DEPARTMENT OF TRANSPORTATION

IM-1668(100)E

WIN 16681.00

BRIDGE NO.: 5797

BRIDGE PLANS

	BY	DATE
PROJ. MANAGER STEPHEN BODGE		
DESIGN-DETAILED	D.BURGESS	05-22-13
CHECKED-REVIEWED	B.WELCH	05-22-13
DESIGN2-DETAILED2	J.BURGESS	------
DESIGN3-DETAILED3	B.WELCH	------
REVISIONS 1	------	------
REVISIONS 2	------	------
REVISIONS 3	------	------
REVISIONS 4	------	------
FIELD CHANGES	------	------

SIGNATURE

P.E. NUMBER

DATE

UNION STREET BRIDGE
OVER INTERSTATE 95
BANGOR PENOBSCOT COUNTY

STAGE CONSTRUCTION (1 OF 2)

SHEET NUMBER

33

OF 93

BECKER
STRUCTURAL ENGINEERS
75 York Street, Portland, Maine 04101
207.879.1838 • beckerstructural.com

Filename: ...\mst0\033_staged constr_001.dgn Division: BRIDGE Username: CADD Date:1/2/2014

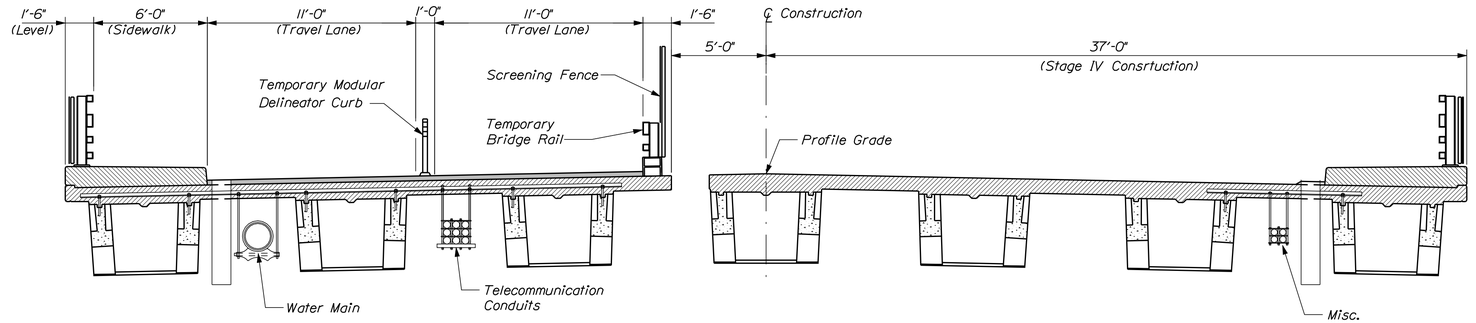

STAGE IV CONSTRUCTION

Construct the Southern Portions of the Proposed Substructure and Superstructure.

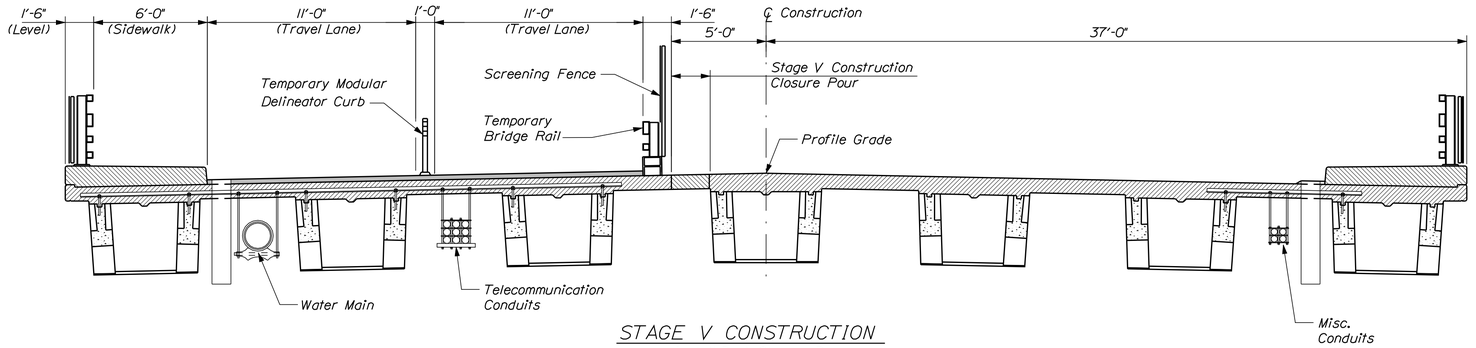

STAGE V CONSTRUCTION

Install Deck Closure Pour

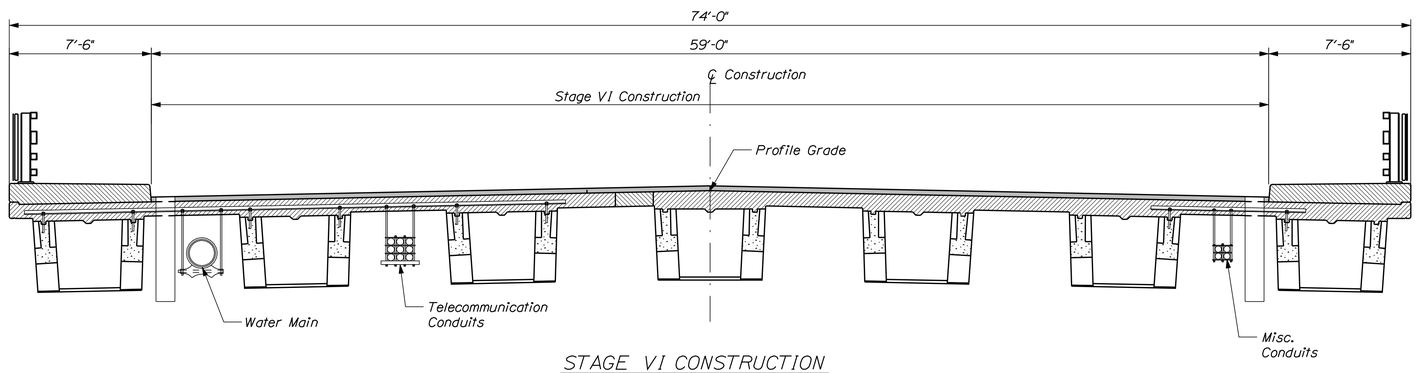

STAGE VI CONSTRUCTION

Remove Temporary Pavement and Install Top Lift of the Wearing Surface for the Northern Side of the Bridge
Install the Wearing Surface for the Southern Side of the Bridge and Stripe Lane Configuration.

STATE OF MAINE
DEPARTMENT OF TRANSPORTATION

IM-1668(100)E

WIN 16681.00

BRIDGE NO.: 5797

BRIDGE PLANS

	BY	DATE
PROJ. MANAGER: STEPHEN BODGE		
DESIGN-DETAILED	D.BURGESS	05-22-13
CHECKED-REVIEWED	J.BURGESS	05-22-13
DESIGN2-DETAILED2		
DESIGN3-DETAILED3		
REVISIONS 1		
REVISIONS 2		
REVISIONS 3		
REVISIONS 4		
FIELD CHANGES		

SIGNATURE

P.E. NUMBER

DATE

UNION STREET BRIDGE
OVER INTERSTATE 95
BANGOR PENOBSCOT COUNTY

STAGE CONSTRUCTION (2 OF 2)

SHEET NUMBER

34

OF 93

Gorrill-Palmer Consulting Engineers, Inc.
PO Box 1237 15 Shaker Road Gray, ME 04039
Engineering Excellence Since 1998
207-657-6910 FAX: 207-657-6912 E-Mail: mailbox@gorrillpalmer.com

BECKER STRUCTURAL ENGINEERS
75 York Street, Portland, Maine 04101
207.879.1838 ■ beckerstructural.com

Filename: ...\mslo\034_staged constr_002.dgn Division: BRIDGE Username: CADD Date:1/2/2014

Filename: ...\mst0\035_Abutment1_footing.dgn Division: BRIDGE Username: CADD Date:1/2/2014

ABUTMENT NOTES:

1. Maximum calculated footing pressure is 2.0 tons per square foot.

2. Reinforcing steel shall have a minimum concrete cover of 2 inches in the walls and 3 inches in the footings unless otherwise noted.

3. Cover joints where waterstops are not required in accordance with Standard Detail 502 (01).

4. Place 4 in. diameter drains in breastwall and wings at 10 feet maximum spacing. Exact location to be determined by the Resident in the field.

5. Construct French Drains behind and in front of the abutments and wingwalls in accordance with Standard Specifications Section 512, French Drains. Daylight french drain at Sta. 13+12.00, 90.00' RT at Abutment No. 1 and Sta. 14+88.00, 76.00' RT at Abutment No. 2. Coordinate daylight locations with resident in the field.

6. Structural Earth Excavation, Abutments and Retaining Walls, required more than 12 inches below the bottom of the structure will be paid for in accordance with Standard Specifications Section 206 Structural Excavation.

7. Abutments, wings, and their footings shall be backfilled with Granular Borrow. Pay limits will be the structural excavation limits in cut areas and a vertical plane located 10 feet behind the walls in fill areas.

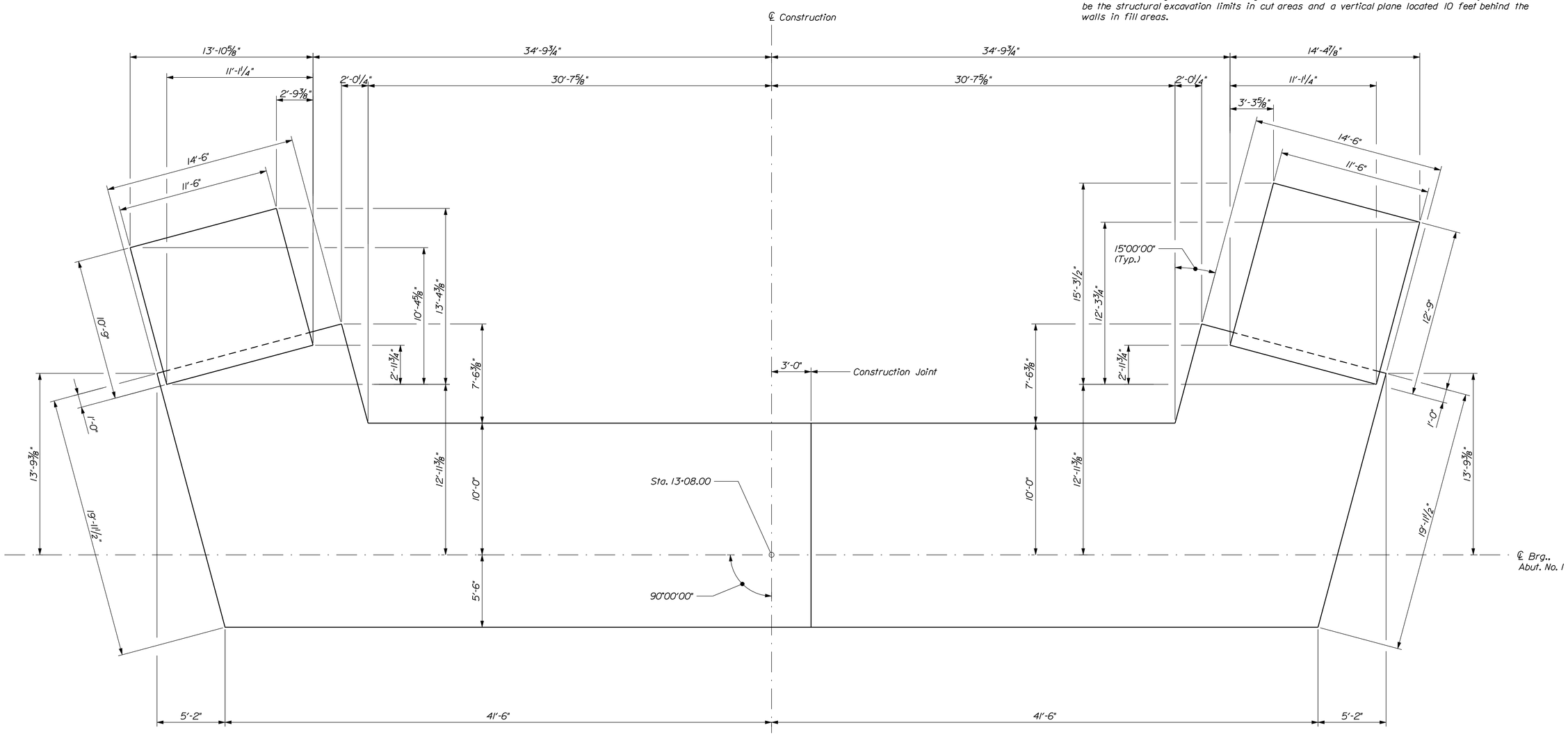

ABUTMENT NO. 1 - FOOTING PLAN

STATE OF MAINE
DEPARTMENT OF TRANSPORTATION

IM-1668(200)E

WIN 16682.00

BRIDGE NO.: 5797

BRIDGE PLANS

PROJ. MANAGER	STEPHEN BODGE		
DESIGN-DETAILED	B. WELCH	D. BURGESS	05-22-13
CHECKED-REVIEWED	B. WELCH	J. BURGESS	05-22-13
DESIGN2-DETAILED2			
DESIGN3-DETAILED3			
REVISIONS 1			
REVISIONS 2			
REVISIONS 3			
REVISIONS 4			
FIELD CHANGES			

SIGNATURE

P.E. NUMBER

DATE

UNION STREET BRIDGE
OVER INTERSTATE 95
BANGOR PENOBSCOT COUNTY

ABUTMENT NO. 1
FOOTING PLAN

SHEET NUMBER

35

OF 93

BECKER STRUCTURAL ENGINEERS
75 York Street, Portland, Maine 04101
207.879.1838 • beckerstructural.com

Filename: ...\bridge\mst0\036_Abutment1.dgn Division: BRIDGE Username: CADD Date:1/2/2014

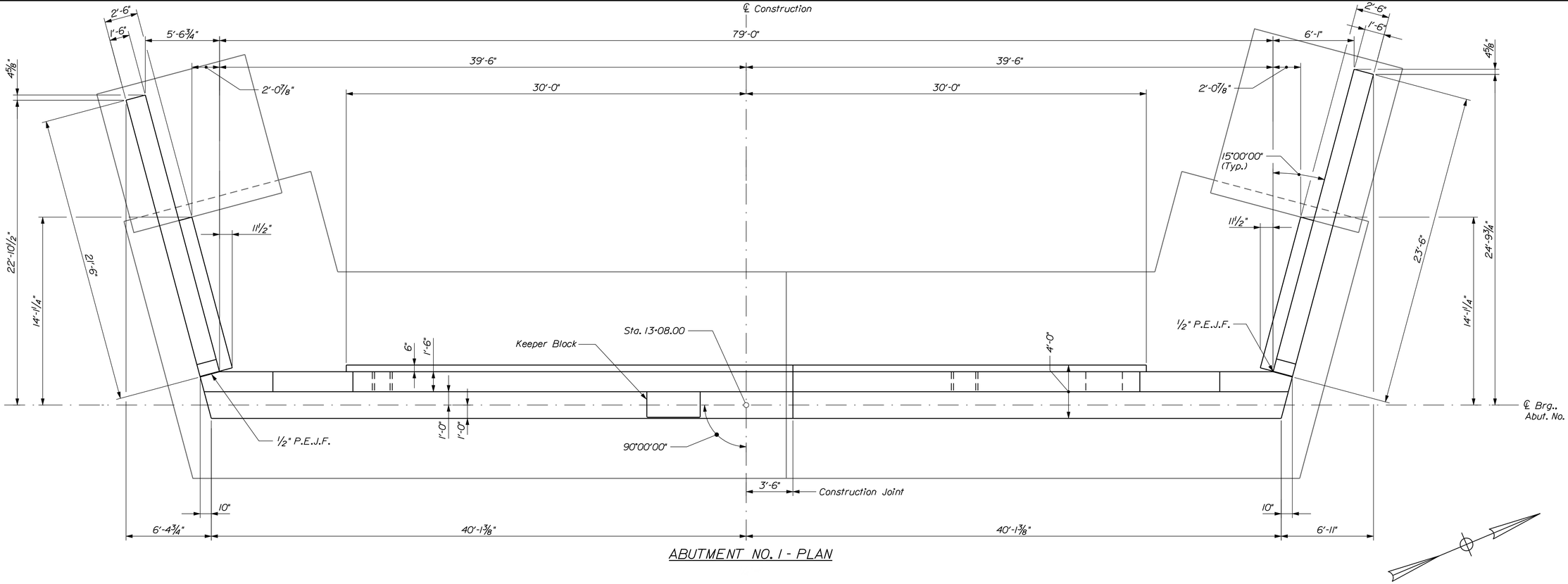

ABUTMENT NO. 1 - PLAN

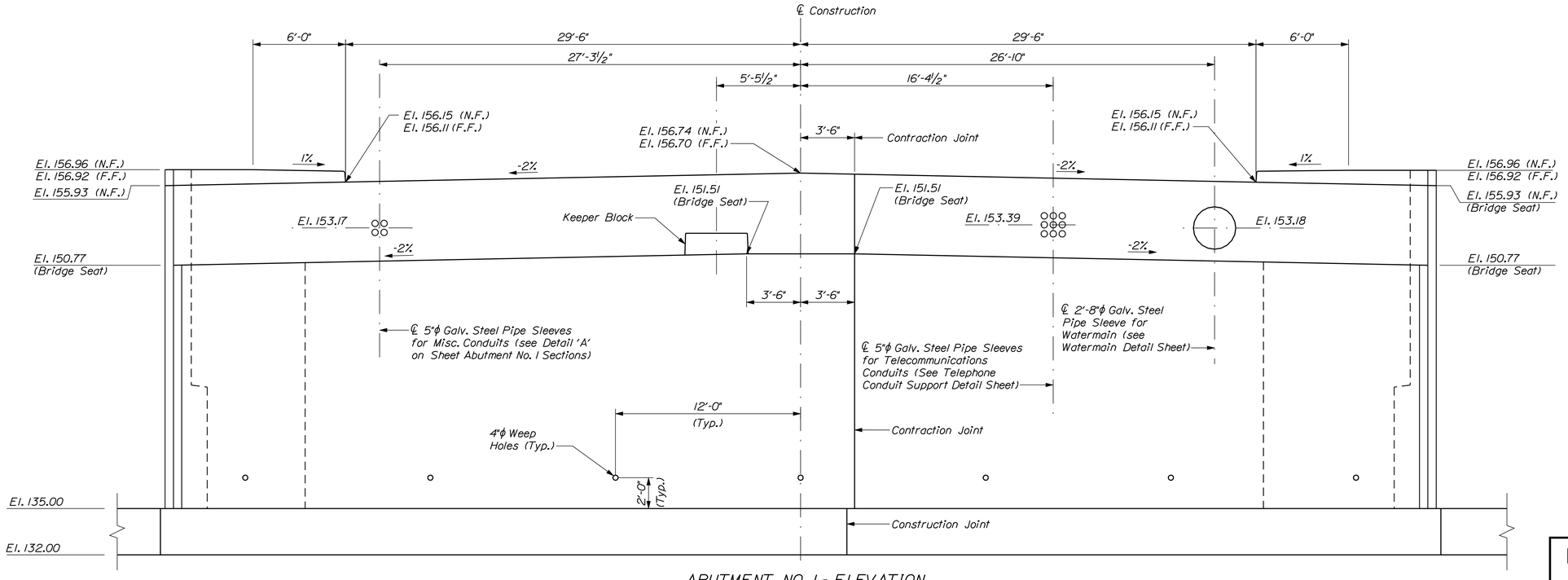

ABUTMENT NO. 1 - ELEVATION

STATE OF MAINE
DEPARTMENT OF TRANSPORTATION

IM-1668(200)E

WIN 16682.00

BRIDGE NO.: 5797

BRIDGE PLANS

	BY	DATE
PROJ. MANAGER STEPHEN BODGE		
DESIGN-DETAILED	D. BURGESS	05-22-13
CHECKED-REVIEWED	B. WELCH	05-22-13
DESIGN2-DETAILED2	J. BURGESS	
DESIGN3-DETAILED3	B. WELCH	
REVISIONS 1		
REVISIONS 2		
REVISIONS 3		
REVISIONS 4		
FIELD CHANGES		

SIGNATURE

P.E. NUMBER

DATE

UNION STREET BRIDGE
OVER INTERSTATE 95
BANGOR PENOBSCOT COUNTY

ABUTMENT NO. 1
PLAN & ELEVATION

SHEET NUMBER

36

OF 93

BECKER
STRUCTURAL ENGINEERS
75 York Street, Portland, Maine 04101
207.879.1838 ▪ beckerstructural.com

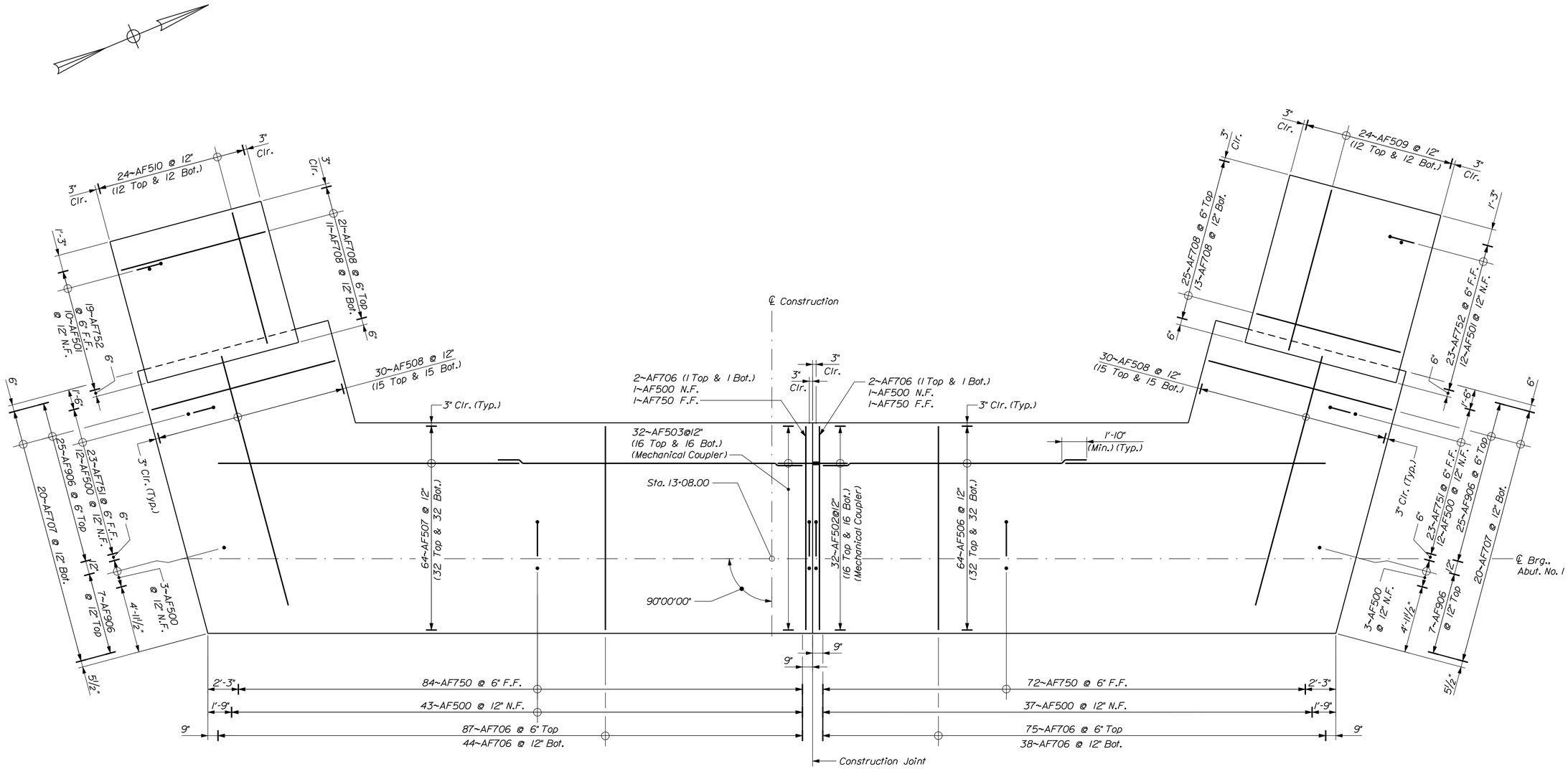

ABUTMENT NO. 1 - FOOTING REINFORCEMENT PLAN

STATE OF MAINE
DEPARTMENT OF TRANSPORTATION

IM-1668(200)E

WIN 16682.00

BRIDGE NO.: 5797

BRIDGE PLANS

	BY	DATE
PROJ. MANAGER: STEPHEN BODGE		
DESIGN-DETAILED	D. BURGESS	05-22-13
CHECKED-REVIEWED	B. WELCH	05-22-13
DESIGN2-DETAILED2	J. BURGESS	05-22-13
DESIGN3-DETAILED3	B. WELCH	
REVISIONS 1		
REVISIONS 2		
REVISIONS 3		
REVISIONS 4		
FIELD CHANGES		

SIGNATURE

P.E. NUMBER

DATE

UNION STREET BRIDGE
OVER INTERSTATE 95
BANGOR PENOBSCOT COUNTY

ABUTMENT NO. 1
FOOTING REINFORCEMENT

SHEET NUMBER

37

OF 93

BECKER
STRUCTURAL ENGINEERS
75 York Street, Portland, Maine 04101
207.879.1838 • beckerstructural.com

Filename: ...\037_Abutment1_footing_rebar.dgn Division: BRIDGE Username: CADD Date:1/2/2014

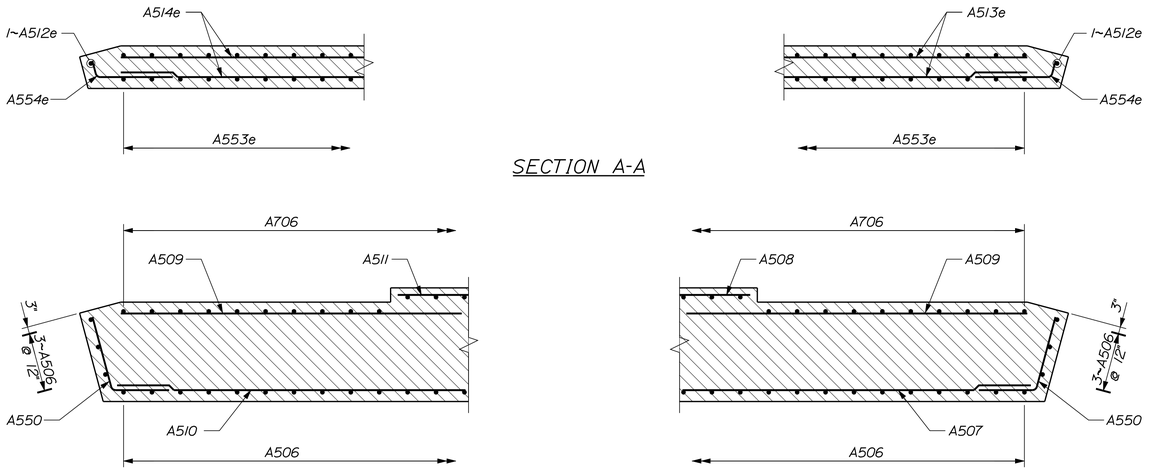

SECTION A-A

SECTION B-B

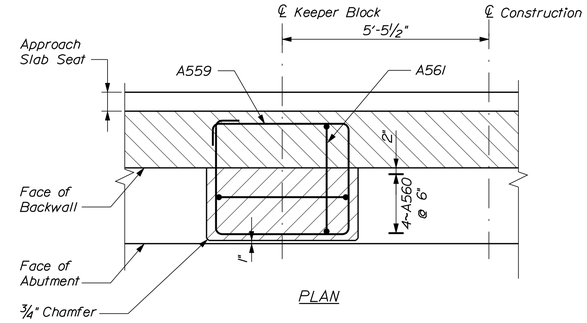

PLAN

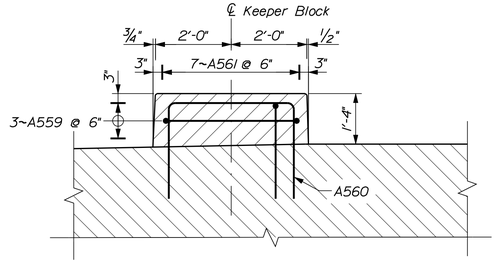

ELEVATION

KEEPER BLOCK DETAIL

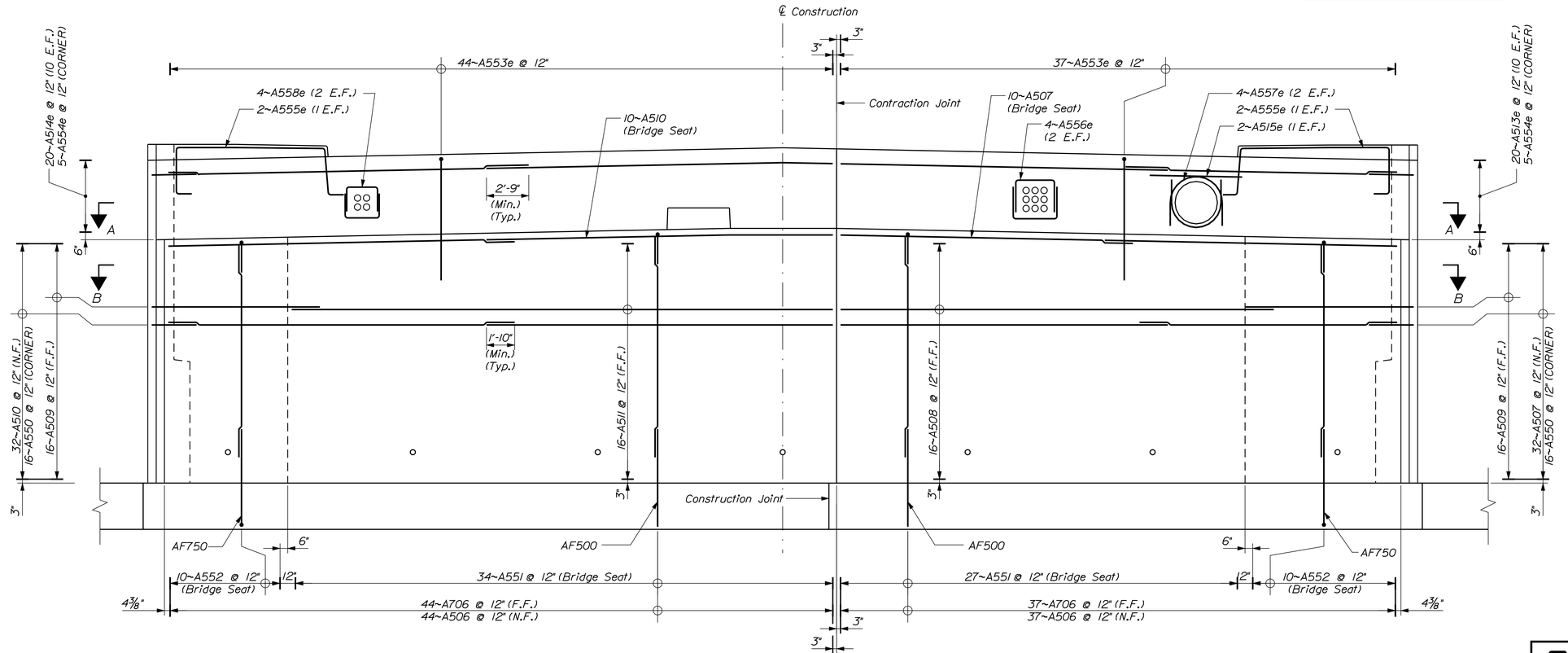

ABUTMENT NO. 1 - REINFORCEMENT ELEVATION

STATE OF MAINE
DEPARTMENT OF TRANSPORTATION

IM-1668(200)E

WIN 16682.00

BRIDGE NO.: 5797

BRIDGE PLANS

PROJ. MANAGER	STEPHEN BODGE
DESIGN-DETAILED	B. WELCH
CHECKED-REVIEWED	B. WELCH
DESIGN2-DETAILED2	
DESIGN3-DETAILED3	

	BY	DATE
REVISIONS 1	D. BURGESS	05-22-13
REVISIONS 2	J. BURGESS	05-22-13
REVISIONS 3		
REVISIONS 4		
FIELD CHANGES		

SIGNATURE

P.E. NUMBER

DATE

UNION STREET BRIDGE
OVER INTERSTATE 95
BANGOR PENOBSCOT COUNTY

ABUTMENT NO. 1
REINFORCEMENT

BECKER
STRUCTURAL ENGINEERS
75 York Street, Portland, Maine 04101
207.879.1838 • beckerstructural.com

SHEET NUMBER

38

OF 93

Filename: ...\mst\038_Abutment1_rebar.dgn Division: BRIDGE Username: CADD Date:1/2/2014

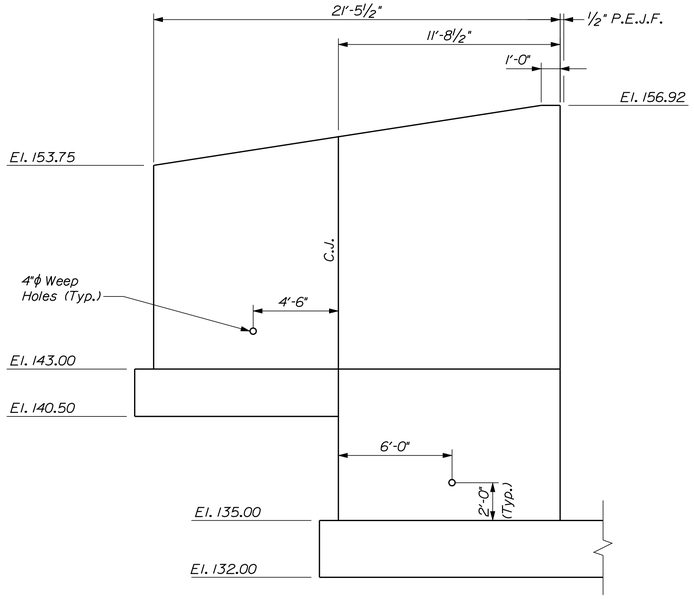

ABUTMENT NO. 1
SOUTHWEST WING ELEVATION

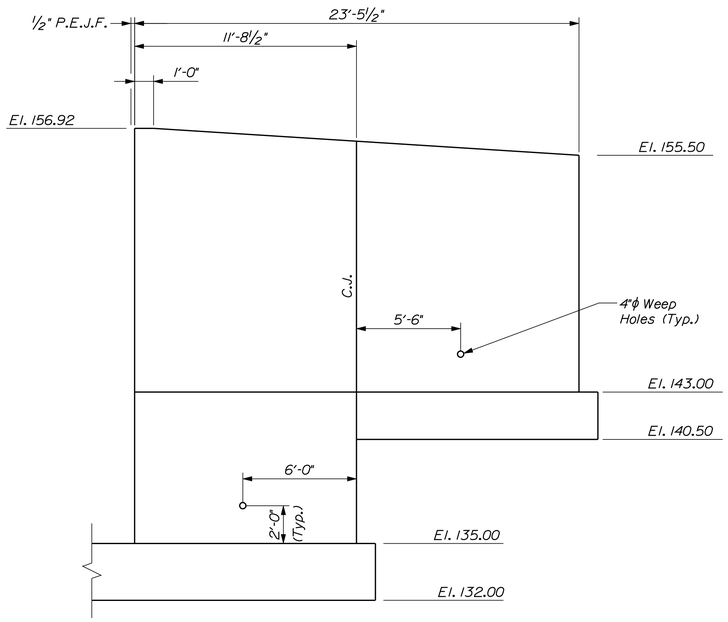

ABUTMENT NO. 1
NORTHWEST WING ELEVATION

WINGWALL NOTES

1. A 1 inch V-Groove joint shall be formed at all locations calling for a control joint (C.J.).

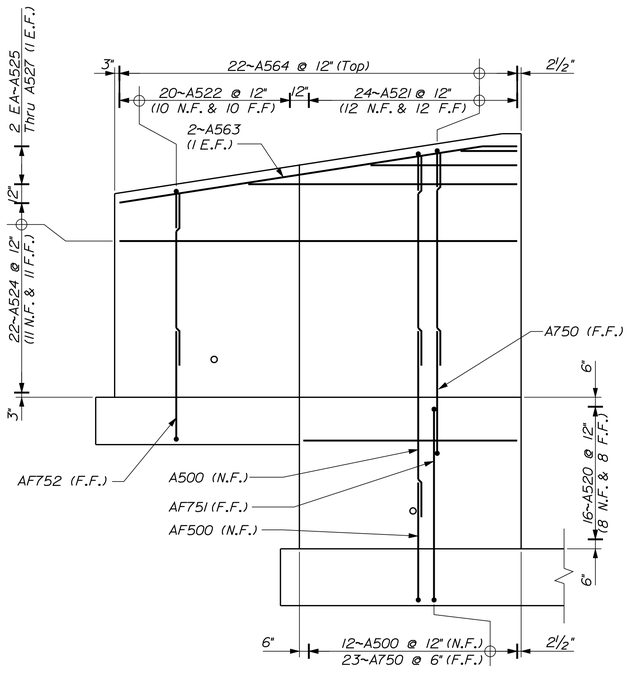

ABUTMENT NO. 1
SOUTHWEST WING REINFORCEMENT

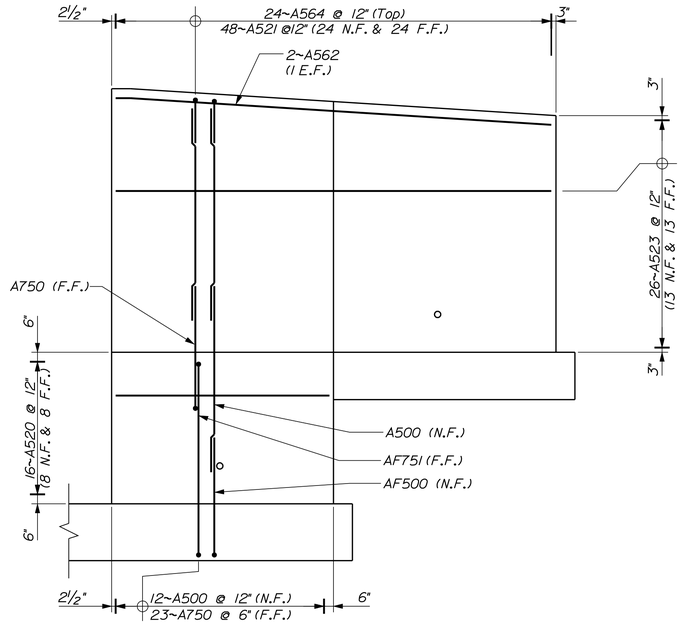

ABUTMENT NO. 1
NORTHWEST WING REINFORCEMENT

STATE OF MAINE
DEPARTMENT OF TRANSPORTATION

IM-1668(200)E

WIN 16682.00

BRIDGE NO.: 5797

BRIDGE PLANS

PROJ. MANAGER	STEPHEN BODGE	BY	DATE
DESIGN-DETAILED	B. WELCH	D. BURGESS	05-22-13
CHECKED-REVIEWED	B. WELCH	J. BURGESS	05-22-13
DESIGN2-DETAILED2			
DESIGN3-DETAILED3			
REVISIONS 1			
REVISIONS 2			
REVISIONS 3			
REVISIONS 4			
FIELD CHANGES			

SIGNATURE

P.E. NUMBER

DATE

UNION STREET BRIDGE
OVER INTERSTATE 95
BANGOR PENOBSCOT COUNTY

ABUTMENT NO. 1
WING WALLS

SHEET NUMBER

39

OF 93

BECKER
STRUCTURAL ENGINEERS
75 York Street, Portland, Maine 04101
207.879.1838 • beckerstructural.com

Filename: ...\039_Abutment1_wingwall.dgn Division: BRIDGE Username: CADD Date:1/2/2014

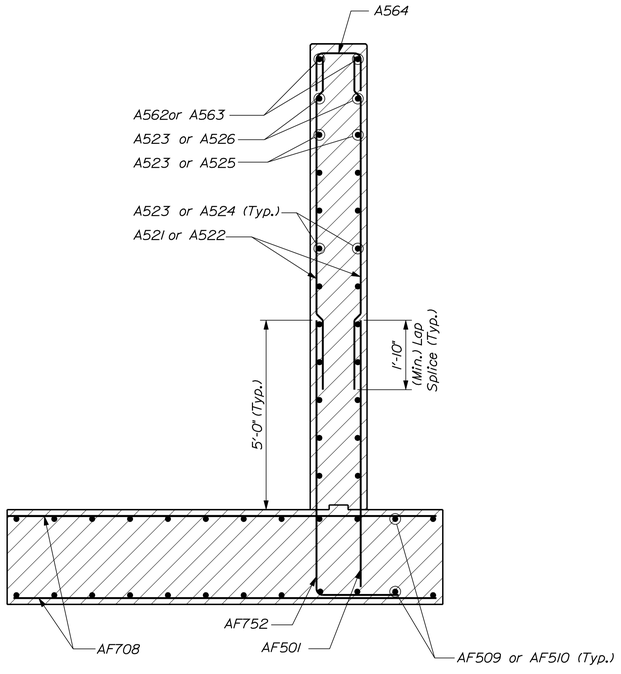

WINGWALL SECTION

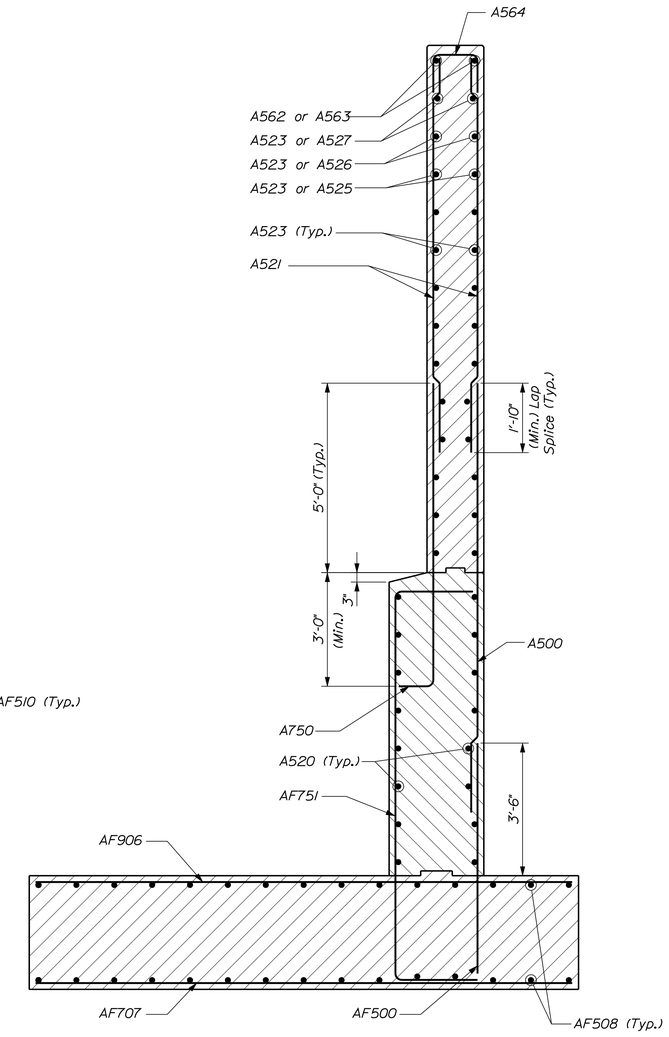

WINGWALL SECTION

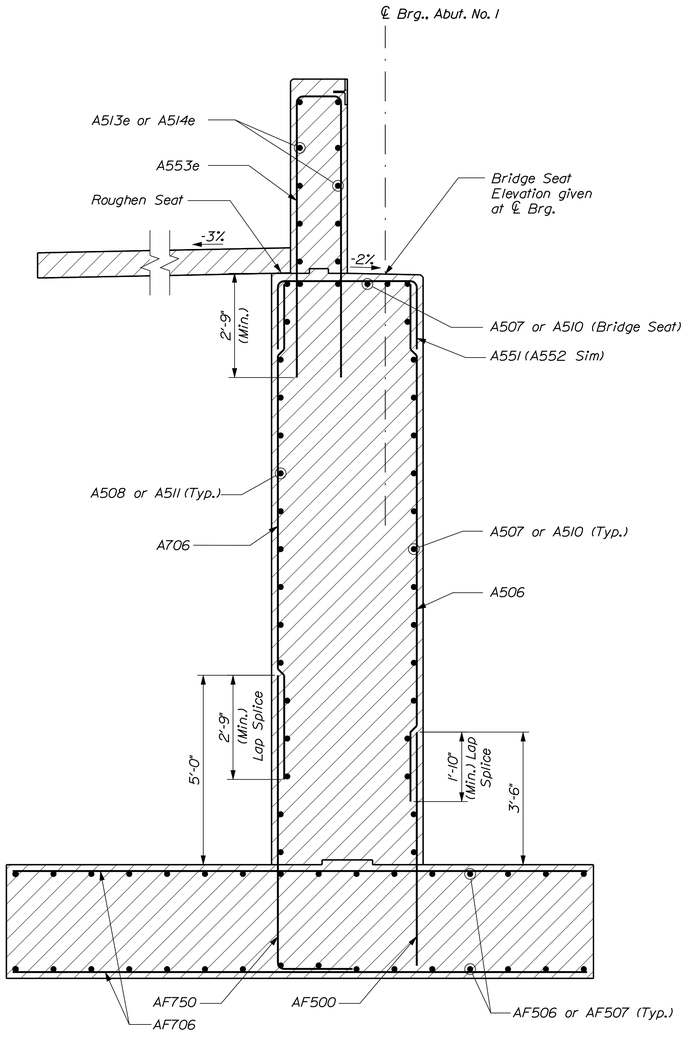

ABUTMENT SECTION

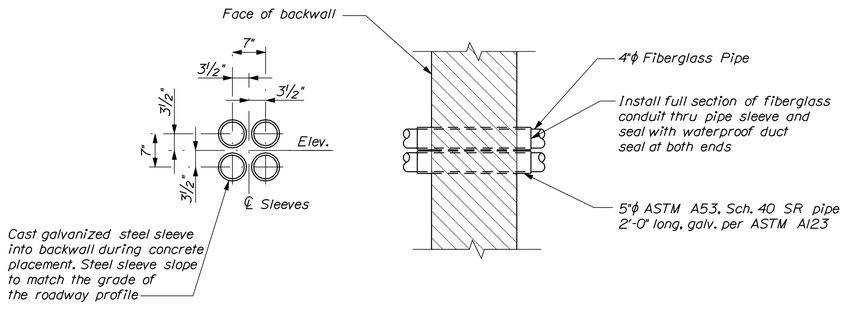

DETAIL 'A'

STATE OF MAINE
DEPARTMENT OF TRANSPORTATION

IM-1668(200)E

WIN 16682.00

BRIDGE NO.: 5797

BRIDGE PLANS

	BY	DATE
PROJ. MANAGER STEPHEN BODGE		
DESIGN-DETAILED	B. WELCH	05-22-13
CHECKED-REVIEWED	D. BURGESS	05-22-13
DESIGN2-DETAILED2	B. WELCH	
DESIGN3-DETAILED3	J. BURGESS	
REVISIONS 1		
REVISIONS 2		
REVISIONS 3		
REVISIONS 4		
FIELD CHANGES		

SIGNATURE

P.E. NUMBER

DATE

UNION STREET BRIDGE
OVER INTERSTATE 95
BANGOR PENOBSCOT COUNTY

ABUTMENT NO. 1
SECTIONS

SHEET NUMBER

40

OF 93

BECKER
STRUCTURAL ENGINEERS
75 York Street, Portland, Maine 04101
207.879.1838 • beckerstructural.com

Filename: ...\mst0\040_Abutment1_section.dgn Division: BRIDGE Username: CADD Date:1/2/2014

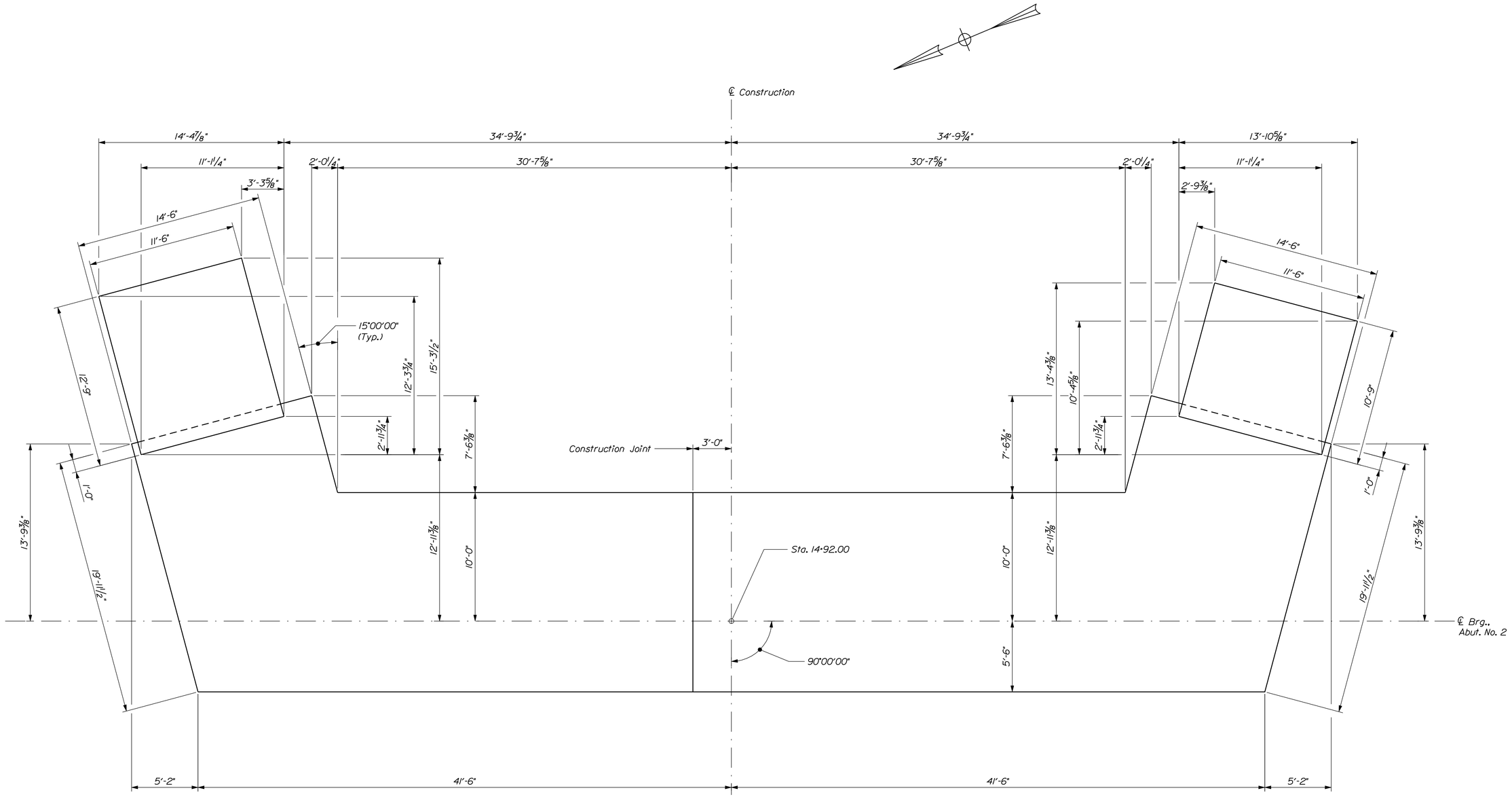

ABUTMENT NO. 2 - FOOTING PLAN

STATE OF MAINE
DEPARTMENT OF TRANSPORTATION

IM-1668(200)E

WIN 16682.00

BRIDGE NO.: 5797

BRIDGE PLANS

PROJ. MANAGER: STEPHEN BODGE		
DESIGN-DETAILED	B. WELCH	05-22-13
CHECKED-REVIEWED	B. WELCH	05-22-13
DESIGN2-DETAILED2		
DESIGN3-DETAILED3		
REVISIONS 1		
REVISIONS 2		
REVISIONS 3		
REVISIONS 4		
FIELD CHANGES		

BY | DATE

SIGNATURE

P.E. NUMBER

DATE

UNION STREET BRIDGE
OVER INTERSTATE 95
BANGOR PENOBSCOT COUNTY

ABUTMENT NO. 2
FOOTING PLAN

SHEET NUMBER

41

OF 93

BECKER
STRUCTURAL ENGINEERS
75 York Street, Portland, Maine 04101
207.879.1838 • beckerstructural.com

Filename: ...\mst0\041_Abutment2_footing.dgn Division: BRIDGE Username: CADD Date:1/2/2014

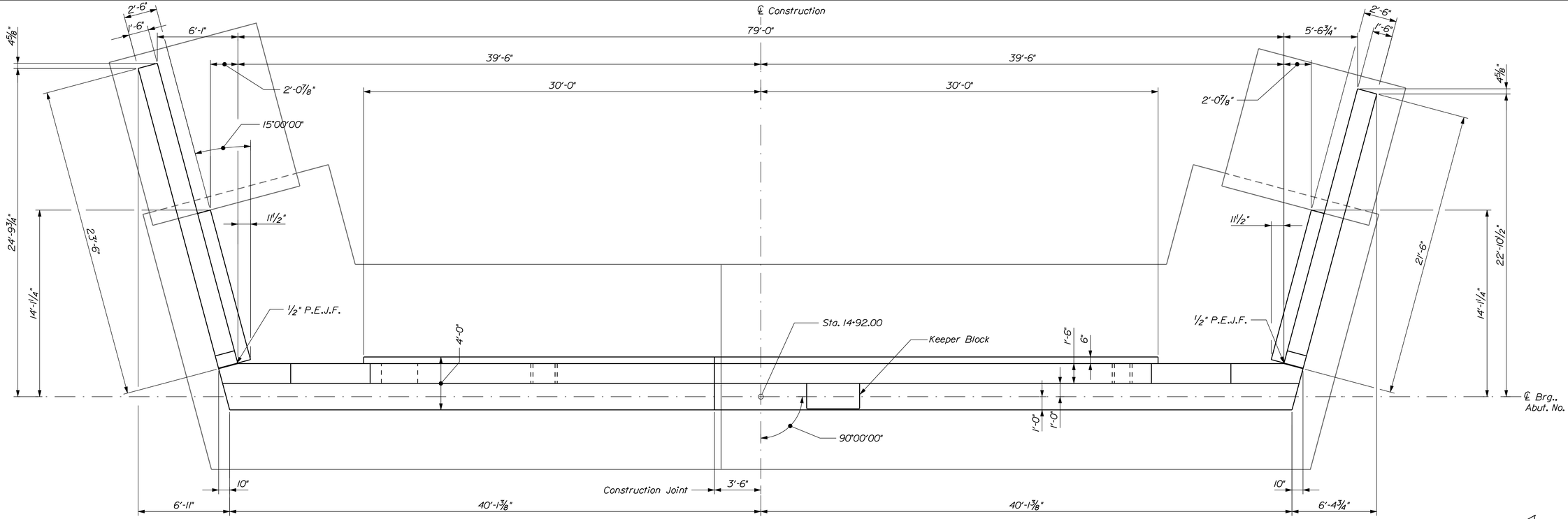

ABUTMENT NO. 2 - PLAN

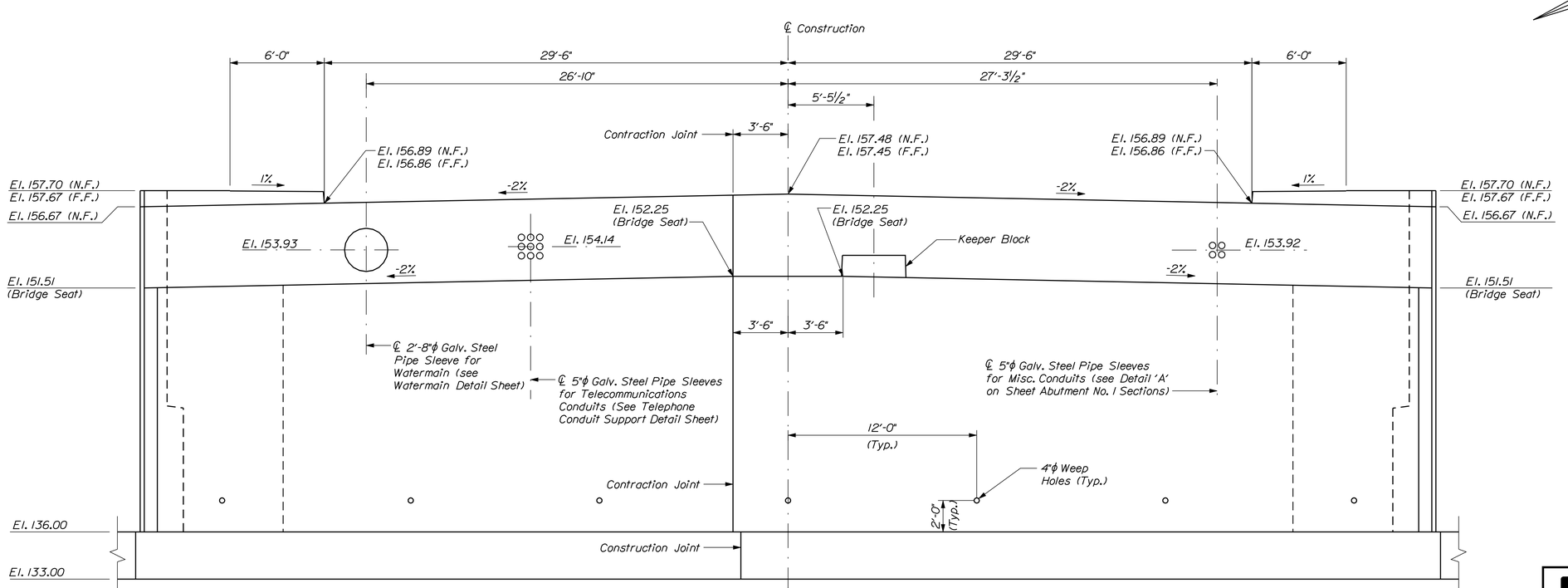

ABUTMENT NO. 2 - ELEVATION

STATE OF MAINE
DEPARTMENT OF TRANSPORTATION

IM-1668(200)E

WIN 16682.00

BRIDGE NO.: 5797

BRIDGE PLANS

	BY	DATE
PROJ. MANAGER STEPHEN BODGE		
DESIGN-DETAILED	B. WELCH	
CHECKED-REVIEWED	B. WELCH	
DESIGN2-DETAILED2		
DESIGN3-DETAILED3		
REVISIONS 1	D. BURGESS	05-22-13
REVISIONS 2	J. BURGESS	05-22-13
REVISIONS 3		
REVISIONS 4		
FIELD CHANGES		

SIGNATURE

P.E. NUMBER

DATE

UNION STREET BRIDGE
OVER INTERSTATE 95
BANGOR PENOBSCOT COUNTY

ABUTMENT NO. 2
PLAN & ELEVATION

BECKER
STRUCTURAL ENGINEERS
75 York Street, Portland, Maine 04101
207.879.1838 • beckerstructural.com

SHEET NUMBER

42

OF 93

Filename: ...\bridge\rnsto\042_Abutment2.dgn Division: BRIDGE Username: CADD Date:1/2/2014

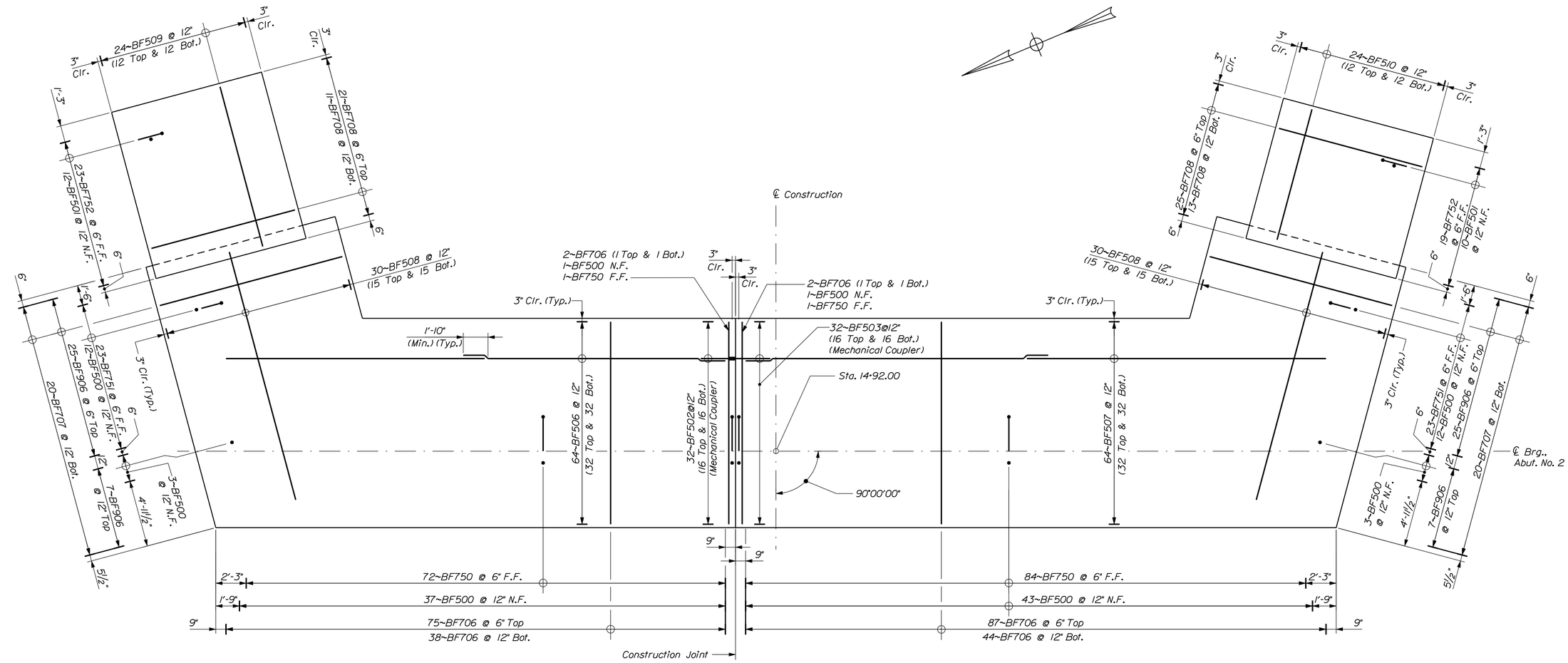

ABUTMENT NO. 2 - FOOTING REINFORCEMENT PLAN

STATE OF MAINE
DEPARTMENT OF TRANSPORTATION

IM-1668(200)E

WIN 16682.00

BRIDGE NO.: 5797

BRIDGE PLANS

	BY	DATE
PROJ. MANAGER STEPHEN BODGE		
DESIGN-DETAILED	B. WELCH	05-22-13
CHECKED-REVIEWED	D. BURGESS	05-22-13
DESIGN2-DETAILED2	B. WELCH	J. BURGESS
DESIGN3-DETAILED3		
REVISIONS 1		
REVISIONS 2		
REVISIONS 3		
REVISIONS 4		
FIELD CHANGES		

SIGNATURE

P.E. NUMBER

DATE

UNION STREET BRIDGE
OVER INTERSTATE 95
BANGOR PENOBSCOT COUNTY

ABUTMENT NO. 2
FOOTING REINFORCEMENT

SHEET NUMBER

43

OF 93

BECKER
STRUCTURAL ENGINEERS
75 York Street, Portland, Maine 04101
207.879.1838 ▪ beckerstructural.com

Filename: ...\043_Abutment2_footing_rebar.dgn Division: BRIDGE Username: CADD Date:1/2/2014

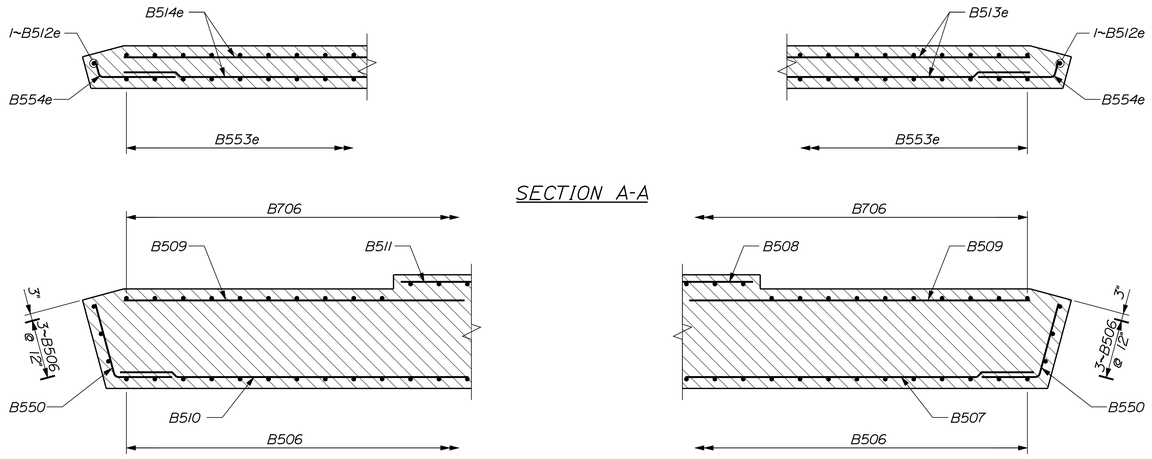

SECTION A-A

SECTION B-B

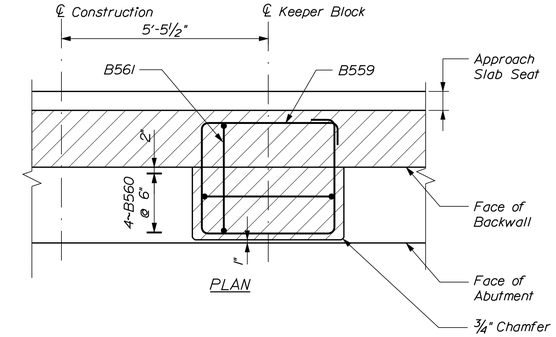

PLAN

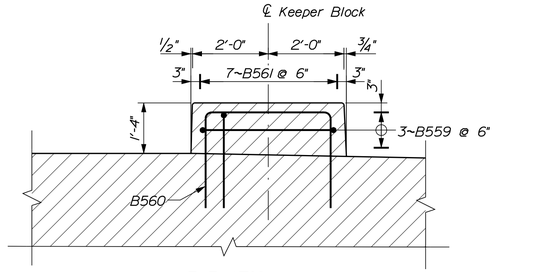

ELEVATION

KEEPER BLOCK DETAIL

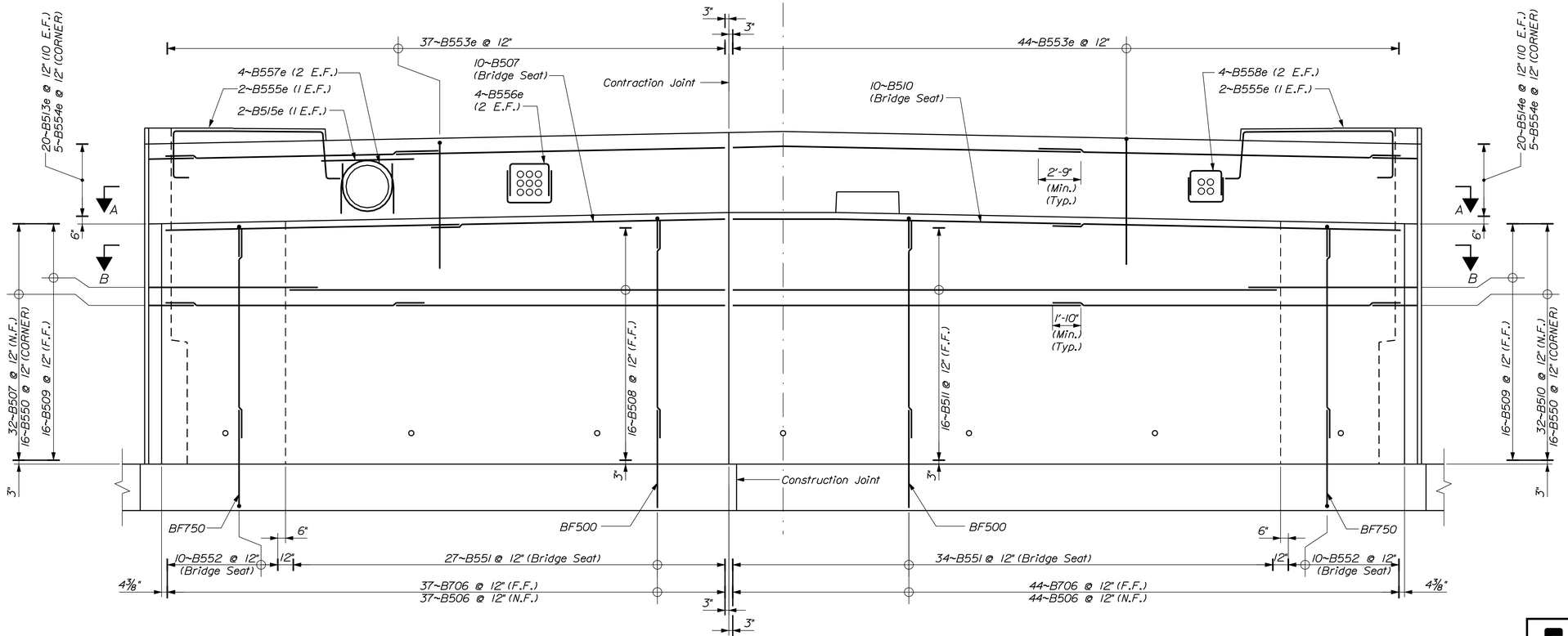

ABUTMENT NO. 2 - REINFORCEMENT ELEVATION

STATE OF MAINE
DEPARTMENT OF TRANSPORTATION

IM-1668(200)E

WIN 16682.00

BRIDGE NO.: 5797

BRIDGE PLANS

PROJ. MANAGER	STEPHEN BODGE	
DESIGN-DETAILED	B. WELCH	D. BURGESS 05-22-13
CHECKED-REVIEWED	B. WELCH	J. BURGESS 05-22-13
DESIGN2-DETAILED2		
DESIGN3-DETAILED3		
REVISIONS 1		
REVISIONS 2		
REVISIONS 3		
REVISIONS 4		
FIELD CHANGES		

SIGNATURE

P.E. NUMBER

DATE

UNION STREET BRIDGE
OVER INTERSTATE 95
BANGOR PENOBSCOT COUNTY

ABUTMENT NO. 2
REINFORCEMENT

SHEET NUMBER

44

OF 93

BECKER
STRUCTURAL ENGINEERS
75 York Street, Portland, Maine 04101
207.879.1838 ■ beckerstructural.com

Filename: ...\mst0\044_Abutment2_rebor.dgn Division: BRIDGE Username: CADD Date:1/2/2014

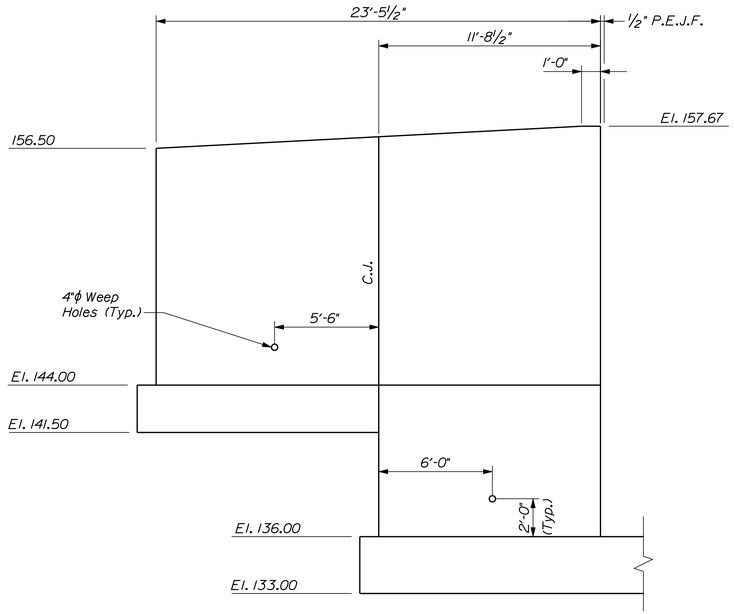

ABUTMENT NO. 2
NORTHEAST WING ELEVATION

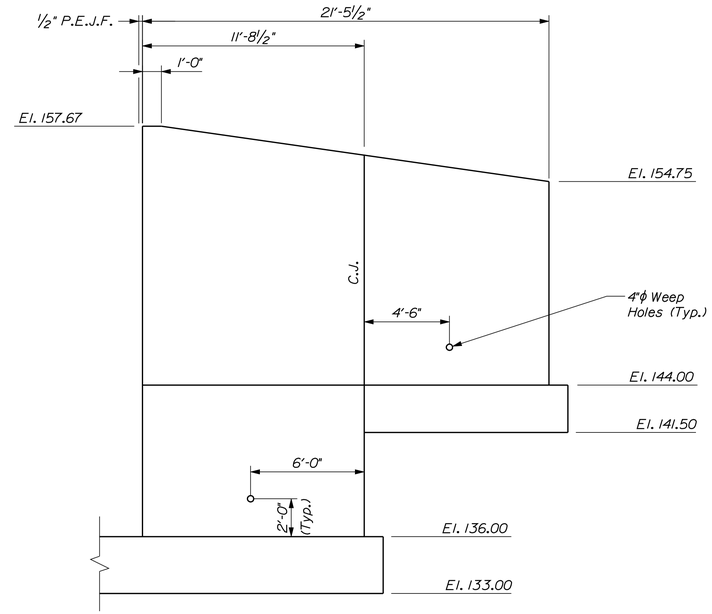

ABUTMENT NO. 2
SOUTHEAST WING ELEVATION

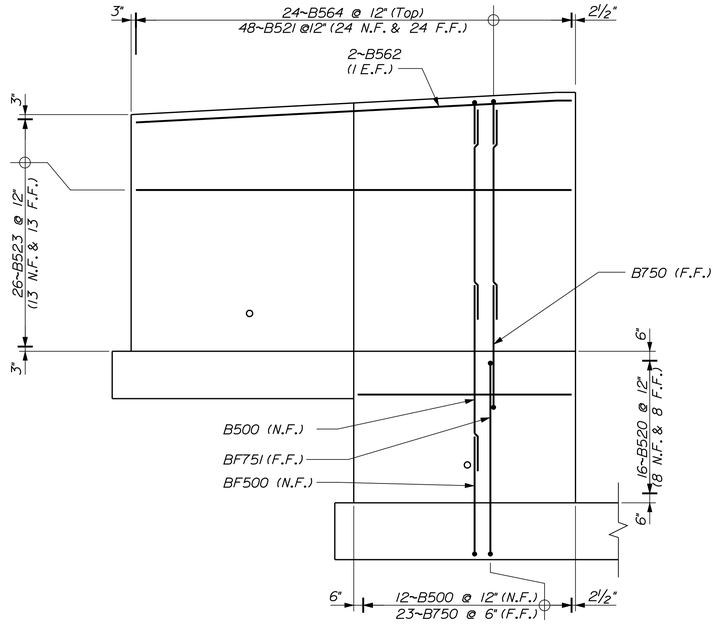

ABUTMENT NO. 2
NORTHEAST WING REINFORCEMENT

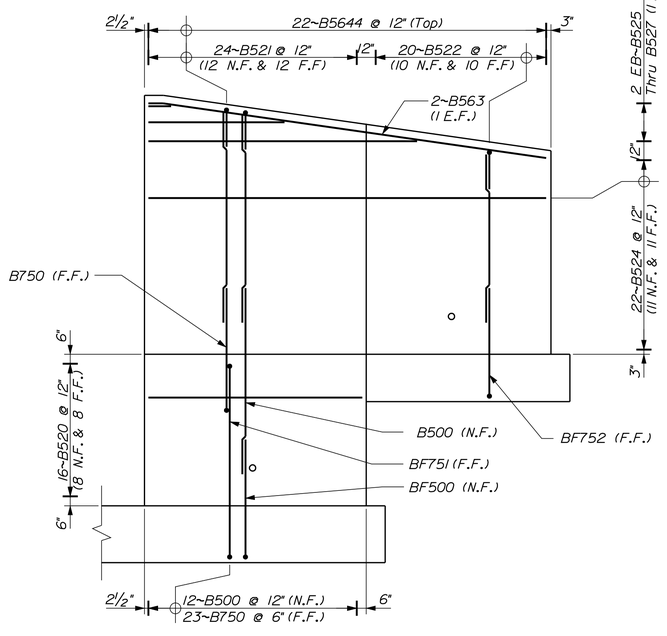

ABUTMENT NO. 2
SOUTHEAST WING REINFORCEMENT

STATE OF MAINE
DEPARTMENT OF TRANSPORTATION

IM-1668(200)E

WIN 16682.00

BRIDGE NO.: 5797

BRIDGE PLANS

	BY	DATE
PROJ. MANAGER STEPHEN BODGE		
DESIGN-DETAILED	B. WELCH	D. BURGESS 05-22-13
CHECKED-REVIEWED	B. WELCH	J. BURGESS 05-22-13
DESIGN2-DETAILED2		
DESIGN3-DETAILED3		
REVISIONS 1		
REVISIONS 2		
REVISIONS 3		
REVISIONS 4		
FIELD CHANGES		

SIGNATURE

P.E. NUMBER

DATE

UNION STREET BRIDGE
OVER INTERSTATE 95
BANGOR PENOBSCOT COUNTY

ABUTMENT NO. 2
WING WALLS

SHEET NUMBER

45

OF 93

BECKER
STRUCTURAL ENGINEERS
75 York Street, Portland, Maine 04101
207.879.1838 • beckerstructural.com

Filename: ...\045_Abutment2_wingwall.dgn Division: BRIDGE Username: CADD Date:1/2/2014

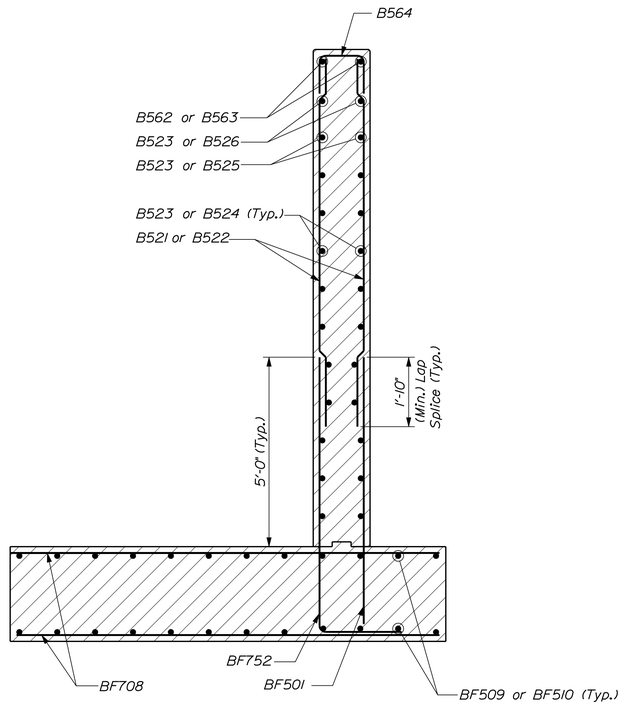

WINGWALL SECTION

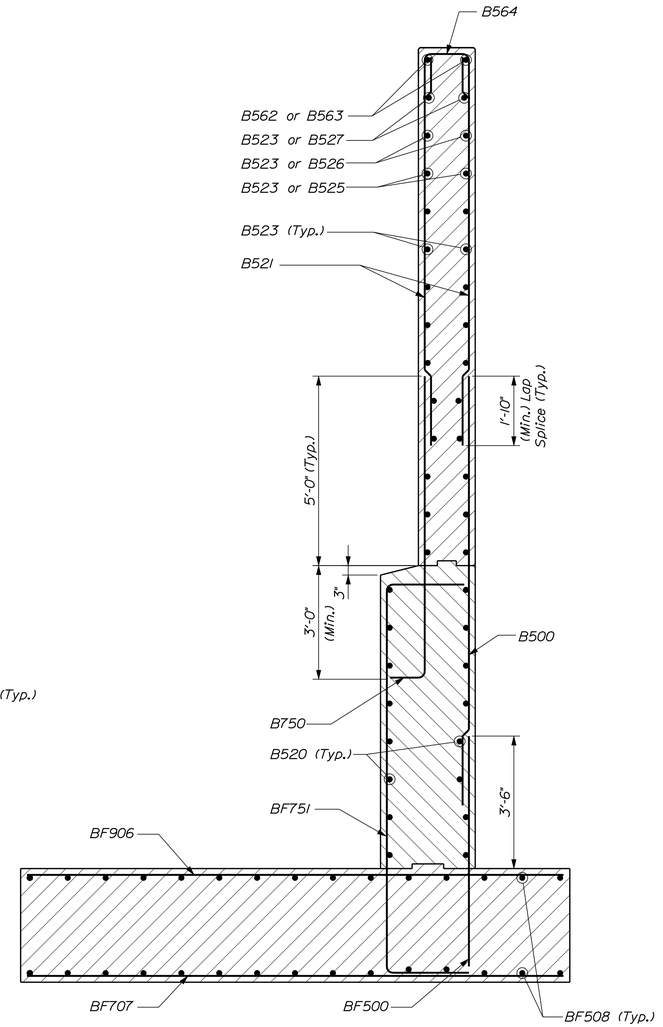

WINGWALL SECTION

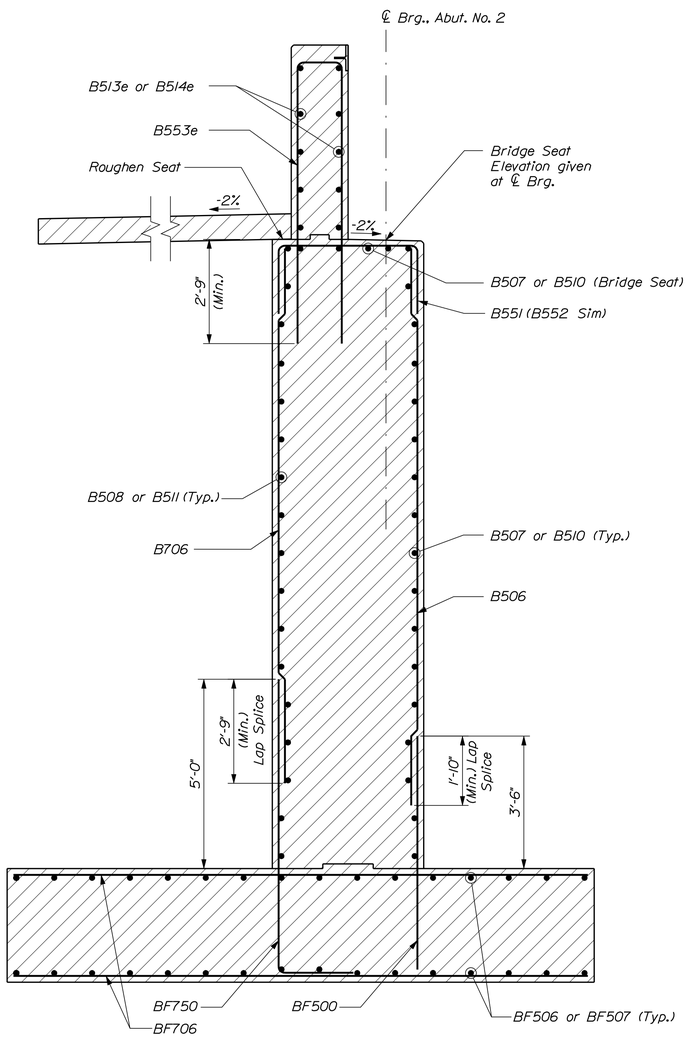

ABUTMENT SECTION

STATE OF MAINE
DEPARTMENT OF TRANSPORTATION

IM-1668(200)E

WIN 16682.00

BRIDGE NO.: 5797

BRIDGE PLANS

	BY	DATE
PROJ. MANAGER STEPHEN BODGE		
DESIGN-DETAILED	D. BURGESS	05-22-13
CHECKED-REVIEWED	B. WELCH	05-22-13
DESIGN2-DETAILED2	B. WELCH	
DESIGN3-DETAILED3		
REVISIONS 1		
REVISIONS 2		
REVISIONS 3		
REVISIONS 4		
FIELD CHANGES		

SIGNATURE

P.E. NUMBER

DATE

UNION STREET BRIDGE
OVER INTERSTATE 95
BANGOR PENOBSCOT COUNTY

ABUTMENT NO. 2
SECTIONS

BECKER
STRUCTURAL ENGINEERS
75 York Street, Portland, Maine 04101
207.879.1838 • beckerstructural.com

SHEET NUMBER

46

OF 93

Filename: ...\mst0\046_Abutment2_section.dgn Division: BRIDGE Username: CADD Date:1/2/2014

PIER NOTES:

1. Maximum calculated footing pressure is 2.7 ton per square foot.

2. All reinforcing steel in the pier shall be stainless steel.

3. Reinforcing steel shall have a minimum concrete cover of 2 inches in the pier columns and pier cap and 3 inches in the pier footing unless otherwise noted.

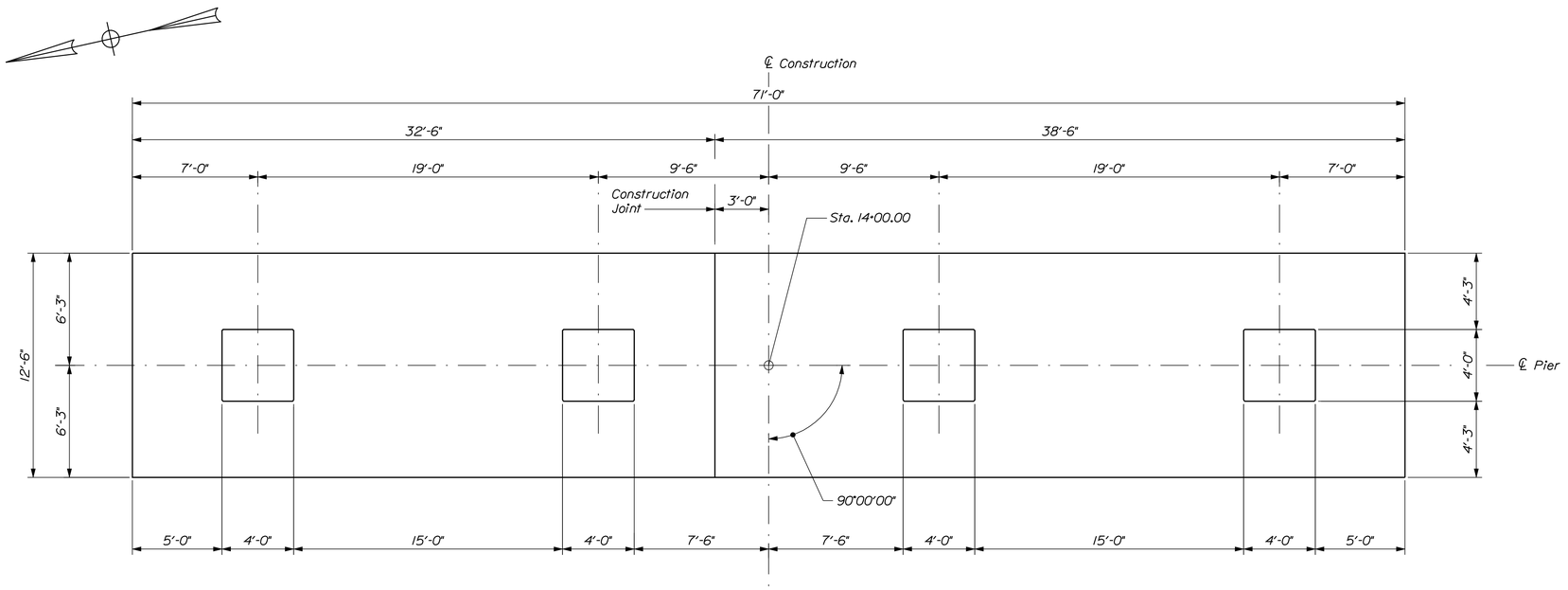

PLAN - PIER FOOTING

STATE OF MAINE
DEPARTMENT OF TRANSPORTATION

IM-1668(200)E

WIN 16682.00

BRIDGE NO.: 5797

BRIDGE PLANS

	BY	DATE
PROJ. MANAGER	STEPHEN BODGE	
DESIGN-DETAILED	D. BURGESS	05-22-13
CHECKED-REVIEWED	B. WELCH	05-22-13
DESIGN2-DETAILED2	B. WELCH	
DESIGN3-DETAILED3		
REVISIONS 1		
REVISIONS 2		
REVISIONS 3		
REVISIONS 4		
FIELD CHANGES		

SIGNATURE

P.E. NUMBER

DATE

UNION STREET BRIDGE
OVER INTERSTATE 95
BANGOR PENOBSCOT COUNTY

PIER - FOOTING

SHEET NUMBER

47

OF 93

BECKER
STRUCTURAL ENGINEERS
75 York Street, Portland, Maine 04101
207.879.1838 • beckerstructural.com

Filename: ...\msto\047_Pier_footing.dgn Division: BRIDGE Username: CADD Date:1/2/2014

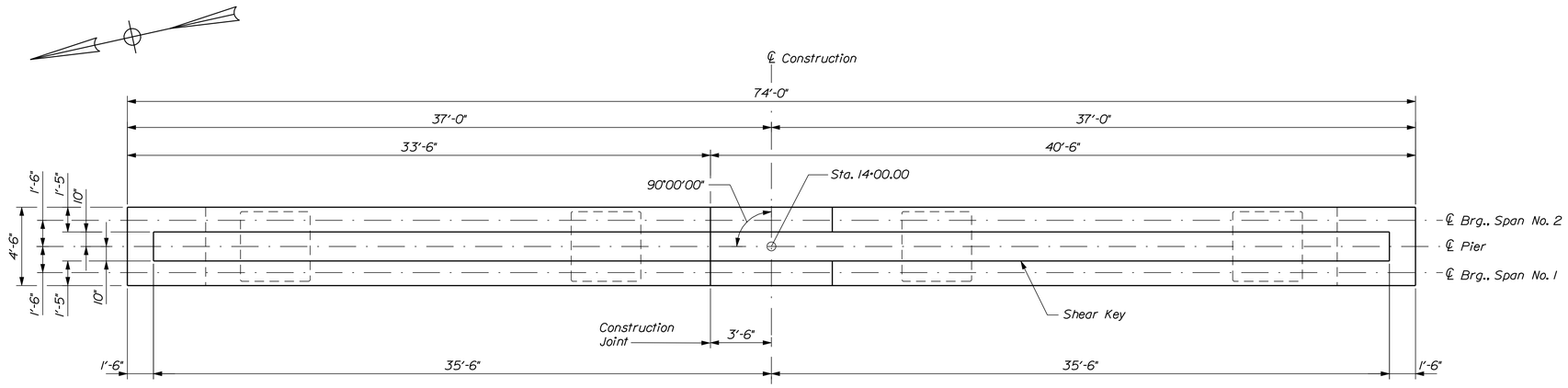

PLAN - PIER CAP

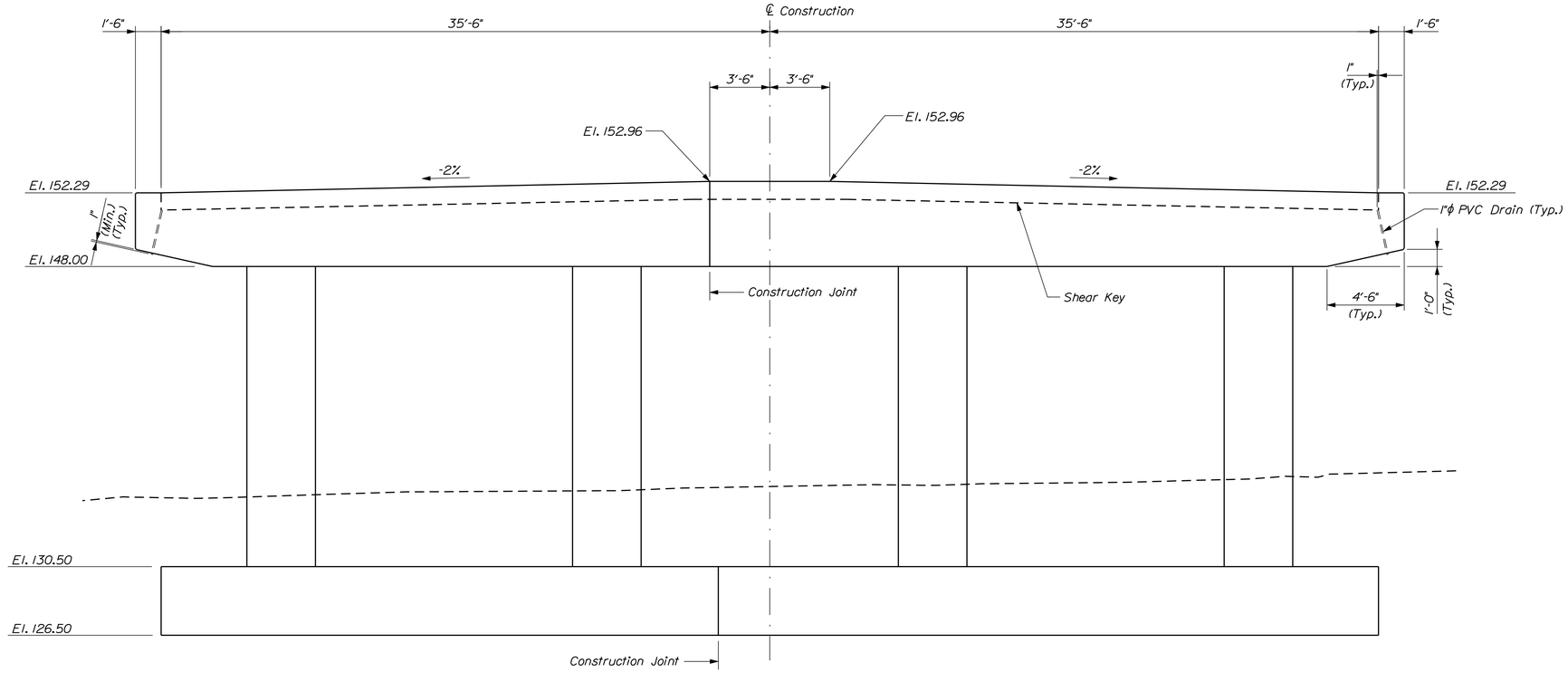

ELEVATION - PIER

STATE OF MAINE
DEPARTMENT OF TRANSPORTATION

IM-1668(200)E

WIN 16682.00

BRIDGE NO.: 5797

BRIDGE PLANS

PROJ. MANAGER STEPHEN BODGE	BY	DATE
DESIGN-DETAILED	B. WELCH	D. BURGESS	05-22-13
CHECKED-REVIEWED	B. WELCH	J. BURGESS	05-22-13
DESIGN2-DETAILED2			
DESIGN3-DETAILED3			
REVISIONS 1			
REVISIONS 2			
REVISIONS 3			
REVISIONS 4			
FIELD CHANGES			

SIGNATURE

P.E. NUMBER

DATE

UNION STREET BRIDGE
OVER INTERSTATE 95
BANGOR PENOBSCOT COUNTY

PIER - ELEVATION

SHEET NUMBER

48

OF 93

BECKER
STRUCTURAL ENGINEERS
75 York Street, Portland, Maine 04101
207.879.1838 • beckerstructural.com

Filename: ...\00\bridge\mst0\048_Pier.dgn Division: BRIDGE Username: CADD Date:1/2/2014

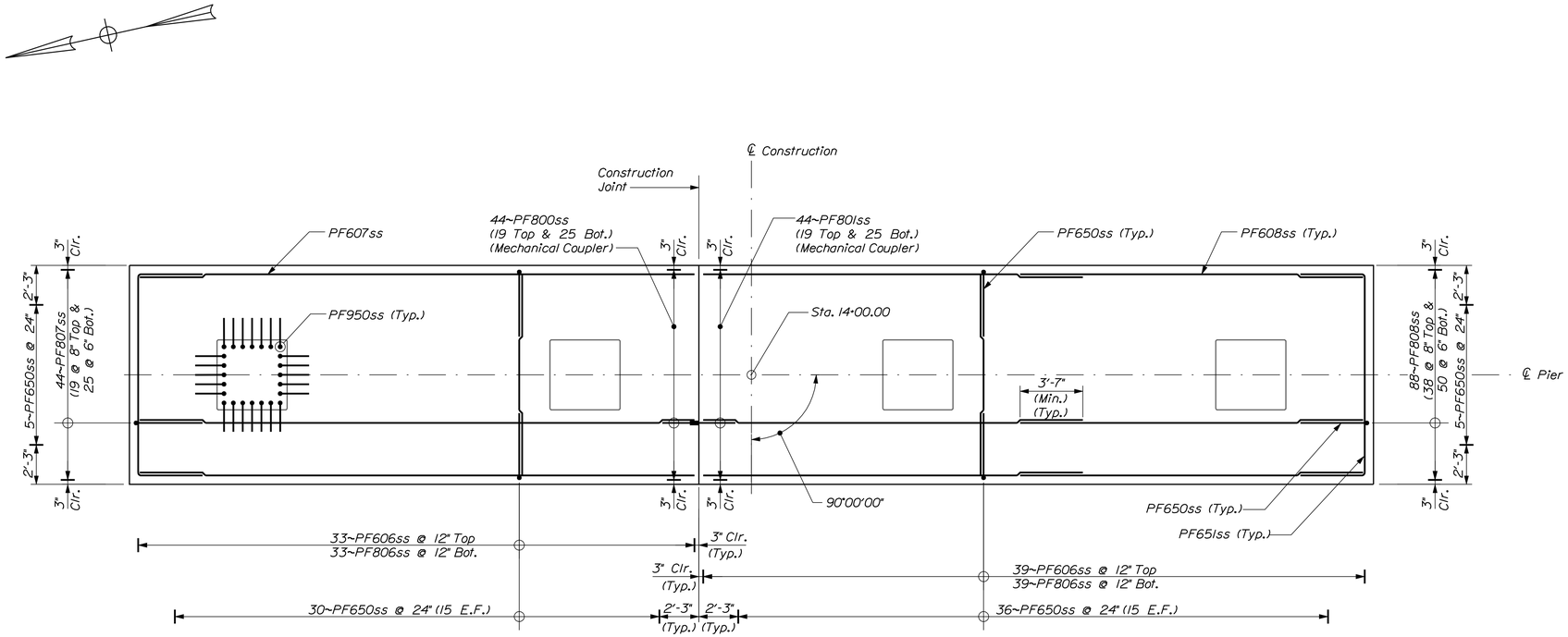

PLAN - PIER FOOTING REINFORCEMENT

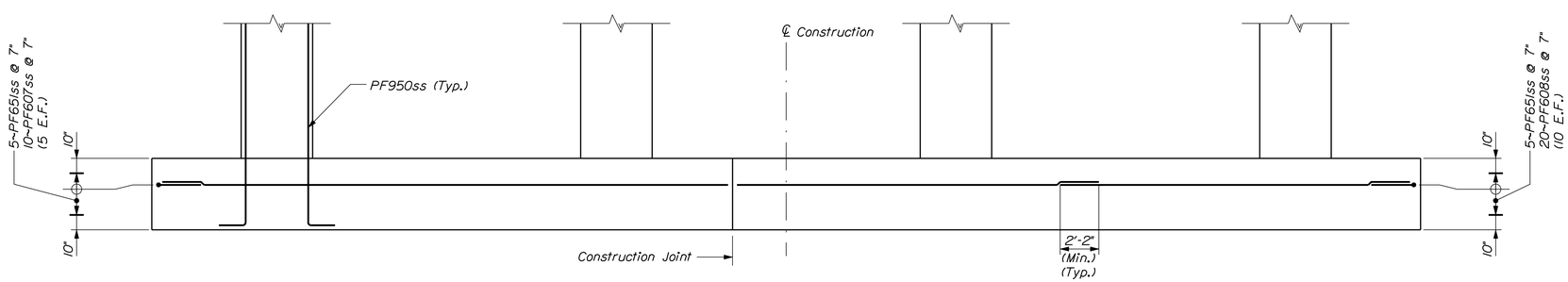

ELEVATION - PIER FOOTING REINFORCEMENT

STATE OF MAINE
DEPARTMENT OF TRANSPORTATION

IM-1668(200)E

WIN 16682.00

BRIDGE NO.: 5797

BRIDGE PLANS

	BY	DATE
PROJ. MANAGER STEPHEN BOOGE		
DESIGN-DETAILED	D. BURGESS	05-22-13
CHECKED-REVIEWED	J. BURGESS	05-22-13
DESIGN2-DETAILED2		
DESIGN3-DETAILED3		
REVISIONS 1		
REVISIONS 2		
REVISIONS 3		
REVISIONS 4		
FIELD CHANGES		

SIGNATURE

P.E. NUMBER

DATE

UNION STREET BRIDGE
OVER INTERSTATE 95
BANGOR PENOBSCOT COUNTY

PIER - FOOTING REINFORCEMENT

SHEET NUMBER

49

OF 93

BECKER
STRUCTURAL ENGINEERS
75 York Street, Portland, Maine 04101
207.879.1838 • beckerstructural.com

Filename: ...\049_Pier_footing_rebor.dgn Division: BRIDGE Username: CADD Date:1/2/2014

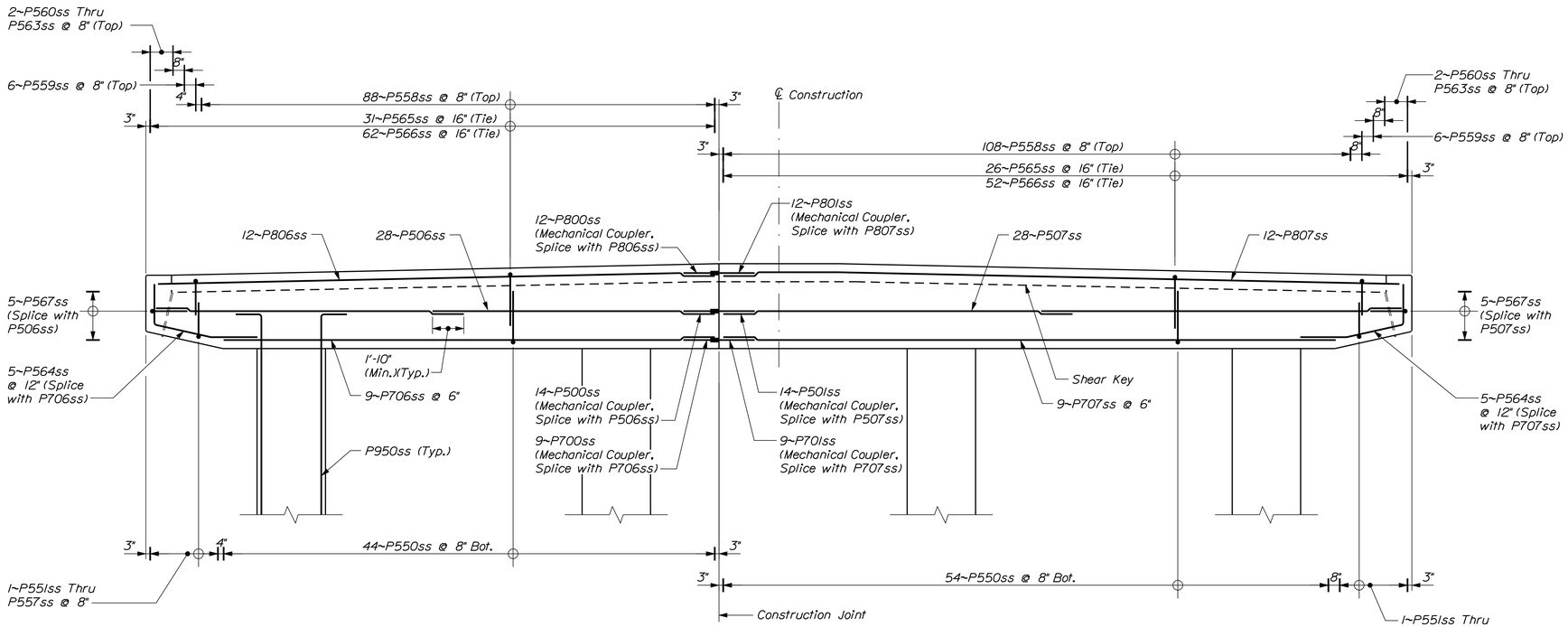

ELEVATION - PIER CAP REINFORCEMENT

1/4"=1'

STATE OF MAINE DEPARTMENT OF TRANSPORTATION	IM-1668(200)E	WIN 16682.00
		BRIDGE NO.: 5797 BRIDGE PLANS

	BY	DATE
PROJ. MANAGER STEPHEN BODGE		
DESIGN-DETAILED	D. BURGESS	05-22-13
CHECKED-REVIEWED	J. BURGESS	05-22-13
DESIGN2-DETAILED2	B. WELCH	
DESIGN3-DETAILED3	B. WELCH	
REVISIONS 1		
REVISIONS 2		
REVISIONS 3		
REVISIONS 4		
FIELD CHANGES		

SIGNATURE

P.E. NUMBER

DATE

UNION STREET BRIDGE
OVER INTERSTATE 95
BANGOR PENOBSCOT COUNTY

PIER CAP REINFORCEMENT

BECKER
STRUCTURAL ENGINEERS
75 York Street, Portland, Maine 04101
207.879.1838 • beckerstructural.com

SHEET NUMBER

50

OF 93

Filename: ...\mslo\050_Pier_cap_rebar.dgn Division: BRIDGE Username: CADD Date:1/2/2014

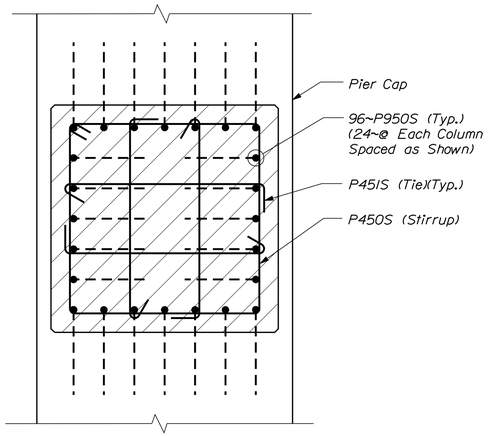

SECTION A-A

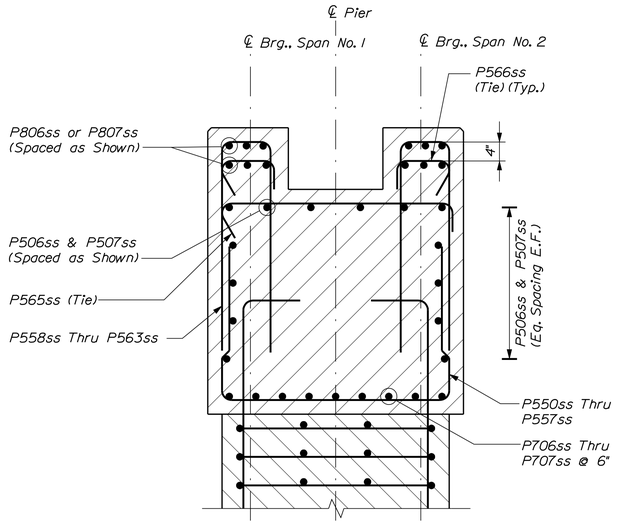

SECTION - PIER CAP REINFORCEMENT

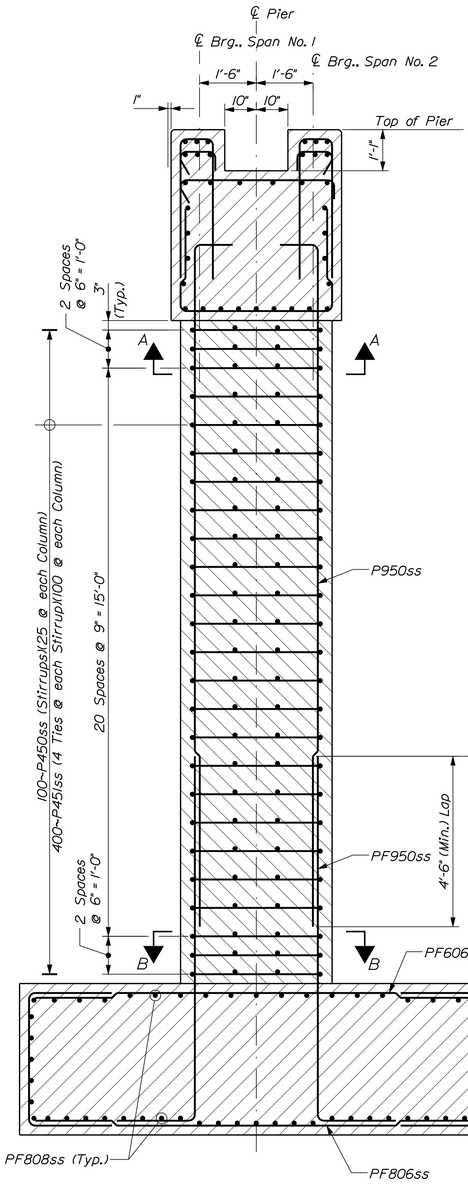

PIER SECTION

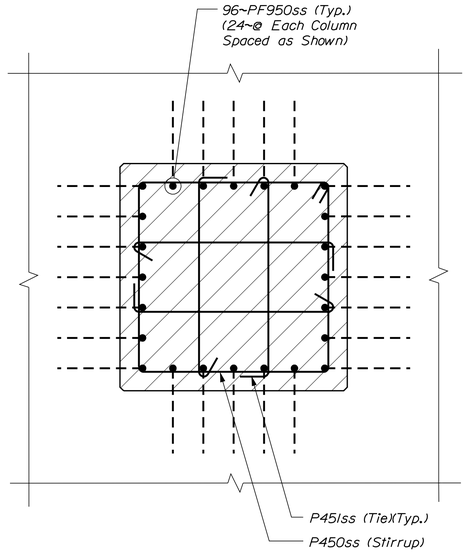

SECTION B-B

BECKER
STRUCTURAL ENGINEERS
75 York Street, Portland, Maine 04101
207.879.1838 • beckerstructural.com

STATE OF MAINE
DEPARTMENT OF TRANSPORTATION

IM-1668(200)E

WIN 16682.00

BRIDGE NO.: 5797

BRIDGE PLANS

	BY	DATE
PROJ. MANAGER STEPHEN BODGE		
DESIGN-DETAILED	B. WELCH	05-22-13
CHECKED-REVIEWED	D. BURGESS	05-22-13
DESIGN2-DETAILED2	B. WELCH	
DESIGN3-DETAILED3	J. BURGESS	
REVISIONS 1		
REVISIONS 2		
REVISIONS 3		
REVISIONS 4		
FIELD CHANGES		

SIGNATURE

P.E. NUMBER

DATE

UNION STREET BRIDGE
OVER INTERSTATE 95
BANGOR PENOBSCOT COUNTY

PIER - SECTIONS

SHEET NUMBER

51

OF 93

Filename: ...\bridge\rmsta\051_Pier_sect.dgn Division: BRIDGE Username: CADD Date:1/2/2014

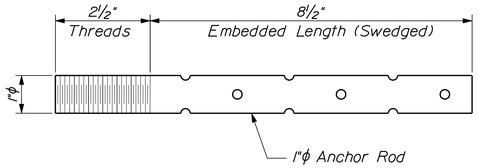

ANCHOR ROD DETAIL

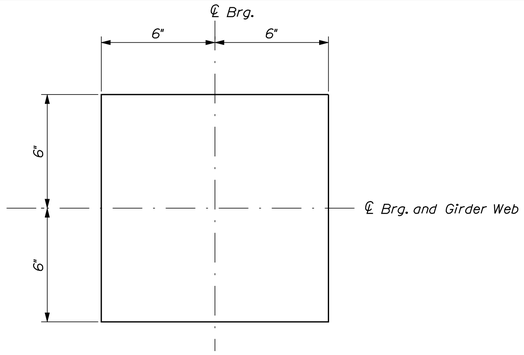

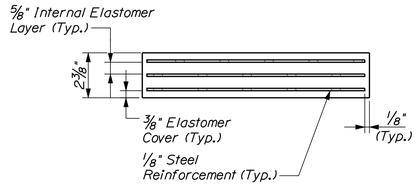

ELASTOMERIC BEARING AT PIER

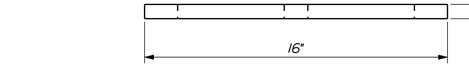

RETAINER PLATE
(At Abutments Only)

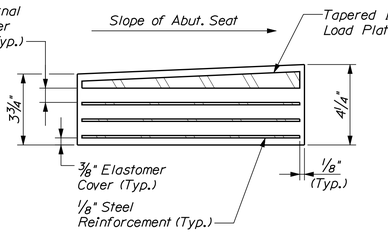

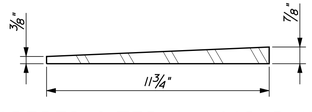

TAPERED INTERNAL LOAD PLATE

ELASTOMERIC BEARING AT ABUTMENTS

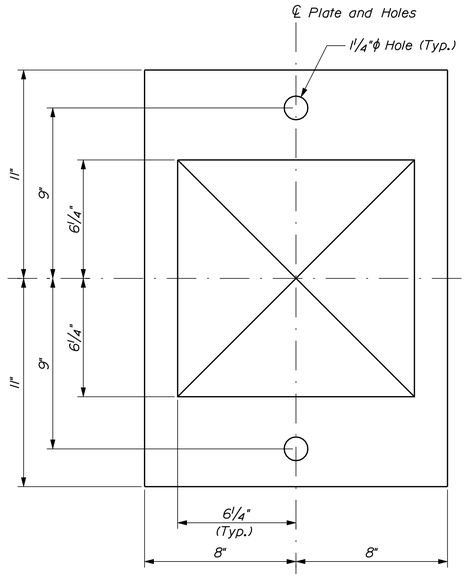

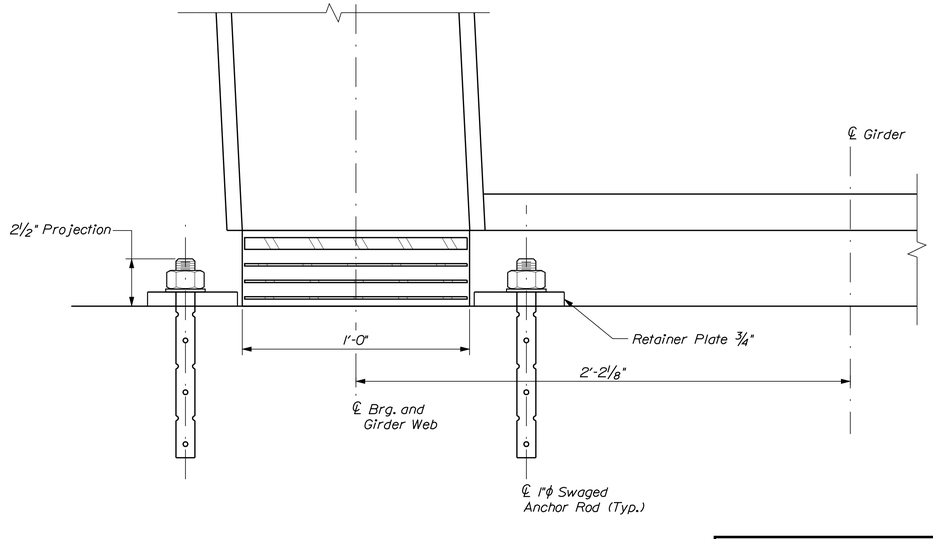

BEARING ASSEMBLY

ELASTOMERIC BEARING NOTES

1. The shear modulus shall be between 80 and 175 psi.

2. Vulcanizing of the elastomer to the steel plates shall be done during the primary mold process.

3. Bearings shall be covered during transit.

4. The retainer plates shall meet the requirements of ASTM A709/A 709M, Grade 50. Anchor rods shall meet the requirements of ASTM F 1554, Grade 105 and shall be swedged on the embedded portion of the rod.

5. The retainer plates shall be galvanized in accordance with section 506. Anchor rods, washers, and nuts shall be galvanized to ASTM A 153 or ASTM B 695 Class 50, Type 1.

6. The bearings are designed so that the superstructure may be erected when the ambient air temperature is within the range of 65°F and 90°F. If the ambient air temperature is outside of this range, the bearings shall be reset as directed by the Resident.

7. All bearings shall be marked prior to shipping. The marks shall include the bearing location on the bridge, and a direction arrow which points up-station. All marks shall be permanent and shall be visible after the bearing is installed.

8. Upset the threads on the anchor rods after assembly.

STATE OF MAINE
DEPARTMENT OF TRANSPORTATION

IM-1668(200)E

WIN 16682.00

BRIDGE NO.: 5797

BRIDGE PLANS

	SIGNATURE	P.E. NUMBER	DATE

PROJ. MANAGER STEPHEN BODGE	BY	DATE
DESIGN-DETAILED	B. WELCH	D. BURGESS	05-22-13
CHECKED-REVIEWED	B. WELCH	J. BURGESS	05-22-13
DESIGN2-DETAILED2			
DESIGN3-DETAILED3			
REVISIONS 1			
REVISIONS 2			
REVISIONS 3			
REVISIONS 4			
FIELD CHANGES			

UNION STREET BRIDGE
OVER INTERSTATE 95
BANGOR PENOBSCOT COUNTY

BEARING DETAILS

SHEET NUMBER
52
OF 93

BECKER
STRUCTURAL ENGINEERS
75 York Street, Portland, Maine 04101
207.879.1838 • beckerstructural.com

Filename: ...\mst0\052_Bearing_001.dgn Division: BRIDGE Username: CADD Date:1/2/2014

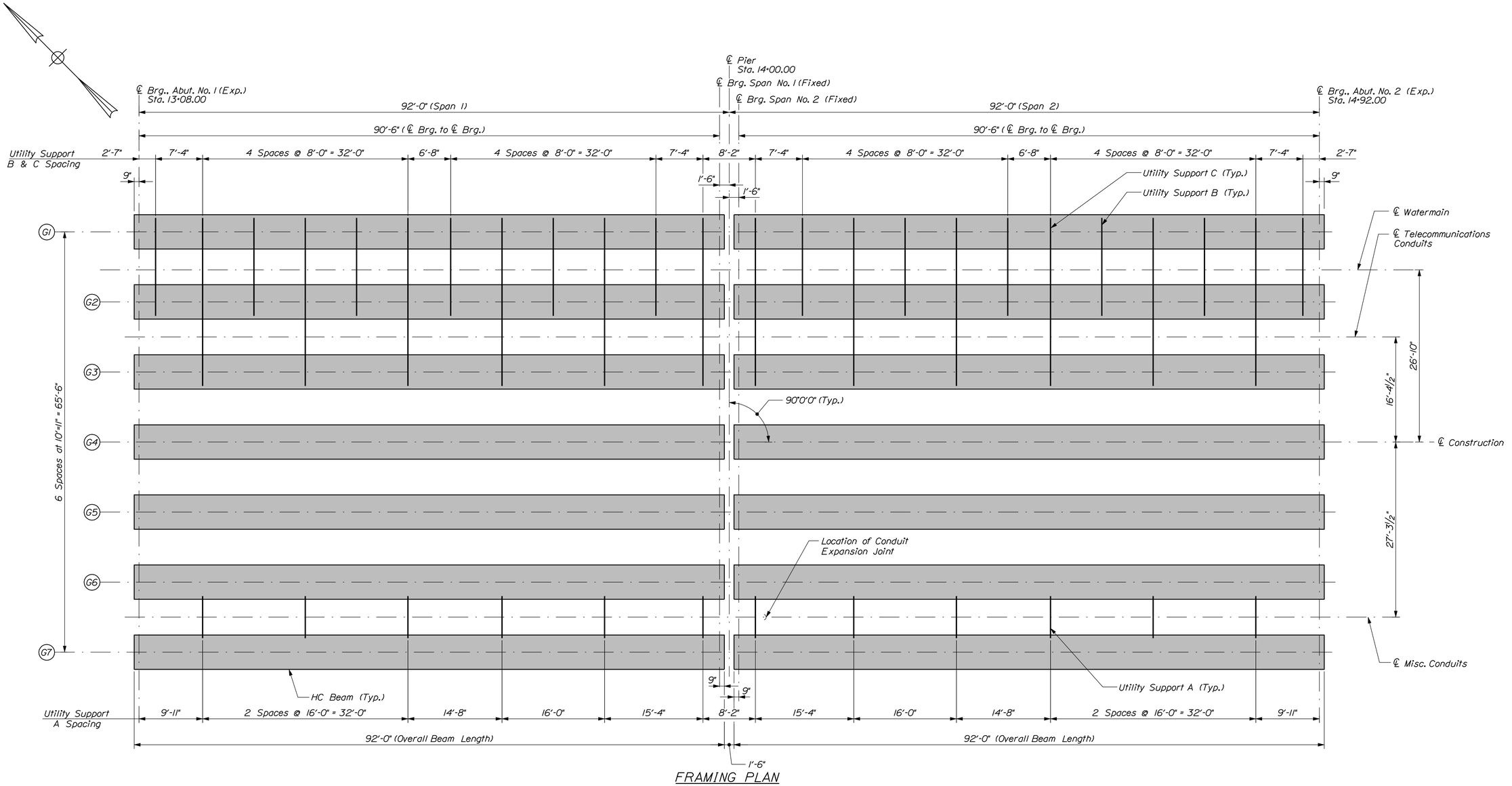

FRAMING PLAN

HYBRID-COMPOSITE BEAM NOTES

1. Hybrid-Composite Beam Notes encompass sheets 53 thru 58.

2. Cost of Shear Connectors included in Hybrid-Composite Beams (HCB).

3. The concrete compression reinforcement in the HCB's shall be furnished and installed by the Contractor. The compression reinforcement will not be paid for separately, and shall be included in the cost of Hybrid-Composite Beams.

4. Compression reinforcement in the HCB shall be Self-Consolidating Concrete (SCC), f'c = 6,000 psi. See Special Provision.

5. The volumes of compression reinforcement in each web shall be maintained within 1½ cubic yards of each other during placement.

6. Tension reinforcement in the HCB shall be ½" diameter 270 ksi strands, according to ASTM A416 Seven-Wire Prestressing Strand. The strands shall be galvanized in accordance with ASTM A475.

7. Shear connectors shall be AASHTO M270 Grade 60 and shall be zinc-coated (galvanized) in accordance with ASTM A767.

8. The FRP shell laminate shall be a glass reinforced, vinyl ester polymer conforming to the requirement of the Special Provisions for Hybrid-Composite Beams.

9. Lifting the HC Beams may be done using a sling angle less than 60 degrees from the horizontal as measured along the length of the beam. Lifting devices shall be sized appropriately, be hot dip galvanized and installed in each of the four chimneys in each beam. During lifting a 6 foot (+/-) long spreader beam shall be used at each end transversely to span between the lifting devices transverse to the beam.

10. Weight a single FRP HC Beam shell, with steel strands, but without compression reinforcement is approximately 10,000 lbs and approximately 35,000 lbs with compression reinforcement

11. The 0-axis of the quad-weave fabric shall be oriented along the longitudinal axis of the beams in building up the FRP shell.

12. Girder lines 1 and 7 shall have 1" diameter holes for deck end haunch reinforcement (abutment ends) on the interior face of the FRP shell only.

13. Place shear connectors, arch reinforcement, continuity bars, utility support anchor rods prior to placing SCC for compression reinforcement.

14. The HCB access hatch shall be constructed with stainless steel plates, shapes, tubing and bars conforming to ASTM 304L unless noted otherwise.

15. Four 18 inch by 18 inch beam witness panels shall be fastened to the bridge as directed by the Resident. Any fasteners used shall not penetrate the composite shell. Three panels shall be located on the sunny side (southerly) of the structure and one panel located on the shaded side (northerly). Panels shall be removable in order to allow for future testing. Payment shall be incidental to related contract items.

16. In order to verify beam deflections, the Contractor shall survey the beam centerline at tenth points after each of the following steps: beam erection, compression reinforcement placement, concrete deck placement, and after all superimposed dead load is applied. Survey results shall be provided to the Resident.

BECKER STRUCTURAL ENGINEERS
75 York Street, Portland, Maine 04101
207.879.1838 ▪ beckerstructural.com

STATE OF MAINE
DEPARTMENT OF TRANSPORTATION

IM-1668(200)E

WIN 16682.00

BRIDGE NO.: 5797

BRIDGE PLANS

	BY	DATE
PROJ. MANAGER STEPHEN BODGE		
DESIGN-DETAILED	D. BURGESS	05-22-13
CHECKED-REVIEWED	B. WELCH	05-22-13
DESIGN2-DETAILED2		
DESIGN3-DETAILED3		
REVISIONS 1		
REVISIONS 2		
REVISIONS 3		
REVISIONS 4		
FIELD CHANGES		

SIGNATURE

P.E. NUMBER

DATE

UNION STREET BRIDGE
OVER INTERSTATE 95
BANGOR PENOBSCOT COUNTY

FRAMING PLAN

SHEET NUMBER
53
OF 93

Filename: ...\MSTA\053_Framing_001.dgn Division: BRIDGE Username: CADD Date:1/2/2014

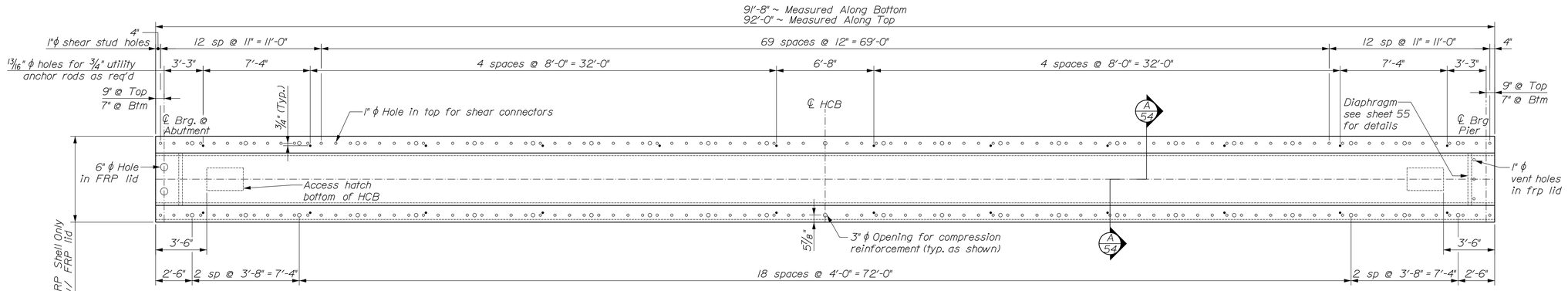

DIMENSIONAL BEAM PLAN

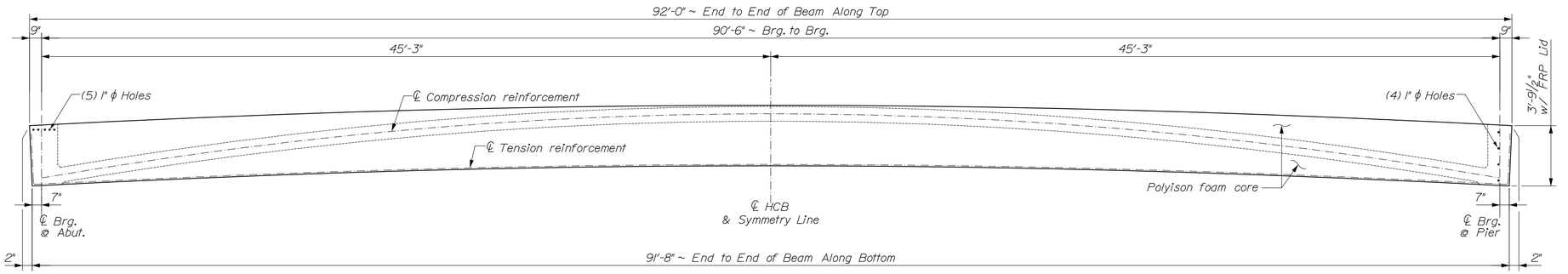

DIMENSIONAL BEAM ELEVATION

(See table sheet 53 for camber information)

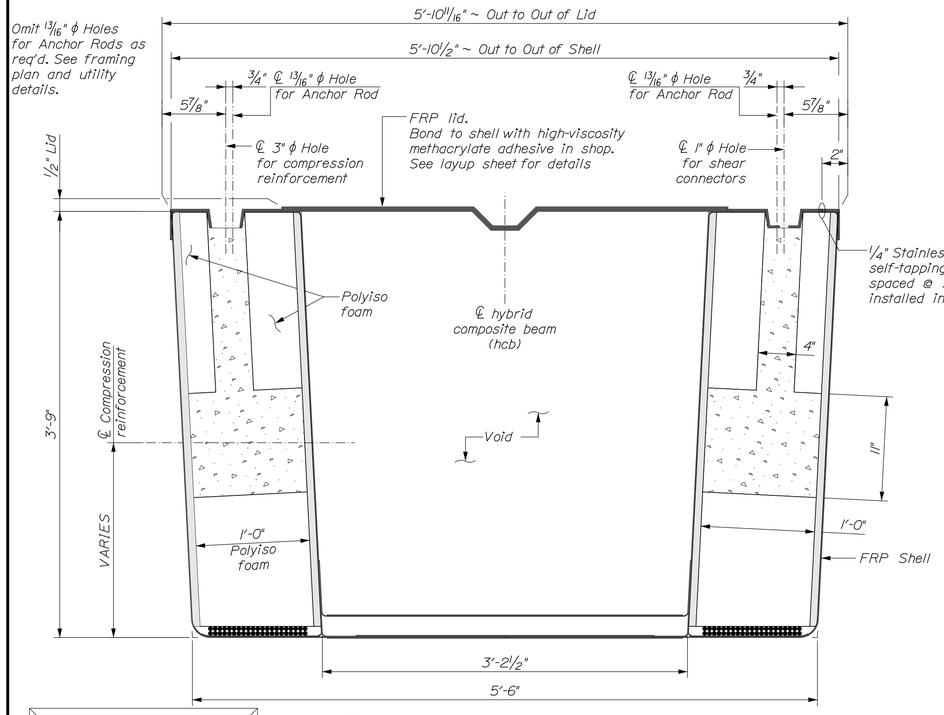

See sheet #56 for all reinforcing information.

A 54 HCB DINEMSIONAL SECTION
(symmetric about ▪ beam, uno)

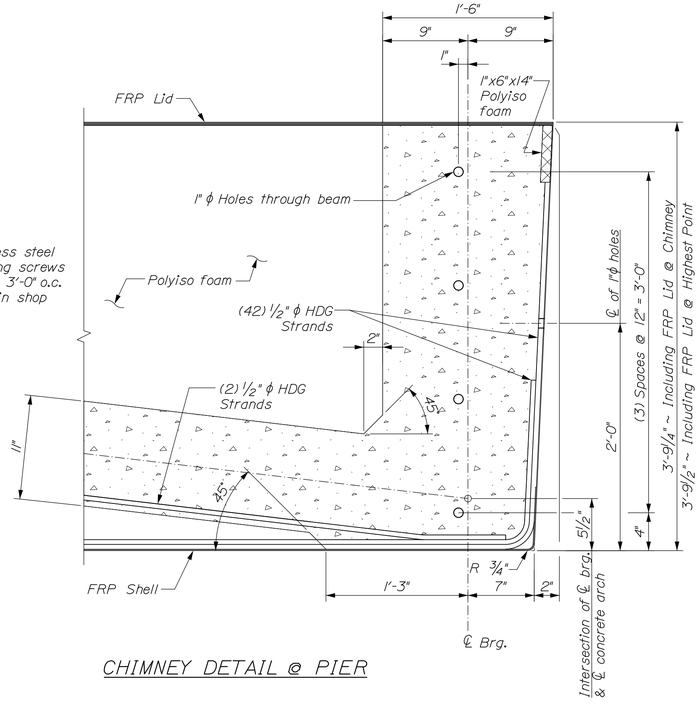

CHIMNEY DETAIL @ PIER

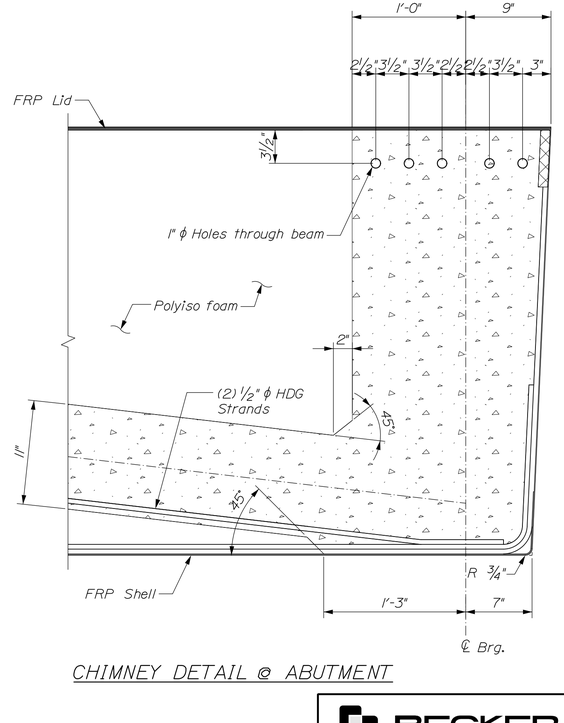

CHIMNEY DETAIL @ ABUTMENT

STATE OF MAINE
DEPARTMENT OF TRANSPORTATION

IM-1668(200)E

PIN 16682.00

BRIDGE PLANS

BRIDGE NO.: 5797

STATE OF MAINE — ERIC A. CALDERWOOD No. 9099 — LICENSED PROFESSIONAL ENGINEER

SIGNATURE

P.E. NUMBER

DATE

	BY	DATE
PROJ. MANAGER STEPHEN BOSSE		
DESIGN-DETAILED	MJH	DEC. 2012
CHECKED-REVIEWED	---	
DESIGN2-DETAILED2		
DESIGN3-DETAILED3		
REVISIONS 1		
REVISIONS 2		
REVISIONS 3		
REVISIONS 4		
FIELD CHANGES		

UNION STREET BRIDGE
OVER INTERSTATE 95
BANGOR PENOBSCOT COUNTY

HCB DIMENSIONAL DETAILS

SHEET NUMBER 54 OF 93

BECKER STRUCTURAL ENGINEERS
75 York Street, Portland, Maine 04101
207.879.1838 ▪ beckerstructural.com

CALDERWOOD ENGINEERING
225 RIVER ROAD
RICHMOND, ME 04357
PH. (207)737-2007 FAX (207)737-2008

Filename: ...\054_HCBeam_Details.dgn Division: HIGHWAY Username: Eric Date:12/30/2013

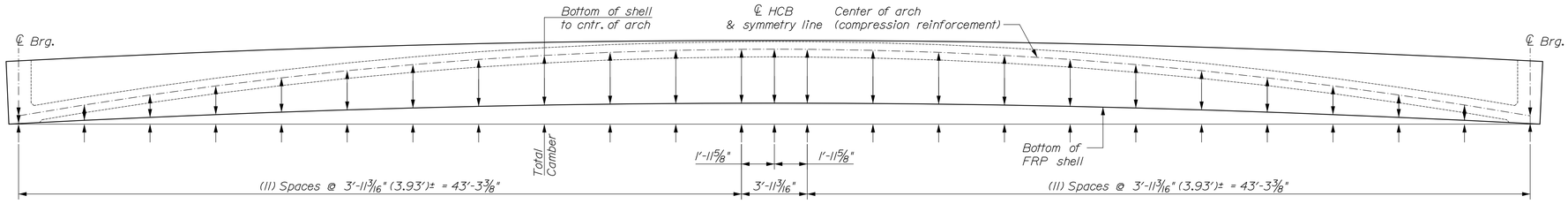

CAMBER DIAGRAM

(See tables this sheet for camber & arch information)

Table of Camber & Deflections

GIRDER		0' ℄ Brg.	3.93'	7.87'	11.80'	15.74'	19.67'	23.61'	27.54'	31.48'	35.41'	39.35'	43.28'	45.25' ½ SPAN	47.22'	51.15'	55.09'	59.02'	62.96'	66.89'	70.83'	74.76'	78.70'	82.63'	86.57'	90.5' ℄ Brg.
G1 & G7	SHELL	0	0.13	0.26	0.38	0.49	0.60	0.69	0.77	0.84	0.89	0.92	0.94	0.94	0.94	0.92	0.89	0.84	0.77	0.69	0.60	0.49	0.38	0.26	0.13	0
	ARCH	0	0.49	0.96	1.41	1.84	2.23	2.57	2.86	3.11	3.29	3.42	3.48	3.48	3.48	3.42	3.29	3.11	2.86	2.57	2.23	1.84	1.41	0.96	0.49	0
	DECK	0	0.73	1.44	2.09	2.67	3.18	3.61	3.96	4.25	4.46	4.60	4.67	4.68	4.67	4.60	4.46	4.25	3.96	3.61	3.18	2.67	2.09	1.44	0.73	0
	SIDC	0	0.06	0.12	0.17	0.23	0.27	0.31	0.34	0.36	0.37	0.37	0.36	0.36	0.35	0.32	0.29	0.25	0.21	0.17	0.13	0.09	0.06	0.03	0.01	0
	DW	0	0.01	0.01	0.02	0.02	0.03	0.03	0.04	0.04	0.04	0.04	0.04	0.04	0.04	0.03	0.03	0.03	0.02	0.02	0.01	0.01	0.01	0	0	0
	VERTICAL CURVE	0	0.58	1.04	1.50	1.84	2.20	2.47	2.74	2.90	3.05	3.10	3.14	3.18	3.14	3.10	3.05	2.90	2.74	2.47	2.20	1.84	1.50	1.04	0.58	0
	TOTAL CAMBER	0	2.00	3.83	5.57	7.09	8.51	9.68	10.71	11.50	12.10	12.45	12.63	12.68	12.62	12.39	12.01	11.38	10.56	9.53	8.35	6.94	5.45	3.73	1.94	0
G2 - G6	SHELL	0	0.13	0.26	0.38	0.49	0.60	0.69	0.77	0.84	0.89	0.92	0.94	0.94	0.94	0.92	0.89	0.84	0.77	0.69	0.60	0.49	0.38	0.26	0.13	0
	ARCH	0	0.49	0.96	1.41	1.84	2.23	2.57	2.86	3.11	3.29	3.42	3.48	3.48	3.48	3.42	3.29	3.11	2.86	2.57	2.23	1.84	1.41	0.96	0.49	0
	DECK	0	0.82	1.60	2.33	2.98	3.55	4.03	4.43	4.74	4.98	5.13	5.21	5.22	5.21	5.13	4.98	4.74	4.43	4.03	3.55	2.98	2.33	1.60	0.82	0
	SIDC	0	0.02	0.03	0.05	0.06	0.08	0.09	0.10	0.10	0.11	0.11	0.11	0.10	0.10	0.09	0.08	0.07	0.06	0.05	0.04	0.03	0.02	0.01	0	0
	WEARING COURSE	0	0.04	0.08	0.11	0.15	0.18	0.20	0.22	0.24	0.25	0.25	0.24	0.24	0.23	0.22	0.19	0.17	0.14	0.11	0.09	0.06	0.04	0.02	0.01	0
	VERTICAL CURVE	0	0.58	1.04	1.50	1.84	2.20	2.47	2.74	2.90	3.05	3.10	3.14	3.18	3.14	3.10	3.05	2.90	2.74	2.47	2.20	1.84	1.50	1.04	0.58	0
	TOTAL CAMBER	0	2.08	3.97	5.78	7.36	8.84	10.05	11.12	11.93	12.57	12.93	13.12	13.16	13.10	12.88	12.48	11.83	11.00	9.92	8.71	7.24	5.68	3.89	2.03	0

-Cambers & deflection dimensions are in inches
-Horizontal dimensions are in feet

Dimensions from bottom of Shell to Centroid of Arch (Compression Reinforcement)

	0' ℄ Brg.	3.93'	7.87'	11.80'	15.74'	19.67'	23.61'	27.54'	31.48'	35.41'	39.35'	43.28'	45.25' ½ span	47.22'	51.15'	55.09'	59.02'	62.96'	66.89'	70.83'	74.76'	78.70'	82.63	86.57'	90.5' ℄ Brg.
Typical all Girders	5.5	11.03	16.06	20.58	24.60	28.12	31.14	33.65	35.66	37.17	38.17	38.68	38.74	38.68	38.17	37.17	35.66	33.65	31.14	28.12	24.60	20.58	16.06	11.03	5.5

-Dimensions to centroid are in inches
-Horizontal dimensions are in feet

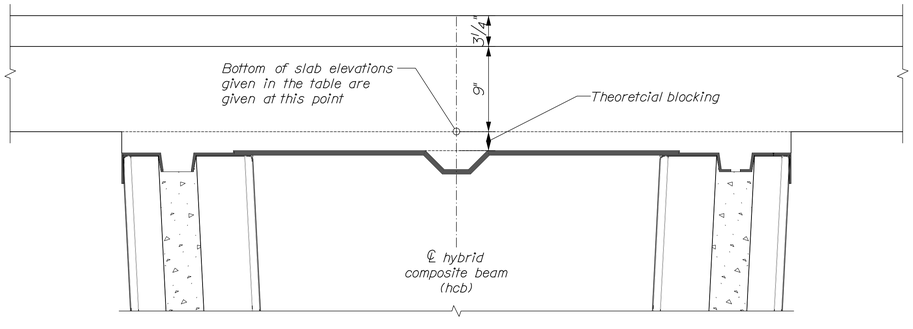

SLAB HAUNCH & BLOCKING DETAIL

THEORETICAL BLOCKING IS 2" @ ℄ BRG ABUTMENTS AND PIER
(DO NOT USE THEORETICAL BLOCKING DISTANCE TO SET FORM)

BOTTOM OF SLAB ELEVATIONS

GIRDER	℄ BRG ABUT 1	Span 1 - Elevations at 1/10th Points								℄ Pier SPAN 1
		9.20'	18.40'	27.60'	36.80'	46.00'	55.20'	64.40'	73.60'	82.8'	
G1	155.11	155.51	155.85	156.14	156.36	156.53	156.64	156.69	156.69	156.64	156.57
G2	155.33	155.74	156.10	156.39	156.62	156.79	156.90	156.95	156.94	156.87	156.78
G3	155.55	155.96	156.31	156.61	156.84	157.01	157.12	157.17	157.16	157.09	157.00
G4	155.77	156.18	156.53	156.83	157.06	157.23	157.34	157.38	157.37	157.31	157.22
G5	155.55	155.96	156.31	156.61	156.84	157.01	157.12	157.17	157.16	157.09	157.00
G6	155.33	155.74	156.10	156.39	156.62	156.79	156.90	156.95	156.94	156.87	156.78
G7	155.11	155.51	155.85	156.14	156.36	156.53	156.64	156.69	156.69	156.64	156.57
GIRDER	℄ Pier SPAN 2	Span 2 - Elevations at 1/10th Points								℄ BRG ABUT 2
		9.20'	18.40'	27.60'	36.80'	46.00'	55.20'	64.40'	73.60'	82.8'	
G1	156.57	156.71	156.84	156.92	156.94	156.90	156.81	156.65	156.44	156.17	155.85
G2	156.78	156.94	157.08	157.17	157.19	157.16	157.06	156.91	156.68	156.40	156.07
G3	157.00	157.16	157.30	157.39	157.41	157.38	157.28	157.12	156.90	156.62	156.29
G4	157.22	157.38	157.52	157.61	157.63	157.60	157.50	157.34	157.12	156.84	156.50
G5	157.00	157.16	157.30	157.39	157.41	157.38	157.28	157.12	156.90	156.62	156.29
G6	156.78	156.94	157.08	157.17	157.19	157.16	157.06	156.91	156.68	156.40	156.07
G7	156.57	156.71	156.84	156.92	156.94	156.90	156.81	156.65	156.44	156.17	155.85

STATE OF MAINE
DEPARTMENT OF TRANSPORTATION

IM-1668(200)E

PIN 16682.00

BRIDGE NO.: 5797

BRIDGE PLANS

STATE OF MAINE
ERIC J. CALDERWOOD
No. 9099
LICENSED PROFESSIONAL ENGINEER

SIGNATURE

P.E. NUMBER

DATE

	BY	DATE
PROJ. MANAGER STEPHEN BODGE		
DESIGN-DETAILED JJH	---	DEC. 2012
CHECKED-REVIEWED		
DESIGN2-DETAILED2		
DESIGN3-DETAILED3		
REVISIONS 1		
REVISIONS 2		
REVISIONS 3		
REVISIONS 4		
FIELD CHANGES		

UNION STREET BRIDGE
OVER INTERSTATE 95
BANGOR PENOBSCOT COUNTY

CAMBER, DEFLECTIONS & ARCH DIMENSIONS

SHEET NUMBER

55

OF 93

BECKER STRUCTURAL ENGINEERS
75 York Street, Portland, Maine 04101
207.879.1838 ▪ beckerstructural.com

CALDERWOOD ENGINEERING
25 RIVER ROAD
RICHMOND, ME 04357
PH. (207)737-2007 FAX (207)737-2008

Filename: ...\055_HCBeam_Detail.dgn Division: HIGHWAY Username: Eric Date:12/30/2013

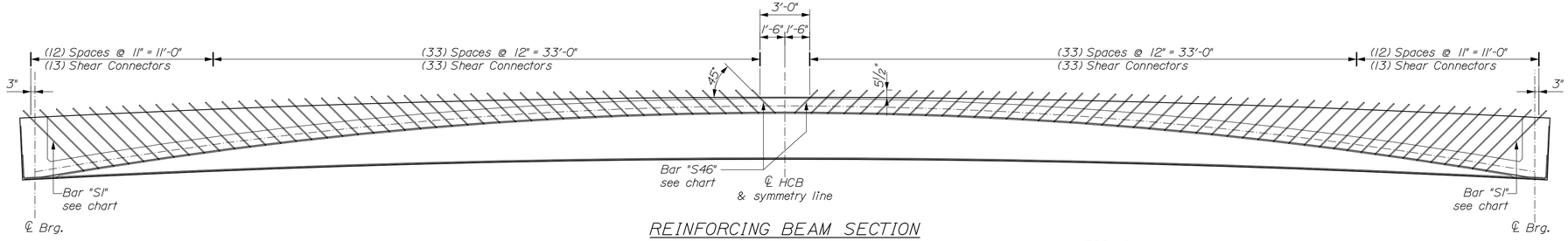

REINFORCING BEAM SECTION

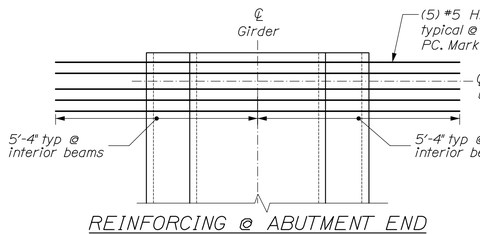

REINFORCING @ ABUTMENT END

Interior Girder lines 2, 3, 5, & 6

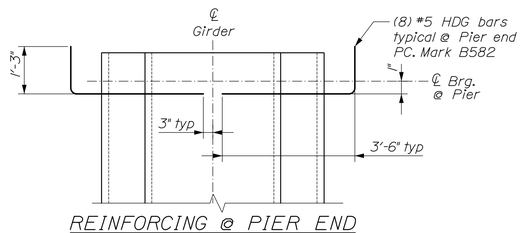

REINFORCING @ PIER END

@ All Girders

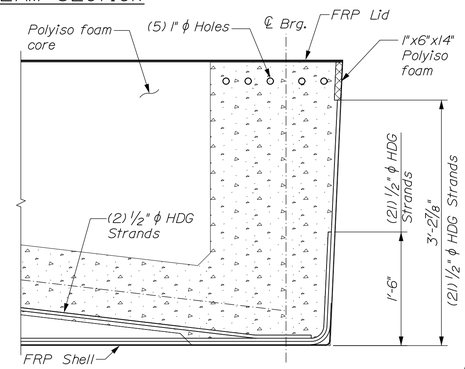

CHIMNEY DETAIL @ ABUTMENT

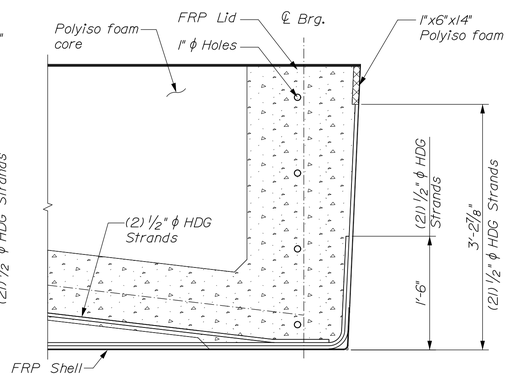

CHIMNEY DETAIL @ PIER

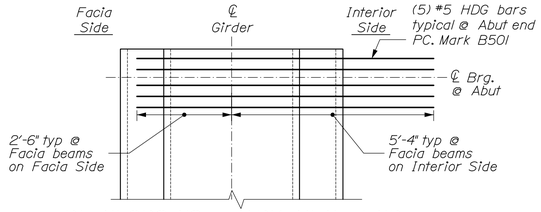

REINFORCING @ ABUTMENT END

Facia Girder lines 1 & 7

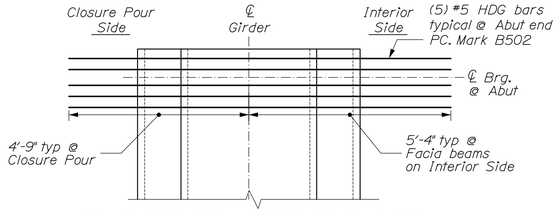

REINFORCING @ ABUTMENT END

Closure Pour, Girder line 4

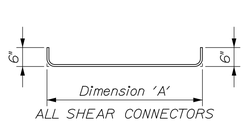

ALL SHEAR CONNECTORS

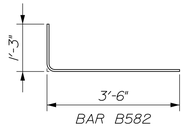

BAR B582

Rebar Quantities

bent bars

Pc. Mk.	Quantity (per beam)	Total (for all beams)	Pc. Mk.	Quantity (per beam)	Total (for all beams)
B550	2	28	B568	2	28
B551	2	28	B569	2	28
B552	2	28	B570	2	28
B553	2	28	B571	2	28
B554	2	28	B572	2	28
B555	2	28	B573	4	56
B556	2	28	B574	2	28
B557	4	56	B575	4	56
B558	2	28	B576	2	28
B559	2	28	B577	4	56
B560	2	28	B578	4	56
B561	2	28	B579	6	112
B562	2	28	B580	8	112
B563	2	28	B581	8	112
B564	2	28	Pc. Mk.	Length	Quantity (per beam)	Total (for all beams)
B565	2	28				
B566	2	28	B582	4'-8"	8	112
B567	2	28				

Rebar Quantities

straight bars

Pc. Mk.	Length	Quantity (per beam)	Total (for all beams)	Pc. Mk.	Length	Quantity (per beam)	Total (for all beams)
B500	10'-8"	5	40	B502	10'-1"	5	10
B501	7'-10"	5	20				

Shear Connectors

Bar	Pc. Mk.	'A'	Length	Bar	Pc. Mk.	'A'	Length
S1	B550	5'-3"	6'-1 1/2"	S24	B572	2'-10"	3'-8 1/2"
S2	B551	5'-1"	5'-11 1/2"	S25	B573	2'-9"	3'-7 1/2"
S3	B552	4'-11"	5'-9 1/2"	S26	B573	2'-9"	3'-7 1/2"
S4	B553	4'-10"	5'-8 1/2"	S27	B574	2'-7"	3'-5 1/2"
S5	B554	4'-8"	5'-6 1/2"	S28	B574	2'-7"	3'-5 1/2"
S6	B555	4'-7"	5'-5 1/2"	S29	B575	2'-6"	3'-4 1/2"
S7	B556	4'-5"	5'-3 1/2"	S30	B575	2'-6"	3'-4 1/2"
S8	B557	4'-4"	5'-2 1/2"	S31	B576	2'-5"	3'-3 1/2"
S9	B557	4'-4"	5'-2 1/2"	S32	B577	2'-4"	3'-2 1/2"
S10	B558	4'-2"	5'-0 1/2"	S33	B577	2'-4"	3'-2 1/2"
S11	B559	4'-1"	4'-11 1/2"	S34	B578	2'-3"	3'-1 1/2"
S12	B560	4'-0"	4'-10 1/2"	S35	B578	2'-3"	3'-1 1/2"
S13	B561	3'-10"	4'-8 1/2"	S36	B579	2'-2"	3'-0 1/2"
S14	B562	3'-9"	4'-7 1/2"	S37	B579	2'-2"	3'-0 1/2"
S15	B563	3'-8"	4'-6 1/2"	S38	B579	2'-2"	3'-0 1/2"
S16	B564	3'-7"	4'-5 1/2"	S39	B580	2'-1"	2'-11 1/2"
S17	B565	3'-6"	4'-4 1/2"	S40	B580	2'-1"	2'-11 1/2"
S18	B566	3'-5"	4'-3 1/2"	S41	B580	2'-1"	2'-11 1/2"
S19	B567	3'-3"	4'-1 1/2"	S42	B580	2'-1"	2'-11 1/2"
S20	B568	3'-2"	4'-0 1/2"	S43	B581	2'-0"	2'-10 1/2"
S21	B569	3'-1"	3'-11 1/2"	S44	B581	2'-0"	2'-10 1/2"
S22	B570	3'-0"	3'-10 1/2"	S45	B581	2'-0"	2'-10 1/2"
S23	B571	2'-11"	3'-9 1/2"	S46	B581	2'-0"	2'-10 1/2"

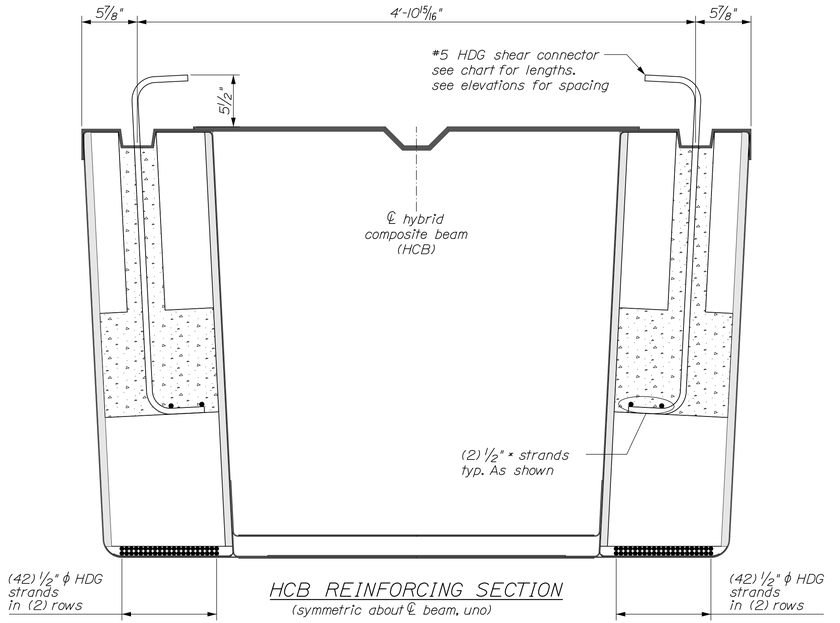

HCB REINFORCING SECTION

(symmetric about ℄ beam, uno)

CALDERWOOD ENGINEERING
222 RIVER ROAD
RICHMOND, ME 04357
PH. (207) 737-2007 FAX (207) 737-2001

BECKER STRUCTURAL ENGINEERS
75 York Street, Portland, Maine 04101
207.879.1838 ■ beckerstructural.com

STATE OF MAINE
DEPARTMENT OF TRANSPORTATION

IM-1668(200)E

PIN 16682.00

BRIDGE NO.: 5797

BRIDGE PLANS

STATE OF MAINE
ERIC J. CALDERWOOD
No. 9099
LICENSED PROFESSIONAL ENGINEER

SIGNATURE

P.E. NUMBER

DATE

	BY	DATE
PROJ. MANAGER STEPHEN BODGE		
DESIGN-DETAILED JJH	---	DEC. 2012
CHECKED-REVIEWED		
DESIGN2-DETAILED2		
DESIGN3-DETAILED3		
REVISIONS 1		
REVISIONS 2		
REVISIONS 3		
REVISIONS 4		
FIELD CHANGES		

UNION STREET BRIDGE
OVER INTERSTATE 95
BANGOR PENOBSCOT COUNTY

HCB REINFORCING DETAILS

SHEET NUMBER

56

OF 93

Username: Eric Date:12/30/2013
Division: HIGHWAY
Filename: ...\056_HCBeam_Details.dgn

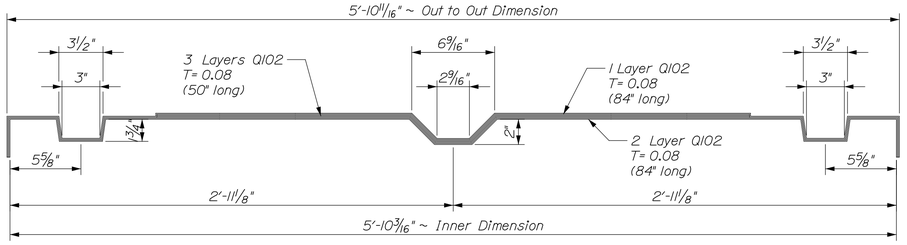

FRP LID LAYUP

(symmetric about ⌀ beam, uno)

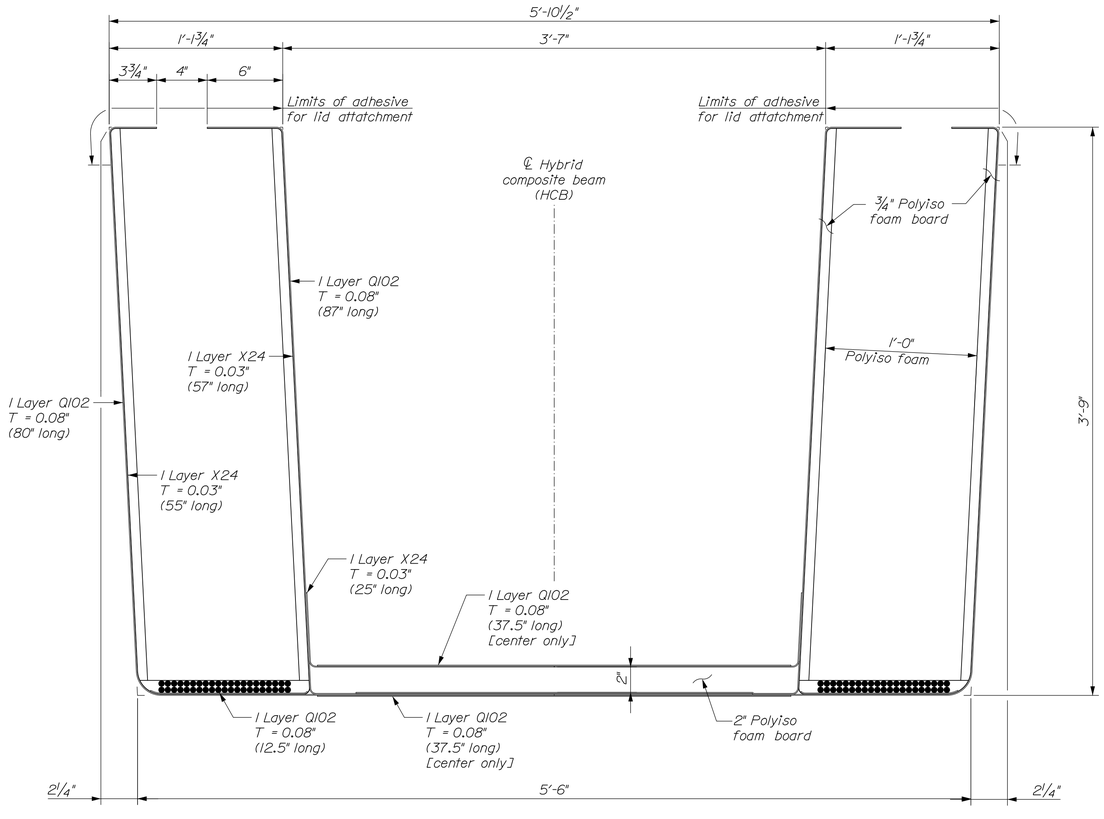

FRP SHELL LAYUP

(symmetric about ⌀ beam, uno)

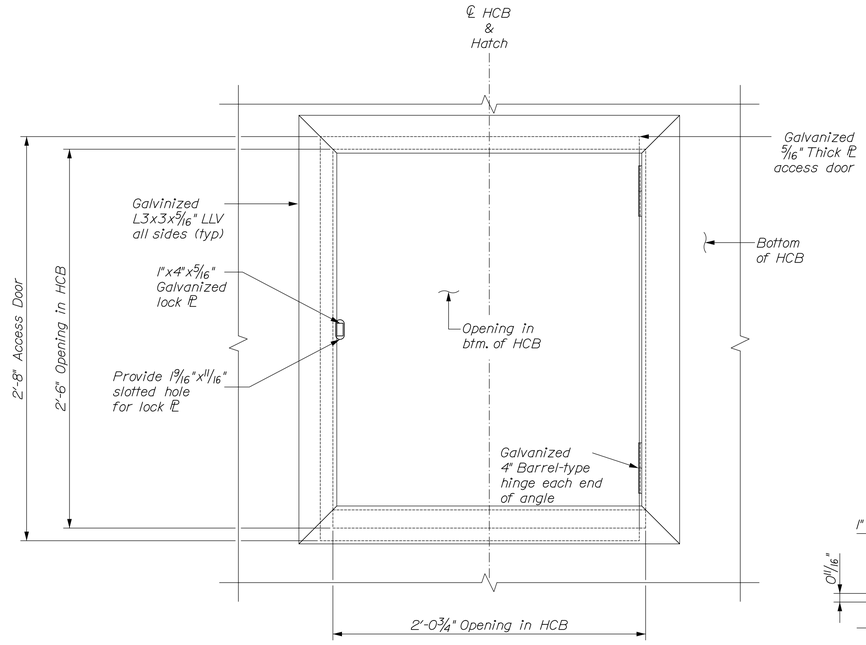

PLAN VIEW OF ACCESS HATCH

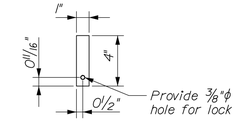

5/16" LOCK ℙ

Hot Dipped Galvanized (HDG)

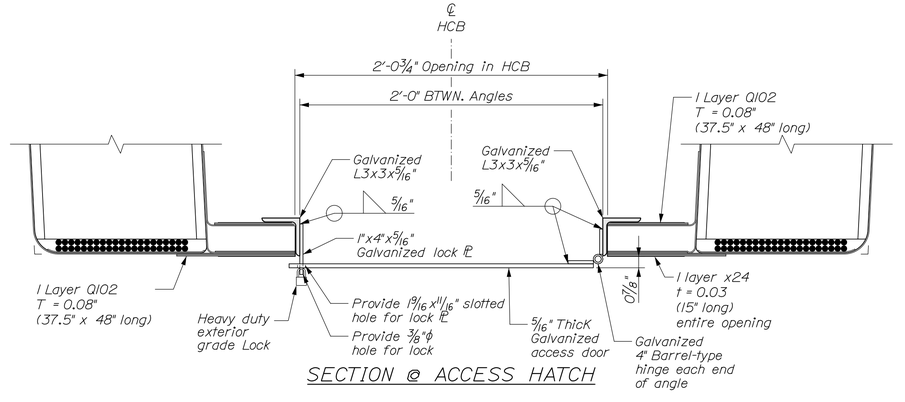

SECTION @ ACCESS HATCH

STATE OF MAINE
DEPARTMENT OF TRANSPORTATION

IM-1668(200)E

PIN 16682.00

BRIDGE NO.: 5797

BRIDGE PLANS

STATE OF MAINE
ERIC J.
CALDERWOOD
No. 9099
LICENSED
PROFESSIONAL ENGINEER

SIGNATURE

P.E. NUMBER

DATE

PROJ. MANAGER STEPHEN BODGE		
DESIGN-DETAILED	JJH	DEC. 2012
CHECKED-REVIEWED	---	
DESIGN2-DETAILED2		
DESIGN3-DETAILED3		
REVISIONS 1		
REVISIONS 2		
REVISIONS 3		
REVISIONS 4		
FIELD CHANGES		

UNION STREET BRIDGE
OVER INTERSTATE 95
BANGOR PENOBSCOT COUNTY

FRP LAYUPS
SHELL, LID, & ACCESS HATCH

SHEET NUMBER

57

OF 93

BECKER
STRUCTURAL ENGINEERS
75 York Street, Portland, Maine 04101
207.879.1838 ▪ beckerstructural.com

CALDERWOOD ENGINEERING
225 RIVER ROAD
RICHMOND, ME 04357
PH. (207)737-2007 FAX (207)737-2008

Filename: ...\057_HCBeam_Details.dgn Division: HIGHWAY Username: Eric Date:12/30/2013

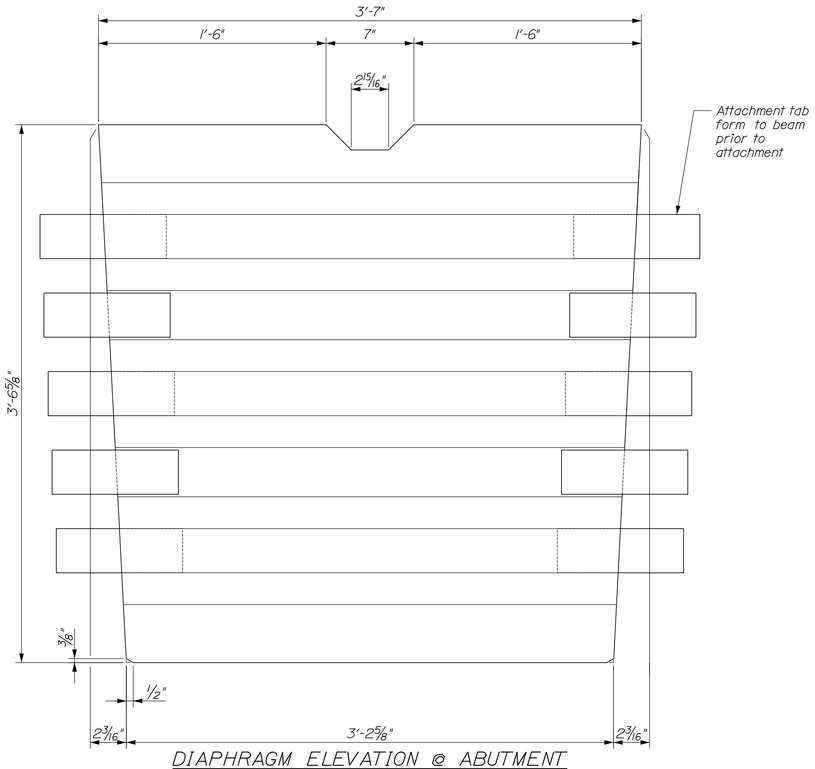

DIAPHRAGM ELEVATION @ ABUTMENT

Interior FRP diaphragm shown Exterior FRP diaphragm similar see section

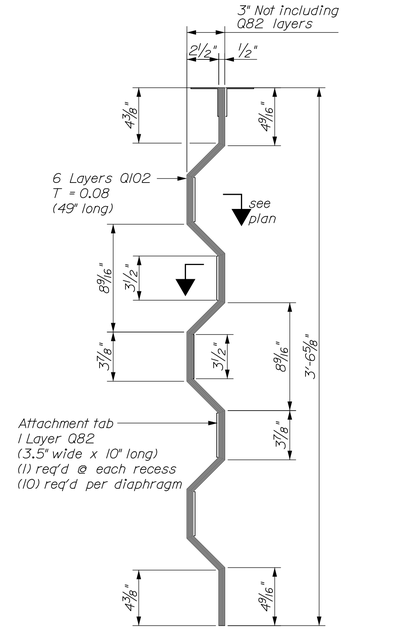

INTERIOR FRP DIAPHRAGM SECTION

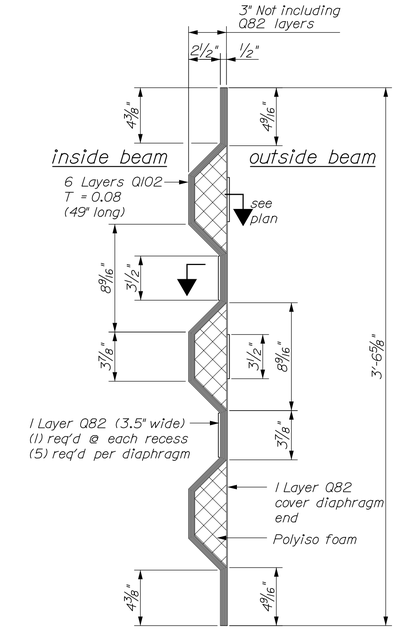

EXTERIOR FRP DIAPHRAGM SECTION

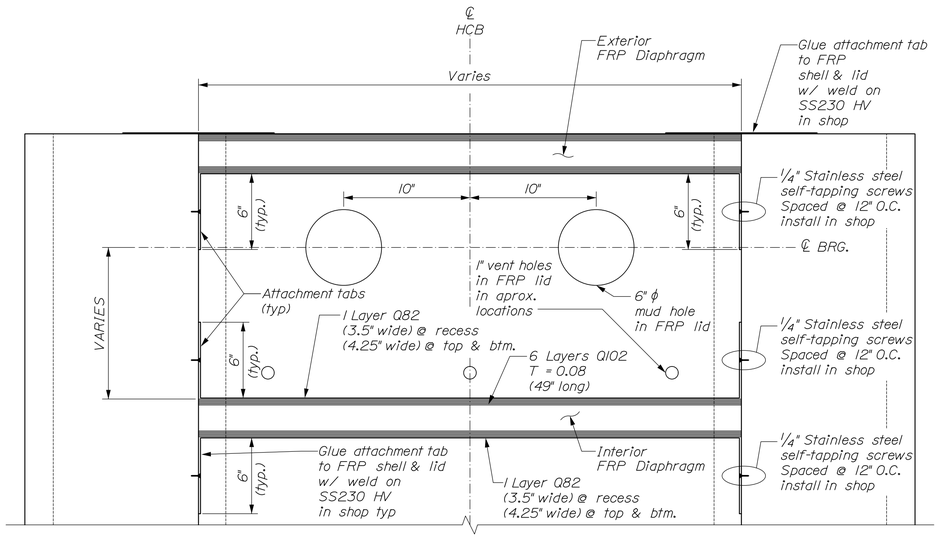

DIAPHRAGM PLAN @ ABUTMENT

The diaphragm panel shall act as a stay-in-place form for the end bent diaphragm concrete placement, but the panel and the connection have not been designed to sustain the weight of fluid concrete unsupported. The contractor shall ensure that the diaphragm is adequately supported until the concrete has set.

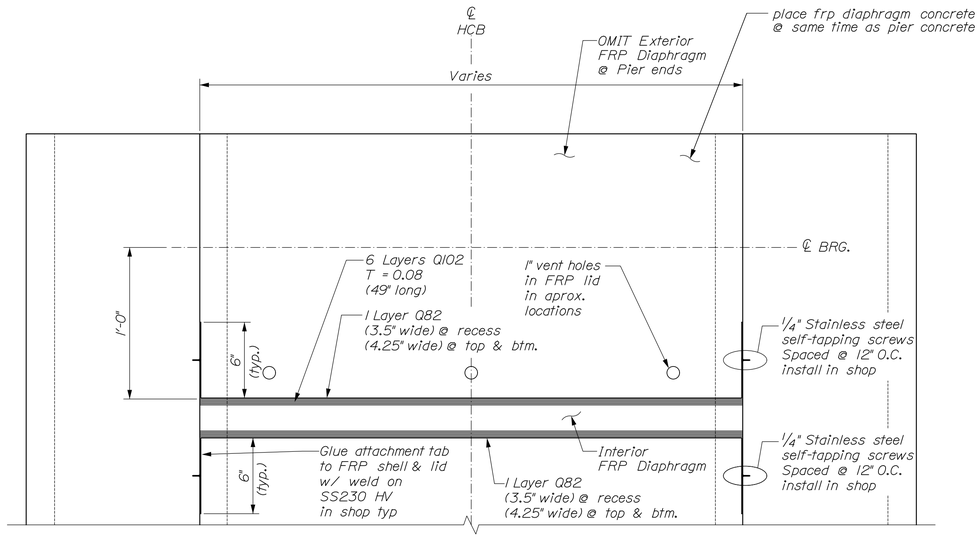

DIAPHRAGM PLAN @ PIER

The diaphragm panel shall act as a stay-in-place form for the end bent diaphragm concrete placement, but the panel and the connection have not been designed to sustain the weight of fluid concrete unsupported. The contractor shall ensure that the diaphragm is adequately supported until the concrete has set. Form ties penetrating the diaphragm are acceptable, subject to the approval of the Engineer.

STATE OF MAINE
DEPARTMENT OF TRANSPORTATION

IM-1668(200)E

PIN 16682.00

BRIDGE PLANS

BRIDGE NO.: 5797

STATE OF MAINE
ERIC CALDERWOOD
No. 9099
LICENSED PROFESSIONAL ENGINEER

SIGNATURE

P.E. NUMBER

DATE

PROJ. MANAGER	STEPHEN BOGGE	
DESIGN-DETAILED	JJH	DEC. 2012
CHECKED-REVIEWED		
DESIGN2-DETAILED2		
DESIGN3-DETAILED3		
REVISIONS 1		
REVISIONS 2		
REVISIONS 3		
REVISIONS 4		
FIELD CHANGES		

UNION STREET BRIDGE
OVER INTERSTATE 95
BANGOR PENOBSCOT COUNTY

DIAPHRAGM DETAILS

SHEET NUMBER

58

OF 93

BECKER STRUCTURAL ENGINEERS
75 York Street, Portland, Maine 04101
207.879.1838 ▪ beckerstructural.com

CALDERWOOD ENGINEERING
P.O. Box 1 - 176 Rowe Road
W. RICHMOND, ME 04357
PH. (207)737-2002 FAX (207)737-2003

Username: Eric Date:12/30/2013 Division: HIGHWAY Filename: ...\058_HCBeam_Details.dgn

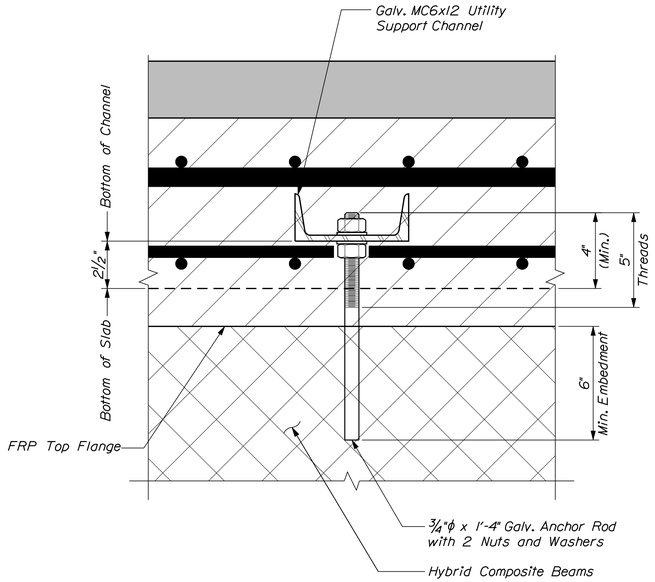

ANCHORAGE ASSEMBLY

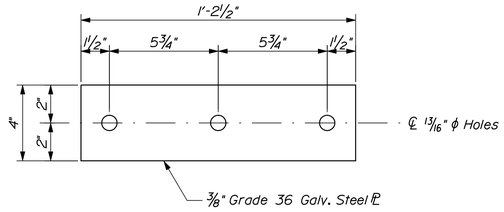

℄ A DETAIL

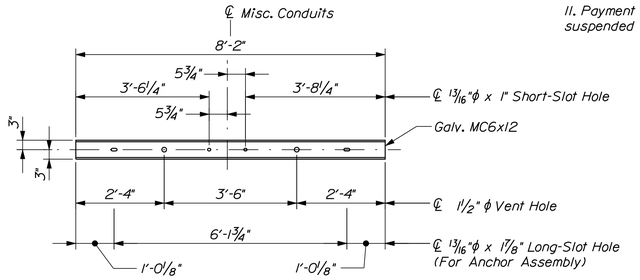

UTILITY SUPPORT 'A' PLAN

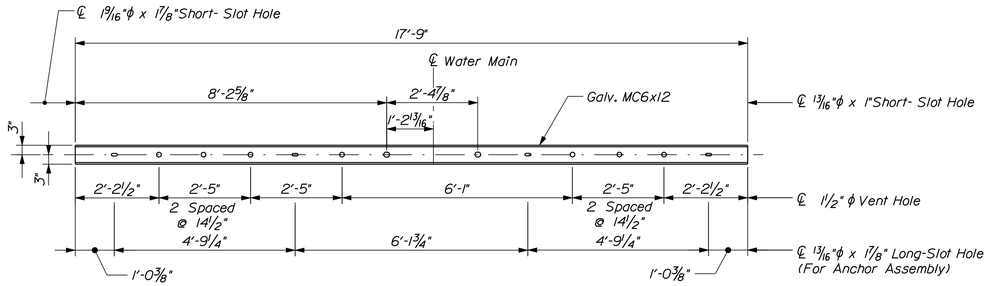

UTILITY SUPPORT 'B' PLAN

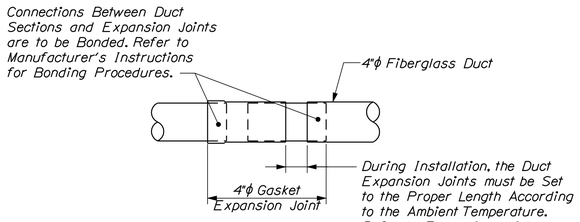

FIBERGLASS DUCT EXPANSION JOINT DETAIL

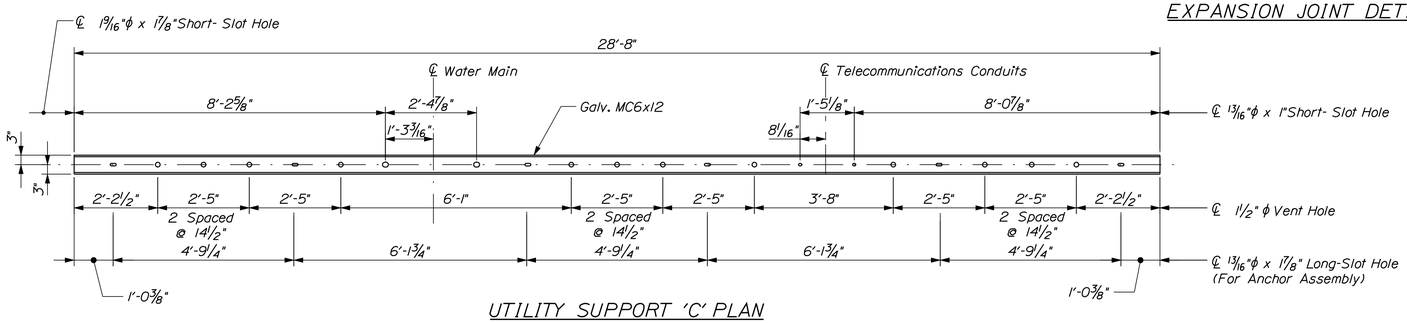

UTILITY SUPPORT 'C' PLAN

UTILITY SUPPORT NOTES

1. Utility Support shall be MC6x12. ASTM A709, Min. Yield = 36 ksi.

2. Anchor Rod shall meet the requirements of ASTM F1554 Gr. 50.

3. All material shall be galvanized in accordance with ASTM A123, except hardware shall meet the requirements of ASTM A153. All material, except hardware shall be blast cleaned prior to galvanization in accordance with SSPC-SP6.

4. The 4"ϕ fiberglass duct shall conform to the following material properties:
   A. 4" fiberglass ducts are to have threaded joints with 3000 lbs pull out strength unbonded.
   B. 4"ϕ fiberglass ducts are to have ultimate tensile strength of 10,500 PSI per ASTM D-2105.
   C. 4" IPS: 4.5" O.D. x 4.36" I.D. x 30 ft length.
   D. Capable of main/interior hanger support spans of up to 21.2 ft for 3 lbs per ft cable, 17.2 ft for 8 lbs per ft cable, and 25.5 ft for 1 lbs per ft of cable based on not exceeding ⅝" midspan deflection.

5. During installation, the duct expansion joints must be set to the proper length according to the ambient temperature. Refer to the expansion joint manufacturer's instructions.

6. All connection between the duct sections, expansion joints, adapters, and couplings are to be bonded. Refer to manufacturer's instruction for bonding procedures.

7. 4" straight couplings shall be installed as required.

8. Cap the ends of the ducts if the underground portion of the work is not done at the same time as the bridge portion.

9. Threaded rods suspended from utility supports A, B and C shall be plumb after erection and dead loading of the structure.

10. Payment for utility supports A, B and C, anchor rods, threaded rods and all hardware cast into superstructure slab will be made under Item 845.10, Structural Steel Utility Support.

11. Payment for steel plates, intermediate threaded rod, steel pipe sleeves, HSS and conduits for the suspended misc. utility bracket will be made under Item 626.27, 4 Inch Diameter Utility Conduit System.

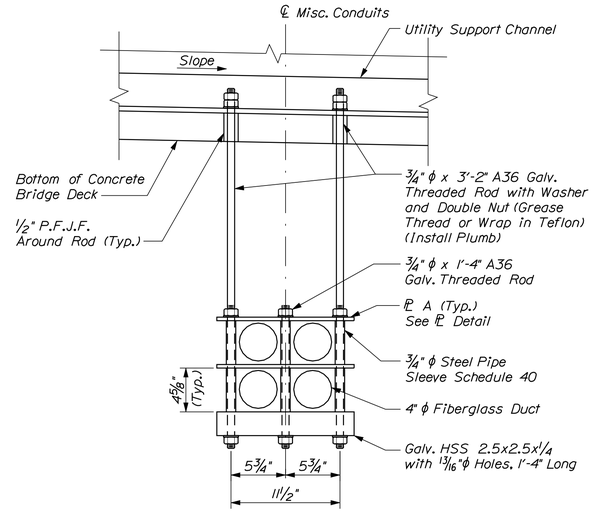

SUSPENDED MISC. UTILITY BRACKET

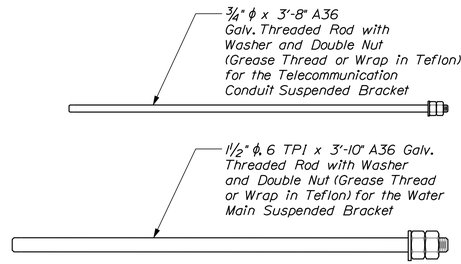

THREADED ROD DETAILS

STATE OF MAINE
DEPARTMENT OF TRANSPORTATION

IM-1668(200)E

WIN 16682.00

BRIDGE NO.: 5797

BRIDGE PLANS

	BY	DATE
PROJ. MANAGER STEPHEN BODGE		
DESIGN-DETAILED	B. WELCH	05-22-13
CHECKED-REVIEWED	B. WELCH	05-22-13
DESIGN2-DETAILED2		
DESIGN3-DETAILED3		
REVISIONS 1		
REVISIONS 2		
REVISIONS 3		
REVISIONS 4		
FIELD CHANGES		

SIGNATURE

P.E. NUMBER

DATE

UNION STREET BRIDGE
OVER INTERSTATE 95
BANGOR PENOBSCOT COUNTY

UTILITY SUPPORT DETAILS

SHEET NUMBER

59

OF 93

BECKER
STRUCTURAL ENGINEERS
75 York Street, Portland, Maine 04101
207.879.1838 • beckerstructural.com

Filename: ...\msto\059_UtilSupport.dgn Division: BRIDGE Username: CADD Date:1/2/2014

PIER DIAPHRAGM NOTES:

1. Payment for the pier diaphragm will be made under Item No. 502.25, Structural Concrete Superstructure Slabs.

2. Reinforcing steel shall have a minum cover of 2 inches unless otherwise noted or shown.

3. All reinforcing steel in the pier diaphragm shall be epoxy coated.

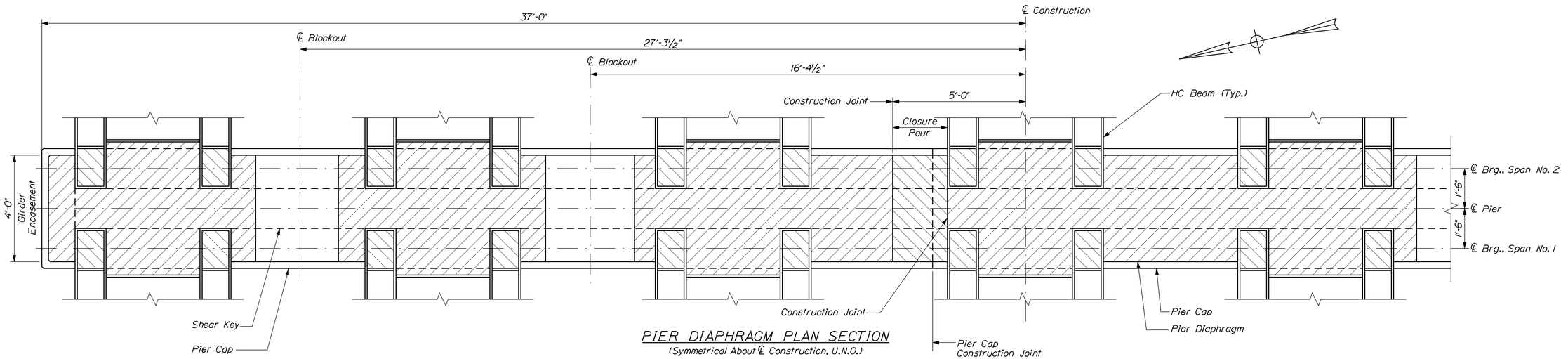

PIER DIAPHRAGM PLAN SECTION
(Symmetrical About ℄ Construction, U.N.O.)

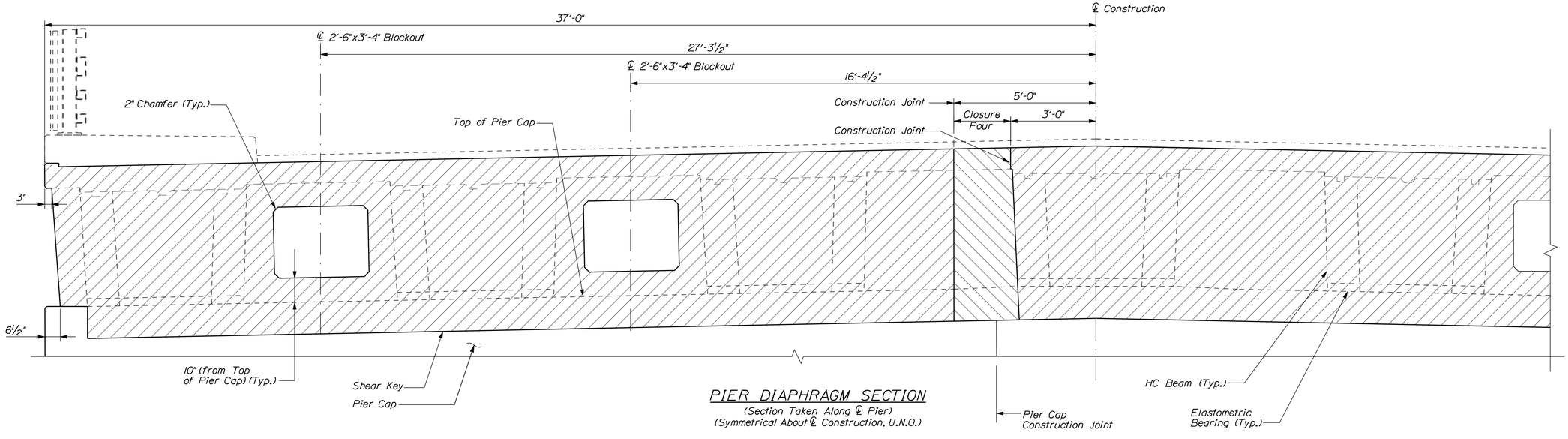

PIER DIAPHRAGM SECTION
(Section Taken Along ℄ Pier)
(Symmetrical About ℄ Construction, U.N.O.)

BECKER STRUCTURAL ENGINEERS
75 York Street, Portland, Maine 04101
207.879.1838 ▪ beckerstructural.com

STATE OF MAINE
DEPARTMENT OF TRANSPORTATION

IM-1668(200)E

WIN 16682.00

BRIDGE NO.: 5797

BRIDGE PLANS

	BY	DATE
PROJ. MANAGER STEPHEN BOGGE		
DESIGN-DETAILED	D. BURGESS	05-22-13
CHECKED-REVIEWED	B. WELCH	
DESIGN2-DETAILED2	J. BURGESS	05-22-13
DESIGN3-DETAILED3	B. WELCH	
REVISIONS 1		
REVISIONS 2		
REVISIONS 3		
REVISIONS 4		
FIELD CHANGES		

SIGNATURE

P.E. NUMBER

DATE

UNION STREET BRIDGE
OVER INTERSTATE 95
BANGOR PENOBSCOT COUNTY

PIER DIAPHRAGM

SHEET NUMBER

60

OF 93

Filename: ...\00\bridge\vmsto\060_PierDia.dgn Division: BRIDGE Username: CADD Date:1/2/2014

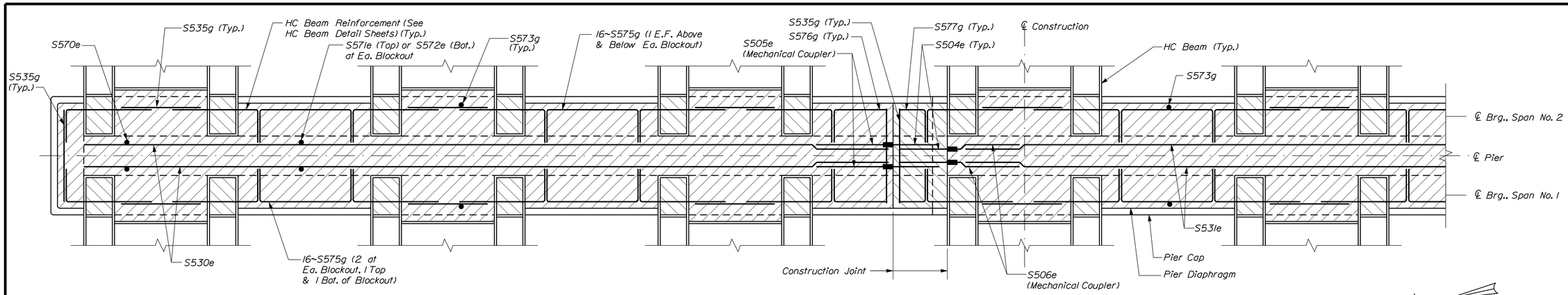

PIER DIAPHRAGM REINFORCEMENT PLAN SECTION

(Symmetrical About ℄ Construction, U.N.O.)

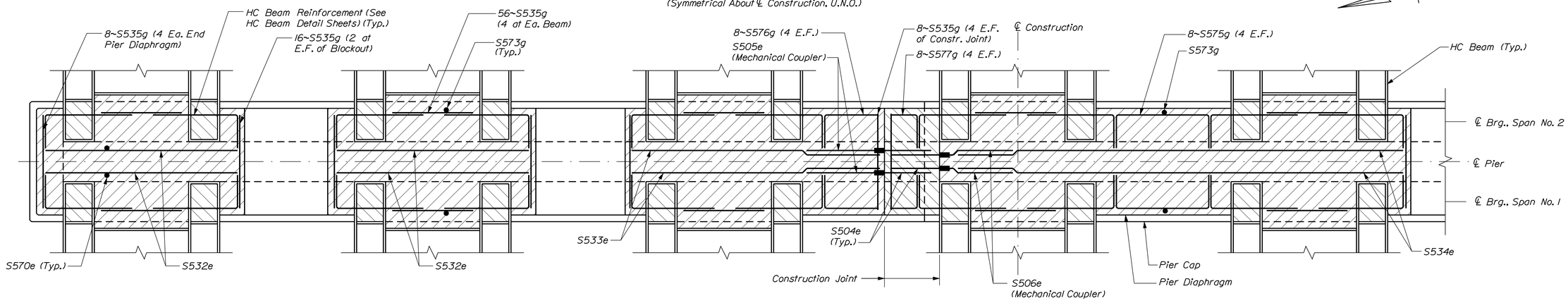

PIER DIAPHRAGM REINFORCEMENT PLAN SECTION

(Section Taken at Blockouts)
(Symmetrical About ℄ Construction, U.N.O.)

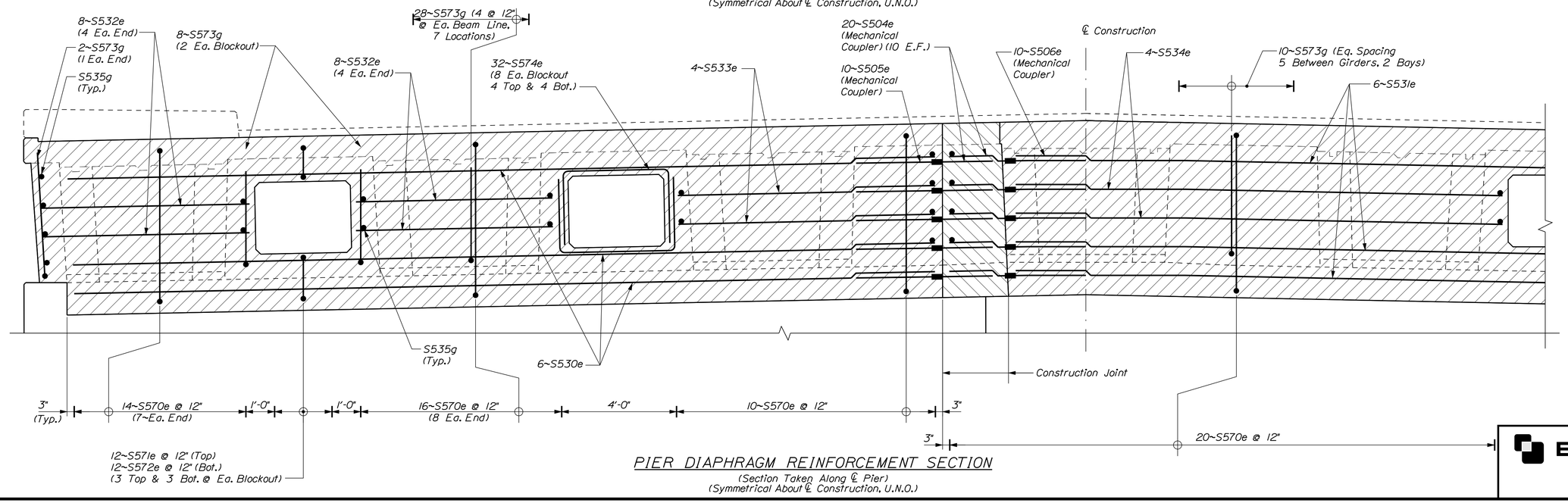

PIER DIAPHRAGM REINFORCEMENT SECTION

(Section Taken Along ℄ Pier)
(Symmetrical About ℄ Construction, U.N.O.)

STATE OF MAINE
DEPARTMENT OF TRANSPORTATION

IM-1668(200)E

WIN 16682.00

BRIDGE NO.: 5797

BRIDGE PLANS

	BY	DATE
PROJ. MANAGER STEPHEN BOGGE		
DESIGN-DETAILED	D. BURGESS	05-22-13
CHECKED-REVIEWED	B. WELCH	05-22-13
DESIGN2-DETAILED2	B. WELCH	
DESIGN3-DETAILED3		
REVISIONS 1		
REVISIONS 2		
REVISIONS 3		
REVISIONS 4		
FIELD CHANGES		

SIGNATURE

P.E. NUMBER

DATE

UNION STREET BRIDGE
OVER INTERSTATE 95
BANGOR PENOBSCOT COUNTY

PIER DIAPHRAGM REINFORCEMENT

SHEET NUMBER

61

OF 93

BECKER STRUCTURAL ENGINEERS
75 York Street, Portland, Maine 04101
207.879.1838 ▪ beckerstructural.com

Date:1/2/2014
Username: CADD
Division: BRIDGE
Filename: ...\mst0\061_PierDia_rebar.dgn

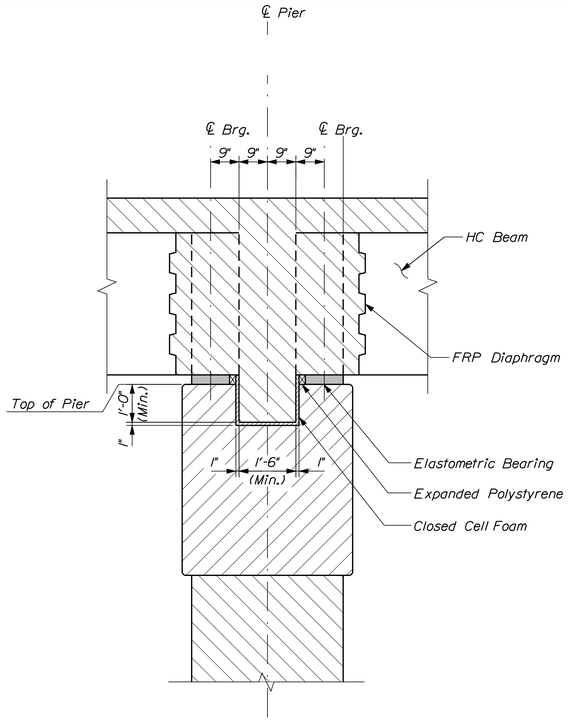

TYPICAL PIER DIAPHRAGM SECTION
(Section Taken Along Beam Lines)

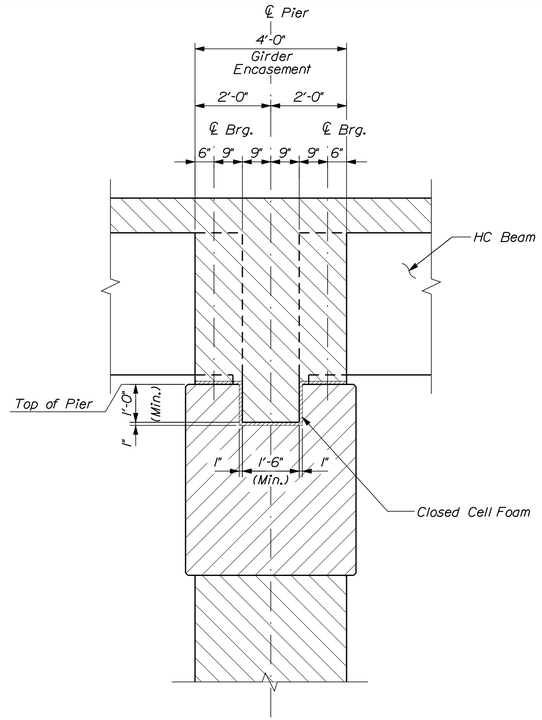

TYPICAL PIER DIAPHRAGM SECTION
(Section Taken Between Beam Lines)

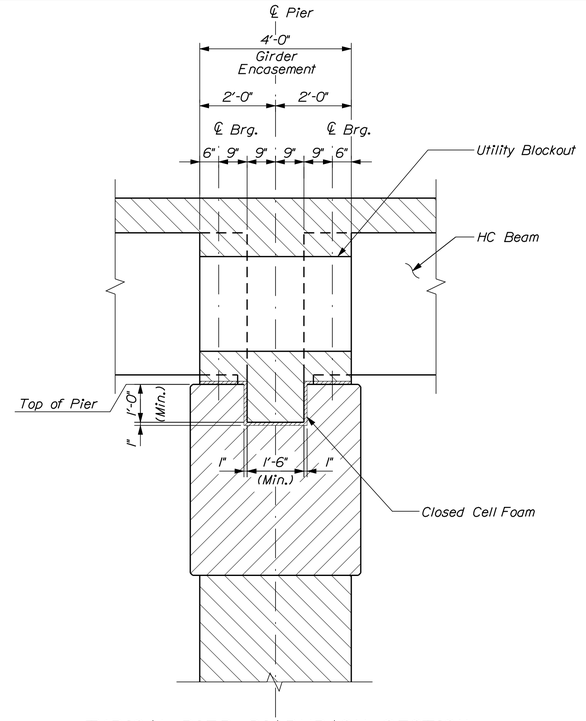

TYPICAL PIER DIAPHRAGM SECTION
(Section Taken Between Beam Lines at Blockout)

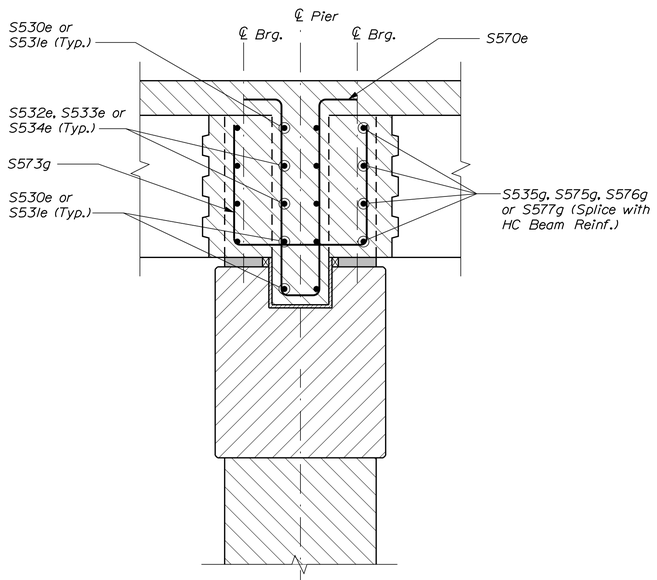

TYPICAL PIER DIAPHRAGM REINFORCEMENT
(Section Taken Along Beam Lines)

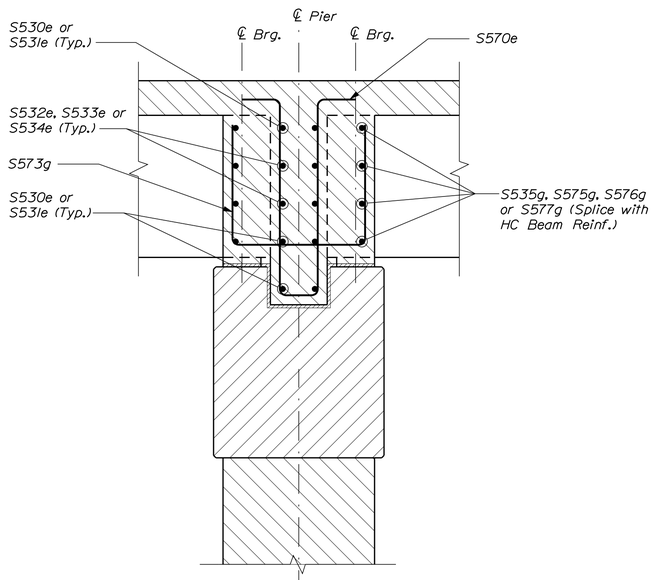

TYPICAL PIER DIAPHRAGM REINFORCEMENT
(Section Taken Between Beam Lines)

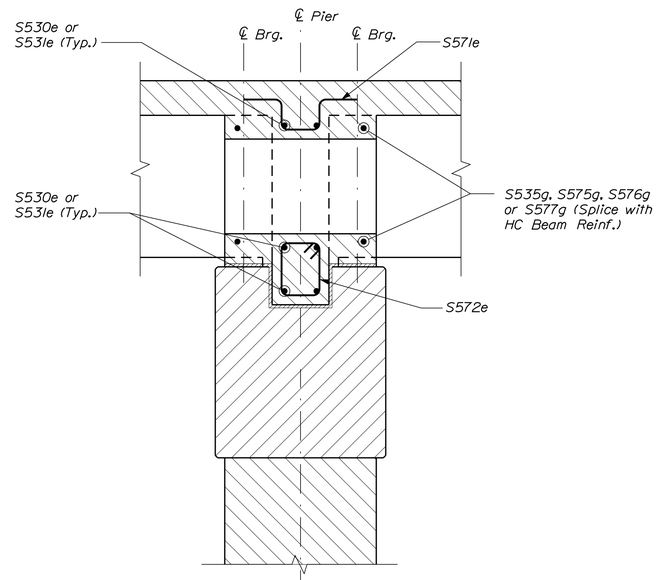

TYPICAL PIER DIAPHRAGM REINFORCEMENT
(Section Taken Between Beam Lines at Blockout)

BECKER
STRUCTURAL ENGINEERS
75 York Street, Portland, Maine 04101
207.879.1838 • beckerstructural.com

STATE OF MAINE
DEPARTMENT OF TRANSPORTATION

IM-1668(200)E

WIN 16682.00

BRIDGE NO.: 5797

BRIDGE PLANS

	BY	DATE
PROJ. MANAGER STEPHEN BODGE		
DESIGN-DETAILED	B. WELCH	D. BURGESS 05-22-13
CHECKED-REVIEWED	B. WELCH	J. BURGESS 05-22-13
DESIGN2-DETAILED2		
DESIGN3-DETAILED3		
REVISIONS 1		
REVISIONS 2		
REVISIONS 3		
REVISIONS 4		
FIELD CHANGES		

SIGNATURE

P.E. NUMBER

DATE

UNION STREET BRIDGE
OVER INTERSTATE 95
BANGOR PENOBSCOT COUNTY

PIER DIAPHRAGM SECTIONS

SHEET NUMBER
62
OF 93

Filename: ...\mstoV062_PierDiaSect.dgn Division: BRIDGE Username: CADD Date:1/2/2014

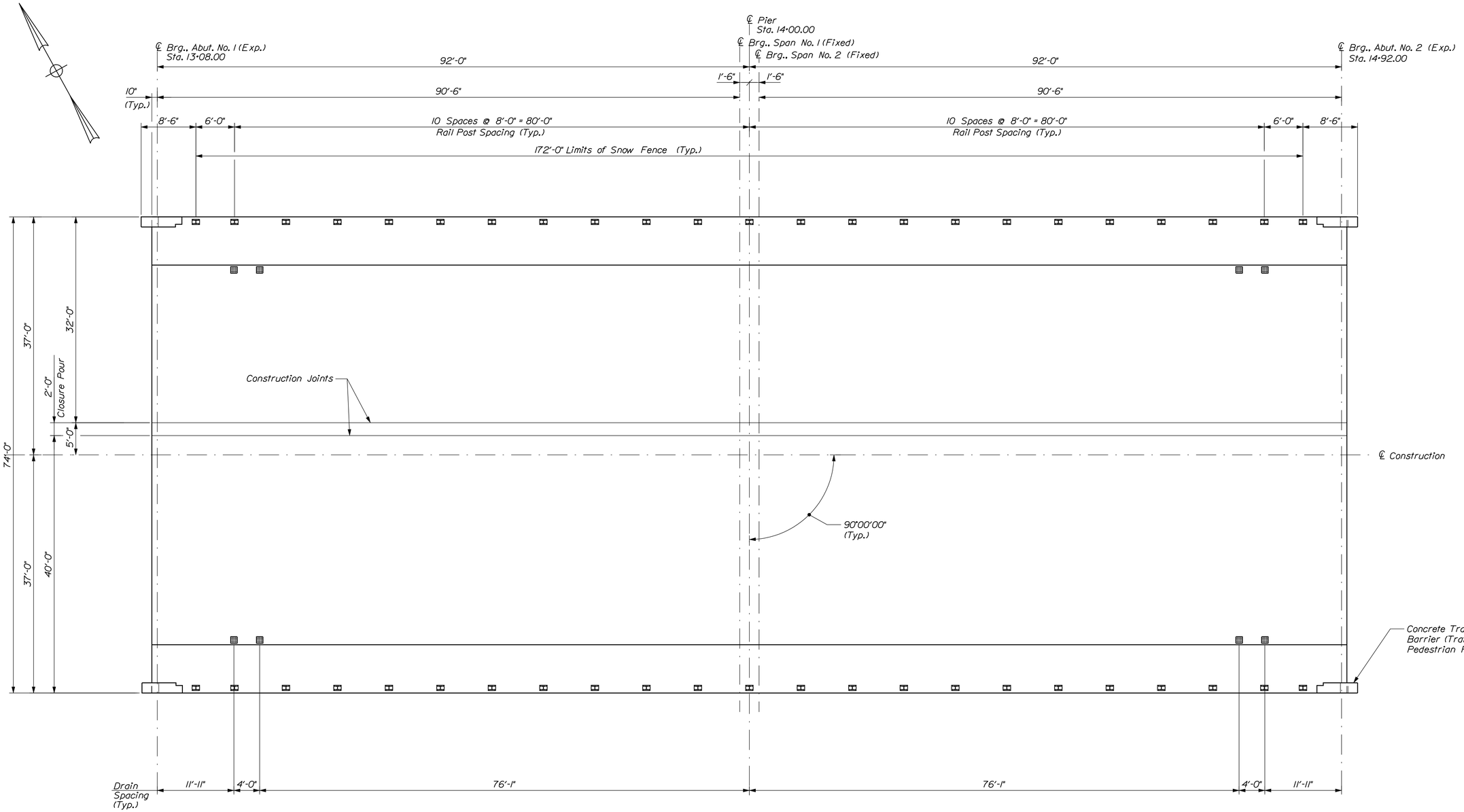

SUPERSTRUCTURE PLAN

STATE OF MAINE
DEPARTMENT OF TRANSPORTATION

IM-1668(200)E

WIN 16682.00

BRIDGE NO.: 5797

BRIDGE PLANS

PROJ. MANAGER	STEPHEN BODGE		
DESIGN-DETAILED	B. WELCH	D. BURGESS	05-22-13
CHECKED-REVIEWED	B. WELCH	J. BURGESS	05-22-13
DESIGN2-DETAILED2			
DESIGN3-DETAILED3			
REVISIONS 1			
REVISIONS 2			
REVISIONS 3			
REVISIONS 4			
FIELD CHANGES			

SIGNATURE

P.E. NUMBER

DATE

UNION STREET BRIDGE
OVER INTERSTATE 95
BANGOR PENOBSCOT COUNTY

SUPERSTRUCTURE PLAN

SHEET NUMBER

63

OF 93

BECKER
STRUCTURAL ENGINEERS
75 York Street, Portland, Maine 04101
207.879.1838 ■ beckerstructural.com

Filename: ...\063_Superstructure_plan.dgn Division: BRIDGE Username: CADD Date:1/2/2014

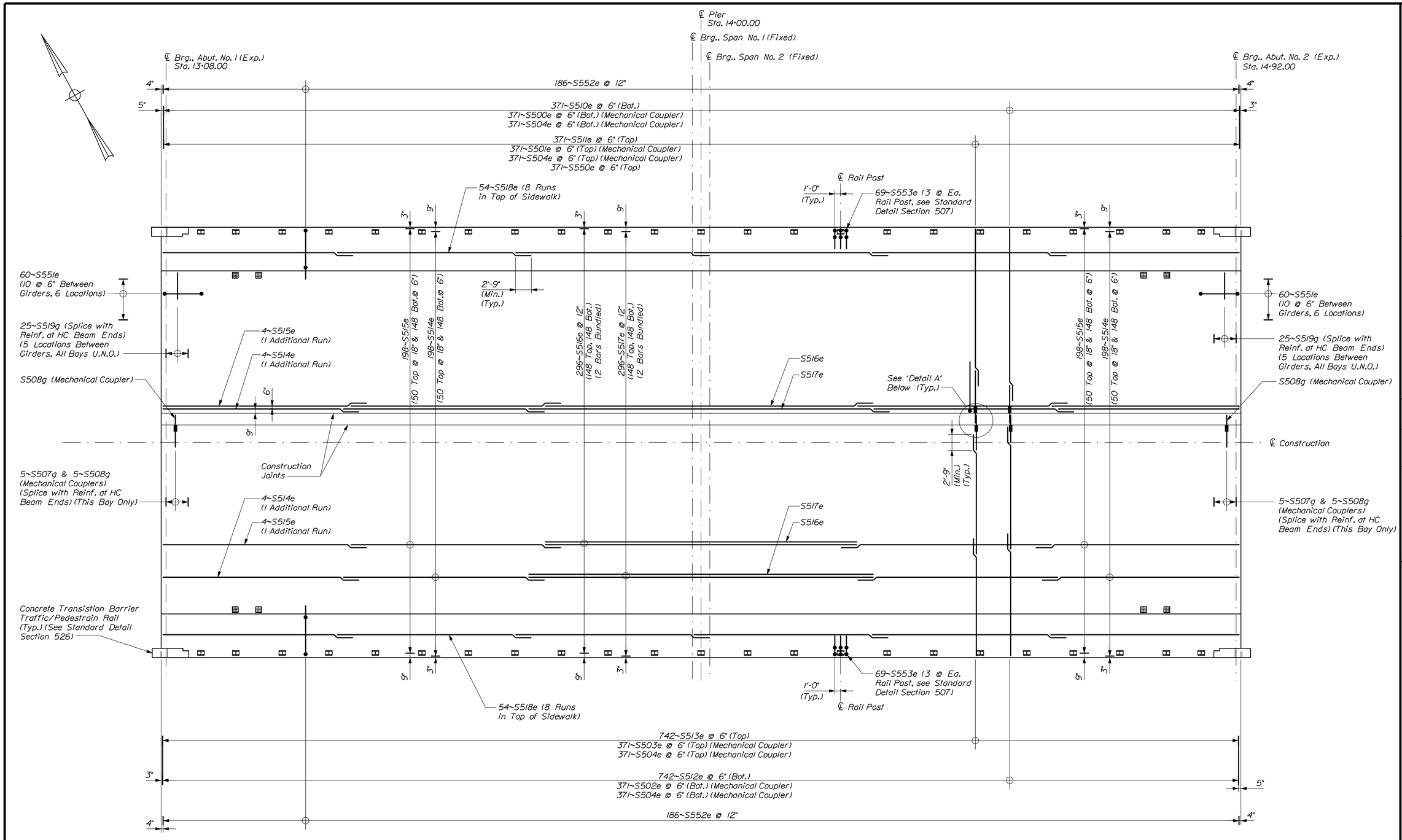

SUPERSTRUCTURE REINFORCEMENT PLAN

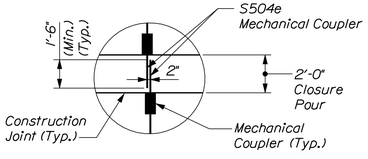

DETAIL A

BECKER STRUCTURAL ENGINEERS
75 York Street, Portland, Maine 04101
207.879.1838 ▪ beckerstructural.com

STATE OF MAINE
DEPARTMENT OF TRANSPORTATION

IM-1668(200)E

WIN 16682.00

BRIDGE NO.: 5797

BRIDGE PLANS

	BY	DATE
PROJ. MANAGER STEPHEN BOGGE		
DESIGN-DETAILED	D. BURGESS	05-22-13
CHECKED-REVIEWED	B. WELCH	05-22-13
DESIGN2-DETAILED2		
DESIGN3-DETAILED3		
REVISIONS 1		
REVISIONS 2		
REVISIONS 3		
REVISIONS 4		
FIELD CHANGES		

SIGNATURE

P.E. NUMBER

DATE

UNION STREET BRIDGE
OVER INTERSTATE 95
BANGOR PENOBSCOT COUNTY

SUPERSTRUCTURE REINFORCEMENT

SHEET NUMBER
64
OF 93

Date:1/2/2014
Username: CADD
Division: BRIDGE
Filename: ...\064_Superstructure_rebor.dgn

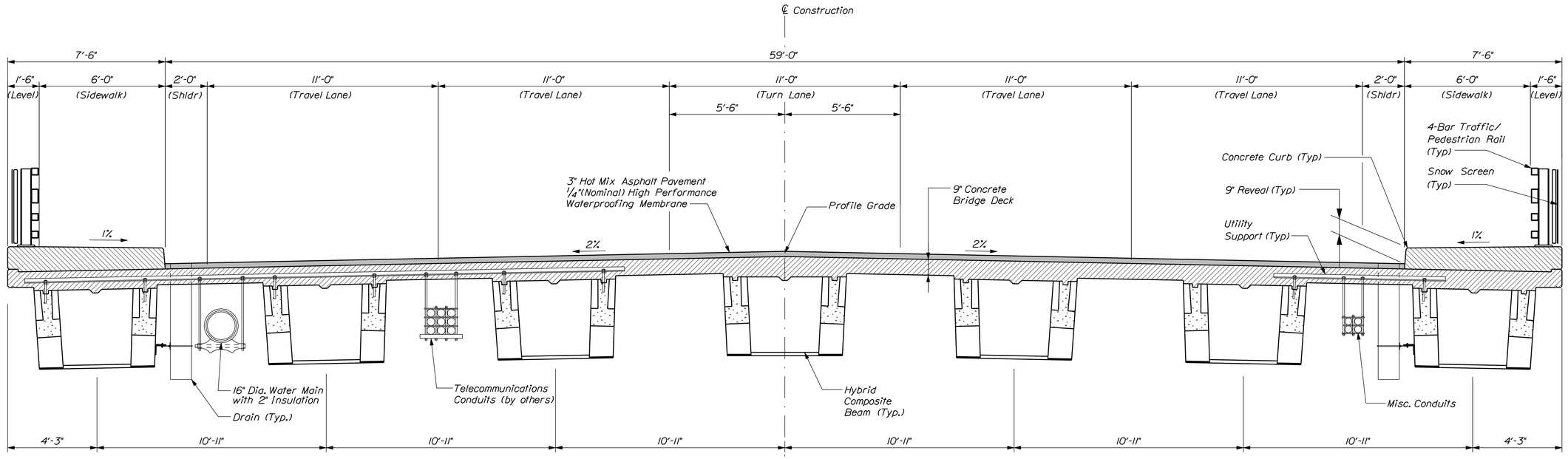

TYPICAL BRIDGE SECTION

SUPERSTRUCTURE NOTES:

1. Form a 1 inch V-groove on the fascias at the horizontal joint between the curb and slab.

2. Reinforcing steel shall have a minimum cover of 2 inches unless otherwise noted or shown.

3. All reinforcing steel in the superstructure shall be epoxy coated U.N.O.

4. Adjust reinforcing steel to fit around the bridge drains in a manner approved by the Resident. Do not cut transverse reinforcing bars.

5. Provide 3 additional stirrups in the curbs at each rail post location.

6. The Contractor shall install Transition Barrier vertical closed stirrups, as shown in the Standard Details Section 526 prior to the placement of the curb or sidewalk concrete.

7. The bridge compression seals to be furnished shall have minimum Movement Ratings as follows:
   Abutment No. 1 = 1.15 inches
   Abutment No. 2 = 1.15 inches

8. The Resident shall approve the compression seals prior to fabrication of the Expansion Devices.

9. Unless the superstructure slab concrete is placed in one continuous operation, the initial placement shall begin at a simply supported end of the deck slab and shall terminate 30 feet from the centerline of the pier. No more than two placements are allowed to complete the entire superstructure slab. The second placement shall begin at the opposite end of the deck slab and terminate at the end of the previous placement. Concrete in a placement shall be kept plastic one complete span behind the span being placed. A minimum of 5 days shall elapse between successive partial placements. The superstructure slab concrete placement sequence shall be approved by the Resident.

10. The formwork and its supports, over the full width of the structural slab, shall remain in place until a minimum of 48 hours has elapsed after placement of the final section of the slab. After this period, removal of formwork for sections may then proceed and shall meet the requirements for form removal in Standard Specifications Section 502, Structural Concrete.

11. After Hybrid Composite Beams have been erected, the Contractor shall survey the Top of Beam elevations at intervals indicated in the "Bottom of Slab Elevations" Table. The Top of Beam elevations shall be submitted to the Resident before setting screed rails.

12. Top of Curb elevations shall be set a 10' intervals based on bridge finish grade profile. The contractor shall submit curb elevations to Resident one week prior to placing curb.

13. Payment for reinforcing steel fabricated, delivered and placed in the cast-in-place portion of the structural concrete slab will be considered incidental to the appropriate Standard Specification Section 502 pay item.

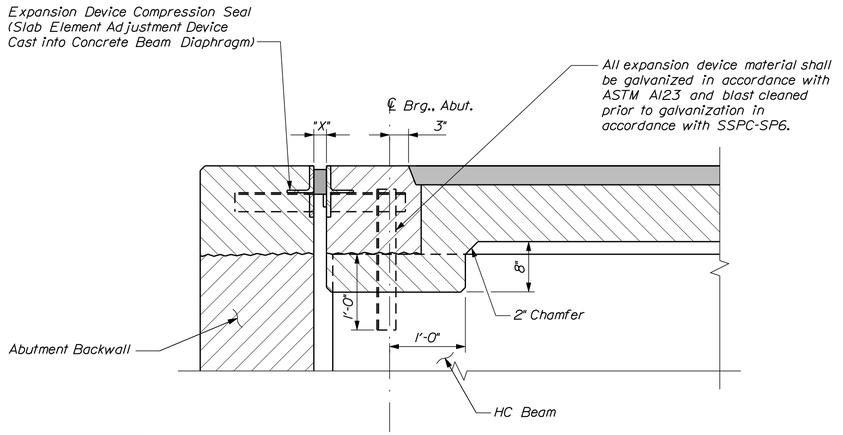

SLAB HAUNCH DETAIL

TEMPERATURE ADJUSTMENT TABLE	
TEMP. (°F)	"X" (IN)
15	2.12
30	2.02
45	1.94
60	1.85
75	1.76
90	1.67

STATE OF MAINE
DEPARTMENT OF TRANSPORTATION

IM-1668(200)E

WIN 16682.00

BRIDGE NO.: 5797

BRIDGE PLANS

PROJ. MANAGER	STEPHEN BODGE		
DESIGN-DETAILED	B. WELCH	D. BURGESS	05-22-13
CHECKED-REVIEWED	B. WELCH	J. BURGESS	05-22-13
DESIGN2-DETAILED2			
DESIGN3-DETAILED3			
REVISIONS 1			
REVISIONS 2			
REVISIONS 3			
REVISIONS 4			
FIELD CHANGES			

SIGNATURE

P.E. NUMBER

DATE

UNION STREET BRIDGE
OVER INTERSTATE 95
BANGOR PENOBSCOT COUNTY

SUPERSTRUCTURE DETAILS
(1 of 3)

SHEET NUMBER
65
OF 93

BECKER
STRUCTURAL ENGINEERS
75 York Street, Portland, Maine 04101
207.879.1838 • beckerstructural.com

Filename: ...\065_SuperstructureDet_001.dgn Division: BRIDGE Username: CADD Date:1/2/2014

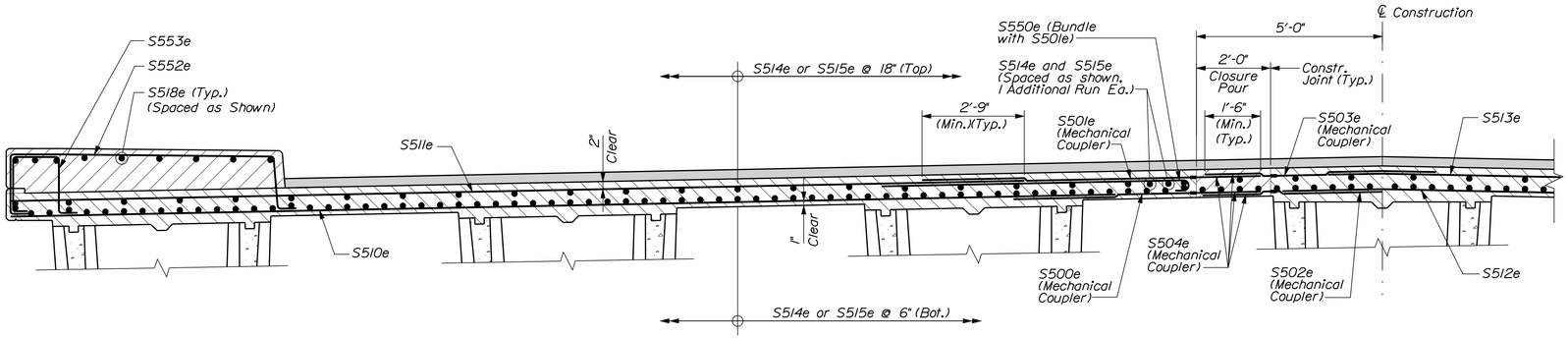

TYPICAL REINFORCEMENT SECTION

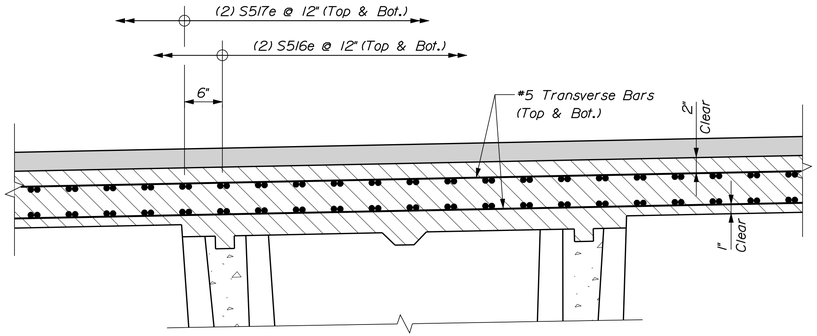

TYPICAL REINFORCEMENT SECTION OVER PIER

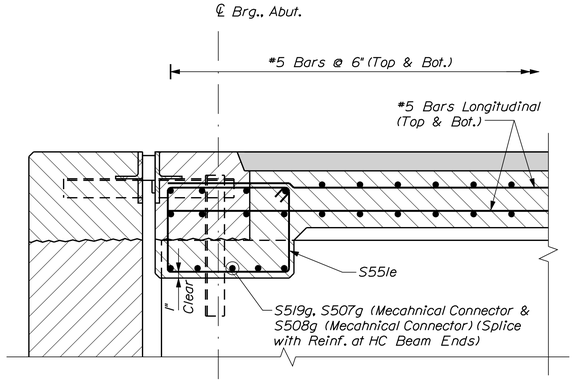

SLAB HAUNCH DETAIL

STATE OF MAINE
DEPARTMENT OF TRANSPORTATION

IM-1668(200)E

WIN 16682.00

BRIDGE NO.: 5797

BRIDGE PLANS

PROJ. MANAGER	STEPHEN BODGE	
DESIGN-DETAILED	B. WELCH	D. BURGESS 05-22-13
CHECKED-REVIEWED	B. WELCH	J. BURGESS 05-22-13
DESIGN2-DETAILED2		
DESIGN3-DETAILED3		
REVISIONS 1		
REVISIONS 2		
REVISIONS 3		
REVISIONS 4		
FIELD CHANGES		

SIGNATURE

P.E. NUMBER

DATE

UNION STREET BRIDGE
OVER INTERSTATE 95
BANGOR PENOBSCOT COUNTY

SUPERSTRUCTURE DETAIL
(2 of 3)

SHEET NUMBER

66

OF 93

BECKER
STRUCTURAL ENGINEERS
75 York Street, Portland, Maine 04101
207.879.1838 • beckerstructural.com

Filename: ...\066_SuperstructureDet_002.dgn Division: BRIDGE Username: CADD Date:1/2/2014

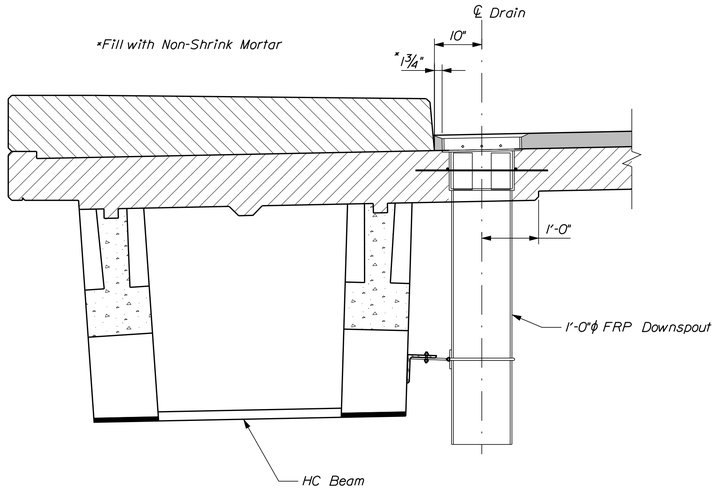

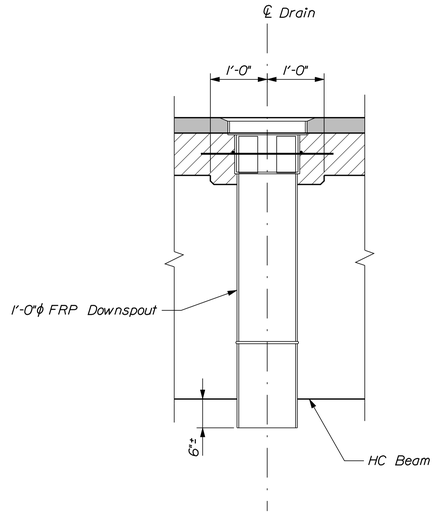

BRIDGE DRAIN NOTES

1. Bridge drains shall meet the requirements of Subsection 711.04 of the Standard Specifications except as noted.

2. FRP bridge drains shall be designed and detailed based on the dimensions for the bridge drain details shown and in accordance with Special Provision Section 502, Fiber Reinforced Polymer Bridge Drains.

BRIDGE DRAIN DETAIL

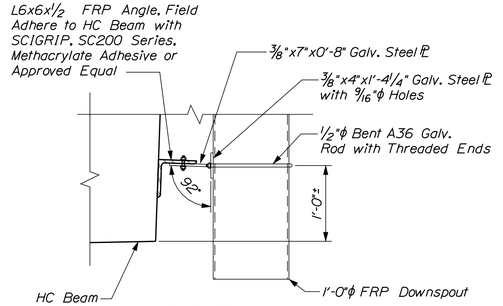

ELEVATION

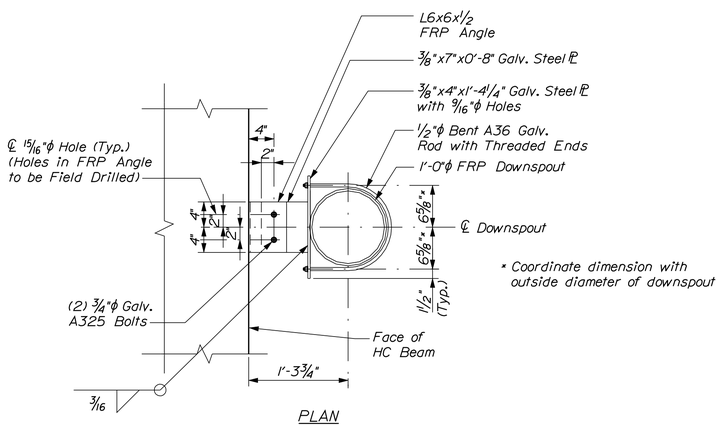

PLAN

BRIDGE DRAIN SUPPORT ASSEMBLY DETAIL

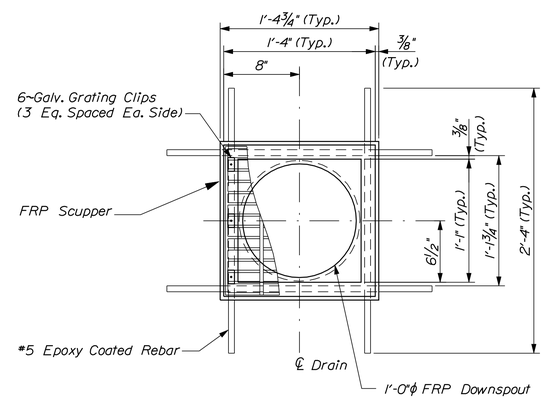

PLAN

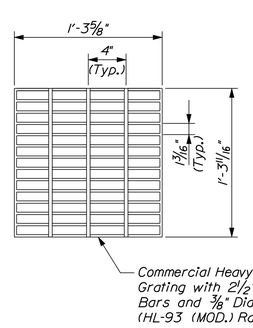

GRATING PLAN

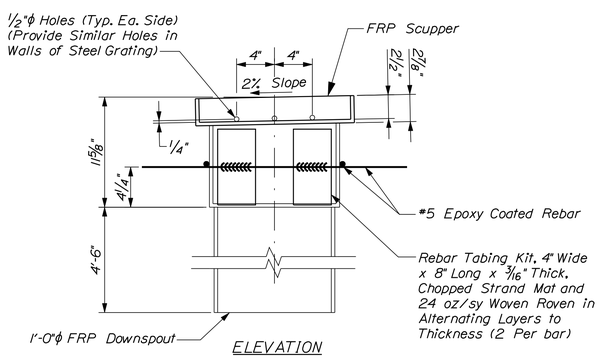

ELEVATION

DOWNSPOUT

BECKER STRUCTURAL ENGINEERS
75 York Street, Portland, Maine 04101
207.879.1838 • beckerstructural.com

STATE OF MAINE
DEPARTMENT OF TRANSPORTATION

IM-1668(200)E

WIN 16682.00

BRIDGE NO.: 5797

BRIDGE PLANS

	BY	DATE
PROJ. MANAGER: STEPHEN BODGE		
DESIGN-DETAILED	B. WELCH	
CHECKED-REVIEWED	B. WELCH	
DESIGN2-DETAILED2		
DESIGN3-DETAILED3		
REVISIONS 1	D. BURGESS	05-22-13
REVISIONS 2	J. BURGESS	05-22-13
REVISIONS 3		
REVISIONS 4		
FIELD CHANGES		

SIGNATURE

P.E. NUMBER

DATE

UNION STREET BRIDGE
OVER INTERSTATE 95
BANGOR PENOBSCOT COUNTY

SUPERSTRUCTURE DETAILS
(3 of 3)

SHEET NUMBER
67
OF 93

Filename: ...\067_SuperstructureDet_003.dgn Division: BRIDGE Username: CADD Date:1/2/2014

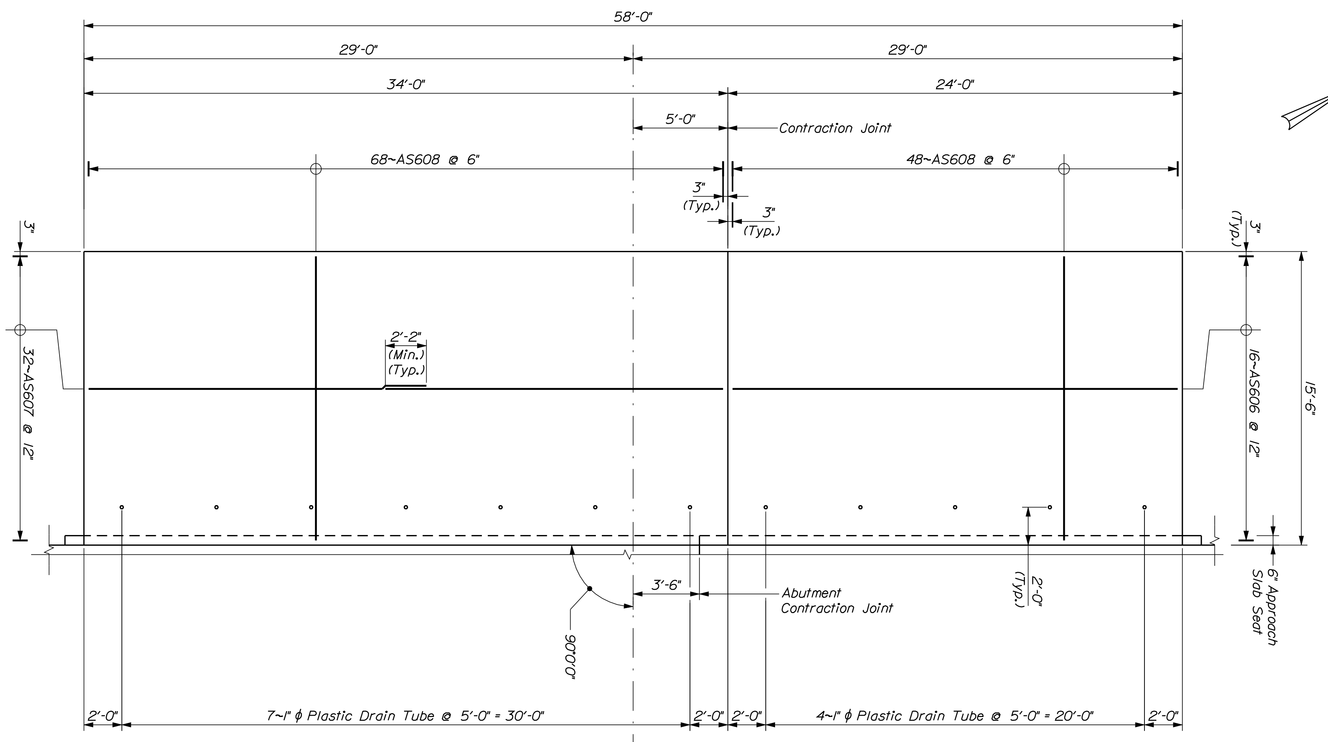

APPROACH SLAB PLAN

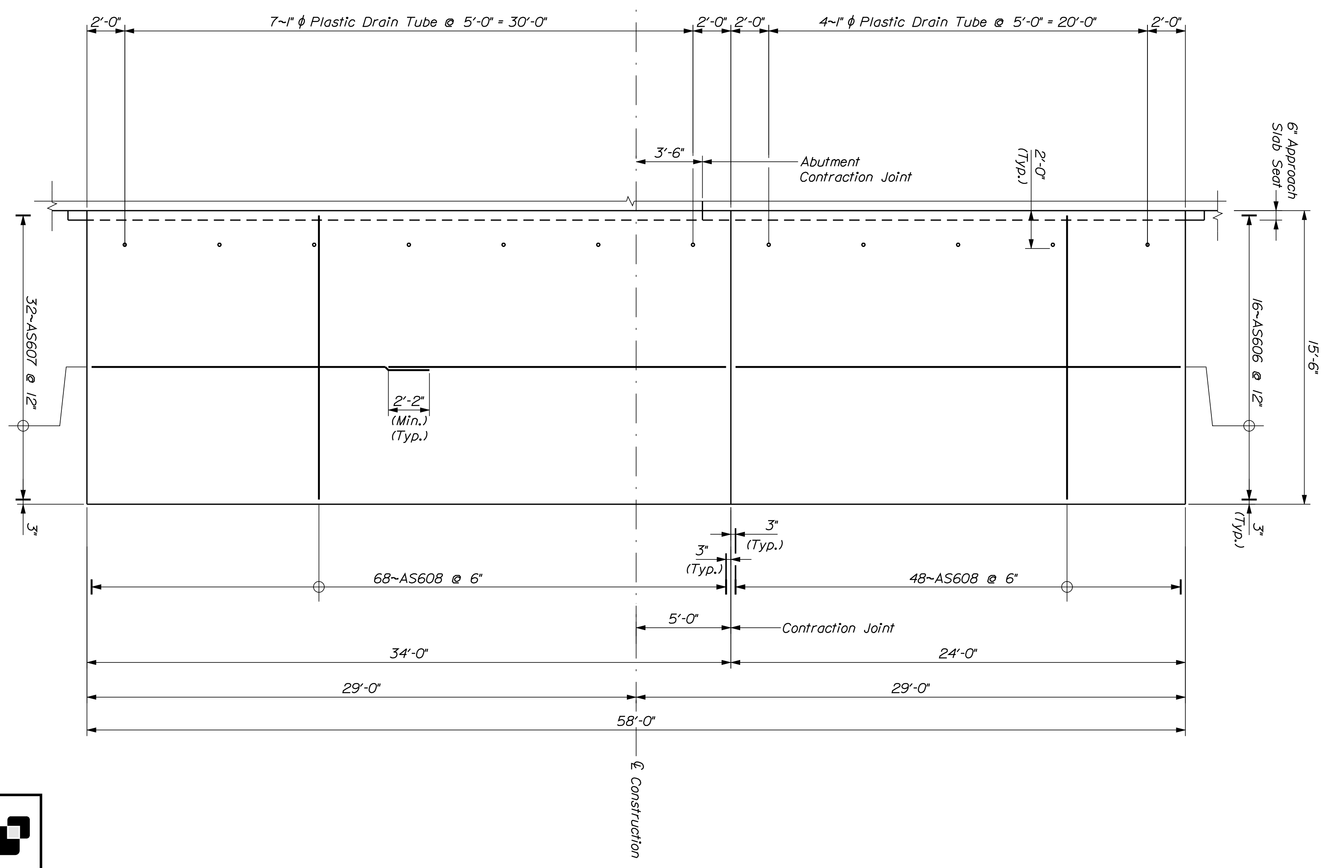

BECKER STRUCTURAL ENGINEERS
75 York Street, Portland, Maine 04101
207.879.1838 • beckerstructural.com

SHEET NUMBER 68 OF 93

UNION STREET BRIDGE
OVER INTERSTATE 95
BANGOR PENOBSCOT COUNTY

APPROACH SLAB DETAILS

PROJ. MANAGER STEPHEN BODGE		BY	DATE
DESIGN-DETAILED	B. WELCH	D. BURGESS	05-22-13
CHECKED-REVIEWED	B. WELCH	J. BURGESS	05-22-13
DESIGN2-DETAILED2			
DESIGN3-DETAILED3			
REVISIONS 1			
REVISIONS 2			
REVISIONS 3			
REVISIONS 4			
FIELD CHANGES			

SIGNATURE

P.E. NUMBER

DATE

STATE OF MAINE
DEPARTMENT OF TRANSPORTATION

IM-1668(200)E

WIN 16682.00

BRIDGE NO.: 5797

BRIDGE PLANS

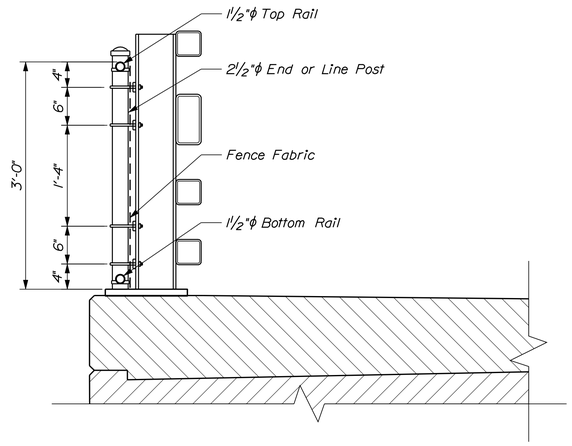

SIDEWALK RAIL SECTION

SNOW FENCE NOTES

1. For the limits of snow fence installation, refer to "Superstructure Plan" sheet.

2. Payment for modified post base plates will be considered incidental to related contract items.

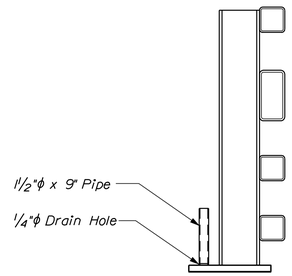

MODIFIED RAIL POST SECTION

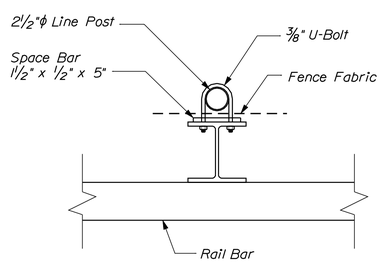

END POST DETAIL

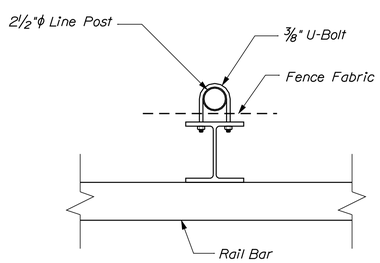

LINE POST DETAIL

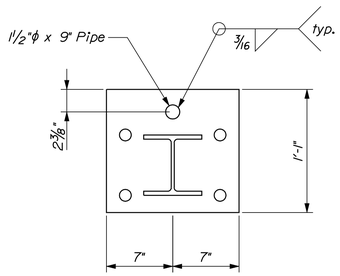

MODIFIED BASE PLATE DETAIL

STATE OF MAINE
DEPARTMENT OF TRANSPORTATION

IM-1668(200)E

WIN 16682.00

BRIDGE NO.: 5797

BRIDGE PLANS

PROJ. MANAGER	STEPHEN BODGE		
DESIGN-DETAILED	B. WELCH	D. BURGESS	05-22-13
CHECKED-REVIEWED	B. WELCH	J. BURGESS	05-22-13
DESIGN2-DETAILED2			
DESIGN3-DETAILED3			
REVISIONS 1			
REVISIONS 2			
REVISIONS 3			
REVISIONS 4			
FIELD CHANGES			

SIGNATURE

P.E. NUMBER

DATE

UNION STREET BRIDGE
OVER INTERSTATE 95
BANGOR PENOBSCOT COUNTY

SNOW FENCE DETAILS

SHEET NUMBER

69

OF 93

BECKER
STRUCTURAL ENGINEERS
75 York Street, Portland, Maine 04101
207.879.1838 • beckerstructural.com

Filename: ...\bridge\rnsto\069_Roll_001.dgn Division: BRIDGE Username: CADD Date:1/2/2014

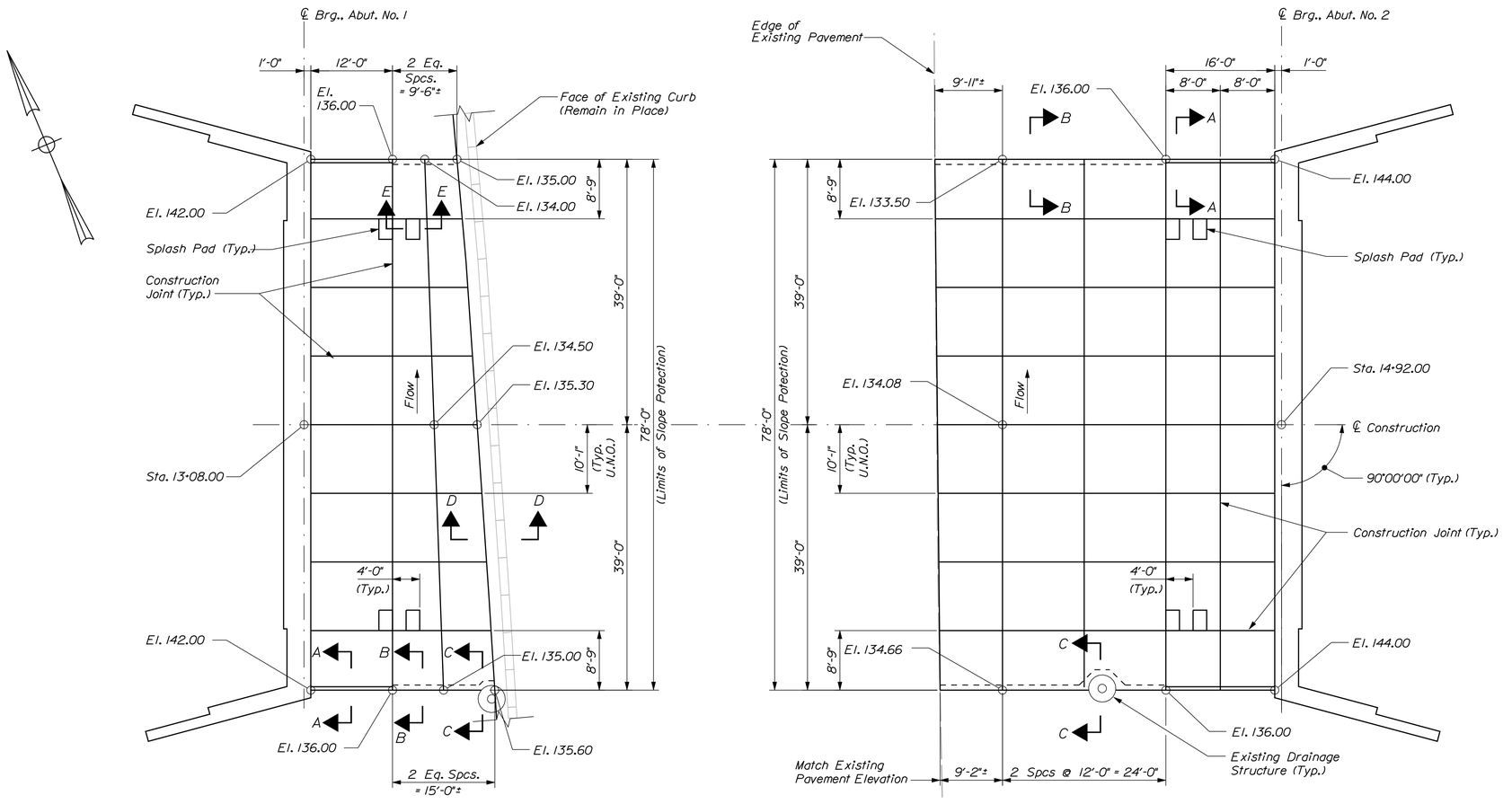

PLAN - SLOPE PROTECTION

SLOPE PROTECTION NOTES

1. All elevations shown are taken at top of slope projection.
2. The 1'-0" of aggregate subbase course-gravel, under slope projection, may be reduced or omitted if, in the opinion of the Resident, the existing material is suitable.
3. Break bond at construction joints with a coat of asphalt paint.
4. Reinforce with epoxy-coated WWF6x6-W2xW2, not to pass thru construction joints.
5. Cost of epoxy-coated WWF shall be included in slope prot - port cem conc.
6. Dummy joints shall be made with a groover to a depth of 1/4".
7. Edges of construction joints shall be finished with a sidewalk edging tool to a depth of 1/4".
8. Elevations taken at top of 4" concrete slab.

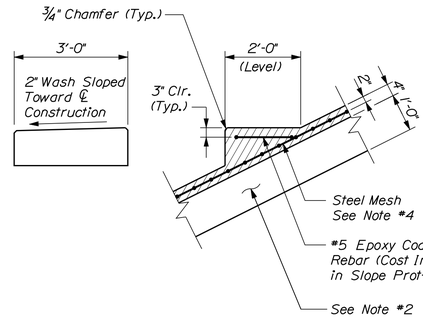

ELEVATION

SECTION E-E
(Splash Pad)

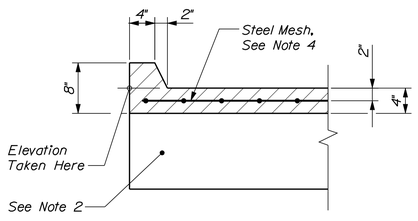

SECTION A-A

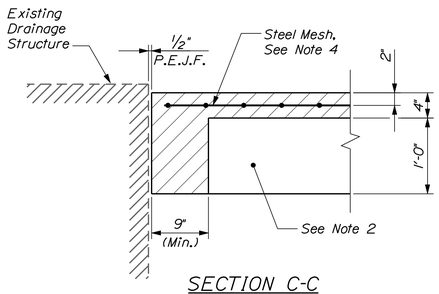

SECTION C-C

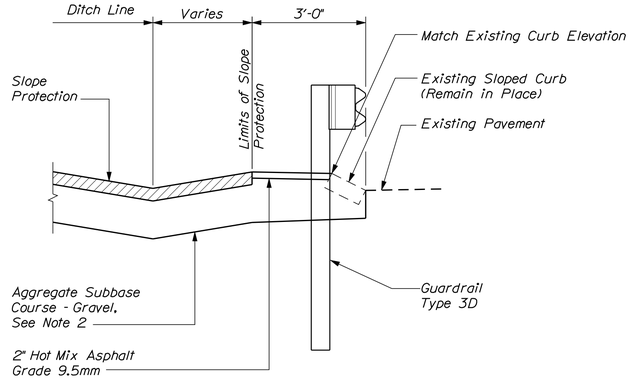

SECTION D-D

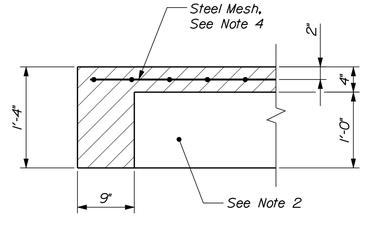

SECTION B-B

STATE OF MAINE
DEPARTMENT OF TRANSPORTATION

IM-1668(200)E

WIN 16682.00

BRIDGE NO.: 5797

BRIDGE PLANS

PROJ. MANAGER: STEPHEN BOGGE			
DESIGN-DETAILED	B. WELCH	D. BURGESS	05-22-13
CHECKED-REVIEWED	B. WELCH	J. BURGESS	05-22-13
DESIGN2-DETAILED2			
DESIGN3-DETAILED3			
REVISIONS 1			
REVISIONS 2			
REVISIONS 3			
REVISIONS 4			
FIELD CHANGES			

SIGNATURE

P.E. NUMBER

DATE

UNION STREET BRIDGE
OVER INTERSTATE 95
BANGOR PENOBSCOT COUNTY

SLOPE PROTECTION DETAIL

SHEET NUMBER

70

OF 93

BECKER
STRUCTURAL ENGINEERS
75 York Street, Portland, Maine 04101
207.879.1838 • beckerstructural.com

Filename: ...\070_SlopeProtection_plan.dgn Division: BRIDGE Username: CADD Date:1/2/2014

STRAIGHT BARS

MARK	QTY.	LENGTH	LOCATION
Abutment No. 1 Footing			
AF500	112	6'-3"	
AF501	22	5'-9"	
AF502	32	2'-6"	Mechanical Coupler
AF503	32	2'-6"	Mechanical Coupler
AF506	64	19'-8"	
AF507	64	22'-8"	
AF508	60	19'-0"	
AF509	24	12'-0"	
AF510	24	10'-0"	
AF706	248	15'-0"	
AF707	40	14'-0"	
AF708	70	11'-0"	
AF906	64	14'-0"	
Abutment No. 1			
A500	24	11'-4"	Wing
A506	87	14'-8"	
A507	42	19'-0"	
A508	16	26'-0"	
A509	32	12'-0"	
A510	42	22'-6"	
A511	16	33'-0"	
A512e	2	7'-8"	Backwall, Epoxy Coated
A513e	20	19'-9"	Backwall, Epoxy Coated
A514e	20	23'-3"	Backwall, Epoxy Coated
A515e	4	6'-0"	Backwall, Epoxy Coated
A520	32	11'-2½"	Wing
A521	72	10'-6"	Wing
A522	20	8'-10"	Wing
A523	26	23'-0"	Wing
A524	22	21'-0"	Wing
A525	2	16'-4"	Wing
A526	2	9'-10"	Wing
A527	2	3'-4"	Wing
A706	81	14'-0"	
Approach Slabs			
AS606	32	23'-6"	
AS607	64	17'-10"	
AS608	232	15'-0"	
Note: Refer to Maine Department of Transportation Standard Details Section 502 for Approach Slab Reinforcing steel.			
Pier Footing (Stainless Steel)			
PF606ss	72	12'-0"	
PF607ss	10	32'-0"	
PF608ss	20	20'-1"	
PF800ss	44	4'-0"	Mechanical Coupler
PF801ss	44	4'-0"	Mechanical Coupler
PF806ss	72	12'-0"	
PF807ss	44	32'-0"	
PF808ss	88	20'-10"	
Pier (Stainless Steel)			
P500ss	14	2'-2"	Mechanical Coupler
P501ss	14	2'-2"	Mechanical Coupler
P506ss	28	17'-6"	
P507ss	28	21'-0"	
P700ss	9	3'-0"	Mechanical Coupler
P701ss	9	3'-0"	Mechanical Coupler
P706ss	9	28'-6"	
P707ss	9	35'-6"	
P800ss	12	3'-10"	Mechanical Coupler
P801ss	28	3'-10"	Mechanical Coupler
P806ss	12	33'-0"	
P807ss	12	40'-0"	

MARK	QTY.	LENGTH	LOCATION
Abutment No. 2 Footing			
BF500	112	6'-3"	
BF501	22	5'-9"	
BF502	32	2'-6"	Mechanical Coupler
BF503	32	2'-6"	Mechanical Coupler
BF506	64	19'-8"	
BF507	64	22'-8"	
BF508	60	19'-0"	
BF509	24	12'-0"	
BF510	24	10'-0"	
BF706	248	15'-0"	
BF707	40	14'-0"	
BF708	70	11'-0"	
BF906	64	14'-0"	
Abutment No. 2			
B500	24	11'-4"	Wing
B506	87	14'-8"	
B507	42	19'-0"	
B508	16	26'-0"	
B509	32	12'-0"	
B510	42	22'-6"	
B511	16	33'-0"	
B512e	2	7'-8"	Backwall, Epoxy Coated
B513e	20	19'-9"	Backwall, Epoxy Coated
B514e	20	23'-3"	Backwall, Epoxy Coated
B515e	4	6'-0"	Backwall, Epoxy Coated
B520	32	11'-2½"	Wing
B521	72	10'-6"	Wing
B522	20	8'-10"	Wing
B523	26	23'-0"	Wing
B524	22	21'-0"	Wing
B525	2	16'-4"	Wing
B526	2	9'-10"	Wing
B527	2	3'-4"	Wing
B706	81	14'-0"	

BENT BARS

MARK	QTY.	LENGTH	TYPE	A	B	C	D	E	F	G	H	O	R	LOCATION
Abutment No. 1 Footing														
AF750	158	9'-9"	L	7'-9"	2'-0"									
AF751	46	14'-3"	S	2'-0"	10'-3"	2'-0"								
AF752	42	9'-3"	L	7'-3"	2'-0"									
Abutment No. 2 Footing														
BF750	158	9'-9"	L	7'-9"	2'-0"									
BF751	46	14'-3"	S	2'-0"	10'-3"	2'-0"								
BF752	42	9'-3"	L	7'-3"	2'-0"									
Abutment No. 1														
A550	32	4'-9"	V				2'-9"	2'-0"			1'-11"			
A551	61	6'-6"	S	1'-6"	3'-6"	1'-6"								Bridge/Approach Slab Seat
A552	20	6'-0"	S	1'-6"	3'-0"	1'-6"								Bridge Seat
A553e	81	16'-5"	S		7'-8"	1'-1"	7'-8"							Backwall, Epoxy Coated
A554e	10	3'-9"	V				3'-0"	9"			8½"			Backwall, Epoxy Coated
A555e	4	17'-6"	SC	1'-0"	3'-0"	9'-6"	3'-0"	1'-0"				9'-9"		Backwall, Sidewalk, Epoxy Coated
A556e	4	6'-10"	SC		2'-3"	2'-6"	2'-3"							Backwall, Block Out, Epoxy Coated
A557e	4	6'-10"	PR		1'-0"	4'-10"	1'-0"						1'-6¼"	Backwall, Block Out, Epoxy Coated
A558e	4	5'-6"	SC		1'-9"	2'-0"	1'-9"							Backwall, Block Out, Epoxy Coated
A559	3	13'-10"	HB	6"	3'-7"	2'-10"	3'-7"	2'-10"		6"				Keeper Block
A560	4	11'-6"	S		4'-0"	3'-6"	4'-0"							Keeper Block
A561	7	10'-9"	S		4'-0"	2'-9"	4'-0"							Keeper Block
A562	2	22'-11"	V				22'-3"	8"			½"			Wing
A563	2	21'-2"	V				21'-2"	8"			1¼"			Wing
A564	46	3'-0"	S	1'-0"	1'-0"	1'-0"								Wing
A750	46	9'-0"	L	8'-0"	1'-0"									Wing
Abutment No. 2														
B550	32	4'-9"	V				2'-9"	2'-0"			1'-11"			
B551	61	6'-6"	S	1'-6"	3'-6"	1'-6"								Bridge/Approach Slab Seat
B552	20	6'-0"	S	1'-6"	3'-0"	1'-6"								Bridge Seat
B553e	81	16'-5"	S		7'-8"	1'-1"	7'-8"							Backwall, Epoxy Coated
B554e	10	3'-9"	V				3'-0"	9"			8½"			Backwall, Epoxy Coated
B555e	4	17'-6"	SC	1'-0"	3'-0"	9'-6"	3'-0"	1'-0"				9'-9"		Backwall, Sidewalk, Epoxy Coated
B556e	4	7'-0"	SC		2'-3"	2'-6"	2'-3"							Backwall, Block Out, Epoxy Coated
B557e	4	6'-10"	PR		1'-0"	4'-10"	1'-0"						1'-6¼"	Backwall, Block Out, Epoxy Coated
B558e	4	5'-6"	SC		1'-9"	2'-0"	1'-9"							Backwall, Block Out, Epoxy Coated
B559	3	13'-10"	HB	6"	3'-7"	2'-10"	3'-7"	2'-10"		6"				Keeper Block
B560	4	11'-6"	S		4'-0"	3'-6"	4'-0"							Keeper Block
B561	7	10'-9"	S		4'-0"	2'-9"	4'-0"							Keeper Block
B562	2	22'-11"	V				22'-3"	8"			½"			Wing
B563	2	21'-2"	V				21'-2"	8"			1¼"			Wing
B564	46	3'-0"	S	1'-0"	1'-0"	1'-0"								Wing
B750	46	9'-0"	L	8'-0"	1'-0"									Wing
Pier Footing (Stainless Steel)														
PF650ss	76	7'-6"	S	2'-0"	3'-6"	2'-0"								
PF651ss	10	16'-0"	S	2'-0"	12'-0"	2'-0"								
PF950ss	96	11'-9"	L	9'-9"	2'-0"									Column
Pier (Stainless Steel)														
P450ss	100	15'-8"	H	6"	3'-8"	3'-8"	3'-8"	3'-8"		6"				Column Stirrup
P451ss	400	4'-8"	T9	6"			3'-8"	6"						Column Tie
P550ss	98	9'-6"	S	2'-8"	4'-2"	2'-8"								
P551ss	2	9'-2"	S	2'-6"	4'-2"	2'-6"								
P552ss	2	8'-10"	S	2'-4"	4'-2"	2'-4"								
P553ss	2	8'-6"	S	2'-2"	4'-2"	2'-2"								
P554ss	2	8'-4"	S	2'-1"	4'-2"	2'-1"								
P555ss	2	8'-0"	S	1'-11"	4'-2"	1'-11"								
P556ss	2	7'-8"	S	1'-9"	4'-2"	1'-9"								
P557ss	2	7'-6"	S	1'-8"	4'-2"	1'-8"								
P558ss	196	8'-7"	S	3'-9"	1'-1"	3'-9"								
P559ss	12	7'-5"	S	3'-2"	1'-1"	3'-2"								
P560ss	4	7'-3"	S	3'-1"	1'-1"	3'-1"								
P561ss	4	7'-1"	S	3'-0"	1'-1"	3'-0"								
P562ss	4	6'-9"	S	2'-10"	1'-1"	2'-10"								
P563ss	4	6'-5"	S	2'-8"	1'-1"	2'-8"								
P564ss	10	9'-0"	14	2'-8"	4'-4"	2'-0"					11¼"			
P565ss	57	5'-2"	T9	6"			4'-2"	6"						Pier Cap Tie
P566ss	114	2'-1"	T9	6"			1'-1"	6"						Pier Cap Tie
P567ss	10	7'-0"	S	1'-6"	4'-0"	1'-6"								
P950ss	96	19'-6"	L	18'-0"	1'-6"									Column

TYPE - BENDING DIAGRAMS

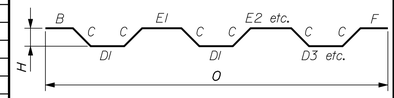

B

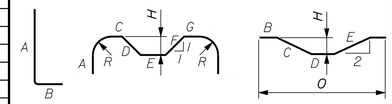

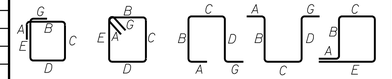

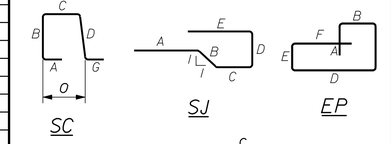

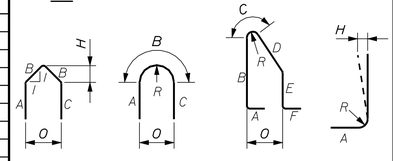

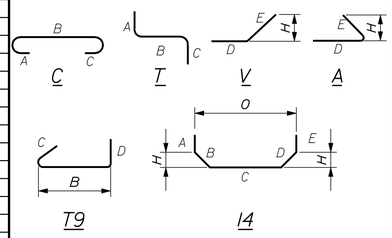

All dimensions are out-to-out of bar.

Bending details and hooks shall conform to the recommendations of the current revision of ACI Standard 315 and ACI Standard 318.

Reinforcing Bar: ASTM A615/A615M, Grade 60

GENERAL NOTES

1. The first two digits following the letter(s) of the mark indicate the size ofthe bar:

   Mark "A502" = bar size #5
   Mark "P805" = bar size #8
   Mark "S650" = bar size #6

2. Mark legend:
   "e" = epoxy coated
   "ss" = stainless steel
   "g" = galvanized

BECKER
STRUCTURAL ENGINEERS
75 York Street, Portland, Maine 04101
207.879.1838 • beckerstructural.com

STATE OF MAINE
DEPARTMENT OF TRANSPORTATION

IM-1668(200)E

WIN 16682.00

BRIDGE NO.: 5797

BRIDGE PLANS

	BY	DATE
PROJ. MANAGER: STEPHEN BODGE		
DESIGN-DETAILED	D. BURGESS	05-22-13
CHECKED-REVIEWED	B. WELCH	J. BURGESS 05-22-13
DESIGN2-DETAILED2		
DESIGN3-DETAILED3		
REVISIONS 1		
REVISIONS 2		
REVISIONS 3		
REVISIONS 4		
FIELD CHANGES		

SIGNATURE

P.E. NUMBER

DATE

UNION STREET BRIDGE
OVER INTERSTATE 95
BANGOR PENOBSCOT COUNTY

REINFORCING STEEL SCHEDULE (1 of 2)

SHEET NUMBER

71

OF 93

Date:1/2/2014

Username: CADD

Division: BRIDGE

Filename: ...\bridge\rmsta\071_Rebar_001.dgn

STRAIGHT BARS

MARK	QTY.	LENGTH	LOCATION
Superstructure (Epoxy Coated & Galvanized)			
S500e	371	5'-0"	Mechanical Coupler
S501e	371	7'-6"	Mechanical Coupler
S502e	371	3'-0"	Mechanical Coupler
S503e	371	4'-6"	Mechanical Coupler
S504e	1504	1'-9"	Mechanical Coupler
S505e	10	3'-0"	Pier Diaphragm, Mechanical Coupler
S506e	10	3'-0"	Pier Diaphragm, Mechanical Coupler
S507g	10	2'-9"	Mechanical Coupler, Galvanized
S508g	10	1'-9"	Mechanical Coupler, Galvanized
S510e	371	29'-9"	
S511e	371	27'-2"	
S512e	742	21'-2"	
S513e	742	20'-6"	
S514e	400	34'-6"	
S515e	400	35'-9"	
S516e	296	53'-4"	
S517e	296	58'-8"	
S518e	108	33'-3"	Sidewalk
S519g	50	4'-8"	Galvanized
S530e	6	30'-0"	Pier Diaphragm
S531e	6	37'-9"	Pier Diaphragm
S532e	16	7'-0"	Pier Diaphragm
S533e	4	9'-0"	Pier Diaphragm
S534e	4	16'-10"	Pier Diaphragm
S535g	88	3'-0"	Pier Diaphragm, Galvanized

BENT BARS

MARK	QTY.	LENGTH	TYPE	A	B	C	D	E	F	G	H	O	R	LOCATION
Superstructure (Epoxy Coated & Galvanized)														
S550e	371	9'-3 3/8"	PR	8'-3"	9 3/8"	3"							3"	
S551e	120	6'-0"	H	6"	1'-5"	1'-1"	1'-5"	1'-1"		6"				Slab Haunch
S552e	372	10'-10"	SC	6"	1'-6"	7'-0"	1'-4"			6"		7'-2"		Sidewalk
S553e	138	5'-6"	S	6"	1'-6"	1'-6"	1'-6"			6"				Sidewalk
S570e	60	13'-4"	SL	1'-0"	5'-2"	1'-0"	5'-2"			1'-0"				Pier Diaphragm
S571e	12	4'-10"	SL	1'-0"	11"	1'-0"	11"			1'-0"				Pier Diaphragm
S572e	12	5'-8"	H	6"	1'-0"	1'-4"	1'-0"	1'-4"		6"				Pier Diaphragm
S573g	48	9'-8"	S		3'-2"	3'-4"	3'-2"							Pier Diaphragm, galvanized
S574e	32	9'-4"	S		2'-9"	3'-10"	2'-9"							Pier Diaphragm
S575g	24	6'-6"	S		1'-3"	4'-0"	1'-3"							Pier Diaphragm, galvanized
S576g	8	3'-6"	L	2'-3"	1'-3"									Pier Diaphragm, galvanized
S577g	8	2'-6"	L	1'-3"	1'-3"									Pier Diaphragm, galvanized

Note: Refer to Maine Department of Transportation Standard Details Section 526 for transition barrier reinforcing steel.

TYPE - BENDING DIAGRAMS

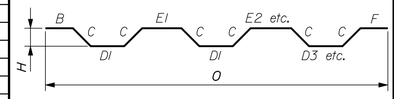

B

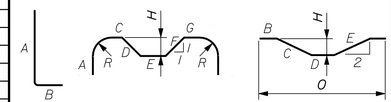

L W M

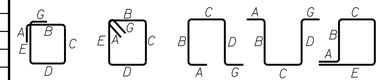

HB H S SL SB

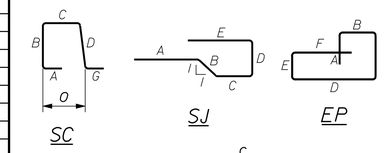

SC SJ EP

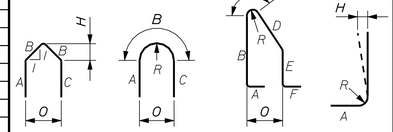

PA PR CB J

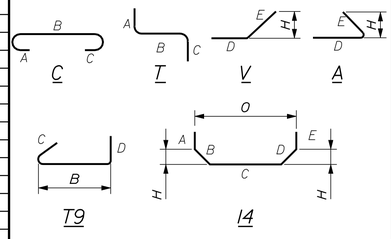

C T V A T9 I4

All dimensions are out-to-out of bar.

Bending details and hooks shall conform to the recommendations of the current revision of ACI Standard 315 and ACI Standard 318.

Reinforcing Bar: ASTM A615/A615M, Grade 60

GENERAL NOTES

1. The first two digits following the letter(s) of the mark indicate the size ofthe bar:

   Mark "A502" = bar size #5
   Mark "P805" = bar size #8
   Mark "S650" = bar size #6

2. Mark legend:
   "e" = epoxy coated
   "ss" = stainless steel
   "g" = galvanized

BECKER STRUCTURAL ENGINEERS
75 York Street, Portland, Maine 04101
207.879.1838 ■ beckerstructural.com

STATE OF MAINE
DEPARTMENT OF TRANSPORTATION

IM-1668(200)E

WIN 16682.00

BRIDGE NO.: 5797

BRIDGE PLANS

	BY	DATE
PROJ. MANAGER STEPHEN BODGE		
DESIGN-DETAILED	D. BURGESS	05-22-13
CHECKED-REVIEWED	J. BURGESS	05-22-13
DESIGN2-DETAILED2		
DESIGN3-DETAILED3		
REVISIONS 1		
REVISIONS 2		
REVISIONS 3		
REVISIONS 4		
FIELD CHANGES		

SIGNATURE

P.E. NUMBER

DATE

UNION STREET BRIDGE
OVER INTERSTATE 95
BANGOR PENOBSCOT COUNTY

REINFORCING
STEEL SCHEDULE (2 of 2)

SHEET NUMBER

72

OF 93

Filename: ...\bridge\mst01072_Rebor_002.dgn Division: BRIDGE Username: CADD Date:1/2/2014

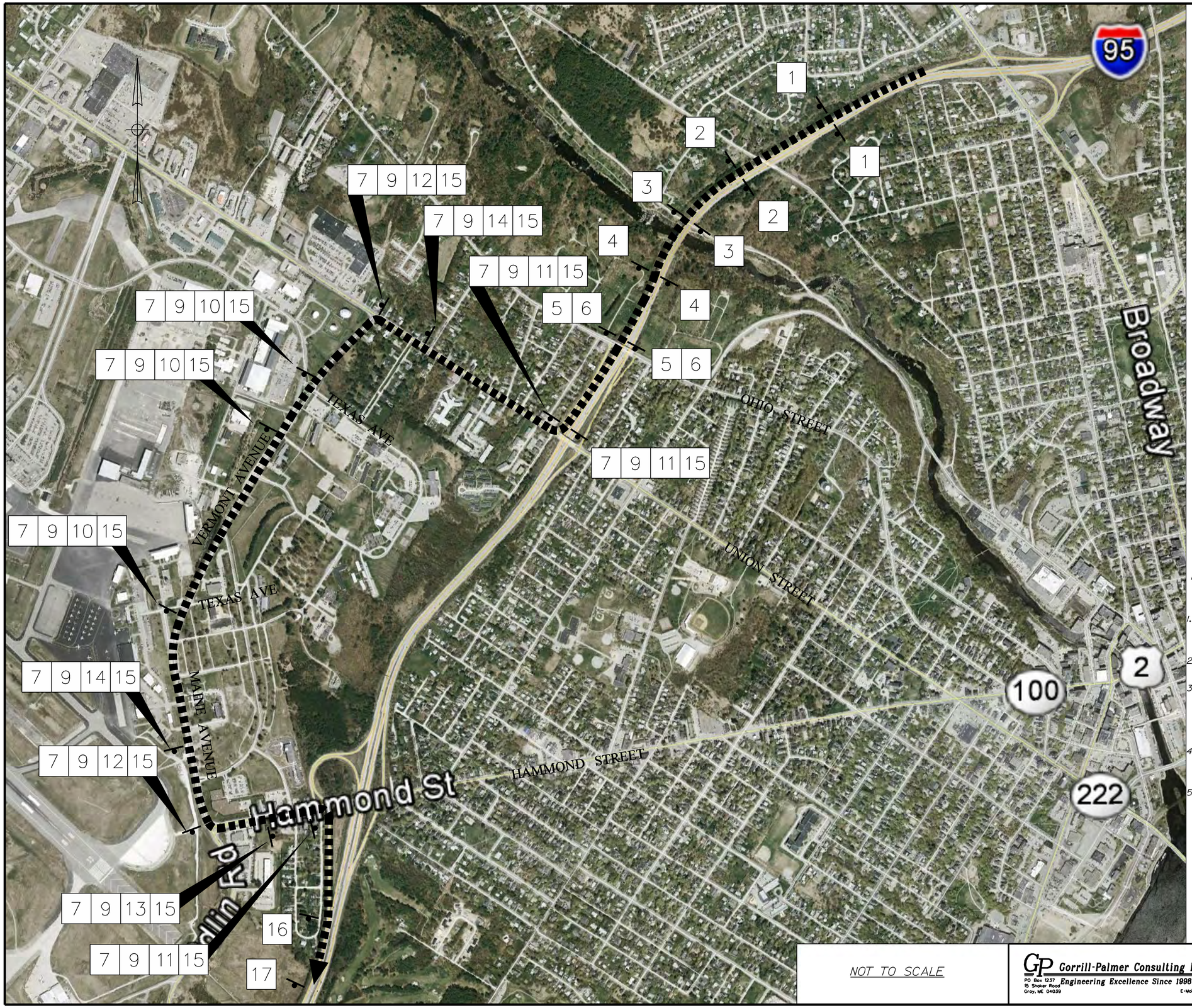

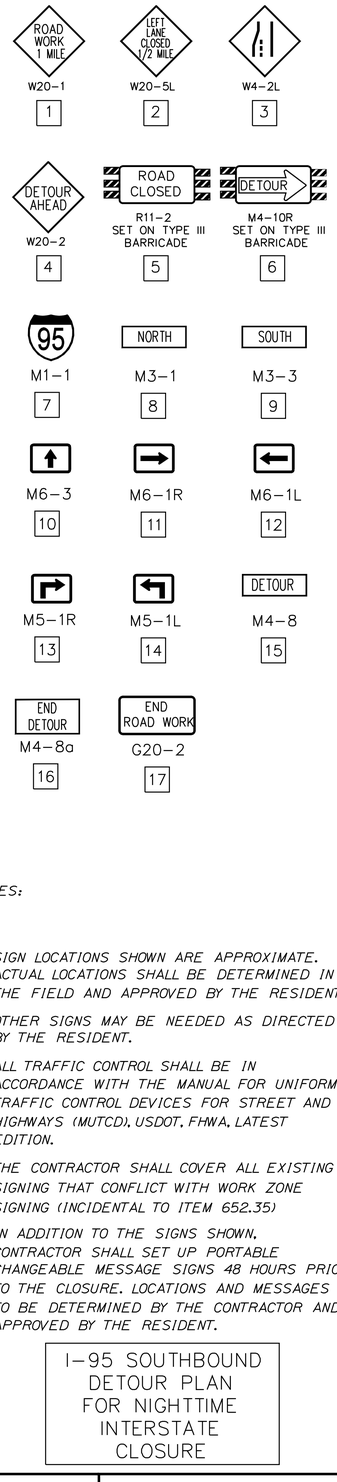

NOTES:

1. SIGN LOCATIONS SHOWN ARE APPROXIMATE. ACTUAL LOCATIONS SHALL BE DETERMINED IN THE FIELD AND APPROVED BY THE RESIDENT.
2. OTHER SIGNS MAY BE NEEDED AS DIRECTED BY THE RESIDENT.
3. ALL TRAFFIC CONTROL SHALL BE IN ACCORDANCE WITH THE MANUAL FOR UNIFORM TRAFFIC CONTROL DEVICES FOR STREET AND HIGHWAYS (MUTCD), USDOT, FHWA, LATEST EDITION.
4. THE CONTRACTOR SHALL COVER ALL EXISTING SIGNING THAT CONFLICT WITH WORK ZONE SIGNING (INCIDENTAL TO ITEM 652.35)
5. IN ADDITION TO THE SIGNS SHOWN, CONTRACTOR SHALL SET UP PORTABLE CHANGEABLE MESSAGE SIGNS 48 HOURS PRIOR TO THE CLOSURE. LOCATIONS AND MESSAGES TO BE DETERMINED BY THE CONTRACTOR AND APPROVED BY THE RESIDENT.

I-95 SOUTHBOUND DETOUR PLAN FOR NIGHTTIME INTERSTATE CLOSURE

NOT TO SCALE

GP Gorrill-Palmer Consulting Engineers, Inc.
PO Box 1237 Engineering Excellence Since 1998 207-657-6910
15 Shaker Road FAX: 207-657-6912
Gray, ME 04039 E-Mail: mailbox@gorrillpalmer.com

BECKER STRUCTURAL ENGINEERS
75 York Street, Portland, Maine 04101
207.879.1838 • beckerstructural.com

STATE OF MAINE
DEPARTMENT OF TRANSPORTATION

IM-1668(100)E

WIN 16681.00

BRIDGE NO.: 5797 BRIDGE PLANS

	BY	DATE
PROJ. MANAGER: STEPHEN BODGE		
DESIGN-DETAILED	D.ETTINGER	05-22-13
CHECKED-REVIEWED	D.BURGESS	05-22-13
DESIGN2-DETAILED2	D.ETTINGER	------
DESIGN3-DETAILED3	T.GORRILL	------
REVISIONS 1	------	------
REVISIONS 2	------	------
REVISIONS 3	------	------
REVISIONS 4	------	------
FIELD CHANGES	------	------

SIGNATURE

P.E. NUMBER

DATE

UNION STREET BRIDGE
OVER INTERSTATE 95
BANGOR PENOBSCOT COUNTY

I-95 SOUTHBOUND DETOUR PLAN

SHEET NUMBER
73
OF 93

Filename: ...\00\bridge\mst0\073_TCPPlan.dgn Division: BRIDGE Username: CADD Date:1/2/2014

ROAD WORK 1 MILE — W20-1 — 1

LEFT LANE CLOSED 1/2 MILE — W20-5L — 2

W4-2L — 3

DETOUR AHEAD — W20-2 — 4

ROAD CLOSED — R11-2 SET ON TYPE III BARRICADE — 5

DETOUR — M4-10R SET ON TYPE III BARRICADE — 6

95 — M1-1 — 7

NORTH — M3-1 — 8

SOUTH — M3-3 — 9

M6-3 — 10

M6-1R — 11

M6-1L — 12

M5-1R — 13

M5-1L — 14

DETOUR — M4-8 — 15

END DETOUR — M4-8a — 16

END ROAD WORK — G20-2 — 17

NOTES:

1. SIGN LOCATIONS SHOWN ARE APPROXIMATE. ACTUAL LOCATIONS SHALL BE DETERMINED IN THE FIELD AND APPROVED BY THE RESIDENT.
2. OTHER SIGNS MAY BE NEEDED AS DIRECTED BY THE RESIDENT.
3. ALL TRAFFIC CONTROL SHALL BE IN ACCORDANCE WITH THE MANUAL FOR UNIFORM TRAFFIC CONTROL DEVICES FOR STREET AND HIGHWAYS (MUTCD), USDOT, FHWA, LATEST EDITION.
4. THE CONTRACTOR SHALL COVER ALL EXISTING SIGNING THAT CONFLICT WITH WORK ZONE SIGNING (INCIDENTAL TO ITEM 652.35)
5. IN ADDITION TO THE SIGNS SHOWN, CONTRACTOR SHALL SET UP PORTABLE CHANGEABLE MESSAGE SIGNS 48 HOURS PRIOR TO THE CLOSURE. LOCATIONS AND MESSAGES TO BE DETERMINED BY THE CONTRACTOR AND APPROVED BY THE RESIDENT.

I-95 NORTHBOUND DETOUR PLAN FOR NIGHTTIME INTERSTATE CLOSURE

NOT TO SCALE

GP Gorrill-Palmer Consulting Engineers, Inc.
PO Box 1237 — 15 Shaker Road — Gray, ME 04039
Engineering Excellence Since 1998
207-657-6910 — FAX: 207-657-6912 — E-Mail: mailbox@gorrillpalmer.com

BECKER STRUCTURAL ENGINEERS
75 York Street, Portland, Maine 04101
207.879.1838 • beckerstructural.com

STATE OF MAINE
DEPARTMENT OF TRANSPORTATION

IM-1668(100)E

WIN 16681.00

BRIDGE NO.: 5797

BRIDGE PLANS

	BY	DATE
PROJ. MANAGER: STEPHEN BODGE		
DESIGN-DETAILED	D.ETTINGER	D.BURGESS 05-22-13
CHECKED-REVIEWED	D.ETTINGER	T.GORRILL 05-22-13
DESIGN2-DETAILED2	-------	-------
DESIGN3-DETAILED3	-------	-------
REVISIONS 1	-------	-------
REVISIONS 2	-------	-------
REVISIONS 3	-------	-------
REVISIONS 4	-------	-------
FIELD CHANGES	-------	-------

SIGNATURE

P.E. NUMBER

DATE

UNION STREET BRIDGE
OVER INTERSTATE 95
BANGOR — PENOBSCOT COUNTY

I-95 NORTHBOUND
DETOUR PLAN

SHEET NUMBER
74
OF 93

Filename: ...\00\bridge\mslo\074_TCPPlan.dgn Division: BRIDGE Username: CADD Date:1/2/2014

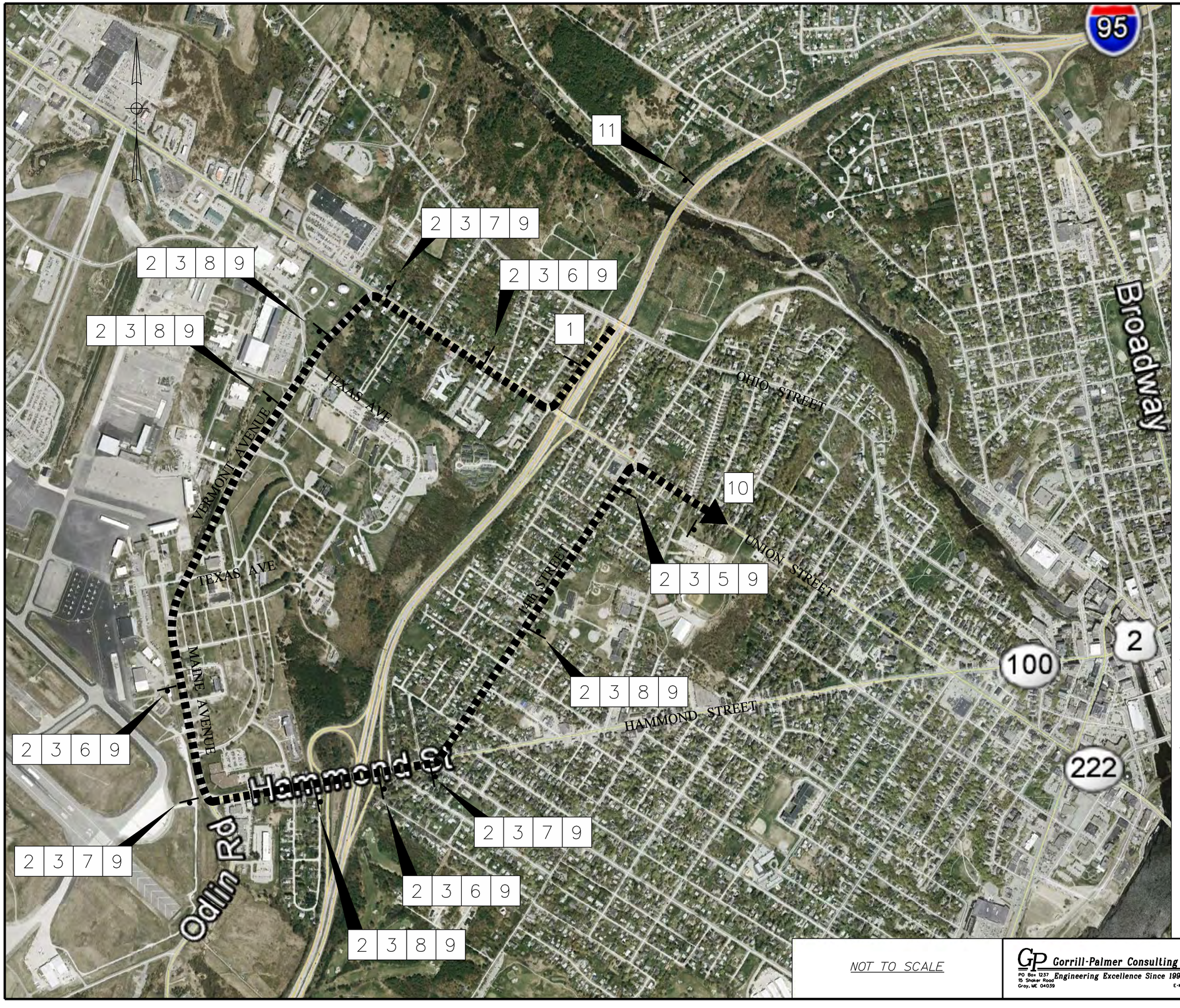

NO LEFT TURN
1

222
M1-5
2

EAST
M3-2
3

M5-1R
4

M6-1R
5

M5-1L
6

M6-1L
7

M6-3
8

DETOUR
M4-8
9

END DETOUR
M4-8a
10

EXIT 184 222
BRIDGE CONSTRUCTION TRUCKS
USE EXIT 183
11

NOTES:

1. *SIGN LOCATIONS SHOWN ARE APPROXIMATE. ACTUAL LOCATIONS SHALL BE DETERMINED IN THE FIELD AND APPROVED BY THE RESIDENT.*
2. *OTHER SIGNS MAY BE NEEDED AS DIRECTED BY THE RESIDENT.*
3. *ALL TRAFFIC CONTROL SHALL BE IN ACCORDANCE WITH THE MANUAL FOR UNIFORM TRAFFIC CONTROL DEVICES FOR STREET AND HIGHWAYS (MUTCD), USDOT, FHWA, LATEST EDITION.*
4. *THE CONTRACTOR SHALL COVER ALL EXISTING SIGNING THAT CONFLICT WITH WORK ZONE SIGNING (INCIDENTAL TO ITEM 652.35)*
5. *IN ADDITION TO THE SIGNS SHOWN, CONTRACTOR SHALL SET UP PORTABLE CHANGEABLE MESSAGE SIGNS 48 HOURS PRIOR TO THE CLOSURE. LOCATIONS AND MESSAGES TO BE DETERMINED BY THE CONTRACTOR AND APPROVED BY THE RESIDENT.*

ROUTE 222 EASTBOUND
DETOUR PLAN –
I95 SOUTHBOUND
OFF RAMP LEFT TURN
PROHIBITED

NOT TO SCALE

GP Gorrill-Palmer Consulting Engineers, Inc.
PO Box 1237 Engineering Excellence Since 1998 207-657-6910
15 Shaker Road FAX: 207-657-6912
Gray, ME 04039 E-Mail: mailbox@gorrillpalmer.com

BECKER STRUCTURAL ENGINEERS
75 York Street, Portland, Maine 04101
207.879.1838 • beckerstructural.com

STATE OF MAINE
DEPARTMENT OF TRANSPORTATION

IM-1668(100)E

WIN 16681.00

BRIDGE NO.: 5797 BRIDGE PLANS

PROJ. MANAGER	STEPHEN BODGE	BY	DATE
DESIGN-DETAILED	D.ETTINGER	D.BURGESS	07-09-13
CHECKED-REVIEWED	D.ETTINGER	T.GORRILL	07-09-13
DESIGN2-DETAILED2	-------	-------	-------
DESIGN3-DETAILED3	-------	-------	-------
REVISIONS 1	-------	-------	-------
REVISIONS 2	-------	-------	-------
REVISIONS 3	-------	-------	-------
REVISIONS 4	-------	-------	-------
FIELD CHANGES	-------	-------	-------

SIGNATURE

P.E. NUMBER

DATE

UNION STREET BRIDGE
OVER INTERSTATE 95
BANGOR PENOBSCOT COUNTY

ROUTE 222 EAST
DETOUR PLAN

SHEET NUMBER
75
OF 93

Filename: ...\00\bridge\msta\075_TCPPlan.dgn Division: BRIDGE Username: CADD Date:1/2/2014

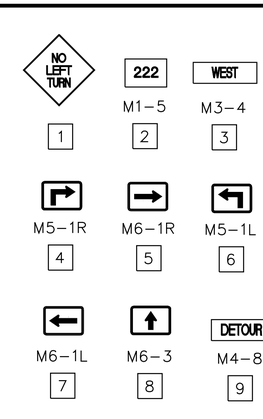

NOTES:

1. SIGN LOCATIONS SHOWN ARE APPROXIMATE. ACTUAL LOCATIONS SHALL BE DETERMINED IN THE FIELD AND APPROVED BY THE RESIDENT.
2. OTHER SIGNS MAY BE NEEDED AS DIRECTED BY THE RESIDENT.
3. ALL TRAFFIC CONTROL SHALL BE IN ACCORDANCE WITH THE MANUAL FOR UNIFORM TRAFFIC CONTROL DEVICES FOR STREET AND HIGHWAYS (MUTCD), USDOT, FHWA, LATEST EDITION.
4. THE CONTRACTOR SHALL COVER ALL EXISTING SIGNING THAT CONFLICT WITH WORK ZONE SIGNING (INCIDENTAL TO ITEM 652.35)
5. IN ADDITION TO THE SIGNS SHOWN, CONTRACTOR SHALL SET UP PORTABLE CHANGEABLE MESSAGE SIGNS 48 HOURS PRIOR TO THE CLOSURE. LOCATIONS AND MESSAGES TO BE DETERMINED BY THE CONTRACTOR AND APPROVED BY THE RESIDENT.

ROUTE 222 WESTBOUND
DETOUR PLAN –
195 NORTHBOUND
OFF RAMP LEFT TURN
PROHIBITED

NOT TO SCALE

GP Gorrill-Palmer Consulting Engineers, Inc.
PO Box 1237 Engineering Excellence Since 1998 207-657-6910
15 Shaker Road FAX: 207-657-6912
Gray, ME 04039 E-Mail: mailbox@gorrillpalmer.com

BECKER STRUCTURAL ENGINEERS
75 York Street, Portland, Maine 04101
207.879.1838 • beckerstructural.com

STATE OF MAINE
DEPARTMENT OF TRANSPORTATION

IM-1668(100)E

WIN 16681.00

BRIDGE NO.: 5797

BRIDGE PLANS

PROJ. MANAGER: STEPHEN BODGE			
DESIGN-DETAILED	D.ETTINGER	D.BURGESS	07-09-13
CHECKED-REVIEWED	D.ETTINGER	T.GORRILL	07-09-13
DESIGN2-DETAILED2	-------	-------	-------
DESIGN3-DETAILED3	-------	-------	-------
REVISIONS 1	-------	-------	-------
REVISIONS 2	-------	-------	-------
REVISIONS 3	-------	-------	-------
REVISIONS 4	-------	-------	-------
FIELD CHANGES	-------	-------	-------

SIGNATURE

P.E. NUMBER

DATE

UNION STREET BRIDGE
OVER INTERSTATE 95
BANGOR PENOBSCOT COUNTY

ROUTE 222 WEST
DETOUR PLAN

SHEET NUMBER
76
OF 93

Filename: ...\00\bridge\mst0\076_TCPPlan.dgn Division: BRIDGE Username: CADD Date:1/2/2014

NO LEFT TURN
1

M1-1
2

NORTH
M3-1
3

M5-1R
4

M6-1R
5

DETOUR
M4-8
6

END DETOUR
M4-8a
7

BRIDGE CONSTRUCTION AHEAD
8

TRUCK DETOUR TO I-95 NORTH
9

M6-3
10

M5-1L
11

M6-1L
12

NOTES:

1. SIGN LOCATIONS SHOWN ARE APPROXIMATE. ACTUAL LOCATIONS SHALL BE DETERMINED IN THE FIELD AND APPROVED BY THE RESIDENT.
2. OTHER SIGNS MAY BE NEEDED AS DIRECTED BY THE RESIDENT.
3. ALL TRAFFIC CONTROL SHALL BE IN ACCORDANCE WITH THE MANUAL FOR UNIFORM TRAFFIC CONTROL DEVICES FOR STREET AND HIGHWAYS (MUTCD), USDOT, FHWA, LATEST EDITION.
4. THE CONTRACTOR SHALL COVER ALL EXISTING SIGNING THAT CONFLICT WITH WORK ZONE SIGNING (INCIDENTAL TO ITEM 652.35)
5. IN ADDITION TO THE SIGNS SHOWN, CONTRACTOR SHALL SET UP PORTABLE CHANGEABLE MESSAGE SIGNS 48 HOURS PRIOR TO THE CLOSURE. LOCATIONS AND MESSAGES TO BE DETERMINED BY THE CONTRACTOR AND APPROVED BY THE RESIDENT.

I-95 NORTHBOUND ONRAMP DETOUR PLAN. ROUTE 222 EASTBOUND LEFT TURN TO I-95 NORTHBOUND ON-RAMP PROHIBITED

NOT TO SCALE

GP Gorrill-Palmer Consulting Engineers, Inc.
PO Box 1237 Engineering Excellence Since 1998
15 Shaker Road
Gray, ME 04039
207-657-6910
FAX: 207-657-6912
E-Mail: mailbox@gorrillpalmer.com

BECKER STRUCTURAL ENGINEERS
75 York Street, Portland, Maine 04101
207.879.1838 • beckerstructural.com

STATE OF MAINE
DEPARTMENT OF TRANSPORTATION

IM-1668(100)E

WIN 16681.00

BRIDGE NO.: 5797

BRIDGE PLANS

		BY	DATE
PROJ. MANAGER	STEPHEN BODGE		
DESIGN-DETAILED	D.ETTINGER	D.BURGESS	05-22-13
CHECKED-REVIEWED	D.ETTINGER	T.GORRILL	05-22-13
DESIGN2-DETAILED2	-------	-------	-------
DESIGN3-DETAILED3	-------	-------	-------
REVISIONS 1	-------	-------	-------
REVISIONS 2	-------	-------	-------
REVISIONS 3	-------	-------	-------
REVISIONS 4	-------	-------	-------
FIELD CHANGES	-------	-------	-------

SIGNATURE

P.E. NUMBER

DATE

UNION STREET BRIDGE
OVER INTERSTATE 95
PENOBSCOT COUNTY
BANGOR

I-95 NORTHBOUND ON-RAMP
DETOUR PLAN

SHEET NUMBER
77
OF 93

Filename: ...\00\bridge\mnsta\077_TCPPlan.dgn Division: BRIDGE Username: CADD Date:1/2/2014

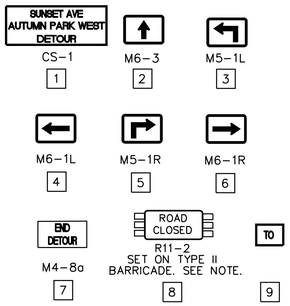

NOTE:
PLACE TYPE III BARRICADES 10 FEET IN FRONT OF CONCRETE BARRIER, BOTH SIDES. PROVIDE CONCRETE BARRIER ACROSS PAVEMENT WIDTH OF LOCAL ROADS WITH RETRO-REFLECTIVE DELINEATION ON BOTH SIDES.

NOTES:

1. SIGN LOCATIONS SHOWN ARE APPROXIMATE. ACTUAL LOCATIONS SHALL BE DETERMINED IN THE FIELD AND APPROVED BY THE RESIDENT.
2. OTHER SIGNS MAY BE NEEDED AS DIRECTED BY THE RESIDENT.
3. ALL TRAFFIC CONTROL SHALL BE IN ACCORDANCE WITH THE MANUAL FOR UNIFORM TRAFFIC CONTROL DEVICES FOR STREET AND HIGHWAYS (MUTCD), USDOT, FHWA, LATEST EDITION.
4. THE CONTRACTOR SHALL COVER ALL EXISTING SIGNING THAT CONFLICT WITH WORK ZONE SIGNING (INCIDENTAL TO ITEM 652.35)
5. IN ADDITION TO THE SIGNS SHOWN, CONTRACTOR SHALL SET UP PORTABLE CHANGEABLE MESSAGE SIGNS 48 HOURS PRIOR TO THE CLOSURE. LOCATIONS AND MESSAGES TO BE DETERMINED BY THE CONTRACTOR AND APPROVED BY THE RESIDENT.

SUNSET AVENUE
CLOSURE DETAIL

NOT TO SCALE

GP Gorrill-Palmer Consulting Engineers, Inc.
PO Box 1237
15 Shaker Road
Gray, ME 04039
Engineering Excellence Since 1998
207-657-6910
FAX: 207-657-6912
E-Mail: mailbox@gorrillpalmer.com

BECKER
STRUCTURAL ENGINEERS
75 York Street, Portland, Maine 04101
207.879.1838 • beckerstructural.com

STATE OF MAINE
DEPARTMENT OF TRANSPORTATION

IM-1668(100)E

WIN 16681.00

BRIDGE NO.: 5797

BRIDGE PLANS

		BY	DATE
PROJ. MANAGER: STEPHEN BODGE			
DESIGN-DETAILED	D.ETTINGER	D.BURGESS	05-22-13
CHECKED-REVIEWED	D.ETTINGER	T.GORRILL	05-22-13
DESIGN2-DETAILED2	----------	----------	----------
DESIGN3-DETAILED3	----------	----------	----------
REVISIONS 1	----------	----------	----------
REVISIONS 2	----------	----------	----------
REVISIONS 3	----------	----------	----------
REVISIONS 4	----------	----------	----------
FIELD CHANGES	----------	----------	----------

SIGNATURE

P.E. NUMBER

DATE

UNION STREET BRIDGE
OVER INTERSTATE 95
BANGOR PENOBSCOT COUNTY

SUNSET AVENUE
DETOUR PLAN

SHEET NUMBER
78
OF 93

Filename: ...\00\bridge\mst0\078_TCPPlan.dgn Division: BRIDGE Username: CADD Date:1/2/2014

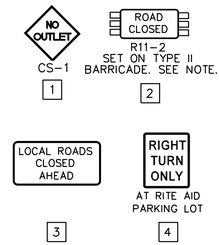

NOTE:
PLACE TYPE III BARRICADES 10 FEET IN FRONT OF CONCRETE BARRIER, BOTH SIDES. PROVIDE CONCRETE BARRIER ACROSS PAVEMENT WIDTH OF LOCAL ROADS WITH RETRO-REFLECTIVE DELINEATION ON BOTH SIDES.

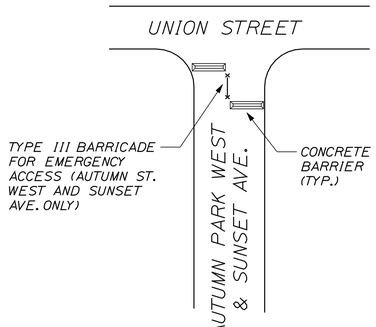

BARRIER LAYOUT

NOTES:

1. SIGN LOCATIONS SHOWN ARE APPROXIMATE. ACTUAL LOCATIONS SHALL BE DETERMINED IN THE FIELD AND APPROVED BY THE RESIDENT.
2. OTHER SIGNS MAY BE NEEDED AS DIRECTED BY THE RESIDENT.
3. ALL TRAFFIC CONTROL SHALL BE IN ACCORDANCE WITH THE MANUAL FOR UNIFORM TRAFFIC CONTROL DEVICES FOR STREET AND HIGHWAYS (MUTCD), USDOT, FHWA, LATEST EDITION.
4. THE CONTRACTOR SHALL COVER ALL EXISTING SIGNING THAT CONFLICT WITH WORK ZONE SIGNING (INCIDENTAL TO ITEM 652.35)
5. IN ADDITION TO THE SIGNS SHOWN, CONTRACTOR SHALL SET UP PORTABLE CHANGEABLE MESSAGE SIGNS 5 DAYS PRIOR TO THE I-95 CLOSURE. LOCATIONS AND MESSAGES TO BE DETERMINED BY THE CONTRACTOR AND APPROVED BY THE RESIDENT.

LOCAL ROAD CLOSURES DETAIL

NOT TO SCALE

GP Gorrill-Palmer Consulting Engineers, Inc.
PO Box 1237 — 15 Shaker Road — Gray, ME 04039
Engineering Excellence Since 1998
207-657-6910 — FAX: 207-657-6912
E-Mail: mailbox@gorrillpalmer.com

BECKER STRUCTURAL ENGINEERS
75 York Street, Portland, Maine 04101
207.879.1838 • beckerstructural.com

STATE OF MAINE
DEPARTMENT OF TRANSPORTATION

IM-1668(100)E

WIN 16681.00

BRIDGE NO.: 5797

BRIDGE PLANS

PROJ. MANAGER: STEPHEN BODGE	BY	DATE	
DESIGN-DETAILED	D.ETTINGER	D.BURGESS	05-22-13
CHECKED-REVIEWED	D.ETTINGER	T.GORRILL	05-22-13
DESIGN2-DETAILED2	-------	-------	-------
DESIGN3-DETAILED3	-------	-------	-------
REVISIONS 1	-------	-------	-------
REVISIONS 2	-------	-------	-------
REVISIONS 3	-------	-------	-------
REVISIONS 4	-------	-------	-------
FIELD CHANGES	-------	-------	-------

SIGNATURE

P.E. NUMBER

DATE

UNION STREET BRIDGE
OVER INTERSTATE 95
BANGOR — PENOBSCOT COUNTY

LOCAL ROAD
DETOUR PLAN

SHEET NUMBER
79
OF 93

Filename: ...\00\bridge\mslo\079_TCPPlan.dgn Division: BRIDGE Username: CADD Date:1/2/2014

Filename: ...\080_BDPlan_DETOUR_01_Index.dgn Division: BRIDGE Username: CADD Date:1/2/2014

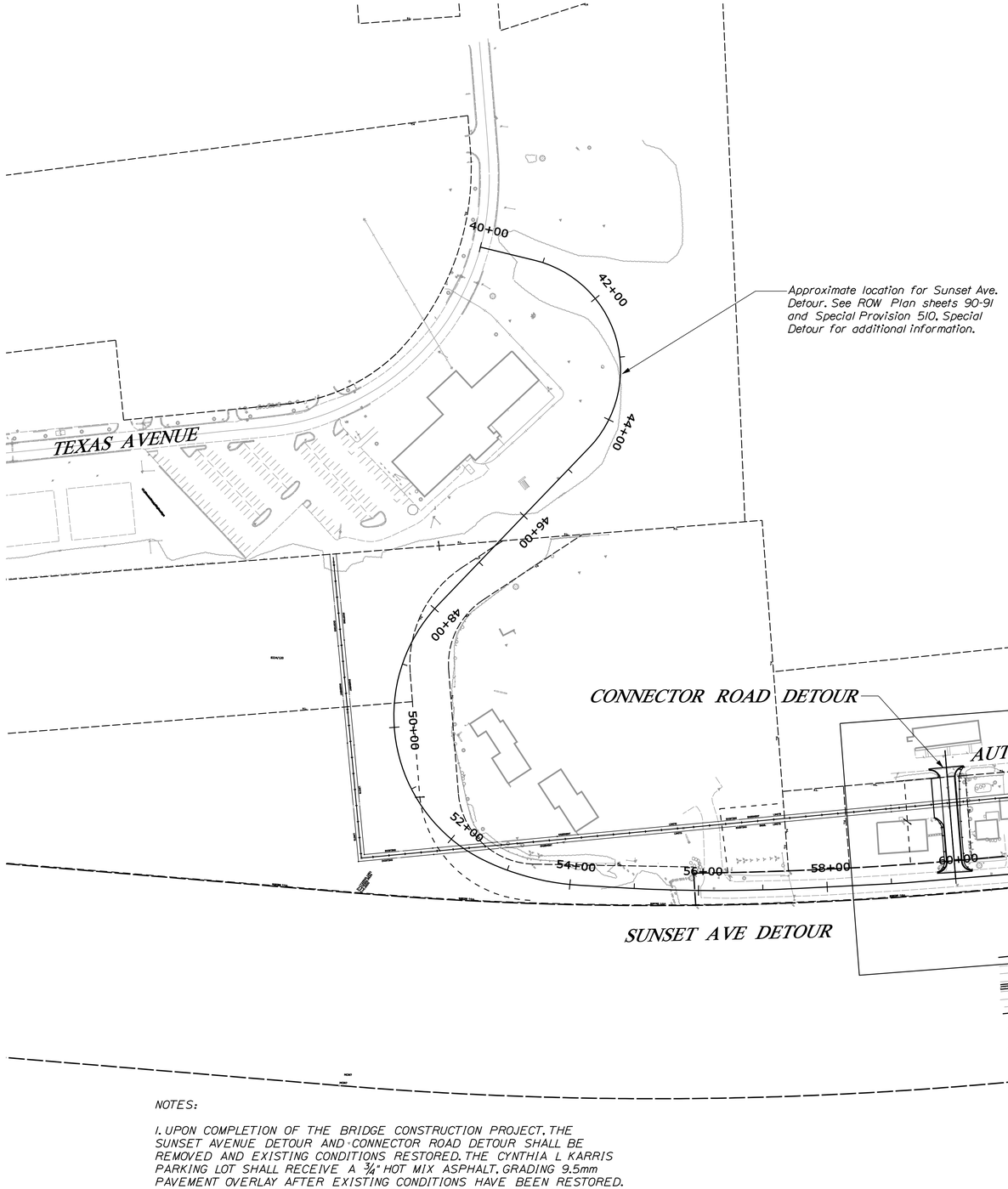

PLAN

100 0 100 200

Scale of Feet

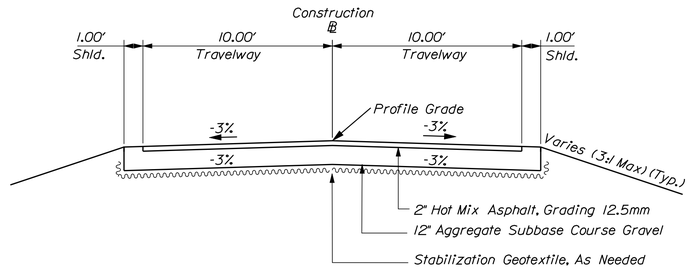

SUNSET AVE DETOUR TYPICAL SECTION

See Special Provision 510, Special Detour for additional information.
Not to Scale

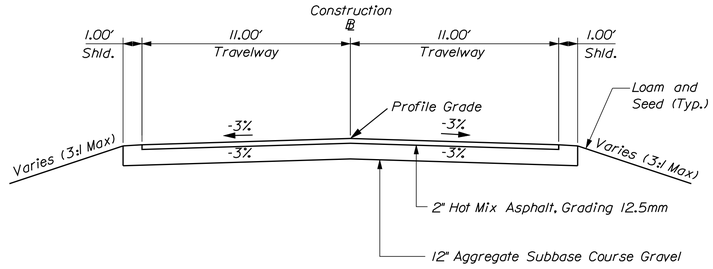

CONNECTOR ROAD DETOUR TYPICAL SECTION

Not to Scale

NOTES:

1. UPON COMPLETION OF THE BRIDGE CONSTRUCTION PROJECT, THE SUNSET AVENUE DETOUR AND CONNECTOR ROAD DETOUR SHALL BE REMOVED AND EXISTING CONDITIONS RESTORED. THE CYNTHIA L KARRIS PARKING LOT SHALL RECEIVE A ¾" HOT MIX ASPHALT, GRADING 9.5mm PAVEMENT OVERLAY AFTER EXISTING CONDITIONS HAVE BEEN RESTORED. PAYMENT FOR SUNSET AVE. DETOUR REMOVAL AND RESTORATION OF EXISTING CONDITION SHALL BE PAID FOR UNDER ITEM 510.10. PAYMENT FOR CONNECTOR ROAD WORK SHALL BE UNDER THE ASSOCIATED PAY ITEMS. COORDINATE WORK WITH RESIDENT.

2. INSTALL STABILIZATION GEOTEXTILE IN LOW, WET AREAS ALONG SUNSET AVENUE DETOUR AS DIRECTED BY THE RESIDENT.

STATE OF MAINE
DEPARTMENT OF TRANSPORTATION

IM-1668(100)E

WIN 16681.00

BRIDGE NO.: 5797

BRIDGE PLANS

PROJ. MANAGER	STEPHEN BODGE		
DESIGN-DETAILED	D.ETTINGER	07-09-13	
CHECKED-REVIEWED	D.ETTINGER	07-09-13	
DESIGN2-DETAILED2	-------	-------	
DESIGN3-DETAILED3	-------	-------	
REVISIONS 1	-------	-------	
REVISIONS 2	-------	-------	
REVISIONS 3	-------	-------	
REVISIONS 4	-------	-------	
FIELD CHANGES	-------	-------	

SIGNATURE

P.E. NUMBER

DATE

UNION STREET BRIDGE
OVER INTERSTATE 95
BANGOR PENOBSCOT COUNTY

SUNSET AVENUE
DETOUR LOCATION MAP

SHEET NUMBER

80

OF 93

GP Gorrill-Palmer Consulting Engineers, Inc.
PO Box 1237 Engineering Excellence Since 1998 207-657-6910
15 Shaker Road FAX: 207-657-6912
Gray, ME 04039 E-Mail: mailbox@gorrillpalmer.com

BECKER STRUCTURAL ENGINEERS
75 York Street, Portland, Maine 04101
207.879.1838 • beckerstructural.com

REMOVE TREE
STA. 30+39.19, 12.93' RT.

REMOVE STUMP
STA. 30+39.19, 12.93' RT.

BANGOR HOUSING DEVELOPMENT CORP.
TAX MAP 4 LOT 13
PP 18
TA = 2.99± AC.(DEED)

Limit of Work
Match Existing Pavment
Sta 30+26.50

Overlay Parking Lot Pavement.
See Note on Sheet 80.

CURVE DATA #5
P.I. = 59+14.49
D = 3°49'11.0" Lt.
Δ = 1°52'18.9"
R = 1500.00'
L = 49.01'
T = 24.51'
E = 0.20'

Remove

STOP Sign

Sta. 30+40. 25' Lt to 25' Rt.
Remove and Reset Fence

AUTUMN STREET WEST

UNION STREET

POB = STA. 10+00.00

TAX MAP 10 L

PC = STA. 58+89.99

PT = STA. 59+38.99

CYNTHIA L. KARRIS
F/K/A CYNTHIA L. PIERSON
TAX MAP 4 LOT 9E
PP 40

DAVID M. PRESSEY
STEPHANIE E. PRESSEY
TAX MAP 4 LOT 17
PP 17

D & K PROPERTIES, LLC
POR NO. 16
TAX MAP 4 LOT 14

RONALD C. MUDIE

S55°59'51"E

'27.88"E

N34°00'08.93"E

SUNSET AVE

EXISTING C.O.A.

Limit of Work
Match Existing Pavment
Sta 31+90.00

Sta 60+00.00 Sunset Ave =
Sta 32+00.00 Detour Road

PLAN

25 0 25 50
Scale of Feet

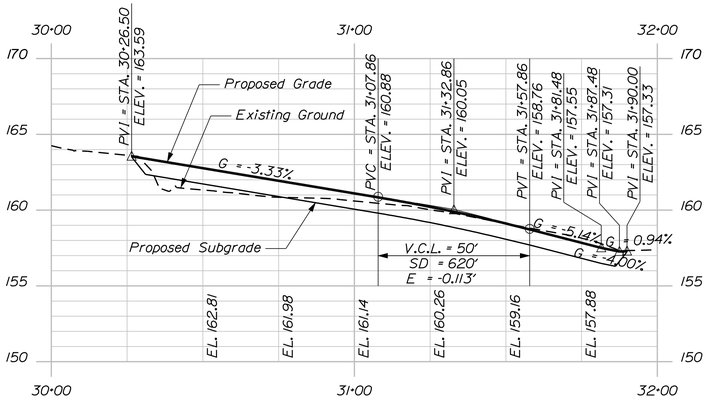

PROFILE

Horiz. 25 0 25 50
Vert. 5 0 5 10
Scale of Feet

STATE OF MAINE
DEPARTMENT OF TRANSPORTATION

IM-1668(100)E

WIN 16681.00

BRIDGE NO.: 5797

BRIDGE PLANS

	BY	DATE
PROJ. MANAGER STEPHEN BOGGE		
DESIGN-DETAILED	D.ETTINGER	07-09-13
CHECKED-REVIEWED	D.ETTINGER	T.GORRILL 07-09-13
DESIGN2-DETAILED2	-------	-------
DESIGN3-DETAILED3	-------	-------
REVISIONS 1	-------	-------
REVISIONS 2	-------	-------
REVISIONS 3	-------	-------
REVISIONS 4	-------	-------
FIELD CHANGES	-------	-------

SIGNATURE

P.E. NUMBER

DATE

UNION STREET BRIDGE
OVER INTERSTATE 95
BANGOR PENOBSCOT COUNTY

CONNECTOR RD DETOUR

SHEET NUMBER
81
OF 93

GP Gorrill-Palmer Consulting Engineers, Inc.
PO Box 1237 Engineering Excellence Since 1998 207-657-6910
15 Shaker Road FAX: 207-657-6912
Gray, ME 04039 E-Mail: mailbox@gorrillpalmer.com

BECKER STRUCTURAL ENGINEERS
75 York Street, Portland, Maine 04101
207.879.1838 ■ beckerstructural.com

Filename: ...\MSTA\081_BDPlan_DETOUR_04.dgn Division: BRIDGE Username: CADD Date:1/6/2014

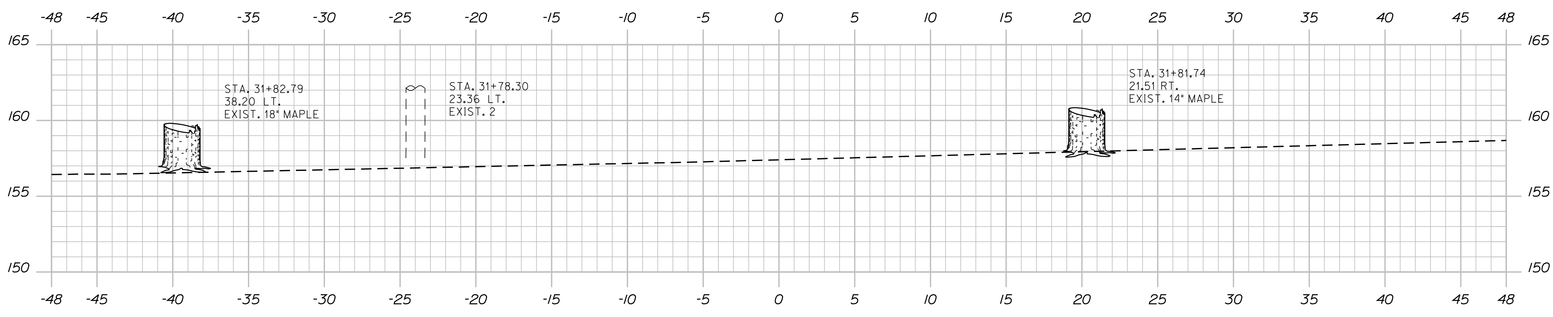

32+00.00

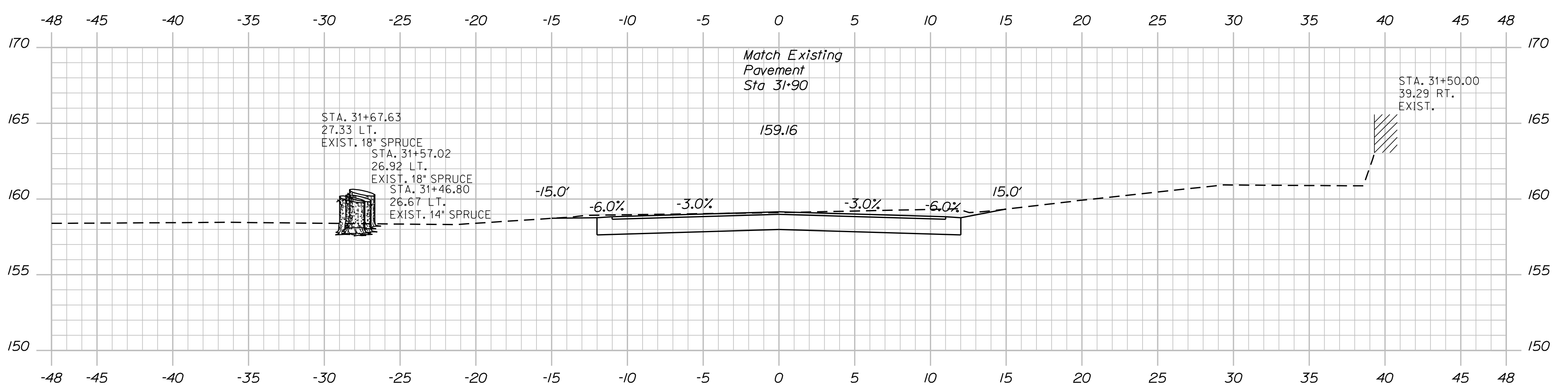

31+50.00

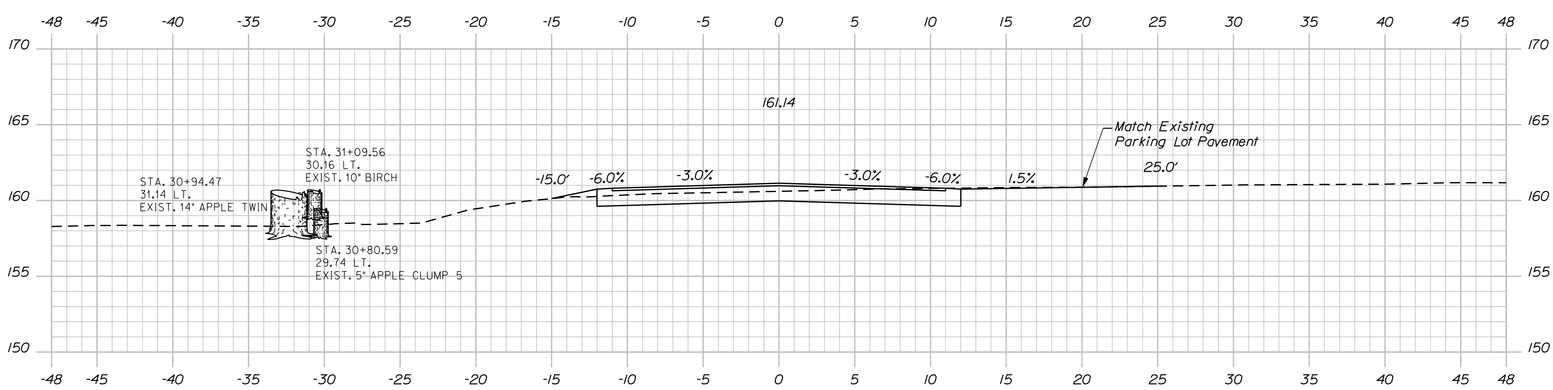

31+00.00

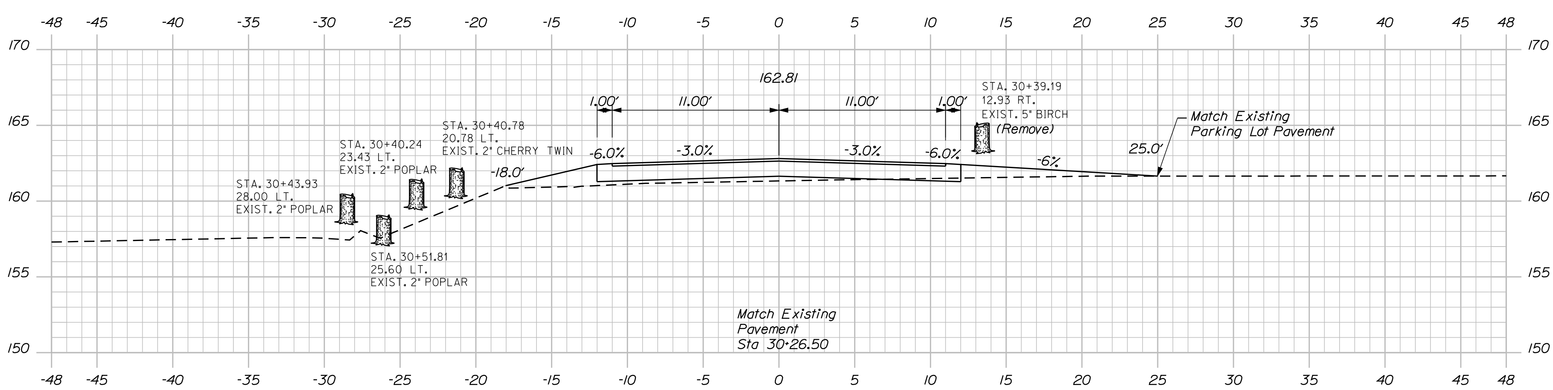

30+50.00

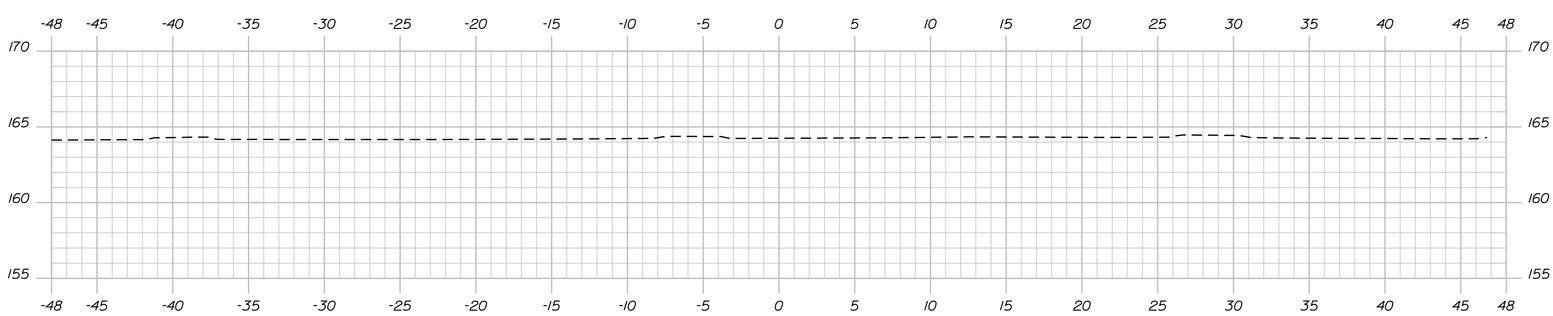

30+00.00

5 0 5 10
Scale of Feet

Sta. 30+00.00 to Sta. 32+00.00

SHEET NUMBER 82 OF 93

UNION STREET BRIDGE
OVER INTERSTATE 95
BANGOR PENOBSCOT COUNTY

CONNECTOR ROAD DETOUR CROSS SECTIONS

PROJ. MANAGER STEPHEN BODGE		BY	DATE
DESIGN-DETAILED	D.ETTINGER	D. BURGESS	07-09-13
CHECKED-REVIEWED	D.ETTINGER	T.GORRILL	07-09-13
DESIGN2-DETAILED2			
DESIGN3-DETAILED3			
REVISIONS 1			
REVISIONS 2			
REVISIONS 3			
REVISIONS 4			
FIELD CHANGES			

SIGNATURE

P.E. NUMBER

DATE

STATE OF MAINE
DEPARTMENT OF TRANSPORTATION

IM-1668(100)E

BRIDGE NO.: 5797 WIN 16681.00 BRIDGE PLANS

Filename: ...\mslo\083_SignPlan_01.dgn Division: BRIDGE Username: CADD Date:1/2/2014

MATCH LINE SEE THIS SHEET

MATCH LINE SEE THIS SHEET

RAMP A (SB OFF)

RAMP C (SB ON)

RAMP G (NB ON)

RAMP J (NB OFF)

INTERSTATE 95 SOUTHBOUND

INTERSTATE 95 NORTHBOUND

16TH STREET

UNION STREET

15TH STREET (NORTH)

ONLY

ONLY

REMOVE AND RESET SIGN ASSEMBLY AND POST. TYP.

Limit of Work
Match Existing
Striping
Sta 17+50

ITEM 645.106 - DEMOUNT REG. WARNING, CONFIRMATION AND ROUTE MARKER ASSEMBLY SIGN

STA. 11+48.1, 33.3' LT.
STA. 12+42.8, 53.9' LT.
STA. 12+45.1, 55.3' LT.
STA. 12+76.9, 49.7' LT.
STA. 12+96.4, 31.6' LT.
STA. 14+97.2, 31.8' LT.
STA. 15+24.8, 36.3' LT.
STA. 15+98.8, 33.6' LT.
STA. 16+13.6, 26.8' LT.
STA. 16+41.7, 26.8' LT.
STA. 16+79.4, 40.7' LT.
STA. 17+33.6, 23.4' LT.
STA. 17+36.4, 23.8' LT.

STA. 12+50, 39.3' RT.
STA. 12+57.1, 27.7' RT.
STA. 12+60.7, 27.7' RT.
STA. 12+66.1, 35.5' RT.
STA. 15+04.8, 36.3' RT.
STA. 15+86.0, 63.9' RT.
STA. 15+89.8, 60.9' RT.
STA. 16+67.9, 27.1' RT.
STA. 71+97.0, 14.1' RT.

STA. 50+43.0, 18.2' LT.
STA. 60+65.9, 16.'; LT.
STA. 71+96.8, 15.5' LT.
STA. 73+87.2, 20.4' LT.
STA. 80+67.7, 15.1' LT.
STA. 103+21.2, 67.5' LT.

ITEM 645.108 - DEMOUNT POLE

STA. 11+48.1, 33.3' LT.
STA. 12+42.8, 53.9' LT.
STA. 12+45.1, 55.3' LT.
STA. 12+76.9, 49.7' LT.
STA. 12+96.4, 31.6' LT.
STA. 14+97.2, 31.8' LT.
STA. 15+24.8, 36.3' LT.
STA. 15+98.8, 33.6' LT.
STA. 16+13.6, 26.8' LT.
STA. 16+41.7, 26.8' LT.
STA. 16+79.4, 40.7' LT.
STA. 17+33.6, 23.4' LT.
STA. 17+36.4, 23.8' LT.

STA. 12+50, 39.3' RT.
STA. 12+57.1, 27.7' RT.
STA. 12+60.7, 27.7' RT.
STA. 12+66.1, 35.5' RT.
STA. 15+04.8, 36.3' RT.
STA. 15+86.0, 63.9' RT.
STA. 15+89.8, 60.9' RT.
STA. 16+67.9, 27.1' RT.
STA. 71+97.0, 14.1' RT.

STA. 50+43.0, 18.2' LT.
STA. 60+65.9, 16.'; LT.
STA. 71+96.8, 15.5' LT.
STA. 73+87.2, 20.4' LT.
STA. 80+67.7, 15.1' LT.
STA. 103+21.2, 67.5' LT.

ITEM 645.116 - REINSTALL REG. WARNING, CONFIRMATION AND ROUTE MARKER ASSEMBLY SIGN

STA. 11+48.1, 33.3' LT.
STA. 12+42.8, 53.9' LT.
STA. 12+45.1, 55.3' LT.
STA. 12+76.9, 49.7' LT.
STA. 12+96.4, 31.6' LT.
STA. 14+97.2, 31.8' LT.
STA. 15+24.8, 36.3' LT.
STA. 15+98.8, 33.6' LT.
STA. 16+13.6, 26.8' LT.
STA. 16+41.7, 26.8' LT.
STA. 16+79.4, 40.7' LT.
STA. 17+33.6, 23.4' LT.
STA. 17+36.4, 23.8' LT.

STA. 12+50, 39.3' RT.
STA. 12+57.1, 27.7' RT.
STA. 12+60.7, 27.7' RT.
STA. 12+66.1, 35.5' RT.
STA. 15+04.8, 36.3' RT.
STA. 15+86.0, 63.9' RT.
STA. 15+89.8, 60.9' RT.
STA. 16+67.9, 27.1' RT.
STA. 71+97.0, 14.1' RT.

STA. 50+43.0, 18.2' LT.
STA. 60+65.9, 16.'; LT.
STA. 71+96.8, 15.5' LT.
STA. 73+87.2, 20.4' LT.
STA. 80+67.7, 15.1' LT.
STA. 103+21.2, 67.5' LT.

ITEM 645.118 - REINSTALL POLE

STA. 11+48.1, 33.3' LT.
STA. 12+42.8, 53.9' LT.
STA. 12+45.1, 55.3' LT.
STA. 12+76.9, 49.7' LT.
STA. 12+96.4, 31.6' LT.
STA. 14+97.2, 31.8' LT.
STA. 15+24.8, 36.3' LT.
STA. 15+98.8, 33.6' LT.
STA. 16+13.6, 26.8' LT.
STA. 16+41.7, 26.8' LT.
STA. 16+79.4, 40.7' LT.
STA. 17+33.6, 23.4' LT.
STA. 17+36.4, 23.8' LT.

STA. 12+50, 39.3' RT.
STA. 12+57.1, 27.7' RT.
STA. 12+60.7, 27.7' RT.
STA. 12+66.1, 35.5' RT.
STA. 15+04.8, 36.3' RT.
STA. 15+86.0, 63.9' RT.
STA. 15+89.8, 60.9' RT.
STA. 16+67.9, 27.1' RT.
STA. 71+97.0, 14.1' RT.

STA. 50+43.0, 18.2' LT.
STA. 60+65.9, 16.'; LT.
STA. 71+96.8, 15.5' LT.
STA. 73+87.2, 20.4' LT.
STA. 80+67.7, 15.1' LT.
STA. 103+21.2, 67.5' LT.

NOTES:

1. PROPOSED SIGN LOCATIONS SHALL BE DETERMINED IN THE FIELD AND APPROVED BY THE RESIDENT.

2. PROPOSED SIGN LOCATIONS, OFFSET AND HEIGHT SHALL BE IN ACCORDANCE WITH THE MANUAL FOR UNIFORM TRAFFIC CONTROL DEVICES FOR STREETS AND HIGHWAYS (MUTCD), LATEST EDITION.

PLAN

25 0 25 50
Scale of Feet

STATE OF MAINE
DEPARTMENT OF TRANSPORTATION

IM-1668(100)E

WIN 16681.00

BRIDGE NO.: 5797

BRIDGE PLANS

PROJ. MANAGER STEPHEN BODGE	BY	DATE
DESIGN-DETAILED	D.ETTINGER	D.BURGESS	05-22-13
CHECKED-REVIEWED	D.ETTINGER	T.GORRILL	05-22-13
DESIGN2-DETAILED2	-------	-------	-------
DESIGN3-DETAILED3	-------	-------	-------
REVISIONS 1	-------	-------	-------
REVISIONS 2	-------	-------	-------
REVISIONS 3	-------	-------	-------
REVISIONS 4	-------	-------	-------
FIELD CHANGES	-------	-------	-------

SIGNATURE

P.E. NUMBER

DATE

UNION STREET BRIDGE
OVER INTERSTATE 95
BANGOR PENOBSCOT COUNTY

SIGNING PLAN

SHEET NUMBER
83
OF 93

GP Gorrill-Palmer Consulting Engineers, Inc.
PO Box 1237 Engineering Excellence Since 1998 207-657-6910
15 Shaker Road FAX: 207-657-6912
Gray, ME 04039 E-Mail: mailbox@gorrillpalmer.com

BECKER STRUCTURAL ENGINEERS
75 York Street, Portland, Maine 04101
207.879.1838 • beckerstructural.com

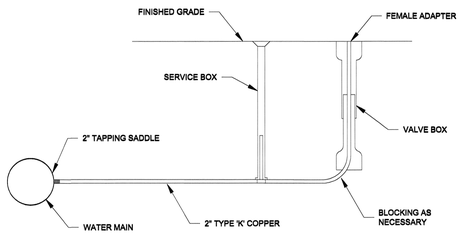

PERMANENT STYLE
2" BLOW-OFFS

NOTE:
1) IN ROADWAYS, PLACE INITIAL TEMPORARY BITUMINOUS PATCH FOR A MINIMUM OF 4 WEEKS. GRIND EDGE TO 8" OUTSIDE TRENCH WIDTH AND PLACE PERMANENT BITUMINOUS PATCH.

2) IN AREAS WHERE THE EXISTING PAVEMENT IS AT A THICKNESS OTHER THAN THAT SHOWN, THE CONTRACTOR SHALL MATCH THE EXISTING PAVEMENT.

3) ALL BACKFILL PROSCEDURE MUST BE COMPLETED USING A MAXIMUM 12" COMPACTED LIFTS.

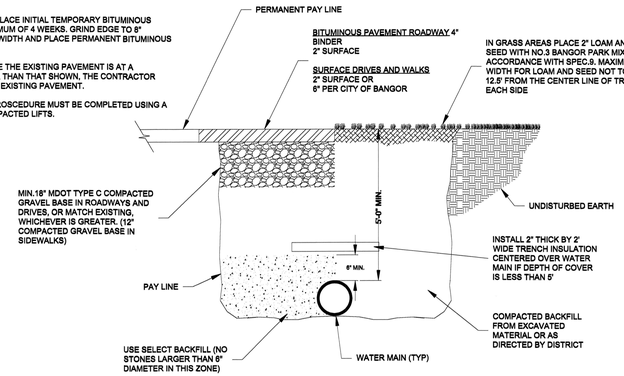

TYPICAL TRENCH DETAIL

NOTE:
SERVICE BOX AND ROD TO BE INSTALLED IN THE R.O.W. FLUSH TO FINISH GRADE. A MINIMUM OF 5'-0" FROM ALL STRUCTURES, AND 2'-0" FROM ALL SHRUBS AND TREES

NOTE:
SERVICE BOXES ARE TO BE PER BWD MATERIAL SPECIFICATIONS

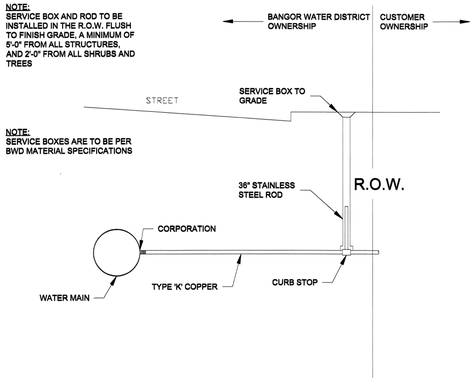

TYPICAL DOMESTIC
SERVICE CONNECTION
(BY BWD ONLY)

NOTE:
HORIZONTAL SEPARATION BETWEEN SEWER OR STORM DRAINS AND WATER MAINS IS 10'0". HORIZONTAL SEPARATION BETWEEN SEWER OR STORM DRAINS AND WATER SERVICES IS 5'0". EXCEPTIONS TO THIS RULE MUST BE AUTHORIZED BY THE BANGOR WATER DISTRICT.

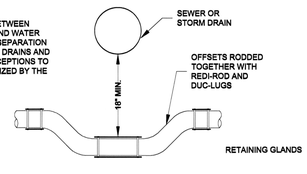

NOTE: ALL VERTICLE THRUST BLOCKS MUST BE FORMED AND POURED IN PLACE

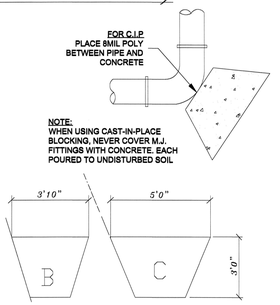

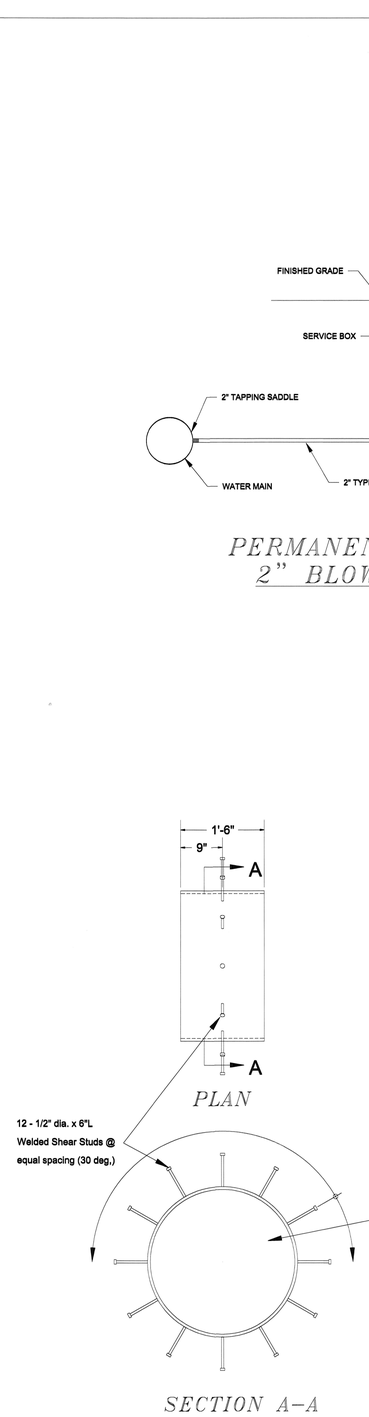

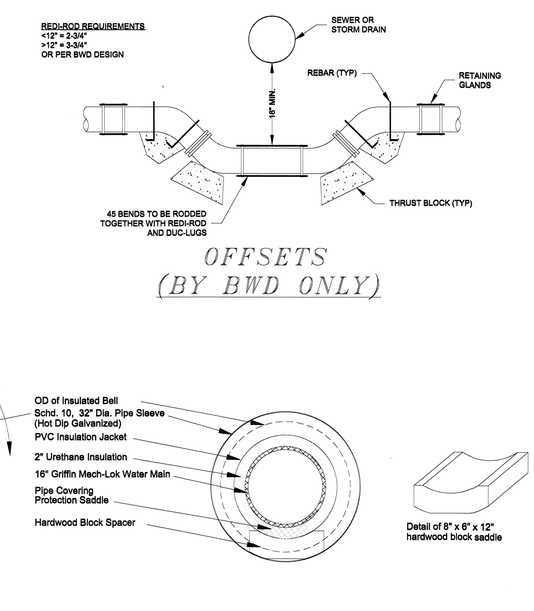

OFFSETS
(BY BWD ONLY)

WALL SLEEVE DETAIL

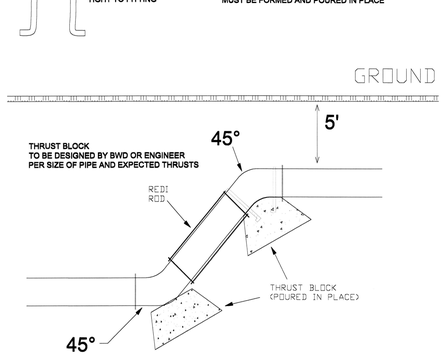

HANGING THRUST BLOCKS
(BY BWD ONLY)

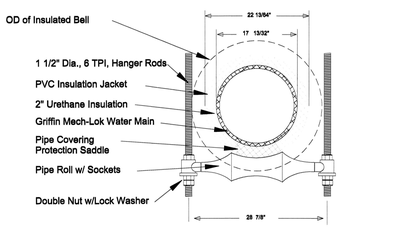

Notes:
1.) All threaded rods, nuts, and washers to be hot-dip galvanized
2.) Pipe end bells not to be placed on pipe roller supports
3.) Hardwood block used to space and center pipe in sleeve on East and West Bridge abutment foundation walls

PIPE HANGER DETAIL

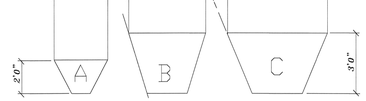

THRUST
BLOCK
SPECIFICATIONS

A=SMALL PRECAST (22 YDS.) HT.= 24"
B=LARGE PRECAST (97 YDS.) HT.= 36"
C=CAST-IN-PLACE (1.74 YDS.) HT. = 50"

MATERIAL LIST

Description	Unit	Quantity
16" Class 52 Mech-Lok CLDI Water Main (installed)	lf	220
Insulation (installed)	lf	190
Pipe Hangers, Roller Assemblies & Shields (installed)	ea	24
Back Wall Sleeves (installed)	ea	2
2" Thick Trench Insulation (installed)	sy	7

WATER MAIN NOTES

1. Pipe roller assemblies, shields, and 16" diameter water main shall be furnished and installed from Sta. 12+90, 26.83' LT to Sta. 15+10.00, 26.83' LT. Payment will be made under Item 830.10 Water Main Bridge Crossing.
2. Threaded rod pipe hangers and galvanized pipe sleeves shall be furnished and installed at locations specified on plans. Payment will be made under Item 845.10 Structural Steel Utility Supports - Bangor Water District.
3. 2" thick urethane pipe insulation and PVC insulation cover shall be furnished and installed from Sta. 13+05, 26.83' LT to Sta. 14+95.00, 26.83' LT. Payment will be made under Item 802.171 16" Diameter Insulation.
4. 2" thick trench insulation shall be installed over 16" water main from Sta. 12+90, 26.83' LT to 13+05, 26.83' LLT and fron Sta. 14+95, 26.83' LT to Sta. 15+10, 26.83' LT. Payment will be made under Item 827.331 Trench Insulation.

STATE OF MAINE
REGISTERED
PROFESSIONAL ENGINEER
No. 12635

PROJECT NO: 4-12-2
DRAWN BY: RSP/RJP
DATE: 4/29/13 12-13-13 ESM
CHECKED BY: RSP
SCALE: Not To Scale

PROJECT NAME: UNION STREET BRIDGE OVER I-95 BANGOR

SHEET NAME: WATER MAIN DETAILS

BANGOR WATER DISTRICT
P.O. BOX 1129 · BANGOR, ME 04402-1129
TEL: (207) 947-4516 · FAX: (207) 947-5707
www.bangorwater.org

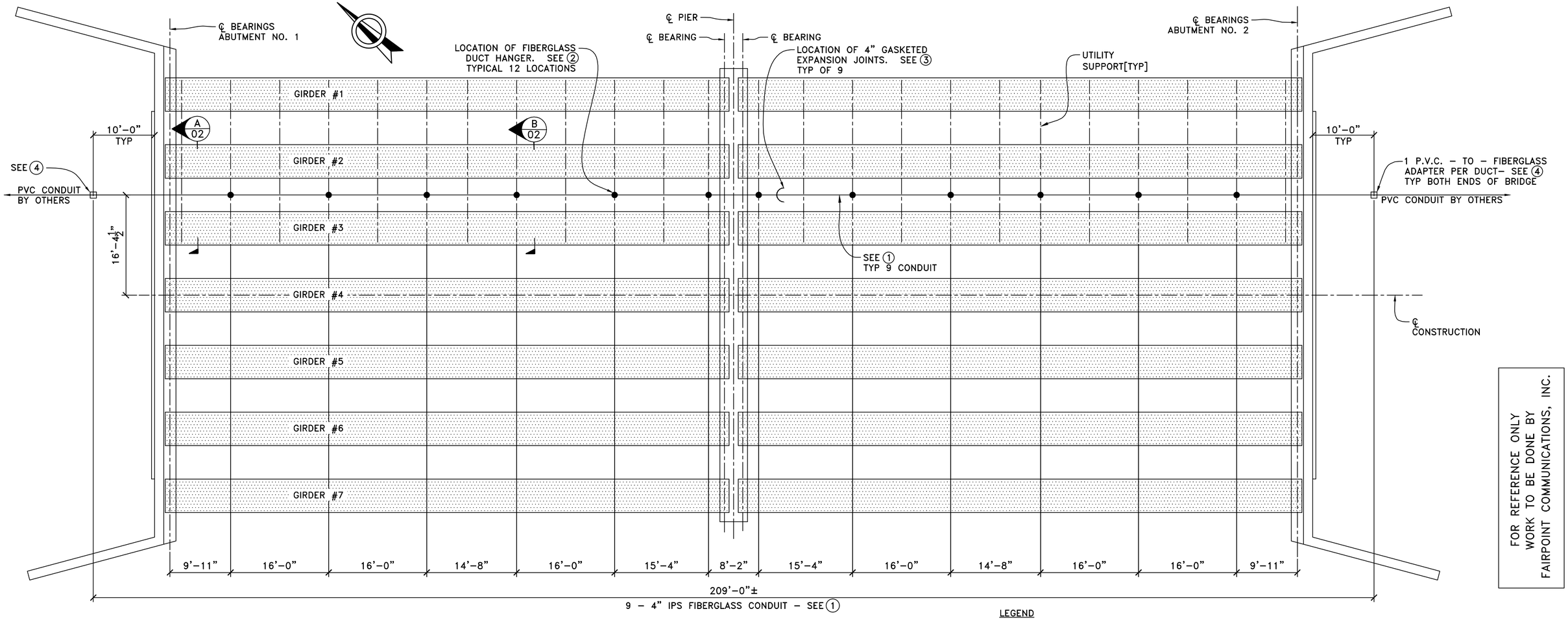

FOR REFERENCE ONLY
WORK TO BE DONE BY
FAIRPOINT COMMUNICATIONS, INC.

GENERAL NOTES

1) ALL ITEMS WITH PART NUMBERS ARE AMERICAN U–TEL, INC. STANDARD ITEMS SUPPLIED BY:
AMERICAN U–TEL, INC.
9760 SMITH ROAD
WILLOUGHBY, OHIO 44094
UNLESS OTHERWISE NOTED.
2) THESE DRAWINGS ARE BASED ON AVAILABLE BRIDGE DESIGN DRAWINGS. CONTRACTOR SHALL VERIFY ALL DIMENSIONS BEFORE FABRICATION AND INSTALLATION OF CONDUITS AND SUPPORTS.
3) SUBGRADE CONDUIT INSTALLATION BY OTHERS.
4) FIBERGLASS DUCT SUPPORTS ARE DESIGNED FOR A MAXIMUM CABLE LOAD OF 8.0 LBS PER FT PER DUCT. THE TOTAL TELEPHONE AND CONDUIT LOAD AT A SUPPORT IS 1200 LBS MAXIMUM.
5) 4" STRAIGHT COUPLINGS SHALL BE INSTALLED AS REQUIRED.
6) THE CONTRACTOR IS REQUIRED TO COMPLY WITH ALL NATIONALLY ACCEPTED SAFETY PRACTICES, OSHA AND ANY OTHER SAFETY REQUIREMENTS IMPOSED BY THE OWNER, AGENCY OR ANY OTHER PARTIES WHICH MAY HAVE JURISDICTION OVER SAFETY.
7) DESIGN OF 4" DUCT BASED ON AMERICAN U–TEL PART NO. [12370] FIBERGLASS CONDUIT WITH THE FOLLOWING CHARACTERISTICS LISTED IN A THRU D:
A)4" FIBERGLASS DUCTS ARE TO HAVE THREADED JOINTS WITH 3000 LBS PULL OUT STRENGTH UNBONDED.
B)4" DIA. FIBERGLASS DUCTS ARE TO HAVE ULTIMATE TENSILE STRENGTH OF 10,500 PSI PER ASTM D–2105.
C)4" IPS:4.5" O.D. x 4.36" I.D. x 30 FT LENGTH
D)CAPABLE OF MAIN/INTERIOR HANGER SUPPORT SPANS OF UP TO 21.2 FT. FOR 3 LBS. PER FT. CABLE, 17.2 FT. FOR 8 LBS. PER FT. CABLE, AND 25.5 FT. FOR 1 LBS. PER FT. CABLE BASED ON NOT EXCEEDING 5/8" MIDSPAN DEFLECTION.
8) DURING INSTALLATION, THE DUCT EXPANSION JOINTS MUST BE SET TO THE PROPER LENGTH ACCORDING TO THE AMBIENT TEMPERATURE. REFER TO THE EXPANSION JOINT MANUFACTURER'S INSTRUCTIONS.
9) ALL CONNECTION BETWEEN DUCT SECTIONS, EXPANSION JOINTS, ADAPTERS, AND COUPLINGS ARE TO BE BONDED. REFER TO MANUFACTURER'S INSTRUCTIONS FOR BONDING PROCEDURES.
10) CAP THE ENDS OF THE DUCTS IF THE UNDERGROUND PORTION OF THE WORK IS NOT DONE AT THE SAME TIME AS THE BRIDGE PORTION.
11) ALL ATTACHMENT RODS, SPACER RODS, NUTS, LOCK AND FLAT WASHERS IN ITEM 2 TO BE ZINC PLATED. THE PART (C) RODS IN ITEM 2 TO BE 44" LONG.
12) CONTRACTOR SHALL UTILIZE EXISTING UTILITY SUPPORT TO SUPPORT THE PROPOSED UTILITY HANGER. DESIGN AND INSTALLATION OF UTILITY SUPPORT BY OTHERS.
13) STEEL PIPE SLEEVES TO BE ASTM A53, GALVANIZED PER ASTM A123.
14) THIS DESIGN IS FOR THE EXPRESS PURPOSE FOR USE ON THE UNION STREET BRIDGE OVER INTERSTATE 95 IN BANGOR, MAINE AND IS NOT TO BE USED ELSEWHERE.

LOCATION PLAN

$\frac{1}{8}$"=1'–0"

LEGEND
① – DENOTES MATERIAL ITEM NUMBER
– DENOTES GASKETED TYPE EXPANSION JOINT
– DENOTES HANGER AND CONDUIT SUPPORT LOCATION

MATERIAL LIST

ITEM NO.	DESCRIPTION AND AMERICAN U–TEL[PART NO.]	QUANTITY
①	4" IPS – 4½" O.D. FIBERGLASS DUCT WITH THREADED ENDS [12370]. SEE G.N. NO'S 7 & 9.	1890 FT
②	FIBERGLASS 2x2 MODIFIED HANGING 4" DUCT HANGER. SEE G.N. NO. 11.	12
③	4" GASKETED EXPANSION JOINT [12352]. SEE G.N. NO'S 8 & 9.	9
④	4" PVC ADAPTER TO FIBERGLASS [12357]. SEE G.N. NO 9.	18
⑤	4" STRAIGHT COUPLING [12348]. SEE G.N. NO'S 5 & 9.	9
⑥	5" DIA. ASTM A53, SCH. 40 STEEL PIPE, 2'–0" LONG, GALVANIZED. SEE G.N. NO. 13.	18
⑦	ADHESIVE KIT [12358].	15

REV	COMMENTS	BY	DATE
3	APPROVAL	AE	06/13/13
2	APPROVAL	AE	05/13/13
1	APPROVAL	AE	05/07/13
0	APPROVAL	AE	04/22/13

UNION STREET BRIDGE
OVER INTERSTATE 95
BANGOR, MAINE

LOCATION PLAN
TELEPHONE CONDUIT SUPPORT

ANDREW J. ELD, P.E.

JOB NO. 24–12

STATE OF MAINE
ANDREW J. ELD 10262
LICENSED PROFESSIONAL ENGINEER

PE NO. 10262

OWNER: FAIRPOINT COMMUNICATIONS

FURNISHED BY: AMERICAN U–TEL
9760 SMITH ROAD
WILLOUGHBY, OHIO 44094
(440)946–6027 FAX:(440)946–7285

CHECKED BY: AE DATE: 04–20–13
DRAWN BY: WS DATE: 04–18–13
DRAWING NO: 24–12–01 SH. 85 OF 93

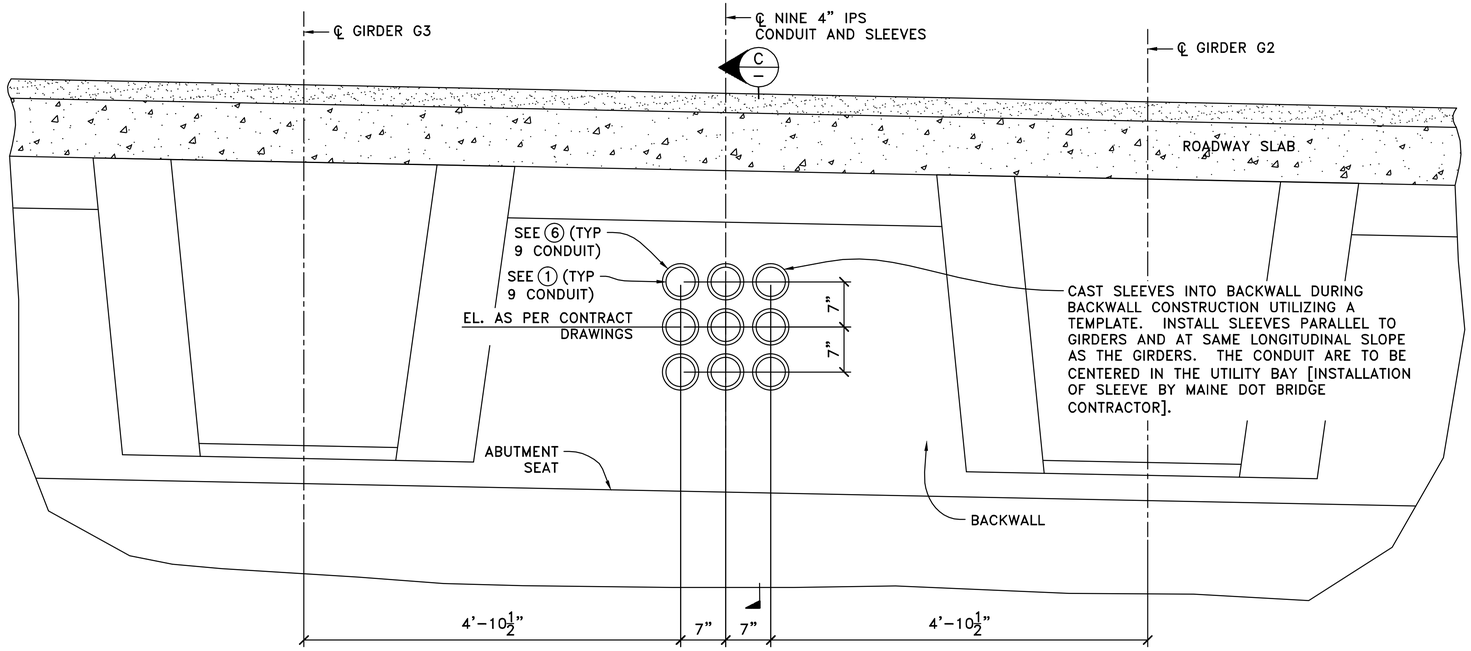

SECTION A / 01 — ABUTMENT NO. 1 SHOWN, ABUTMENT NO. 2 SIMILAR
1"=1'-0

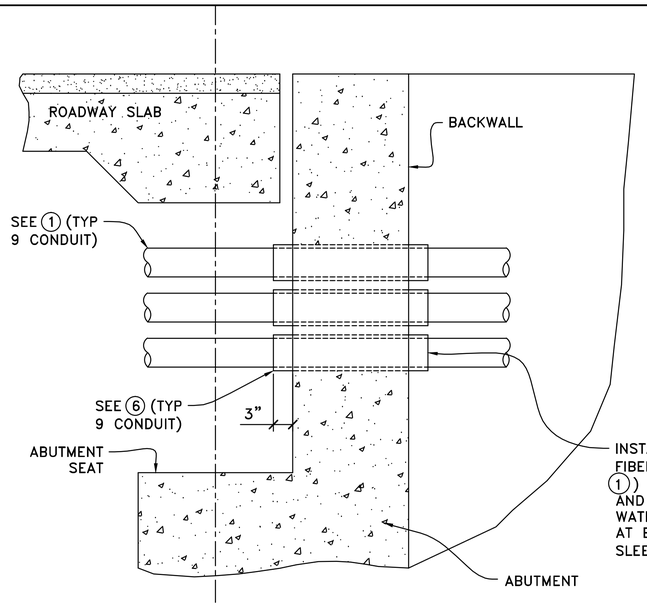

SECTION C / — — ABUTMENT NO. 1 SHOWN, ABUTMENT NO. 2 SIMILAR
1"=1'-0

FOR REFERENCE ONLY
WORK TO BE DONE BY
FAIRPOINT COMMUNICATIONS, INC.

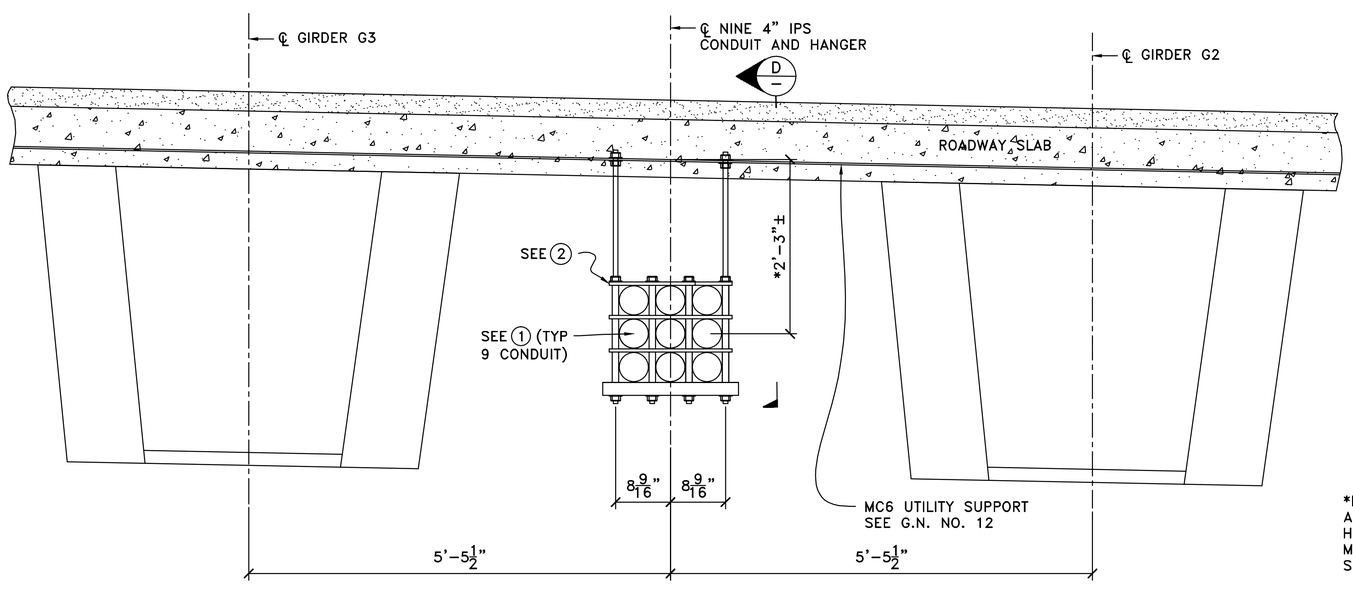

SECTION B / 01 — HANGER DETAIL AT UTILITY SUPPORT TYP OF 12 TOTAL SUPPORTS.
1"=1'-0

*DIMENSION TO BE DETERMINED BY LOCATION OF UTILITY OPENING AT PIER DIAPHRAGM AND ABUTMENT BACKWALL

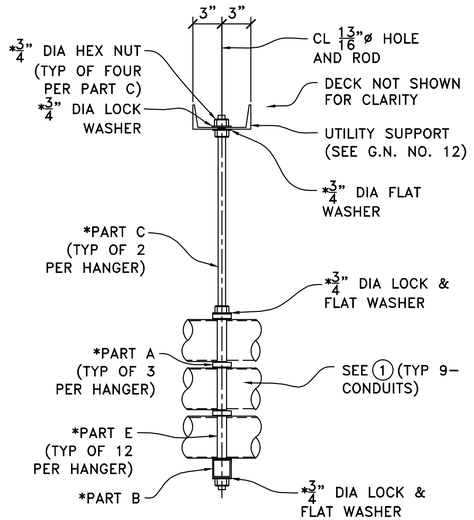

SECTION D / — — 1½"=1'-0

*INDICATES PARTS OF AMERICAN U-TEL HANGER PACKAGE FOR MATERIAL ITEM NO. 2 SEE G.N. #11

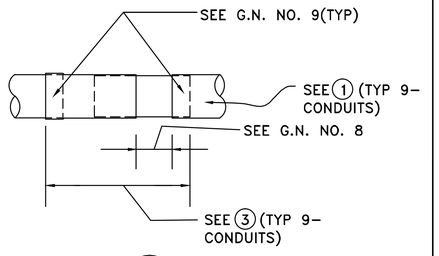

DETAIL 1 / — ITEM 3
1½"=1'-0

REV	COMMENTS	BY	DATE
3	APPROVAL	AE	06/13/13
2	APPROVAL	AE	05/13/13
1	APPROVAL	AE	05/07/13
0	APPROVAL	AE	04/22/13

UNION STREET BRIDGE
OVER INTERSTATE 95
BANGOR, MAINE

MISCELLANEOUS DETAILS
TELEPHONE CONDUIT SUPPORT

ANDREW J. ELD, P.E.

JOB NO. 24-12

STATE OF MAINE — ANDREW J ELD 10262 — LICENSED PROFESSIONAL ENGINEER

PE NO. 10262

OWNER: FAIRPOINT COMMUNICATIONS

FURNISHED BY: AMERICAN U-TEL
9760 SMITH ROAD
WILLOUHGBY, OHIO 44094
(440)946-6027 FAX:(440)946-7285

CHECKED BY: AE DATE: 04-20-13
DRAWN BY: WS DATE: 04-18-13
DRAWING NO: 24-12-02 SH. 86 OF 93

Filename: ...\00\ROW\MSTA\001_RWPLAN1.dgn Username: david.show Date:1/2/2014 Division: BRIDGE

THIS AREA:
SEE SURVEY PLAN OF
SOLOMON DUNNING'S LAND
BY NATHANIEL COLLAMORE
PLAN BK. 3, PG. 67

LOT 61
LOT 63

MELISSA J. CASTERLINE

WILLIAM H. ROBINSON, JR.

ABIGAIL M. RIVERS
GRANT D. BAILEY

JANICE L. WAGNER
PAUL DOUGLAS

JOHN A. HAGER
JUDY L. HAGER

RONALD C. MUDIE
ITEM NO. (2)
TEMP. CONST. RIGHTS = 220± S.F.(1)
TOTAL AREA = 10,456± S.F.
(SURVEY)

THIS AREA:
SEE SURVEY PLAN FOR
THOMAS D. EMERO
BANGOR, MAINE
BY RICHARD N. PERRY, JR.
7/26/04 DR. NO. 7055 1

LOT 2
LOT 1

SIXTEENTH STREET

10' EASE.
TO BANGOR GAS
11658/57 2/05/09

20' EASE. FOR WIDENING
OF UNION ST.
RESERVED BY
CITY OF BANGOR
6688/241 5/22/1988

UNION STREET
S.H. "91"

BEGIN B.L.
S.55°-59'-51.1"E.
800.00'

BANGOR HOUSING DEVELOPMENT CORPORATION
ITEM NO. (12)
TEMP. ROAD RIGHTS = 1725± S.F.(1)
TOTAL AREA = 2.99± AC.(DEED)

1204± S.F.

THIS AREA:
SEE SURVEY PLAN FOR
H. RANKIN GRANT
BANGOR, MAINE
BY PRENTISS & CARLISLE CO.,
9/9/63 PLAN BK. 21, PG. 93

D&K PROPERTIES, LLC
PARCEL NO. (1)
LAND TAKEN = 1204± S.F.
TOTAL AREA = 34,630± S.F.(DEED)
REM. AREA = 33,426± S.F.

AIR FORCE STORM
EASEMENT
BOOK 1646 PAGE 328

PLAN BK. 21, PG 93
50' WIDE

SUNSET AVENUE

EXISTING C.O.A.

CONST. LIMITS
3904± S.F.

END B.L.
STA. 71+59
N.37°-33'-27.0"E.

I-95 S.B.
OFF RAMP

I-95 SOUTHBOUND

I-95 NORTHBOUND
TO ORONO

SEE S.H.C. FILE NO. 10-113
SHEET NO. 13

SEE S.H.C. FILE NO. 10-113
SHEET NO. 12

S.H.C. FILE NO. 10-113
SHEET NO. 12

I-95 N.B.
TO ORONO

UNION STREET BRIDGE
OVER
I-95

BRIDGE NO. 5797 WIN 16681.00

EXISTING R/W

UNION STREET
PENOBSCOT COUNTY
VOL. 1 PAGE 466
1833 4 RODS WIDE

SEE ALSO S.H.C. FILE NO. 10-154 (1964)
D.O.T. FILE NO. 10-362 (1995)
S.H.C. FILE NO. 10-113 (1958)

INTERSTATE 95
S.H.C. FILE NO. 10-113 (1958)
SHEET NOS. 12 & 13
D.O.T. FILE NO. 10-362 (1995)

MAINE AVENUE
D.O.T. FILE NO. 10-427 (2006)

CONTROLLED ACCESS LIMIT

CONTROLLED ACCESS LIMIT LINE
ALONG R/W LINE

R/W LINE

CONTROLLED ACCESS LIMIT LINE NOT
ON R/W LINE

NO ACCESS WILL BE PERMITTED TO
OR FROM STATE HIGHWAY "95" AND
ADJOINING PROPERTIES WITHIN
BOUNDARIES DEFINED BY
CONTROLLED ACCESS LIMIT LINES

SYMBOLS

- ● IP or ● IPF (IRON PIPE or PIN FOUND)
- □ S.T. (SEPTIC TANK)
- ⊕DH (ROW MONUMENT)
- ⊕DM (TRAVERSE POINT)
- ○WELL (WELL)
- GRADING LIMIT LINE
- CONSTRUCTION LIMIT LINE
- PROPERTY LINE
- PL
- W WATER LINE
- G GAS LINE
- E ELECTRIC LINE
- T TELEPHONE LINE
- SEWER LINE
- NEW RIGHT OF WAY
- NEW ROW WITHIN EXIST. ROW
- CONTROL OF ACCESS

THIS PLAN WAS PREPARED IN CONNECTION WITH THE DEPARTMENT'S ACQUISITION OF REAL PROPERTY FOR TRANSPORTATION PURPOSES. IT CANNOT BE USED TO ESTABLISH LEGAL BOUNDARIES BETWEEN ABUTTING PROPERTY OWNERS.

ITEM	TECH	CHECKED
BASE MAP		
EXIST. R/W	D.S.G.	
PROP. LINES		T.L.B.
AREAS		T.J.K.

STATE OF MAINE
DEPARTMENT OF TRANSPORTATION
16 STATE HOUSE STATION - AUGUSTA, ME 04333-0016
BANGOR
RIGHT OF WAY MAP

REVISIONS

NO.	DATE	DESCRIPTION	BY

PLAN FILED IN PLAN BOOK PAGE COUNTY RECORD

NO.	GRANTOR	INSTRUMENT	DATE	BOOK	PAGE
		COND.	6/18/13	13220	11

DAVID BERNHARDT
COMMISSIONER
KENNETH L. SWEENEY
CHIEF ENGINEER
DATE

STATE HIGHWAY "91"
UNION ST.
BANGOR PENOBSCOT COUNTY
FEDERAL AID PROJECT NO. IM-1668(100)E

MARCH 2013	RIGHT-OF-WAY MAP	D.O.T. FILE NO. 10-482
SCALE 1"= 25'	SHEET 1 OF 7	

SHEET NUMBER
87
OF 93

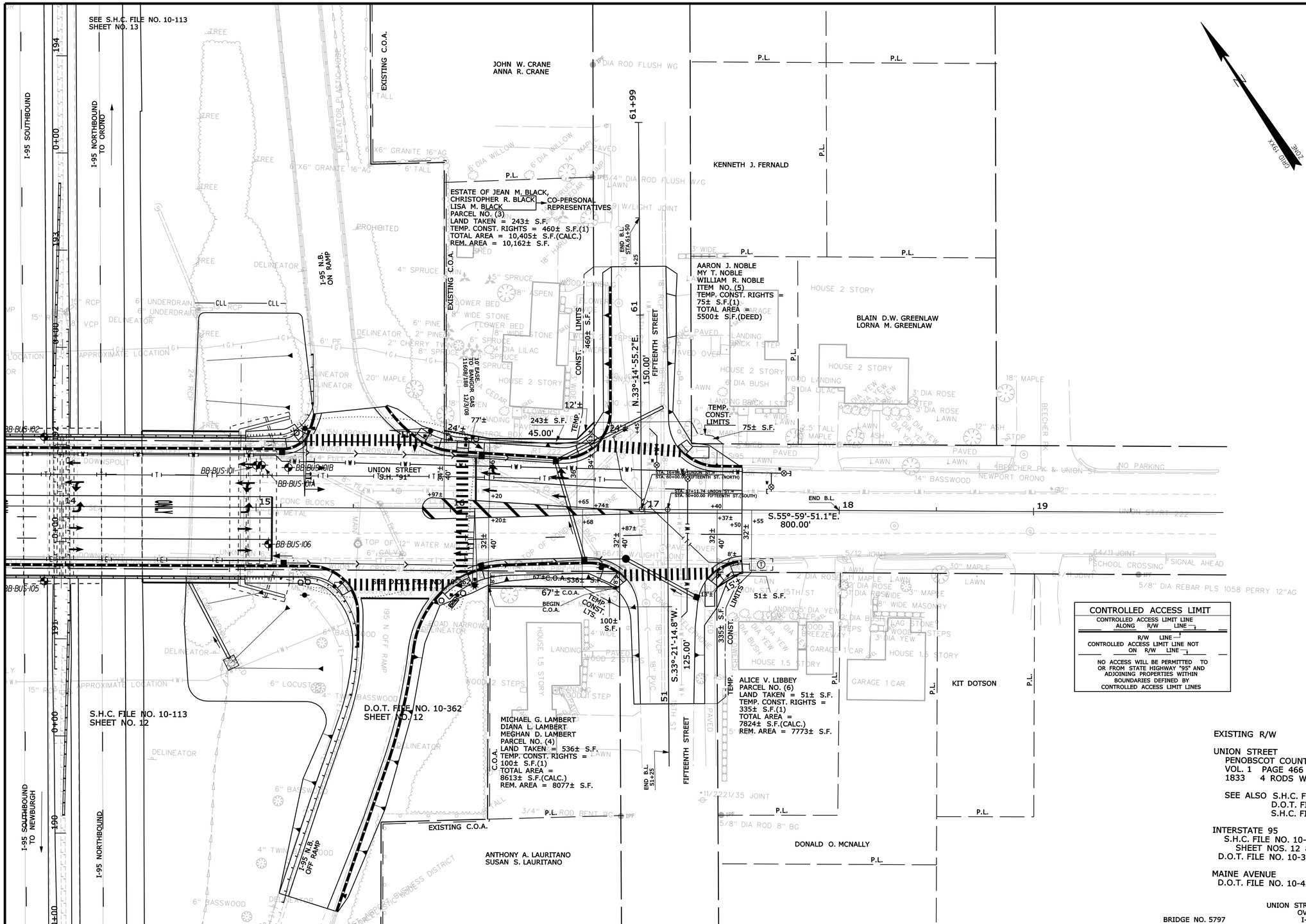

THIS PLAN WAS PREPARED IN CONNECTION WITH THE DEPARTMENT'S ACQUISITION OF REAL PROPERTY FOR TRANSPORTATION PURPOSES. IT CANNOT BE USED TO ESTABLISH LEGAL BOUNDARIES BETWEEN ABUTTING PROPERTY OWNERS.

SYMBOLS

- ● IP or ■ PP (IRON PIPE or PIN FOUND)
- ST. (SEPTIC TANK)
- (ROW MONUMENT)
- (TRAVERSE POINT)
- (WELL)
- GRADING LIMIT LINE
- CONSTRUCTION LIMIT LINE
- PROPERTY LINE PL
- LIMITS OF TYP. RIGHT-OF-WAY PORTION (LOW.P.)
- W WATER LINE
- G GAS LINE
- E ELECTRIC LINE
- T TELEPHONE LINE
- SEWER LINE
- NEW RIGHT OF WAY
- NEW ROW WITHIN EXIST. ROW
- CONTROL OF ACCESS

ITEM	TECH	CHECKED
BASE MAP		
EXIST. R/W	D.S.G.	D.S.G.
PROP. LINES		
AREAS	T.L.B.	T.J.K.

STATE OF MAINE
DEPARTMENT OF TRANSPORTATION
16 STATE HOUSE STATION - AUGUSTA, ME 04333-0016
BANGOR
RIGHT OF WAY MAP

REVISIONS

NO.	DATE	DESCRIPTION	BY
1.	6/24/2013	ADDED CO-PERSONAL REPRESENTATIVES	D.S.G.

PLAN FILED IN PLAN BOOK PAGE COUNTY RECORD

NO.	GRANTOR	INSTRUMENT	DATE	BOOK	PAGE
		COND.	6/18/13	13220	11

DAVID BERNHARDT
COMMISSIONER
KENNETH L. SWEENEY
CHIEF ENGINEER
DATE

STATE HIGHWAY "91"
UNION ST.
BANGOR PENOBSCOT COUNTY
FEDERAL AID PROJECT NO. IM-1668(100)E

MARCH 2013	RIGHT-OF-WAY MAP	D.O.T. FILE NO. 10-482
SCALE 1" = 25'	SHEET 2 OF 7	

SHEET NUMBER
88
OF 93

Filename: ...\00\row\mrsto\002_RWPLAN2.dgn Division: BRIDGE Username: david.shaw Date:1/2/2014

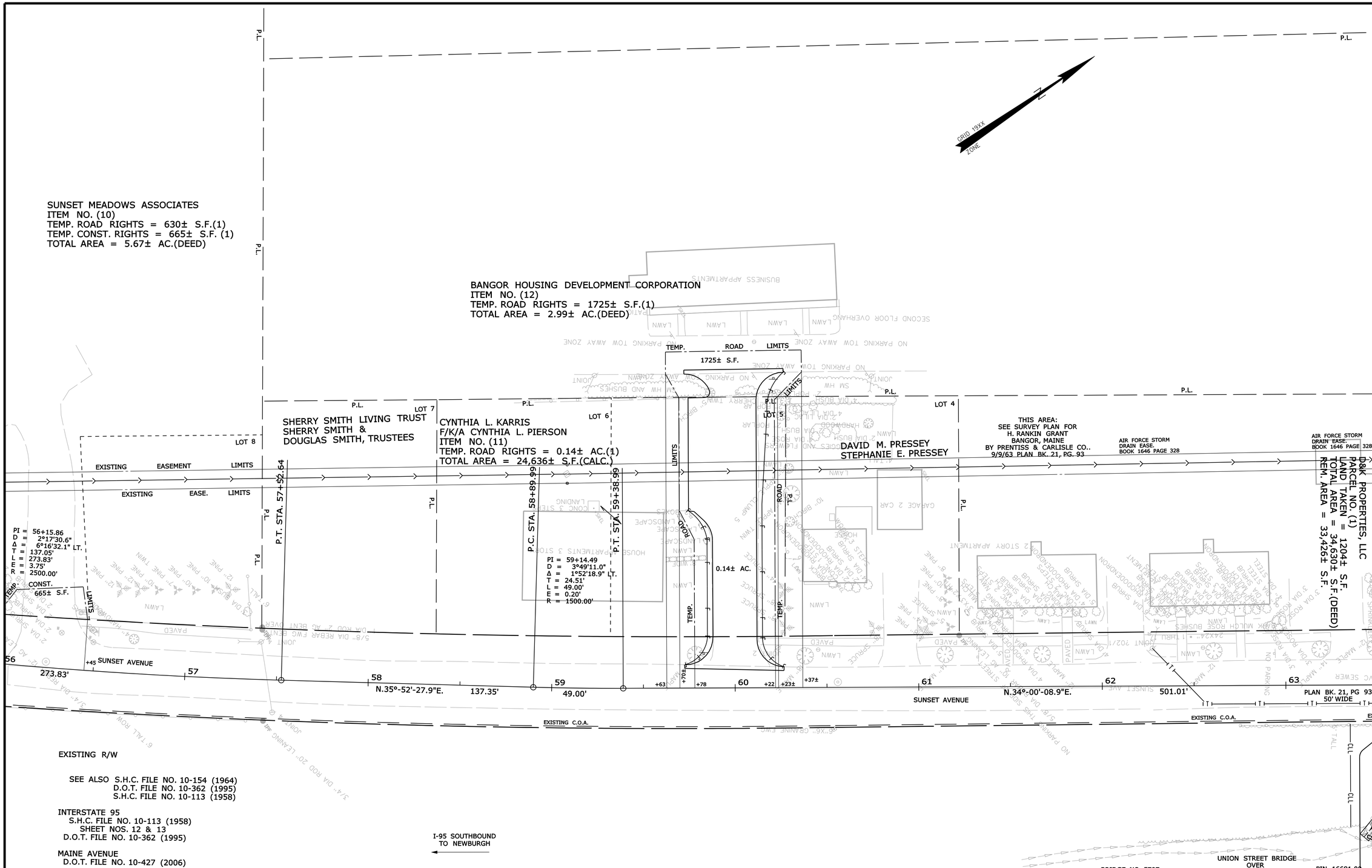

SYMBOLS

- IP or ● IPF (IRON PIPE or PIN FOUND)
- ☐ S.T. (SEPTIC TANK)
- ⊡ (ROW MONUMENT)
- ⚠BM (TRAVERSE POINT)
- WELL (WELL)
- GRADING LIMIT LINE
- CONSTRUCTION LIMIT LINE
- PROPERTY LINE PL
- LIMITS OF WROUGHT PORTION (L.O.W.P.)
- EXISTING RIGHT OF WAY
- NEW RIGHT OF WAY
- NEW ROW WITHIN EXIST. ROW
- CONTROL OF ACCESS
- WATER LINE
- GAS LINE
- ELECTRIC LINE
- TELEPHONE LINE
- SEWER LINE

ITEM	TECH	CHECKED
BASE MAP		
EXIST. R/W	D.S.G.	
PROP. LINES		
AREAS	T.L.B.	D.S.G.

STATE OF MAINE
DEPARTMENT OF TRANSPORTATION
16 STATE HOUSE STATION - AUGUSTA, ME 04333-0016
BANGOR
RIGHT OF WAY MAP

REVISIONS			
NO.	DATE	DESCRIPTION	BY

PLAN FILED IN PLAN BOOK PAGE COUNTY RECORD

NO.	GRANTOR	INSTRUMENT	DATE	BOOK	PAGE
		COND.	6/18/13	13220	11

DAVID BERNHARDT
COMMISSIONER
KENNETH L. SWEENEY
CHIEF ENGINEER
DATE

STATE HIGHWAY "91"
UNION ST.
BANGOR PENOBSCOT COUNTY
FEDERAL AID PROJECT NO. IM-1668(100)E

MARCH 2013 | RIGHT-OF-WAY MAP | D.O.T. FILE NO. 10-482
SCALE 1" = 25' | SHEET 3 OF 7

SHEET NUMBER
89
OF 93

Filename: ...\00\row\msta\003_RWPLAN3.dgn Division: BRIDGE Username: david.shaw Date:1/2/2014

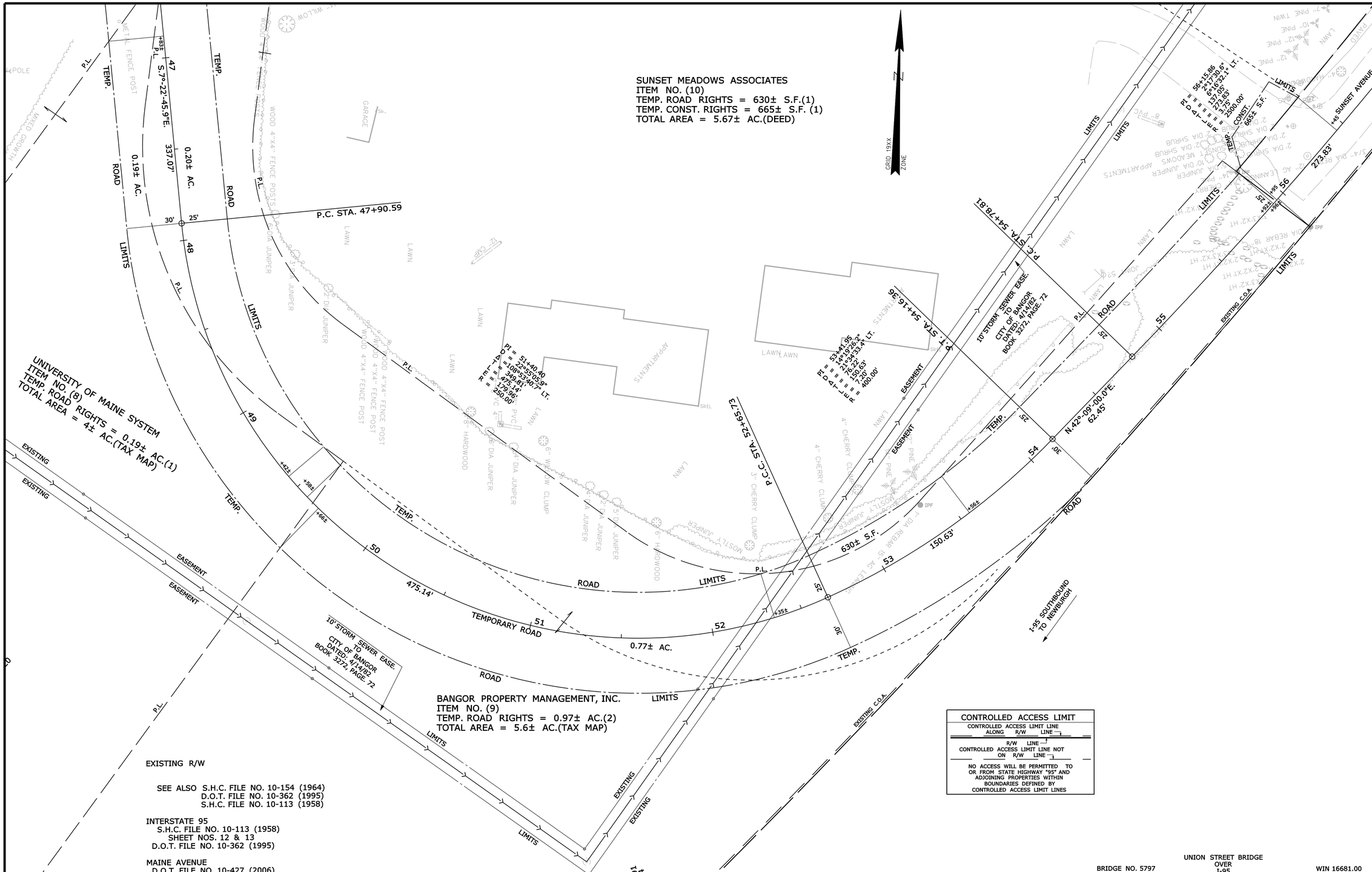

THIS PLAN WAS PREPARED IN CONNECTION WITH THE DEPARTMENT'S ACQUISITION OF REAL PROPERTY FOR TRANSPORTATION PURPOSES. IT CANNOT BE USED TO ESTABLISH LEGAL BOUNDARIES BETWEEN ABUTTING PROPERTY OWNERS.

SYMBOLS

- IP or IPF (IRON PIPE or PIN FOUND)
- ST. (SEPTIC TANK)
- (ROW MONUMENT)
- (TRAVERSE POINT)
- WATER LINE
- GAS LINE
- ELECTRIC LINE
- TELEPHONE LINE
- SEWER LINE
- WELL (WELL)
- GRADING LIMIT LINE
- CONSTRUCTION LIMIT LINE
- PROPERTY LINE
- LIMITS OF WROUGHT PORTION (L.O.W.P.)
- EXISTING RIGHT OF WAY
- NEW RIGHT OF WAY
- NEW ROW WITHIN EXIST. ROW
- CONTROL OF ACCESS

ITEM	TECH	CHECKED
BASE MAP		
EXIST. R/W	D.S.G.	
PROP. LINES		
AREAS	T.L.B.	T.J.K.

STATE OF MAINE
DEPARTMENT OF TRANSPORTATION
16 STATE HOUSE STATION - AUGUSTA, ME 04333-0016
BANGOR
RIGHT OF WAY MAP

REVISIONS			
NO.	DATE	DESCRIPTION	BY

PLAN FILED IN PLAN BOOK PAGE COUNTY RECORD

NO.	GRANTOR	INSTRUMENT	DATE	BOOK	PAGE
		COND.	6/18/13	13220	11

DAVID BERNHARDT
COMMISSIONER
KENNETH L. SWEENEY
CHIEF ENGINEER
DATE

STATE HIGHWAY "91"
UNION ST.
BANGOR PENOBSCOT COUNTY
FEDERAL AID PROJECT NO. IM-1668(100)E

MARCH 2013 | RIGHT-OF-WAY MAP | D.O.T. FILE NO. 10-482
SCALE 1" = 25' | SHEET 4 OF 7

SHEET NUMBER
90
OF 93

Filename: ...\00\row\msta\004_RWPLAN4.dgn Division: BRIDGE Username: david.shaw Date:1/2/2014

Filename: ...\00\row\msta\005_RWPLAN5.dgn   Division: BRIDGE   Username: david.shaw   Date:1/2/2014

THIS PLAN WAS PREPARED IN CONNECTION WITH THE DEPARTMENT'S ACQUISITION OF REAL PROPERTY FOR TRANSPORTATION PURPOSES. IT CANNOT BE USED TO ESTABLISH LEGAL BOUNDARIES BETWEEN ABUTTING PROPERTY OWNERS.

SYMBOLS

- IP or IPF (IRON PIPE or PIN FOUND)
- S.T. (SEPTIC TANK)
- (ROW MONUMENT)
- BM (TRAVERSE POINT)
- WATER LINE
- GAS LINE
- ELECTRIC LINE
- TELEPHONE LINE
- SEWER LINE
- WELL (WELL)
- GRADING LIMIT LINE
- CONSTRUCTION LIMIT LINE
- PROPERTY LINE PL
- LIMITS OF WROUGHT PORTION (L.O.W.P.)
- EXISTING RIGHT OF WAY
- NEW RIGHT OF WAY
- NEW ROW WITHIN EXIST. ROW
- CONTROL OF ACCESS

ITEM	TECH	CHECKED
BASE MAP		
EXIST. R/W	D.S.G.	
PROP. LINES		
AREAS	T.L.B.	D.S.G.

STATE OF MAINE
DEPARTMENT OF TRANSPORTATION
16 STATE HOUSE STATION - AUGUSTA, ME 04333-0016
BANGOR
RIGHT OF WAY MAP

REVISIONS

NO.	DATE	DESCRIPTION	BY

PLAN FILED IN PLAN BOOK   PAGE   COUNTY RECORD

NO.	GRANTOR	INSTRUMENT	DATE	BOOK	PAGE
		COND.	6/18/13	13220	11

DAVID BERNHARDT
COMMISSIONER
KENNETH L. SWEENEY
CHIEF ENGINEER
DATE

STATE HIGHWAY "91"
UNION ST.
BANGOR   PENOBSCOT COUNTY
FEDERAL AID PROJECT NO. IM-1668(100)E

MARCH 2013 | SCALE 1" = 25' | RIGHT-OF-WAY MAP SHEET 5 OF 7 | D.O.T. FILE NO. 10-482

SHEET NUMBER
91
OF 93

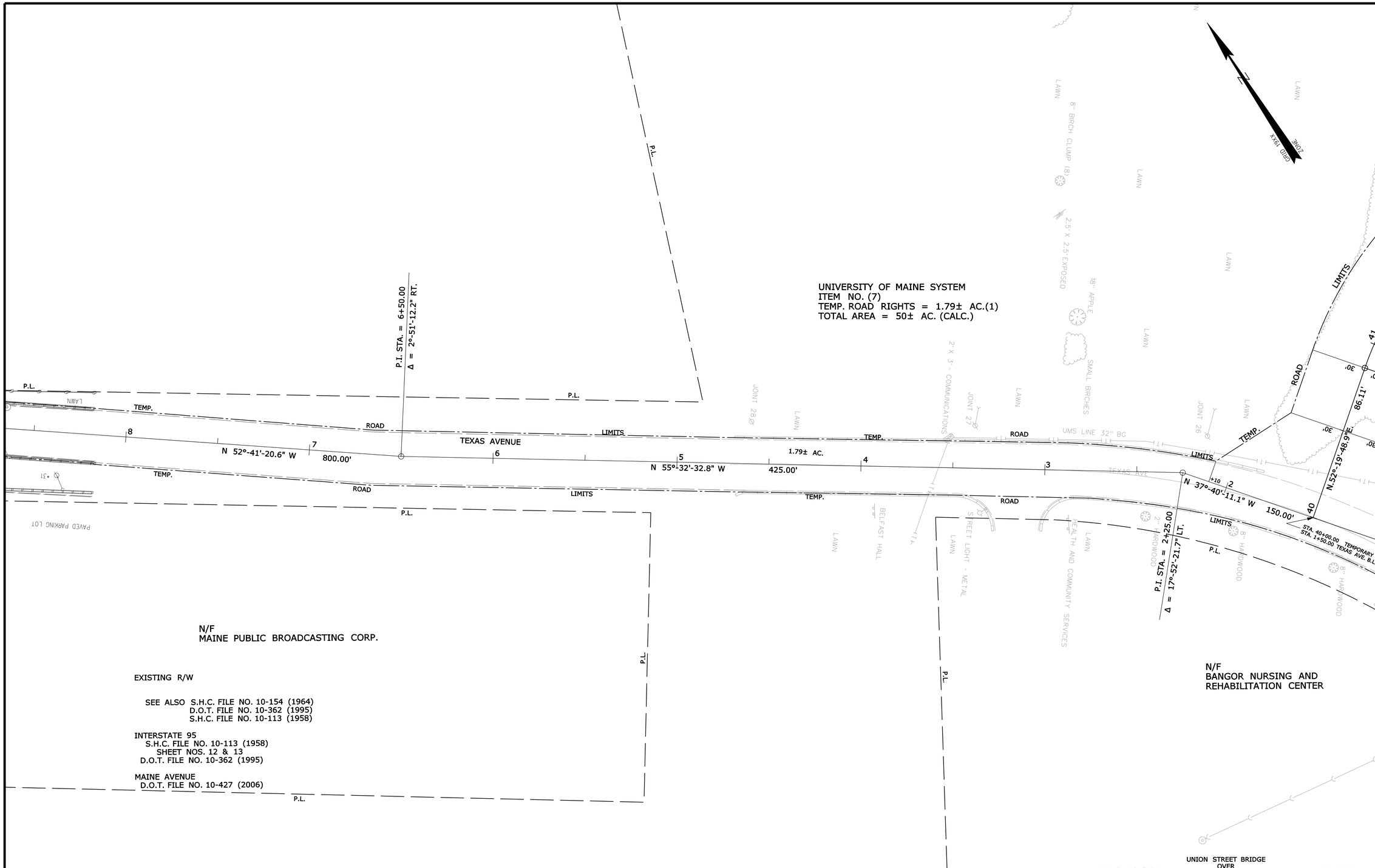

THIS PLAN WAS PREPARED IN CONNECTION WITH THE DEPARTMENT'S ACQUISITION OF REAL PROPERTY FOR TRANSPORTATION PURPOSES. IT CANNOT BE USED TO ESTABLISH LEGAL BOUNDARIES BETWEEN ABUTTING PROPERTY OWNERS.

SYMBOLS

- IP or ● IPF (IRON PIPE or PIN FOUND)
- ST. (SEPTIC TANK)
- (ROW MONUMENT)
- BM (TRAVERSE POINT)
- WATER LINE
- GAS LINE
- ELECTRIC LINE
- TELEPHONE LINE
- SEWER LINE
- WELL (WELL)
- GRADING LIMIT LINE
- CONSTRUCTION LIMIT LINE
- PROPERTY LINE PL
- LIMITS OF WROUGHT PORTION (L.O.W.P.)
- EXISTING RIGHT OF WAY
- NEW RIGHT OF WAY
- NEW ROW WITHIN EXIST. ROW
- CONTROL OF ACCESS

ITEM	TECH	CHECKED
BASE MAP		
EXIST. R/W	D.S.G.	
PROP. LINES		
AREAS	T.L.B.	D.S.G.

STATE OF MAINE
DEPARTMENT OF TRANSPORTATION
16 STATE HOUSE STATION - AUGUSTA, ME 04333-0016
BANGOR
RIGHT OF WAY MAP

REVISIONS

NO.	DATE	DESCRIPTION	BY

PLAN FILED IN PLAN BOOK PAGE COUNTY RECORD

NO.	GRANTOR	INSTRUMENT	DATE	BOOK	PAGE
		COND.	6/18/13	13220	11

DAVID BERNHARDT
COMMISSIONER
KENNETH L. SWEENEY
CHIEF ENGINEER
DATE

STATE HIGHWAY "91"
UNION ST.
BANGOR PENOBSCOT COUNTY
FEDERAL AID PROJECT NO. IM-1668(100)E

MARCH 2013 | RIGHT-OF-WAY MAP | D.O.T. FILE NO. 10-482
SCALE 1" = 25' | SHEET 6 OF 6

SHEET NUMBER
92
OF 93

Filename: ...\00\row\msta\006_RWPLAN6.dgn Division: BRIDGE Username: david.shaw Date:1/2/2014

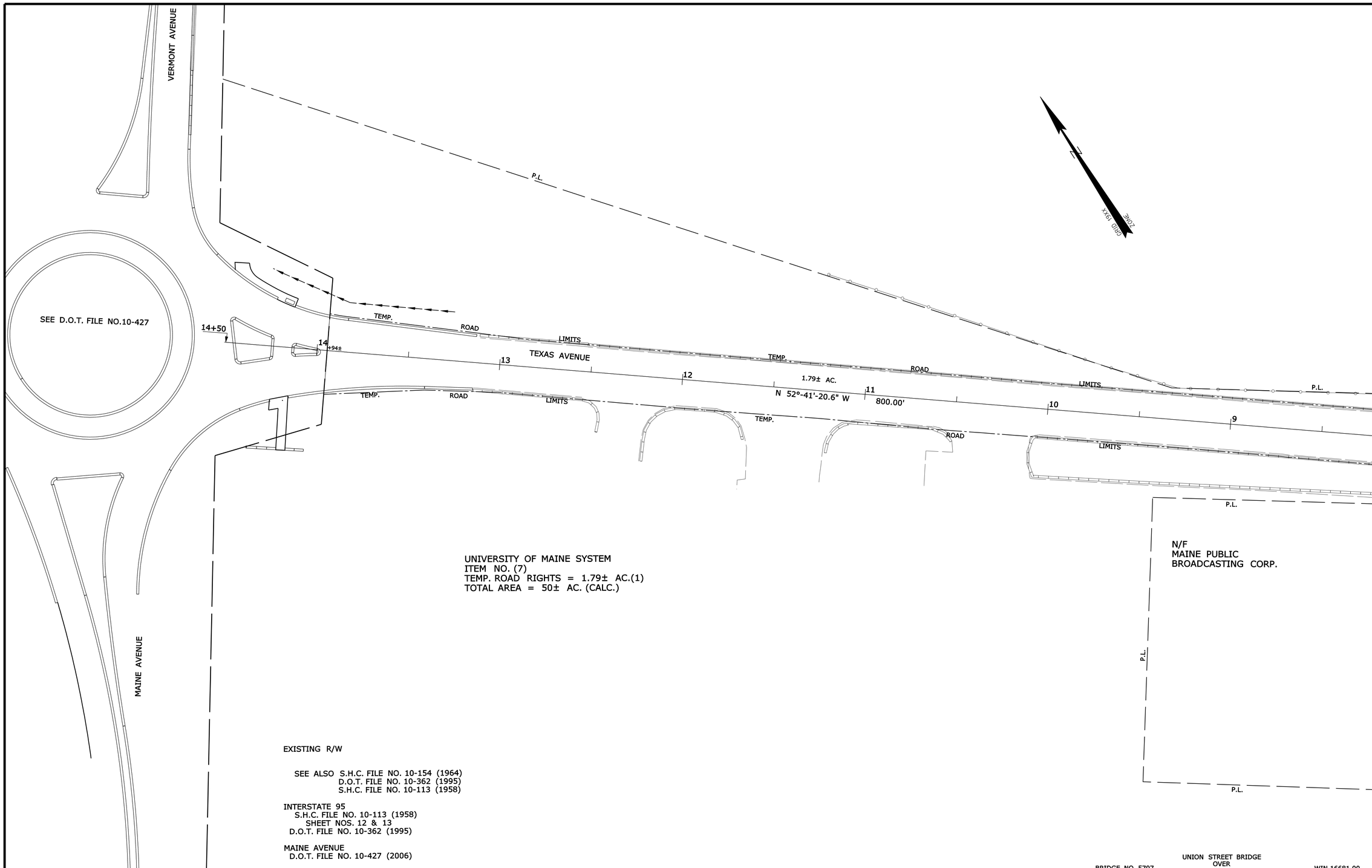

THIS PLAN WAS PREPARED IN CONNECTION WITH THE DEPARTMENT'S ACQUISITION OF REAL PROPERTY FOR TRANSPORTATION PURPOSES. IT CANNOT BE USED TO ESTABLISH LEGAL BOUNDARIES BETWEEN ABUTTING PROPERTY OWNERS.

SYMBOLS

- IP or IPF (IRON PIPE or PIN FOUND)
- S.T. (SEPTIC TANK)
- (ROW MONUMENT)
- BM (TRAVERSE POINT)
- WELL (WELL)
- GRADING LIMIT LINE
- CONSTRUCTION LIMIT LINE
- PROPERTY LINE PL
- LIMITS OF WROUGHT PORTION (L.O.W.P.)
- EXISTING RIGHT OF WAY
- NEW RIGHT OF WAY
- NEW ROW WITHIN EXIST. ROW
- CONTROL OF ACCESS
- WATER LINE
- GAS LINE
- ELECTRIC LINE
- TELEPHONE LINE
- SEWER LINE

ITEM	TECH	CHECKED
BASE MAP		
EXIST. R/W	D.S.G.	
PROP. LINES		
AREAS	T.L.B.	D.S.G.

STATE OF MAINE
DEPARTMENT OF TRANSPORTATION
16 STATE HOUSE STATION - AUGUSTA, ME 04333-0016
BANGOR
RIGHT OF WAY MAP

REVISIONS

NO.	DATE	DESCRIPTION	BY

PLAN FILED IN PLAN BOOK PAGE COUNTY RECORD

NO.	GRANTOR	INSTRUMENT	DATE	BOOK	PAGE
		COND.	6/18/13	13220	11

DAVID BERNHARDT
COMMISSIONER
KENNETH L. SWEENEY
CHIEF ENGINEER
DATE

STATE HIGHWAY "91"
UNION ST.
BANGOR PENOBSCOT COUNTY
FEDERAL AID PROJECT NO. IM-1668(100)E

MARCH 2013 | RIGHT-OF-WAY MAP | D.O.T. FILE NO. 10-482
SCALE 1" = 25' | SHEET 7 OF 7

SHEET NUMBER
93
OF 93

Filename: ...\00\row\msta\007_RWPLAN7.dgn Division: BRIDGE Username: david.show Date:1/2/2014

STATE OF MAINE
DEPARTMENT OF TRANSPORTATION

TMSI

PLAN LEGEND

Town, County, State	Centerline-Existing
Property Lines	Centerline-Proposed 10+00
R/W Lines-Existing	Travelway-Existing
R/W Lines-Proposed	Travelway-Proposed
Culvert-Existing	Railroad
Culvert Proposed	Catch Basins Existing Proposed
Curbing Existing Proposed	Manholes Existing Proposed
Type 1	Proposed Underdrain
Type 3	Proposed Ditch
Type 5	Existing Ditch
Outline of Bodies of Water	Utlity Poles Existing Proposed
Ledge	Fire Hydrants Existing Proposed
Buildings	Existing Water Line
Trees Conifer Deciduous	Existing San. Sewer
Tree Line	Existing San. Sewer Manhole
Clearing Limit Line CLL	Guardrail-Existing
	Guardrail-Proposed
	Guardrail-Cable, Other

BANGOR
PENOBSCOT
I-95 EXIT 184 NB ON-RAMP
IM-1925(600)E
PROJECT LENGTH : 0.279 MILES

INDEX OF SHEETS

Description	Sheet No.
Title Sheet	1
Typical Sections	2-3
Earthwork Summary	4
Drainage Sheet	5
General Notes	6
Lighting Plan	7-8
Detour Signing Plan	9
Plan / Profile	10-12
Geometric Curb Layout	13-14
Cross - Sections	15-43
Right of Way Map	44

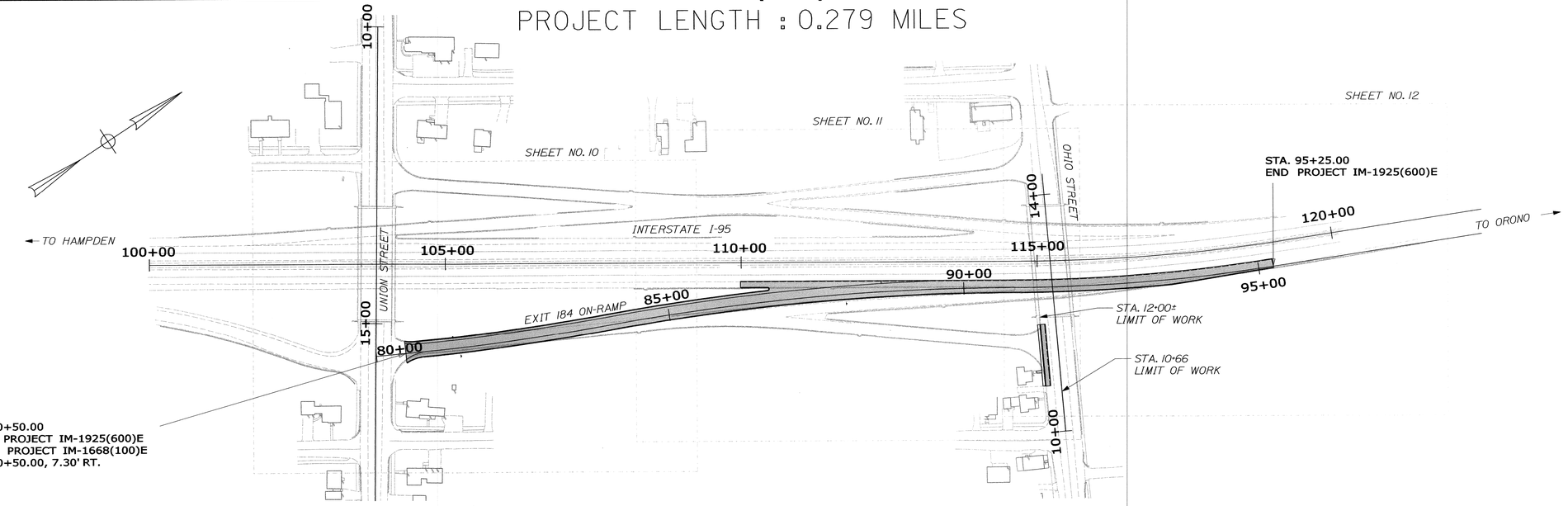

TRAFFIC DATA

	I-95 S/O EXIT 184 NB ON-RAMP	I-95 EXIT 184 NB ON-RAMP	I-95 N/O EXIT 184 NB ON-RAMP
Current (2013) AADT	18,310	6,410	24,720
Future (2034) AADT	23,120	8,090	31,210
DHV - % of AADT	12%	9%	11%
Design Hour Volume	2,695	741	3,436
% Heavy Trucks (AADT)	11%	2%	8%
% Heavy Trucks (DHV)	11%	2%	8%
Directional Distribution (DHV)	100%	100%	100%
18 kip Equivalent P 2.0	2,698	89	2,681
18 kip Equivalent P 2.5	2,570	85	2,554
Design Speed (mph)	55	35	55
Functional Class:	INTERSTATE	INTERSTATE	INTERSTATE

LAYOUT SCALE

100 0 100 200

Scale in Feet

PROJECT LOCATION:	I-95 EXIT 184 NORTHBOUND ON-RAMP
PROGRAM AREA:	MULTIMODAL
SCOPE OF WORK:	RAMP IMPROVEMENTS: REALIGN NORTHBOUND ON-RAMP TO INCREASE LENGTH OF ACCELERATION LANE.

WIN 19256.00 IM-1925(600)E

STATE OF MAINE
DEPARTMENT OF TRANSPORTATION

APPROVED

COMMISSIONER: DATE 12/20/13

CHIEF ENGINEER: 12-26-13

STATE OF MAINE JAMES L. EASON No. 7960 LICENSED PROFESSIONAL ENGINEER

SIGNATURE 7960

P.E. NUMBER December 18, 2013

DATE

PROJECT INFORMATION

PROGRAM	MULTIMODAL
PROJECT MANAGER	BRIAN KEEZER
DESIGNER	J.EASON
CONSULTANT	TERRA MAGNA SERVICES, INC.
PROJECT RESIDENT	
CONTRACTOR	
PROJECT COMPLETION DATE	

BANGOR
I-95 EXIT 184 NB ON-RAMP

TITLE SHEET

SHEET NUMBER
1
OF 44

Filename: ...\HIGHWAY\MSTA\001_Title_01.dgn Division: HIGHWAY Username: jeason Date:12/17/2013

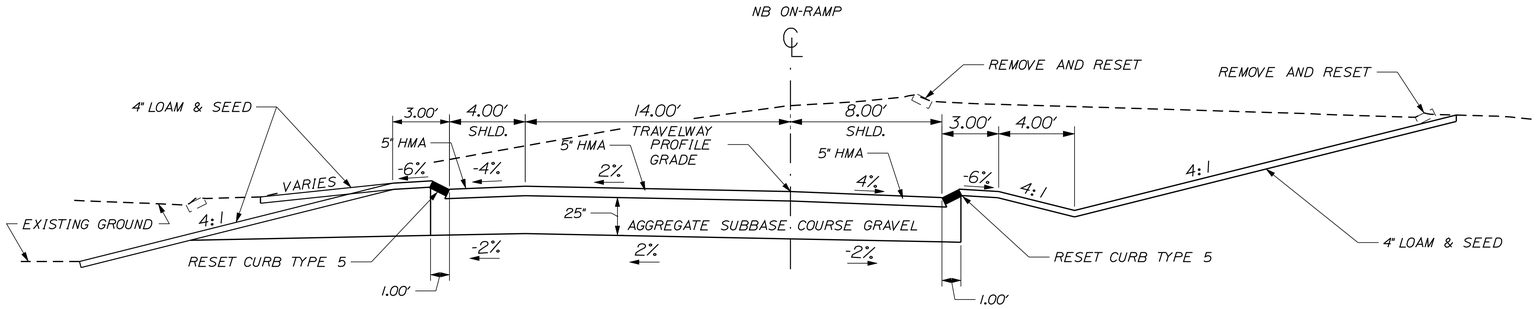

I-95 NORTHBOUND RAMP
FULL RECONSTRUCTION
NORMAL SECTION

A.S.C.G.
LEFT SHLD. 105.52 CY/100 LF
STATION TO STATION
80+50 TO 84+75

AGGREGATE SUBBASE COURSE - GRAVEL (ITEM 304.10)		
4' LEFT SHLD. 38.36 CY/100 LF	14' WIDTH TRAVELWAY 108.02 CY/100 LF	8' RIGHT SHLD. 67.22 CY/100 LF
STATION TO STATION	STATION TO STATION	STATION TO STATION
84+75 TO 86+75	80+50 TO 86+75	80+50 TO 86+75

SUPERELEVATION TABLE

LT. SHLD.	TRAVELWAY	STATION	RT. SHLD.
-4.0%	+2.0%	80+50	-4.0%
-4.0%	+2.0%	86+00	-4.0%
-2.0%	+2.0	86+25	-4.0%
0.0%	+2.0	86+50	-4.0%
+1.5%	+2.0%	86+75	-4.0%
	+2.0%	89+25	-4.0%
	+1.5%	89+50	-4.0%
	+0.9%	89+75	-4.0%
	+0.4%	90+00	-4.0%
	-0.2%	90+25	-4.0%
	-0.7%	90+50	-4.0%
	-1.2%	90+75	-4.0%
	-0.6%*	91+00	-4.0%
	-1.3%*	91+25	-3.7%
	-2.9%	91+50	-3.1%
	-3.4%	91+75	-2.6%
	-4.0%	92+00	-2.0%
	-4.5%	92+25	-1.5%
	-4.5%	93+50	-1.5%
	-3.6%	93+75	-2.4%
	-2.7%	94+00	-3.3%
	-1.7	94+25	-4.0%
	-0.8%	94+50	-4.0%
	0.1%	94+75	-4.0%
	1.0%	95+00	-4.0%
	EXIST.	95+25	EXIST.

* SUPERELEVATION VARIED TO MATCH EXISTING VERTICAL BRIDGE CLEARANCE

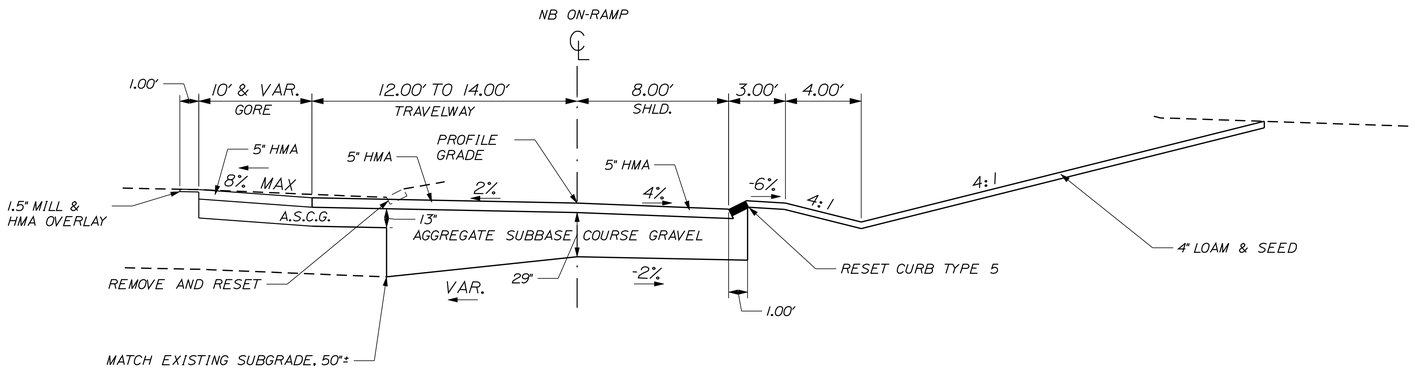

I-95 NORTHBOUND RAMP
FULL RECONSTRUCTION
RAMP WIDENING

AGGREGATE SUBBASE COURSE - GRAVEL (ITEM 304.10)		
LEFT SHLD. 4.01 CY/LF WIDTH/100 LF	VAR. WIDTH TRAVELWAY VARIES	8' RIGHT SHLD. 78.37 CY/100 LF
STATION TO STATION	STATION TO STATION	STATION TO STATION
86+75 TO 89+50	86+75 TO 90+90	86+75 TO 90+90

NOTE:

1. THE PAVEMENT, BASE, AND SUBBASE DEPTHS AS SHOWN ON THE PLANS ARE INTENDED TO BE NOMINAL.
2. WHEN SUPERELEVATION EXCEEDS THE SLOPE OF THE LOW SIDE SHOULDER, THE LOW SIDE SHOULDER'S PAVEMENT SHALL HAVE THE SAME CROSS SLOPE AS THE TRAVEL WAY.
3. CROWNS FOR BOTH NORMAL AND SUPERELEVATION SECTIONS FOR ALL COURSES OF SUBBASE AND PAVEMENT SHALL BE STRAIGHT.
4. EXCEPT WHERE NOTED, THE GRAVEL QUANTITY CALCULATION IS BASED ON 4" LOAM. THE ACTUAL DEPTH MAY VARY. SEE THE GENERAL NOTES.
5. THE ALGEBRAIC DIFFERENCE BETWEEN SHOULDER AND TRAVEL LANE CROSS SLOPE'S "ROLLOVER" SHALL NOT EXCEED 8%.
6. THE STATION SHOWN UNDER EACH TYPICAL IS APPROXIMATE.
7. HMA = HOT MIX ASPHALT
   A.S.C.G. = AGGREGATE SUBBASE COURSE - GRAVEL
8. MAXIMUM REVEAL ON TYPE 5 CURB IS LIMITED TO 4 INCHES.

NOT TO SCALE

STATE OF MAINE
DEPARTMENT OF TRANSPORTATION

IM-1925(600)E

WIN
19256.00

HIGHWAY PLANS

	BY	DATE
PROJ. MANAGER	BRIAN KEEZER	
DESIGN-DETAILED	JLE	12-13
CHECKED-REVIEWED	ALG	12-13
DESIGN2-DETAILED2		
DESIGN3-DETAILED3		
REVISIONS 1		
REVISIONS 2		
REVISIONS 3		
REVISIONS 4		
FIELD CHANGES		

SIGNATURE

7960
P.E. NUMBER

December 18, 2013
DATE

BANGOR
I-95 EXIT 184 NB ON-RAMP

TYPICAL SECTIONS

SHEET NUMBER
2
OF 44

Filename: ...\MSTA\002_Typicol_01.dgn Division: HIGHWAY Username: jeason Date:12/17/2013

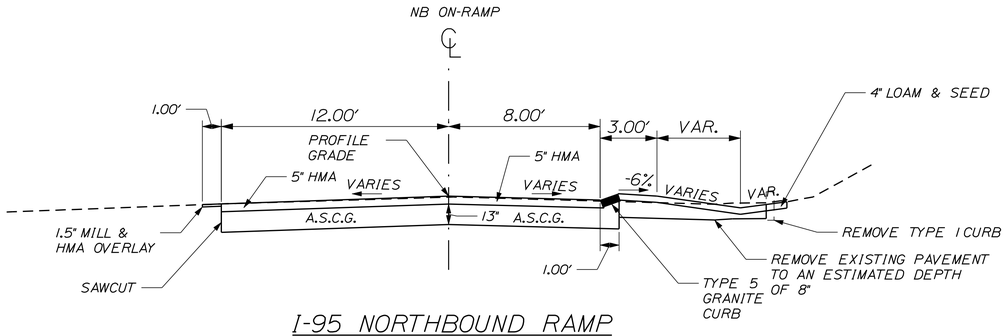

I-95 NORTHBOUND RAMP RECONSTRUCTION

SUPERELEVATED SECTION

AGGREGATE SUBBASE COURSE - GRAVEL (ITEM 304.10)	
12' WIDTH TRAVELWAY 48.15 CY/100 LF	8' RIGHT SHLD. 32.10 CY/100 LF
STATION TO STATION	STATION TO STATION
90+90 TO 95+25	90+90 TO 93+50

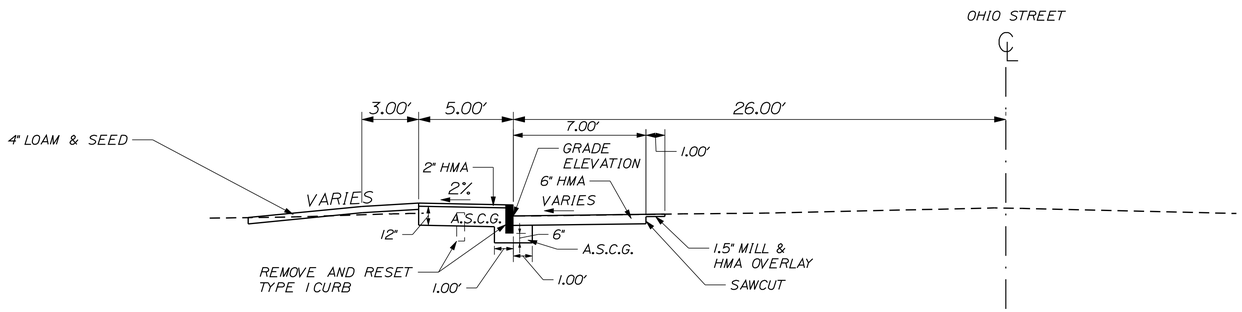

A.S.C.G.
SIDEWALK 21.93 CY/100 LF
STATION TO STATION
10+78.3 TO 11+83.0

NOT TO SCALE

STATE OF MAINE
DEPARTMENT OF TRANSPORTATION

IM-1925(600)E

WIN
19256.00

HIGHWAY PLANS

PROJ. MANAGER	BRIAN KEEZER	
DESIGN-DETAILED	JLE	12-13
CHECKED-REVIEWED	ALG	12-13
DESIGN2-DETAILED2		
DESIGN3-DETAILED3		
REVISIONS 1		
REVISIONS 2		
REVISIONS 3		
REVISIONS 4		
FIELD CHANGES		

SIGNATURE

7960
P.E. NUMBER

December 18, 2013
DATE

BANGOR
I-95 EXIT 184 NB ON-RAMP
TYPICAL SECTIONS

SHEET NUMBER
3
OF 44

Filename: ...\MSTA\003_Typical_02.dgn Division: HIGHWAY Username: jeason Date:12/17/2013

SUMMARY OF EARTHWORK AND BORROW

COMMON EXCAVATION FOR ESTIMATE		
COMMON EXCAVATION (FROM CROSS SECTIONS - MAINLINE)	6,298 CY	
COMMON EXCAVATION (FROM CROSS SECTIONS - SIDE ROAD)	52 CY	
PAVEMENT REMOVAL OUTSIDE OF SECTIONS	162 CY	
TOTAL COMMON EXCAVATION		6,512 CY
FILL FOR BORROW CALCULATIONS		
COMMON FILL (FROM CROSS SECTIONS)	279 CY	
COMMON FILL (SIDE ROADS)	14 CY	
TOTAL FILL		293 CY
ROCK EXCAVATION FOR ESTIMATE		
ROCK EXCAVATION	0 CY	
TOTAL ROCK EXCAVATION		0 CY
AVAILABLE COMMON EXCAVATION FOR BORROW CALCULATIONS		6,512 CY
(1) TOTAL COMMON EXCAVATION DEDUCTIONS:		
PAVEMENT IN SECTIONS	992 CY	
PAVEMENT OUTSIDE OF SECTIONS	162 CY	
GRUBBING IN CUT	511 CY	
(2) TOTAL DEDUCTIONS		1,665 CY
TOTAL AVAILABLE COMMON EXCAVATION (1) MINUS (2)		4,847 CY
TOTAL AVAILABLE STRUCT. EXC. (USUALLY UNDERDRAIN ONLY)		322 CY
TOTAL AVAILABLE NON-ROCK EXCAVATION		5169 CY
COMPUTATION OF COMMON BORROW FOR ESTIMATE		
(3) TOTAL FILL		293 CY

TOTAL AVAILABLE NON-ROCK EXCAV.	5,169	X 0.85 =	4,394 CY
TOTAL AVAILABLE ROCK EXCAV.	0	X 1.33 =	0 CY

(4) TOTAL AVAILABLE EXCAVATION		4,394 CY
SURPLUS EXCAVATION (4) MINUS (3)		4,101 CY
TOTAL SURPLUS WASTE MATERIAL	5,766 CY	

Username: jeason Division: HIGHWAY Filename: ...\MSTA\004_Estimate_01.dgn Date:12/17/2013

STATE OF MAINE
DEPARTMENT OF TRANSPORTATION

IM-1925(600)E

WIN
19256.00

HIGHWAY PLANS

PROJ. MANAGER	BRIAN KEEZER	BY	DATE
DESIGN-DETAILED	JLE	JLE	12-13
CHECKED-REVIEWED	ALG		
DESIGN2-DETAILED2			
DESIGN3-DETAILED3			
REVISIONS 1			
REVISIONS 2			
REVISIONS 3			
REVISIONS 4			
FIELD CHANGES			

SIGNATURE

7960
P.E. NUMBER

December 18, 2013
DATE

BANGOR
I-95 EXIT 184 NB ON-RAMP

EARTHWORK SUMMARY

SHEET NUMBER

4

OF 44

	STATION	CULVERT PIPE											CATCH BASIN					PIPE ARCH				MH	UNDERDRAIN						ELBOWS, TEES, WYES AND INLET GRATE UNITS	REMARKS
		RCP			CMP		OPTION I		OPTION III														TYPE B		TYPE C					
									SMOOTHLINED		CORRUGATED										GAGE OR WALL THICKNESS		TYPE B	OUTLET	SMOOTHLINED		CORRUGATED		DESCRIPTIONS	
		SIZE	LENGTH	CLASS	SIZE	LENGTH	SIZE	LENGTH	SIZE	LENGTH	SIZE	LENGTH	A5-C	B1-C		E	F	SPAN	RISE	LENGTH		LENGTH	LENGTH	SIZE	LENGTH	SIZE	LENGTH		
	STA. 82+00.00 LT. TO STA. 82+00.00 RT.	15"	20'	III																									
	STA. 84+44.60 RT. TO STA. 84+50.00 RT.								15"	10'																			
	STA. 84+50.60 RT. TO STA. 84+56.90 LT.	15"	21'	III																									
	STA. 84+57.80 LT. TO STA. 84+61.10 LT.	15"	8'	III																									
	STA. 86+38.00 LT. TO STA. 86+48.00 LT.								24"	10'																			
	STA. 86+50.00 LT. TO STA. 86+50.00 LT.								12"	7'																			
	STA. 86+52.00 LT. TO STA. 86+62.0 LT.								24"	10'																			
	STA. 87+75.00 RT. TO STA. 87+75.00 RT.								12"	5'																			
	STA. 87+78.50 LT. TO STA. 87+75.00 RT.	15"	16'	III																									
1	STA. 82+00.00, 16.88' LT.													1															
2	STA. 82+00.00, 6.88' RT.													1															
3	STA. 84+44.6, 19.8' RT.																												ALTER CB TO MH
4	STA. 84+50.00, 6.88' RT.													1															
5	STA. 84+57.3, 16.88' LT.													1 1/4															EXTRA DEPTH
6	STA. 86+50.00, 16.88' LT.													1															
7	STA. 86+50.00, 27.35' LT.													1 3/8															EXTRA DEPTH
8	STA. 87+75.00, 15.00' RT.													1															
9	STA. 87+75.00, 6.88' RT.													1															
10	STA. 87+78.7, 12.6' LT.																												ALTER CB TO MH
11	STA. 88+37.9, 7.2' LT.																												REBUILD MH
12	STA. 90+12.3, 3.6' LT.																												ALTER CB TO MH
13	STA. 90+78.6, 7.3' RT.																												REBUILD CB W/ SHAPE 5 TOP
14	STA. 91+88.6, 14.9' RT.																												ADJUST CB TO GRADE
15	STA. 93+50.00, 6.88' RT.													1															
16	STA. 11+02.00.00, 24.88' LT.												1																
	STA. 80+85.00 RT. TO STA. 81+98.00 RT.																						113'						
	STA. 82+02.00 RT. TO STA. 84+48.00 RT.																								15"	246'			
	STA. 84+55.00 RT. TO STA. 87+73.00 RT.																						318'						
	STA. 87+77.00 RT. TO STA. 88+25 RT.																						48'						
	STA. 88+50.00 RT. TO STA. 90+76.6 RT.																						227'						
	STA. 90+85.00 RT. TO STA. 91+87.10 RT.																						101'						
	STA. 93+25.00 RT. TO STA. 93+48.00 RT.																								12"	24'			
	STA. 93+52.00 RT. TO STA. 93+75.00 RT.																								12"	24'			

STATE OF MAINE
DEPARTMENT OF TRANSPORTATION

IM-1925(600)E

WIN
19256.00

HIGHWAY PLANS

PROJ. MANAGER	BRIAN KEEZER		
DESIGN-DETAILED	JLE	JLE	12-13
CHECKED-REVIEWED	ALG	ALG	12-13
DESIGN2-DETAILED2			
DESIGN3-DETAILED3			
REVISIONS 1			
REVISIONS 2			
REVISIONS 3			
REVISIONS 4			
FIELD CHANGES			

SIGNATURE
7960
P.E. NUMBER
December 18, 2013
DATE

BANGOR
I-95 EXIT 184 NB ON-RAMP

DRAINAGE SHEET

SHEET NUMBER
5
OF 44

Filename: ...\MSTA\005_Drainage_01.dgn Username: jeason Division: HIGHWAY Date:12/17/2013

GENERAL NOTES:

1. THE UTILITIES INVOLVED IN THIS CONTRACT ARE AS FOLLOWS:
   BANGOR WATER DISTRICT
   EASTERN MAINE HEALTHCARE SYSTEMS
   BANGOR GAS COMPANY
   CITY OF BANGOR
   UNIVERSITY OF MAINE
   BANGOR HYDROELECTRIC COMPANY

2. NO UTILITY INVOLVEMENT IS ANTICIPATED.

3. ALL JOINTS BETWEEN EXISTING AND PROPOSED HOT BITUMINOUS PAVEMENT SHALL BE BUTTED. PAYMENT SHALL BE MADE UNDER ITEM 202.202 REMOVING PAVEMENT SURFACE.

4. CLEARING LIMITS SHALL BE 10' BEYOND AND PARALLEL TO THE CONSTRUCTION SLOPE LINES OR AS SHOWN ON THE PLANS UNLESS OTHERWISE AUTHORIZED BY THE RESIDENT.

5. ALL CLEARING SHALL BE CONSIDERED INCIDENTAL TO THE CONTRACT AND NO SEPARATE PAYMENT WILL BE MADE. THE ACTUAL LINES FOR CLEARING SHALL BE ESTABLISHED IN THE FIELD BY THE CONTRACTOR AS INDICATED ON THE PLANS AND APPROVED BY THE RESIDENT.

6. ALL WASTE MATERIAL NOT USED ON THE PROJECT SHALL BE DISPOSED OF OFF THE PROJECT.

7. REQUIRED DITCH PROTECTION SHOWN ON THE PLANS OR IN THE CONSTRUCTION NOTES IS FOR ESTIMATING PURPOSES ONLY. THE ACTUAL TYPE AND LOCATION OF DITCH PROTECTION MAY BE ALTERED BY THE RESIDENT.

8. IF FOUNDATION MATERIAL IS REQUIRED UNDER CULVERTS, IT SHALL MEET THE REQUIREMENTS FOR GRANULAR BORROW - UNDERWATER BACKFILL AND WILL BE PAID FOR AS GRANULAR BORROW.

9. GRANULAR BORROW USED TO BACKFILL MUCK EXCAVATION OR IN LOW WET AREAS TO 1' ABOVE WATER LEVEL OR OLD GROUND SHALL MEET REQUIREMENTS FOR GRANULAR BORROW UNDERWATER BACKFILL.

10. ALL PAVED WALKS TO BE CONSTRUCTED WITH 12" AGGREGATE SUBBASE COURSE-GRAVEL AND 2" HOT MIX ASPHALT UNLESS OTHERWISE NOTED IN THE PLANS OR DIRECTED BY THE RESIDENT.

11. PLACE 12 INCHES GRAVEL AND 2 INCHES HOT MIX ASPHALT AROUND CATCH BASINS IN GRASSED AREAS (3' OUTSIDE OF FRAME) AND PAINT WITH ACRYLIC LATEX COLOR FINISH - GREEN. PAYMENT SHALL BE UNDER THE APPLICABLE CONTRACT ITEMS.

12. THE FOLLOWING SHALL BE INCIDENTAL TO THE 603 ITEM(S):
- o ANY CUTTING OF EXISTING CULVERTS AND OR CONNECTORS NECESSARY TO INSTALL NEW CULVERT REPLACEMENTS OR EXTENSIONS
- o ALL PIPE EXCAVATION INCLUDING ANY CUTTING AND REMOVAL OF PAVEMENT
- o FURNISHING, PLACING, GRADING, AND COMPACTING OF ANY NEW GRAVEL AND/OR FILL MATERIAL INCLUDING GRANULAR BORROW USED UNDER PIPES AND FOR TEMPORARY DETOURS TO MAINTAIN TRAFFIC DURING PIPE INSTALLATION (EXCAVATION IS ALSO INCIDENTAL).
- o GRANULAR BORROW UNDER THE PIPE SHALL MEET THE REQUIREMENTS FOR UNDERWATER BACKFILL
- o ALL WORK NECESSARY TO CONNECT TO EXISTING PIPES AND DRAINAGE STRUCTURES

13. EXISTING CULVERTS TO REMAIN SHALL BE CLEANED AS DIRECTED BY THE RESIDENT. PAYMENT WILL BE MADE UNDER ITEM 631.32 CULVERT CLEANER (INCLUDING OPERATOR).

14. NO EXISTING DRAINAGE SHALL BE ABANDONED, REMOVED OR PLUGGED WITHOUT PRIOR APPROVAL OF THE RESIDENT.

15. THE CULVERT SIZES SHOWN ON THE PLANS AND CROSS SECTIONS ARE FOR SMOOTHLINED PIPES.

16. ANY NECESSARY CUTTING OF EXISTING PIPES TO FIT IN AREAS OF PROPOSED CATCH BASINS WILL NOT BE PAID FOR SEPARATELY AND WILL BE CONSIDERED INCIDENTAL TO ITEM 604.

17. ANY NECESSARY CUTTING OF EXISTING CATCH BASINS TO ALLOW FOR PROPOSED PIPE CONNECTIONS WILL NOT BE PAID FOR SEPARATELY AND WILL BE CONSIDERED INCIDENTAL TO ITEM 603 OR 605.

18. GUARDRAIL END TREATMENTS SHALL BE INSTALLED CONCURRENTLY WITH THE PLACEMENT OF EACH SECTION OF BEAM GUARDRAIL.

19 TWO REFLECTORIZED FLEXIBLE GUARDRAIL MARKERS WILL BE INSTALLED AT EACH GUARDRAIL END.

20. CONNECTIONS FOR PROPOSED GUARDRAIL TO EXISTING GUARDRAIL AND BRIDGE RAIL TRANSITION BARRIER WILL BE CONSIDERED INCIDENTAL TO ITEM 606.

21. UNLESS OTHERWISE NOTED SEEDING METHOD NO. 1 SHALL BE UTILIZED ON ALL LAWNS AND DEVELOPED AREAS; SEEDING METHOD NO. 2 SHALL BE UTILIZED ON ALL OTHER AREAS.

22. LOAM SHALL BE PLACED TO A NOMINAL DEPTH OF 4 INCHES IN ALL AREAS UNLESS OTHERWISE NOTED OR DIRECTED.

23. ANY BASE PAVEMENT NOT SURFACED BEFORE WINTER WILL REQUIRE TEMPORARY PAVEMENT MARKINGS OF PAINT, BOTH YELLOW AND WHITE EDGE LINES AND WILL BE CONSIDERED PART OF ITEM 627.76

24. ANY DAMAGE TO THE SLOPES CAUSED BY THE CONTRACTOR'S EQUIPMENT, PERSONNEL, OR OPERATION SHALL BE REPAIRED TO THE SATISFACTION OF THE RESIDENT. ALL WORK, EQUIPMENT, AND MATERIALS REQUIRED TO MAKE REPAIRS SHALL BE AT THE CONTRACTOR'S EXPENSE.

25. AREAS REQUIRING FILL ON THE PROJECT WILL COME FROM SUITABLE EXCAVATION FROM EXCAVATION AREAS.

26. NO SEPARATE PAYMENT FOR SUPERINTENDENT OR FOREMAN WILL BE MADE FOR THE SUPERVISION OF EQUIPMENT BEING PAID FOR UNDER THE EQUIPMENT RENTAL ITEMS.

27. "UNDETERMINED LOCATIONS" SHALL BE DETERMINED BY THE RESIDENT.

28. STATIONS REFERENCED ARE APPROXIMATE.

29. ALL WORK SHALL BE DONE IN ACCORDANCE WITH THE MAINE DEPARTMENT OF TRANSPORTATION'S BEST MANAGEMENT PRACTICES FOR EROSION CONTROL & SEDIMENT CONTROL, FEBRUARY, 2008.

30. ANY CUTTING OF EXISTING CURB TYPE 1 THAT MAY BE NECESSARY TO ACCOMMODATE INSTALLATION OF NEW TERMINAL ENDS AND DRAINAGE HEADER STONES SHALL BE INCIDENTAL TO PAYMENT UNDER ITEM 609.38.

Filename: ...\HIGHWAY\MSTA\006_Notes_01.dgn Division: HIGHWAY Username: jeason Date:12/17/2013

STATE OF MAINE
DEPARTMENT OF TRANSPORTATION

IM-1925(600)E

WIN
19256.00

HIGHWAY PLANS

PROJ. MANAGER	BRIAN KEEZER	BY	DATE
DESIGN-DETAILED	JLE	JLE	12-13
CHECKED-REVIEWED	ALG	ALG	12-13
DESIGN2-DETAILED2			
DESIGN3-DETAILED3			
REVISIONS 1			
REVISIONS 2			
REVISIONS 3			
REVISIONS 4			
FIELD CHANGES			

SIGNATURE
7960
P.E. NUMBER
December 18, 2013
DATE

BANGOR
I-95 EXIT 184 NB ON-RAMP

GENERAL NOTES

SHEET NUMBER
6
OF 44

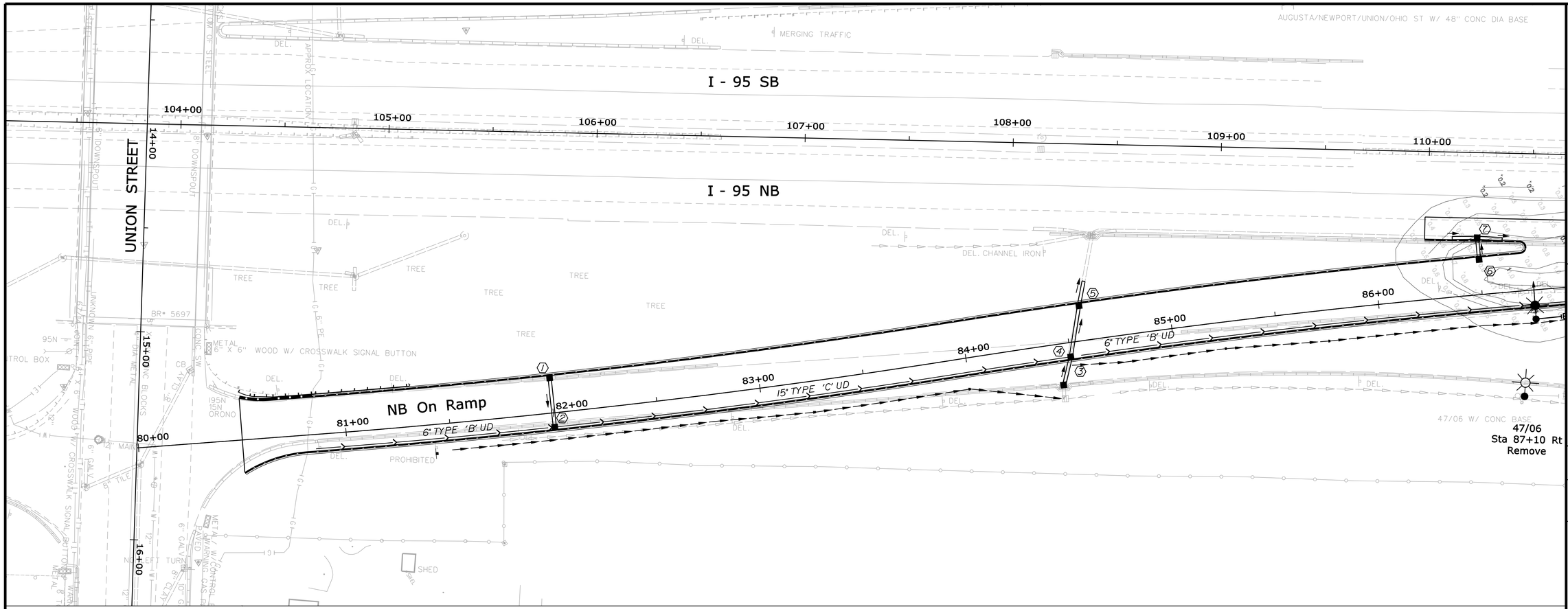

GENERAL NOTES - HIGHWAY LIGHTING

1. SCOPE OF WORK - INSTALL HIGHWAY LIGHTING AS SHOWN ON THIS PLAN. INSTALL NEW CONDUIT, WIRING, FOUNDATIONS, POLES, L.E.D. LUMINAIRES AND RELATED HARDWARE. REMOVE EXISTING LIGHTING AS NOTED. USE EXISTING LIGHTING SERVICE CABINET. INSTALL A METER DISCONNECT IN A SEPARATE NEMA 3R ENCLOSURE.
2. EXISTING INTERCHANGE LIGHTING SHALL REMAIN ACTIVE UNTIL THE NEW LIGHTING SYSTEM IS APPROVED BY MAINEDOT TO BE ACTIVATED.
3. EXISTING LIGHT POLES AND LUMINAIRES SHALL BE CAREFULLY REMOVED AND DELIVERED TO MAINEDOT AFTER ACTIVATION OF THE NEW SYSTEM. EXISTING FOUNDATIONS SHALL BE REMOVED AS DIRECTED. ABANDON EXISTING CONDUIT THAT IS REPLACED WITH NEW CONDUIT.
4. ALL MATERIALS AND WORKMANSHIP SHALL CONFORM TO APPLICABLE PROVISIONS OF THE MAINE DEPARTMENT OF TRANSPORTATION STANDARD SPECIFICATIONS AND STANDARD DETAILS, NATIONAL ELECTRICAL CODE AND ANY REQUIREMENTS OF THE POWER COMPANY.
5. THE CONTRACTOR SHALL FIELD VERIFY POLE LOCATIONS TO AVOID NATURAL AND BUILT SITE FEATURES THAT WOULD CONFLICT WITH PROPER INSTALLATION OF POLE FOUNDATIONS.
6. THE CONTRACTOR SHALL VISIT THE SITE PRIOR TO BIDDING TO ENSURE AWARENESS OF SITE CONDITIONS THAT COULD AFFECT THE BID.
7. LIGHTING FIXTURE VOLTAGE SHALL BE 480 VOLTS.
8. LIGHTING FIXTURES SHALL BE IES FULL CUTOFF, INDIRECT VIEW LIGHT EMITTING DIODE (LED) FIXTURES, IES DISTRIBUTION TYPE 2 AND TYPE 3.
9. INSTALL LIGHTING FIXTURES ON 40-FOOT POLES WITH A MINIMAL LENGTH HORIZONTAL, 2" DIAMETER PIPE TENON. POLES MAY BE EITHER ALUMINUM OR GALVANIZED STEEL.
10. ALL FIXTURES SHALL BE GASKETED WITH SURGE PROTECTION, AND A DOUBLE FUSE KIT. ALL FIXTURES SHALL BE GRAY. THE LIGHTING LAYOUT WAS DONE USING HOLOPHANE LEDGEND LED ROADWAY LIGHTING LUMINAIRES,
    CATALOG NUMBERS:
    LEDG 120 35 6K AH G L3 F2; 1 - TYPE 3 FIXTURE
    LEDG 120 35 6K AH G L2 F2; 7 - TYPE 2 FIXTURES
ACTUAL COLOR TEMPERATURE OF FIXTURES TO BE INSTALL SHALL BE 5,000K CCT.

IF DIFFERENT FIXTURES ARE PROPOSED, THEY SHALL BE IES FULL CUTOFF, TYPE 2 AND 3 IES DISTRIBUTION, INDIRECT VIEW LED LUMINAIRES. THE CONTRACTOR MUST DEMONSTRATE THAT THE PROPOSED FIXTURES WILL REASONABLY EQUAL THE LIGHT LEVELS AND DISTRIBUTIONS SHOWN ON THE PLANS, IN THE OPINION OF MAINEDOT.
11. EVALUATION BY MAINEDOT OF ALTERNATIVE LED LUMINAIRES THAT MAY BE PROPOSED THE CONTRACTOR FOR SUBSTITUTION WILL REQUIRE SUBMITTAL OF THE FOLLOWING, AT MINIMUM:
IES LM-79-08 ABSOLUTE TESTING REPORT FOR THE PROPOSED ALTERNATIVE LUMINAIRE;
IES LM-80-08 TESTING REPORT FOR LED CHIPS TO BE USED IN THE ALTERNATIVE LUMINAIRE, DOCUMENTING TESTING FOR A MINIMUM OF 8500 HOURS;
IES TM-21-11 REPORT FOR PROJECTED LONG TERM LUMEN MAINTENANCE, INCLUDING INCREMENTAL LUMEN DEPRECIATION TABLE AT 25 DEGREES CELSIUS TO A MINIMUM OF 50,000 HOURS;
IES PHOTOMETRIC FILE FROM THE MANUFACTURER FOR THE PROPOSED ALTERNATIVE LUMINAIRE;
PHOTOMETRIC PLOT, OVERLAID ON THE LAYOUT OF THE LUMINAIRE LOCATIONS FOR THIS SPECIFIC PROJECT, SHOWING LIGHT CONTOURS, ILLUMINATION STATISTICS FOR EACH OF THE LIGHTING GROUPS, AND VALUE OF LIGHT LOSS FACTOR USED IN THE ANALYSIS;
VALUES OF LLD, LDD, BALLAST FACTOR AND OTHER FACTORS USED FOR CALCULATION OF THE ASSUMED LIGHT LOSS FACTOR;
SPECIFICATION DATA REGARDING OPTICS, CHROMATIC COLOR TEMPERATURE, DRIVER, PHOTOCONTROL, SURGE PROTECTION, HOUSING AND GASKETING.
12. CONDUIT SHALL BE 2" MINIMUM, PVC SCHEDULE 40. CONDUIT UNDER PAVEMENT SHALL BE SCHEDULE 80. MINIMUM BURIAL DEPTH FOR CONDUIT SHALL BE 36".
WIRE SHALL BE STRANDED COPPER, XHHW-2.
13. THERE SHALL BE NO SPLICES OR JUNCTION BOXES BETWEEN POLES, EXCEPT AS NOTED ON THE PLANS. THE WIRE IN CONDUITS SHALL BE CONTINUOUS BETWEEN POLES.
14. UPON COMPLETION OF THIS PROJECT, THE CONTRACTOR SHALL FURNISH TO MAINEDOT A SET OF AS-BUILT PLANS FOR FUTURE REFERENCE AND SYSTEM MAINTENANCE.
15. IF STRUCTURAL ROCK IS ENCOUNTERED DURING INSTALLATION OF FOUNDATIONS, PAYMENT FOR EXCAVATION AND DOWELING REINFORCING INTO ROCK SHALL BE CONSIDERED INCIDENTAL TO FOUNDATION ITEMS.
16. BREAKAWAY DEVICES FOR LIGHT POLES SHALL CONFORM TO THE LATEST VERSION OF "AASHTO STANDARD SPECIFICATIONS FOR STRUCTURAL SUPPORTS FOR HIGHWAY SIGNS, LUMINAIRES AND TRAFFIC SIGNALS" AND NCHRP REPORT 350. THE BREAKAWAY DEVICE SHALL BE DESIGNED SO THAT THE ANCHOR BOLTS WILL NOT BEND WHEN A VEHICLE HITS THE POLE. A FRANGIBLE COUPLING SUCH AS TRANSPO POLE-SAFE 5000 SERIES (WITH A FEMALE ANCHOR), THE MANITOBA SAFETY BASE WITH REACTION PLATE, OR APPROVED EQUAL SHALL BE USED. BREAKAWAY DEVICES SHALL BE INSTALLED ON ALL POLES EXCEPT THOSE LOCATED MORE THAN 4' BEHIND GUARDRAIL.
17. PAYMENT UNDER ITEM 634.16, HIGHWAY LIGHTING, WILL INCLUDE ALL MATERIALS, LABOR AND EQUIPMENT NECESSARY TO PROVIDE A FULLY FUNCTIONING HIGHWAY LIGHTING SYSTEM, EXCEPT THOSE ITEMS TO BE PAID UNDER OTHER RELATED BID ITEMS IN THE CONTRACT.
18. ALL LIGHT BASES SHALL HAVE A GROUND ROD, LOCATED IN THE FOUNDATION THAT IS BONDED TO THE GROUNDING CONDUCTOR. PAYMENT FOR THE GROUND ROD SHALL BE INCLUDED IN ITEM 634.16, HIGHWAY LIGHTING.
19. PAYMENT UNDER ITEM 634.21, CONVENTIONAL LIGHT STANDARD, WILL INCLUDE BUT NOT BE LIMITED TO NEW POLES, TRANSFORMER BASES AND BREAKAWAY DEVICES.
20. A 480V TWIST-OFF PHOTO CONTROL AND NEMA TWIST-OFF PHOTO CONTROL RECEPTACLE SHALL BE FURNISHED AND INSTALLED ON THE LIGHTING CABINET TO CONTROL ALL FIXTURES ON THE NEW CIRCUIT.

STATE OF MAINE
DEPARTMENT OF TRANSPORTATION

IM-1925(600)E

WIN 19256.00

HIGHWAY PLANS

SIGNATURE
4226
P.E. NUMBER
December 18, 2013
DATE

	BY	DATE
PROJ. MANAGER	BRIAN KEEZER	
DESIGN-DETAILED	RAL	12-13
CHECKED-REVIEWED	ALG	12-13
DESIGN2-DETAILED2		
DESIGN3-DETAILED3		
REVISIONS 1		
REVISIONS 2		
REVISIONS 3		
REVISIONS 4		
FIELD CHANGES		

BANGOR
I-95 EXIT 184 NB ON-RAMP
LIGHTING PLAN

SHEET NUMBER
7
OF 44

Filename: ...\HIGHWAY\MSTA\007_lightplan.dgn Division: HIGHWAY Username: jeason Date:12/17/2013

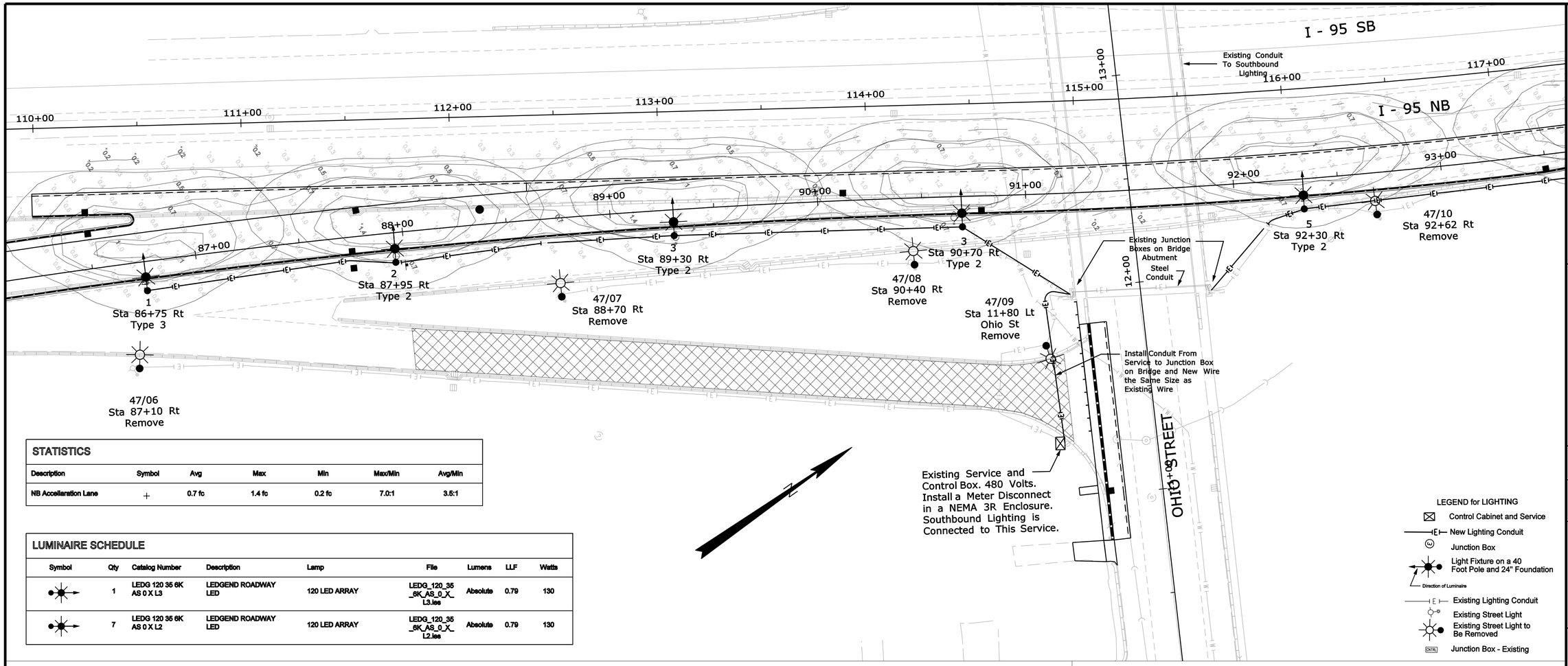

STATISTICS

Description	Symbol	Avg	Max	Min	Max/Min	Avg/Min
NB Accellaration Lane	+	0.7 fc	1.4 fc	0.2 fc	7.0:1	3.5:1

LUMINAIRE SCHEDULE

Symbol	Qty	Catalog Number	Description	Lamp	File	Lumens	LLF	Watts
	1	LEDG 120 35 6K AS 0 X L3	LEDGEND ROADWAY LED	120 LED ARRAY	LEDG_120_35_6K_AS_0_X_L3.ies	Absolute	0.79	130
	7	LEDG 120 35 6K AS 0 X L2	LEDGEND ROADWAY LED	120 LED ARRAY	LEDG_120_35_6K_AS_0_X_L2.ies	Absolute	0.79	130

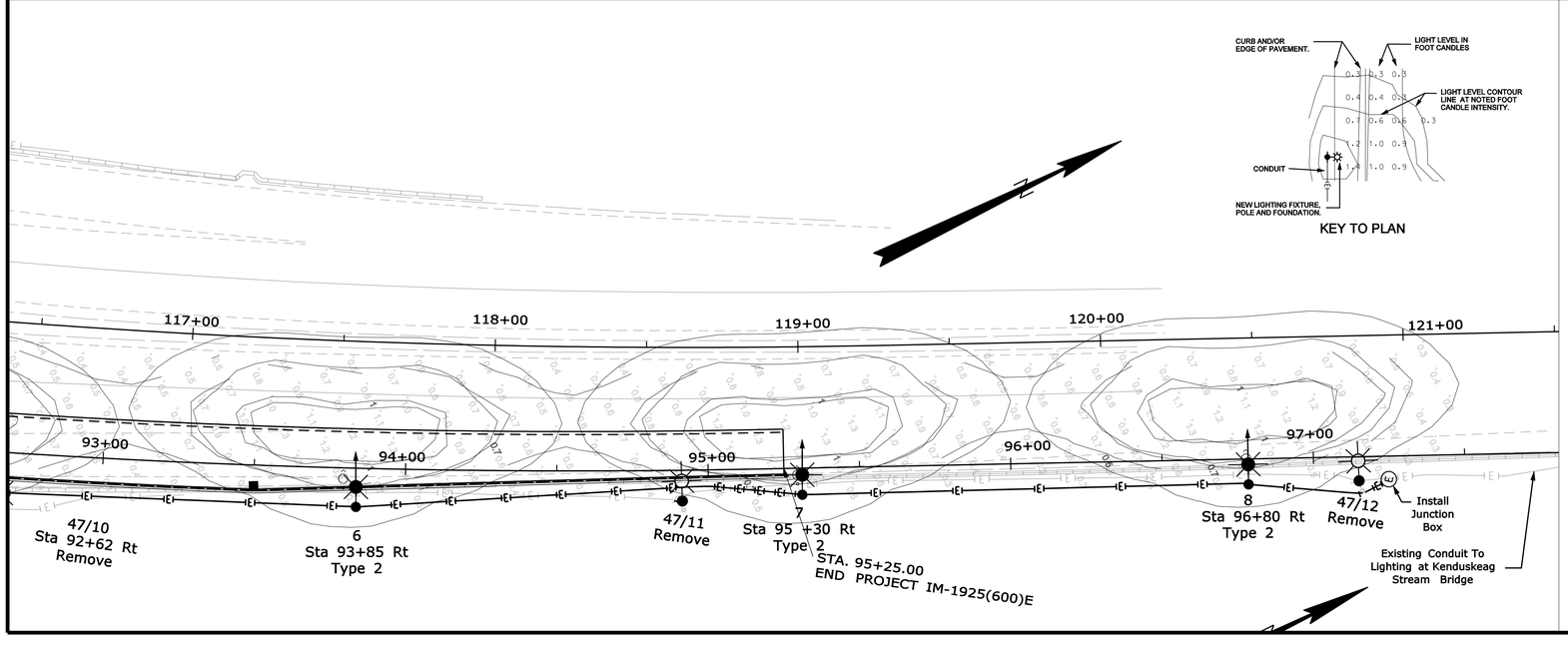

KEY TO PLAN

TYPICAL SECTIONS - PLACEMENT OF POLES

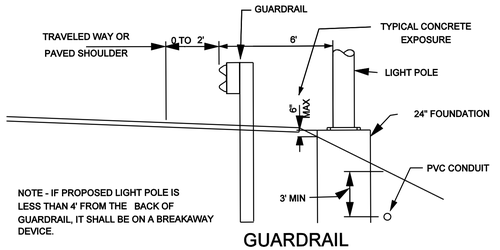

NOTE - IF PROPOSED LIGHT POLE IS LESS THAN 4' FROM THE BACK OF GUARDRAIL, IT SHALL BE ON A BREAKAWAY DEVICE.

GUARDRAIL

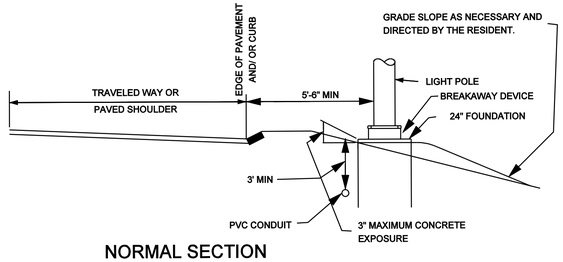

NORMAL SECTION

STATE OF MAINE
DEPARTMENT OF TRANSPORTATION

IM-1925(600)E

WIN 19256.00

HIGHWAY PLANS

	BY	DATE
PROJ. MANAGER	BRIAN KEEZER	
DESIGN-DETAILED	RAL	12-13
CHECKED-REVIEWED	ALG	12-13
DESIGN2-DETAILED2		
DESIGN3-DETAILED3		
REVISIONS 1		
REVISIONS 2		
REVISIONS 3		
REVISIONS 4		
FIELD CHANGES		

SIGNATURE

4226
P.E. NUMBER

December 18, 2013
DATE

BANGOR
I-95 EXIT 184 NB ON-RAMP
LIGHTING PLAN

SHEET NUMBER
8
OF 44

Filename: ...\HIGHWAY\MSTA\008_lightplan.dgn Division: HIGHWAY Username: jeason Date:12/17/2013

Filename: ...\00\HIGHWAY\MSTA\009_TCP.dgn Division: HIGHWAY Username: jeason Date:12/17/2013

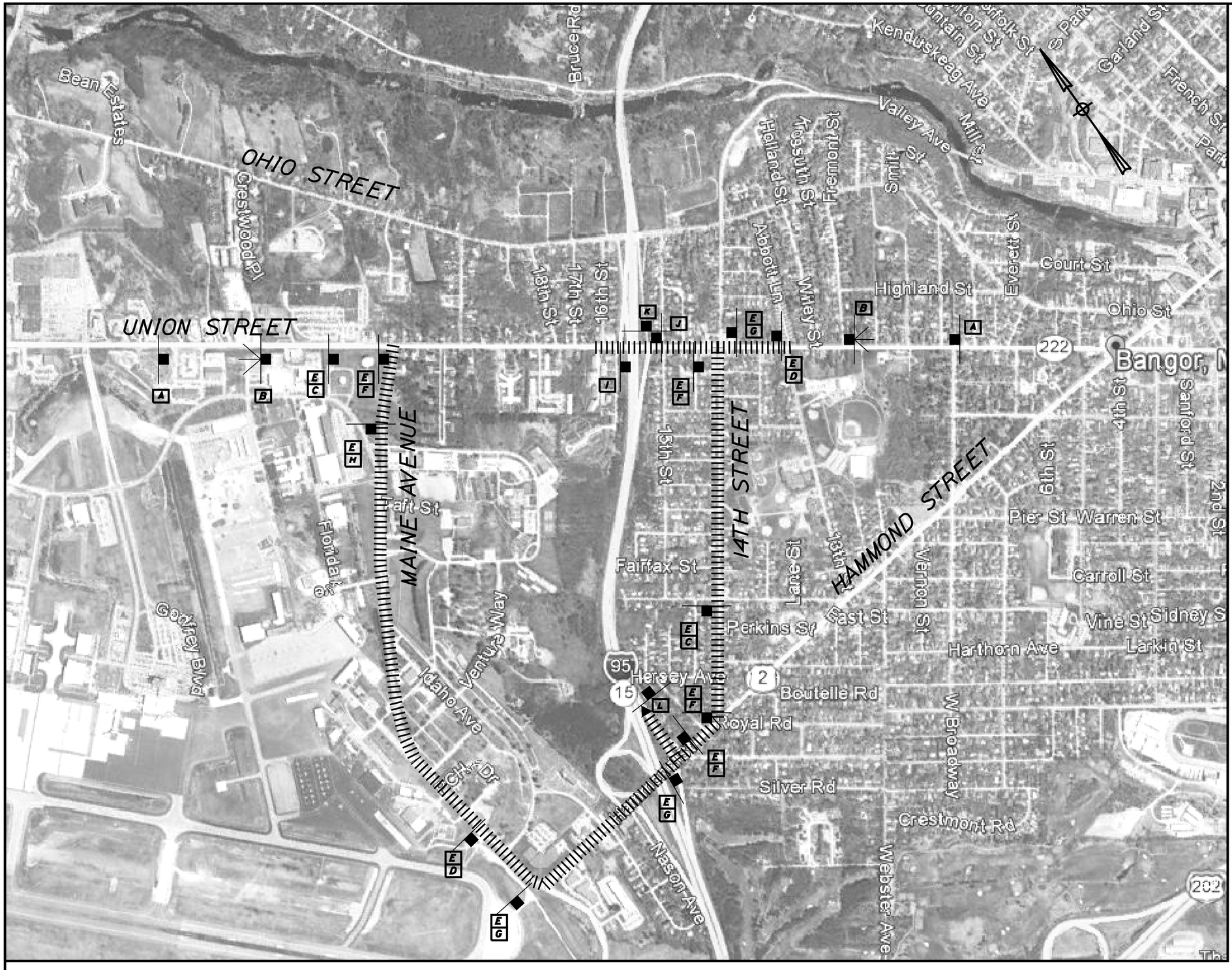

LAYOUT SCALE

500 0 500 1000

Scale of Feet

ROAD WORK AHEAD — A W20-1 48"X48"

I-95 NORTHBOUND ON RAMP CLOSED — B PORTABLE CHANGE MESSAGE SIGN

C M5-1R 21"X15"

D M5-1L 21"X15"

DETOUR / NORTH / INTERSTATE 95 — E M4-8 24"X12", M3-1 24"X12", M1-1 24"X24"

F M6-1R 21"X15"

G M6-1L 21"X15"

H M6-3 21"X15"

I R3-2 36"X36"

J R3-1 36"X36"

ROAD CLOSED / DETOUR — K R11-2 48"X30", M4-10R 48"X18"

END DETOUR — L M4-8a 24"X18"

NOTES:

1. THIS PLAN IS FOR TRAFFIC DETOURING FOR TEMPORARY CLOSURE OF THE I-95 EXIT 184 NORTHBOUND ON-RAMP FROM UNION STREET. OTHER SIGNAGE FOR I-95 NORTHBOUND LANE CLOSURE AND WORK ADJACENT TO OPEN INTERSTATE TRAVEL LANES SHALL BE ADDRESSED BY THE CONTRACTOR'S TCP.
2. ALL TRAFFIC CONTROL AND TRAFFIC CONTROL SIGNAGE SHALL BE COORDINATED WITH UNION STREET BRIDGE PROJECT IM-1668(100)E.
3. OTHER SIGNS MAY BE NEEDED AS DIRECTED BY THE RESIDENT.
4. SIGN LOCATIONS SHOWN ARE APPROXIMATE. ACTUAL LOCATIONS SHALL BE DETERMINED IN THE FIELD AND APPROVED BY THE RESIDENT.
5. ALL TRAFFIC CONTROL SHALL BE IN ACCORDANCE WITH THE MANUAL FOR UNIFORM TRAFFIC CONTROL DEVICES FOR STREETS AND HIGHWAYS (MUTCD) USDOT, FHWA, LATEST EDITION.
6. THE CONTRACTOR SHALL COVER ALL EXISTING SIGNING THAT CONFLICTS WITH WORK ZONE SIGNING (INCIDENTAL TO ITEM 652.35)
7. CONTRACTOR SHALL SET UP PORTABLE CHANGE MESSAGE SIGNS 48 HOURS PRIOR TO CLOSURE. MESSAGES TO BE DETERMINED BY THE CONTRACTOR AND APPROVED BY THE RESIDENT.

STATE OF MAINE
DEPARTMENT OF TRANSPORTATION

IM-1925(600)E

WIN 19256.00

HIGHWAY PLANS

		BY	DATE
PROJ. MANAGER	BRIAN KEEZER		
DESIGN-DETAILED	JLE	JLE	12-13
CHECKED-REVIEWED	ALG	ALG	12-13
DESIGN2-DETAILED2			
DESIGN3-DETAILED3			
REVISIONS 1			
REVISIONS 2			
REVISIONS 3			
REVISIONS 4			
FIELD CHANGES			

SIGNATURE
7960
P.E. NUMBER
December 18, 2013
DATE

BANGOR
I-95 EXIT 184 NB ON-RAMP

DETOUR SIGNING PLAN

SHEET NUMBER

9

OF 44

Filename: ...\HIGHWAY\MSTA\010_HDPlan1.dgn Division: HIGHWAY Username: jeason Date:12/17/2013

TO NEWPORT

I-95 SOUTHBOUND

I-95 NORTHBOUND

103+00 104+00 105+00 106+00 107+00 108+00 109+00

14+00 15+00 16+00

UNION STREET

APPROXIMATE LOCATION

CURVE DATA

PI = 82+40.03
D = 1° - 30' - 28.0"
Δ = 4° - 40' - 29.0" Lt.
R = 3800.00'
L = 310.04'
T = 155.11'
E = 3.16'

PC = STA. 80+84.92

PRC = STA. 83+94.96

STA. 79+99.21 =
POT STA. 15+55.85

80+00 81+00 82+00 83+00 84+00 85+00 86+00

N27°50'36.9"E

N33°24'14.4"E

STA. 109+98.5
LIMIT OF WORK

CLEARING LIMIT

REMOVE

PROPOSED GUARDRAIL

I-95 NB ON-RAMP "G"

6" TYPE 'B' UD

15" TYPE 'C' UD

INSTALL 20 LF X
15" RCP CLS III

INSTALL 21 LF
X 15" RCP CLS III

INSTALL 8 LF X 15" RCP. CL III.
MATCH EXISTING PIPE.

INSTALL 7 LF X 12" OPT III PIPE

INSTALL 10 LF X 15" OPT III PIPE

ALTER CB TO MH

STA. 80+50.00
BEGIN PROJECT IM-1925(600)E
MATCH PROJECT IM-1668(100)E
STA. 80+50.00, 7.30' RT.

EXISTING C.O.A.

DEMOUNT AND
RELOCATE SIGN
STA. 81+42, 14.0' RT.

JOHN W. CRANE
ANNA R. CRANE

NOTE:
GUARDRAIL FROM STA. 80+50.00 TO STA. 80+80.74 LT.
WILL BE INSTALLED AND PAID FOR UNDER
PROJECT STP-1668(100)E

ITEM 606.24 GUARDRAIL, TYPE 3D - SINGLE RAIL	
LOCATION	LENGTH
STA. 80+80.74, 18.0' LT. TO STA. 81+30.84, 18.0' LT.	50 LF
MATCH PROJECT STP-1668(100)E	

ITEM 606.265 TERM END- SGL RAIL- GALV STEEL
LOCATION
STA. 81+30.84, 18.0' LT.

EROSION CONTROL BLANKET ITEM 613.319
LOCATION
STA. 81+50 RT. TO STA. 85+50 RT.

CURVE DATA

PI = 87+36.85
D = 1° - 30' - 28.0"
Δ = 10° - 16' - 56.5" Rt.
R = 3800.00'
L = 681.95'
T = 341.89'
E = 15.35'

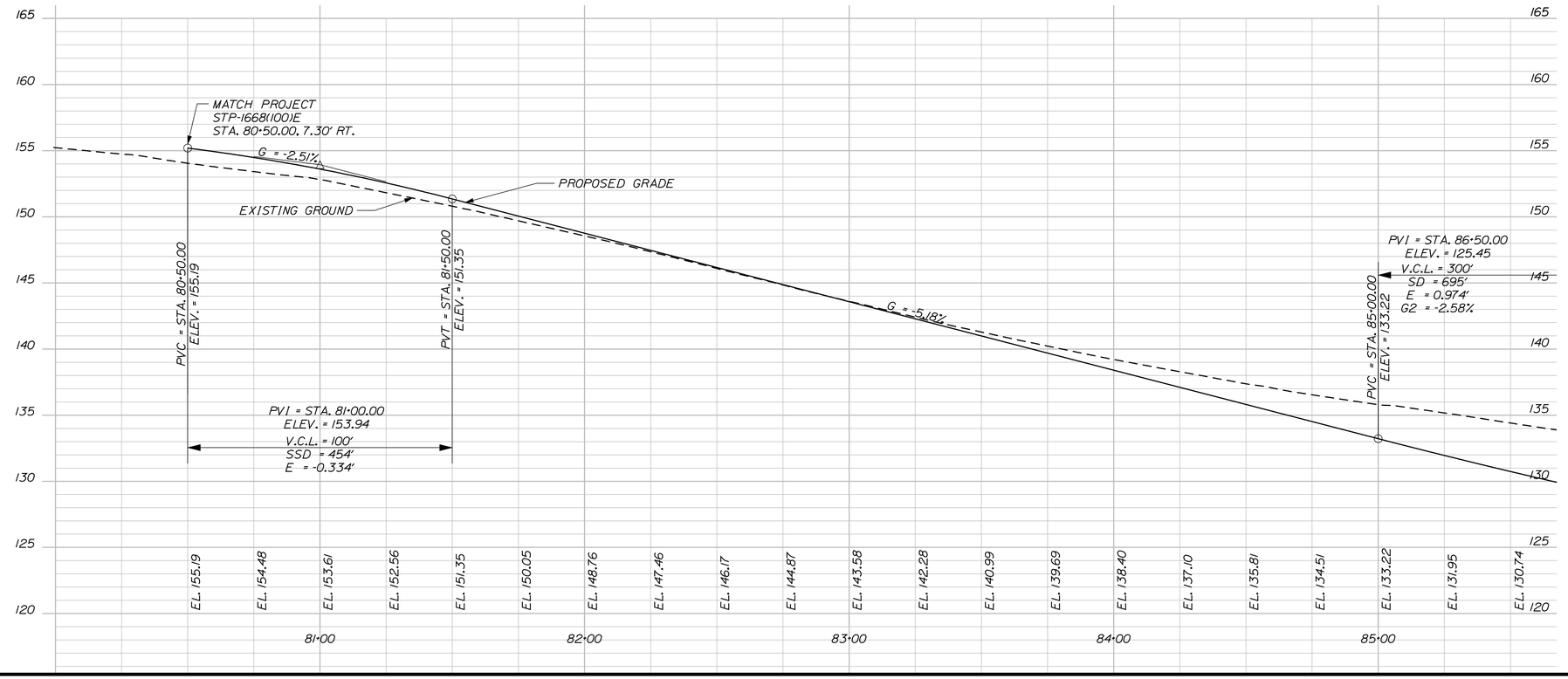

STATE OF MAINE
DEPARTMENT OF TRANSPORTATION

IM-1925(600)E

WIN
19256.00

HIGHWAY PLANS

	BY	DATE
SIGNATURE		
7960		
P.E. NUMBER		
December 18, 2013		
DATE		

PROJ. MANAGER	BRIAN KEEZER
DESIGN-DETAILED	JLE
CHECKED-REVIEWED	ALG
DESIGN2-DETAILED2	
DESIGN3-DETAILED3	
REVISIONS 1	
REVISIONS 2	
REVISIONS 3	
REVISIONS 4	
FIELD CHANGES	

BANGOR
I-95 EXIT 184 NB ON-RAMP
PLANS

SHEET NUMBER
10
OF 44

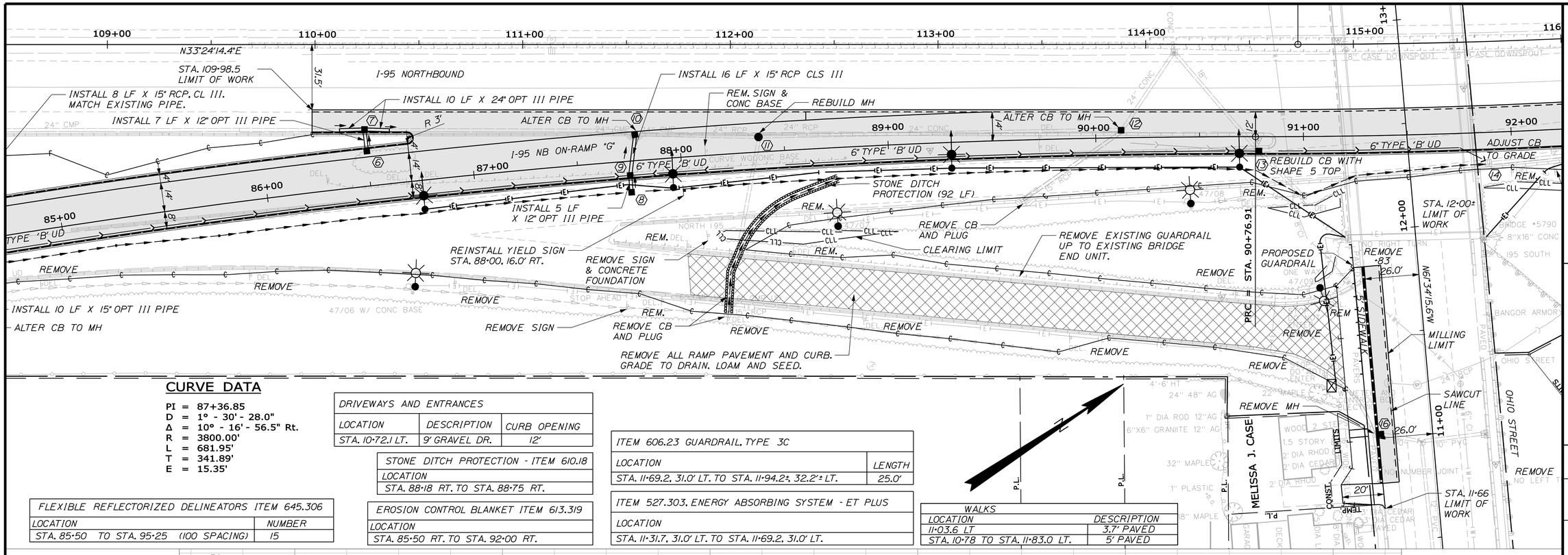

CURVE DATA

PI = 87+36.85
D = 1° - 30' - 28.0"
Δ = 10° - 16' - 56.5" Rt.
R = 3800.00'
L = 681.95'
T = 341.89'
E = 15.35'

DRIVEWAYS AND ENTRANCES		
LOCATION	DESCRIPTION	CURB OPENING
STA. 10+72.1 LT.	9' GRAVEL DR.	12'

STONE DITCH PROTECTION - ITEM 610.18
LOCATION
STA. 88+18 RT. TO STA. 88+75 RT.

EROSION CONTROL BLANKET ITEM 613.319
LOCATION
STA. 85+50 RT. TO STA. 92+00 RT.

ITEM 606.23 GUARDRAIL, TYPE 3C	
LOCATION	LENGTH
STA. 11+69.2, 31.0' LT. TO STA. 11+94.2±, 32.2'± LT.	25.0'

ITEM 527.303, ENERGY ABSORBING SYSTEM - ET PLUS
LOCATION
STA. 11+31.7, 31.0' LT. TO STA. 11+69.2, 31.0' LT.

WALKS	
LOCATION	DESCRIPTION
11+03.6 LT	3.7' PAVED
STA. 10+78 TO STA. 11+83.0 LT.	5' PAVED

FLEXIBLE REFLECTORIZED DELINEATORS ITEM 645.306	
LOCATION	NUMBER
STA. 85+50 TO STA. 95+25 (100 SPACING)	15

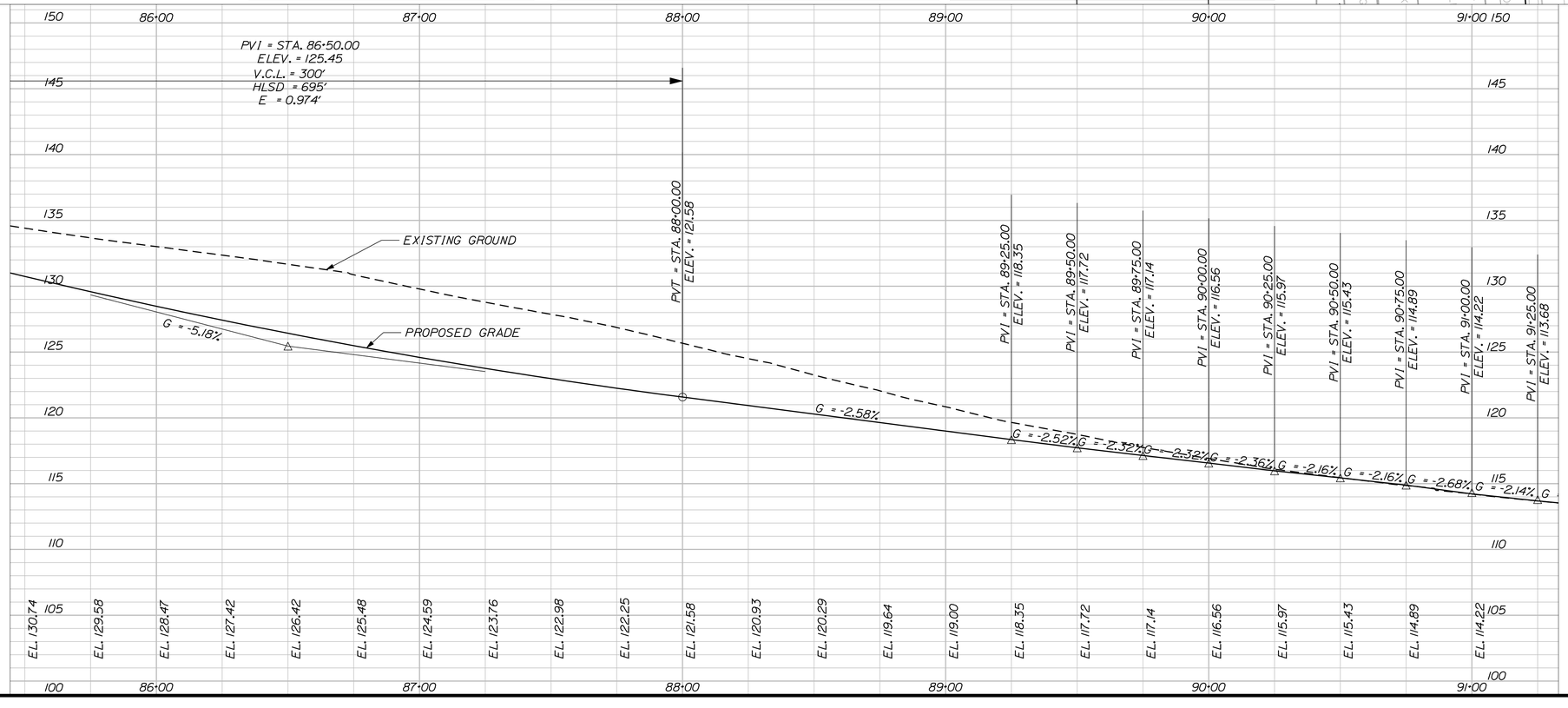

STATE OF MAINE
DEPARTMENT OF TRANSPORTATION

IM-1925(600)E

WIN
19256.00

HIGHWAY PLANS

	BY	DATE
SIGNATURE		
7960		
P.E. NUMBER		
December 18, 2013		
DATE		

PROJ. MANAGER	BRIAN KEEZER
DESIGN-DETAILED	JLE
CHECKED-REVIEWED	ALG
DESIGN2-DETAILED2	
DESIGN3-DETAILED3	
REVISIONS 1	
REVISIONS 2	
REVISIONS 3	
REVISIONS 4	
FIELD CHANGES	

BANGOR
I-95 EXIT 184 NB ON-RAMP
PLANS

SHEET NUMBER
11
OF 44

Filename: ...\HIGHWAY\MSTA\011_HDPlan2.dgn Division: HIGHWAY Username: jeason Date:12/17/2013

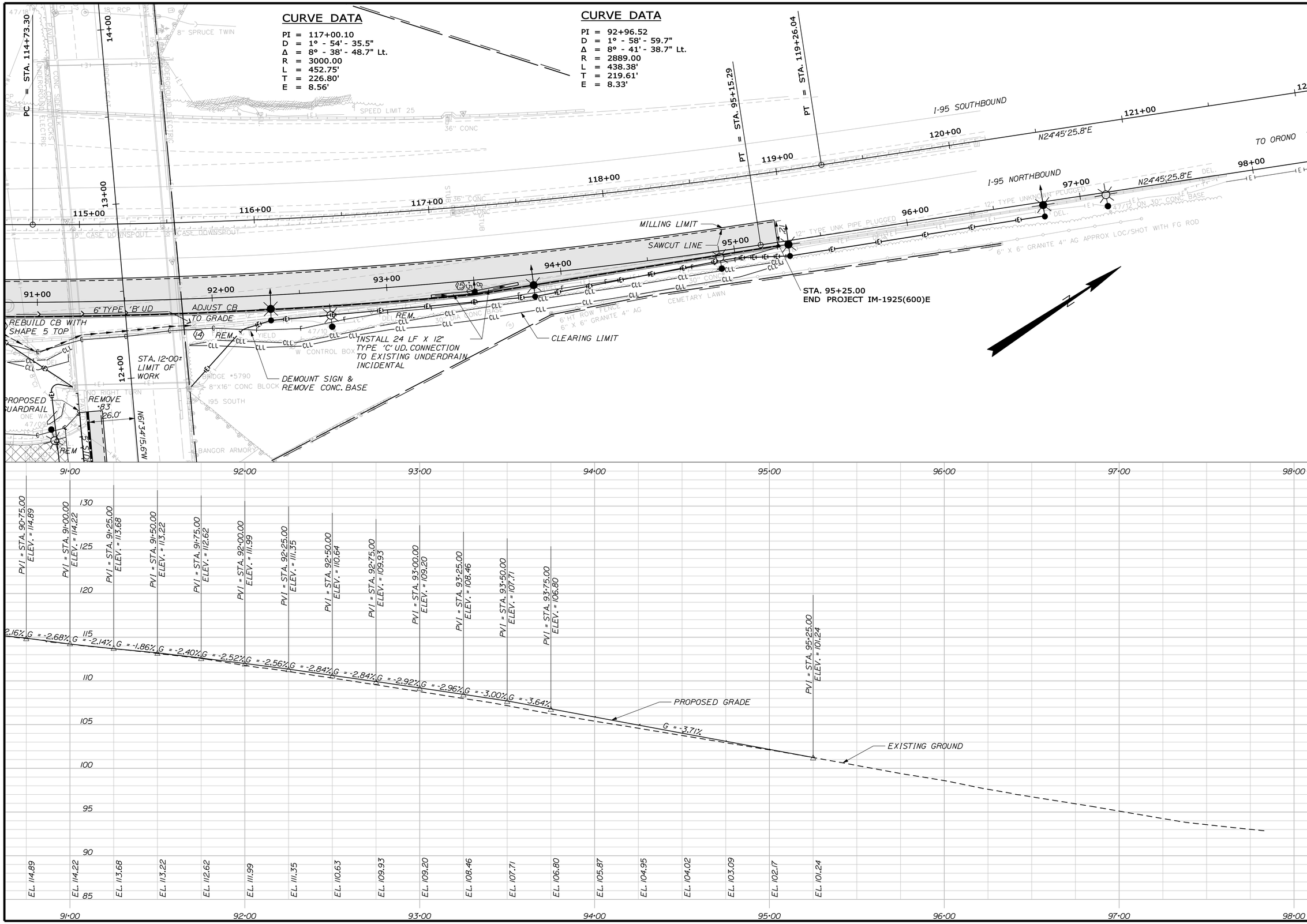

STATE OF MAINE
DEPARTMENT OF TRANSPORTATION

IM-1925(600)E

WIN 19256.00

HIGHWAY PLANS

PROJ. MANAGER	BRIAN KEEZER	BY	DATE
DESIGN-DETAILED	JLE	JLE	12-13
CHECKED-REVIEWED	ALG		12-13
DESIGN2-DETAILED2			
DESIGN3-DETAILED3			
REVISIONS 1			
REVISIONS 2			
REVISIONS 3			
REVISIONS 4			
FIELD CHANGES			

SIGNATURE
7960
P.E. NUMBER
December 18, 2013
DATE

BANGOR
I-95 EXIT 184 NB ON-RAMP
PLANS

SHEET NUMBER
12
OF 44

Filename: ...\HIGHWAY\MSTA\012_HDPlan3.dgn Division: HIGHWAY Username: jeason Date:12/17/2013

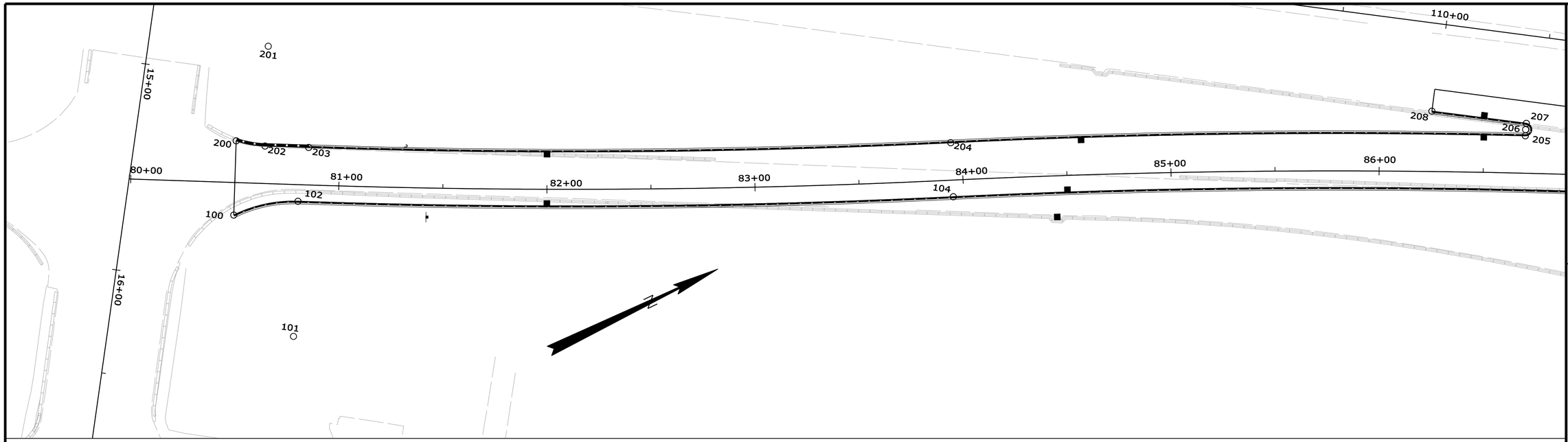

Horizontal Alignment Name: MAINLINE CURB RIGHT

STATION	NORTHING	EASTING
PC (100) 0+00.00	477257.88449	1726667.93604
PI ( ) 0+16.27	477274.14983	1726667.86380
CC (101)	477258.17319	1726732.93540
PRC (102) 0+31.88	477288.53220	1726675.46079

Radius: 65.00
Delta: 28°05'53.6" Right
Degree of Curvature(Arc): 88°08'50.5"
Length: 31.88
Tangent: 16.27
External: 2.00

PI ( ) 1+89.45	477427.78325	1726749.21399
CC (103)	479070.85421	1723310.31569
PRC (104) 3+46.85	477572.65166	1726811.21021

Radius: 3808.00
Delta: 4°44'20.9" Left
Degree of Curvature(Arc): 1°30'16.6"
Length: 314.97
Tangent: 157.58
External: 3.26

PI ( ) 6+88.02	477886.31008	1726945.44264
CC (105)	476080.71840	1730297.38273
PRC (106) 10+27.37	478170.97074	1727133.50713

Radius: 3792.00
Delta: 10°16'56.5" Right
Degree of Curvature(Arc): 1°30'39.5"
Length: 680.52
Tangent: 341.17
External: 15.32

PI ( ) 11+64.39	478285.29796	1727209.03877
CC (107)	479767.87507	1724716.37953
PT (108) 13+01.21	478406.24393	1727273.44228

Radius: 2897.00
Delta: 5°24'57.6" Left
Degree of Curvature(Arc): 1°58'39.9"
Length: 273.85
Tangent: 137.02
External: 3.24

POE (109) 14+76.58	478566.08967	1727345.56589

Tangent Direction: N 24°17'06.9" E
Tangent Length: 175.36

Horizontal Alignment Name: MAINLINE CURB LEFT

STATION	NORTHING	EASTING
PC (200) 0+00.00	477274.54245	1726636.34758
PI ( ) 0+07.11	477279.60138	1726641.34555
CC (201)	477308.27722	1726602.20135
PT (202) 0+14.12	477285.89213	1726644.66201

Radius: 48.00
Delta: 16°51'16.9" Left
Degree of Curvature(Arc): 119°21'58.3"
Length: 14.12
Tangent: 7.11
External: 0.52

PC (203) 0+35.12	477304.46084	1726654.47026

Tangent Direction: N 27°50'37.1" E
Tangent Length: 21.00

PI ( ) 1+89.49	477440.95998	1726726.57087
CC (212)	479070.88004	1723310.32803
PRC (204) 3+43.69	477582.88118	1726787.30709

Radius: 3782.00
Delta: 4°40'29.0" Left
Degree of Curvature(Arc): 1°30'53.9"
Length: 308.57
Tangent: 154.37
External: 3.15

PI ( ) 4+81.84	477709.88348	1726841.65866
CC (105)	476080.71840	1730297.38273
PRC (205) 6+19.86	477832.62570	1726905.04654

Radius: 3818.00
Delta: 4°08'39.7" Right
Degree of Curvature(Arc): 1°30'02.4"
Length: 276.17
Tangent: 138.14
External: 2.50

PI ( ) 6+90.95	477895.21590	1726938.76370
CC (206)	477834.04870	1726902.40499
PT (207) 6+29.03	477835.68921	1726899.89273

Radius: 3.00
Delta: 175°09'59.9" Left
Degree of Curvature(Arc): 1909°34'11.4"
Length: 9.17
Tangent: 71.09
External: 68.16

POE (208) 6+74.80	477797.43016	1726874.76784

Tangent Direction: S 33°17'35.1" W
Tangent Length: 45.77

CONTROL POINTS FOR TYPE 1 GRANITE CURB				
Point	Station	Offset	NORTHING	EASTING
200	80+50.00	-20.05	477274.54245	1726636.34758
201	80+63.88	-66.00	477308.27722	1726602.20135
202	80+63.92	-18.00	477285.89213	1726644.66201
203	80+84.92	-18.00	477304.46084	1726654.47026

CONTROL POINTS FOR TYPE 5 GRANITE CURB				
Point	Station	Offset	NORTHING	EASTING
203	80+84.92	-18.00	477304.46084	1726654.47026
204	83+94.96	-18.00	477582.88118	1726787.30709
205	86+69.82	-18.00	477832.62570	1726905.04654
206	86+69.88	-21.00	477834.04870	1726902.40499
207	86+70.18	-23.98	477835.68921	1726899.89273
208	86+25.00	-29.02	477797.43016	1726874.76784

RESET CURB TYPE 1 - ITEM 609.38	
LOCATION	LENGTH
STA. 80+63.90, 18.00' LT. TO STA. 80+84.90, 18.00' LT.	21.0 LF
STA. 10+86.3, 26.00' LT. TO STA. 11+83.00, 26.00' LT.	92 LF

VERTICAL CURB TYPE 1 - CIRCULAR ITEM 609.12		
LOCATION	LENGTH	REMARK
STA. 80+50.00, 20.1' LT. TO STA. 80+63.90, 18.0' LT.	14.1 LF	R=48'

RESET CURB TYPE 5 - ITEM 609.40 CURB TYPE 5 - ITEM 609.34	
LOCATION	LENGTH
STA. 80+50.0, 15.7' RT. TO STA. 95+25.0, 1.8' RT.	1456.6 LF
STA. 80+84.9, 18.0' LT. TO STA. 86+69.9, 18.0' LT.	576.8 LF
STA. 86+25.0, 29.0' LT. TO STA. 86+70.2, 24.0' LT.	41.8 LF

TERMINAL CURB TYPE 1 - 8 LF ITEM 609.238
LOCATION
STA. 10+78.3, 26.1' LT. TO STA. 10+86.3, 26.0' LT.

CURB TYPE 5 - CIRCULAR ITEM 609.35		
LOCATION	LENGTH	REMARK
STA. 86+69.9, 18.0' LT. TO STA. 86+70.2, 24.0' LT.	9.1 LF	R=3'

STATE OF MAINE
DEPARTMENT OF TRANSPORTATION

IM-1925(600)E

WIN 19256.00

HIGHWAY PLANS

SIGNATURE
7960
P.E. NUMBER
December 18, 2013
DATE

	BY	DATE
PROJ. MANAGER	BRIAN KEEZER	
DESIGN-DETAILED	JLE	12-13
CHECKED-REVIEWED	ALG	12-13
DESIGN2-DETAILED2		
DESIGN3-DETAILED3		
REVISIONS 1		
REVISIONS 2		
REVISIONS 3		
REVISIONS 4		
FIELD CHANGES		

BANGOR
I-95 EXIT 184 NB ON-RAMP

GEOMETRY PLANS

SHEET NUMBER
13
OF 44

Filename: ...\MSTA\013_geometryplan.dgn Username: jeason Division: HIGHWAY Date:12/17/2013

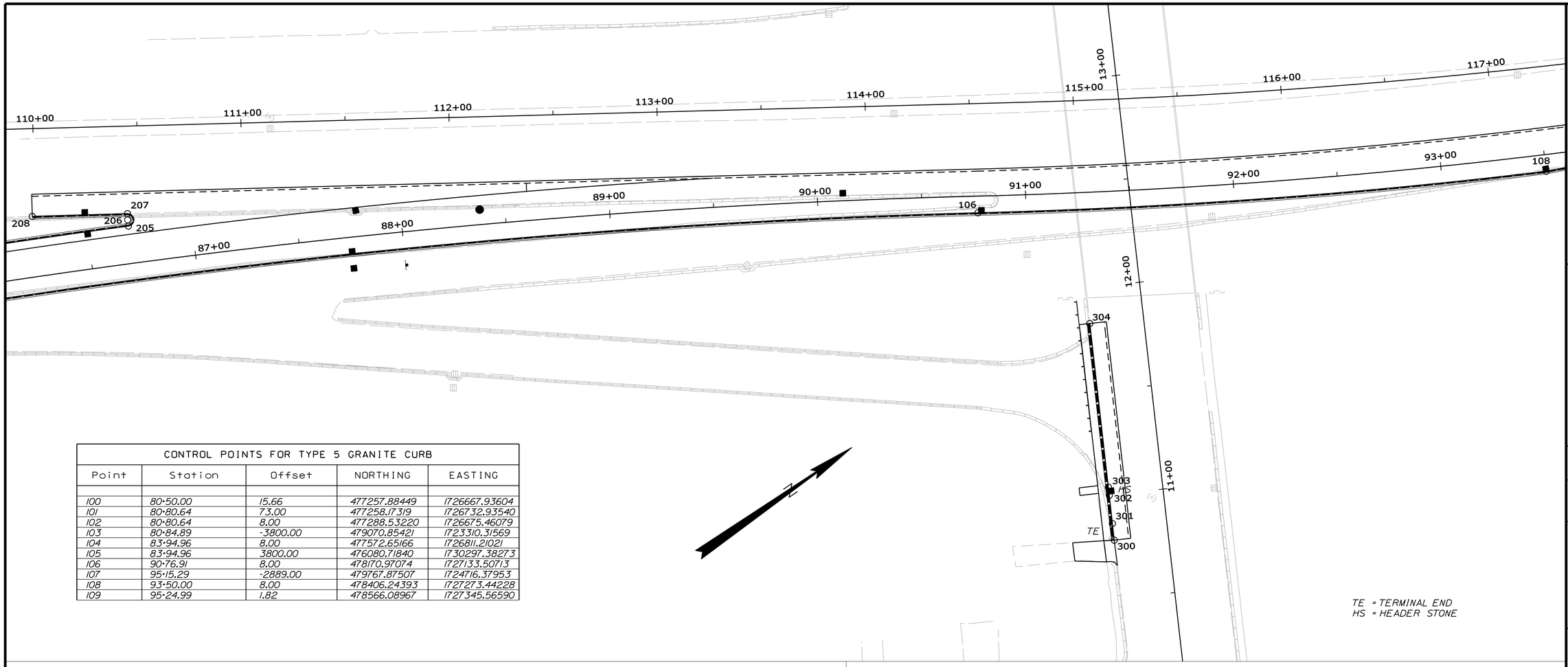

TE = TERMINAL END
HS = HEADER STONE

CONTROL POINTS FOR TYPE 5 GRANITE CURB				
Point	Station	Offset	NORTHING	EASTING
100	80+50.00	15.66	477257.88449	1726667.93604
101	80+80.64	73.00	477258.17319	1726732.93540
102	80+80.64	8.00	477288.53220	1726675.46079
103	80+84.89	-3800.00	479070.85421	1723310.31569
104	83+94.96	8.00	477572.65166	1726811.21021
105	83+94.96	3800.00	476080.71840	1730297.38273
106	90+76.91	8.00	478170.97074	1727133.50713
107	95+15.29	-2889.00	479767.87507	1724716.37953
108	93+50.00	8.00	478406.24393	1727273.44228
109	95+24.99	1.82	478566.08967	1727345.56590

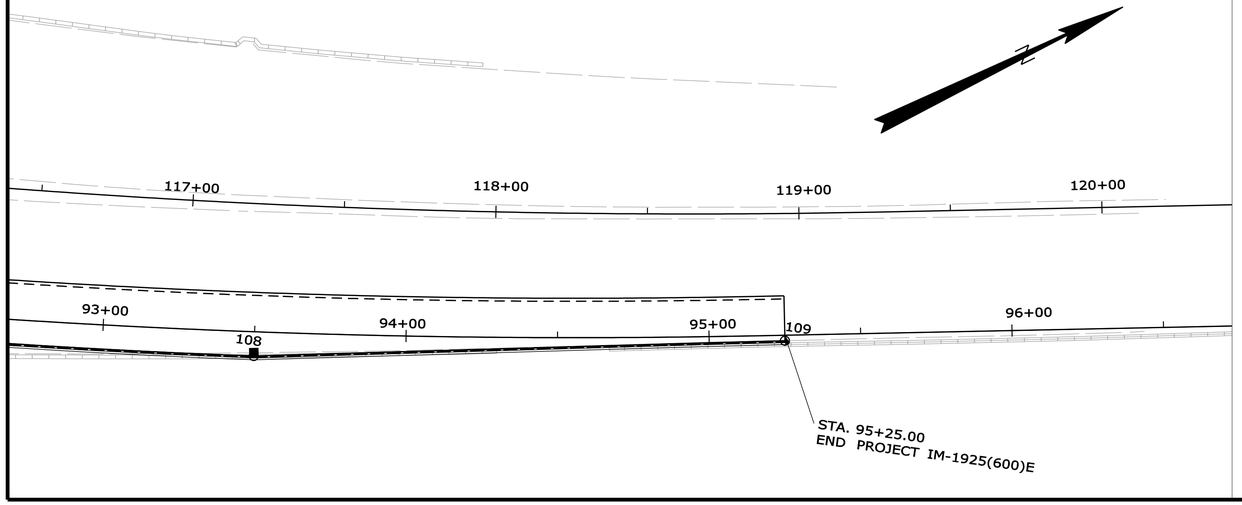

CONTROL POINTS FOR TYPE 1 GRANITE CURB				
Point	Station	Offset	NORTHING	EASTING
300	10+78.29	-26.08	478134.63530	1727299.90915
301	10+86.29	-26.05	478138.46874	1727292.88742
302	10+99.94	-26.00	478145.00654	1727280.90507
303	11+03.94	-26.00	478146.91398	1727277.38915
304	11+83.00	-25.96	478184.59052	1727207.88115

Horizontal Alignment Name: OH10 curb lt

	STATION	NORTHING	EASTING
POB (300)	0+00.00	478134.63530	1727299.90915
PI (301)	0+08.00	478138.46874	1727292.88742
Tangent Direction: N 61°22'05.2" W			
Tangent Length: 8.00 Terminal End			
PI (302)	0+21.65	478145.00654	1727280.90507
Tangent Direction: N 61°22'56.2" W			
PI (303)	0+25.65	478146.91398	1727277.38915
Tangent Direction: N 61°31'10.1" W			
Tangent Length: 4.00 Header Stone			
POE (304)	1+04.71	478184.59052	1727207.88115
Tangent Direction: N 61°32'25.0" W			
Tangent Length: 79.06			

STATE OF MAINE
DEPARTMENT OF TRANSPORTATION

IM-1925(600)E

WIN
19256.00

HIGHWAY PLANS

SIGNATURE
7960
P.E. NUMBER
December 18, 2013
DATE

PROJ. MANAGER	BRIAN KEEZER		
DESIGN-DETAILED	JLE	JLE	12-13
CHECKED-REVIEWED	ALG		12-13
DESIGN2-DETAILED2			
DESIGN3-DETAILED3			
REVISIONS 1			
REVISIONS 2			
REVISIONS 3			
REVISIONS 4			
FIELD CHANGES			

BANGOR
I-95 EXIT 184 NB ON-RAMP

GEOMETRY PLANS

SHEET NUMBER
14
OF 44

Filename: ...\MSTA\014_geometryplan.dgn Division: HIGHWAY Username: jeason Date:12/17/2013

STA. 80+80.74, 18.0' LT. TO STA. 81+30.74 18.0' LT
INSTALL GUARDRAIL TYPE 3D - SINGLE RAIL WITH
ITEM 606.265, TERMINAL END-SINGLE RAIL-GALVANIZED STEEL AT STA. 81+30.74 LT.
MATCH GUARDRAIL FROM PROJECT IM-1668(100)E

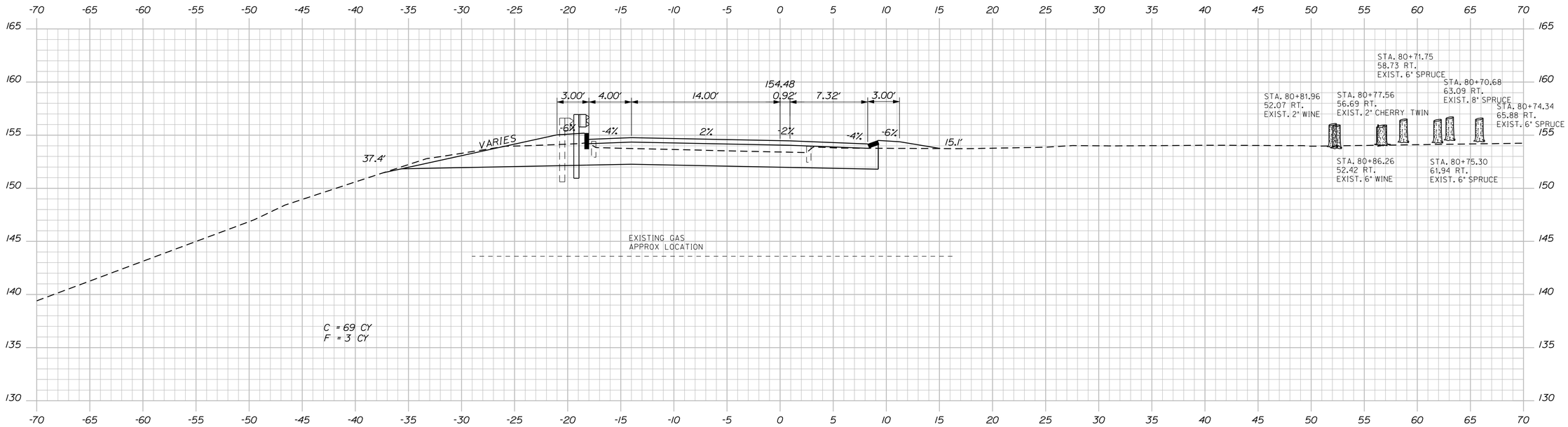

C = 69 CY
F = 3 CY

NOTE: GUARDRAIL FROM STA. 80+50 TO STA. 80+80.74 LT.
INSTALLED AND PAID FOR UNDER PROJECT IM-1668(100)E

80+75.00

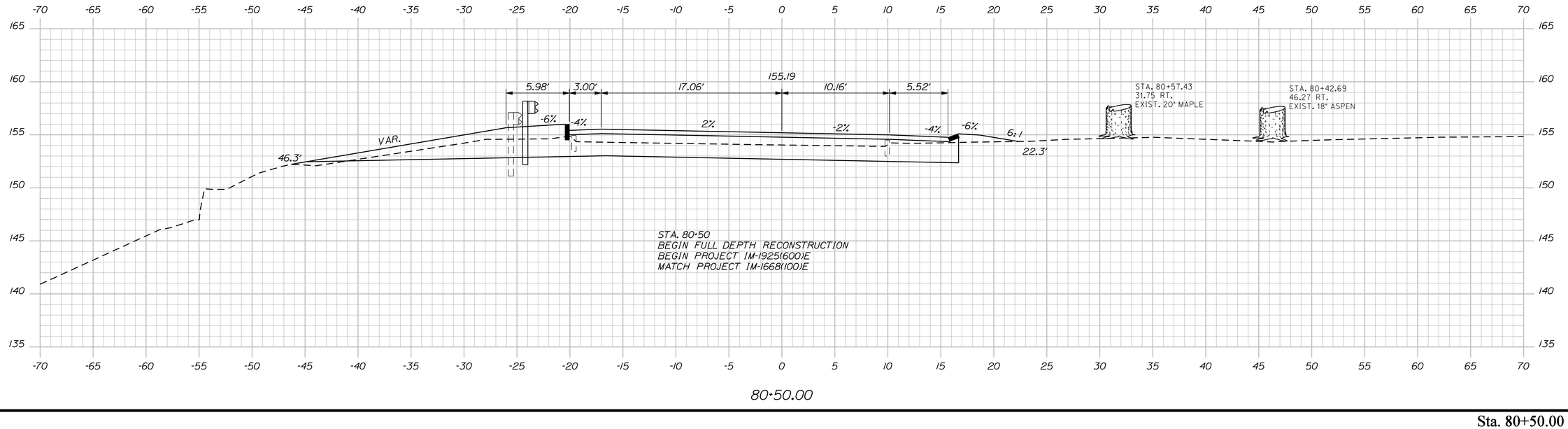

STA. 80+50
BEGIN FULL DEPTH RECONSTRUCTION
BEGIN PROJECT IM-1925(600)E
MATCH PROJECT IM-1668(100)E

80+50.00

STATE OF MAINE
DEPARTMENT OF TRANSPORTATION

IM-1925(600)E

WIN
19256.00

HIGHWAY PLANS

	BY	DATE
PROJ. MANAGER	BRIAN KEEZER	
DESIGN-DETAILED	JLE	12-13
CHECKED-REVIEWED	ALG	12-13
DESIGN2-DETAILED2		
DESIGN3-DETAILED3		
REVISIONS 1		
REVISIONS 2		
REVISIONS 3		
REVISIONS 4		
FIELD CHANGES		

SIGNATURE
7960
P.E. NUMBER
December 18, 2013
DATE

BANGOR
I-95 EXIT 184 NB ON-RAMP

CROSS SECTIONS

SHEET NUMBER
15
OF 44

Sta. 80+50.00 to Sta. 80+75.00

Filename: ...\MSTA\015_XSECT_80+50_001.dgn Division: HIGHWAY Username: jeason Date:12/17/2013

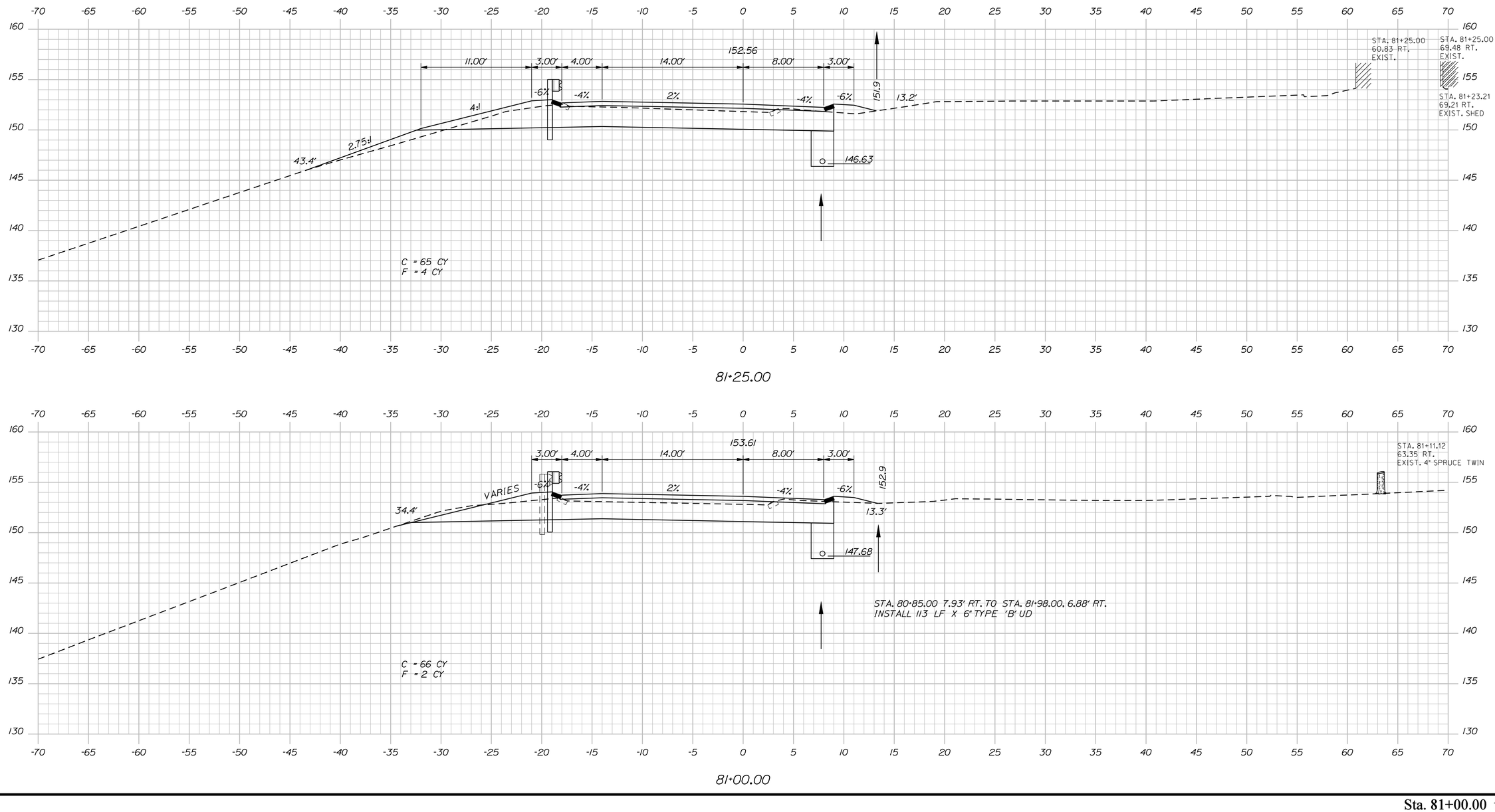

STATE OF MAINE
DEPARTMENT OF TRANSPORTATION

IM-1925(600)E

WIN
19256.00

HIGHWAY PLANS

		BY	DATE
PROJ. MANAGER	BRIAN KEEZER		
DESIGN-DETAILED	JLE	JLE	12-13
CHECKED-REVIEWED	ALG		12-13
DESIGN2-DETAILED2			
DESIGN3-DETAILED3			
REVISIONS 1			
REVISIONS 2			
REVISIONS 3			
REVISIONS 4			
FIELD CHANGES			

SIGNATURE
7960
P.E. NUMBER
December 18, 2013
DATE

BANGOR
I-95 EXIT 184 NB ON-RAMP

CROSS SECTIONS

SHEET NUMBER
16
OF 44

Sta. 81+00.00 to Sta. 81+25.00

Filename: ...\MSTA\016_XSECT_81+00_002.dgn Division: HIGHWAY Username: jeason Date:12/17/2013

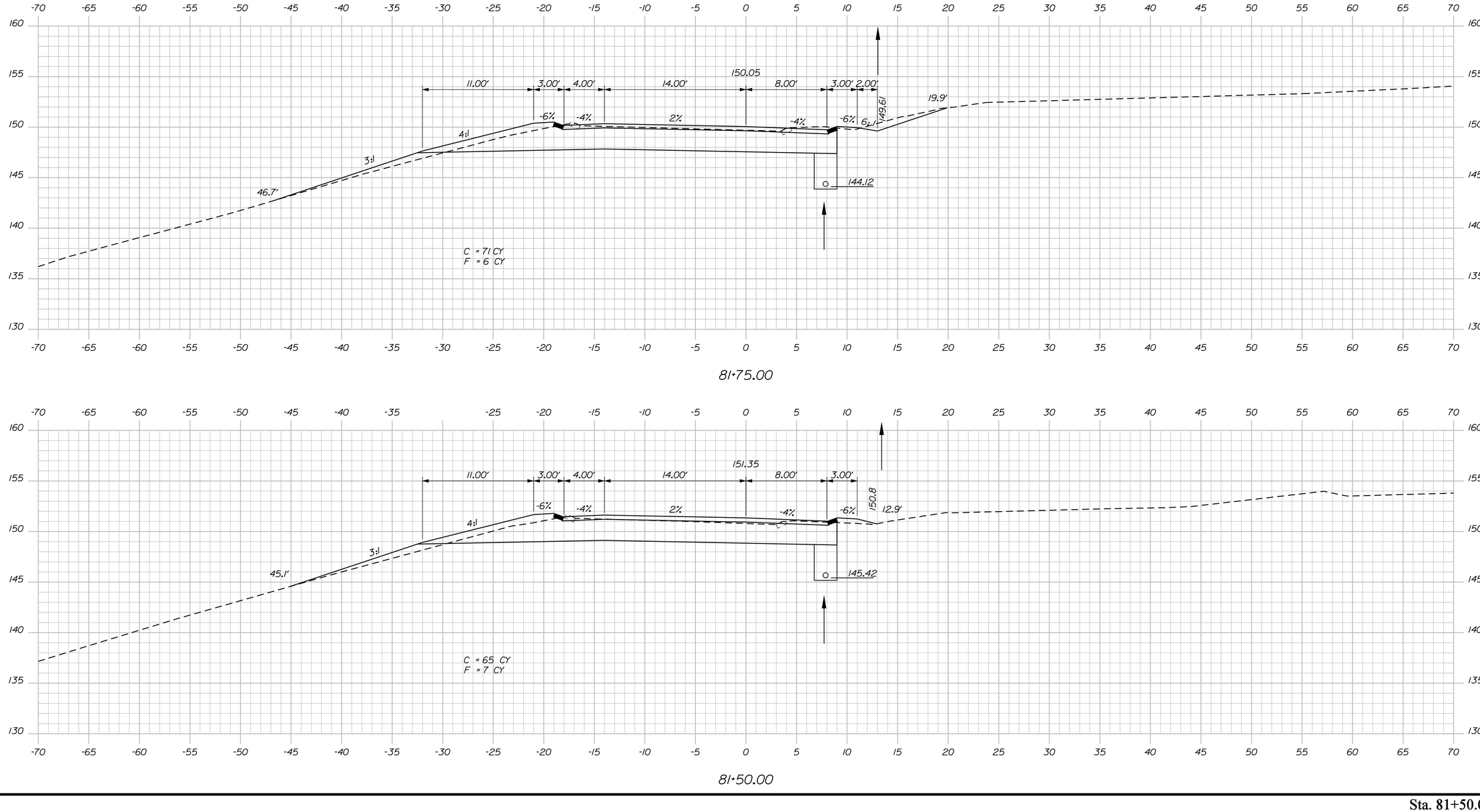

Sta. 81+50.00 to Sta. 81+75.00

STATE OF MAINE
DEPARTMENT OF TRANSPORTATION

IM-1925(600)E

WIN
19256.00

HIGHWAY PLANS

			DATE
PROJ. MANAGER	BRIAN KEEZER	BY	
DESIGN-DETAILED	JLE	JLE	12-13
CHECKED-REVIEWED	ALG		12-13
DESIGN2-DETAILED2			
DESIGN3-DETAILED3			
REVISIONS 1			
REVISIONS 2			
REVISIONS 3			
REVISIONS 4			
FIELD CHANGES			

SIGNATURE

7960
P.E. NUMBER

December 18, 2013
DATE

BANGOR
I-95 EXIT 184 NB ON-RAMP

CROSS SECTIONS

SHEET NUMBER

17

OF 44

Filename: ...\MSTA\017_XSECT_81+50_003.dgn Division: HIGHWAY Username: jeason Date:12/17/2013

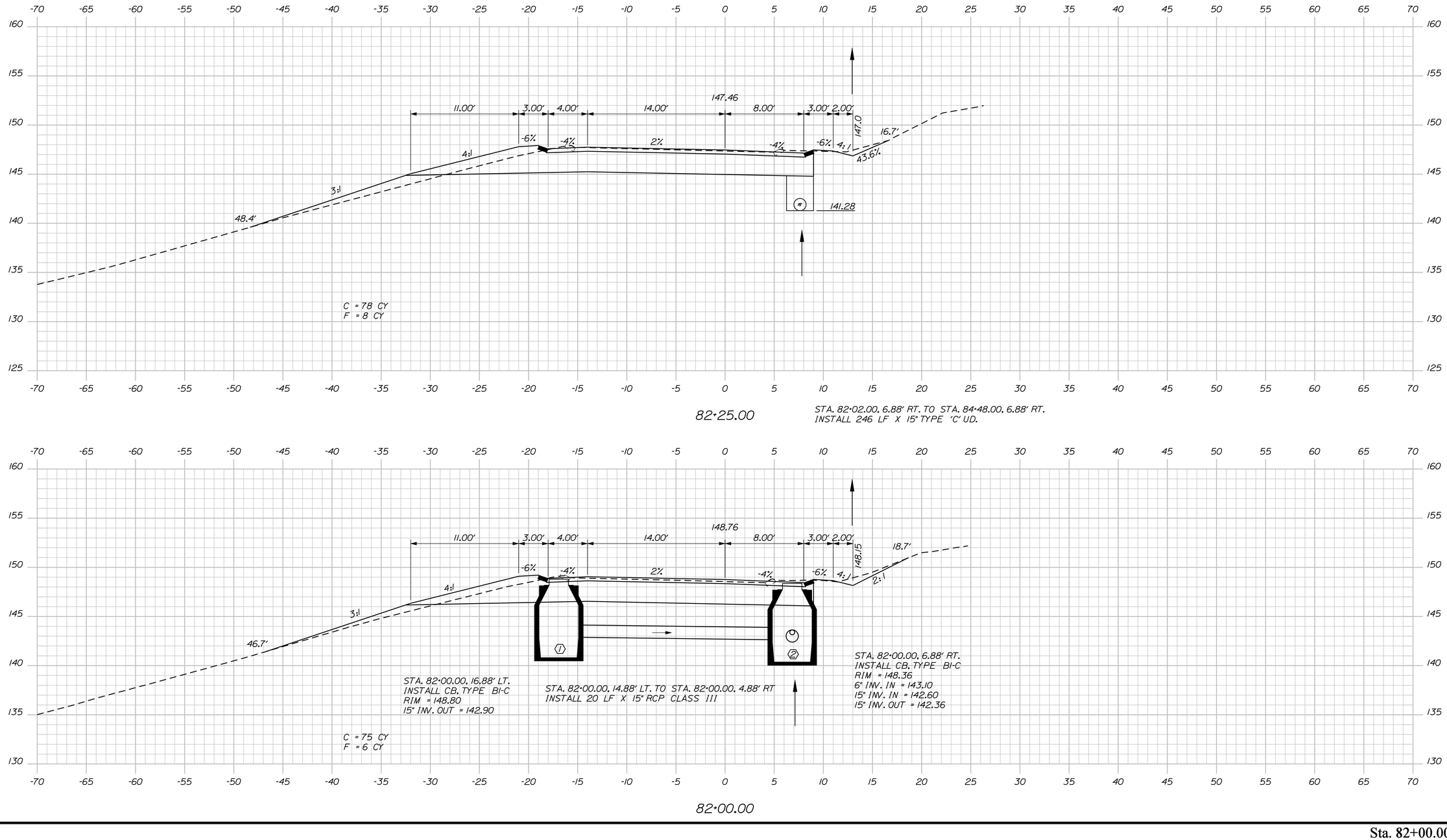

STATE OF MAINE
DEPARTMENT OF TRANSPORTATION

IM-1925(600)E

WIN
19256.00

HIGHWAY PLANS

PROJ. MANAGER	BRIAN KEEZER	BY	DATE
DESIGN-DETAILED	JLE	JLE	12-13
CHECKED-REVIEWED	ALG		12-13
DESIGN2-DETAILED2			
DESIGN3-DETAILED3			
REVISIONS 1			
REVISIONS 2			
REVISIONS 3			
REVISIONS 4			
FIELD CHANGES			

SIGNATURE

7960
P.E. NUMBER

December 18, 2013
DATE

BANGOR
I-95 EXIT 184 NB ON-RAMP

CROSS SECTIONS

SHEET NUMBER

18

OF 44

Sta. 82+00.00 to Sta. 82+25.00

Filename: ...\MSTA\018_XSECT_82+00_004.dgn Division: HIGHWAY Username: jeason Date:12/17/2013

Filename: ...\MSTA\019_XSECT_82+50_005.dgn Division: HIGHWAY Username: jeason Date:12/17/2013

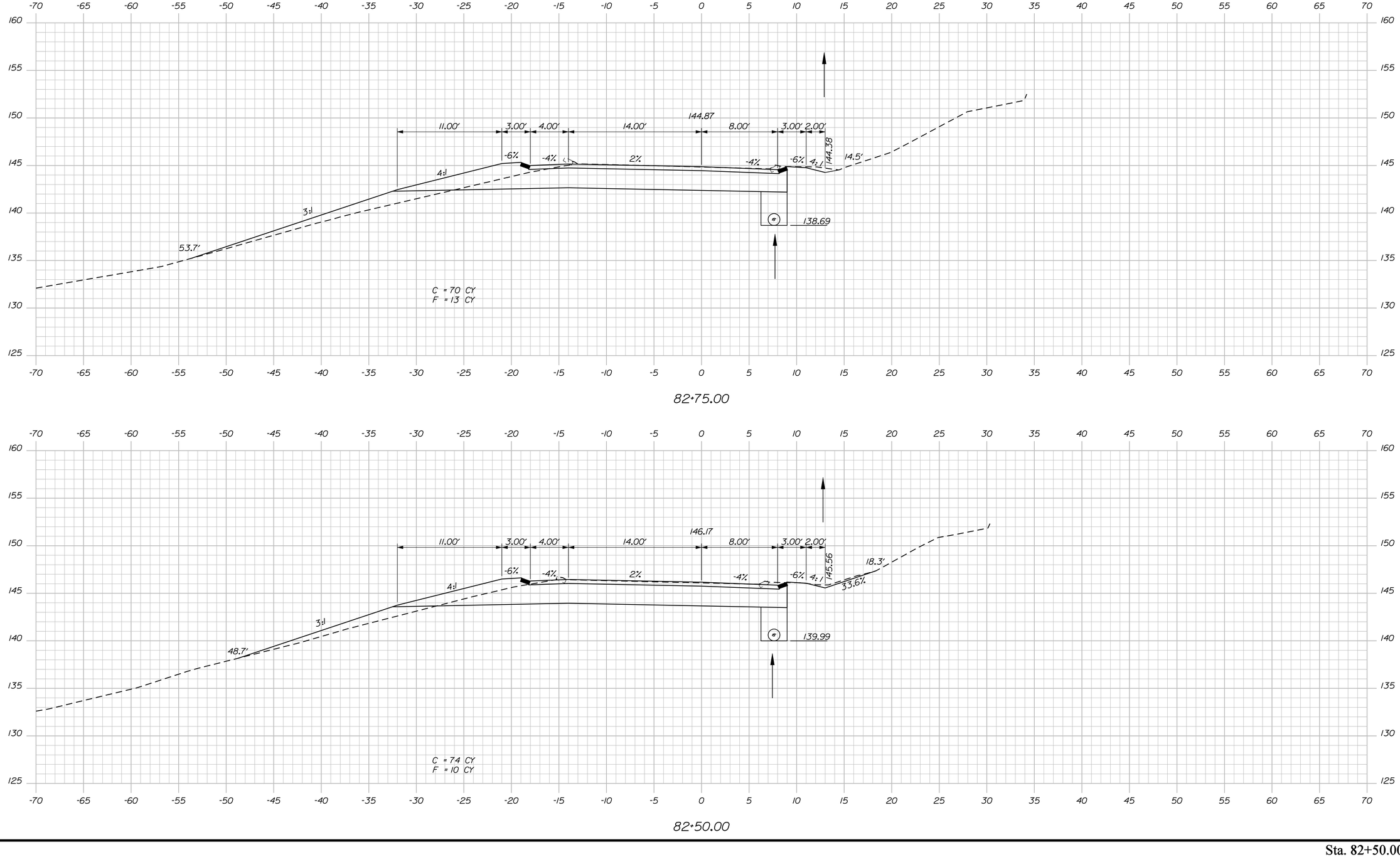

PROJ. MANAGER	BRIAN KEEZER			
DESIGN-DETAILED	JLE	JLE	12-13	
CHECKED-REVIEWED	ALG	ALG	12-13	
DESIGN2-DETAILED2				
DESIGN3-DETAILED3				
REVISIONS 1				
REVISIONS 2				
REVISIONS 3				
REVISIONS 4				
FIELD CHANGES				

STATE OF MAINE
DEPARTMENT OF TRANSPORTATION

IM-1925(600)E

WIN 19256.00

HIGHWAY PLANS

SIGNATURE

7960

P.E. NUMBER

December 18, 2013

DATE

BANGOR I-95 EXIT 184 NB ON-RAMP

CROSS SECTIONS

SHEET NUMBER

19

OF 44

Sta. 82+50.00 to Sta. 82+75.00

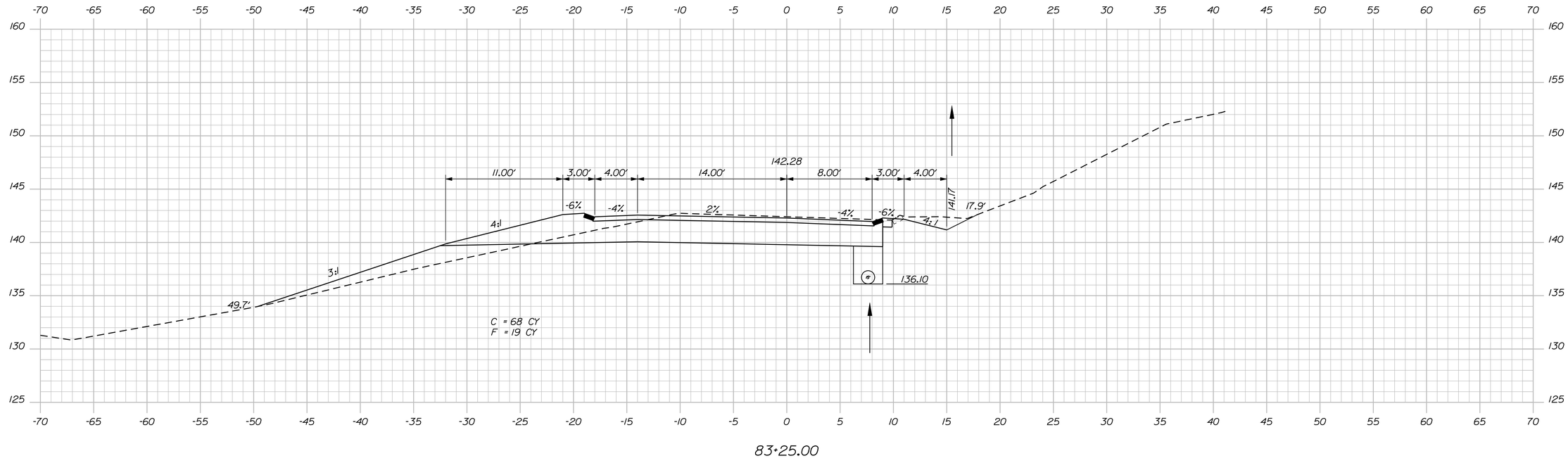

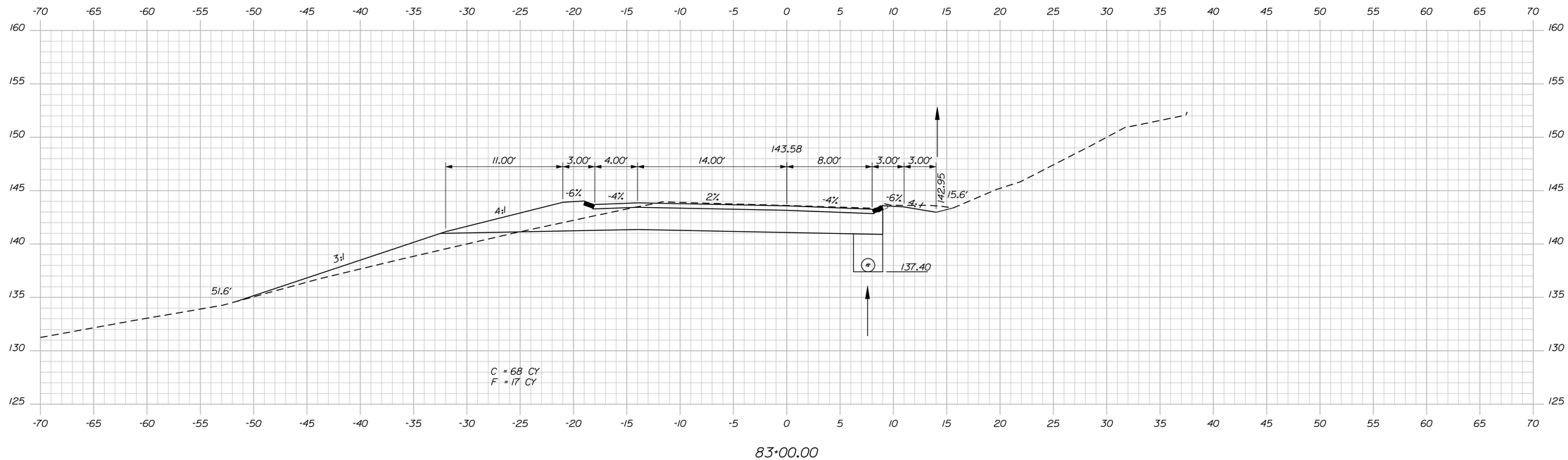

STATE OF MAINE
DEPARTMENT OF TRANSPORTATION

IM-1925(600)E

WIN
19256.00

HIGHWAY PLANS

	BY	DATE
PROJ. MANAGER	BRIAN KEEZER	
DESIGN-DETAILED	JLE	12-13
CHECKED-REVIEWED	ALG	12-13
DESIGN2-DETAILED2		
DESIGN3-DETAILED3		
REVISIONS 1		
REVISIONS 2		
REVISIONS 3		
REVISIONS 4		
FIELD CHANGES		

SIGNATURE
7960
P.E. NUMBER
December 18, 2013
DATE

BANGOR
I-95 EXIT 184 NB ON-RAMP

CROSS SECTIONS

SHEET NUMBER
20
OF 44

Sta. 83+00.00 to Sta. 83+25.00

Filename: ...\MSTA\020_XSECT_83+00_006.dgn Division: HIGHWAY Username: jeason Date:12/17/2013

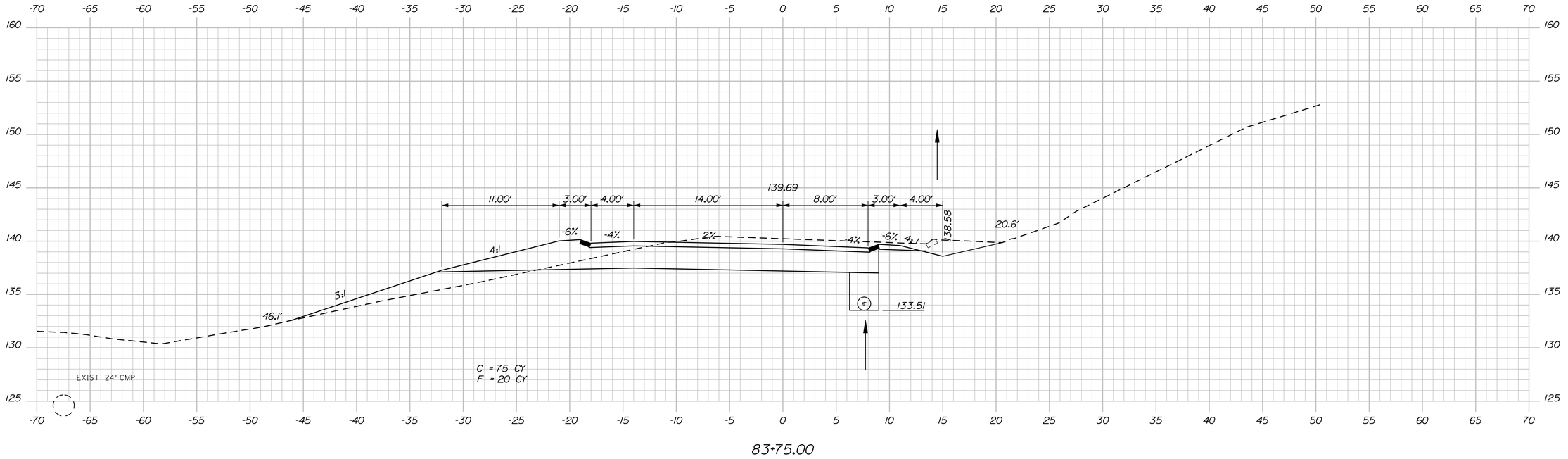

83+75.00

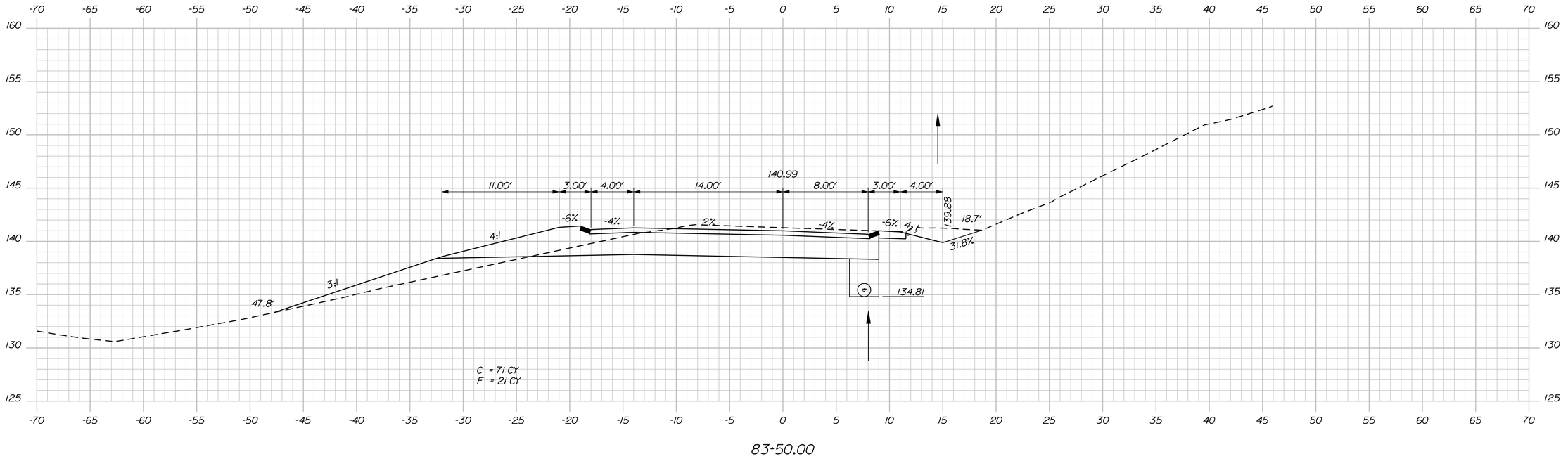

83+50.00

STATE OF MAINE
DEPARTMENT OF TRANSPORTATION

IM-1925(600)E

WIN
19256.00

HIGHWAY PLANS

PROJ. MANAGER	BRIAN KEEZER	
DESIGN-DETAILED	JLE	12-13
CHECKED-REVIEWED	ALG	12-13
DESIGN2-DETAILED2		
DESIGN3-DETAILED3		
REVISIONS 1		
REVISIONS 2		
REVISIONS 3		
REVISIONS 4		
FIELD CHANGES		

SIGNATURE
7960
P.E. NUMBER
December 18, 2013
DATE

BANGOR
I-95 EXIT 184 NB ON-RAMP

CROSS SECTIONS

SHEET NUMBER
21
OF 44

Sta. 83+50.00 to Sta. 83+75.00

Filename: ...\MSTA\021_XSECT_83+50_007.dgn Division: HIGHWAY Username: jeason Date:12/17/2013

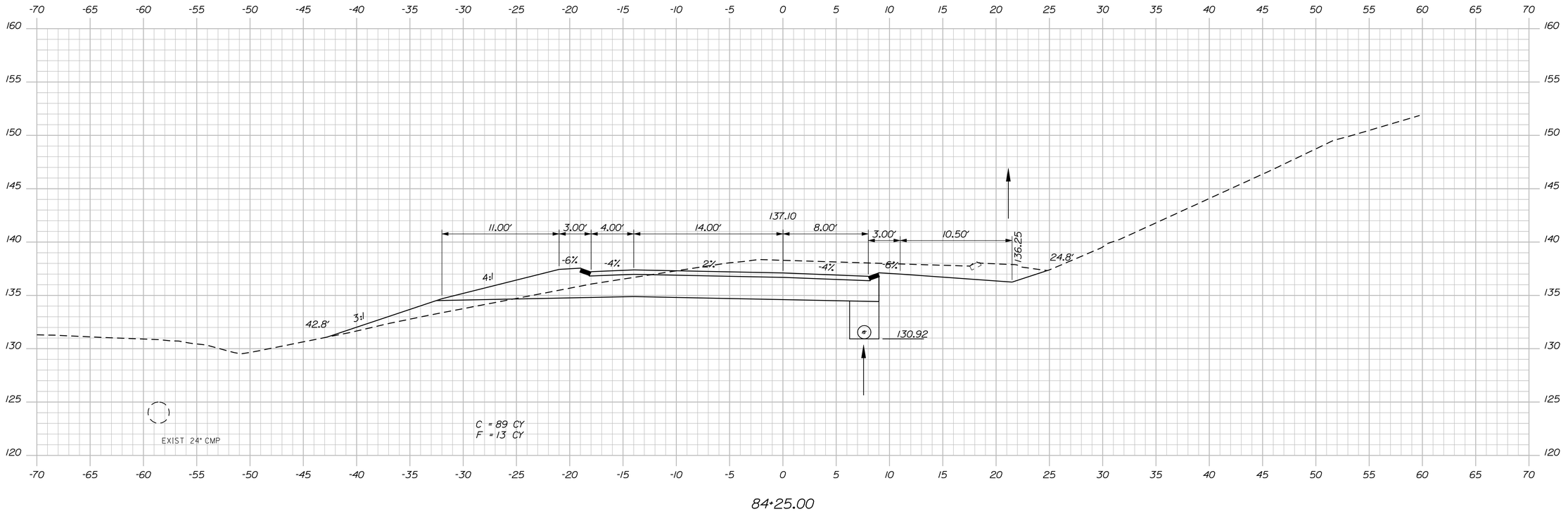

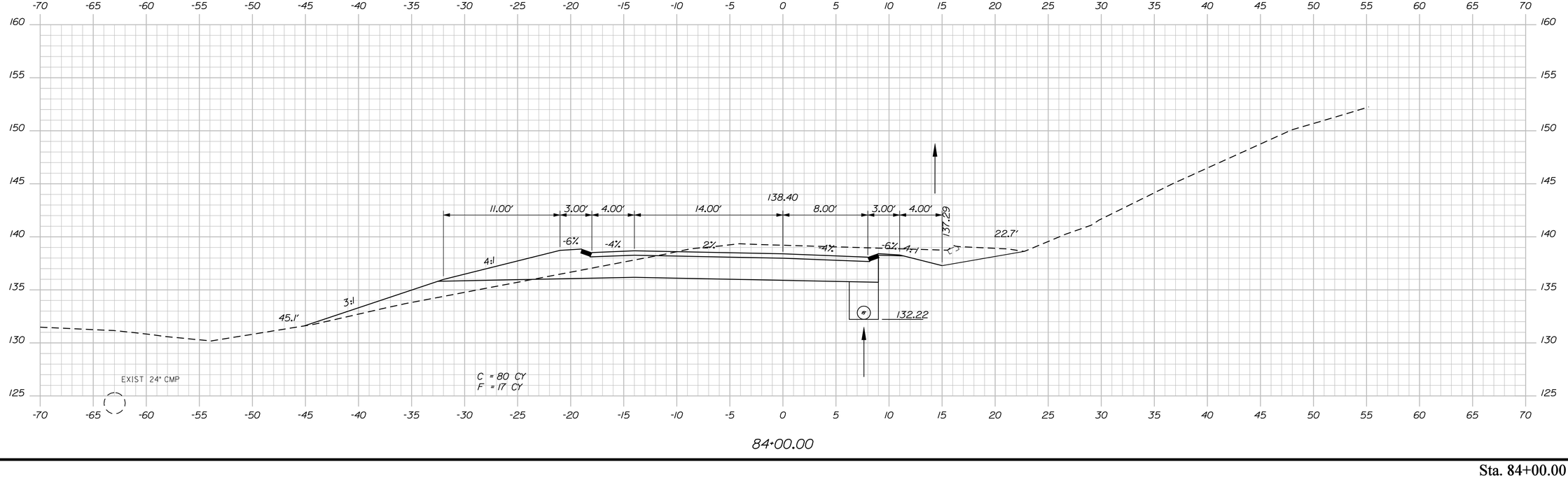

STATE OF MAINE
DEPARTMENT OF TRANSPORTATION

IM-1925(600)E

WIN
19256.00

HIGHWAY PLANS

PROJ. MANAGER	BRIAN KEEZER	BY	DATE
DESIGN-DETAILED	JLE	JLE	12-13
CHECKED-REVIEWED	ALG		12-13
DESIGN2-DETAILED2			
DESIGN3-DETAILED3			
REVISIONS 1			
REVISIONS 2			
REVISIONS 3			
REVISIONS 4			
FIELD CHANGES			

SIGNATURE
7960
P.E. NUMBER
December 18, 2013
DATE

BANGOR
I-95 EXIT 184 NB ON-RAMP

CROSS SECTIONS

SHEET NUMBER
22
OF 44

Sta. 84+00.00 to Sta. 84+25.00

Filename: ...\MSTA\022_XSECT_84+00_008.dgn Division: HIGHWAY Username: jeason Date:12/17/2013

Filename: ...\MSTA\023_XSECT_84+50_009.dgn Division: HIGHWAY Username: jeason Date:12/17/2013

EXIST CB
STA. 84+67.9, 50.1' LT.
RIM = 130.02
24" INV. IN = 122.36
12" INV. IN = 126.19
15" INV. IN = 125.97
24" INV. OUT = 122.35

EXIST 24" CMP

C = 110 CY
F = 6 CY

3.00' 4.00' 14.00' 8.00' 3.00' 2.00'
134.51
135.91
22.9'
38.4'
5:1
-6% -4% 2% -4% -6% 4:1 4:1

128.58

84+75.00

STA. 84+55.00, 7.88' RT. TO STA. 87+73.00, 6.88' RT.
INSTALL 318 LF X 6" TYPE 'B' UD.

INSTALL CB, TYPE BI-C
EXTRA DEPTH
STA. 84+57.3, 16.88' LT
RIM = 135.47
15" INV. IN = 128.45
15" INV. OUT = 127.62

INSTALL CB, TYPE BI-C
STA. 84+50.00, 6.88' RT
RIM = 135.41
15" INV. IN = 129.72 (BACK)
15" INV. IN = 129.50 (RIGHT)
15" INV. OUT = 129.41 (LEFT)

EXIST CB
STA. 84+44.6, 19.8' RT.
RIM = 136.97
15" INV. IN = 131.94
6" INV. IN = 129.94
6" INV. IN = 130.42
15" INV. OUT = 129.72
ALTER CB TO MH

135.81
135.70
3.00' 4.00' 14.00' 8.00' 3.00' 8.00'
-6% -4% 2% -4% -6% 4:1 4:1 21.9'
40.5'

EXIST 12" CMP
STA. 84+41.5, 49.2' LT
INV. IN = 129.08

C = 93 CY
F = 11 CY

EXIST CB
STA. 84+44.5, 26.4'RT
RIM = 135.97
15" INV. OUT = 131.79

STA. 84+50.60, 5.0' RT. TO STA. 84+56.9, 14.9' LT.
INSTALL 21 LF X 15" RCP CLASS III.

STA. 84+57.8, 18.8' LT. TO STA. 84+61.1, 28.2' LT.
INSTALL 8 LF X 15" RCP CLASS III.
MATCH EXISTING PIPE. CONNECTION WILL BE INCIDENTAL.

84+50.00

STA. 84+44.6, 17.8' RT. TO STA. 84+50.00, 8.88' RT.
INSTALL 10 LF X 15" OPT III PIPE.

STATE OF MAINE
DEPARTMENT OF TRANSPORTATION

IM-1925(600)E

WIN
19256.00

HIGHWAY PLANS

	BY	DATE
PROJ. MANAGER	BRIAN KEEZER	
DESIGN-DETAILED	JLE	12-13
CHECKED-REVIEWED	ALG	12-13
DESIGN2-DETAILED2		
DESIGN3-DETAILED3		
REVISIONS 1		
REVISIONS 2		
REVISIONS 3		
REVISIONS 4		
FIELD CHANGES		

SIGNATURE
7960
P.E. NUMBER
December 18, 2013
DATE

BANGOR
I-95 EXIT 184 NB ON-RAMP

CROSS SECTIONS

SHEET NUMBER
23
OF 44

Sta. 84+50.00 to Sta. 84+75.00

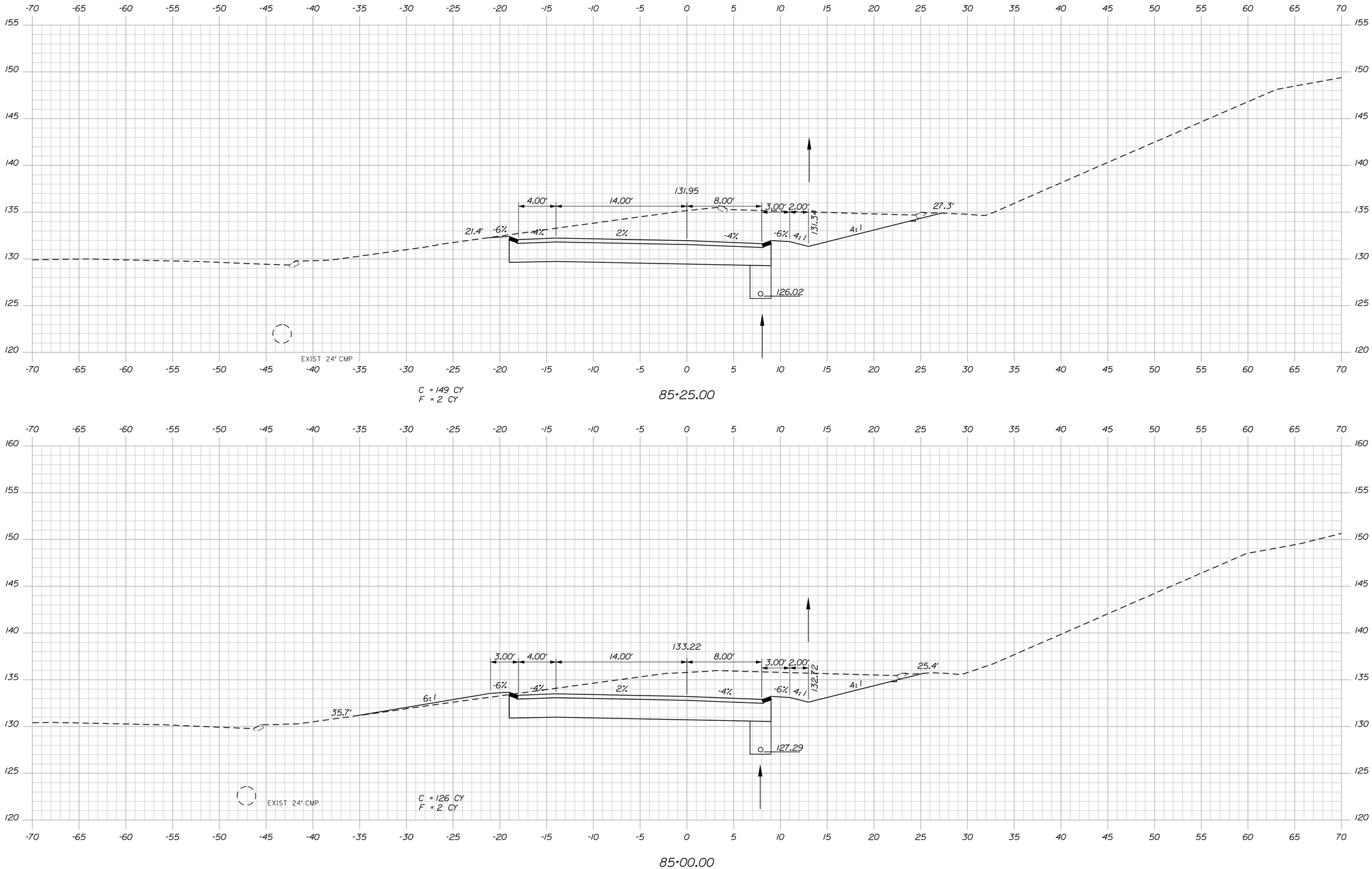

STATE OF MAINE
DEPARTMENT OF TRANSPORTATION

IM-1925(600)E

WIN
19256.00

HIGHWAY PLANS

	BY	DATE
PROJ. MANAGER	BRIAN KEEZER	
DESIGN-DETAILED	JLE	12-13
CHECKED-REVIEWED	ALG	12-13
DESIGN2-DETAILED2		
DESIGN3-DETAILED3		
REVISIONS 1		
REVISIONS 2		
REVISIONS 3		
REVISIONS 4		
FIELD CHANGES		

SIGNATURE

7960
P.E. NUMBER

December 18, 2013
DATE

BANGOR
I-95 EXIT 184 NB ON-RAMP

CROSS SECTIONS

SHEET NUMBER

24

OF 44

Sta. 85+00.00 to Sta. 85+25.00

Filename: ...\MSTA\024_XSECT_85+00_010.dgn Division: HIGHWAY Username: jeason Date:12/17/2013

Filename: ...\MSTA\025_XSECT_85+50_011.dgn Division: HIGHWAY Username: jeason Date:12/17/2013

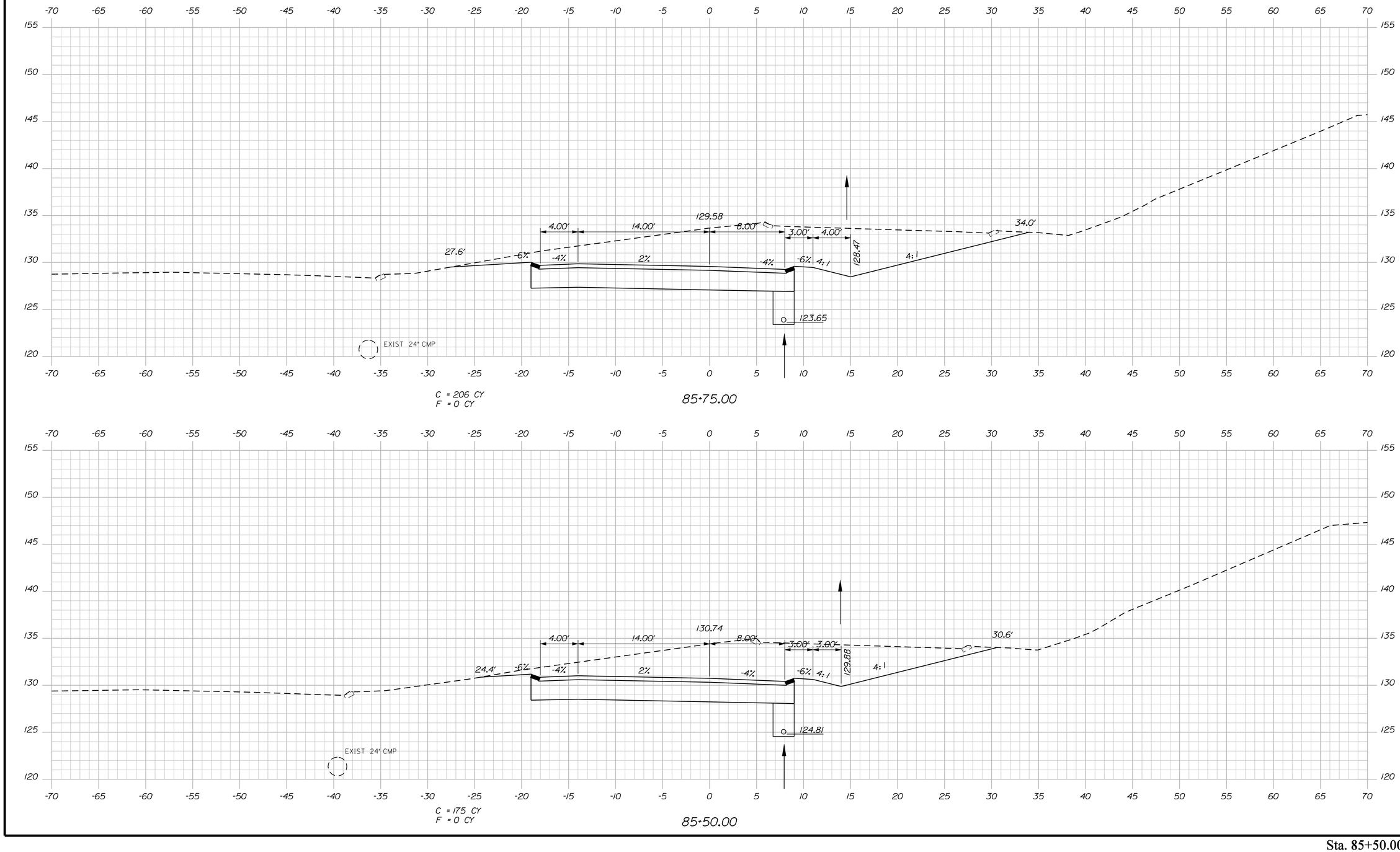

STATE OF MAINE
DEPARTMENT OF TRANSPORTATION

IM-1925(600)E

WIN 19256.00

HIGHWAY PLANS

	BY	DATE
PROJ. MANAGER	BRIAN KEEZER	
DESIGN-DETAILED	JLE	12-13
CHECKED-REVIEWED	ALG	12-13
DESIGN2-DETAILED2		
DESIGN3-DETAILED3		
REVISIONS 1		
REVISIONS 2		
REVISIONS 3		
REVISIONS 4		
FIELD CHANGES		

SIGNATURE

7960
P.E. NUMBER

December 18, 2013
DATE

BANGOR
I-95 EXIT 184 NB ON-RAMP

CROSS SECTIONS

SHEET NUMBER

25

OF 44

Sta. 85+50.00 to Sta. 85+75.00

STA. 109+98.5 TO STA. 110+45 RT. (MAINLINE)
SAWCUT AND REMOVE I-95 NB SHOULDER PAVEMENT.
MILL OUTER 1.00' OF TRAVEL LANE 1.5" DEPTH.
REGRADE SHOULDER AGGREGATE TO DRAIN TO CB #7.
SHIM SHOULDER, IF REQUIRED WITH AGGREGATE MEETING
GRADATION OF SECTION 703.10. REPAVE WITH 5" HMA.
SHIM MATERIAL AND REGRADING WILL BE INCIDENTAL TO
SECTION 403 PAY ITEMS.

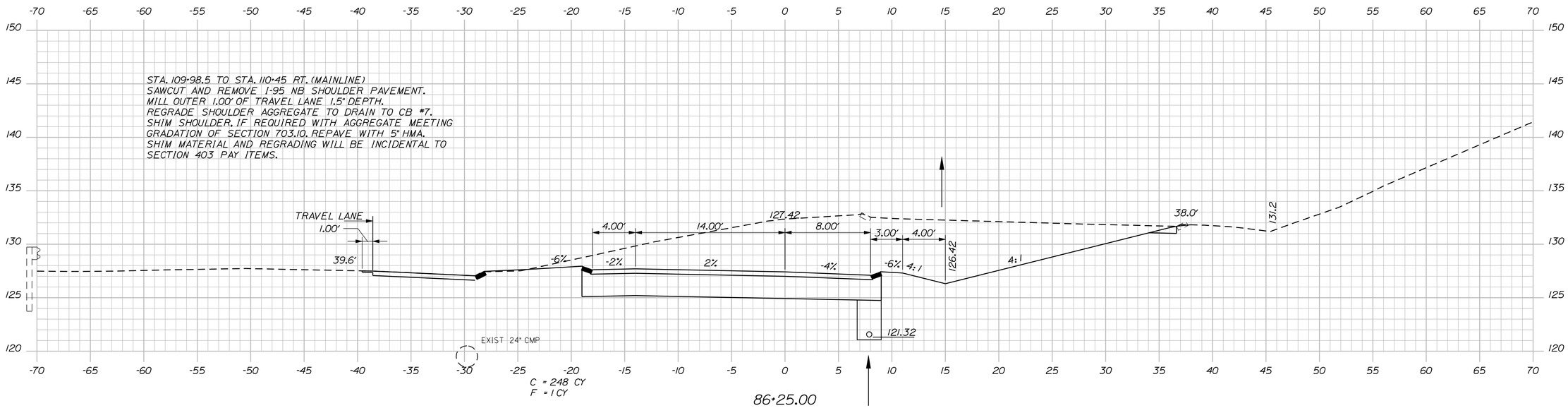

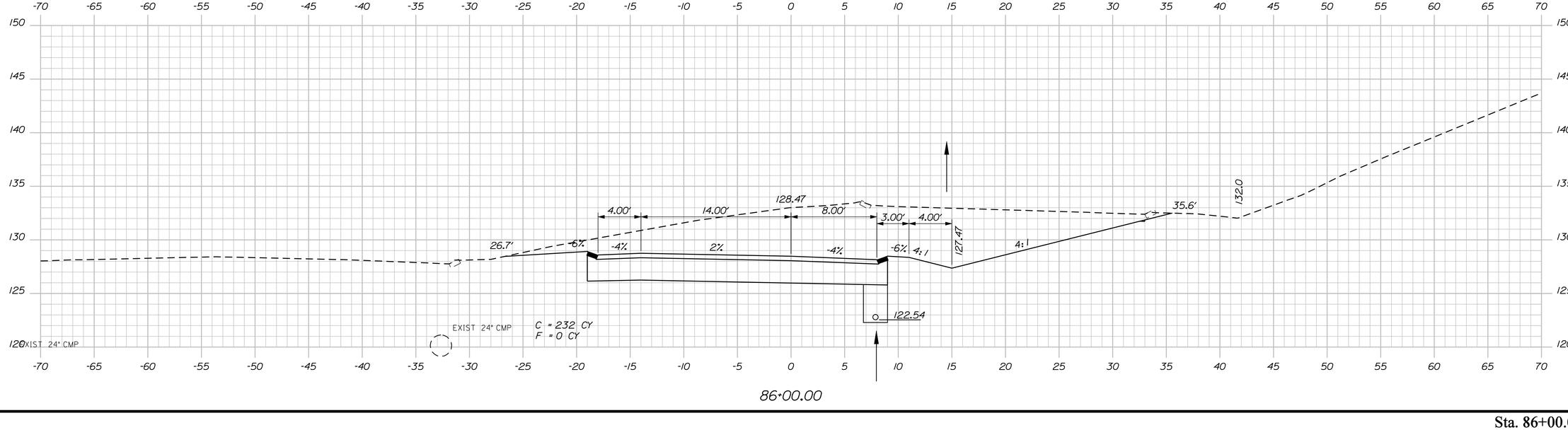

Sta. 86+00.00 to Sta. 86+25.00

STATE OF MAINE
DEPARTMENT OF TRANSPORTATION

IM-1925(600)E

WIN
19256.00

HIGHWAY PLANS

	BY	DATE
PROJ. MANAGER	BRIAN KEEZER	
DESIGN-DETAILED	JLE	12-13
CHECKED-REVIEWED	ALG	12-13
DESIGN2-DETAILED2		
DESIGN3-DETAILED3		
REVISIONS 1		
REVISIONS 2		
REVISIONS 3		
REVISIONS 4		
FIELD CHANGES		

SIGNATURE
7960
P.E. NUMBER
December 18, 2013
DATE

BANGOR
I-95 EXIT 184 NB ON-RAMP

CROSS SECTIONS

SHEET NUMBER
26
OF 44

Filename: ...\MSTA\026_XSECT_86+00_012.dgn Division: HIGHWAY Username: jeason Date:12/17/2013

Filename: ...\MSTA\027_XSECT_86+50_013.dgn Division: HIGHWAY Username: jeason Date:12/18/2013

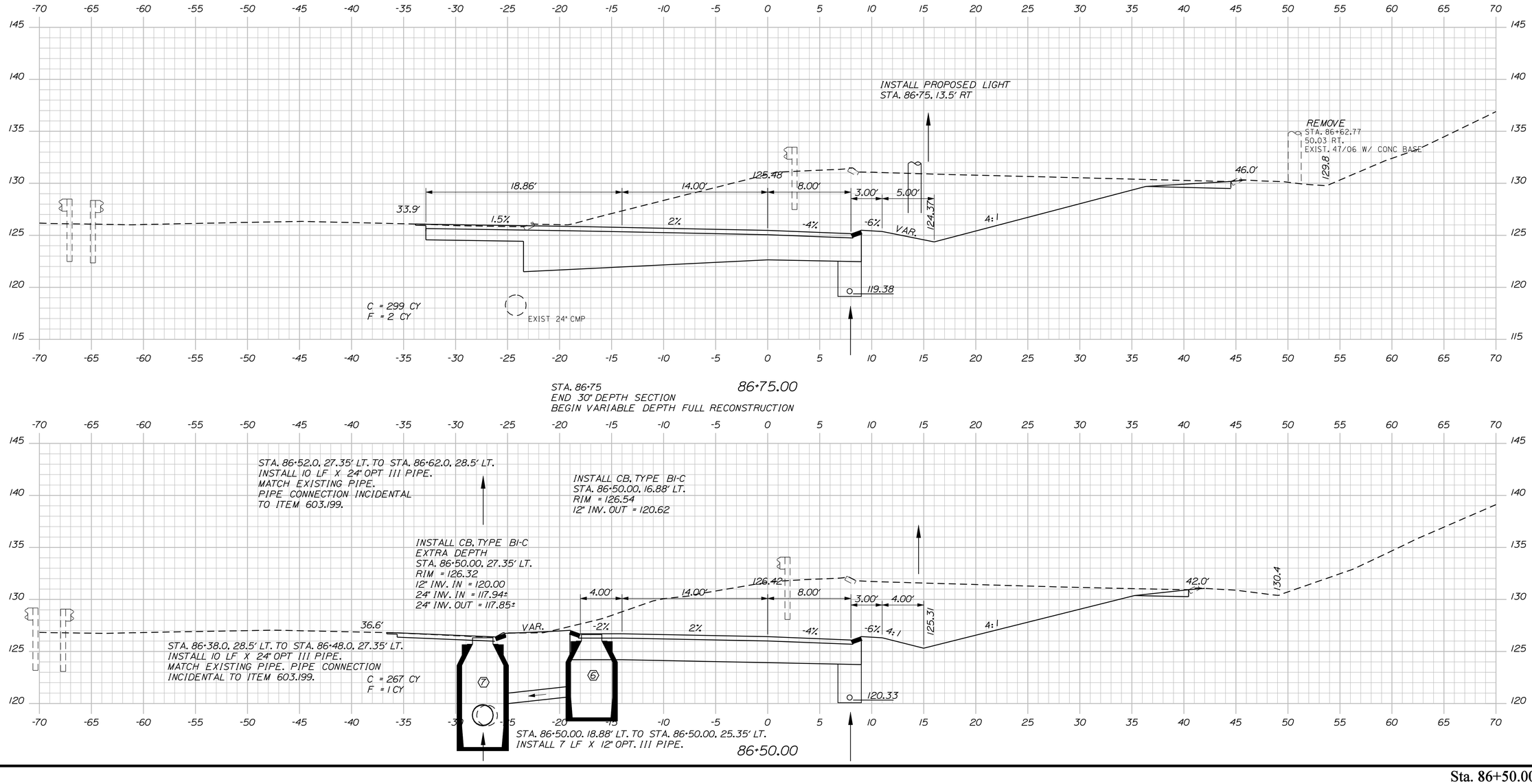

Sta. 86+50.00 to Sta. 86+75.00

STATE OF MAINE
DEPARTMENT OF TRANSPORTATION

IM-1925(600)E

WIN
19256.00

HIGHWAY PLANS

	BY	DATE
PROJ. MANAGER	BRIAN KEEZER	
DESIGN-DETAILED	JLE	12-13
CHECKED-REVIEWED	ALG	12-13
DESIGN2-DETAILED2		
DESIGN3-DETAILED3		
REVISIONS 1		
REVISIONS 2		
REVISIONS 3		
REVISIONS 4		
FIELD CHANGES		

SIGNATURE
7960
P.E. NUMBER
December 18, 2013
DATE

BANGOR
I-95 EXIT 184 NB ON-RAMP

CROSS SECTIONS

SHEET NUMBER
27
OF 44

Filename: ...\MSTA\028_XSECT_87+00_0I4.dgn Division: HIGHWAY Username: jeason Date:12/17/2013

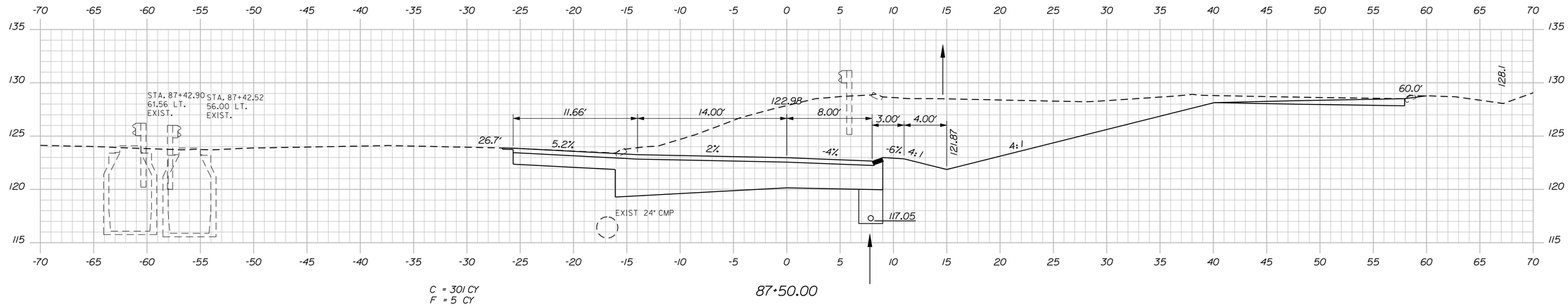

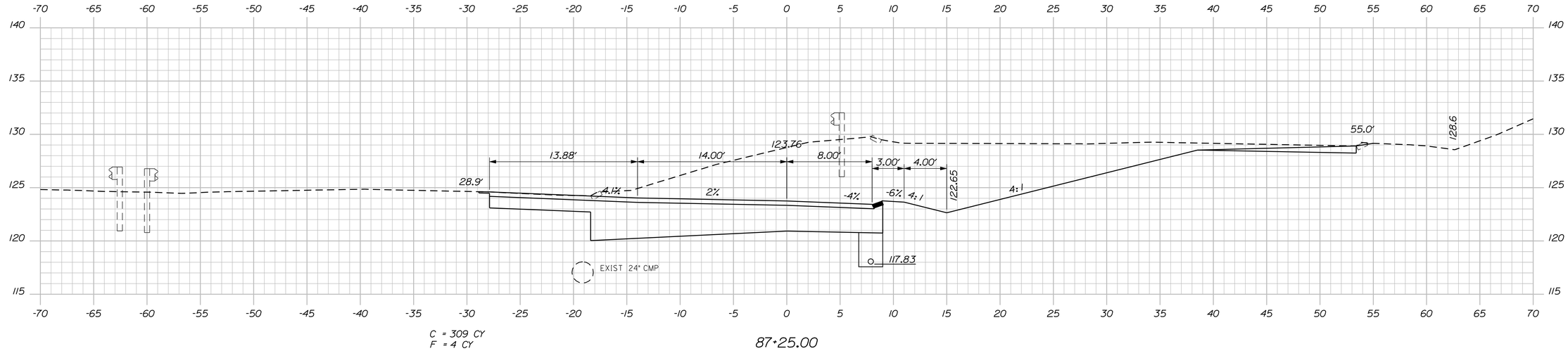

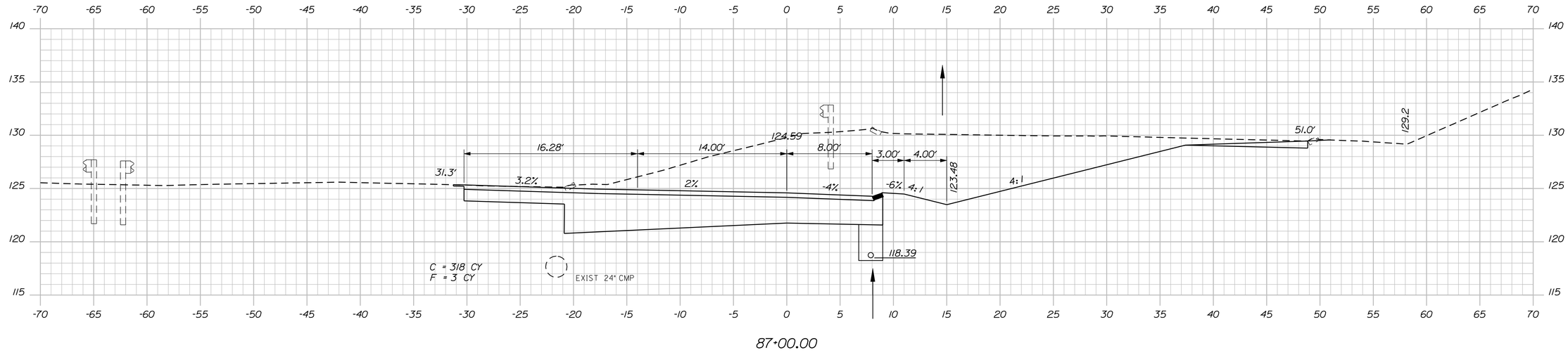

STATE OF MAINE
DEPARTMENT OF TRANSPORTATION

IM-1925(600)E

WIN
19256.00

HIGHWAY PLANS

	BY	DATE
PROJ. MANAGER	BRIAN KEEZER	
DESIGN-DETAILED	JLE	12-13
CHECKED-REVIEWED	ALG	12-13
DESIGN2-DETAILED2		
DESIGN3-DETAILED3		
REVISIONS 1		
REVISIONS 2		
REVISIONS 3		
REVISIONS 4		
FIELD CHANGES		

SIGNATURE
7960
P.E. NUMBER
December 18, 2013
DATE

BANGOR
I-95 EXIT 184 NB ON-RAMP
CROSS SECTIONS

SHEET NUMBER
28
OF 44

Sta. 87+00.00 to Sta. 87+50.00

Filename: ...\MSTA\029_XSECT_87+75_015.dgn Username: jeason Division: HIGHWAY Date:12/18/2013

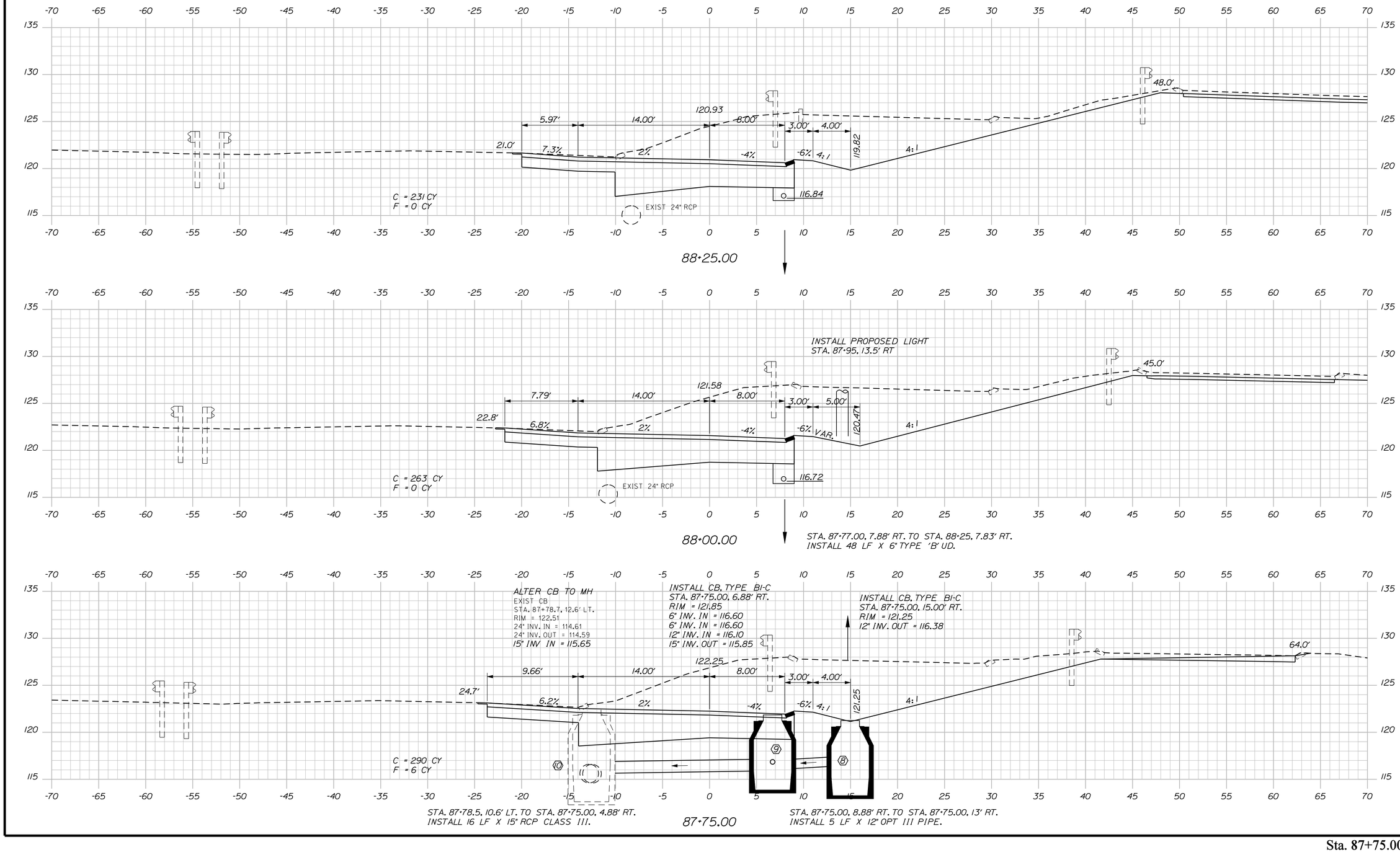

STATE OF MAINE
DEPARTMENT OF TRANSPORTATION

IM-1925(600)E

WIN
19256.00

HIGHWAY PLANS

PROJ. MANAGER	BRIAN KEEZER	
DESIGN-DETAILED	JLE	12-13
CHECKED-REVIEWED	ALG	12-13
DESIGN2-DETAILED2		
DESIGN3-DETAILED3		
REVISIONS 1		
REVISIONS 2		
REVISIONS 3		
REVISIONS 4		
FIELD CHANGES		

SIGNATURE
7960
P.E. NUMBER
December 18, 2013
DATE

BANGOR
I-95 EXIT 184 NB ON-RAMP
CROSS SECTIONS

SHEET NUMBER
29
OF 44

Sta. 87+75.00 to Sta. 88+25.00

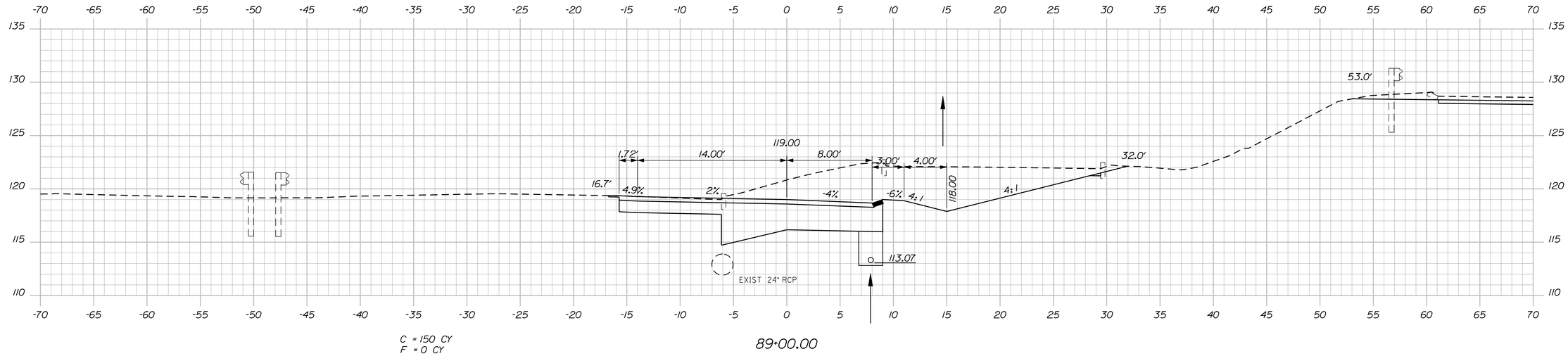

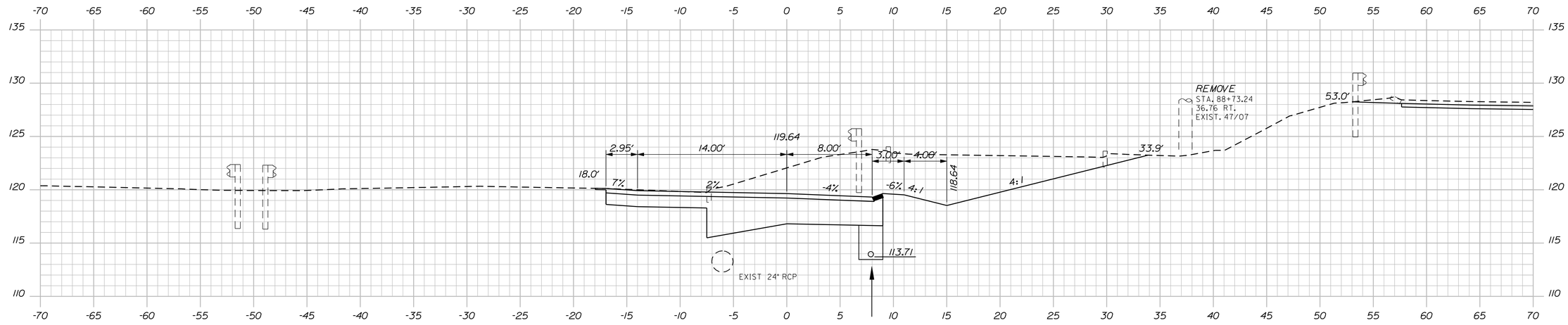

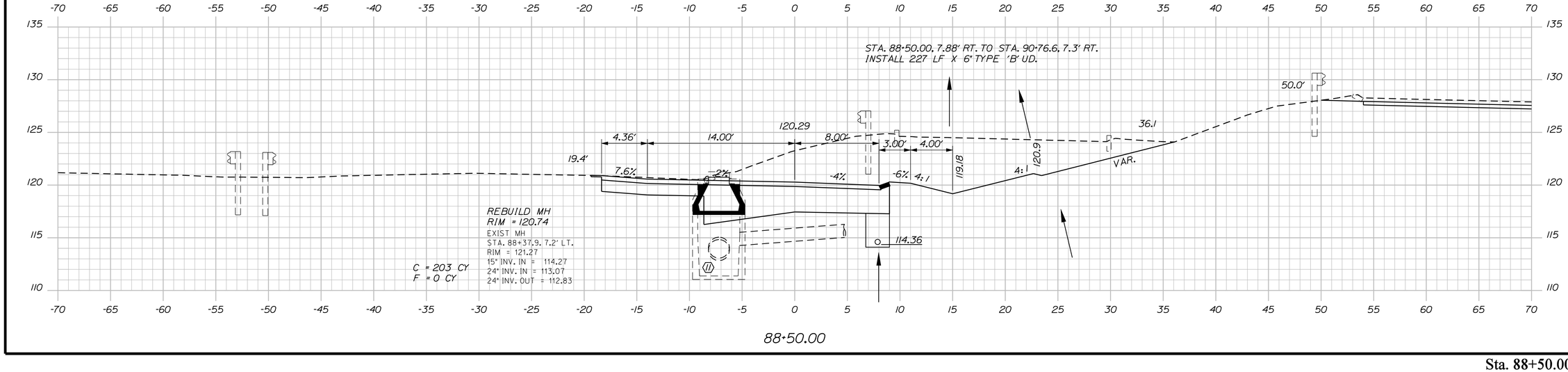

STATE OF MAINE
DEPARTMENT OF TRANSPORTATION

IM-1925(600)E

WIN
19256.00

HIGHWAY PLANS

PROJ. MANAGER	BRIAN KEEZER	BY	DATE
DESIGN-DETAILED	JLE	JLE	12-13
CHECKED-REVIEWED	ALG		12-13
DESIGN2-DETAILED2			
DESIGN3-DETAILED3			
REVISIONS 1			
REVISIONS 2			
REVISIONS 3			
REVISIONS 4			
FIELD CHANGES			

SIGNATURE
7960
P.E. NUMBER
December 18, 2013
DATE

BANGOR
I-95 EXIT 184 NB ON-RAMP

CROSS SECTIONS

SHEET NUMBER
30
OF 44

Filename: ...\MSTA\030_XSECT_88+50_016.dgn Division: HIGHWAY Username: jeason Date:12/18/2013

Sta. 88+50.00 to Sta. 89+00.00

Filename: ...\MSTA\031_XSECT_89+25_017.dgn Username: jeason Division: HIGHWAY Date:12/18/2013

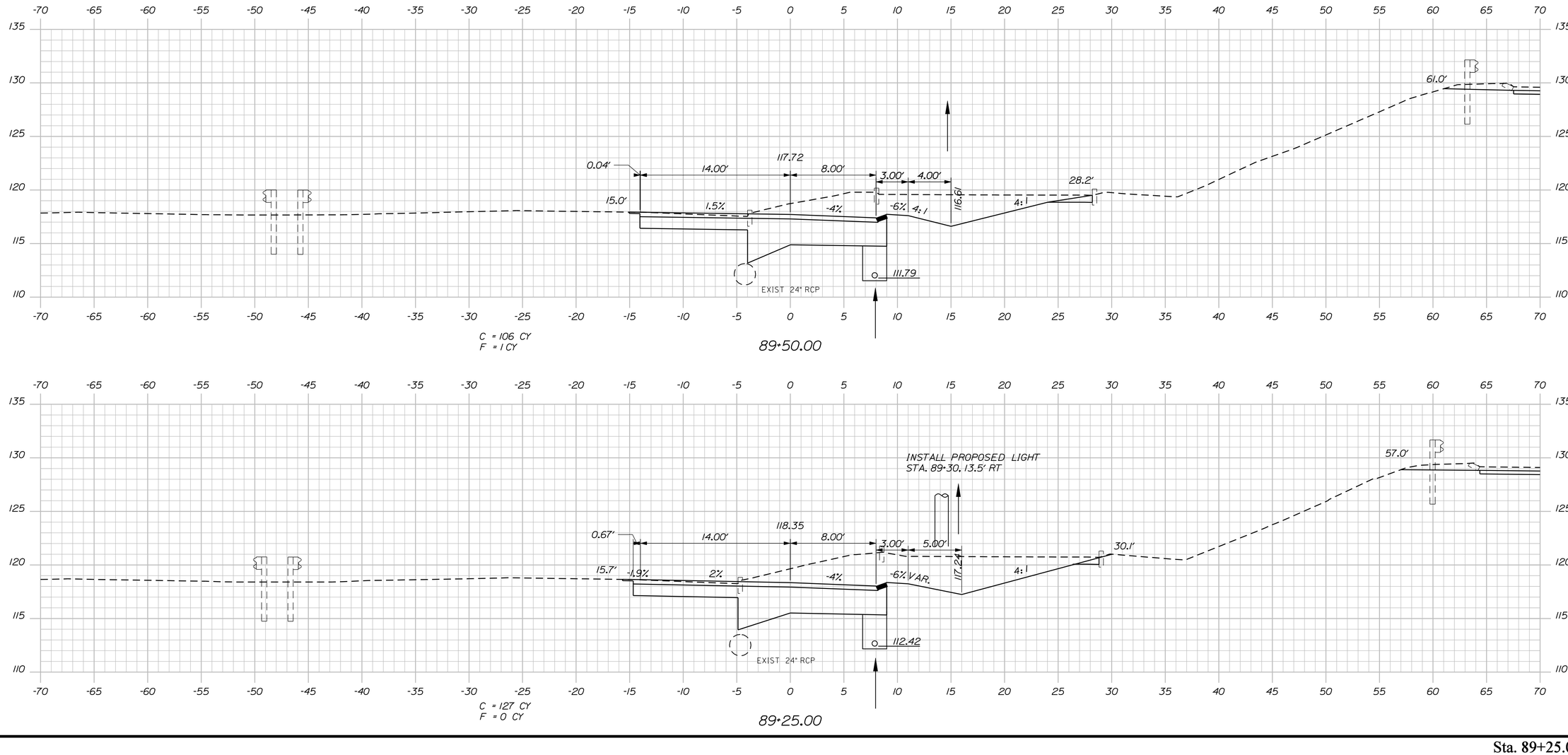

STATE OF MAINE
DEPARTMENT OF TRANSPORTATION

IM-1925(600)E

WIN 19256.00

HIGHWAY PLANS

PROJ. MANAGER	BRIAN KEEZER		
DESIGN-DETAILED	JLE	BY	JLE
CHECKED-REVIEWED	ALG	DATE	12-13
DESIGN2-DETAILED2			12-13
DESIGN3-DETAILED3			
REVISIONS 1			
REVISIONS 2			
REVISIONS 3			
REVISIONS 4			
FIELD CHANGES			

SIGNATURE

7960

P.E. NUMBER

December 18, 2013

DATE

BANGOR
I-95 EXIT 184 NB ON-RAMP

CROSS SECTIONS

SHEET NUMBER

31

OF 44

Sta. 89+25.00 to Sta. 89+50.00

Filename: ...\MSTA\032_XSECT_89+75_018.dgn Division: HIGHWAY Username: jeason Date:12/17/2013

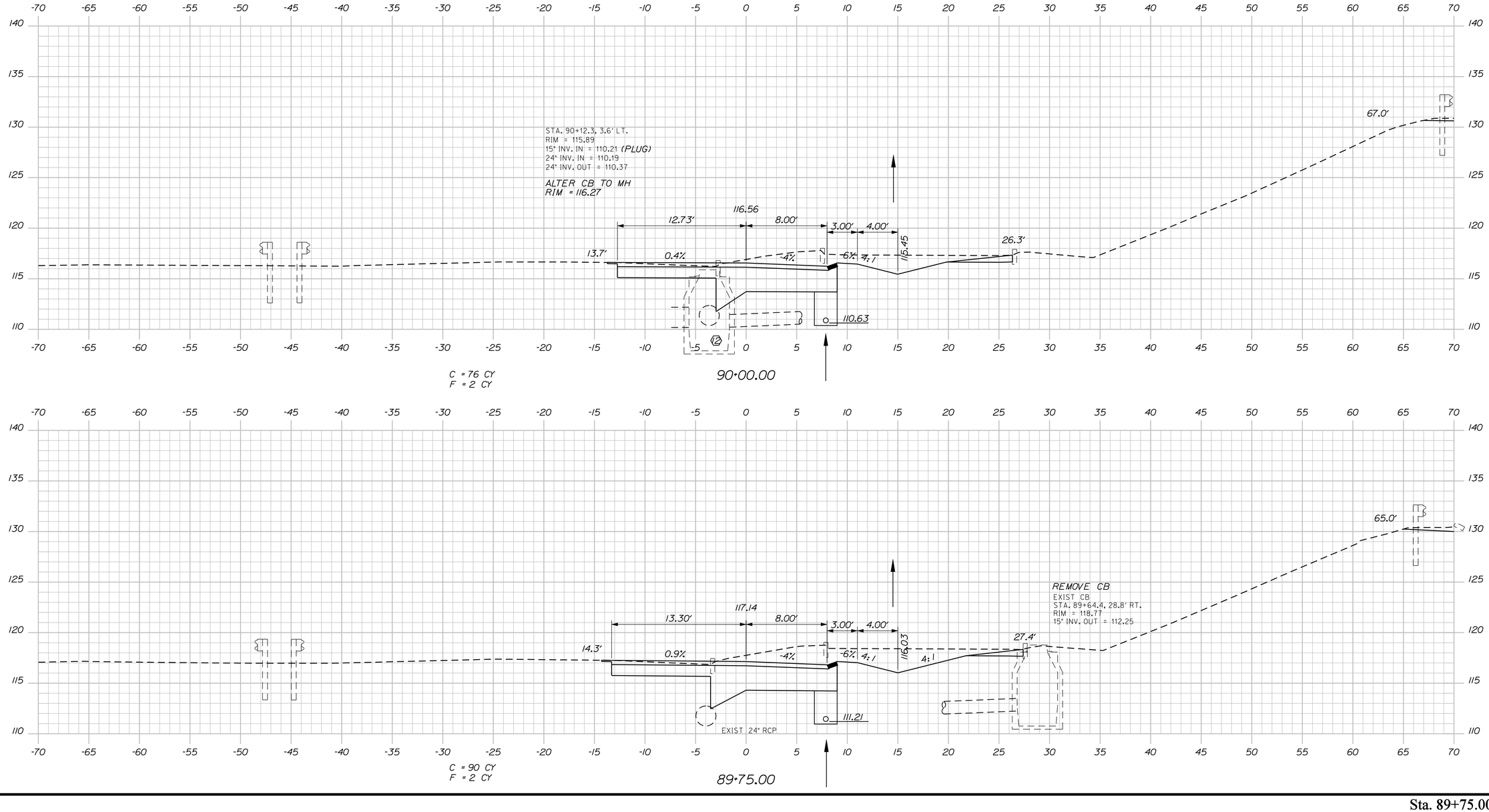

STATE OF MAINE
DEPARTMENT OF TRANSPORTATION

IM-1925(600)E

WIN
19256.00

HIGHWAY PLANS

PROJ. MANAGER	BRIAN KEEZER	BY	DATE
DESIGN-DETAILED	JLE	JLE	12-13
CHECKED-REVIEWED	ALG	ALG	12-13
DESIGN2-DETAILED2			
DESIGN3-DETAILED3			
REVISIONS 1			
REVISIONS 2			
REVISIONS 3			
REVISIONS 4			
FIELD CHANGES			

SIGNATURE
7960
P.E. NUMBER
December 18, 2013
DATE

BANGOR
I-95 EXIT 184 NB ON-RAMP

CROSS SECTIONS

SHEET NUMBER
32
OF 44

Sta. 89+75.00 to Sta. 90+00.00

Filename: ...\MSTA\033_XSECT_90+25_019.dgn Division: HIGHWAY Username: jeason Date:12/18/2013

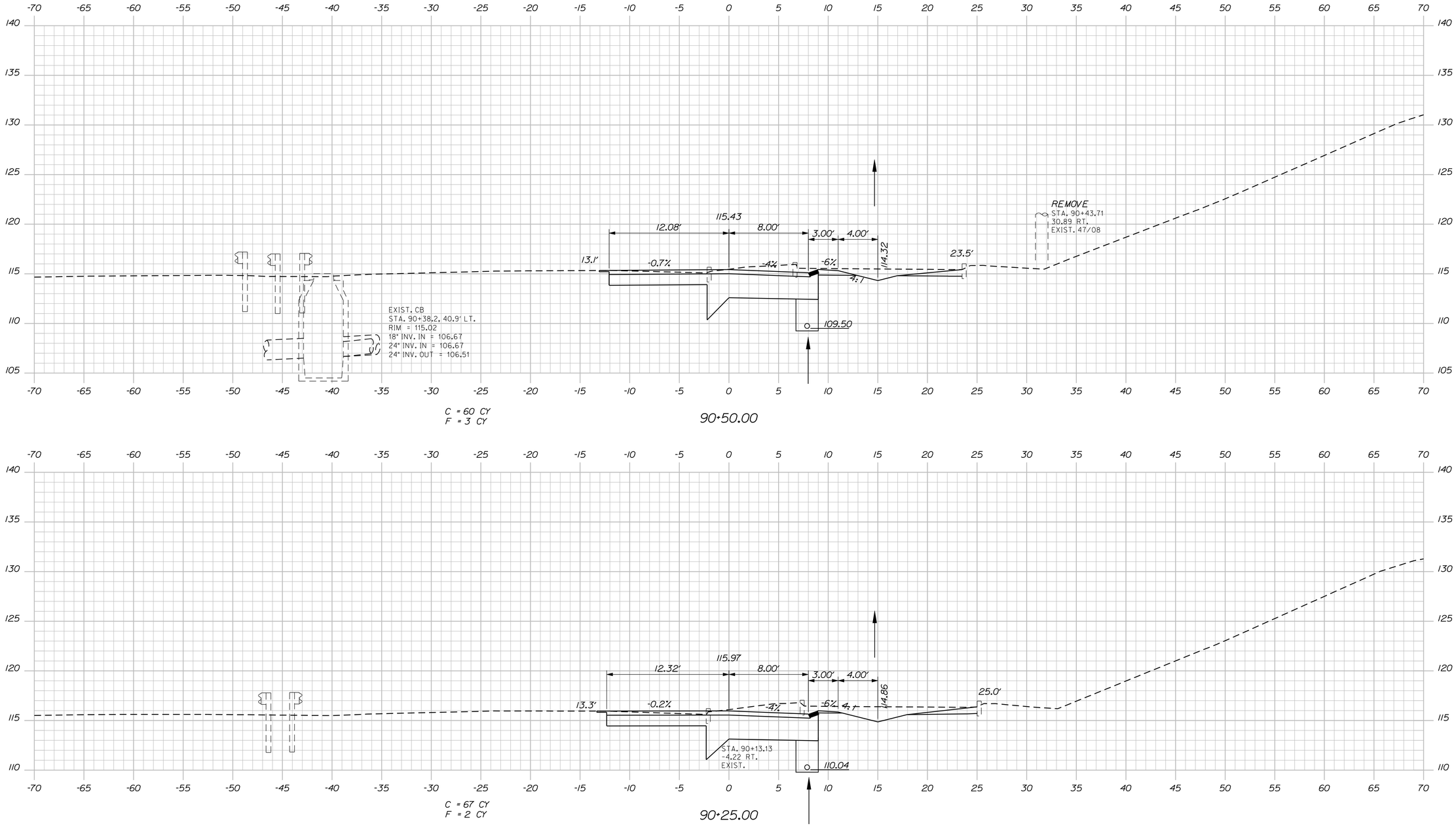

STATE OF MAINE
DEPARTMENT OF TRANSPORTATION

IM-1925(600)E

WIN
19256.00

HIGHWAY PLANS

		DATE
PROJ. MANAGER	BRIAN KEEZER	
DESIGN-DETAILED	JLE	12-13
CHECKED-REVIEWED	ALG	12-13
DESIGN2-DETAILED2		
DESIGN3-DETAILED3		
REVISIONS 1		
REVISIONS 2		
REVISIONS 3		
REVISIONS 4		
FIELD CHANGES		

SIGNATURE
7960
P.E. NUMBER
December 18, 2013
DATE

BANGOR
I-95 EXIT 184 NB ON-RAMP

CROSS SECTIONS

SHEET NUMBER
33
OF 44

Sta. 90+25.00 to Sta. 90+50.00

Filename: ...\MSTA\034_XSECT_90-75_020.dgn Division: HIGHWAY Username: jeason Date:12/18/2013

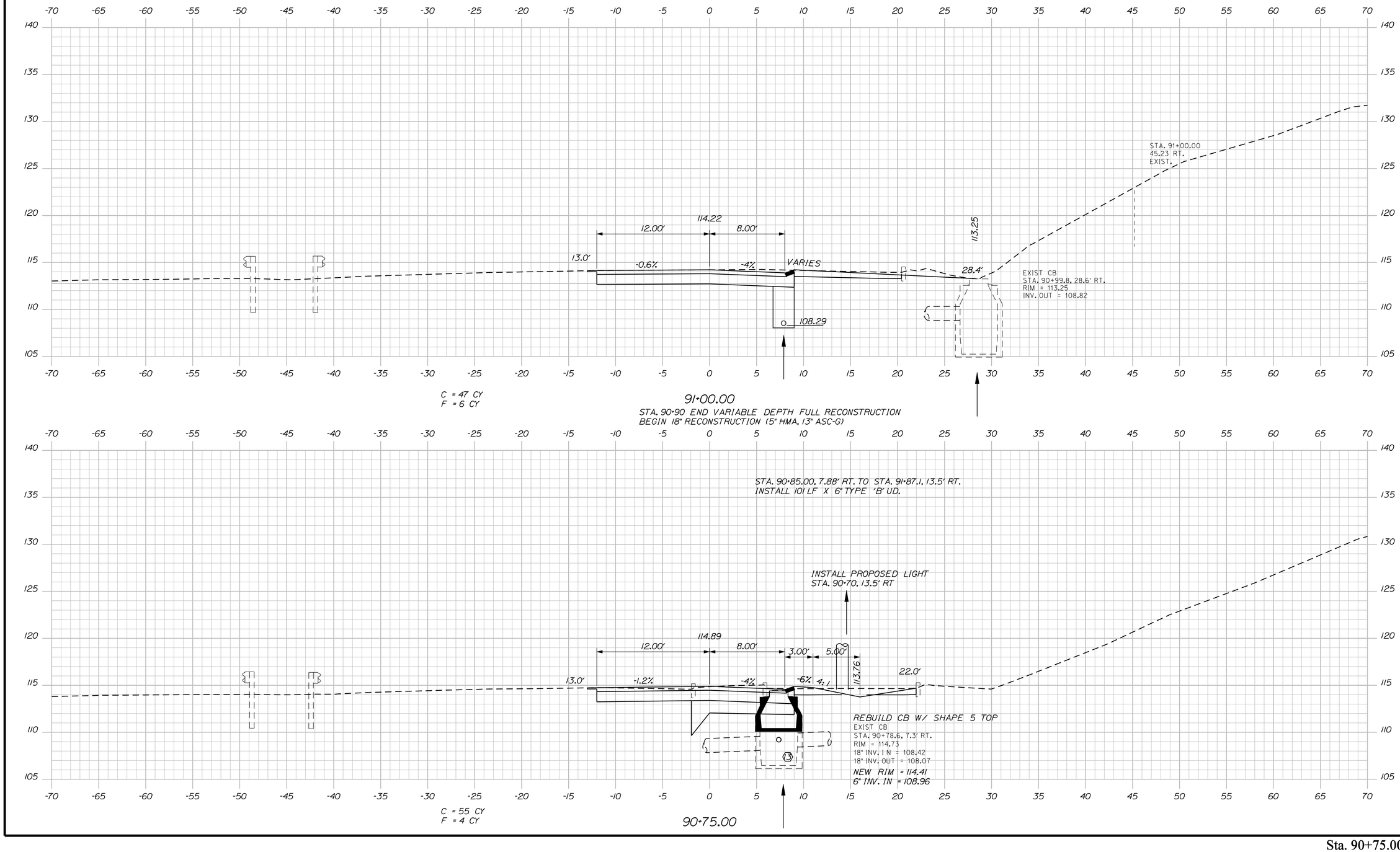

STATE OF MAINE
DEPARTMENT OF TRANSPORTATION

IM-1925(600)E

WIN
19256.00

HIGHWAY PLANS

PROJ. MANAGER	BRIAN KEEZER		
DESIGN-DETAILED	JLE	JLE	12-13
CHECKED-REVIEWED	ALG		12-13
DESIGN2-DETAILED2			
DESIGN3-DETAILED3			
REVISIONS 1			
REVISIONS 2			
REVISIONS 3			
REVISIONS 4			
FIELD CHANGES			

SIGNATURE
7960
P.E. NUMBER
December 18, 2013
DATE

BANGOR
I-95 EXIT 184 NB ON-RAMP

CROSS SECTIONS

SHEET NUMBER
34
OF 44

Sta. 90+75.00 to Sta. 91+00.00

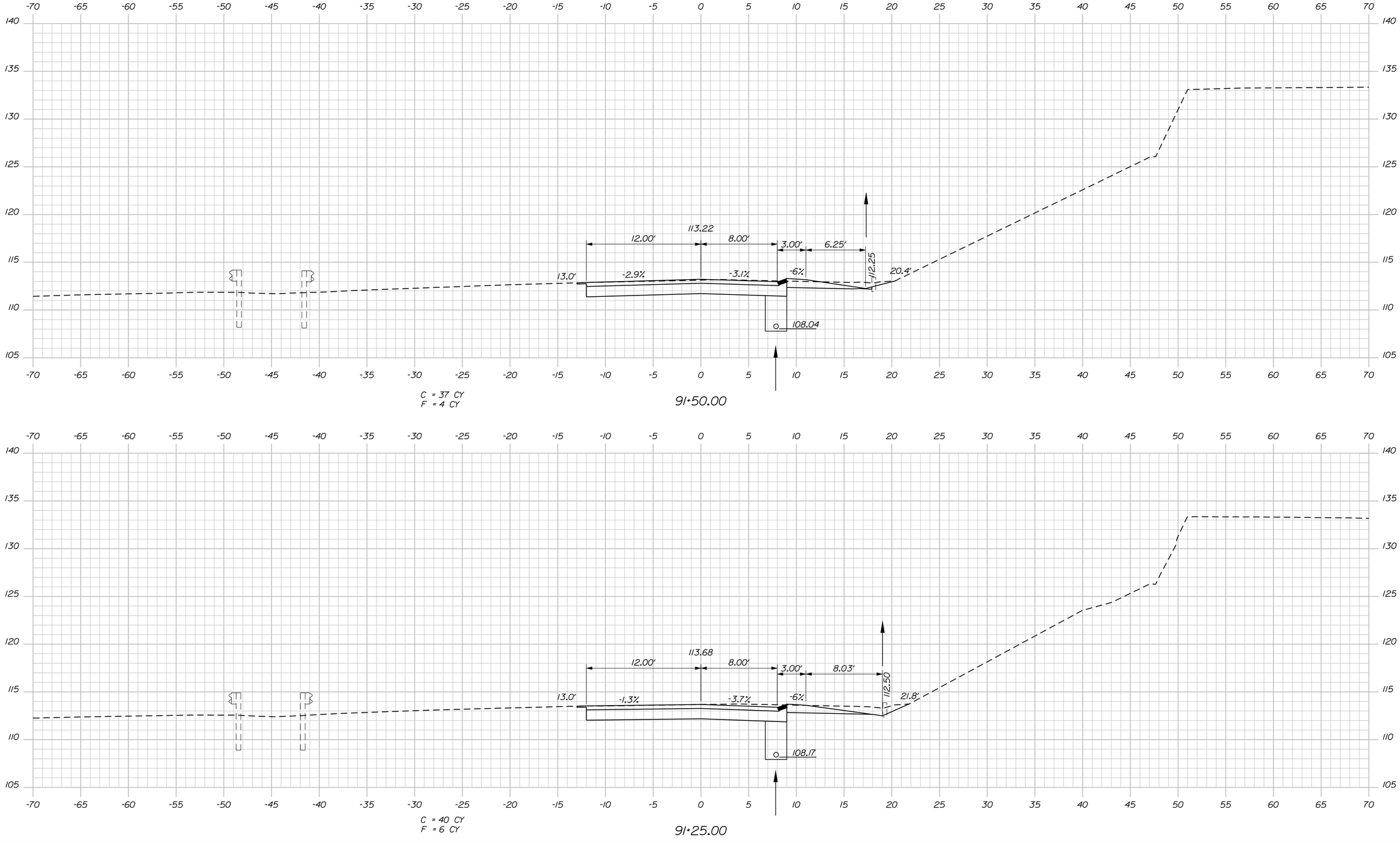

Sta. 91+25.00 to Sta. 91+50.00

STATE OF MAINE
DEPARTMENT OF TRANSPORTATION

IM-1925(600)E

WIN
19256.00

HIGHWAY PLANS

	BY	DATE
PROJ. MANAGER	BRIAN KEEZER	
DESIGN-DETAILED	JLE	12-13
CHECKED-REVIEWED	ALG	12-13
DESIGN2-DETAILED2		
DESIGN3-DETAILED3		
REVISIONS 1		
REVISIONS 2		
REVISIONS 3		
REVISIONS 4		
FIELD CHANGES		

SIGNATURE
7960
P.E. NUMBER
December 18, 2013
DATE

BANGOR
I-95 EXIT 184 NB ON-RAMP

CROSS SECTIONS

SHEET NUMBER
35
OF 44

Filename: ...\MSTA\035_XSECT_91+25_021.dgn Division: HIGHWAY Username: jeason Date:12/17/2013

Filename: ...\MSTA\036_XSECT_91+75_022.dgn Division: HIGHWAY Username: jeason Date:12/17/2013

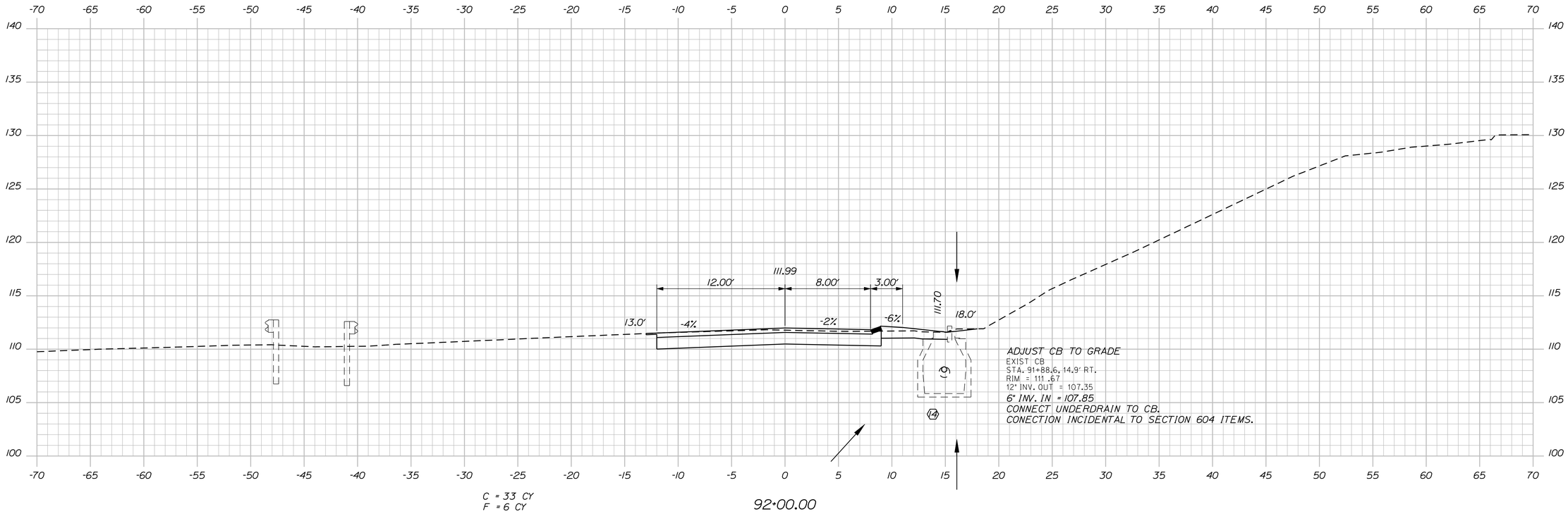

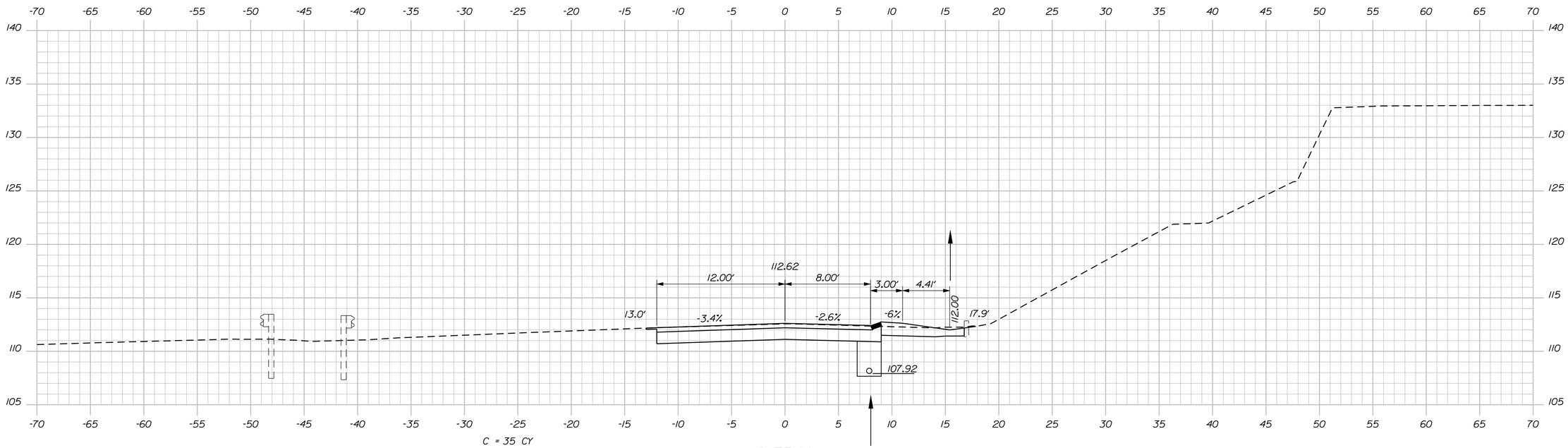

STATE OF MAINE
DEPARTMENT OF TRANSPORTATION

IM-1925(600)E

WIN 19256.00

HIGHWAY PLANS

PROJ. MANAGER	BRIAN KEEZER		
DESIGN-DETAILED	JLE	BY	JLE
CHECKED-REVIEWED	ALG	DATE	12-13
DESIGN2-DETAILED2			12-13
DESIGN3-DETAILED3			
REVISIONS 1			
REVISIONS 2			
REVISIONS 3			
REVISIONS 4			
FIELD CHANGES			

SIGNATURE
7960
P.E. NUMBER
December 18, 2013
DATE

BANGOR
I-95 EXIT 184 NB ON-RAMP

CROSS SECTIONS

SHEET NUMBER
36
OF 44

Sta. 91+75.00 to Sta. 92+00.00

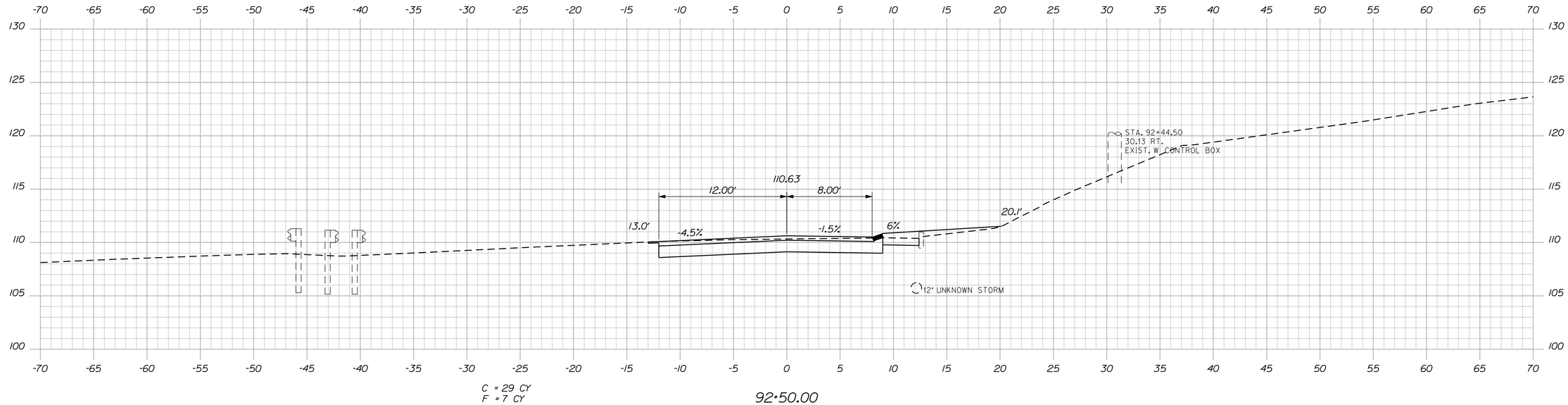

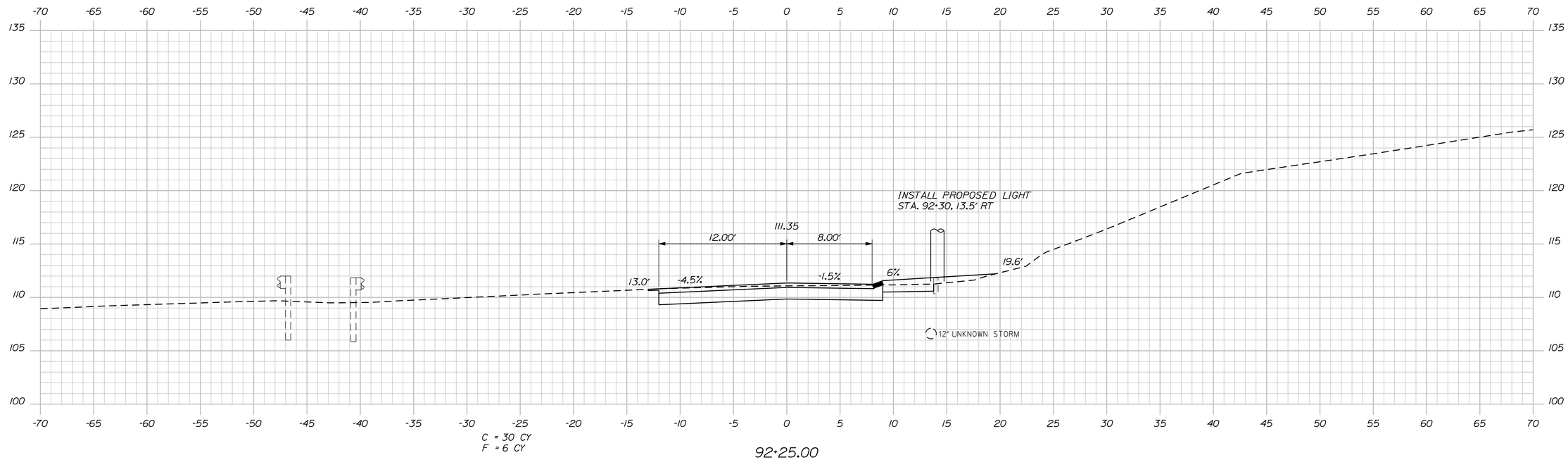

STATE OF MAINE
DEPARTMENT OF TRANSPORTATION

IM-1925(600)E

WIN
19256.00

HIGHWAY PLANS

PROJ. MANAGER	BRIAN KEEZER		
DESIGN-DETAILED	JLE	BY	JLE
CHECKED-REVIEWED	ALG	DATE	12-13
DESIGN2-DETAILED2			12-13
DESIGN3-DETAILED3			
REVISIONS 1			
REVISIONS 2			
REVISIONS 3			
REVISIONS 4			
FIELD CHANGES			

SIGNATURE
7960
P.E. NUMBER
December 18, 2013
DATE

BANGOR
I-95 EXIT 184 NB ON-RAMP

CROSS SECTIONS

SHEET NUMBER
37
OF 44

Sta. 92+25.00 to Sta. 92+50.00

Filename: ...\MSTA\037_XSECT_92+25_023.dgn Division: HIGHWAY Username: jeason Date:12/18/2013

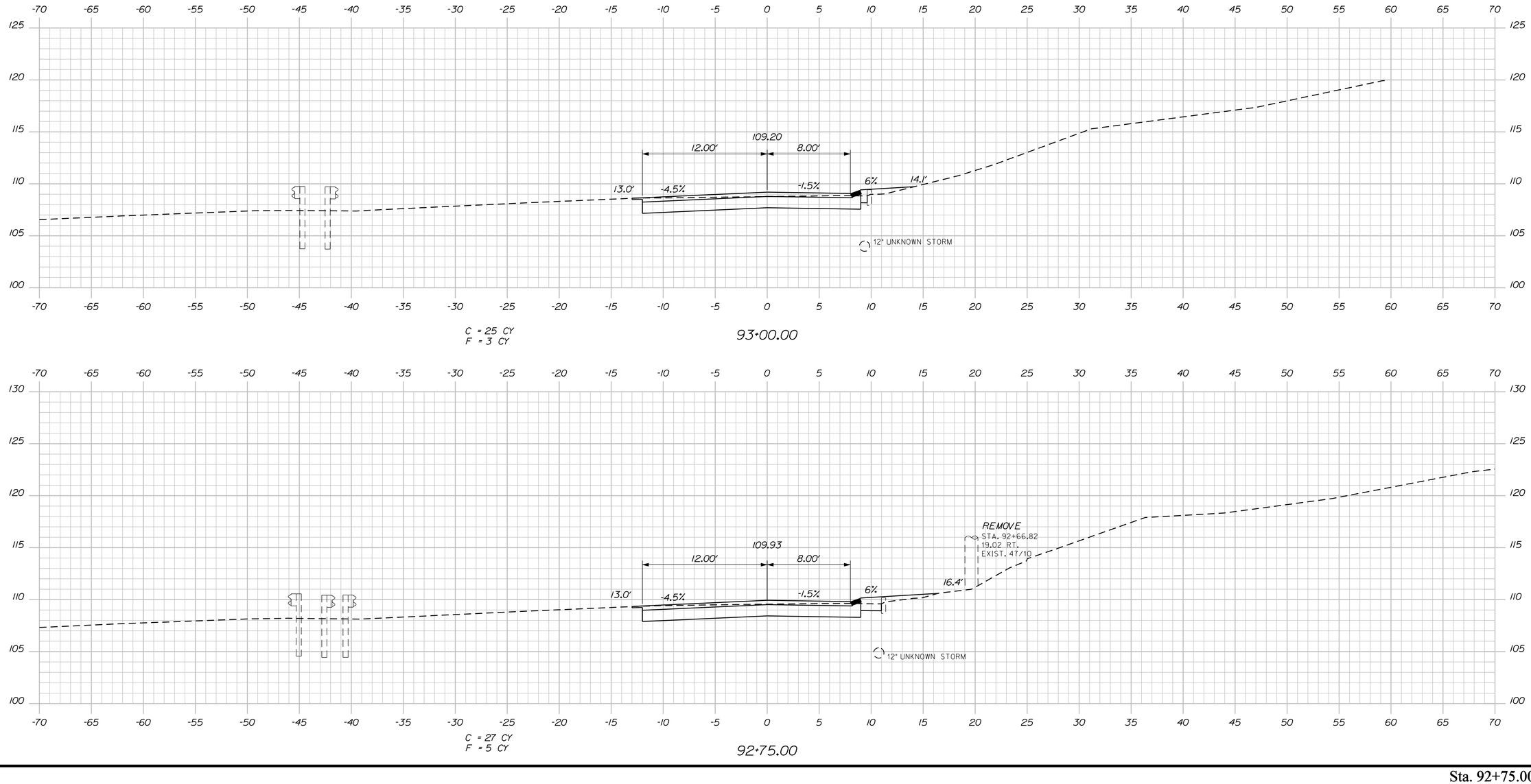

Sta. 92+75.00 to Sta. 93+00.00

STATE OF MAINE
DEPARTMENT OF TRANSPORTATION

IM-1925(600)E

WIN
19256.00

HIGHWAY PLANS

	BY	DATE
PROJ. MANAGER	BRIAN KEEZER	
DESIGN-DETAILED	JLE	12-13
CHECKED-REVIEWED	ALG	12-13
DESIGN2-DETAILED2		
DESIGN3-DETAILED3		
REVISIONS 1		
REVISIONS 2		
REVISIONS 3		
REVISIONS 4		
FIELD CHANGES		

SIGNATURE
7960
P.E. NUMBER
December 18, 2013
DATE

BANGOR
I-95 EXIT 184 NB ON-RAMP

CROSS SECTIONS

SHEET NUMBER
38
OF 44

Filename: ...\MSTA\038_XSECT_92+75_024.dgn Division: HIGHWAY Username: jeason Date:12/18/2013

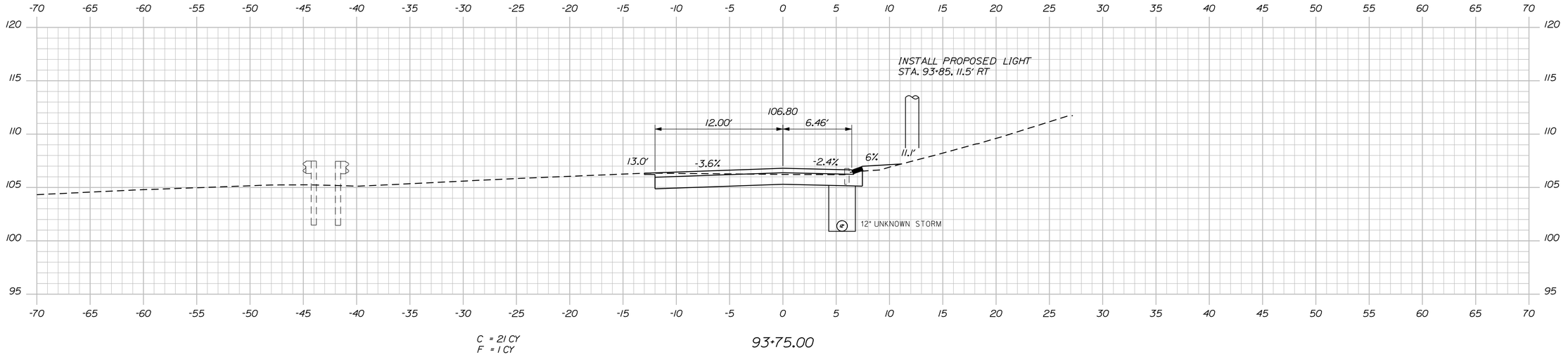

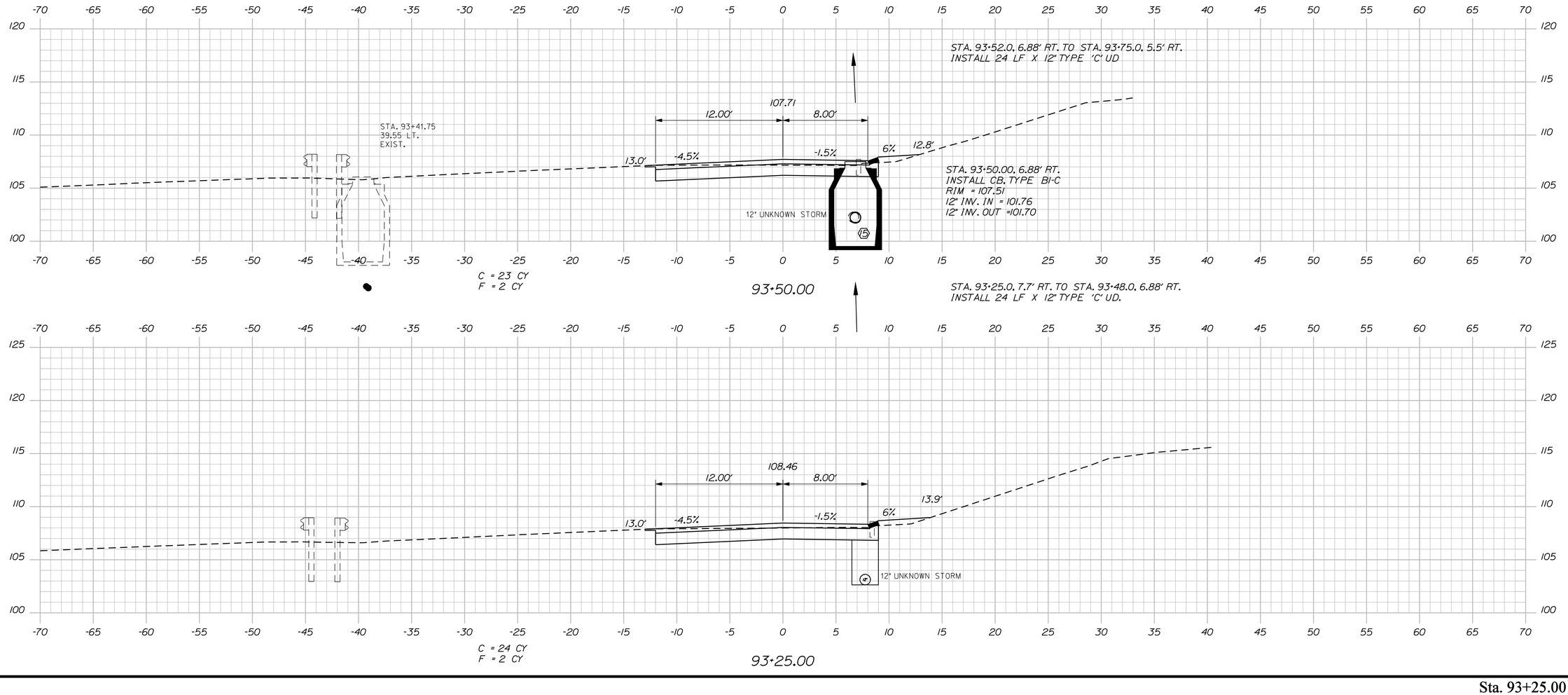

STATE OF MAINE
DEPARTMENT OF TRANSPORTATION

IM-1925(600)E

WIN
19256.00

HIGHWAY PLANS

PROJ. MANAGER	BRIAN KEEZER	
DESIGN-DETAILED	JLE	
CHECKED-REVIEWED	ALG	
DESIGN2-DETAILED2		
DESIGN3-DETAILED3		
REVISIONS 1		
REVISIONS 2		
REVISIONS 3		
REVISIONS 4		
FIELD CHANGES		

BY	DATE
JLE	12-13
	12-13

SIGNATURE
7960
P.E. NUMBER
December 18, 2013
DATE

BANGOR
I-95 EXIT 184 NB ON-RAMP
CROSS SECTIONS

SHEET NUMBER
39
OF 44

Sta. 93+25.00 to Sta. 93+75.00

Filename: ...\MSTA\039_XSECT_93+25_025.dgn Division: HIGHWAY Username: jeason Date:12/18/2013

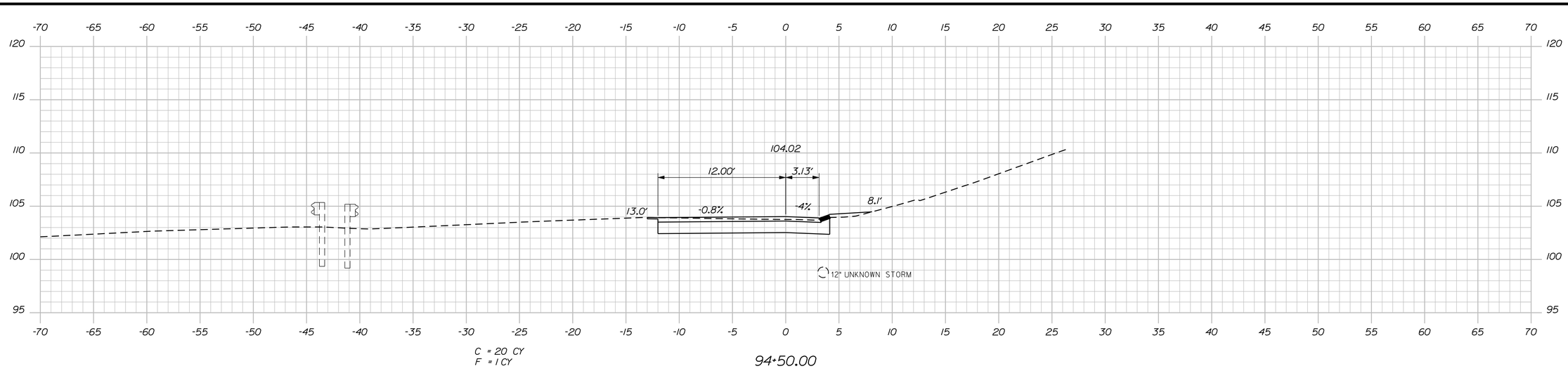

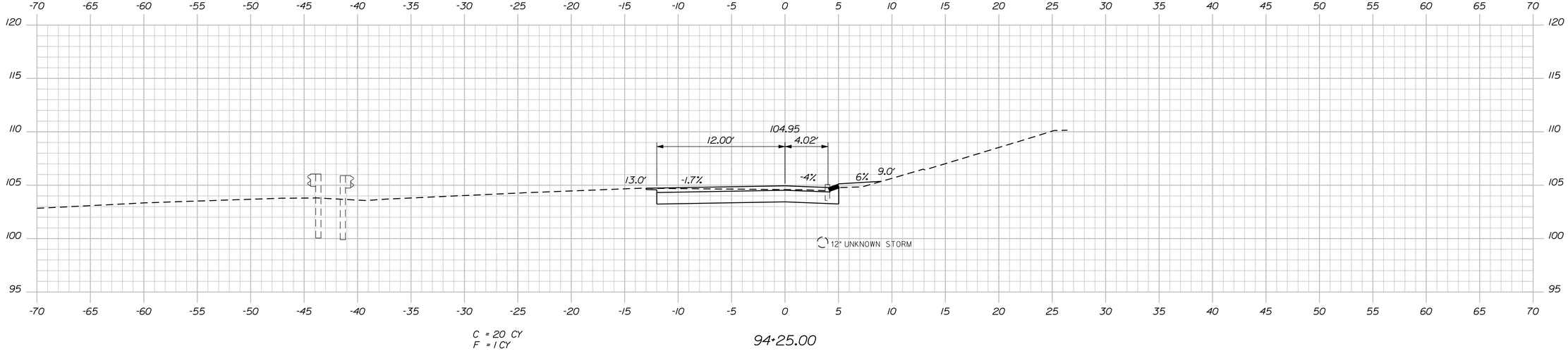

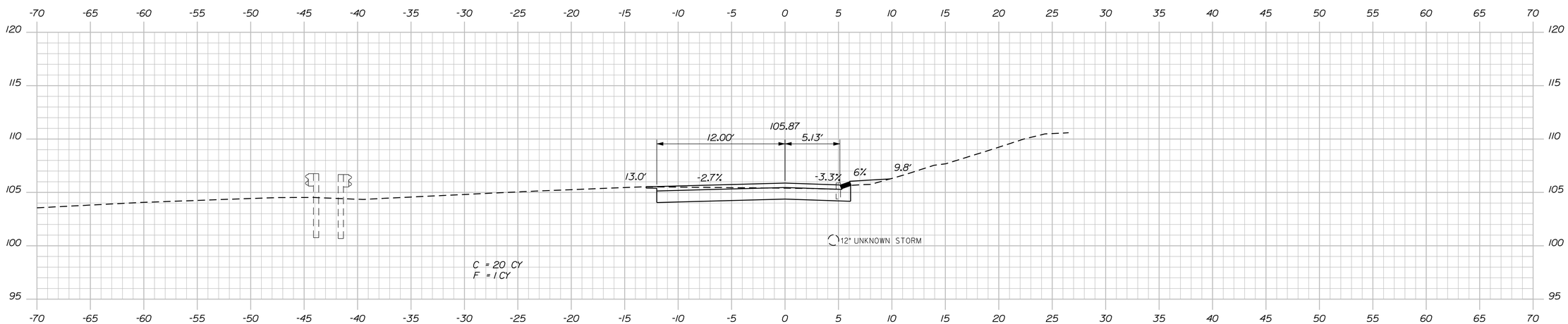

STATE OF MAINE
DEPARTMENT OF TRANSPORTATION

IM-1925(600)E

WIN 19256.00

HIGHWAY PLANS

PROJ. MANAGER	BRIAN KEEZER	
DESIGN-DETAILED	JLE	12-13
CHECKED-REVIEWED	ALG	12-13
DESIGN2-DETAILED2		
DESIGN3-DETAILED3		
REVISIONS 1		
REVISIONS 2		
REVISIONS 3		
REVISIONS 4		
FIELD CHANGES		

SIGNATURE

7960

P.E. NUMBER

December 18, 2013

DATE

BANGOR
I-95 EXIT 184 NB ON-RAMP

CROSS SECTIONS

SHEET NUMBER

40

OF 44

Sta. 94+00.00 to Sta. 94+50.00

Filename: ...\MSTA\040_XSECT_94+00_026.dgn Division: HIGHWAY Username: jeason Date:12/17/2013

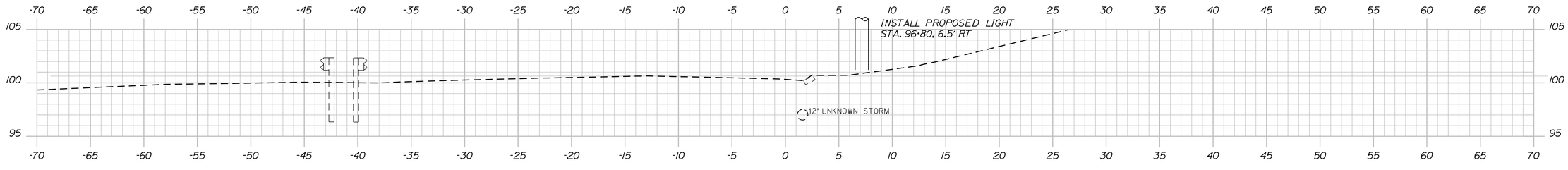

95+50.00

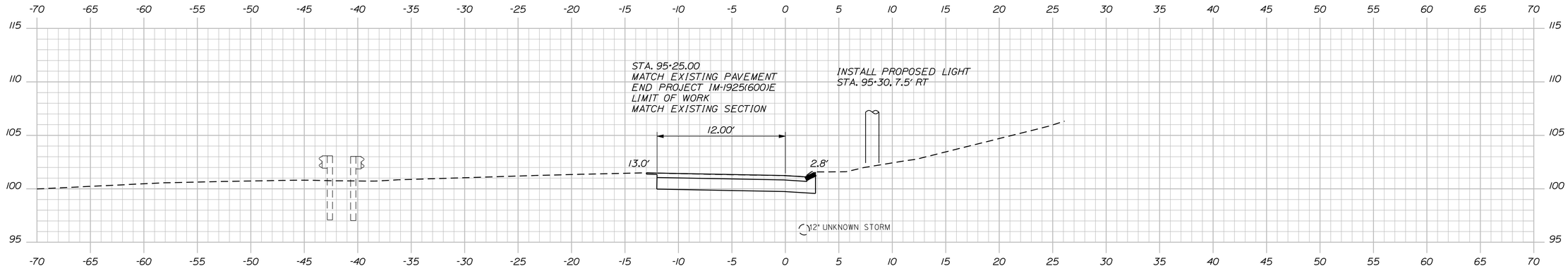

C = 21 CY
F = 0 CY

95+25.00

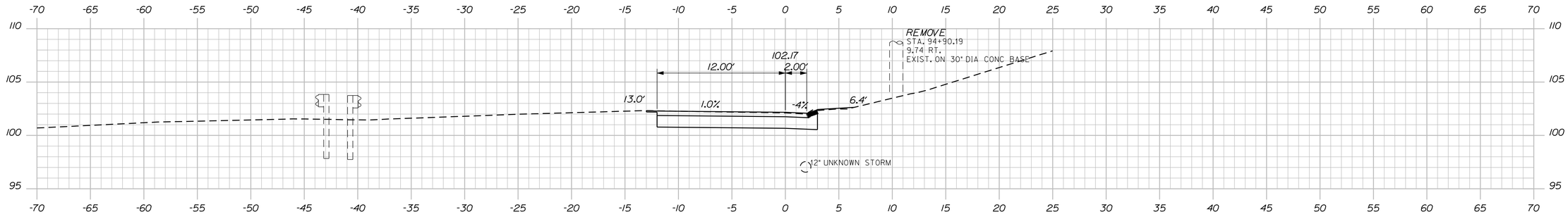

C = 21 CY
F = 0 CY

95+00.00

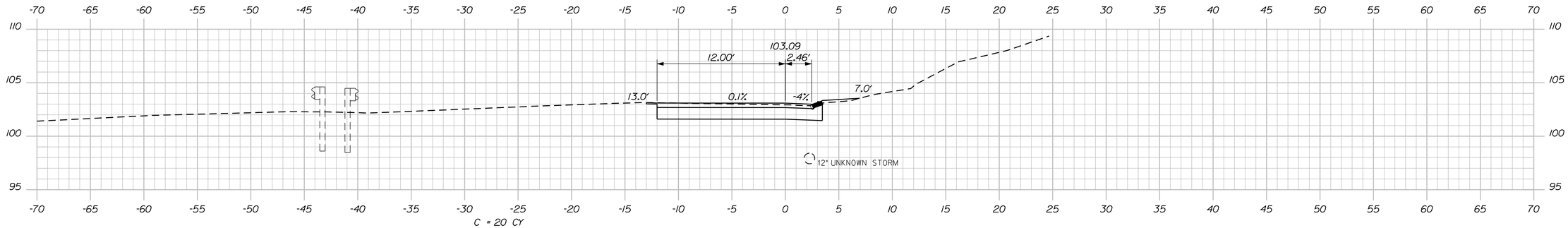

C = 20 CY
F = 1 CY

94+75.00

STATE OF MAINE
DEPARTMENT OF TRANSPORTATION

IM-1925(600)E

WIN
19256.00

HIGHWAY PLANS

	BY	DATE
PROJ. MANAGER	BRIAN KEEZER	
DESIGN-DETAILED	JLE	12-13
CHECKED-REVIEWED	ALG	12-13
DESIGN2-DETAILED2		
DESIGN3-DETAILED3		
REVISIONS 1		
REVISIONS 2		
REVISIONS 3		
REVISIONS 4		
FIELD CHANGES		

SIGNATURE
7960
P.E. NUMBER
December 18, 2013
DATE

BANGOR
I-95 EXIT 184 NB ON-RAMP

CROSS SECTIONS

SHEET NUMBER
41
OF 44

Sta. 94+75.00 to Sta. 95+50.00

Filename: ...\MSTA\041_XSECT_94+75_027.dgn Division: HIGHWAY Username: jeason Date:12/18/2013

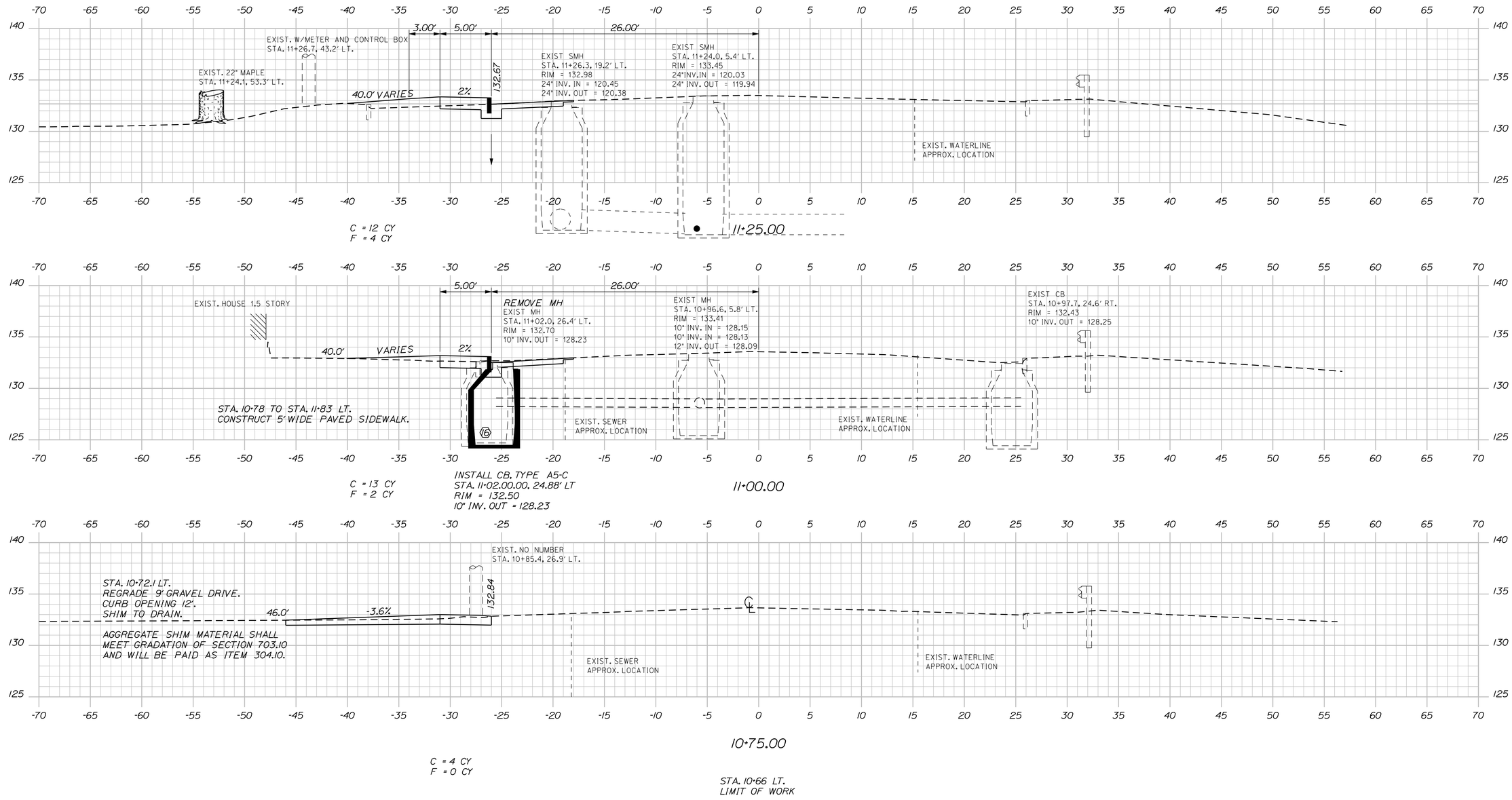

STATE OF MAINE
DEPARTMENT OF TRANSPORTATION

IM-1925(600)E

WIN
19256.00

HIGHWAY PLANS

	BY	DATE
PROJ. MANAGER	BRIAN KEEZER	
DESIGN-DETAILED	JLE	12-13
CHECKED-REVIEWED	ALG	12-13
DESIGN2-DETAILED2		
DESIGN3-DETAILED3		
REVISIONS 1		
REVISIONS 2		
REVISIONS 3		
REVISIONS 4		
FIELD CHANGES		

SIGNATURE
7960
P.E. NUMBER
December 18, 2013
DATE

BANGOR
OHIO STREET

CROSS SECTIONS

SHEET NUMBER
42
OF 44

Sta. 10+50.00 to Sta. 11+25.00

Filename: ...\MSTA\042_XSECT_10+50_001.dgn Division: HIGHWAY Username: jeason Date:12/17/2013

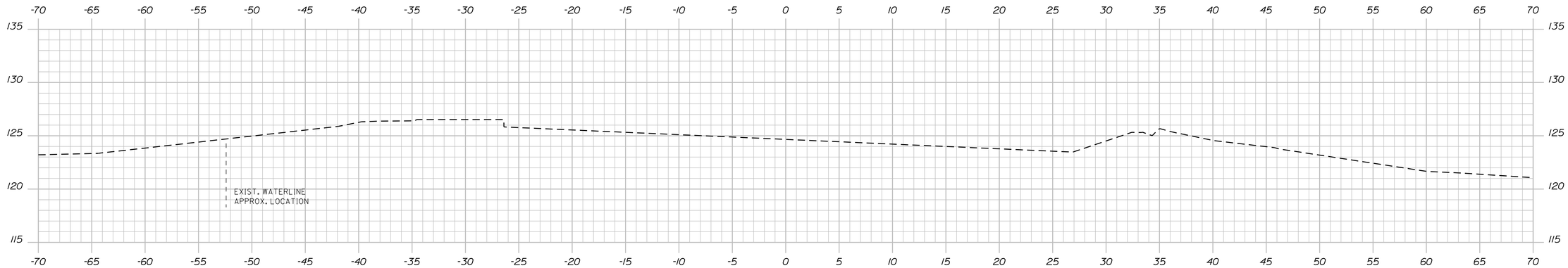

STATE OF MAINE
DEPARTMENT OF TRANSPORTATION

IM-1925(600)E

WIN
19256.00

HIGHWAY PLANS

	BY	DATE
PROJ. MANAGER	BRIAN KEEZER	
DESIGN-DETAILED	JLE	12-13
CHECKED-REVIEWED	ALG	12-13
DESIGN2-DETAILED2		
DESIGN3-DETAILED3		
REVISIONS 1		
REVISIONS 2		
REVISIONS 3		
REVISIONS 4		
FIELD CHANGES		

SIGNATURE
7960
P.E. NUMBER
December 18, 2013
DATE

BANGOR
OHIO STREET

CROSS SECTIONS

SHEET NUMBER
43
OF 44

Sta. 11+50.00 to Sta. 12+00.00

Filename: ...\MSTA\043_XSECT_11+50_002.dgn Division: HIGHWAY Username: jeason Date:12/18/2013

THIS PLAN WAS PREPARED IN CONNECTION WITH THE DEPARTMENT'S ACQUISITION OF REAL PROPERTY FOR TRANSPORTATION PURPOSES. IT CANNOT BE USED TO ESTABLISH LEGAL BOUNDARIES BETWEEN ABUTTING PROPERTY OWNERS.

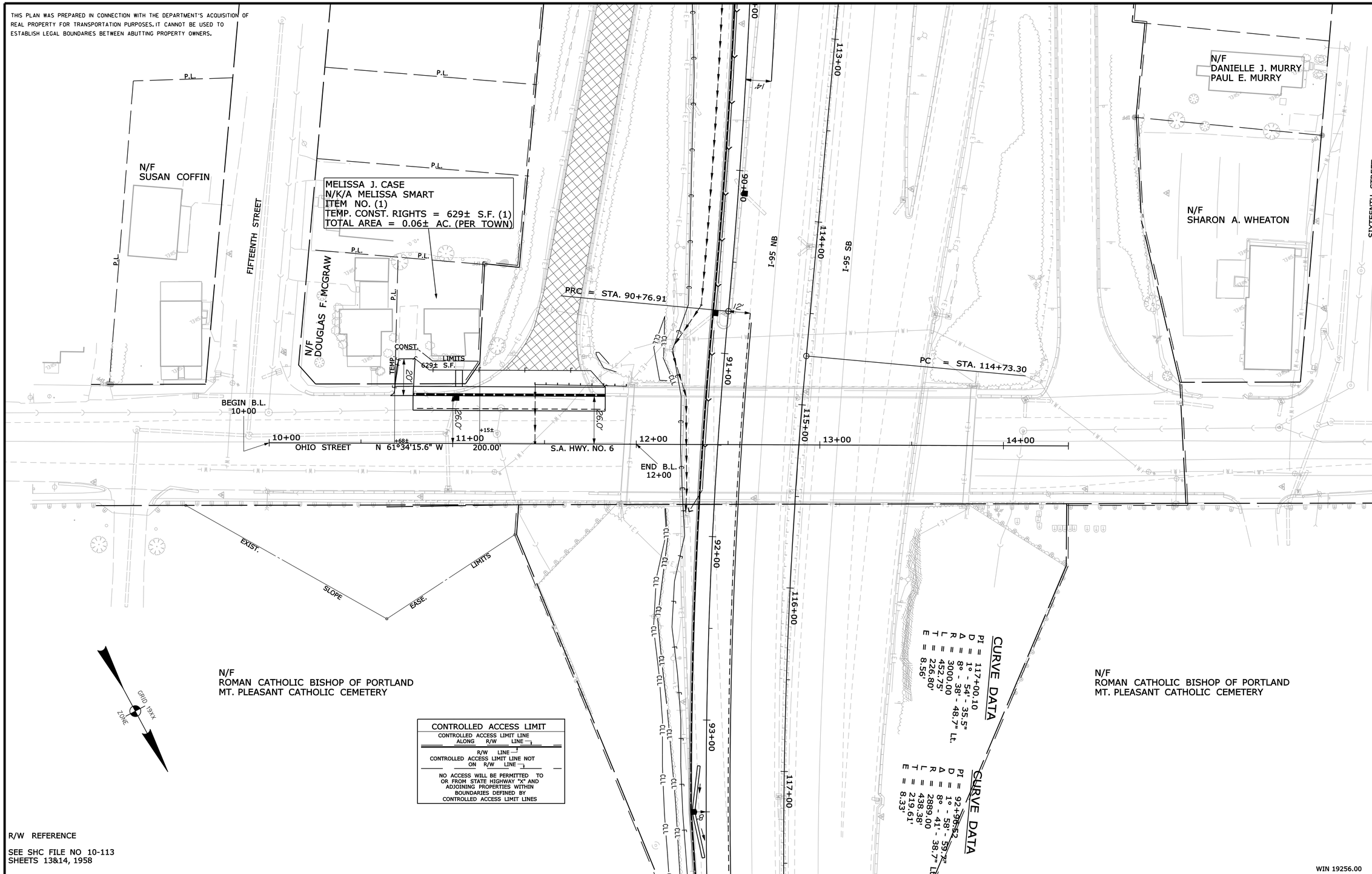

CONTROLLED ACCESS LIMIT

CONTROLLED ACCESS LIMIT LINE ALONG R/W LINE

R/W LINE

CONTROLLED ACCESS LIMIT LINE NOT ON R/W LINE

NO ACCESS WILL BE PERMITTED TO OR FROM STATE HIGHWAY "X" AND ADJOINING PROPERTIES WITHIN BOUNDARIES DEFINED BY CONTROLLED ACCESS LIMIT LINES

R/W REFERENCE

SEE SHC FILE NO 10-113
SHEETS 13&14, 1958

WIN 19256.00

SYMBOLS

- IP or IPF (IRON PIPE or PIN FOUND)
- ST. (SEPTIC TANK)
- (ROW MONUMENT)
- BM (TRAVERSE POINT)
- WATER LINE
- GAS LINE
- ELECTRIC LINE
- TELEPHONE LINE
- SEWER LINE
- WELL (WELL)
- GRADING LIMIT LINE
- CONSTRUCTION LIMIT LINE
- PROPERTY LINE
- LIMITS OF WROUGHT PORTION (L.O.W.P.)
- EXISTING RIGHT OF WAY
- NEW RIGHT OF WAY
- NEW ROW WITHIN EXIST. ROW
- CONTROL OF ACCESS

ITEM	TECH	CHECKED
BASE MAP		
EXIST. R/W	BDM	
PROP. LINES	BDM	
AREAS	BDM	

STATE OF MAINE
DEPARTMENT OF TRANSPORTATION
16 STATE HOUSE STATION - AUGUSTA, ME 04333-0016
BANGOR
RIGHT OF WAY MAP

REVISIONS			
NO.	DATE	DESCRIPTION	BY

PLAN FILED IN PLAN BOOK PAGE COUNTY RECORD

NO.	GRANTOR	INSTRUMENT	DATE	BOOK	PAGE

DAVID BERNHARDT
COMMISSIONER
JOYCE NOEL TAYLOR
CHIEF ENGINEER
DATE

PLAN NOT TO BE RECORDED

STATE AID HIGHWAY NO. 6
OHIO STREET
BANGOR PENOBSCOT COUNTY
FEDERAL AID PROJECT NO. AC-IM-1925(600)E

OCTOBER 2013 | RIGHT-OF-WAY MAP
SCALE 1" = 25' | SHEET 1 OF 1

SHEET NUMBER
44
OF 44

Filename: ...\00\ROW\MSTA\001_RWPLAN1.dgn Division: BRIDGE Username: coy.williams Date:12/31/2013