Updated 04/30/13

FEDERAL PROJECT

BIDDING INSTRUCTIONS

FOR ALL PROJECTS:

1. Use pen and ink to complete all paper Bids.
2. As a minimum, the following must be received prior to the time of Bid opening:

For a Paper Bid:

a) a copy of the Notice to Contractors, b) the completed Acknowledgement of Bid Amendments form, c) the completed Schedule of Items, d) two copies of the completed and signed Contract Offer, Agreement & Award form, e) a Bid Guaranty, (if required), and f) any other certifications or Bid requirements listed in the Bid Documents as due by Bid opening.

For an Electronic Bid:

a) a completed Bid using Expedite® software and submitted via the Bid Express™ web-based service, b) an electronic Bid Guaranty (if required) or a faxed copy of a Bid Bond (with original to be delivered within 72 hours), and c) any other Certifications or Bid requirements listed in the Bid Documents as due by Bid opening.

3. Include prices for all items in the Schedule of Items (<u>excluding non-selected alternates</u>).
4. Bid Guaranty acceptable forms are:
   a) a properly completed and signed Bid Bond on the Department's prescribed form (or on a form that does not contain any significant variations from the Department's form as determined by the Department) for 5% of the Bid Amount or
   b) an Official Bank Check, Cashier's Check, Certified Check, U.S. Postal Money Order or Negotiable Certificate of Deposit in the amount stated in the Notice to Contractors or
   c) an electronic bid bond submitted with an electronic bid.

5. If a paper Bid is to be sent, "FedEx First Overnight" delivery is suggested as the package is delivered directly to the DOT Headquarters Building located at 16 Child Street in Augusta. Other means, such as U.S. Postal Service's Express Mail has proven not to be reliable.

IN ADDITION, FOR FEDERAL AID PROJECTS:

6. Complete the DBE Proposed Utilization form, and submit with your bid. If you are submitting your bid electronically, you must FAX the form to (207) 624-3431. This is a curable defect.

If you need further information regarding Bid preparation, call the DOT Contracts Section at (207) 624-3410.

For complete bidding requirements, refer to Section 102 of the Maine Department of Transportation, Standard Specifications, Revision of December 2002.

January 19, 2012
Supersedes September 09, 2011

NOTICE

The Maine Department of Transportation is attempting to improve the way Bid Amendments/Addendums are handled, and allow for an electronic downloading of bid packages from our website, while continuing to maintain an optional planholders list.

Prospective bidders, subcontractors or suppliers who wish to download a copy of the bid package and receive a courtesy notification of project specific bid amendments, must provide an email address to Diane Barnes or David Venner at the MDOT Contracts mailbox at: MDOT.contracts@maine.gov. Each bid package will require a separate request.

Additionally, interested parties will be responsible for reviewing and retrieving the Bid Amendments from our web site, and acknowledging receipt and incorporating those Bid Amendments in their bids using the Acknowledgement of Bid Amendment Form.

The downloading of bid packages from the MDOT website is not the same as providing an electronic bid to the Department. Electronic bids must be submitted via http://www.BIDX.com. For information on electronic bidding contact Patrick Corum at patrick.corum@maine.gov , Rebecca Snowden at rebecca.snowden@maine.gov or Diane Barnes at diane.barnes@maine.gov.

NOTICE

For security and other reasons, all Bid Packages which are mailed, shall be provided in double (one envelope inside the other) envelopes. The *Inner Envelope* shall have the following information provided on it:

Bid Enclosed - Do Not Open
PIN:
Town:
Date of Bid Opening:
Name of Contractor with mailing address and telephone number:

In Addition to the usual address information, the *Outer Envelope* should have written or typed on it:

Double Envelope: Bid Enclosed
PIN:
Town:
Date of Bid Opening:
Name of Contractor:
This should not be much of a change for those of you who use Federal Express or similar services.

Hand-carried Bids may be in one envelope as before, and should be marked with the following infrormation:

Bid Enclosed: Do Not Open
PIN:
Town:
Name of Contractor:

October 16, 2001

STATE OF MAINE DEPARTMENT OF TRANSPORTATION

Bid Guaranty-Bid Bond Form

KNOW ALL MEN BY THESE PRESENTS THAT_____

_____, of the City/Town of _____and State of_____

as Principal, and _____as Surety, a

Corporation duly organized under the laws of the State of_____and having a usual place of

Business in _____and hereby held and firmly bound unto the Treasurer of

the State of Maine in the sum of_____,for payment which Principal and Surety bind

themselves, their heirs, executers, administrators, successors and assigns, jointly and severally.

The condition of this obligation is that the Principal has submitted to the Maine Department of Transportation, hereafter Department, a certain bid, attached hereto and incorporated as a part herein, to enter into a written contract for the construction of _____

_____

_____and if the Department shall accept said bid and the Principal shall execute and deliver a contract in the form attached hereto (properly completed in accordance with said bid) and shall furnish bonds for this faithful performance of said contract, and for the payment of all persons performing labor or furnishing material in connection therewith, and shall in all other respects perform the agreement created by the acceptance of said bid, then this obligation shall be null and void; otherwise it shall remain in full force, and effect.

Signed and sealed this_____day of _____20_____

WITNESS:

_____

_____

_____

WITNESS

_____

_____

_____

PRINCIPAL:

By_____

By:_____

By:_____

SURETY:

By_____

By:_____

Name of Local Agency: _____

SAMPLE

NOTICE

Bidders:

Please use the attached "Request for Information" form when faxing questions and comments concerning specific Contracts that have been Advertised for Bid. Include additional numbered pages as required. Questions are to be faxed to the number listed in the Notice to Contractors. This is the only allowable mechanism for answering Project specific questions. Maine DOT will not be bound to any answers to Project specific questions received during the Bidding phase through other processes.

State of Maine
Department of Transportation

REQUEST FOR INFORMATION

Date _____ Time _____

Information Requested: **PIN:** _____ **Town(s):** _____

_____

_____

_____

_____

_____

_____

_____

_____

_____

_____

_____

_____

Request by: _____ **Phone: (_____)**_____
Bid Date: _____ **Fax: (_____)**_____

Complete top portion of form and transmit to the number listed in the Notice to Contractors

RFI No: _____ **RFI received:** _____

Response:_____

_____

_____

_____

_____

_____

_____

_____

_____

_____

_____

Response By:_____ Date: _____

NOTICE

Disadvantaged Business Enterprise Proposed Utilization

The Apparent Low Bidder shall submit the Disadvantaged Business Enterprise Proposed Utilization form with their bid. This is a curable bid defect.

The Contractor's Disadvantaged Business Enterprise Proposed Utilization Plan form contains additional information that is required by USDOT.

The Contractor's Disadvantaged Business Enterprise Proposed Utilization Plan form should be used.

A copy of the new Contractor's Disadvantaged Business Enterprise Proposed Utilization Plan and instructions for completing it are attached.

Note: Questions about DBE firms, or to obtain a printed copy of the DBE Directory, contact The Office of Civil Rights at (207) 624-3066.

MDOTs DBE Directory of Certified firms can also be obtained at www.maine.gov/mdot/disadvantaged-business-enterprises/dbe-home.php

INSTRUCTIONS FOR PREPARING THE MaineDOT CONTRACTOR'S DBE/SUBCONTRACTOR UTILIZATION FORM

The Contractor Shall Extend equal opportunity to MaineDOT certified DBE firms (as listed in MaineDOT's DBE Directory of Certified Businesses) in the selection and utilization of Subcontractors and Suppliers.

SPECIFIC INSTRUCTIONS FOR COMPLETING THE FORM:

Insert Contractor name, the name of the person(s) preparing the form, and that person(s) telephone, fax number and e-mail address.

Calculate and provide percentage of your bid that will be allocated to DBE firms, Federal Project Identification Number, and location of the Project work.

In the columns, name each subcontractor, DBE and non-DBE firm to be used, provide the Unit/Item cost of the work/product to be provided by the subcontractor, give a brief description and the dollar value of the work.

Revised 1/12

DBE GOAL NOTICE
Maine Department of Transportation
Disadvantaged Business Enterprise Program

Notice is hereby given that in accordance with US DOT regulation 49 CFR Part 26, the Maine Department of Transportation has established a DBE Program for disadvantaged business participation in the federal-aid highway and bridge construction program; MaineDOT contracts covered by the program include consulting, construction, supplies, manufacturing, and service contracts.

For FFY 2013-15 (October 1, 2012 through September 30, 2015) MaineDOT has established an annual DBE participation goal of **4.0%** to be achieved through race/gender neutral means. This goal has been approved by the Federal Highway Administration and remains in effect through September 30, 2015. Maine DOT must meet this goal each federal fiscal year. If the goal is not met, MaineDOT must provide a justification for not meeting the goal and provide a plan to ensure the goal is met, which may include contract goals on certain projects that contractors will be required to meet.

MaineDOT asks all contractors, consultants and subcontractors to seek certified DBE firms for projects and to work to meet the determined 4.0% goal without the need to impose contract goals. DBE firms are listed on the MaineDOT website at:

http://www.maine.gov/mdot/disadvantaged-business-enterprises/pdf/directory.pdf

Interested parties may view MaineDOT's DBE goal setting methodology also posted on this website. If you have questions regarding this goal or the DBE program you may contact Sherry Tompkins at the Maine Department of Transportation, Civil Rights Office by telephone at (207) 624-3066 or by e-mail at: sherry.tompkins@maine.gov

.

MaineDOT CONTRACTOR'S DBE/SUBCONTRACTOR PROPOSED UTILIZATION FORM

All Bidders must furnish this form with their bid on Bid Opening day

Contractor: _____ **Telephone:** _____ **Ext** _____

Contact Person: _____ **Fax:** _____

E-mail: _____

BID DATE: _____

FEDERAL PROJECT PIN # _____ **PROJECT LOCATION:** _____

TOTAL ANTICIPATED DBE ____ % PARTICIPATION FOR THIS CONTRACT

WBE	DBE	Non DBE	Firm Name	Item Number & Description of Work	Quantity	Cost Per Unit/Item	Anticipated $ Value
						Subcontractor Total>	
						DBE Total >	

NOTE: THIS INFORMATION IS USED TO TRACK AND REPORT ANTICIPATED DBE PARTICIPATION IN ALL FEDERALLY FUNDED MAINE DOT CONTRACTS. THE ANTICIPATED DBE AMOUNT IS VOLUNTARY AND WILL NOT BECOME A PART OF THE CONTRACTUAL TERMS.

Equal Opportunity Use:

Form received: ___/___/___ Verified by: _____

FHWA ☐ FTA ☐ FAA ☐

For a complete list of certified firms and company designation (WBE/DBE) go to http://www.maine.gov/mdot

Rev. 05/13

Maine Department of Transportation Civil Rights Office

Directory of Certified Disadvantaged Business Enterprises

Listing can be found at:

www.maine.gov/mdot/disadvantaged-business-enterprises/dbe-home.php

For additional information and guidance contact: Civil Rights Office at (207) 624-3066

It is the responsibility of the Contractor to access the DBE Directory at this site in order to have the most current listings.

Vendor Registration

Prospective Bidders must register as a vendor with the Department of Administrative & Financial Services if the vendor is awarded a contract. Vendors will not be able to receive payment without first being registered. Vendors/Contractors will find information and register through the following link –
http://www.maine.gov/purchases/venbid/index.shtml

STATE OF MAINE DEPARTMENT OF TRANSPORTATION
NOTICE TO CONTRACTORS

Sealed Bids addressed to the Maine Department of Transportation, Augusta, Maine 04333 and endorsed on the wrapper "Bids for Union Street Bridge Replacement and Ohio Street/ Interstate 95 Exit 184 on ramp reconstruction in the city of **BANGOR**" will be received from contractors at the Reception Desk, Maine DOT Building, Capitol Street, Augusta, Maine, until 11:00 o'clock A.M. (prevailing time) on February 5, 2014 and at that time and place publicly opened and read. Bids will be accepted from all bidders. The lowest responsive bidder must have completed, or successfully complete, a bridge, highway, or project specific prequalification to be considered for the award of this contract. **We now accept electronic bids for those bid packages posted on the bidx.com website. Electronic bids do not have to be accompanied by paper bids. Please note: the Department will accept a facsimile of the bid bond; however, the original bid bond must then be received at the MDOT Contract Section within 72 hours of the bid opening. Until further notice, dual bids (one paper, one electronic) will be accepted, with the paper copy taking precedence.**

Description: Maine Federal Aid Project No. IM-1668(100)E, WIN 016681.00 and AC-IM-1925(600)E

Location: In Penobscot County, project is located on Fifteenth Street, Sunset Avenue, Interstate 95 Ramp A, Ramp G, Ramp J, Ohio Street, Exit 184 Northbound ramp, and Union Street/ Route 222 over Interstate 95.

Scope of Work: Union Street Bridge Replacement and Ohio Street/ Exit 184 Northbound reconstruction plus other incidental work.

For general information regarding Bidding and Contracting procedures, contact George Macdougall at (207)624-3410. Our webpage at http://www.maine.gov/mdot/contractors/ contains a copy of the schedule of items, Plan Holders List, written portions of bid amendments (not drawings), and bid results. For Project-specific information fax all questions to **Project Manager Steve Bodge** at (207)624-3431. Questions received after 12:00 noon of Monday prior to bid date will not be answered. Bidders shall not contact any other Departmental staff for clarification of Contract provisions, and the Department will not be responsible for any interpretations so obtained. TTY users call Maine Relay 711.

Plans, specifications and bid forms may be seen at the Maine DOT Building in Augusta, Maine and at the Department of Transportation's Regional Office in Bangor. They may be purchased from the Department between the hours of 8:00 a.m. to 4:30 p.m. by cash, credit card (Visa/Mastercard) or check payable to Treasurer, State of Maine sent to Maine Department of Transportation, Attn.: Mailroom, 16 State House Station, Augusta, Maine 04333-0016. They also may be purchased by telephone at (207) 624-3536 between the hours of 8:00 a.m. to 4:30 p.m. Full size plans $137.00 ($145.00 by mail). Half size plans $68.50 ($72.50 by mail), Bid Book $10 ($13 by mail), Single Sheets $2, payment in advance, all non-refundable.

Each Bid must be made upon blank forms provided by the Department and must be accompanied by a bid bond at 5% of the bid amount or an official bank check, cashier's check, certified check, certificate of deposit, or United States postal money order in the amount of $250,000.00 payable to Treasurer, State of Maine as a Bid guarantee. A Contract Performance Surety Bond and a Contract Payment Surety Bond, each in the amount of 100 percent of the Contract price, will be required of the successful Bidder.

This Contract is subject to all applicable Federal Laws. This contract is subject to compliance with the Disadvantaged Business Enterprise program requirements as set forth by the Maine Department of Transportation.

All work shall be governed by "State of Maine, Department of Transportation, Standard Specifications, Revision of December 2002", price $10 [$13 by mail], and Standard Details, Revision of December 2002, price $20 [$25 by mail]. They also may be purchased by telephone at (207) 624-3536 between the hours of 8:00 a.m. to 4:30 p.m. Standard Detail updates can be found at http://www.maine.gov/mdot/contractors/publications/ .

The right is hereby reserved to the Maine DOT to reject any or all bids.

Augusta, Maine
January 15, 2014

STATE OF MAINE
Joyce Noel Taylor
6997
LICENSED
PROFESSIONAL ENGINEER

Joyce Noel Taylor

JOYCE N. TAYLOR P.E.
CHIEF ENGINEER

Bangor
Union Street Bridge, WIN 016681.00
I-95 Exit 184, WIN 019256.00
April 14, 2011
Supersedes August 3, 2004

SPECIAL PROVISION 102.7.3
ACKNOWLEDGMENT OF BID AMENDMENTS

With this form, the Bidder acknowledges its responsibility to check for all Amendments to the Bid Package. For each Project under Advertisement, Amendments are located at http://www.maine.gov/mdot/contractors/ . It is the responsibility of the Bidder to determine if there are Amendments to the Project, to download them, to incorporate them into their Bid Package, and to reference the Amendment number and the date on the form below. The Maine DOT will not post Bid Amendments any later than noon the day before Bid opening without individually notifying all the planholders.

Amendment Number	Date

The Contractor, for itself, its successors and assigns, hereby acknowledges that it has received all of the above referenced Amendments to the Bid Package.

CONTRACTOR

_____ _____
Date Signature of authorized representative

_____
(Name and Title Printed)

NOTICE

All bids for Federal Projects **shall** be accompanied by the DBE Proposed Utilization form. If you are submitting an electronic bid, the DBE Utilization Form may be faxed to 207-624-3431. Failure to submit the form with the bid will be considered a curable defect.

CONTRACT ID: 016681.00 PROJECT(S): IM-1668(100)E
AC-IM-1925(600)E

CONTRACTOR :_____

SECTION 0001 PROJECT ITEMS

LINE NO	ITEM DESCRIPTION	APPROX. QUANTITY AND UNITS	UNIT PRICE DOLLARS	UNIT PRICE CTS	BID AMOUNT DOLLARS	BID AMOUNT CTS
0010	202.15 REMOVING MANHOLE OR CATCH BASIN	16.000 EA				
0020	202.19 REMOVING EXISTING BRIDGE	LUMP	LUMP			
0030	202.202 REMOVING PAVEMENT SURFACE	11120.000 SY				
0040	203.20 COMMON EXCAVATION EXIT 184	6550.000 CY				
0050	203.20 COMMON EXCAVATION UNION ST	6000.000 CY				
0060	203.24 COMMON BORROW	800.000 CY				
0070	203.25 GRANULAR BORROW	3150.000 CY				
0080	206.061 STRUCTURAL EARTH EXCAVATION - DRAINAGE AND MINOR STRUCTURES, BELOW GRADE	50.000 CY				
0090	206.082 STRUCTURAL EARTH EXCAVATION - MAJOR STRUCTURES	3350.000 CY				

CONTRACT ID: 016681.00 PROJECT(S): IM-1668(100)E
AC-IM-1925(600)E

CONTRACTOR :_____

LINE NO	ITEM DESCRIPTION	APPROX. QUANTITY AND UNITS	UNIT PRICE DOLLARS	UNIT PRICE CTS	BID AMOUNT DOLLARS	BID AMOUNT CTS
0100	206.10 STRUCTURAL EARTH EXCAVATION - PIERS	380.000 CY				
0110	304.10 AGGREGATE SUBBASE COURSE - GRAVEL EXIT 184	2950.000 CY				
0120	304.10 AGGREGATE SUBBASE COURSE - GRAVEL UNION ST	4500.000 CY				
0130	403.207 HOT MIX ASPHALT 19.0 MM HMA	810.000 T				
0140	403.208 HOT MIX ASPHALT 12.5 MM HMA SURFACE	100.000 T				
0150	403.2081 12.5 MM POLYMER MODIFIED HOT MIX ASPHALT	1920.000 T				
0160	403.209 HOT MIX ASPHALT 9.5 MM (SIDEWALKS, DRIVES, INCIDENTALS)	60.000 T				
0170	403.210 HOT MIX ASPHALT 9.5 MM	55.000 T				
0180	403.211 HOT MIX ASPHALT (SHIMMING)	20.000 T				
0190	403.213 HOT MIX ASPHALT 12.5 MM BASE EXIT 184	790.000 T				
0200	403.213 HOT MIX ASPHALT 12.5 MM BASE UNION ST	50.000 T				

CONTRACT ID: 016681.00 PROJECT(S): IM-1668(100)E
AC-IM-1925(600)E

CONTRACTOR :_____

LINE NO	ITEM DESCRIPTION	APPROX. QUANTITY AND UNITS	UNIT PRICE DOLLARS	UNIT PRICE CTS	BID AMOUNT DOLLARS	BID AMOUNT CTS
0210	403.2131 12.5 MM POLYMER MODIFIED HMA BASE	615.000 T				
0220	409.15 BITUMINOUS TACK COAT - APPLIED	936.000 G				
0230	461.131 TEMPORARY PAVEMENT	9.000 T				
0240	502.219 STRUCTURAL CONCRETE, ABUTMENTS AND RETAINING WALLS	LUMP	LUMP			
0250	502.239 STRUCTURAL CONCRETE PIERS	LUMP	LUMP			
0260	502.25 STRUCTURAL CONCRETE SUPERSTRUCTURE SLABS	LUMP	LUMP			
0270	502.31 STRUCTURAL CONCRETE APPROACH SLABS	LUMP	LUMP			
0280	502.49 STRUCTURAL CONCRETE CURBS AND SIDEWALKS	LUMP	LUMP			
0290	502.74 FIBER REINFORCED POLYMER BRIDGE DRAIN - TYPE C	8.000 EA				
0300	503.12 REINFORCING STEEL, FABRICATED AND DELIVERED	79427.000 LB				
0310	503.13 REINFORCING STEEL, PLACING	79427.000 LB				

CONTRACT ID: 016681.00 PROJECT(S): IM-1668(100)E
AC-IM-1925(600)E

CONTRACTOR :_____

LINE NO	ITEM DESCRIPTION	APPROX. QUANTITY AND UNITS	UNIT PRICE DOLLARS	UNIT PRICE CTS	BID AMOUNT DOLLARS	BID AMOUNT CTS
0320	503.14 EPOXY-COATED REINFORCING STEEL, FABRICATED AND DELIVERED	8803.000 LB				
0330	503.15 EPOXY-COATED REINFORCING STEEL, PLACING	8803.000 LB				
0340	503.17 MECHANICAL WELDED SPLICE NON COATED	128.000 EA				
0350	503.17 MECHANICAL WELDED SPLICE STAINLESS STEEL	158.000 EA				
0360	503.26 STAINLESS STEEL REINFORCEMENT - FABRICATED & DELIVERED	35350.000 LB				
0370	503.27 STAINLESS STEEL REINFORCEMENT - PLACING	35350.000 LB				
0380	507.0831 STEEL BRIDGE RAILING, 4 BAR	LUMP	LUMP			
0390	507.13 TEMPORARY BRIDGE RAILING	194.000 LF				
0400	508.14 HIGH PERFORMANCE WATERPROOFING MEMBRANE	LUMP	LUMP			
0410	509.70 COMPOSITE BEAM	LUMP	LUMP			

CONTRACT ID: 016681.00 PROJECT(S): IM-1668(100)E
AC-IM-1925(600)E

CONTRACTOR :_____

LINE NO	ITEM DESCRIPTION	APPROX. QUANTITY AND UNITS	UNIT PRICE DOLLARS	UNIT PRICE CTS	BID AMOUNT DOLLARS	BID AMOUNT CTS
0420	510.10 SPECIAL DETOUR_____ROADWAY WIDTH VEHICULAR & PEDESTRIAN TRAFFIC NOT SEPARATED 22' SUNSET AVENUE	LUMP	LUMP			
0430	511.07 COFFERDAM: ABUT NO.1	LUMP	LUMP			
0440	511.07 COFFERDAM: ABUT NO.2	LUMP	LUMP			
0450	511.07 COFFERDAM: PIER	LUMP	LUMP			
0460	512.081 FRENCH DRAINS	LUMP	LUMP			
0470	513.09 SLOPE PROTECTION - PORTLAND CEMENT CONCRETE	670.000 SY				
0480	514.06 CURING BOX FOR CONCRETE CYLINDERS	1.000 EA				
0490	515.21 PROTECTIVE COATING FOR CONCRETE SURFACES	LUMP	LUMP			
0500	520.22 EXPANSION DEVICE - COMPRESSION SEAL	2.000 EA				
0510	523.52 BEARING INSTALLATION	56.000 EA				

CONTRACT ID: 016681.00 PROJECT(S): IM-1668(100)E
AC-IM-1925(600)E

CONTRACTOR :_____

LINE NO	ITEM DESCRIPTION	APPROX. QUANTITY AND UNITS	UNIT PRICE DOLLARS	UNIT PRICE CTS	BID AMOUNT DOLLARS	BID AMOUNT CTS
0520	523.5401 LAMINATED ELASTOMERIC BEARINGS, FIXED	28.000 EA				
0530	523.5402 LAMINATED ELASTOMERIC BEARINGS, EXPANSION	28.000 EA				
0540	526.301 TEMPORARY CONCRETE BARRIER TYPE I	LUMP	LUMP			
0550	526.34 PERMANENT CONCRETE TRANSITION BARRIER	4.000 EA				
0560	527.303 ENERGY ABSORBING SYSTEM (ET-PLUS)	4.000 EA				
0570	527.34 WORK ZONE CRASH CUSHIONS	8.000 UN				
0580	603.159 12 INCH CULVERT PIPE OPTION III	49.000 LF				
0590	603.165 15 INCH REINFORCED CONCRETE PIPE CLASS III	65.000 LF				
0600	603.169 15 INCH CULVERT PIPE OPTION III	222.000 LF				
0610	603.179 18 INCH CULVERT PIPE OPTION III	58.000 LF				
0620	603.199 24 INCH CULVERT PIPE OPTION III	128.000 LF				

CONTRACT ID: 016681.00 PROJECT(S): IM-1668(100)E
AC-IM-1925(600)E

CONTRACTOR :_____

LINE NO	ITEM DESCRIPTION	APPROX. QUANTITY AND UNITS	UNIT PRICE DOLLARS	UNIT PRICE CTS	BID AMOUNT DOLLARS	BID AMOUNT CTS
0630	604.072 CATCH BASIN TYPE A1-C	3.000 EA				
0640	604.092 CATCH BASIN TYPE B1-C	11.000 EA				
0650	604.15 MANHOLE	2.200 EA				
0660	604.16 ALTERING CATCH BASIN TO MANHOLES	3.000 EA				
0670	604.164 REBUILDING CATCH BASIN	1.000 EA				
0680	604.166 REBUILDING MANHOLE	1.000 EA				
0690	604.18 ADJUSTING MANHOLE OR CATCH BASIN TO GRADE	3.000 EA				
0700	604.252 CATCH BASIN TYPE A5-C	11.500 EA				
0710	604.262 CATCH BASIN TYPE B5-C	5.200 EA				
0720	605.09 6 INCH UNDERDRAIN TYPE B	1410.000 LF				
0730	605.11 12 INCH UNDERDRAIN TYPE C	798.000 LF				

CONTRACT ID: 016681.00 PROJECT(S): IM-1668(100)E
AC-IM-1925(600)E

CONTRACTOR :_____

LINE NO	ITEM DESCRIPTION	APPROX. QUANTITY AND UNITS	UNIT PRICE DOLLARS	UNIT PRICE CTS	BID AMOUNT DOLLARS	BID AMOUNT CTS
0740	605.12 15 INCH UNDERDRAIN TYPE C	246.000 LF				
0750	606.1721 BRIDGE TRANSITION - TYPE 1	4.000 EA				
0760	606.23 GUARDRAIL TYPE 3C - SINGLE RAIL	63.000 LF				
0770	606.231 GUARDRAIL TYPE 3C - 15 FOOT RADIUS AND LESS	25.000 LF				
0780	606.232 GUARDRAIL TYPE 3C - OVER 15 FOOT RADIUS	88.000 LF				
0790	606.24 GUARDRAIL TYPE 3D - SINGLE RAIL	638.000 LF				
0800	606.265 TERMINAL END - SINGLE RAIL - GALVANIZED STEEL	2.000 EA				
0810	606.353 REFLECTORIZED FLEXIBLE GUARDRAIL MARKER	12.000 EA				
0820	606.356 UNDERDRAIN DELINEATOR POST	3.000 EA				
0830	606.363 GUARDRAIL REMOVE AND DISPOSE	618.000 LF				
0840	606.369 GUARDRAIL REMOVED AND STACKED	500.000 LF				

CONTRACT ID: 016681.00 PROJECT(S): IM-1668(100)E
AC-IM-1925(600)E

CONTRACTOR :_____

LINE NO	ITEM DESCRIPTION	APPROX. QUANTITY AND UNITS	UNIT PRICE DOLLARS	UNIT PRICE CTS	BID AMOUNT DOLLARS	BID AMOUNT CTS
0850	606.48 SINGLE GALVANIZED STEEL POST	184.000 EA				
0860	606.63 THRIE BEAM RAIL BEAM	700.000 LF				
0870	606.64 GUARDRAIL THRIE BEAM - DOUBLE RAIL	200.000 LF				
0880	606.65 GUARDRAIL THRIE BEAM - SINGLE RAIL	300.000 LF				
0890	606.66 TERMINAL END THRIE BEAM	2.000 EA				
0900	607.163 CHAIN LINK FENCE - 4 FOOT P.V.C. COATED	40.000 LF				
0910	607.184 CHAIN LINK SNOW FENCE 3 FOOT	344.000 LF				
0920	607.24 REMOVE AND RESET FENCE	50.000 LF				
0930	607.421 SCREENING FENCE	250.000 LF				
0940	608.26 CURB RAMP DETECTABLE WARNING FIELD	230.000 SF				
0950	609.11 VERTICAL CURB TYPE 1	1270.000 LF				

CONTRACT ID: 016681.00 PROJECT(S): IM-1668(100)E
AC-IM-1925(600)E

CONTRACTOR :_____

LINE NO	ITEM DESCRIPTION	APPROX. QUANTITY AND UNITS	UNIT PRICE DOLLARS	UNIT PRICE CTS	BID AMOUNT DOLLARS	BID AMOUNT CTS
0960	609.12 VERTICAL CURB TYPE 1 - CIRCULAR	230.000 LF				
0970	609.234 TERMINAL CURB TYPE 1 - 4 FOOT	8.000 EA				
0980	609.238 TERMINAL CURB TYPE 1 - 8 FOOT	21.000 EA				
0990	609.34 CURB TYPE 5	400.000 LF				
1000	609.35 CURB TYPE 5 - CIRCULAR	10.000 LF				
1010	609.38 RESET CURB TYPE 1	114.000 LF				
1020	609.40 RESET CURB TYPE 5	1700.000 LF				
1030	609.441 CURBING REMOVED AND STACKED	1610.000 LF				
1040	610.08 PLAIN RIPRAP	27.000 CY				
1050	610.18 STONE DITCH PROTECTION	41.000 CY				
1060	613.319 EROSION CONTROL BLANKET	1800.000 SY				

CONTRACT ID: 016681.00 PROJECT(S): IM-1668(100)E
AC-IM-1925(600)E

CONTRACTOR :_____

LINE NO	ITEM DESCRIPTION	APPROX. QUANTITY AND UNITS	UNIT PRICE DOLLARS	UNIT PRICE CTS	BID AMOUNT DOLLARS	BID AMOUNT CTS
1070	615.07 LOAM	1035.000 CY				
1080	615.081 COMPOST BLANKET	150.000 CY				
1090	618.1301 SEEDING METHOD NUMBER 1 - PLAN QUANTITY	77.000 UN				
1100	618.1401 SEEDING METHOD NUMBER 2 - PLAN QUANTITY	48.000 UN				
1110	618.1411 SEEDING METHOD NUMBER 3 - PLAN QUANTITY	22.000 UN				
1120	619.1201 MULCH - PLAN QUANTITY	146.000 UN				
1130	619.1401 EROSION CONTROL MIX	50.000 CY				
1140	620.58 EROSION CONTROL GEOTEXTILE	195.000 SY				
1150	626.11 PRECAST CONCRETE JUNCTION BOX	13.000 EA				
1160	626.22 NON-METALLIC CONDUIT	2260.000 LF				
1170	626.27 4 INCH DIAMETER UTILITY CONDUIT SYSTEM	LUMP	LUMP			

CONTRACT ID: 016681.00 PROJECT(S): IM-1668(100)E
AC-IM-1925(600)E

CONTRACTOR :_____

LINE NO	ITEM DESCRIPTION	APPROX. QUANTITY AND UNITS	UNIT PRICE DOLLARS	UNIT PRICE CTS	BID AMOUNT DOLLARS	BID AMOUNT CTS
1180	626.31 18 INCH FOUNDATION	2.000 EA				
1190	626.32 24 INCH FOUNDATION	18.000 EA				
1200	626.34 SIGNAL POLE FOUNDATION	5.000 EA				
1210	626.35 CONTROLLER CABINET FOUNDATION	2.000 EA				
1220	626.36 REMOVE OR MODIFY CONCRETE FOUNDATION	10.000 EA				
1230	627.18 12 " SOLID WHITE PAVEMENT MARKING	500.000 LF				
1240	627.733 4" WHITE OR YELLOW PAINTED PAVEMENT MARKING LINE	5360.000 LF				
1250	627.744 6" WHITE OR YELLOW PAINTED PAVEMENT MARKING LINE	9400.000 LF				
1260	627.75 WHITE OR YELLOW PAVEMENT & CURB MARKING	1720.000 SF				
1270	627.76 TEMPORARY PAVEMENT MARKING LINE, WHITE OR YELLOW	LUMP	LUMP			
1280	627.77 REMOVING PAVEMENT MARKINGS	3350.000 SF				

CONTRACT ID: 016681.00 PROJECT(S): IM-1668(100)E
AC-IM-1925(600)E

CONTRACTOR :_____

LINE NO	ITEM DESCRIPTION	APPROX. QUANTITY AND UNITS	UNIT PRICE DOLLARS	UNIT PRICE CTS	BID AMOUNT DOLLARS	BID AMOUNT CTS
1290	629.05 HAND LABOR, STRAIGHT TIME	110.000 HR				
1300	631.10 AIR COMPRESSOR (INCLUDING OPERATOR)	40.000 HR				
1310	631.11 AIR TOOL (INCLUDING OPERATOR)	40.000 HR				
1320	631.12 ALL PURPOSE EXCAVATOR (INCLUDING OPERATOR)	90.000 HR				
1330	631.14 GRADER (INCLUDING OPERATOR)	40.000 HR				
1340	631.172 TRUCK - LARGE (INCLUDING OPERATOR)	50.000 HR				
1350	631.18 CHAIN SAW RENTAL (INCLUDING OPERATOR)	50.000 HR				
1360	631.20 STUMP CHIPPER (INCLUDING OPERATOR)	20.000 HR				
1370	631.21 ROAD BROOM (INCLUDING OPERATORS AND HAULER)	20.000 HR				
1380	631.22 FRONT END LOADER (INCLUDING OPERATOR)	10.000 HR				
1390	631.32 CULVERT CLEANER (INCLUDING OPERATOR)	90.000 HR				

CONTRACT ID: 016681.00 PROJECT(S): IM-1668(100)E
AC-IM-1925(600)E

CONTRACTOR :_____

LINE NO	ITEM DESCRIPTION	APPROX. QUANTITY AND UNITS	UNIT PRICE DOLLARS	UNIT PRICE CTS	BID AMOUNT DOLLARS	BID AMOUNT CTS
1400	634.16 HIGHWAY LIGHTING	LUMP	LUMP			
1410	634.2042 LED LUMINARIES	8.000 EA				
1420	634.208 REMOVE AND RESET LIGHT STANDARDS	1.000 EA				
1430	634.2082 REMOVE EXISTING LIGHT STANDARD	1.000 EA				
1440	634.21 CONVENTIONAL LIGHT STANDARD	8.000 EA				
1450	637.071 DUST CONTROL	LUMP	LUMP			
1460	639.18 FIELD OFFICE TYPE A	2.000 EA				
1470	643.6004 TEMPORARY SOLAR POWERED PEDESTRIAN CROSSING BEACON	4.000 EA				
1480	643.71 TRAFFIC SIGNAL MODIFICATION UNION ST AND RAMP A	LUMP	LUMP			
1490	643.71 TRAFFIC SIGNAL MODIFICATION UNION ST AND RAMP G	LUMP	LUMP			
1500	643.712 PREEMPTIVE SYSTEM	LUMP	LUMP			

CONTRACT ID: 016681.00 PROJECT(S): IM-1668(100)E
AC-IM-1925(600)E

CONTRACTOR :_____

LINE NO	ITEM DESCRIPTION	APPROX. QUANTITY AND UNITS	UNIT PRICE DOLLARS	UNIT PRICE CTS	BID AMOUNT DOLLARS	BID AMOUNT CTS
1510	643.83 VIDEO DETECTION SYSTEM	LUMP	LUMP			
1520	643.90 INTERCONNECT WIRE BETWEEN	LUMP	LUMP			
1530	643.91 MAST ARM POLE WITH 20FT MAST ARM	1.000 EA				
1540	643.92 PEDESTAL POLE	9.000 EA				
1550	643.94 DUAL PURPOSE POLE WITH 15FT & 35FT MAST ARMS	1.000 EA				
1560	643.94 DUAL PURPOSE POLE WITH 25FT & 30FT MAST ARMS	1.000 EA				
1570	643.94 DUAL PURPOSE POLE WITH 35FT MAST ARM	1.000 EA				
1580	643.94 DUAL PURPOSE POLE WITH 40FT MAST ARM	1.000 EA				
1590	645.106 DEMOUNT REGULATORY, WARNING, CONFIRMATION AND ROUTE MARKER ASSEMBLY SIGN	30.000 EA				
1600	645.108 DEMOUNT POLE	28.000 EA				

CONTRACT ID: 016681.00 PROJECT(S): IM-1668(100)E
AC-IM-1925(600)E

CONTRACTOR :_____

LINE NO	ITEM DESCRIPTION	APPROX. QUANTITY AND UNITS	UNIT PRICE DOLLARS	UNIT PRICE CTS	BID AMOUNT DOLLARS	BID AMOUNT CTS
1610	645.116 REINSTALL REGULATORY, WARNING, CONFIRMATION AND ROUTE MARKER ASSEMBLY SIGN	30.000 EA				
1620	645.118 REINSTALL POLE	28.000 EA				
1630	645.161 BREAKAWAY DEVICES SINGLE POLE	2.000 EA				
1640	645.289 STEEL H-BEAM POLES	200.000 LB				
1650	645.306 FLEXIBLE REFLECTORIZED DELINEATOR	15.000 EA				
1660	652.30 FLASHING ARROW BOARD	6.000 EA				
1670	652.311 TYPE II BARRICADE	2.000 EA				
1680	652.312 TYPE III BARRICADE	86.000 EA				
1690	652.33 DRUM	600.000 EA				
1700	652.34 CONE	250.000 EA				

CONTRACT ID: 016681.00 PROJECT(S): IM-1668(100)E
AC-IM-1925(600)E

CONTRACTOR :_____

LINE NO	ITEM DESCRIPTION	APPROX. QUANTITY AND UNITS	UNIT PRICE DOLLARS	UNIT PRICE CTS	BID AMOUNT DOLLARS	BID AMOUNT CTS
1710	652.343 TEMPORARY MODULAR DELINEATOR CURB	1200.000 LF				
1720	652.35 CONSTRUCTION SIGNS	4000.000 SF				
1730	652.36 MAINTENANCE OF TRAFFIC CONTROL DEVICES	630.000 CD				
1740	652.361 MAINTENANCE OF TRAFFIC CONTROL DEVICES	LUMP	LUMP			
1750	652.38 FLAGGER	7600.000 HR				
1760	652.381 TRAFFIC OFFICER	560.000 HR				
1770	652.41 PORTABLE CHANGEABLE MESSAGE SIGN	11.000 EA				
1780	656.75 TEMPORARY SOIL EROSION AND WATER POLLUTION CONTROL	LUMP	LUMP			
1790	658.20 ACRYLIC LATEX COLOR FINISH, GREEN	13.000 SY				
1800	659.10 MOBILIZATION	LUMP	LUMP			
1810	660.21 ON-THE-JOB TRAINING (BID)	1000.000 HR				

CONTRACT ID: 016681.00 PROJECT(S): IM-1668(100)E
AC-IM-1925(600)E

CONTRACTOR :_____

LINE NO	ITEM DESCRIPTION	APPROX. QUANTITY AND UNITS	UNIT PRICE DOLLARS	UNIT PRICE CTS	BID AMOUNT DOLLARS	BID AMOUNT CTS
1820	802.171 16 INCH DIAMETER INSULATION	190.000 LF				
1830	827.331 TRENCH INSULATION	7.000 SY				
1840	830.10 WATER MAIN BRIDGE CROSSING	LUMP	LUMP			
1850	845.10 STRUCTURAL STEEL UTILITY SUPPORT BANGOR WATER DISTRICT	LUMP	LUMP			
1860	845.10 STRUCTURAL STEEL UTILITY SUPPORT FAIRPOINT	LUMP	LUMP			
1870	845.10 STRUCTURAL STEEL UTILITY SUPPORT MDOT	LUMP	LUMP			
	SECTION 0001 TOTAL					
	TOTAL BID					

CONTRACT AGREEMENT, OFFER & AWARD

AGREEMENT made on the date last signed below, by and between the State of Maine, acting through and by its Department of Transportation (Department), an agency of state government with its principal administrative offices located at Child Street, Augusta, Maine, with a mailing address at 16 State House Station, Augusta, Maine 04333-0016, and _____ a corporation or other legal entity organized under the laws of the State of _____, with its principal place of business located at _____ _____

The Department and the Contractor, in consideration of the mutual promises set forth in this Agreement (the "Contract"), hereby agree as follows:

A. The Work.

The Contractor agrees to complete all Work as specified or indicated in the Contract including Extra Work in conformity with the Contract, WIN **016681.00** for **Union Street Bridge Replacement** and WIN **019256.00** for **Ohio Street/ Exit 184 Northbound Reconstruction** in the city of **Bangor**, County of **Penobscot**, Maine. The Work includes construction, maintenance during construction, warranty as provided in the Contract, and other incidental work.

The Contractor shall be responsible for furnishing all supervision, labor, equipment, tools supplies, permanent materials and temporary materials required to perform the Work including construction quality control including inspection, testing and documentation, all required documentation at the conclusion of the project, warranting its work and performing all other work indicated in the Contract.

The Department shall have the right to alter the nature and extent of the Work as provided in the Contract; payment to be made as provided in the same.

B. Time.

The Contractor agrees to complete all **Union Street Bridge Work**, except warranty work, on or before **November 15, 2016.** The Contractor agrees to complete all **Ohio Street/ Exit 184 Northbound Reconstruction Work**, except warranty work, on or before **November 15, 2014.** Further, the Department may deduct from moneys otherwise due the Contractor, not as a penalty, but as Liquidated Damages in accordance with Sections 107.7 and 107.8 of the State of Maine Department of Transportation Standard Specifications, Revision of December 2002 and related Special Provisions.

C. Price.

The quantities given in the Schedule of Items of the Bid Package will be used as the basis for determining the original Contract amount and for determining the amounts of the required Performance Surety Bond and Payment Surety Bond, and that the amount of this offer is _____

_____

$_ _____ Performance Bond and Payment Bond each being 100% of the amount of this Contract.

D. Contract.

This Contract, which may be amended, modified, or supplemented in writing only, consists of the Contract documents as defined in the Plans, Standard Specifications, Revision of December 2002, Standard Details Revision of December 2002 as updated through advertisement, Supplemental Specifications, Special Provisions, Contract Agreement; and Contract Bonds. It is agreed and understood that this Contract will be governed by the documents listed above.

E. Certifications.

By signing below, the Contractor hereby certifies that to the best of the Contractor's knowledge and belief:

1. All of the statements, representations, covenants, and/or certifications required or set forth in the Bid and the Bid Documents, including those in the Federal Contract Provisions Supplement, and the Contract are still complete and accurate as of the date of this Agreement.

2. The Contractor knows of no legal, contractual, or financial impediment to entering into this Contract.

3. The person signing below is legally authorized by the Contractor to sign this Contract on behalf of the Contractor and to legally bind the Contractor to the terms of the Contract.

F. Offer.

The undersigned, having carefully examined the site of work, the Plans, Standard Specifications Revision of December 2002, Standard Details Revision of December 2002 as updated through advertisement, Supplemental Specifications, Special Provisions, Contract Agreement; and Contract Bonds contained herein for construction of: **WIN 016681.00 Union Street Bridge Replacement and WIN 019256.00 Ohio Street/ Exit 184 Northbound Reconstruction plus other incidental work**, State of Maine, on which bids will be received until the time specified in the "Notice to Contractors" do(es) hereby bid and offer to enter into this contract to supply all the materials, tools, equipment and labor to construct the whole of the Work in strict accordance with the terms and conditions of this Contract at the unit prices in the attached "Schedule of Items".

The Offeror agrees to perform the work required at the price specified above and in accordance with the bids provided in the attached "Schedule of Items" in strict accordance with the terms of this solicitation, and to provide the appropriate insurance and bonds if this offer is accepted by the Government in writing.

As Offeror also agrees:

First: To do any extra work, not covered by the attached "Schedule of Items", which may be ordered by the Resident, and to accept as full compensation the amount determined upon a "Force Account" basis as provided in the Standard Specifications, Revision of December 2002, and as addressed in the contract documents.

Second: That the bid bond at 5% of the bid amount or the official bank check, cashier's check, certificate of deposit or U. S. Postal Money Order in the amount given in the "Notice to Contractors", payable to the Treasurer of the State of Maine and accompanying this bid, shall be forfeited, as liquidated damages, if in case this bid is accepted, and the undersigned shall fail to abide by the terms and conditions of the offer and fail to furnish satisfactory insurance and Contract bonds under the conditions stipulated in the Specifications within 15 days of notice of intent to award the contract.

Third: To begin the Work as stated in Section 107.2 of the Standard Specifications Revision of December 2002 and complete the Work within the time limits given in the Special Provisions of this Contract.

Fourth: The Contractor will be bound to the Disadvantaged Business Enterprise (DBE) Requirements contained in the attached Notice (Additional Instructions to Bidders) and

submit a completed Contractor's Disadvantaged Business Enterprise Utilization Plan with their bid.

Fifth: That this offer shall remain open for 30 calendar days after the date of opening of bids.

Sixth: The Bidder hereby certifies, to the best of its knowledge and belief that: the Bidder has not, either directly or indirectly, entered into any agreement, participated in any collusion, or otherwise taken any action in restraint of competitive bidding in connection with its bid, and its subsequent contract with the Department.

IN WITNESS WHEREOF, the Contractor, for itself, its successors and assigns, hereby execute two duplicate originals of this Agreement and thereby binds itself to all covenants, terms, and obligations contained in the Contract Documents.

CONTRACTOR

_____	_____
Date	(Signature of Legally Authorized Representative of the Contractor)
_____	_____
Witness	(Name and Title Printed)

G. Award.

Your offer is hereby accepted. This award consummates the Contract, and the documents referenced herein.

MAINE DEPARTMENT OF TRANSPORTATION

_____	_____
Date	By: David Bernhardt, Commissioner
_____	
Witness	

CONTRACT AGREEMENT, OFFER & AWARD

AGREEMENT made on the date last signed below, by and between the State of Maine, acting through and by its Department of Transportation (Department), an agency of state government with its principal administrative offices located at Child Street, Augusta, Maine, with a mailing address at 16 State House Station, Augusta, Maine 04333-0016, and _____ a corporation or other legal entity organized under the laws of the State of _____, with its principal place of business located at _____ _____

The Department and the Contractor, in consideration of the mutual promises set forth in this Agreement (the "Contract"), hereby agree as follows:

A. The Work.

The Contractor agrees to complete all Work as specified or indicated in the Contract including Extra Work in conformity with the Contract, WIN **016681.00** for **Union Street Bridge Replacement** and WIN **019256.00** for **Ohio Street/ Exit 184 Northbound Reconstruction** in the city of **Bangor**, County of **Penobscot**, Maine. The Work includes construction, maintenance during construction, warranty as provided in the Contract, and other incidental work.

The Contractor shall be responsible for furnishing all supervision, labor, equipment, tools supplies, permanent materials and temporary materials required to perform the Work including construction quality control including inspection, testing and documentation, all required documentation at the conclusion of the project, warranting its work and performing all other work indicated in the Contract.

The Department shall have the right to alter the nature and extent of the Work as provided in the Contract; payment to be made as provided in the same.

B. Time.

The Contractor agrees to complete all **Union Street Bridge Work**, except warranty work, on or before **November 15, 2016.** The Contractor agrees to complete all **Ohio Street/ Exit 184 Northbound Reconstruction Work**, except warranty work, on or before **November 15, 2014.** Further, the Department may deduct from moneys otherwise due the Contractor, not as a penalty, but as Liquidated Damages in accordance with Sections 107.7 and 107.8 of the State of Maine Department of Transportation Standard Specifications, Revision of December 2002 and related Special Provisions.

C. Price.

The quantities given in the Schedule of Items of the Bid Package will be used as the basis for determining the original Contract amount and for determining the amounts of the required Performance Surety Bond and Payment Surety Bond, and that the amount of this offer is _____

_____

$_ _____ Performance Bond and Payment Bond each being 100% of the amount of this Contract.

D. Contract.

This Contract, which may be amended, modified, or supplemented in writing only, consists of the Contract documents as defined in the Plans, Standard Specifications, Revision of December 2002, Standard Details Revision of December 2002 as updated through advertisement, Supplemental Specifications, Special Provisions, Contract Agreement; and Contract Bonds. It is agreed and understood that this Contract will be governed by the documents listed above.

E. Certifications.

By signing below, the Contractor hereby certifies that to the best of the Contractor's knowledge and belief:

1. All of the statements, representations, covenants, and/or certifications required or set forth in the Bid and the Bid Documents, including those in the Federal Contract Provisions Supplement, and the Contract are still complete and accurate as of the date of this Agreement.

2. The Contractor knows of no legal, contractual, or financial impediment to entering into this Contract.

3. The person signing below is legally authorized by the Contractor to sign this Contract on behalf of the Contractor and to legally bind the Contractor to the terms of the Contract.

F. Offer.

The undersigned, having carefully examined the site of work, the Plans, Standard Specifications Revision of December 2002, Standard Details Revision of December 2002 as updated through advertisement, Supplemental Specifications, Special Provisions, Contract Agreement; and Contract Bonds contained herein for construction of: **WIN 016681.00 Union Street Bridge Replacement and WIN 019256.00 Ohio Street/ Exit 184 Northbound Reconstruction plus other incidental work**, State of Maine, on which bids will be received until the time specified in the "Notice to Contractors" do(es) hereby bid and offer to enter into this contract to supply all the materials, tools, equipment and labor to construct the whole of the Work in strict accordance with the terms and conditions of this Contract at the unit prices in the attached "Schedule of Items".

The Offeror agrees to perform the work required at the price specified above and in accordance with the bids provided in the attached "Schedule of Items" in strict accordance with the terms of this solicitation, and to provide the appropriate insurance and bonds if this offer is accepted by the Government in writing.

As Offeror also agrees:

First: To do any extra work, not covered by the attached "Schedule of Items", which may be ordered by the Resident, and to accept as full compensation the amount determined upon a "Force Account" basis as provided in the Standard Specifications, Revision of December 2002, and as addressed in the contract documents.

Second: That the bid bond at 5% of the bid amount or the official bank check, cashier's check, certificate of deposit or U. S. Postal Money Order in the amount given in the "Notice to Contractors", payable to the Treasurer of the State of Maine and accompanying this bid, shall be forfeited, as liquidated damages, if in case this bid is accepted, and the undersigned shall fail to abide by the terms and conditions of the offer and fail to furnish satisfactory insurance and Contract bonds under the conditions stipulated in the Specifications within 15 days of notice of intent to award the contract.

Third: To begin the Work as stated in Section 107.2 of the Standard Specifications Revision of December 2002 and complete the Work within the time limits given in the Special Provisions of this Contract.

Fourth: The Contractor will be bound to the Disadvantaged Business Enterprise (DBE) Requirements contained in the attached Notice (Additional Instructions to Bidders) and

submit a completed Contractor's Disadvantaged Business Enterprise Utilization Plan with their bid.

Fifth: That this offer shall remain open for 30 calendar days after the date of opening of bids.

Sixth: The Bidder hereby certifies, to the best of its knowledge and belief that: the Bidder has not, either directly or indirectly, entered into any agreement, participated in any collusion, or otherwise taken any action in restraint of competitive bidding in connection with its bid, and its subsequent contract with the Department.

IN WITNESS WHEREOF, the Contractor, for itself, its successors and assigns, hereby execute two duplicate originals of this Agreement and thereby binds itself to all covenants, terms, and obligations contained in the Contract Documents.

CONTRACTOR

_____	_____
Date	(Signature of Legally Authorized Representative of the Contractor)
_____	_____
Witness	(Name and Title Printed)

G. Award.

Your offer is hereby accepted. This award consummates the Contract, and the documents referenced herein.

MAINE DEPARTMENT OF TRANSPORTATION

_____	_____
Date	By: David Bernhardt, Commissioner
_____	
Witness	

CONTRACT AGREEMENT, OFFER & AWARD

AGREEMENT made on the date last signed below, by and between the State of Maine, acting through and by its Department of Transportation (Department), an agency of state government with its principal administrative offices located at Child Street Augusta, Maine, with a mailing address at 16 State House Station, Augusta, Maine 04333-0016, and **(Name of the firm bidding the job)** a corporation or other legal entity organized under the laws of the State of Maine, with its principal place of business located at **(address of the firm bidding the job)**

The Department and the Contractor, in consideration of the mutual promises set forth in this Agreement (the "Contract"), hereby agree as follows:

SAMPLE

A. The Work.

The Contractor agrees to complete all Work as specified or indicated in the Contract including Extra Work in conformity with the Contract, PIN No.**1224.00**, for the **Hot Mix Asphalt Overlay** in the town/city of **South Nowhere,** County of **Washington**, Maine. The Work includes construction, maintenance during construction, warranty as provided in the Contract, and other incidental work.

The Contractor shall be responsible for furnishing all supervision, labor, equipment, tools supplies, permanent materials and temporary materials required to perform the Work including construction quality control including inspection, testing and documentation, all required documentation at the conclusion of the project, warranting its work and performing all other work indicated in the Contract.

The Department shall have the right to alter the nature and extent of the Work as provided in the Contract; payment to be made as provided in the same.

B. Time.

The Contractor agrees to complete all Work, except warranty work, on or before **November 15, 2006.** Further, the Department may deduct from moneys otherwise due the Contractor, not as a penalty, but as Liquidated Damages in accordance with Sections 107.7 and 107.8 of the State of Maine Department of Transportation Standard Specifications, Revision of December 2002 and related Special Provisions.

C. Price.

The quantities given in the Schedule of Items of the Bid Package will be used as the basis for determining the original Contract amount and for determining the amounts of the required Performance Surety Bond and Payment Surety Bond, and that the amount of this offer is **____(Place bid here in alphabetical form such as One Hundred and Two dollars and 10 cents)** **$_ (repeat bid here in numerical terms, such as $102.10)**_____ Performance Bond and Payment Bond each being 100% of the amount of this Contract.

D. Contract.

This Contract, which may be amended, modified, or supplemented in writing only, consists of the Contract documents as defined in the Plans, Standard Specifications, Revision of December 2002, Standard Details Revision of December 2002, Supplemental Specifications, Special Provisions, Contract Agreement; and Contract Bonds. It is agreed and understood that this Contract will be governed by the documents listed above.

E. Certifications.

By signing below, the Contractor hereby certifies that to the best of the Contractor's knowledge and belief:

1. All of the statements, representations, covenants, and/or certifications required or set forth in the Bid and the Bid Documents, including those in Appendix A to Division 100 of the Standard Specifications Revision of December 2002 (Federal Contract Provisions Supplement), and the Contract are still complete and accurate as of the date of this Agreement.

2. The Contractor knows of no legal, contractual, or financial impediment to entering into this Contract.

3. The person signing below is legally authorized by the Contractor to sign this Contract on behalf of the Contractor and to legally bind the Contractor to the terms of the Contract.

SAMPLE

F. Offer.

The undersigned, having carefully examined the site of work, the Plans, Standard Specifications, Revision of December 2002, Standard Details Revision of December 2002, Supplemental Specifications, Special Provisions, Contract Agreement; and Contract Bonds contained herein for construction of:

PIN 1234.00 South Nowhere, Hot Mix Asphalt Overlay,

State of Maine, on which bids will be received until the time specified in the "Notice to Contractors" do(es) hereby bid and offer to enter into this contract to supply all the materials, tools, equipment and labor to construct the whole of the Work in strict accordance with the terms and conditions of this Contract at the unit prices in the attached "Schedule of Items".

The Offeror agrees to perform the work required at the price specified above and in accordance with the bids provided in the attached "Schedule of Items" in strict accordance with the terms of this solicitation, and to provide the appropriate insurance and bonds if this offer is accepted by the Government in writing.

As Offeror also agrees:

First: To do any extra work, not covered by the attached "Schedule of Items", which may be ordered by the Resident, and to accept as full compensation the amount determined upon a "Force Account" basis as provided in the Standard Specifications, Revision of December 2002, and as addressed in the contract documents.

Second: That the bid bond at 5% of the bid amount or the official bank check, cashier's check, certificate of deposit or U. S. Postal Money Order in the amount given in the "Notice to Contractors", payable to the Treasurer of the State of Maine and accompanying this bid, shall be forfeited, as liquidated damages, if in case this bid is accepted, and the undersigned shall fail to abide by the terms and conditions of the offer and fail to furnish satisfactory insurance and Contract bonds under the conditions stipulated in the Specifications within 15 days of notice of intent to award the contract.

Third: To begin the Work as stated in Section 107.2 of the Standard Specifications Revision of 2002 and complete the Work within the time limits given in the Special Provisions of this Contract.

Fourth: The Contractor will be bound to the Disadvantaged Business Enterprise (DBE) Requirements contained in the attached Notice (Additional Instructions to Bidders) and submit a completed Contractor's Disadvantaged Business Enterprise Utilization Plan with their bid.

Fifth: That this offer shall remain open for 30 calendar days after the date of opening of bids.

SAMPLE

Sixth: The Bidder hereby certifies, to the best of its knowledge and belief that: the Bidder has not, either directly or indirectly, entered into any agreement, participated in any collusion, or otherwise taken any action in restraint of competitive bidding in connection with its bid, and its subsequent contract with the Department.

IN WITNESS WHEREOF, the Contractor, for itself, its successors and assigns, hereby execute two duplicate originals of this Agreement and thereby binds itself to all covenants, terms, and obligations contained in the Contract Documents.

CONTRACTOR

_____	**(Sign Here)**
Date	(Signature of Legally Authorized Representative of the Contractor)
____(**Witness Sign Here)**_____	**(Print Name Here)**
Witness	(Name and Title Printed)

SAMPLE

G. Award.

Your offer is hereby accepted. This award consummates the Contract, and the documents referenced herein.

MAINE DEPARTMENT OF TRANSPORTATION

_____	_____
Date	By: David A. Cole, Commissioner

_____
(Witness)

BOND # _____

CONTRACT PERFORMANCE BOND
(Surety Company Form)

KNOW ALL MEN BY THESE PRESENTS: That _____ _____ **in the State of** _____, as principal, and……....., a corporation duly organized under the laws of the State of ..... and having a usual place of business ...., as Surety, are held and firmly bound unto the Treasurer of the State of Maine in the sum of _____ **and 00/100 Dollars ($)**, to be paid said Treasurer of the State of Maine or his successors in office, for which payment well and truly to be made, Principal and Surety bind themselves, their heirs, executors and administrators, successors and assigns, jointly and severally by these presents.

The condition of this obligation is such that if the Principal designated as Contractor in the Contract to construct Project Number _____ in the Municipality of _____ promptly and faithfully performs the Contract, then this obligation shall be null and void; otherwise it shall remain in full force and effect.

The Surety hereby waives notice of any alteration or extension of time made by the State of Maine.

Signed and sealed this ..... day of ....., 20….. .

WITNESSES:	SIGNATURES:
	CONTRACTOR:
Signature.....	.....….....
Print Name Legibly	Print Name Legibly ...….....
	SURETY:
Signature	....….....
Print Name Legibly	Print Name Legibly .....
SURETY ADDRESS:	NAME OF LOCAL AGENCY:
.....	ADDRESS .....
.....	...…….....
.....	.....…….....
TELEPHONE.....	.....…….....

SAMPLE

BOND # _____

CONTRACT PAYMENT BOND
(Surety Company Form)

KNOW ALL MEN BY THESE PRESENTS: That _____ _____ **in the State of** _____, as principal, and.....….....
a corporation duly organized under the laws of the State of ..... and having a usual place of business in .....……., as Surety, are held and firmly bound unto the Treasurer of the State of Maine for the use and benefit of claimants as herein below defined, in the sum of _____ **and 00/100 Dollars ($)** for the payment whereof Principal and Surety bind themselves, their heirs, executors and administrators, successors and assigns, jointly and severally by these presents.

The condition of this obligation is such that if the Principal designated as Contractor in the Contract to construct Project Number _____ in the Municipality of _____ promptly satisfies all claims and demands incurred for all labor and material, used or required by him in connection with the work contemplated by said Contract, and fully reimburses the obligee for all outlay and expense which the obligee may incur in making good any default of said Principal, then this obligation shall be null and void; otherwise it shall remain in full force and effect.

A claimant is defined as one having a direct contract with the Principal or with a Subcontractor of the Principal for labor, material or both, used or reasonably required for use in the performance of the contract.

Signed and sealed this ..... day of ...……....., 20 ... .

WITNESS:	SIGNATURES:
	CONTRACTOR:
Signature…….....	.....….....
Print Name Legibly .....……..	Print Name Legibly ….....
	SURETY:
Signature.....	...….....
Print Name Legibly	Print Name Legibly ….....
SURETY ADDRESS:	NAME OF LOCAL AGENCY:
...….....	ADDRESS ….....
.....	…….....
TELEPHONE	…….....

SAMPLE

Maine DOT Map

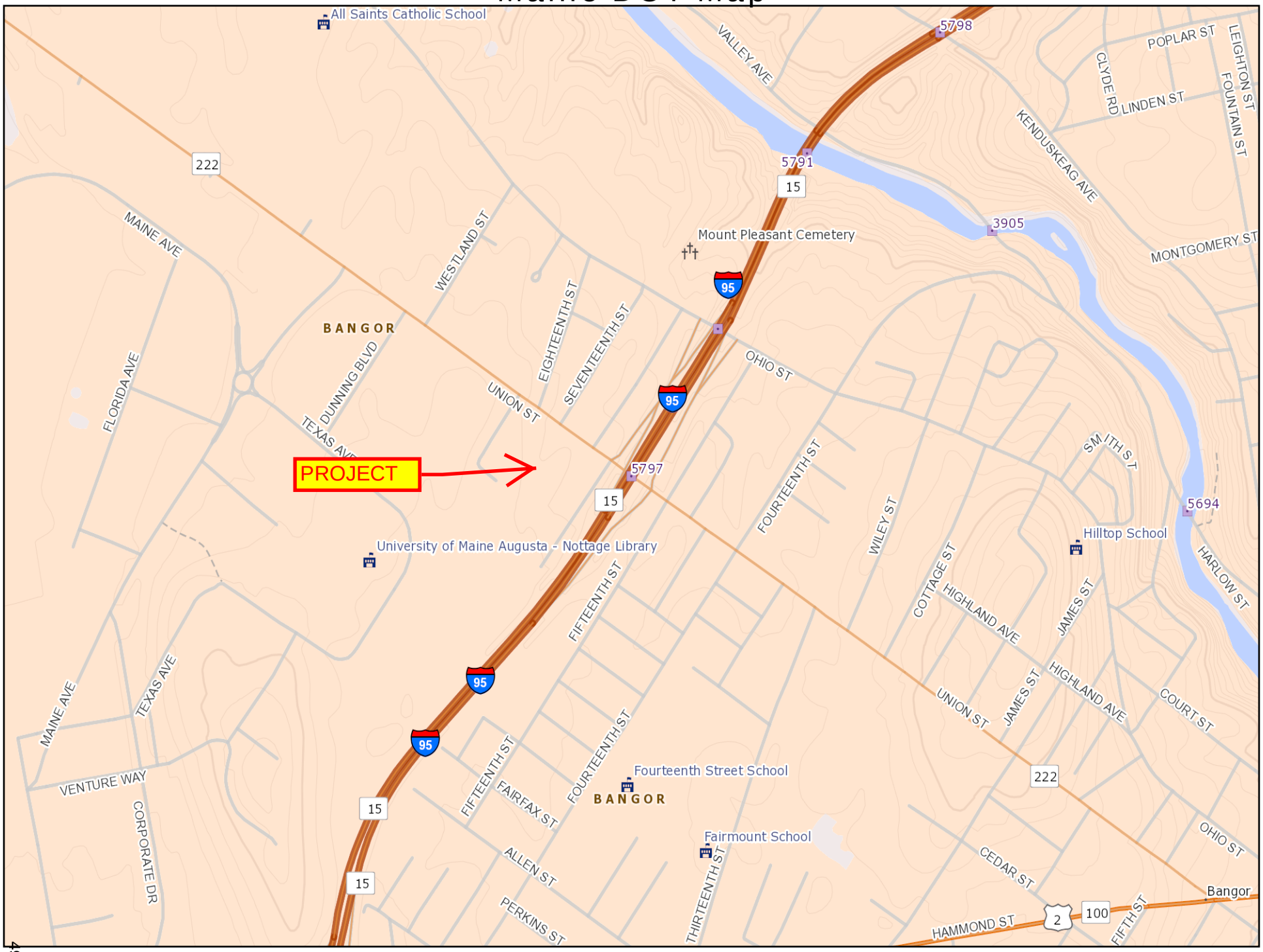

Map Generated on Thursday, December 12, 2013 09:30:11 AM

Map Scale 1:10549

The Maine Department of Transportation provides this publication for information only. Reliance upon this information is at user risk. It is subject to revision and may be incomplete depending upon changing conditions. The Department assumes no liability if injuries or damages result from this information. This map is not intended to support emergency dispatch. Road names used on this map may not match official road names.

General Roads

- *Interstate*
- *US Routes*
- *State Routes*
- *Public Roads*

Bridges

MaineDOT Regions

State Urban

Water Bodies

Boundary Lines

- *coastline*
- *county*
- *state*
- *town*

Wetlands

Conserved Lands

General Decision Number: ME140051 01/03/2014 ME51

Superseded General Decision Number: ME20130051

State: Maine

Construction Type: Highway

County: Penobscot County in Maine.

HIGHWAY CONSTRUCTION PROJECTS (excluding tunnels, building structures in rest area projects & railroad construction; bascule, suspension & spandrel arch bridges designed for commercial navigation, bridges involving marine construction; and other major bridges).

Modification Number	Publication Date
0	01/03/2014

* ENGI0004-013 04/01/2013

	Rates	Fringes
POWER EQUIPMENT OPERATOR: Grader/ Blade, Milling Machine	$ 20.90	9.94

SUME2011-046 09/14/2011

	Rates	Fringes
CARPENTER, Includes Form Work	$ 14.72	1.72
CEMENT MASON/CONCRETE FINISHER	$ 16.94	0.00
ELECTRICIAN	$ 21.55	3.51
IRONWORKER, REINFORCING	$ 17.45	0.00
IRONWORKER, STRUCTURAL	$ 18.75	4.56
LABORER: Common or General	$ 12.83	2.20
LABORER: Flagger	$ 9.00	0.00
LABORER: Highway/Parking Lot Striping	$ 14.63	0.00
LABORER: Landscape	$ 15.43	2.09
OPERATOR: Backhoe	$ 17.27	3.45
OPERATOR: Bobcat/Skid		

Steer/Skid Loader.....$ 16.21 4.60

OPERATOR: Broom/Sweeper.....$ 13.49 1.22

OPERATOR: Bulldozer.....$ 17.74 2.72

OPERATOR: Crane.....$ 19.03 1.70

OPERATOR: Excavator.....$ 16.33 2.78

OPERATOR: Loader.....$ 15.66 4.79

OPERATOR: Mechanic.....$ 21.71 6.29

OPERATOR: Milling Machine
Reclaimer Combo.....$ 24.77 8.39

OPERATOR: Paver (Asphalt,
Aggregate, and Concrete).....$ 19.89 7.20

OPERATOR: Roller excluding
Asphalt.....$ 19.97 7.43

OPERATOR: Screed.....$ 19.58 5.95

TRUCK DRIVER, Includes all
axles including Dump Trucks.....$ 12.31 4.44

TRUCK DRIVER: Lowboy Truck.....$ 15.15 5.62

WELDERS - Receive rate prescribed for craft performing operation to which welding is incidental.

==========

Unlisted classifications needed for work not included within the scope of the classifications listed may be added after award only as provided in the labor standards contract clauses (29CFR 5.5 (a) (1) (ii)).

The body of each wage determination lists the classification and wage rates that have been found to be prevailing for the cited type(s) of construction in the area covered by the wage determination. The classifications are listed in alphabetical order of "identifiers" that indicate whether the particular rate is union or non-union.

Union Identifiers

An identifier enclosed in dotted lines beginning with characters other than "SU" denotes that the union classification and rate have found to be prevailing for that classification. Example: PLUM0198-005 07/01/2011. The first four letters , PLUM, indicate the international union and the four-digit number, 0198, that follows indicates the local union number or district council number where applicable , i.e., Plumbers Local 0198. The next number, 005 in the example, is an internal number used in processing the wage determination. The date, 07/01/2011, following these characters is the effective date of the most current negotiated rate/collective bargaining agreement which would be July 1, 2011 in the above example.

Union prevailing wage rates will be updated to reflect any changes in the collective bargaining agreements governing the rates.

0000/9999: weighted union wage rates will be published annually each January.

Non-Union Identifiers

Classifications listed under an "SU" identifier were derived from survey data by computing average rates and are not union rates; however, the data used in computing these rates may include both union and non-union data. Example: SULA2004-007 5/13/2010. SU indicates the rates are not union majority rates, LA indicates the State of Louisiana; 2004 is the year of the survey; and 007 is an internal number used in producing the wage determination. A 1993 or later date, 5/13/2010, indicates the classifications and rates under that identifier were issued as a General Wage Determination on that date.

Survey wage rates will remain in effect and will not change until a new survey is conducted.

WAGE DETERMINATION APPEALS PROCESS

1.) Has there been an initial decision in the matter? This can be:

* an existing published wage determination
* a survey underlying a wage determination
* a Wage and Hour Division letter setting forth a position on a wage determination matter
* a conformance (additional classification and rate) ruling

On survey related matters, initial contact, including requests for summaries of surveys, should be with the Wage and Hour Regional Office for the area in which the survey was conducted because those Regional Offices have responsibility for the Davis-Bacon survey program. If the response from this initial contact is not satisfactory, then the process described in 2.) and 3.) should be followed.

With regard to any other matter not yet ripe for the formal process described here, initial contact should be with the Branch of Construction Wage Determinations. Write to:

Branch of Construction Wage Determinations
Wage and Hour Division
U.S. Department of Labor
200 Constitution Avenue, N.W.
Washington, DC 20210

2.) If the answer to the question in 1.) is yes, then an interested party (those affected by the action) can request review and reconsideration from the Wage and Hour Administrator (See 29 CFR Part 1.8 and 29 CFR Part 7). Write to:

Wage and Hour Administrator
U.S. Department of Labor
200 Constitution Avenue, N.W.
Washington, DC 20210

The request should be accompanied by a full statement of the interested party's position and by any information (wage payment data, project description, area practice material, etc.) that the requestor considers relevant to the issue.

3.) If the decision of the Administrator is not favorable, an interested party may appeal directly to the Administrative Review Board (formerly the Wage Appeals Board). Write to:

Administrative Review Board
U.S. Department of Labor
200 Constitution Avenue, N.W.
Washington, DC 20210

4.) All decisions by the Administrative Review Board are final.

==========

END OF GENERAL DECISION

July 16, 2009

SPECIAL PROVISION
SECTION 102.3
EXAMINATION OF DOCUMENTS, SITE, AND OTHER INFORMATION
(Geotechnical Information)

Add the following to Section 102.3, Examination of Documents, Site and Other Information:

102.3.1 Geotechnical Information In most cases, Geotechnical Information pertaining to the project has been collected and assembled. Bidders and Contractors are obligated to examine and, if necessary, obtain geotechnical information. If one is available, the project geotechnical report may be accessed at the following web address:

http://www.maine.gov/mdot/contractors/

The Department shall not be responsible for the Bidders' and Contractors' interpretations of or estimates or conclusions drawn from the Geotechnical Information. Data provided may not be representative of the subsurface conditions between the boring locations.

This section does not diminish the duties imposed upon parties in Section 102 or in any other sections.

April 10, 2013
Supersedes December 17, 2010

SPECIAL PROVISION
SECTION 104
GENERAL RIGHTS AND RESPONSIBILITIES
(Electronic Payroll Submission)
(Payment Tracking)

104.3.8.1 Electronic Payroll Submission The prime contractor and all subcontractors and lower-tier subcontractors will submit their certified payrolls electronically on this contract utilizing the Elation System web based reporting. There is no charge to the contracting community for the use of this service. The submission of paper payrolls will not be allowed or accepted. Additional information can be found at http://www.maine.gov/mdot/contractors/ under the "Quick Links".

104.3.8.2 Payment Tracking The prime contractor and all subcontractors and lower-tier subcontractors will track and confirm the delivery and receipt of all payments through the Elation System

SPECIAL PROVISION
SECTION 104.5.5
GENERAL RIGHTS AND RESPONSIBILITIES
Prompt Payment of Subcontractors

104.5.5

104.5.5 Prompt Payment of Subcontractors

A. Pay When Paid The Contractor shall pay Subcontractors for all Work satisfactorily performed and Invoiced by the Subcontractor no later than 30 Days from the date the Contractor receives payment from the Department for such Subcontractor's Work.

B. Payment Tracking Federal Projects On federally funded projects, the prime contractor, subcontractors and lower-tier subcontractors will track and confirm the delivery and receipt of all payments through the Elation System. They will be responsible for entering all payments to all sub and lower tier contractors. MaineDOT will run a query monthly to ensure that contractors are complying and generate an e-mail to contractors who have not responded to confirm receipt of MaineDOT payment or contractor payment to lower tier subcontractors.

C. Retainage The Contractor shall return to the Subcontractor all retainage withheld from the Subcontractor within 30 Days after the date the Subcontractor's Work is satisfactorily completed. If there is a Delay in such return of retainage, the Subcontractor may pursue all rights it may have under the claims procedure referenced in Section 104.5.6 - Subcontractor Claims for Payment.

Town: Bangor
Project: IM-1668(100)E
WIN: 16681.00
Date: May 24, 2013(Revised July 26, 2013)

SPECIAL PROVISIONS
SECTION 104
Utilities

MEETING
A Preconstruction Utility Conference, as defined in Subsection 104.4.6 of the Standard Specifications **is required.**

GENERAL INFORMATION
These Special Provisions outline the arrangements that have been made by the Department for coordination of the work and for utility and/or railroad adjustments as defined in Subsection 104.4.6 and 104.4.8 of the Standard Specifications. The following list identifies all known utilities or railroads having facilities presently located within the limits of this project or intending to install facilities during project construction, unless otherwise provided.

Overview

Utility/Railroad	Aerial	Underground	Railroad
Bangor Hydro-Electric Company	Yes	None	None
Fairpoint Communications	Yes	Yes	None
Time Warner Cable	Yes	None	None
Bangor Fire Alarm	Yes	None	None
Bangor Sewer Department	None	Yes	None
Bangor Water District	None	Yes	None
Bangor Gas Company	None	Yes	None
Oxford Networks	Yes	None	None
University of Maine System	Yes	Yes	None
Eastern Maine Health System	Yes	None	None

Temporary utility adjustments are not contemplated unless herein provided for.

The approximate locations of major items of existing and proposed (permanent and temporary) utility plant are shown on the highway construction plans.

All utility crossings over highways will provide not less than 20 feet vertical clearance over existing ground in cut or over finished grade in fill, during construction of this project.

Manholes, valve boxes, service connections, and similar incidental utility plant are to be adjusted in cooperation with work being done by the Contractor**.**

It is the Contractor's responsibility to maintain the interstate lighting operational on both sides of the interstate. See Lighting Specification 634 for details.

Unless otherwise provided, utilities will not be required to make underground installations in frozen ground.

Any times and dates mentioned are estimates only and are dependent upon favorable weather, working conditions, and freedom from emergencies. The Contractors shall have no claim against the Department if they are exceeded.

Utility working days are Monday through Friday, conditions permitting. Times are estimated on the basis of a single crew for each utility.

In all cases, the utilities shall be advised well in advance (generally three weeks) before work, dependent upon other work to be done by the Contractor, in any particular area, is to be commenced by them.

Unless otherwise specified, any underground utility facilities shown on the project plans represent approximate locations gathered from available information. The Department cannot certify the level of accuracy of this data. Underground facilities indicated on the topographic sheets (plan views) have been collected from historical records and/or on-site designations provided by the respective utility companies. Underground facilities indicated on the cross-sections have been carried over from the plan view data and may also include further approximations of the elevations (depths) based upon straight-line interpolation from the nearest manholes, gate valves, or test pits.

All clearing and tree removal which is a part of this contract in areas where utilities are involved must be completed by the Contractor before the utilities can relocate their facilities. The Contractor shall clear and remove all trees to the right-of-way limit on the left.

AERIAL

Union Street

Bangor Hydro-Electric Company plans to cut a temporary gap between Fifteenth Street to Sixteenth Street; removing their existing conductors from two existing poles (one at Station 12+70+/- Right and one at 15+10+/- Right), on a temporary basis. The removal of these two poles are to be accomplished by Fairpoint Communications. Their estimated time to cut this gap is estimated at 5 working days.

Bangor Hydro-Electric Company then plans to install 2 new poles (one at Station 12+70+/- Right and one at Station 15+25+/- Right), 5 feet further back from the location of the existing poles. These two poles are going to be located in the back of the new sidewalk. **Bangor Hydro-Electric Company** has to measure the height of the lowest cable that crosses Sunset Avenue. This cable is 16.6' of clearance above the road. This cable is going to be raised to 18' clearance.

City of Bangor has both a fire alarm circuit and a traffic signal interconnect cable. They plan to relocate the fire alarm cable up to Ohio Street, thus creating a permanent gap on Union Street over the interstate; their estimated time is 5 working days. The traffic signal interconnect cable is going to be relocated in the miscellaneous conduit on the bridge and to be included as part of the Department's contract for this project.

Oxford Networks is planning to relocate their existing fiber optic cable up to Ohio Street, thus creating a permanent gap on Union Street over the interstate; their estimated time is 8 working days.

Eastern Maine Health System is planning to relocate their existing fiber optic cable up to Ohio Street, thus creating a gap on Union Street over the interstate; their estimated time is 8 working days.

Time Warner Cable is planning to relocate their fiber optic cable up to Ohio Street, thus creating a gap on Union Street over the interstate; their estimated time is 10 working days.

Fairpoint Communications plans to run new cables in their new conduit system, remove the existing cable and poles between Station 12+70+/- to 15+00+/- on the Right; their estimated is figured in their underground.

Autumn Street

Bangor Hydro-Electric Company plans to close a gap on a temporary basis on the above named street. They are still working on obtaining a temporary easement. Their estimated time is 5 working days.

Time Warner Cable is going to follow Bangor Hydro-Electric Company and plans to close the gap on a temporary basis on the above named street. Their estimated time is 3 working days.

Sunset Avenue

Bangor Hydro-Electric Company, **Time Warner Cable** and **Fairpoint Communications** are to check the clearance between the top of the ground and the bottom of the lowest cable. If the cables have to be raised then an existing pole may have to be replaced by a new pole. **Bangor Hydro-Electric Company** would transfer their conductors; their estimated time is 3 working days. Then **Time Warner Cable** would transfer and raise their existing cable; their estimated time is 1 working day. **Fairpoint Communications** would replace pole and transfer cables to new pole; their estimated time is 5 working days. This is going to be discussed in greater detail at the pre-construction utility meeting.

Texas Avenue

Bangor Hydro-Electric Company, Time Warner Cable, City of Bangor Fire Alarm, University of Maine System and **Fairpoint Communications** are to check the clearance between the top of the existing ground and the bottom of the lowest cable. If these cables have to be raised then an existing pole may have to be replaced by a new pole. **Bangor Hydro-Electric Company** would transfer their conductors; their estimated time is 5 working days. Then **Time Warner Cable** would transfer and raise their existing cable; their estimated time is 1 working day. The **City of Bangor Fire Alarm** is next to transfer and raise the cable; their estimated time is 1 working day. After that is the **University of Maine System**, which would transfer and raise their existing cable; their estimated time is 1 working day. The last utility is **Fairpoint Communications** to replace the pole and transfer their existing cable top new pole; their estimated time is 5 working days. This is going to be discussed in greater detail at the pre-construction utility meeting.

Sequence of Aerial Work

Most of the aerial work on Union Street, Sunset Avenue, and Autumn Street may be completed prior to the bridge work starting. This shall be discussed in greater detail at the pre-construction utility meeting.

List of New Poles

STATION	OFFSET	RIGHT/LEFT	REMARKS
11+25	33 FT/+/-	Right	Riser for FP
12+70	45 FT/+/-	Right	Complete
15+25	45 FT +/-	Right	“
16+75	33 FT +/-	Right	“

RAILROAD

None.

UNDERGROUND

Bangor Gas Company has an existing gas main on Union Street. They do not anticipate doing any work at this time.

Sunset Street: They have an existing 2 inch gas main. They do not anticipate doing any work at this time.

Bangor Sewer Department has 3 (three) manholes to adjust to finish grade. Their estimated time is 3 working days. One of the manholes is on Sunset Avenue at the junction of Union Street. The other 2 manholes are at the junction of Fifteenth Street and Union Street.

Bangor Water District plans to include a portion of their work in the Department’s contract. This would be for the installation of a 16 inch ductile iron water main from 5

feet outside the new approach slab, on both approaches. This also includes the hangars, sleeves and channels.

Fairpoint Communications has proposed three different phases of work to be accomplished, as follows:

1. Pre-work (Prior to bridge work)
   A. Installation of telephone vaults in the sidewalks on both Union Street approaches; their estimated time is 15 working days.
   B. Installation of conduits in Union Street approaches outside the construction limits of the project; their estimated time is 10 working days.
   C. Installation of conduit on riser poles and concrete pad for telephone remote cabinet; their estimated time is 5 working days.
   D. Install two new poles; their estimated time is 5 working days.
2. Bridge work
   A. Installation of conduits with hangars (not hangar rods); their estimated time is 10 working days.
   B. Pull cables in the new conduits including both approaches and the bridge; their estimated time is 10 working days.
   C. Splice new cables; their estimated time is 55 working days.
3. Post bridge (after new bridge construction)
   A. Remove old cables and old poles; their estimated time is 10 working days.

Fairpoint Communications total working days come to 120. Approximately 45 working days, maybe prior or after construction is completed.

CONTRACTOR

Bangor Water District plans to do their work in the approaches outside the approach Slabs (Station 12+90 to 15+10) with their own forces. Their estimated time is 20 working days.

Fairpoint Communications and **Bangor Water District** work is to be made part of the Department's contract. The contractor is responsible for purchasing, obtaining and installing the steel channels and hangar rods. FairPoint Communications to provide the conduit sleeves (for the abutments) to the contractor for installation. Installation of the hangers, conduit, cables, telephone vaults and splicing is by their own forces. (**Fairpoint Communications**)

UTILITY SPECIFIC ISSUES

Any tree removal or tree trimming required within ten feet of the electrical conductors must be done by a qualified contractor. A list of tree removal contractors qualified to remove trees or limbs within ten feet of the electrical conductors may be obtained from the power company.

DIG SAFE

The Contractor shall be responsible for determining the presence of underground utility facilities prior to commencing any excavating work and shall notify utilities of proposed excavation in accordance with M.R.S.A. Title 23 §3360-A, Maine "Dig Safe" System.

SAFE PRACTICES AROUND UTILITY FACILITIES

The Contractor shall be responsible for complying with M.R.S.A. Title 35-A, Chapter 7-A - Sections 751 - 761 Overhead High-Voltage Line Safety Act. Prior to commencing any work that may come within ten (10) feet of any aerial electrical line, the Contractor shall notify the aerial utilities as per Section 757 of the above act.

BLASTING

In addition to any other notice which may be required, the Contractor shall notify an authorized representative of each utility having plant close to the site not later than 3:00 P.M. on the working day (Monday through Friday) before he intends to blast. Notice shall state the approximate time of the blast.

THE CONTRACTOR SHALL PLAN AND CONDUCT HIS WORK ACCORDINGLY.

JQ/sm

CC: Steve Bodge, Project Manager

Town: **Bangor**
Project: **19256.00**
Date: **November 14, 2013**

SPECIAL PROVISIONS
SECTION 104
Utilities

MEETING

A Preconstruction Utility Conference, as defined in Subsection 104.4.6 of the Standard Specifications **is** required.

GENERAL INFORMATION

These Special Provisions outline the arrangements that have been made by the Department for utility and/or railroad work to be undertaken in conjunction with this project. The following list identifies all known utilities or railroads having facilities presently located within the limits of this project or intending to install facilities during project construction.

Utilities have been notified and will be furnished a project specification.

There may be project construction activities which will occur beneath or around existing aerial neutral conductors such as ditching or guardrail installation. The Contractor shall conduct their work accordingly.

Overview:

Utility/Railroad	Aerial	Underground	Railroad
Bangor Gas Company		X	
Bangor Hydro-Electric Company	X		
Bangor Water District		X	
City of Bangor		X	
Eastern Maine Healthcare Systems	X		
University of Maine	X		

Utility Contact Information		
Utility/Railroad	**Contact Person**	**Contact Phone**
Bangor Gas Company	Michael Hussey	941-9595
Bangor Hydro-Electric Company	Jerrod Crouse	973-2671
Bangor Water District	Kyle Killip	852-7178
City of Bangor	Sean Currier	992-4513
Eastern Maine Healthcare Systems	Richard Chapman	973-8722
University of Maine	Eric Damboise	561-3572

Temporary utility adjustments are **not** anticipated.

Unless otherwise specified, any underground utility facilities shown on the project plans represent approximate locations gathered from available information. The Department cannot certify the level of accuracy of this data. Underground facilities indicated on the topographic sheets (plan views) have been collected from historical records and/or on-site designations provided by the respective utility companies. Underground facilities indicated on the cross-sections have been carried over from the plan view data and may also include further approximations of the elevations (depths) based upon straight-line interpolation from the nearest manholes, gate valves, or test pits.

All adjustments are to be made by the respective utility/railroad unless otherwise specified herein.

All clearing and tree removal in areas where utilities are involved must be completed before the utilities are able to relocate their facilities.

Fire hydrants shall not be disturbed until all necessary work has been accomplished to provide proper fire protection.

Utility working days are Monday through Friday. Times are estimated on the basis of a single crew for each utility. Any times and dates mentioned are **estimates only** and are dependent upon favorable weather, working conditions, and freedom from emergencies. The Contractor shall have no claim against the Department if they are exceeded.

AERIAL

Utility Specific Issues:

Bangor Hydro-Electric Company

Bangor Hydro has facilities in the vicinity of and adjacent to the project. **No involvement is anticipated.**

Any tree removal or tree trimming required within ten feet of the Bangor Hydro-Electric Company conductors must be done by a contractor qualified to work within ten feet of the Bangor Hydro-Electric Company conductors. A list of tree removal contractors qualified to remove trees or limbs within ten feet of Bangor Hydro-Electric Company conductors may be obtained from Jerrod Crouse and he may be reached at 973-2671.

Eastern Maine Healthcare Systems

Eastern Maine Healthcare Systems has facilities in the vicinity of and adjacent to the project. **No involvement is anticipated.**

University of Maine
University of Maine has facilities in the vicinity of and adjacent to the project. **No involvement is anticipated.**

Aerial utility adjustments are not anticipated as part of this project. Utilities have been notified and if utility relocations, though unexpected, become necessary, they will be scheduled in compliance with Section 104 of the Standard Specifications and will be done by the utilities in conjunction with the work by the Contractor.

SUBSURFACE

Utility Specific Issues:

Bangor Gas Company
Bangor Gas has facilities crossing I-95 and the Northbound-On ramp. The Contractor shall notify Bangor Gas for additional information on the location of the Gas main prior to beginning any excavation, or guardrail installation. Bangor Gas must be present during any/all subsurface work in the vicinity of the Bangor Gas main. One week initial notification and 48 hours for subsequent work is requested so they may have a representative present.

Bangor Water District
Bangor Water District has facilities crossing I-95 and the Northbound-Off ramp to Ohio Street. The contractor shall notify Bangor Water District prior to any subsurface work in the vicinity of the water main. The contractor shall verify the elevation of the water main at approximate station 90+90 prior to installing the 6" underdrain. Verification of the water main depth is incidental to the installation of the underdrain.

City of Bangor
The City of Bangor has sewer facilities on Ohio Street. The contractor shall notify the City prior to milling around the sewer manhole at approximate station 11+25. No adjustment of the manhole is anticipated.

MAINTAINING UTILITY LOCATION MARKNIGS

The Contractor will be responsible for maintaining the buried utility location markings following the initial locating by the appropriate utility or their designated representative.

UTILITY SIGNING

Any utility working within the construction limits of this project shall ensure that the traveling public is adequately protected at all times. All work areas shall be signed, lighted, and traffic flaggers employed as determined by field conditions. All traffic controls shall be in accordance with the latest edition of the Manual on Uniform Traffic Control Devices for Streets and Highways, as issued by the Federal Highway Administration.

THE CONTRACTOR SHALL PLAN AND CONDUCT THEIR WORK ACCORDINGLY.

SPECIAL PROVISION
SECTION 105
CONTROL OF WORK
(Cooperation Between Contractors - Periodic Progress Coordination Meeting)

It is hereby brought to the Contractor's attention that the Department has awarded and plans to award other contracts near the limits of this contract, which may be in progress simultaneously.

The Contractor shall attend periodic meetings for the projects in the greater Bangor area. The highway projects near the Union Street Bridge may include the following projects:

- Interstate 95 SB Highway Preservation Paving, WIN 020380.00
- Interstate 95 NB Highway Preservation Paving, WIN 020380.00
- Interstate 95 Exit #184 Ramp Improvements, WIN 019256.00
- Interstate 395 Webster Avenue Bridge, WIN 019311.00
- Other City of Bangor projects –Non DOT Related
- Other Developer projects –Non DOT Related

The periodic meetings will be held in the Bangor area. The intent of these meetings is to insure the traffic control measures for the different projects are well coordinated and incidents are coordinated between the above referenced projects in accordance with incident management plan/emergency plan that is being developed for the projects.

The Contractor shall cooperate with other Contractors at all times and provide project access as necessary and as directed by the Resident.

The following shall Apply to All Lane or Partial Lane Closure or Any Time the Contractor is will be affecting traffic:

- ALL LANE CLOSURES NEED 48 HOURS Notice to the Resident.
- Lane Closures shall be APPROVED By the RESIDENT.
- The Resident has the authority to deny the Lane Closure Request.
- A deny of the Request may be Time Compensable to the project.
- A deny shall not be Monetarily compensable.

SPECIAL PROVISION
SECTION 105.8.2

(Federal Aviation Requirements(FAA))

The attached **FAA information** is information required to be submitted by the Contractor prior to starting work. In addition to the submittal requirements, the Contractor shall comply with all other requirements included in this document. Payment for the work associated with complying with this Special Provision shall not be made directly, but will be considered incidental to related Contract Pay Items.

The Contractor shall be responsible for filing a 7460-1 Notice of Proposed Construction or Alteration to the FAA Obstruction Evaluation/Airport Airspace Analysis office for all crane usage as required by 14 CFR Part 77 (http://www.ecfr.gov/cgi-bin/text-idx?c=ecfr&SID=61302bd90d79271a583474ad2f9dcd7e&rgn=div5&view=text&node=14:2.0.1.2.9&idno=14#14:2.0.1.2.9.2.1.3) . The 7460-1 can be filed electronically at https://oeaaa.faa.gov/oeaaa/external/portal.jsp . Proof of submission shall be forwarded to the MaineDOT Project Manager. Responses from the FAA regarding the submission shall be filed with the MaineDOT Project Manager. Should the FAA require marking or lighting, the Contractor shall follow the most recent version of the Advisory Circular 70/7460-1k, Obstruction Marking and Lighting. which is located at the following link, http://rgl.faa.gov/Regulatory_and_Guidance_Library/rgAdvisoryCircular.nsf/0/b993dcdfc37fcdc486257251005c4e21

All questions regarding the need to file should be directed towards the FAA Airports Airspace Specialist at 781-238-7621 with notification to the MaineDOT Project Manager with the inquiry and the FAA response.

SPECIAL PROVISION
SECTION 105
GENERAL SCOPE OF WORK
(Limitations of Operations)

This Section contains Limitations of Operations requirements for the project. See also stage construction drawings and Special Provision Section 107 Time (Work Times and Supplemental Liquidated Damages) for supporting documentation.

1. The Contractor shall complete the bridge phasing work as shown on the stage construction drawings. Modifications to the bridge phasing work or associated traffic control will not be permitted unless noted herein.

2. Any standard channelization devices used to shift I-95 traffic lanes must be accepted and remain in place until the protected work, such as work on the median pier, is completed. For channelization in areas of substructure work and drainage work, the Contractor should plan for the channelization to accommodate all stages of the bridge removal and reconstruction. This requirement is intended to minimize traffic channelization shifts, particularly during winter months.

3. In the work zone, the intersections of Union Street and the I-95 Southbound off-ramp, Northbound off-ramp and Northbound on-ramp will be right turn only movements using temporary concrete barriers with reflective markers as channelization devices. The traffic signals at these intersection shall not be in operation during the construction period.

4. The temporary modular delineator curb on Union Street shall extend easterly beyond 15th Street and westerly beyond 16th Street to prevent Union Street traffic from attempting left turns in the work zone.

5. Construct the Sunset Avenue and Connector Road Detours prior to closing Sunset Avenue and Autumn Street West access to Union Street and prior to traffic control installations on Union Street.

6. Close local streets to prevent Union Street access prior to starting bridge construction. Local streets include Beecher Park, Eddyway Street, 15th Street (south and north of Union Street), Sunset Avenue, 16th Street, Autumn Street West and 17th Street.

7. Temporary Solar Powered LED PED Crosswalk Beacons shall be installed and operational to maintain pedestrian access prior to closing sidewalk on bridge.

SPECIAL PROVISION
SECTION 105
SCOPE OF WORK
(Temporary Detours)

Subsection 105.4.4 of the Standard Specifications is amended as follows:

During an approved suspension, the **Contractor** shall maintain the temporary Roads and Project sections by plowing snow, controlling ice and patching or retreating the surface. The temporary Roads include the following:

1. Sunset Ave Detour from Union Street to Texas Ave
2. Emergency access entrance between Sunset Ave and Union Street.
3. Connector Road Detour.
4. Emergency access entrance between Autumn Street West and Union Street.

Project sections include the portions of Union Street where traffic control devices are used to channelize traffic through the work zone, including all bridges and sidewalks, so as to allow the free and safe flow of vehicular and pedestrian traffic.

The local governmental agency that would otherwise be responsible for winter maintenance will continue to plow snow, remove snow and control ice on all other closed streets including Beecher Park, Eddyway Street, 15th Street, 16th Street and 17th Street.

December 5, 2011
Supersedes December 1, 2010

SPECIAL PROVISION
SECTION 105
GENERAL SCOPE OF WORK
(Buy America Certification)

105.11 Federal Requirements Add the following as the third and subsequent paragraphs:

"Prior to payment by the Department, the Contractor shall provide a certification from the producer of steel or iron, or any product containing steel or iron as a component, stating that all steel or iron furnished or incorporated into the furnished product was manufactured in the United States in accordance with the requirements of the Buy America provisions of 23 CFR 635.410, as amended. Such certification shall also include (1) a statement that the iron or steel product or component was produced entirely within the United States, or (2) a statement that the iron or steel product or component was produced within the United States except for minimal quantities of foreign steel and iron valued at $ (actual value).

All manufacturing processes must take place domestically. Manufacturing begins with the initial melting and mixing, and continues through the coating stage. Any process which modifies the chemical content, the physical size and shape, or the final finish is considered a manufacturing process. These processes include rolling, extruding, machining, bending, grinding, drilling, and coating. "Coating" includes epoxy coating, galvanizing, painting, or any other coating that protects or enhances the value of the material.

A Buy America Certification is required from each manufacturer, fabricator, supplier, subcontractor, etc. that meets the "manufacturing" definition above.

Buy America does not apply to raw materials (iron ore and alloys), scrap, pig iron, or processed, pelletized, and reduced iron ore."

SPECIAL PROVISION 105
GENERAL SCOPE OF WORK
Equal Opportunity and Civil Rights
(Disadvantaged Business Enterprises Program)

105.10.1.1 Disadvantaged Business Enterprises Program The Maine Department of Transportation (MaineDOT) has established a Disadvantaged Business Enterprise (DBE) program in accordance with regulations of the United States Department of Transportation (USDOT), 49 CFR Part 26. The MaineDOT receives federal financial assistance from USDOT, and as a condition of receiving this assistance, the Department has signed an assurance that it will comply with 49 CFR Part 26.The MaineDOT is responsible for determining the eligibility of and certifying DBE firms in Maine.

A DBE is defined as a for-profit business that is owned and controlled by one or more socially and economically disadvantaged person(s). For the purpose of this definition:

1. "Socially and economically disadvantaged person" means an individual who is a citizen or lawful permanent resident of the United States and who is Black, Hispanic, Native American, Asian, Female; or a member of another group or an individual found to be disadvantaged by the Small Business Administration pursuant to Section 3 of the Small Business Act.
2. "Owned and controlled" means a business which is:
   a. A sole proprietorship legitimately owned and controlled by an individual who is a disadvantaged person.
   b. A partnership or limited liability company in which at least 51% of the beneficial ownership interests legitimately are held by a disadvantaged person(s).
   c. A corporation or other entity in which at least 51% of the voting interest and 51% of the beneficial ownership interests legitimately are held by a disadvantaged person(s).

The disadvantaged group owner(s) or stockholder(s) must possess control over management, interest in capital, and interest in earnings commensurate with the percentage of ownership. If the disadvantaged group ownership interests are real, substantial and continuing and not created solely to meet the requirements of this program, a firm is considered a bona fide DBE.

105.10.1.2 Commercially Useful Function MaineDOT will count expenditures of a DBE contractor toward DBE goals only if the DBE is performing a commercially useful function on that contract. A DBE performs a commercially useful function when it is responsible for execution of the work of the contract and is carrying out its responsibilities by actually performing, managing, and supervising the work involved. Credit will only be given when the DBE meets all conditions for a CUF. Credit for labor will be in accordance with the responsibilities outlined in the contract. To perform a commercially useful function, the DBE must also be responsible, with respect to materials and supplies used on the Contract, for negotiating price, determining quality and quantity, ordering the materials, and installing (where applicable) and paying for the material itself. To determine whether a DBE is performing a commercially useful function, MaineDOT will evaluate the amount of work subcontracted, industry practices, whether the amount the firm is to be paid under the Contract is commensurate with the work it is actually performing and DBE credit claimed for its performance of the work, and other relevant factors.

Rented equipment used by the DBE must not be rented from the Prime Contractor on a job that the DBE is subcontracted with that Prime Contractor for regular course of business.

A current listing of certified DBEs that may wish to participate in the highway construction program and the scope of work for which they are certified can be found at http://www.maine.gov/mdot/disadvantaged-business-enterprises/pdf/directory.pdf. Credit will be given for the value described by a DBE performing as:

A. A prime contractor; 100% of actual value of work performed by own workforces.
B. An approved subcontractor; 100% of work performed by own workforces.
C. An owner-operator of construction equipment; 100% of expenditures committed.
D. A manufacturer; 100% of expenditures committed. The manufacturer must be a firm that operates or maintains a factory or establishment that produces on the premises the materials or supplies obtained by the Contractor. Brokers and packagers shall not be regarded as manufacturers.
E. A regular dealer; 60% of expenditures committed. A regular dealer is defined as a firm that owns, operates, or maintains a store, warehouse or other establishment in which the materials or supplies required for the performance of the contract are bought, kept in stock, and regularly sold to the public. For purposes of this provision a "Broker" is a DBE that has entered into a legally binding relationship to provide goods or services delivered or performed by a third party. Brokers and packagers shall not be regarded as regular dealers.
F. A bona fide service provider; 100% of reasonable fees or commissions. Eligible services include professional, technical, consultant, or managerial, services and assistance in the procurement of essential personnel, facilities, equipment, materials or supplies required for the performance of the contract. Eligible services also include agencies providing bonding and insurance specifically required for the performance of the contract.
G. A trucking, hauling or delivery operation. 100% of expenditures committed when trucks are owned, operated, licensed and insured by the DBE and used on the contract and, if applicable, includes the cost of the self supplied materials and supplies.100% of expenditures committed when the DBE leases trucks from another DBE firm including an owner-operator. 100% of reasonable fees or commissions the DBE receives as a result of a lease arrangement for trucks from a non-DBE, including an owner-operator.
H. Any combination of the above.

105.10.1.3 Race-neutral Goals The Maine DOT is required to set an annual goal (approved on a three year basis) for DBE participation in Federal-aid projects. In order to fulfill that goal, bidders are encouraged to utilize DBE businesses certified by the MaineDOT. MaineDOT seeks to meet the established DBE goal solely through race-neutral means. *Race-neutral* DBE participation occurs when a DBE is awarded a prime contract through customary competitive procurement procedures, is awarded a subcontract on a contract that does not carry a DBE contract goal, or wins a subcontract from a prime contractor that did not consider its DBE status in making the award. A DBE/subcontractor Utilization Proposed Form is required to be included in bid documents.

MaineDOT will analyze each project and create a Project Availability Target (PAT), based on a number of factors including project scope, available DBE firms, firms certified in particular project work, etc. Each bid will request that the contractor attempt to meet the PAT. This PAT is developed to assist contractors to better understand what the MaineDOT expectations are for a

specific project. The PAT is NOT a mandate but an assessment of what this particular project can bear for DBE participation. The Department anticipates that each contractor will make the best effort to reach or exceed this PAT for the project.

105.10.1.4 Race-conscious Project Goals If it is determined by the Department that the annual DBE goal will not be met through *race-neutral* means, the Department may implement *race-conscious contract goals* on some projects. Race-conscious contract goals are goals that are enforceable by the Department and require that the prime contractor use good faith effort to achieve the goal set by the Department for that particular project. If race conscious means are implemented on a project, the Prime must comply with the requirements of 49 CFR.

At the time of the bid opening, all Bidders shall submit with their bid a Disadvantaged Business Enterprise (DBE) Commitment Form provided by the Department. This form will list the DBE and non-DBE firms that are proposed to be used during the execution of the Work. The list shall show the name of the firm, the item/material/type of work involved and the dollar amount of work to be performed. The dollar total of each commitment shall be totaled and a percentage determined.

If the project goal is not met, acceptable documentation showing all good faith efforts made to obtain participation may be required in order to award the project. Failure to provide the required listing with the dollar participation total or acceptable documentation of good faith efforts to obtain DBE participation within 3 days after the bid opening date will be considered a lack of responsiveness on the part of the low bidder. Rejection of the low bid under these circumstances will require the low bidder to surrender the Proposal Guaranty to the Department. The submission and approval of the above forms does not constitute a formal subcontract.

If for any reason during the progress of the Work the Contractor finds that DBEs included on the list are unable to perform the proposed work, the Contractor, with written release by the committed DBE or approval of the Department, may substitute other DBE firms for those named on the list. If the Contractor is able to clearly document their inability to find qualified substitute firms to meet the project goal, the Contractor may request in writing approval to substitute the DBE with a non-DBE firm. If at any time during the life of the Contract it is determined that the Contractor is not fulfilling the goal or commitment(s) and is not making a good faith effort to fulfill the DBE requirement, the Department may withhold progress payments. If good faith effort is determined by the Department, failure to meet the DBE contract goal will not be a detriment to the bid award. Fulfillment of the goal percentage shall be determined by dividing the dollars committed to the DBEs by the actual contract dollars. These requirements are in addition to all other Equal Employment Opportunity requirements on Federal-aid contracts.

105.10.1.5 Certification of DBE attainment on Contracts The MaineDOT must certify that it has conducted post-award monitoring of all contracts to ensure that DBEs had done the work for which credit was claimed. The certification is for the purpose of ensuring accountability for monitoring which the regulation already requires. The MaineDOT will certify these contracts through review of CUF forms, Elations sub-contract payment tracking as well as occasional on-site reviews of projects and through the project's final closeout documentation provided by our Contracts Section.

105.10.1.6 Bidders' List Survey Pursuant to 49 CFR 26.11 the MaineDOT is required to "create and maintain" a bidders list and gather bidder information on our construction/consultant projects, Contractors will maintain information on all subcontract bids submitted by DBE and Non-DBE firms and provide that information to the Department. The Following information is required:

Firm Name
Firm Address
Firm status (DBE or non-DBE)
Age of firm (years)
And the annual gross receipts amount as indicated by defined brackets, i.e. $500,000 to $800,000, rather than requesting exact figures.

Not only is this information critical in determining the availability of DBE businesses relative to other businesses that do similar work, but the Federal Highway Administration requires that we obtain this information.

MaineDOT DBE Project Attainment Target (PAT)
for this Project is **2.4 %**

The MaineDOT seeks to meet the specified annual Disadvantaged Business Enterprise (DBE) usage goal set out by 49 CFR 26.45 through the efforts of contractors seeking to employ qualified DBE subcontractors. We seek to meet this goal by race neutral means and do not, at this time, use contract specific requirements for each project. We do however, understand the capacity of Maine's DBE community and the unique characteristics a project may have that would differ from the broad annual goal.

Taking this into consideration, the MaineDOT will review each project and develop an anticipated attainment or Project Attainment Target (PAT) based on several factors that are project specific. Those factors include:

- ☐ Scope of Work
- ☐ DBE availability according to Specification Item
- ☐ Geographic location
- ☐ DBE capacity

This PAT is developed to assist contractors to better understand the DBE participation that the MaineDOT can reasonably expect for a specific project. The PAT is NOT a mandate but an assessment of the DBE opportunities that this project could meet or exceed. MaineDOT anticipates that each contractor will make the best effort to reach or exceed the PAT for this project.

SPECIAL PROVISION
SECTION 105
LEGAL RELATIONS WITH AND RESPONSIBILITY TO PUBLIC
(NPDES)

105.8.2 Permit Requirements This Section is revised by the addition of the following paragraph:

"The Contractor is advised that the Environmental Protection Agency has issued a final National Pollutant Discharge Elimination System (NPDES) General Permit for storm water discharges from construction sites disturbing more than 2 ha [5 acres]. This permit requires:

- Storm Water Pollution Prevention Plan
- Submission of a Notification of Intent (NOI) at least 48 hours before construction commences
- Submission of a Notification of Termination (NOT) when a site has been finally stabilized and all storm water discharges from construction activities are eliminated.

If the project's land disturbances is 2 ha [5 acres] or more, the Department will prepare the plan and submit the NOI (and NOT). The Contractor shall prepare plans and submit NOI's (and NOT's) for regulated construction activities beyond the project limits (e.g., borrow pits).

The Contractor shall be familiar with and comply with these regulations."

SPECIAL PROVISION 105
CONSTRUCTION AREA

A Construction Area located in the **City of Bangor** has been established by the Maine Department of Transportation (MDOT) in accordance with provisions of 29-A § 2382 Maine Revised Statutes Annotated (MRSA).

(a) The following sections of highway under construction in the city of Bangor, Penobscot County on Union Street/ Route 222 over Interstate 95, Ramp A southbound off ramp, Ramp G northbound on ramp, Fifteenth street, Sunset avenue, Ramp J northbound off ramp.

(b) (Union Street/ Route 222) station 11+25.00 to station 17+50.00 of the construction plus approaches.

(c) (Ramp A) station 70+00.00 to station 74+32.00 of the construction plus approaches.

(d) (Ramp G) station 80+00.00 to station 95+25.00 of the construction plus approaches.

(e) (Fifteenth street) station 50+00.00 to station 51+00.00 and station 60+00.00 to station 61+25.00 of the construction plus approaches.

(f) (Sunset Avenue) station 63+00.00 to station 64+40.00 of the construction plus approaches.

(g) (Ramp J) station 90+00.00 to station 92+09.00 of the construction plus approaches.

Per 29-A § 2382 (7) MRSA, the MDOT may "*issue permits for stated periods of time for loads and equipment employed on public way construction projects, United States Government projects or construction of private ways, when within construction areas established by the Department of Transportation. The permit:*

A. Must be procured from the municipal officers for a construction area within that municipality;

B. May require the contractor to be responsible for damage to ways used in the construction areas and may provide for:

(1) Withholding by the agency contracting the work of final payment under contract; or

(2) The furnishing of a bond by the contractor to guarantee suitable repair or payment of damages.

The suitability of repairs or the amount of damage is to be determined by the Department of Transportation on state-maintained ways and bridges, otherwise by the municipal officers;

C. May be granted by the Department of Transportation or by the state engineer in charge of the construction contract; and

D. For construction areas, carries no fee and does not come within the scope of this section."

The Municipal Officers for the **City of Bangor** agreed that an Overlimit Permit will be issued to the Contractor for the purpose of using loads and equipment on municipal ways in excess of the limits as specified in 29-A MRSA, on the municipal ways as described in the "Construction Area".

As noted above, a bond may be required by the municipality, the exact amount of said bond to be determined prior to use of any municipal way. The MDOT will assist in determining the bond amount if requested by the municipality.

The maximum speed limits for trucks on any town way will be 25 mph (40 km per hour) unless a higher legal limit is specifically agreed upon in writing by the Municipal Officers concerned.

SPECIAL PROVISION 105
OVERLIMIT PERMITS

Title 29-A § 2382 MRSA Overlimit Movement Permits.

1. Overlimit movement permits issued by State. The Secretary of State, acting under guidelines and advice of the Commissioner of Transportation, may grant permits to move nondivisible objects having a length, width, height or weight greater than specified in this Title over a way or bridge maintained by the Department of Transportation

2. Permit fee. The Secretary of State, with the advice of the Commissioner of Transportation, may set the fee for single trip permits, at not less than $6, nor more than $30, based on weight, height, length and width. The Secretary of State may, by rule, implement fees that have been set by the Commissioner of Transportation for multiple trip, long-term overweight movement permits. Rules established pursuant to this section are routine technical rules pursuant to Title 5, chapter 375, subchapter II-A.

3. County and municipal permits. A county commissioner or municipal officer may grant a permit, for a reasonable fee, for travel over a way or bridge maintained by that county or municipality

4. Permits for weight. A vehicle granted a permit for excess weight must first be registered for the maximum gross vehicle weight allowed for that vehicle.

5. Special mobile equipment. The Secretary of State may grant a permit, for no more than one year, to move pneumatic-tire equipment under its own power, including Class A and Class B special mobile equipment, over ways and bridges maintained by the Department of Transportation. The fee for that permit is $15 for each 30-day period.

6. Scope of permit. A permit is limited to the particular vehicle or object to be moved, the trailer or semitrailer hauling the overlimit object and particular ways and bridges.

7. Construction permits. A permit for a stated period of time may be issued for loads and equipment employed on public way construction projects, United States Government projects or construction of private ways, when within construction areas established by the Department of Transportation. The permit:

A. Must be procured from the municipal officers for a construction area within that municipality;

B. May require the contractor to be responsible for damage to ways used in the construction areas and may provide for:

(1) Withholding by the agency contracting the work of final payment under contract; or

(2) The furnishing of a bond by the contractor to guarantee suitable repair or payment of damages.

The suitability of repairs or the amount of damage is to be determined by the Department of Transportation on state-maintained ways and bridges, otherwise by the municipal officers;

C. May be granted by the Department of Transportation or by the state engineer in charge of the construction contract; and

D. For construction areas, carries no fee and does not come within the scope of this section.

8. Gross vehicle weight permits. The following may grant permits to operate a vehicle having a gross vehicle weight exceeding the prescribed limit:

A. The Secretary of State, with the consent of the Department of Transportation, for state and state aid highways and bridges within city or compact village limits;

B. Municipal officers, for all other ways and bridges within that city and compact village limits; and

C. The county commissioners, for county roads and bridges located in unorganized territory.

9. Pilot vehicles. The following restrictions apply to pilot vehicles.

A. Pilot vehicles required by a permit must be equipped with warning lights and signs as required by the Secretary of State with the advice of the Department of Transportation.

B. Warning lights may be operated and lettering on the signs may be visible on a pilot vehicle only while it is escorting a vehicle with a permit on a public way.

With the advice of the Commissioner of Transportation and the Chief of the State Police, the Secretary of State shall establish rules for the operation of pilot vehicles.

9-A. Police escort. A person may not operate a single vehicle or a combination of vehicles of 125 feet or more in length or 16 feet or more in width on a public way unless the vehicle or combination of vehicles is accompanied by a police escort. The Secretary of State, with the advice of the Commissioner of Transportation, may require a police escort for vehicles of lesser dimensions.

A. The Bureau of State Police shall establish a fee for state police escorts to defray the costs of providing a police escort. A county sheriff or municipal police department may establish a fee to defray the costs of providing police escorts.

B. The Bureau of State Police shall provide a police escort if a request is made by a permittee. A county sheriff or municipal police department may refuse a permittee's request for a police escort.

C. A vehicle or combination of vehicles for which a police escort is required must be accompanied by a state police escort when operating on the interstate highway system.

10. Taxes paid. A permit for a mobile home may not be granted unless the applicant provides reasonable assurance that all property taxes, sewage disposal charges and drain and sewer assessments applicable to the mobile home, including those for the current tax year, have been paid or that the mobile home is exempt from those taxes. A municipality may waive the requirement that those taxes be paid before the issuance of a permit if the mobile home is to be moved from one location in the municipality to another location in the same municipality for purposes not related to the sale of the mobile home.

11. Violation. A person who moves an object over the public way in violation of this section commits a traffic infraction.

Section History:
PL 1993, Ch. 683, §A2 (NEW).
PL 1993, Ch. 683, §B5 (AFF).
PL 1997, Ch. 144, §1,2 (AMD).
PL 1999, Ch. 117, §2 (AMD).
PL 1999, Ch. 125, §1 (AMD).
PL 1999, Ch. 580, §13 (AMD).
PL 2001, Ch. 671, §30 (AMD).
PL 2003, Ch. 166, §13 (AMD).
PL 2003, Ch. 452, §Q73,74 (AMD).
PL 2003, Ch. 452, §X2 (AFF).

SPECIAL PROVISION
SECTION 105
GENERAL SCOPE OF WORK
(Project Survey Control & Construction Layout)

Description The Contractor may elect to utilize electronic methods of project location layout and control (such as, but not limited to, Global Position System (GPS) and/or Robotic Total Station (RTS) equipment) provided the following requirements are met.

Project Control Work Plan The Contractor shall provide a Project Control Work Plan to the Department at least 14 days prior to the preconstruction meeting. The Project Control Work Plan shall include:

- Design software and version used to develop Digital Terrain Model (DTM)
- Make and model of equipment and software used for project layout/staking
- Make and model of equipment and software used for machine guidance/control and the make and model of machine to be used
- Manufacturer stated vertical and horizontal accuracy attainable by equipment
- Site Calibration and control verification procedures including timetable and tolerances
- Calibration procedure and records for equipment used for machine guidance/control
- Description of procedure used to integrate vertical refinement equipment (i.e. laser), including process of determining and verifying transmitter set-up location and communicating any necessary adjustments to the machine control equipment
- Narrative description of methods used to establish any additional project control points (horizontal or vertical)
- Type(s) and locations of base stations to be used, including methods for determining on-site bases and localization procedure for off-site bases
- Name, title and role of all contractor personnel involved with equipment utilized on the project (including development of DTM)
- Designated on-site contractor person to be primary contact for issues arising from Contractor's use of GPS or RTS equipment

The Department will review and provide comments to the Contractor within 14 days of receipt of the Project Control Work Plan.

Digital Terrain Model (DTM) Any electronic project design data provided to the Contractor will not be deemed a part of the contract. Any electronic data provided to the Contractor is done as a courtesy by the Department. The Contractor shall not take advantage of any Ambiguity, error, omission, conflict, or discrepancy contained in the electronic data. If the Contractor discovers any such ambiguity, etc., the Contractor shall notify the Department before performing any Work related to the ambiguity, etc.

The Contractor shall convert any electronic data provided by the Department into the format required by the Contractor's system and equipment at the Contractor's expense.

The completed Digital Terrain Model (DTM) to be used for construction shall be submitted to the Department in InRoads DTM, LandXML, or other format acceptable to the Department for review with the Project Control Work Plan. No changes shall be made to the electronic model after submittal without prior written consent by the Project Resident.

Department Verification The Contractor shall furnish a GPS Rover or RTS equipment with the same capabilities as units used by the Contractor and compatible with the system(s) used by the Contractor to the Project Resident prior to commencing work utilizing electronic layout methods. The unit(s) shall stay in the possession of the Department for the duration of the project and shall be returned, in good condition, to the Contractor upon final acceptance of the field work.

Any augmented features (such as laser refinement) used by the contractor shall be included in the features available on the equipment provided to the Department.

With the equipment, the Contractor shall provide eight hours of manufacturer certified training on the use of the GPS or RTS and the Contractor's systems to Department project personnel prior to beginning any work. This training is for the purpose of providing Department project personnel with an understanding of the equipment, software, and electronic data being used by the Contractor.

Equipment Use All work accomplished through electronic layout methods and/or machine control must meet the same accuracy requirements as conventional grading construction as detailed in the Standard Specifications. The contractor shall not utilize GPS or RTS equipment for a construction activity that requires a greater precision than the machine's capability as per the manufacturer's recommendation.

Basis of Payment No payment shall be made for the elected use of electronic methods of project location layout and control. Any delays arising from the operation of GPS or RTS layout or machine control systems will not result in adjustment to the bid price or quantity of any construction items or be justification for granting any type of contract extension. Any costs incurred through incorrect use of GPS or RTS layout or machine control systems or re-construction necessary through their use are the sole responsibility of the Contractor. Training of Department project personnel in the use of GPS or RTS will be paid on a reimbursable basis based on submitted invoices, without Contractor markup.

Bangor
WIN 19256.00
December 12, 2013

SPECIAL PROVISIONS
SECTION 105
MAINTENANCE OF WORK

Where existing pavement carries traffic and is removed to install (or remove) drainage or utility structures, the pavement shall be replaced weekly with a temporary pavement consisting of a minimum of 3 inches of acceptable hot mix asphalt. No separate payment will be made for furnishing, placing, maintaining and removing temporary pavement and all cost of such work will be considered incidental to the contract.

Prior to placing any permanent pavement over backfilled trenches, the edge of any adjoining existing pavement shall be cut even and vertical and coated with tack coat to form a tight joint between the new and the existing pavement. No separate payment will be made for cutting and tack coating the joint.

SPECIAL PROVISION
SECTION 106
QUALITY
(Quality Level Analysis- Structural Concrete)

106.7.1 Standard Deviation Method Under H. Replace the Method A payfactor with the following;

"Method A: PF = [32.5 + (Quality Level * 0.75)] * 0.01"

SPECIAL PROVISION
SECTION 107
TIME
(Work Times and Supplemental Liquidated Damages)

107.1 Contract Completion Date Add the following to this section.

The specified Contract Completion Date is November 15, 2016.

107.3.2 Night Work Add the following to this section.

The Contractor shall not carry on construction operations on Friday and Saturday nights. Night work can be performed Sunday through Thursday.

Single lane I-95 closures are allowed without penalty between 7:00 PM and 7:00 AM. Supplemental liquidated damages will be assessed at $500.00 per lane per 30 minutes or any part thereof for closing one lane of traffic on I-95 Northbound or Southbound anytime between 7:00 AM and 7:00 PM. At least two lanes of traffic must be maintained in each direction between 7:00 AM and 7:00 PM.

256 hours of complete I-95 closures of are allowed without penalty. Complete closures of I-95 Northbound and I-95 Southbound must be counted separately. Complete closures of I-95 Northbound will be scheduled to occur between 9:00 PM and 5:00 AM. Complete closures of I-95 Southbound will be scheduled to occur between 10:00 PM and 6:00 AM. The allotted closure time must include set up and removal of traffic control devices in the roadway, any removal of the existing superstructure and substructure that is not protected from I-95 traffic, and any installation of the new superstructure and substructure that is not protected from I-95 traffic. A closure notification plan must be included in the Traffic Control Plan.

Supplemental liquidated damages will be assessed at $500.00 per lane per 30 minutes or any part thereof for all complete I-95 closures in excess of the 256 hours allowed. Supplemental liquidated damages will be assessed at $500.00 per lane per 30 minutes or any part thereof for complete closures of I-95 Northbound traffic anytime between 5:00 AM and 9:00 PM and for complete closures of I-95 Southbound traffic anytime between 6:00 AM and 10:00 PM.

The interstate shall be cleaned after each night of work before resuming I-95 traffic.

Basis of Payment
All work and materials required to maintain traffic in accordance with this Special Provision including the work and materials needed to set up the work area to complete night work will be paid for under appropriate 652 pay items.

Bangor
WIN 19256.00
I-95 Exit 184 NB On-Ramp
December 9, 2013

SPECIAL PROVISION
SECTION 107
TIME
(Contract Time)

The contractor will be allowed to commence work on this project at any time, provided that all applicable plans required under this contract have been submitted and approved and required notice has been provided.

The completion date for work required under the contract for WIN 19256.00 is **November 15, 2014**.

All travel lanes shall be open to traffic and the roadway in safe operating condition when the contractor suspends work for holidays or extended periods of time as directed.

All work schedule changes must be submitted for approval to the Department a minimum of 10 calendar days prior to the requested change.

SPECIAL PROVISION
SECTION 107
TIME
(Work Times and Supplemental Liquidated Damages)

General Monetary assessments will be made against the Contractor for each period that there are restrictions as specified below.

Definitions of Terms For this contract the following definitions apply:

(a) Calendar Day Any portion of the day on the calendar including Saturdays, Sundays and holidays, beginning and ending at midnight.

(b) Hour Any continuous 60-minute period or portion of a continuous 60-minute period beginning at the point when a ramp, lane or shoulder is closed or obstructed by the Contractor's operations.

(c) 15-Minute Period Any portion of a 15-minute continuous period.

(d) Obstruction When the Contractor's operations have resulted in the useable lane width of the travel lane to be less than specified in the plan documents or by the Resident.

The Contractor shall not carry on construction operations on Friday and Saturday nights. Night work can be performed Sunday through Thursday.

Single lane I-95 closures are allowed without penalty between 7:00 PM and 7:00 AM. Supplemental liquidated damages will be assessed at **$500.00 per lane per each 15 minutes** or any part thereof for closing or creating an obstruction to traffic of one lane or any part of one lane of traffic on I-95 anytime between 7:00 AM and 7:00 PM. At least two lanes of northbound traffic must be maintained between 7:00 AM and 7:00 PM.

Complete closure to traffic of the Interstate 95 Exit 184 northbound on-ramp will be allowed for a maximum of fourteen (14) calendar days. Supplemental liquidated damages will be assessed at **$25,000.00 per calendar day** or any part thereof for closure of the ramp to traffic for more calendar days or parts of calendar days than allowed herein.

Northbound Interstate travel lanes shall be cleaned after each period of lane closure due to adjacent ramp and acceleration lane construction before resuming I-95 traffic.

A closure notification plan must be included in the Traffic Control Plan.

SPECIAL PROVISION
SECTION 107
TIME

107.4.2 Schedule of Work Required. This Section is amended by the following:

In addition to the Contractors initial CPM Schedule, the Department will require the Contractor to update the schedule monthly to show current progress. The submittal date for monthly updates shall be determined by the Resident.

SPECIAL PROVISION
SECTION 107
SCHEDULING OF WORK

Replace Section 107.4.2 with the following:

"107.4.2 Schedule of Work Required Within 21 Days of Contract Execution and before beginning any on-site activities, the Contractor shall provide the Department with its Schedule of Work. The Contractor shall plan the Work, including the activity of Subcontractors, vendors, and suppliers, such that all Work will be performed in Substantial Conformity with its Schedule of Work. The Schedule must include sufficient time for the Department to perform its functions as indicated in this Contract, including QA inspection and testing, approval of the Contractor's TCP, SEWPCP and QCP, and review of Working Drawings.

At a minimum, the Schedule of Work shall include a bar chart which shows the major Work activities, milestones, durations, **submittals and approvals**, and a timeline. Milestones to be included in the schedule include: (A) start of Work, (B) beginning and ending of planned Work suspensions, (C) Completion of Physical Work, and (D) Completion. If the Contractor Plans to Complete the Work before the specified Completion date, the Schedule shall so indicate.

Any restrictions that affect the Schedule of Work such as paving restrictions or In-Stream Work windows must be charted with the related activities to demonstrate that the Schedule of Work complies with the Contract.

The Department will review the Schedule of Work and provide comments to the Contractor within 20 days of receipt of the schedule. The Contractor will make the requested changes to the schedule and issue the finalized version to the Department."

Bangor
WIN 016681.00
Union St. (Route 222)
May 30, 2013

SPECIAL PROVISION
SECTION 107
TIME
(Supplemental Liquidated Damages for Fabrication Time)

107.8.1 Fabrication Time.

The Department has budgeted for the following amounts of fabrication/shop inspection for certain Work components:

Element	Time	Supplemental LD
14 Hybrid Composite Beams	84 Calendar Days	$650 per calendar day

The Contractor is responsible to produce these products for the Work until finished, including any needed actions to correct unacceptable workmanship or materials. The fabricator is responsible to notify the QA Inspector of required inspection at least 2 work days prior to doing the work. If the Department determines that shop inspection beyond these times is required, then the corresponding Supplemental Liquidated Damages will be deducted as they occur from amounts otherwise due the Fabricator. The Fabricator will be notified by the Department when these times begin and when the allotted time will expire.

If a fabricator or supplier works more than one shift per day and the Department determines that inspection is required for each shift, each shift will count as a QA day and the LD rate will be the noted amount per shift per QA Day in lieu of per QA day.

The Contractor that will be erecting the HCBs shall be notified by the fabricator about the beam manufacturing progress. To ensure timely fabrication, Supplemental liquidated damages assessed to the contract will be increased to a rate of Six Hundred and fifty ($650.00) U.S. dollars per day for each day beyond March 1, 2014 that the beams for stage 1 are not completed and ready for delivery.

Inspection by the Department is required for the following activities:

- Installation of fiber reinforcement and strand
- Installation of void foam
- Resin infusion
- Installation of cover and reinforcing
- Gel Coat

SPECIAL PROVISION
SECTION 107
TIME
(Scheduling of Work – Projected Payment Schedule)

Description The Contractor shall also provide the Department with a Quarterly Projected Payment Schedule that estimates the value of the Work as scheduled, including requests for payment of Delivered Materials. The Projected Payment Schedule must be in accordance with the Contractor's Schedule of Work and prices submitted by the Contractor's Bid. The Contractor shall submit the Projected Payment Schedule as a condition of Award.

SPECIAL PROVISION
SECTION 108
PAYMENT
(Asphalt Escalator)

108.4.1 Price Adjustment for Hot Mix Asphalt: For all contracts with hot mix asphalt in excess of 500 tons total, a price adjustment for performance graded binder will be made for the following pay items:

Item 403.102 Mot Mix Asphalt – Special Areas
Item 403.206 Hot Mix Asphalt - 25 mm
Item 403.207 Hot Mix Asphalt - 19 mm
Item 403.2071 Hot Mix Asphalt - 19 mm (Polymer Modified)
Item 403.2072 Hot Mix Asphalt - 19 mm (Asphalt Rich Base)
Item 403.2073 Warm Mix Asphalt - 19 mm
Item 403.208 Hot Mix Asphalt - 12.5 mm
Item 403.2081 Hot Mix Asphalt - 12.5 mm (Polymer Modified)
Item 403.20813 Warm Mix Asphalt - 12.5 mm (Polymer Modified)
Item 403.2083 Warm Mix Asphalt - 12.5 mm
Item 403.209 Hot Mix Asphalt - 9.5 mm (sidewalks, drives, & incidentals)
Item 403.210 Hot Mix Asphalt - 9.5 mm
Item 403.2101 Hot Mix Asphalt - 9.5 mm (Polymer Modified)
Item 403.2102 Hot Mix Asphalt - 9.5 mm (Asphalt Rich Base)
Item 403.2103 Warm Mix Asphalt - 9.5 mm
Item 403.2104 Hot Mix Asphalt - 9.5 mm (3/4” Surface)
Item 403.211 Hot Mix Asphalt – Shim
Item 403.2111 Hot Mix Asphalt – Shim (Polymer Modified)
Item 403.2113 Warm Mix Asphalt - Shim
Item 403.212 Hot Mix Asphalt - 4.75 mm (Shim)
Item 403.2123 Warm Mix Asphalt - 4.75 mm (Shim)
Item 403.213 Hot Mix Asphalt - 12.5 mm (base and intermediate course)
Item 403.2131 Hot Mix Asphalt - 12.5 mm (base and intermediate course Polymer Modified)
Item 403.2132 Hot Mix Asphalt - 12.5 mm (Asphalt Rich Base and intermediate course)
Item 403.2133 Warm Mix Asphalt - 12.5 mm (base and intermediate course)
Item 403.214 Hot Mix Asphalt - 4.75 mm (Surface)
Item 403.2143 Warm Mix Asphalt - 4.75 mm (Surface)
Item 403.301 Hot Mix Asphalt (Asphalt Rubber Gap-Graded)
Item 404.70 Colored Hot Mix Asphalt – 9.5mm (Surface)
Item 404.72 Colored Hot Mix Asphalt – 9.5mm (Islands, sidewalks, & incidentals)
Item 461.13 Maintenance Surface Treatment

Price adjustments will be based on the variance in costs for the performance graded binder component of hot mix asphalt. They will be determined as follows:

The quantity of hot mix asphalt for each pay item will be multiplied by the performance graded binder percentages given in the table below times the difference in price between the base price and the period price of asphalt cement. Adjustments will be made upward or downward, as prices increase or decrease.

Item 403.102–6.2%			
Item 403.206–4.8%			
Item 403.207–5.2%	Item 403.2071–5.2%	Item 403.2072–5.8%	Item 403.2073–5.2%
Item 403.208–5.6%	Item 403.2081–5.6%	Item 403.20813–5.6%	Item 403.2083–5.6%
Item 403.209–6.2%			
Item 403.210–6.2%	Item 403.2101–6.2%	Item 403.2102–6.8%	Item 403.2103–6.2%
Item 403.2104–6.2%			
Item 403.211–6.2%	Item 403.2111–6.2%		Item 403.2113–6.2%
Item 403.212–6.8%			Item 403.2123–6.8%
Item 403.213–5.6%	Item 403.2131–5.6%	Item 403.2132–6.2%	Item 403.2133–5.6%
Item 403.214–6.8%			Item 403.2143–6.8%
Item 403.301–6.2%			
Item 404.70–6.2%			
Item 404.72–6.2%			
Item 461.13–6.4%			

Hot Mix Asphalt**:** The quantity of hot mix asphalt will be determined from the quantity shown on the progress estimate for each pay period.

Base Price: The base price of performance graded binder to be used is the price per standard ton current with the bid opening date. This price is determined by using the average New England Selling Price (Excluding the Connecticut market area), as listed in the Asphalt Weekly Monitor.

Period Price: The period price of performance graded binder will be determined by the Department by using the average New England Selling Price (Excluding the Connecticut market area), listed in the Asphalt Weekly Monitor current with the paving date. The maximum Period Price for paving after the adjusted Contract Completion Date will be the Period Price on the adjusted Contract Completion Date.

SPECIAL PROVISION
SECTION 202
Removing Structures and Obstructions
(Staged Bridge Removal)

Description. This work shall consist of the design and detailed planning for the staged removal and reconstruction of the Union Street Bridge while safely maintaining vehicle and pedestrian traffic. The work includes provision of structural analysis calculations, detailed staged work schedules, and working drawings that address all safety needs, particularly any temporary bracing required to maintain traffic on the existing structure after partial bridge removal. The structural analysis shall address all existing bridge elements that are likely to undergo changes in load intensity, support, or strength due to staged work modifications. The work includes the construction of all necessary modifications and bracing and the maintenance of the existing structure required for safe construction and traffic maintenance. The work also includes the submittal of demolition plans clearly stating the intended recycling or disposal of the materials in accordance with this contract and applicable federal and state regulations. All design calculations, working drawings, schedules, and disposal/reuse provisions noted above are included in the term, "Stage Removal and Construction Plan". The Stage Removal and Construction Plan is qualified as a Working Drawing and must meet all the provisions of Standard Specification Subsection 105.7.1, Working Drawings: General. The Contractor is not relieved of any responsibility by the Departmental review or any provisions, omissions, or statements in the contract.

Work. At least twenty-one calendar days prior to the start of any demolition work, the Contractor shall submit the Stage Removal and Construction Plan described above to the Resident. The Stage Removal and Construction Plan must be prepared and stamped by a Professional Engineer licensed in the State of Maine. The work includes all modifications to the working drawings, schedule, and design required to obtain acceptance by the Maine Department of Transportation. Acceptance of the plan is at the sole discretion of the Maine Department of Transportation. The Contractor shall not begin any demolition until the Stage Removal and Construction Plan is complete and accepted by the Maine Department of Transportation.

As indicated above, the Work also consists of all materials, labor, and equipment needed to remove the bridge and to modify and maintain portions of the bridge such that traffic can be safely maintained in accordance with the Stage Construction plan sheets.

Of particular concern, is the support of the existing pier cap, once partially removed. It appears that the cut cap will need both vertical and horizontal bracing to support live loads. Also of special concern is the appropriate reuse or disposal of the lead painted steel beams and the bridge portion of the existing abandoned gas main pipe. Except for the aluminum bridge railing, all existing elements and attachments to the existing bridge become the Contractor's property at demolition.

Basis of Payment. There shall be no separate payment for this work. All work described in this Special Provision will be considered incidental to Pay Item # 202.19 Removing Existing Bridge.

SPECIAL PROVISION
SECTION 202
(REMOVING EXISTING RAIL - RETAINED BY THE DEPARTMENT)

The Contractor shall be responsible for transporting the existing bridge rail from the project site to the following location:

Maine Department of Transportation Facility
991 Fuller Road in Carmel, Maine

The Contractor shall contact the Resident and Joe Prescott, Maine DOT at (207) 941-4500 a minimum of 72 hours in advance of delivery.

The aluminum rails and posts shall be adequately secured to wooden pallets before being returned to the Department. Base plates, rail caps, splice bars, clamp bars and miscellaneous hardware shall be placed in wooden boxes on wooden pallets. The wooden boxes shall have wooden covers attached with two hinges and a clasp. The clasp shall be secured in the closed position by a method approved by the Resident. The size of the pallets and boxes shall be approved by the Resident. The weight limit on the pallets shall be such that no damage will occur to the pallets or the materials stored on the pallets.

SPECIAL PROVISIONS
SECTION 202
REMOVING STRUCTURES AND OBSTRUCTIONS
(Removing Pavement Surface)

The December 2002 Revision of the Standard Specifications, Section 202-Removing Structures and Obstructions, subsection 202.061-Removing Pavement Surface, has been removed and replaced in it's entirety by the following:

202.061 Removing Pavement Surface The equipment for removing the bituminous surface shall be a power operated milling machine or grinder capable of removing bituminous concrete pavement to the required depth, transverse cross slope, and profile grade by the use of an automated grade and slope control system. The controls shall automatically increase or decrease the pavement removal depth as required, and readily maintain desired cross slope, to compensate for surface irregularities in the existing pavement course. The equipment shall be capable of accurately establishing profile grades by referencing from a fixed reference such as a grade wire, or from the existing pavement surface using a 30 foot (9m) minimum contact ski (floating beam), or 24 foot (8m) non-contact grade control beam.

The Contractor shall locate and remove all objects in the pavement through the work area that would be detrimental to the planing or grinding machine. Any structures or obstructions left within the travel lane or shoulders shall have tapers installed according to Standard Detail 202(01).

The finished milled surface will be inspected before being accepted, and any deviations in the profile exceeding 12 mm [1/2 inch] under a 5 meter [16 foot] string line or straightedge placed parallel to the centerline will be corrected. Any deviations in the cross-slope that exceed 10 mm [3/8 inch] under a 3 meter [10 foot] string line or straightedge placed transversely to centerline will be corrected. All corrections will be made with approved methods and materials. Any areas that require corrective measures will be subject to the same acceptance tolerances. Excess material that becomes bonded to the milled surface will be removed to the Resident's satisfaction before the area is accepted.

On highways or expressways with directional traffic, the Contractor will be required to remove the pavement surface on the adjacent sections of travel lane and designated portions of adjacent shoulder before the end of the following calendar day unless the centerline edge is tapered to a 12:1. Failure to remove the centerline vertical edge by milling, using the approved taper, or matching the adjacent course the following day will constitute a traffic control violation unless an excusable delay is granted by the Department. The Contractor will be required to remove the specified pavement course over the full width of the mainline traveled ways prior to opening the sections to weekend or holiday traffic.

On roadways with two-way traffic, the Contractor will be required to remove the specified pavement course over the full width of the mainline traveled ways prior to opening the sections to weekend or holiday traffic.

During any period that a centerline vertical or tapered edge exists, the Contractor will be responsible for installing additional warning signage that clearly defines the centerline vertical or tapered edge and elevation differential hazard, as well as additional centerline delineation such as double RPM application, or temporary painted line. The Traffic Control Plan shall include the additional requirements. All signs and traffic control devices will conform to Section 719.01, and Section 652, and will be installed prior to the work, at a maximum spacing of 0.50 mile [0.80 km] for the entire length of the effected roadway section. All additional signing, labor, traffic control devices, or incidentals will not be paid for directly, but will be considered incidental to the appropriate 652 bid items.

Any areas of concern, such as de-lamination or pot-holing shall be identified on a continuous basis as milling progresses. Proper corrective action will be determined by the Resident and paid for under the appropriate contract items, and if required, completed prior to opening lane to traffic. Any issues that arise **up to** 7 calendar days after being milled will be the responsibility of the MaineDOT as noted in Special Provision Section 105 – Limitations Of Operations.

Bangor
WIN 19256.00
December 12, 2013

SPECIAL PROVISION
SECTION 304
AGGREGATE BASE AND SUBBASE COURSE
(Aggregate Subbase)

If the Contractor wishes to route public traffic over completed aggregate subbase course, the course shall be constructed with a minimum 50mm [2 inch] surcharge above the design grade of the aggregate subbase course, except as described below. Whenever the surcharge is used, it shall be constructed with material meeting the requirements of Subsection 703.06(b), Type D Aggregate. Also, whenever the surcharge is used, it shall be placed on all the aggregate subbase course subjected to traffic, including public driveways, sidewalks, approach roads, and the outer portions of the shoulders. Removal of the surcharge shall be followed immediately in succession by the fine grading of the aggregate subbase and construction of the next course.

The furnishing, placing, maintaining and removal of the surcharge will not be paid for directly, but will be considered incidental to the Aggregate Subbase Course pay item.

If salvaged bituminous pavement is placed as the top layer of the aggregate subbase course, a surcharge is not required.

Bangor
WIN 19256.00
December 12, 2013

SPECIAL PROVISION
SECTION 304
(Aggregate Base and Subbase Course)

The following replaces Section 304.02, Aggregate, in the Standard Specifications.

304.02 Aggregate. Aggregates shall conform to the requirements specified in the following Subsection of Division 700 – Materials:

Aggregate Subbase	703.06b

Aggregate subbase shall be material meeting Type D aggregate for the entire depth of the subbase layer beneath travel and turning lane and shoulder pavement materials. For this project, Type E aggregate is not a Contractor option for aggregate subbase within the depths described above. Type D aggregate shall be paid for under Pay Item 304.10.

The portion of the material passing a 75 mm (3 in) sieve at the time it is deposited on the roadway shall conform to the gradation requirements of 703.06b, Type D. Oversized stones shall be removed before depositing on the roadway. Oversized stones are stones that will not pass a 150 mm (6 in) square mesh sieve.

SPECIAL PROVISION
SECTION 403
HOT MIX ASPHALT PAVEMENT

401 HOT MIX ASPHALT LONGITUDINAL JOINT DENSITY

401.30 Description The Department will measure the pavement density of longitudinal joints constructed between adjoining mainline travel lanes. Core samples shall be tested according to AASHTO T-166. The Department will randomly determine core locations. The Contractor shall cut 6 in [150 mm] diameter cores at no additional cost to the Department by the end of the working day following the day the pavement is placed, and immediately give them to the Department. The cores will be placed in a transport container provided by the Department and transported by the Contractor to the designated MaineDOT Lab as directed by the Department. Cores shall not be cut except for verification at a rate not to exceed 3 per day or 2 per 1000 ton [1000 Mg] placed. Pre-testing of the acceptance cores will not be allowed. At the time of sampling, the Contractor and the Department shall mutually determine if a core is damaged. If it is determined that the core(s) is damaged, the Contractor shall cut new core(s) at the same offset and within 3 ft [1 m] of the initial sample. At the time the core is cut, the Contractor and the Department will mutually determine if saw cutting of the core is needed, and will mark the core at the point where sawing is needed. The core may be saw cut by the Contractor in the Department's presence onsite, or in an MaineDOT Lab by The Department, without disturbing the layer being tested to remove lower layers of Hot Mix Asphalt Pavement, gravel, or RAP. No recuts are allowed at a test location after the core has been tested. A minimum of five centerline joint cores will be obtained for each lot. Upon conclusion of each lot, density results shall be examined for statistical outliers as stated in Section 106.7.2.

Cores shall be taken directly over the construction joint. Should the notched wedge joint device be used, the cores shall be cut directly over the taper portion of the wedge (approximately centered 3” from the visible joint).

If the pay factor for Density falls below 0.80 for Method A or C, or 0.86 for Method B, the Contractor shall make corrective action to the longitudinal joint density construction method before proceeding with the Lot, or before starting a new Lot. In cases where the corrective action can be shown to immediately increase density, such as with informational cores or density gauge readings, the Contractor may elect to resume production once the corrective action methods are established. Additional QC testing shall be performed to verify the effectiveness of the corrective action.

Should the pay factor for Density remain at or fall below the specified action limit of 0.80 for Method A or C, or 0.86 for Method B, then the Contractor shall be required to make further adjustments to the construction method. The Department will consider corrective action acceptable if the density pay factor increases based on independent verification samples or acceptance samples.

401.31 Acceptance This method utilizes Quality Level Analysis and pay factor specifications as described in Section 106. For Hot Mix Asphalt Pavement designated for acceptance under Quality Assurance provisions, the Department will sample once per sublot on a statistically random basis, test, and evaluate in accordance with the following Acceptance Criteria:

TABLE 1: ACCEPTANCE CRITERIA

PROPERTIES	POINT OF SAMPLING	LOT SIZE	SUBLOT SIZE	TEST METHOD
%TMD (Centerline Joint)	Completed centerline joint	5000 ft* [1520 m]	1000 ft [300 m]	AASHTO T269

* Lot size will not exceed 7500 ft [2280 m]. Projects longer than 7500 ft [2280 m] will be divided into two or more lots. Partial lots will be included in the previous lot if equal to or less than one-half the size of a normal lot. If greater than one-half the normal lot size, it will be tested as a separate lot.

The Department will determine a pay factor using acceptance limits from Table 2.

TABLE 2: METHOD A DENSITY ACCEPTANCE LIMITS

	LSL
Percent of Maximum Theoretical Density*	91.0

* The Theoretical Maximum Density will be determined from the average of the Gmm values used to determine the percent compaction of the nearest acceptance cores on either side of the Centerline Joint Core from each adjacent mat.

The Department will calculate the Pay Adjustment for Centerline Joint Density as follows:

PA = (joint density PF- 1.0)(Q)(P) x0.40

Where

PA = Pay Adjustment
Q = Quantity of traveled way pavement represented by PF in tons [Mg]
P = Contract price per ton [Mg]
PF = Pay Factor

If the joint density Pay Factor is less than 0.88, the Pay Adjustment shall be:

PA = (-0.05)(Q)(P)

SPECIAL PROVISION 400 - PAVEMENTS

SECTION 401 - HOT MIX ASPHALT PAVEMENT

401.01 Description The Contractor shall furnish a uniformly blended, homogenous mixture placed as one or more courses of Hot Mix Asphalt Pavement (HMA) on an approved base in accordance with the contract documents and in reasonably close conformity with the lines, grades, thickness, and typical cross sections shown on the plans or established by the Resident. The Department will accept this work under Quality Assurance provisions, in accordance with these specifications and the requirements of Section 106 – Quality, the provisions of AASHTO M 323 except where otherwise noted in sections 401 and 703 of these specifications, and the MaineDOT Policies and Procedures for HMA Sampling and Testing.

401.02 Materials Materials shall meet the requirements specified in Section 700 - Materials:

Asphalt Cement	702.01
Aggregates for HMA Pavement	703.07
RAP for HMA Pavement	703.08
HMA Mixture Composition	703.09

401.03 Composition of Mixtures The Contractor shall compose the Hot Mix Asphalt Pavement with aggregate, Performance Graded Asphalt Binder (PGAB), and mineral filler if required. HMA shall be designed and tested according to AASHTO R35 and the volumetric criteria in Table 1. The Contractor shall size, uniformly grade, and combine the aggregate fractions in proportions that provide a mixture meeting the grading requirements of the Job Mix Formula (JMF).

The Contractor shall submit for Department approval a JMF to the Central Laboratory in Bangor for each mixture to be supplied. The Department may approve 1 active design per nominal maximum size, per traffic level, per plant, plus a 9.5mm "fine" mix for shimming and where required, a non-RAP design for bridge decks. The Department shall then have 15 calendar days in which to process a new design before approval. The JMF shall establish a single percentage of aggregate passing each sieve size within the limits shown in section 703.09. The mixture shall be designed and produced, including all production tolerances, to comply with the allowable control points for the particular type of mixture as outlined in 703.09. The JMF shall state the original source, gradation, and percentage to be used of each portion of the aggregate including RAP when utilized, and mineral filler if required. It shall also state the proposed PGAB content, the name and location of the refiner, the supplier, the source of PGAB submitted for approval, the type of PGAB modification if applicable, and the location of the terminal if applicable.

In addition, the Contractor shall provide the following information with the proposed JMF:

- Properly completed JMF indicating all mix properties (Gmm, VMA, VFB, etc.)
- Stockpile Gradation Summary
- Design Aggregate Structure Consensus Property Summary
- Design Aggregate Structure Trial Blend Gradation Plots (0.45 power chart)
- Trial Blend Test Results for at least three different asphalt contents
- Design Aggregate Structure for at least three trial blends
- Test results for the selected aggregate blend at a minimum of three binder contents
- Specific Gravity and temperature/viscosity charts for the PGAB to be used
- Recommended mixing and compaction temperatures from the PGAB supplier
- Material Safety Data Sheets (MSDS) For PGAB
- Asphalt Content vs. Air Voids trial blend curve
- Test report for Contractor's Verification sample

Summary of RAP test results (if used), including count, average and standard deviation of binder content and gradation

At the time of JMF submittal, the Contractor shall identify and make available the stockpiles of all proposed aggregates at the plant site. There must be a minimum of 150 ton for stone stockpiles, 75 ton for sand stockpiles, and 50 ton of blend sand before the Department will sample. The Department shall obtain samples for laboratory testing. The Contractor shall also make available to the Department the PGAB proposed for use in the mix in sufficient quantity to test the properties of the asphalt and to produce samples for testing of the mixture. Before the start of paving, the Contractor and the Department shall split a production sample for evaluation. The Contractor shall test its split of the sample and determine if the results meet the requirements of the Department's written policy for mix design verification (See MaineDOT Policies and Procedures for HMA Sampling and Testing available at the Central Laboratory in Bangor). If the results are found to be acceptable, the Contractor will forward their results to the Department's Lab, which will test the Department's split of the sample. The results of the two split samples will be compared and shared between the Department and the Contractor. If the Department finds the mixture acceptable, an approved JMF will be forwarded to the Contractor and paving may commence. The first day's production shall be monitored, and the approval may be withdrawn if the mixture exhibits undesirable characteristics such as checking, shoving or displacement.

The Contractor shall be allowed to submit aim changes within 24 hours of receipt of the first Acceptance test result. Should all of the Acceptance samples of a Lot be obtained prior to the receipt of the first Acceptance result, the Department will not allow the aim changes to be applied to that Lot. Adjustments will be allowed of up to 2% on the percent passing the 2.36 mm sieve through the 0.075 mm and 3% on the percent passing the 4.75 mm or larger sieves. Adjustments will be allowed on the %PGAB of up to 0.2%. Adjustments will be allowed on GMM of up to 0.010.

The Contractor shall submit a new JMF for approval each time a change in material source or materials properties is proposed. The same approval process shall be followed. The cold feed percentage of any aggregate may be adjusted up to 10 percentage points from the amount listed on the JMF, however no aggregate listed on the JMF shall be eliminated. The cold feed percentage for RAP may be reduced up to 10 percentage points from the amount listed on the JMF and shall not exceed the percentage of RAP approved in the JMF or for the specific application under any circumstances.

TABLE 1: VOLUMETRIC DESIGN CRITERIA

Design ESAL's (Millions)	Required Density (Percent of G_{mm})			Voids in the Mineral Aggregate (VMA)(Minimum Percent)					Voids Filled with Binder (VFB) (Minimum %)	Fines/Eff. Binder Ratio
				Nominal Maximum Aggregate Size (mm)						
	$N_{initial}$	N_{design}	N_{max}	25	19	12.5	9.5	4.75		
<0.3	≤91.5	96.0	≤98.0	13.0	14.0	15.0	16.0	16.0	70-80	0.6-1.2
0.3 to <3	≤90.5								65-80	
3 to <10	≤89.0								65-80*	
10 to <30										
≥ 30										

*For 9.5 mm nominal maximum aggregate size mixtures, the maximum VFB is 82.
*For 4.75 mm nominal maximum aggregate size mixtures, the maximum VFB is 84.

401.031 Warm Mix Technology The Contractor may place Hot Mix Asphalt Pavement produced with an accepted WMA technology if approved by the Department. Methods or technologies shall generally be at the Contractors option, but will be limited to proven, Agency and Industry accepted practice. Mixture production,

placement and volumetric testing details, including temperatures, shall be included in the project specific QCP, and submitted to the Department for approval prior to any work.

401.04 Temperature Requirements After the JMF is established, the temperatures of the mixture shall conform to the following tolerances:

In the truck at the mixing plant – allowable range 275 to 325°F
At the Paver – allowable range 275 to 325°F

The JMF and the mix subsequently produced shall meet the requirements of Tables 1 and Section 703.07.

401.05 Performance Graded Asphalt Binder Unless otherwise noted in Special Provision 403 - Hot Mix Asphalt Pavement, the Contractor may utilize either a 64-28 or 58-28 PGAB. The Contractor must stipulate which PGAB grading will be used to construct the entire HMA pavement structure prior to starting work. For mixtures containing greater than 20 percent but no more than 30 percent RAP the PGAB shall be PG 58-34 (or PG 52-34 when approved by the Department). The PGAB shall meet the applicable requirements of AASHTO M320 - Standard Specification for PGAB. Polymer-modified PGAB shall meet the applicable requirements of AASHTO MP 19. The Contractor shall provide the Department with an approved copy of the Quality Control Plan for PGAB in accordance with AASHTO R 26 Certifying Suppliers of PGAB.
The Contractor shall request approval from the Department for a change in PGAB supplier or source by submitting documentation stating the new supplier or source a minimum of 24 hours prior to the change. In the event that the PGAB supplier or source is changed, the Contractor shall make efforts to minimize the occurrence of PGAB co-mingling.

401.06 Weather and Seasonal Limitations The State is divided into two paving zones as follows:

a. Zone 1 Areas north of US Route 2 from Gilead to Bangor and north of Route 9 from Bangor to Calais.
b. Zone 2 Areas south of Zone 1 including the US Route 2 and Route 9 boundaries.

The Contractor may place Hot Mix Asphalt Pavement for use other than a traveled way wearing course in either Zone between the dates of April 15th and November 15th, provided that the air temperature as determined by an approved thermometer (placed in the shade at the paving location) is 40°F or higher.
The Contractor may place Hot Mix Asphalt Pavement produced with an accepted WMA technology for any base, intermediate base, or shim course in either Zone between the dates of April 15th and November 15th, provided that the air temperature as determined by an approved thermometer (placed in the shade at the paving location) is 35°F or higher, and the area to be paved is not frozen. The Hot Mix Asphalt Pavement produced with an approved WMA technology shall meet the requirements of section 401.04 - Temperature Requirements, unless otherwise approved by the Department.

The Contractor may place Hot Mix Asphalt Pavement as traveled way wearing course in Zone 1 between the dates of May 1st and the Saturday following October 1st and in Zone 2 between the dates of April 15th and the Saturday following October 15th, provided the air temperature determined as above is 50°F or higher. For the purposes of this Section, the traveled way includes truck lanes, ramps, approach roads and auxiliary lanes. The atmospheric temperature for all courses on bridge decks shall be 50°F or higher.

Hot Mix Asphalt Pavement used for curb, driveways, sidewalks, islands, or other incidentals is not subject to seasonal limitations, except that conditions shall be satisfactory for proper handling and finishing of the mixture. All mixtures used for curb, driveways, sidewalks, islands, or other incidentals shall conform to section 401.04 - Temperature Requirements. Unless otherwise specified, the Contractor shall not place Hot Mix Asphalt Pavement on a wet or frozen surface and the air temperature shall be 40°F or higher.

On all sections of overlay with wearing courses less than 1 in thick, the wearing course for the travelway and adjacent shoulders shall be placed between the dates of May 15th and the Saturday following September 15th.

On all sections of overlay with wearing courses less than 1 inch thick, the wearing course for the travelway and adjacent shoulders shall be placed between the dates of June 1st and the Saturday following September 1st if the work is to be performed, either by contract requirement, or Contractor option, during conditions defined as "night work".

401.07 Hot Mix Asphalt Plant

401.071 General Requirements HMA plants shall conform to AASHTO M156.

a. Truck Scales When the hot mix asphalt is to be weighed on scales meeting the requirements of Section 108 - Payment, the scales shall be inspected and sealed by the State Sealer as often as the Department deems necessary to verify their accuracy.

Plant scales shall be checked prior to the start of the paving season, and each time a plant is moved to a new location. Subsequent checks will be made as determined by the Resident. The Contractor will have at least ten 20 Kg [50 pound] masses for scale testing.

401.072 Automation of Batching Batch plants shall be automated for weighing, recycling, and monitoring the system. In the case of a malfunction of the printing system, the requirements of Section 401.074 c. of this specification will apply.

The batch plant shall accurately proportion the various materials in the proper order by weight. The entire batching and mixing cycle shall be continuous and shall not require any manual operations. The batch plant shall use auxiliary interlock circuits to trigger an audible alarm whenever an error exceeding the acceptable tolerance occurs. Along with the alarm, the printer shall print an asterisk on the delivery slip in the same row containing the out-of-tolerance weight. The automatic proportioning system shall be capable of consistently delivering material within the full range of batch sizes. When RAP is being used, the plant must be capable of automatically compensating for the moisture content of the RAP.

All plants shall be equipped with an approved digital recording device. The delivery slip load ticket shall contain information required under Section 108.1.3 - Provisions Relating to Certain Measurements, Mass and paragraphs a, b, and c of Section 401.073

401.073 Automatic Ticket Printer System on Automatic HMA Plant An approved automatic ticket printer system shall be used with all approved automatic HMA plants. The requirements for delivery slips for payment of materials measured by weight, as given in the following Sections, shall be waived: 108.1.3 a., 108.1.3 b., 108.1.3 c., and 108.1.3 d. The automatic printed ticket will be considered as the Weight Certificate.

The requirements of Section 108.1.3 f. - Delivery Slips, shall be met by the weigh slip or ticket, printed by the automatic system, which accompanies each truckload, except for the following changes:

a. The quantity information required shall be individual weights of each batch or total net weight of each truckload.
b. Signatures (legible initials acceptable) of Weighmaster (required only in the event of a malfunction as described in 401.074 c.).
c. The MaineDOT designation for the JMF.

401.074 Weight Checks on Automatic HMA Plant At least twice during each 5 days of production either of the following checks will be performed:

a. A loaded truck may be intercepted and weighed on a platform scale that has been sealed by the State Sealer of Weights and Measures within the past 12 months. The inspector will notify the producer to take corrective action on any discrepancy over 1.0%. The producer may continue to operate for 48 hours under the following conditions.

1. If the discrepancy does not exceed 1.5%; payment will still be governed by the printed ticket.
2. If the discrepancy exceeds 1.5%, the plant will be allowed to operate as long as payment is determined by truck platform scale net weight.

If, after 48 hours the discrepancy has not been addressed and reduced below 1.0%, than plant operations will cease. Plant operation may resume after the discrepancy has been brought within 1.0%.

b. Where platform scales are not readily available, a check will be made to verify the accuracy and sensitivity of each scale within the normal weighing range and to assure that the interlocking devices and automatic printer system are functioning properly.

c. In the event of a malfunction of the automatic printer system, production may be continued without the use of platform truck scales for a period not to exceed the next two working days, providing total weights of each batch are recorded on weight tickets and certified by a Licensed Public Weighmaster.

401.08 Hauling Equipment Trucks for hauling Hot Mix Asphalt Pavement shall have tight, clean, and smooth metal dump bodies, which have been thinly coated with a small amount of approved release agent to prevent the mixture from adhering to the bodies. Solvent based agents developed to strip asphalts from aggregates will not be allowed as release agents.

All truck dump bodies shall have a cover of canvas or other water repellent material capable of heat retention, which completely covers the mixture. The cover shall be securely fastened on the truck, unless unloading.

All truck bodies shall have an opening on both sides, which will accommodate a thermometer stem. The opening shall be located near the midpoint of the body, at least 12 in above the bed.

401.09 Pavers Pavers shall be self-contained, self-propelled units with an activated screed (heated if necessary) capable of placing courses of Hot Mix Asphalt Pavement in full lane widths specified in the contract on the main line, shoulder, or similar construction.

On projects with no price adjustment for smoothness, pavers shall be of sufficient class and size to place Hot Mix Asphalt Pavement over the full width of the mainline travel way with a 10 ft minimum main screed with activated extensions.

The Contractor shall place Hot Mix Asphalt Pavement on the main line with a paver using an automatic grade and slope controlled screed, unless otherwise authorized by the Department. The controls shall automatically adjust the screed and increase or decrease the layer thickness to compensate for irregularities in the preceding course. The controls shall maintain the proper transverse slope and be readily adjustable so that transitions and superelevated curves can be properly paved. The controls shall operate from a fixed or moving reference such as a grade wire or ski type device (floating beam) with a minimum length of 30 ft, a non-contact grade control with a minimum span of 24 ft, except that a 40 ft reference shall be used on Expressway projects.

The Contractor shall operate the paver in such a manner as to produce a visually uniform surface texture and a thickness within the requirements of Section 401.101 - Surface Tolerances. The paver shall have a receiving hopper with sufficient capacity for a uniform spreading operation and a distribution system to place the mixture uniformly, without segregation in front of the screed. The screed assembly shall produce a finished surface of the required evenness and texture without tearing, shoving, or gouging the mixture. Pavers with extendible screeds shall have auger extensions and tunnel extenders as per the manufacturer's recommendations, a copy of which shall be available if requested.

The Contractor shall have the paver at the project site sufficiently before the start of paving operations to be inspected and approved by the Department. The Contractor shall repair or replace any paver found worn or defective, either before or during placement, to the satisfaction of the Department. Pavers that produce an unevenly textured or non-uniform mat will be repaired or replaced before continuing to place HMA on MaineDOT projects.

On a daily basis, the Contractor shall perform density testing across the mat being placed, prior to being compacted by equipment at 12 in intervals. If the density values vary by more than 2.0% from the mean, the Contractor shall make adjustments to the screed until the inconsistencies are remedied. Failure to replace or repair defective placement equipment may result in a letter of suspension of work and notification of a quality control violation resulting in possible monetary penalties as governed by Section 106 - Quality

<u>401.10 Rollers</u> Rollers shall be static steel, pneumatic tire, oscillatory, or approved vibrator type. Rollers shall be in good mechanical condition, capable of starting and stopping smoothly, and be free from backlash when reversing direction. Rollers shall be equipped and operated in such a way as to prevent the picking up of hot mixed material by the roller surface. The use of rollers, which result in crushing of the aggregate or in displacement of the HMA will not be permitted. Any Hot Mix Asphalt Pavement that becomes loose, broken, contaminated, shows an excess or deficiency of Performance Graded Asphalt Binder, or is in any other way defective shall be removed and replaced at no additional cost with fresh Hot Mix Asphalt Pavement, which shall be immediately compacted to conform to the adjacent area.

The Contractor shall repair or replace any roller found to be worn or defective, either before or during placement, to the satisfaction of the Department. Rollers that produce grooved, unevenly textured or non-uniform mat will be repaired or replaced before continuing to place HMA on MaineDOT projects. The type of rollers to be used and their relative position in the compaction sequence shall generally be the Contractor's option, provided specification densities are attained and with the following requirements:

a. On variable-depth courses, the first lift of pavement over gravel, reclaimed pavement, on irregular or milled surfaces, or on bridges, at least one roller shall be 16 ton pneumatic-tired. Unless otherwise allowed by the Resident, pneumatic-tired rollers shall be equipped with skirting to minimize the pickup of HMA materials from the paved surface. When required by the Resident, the roller shall be ballasted to 20 ton.

b. Compaction with a vibratory or steel wheel roller shall precede pneumatic-tired rolling, unless otherwise authorized by the Department.

c. Vibratory rollers shall not be operated in the vibratory mode when checking or cracking of the mat occurs, or on bridge decks.

d. Any method, which results in cracking or checking of the mat, will be discontinued and corrective action taken.

e. The use of an oscillating steel roller shall be required to compact all mixtures placed on bridge decks.

The maximum operating speed for a steel wheel or pneumatic roller shall not exceed the manufacturer's recommendations, a copy of which shall be available if requested.

401.101 Surface Tolerances The Department will check surface tolerance utilizing the following methods :

a.) A 16 ft straightedge or string line placed directly on the surface, parallel to the centerline of pavement.
b.) A 10 ft straightedge or string line placed directly on the surface, transverse to the centerline of pavement.

The Contractor shall correct variations exceeding ¼ in by removing defective work and replacing it with new material as directed by the Department. The Contractor shall furnish a 10 foot straightedge for the Departments use.

401.11 Preparation of Existing Surface The Contractor shall thoroughly clean the surface upon which Hot Mix Asphalt Pavement is to be placed of all objectionable material. When the surface of the existing base or pavement is irregular, the Contractor shall bring it to uniform grade and cross section. All surfaces shall have a tack coat applied prior to placing any new HMA course. Tack coat shall conform to the requirements of Section 409 – Bituminous Tack Coat, Section 702 – Bituminous Material, and all applicable sections of the contract.

401.12 Hot Mix Asphalt Documentation The Contractor and the Department shall agree on the amount of Hot Mix Asphalt Pavement that has been placed each day. All delivery slips shall conform to the requirements of 401.073.

401.13 Preparation of Aggregates The Contractor shall dry and heat the aggregates for the HMA to the required temperature. The Contractor shall properly adjust flames to avoid physical damage to the aggregate and to avoid depositing soot on the aggregate.

401.14 Mixing The Contractor shall combine the dried aggregate in the mixer in the amount of each fraction of aggregate required to meet the JMF. The Contractor shall measure the amount of PGAB and introduce it into the mixer in the amount specified by the JMF.

The Contractor shall produce the HMA at the temperature established by the JMF.

The Contractor shall dry the aggregate sufficiently so that the HMA will not flush, foam excessively, or displace excessively under the action of the rollers. The Contractor shall introduce the aggregate into the mixer at a temperature of not more than 25°F above the temperature at which the viscosity of the PGAB being used is 0.150 Pa·s.

The Contractor shall store and introduce into the mixer the Performance Graded Asphalt Binder at a uniformly maintained temperature at which the viscosity of the PGAB is between 0.150 Pa·s and 0.300 Pa·s. The aggregate shall be coated completely and uniformly with a thorough distribution of the PGAB. The Contractor shall determine the wet mixing time for each plant and for each type of aggregate used. The resultant material shall be a uniformly blended, homogenous HMA mixture.

401.15 Spreading and Finishing On areas where irregularities or unavoidable obstacles make the use of mechanical spreading and finishing equipment impracticable, the Contractor shall spread, rake, and lute the HMA with hand tools to provide the required compacted thickness. Solvent based agents developed to strip asphalts from aggregates will not be allowed as release agents.

On roadways with adjoining lanes carrying traffic, the Contractor shall place each course over the full width of the traveled way section being paved that day, unless otherwise noted by the Department in Section 403 - Hot Mix Asphalt Pavement.

In addition, hot mix asphalt pavement placed on bridges shall also conform to Section 508.04 and the following requirements.

a. The bottom course shall be placed with an approved rubber mounted paver of such type and operated in such a manner that the membrane waterproofing will not be damaged in any way.

b. The top course shall not be placed until the bottom course has cooled sufficiently to provide stability.

c. The Contractor will not be required to cut sample cores from the compacted pavement on the bridge deck, unless otherwise directed by Special Provision.

d. After the top course has been placed, the shoulder areas shall be sealed 3 ft wide with two applications of an emulsified bituminous sealer meeting the requirements of Section 612.03 – Sealing and Section 702.12 - Emulsified Bituminous Sealing Compound. The first application shall be pre-mixed with fine, sharp sand, similar to mortar sand, as needed to fill all voids in the mix in the area being sealed. The second application may be applied without sand. The sealer shall be carried to the curb at the gutter line in sufficient quantity to leave a bead or fillet of material at the face of the curb. The area to be sealed shall be clean, dry and the surface shall be at ambient temperature.

e. The furnishing and applying of the required quantity of sealer for the bridge shoulder areas shall be incidental to placing the hot mix asphalt pavement.

f. The atmospheric temperature for all courses placed on bridge decks shall be 50°F or higher.

<u>401.16 Compaction</u> Immediately after the Hot Mix Asphalt Pavement has been spread, struck off, and any surface irregularities adjusted, the Contractor shall thoroughly and uniformly compact the HMA by rolling.

The Contractor shall roll the surface when the mixture is in the proper condition and when the rolling does not cause undue displacement, cracking, or shoving. The Contractor shall prevent adhesion of the HMA to the rollers or vibrating compactors without the use of fuel oil or other petroleum based release agents. Solvents designed to strip asphalt binders from aggregates will not be permitted as release agents on equipment, tools, or pavement surfaces.

The Contractor shall immediately correct any displacement occurring as a result of the reversing of the direction of a roller or from other causes to the satisfaction of the Department. Any operation other than placement of variable depth shim course that results in breakdown of the aggregate shall be discontinued. Any new pavement that shows obvious cracking, checking, or displacement shall be removed and replaced for the full lane width as directed by the Resident at no cost to the Department.

Along forms, curbs, headers, walls, and other places not accessible to the rollers, the Contractor shall thoroughly compact the HMA with mechanical vibrating compactors. The Contractor shall only use hand tamping in areas inaccessible to all other compaction equipment. On depressed areas, the Contractor may use a trench roller or cleated compression strips under a roller to transmit compression to the depressed area.

Any HMA that becomes unacceptable due to cooling, cracking, checking, segregation or deformation as a result of an interruption in mix delivery shall be removed and replaced, with material that meets contract specifications at no cost to the Department.

401.17 Joints The Contractor shall construct wearing course transverse and longitudinal joints in such a manner that minimum tolerances shown in Section 401.101 - Surface Tolerances are met when measured with a straightedge.

The paver shall maintain a uniform head of HMA during transverse and longitudinal joint construction.

The HMA shall be free of segregation and meet temperature requirements outlined in section 401.04. Transverse joints of the wearing course shall be straight and neatly trimmed. The Contractor may form a vertical face exposing the full depth of the course by inserting a header, by breaking the bond with the underlying course, or by cutting back with hand tools. The Department may allow feathered or "lap" joints on lower base courses or when matching existing base type pavements.

Longitudinal joints shall be generally straight to the line of travel, and constructed in a manner that best ensure joint integrity. Methods or activities that prove detrimental to the construction of straight, sound longitudinal joints will be discontinued.

The Contractor shall apply a coating of emulsified asphalt immediately before paving all joints to the vertical face and 3 in of the adjacent portion of any pavement being overlaid except those formed by pavers operating in echelon. The Contractor shall use an approved spray apparatus designed for covering a narrow surface. The Department may approve application by a brush for small surfaces, or in the event of a malfunction of the spray apparatus, but for a period of not more than one working day.

Where pavement under this contract joins an existing pavement, or when the Department directs, the Contractor shall cut the existing pavement along a smooth line, producing a neat, even, vertical joint. The Department will not permit broken or raveled edges. The cost of all work necessary for the preparation of joints is incidental to related contract pay items.

401.18 Quality Control Method A, B & C The Contractor shall operate in accordance with the approved Quality Control Plan (QCP) to assure a product meeting the contract requirements. The QCP shall meet the requirements of Section 106.6 - Acceptance and this Section. The Contractor shall not begin paving operations until the Department approves the QCP in writing.

Prior to placing any mix, the Department and the Contractor shall hold a Pre-paving conference to discuss the paving schedule, source of mix, type and amount of equipment to be used, sequence of paving pattern, rate of mix supply, random sampling, project lots and sublots and traffic control. A copy of the QC random numbers to be used on the project shall be provided to The Resident. The Departments' random numbers for Acceptance testing shall be generated and on file with the Resident and the Project Manager. All personnel of the Department and the Contractor who have significant information relevant to the paving items shall attend, including the responsible onsite paving supervisor for the Contractor. The Resident will prepare minutes of the conference and distribute them to all attendees. Any requests to revise the minutes must be made to the Resident within 7 Days of Receipt. These minutes will constitute the final record of the Pre-paving conference.

The QCP shall address any items that affect the quality of the Hot Mix Asphalt Pavement including, but not limited to, the following:

a. JMF(s)
b. Hot mix asphalt plant details
c. Stockpile Management (to include provisions for a minimum 2 day stockpile)
d. Make and type of paver(s)
e. Make and type of rollers including weight, weight per inch of steel wheels, and average contact pressure for pneumatic tired rollers
f. Name of QCP Administrator, and certification number
g. Name of Process Control Technician(s) and certification number(s)
h. Name of Quality Control Technicians(s) and certification number(s)
i. Mixing & transportation including process for ensuring that truck bodies are clean and free of debris or contamination that could adversely affect the finished pavement
j. Testing Plan
k. Laydown operations including longitudinal joint construction, procedures for avoiding paving in inclement weather, type of release agent to be used on trucks tools and rollers, compaction of shoulders, tacking of all joints, methods to ensure that segregation is minimized, procedures to determine the maximum rolling and paving speeds based on best engineering practices as well as past experience in achieving the best possible smoothness of the pavement. Solvent based agents developed to strip asphalts from aggregates will not be allowed as release agents.
l. Examples of Quality Control forms including a daily plant report, daily paving report, and delivery slip template for any plant to be utilized.
m. Silo management and details (can show storage for use on project of up to 36 hours)
n. Provisions for varying mix temperature due to extraordinary conditions or production limitations. If a warm-mix technology is utilized, a proposed target production temperature range (not to exceed 50°F) will be provided for each mix design.
o. Name and responsibilities of the Responsible onsite Paving Supervisor.
p. Method for calibration/verification of Density Gauge
q. A note that all testing will be done in accordance with AASHTO and the MaineDOT Policies and Procedures for HMA Sampling and Testing.
r. A detailed description of RAP processing, stockpiling and introduction into the plant as well as a note detailing conditions under which the percent of RAP will vary from that specified on the JMF.
s. A detailed procedure outlining when production will be halted due to QC or Acceptance testing results.
t. A plan to address the change in PGAB source or supplier and the potential co-mingling of differing PGAB's.
u. A procedure to take immediate possession of acceptance samples once released by MaineDOT and deliver said samples to the designated acceptance laboratory.
v. Provisions for how the QCP will be communicated to the Contractor's field personnel

The QCP shall include the following technicians together with following minimum requirements:

a. QCP Administrator - A qualified individual shall administer the QCP. The QCP Administrator must be a full-time employee of or a consultant engaged by the Contractor or paving subcontractor. The QCP Administrator shall have full authority to institute any and all actions necessary for the successful operation of the QCP. The QCP Administrator (or its designee in the QCP Administrator's absence) shall be available to communicate with the Department at all times. The QCP Administrator shall be certified as a Quality Assurance Technologist certified by the New England Transportation Technician Certification Program (NETTCP).

b. Process Control Technician(s) (PCT) shall utilize test results and other quality control practices to assure the quality of aggregates and other mix components and control proportioning to meet the JMF(s). The PCT shall inspect all equipment used in mixing to assure it is operating properly and that mixing conforms to the mix design(s) and other Contract requirements, and that delivery slips and plant recordation accurately reflects the mix being produced with all the required information. The QCP shall detail how these duties and responsibilities are to be accomplished and documented, and whether more than one PCT is required. The Plan shall include the criteria to be utilized by the PCT to correct or reject unsatisfactory materials. The PCT shall be certified as a Plant Technician by the NETTCP.

c. Quality Control Technician(s) (QCT) shall perform and utilize quality control tests at the job site to assure that delivered materials meet the requirements of the JMF(s). The QCT shall inspect all equipment utilized in transporting, laydown, and compacting to assure it is operating properly and that all laydown and compaction conform to the Contract requirements. The QCP shall detail how these duties and responsibilities are to be accomplished and documented, and whether more than one QCT is required. The QCP shall include the criteria utilized by the QCT to correct or reject unsatisfactory materials. The QCT shall be certified as a Paving Inspector by the NETTCP.

The QCP shall detail the coordination of the activities of the Plan Administrator, the PCT and the QCT. The Project Superintendent shall be named in the QCP, and the responsibilities for successful implementation of the QCP shall be outlined.

The Contractor shall sample, test, and evaluate Hot Mix Asphalt Pavement in accordance with the following minimum frequencies:

TABLE 2 : MINIMUM QUALITY CONTROL FREQUENCIES

Test or Action	Frequency	Test Method
Temperature of mix	6 per day at street and plant	-
Temperature of mat	4 per day	-
%TMD (Surface)	1 per 125 ton (As noted in QC Plan)	ASTM D2950
%TMD (Base)	1 per 250 ton (As noted in QC Plan)	AASHTO T269
Fines / Effective Binder	1 per 500 ton	AASHTO T 312*
Gradation	1 per 500 ton	AASHTO T30
PGAB content	1 per 500 ton	AASHTO T164 or T308
Voids at N_{design}	1 per 500 ton	AASHTO T 312*
Voids in Mineral Aggregate at N_{design}	1 per 500 ton	AASHTO T 312*
Rice Specific Gravity	1 per 500 ton	AASHTO T209
Coarse Aggregate Angularity	1 per 5000 ton	ASTM D5821
Flat and Elongated Particles	1 Per 5000 ton	ASTM D4791
Fine Aggregate Angularity	1 Per 5000 ton	AASHTO T304

*Method A and B only

The Contractor may utilize innovative equipment or techniques not addressed by the Contract documents to produce or monitor the production of the mix, subject to approval by the Department.

The Contractor shall submit all Hot Mix Asphalt Pavement plant test reports, inspection reports and updated pay factors in writing, signed by the appropriate technician and present them to the Department by 1:00 P.M. on the next working day, except when otherwise noted in the QCP due to local restrictions. The Contractor shall also retain splits of the previous 5 QC tests, with QC results enclosed for random selection and testing by The Department during QA inspections of the HMA production facility. Test results of splits that do not meet the Dispute Resolution Variance Limits in Table 10 shall trigger an investigation by the MaineDOT Independent Assurance Unit, and may result in that lab losing NETTCP certification and the ability to request a dispute [Section 401.223 - Process for Dispute Resolution (Methods A , B and C only)].

The Contractor shall make density test results, including randomly sampled densities, available to the Department onsite. Summaries of each day's results, including a daily paving report, shall be recorded and signed by the QCT and presented to the Department by 1:00 p.m. the next working day.

The Contractor shall have a testing lab at the plant site, equipped with all testing equipment necessary to complete the tests in Table 2. The Contractor shall locate an approved Gyratory Compactor at the plant testing lab or within 30 minutes of the plant site.

The Contractor shall fill all holes in the pavement resulting from cutting cores by the Contractor or the Department with a properly compacted, acceptable mixture no later than the following working day. Before filling, the Contractor shall carefully clean the holes and apply a coating of emulsified asphalt. On surface courses, cores shall not be cut except for Verification of the Nuclear Density Gauge, at a rate not to exceed 3 per day or 2 per 1000 Mg [1000 ton] placed.

The Contractor shall monitor plant production using running average of three control charts as specified in Section 106 - Quality. Control limits shall be as noted in Table 3 below. The UCL and LCL, shall not exceed the allowable gradation control points for the particular type of mixture as outlined in Table 1 of section 703.09

TABLE 3: Control Limits

Property	UCL and LCL
Passing 4.75 mm and larger sieves	Target +/-4.0
Passing 2.36 mm sieve	Target +/-2.5
Passing .075 mm sieve	Target +/-1.2
PGAB Content*	Target +/-0.3
Voids in the Mineral Aggregate	LCL = LSL + 0.2
% Voids at N_{design}	JMF Target +/-1.3

*Based on AASHTO T 308

The Contractor shall cease paving operations whenever one of the following occurs on a lot in progress:

a. Method A: The Pay Factor for VMA, Voids @ N_d, Percent PGAB, composite gradation, VFB, fines to effective binder or density using all Acceptance or all Quality Control tests for the current lot is less than 0.85.
b. Method B: The Pay Factor for VMA, Voids @ N_d, Percent PGAB, composite gradation, VFB, fines to effective binder or density using all Acceptance or all Quality Control tests for the current lot is less than 0.90.
c. Method C: The Pay Factor for VMA, Voids @ $N_{d,}$ Percent PGAB, percent passing the nominal maximum sieve, percent passing 2.36 mm sieve, percent passing 0.300 mm sieve, percent passing 0.075 mm sieve or density using all Acceptance or all available Quality Control tests for the current lot is less than 0.85.

d. The Coarse Aggregate Angularity or Fine Aggregate Angularity value falls below the requirements of Table 3: Aggregate Consensus Properties Criteria in Section 703.07 for the design traffic level.
e. Each of the first 2 control tests for a Method A or B lot fall outside the upper or lower limits for VMA, Voids @ Nd, or Percent PGAB; or under Method C, each of the first 2 control tests for the lot fall outside the upper or lower limits for the nominal maximum, 2.36 mm, 0.300 mm or 0.075 mm sieves, or percent PGAB.
f. The Flat and Elongated Particles value exceeds 10% by ASTM D4791.
g. There is any visible damage to the aggregate due to over-densification other than on variable depth shim courses.
h. The Contractor fails to follow the approved QCP.

The Contractor shall notify the Resident in writing as to the reason for shutdown, as well as the proposed corrective action, by the end of the work day. Failure to do so will be treated as a second incident under 106.4.6 QCP Non-compliance. The Department will consider corrective action acceptable if the pay factor for the failing property increases, based on samples already in transit, or a verification sample is tested and the property falls within the specification limits.

In cases where the corrective action can be accomplished immediately, such as batch weight or cold feed changes, the Contractor may elect to resume production once the corrective action is completed. Additional QC testing shall be performed to verify the effectiveness of the corrective action. Subsequent occurrences of shutdown for the same property in a Lot in progress will require paving operations to cease. Paving operations shall not resume until the Contactor and the Department determines that material meeting the Contract requirements will be produced. The Department may allow the Contractor to resume production based upon a passing QC sample, with a split of the sample being sent to the Department for verification testing. If the submitted verification sample test results fall outside the specification limits, the Contractor shall cease production until a verification sample is submitted to the Department has been tested by the Department and found to be within specification limits.

If the Contractor's control chart shows the process to be out of control (defined as a single point outside of the control limits on the running average of three chart) on any property listed in Table 3: Control Limits, the Contractor shall notify the Resident in writing of any proposed corrective action by 1:00 PM the next working day.

The Department retains the exclusive right, with the exception of the first day's production of a new JMF, to determine whether the resumption of production involves a significant change to the production process. If the Department so determines, then the current lot will be terminated, a pay factor established, and a new lot will begin.

<u>401.19 Quality Control Method D</u> For Items covered under Method D, the Contractor shall submit a modified QC Plan detailing, how the mix is to be placed, what equipment is to be used, and what HMA plant is to be used. All mix designs (JMF) shall be approved and verified by MaineDOT prior to use. Certified QC personnel shall not be required. The Contractor shall certify the mix and the test results for each item by a Certificate of Compliance.

<u>401.20 Acceptance Method A, B & C</u> These methods utilizes Quality Level Analysis and pay factor specifications. For Hot Mix Asphalt Pavement designated for acceptance under Quality Assurance provisions, the Department will sample once per sublot on a statistically random basis, test, and evaluate in accordance with the following Acceptance Criteria:

TABLE 4: ACCEPTANCE CRITERIA

PROPERTIES	POINT OF SAMPLING	TEST METHOD
Gradation	Paver Hopper	AASHTO T30
PGAB Content	Paver Hopper	AASHTO T308
%TMD (Surface)	Mat behind all Rollers	AASHTO T269
%TMD (Base or Binder)	Mat behind all Rollers	AASHTO T269
Air Voids at N_d	Paver Hopper	AASHTO T 312
%VMA at N_d	Paver Hopper	AASHTO T 312
Fines to Effective Binder	Paver Hopper	AASHTO T 312
%VFB	Paver Hopper	AASHTO T 312

In the event the Department terminates a Lot prematurely but fails to obtain the required number of acceptance samples to calculate the volumetric property pay factor under the test method specified in the contract, the pay factor shall be calculated using the number of samples actually obtained from the contract. Should the number of acceptance samples taken total less than three, the resulting pay factor shall be 1.0 for volumetric properties. A minimum of three cores will be used for a density pay factor using the contract's specified Acceptance method, if applicable, for quantities placed to date.

Should the Contractor request a termination of the Lot in progress prior to three acceptance samples being obtained, and the Department agrees to terminate the Lot, then the pay factor for mixture properties shall be 0.80. A minimum of three cores will be used to determine a density pay factor using the contract's specified Acceptance method, if applicable, for quantities placed to date.

Lot Size For purposes of evaluating all acceptance test properties, a lot shall consist of the total quantity represented by each item listed under the lot size heading.

Sublot size - Refer to section 401.201, 401.202, and 401.203 for minimum size and number of sublots. The quantity represented by each sample will constitute a sublot.

If there is less than one-half of a sublot remaining at the end, then it shall be combined with the previous sublot. If there is more than one-half sublot remaining at the end, then it shall constitute the last sublot and shall be represented by test results. If it becomes apparent partway through a Lot that, due to an underrun, there will be insufficient mix quantity to obtain the minimum number of sublots needed, the Resident may adjust the size of the remaining sublots and select new sample locations based on the estimated quantity of material remaining in the Lot.

Acceptance Testing The Department will obtain samples of Hot Mix Asphalt Pavement in conformance with AASHTO T168 Sampling Bituminous Paving Mixtures, and the MaineDOT Policies and Procedures for HMA Sampling and Testing, which will then be transported by the Contractor to the designated MaineDOT Laboratory within 48 hours (except when otherwise noted in the project specific QCP due to local restrictions), as directed by MaineDOT in approved transport containers to be provided by the Department, unless otherwise directed by the Resident. Failure to deliver an acceptance sample to the designated acceptance laboratory will be considered the second incident under 106.4.6–QCP Non-Compliance.

The Department will take the sample randomly within each sublot. Target values shall be as specified in the JMF. The Department will use Table 5 for calculating pay factors for gradation, PGAB Content, Air Voids at N_{design}, VMA, Fines to Effective Binder and VFB. The Department will withhold reporting of the test results for the Acceptance sample until 7:00 AM, on the second working day of receipt of the sample, or after receipt of the Contractors results of the Acceptance sample split. Upon conclusion of each lot, where there is a minimum of four sublots, results shall be examined for statistical outliers, as stated in Section 106.7.2 - Statistical Outliers.

Isolated Areas During the course of inspection, should it appear that there is an isolated area that is not representative of the lot based on a lack of observed compactive effort, excessive segregation, a change in process or any other questionable practice, that area may be isolated and tested separately. An area so isolated that has a calculated pay factor below 0.80 for Method A and C or below 0.86 for Method B, based on three random tests shall be removed and replaced at the expense of the Contractor for the full lane width and a length not to be less than 150 ft.

Pavement Density The Department will measure pavement density using core samples tested according to AASHTO T-166. The Department will randomly determine core locations. The Contractor shall cut 6 inch diameter cores at no additional cost to the Department by the end of the working day following the day the pavement is placed, and immediately give them to the Department. Cores for Acceptance testing shall be cut such that the nearest edge is never within 9 inches of any joint. The cores will be placed in a transport container provided by the Department and transported by the Contractor to the designated MaineDOT Lab as directed by the Department. Pre-testing of the cores will not be allowed. At the time of sampling, the Contractor and the Department shall mutually determine if a core is damaged. If it is determined that the core(s) is damaged, the Contractor shall cut new core(s) at the same offset and within 3 ft of the initial sample. At the time the core is cut, the Contractor and the Department will mutually determine if saw cutting of the core is needed, and will mark the core at the point where sawing is needed. The core may be saw cut by the Contractor in the Department's presence onsite, or in an MaineDOT Lab by The Department, without disturbing the layer being tested to remove lower layers of Hot Mix Asphalt Pavement, gravel, or RAP. No recuts are allowed at a test location after the core has been tested. Upon conclusion of each lot, density results shall be examined for statistical outliers as stated in Section 106.7.2.

On all sections of overlay with wearing courses designed to be 3/4 in or less in thickness, there shall be no pay adjustment for density otherwise noted in Section 403 - Hot Mix Asphalt Pavement. For overlays designed to be 3/4 in or less in thickness, density shall be obtained by the same rolling train and methods as used on mainline travelway surface courses with a pay adjustments for density, unless otherwise directed by the Department.

There shall be no pay adjustment for density on shoulders unless otherwise noted in Section 403 - Hot Mix Asphalt Pavement. Density for shoulders shall be obtained by the same rolling train and methods as used on mainline travelway, unless otherwise directed by the Department. Efforts to obtain optimum compaction will not be waived by the Department unless it is apparent during construction that local conditions make densification to this point detrimental to the finished pavement surface course.

For 9.5 mm NMAS mixtures the following pay adjustment shall also apply:

The average percent passing for the 0.075 mm sieve shall be evaluated for each Lot. If the average is greater than 6.5%, a pay adjustment according to Table 4A below shall apply in addition to the other pay adjustments for the given method of testing.

TABLE 4A: 0.075 mm SIEVE PAY ADJUSTMENT

AVERAGE PERCENT PASSING 0.075 MM SIEVE	PAY ADJUSTMENT
6.6% - 7.0%	-5% Pay Adjustment
> 7.0%	-10% Pay Adjustment

The Department shall notify the Contractor whenever the average of at least three samples in a given Lot is greater than 6.5%. Disputes on the 0.075 mm sieve values shall not be allowed for Method A or Method B Lots.

401.201 Method A Lot Size will be the entire production per JMF for the project, or if so agreed at the Pre-paving Conference, equal lots of up to 4500 tons, with unanticipated over-runs of up to 1500 ton rolled into the last lot. Sublot sizes shall be 750 ton for mixture properties, 500 ton for base or binder densities and 250 ton for surface densities. The minimum number of sublots for mixture properties shall be 4, and the minimum number of sublots for density shall be five.

TABLE 5: METHOD A ACCEPTANCE LIMITS

Property	USL and LSL
Passing 4.75 mm and larger sieves	Target +/-7%
Passing 2.36 mm to 1.18 mm sieves	Target +/-4%
Passing 0.60 mm	Target +/-3%
Passing 0.30 mm to 0.075 mm sieve	Target +/-2%
PGAB Content	Target +/-0.4%
Air Voids	4.0% +/-1.5%
Fines to Effective Binder	0.9 +/-0.3
Voids in the Mineral Aggregate	LSL Only from Table 1
Voids Filled with Binder	Table 1 values plus a 4% production tolerance for USL only
% TMD (In place density)	95.0% +/- 2.5%

401.202 Method B Lot Size will be the entire production per JMF for the project and shall be divided into 3 equal sublots for Mixture Properties and 3 equal sublots for density.

TABLE 6: METHOD B ACCEPTANCE LIMITS

Property	USL and LSL
Percent Passing 4.75 mm and larger sieves	Target +/-7
Percent Passing 2.36 mm to 1.18 mm sieves	Target +/-5
Percent Passing 0.60 mm	Target +/-4
Percent Passing 0.30 mm to 0.075 mm sieve	Target +/-3
PGAB Content	Target +/-0.5
Air Voids	4.0% +/-2.0
Fines to Effective Binder	0.9 +/-0.3
Voids in the Mineral Aggregate	LSL from Table 1
Voids Filled with Binder	Table1 plus a 4% production tolerance for USL.
% TMD (In-place Density)	95.0% +/- 2.5%

401.203 Method C Lot Size will be the entire production per JMF for the project, or if so agreed at the Pre-paving Conference, equal lots of up to 4500 tons, with unanticipated over-runs of up to 1500 ton rolled into the last lot. Sublot sizes shall be 750 ton for mixture properties, 500 ton for base or binder densities and 250 ton for surface densities. The minimum number of sublots for mixture properties shall be 4, and the minimum number of sublots for density shall be five.

TABLE 7: METHOD C ACCEPTANCE LIMITS

Property	USL and LSL
Passing 4.75 mm and larger sieves	Target +/-7%
Passing 2.36 mm to 1.18 mm sieves	Target +/-5%
Passing 0.60 mm	Target +/-4%
Passing 0.30 mm to 0.075 mm sieve	Target +/-2%
PGAB Content	Target +/-0.4%
Air Voids	4.0% +/-1.5%
Fines to Effective Binder	0.9 +/-0.3
Voids in the Mineral Aggregate	LSL Only from Table 1
Voids Filled with Binder	Table 1 values plus a 4% production tolerance for USL only
% TMD (In place density)	95.0% +/- 2.5%

401.204 Method D For hot mix asphalt items designated as Method D in Section 403 - Hot Mix Asphalt Pavement, one sample will be taken from the paver hopper or the truck body per 250 ton per pay item. The mix will be tested for gradation and PGAB content. Disputes will not be allowed. If the mix is within the tolerances listed in Table 8: Method D Acceptance Limits, the Department will pay the contract unit price. Contractor shall cut two 6 in cores, which shall be tested for percent TMD per AASHTO T-269 unless otherwise noted in Section 403 - Hot Mix Asphalt Pavement. If the average for the two tests falls below 92.5% the disincentive shall apply. If the test results for each 250 ton increment are outside these limits, the following deductions (Table 8b) shall apply to the HMA quantity represented by the test.

TABLE 8: METHOD D ACCEPTANCE LIMITS

Property	USL and LSL
Percent Passing 4.75 mm and larger sieves	Target +/-7
Percent Passing 2.36 mm to 1.18 mm sieves	Target +/-5
Percent Passing 0.60 mm	Target +/-4
Percent Passing 0.30 mm to 0.075 mm sieve	Target +/-3
PGAB Content	Target +/-0.5
% TMD (In-place Density)	95.0% +/- 2.5%

TABLE 8b Method “D” Price Adjustments

PGAB Content	-5%
2.36 mm sieve	-2%
0.30 mm sieve	-1%
0.075 mm sieve	-2%
Density	-10%

401.21 Method of Measurement The Department will measure Hot Mix Asphalt Pavement by the ton in accordance with Section 108.1 - Measurement of Quantities for Payment.

401.22 Basis of Payment The Department will pay for the work, in place and accepted, in accordance with the applicable sections of this Section, for each type of HMA specified.

The Department will pay for the work specified in Section 401.11, for the HMA used, except that cleaning objectionable material from the pavement and furnishing and applying bituminous material to joints and contact surfaces is incidental. Payment for this work under the appropriate pay items shall be full compensation for all labor, equipment, materials, and incidentals necessary to meet all related contract requirements, including design of the JMF, implementation of the QCP, obtaining core samples, transporting cores and samples, filling core holes, applying emulsified asphalt to joints, and providing testing facilities and equipment.
The Department will make a pay adjustment for quality as specified below.

401.221 Pay Adjustment The Department will sample, test, and evaluate Hot Mix Asphalt Pavement in accordance with Section 106 - Quality and Section 401.20 - Acceptance, of this Specification.

401.222 Pay Factor (PF) The Department will use the following criteria for pay adjustment using the pay adjustment factors under Section 106.7 - Quality Level Analysis:

Density If the pay factor for Density falls below 0.80 for Method A or C or 0.86 for Method B, all of the cores will be randomly re-cut by Sublot. A new pay factor will be calculated that combines all initial and retest results. If the resulting pay factor is below 0.80 for Method A or C or below 0.86 for Method B, the entire Lot shall be removed and replaced with material meeting the specifications at no additional cost to the Department, except that the Department may, when it appears that there is a distinct pattern of defective material, isolate any defective material by investigating each mix sample sublot and require removal of defective mix sample sublots only, leaving any acceptable material in place if it is found to be free of defective material. Pay factors equal to or greater than the reject level will be paid accordingly.

Gradation For HMA evaluated under Acceptance Method A or B, the Department will determine a composite pay factor (CPF) using applicable price adjustment factors “f“ from Table 9: Table of Gradation Composite “f” Factors, and Acceptance limits from Table 5: Method A Acceptance Limits, for Method A or Table 6: Method B Acceptance Limits, for Method B. The Department will not make price adjustments for gradation on Methods A and B except for 9.5mm NMAS mixtures as outlined in Table 4A. Gradations for Methods A and B shall be monitored as shutdown criteria.

TABLE 9: TABLE OF GRADATION COMPOSITE " f " FACTORS (Methods A and B)

Constituent		"f" Factor			
		19 mm	12.5 mm	9.5 mm	4.75 mm
Gradation	25 mm	-	-	-	-
	19 mm	4	-	-	-
	12.5 mm		4	4	-
	9.50 mm				4
	2.36 mm	6	6	6	8
	1.18 mm				
	0.60 mm	2	2	2	2
	0.30 mm	2	2	2	2
	0.075 mm	6	6	6	8

For HMA evaluated under Acceptance Method C, the Department will determine a pay factor using acceptance limits from Table **7**: Method C Acceptance Limits.

VMA, Air Voids, VFB and Fines to Effective Binder The Department will determine a pay factor (PF) using the applicable Acceptance Limits.

The following variables will be used for pay adjustment:

PA = Pay Adjustment
Q = Quantity represented by PF in ton
P = Contract price per ton
PF = Pay Factor

Pay Adjustment Method A

The Department will use the following criteria for pay adjustment: density, Performance Graded Asphalt Binder content, voids @N_d, VMA, VFB, F/B_{eff}, and the screen sizes listed in Table 9 for the type of HMA represented in the JMF. If any single pay factor for PGAB Content, VMA, or Air Voids falls below 0.80, then the composite pay factor for PGAB Content, VMA, and Air Voids shall be 0.55.

Density: For mixes having a density requirement, the Department will determine a pay factor using Table 5: Method A Acceptance Limits:

PA = (density PF- 1.0)(Q)(P)x0.50

PGAB Content, VMA and Air Voids: The Department will determine a pay adjustment using Table 5: Method A Acceptance Limits as follows:

PA = (voids @ N_d PF- 1.0)(Q)(P)x0.20 + (VMA @ N_d PF- 1.0)(Q)(P)x0.20 + (PGAB PF- 1.0)(Q)(P)x0.10

VFB and Fines to Effective Binder The Department will determine a pay factor (PF) using Table 5: Method A Acceptance Limits. The Department will not make price adjustments for VFB or Fines to Effective Binder, but will monitor them as shutdown criteria.

Pay Adjustment Method B

The Department will use the following criteria for pay adjustment: density, Performance Graded Asphalt Binder content, voids @N_d, VMA, VFB, F/B_{eff}, and the screen sizes listed in Table 9 for the type of HMA represented in the JMF. If any single pay factor for PGAB Content, VMA, or Air Voids falls below 0.86, then the composite pay factor for PGAB Content, VMA, and Air Voids shall be 0.70.

Density: For mixes having a density requirement, the Department will determine a pay factor using Table 6: Method B Acceptance Limits:

PA = (density PF- 1.0)(Q)(P)x0.50

PGAB Content, VMA and Air Voids: The Department will determine a pay adjustment using Table 6: Method B Acceptance Limits as follows:

PA = (voids @ N_d PF- 1.0)(Q)(P)x0.20 + (VMA @ N_d PF- 1.0)(Q)(P)x0.20 + (PGAB PF- 1.0)(Q)(P)x0.10

VFB and Fines to Effective Binder The Department will determine a pay factor (PF) using Table 6: Method B Acceptance Limits. The Department will not make price adjustments for VFB or Fines to Effective Binder, but will monitor them as shutdown criteria.

Pay Adjustment Method C

The Department will use density, Performance Graded Asphalt Binder content, and the percent passing the nominal maximum, 2.36 mm, 0.300 mm and 0.075 mm sieves for the type of HMA represented in the JMF. If the PGAB content falls below 0.80, then the PGAB pay factor shall be 0.55.

Density: For mixes having a density requirement, the Department will determine a pay factor using Table 7: Method C Acceptance Limits:

PA = (density PF- 1.0)(Q)(P)x0.50

PGAB Content and Gradation The Department will determine a pay factor using Table **7**: Method C Acceptance Limits. The Department will calculate the price adjustment for Mixture Properties as follows:

PA = (% Passing Nom. Max PF-1.0)(Q)(P)X0.05+(% passing 2.36 mm PF-1.0)(Q)(P)X0.05+(%passing 0.30 mm PF-1.0)(Q)(P)X0.05+(%passing 0.075 mm PF-1.0)(Q)(P)X0.10+(PGAB PF-1.0)(Q)(P)X0.25

VMA, Air Voids, VFB and Fines to Effective Binder The Department will determine a pay factor (PF) using Table 7: Method C Acceptance Limits. The Department will not make price adjustments for VMA, Air Voids, VFB or Fines to Effective Binder, but will monitor them as shutdown criteria.

Pay Adjustment Method D

The Department will use density, Performance Graded Asphalt Binder content, and the screen sizes listed in Table 8b for the type of HMA represented in the JMF. If test results do not meet the Table 8 requirements, deducts as shown in Table 8b shall be applied to the quantity of mix represented by the test.

401.223 Process for Dispute Resolution (Methods A B & C only)

a. Dispute Resolution sampling At the time of Hot-Mix Asphalt sampling, the Department will obtain a split sample of each Acceptance test random sample for possible dispute resolution testing. The Contractor shall also obtain a split sample of the HMA at this same time. If the Contractor wishes to retain the option of requesting dispute testing of the initial Acceptance sample, the Contractor will test their split of the

Acceptance sample and shall report their results to the Resident, with a copy to the QA Engineer by 7:00 AM, on the second working day from time of QA sampling, otherwise dispute resolution will not be initiated. The Department's dispute resolution split sample will be properly labeled and stored for a period of at least two weeks, or until the sample is tested.

b. Disputing Acceptance results The Contractor may dispute the Department's Acceptance results and request (Methods A, B, & C) that the dispute resolution split sample be tested by notifying the

Department's Resident and the QA Engineer in writing within two working days after receiving the results of the Acceptance test. The following shall be provided in the request:

- Acceptance sample reference number
- The specific test result(s) or property(ies) being disputed, and
- The complete, signed report of the Contractor's testing (In a lab certified by the NETTCP and MaineDOT) of their split of the Acceptance sample indicating that the variances in Table10: Dispute Resolution Variance Limits, for the specific test result(s) or property(ies) were exceeded.

c. Disputable items

For Methods A and B: The Contractor may dispute any or all of the following test results when the difference between the Department's value and the Contractor's value for that test equals or exceeds the corresponding allowable variation in Table 10: Dispute Resolution Variance Limits, PGAB content, G_{mb}, and G_{mm}. In addition, if the allowable variation for the G_{mb} or G_{mm} is not met or exceeded, the Contractor may dispute either or both of the following material properties provided the difference between results for them equals or exceeds the corresponding allowable variation in Table 10: Voids at N_{design}, and VMA.

For Method C only: The results for PGAB content and the screen sizes used for pay adjustment may be disputed.

d. Outcome The value of any disputed result or property reported for the initial Acceptance sample shall stand if the value reported for the dispute resolution sample is not closer to the value the Contractor reported for their split sample than to the value reported for the initial Acceptance sample. If the value reported for the dispute resolution falls precisely half-way between the other two values the value reported for the dispute resolution will replace the original acceptance value. Otherwise, the value reported for the dispute resolution sample will replace the value reported for the initial Acceptance sample, and will be used to re-calculate any other affected results or properties.

TABLE 10: DISPUTE RESOLUTION VARIANCE LIMITS

PGAB Content	+/-0.4%
G_{mb}	+/-0.030
G_{mm}	+/-0.020
Voids @ N_d	+/-0.8%
VMA	+/-0.8%
Passing 4.75 mm and larger sieves	+/- 4.0%
Passing 2.36 mm to 0.60 mm sieves	+/- 3.0%
Passing 0.30 mm to 0.15	+/- 2.0 %
0.075 mm sieve	+/- 1.0%

SECTION 402 - PAVEMENT SMOOTHNESS

402.00 Smoothness Projects Projects to have their pavement smoothness analyzed in accordance with this Specification will be so noted in Special Provision 403 - Hot Mix Asphalt Pavement

402.01 Pavement Smoothness The final pavement surface shall be evaluated for smoothness using a Class I or Class II profiler as defined by ASTM E950 (94). Smoothness measurements will be expressed in terms of the International Roughness Index (IRI) as defined by the World Bank, in units of inches/mile.

402.02 Lot Size Lot size for smoothness will be 3000 lane-feet. A sublot will consist of 20 50 lane-feet. Partial lots will be included in the previous lot if less than one-half the size of a normal lot. If equal to or greater than one-half the normal lot size, it will be tested as a separate lot.

402.03 Acceptance Testing The Department will conduct Acceptance testing following completion of the surface course. Sections to be excluded from testing include the following:

Bridge decks and joints (no smoothness measurements will be taken within 100 ft of bridge joints)
Acceleration and deceleration lanes
Shoulders and ramps
Side streets and roads
Within 100 ft of transverse joints at the beginning and end of the project
Within 100 ft of railroad crossings
Urban areas with speed limits of 30 mph or lower

Each lot shall have 2 measurements made in each wheel path. The average of the 4 measurements will determine the smoothness for that lot.

The smoothness measurements will be statistically evaluated for pay factors as described in Subsection 106.7 - Quality Level Analysis, using the specification limits shown below.

ACCEPTANCE LIMITS

Level	USL
I	60 in/mile
II	70 in/mile
III	80 in/mile

Computation of Smoothness Pay Adjustment:

PA = (PF-1.0)(Q)(P)
where:
Q = Quantity of surface course in the Lot (excluding shoulders, side streets, bridge decks, ramps, acceleration and deceleration lanes)
PF = smoothness pay factor for the Lot
P = Contract unit price for surface pavement
PA = pay adjustment

402.04 Unacceptable Work In the event that any Lot is found to have a pay factor less than 0.80, the Contractor shall take whatever remedial action is required to correct the pavement surface in that Lot at no additional expense to the Department. Such remedial action may include but is not limited to removal and replacement of the unacceptable pavement. In the event remedial action is necessary, the Contractor shall submit a written plan to the Resident outlining the scope of the remedial work. The Resident must approve this plan before the remedial work can begin. Following remedial work, the Lot shall be retested, and will be subject to the specification limits listed above. The resulting pay factor, if within the acceptable range, will be used in the final pay adjustment. The Contractor shall pay the cost of retesting the pavement following corrective action.

Localized surface tolerance defects will be subject to the provisions outlined in Section 401.101 Surface Tolerances.

Payment will be made under:

Pay Item	Pay Unit
402.10 Incentive/Disincentive - Pavement Smoothness	Lump Sum

SECTION 403 - HOT MIX ASPHALT PAVEMENT

403.01 Description This work shall consist of constructing one or more courses of Hot Mix Asphalt pavement on an approved base in accordance with these specifications, and in reasonably close conformity with the lines, grades, thickness and typical cross sections shown on the plans or established.

The HMA pavement shall be composed of a mixture of aggregate, filler if required, and asphalt material.

403.02 General The materials and their use shall conform to the requirements of Section 401 - Hot Mix Asphalt Pavement.

403.03 Construction The construction requirements shall be as specified in Section 401 - Hot Mix Asphalt Pavement.

403.04 Method of Measurement Hot mix asphalt pavement will be measured as specified in Section 401.21-Method of Measurement.

403.05 Basis of Payment The accepted quantities of hot mix asphalt pavement will be paid for at the contract unit price per ton for the mixtures, including hot mix asphalt material complete in place.

Method A, Method B, Method C and Method D shall be used for acceptance as specified in Section 401 - Hot Mix Asphalt Pavements. (See Complementary Notes, Section 403 - Hot Mix Asphalt Pavement, for Method location).

Payment will be made under:

	Pay Item	Pay Unit
403.102	Hot Mix Asphalt Pavement for Special Areas	Ton
403.206	Hot Mix Asphalt, 25 mm Nominal Maximum Size	Ton
403.207	Hot Mix Asphalt, 19.0 mm Nominal Maximum Size	Ton
403.2071	Hot Mix Asphalt , 19.0 mm Nominal Maximum Size (Polymer Modified)	Ton
403.2072	Asphalt Rich Hot Mix Asphalt, 19.0 mm Nominal Maximum Size (Asphalt Rich Base and Intermediate course)	Ton
403.2073	Warm Mix Asphalt, 19.0 mm Nominal Maximum Size	Ton
403.208	Hot Mix Asphalt, 12.5 mm Nominal Maximum Size	Ton
403.2081	Hot Mix Asphalt - 12.5 mm Nominal Maximum Size (Polymer Modified)	Ton
403.20813	Warm Mix Asphalt - 12.5 mm Nominal Maximum Size (Polymer Modified)	Ton
403.2083	Warm Mix Asphalt, 12.5 mm Nominal Maximum Size	Ton

403.209	Hot Mix Asphalt, 9.5 mm Nominal Maximum Size (sidewalks, drives, islands & incidentals)	Ton
403.210	Hot Mix Asphalt, 9.5 mm Nominal Maximum Size	Ton
403.2101	Hot Mix Asphalt, 9.5 mm Nominal Maximum Size (Polymer Modified)	Ton
403.2102	Asphalt Rich Hot Mix Asphalt, 9.5 mm Nominal Maximum Size (Asphalt Rich Intermediate course)	Ton
403.2103	Warm Mix Asphalt, 9.5 mm Nominal Maximum Size	Ton
403.2104	Hot Mix Asphalt, 9.5 mm Nominal Maximum Size (3/4" Surface Treatment)	Ton
403.211	Hot Mix Asphalt, 9.5 mm Nominal Maximum Size (Shimming)	Ton
403.2111	Hot Mix Asphalt, 9.5 mm Nominal Maximum Size (Shimming, Polymer Modified))	Ton
403.2113	Warm Mix Asphalt, 9.5 mm Nominal Maximum Size (Shimming)	Ton
403.212	Hot Mix Asphalt, 4.75 mm Nominal Maximum Size	Ton
403.2123	Warm Mix Asphalt, 4.75 mm Nominal Maximum Size	Ton
403.213	Hot Mix Asphalt, 12.5 mm Nominal Maximum Size (Base and Intermediate Base course)	Ton
403.2131	Hot Mix Asphalt, 12.5 mm Nominal Maximum Size (Base and Intermediate Base course, Polymer Modified)	Ton
403.2132	Asphalt Rich Hot Mix Asphalt, 12.5 mm Nominal Maximum Size (Base and Intermediate Base course)	Ton
403.2133	Warm Mix Asphalt, 12.5 mm Nominal Maximum Size (Base and Intermediate Base course)	Ton
403.214	Hot Mix Asphalt, 4.75 Nominal Maximum Size (5/8" Surface Treatment)	Ton
403.2143	Warm Mix Asphalt, 4.75 Nominal Maximum Size (5/8" Surface Treatment)	Ton

SPECIAL PROVISION
DIVISION 400
PAVEMENTS

SECTION 401 - HOT MIX ASPHALT PAVEMENT
(Longitudinal joint construction using wedge/taper apparatus)

The Special Provision 400. Section 401 – Hot Mix Asphalt Pavement, subsection 401.15 – Spreading and Finishing, and subsection 401.17- Joints have been modified with the following revisions. All sections not revised by this Special Provision shall be as outlined in the Special Provision 400 Pavements, Section 401 – Hot Mix Asphalt Pavement. References to Standard Specifications, Special Provisions, or other documents, shall be determined as the most current version available at the time of bid, or as amended. All costs associated with this Item will not be paid for directly, but shall be considered included in the associated contract items.

401.15 Spreading and Finishing The section has been amended as follows:

On areas where irregularities or unavoidable obstacles make the use of mechanical spreading and finishing equipment impracticable, the Contractor shall spread, rake, and lute the HMA with hand tools to provide the required compacted thickness. Solvent based agents that strip asphalts from aggregates will not be allowed as release agents.

On roadways with adjoining lanes carrying traffic, the Contractor shall place each course over the full width of the traveled way section being paved that day, unless otherwise noted by the Department in Section 403 - Hot Bituminous Pavement, or within this Special Provision.

When an approved longitudinal joint construction method is utilized, such as a manufactured notched wedge apparatus, the Department may allow the placement of mixtures in one continuous lane for each calendar day worked, with the following conditions:

The Contractor may utilize a manufactured notched wedge joint apparatus on all HMA layers 1 ½ inch or greater in Zone 1 between the dates of May 30th and the Saturday following September 1st, and in Zone 2 between the dates of May 15th and the Saturday following September 15th. When the work is to be performed, either by contract requirement or Contractor option, during conditions defined as “night work”, the same seasonal limitations shall apply unless the Department determines that the construction method is producing an unsound joint. This work will not be allowed during times of inclement weather as outlined in Division 400 – Special Provision 401; subsection 401.06 Weather and Seasonal Limitations.

If this option is utilized on roadways with two-way traffic, the Contractor will be required to place a matching course of HMA over the adjacent section of travel lane before the end of the following calendar day. Failure to match the centerline course the following day will constitute a traffic control violation unless an excusable delay is granted by the Department.

If this option is utilized on divided highways or expressways with directional traffic, the Contractor will be required to place a matching course of HMA over the adjacent section of travel lane within seven calendar days from placement of the initial paved lane. Failure to match the centerline course the within the seven calendar days will constitute a traffic control violation unless an excusable delay is granted by the Department.

The Contractor will also be responsible for installing additional warning signage that clearly defines the centerline elevation differential hazard, as well as additional centerline delineation such as double RPM application, or temporary painted line. The Traffic Control Plan shall include this option and the additional requirements. All signs and traffic control devices will conform to Section 719.01, and Section 652, and will be installed prior to the work, at a maximum spacing of 0.50 mile [0.80 km] for the entire length of the effected roadway section. On roadways with two-way traffic, the Contractor will be required to place the specified course over the full width of the mainline traveled way being paved prior to opening the sections to weekend or holiday traffic. If this option is utilized, all additional signing, labor, traffic control devices, or incidentals will not be paid for directly, but will be considered incidental to the appropriate 652 bid items.

The Department reserves the right to have centerline cores cut by the Contractor's QC personnel for informational purposes to monitor the density along the joint. Informational cores at the centerline joint will be taken centered over the tapered part of the wedge joint.

Any notched wedge joint constructed areas that become cracked or broken shall be trimmed back to the limits affected prior to placing the adjoining lane. Any materials that become unbound or separated from the wedge or tapered joint section, or contaminated by materials determined by the Department as being detrimental to the construction of a sound construction joint, shall be removed by sweeping, compressed air and lance, or by hand tools as required. This work, if necessary, will not be paid for directly, but shall be considered incidental to the related contract items.

<u>401.17 Joints</u> The following section has been amended as follows:

Should the notched wedge joint device be used, the Contractor shall apply a coating of emulsified asphalt on the vertical and tapered surface of the longitudinal centerline joint immediately before paving. The rate of application shall be approximately 0.050 G/SY. This application shall be in addition to the normal application of tack coats to the construction joint face and horizontal surfaces prior to placing a new lift. The Contractor shall use an approved spray apparatus designed for covering a narrow surface. The Department may approve application by a brush for small surfaces, or in the event of a malfunction of the spray apparatus, but for a period of not more than one working day.

SPECIAL PROVISION
SECTION 403
HOT MIX ASPHALT

Desc. Of Course	Grad Design.	Item Number	Bit Cont. % of Mix	Total Thick	No. Of Layers	Comp. Notes
3" Union Street Bridge Deck						
Wearing	12.5 mm	403.2081	N/A	1½"	1	2,5,8,12,30
Base	12.5 mm	403.2131	N/A	1½"	1	2,5,8,12,30
6" – Union Street (Route 222)						
Wearing	12.5 mm	403.2081	N/A	1½"	1	5,8,12,30
Base	12.5 mm	403.2131	N/A	1½"	1	5,8,12,30
Base	19.0 mm	403.207	N/A	3"	1	1,5,8
6" – Ramp A, Ramp G, and Ramp J Travel Way & Shoulders						
Wearing	12.5 mm	403.2081	N/A	1½"	1	5,8,12,30
Base	12.5 mm	403.2131	N/A	1½"	1	5,8,12,30
Base	19.0 mm	403.207	N/A	3"	1	1,5,8
3" – 15th Street and Sunset Ave Travel Way & Shoulders						
Wearing	12.5 mm	403.2081	N/A	1½"	1	5,8,12,30
Base	12.5 mm	403.2131	N/A	1½"	1	5,8,12,30
2" – Sunset Ave Detour Travel Way - Station 40+00 – 56+40						
Wearing	12.5 mm	403.208	N/A	2"	1	1,5,8,12
2" – Connector Road Detour Travel Way – Station 30+00 – 32+00						
Wearing	12.5 mm	403.208	N/A	2"	1	1,5,8,12
1 ½" – Ramp C Travel Way & Shoulders – Mill & Fill						
Wearing	12.5 mm	403.2081	N/A	1 ½"	1	5,8,30
1 ½" – I-95 Travel Lane & Shoulder - Mill & Fill						
Wearing	12.5 mm	403.2081	N/A	1 ½"	1	5,8,30
8" – I-95 Passing Lane Travel Way – Full Depth Reconstruction						
Wearing	12.5 mm	403.2081	N/A	1 ½"	1	5,8,30
Base	12.5 mm	403.2131	N/A	2 ½"	1	5,8,30
Base	12.5 mm	403.213	N/A	4"	2	1,5,8,13
4" – I-95 Passing Lane Shoulder & Median						
Wearing	12.5 mm	403.2081	N/A	1 ½"	1	5,8,30
Base	12.5 mm	403.2131	N/A	2 ½"	1	5,8,30
1 ½" – Temporary Pavement on Bridge Deck						
Temp. Surface	12.5 mm	461.131	N/A	1 ½"	1	1,27
¾" – Cynthia L Karris Parking Lot Overlay						
Wearing	9.5 mm	403.210	N/A	¾"	1	1,5,10,17
Shim	9.5 mm	403.211	N/A	Varies	1/more	1,5,10,17
2" – Sidewalks, Drives, Islands and Incidentals						
Wearing	9.5 mm	403.209	N/A	2"	2/more	2,3,10,11,14

COMPLEMENTARY NOTES

1. The required PGAB for this mixture will meet a **PG 64-28** grading.
2. The density requirements are waived. The use of an oscillating steel roller shall be required to compact all HMA pavements placed on bridge decks in addition to the normal roller train.
3. The design traffic level for mix placed shall be <0.3 million ESALS.
5. The design traffic level for mix placed shall be 3 to < 10 million ESALS. The design, verification, Quality Control, and Acceptance tests for this mix will be performed at **75 gyrations.**
8. Section 106.6 Acceptance, (2) Method B. The Contractor may request a contract modification to change to testing method "A" prior to work starting on this item.
10. Section 106.6 Acceptance, (2) Method D.
11. The combined aggregate gradation required for this item shall be classified as a 9.5mm "**fine graded "** mixture, (using the Primary Control Sieve control point) as defined in 703.09.
12. The combined aggregate gradation required for this item shall be classified as a 12.5mm "**fine graded "** mixture, (using the Primary Control Sieve control point) as defined in 703.09.
13. A mixture meeting the gradation of 19.0 mm hot mix asphalt may be used at the option of the contractor.
14. A mixture meeting the requirements of section 703.09 Grading 'D', with a minimum PGAB content of 6%, and the limits of Special Provision 401, Table 9 (Drives and Sidewalks) for PGAB content and gradation may be substituted for this item. A job mix formula shall be submitted to the department for approval.
17. Compaction of the new Hot Mix Asphalt Pavement will be obtained using a minimal roller train consisting of a **10 ton** vibratory, **12 ton** pneumatic, and a **10 ton** finish roller for roadway work. Density testing of the mixture will be performed by the QCT using a density meter (according to ASTM D 2950). The mixture will be rolled until the density readings show less than 1 pcf change for the final roller passes. This density will be used as the target TMD for the mixture. The remaining mixture shall be compacted to a minimum density of 95% of the target density as determined in the control section. The Contractor shall make density test results, including randomly sampled densities, available to the Department's representative onsite. Summaries of each day's results, including a daily paving report, summarizing the mixture type, mixture temperature, equipment used, environmental conditions, and number of roller passes, shall be recorded and signed by the QCT and presented to the Department's representative by the end of the working day. An approved release agent is required to ensure the mixture dose not adhere to hand tools, rollers, pavers, and truck bodies. The use of petroleum based fuel oils, or asphalt stripping solvents will not be permitted. The Department may require cores for informational purposes.
27. See Special Provision 461.131 – Temporary Pavement, for project specifics.
30. The required PGAB shall be a storage-stable, pre-blended, homogeneous, polymer modified asphalt binder that meets **PG 64E-28** grading requirements in AASHTO MP 19.

Tack Coat

A tack coat of emulsified asphalt, RS-1, Item 409.15 shall be applied to any existing pavement at a rate of approximately 0.025 gal/yd², and on milled pavement approximately 0.05 gal/yd², prior to placing a new course. A fog coat of emulsified asphalt shall be applied between shim / intermediate course and the surface course, at a rate not to exceed 0.025 gal/yd².

Tack used between layers of pavement will be paid for at the contract unit price for Item 409.15 Bituminous Tack Coat.

SPECIAL PROVISION
SECTION 403
HOT MIX ASPHALT

Desc. Of Course	Grad Design.	Item Number	Bit Cont. % of Mix	Total Thick	No. Of Layers	Comp. Notes
5" HMA Overlay Areas						
Exit 184 Northbound Full Construction Areas						
Mainline Travelway & Shoulders						
Wearing	12.5 mm	403.2081	N/A	1 ½"	1	5,8,30
Intermediate	12.5 mm	403.213	N/A	1 ½"	1	1,5,8
Base	12.5 mm	403.213	N/A	2"	1	1,5,8
6" HMA Overlay Areas						
Ohio Street – Curb Replacement Areas						
Wearing	12.5 mm	403.208	N/A	1 ½"	1	1,2,5,8
Intermediate	12.5 mm	403.213	N/A	1 ½"	1	1,2,5,8
Base	12.5 mm	403.213	N/A	2"	1	1,2,5,8
Sidewalks, Drives, Etc.						
Wearing	9.5 mm	403.209	N/A	2"	1/more	2,3,10,11,14

COMPLEMENTARY NOTES

1. The required PGAB for this mixture will meet a **PG 64-28** grading.
2. The density requirements are waived. In addition, the use of an oscillating steel roller shall be required to compact all HMA pavements placed on bridge decks.
3. The design traffic level for mix placed shall be <0.3 million ESALS.
5. The aggregate qualities shall meet the design traffic level of 3 to <10 million ESALS for mix placed under this contract. The design, verification, Quality Control, and Acceptance tests for this mix will be performed at **75 gyrations**.
8. Section 106.6 Acceptance, (2) Method B. The Contractor may request a contract modification to change to testing method "A" prior to work starting on this item.
10. Section 106.6 Acceptance, (2) Method D.
11. The combined aggregate gradation required for this item shall be classified as a 9.5mm "**fine graded "** mixture, (using the Primary Control Sieve control point) as defined in 703.09.
14. A mixture meeting the requirements of section 703.09 Grading 'D', with a minimum PGAB content of 6%, and the limits of Special Provision 401, Table 9 (Drives and Sidewalks) for PGAB content and gradation may be substituted for this item. A job mix formula shall be submitted to the department for approval.
30. The required PGAB shall be a storage-stable, pre-blended, homogeneous, polymer modified asphalt binder that meets **PG 64E-28** grading requirements in AASHTO MP 19.

Tack Coat

A tack coat of emulsified asphalt, RS-1, Item 409.15 shall be applied to any existing pavement at a rate of approximately 0.025 gal/yd², and on milled pavement approximately 0.05 gal/yd² prior to placing a new course. A fog coat of emulsified asphalt shall be applied between shim /base courses and the surface course, at a rate not to exceed 0.025 gal/yd². Tack used between layers of pavement will be paid for at the contract unit price for Item 409.15 Bituminous Tack Coat.

SPECIAL PROVISION
SECTION 461.131
TEMPORARY PAVEMENT

Description:

This work shall consist of furnishing all labor, materials and equipment, for the manufacturing, installation and removal of all Temporary Pavement in accordance with these specifications, Special Provision 403 Hot Mix Asphalt, and the Plans. Temporary pavement shall meet all mix design requirements of a 12.5 mm surface mix.

Method of Measurement:

This work will be measured for payment by the Ton, complete in place and accepted.

Basis of Payment:

The work shall be paid for at the contract Ton price for the manufacturing, installation and removal of all Temporary Pavement.

Payment will be made under:

Pay Item		Pay Unit
461.131	Temporary Pavement	Ton

SPECIAL PROVISION
SECTION 502
STRUCTURAL CONCRETE
(QC/QA Acceptance Methods)

CLASS OF CONCRETE	ITEM NUMBER	DESCRIPTION	P	METHOD
A	502.219	Structural Concrete Abutments and Retaining Walls	$400	A
A	502.239	Structural Concrete Piers	$400	A
A	502.25	Structural Concrete Superstructure Slab	$400	A
A	502.31	Structural Concrete Approach Slabs	-	C
LP	502.49	Structural Concrete Curbs and Sidewalks	$425	A
LP	526.34	Permanent Concrete Transition Barrier	$425	A

Bangor
WIN 19256.00
December 12, 2013

SPECIAL PROVISIONS
SECTION 502
STRUCTURAL CONCRETE
(QC/QA Acceptance Methods)

CLASS OF CONCRETE	ITEM NUMBER	DESCRIPTION	P	METHOD
A	626.31	18 Inch Foundation	-	C
A	626.32	24 Inch Foundation	-	C

May 5, 2010
Supersedes September 29, 2004

SPECIAL PROVISION
SECTION 502
STRUCTURAL CONCRETE
(Quality Level Analysis)

502.01 Description In second sentence, replace "…METHOD B Small Quantity Product Verification…" with "…METHOD B Statistical Acceptance…"

502.05 Composition and Proportioning Delete Table 1 and replace with the following;

TABLE 1- Methods A, B, and C

Concrete CLASS	Compressive Strength (PSI)		Permeability (COULOMBS)		Entrained Air (%)		Notes
	LSL	USL	LSL	USL	LSL	USL	
S	2,900	N/A	N/A	N/A	6.0	8.5	1, 5
A	4,350	-----	-----	2,400	6.0	8.5	1,2,5,6
P	-----	-----	-----	-----	5 ½	7 ½	1,2,3,4,5
LP	5,075	-----	-----	2,000	6.0	8.5	1,2,5,6
Fill	2,900	N/A	N/A	N/A	N/A	N/A	6

502.503 Delete and replace with the following;

"502.0503 Quality Assurance METHOD B The Department will determine the acceptability of the concrete through a quality assurance program.

The Department will take Quality Assurance samples a minimum of once per sublot on a statistically random basis. Quality Assurance tests will include compressive strength, air content and permeability.

Concrete sampling for quality assurance tests will be taken at the discharge point, with pumped concrete sampling taken at the discharge end of the pump line.

Lot Size A lot size shall consist of the total quantity represented by each class of concrete in the Contract, except in the case when the same class of concrete is paid for under both lump sum items and unit price items in the Contract; in this case, the lump sum item quantities shall comprise 1 lot and the unit price item quantities shall comprise a separate lot. A lot shall consist of a minimum of 3 and a maximum of 10 sublots. If a lot is comprised of more than 10 sublots, sized in accordance with Table #3, then this quantity shall be divided equally into 2, or more, lots such that there is a minimum of 3 and a maximum of 10 sublots per lot. If there is insufficient quantity in a lot to meet the recommended minimum sublot size, then the lot shall be divided into 3 equal sublots.

Sublot Size, General The size of each sublot shall be determined in accordance with Table #3. The Resident may vary sublot sizes based on placement sizes and sequence.

Sublot Size, Unit Price Items Sublot sizes will initially be determined from estimated quantities. When the actual final quantity of concrete is determined: If there is less than one-half the estimated sublot quantity in the remaining quantity, then this quantity shall be combined with the previous sublot, and no further Acceptance testing will be performed; if there is more than one-half the estimated sublot quantity in the remaining quantity, then this quantity shall constitute the last sublot and shall be represented by Acceptance test results. If it becomes apparent part way through a lot that, due to an underrun in quantity, there will be an insufficient quantity of concrete to comprise three sublots, then the Resident may adjust the sizes of the remaining sublots and select new sample locations based on the revised estimated quantity of concrete remaining in the lot.

Sublot Size, Lump Sum Items Each lot shall be divided into sublots of equal size, based on the estimated quantity of concrete.

TABLE 3

Quantity m^3 [cy]	Recommended Sublot Size m^3 [cy]
0-400 [0-500]	40 [50]
401-800 [501-1000]	60 [75]
801-1600 [1001-2000]	80 [100]
1601 [2001]or greater	200 [250]

Determination of the concrete cover over reinforcing steel for structural concrete shall be made prior to concrete being placed in the forms. Bar supports, chairs, slab bolsters, and side form spacers shall meet the requirements of Concrete Reinforcing Steel Institute (CRSI) Manual of Standard Practice, Chapter 3 Section 2.5 Class 1, Section 2.6 Class 1A, or Section 4. All supports shall meet the requirements for type and spacing as stated in the CRSI Manual of Standard Practice, Chapter 3. Concrete will not be placed until the placing of the reinforcing steel and supports have been approved by the Resident. If the Contractor fails to secure Department approval prior to placement, the Contractor's failure shall be cause for removal and replacement at the Contractor's expense. The Contractor shall notify the Resident, at least 48 hours prior to the placement, when the reinforcing steel will be ready for checking. Sufficient time must be allowed for the checking process and any needed repairs.

Evaluation of materials will be made using the specification limits in Table 1.

Compressive strength tests will be completed by the Department in accordance with AASHTO-T22 at ≥ 28 days, except that no slump will be taken. The average of two concrete cylinders per sublot will constitute a test result and this average will be used to determine the compressive strength for pay adjustment computations.

Testing for Entrained Air in concrete, at the rate of one test per sublot, shall be in accordance with AASHTO T152.

Rapid Chloride Permeability test specimens will be completed by the Resident in accordance with AASHTO T-277 at an age ≥ 56 days. Two 100 mm x 200 mm [4 in x 8 in] cylinders will be taken per sublot placed.

Surface Tolerance, Alignment and Trueness, Plumb and Batter, and Finish will be measured as described in Section 502.0502.

Rejection by Resident For an individual sublot with a calculated pay factor of less than 0.80, the Department will, at its sole discretion:

A. Require the Contractor to remove and replace the entire affected placement with concrete meeting the Contract requirements at no additional expense to the Department, or

B. Accept the material, at a reduced payment as determined by the Department. (See also Section 502.191)

For a lot in progress, the Contractor shall discontinue operations whenever one or more of the following occurs:

A. The pay factor for any property drops below 1.00 and the Contractor is taking no corrective action

B. The pay factor for any property is less than 0.90

C. The Contractor fails to follow the QC Plan"

502.18 Method of Measurement Under Section E. make the following change from "….Method A, and under Section 502.19…" to "…Method A, Section 502.0503- Quality Assurance Method B, and under Section 502.19…"

502.19 Basis of Payment Modify the first sentence of the seventh paragraph from "…accepted under Method A." to "…accepted under Method A and Method B."

502.191 Pay Adjustment for Compressive Strength Add the following as the second sentence to the first paragraph; "Pay factors (PF) for pay adjustments for compressive strength will be determined using the Quality Level Analysis as specified in Section 106."

502.192 Pay Adjustment for Chloride Permeability Delete and replace with the following;

"Pay factors (PF) for pay adjustments for Chloride Permeability will be determined using the Quality Level Analysis as specified in Section 106.

Values greater than 4000 coulombs shall be subject to rejection and replacement at no additional cost to the Department."

502.193 Pay Adjustment for Air Content Delete and replace with the following;

"Pay factors (PF) for pay adjustments for air content will be determined using the Quality Level Analysis as specified in Section 106."

Add the following Section;

"502.195 Pay Adjustments for Compressive Strength, Chloride Permeability and Air Content The Composite Pay Factor (CPF) for each lot of concrete shall be computed as follows:

CPF = [(Compressive Strength PF-1)(0.20)] + [(Air Content PF-1)(0.40)]
+ [(Chloride Permeability PF-1)(0.40)]

The pay adjustment for each lot of concrete shall be computed as follows:

Lot Pay Adjustment = P x CPF x Lot Size

There will be no positive pay adjustments for Method B Concrete."

Bangor
WIN 06681.00
Union St. (Route 222)
August 28, 2013

SPECIAL PROVISION
SECTION 503
REINFORCING STEEL
(Corrosion Resistant Reinforcing System, Fabricated and Delivered)
(Corrosion Resistant Reinforcing System, Placing)

The following are corrections, additions and revisions to the Standard Specification Section 503, Reinforcing Steel.

503.01 Description:

This work shall consist of furnishing and placing corrosion resistant reinforcing, in accordance with these specifications and in conformance with the Plans, Supplemental Specifications and Special Provisions.

503.02 Materials

Add the following:

Corrosion resistant reinforcing shall consist of any of the following materials:
a) Epoxy-coated reinforcing steel with a corrosion inhibitor.
b) Stainless reinforcing steel.
c) Galvanized reinforcing steel.

Corrosion resistant reinforcing systems shall be placed at the locations shown on the plans or as directed by the Resident.

All corrosion resistant reinforcing systems shall have a minimum yield strength, F_y = 60 ksi.

Stainless reinforcing steel shall consist of deformed bars made of solid stainless steel meeting the requirements of ASTM A955.

Galvanized reinforcing steel shall be zinc-coated in accordance with ASTM A767.

503.04 Protection of Material

The first sentence of the first paragraph is modified to read:

Reinforcement shall be stored on skids or other supports a minimum of 12 in above the ground surface and protected at all times from damage and surface contamination.

503.05 Fabrication

The following is added:

Welding to aid fabrication shall not be permitted. Reinforcing bars shall be bent cold and shall not be bent or straightened in a manner that will injure the material. Heating of the bars to facilitate bending shall not be permitted. Bar cutting shall be accomplished by shearing or with a water-cooled saw. Torch cutting reinforcing steel shall not be permitted. Field welding as an aid to installation shall not be permitted.

503.06 Placing and Fastening

The following is added:

Reinforcing bars shall be bent cold and shall not be bent or straightened in a manner that will injure the material. Heating of the bars to facilitate bending shall not be permitted. Bar cutting shall be accomplished by shearing or with a water-cooled saw. Torch cutting reinforcing steel shall not be permitted. Field welding as an aid to installation shall not be permitted.

503.06 Placing and Fastening

The sixth paragraph is modified to include:

Tie wire shall be soft- annealed wire that has been nylon or plastic coated. Non-metallic ties may be used with approval from the Resident.

503.07 Splicing

This section is removed in its entirety and replaced with the following:

Reinforcing bars shall be spliced in accordance with the requirements of this section, and in the locations shown on the plans. No modifications of, or additions to, the splice arrangements shown on the plans shall be made without the Resident's prior approval. Any additional splices authorized shall be staggered as much as possible. All splices shall be made in a manner that will ensure that not less than 75% of the clear concrete cover and not less than75% of the minimum clear distance to other bars will be maintained, as compared to the cover and clear distance requirements for the unspliced bar.

Lapped splices shall be made by placing the bars in contact and wiring them together. Splice laps shall be made in accordance with the following table, unless noted otherwise on the plans:

Minimum Lap Splice Length (inches)*									
Bar Type	Bar Size								
	#3	#4	#5	#6	#7	#8	#9	#10	#11
Epoxy Coated	21	27	33	39	50	64	80	103	124
Stainless Steel Galvanized	14	18	22	26	33	43	54	68	83

* Lap splice length are based on the following parameters: Minimum center to center spacing between bars of 6 inch; nominal yield strength of the reinforcing steel of 60 ksi; minimum 28 day compressive strength of concrete of 4350 psi. When any of the preceding parameters is altered appropriate minimum lap splice lengths will be determined by the Resident. When lap splices are placed horizontally in an element where the concrete depth below the splice will be 12 inches or more, the indicated lap splice lengths shall be multiplied by a factor of 1.4.

Mechanical couplers may be used for splicing reinforcing bars, provided they are approved by the Resident and conform to the following requirements:

Couplers shall be made from the same material as the attached reinforcing bars to which they are attached, or shall be approved for use by the manufacturer of the corrosion resistant reinforcing system provided.

a. Tension couplers Coupler shall be able to develop 1.25 times the theoretical yield strength of the spliced bar in tension. Bolted and wedge-lock type couplers will not be allowed

b. Compression Couplers Couplers shall be capable of maintaining the spliced bars in alignment prior to and during concrete placement. For reinforcing bars designed to act in compression, the individual bars ends shall be within 1 1/2° of being "square" to the final 12 inches of the bar. Additionally, abutting bar ends shall be in contact, and the angle of the gap between abutting bar ends shall be 3°, or less.

Welded splices shall not be allowed.

503.10 Method of Measurement

Corrosion resistant reinforcing steel and mechanical splices placed in the cast-in-place portion of the structural concrete slab will be considered incidental to the appropriate Standard Specification Section 502 pay item. All other corrosion resistant reinforcing steel and mechanical splices will be measured as follows:

Corrosion resistant reinforcing steel will be measured per pound complete in place and accepted. Corrosion resistant mechanical splices will be measured per each unit complete in place and accepted.

503.11 Basis of Payment

Corrosion resistant reinforcing steel and mechanical splices placed in the cast-in-place portion of the structural concrete slab will be considered incidental to the appropriate Standard Specification Section 502 pay item. Basis of payment for all other corrosion resistant reinforcing steel and mechanical splices will be as follows:

The accepted quantity of corrosion resistant reinforcing steel will be paid for at the contract unit bid price per pound. The accepted quantity of corrosion resistant mechanical splices will be paid for at the contract unit price per each unit.

Payment will be full compensation for all materials, labor, equipment and incidentals necessary to furnish and install corrosion resistant reinforcing. Payment will also include all submittals required for approval prior to execution of this work.

Payment will be made under:

Pay Item		Pay Unit
503.14	Epoxy- Coated Reinf Steel, Fab'd/Deliv'd	LB
503.15	Epoxy-Coated Reinf Steel, Placing	LB
503.17	Mechanical Welded Splice - Stainless Steel	EA
503.26	Stainless Steel Reinforcement - Fab & Del	LB
503.27	Stainless Steel Reinforcement - Placing	LB

Bangor
WIN 016681.00
Union St. (Route 222)
May 22, 2013

SPECIAL PROVISION
SECTION 507
Railings

The following is added to Section 507.09 Basis of Payment:

Payment for the modified post base plates necessary for the snow fence shown on the Plans shall be included in the lump sum price.

SPECIAL PROVISION
SECTION 507.131
TEMPORARY BRIDGE RAIL

Description: This work shall consist of fabrication, delivery, installation, relocation and removal of the temporary bridge rail. Work shall include the design of the temporary bridge rail and its attachments to the existing and new bridge decks.

Materials:

Structural Steel
Structural Steel shall conform to Subsection 713.10 of the Standard Specifications.

High Strength Bolts
High strength bolts, nuts, and washers shall conform to the requirements of AASHTO M164 (ASTM A325).

Anchor Bolts
Anchor bolts shall conform to the requirements of AASHTO M164 (ASTM A325).

Epoxy Bonding Compound
All epoxy bonding compound shall conform to the requirements of AASHTO M235. The epoxy bonding compound is an irritant and should only be used in the methods set forth by the manufacturer.

Anchor Bolt Hole Patching Material
Material used to patch the holes in the new deck shall be a product contained in the list of Prequalified Patching Materials. The material selected must be capable of completely bonding with the concrete in the new deck, must be of equal or greater compressive strength as the concrete in the new deck and must be a non-shrink patch material.

Construction Methods:

Steel Bridge Rail
The fabrication and erection of temporary steel bridge rail shall conform to the requirements of Section 504 of the Standard Specifications.

Temporary Concrete Barrier Transition Section
The transition from temporary concrete barrier to temporary steel rail has been designed to avoid any snag points. To obtain this, the temporary concrete section adjacent to the temporary bridge rail shall be modified from standard detail 526. The modified barrier shall provide a smooth transition from a typical cross section of the barrier to a section that completely obscures the rails at the point where the steel rail and concrete barrier

connect. The Contractor will prepare the surface of the existing concrete barrier by removing the outer concrete until a rough surface is available to the application of the new concrete. Epoxy bonding compound will be used on the exposed face to provide a more adhesive surface for the new concrete. The Contractor will provide the additional reinforced concrete in a method that will ensure that the concrete and its connection to the original barrier meets or exceeds the strength of the barrier as shown on standard detail 526. Once this strength has been obtained, the concrete barrier may be placed such that the exposed face provides a smooth transition with no snag points.

The base of the modified barrier section is to be placed in such a manner that the modified barrier is completely protecting the steel rails, but is not protruding into the adjacent travel way. This will require that the end of the modified barrier be placed above the steel rail base plate. To accommodate the bolts holding the steel base plate, the base of the modified barrier shall be recessed to a depth of 2.5 inches in the region directly above the steel base plate. At no time shall any temporary concrete barrier, typical or modified, rest on the steel base plate.

Steel hooks protruding from the ends of the temporary concrete barriers shall be joined with a steel bar to prevent independent movement of any one barrier section as shown in the Standard Details 526(02) and 526(03). Also, the rail end treatment shall be affixed with two steel hooks to allow for the modified concrete barrier sections to attach to the steel rail in the same manner. If at any time during the project the modified barrier section becomes damaged through handling, collision or any other manner, the modified section shall be replaced immediately with a newly made modified section. Payment for the modified barrier section shall be considered incidental to this item.

Drilling

Drilling shall be done before placement of the temporary bridge rail sections in final location. The locations for the hold may be determined by using a plywood template with predrilled hole locations.

Patching of Anchor Bolt Holes

All anchor bolt holes in the new deck must be filled promptly after use. After the temporary bridge rail segments have been moved for the final time from a setup locations in the new deck (not applicable to existing deck), fill in all accessible holes with a concrete repair material that is in full accordance with Standard Specifications set forth in Sections 518.03, 518.07 and 518.08. The repair of the anchor bolt holes shall be done before any other work begins in the new temporary bridge rail setup.

Design Criteria:

The temporary bridge rail and its connection to the existing and new concrete deck shall be designed to meet the requirements of AASHTO LRFD TL-4 loading condition. The temporary bridge rail and its attachments shall be designed and stamped by a

Professional Engineer licensed in the State of Maine and approved by the Resident Engineer.

Method of Measurement:
Temporary Bridge Rail shall be measured for payment per linear foot.

Basis of Payment:
The accepted quantity of Temporary Bridge Rail will be paid for at the contract unit price of linear foot, which payment will be full compensation for furnishing, installing, maintaining, adjusting, relocating, and including all labor, equipment, materials and incidentals necessary to complete the work as described herein and as shown on the Plans, accepted in place, including design of the temporary bridge rail and its attachments to the existing and new bridge decks.

Payment will be made under:

Pay Item		Pay Unit
507.13	Temporary Bridge Rail	Linear Feet

SPECIAL PROVISION
SECTION 509
COMPOSITE BEAM

Description: This work shall consist of furnishing (fabricating, storing and delivering) and installing Hybrid-Composite Beams (HCB®'s) to the dimensions and details shown on the plans and according to the requirements of the Standard Specifications and these Special Provisions. HCB's for incorporation into the project shall include the tension reinforcement, compression reinforcement, FRP shell and shear connectors as detailed on the Plans. Anchor bolts, shim plates and bearings will be paid for separately under separate pay items.

Quality Control/Quality Assurance: Within 30 calendar days the Contractor shall submit to the Department a Quality Control Quality Assurance (QCQA) Plan for fabrication of the HCB's. Fabrication of HCB's shall not commence until the QCQA Plan has been reviewed and approved by the Department.

Definitions: Terms and definitions found within this document shall be defined as outlined in the Standard Specifications, with the following added terms:

Hybrid-Composite Beam (HCB®): A structural framing member comprised of three main sub-components that include a fiber-reinforced polymer (FRP) shell, compression reinforcement and tension reinforcement.

FRP shell: An external, fiber reinforced polymer shell consisting of a quad-weave glass fabric infused with a polyester matrix or an epoxy, vinyl ester resin matrix that encapsulates the other components of the HCB.

Compression Reinforcement: A cementitious material such as Portland cement concrete, which is placed by suitable means into a profiled conduit fabricated within the FRP shell. The profile of the conduit is designed to resist the internal compression forces in the beam.

Tension Reinforcement: A high strength, high modulus material such as high strength prestressing strands infused integrally into the FRP shell and designed to equilibrate the internal compression forces in the beam.

Shear Connector: A diagonal tension member with one end anchored in the compression reinforcement and the opposing end anchored in the deck slab. A plurality of shear connectors are utilized to provide a positive connection to the bridge deck as well as to facilitate composite bending behavior between the HCB and the concrete deck.

Preforms: Individual element components of materials to be incorporated into the manufactured FRP shell, e.g. glass fabric and tension reinforcement.

Tooling: The molds or forms that are used in the manufacturing of the HCB.

Supplier: The only licensed supplier of HCB®'s is HCB, Inc. of 1521 Lake Avenue, Wilmette, IL.

Manufacturer: A firm authorized by the HCB, INC. for the manufacturing of Hybrid-Composite Beams (HCB®).

Materials: Materials shall be according to the following. Any substitutions to the materials specified must be submitted to the Department for approval.

a) FRP Shell: The FRP shell shall be comprised of a glass fiber reinforced polymer laminate bonded to a low-density foam core. The materials used in the laminate shall be as follows:

(1) Glass Reinforcement: The glass reinforcement of the FRP laminate shall be as per the contract plans or final design

Acceptable Manufacturers include:

a) Vectorply
b) Owens Corning
c) V2
d) FGI
e) Other approved sources

Additional non-structural layers of glass veil such as PRE 0700-02014-074 REEMAY may be placed between the glass layers and tooling surfaces as necessary to enhance resin infusion. Additional non-structural layers of resin distribution media may be placed between the glass layers and the low-density foam.

(2) Resin: The matrix used in the manufacturing of the FRP Shell shall be a polyester resin or a bisphenol-A epoxy-vinyl ester resin with a dynamic viscosity between 100 and 400 centipoise at 77 degrees F. The resin shall be promoted with 12% cobalt solution comprising of between 0.07 to 0.15% by weight of resin, along with between 0 to 0.07% by weight N, N-Dimethylanileine (DMA), or as recommended by the manufacturer. The resin shall also contain 0.30% by weight UV-9 as a UV Stabilizer. 2, 4 Pentanedione may be used as an inhibitor to increase the gel time if necessary

Acceptable products include:

a) DERAKANE MOMENTUM™ 411-45 as manufactured by Ashland
b) Vipel® F007-AAA-00 as manufactured by AOC, L.L.C.
c) AROPOL RTM 80545-45 as manufactured by Ashland
d) STYPOL DX 040-8086 as manufactured by CCP
e) Approved equal.

(3) Foam Core: Where shown on the contract plans or in accordance with the final design, the interior volume of the shell shall be occupied by a polyisocyanurate (polyiso) foam core. The polyiso foam shall have an average density of no less than

2.0 lbs/cubic foot as determined by ASTM D1622 and a compressive strength of no less than 20 lbs/square inch as measured by ASTM D1621.

Polyiso foam shall be cut using a saw capable of cutting the profiled shape of the compression reinforcement in the polyiso foam core to within ±1/8" per eight foot.

Acceptable products include:

a) ELFOAM® P200 as manufactured by Elliott Company of Indianapolis, Inc.
b) 2lbs foam as manufactured by PolyCel Inc, of Stow, Massachusetts
c) Approved equal.

(4) Structural Adhesives: The adhesive used in joining pieces of laminate together shall be a two-component, medium viscosity, solvent-free methyl methacrylate or epoxy suitable for bonding plastics.

Acceptable products include:

a) Plexus MA560-1 as manufactured by ITW
b) Extreme 360M and Extreme 350M as manufactured by Extreme Adhesives
c) Weld On SS230 HV as manufactured by IPS Corporation
d) MES135G as manufactured by Momentive Performance Materials
e) Approved equal.

b) Compression Reinforcement: The Compression Reinforcement shall consist of Self-Consolidating Concrete (SCC). The SCC shall conform to the requirements of Section 502 of the Standard Specifications and as follows:

1. Minimum compressive strength at 28 days shall be as shown on the Plans.
2. The minimum cementitious content shall be no less than 600 lbs per cubic yard.
3. The maximum water/cementitious material ratio shall be 0.42, which is to include pozzolans as cementitious material.
4. Target air content shall be 4% ± 3%.
5. The mix design shall contain either:
   Minimum 15% Fly ash by weight of total cementitious material, or
   Minimum 30% Granulated Blast Furnace Slag by weight of total cementitious material.
6. Coarse aggregate shall be a maximum 3/8 inch.
7. Minimum fine aggregate shall be not less than 45% of the total aggregate.
8. The mix shall contain a viscosity-modifying admixture at a dosage to be determined by the Contractor's Concrete Supplier.
9. The mix shall contain a hydration stabilizer dosed at a rate to ensure no hydration beginning for a minimum of three hours from batching or as needed by the ambient conditions at the time of concrete placement.
10. The mix shall contain a shrinkage compensating admixture dosed at a rate of 1.5 gal/cy. Acceptable shrinkage compensating admixtures include Eclipse 4500 by

WR Grace & Co., 1-877-423-6491 and Masterlife SRA 20 by BASF, 1-800-628-9990.

11. The measured spread of a slump flow test shall be within the range of 26 inches minimum and 30 inches maximum.

Permeability requirements of Section 502 of the Standard Specifications will be waived for SCC.

c) Tension Reinforcement: The Tension Reinforcement shall consist of one or more of the following:
   a. Seven-wire, Prestressed Concrete Strand (PC) conforming to the requirements of ASTM A416, Grade 270. Where indicated, the strand shall be zinc coated in accordance with ASTM A475 and stress-relieved after galvanizing and stranding. The Tension Reinforcement shall be cut and bent after galvanizing. Seven-wire, Galvanized Barrier Strand, Grade 270 is also an acceptable substitution for ASTM A416 Strand.
   b. Concrete Reinforcing Bars meeting the requirements of ASTM A615 or A706 Grade 60. Where indicated, the reinforcing bars shall be zinc coated (galvanized) in accordance with ASTM A767.
   c. Other mild steels as indicated in the Plans or in accordance with the final design meeting appropriate industry standards (ASTM, AISC, AASHTO, etc.) with the use of such materials, their source and fabrication subject to the approval of the engineer.

d) Shear Connectors: The Shear Connectors shall be ASTM A615 or A706 Grade 60 reinforcement bars. The Shear Connectors shall be zinc-coated (galvanized) in accordance with ASTM A767 after they have been cut and bent to the sizes and shapes indicated on the Plans. Bending tolerances and material certifications shall be in accordance with the appropriate sections of the Standard Specifications.

Equipment: Equipment shall be according to the following:

(1) Vacuum System: A vacuum capable of sustaining a pressure equal to 25 inches of mercury shall be required for the vacuum infusion of the FRP Shell. The vacuum system shall be outfitted with a reservoir system to accumulate any over filling of the matrix in the mold.

(2) Concrete Pump: For placement of the SCC, a boom type concrete pump truck may be allowed. The pump truck shall be capable of reaching all HCB's to be filled with one truckload of concrete, without moving the truck. Aluminum pipe or conduit will not be permitted in pumping or placing concrete. The Contractor shall also have a backup method in place for placing SCC, in the event of a pump truck failure. The backup method for placing the SCC shall be approved by the Resident Engineer, and in place and capable of restarting the SSC placement within ten minutes of the pump truck failure.

Working Drawings: Prior to beginning fabrication, the Contractor shall submit complete Working Drawings to the Department for review and approval in accordance with Section 105.7 'Working Drawings' of the Standard Specifications. Each drawing shall provide adequate space for review and approval stamps at the lower right corner. Each drawing shall be completely titled according to the contract plans, including structure number, state contract number, route, and town and shall pertain to only one structure. If the Working Drawings have significant discrepancies, revised sets must be submitted until details comply with the contract requirements. Changes to previously approved working drawings shall be subject to the approval of the Engineer of Record, and the Resident Engineer shall be supplied with a record of all such changes.

As a minimum, Working Drawings for Each Structure Shall include:

- Layout drawings identifying piece marks and orientation in the structure (including a North Arrow)
- Individual Piece Drawings indicating the length, depth and width of piece, along with the spacing of shear connectors, location of piece mark, weight, location of all holes and/or inserts, location of lifting points, pumping locations for compression reinforcement storage and transportation points, and any other information necessary to adequately build each beam.

Fabrication: Hybrid-Composite Beams shall be fabricated and stored according to the following requirements.

a) Preform Storage and Preparation: Glass fabrics, tension reinforcing and polyiso foam shall be stored above the ground in a clean, dry environment upon platforms, skids, or other supports. It shall be kept free from water, dirt, grease, or other foreign matter, and shall be protected from corrosive and or deleterious materials.

   Glass fabrics shall be sheared or water-jet cut to the shapes and dimensions indicated on the approved Working Drawings. The fabrics shall be cut on a clean cutting surface, free of any deleterious material that could adhere to the fabrics prior to placing in the tooling. Cut-outs within the glass fabric to accommodate details of the infusion process and/or details of the finished HCB shall be clearly indicated on the Working Drawings. Any cutting of rovings within a piece of glass fabric that exceeds 5 percent of the dimension parallel to the line of the cut may be rejected.

   Lap splices in the glass fabric will be permitted along the longitudinal direction of the beam. Lap splices shall be no less than 4-inches in length and placement shall be limited as follows:

   - No lap splice will be permitted within 6-feet of either end of the beam
   - If multiple, longitudinal splices are requires, the splices shall be spaced no less than 10-feet apart within a single layer of the FRP laminate

- If splices are required in adjacent layers of the laminate, the splices shall be staggered to provide no less than 2-feet between splices in adjacent layers of glass within the FRP laminate
- All proposed locations of lap splices shall be indicated on the approved Working Drawings

Tension Reinforcement shall be cut on a clean surface, free of any deleterious material that could adhere to the steel prior to placing in the tooling. Cutting of the Tension Reinforcement shall be performed utilizing a method that will not significantly alter the physical properties of the material. Cutting of the Tension Reinforcement with acetylene or plasma torches will not be permitted. Bends to the longitudinal strands necessary to produce the preformed Tension Reinforcement shall be made with a hydraulic press suitable to provide a tight uniform bend with a radius of no more than 3-inches. The tolerance on the out-to-out dimensions after bending of adjacent strands of Tension Reinforcement shall be +0, -1/2 inch. Tension reinforcement length may be adjusted as required to account for tolerance in the form.

Polyiso foam shall be prefabricated in large blocks to minimize the number of joints within the beam core. With the exception of some minor modifications to the blocks to accommodate manufacturing, the polyiso blocks shall be machine cut with a saw of sufficient throat to cut the entire depth of the section. All longitudinal cutting of the polyiso blocks to facilitate the shape of the compression reinforcement must be cut with a saw with sufficient depth to cut the entire depth of the section within the required tolerance. Once the longitudinal cuts for the compression reinforcement have been made, the separate pieces shall be match marked. Match marked pieces of polyiso foam shall be shipped and placed in the tooling to maintain the proper dimensions of the conduit for the compression reinforcement. Gaps in the joints between adjacent pieces of foam shall not exceed ¼-inch prior to pulling vacuum on the tooling. Additional processing for recesses and cutouts in the polyiso foam shall be performed with handheld and/or table mounted routers and saws suitable for the intended purpose.

Resins and other chemicals necessary for catalyzing the infusion matrix shall be stored in temperature-controlled environment, in accordance with the manufacturer's recommendations for each component.

b) Tooling: Tooling shall be capable of fabricating units to the dimensions required by the contract plans within all allowable tolerances. The tooling surfaces shall be manufactured of steel or FRP laminate skins of sufficient thickness so that they will remain true to shape under the vacuum infusion pressures. Clamps, pins and other connecting devices shall be designed to hold the tooling rigidly in place during placement of the preforms and application of vacuum pressure for infusion as well as to allow removal of the FRP Shell without damage to the laminate. If metal forms are used, they shall be free from rust, grease, or other foreign matter. ¾-inch radius fillets shall be built into the tooling at all sharp corners or as indicated on the Plans. The tooling shall be designed with monolithic joints and/or seals to facilitate an airtight chamber capable of sustaining 1 atmosphere of pressure, without any leaks for the duration of the infusion process.

The HCB's shall be manufactured to the dimensions shown on the Plans. Measurements of the product shall be recorded and compared to design plans and tolerances allowed. The dimensional tolerances for the tooling shall be as follows:

Maximum Allowable Dimensional Tolerances for HCB

HCB Component	**Inches (except as noted)**
Thickness of FRP Shell laminates	± 1/16 in.
Depth, overall	± ¼ in.
Width, overall	± ¼ in.
Length (string line measurement along bottom of beam)	± ¼ per 25 feet max ± ¾ in.
Variation from specified elevation and squareness or skew	± 1/8 in. per 12" depth max ± ¾ in.
Sweep	± ½" maximum
Camber variation from design camber	-½ in., +1/8 in. per 10 ft, +1 in. Max
Tipping and flushness of beam seat bearing area	± 1/8 in. per 24 inches
Shear reinforcing; longitudinal location	± 1 in.
Shear reinforcing; projection from beam surface	+ 1/2 in., - 1/2 in.

Prior to placement of preforms, the tooling shall be cleaned and coated with a semi-permanent form release agent common to the practice of composite manufacturing, e.g. Extend 19MDR or approved equal. Prior to charging the tooling with glass preforms, the Manufacturer may apply a gel coat to provide for protection of the laminate from Ultraviolet (UV) radiation in the completed FRP Shell.

c) Vacuum Assisted Resin Transfer: Prior to vacuum infusion of the vinyl-ester or polyester matrix, the Manufacturer must thoroughly seal the tooling and demonstrate that the sealed tooling can obtain a minimum vacuum pressure of 25 inches of Mercury and for that vacuum pressure to drop no more than 1" of mercury over a period of five of minutes.

Chemical additives and catalysts to be combined with the vinyl-ester resin shall be measured by weight, or the corresponding volume, based on the batch weight of the vinyl-ester resin. The HCB Fabricator shall maintain a log of each batch of resin and the weights or volumes of each constitutive material included in each batch. Once a batch of resin has been catalyzed, it must be thoroughly mixed and placed into the infusion resevoir within ten minutes. The manufacture may request an extension of time on a catalyzed batch, contingent on providing sufficient test data to demonstrate an extended gel time for the specific composition of the catalyzed matrix with a specified quantity of gel time inhibitor.

The infusion resevoir must be charged with a sufficient amount of resin at all times to prevent air bubbles from entering the infusion port(s) in the tooling. Once the matrix is introduced into the tooling, the infusion process shall continue, uninterrupted until it has been demonstrated that all evacuation ports have a surplus of resin flowing past the finished

surface of the tooling and that no less than the predicted volume of resin has been introduced into the tool.

In the absence of tests to determine the cured state of the resin matrix, the tooling shall remain in place, under at least 25 inches of mercury until at least 6 hours have elapsed after all evacuation lines have been clamped and the infusion process is considered to have been completed.

The FRP laminate comprising the shell shall be tested in accordance with the specified ASTM Standards in conformance with the minimum mechanical properties outlined in the table below. Adequate supporting documentation and the appointed values for the mechanical properties shall be obtained from the Manufacturer and provided to the Department.

PROPERTY	**UNITS**	**ASTM TEST METHOD**	**MINIMUM**
TENSILE STRENGTH Longitudinal Transverse	psi	D3039-07	 60,000 25,000
TENSILE MODULUS OF ELASTICITY Longitudinal Transverse	psi x 10^6	D3039-07	 3.10 3.10
COMPRESSIVE STRENGTH Longitudinal Transverse	psi	D695 or D6641	 20,000 20,000
SHEAR STRENGTH	psi	D7078	8,300
SHEAR MODULUS	psi x 10^6	D7078	0.85
WATER ABSORPTION	% max.	D570	0.7
DENSITY	lb./in^3	D792	0.060-0.068
SPECIFIC GRAVITY		D792	1.6-1.0
COEFFICIENT OF THERMAL EXPANSION (Longitudinal)	In./in./^{o}F	D696	6.0 x 10^6
GLASS CONTENT	% by weight	D2584	60

d) Post-Processing: Once the laminate of the FRP Shell has been sufficiently cured, the HCB may be removed from the tooling and ridges or fins (flash) of resin shall be removed by scraping or grinding as required. Any tooling or appurtenances internal to the FRP shell, necessary for forming of the compression reinforcement conduit shall be removed.

Subsequent to infusion of the bottom FRP Shell and the FRP top flange, the two match pieces shall be joined using structural adhesive. The two-part adhesive shall be mixed and applied in accordance with the manufacturer's recommendations, centered along the line of fasteners located along the top flange. Within the working time allowed for the adhesive, the

FRP top flange shall be joined to the top of the beam shell using self-tapping stainless steel, screws capable of supplying the necessary clamping force to ensure a secure bond. Fasteners shall be spaced no more than 3'-0" on center for the entire length of the beam.

Holes in the FRP Shell to facilitate the installation of Shear Connectors, diaphragm connections or reinforcing steel, anchor bolt studs and attachments for appurtenances shall be done by the Fabrication Contractor using tools designed for the cutting of FRP laminates, including carbide tipped drill bit, water-jet cutting or other suitable means. Once these holes have been drilled, thoroughly remove all debris, including residual chunks of foam from the internal conduit within the FRP Shell.

Handling, Storing and Transporting: The FRP Shell, without compression reinforcement, may be placed upright, upside down or on its side, as necessary for drilling and post-processing of the finished piece. Care shall be taken in the handling of the HCB not to damage the surface finish of the laminate.

Prior to moving any HCB FRP shell to storage, it shall be clearly marked with the mark number and date of fabrication of the FRP Shell in the location shown on the Working Drawings. All units shall be stored in an upright position on suitable dunnage, not in contact with the ground, at the support points shown on the approved working drawings. The FRP Shells may be stacked. When stacking, the HCB's shall be maintained in the upright position at all times and each beam shall be supported with cribbing supporting the upper beam in the same locations as the HCB's below. HCB's shall be protected against any accumulation of water in the compression reinforcement void while stored at the Manufacturer's facility.

HCB's shall not be approved for shipment until all dimension tolerances have been checked and the void for the compression reinforcement has been checked to ensure it is the proper size and free of any obstruction.

All HCB's shall be shipped upright at the transportation points shown on the approved working drawings. FRP shells may be stacked for shipping and shall be protected against any accumulation of water in the compression reinforcement void during transit.

If the HCB's are to be stored on site, the same provisions outlined above for storage at the manufacturer's facility shall apply. In addition, the beams should not be allowed to come into contact with seawater, mud, grease or other deleterious materials that may be present on a jobsite.

The Contractor shall be responsible for removal of any standing water within the FRP shell immediately prior to placement of the compression reinforcement.

If the HCB's are damaged during handling and storage prior to their incorporation into the structure, the damaged HCB's shall be repaired or replaced at the Resident Engineer's discretion and at no additional cost to the Department.

Erection: The Hybrid-Composite Beams shall be erected to the lines and grades as indicated in the Plans and in accordance with the requirements of these Special Provisions. At least thirty days prior to erection, the Contractor shall submit an Erection Plan indicating lifting methods, erection sequence, construction inserts and other pertinent information. Penetrations in the HCB Shells for construction purposes shall be shown on the erection plan and will not be permitted unless approved by the Engineer of Record.

A. Beams shall be placed on clean bridge seats and tops of bearing devices. Any shifting of beams shall be done while they are held free of the supports.

B. HCB's shall be handled with a suitable hoisting device or crane of sufficient capacity to handle the members. Nylon slings or other approved methods shall be used to prevent damage to the surface of the HCB's. Lifting anchors, in accordance with the approved working drawings, shall be cast into the ends of the beams during placement of the compression reinforcement.

C. Spreader beams shall be utilized at each end of the beam during lifting to ensure vertical lifting forces are directly over each web of beam. The Erection Plan shall demonstrate that the HCB's are not overstressed by the intended method of lifting and erecting.

D. The Contractor shall provide sufficient bracing of the beams to prevent rotation or instability during placement of the compression reinforcement and forming and casting of the deck and end diaphragms. Bracing shall also provide for a tie-down force to prevent displacement of the beams resulting from climatic events such as high winds or wave impact or other environmental or jobsite hazards, as required.

E. The shear connectors must be in place and positively secured prior to placing the compression reinforcement.

F. The compression reinforcement shall be placed in accordance with the approved filling plan and shall reach a minimum concrete strength of 3,500 psi prior to erecting the beams and placing the deck concrete.

G. Subsequent to placing the compression reinforcement in the HCB's and prior to placing the reinforcing steel for the deck, the longitudinal space between adjacent beams shall be formed and/or filled by the Contractor by suitable means to prevent leakage of mortar or other debris before or during casting of the bridge deck. The materials and methods for forming the deck shall be submitted to the Department for approval prior to initiating this work.

Placement of Compression Reinforcement:
The Contractor will place the compression reinforcement prior to erection of the HCB shells. The Contractor's Quality Control Technician (QCT) shall be present for all compression reinforcement concrete placements. The Contractor shall be responsible for ensuring that all requisite reinforcing bars, dowel bars and other inserts have been properly installed in the HCB shell prior to placing of the compression reinforcement.

Precast Compression Reinforcement:
The Contractor shall not receive any additional payment for any additional reinforcement or couplers that may be required to make connections between units or to cast-in-place reinforcing in the field. The HCB's shall be supported at the bearing areas as shown on the Plans (or other locations as shown on the approved Working Drawings). The HCB's shall be suitably braced during the placement of the compression reinforcement. HCB's shall not be moved after placement until the compression reinforcement has reached a minimum of 3,500 psi.

A. Written Placement Plan:
A written placement plan shall be submitted at least 30 days prior to the first placement of concrete compression reinforcement. The written placement plan shall provide as a minimum the following information:
1) List all equipment to be used. Manufacturer performance data will be required for any pumping equipment.
2) The concrete mix design to be used.
3) The intended method and sequence of placing the concrete. This shall include a concise written narrative and diagrams and/or photographs as necessary so that the process will be clearly defined.
4) The name(s) of the responsible person in charge for the Contractor

B. Pre-Placement Meeting:
The Contractor or the Engineer may request a Pre-Placement meeting upon approval of the Placement Plan. The meeting shall include the Contractor's Superintendent and responsible person in charge, the QCT, a representative from the pumping subcontractor (if any), a representative from the concrete supplier, the Resident Engineer, as well as representatives from the Department and HCB, Inc.

C. Placing Compression Reinforcement:
Concrete shall not be placed until the HCB's and shear connectors have been checked and approved by the Resident Engineer. The beams shall be clean of all debris and the HCB shell purged of any standing water.

The only acceptable method(s) shall be that approved in the placement plan. The SCC for the compression reinforcement shall be pumped into the HCB at the locations shown on the approved working drawings. If a concrete pump is used, the concrete pressure at the discharge end of the pump shall be no more than 10 psi. The filling shall continue until there is sufficient evidence at vent ports at the ends of the beams that the conduit for the compression reinforcement is completely filled. Once filling has been initiated for any given HCB, the beam must be completely filled without delay. Cold joints in compression reinforcement will not be allowed. Adjustments to the placement plan based on ambient conditions and field experience will be allowed after the completion of the first beam with the concurrence of the Resident Engineer.

Although SCC is a flowable concrete that is designed for placement with no vibration, the Contractor may find it necessary or may be directed to use vibrators to ensure that the HCB shell is completely filled with the compression reinforcement and free of any air voids. For

this purpose, 2-inch diameter holes may be drilled into the top flange of the HCB shell at four-foot intervals along the top flange in the end quarter of each end to accommodate a conventional concrete vibrator. Furthermore, the Contractor shall have on site, a drill and 2-inch diameter drill-bit or hole saw capable of drilling additional holes as needed for placement of the compression reinforcement. Prior to drilling any additional holes necessary for placement of the concrete, the Contractor must receive written approval from the Engineer of Record.

In addition, hand placement of concrete may be used to completely fill the final few inches of the beam. It is the Contractors responsibility to ensure each beam is completely filled. Due to the nature of SCC Concrete, the contractor may have to remove some foam or excessive bleed water by placing additional concrete by hand in the injection or vibration openings after pumping is complete until such time as concrete appears to the tops of these openings.

Care shall be taken to prevent mortar from spattering on the HCB shell and, reinforcing steel and forms. Concrete or mortar that becomes dried on the HCB, reinforcing steel or forms shall be thoroughly cleaned off before the final covering with concrete. Upon completion of the bridge structure, the HCB's shall be cleaned of all concrete, mortar or other materials present on the HCB shells in a manner that does not damage the HCB's and as approved by the Resident Engineer.

No less than 24 hours after the placement of the compression reinforcement, but prior to placing the deck reinforcement, the Contractor, shall inspect the beam(s) containing cast compression reinforcement for voids. The inspection shall consist of a minimum of the following:

- Visual Inspection of all openings including around the shear connectors and embedded items for voids;
- Sounding along the top flange for voids using a hammer
- Drilling through the FRP top flange where voids are suspected by either of the two methods above to ensure complete filling of the beams.

If the inspection indicates the presence of voids, they shall be filled using either the same SCC concrete mix, an approved prepackaged grout with the same 28 day compressive strength as the SCC mix or the deck concrete placement when the void is completely exposed to the deck and the opening is not less than 1" across in any direction. Voids not filled with the deck concrete placement shall be re-inspected to ensure the void has been filled.

D. Delivery:

Delivery and discharge of the concrete from the mixer shall be completed within a maximum of 2½ hours from the time that the cement is added. Placement of concrete in any given HCB shall not be initiated until the Contractor has demonstrated that there is sufficient concrete located at the site as verified by the Resident Engineer for placement in the final structure. The Contractor may request permission from the Resident Engineer to add water or admixtures to the mixture before or after discharge has been initiated from the mixer as long as the amount of additional water does not exceed the maximum water/cement ratio for

the approved mix design. Concrete that is allowed to stand in the pump line for a period of more than ten minutes shall be purged from the line and shall not be utilized for compression reinforcement and a slump flow range test shall be required before continuing pumping operations. Recirculation of concrete shall not be considered "standing" for this specification.

E. Temperature Restrictions: Concrete Temperature when pumped into the HCB's shall not exceed 75ºF. Placement shall not be initiated unless the ambient temperature is at least 40ºF and below 80 degrees F. Conversely, placement shall not be initiated if the temperature of the HCB shell is in excess of 90 ºF. Concrete, which has been rejected for any reason, shall be removed immediately from the job site and disposed of properly at the Contractor's expense.

Method of Measurement and Basis of Payment: Item No. 509.70 Composite Beam will be paid for at the lump sum price. Payment shall be compensation for handling and erecting the HCB's. Related materials and work include storing beams, placement of reinforcing steel and shear connectors and any other inserts that are cast into the compression reinforcement, placement of the compression reinforcement including grout voids, installation of mechanical couplers for prefilled beams, temporary bracing and all submittals required for approval prior to execution of this work and any other work specified in this special provision or in Section 502 of the Standard Specifications. Anchor bolts, shim plates, and bearings shall be paid for under separate items.

Payment will be made under:

Pay Item		Pay Unit
509.70	Composite Beam	Lump Sum

SPECIAL PROVISION
SECTION 510
SPECIAL DETOURS

Section 510, Special Detours, of the Standard Specifications is replaced in its entirety with the following:

510.01 Description This work shall consist of the design, construction, maintenance in good condition, and removal of the Sunset Ave Special Detour (temporary detour) required for the satisfactory maintenance of vehicular traffic. The general location of the Sunset Ave temporary detour is shown on plan sheet 80 as well as ROW plan sheets 90 and 91.

Easements or right-of-way for the Special Detour will be furnished by the Department and will be shown on the Contract Plans. If the Contractor proposes an alternative location for the Special Detour, and the alternative location is approved by Department, that easement may only be acquired by the Department. All additional costs associated with the acquisition, including but not limited to obtaining easements, environmental mitigation, restoration and Department time, shall be borne by the Contractor.

510.02 Materials The Materials used for the Special Detour shall conform to the detailed plans and specifications submitted by the Contractor and as noted in this Special Provision.

510.03 Vehicular and Pedestrian Traffic Not Separated The Special Detour shall be located as close as practicable to the alignment shown on the plans as noted above.

The Special Detour shall be designed and sealed by a Professional Engineer, licensed in accordance with the laws of the State of Maine. The Contractor shall submit the design computations and detailed plans that will serve as the temporary detour to the Resident prior to beginning construction of the Special Detour.

If the Department requires changes to Temporary Detour plans or computations, based on Contract requirements, then the Contractor shall implement the changes at no additional cost to the Department.

The Department shall have no obligation to review or comment on any design, construction, maintenance or removal of Temporary Detour. No review or comment by the Department, or any lack of review or comment by the Department, shall relieve the Contractor of its responsibility to properly design,

construct, maintain in good condition, and remove Temporary Detour in accordance with the Contract, or to shift any responsibility to the Department. The Contractor shall be responsible for all damages resulting from any failure of the temporary detour.

The Special Detour shall not be opened to traffic until the Professional Engineer who designed the special detour inspects the detour and provides the Department with a signed and sealed document certifying that the detour was built in accordance with the previously submitted sealed plans and design details.

510.032 Geometric Design The geometric design of the Special Detour, except as otherwise shown on the plans or as noted herein, shall be designed in accordance with the current AASHTO Specification "A Policy on Geometric Design of Highways and Streets" and the MaineDOT Highway Design Guide. The following design criteria shall be met:

1. The horizontal alignment shall be designed for a 25 mph posted speed. The horizontal alignment shown on the plans is for informational purposes only. The actual detour baseline may vary.

2. The roadway travel lane and shoulder widths shall be as indicated on the typical sections and as per the requirements of this specification.

3. The roadway width shall be increased at intersections and on curved portions of the Special Detour to account for the off tracking characteristics of the following design vehicles; School Bus, SU, and WB-50.

4. The roadway typical section is provided on plan sheet 80. Roadway widths, cross slopes, side slopes, pavement and gravel depths are provided. These parameters shall be used in the Special Detour design.

5. Clearing, tree removal and stump removal shall be completed as required to construct the Special Detour.

6. Grubbing of the existing ground surface within the limits of the roadway construction is required.

7. Stabilization geotextile shall be used in areas of existing soft wet soil conditions.

8. The minimum vertical roadway grade shall be 0.5% and maximum vertical grade shall be 8%.

9. The stopping sight distance for the vertical alignment shall be adequate for 25 mph and stall meet a minimum distance of 155 feet.

10. In accordance with the environmental permitting requirements, the special detour shall be constructed in a fill condition with no ditches from sta. 40+00 to sta. 51+00. Within these limits, the side slope treatments shall be comprised of a 2" compost blanket and seeding method #2. Compost Blanket shall be installed according to Special Provision – Section 615.081, Compost Blanket – Highway Inslopes. Erosion control mix berms shall be installed at the toe of slopes. Sizing of the berms shall be in accordance with the MaineDOT BMP Manual. See typical section attached to this specification for additional information.

11. Guardrail shall be required in areas where the side slopes exceed three horizontal to one vertical. If required, guardrail type 3c shall be used and NCHRP 350 compliant guardrail end treatments shall be provided in the design. Guardrail design shall be in accordance with the latest version of the AASHTO Roadside Design Guide manual.

12. Embankments shall be constructed from suitable earth material, as shown in the Contractor's plans submitted to the Resident. The earth material shall have sufficient strength under the placement method specified in the Contractor's plans to maintain stability throughout the duration of the Special Detour.

13. The road base structure shall be consistent with the typical section on the plans. Aggregate subbase coarse - gravel shall be used.

14. Surface drainage shall be designed to properly drain the area. Ditches shall be avoided in areas noted in item #10 above. Cross pipes, where required, shall be designed to accommodate the anticipated drainage flows and adequate cover over the cross pipes shall be provided. Drainage overtopping of the road will not be permitted.

15. The road surface, excluding the shoulders, shall be paved with a 2 inch, minimum thickness hot mix asphalt 12.5mm surface pavement (403.208 pavement mix type) accepted at the discretion of the Resident.

16. The side slopes shall be treated with 2" loam, seeding method #2 and mulch in areas not receiving the 2" compost blanket, as noted in item #10 above.

17. The clear zone shall be calculated. Hazards within the clear zone of the Special Detour shall be removed or protected with guardrail.

18. The design speed of the Special Detour shall be 25 mph.

19. Signing and striping for the Special Detour shall be designed in accordance with the latest version of the MUTCD manual. Stop signs are required at both ends of the Special Detour. A 3-way stop condition shall be proposed at the eastern end of the Special Detour.

20. Proper temporary and permanent erosion control measures shall be provided with the Special Detour design. Erosion control shall be in accordance with the MaineDOT BMP manual.

510.06 Special Detour Construction The Special Detour shall be constructed in accordance with the plans submitted by the Contractor. Barricades, warning signs and other traffic control devices shall be provided in accordance with the Contract and the approved Traffic Control Plan.

The road surface, including shoulders whether paved or graveled, shall be constructed and maintained in a compacted smooth condition, as determined and approved by the Resident. Immediate corrective action shall be taken by the Contractor to remedy objectionable roughness of the Special Detour riding surface.

Erosion control shall be accomplished in accordance with Section 656 - Temporary Soil Erosion and Water Pollution Control.

When the detour is no longer required, the temporary detour shall be removed to, or below, the original ground line, as applicable. The disturbed areas shall be stabilized to original, or better than original, conditions. The provisions of Section 104 - General Rights and Responsibilities, shall apply.

510.07 Contractor's Responsibility The Contractor shall be responsible for removal of snow from areas along the Special Detour in accordance with Section 105, General Scope of Work. In addition to normal maintenance, should any part, or all, of the Special Detour be damaged by any cause, prior to, or after, opening the Special Detour to traffic, it shall be repaired or replaced by the Contractor without additional compensation.

510.08 Method of Measurement Special Detour will be measured by the lump sum.

510.09 Basis of Payment The accepted Special Detour will be paid for at the contract lump sum price which price shall be full compensation for the respective items, as called for in the Contract, including design, construction, maintenance,

complete removal, rehabilitation and permanent stabilization, including loaming, seeding and mulching. All pavement, gravel or borrow material and excavation needed to accommodate changes in elevation between the existing ground and proposed roadway shall be incidental to this item. The lump sum price shall also include the cost of furnishing and revising, as necessary, all plans, computations and certifications, as called for in the Contract. The lump sum price shall also include signing, striping, stabilization geotextile, loam, seed, mulch, drainage features including cross pipes, guardrail, clearing, tree and stump removal, grubbing and all other related items needed to complete the work. The lump sum price shall include all labor, equipment and materials to complete the work.

Traffic control devices, temporary erosion control, and dust control will be paid in accordance with the applicable Contract items and not under the 510 pay item. Also, the compost blanket will be paid for separately under pay item 615.081.

Payment will be made under:

Pay Item	Pay Unit
510.10 Special Detour – Sunset Ave	Lump Sum

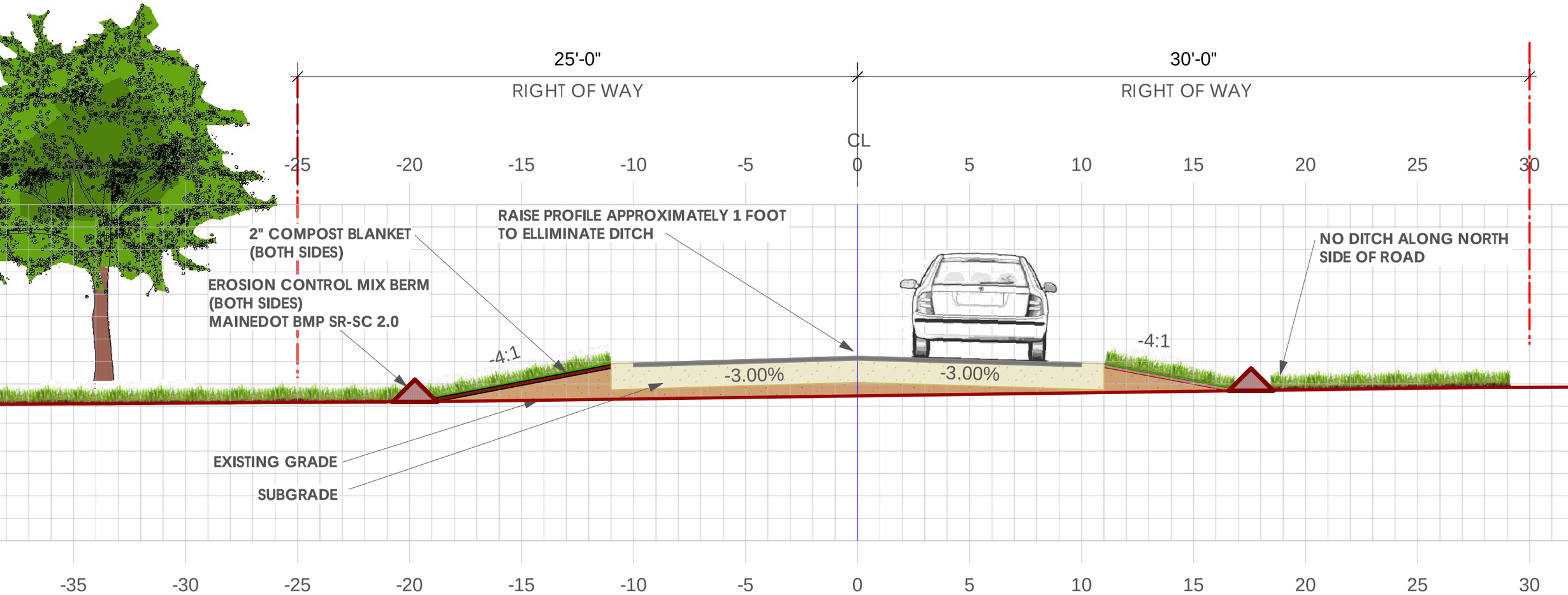

NOTE:
COMPOST BLANKET INSTALLED ACCORDING TO
SPECIAL PROVISION - SECTION 615.081
COMPOST BLANKET – HIGHWAY INSLOPES

FIGURE 1

BANGOR 16681 - TEMPORARY ROAD
PROPOSED STORMWATER TREATMENT
TYPICAL CROSS SECTION
Station 40+25 To Station 51+00

SPECIAL PROVISION
SECTION 511
COFFERDAMS
(Temporary Earth Support Systems)

Section 511, Cofferdams, is deleted in its entirety and replaced with the following:

511.01 Description

This work shall consist of the complete design, construction, maintenance and removal of all temporary earth support systems including, but not necessarily limited to, cofferdams, caissons, cribs and sheeting, and other related work, including dewatering, required to allow for the excavation of foundation pits; to permit and protect the construction of structural units; to allow for the demolition and/or construction of the concrete abutments, piers, foundations and wingwalls; removal and/or construction and maintenance of approach roadways; and any other work requiring temporary earth support mandated by OSHA, Subpart P, Excavation Requirements, or required for the maintenance of traffic. The temporary earth support systems shall meet all of the applicable requirements of the Standard Specifications.

511.02 Materials

A minimum of three weeks prior to the start of work, the Contractor shall submit the proposed method of temporary earth support. The submission shall include working drawings and list the type and size of the proposed support, details of construction, calculations and a sequence of operations all to be designed and sealed by a Professional Engineer registered in the State of Maine. This Professional Engineer may be directly employed or otherwise retained by the Contractor. Construction shall not be started on temporary earth support systems until such plans are approved. Approval of the plans shall not relieve the Contractor of the responsibility for the satisfactory functioning of the temporary earth support systems.

Temporary Earth Support Systems shall be designed to support all vertical, horizontal, longitudinal and differential settlement forces. Sufficient redundancy shall be designed into the support system so that failure of one member will not cause the collapse of the entire system. Temporary earth support systems, which are adjacent to traveled ways, shall additionally be designed to resist any vibration or impact forces due to traffic and shall incorporate sufficient protection against impact by errant vehicles.

Prior to excavating or loading the temporary earth support systems, the Professional Engineer responsible for the design of the temporary earth support systems shall, after inspection of the temporary earth support systems, provide a sealed

certification to the Resident that the systems were erected in conformance with the Professional Engineer's plans and design details.

The submission shall also show the Contractor's proposed method of excavation, water diversion and dewatering methods (sumps, wells, seal concrete, or well points) to
minimize the flow of groundwater into the excavation. Such methods should preserve the undisturbed condition of the subgrade and permit foundation construction in-the-dry.

511.03 Temporary Earth Support System Construction

Temporary earth support systems shall, in general, be carried well below the elevation of the bottom of footings, and shall be well braced and as watertight as necessary for the proper construction of the foundation. Unless it is contemplated that a concrete foundation seal will be placed under water, the interior dimensions of temporary earth support systems shall be such as to give sufficient clearance for the construction and inspection of forms and to permit pumping outside of forms. Temporary earth support systems shall be so constructed that water will not come in contact with concrete as required in Section 502, Structural Concrete.

During the placing of seal concrete, the elevation of the water inside the temporary earth support systems shall be controlled to prevent any flow through the concrete.

No timber or bracing shall be used in temporary earth support systems in such a way as to remain in the substructure masonry.

Temporary earth support systems shall be constructed to protect fresh concrete against damage from the sudden rising of the waterbody and to prevent damage by erosion.

Unless otherwise provided, temporary earth support systems, including all sheeting and bracing involved, shall be removed after the completion of the substructure; care being taken not to disturb or otherwise injure the finished masonry.

511.04 Pumping

Pumping from the interior of any foundation enclosure shall be done in such a manner as to prevent any current of water that would carry away or segregate the concrete.

Pumping to dewater a sealed temporary earth support system shall not commence until the seal concrete has set sufficiently to withstand the hydrostatic pressure. In no case will pumping be permitted until a minimum of five days has

elapsed since the completion of the installation of the seal concrete, when the temperature of the waterbody outside the temporary earth support system is greater than 4°C [40°F], or a minimum of seven days has elapsed since the completion of the installation of the seal concrete, when the temperature of the waterbody outside the temporary earth support systems is less than 4°C [40°F].

Sediment laden water will not be allowed to leave the Project area. The Contractor shall be required to install appropriate erosion and sedimentation control devices as approved by the Resident. Erosion and sedimentation control devices may include plain riprap, hay bales, silt fence and sedimentation basins.

All water and materials pumped from excavation shall be pumped into a sedimentation basin which is of sufficient volume to detain the pumped water and materials. The water and materials removed from the excavation shall be pumped at a rate that permits infiltration of the water into the earth, preventing any overland flow or direct discharge into a stream or other waterbody.

511.05 Method of Measurement

Cofferdams will be measured as one lump sum unit, as indicated on the plans or called for in the contract.

511.06 Basis of Payment The accepted quantity of cofferdam will be paid for at the contract lump sum price for the respective cofferdam items.

When required, the elevation of the bottom of the footing of any substructure unit may be lowered, without change in the price to be paid for Cofferdam. However, if the average elevation of more than 25% of the area of the excavation is more then 3 feet below the elevation shown on the plans, and if requested by the Contractor, then the entire cost of the cofferdam will be paid in accordance with Section 109.7 – Equitable Adjustments to Compensation, instead of at the contract lump sum price.

All cost of construction, maintaining, and removing a sedimentation basin and pumping or transporting water and other materials to the sedimentation basin will not be paid for directly but will be considered incidental to cofferdam pay item(s).

All cost of related temporary soil erosion and water pollution controls, including inspection and maintenance, will not be paid for directly but will be considered incidental to the cofferdam pay items(s).

No direct payment will be made for Temporary Earth Supports Systems. All cost, regardless of the number of temporary earth support structures required at the site, including full compensation for design, furnishing materials, excavation, installation, removal, tools, equipment and labor necessary to construct, maintain and remove

the work in accordance with the Plans or called for in the Contract shall be considered incidental to related contract items.

	Pay Item	Pay Unit
511.07	Cofferdam – Abutment #1	Lump Sum
511.07	Cofferdam – Pier	Lump Sum
511.07	Cofferdam – Abutment #2	Lump Sum

Revised: 7-1-13

SECTION 515 - PROTECTIVE COATING FOR CONCRETE SURFACES

515.01 Description This work shall consist of furnishing and applying a protective coating on concrete surfaces as called for on the Plans or as designated by the Resident in accordance with these specifications.

515.02 Materials Materials shall meet the requirements of Type 1c penetrating silane concrete sealers, from the MaineDOT Qualified Products List (QPL).

515.03 Surface Preparation On surfaces to be treated, all voids shall be filled with mortar and the entire surface shall be dressed by dry rubbing to remove form marks and blemishes to present a neat appearance. The concrete shall remain dry for at least 48 hours before treatment and shall be free of laitance, oil, grease, dirt and dust. All traces of dust shall be removed immediately before applying the silane sealer.

The treatment shall not be done until at least 14 days after casting the concrete, or in accordance with the manufacturer's published recommendations, and completed at least 24 hours before the treated portion is opened to traffic.

515.04 Application The application rate and method of application shall be in accordance with the manufacturer's published recommendations.

When practical, treatment of the concrete surfaces shall be completed before exposure to deicing salts. The temperature of the concrete to be treated shall be above 40°F at the time of application, or per the manufacturer's published recommendations.

515.05 Method of Measurement Protective coating for concrete surfaces will be measured for payment by the square yard or lump sum unit as specified, satisfactorily applied and accepted.

515.06 Basis of Payment Protective coating for concrete surfaces will be paid for at the contract unit price per square yard or lump sum, as specified.

Payment will be made under:

	Pay Item	Pay Unit
515.20	Protective Coating for Concrete Surfaces	Square Yard
515.21	Protective Coating for Concrete Surfaces	Lump Sum

May 13, 2008
Supercedes June 24, 2004

SPECIAL PROVISION
SECTION 526
CONCRETE BARRIER
(Temporary Concrete Barrier)

Materials

Temporary concrete barriers must be connected in accordance with Standard Detail 526(02) except as indicated below:

The top of the rod may be hooked over the top connector instead of using the hex nut and washer.

SPECIAL PROVISION
SECTION 527
ENERGY ABSORBING UNIT
(ET-Plus)

Description: This work shall consist of furnishing and installing an ET-Plus crash cushion as a permanent energy absorbing system in accordance with these specifications at locations shown on the Plans or as directed by the Resident.

Materials: The Energy Absorbing Unit shall be the NCHRP 350 Test Level 3 ET-Plus system as manufactured by Trinity Highway Products as approved and crash tested by the Federal Highway Administration.

Installation: A set of installation drawings shall be submitted to the Resident for the system installed. The system shall be installed according to the manufacturer's recommendations and the installation drawings.

Method of Measurement: Energy Absorbing Units shall be measured by each unit, complete, in place, and accepted.

Basis of Payment: The accepted quantity of Energy Absorbing Units shall be paid for at the contract unit price, such payment being full compensation for all labor, materials, equipment, and incidentals necessary to complete the work.

Payment will be made under:

Pay Item		Unit
527.303	Energy Absorbing System (ET-Plus)	Each

SECTION 603 - PIPE CULVERTS AND STORM DRAINS

603.01 Description This work shall consist of constructing or reconstructing pipe culverts and storm drains, in accordance with these specifications, the Standard Detail plans and in reasonably close conformity with the lines and grades shown on the plans or established.

The word "pipe" in these specifications shall include both round pipe and pipe arches..

603.02 Materials Meet Sections:

Joint Mortar	705.02
Flexible Gaskets	705.03
Flexible Culvert Polyvinylchloride (PVC) Pipe	706.08
Corrugated Steel, Metallic Coated Pipe	707.02
Corrugated Aluminum Alloy Pipe & Pipe Arches	707.06
Polymer Precoated, Galvanized Corrugated Steel	707.07
Pipe & Pipe Arches	
Aluminum Coated (Type 2) Corrugated Steel Pipe	707.10
Zinc-Coated (Galvanized) Corrugated Steel Pipe	707.11
Rigid Culvert	
Reinforced Concrete Pipe	706.02
Corrugated Polyethylene Pipe	706.06
Corrugated Polypropylene Pipe	706.10

Flexible culverts with a diameter of 48 inches or more shall have the ends cut to a partial bevel as called for on the plans. The cut ends of galvanized steel pipe shall be regalvanized or painted with a zinc aluminum paint conforming to Federal Specification TT-P-1561A or an approved equal.

Helical corrugated pipe shall be re-rolled to form angular corrugations on the ends.

The corrugated bands for connecting pipe with $2^2/_3$ inches by ½ inch corrugations shall be not less than 10½ inches wide.

Rigid culverts, designated to have the ends shaped to a partial bevel, shall be either cast or cut to the required shape and dimensions. In either case, the edges of the pipe shall be even and true with no exposed reinforcing.

603.03 Construction Requirements

603.031 General Culvert pipe and pipe arches shall be furnished under the following options unless otherwise specified.

Option I The Contractor shall furnish any of the following type of pipe under Option I:

Corrugated Steel, Metallic (zinc or aluminum) Coated Pipe
Reinforced Concrete Pipe
Corrugated Polyethylene Pipe
Corrugated Polypropylene Pipe
Any of the metal pipes allowed under Option III.

Option III The Contractor shall furnish any of the following types of pipe under Option III. (Corrugated pipe used under this option shall be adequate to equal the flow capacity of comparable smoothlined pipe):

Corrugated Aluminum Alloy Pipe
Polyvinylchloride (PVC) Pipe
Polymer-Precoated Galvanized Corrugated Steel Pipe
Reinforced Concrete Pipe
Corrugated Polyethylene Pipe
Corrugated Polypropylene Pipe

Within any single run of culvert pipe, including extensions of existing culverts, the type of pipe shall be the same unless otherwise specified or as directed by the Resident. In a closed drainage system, a run of culvert pipe shall be considered from catch basin to catch basin. In an open drainage system, a run of culvert shall be considered from inlet to outlet.

Option III polyvinylchloride (PVC) pipe shall only be used in closed drainage systems, between catch basins.

603.0311 Corrugated Polyethylene or Polypropylene Pipe for Option III If inspection by the Resident reveals an unsatisfactory installation, the Resident may direct the contractor to test installed Smooth Lined Corrugated Polyethylene or Polypropylene Pipe for Option III to ensure the vertical deflection does not exceed the maximum allowable deflection. Maximum allowable deflection shall be 5 percent of the sum of the nominal inside diameter minus a 1.5 percent undersize tolerance.

Deflection tests shall not be performed until at least 30 days after completion of installation and compaction of backfill. The pipe shall be cleaned and inspected for offsets and obstructions before testing.

For all pipes 24 inches and smaller, a mandrel shall be pulled through the pipe by hand to ensure the maximum allowable deflections have not been exceeded. The mandrel shall be certified by the Department prior to use. If the mandrel fails to pass through the pipe, the pipe will be deemed overdeflected.

For pipes greater than 24 inches, deflections shall be determined by a method submitted and approved by the Department. If a mandrel is selected, the minimum diameter and length and

other requirements shall conform to the dimensions and requirements stated below. If other methods are used the measurements shall meet the minimum mandrel diameter requirements.

Any overdeflected pipe shall be uncovered and if not damaged as determined by the Department shall be allowed for reinstallation. Damaged pipe shall not be reinstalled and shall be removed from the work site.

The mandrel shall be a rigid non-adjustable, odd numbered-leg (9 legs minimum) mandrel having an effective length not less than its nominal diameter and having a minimum diameter at any point along the full length as follows:

Nominal Size inches	Minimum Mandrel Diameter inches		
12	11.23		
15	14.04		
18	16.84		
24	22.46		
30	28.07		
36	33.69		
42	39.30		
48	44.92		
60	56.15		

When deflection testing reveals overdeflected pipe, all costs incurred by the Contractor including mandrel and deflection testing, reinstallation of pipe and delays shall be the responsibility of the Contractor. When deflection testing reveals satisfactory pipe, all costs for deflection testing will be paid for by the Department.

603.032 Excavation Trenches shall be excavated in accordance with the requirements of Section 206 - Structural Excavation and wide enough to allow joining the culvert and compacting the bedding and backfill material under and around the culvert. Unless otherwise designated, trench walls shall be as nearly vertical as possible and the trench width no greater than necessary for installation of the culvert.

603.04 Bedding Culverts, less than 42 inches in diameter, shall be bedded on a firm foundation of uniform density. After placing the culvert pipe, backfill material shall be placed along the bottom of the trench, thoroughly tamped against the lower portion of the pipe with special care taken not to move the bedded pipe.

For culverts 42 inches in diameter and larger, the bottom of the trench shall be compacted to uniform density and shaped to fit a template with reasonable closeness for at least 10 percent of the culvert's total height.

On all bedding, when bell and spigot pipe is used, the portion of trench at the joints shall be shaped to fit the bell.

603.05 Laying Culvert The Contractor shall not install nor backfill culverts between December 15th and April 1st without written permission. Installing shall begin at the downstream end of the culvert line. Bell or groove ends of rigid culverts shall be placed facing upstream.

Elliptically shaped culverts shall be placed with the major axis within 5 degrees of vertical. Elliptically reinforced concrete pipe shall be placed with the vertical axis, indicated by the manufacturer, within 5 degrees of vertical.

603.06 Joining Culverts The method of joining rigid culvert sections shall be such that the ends are fully entered and the inner surfaces are reasonably flush and even. Joints shall be made with portland cement mortar, portland cement grout, rubber ring gaskets, or flexible plastic gaskets.

The pipe ends shall be thoroughly cleaned before the joint is made. Mortared joints shall be made with an excess of mortar to form a bead around the outside of the culvert and finished smooth inside. For grouted joints, molds or runners shall be used to retain the poured grout.

Joints with rubber ring gasket or flexible plastic gasket shall be made in accordance with the manufacturer's recommended procedures.

When portland cement mixtures are used, the completed joints shall be covered to protect against drying.

Flexible culvert section and metal end sections shall be firmly jointed by coupling bands. These bands shall meet the same applicable requirements as the flexible culvert being joined.

603.07 Shop Strutting All flexible circular culvert pipe 48 inches in diameter and larger shall be elongated along the vertical diameter in accordance with one of the following two methods:

a) The pipe shall be elongated by the manufacturer after fabrication by increasing the diameter along the vertical axis approximately 3 percent with a corresponding decrease along the horizontal axis. The elongation shall be obtained by installing rods and tightening the rods, uniformly from end to end of the pipe, obtaining approximately one quarter of the required elongation each time throughout the length of the pipe.

The rods shall be ⅝ inch diameter threaded 7 inches at both ends with washers and nuts. The length of the rods shall be the diameter of the pipe plus 8 inches. The rods shall be placed on the horizontal axis of the pipe at 2 foot spacing and located halfway between the circumferential riveting. A block of soft wood 2 inches by 4 inches by 12 inches long, shall be placed over the rods at each end to provide contact against the outside of the pipe. The

long dimension of the blocks shall be parallel with the horizontal axis of the pipe. The rods shall be left in the pipe until the fill is completed and compacted, unless for some unusual condition their removal is ordered. The rods shall be removed by cutting from the inside adjacent to the pipe.

(b) The pipe shall be elongated by the manufacturer by increasing the diameter along the vertical axis approximately 5 percent with a corresponding decrease along the horizontal axis by applying sufficient pressure to the sides of the pipe after fabrication to produce the specified distortion. The elongation shall be maintained by drilling holes in the ends of the pipe sections and placing and tightening horizontal wires. After the pipe sections have been installed with coupling bands, the wires shall be removed.

Helically corrugated culvert sections shall be match marked before being elongated by the manufacturer or before the ⅝ inch diameter rods are installed.

603.08 Backfilling Culverts and Storm Drains After the pipe is installed, it will be inspected before any backfill material is placed. All pipe found to be out of alignment, unduly settled or damaged to the extent that full performance is impaired, shall be taken up and re-laid or replaced.

Trenches shall be backfilled in accordance with Section 206.03 and as follows. The backfill material shall be thoroughly rammed under the haunches of the pipe with power or pneumatic operated hand tampers. The remainder of the backfill shall be thoroughly compacted with power tampers or vibratory compactors or other approved equipment or combination of equipment.

When the top of the pipe is exposed above the top of the trench, the embankment material around the pipe shall be placed and compacted on each side of the pipe in the aforementioned manner described for backfilling trenches, for a width of 5 feet measured from the outside diameter of the pipe. Only that portion of the embankment on each side and top of the pipe, for a minimum distance of 15 inches measured from the outside diameter of the pipe, must be of material conforming to the requirements described for backfilling in Section 206.03. Backfill material beyond these limits may contain stones larger than 3 inches but no greater than the thickness of the layer being placed. The embankment construction around the pipe shall continue up to an elevation 15 inches above the top of the pipe. Beyond these limits, the embankment shall be placed and compacted in accordance with the embankment construction requirements specified for the work except where the induced trench method is called for on the plans.

When construction equipment is used or traffic is maintained the Contractor shall provide a minimum cover of 3 feet over all pipes, if possible. Whenever this cover extends above the subgrade the Contractor shall temporarily place earth, which shall be removed when necessary to complete the work in accordance with the plans, or as directed. Any deviation from this practice shall have prior approval.

603.09 Induced Trench Under this method, for designated rigid pipes only, the embankment shall be completed as specified above, to a height above the culvert equal to the vertical outside diameter of the pipe plus 1 foot. A trench, equal in width to the outside horizontal diameter of the pipe, shall then be excavated to within 1 foot of the top of the pipe. Trench walls shall be as nearly vertical as possible. Hay bales shall be used to fill the lower 1/4 to 1/3 of the trench. Construction of the embankment above shall then proceed in a normal manner. The trench shall be loosely filled with highly compressible soil.

603.10 Removing and Relaying Culverts The pipe shall be carefully removed from its existing location, transported to and installed in the new location in accordance with these specifications for the particular type of pipe involved. Pipe damaged by the Contractor shall be replaced with pipe of similar type by the Contractor without additional compensation.

New metal bands or joint material shall be supplied and installed when necessary.

603.11 Method of Measurement Culvert and storm drain pipe of the different types and sizes, both new and re-laid, will be measured by the length in linear feet along the invert, laid as directed, complete in place, and accepted. Pipe laid in excess of the authorized length will not be included.

When the ends of a pipe are sloped or skewed, the amount to be included for payment shall be the length along the invert of the pipe.

When elbows, tees, wyes, or other special fittings are required, each fitting shall be included for payment as 3 additional linear feet of the largest pipeline involved.

Inlet grate units will be measured by each unit installed, complete in place, and accepted.

Concrete pipe ties shall be measured per Group (2 ties per Group).

603.12 Basis of Payment The accepted quantities of pipe for culverts and storm drains will be paid for at the contract unit price per linear foot, for the types and sizes specified, complete in place.

No payment will be made for pipe ordered without written approval of the Resident when such pipe is not required to be installed for completion of the work.

Excavation for culverts and storm drains, including excavation below the pipe, for induced trench and for bedding and backfilling will be considered incidental, except as provided in Section 206 - Structural Excavation.

Whenever minimum cover material extends above the subgrade, removal of the cover material necessary to complete the work will not be paid for directly but shall be considered part of the work specified herein.

Coupling bands and joint material will not be paid for separately but shall be considered included in the unit bid price for the type of pipe being used or re-laid.

Existing culverts to be re-laid, salvaged, or wasted shall be removed and disposed of as directed. The excavation for removal of these culverts that is not paid for under other items or incidental to other items shall be paid for as Common Excavation.

Inlet grate units will be paid for at the contract unit price each for the size specified, complete in place.

The accepted quantity of concrete pipe ties will be paid for at the contract unit price per Group. Such payment will be full compensation for furnishing, installing, and all other necessary incidentals for satisfactory completion of the work. Any grout or mortar necessary to repair chipping shall be incidental to the installation of the pipe ties.

Payment will be made under:

Pay Item		Pay Unit
603.15	12 inch Culvert Pipe Option I	Linear Foot
603.16	15 inch Culvert Pipe Option I	Linear Foot
603.17	18 inch Culvert Pipe Option I	Linear Foot
603.18	21 inch Culvert Pipe Option I	Linear Foot
603.19	24 inch Culvert Pipe Option I	Linear Foot
603.20	30 inch Culvert Pipe Option I	Linear Foot
603.21	36 inch Culvert Pipe Option I	Linear Foot
603.159	12 inch Culvert Pipe Option III	Linear Foot
603.169	15 inch Culvert Pipe Option III	Linear Foot
603.179	18 inch Culvert Pipe Option III	Linear Foot
603.189	21 inch Culvert Pipe Option III	Linear Foot
603.199	24 inch Culvert Pipe Option III	Linear Foot
603.2009	27 inch Culvert Pipe Option III	Linear Foot
603.209	30 inch Culvert Pipe Option III	Linear Foot
603.2019	33 inch Culvert Pipe Option III	Linear Foot
603.219	36 inch Culvert Pipe Option III	Linear Foot
603.229	42 inch Culvert Pipe Option III	Linear Foot
603.239	48 inch Culvert Pipe Option III	Linear Foot
603.249	54 inch Culvert Pipe Option III	Linear Foot
603.259	60 inch Culvert Pipe Option III	Linear Foot
603.269	66 inch Culvert Pipe Option III	Linear Foot
603.279	72 inch Culvert Pipe Option III	Linear Foot
603.289	84 inch Culvert Pipe Option III	Linear Foot
603.30	21 inch span by 15 inch rise Pipe Arch Option III	Linear Foot
603.31	24 inch span by 18 inch rise Pipe Arch Option III	Linear Foot
603.32	28 inch span by 20 inch rise Pipe Arch Option III	Linear Foot
603.33	35 inch span by 24 inch rise Pipe Arch Option III	Linear Foot
603.34	42 inch span by 29 inch rise Pipe Arch Option III	Linear Foot

603.35	49 inch span by 33 inch rise Pipe Arch Option III	Linear Foot
603.36	57 inch span by 38 inch rise Pipe Arch Option III	Linear Foot
603.37	64 inch span by 43 inch rise Pipe Arch Option III	Linear Foot
603.38	66 inch span by 51 inch rise Pipe Arch Option III	Linear Foot
603.39	73 inch span by 55 inch rise Pipe Arch Option III	Linear Foot
603.40	81 inch span by 59 inch rise Pipe Arch Option III	Linear Foot
603.41	24 inch Reinforced Conc. Pipe Class IV	Linear Foot
603.42	30 inch Reinforced Conc. Pipe Class IV	Linear Foot
603.43	36 inch Reinforced Conc. Pipe Class IV	Linear Foot
603.44	42 inch Reinforced Conc. Pipe Class IV	Linear Foot
603.45	48 inch Reinforced Conc. Pipe Class IV	Linear Foot
603.46	54 inch Reinforced Conc. Pipe Class IV	Linear Foot
603.47	60 inch Reinforced Conc. Pipe Class IV	Linear Foot
603.48	66 inch Reinforced Conc. Pipe Class IV	Linear Foot
603.49	72 inch Reinforced Conc. Pipe Class IV	Linear Foot
603.55	Concrete Pipe Ties	Group
603.73	Remove and Relay Metal Pipe: _____	Linear Foot
603.7315	Remove and Relay 15 inch Metal Pipe	Linear Foot
603.7318	Remove and Relay 18 inch Metal Pipe	Linear Foot
603.7324	Remove and Relay 24 inch Metal Pipe	Linear Foot
603.733	Remove and Relay 30 inch Metal Pipe	Linear Foot
603.7336	Remove and Relay 36 inch Metal Pipe	Linear Foot
603.7348	Remove and Relay 48 inch Metal Pipe	Linear Foot
603.7372	Remove and Relay 72 inch Metal Pipe	Linear Foot
603.74	Remove and Relay Concrete Pipe: _____	Linear Foot
603.7415	Remove and Relay 15 inch Concrete Pipe	Linear Foot
603.7418	Remove and Relay 18 inch Concrete Pipe	Linear Foot
603.7421	Remove and Relay 21 inch Concrete Pipe	Linear Foot
603.7424	Remove and Relay 24 inch Concrete Pipe	Linear Foot
603.743	Remove and Relay 30 inch Concrete Pipe	Linear Foot
603.7436	Remove and Relay 36 inch Concrete Pipe	Linear Foot
603.7442	Remove and Relay 42 inch Concrete Pipe	Linear Foot
603.7448	Remove and Relay 48 inch Concrete Pipe	Linear Foot
603.7454	Remove and Relay 54 inch Concrete Pipe	Linear Foot
603.746	Remove and Relay 60 inch Concrete Pipe	Linear Foot
603.7472	Remove and Relay 72 inch Concrete Pipe	Linear Foot
603.75	6 inch Inlet Grate Unit	Each
603.76	12 inch Inlet Grate Unit	Each
603.77	15 inch Inlet Grate Unit	Each
603.78	18 inch Inlet Grate Unit	Each
603.79	21 inch Inlet Grate Unit	Each
603.80	24 inch Inlet Grate Unit	Each
603.81	30 inch Inlet Grate Unit	Each
603.82	36 inch Inlet Grate Unit	Each

706.10 Corrugated Polypropylene Pipe for Option I and Option III Culvert Pipe

Option I/III pipe and fittings shall conform to the requirements of AASHTO M 330 Type S (dual wall) or Type D (triple wall). All polypropylene pipe shall be smooth lined and shall meet the pipe stiffness requirements of AASHTO M 330. The manufacturing plants of polypropylene pipe shall participate annually in the National Transportation Product Evaluation Program (NTPEP) process for plastic pipe and resins which includes audits by the AASHTO Materials Reference Laboratory (AMRL). Plants shall be listed as "Compliant" on the NTPEP website and take immediate corrective action for any deficiencies found during audits. Continued compliance with all elements of the NTPEP/AMRL program and the Maine DOT manufactured Materials Verification Program will be required in order to continue supplying product to the Maine DOT.

Bangor
WIN 19256.00
December 12, 2013

SPECIAL PROVISION
SECTION 603
Pipe Culverts and Storm Drains

603.12 Basis of Payment: This section shall be amended with the addition of the following:

Pay Item		Pay Unit
603.165	15" Reinforced Concrete Pipe, Class III	Linear Foot

SPECIAL PROVISION
SECTION 606
GUARDRAIL

606.01 Description This work shall consist of furnishing and installing guardrail components in accordance with these specifications and in reasonably close conformity with the lines and grades shown on the plans or as established. The types of guardrail are designated as follows:

Type 3-Galvanized steel "w" beam, wood posts or galvanized steel posts.
Type 3a-Galvanized steel "w" beam, wood posts, wood or composite offset blocks.
Type 3aa-Corrosion resistant steel "w" beam, wood posts, wood or composite offset blocks.
Type 3b-Galvanized steel "w" beam, galvanized steel posts, galvanized steel offset blocks.
Type 3c-Galvanized steel "w" beam, wood posts or galvanized steel posts, wood or composite offset blocks.
Type 3d-Galvanized steel "w" beam, galvanized steel posts, wood or composite offset blocks.
Thrie Beam-Galvanized steel thrie beam, wood posts or galvanized steel posts, wood or composite offset blocks.

Median barriers shall consist of two beams of the above types, mounted on single posts. Except for thrie beam, median barriers may include rub rails when called for.

Bridge mounted guardrail shall consist of furnishing all labor, materials, and equipment necessary to install guardrail as shown on the plans. This work shall also include drilling for and installation of offset blocks if specified, and incidental hardware necessary for satisfactory completion of the work.

Remove and Reset and Remove, Modify, and Reset guardrail shall consist of removing the existing designated guardrail and resetting in a new location as shown on the plans or directed by the Resident. Remove, Modify, and Reset guardrail and Modify guardrail include the following guardrail modifications: Removing plate washers at all posts, except at anchorage assemblies as noted on the Standard Details, Adding offset blocks, and other modifications as listed in the Construction Notes or General Notes. Modifications shall conform to the guardrail Standard Details.

Bridge Connection shall consist of the installation and attachment of beam guardrail to the existing bridge. This work shall consist of constructing a concrete end post or modifying an existing endpost as required, furnishing, and installing a terminal connector, necessary hardware, and incidentals required to complete the work as shown on the plans. Bridge Transition shall consist of a bridge connection and furnishing and installing guardrail components as shown in the Standard Details.

606.02 Materials Materials shall meet the requirements specified in the following Sections of Division 700 - Materials:

Timber Preservative	708.05
Metal Beam Rail	710.04
Guardrail Posts	710.07
Guardrail Hardware	710.08

Guardrail components shall meet the applicable standards of "A Guide to Standardized Highway Barrier Hardware" prepared and approved by the AASHTO-AGC-ARTBA Joint Cooperative Committee, Task Force 13 Report.

Posts for underdrain delineators shall be “U” channel steel, 2.44m [8 ft] long, 3.72 kg/m [2 ½ lb/ft] minimum and have 9.5 mm [3/8 in] round holes, 25 mm [1 in] center to center for a minimum distance of 610 mm [2 ft] from the top of the post.

Reflectorized Flexible Guardrail Markers shall be mounted on all guardrails. A marker shall be mounted onto guardrail posts at the flared end treatment’s terminal and its tangent point, both at the leading and trailing ends of each run of guardrail. The marker’s flexible posts shall be grey with either silver-white or yellow reflectors (to match the edge line striping) at the tangents, red at leading ends, and green at trailing ends. Whenever the end treatment is not flared, markers will only be required at the end treatment’s terminal. These shall be red or green as appropriate. Markers shall be installed on the protected side of guardrail posts unless otherwise approved by the Resident. Reflectorized flexible guardrail markers shall be from the Maine DOT’s Approved Product List of Guardrail Material. The marker shall be grey, flexible, durable, and of a non-discoloring material to which 75 mm [3 in] by 225 mm [9 in] reflectors shall be applied, and capable of recovering from repeated impacts. Reflective material shall meet the requirements of Section 719.01 for ASTM D 4956 Type III reflective sheeting. The marker shall be secured to the guardrail post with two fasteners, as shown in the Standard Details.

Reflectorized beam guardrail (“butterfly”-type) delineators shall be mounted on all “w”-beam guardrail. The delineators shall be mounted within the guardrail beam at guardrail posts. Delineators shall be fabricated from high-impact, ultraviolet & weather resistant thermoplastic. Reflectorized beam guardrail delineators shall be placed at approximately 20 m [62.5 ft] intervals or every tenth post on tangents and at approximately 10 m [31.25 ft] intervals or every fifth post on curves. Exact locations of the delineators shall be as directed by the Resident. On divided highways, the left hand delineators shall be yellow and the right hand delineators shall be silver/white. On two directional highways, the right hand side shall be silver/white and no reflectorized delineator used on the left. All reflectors shall have reflective sheeting applied to only one side of the delineator facing the direction of traffic as shown in the Standard Detail 606(07). Reflectorized sheeting for guardrail delineators shall meet the requirements of Section 719.01.

Single wood post shall be of cedar, white oak, or tamarack, well seasoned, straight, and sound and have been cut from live trees. The outer and inner bark shall be removed and all knots trimmed flush with the surface of the post. Posts shall be uniform taper and free of kinks and bends.

Single steel post shall conform to the requirements of Section 710.07 b.

Single steel pipe post shall be galvanized, seamless steel pipe conforming to the requirements of ASTM A120, Schedule No. 40, Standard Weight.

Acceptable multiple mailbox assemblies shall be listed on the Department’s Approved Products List and shall be NCHRP 350 tested and approved.

The Guardrail 350 Flared Terminal shall be a terminal with a 1.2 m [4 ft] offset as shown in the Manufacturer's installation instructions.

Existing materials damaged or lost during adjusting, removing and resetting, or removing, modifying, and resetting, shall be replaced by the Contractor without additional compensation. Existing guardrail posts and guardrail beams found to be unfit for reuse shall be replaced when directed by the Resident.

606.03 Posts Posts for guardrail shall be set plumb in holes or they may be driven if suitable driving equipment is used to prevent battering and distorting the post. When posts are driven through pavement, the damaged area around the post shall be repaired with approved bituminous patching. Damage to lighting and signal conduit and conductors shall be repaired by the Contractor.

When set in holes, posts shall be on a stable foundation and the space around the posts, backfilled in layers with suitable material, thoroughly tamped.

The reflectorized flexible guardrail markers shall be set plumb with the reflective surface facing the oncoming traffic. Markers shall be installed on the protected side of guardrail posts. Markers, which become bent or otherwise damaged, shall be removed and replaced with new markers.

Single wood posts shall be set plumb in holes and backfilled in layers with suitable material, thoroughly tamped. The Resident will designate the elevation and shape of the top. The posts, that are not pressure treated, shall be painted two coats of good quality oil base exterior house paint.

Single steel posts shall be set plumb in holes as specified for single wood posts or they may be driven if suitable driving equipment is used to prevent battering and distorting the post.

Additional bolt holes required in existing posts shall be drilled or punched, but the size of the holes shall not exceed the dimensions given in the Standard Details. Metal around the holes shall be thoroughly cleaned and painted with two coats of approved aluminum rust resistant paint. Holes shall not be burned.

606.04 Rails Brackets and fittings shall be placed and fastened as shown on the plans. Rail beams shall be erected and aligned to provide a smooth, continuous barrier. Beams shall be lapped with the exposed end away from approaching traffic.

End assemblies shall be installed as shown on the plans and shall be securely attached to the rail section and end post.

All bolts shall be of sufficient length to extend beyond the nuts but not more than 13 mm [½ in]. Nuts shall be drawn tight.

Additional bolt holes required in existing beams shall be drilled or punched, but the size of the holes shall not exceed the dimensions given in the Standard Details. Metal around the holes shall be thoroughly cleaned and painted with two coats of approved aluminum rust resistant paint. Holes shall not be burned.

606.045 Offset Blocks The same offset block material is to be provided for the entire project unless otherwise specified.

606.05 Shoulder Widening At designated locations the existing shoulder of the roadway shall be widened as shown on the plans. All grading, paving, seeding, and other necessary work shall be in accordance with the Specifications for the type work being done.

606.06 Mail Box Post Single wood post shall be installed at the designated location for the support of the mailbox. The multiple mailbox assemblies shall be installed at the designated location in accordance with the Standard Details and as recommended by the Manufacturer. Attachment of the mailbox to the post will be the responsibility of the home or business owner.

606.07 Abraded Surfaces All galvanized surfaces of new guardrail and posts, which have been abraded so that the base metal is exposed, and the threaded portions of all fittings and fasteners and cut ends of bolts shall be cleaned and painted with two coats of approved rust resistant paint.

606.08 Method of Measurement Guardrail will be measured by the meter [linear foot] from center to center of end posts along the gradient of the rail except where end connections are made to masonry or steel structures, in which case measurement will be as shown on the plans.

Terminal section, low volume end, NCHRP 350 end treatments, reflectorized flexible guardrail marker, terminal end, bridge transition, bridge connection, multiple mailbox post, and single post will be measured by each unit of the kind specified and installed.

Widened shoulder will be measured as a unit of grading within the limits shown on the plans.

Excavation in solid rock for placement of posts will be measured by the cubic meter [cubic yard] determined from the actual depth of the hole and a hypothetical circle diameter of 600 mm [2 ft].

606.09 Basis of Payment The accepted quantities of guardrail will be paid for at the contract unit price per meter [linear foot] for the type specified, complete in place. Reflectorized beam guardrail (“butterfly”-type) delineators will not be paid for directly, but will be considered incidental to guardrail items. Terminal section, buffer end, NCHRP 350 end treatment, bridge connection, single post and reflectorized flexible guardrail markers will be paid for at the contract unit price each for the kind specified complete in place.

NCHRP 350 end treatments and low volume guardrail ends will be paid for at the contract price each, complete in place which price shall be full payment for furnishing and installing all components including the terminal section, posts, offset blocks, "w" beam, cable foundation posts, plates and for all incidentals necessary to complete the installation within the limits as shown on the Standard Details or the Manufacturer’s installation instructions. Each end treatment will be clearly marked with the manufacturers name and model number to facilitate any future needed repair. Such payment shall also be full compensation for furnishing all material, excavating, backfilling holes, assembling, and all incidentals necessary to complete the work, except that for excavation for posts or anchorages in solid ledge rock, payment will be made under Pay Item 206.07. Type III Retroreflective Adhesive Sheeting

shall be applied to the approach buffer end sections and sized to substantially cover the end section. On all roadways, the ends shall be marked with alternating black and retroreflective yellow stripes. The stripes shall be 75 mm [3 in] wide and sloped down at an angle of 45 degrees toward the side on which traffic is to pass the end section. Guardrail 350 flared terminal shall also include a set of installation drawings supplied to the Resident.

Anchorages to bridge end posts will be part of the bridge work. Connections thereto will be considered included in the unit bid price for guardrail.

Guardrail to be placed on a radius of curvature of 45 m [150 ft] or less will be paid for under the designated radius pay item for the type guardrail being placed.

Widened shoulder will be paid for at the contract unit price each complete in place and will be full compensation for furnishing and placing, grading and compaction of aggregate subbase and any required fill material.

Adjust guardrail will be paid for at the contract unit price per meter and will be full compensation for adjusting to grade. Payment shall also include adjusting terminal end treatments where required.

Modify guardrail will be paid for at the contract unit price per meter and will be full compensation for furnishing and installing offset blocks, additional posts, and other specified modifications; removing, modifying, installing, and adjusting to grade existing posts and beams; removing plate washers and backup plates, and all incidentals necessary to complete the work. Payment shall also include removing and resetting terminal ends where required.

Remove and Reset guardrail will be paid for at the contract unit price per meter and will be full compensation for removing, transporting, storing, reassembling all parts, necessary cutting, furnishing new parts when necessary, reinstalling at the new location, and all other incidentals necessary to complete the work. Payment shall also include removing and resetting terminal ends when required. No payment will be made for guardrail removed, but not reset and all costs for such removal shall be considered incidental to the various contract pay items.

Remove, Modify, and Reset guardrail will be paid for at the contract unit price per meter and will be full compensation for the requirements listed in Modify guardrail and Remove and Reset guardrail.

Bridge Connections will be paid for at the contract unit price each. Payment shall include, attaching the connection to the endpost including furnishing and placing concrete and reinforcing steel necessary to construct new endposts if required, furnishing and installing the terminal connector, and all miscellaneous hardware, labor, equipment, and incidentals necessary to complete the work.

Bridge Transitions will be paid for at the contract unit price each. Payment shall include furnishing and installing the thrie beam or “w”-beam terminal connector, doubled beam section, and transition section, where called for, posts, hardware, precast concrete transition curb, and any other necessary materials and labor, including the bridge connection as stated in the previous paragraph.

Payment will be made under:

	Pay Item	Pay Unit
606.15	Guardrail Type 3a-Single Rail	meter [Linear Foot]
606.151	Guardrail Type 3aa-Single Rail	meter [Linear Foot]
606.17	Guardrail Type 3b-Single Rail	meter [Linear Foot]
606.1721	Bridge Transition - Type I	Each
606.1722	Bridge Transition - Type II	Each
606.1731	Bridge Connection - Type I	Each
606.1732	Bridge Connection - Type II	Each
606.178	Guardrail Beam	meter [Linear foot]
606.18	Guardrail Type 3b - Double Rail	meter [Linear foot]
606.19	Guardrail Type 3a - 4.5 m [15 ft] radius and less	meter [Linear Foot]
606.191	Guardrail Type 3aa - 4.5 m [15 ft] radius and less	meter [Linear Foot]
606.20	Guardrail Type 3a - over 4.5 m [15 ft] radius	meter [Linear Foot]
606.201	Guardrail Type 3aa - over 4.5 m [15 ft] radius	meter [Linear Foot]
606.21	Guardrail Type 3b - 4.5 m [15 ft] radius and less	meter [Linear Foot]
606.22	Guardrail Type 3b - over 4.5 m [15 ft] radius	meter [Linear Foot]
606.23	Guardrail Type 3c - Single Rail	meter [Linear Foot]
606.2301	Guardrail Type 3c - Double Rail	meter [Linear Foot]
606.231	Guardrail Type 3c - 4.5 m [15 ft] radius and less	meter [Linear Foot]
606.232	Guardrail Type 3c - over 4.5 m [15 ft] radius	meter [Linear Foot]
606.24	Guardrail Type 3d - Single Rail	meter [Linear Foot]
606.2401	Guardrail Type 3d - Double Rail	meter [Linear Foot]
606.241	Guardrail Type 3d - 4.5 m [15 ft] radius and less	meter [Linear Foot]
606.242	Guardrail Type 3d - over 4.5 m [15 feet] radius	meter [Linear Foot]
606.25	Terminal Connector	Each
606.257	Terminal Connector - Thrie Beam	Each
606.265	Terminal End-Single Rail - Galvanized Steel	Each
606.266	Terminal End-Single Rail - Corrosion Resistant Steel	Each
606.275	Terminal End-Double Rail - Galvanized Steel	Each
606.276	Terminal End-Double Rail - Corrosion Resistant Steel	Each
606.353	Reflectorized Flexible Guardrail Marker	Each
606.354	Remove and Reset Reflectorized Flexible Guardrail Marker	Each
606.356	Underdrain Delineator Post	Each
606.358	Guardrail, Modify, Type 3b to 3c	meter [Linear Foot]
606.3581	Guardrail, Modify Existing to Type 3d	meter [Linear Foot]
606.362	Guardrail, Adjust	meter [Linear Foot]
606.365	Guardrail, Remove, Modify, and Reset, Type 3b to 3c	meter [Linear Foot]
606.3651	Guardrail, Remove, Modify, and Reset Existing to Type 3d	meter [Linear Foot]
606.366	Guardrail, Removed and Reset, Type 3c	meter [Linear Foot]
606.367	Replace Unusable Existing Guardrail Posts	Each
606.47	Single Wood Post	Each
606.48	Single Galvanized Steel Post	Each
606.50	Single Steel Pipe Post	Each

606.51	Multiple Mailbox Support	Each
606.55	Guardrail Type 3 - Single Rail	meter [Linear Foot]
606.551	Guardrail Type 3 - Single Rail with Rub Rail	meter [Linear Foot]
606.56	Guardrail Type 3 - Double Rail	meter [Linear Foot]
606.561	Guardrail Type 3 - Double Rail with Rub Rail	meter [Linear Foot]
606.568	Guardrail, Modify Type 3c -Double Rail	meter [Linear Foot]
606.59	Guardrail Type 3 - 4.5 m [15 ft] radius and less	meter [Linear Foot]
606.60	Guardrail Type 3 - over 4.5 m [15 ft] radius	meter [Linear Foot]
606.63	Thrie Beam Rail Beam	meter [Linear Foot]
606.64	Guardrail Thrie Beam - Double Rail	meter [Linear Foot]
606.65	Guardrail Thrie Beam - Single Rail	meter [Linear Foot]
606.66	Terminal End Thrie Beam	Each
606.70	Transition Section - Thrie Beam	Each
606.71	Guardrail Thrie Beam - 4.5 m [15 ft] radius and less	meter [Linear Foot]
606.72	Guardrail Thrie Beam - over 4.5 m [15 ft] radius	meter [Linear Foot]
606.73	Guardrail Thrie Beam - Single Rail Bridge Mounted	meter [Linear Foot]
606.74	Guardrail Type 3 - Single Rail Bridge Mounted	meter [Linear Foot]
606.753	Widen Shoulder for Low Volume Guardrail End - Type 3	Each
606.754	Widen Shoulder for Guardrail 350 Flared Terminal	Each
606.78	Low Volume Guardrail End - Type 3	Each
606.79	Guardrail 350 Flared Terminal	Each

1. Reflectorized Flexible Guardrail Markers shall be from Maine DOT's Approved Product List of Guardrail Material.

2. Installation:
   a. Each bolt-hole diameter shall be the bolt diameter + 1/16".
   b. Wood post attachment - attach marker with 2, 5/16" diameter zinc-coated lag bolts, having 2" of embedment into wood post.
   c. Steel post attachment - attach marker with 2, 1/4" diameter zinc-coated bolt, washer and nut assemblies, having 1/2" of bolt extension behind steel post.
   d. When provided by the marker manufacturer, a stiffening pipe shall be inserted into the base of the marker prior to drilling bolt holes and shall remain in-place.

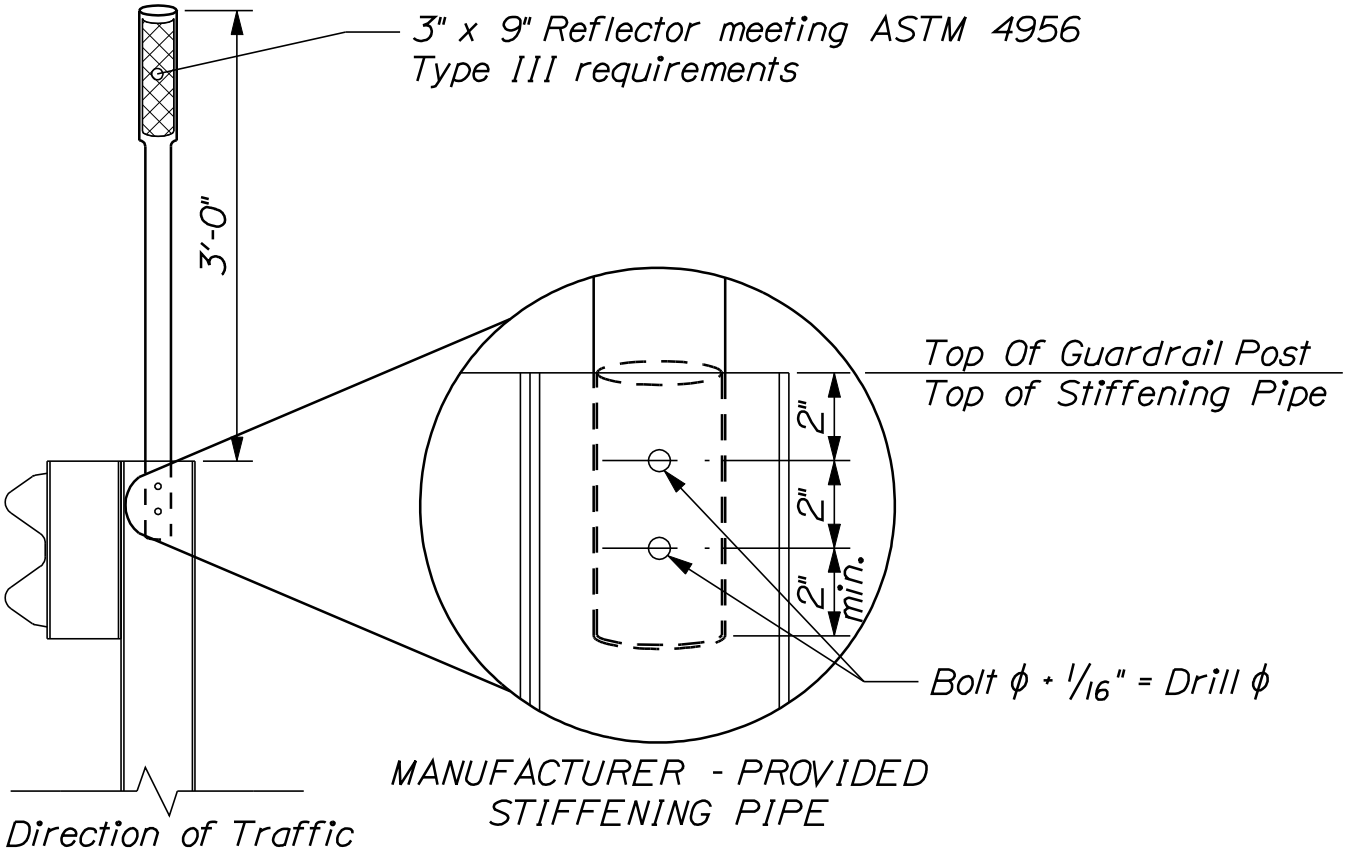

REFLECTORIZED FLEXIBLE GUARDRAIL MARKER DETAILS

606(34)

SPECIAL PROVISION
SECTION 606
GUARDRAIL
(Remove and Dispose)

This Section of the Standard Specifications is amended by the addition of the following:

Description This work shall consist of the removing and disposing of existing beam guardrail, as indicated on the plans.

CONSTRUCTION REQUIREMENTS

General The existing guardrail shall be removed and shall become the property of the Contractor to be disposed of off the project.

Method of Measurement Guardrail, Remove and Dispose, will be measured by the linear foot of rail.

Basis of Payment The quantity of Guardrail, Remove and Dispose, will be paid for at the contract unit price per linear foot.

Payment will be made under:

Pay Item	Pay Unit
606.363 Guardrail, Remove and Dispose	Linear Foot

SPECIAL PROVISION
SECTION 606
GUARDRAIL
(Removed and Stacked)

This Section of the Standard Specifications is amended by the addition of the following:

Description This work shall consist of the removing existing beam guardrail along the Interstate 95 median and stacking, as indicated on the plans and noted herein.

CONSTRUCTION REQUIREMENTS

General The existing guardrail shall be removed and stacked and shall remain the property of the MaineDOT. The Contractor shall take care while removing, delivering and stacking the guardrail to avoid any damage. The Contractor shall deliver and stack the existing guardrail at the Bangor, Hogan Road Maintenance Facility. Coordinate work and delivery with the Resident.

Method of Measurement Guardrail, Removed and Stacked, will be measured by the linear foot of rail.

Basis of Payment The quantity of Guardrail, Removed and Stacked, will be paid for at the contract unit price per linear foot. Payment shall include removal, delivery and stacking of material and shall include all labor, equipment and materials necessary to complete the work.

Payment will be made under:

Pay Item	Pay Unit
606.369 Guardrail, Removed and Stacked	Linear Foot

SPECIAL PROVISION
SECTION 607
FENCES
(Chain Link Snow Fence – 3 Foot)

Materials

Posts, rails, and braces shall be manufactured by one of the following methods with the steel conforming to ASTM A1011 or ASTM A1008 and A1011/A1011M with minimum yield strength 50 ksi:

Furnace butt welded, continuous welded
Cold rolled and electric resistance welded
Seamless

The Piping shall conform to the following dimensions:

Nominal Diameter In.	**Outside Diameter In.**	**Minimum Wall Thickness In.**	**Mass Lb/Ft.**
1 ½	1.900	.145	2.72
2 ½	2.875	.203	5.79

Hardware shall be hot dipped galvanized in accordance with AASHTO M 232 (ASTM A 153) or AASHTO M 298 Class 50 (ASTM B 695 Class 50).

The chain link fabric shall be 9 gauge steel, zinc coated conforming to AASHTO M 181 Type 1 Class D (ASTM A 392), aluminum-coated conforming to AASHTO M181 Type II (ASTM A 491), or 6 gauge aluminum alloy conforming to AASHTO M 181 Type III (ASTM F 1183). Chain-link fabric shall be knuckled on top and bottom. The size of the wire mesh shall be 1 inch. Wire ties shall be standard round 9 gauge zinc or aluminum coated steel or 6 gauge aluminum alloy conforming to ASTM F 626. All ties shall be wrapped around chain-link fabric twice (double pigtailed) at both ends. Space ties @ 6“o.c. to bottom rail and @ 12” o.c. at all posts and other rails.

Method of Measurement

This work shall consist of the construction of a chain link fence installed on the bridge in accordance with the Plans and these Specifications. Measurement will be center of post to center of post in reasonably close conformity with the details as shown on the Plans or as directed by the Resident.

Basis of Payment

This work shall be paid for at the contract unit price per Linear Foot, complete and accepted in place. Such price will be full compensation for furnishing all materials, labor, equipment, and incidentals to complete the work. Payment will be made under:

Pay Item		Pay Unit
607.184	Chain Link Snow Fence 3’	Linear Foot

SPECIAL PROVISION
SECTION 607
FENCES
(Screening Fence)

Description: This work shall consist of furnishing, installing maintaining, and adjusting a 4' tall privacy screen located on top of the temporary bridge rail and temporary concrete barrier. Screening fence shall be used along Union Street during stage construction or as determined by the resident. The purpose of the privacy screen is to block the driver's view of the construction area. The gap in the privacy screen at the joints between the temporary concrete barriers shall be kept to a minimum. The privacy screen shall have adequate strength and a solid connection to the temporary bridge rail and temporary concrete barrier that shall be approved by the resident.

Method of Measurement: Screening fence shall be measured for payment per linear foot.

Basis of Payment: The accepted quantity of screening fence will be paid for at the contract unit price of linear foot, which payment will be full compensation for furnishing, installing, maintaining, adjusting, relocating, and including all labor, equipment, materials and incidentals necessary to complete the work, accepted in place.

Payment will be made under:

Pay Item		Pay Unit
607.421	Screening Fence	Linear Feet

SPECIAL PROVISION
SECTION 608
DETECTABLE WARNINGS
(Cast Iron)

Description This work shall consist of furnishing and installing curb ramp detectable warning plates with truncated domes at the locations shown on the plans or as established by the Resident.

MATERIALS

Detectable Warnings The Contractor shall provide new cast iron detectable warning plates as manufactured by one of the manufacturers listed on Maine DOT's Qualified Products list of Cast Iron Detectable Warning Plates. This list can be found at:

http://www.maine.gov/mdot/tr/qpl/

Each field shall match the width of the ramp and shall have a natural finish.

Prior to starting this work, the Contractor shall submit for approval the name of the selected supplier, manufacturer's literature describing the product, installation procedures, and routine maintenance required.

Concrete Portland cement concrete shall meet the requirements of Section 502, Structural Concrete, Class A

CONSTRUCTION REQUIREMENTS

Existing Concrete Curb Ramps Existing Concrete shall be saw-cut to a dimension 100mm [4 in] larger than the detectable warning plates. New concrete shall be placed in the resulting opening and finished, and the new plates set into the wet concrete, according to manufacturer recommendations. New plates shall be set square with the curb edge and the base of the truncated domes shall be flush with adjacent surfaces to allow proper drainage.

New Concrete Curb Ramps New concrete shall be placed and finished for the ramp, and the new plates set into the wet concrete, according to manufacturer recommendations. New plates shall be set square with the curb edge and the base of the truncated domes shall be flush with adjacent surfaces to allow proper drainage

New Asphalt Ramps Asphalt shall be saw cut and removed to provide an opening that will allow for the dimensions of the cast iron plate surrounded by an additional 100mm [4 in] border on all sides of the plate. New concrete shall be placed in the resulting opening and finished, and the new plates set into the wet concrete, according to manufacturer

recommendations. New plates shall be set square with the curb edge and the base of the truncated domes shall be flush with adjacent surfaces to allow proper drainage.

Method of Measurement Detectable warning fields properly placed and accepted shall be measured for payment by the square meter [ft^2]. Measurement shall include actual plate area, not surrounding concrete.

Basis of Payment Payment will be full compensation at the contract unit price for all labor, materials, and equipment required to install the detectable warning fields. This shall include surface preparation and removal of concrete or asphalt, and necessary replacement concrete. On new concrete ramps, concrete shall be paid for under separate items

Pay Item		Pay Unit
608.26	Curb Ramp Detectable Warning Field	Square Meter [Square Foot]

VIEWS AND DETAILS OF THE DETECTABLE WARNING

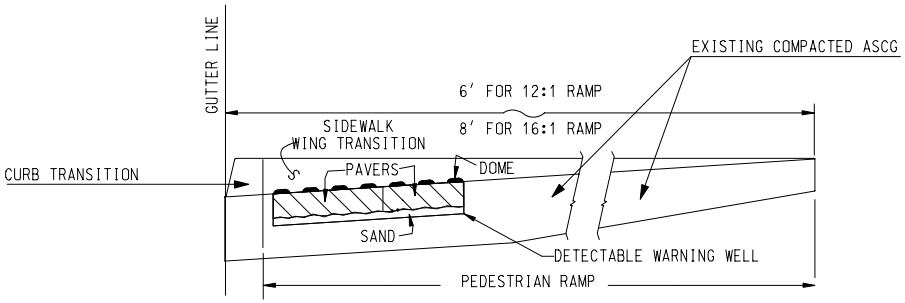

SIDE SECTION VIEW OF
DETECTABLE WARNING, WELL, CURB, AND GUTTER

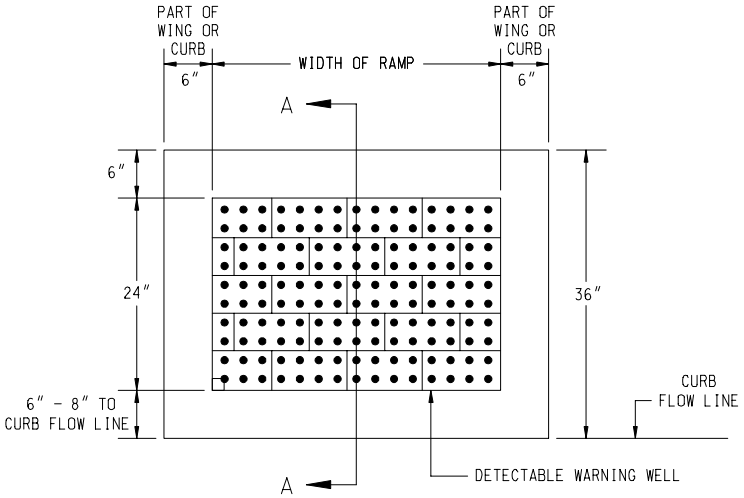

PLAN VIEW OF
DETECTABLE WARNING AND WELL

(PAVERS NOT DRAWN TO SCALE)

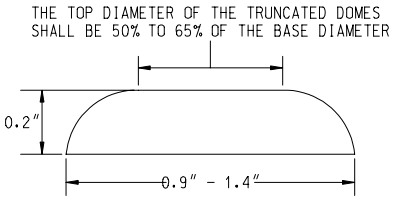

ELEVATION VIEW

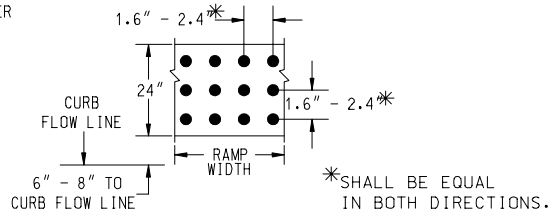

PLAN VIEW

DOME AND DETECTABLE WARNING DETAILS

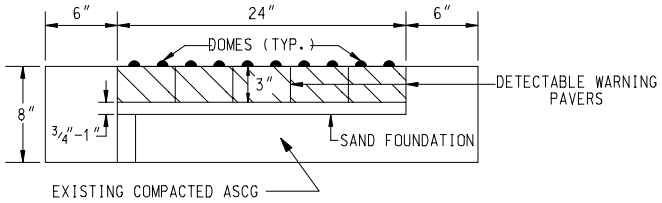

SECTION A-A

NOTE:
ALL DETECTABLE WARNING AREAS SHALL START 6 INCHES FROM THE FLOW LINE OF THE CURB, AND BE 24 INCHES IN DEPTH, AND COVER THE COMPLETE WIDTH OF THE RAMP AREA ONLY.

STATE OF MAINE
DEPARTMENT OF TRANSPORTATION

CURB RAMP

VIEWS AND DETAILS OF THE DETECTABLE WARNING

DETAILS

SHEET NUMBER

1

202

SPECIAL PROVISION
SECTION 609
CURBING
(Curbing - Removed and Stacked)

Description This work shall consist of removing, transporting to a secured site approved by the Resident and stacking existing granite curbing.

CONSTRUCTION REQUIREMENTS

Removal The granite curbing designated to be removed and stacked shall be carefully lifted from its position and hauled to a secured site approved by the Resident. The Contractor shall stack the granite curbing at the site as directed

Stacking The curbing shall be carefully and neatly stacked on wooden planks at the stacking area. Curbing which is considered unfit for reuse shall be disposed of by the Contractor at his own expense.

Basis of Payment Curbing, removed and stacked, will be paid by the linear foot which will be full compensation for all labor, equipment, transporting, stacking and any incidentals needed to complete the item.

Pay Item		Unit
609.441	Curbing Removed and Stacked	Linear Foot

Bangor
PIN 16681.00
November 25, 2013

SPECIAL PROVISION
SECTION 615.081
COMPOST BLANKET – HIGHWAY INSLOPES

Description

This work shall consist of furnishing and placing compost to create a uniform blanket (compost blanket) for seeding, in reasonably close conformity with the thicknesses and locations called for on the Plans or as authorized.

The finished compost blanket and established vegetation will provide long term bank stability and treatment of stormwater.

Materials

The recipe for the Compost Blanket shall be a one to one blend by volume of compost and Processed Flume Grit meeting the following requirements:

Compost may be produced by the aerobic (biological) and biochemical decomposition of source separated organic materials.

Compost shall be derived from a mixture of the following feedstock materials:

1. Green material consisting of chipped, shredded, or ground vegetation, or clean processed recycled wood products (MDEP Type IA, IB)
2. Biosolids (MDEP Type II)
3. Manure
4. Mixed food waste (MDEP Type 1B, IC)

Compost shall not be derived from mixed municipal solid waste and must be reasonably free of visible contaminates. Compost shall not contain paint, petroleum products, pesticides, industrial residuals or any other chemical residues harmful to animal life or plant growth. Compost shall not possess objectionable odors.

The compost shall be produced at a licensed facility as specified under the State of Maine Department of Environmental Protection Chapter 410: Composting Facilities that regulate Solid Waste Facilities. If exempt from State permitting requirements, the composting facility shall certify that it follows guidelines and procedures for production of compost meeting the environmental standards of Chapter 410.

Processed Flume Grit shall be derived from a paper mill flume operation that collects the fine bark, forest organic matter, and a small amount of fine sand and stone. Processed Flume Grit shall be screened to <7/8”.

Product Parameters

Parameter	Compost	Processed Flume Grit	Compost Blanket
Acidity range:	pH 5.5 - 8.5	pH 5.5-6.5	pH 5.5 - 8.5
Moisture wet weight:	30-60% ww	30-60% ww	30-60% ww
Organic content dry weight:	25-70% dw	50-70% dw	25-70% dw
Particle Size	Screened to <3/8”	Screened to <7/8”	
	100% passing 3”	100% passing 3”	100% passing 3”
	90-100% passing 1”	90-100% passing 1”	90-100% passing 1”
	65-100% passing 3/4”	65-100% passing 3/4”	65-100% passing 3/4”
	0-95% passing ¼”	0-80% passing ¼”	0-85% passing ¼”
Physical Contaminant:	<1 % (dry weight basis)	<1 % (dry weight basis)	<1 % (dry weight basis)
Soluble Salts:	5.0 max mmh os/cm.	2.0 max mmh os/cm.	5.0 max mmh os/cm.
Carbon: Nitrogen Ratio:	15-25:1	50-70:1	25:35:1
Total Nitrogen:	<1.7%	<1.0%	<1.7%
Organic N:	<1.5%	<1.0%	<1.5%
Total Phosphorous:	<1.0%	<0.5%	<1.0%
Total Potassium:	<0.5%	<0.5%	<0.5%

Maturity Test: The finished compost must be tested and classified as “Mature” by one of the following methods.

Method	Units	Very Mature	Mature	Immature
Oxygen Uptake Rate (OUR Test)	O2 / unit TS / hr	< 0.4	0.4 - 1.3	> 1.3
Specific Oxygen Uptake Rate (SOUR Test)	O2 / unit BVS / hr	< 0.5	0.5 - 1.5	> 1.5
Dewar Self-Heating Test	Temp. rise (oC)	< 10	10 - 20	> 20
Solvita Test	Index value	7 - 8	5 – 6	< 5
CO2 Evolution	mg CO2-C/g OM/day	2 - 4	4 - 8	8 - 12

Submittal Requirements

The contractor shall provide MaineDOT with a 5 gallon compost sample and documentation from the compost supplier of the following information:

1. The source(s) of compost.
2. Laboratory results that show that the compost delivered to the project meets the compost parameters listed above. An independent Seal of Testing Assurance (STA) Program certified laboratory shall perform the analysis.
3. Compost supplier references documenting that they are fully permitted by the Maine DEP to produce compost.

Compost shall conform to all applicable specification requirements prior to its final placement on the project. The practice of culling deleterious or out of specification material after placement and/or grading in place will not be allowed.

Preconstruction Site Walk

The Contractor shall have a preconstruction site walk with the Resident and a representative from the MaineDOT Environmental Office Surface Water Resources Unit to review the installation area and to answer questions in regard to layout and installation. The final locations and limits of compost blanket shall be laid out by the Contractor prior to installation for review and approval by the Resident.

Preparing Areas

All slopes and other areas where compost is to be placed shall be shaped to the required grade. The area shall be uniformly graded and be free of obstructions, rocks, clods, roots and soft or low density pockets of material that could result in the concentration of surface water drainage. This may require hand raking to meet this standard. Prior to placing compost, the slopes may be roughened by trackwalking or rolling with a sheepsfoot roller.

Placing Compost

The compost shall be placed in the locations as shown in the Plans. Compost shall be placed by the contractor using conventional earthmoving equipment, distributed by hand using a shovel or by mechanical means such as a spreader unit (e.g., bulldozer, excavator, or manure spreader) or pneumatic blower. It shall be spread to the uniform final depth of 2” or as otherwise noted on the Plans. Compost shall be spread in a manner as to establish a loose, friable seed bed.

Seeding

The finished compost blanket shall be seeded under Special Provision 713.03

Maintenance and Inspections

The Contractor shall inspect the installed compost blanket weekly and before and after storm events until vegetative cover is fully established.

The Contractor shall maintain the compost blanket by repairing all damaged areas and by correcting all shifting of the blanket due to wind, water, or other causes.

Method of Measurement

Compost blankets will be measured by the cubic yard complete in place after finishing to the required depths as shown on the plans or directed. Lateral measurements will be parallel with the slope of the ground.

Basis of Payment

Compost blankets shall be paid for at the contract unit price per cubic yard, in place and accepted.

Payment will be made under:

Pay Item		Pay Unit
615.081	Compost Blanket	Cubic Yard

SPECIAL PROVISION
SECTION 626
CONDUIT
(4 Inch Diameter Utility Conduit System)

Description
This work shall consist of furnishing and installing all materials and labor for installation of two utility conduits from junction box near station 12+95 RT to junction box near station 15+05 RT and two utility conduits from signal control cabinet near station 12+32 LT to signal control cabinet near station 16+02 RT. Work shall include furnishing and installing bridge utility conduit system including hanger assemblies not cast into superstructure slab (threaded rods, spacer tubes, flat bars), hardware, fixed anchor point fittings, expansion fittings, couplers, pull-lines, caps, tracer wire, plastic warning tape, furnishing and installing concrete encasement, separation board, the required excavation and backfill, and all other incidentals. This work shall be in conformance with the Plans, these specifications, and Special Provision Section 104 Utilities.

Required pre-installation meeting
Prior to beginning installation of this work, a utility meeting shall be held with all utilities, the Resident, and the MaineDOT utility coordinator (Jerry Quirion).

Materials
The materials furnished by the Contractor shall be new. All materials shall conform to NEMA or UL standards as applicable.

Conduit from station 12+95, 27' RT to station 15+05, 27' RT shall be fiberglass conduit with design properties equivalent to American U-Tel Part No. 12370. All other conduit shall be rigid unplasticized polyvinylchloride (PVC) conduit, schedule 80, suitable for buried or concrete encased applications. Use PVC adapter to fiberglass at transition between PVC and fiberglass conduit.

Concrete for encasement of buried non-metallic conduit shall have a minimum compressive strength of 2,900 psi and a maximum aggregate size of one inch.

Pull-lines shall be polypropylene rope. Junction Boxes shall be precast concrete.

Submittals
The Contractor shall within 60 days following execution of the contract, submit a list of materials which are to be installed. The list shall include the manufacturer, size, and identifying number of each item. The list shall be supplemented by such data as may be required, including detailed scale drawings of proposed minor deviations from the plans. The Contractor shall submit for review, design data and sample articles of the material proposed for use. All of the data shall be submitted in duplicate. The Department or City

will not be liable for material purchased, labor performed, or work delayed until the review is complete and the list of materials and associated details are approved.

Construction Requirements

Workmanship shall conform to the requirements of: NEC, NESC, ASTM Standards, the ANSI, the local Utility Companies, the State of Maine, and any local ordinances that may apply except when otherwise noted on the plans or in the Special Provisions.

Conduits shall be of the sizes noted on the plans, which are indicated as the nominal inside diameter.

The Contractor shall be responsible for and shall repair all damage caused to underground drainage structures, utilities, or lighting conduit, which are encountered during construction.

Trenches for conduits shall be excavated to a width that will permit proper installation of the conduit and to the depth shown on the plans or as directed. Minimum cover shall be thirty inches (30”). Where minimum cover cannot be achieved, conduits shall be encased in concrete.

Concrete encasement shall be a minimum of six inches (6”) thickness above and on the sides of buried non-metallic conduit.

After the trench has been excavated as specified, the bottom of the trench shall be prepared with a sand bedding material. After placing the conduit, sand shall be placed around the sides and over the top of the conduit. The entire trench shall be backfilled with an approved material, placed in layers not exceeding eight inches (8”), and thoroughly tamped.

All underground conduits shall placed to at least the depth shown on the plans and shall not interfere with poles, guardrail posts, approach rail anchor block, sign foundations or other objects.

PVC conduit shall be made watertight by joining with solvent or in accordance with the manufacturer’s specifications.

Conduits shall be bent carefully to avoid damage and without the use of an open flame. Bends sharper than 45 degrees will not be permitted. The total angle of all bends in one run and the radius of bends shall conform to the NEC requirements.

Fiberglass conduits placed in the bridge superstructure shall be securely supported and fastened as shown on the plans to maintain the conduits position. Expansion fittings in the superstructure shall be gasket expansion couplings with a movement capacity as indicated by the expansion joints manufacturer's instructions.

To allow for expansion and contraction of PVC conduit during installation on long runs, one end shall be left unconnected or a double “O”-ring expansion coupling inserted near one end of the run until the final covering of the conduit is in progress.

Where PVC conduit runs are placed parallel to other conduits, they shall be separated by a minimum of 2” of sand or soil cushion. The bottom of trenches shall be lined with a 3” bedding material of tamped sand before laying the conduit. Backfill to a compacted depth of 6” above the top of the conduit shall be sand, free from rocks or hard lumps.

The Contractor shall install pull-lines in all conduits. The ends of the lines shall be secured in such manner as to prevent accidental withdrawal of the wire.

All conduit ends shall be capped with watertight conduit caps.

The Contractor shall provide a metal tracer wire and a 2” wide “buried cable” plastic warning tape located 12” below grade at all underground conduits.

Within ten (10) days after completion of each section of the conduit, the Contractor, in the presence of the Resident, shall rod and pull through each duct a mandrel and brush of a pattern satisfactory to the Resident, but which shall not be more than 1/8” smaller than the bore of the conduits. Where obstructions in the conduits prevent passage of the mandrel, the Contractor shall, at their own expense, remove and relay those portions of the conduits necessary to clear the obstruction.

When solid rock is encountered at less than the required distance below ground level, the construction method shown on the plans shall be followed.

Method of Measurement

4 Inch Diameter Utility Conduit System will be measured by the lump sum, complete, and accepted in place.

Basis of Payment

Payment for “4 Inch Diameter Utility Conduit System”, shall be full compensation for all labor, materials, equipment and incidentals necessary to complete the work, including but not limited to furnishing and installing the conduit; excavating; furnishing and placing concrete encasement and other special backfill materials that may be specified on the plans, pull wire, fittings, groundings and bonding; test cleaning interiors of conduits, and related incidental work and materials.

Payment will be made under:

Pay Item	Description	Pay Unit

626.27	4 Inch Diameter Utility Conduit System	Lump Sum

SPECIAL PROVISION
SECTION 627
PAVEMENT MARKINGS

The last paragraph of Subsection 627.10, Basis of Payment is revised by the addition of the following:

Pay Item		Pay Unit
627.733	4” White or Yellow Painted Pavement Marking Line	LF
627.744	6” White or Yellow Painted Pavement Marking Line	LF

September 20, 2012

SPECIAL PROVISION
SECTION 634
Highway Lighting
and
SECTION 643
Traffic Signals

634.08 Service
634.09 Service Connection
Add the following to each of these sections:

METER POSITION
All meter mounting devices shall be installed so that the meters will be upright (plumb). They shall be installed with the top of the meter not less than 48 inches nor more than 60 inches from the floor or final grade. Exceptions to this height requirement will be made where special permission has been given to install group or modular metering, overall meter enclosures or pole-mounted meters.

Level grade shall be maintained for a minimum of 36 inches in front of the meter enclosure to provide a safe working space. In order to meet this requirement on uneven terrain, as an option, the Contractor may install a pressure-treated wood platform.

For any **non-residential** (industrial or commercial) self-contained meter socket, the **bypass requirements** are as follows:
Meter Socket Bypass
Single-Phase:
100 or 150 amp *Single handle lever operated bypass required.

A disconnect in an enclosure rated for 480 volts shall be installed between the meter trim and the control cabinet, external to the control cabinet.

The Contractor shall meet all requirements and regulations of utility companies when installing equipment on their poles and for the service connection. It is the responsibility of the Contractor to contact the utility companies to determine specific requirements.

SPECIAL PROVISION
Section 634 and 643
Highway Lighting and Traffic Signals

Section 634.09 testing of highway lighting, the first sentence shall be amended as follows:

Before acceptance of the work, the contractor shall cause the following tests to be made on all lighting circuits, by a licensed electrician.

The tests do not need to be performed in the presence of the Resident, but the test results shall be recorded on the Highway Lighting Quality Control Check List and submitted to the Resident by the Contractor for acceptance. The form shall be signed by the licensed electrician certifying that the highway lighting meets the requirements of section 634.09.

Subsection 634.14, field testing of Traffic Signals, the first sentence shall be amended as follows:

Before acceptance of the work the contractor shall cause the following tests to be made on all traffic signal equipment and circuits, by a licensed electrician.

The tests do not need to be performed in the presence of the Resident, but the test results shall be recorded on the Traffic Signal Quality Control Check List and submitted to the Resident by the Contractor for acceptance. The form shall be signed by the licensed electrician certifying that the signal equipment and circuits meet the requirements of section 634.14.

Highway Lighting Quality Control Checklist

Subsection 634.09 Field Testing

Project Pin # _____

Location (if multiple services, please be specific)- _____

Grounding Electrode Resistance at service _____

Number of Circuits _____

Hand-Off-Auto Switch? _____

Circuit #1

Open Circuit Resistance- (Ohm out both hot legs at the cabinet while they are shorted together at the last pole and the fuse holders are disconnected at each pole) _____

Megger Test- (Meg out both hot legs to ground at the cabinet while they are shorted together at the last pole and the fuse holders are disconnected at each pole) _____

Current draw- (during normal operation) Leg #1 _____ Leg #2 _____

Operating Voltage at last pole _____

Circuit #2

Open Circuit Resistance- (Ohm out both hot legs at the cabinet while they are shorted together at the last pole and the fuse holders are disconnected at each pole) _____

Megger Test- (Meg out both hot legs to ground at the cabinet while they are shorted together at the last pole and the fuse holders are disconnected at each pole) _____

Current draw- (during normal operation) Leg #1 _____ Leg #2 _____

Operating Voltage at last pole _____

I, _____, certify that this work was done in accordance with subsection 643.14 and current NEC _____ guidelines, and when tested, was functioning as intended.
(YEAR)

Electrician's Signature _____

Electrician's License # _____

Highway Lighting Quality Control Checklist

Subsection 634.09 Field Testing

Project Pin # _____

Location (if multiple services, please be specific)- _____

Grounding Electrode Resistance at service _____

Number of Circuits _____

Hand-Off-Auto Switch? _____

Circuit #3

Open Circuit Resistance- (Ohm out both hot legs at the cabinet while they are shorted together at the last pole and the fuse holders are disconnected at each pole) _____

Megger Test- (Meg out both hot legs to ground at the cabinet while they are shorted together at the last pole and the fuse holders are disconnected at each pole) _____

Current draw- (during normal operation) Leg #1 _____ Leg #2 _____

Operating Voltage at last pole _____

Circuit #4

Open Circuit Resistance- (Ohm out both hot legs at the cabinet while they are shorted together at the last pole and the fuse holders are disconnected at each pole) _____

Megger Test- (Meg out both hot legs to ground at the cabinet while they are shorted together at the last pole and the fuse holders are disconnected at each pole) _____

Current draw- (during normal operation) Leg #1 _____ Leg #2 _____

Operating Voltage at last pole _____

I, _____, certify that this work was done in accordance with subsection 643.14 and current NEC _____ guidelines, and when tested, was functioning as intended.
(YEAR)

Electrician's Signature _____

Electrician's License # _____

Traffic Signal Quality Control Checklist

Subsection 643.14 Field Testing

Project Pin # _____

Grounding Electrode Resistance at service _____

ID tags on loop amps / detector cards? _____

Location

Street Approach _____

Loop #	_____	**Resistance**	_____
Phase #	_____	**Meg to ground**	_____
L,C, or R Lane	_____	**Amount of bondo covering loop**	_____
Pulse or Presence	_____		

Street Approach _____

Loop #	_____	**Resistance**	_____
Phase #	_____	**Meg to ground**	_____
L,C, or R Lane	_____	**Amount of bondo covering loop**	_____
Pulse or Presence	_____		

Street Approach _____

Loop #	_____	**Resistance**	_____
Phase #	_____	**Meg to ground**	_____
L,C, or R Lane	_____	**Amount of bondo covering loop**	_____
Pulse or Presence	_____		

I, _____, certify that this work was done in accordance with subsection 643.14 and current NEC _____ guidelines, and when tested, was functioning as intended.
(YEAR)

Electrician's Signature _____

Electricain's License # _____

SPECIAL PROVISION
SECTION 634
HIGHWAY LIGHTING
(Remove and Reset Light Poles)

Description: This work will consist of removing and relocating light poles and installing necessary wiring to energize them. The existing foundations shall be removed and become the property of the contractor. The existing light poles are approximately 40 feet long. The light poles will be relocated 10 to 15 feet or less from their existing locations.

Construction Requirements: The relocated light poles shall be installed in accordance with Section 634 and 626 and any applicable portions of the Standard Specifications and the Standard Details.

Method of Measurement: The removal and resetting of light poles shall be measured for payment by the unit, each, satisfactorily installed and operating.

Basis of Payment: Payment will be made for removal and resetting of each light pole.

Payment will be made under:

Pay Item		Pay Unit
634.208	Remove and Reset Light Standards	Each

SPECIAL PROVISION
SECTION 634
HIGHWAY LIGHTING
(Remove Existing Light Poles)

Description: This work will consist of removing existing light poles, foundations and wiring. The light poles and foundations shall be become the property of the contractor. The existing light poles are approximately 40 feet long and the existing foundations are approximately 30" diameter concrete.

Construction Requirements: The light poles, foundations and wiring shall be removed in accordance with Section 634 and 626 and any applicable portions of the Standard Specifications and the Standard Details.

Method of Measurement: The removal of light poles and foundations shall be measured for payment by the unit, each, satisfactorily removed.

Basis of Payment: Payment will be made for removal of each light pole and foundation.

Payment will be made under:

Pay Item		Pay Unit
634.2082	Remove Existing Light Standards	Each

SPECIAL PROVISION
SECTION 643
TEMP. SOLAR POWERED LED PED. CROSSWALK BEACON

The Contractor shall install temporary solar powered flashing beacon assemblies at locations identified in the approved traffic control plan. Their installation shall be as described in this special provision.

1. Beacon Dimensions and Placement in Sign Assembly:
   a. Each temporary rectangular rapid flashing beacon (RRFB) shall consist of two rectangular-shaped yellow indications (in each direction), each with an LED-array based light source. Each RRFB indication shall be a minimum of approximately 5 inches wide by approximately 2 inches high. Flashing lights and signage shall be in both directions of vehicle travel.
   b. The two RRFB indications shall be aligned horizontally, with the longer dimension horizontal and with a minimum space between the two indications of approximately seven inches (7 in), measured from inside edge of one indication to inside edge of the other indication.
   c. The outside edges of the RRFB indications, including any housing, shall not project beyond the outside edges of the W11-15 or W11-2 signage attached to the beacon assembly.
   d. As a specific exception to 2009 MUTCD Section 4L.01 guidance, the RRFB shall be located between the bottom of the crossing warning sign and the top of the supplemental downward diagonal arrow plaque, rather than 12 inches above or below the sign assembly.

2. Beacon Flashing Requirements:
   a. When activated, the two yellow indications in each RRFB shall flash in a rapidly alternating "wig-wag" flashing sequence (left light on, then right light on).
   b. As a specific exception to 2009 MUTCD Section 4L.01 requirements for the flash rate of beacons, RRFBs shall use a much faster flash rate. Each of the two yellow indications of an RRFB shall have 70 to 80 periods of flashing per minute and shall have alternating but approximately equal periods of rapid pulsing light emissions and dark operation. During each of its 70 to 80 flashing periods per minute, one of the yellow indications shall emit two rapid pulses of light and the other yellow indication shall emit three rapid pulses of light.
   c. The flash rate of each individual yellow indication, as applied over the full on-off sequence of a flashing period of the indication, shall not be between 5 and 30 flashes per second, to avoid frequencies that might cause seizures.
   d. The light intensity of the yellow indications shall meet the minimum specifications of Society of Automotive Engineers (SAE) standard J595 (Directional Flashing Optical Warning Devices for Authorized Emergency, Maintenance, and Service Vehicles) dated January 2005.

3. Beacon Operation:
   a. The RRFB, normally dark, shall initiate operation only upon pedestrian actuation, and shall cease operation at a predetermined time after the pedestrian actuation.
   b. All RRFBs associated with a given crosswalk shall, when activated, simultaneously commence operation of their alternating rapid flashing indications and shall cease operation simultaneously.
   c. A pedestrian instruction sign with the legend PUSH BUTTON TO TURN ON WARNING LIGHT should be mounted adjacent to or integral with each pedestrian pushbutton.
   d. The duration of a predetermined period of operation of the RRFBs following each actuation shall be 20 seconds.
   e. Solar power assemblies shall be provided on each beacon assembly.
   f. Communication between the devices shall be via spread spectrum wireless.

4. Pole and Foundation
   a. Temporary pole and foundation systems shall be provided. A shop drawing submittal is required for the pole, foundation and beacon assembly device proposed.

643.18 Method of Measurement

Rectangular rapid flashing beacon assemblies installed with signs and equipment in accordance with the latest federal standards as shown and approved on the traffic control plans at each location shall constitute a single installation. Each installation will be measured for payment by each in place.

643.19 Basis of Payment

The rectangular rapid flashing beacon will be paid for by each at the contract price, which payment will be full compensation for furnishing all materials including, but not limited to the LED-arrays, flasher, timer, controller cabinets, solar equipment and wiring, pedestrian push buttons, crosswalk signs, radio devices, support pole, foundation and all appurtenances and incidentals required for a complete and functioning installation and for furnishing all tools and labor necessary for completing the installation.

Payment will be made under:

Pay Item	Description	Pay Unit
643.6004	Temp. Solar Powered LED PED Crosswalk Beacon	Each

Special Provision
SECTION 643
Traffic Signals

643.021 Materials

Add	Concrete	Section 502.03
Add	Reinforcing Steel	Section 503.02

Add Section 643.041 Foundations as follows:

Foundations shall consist of cast-in-place reinforced concrete drilled shafts; one drilled shaft per mast arm or dual purpose pole. Supplier shall determine the Bending Moment, Shear Force, Torsion and Axial Load at the top of each mast arm or dual purpose pole foundation. Foundation size (diameter and length) shall depend on the Torsion and Bending Moment at the top of the foundation based on Chart 1 and 2, below. The larger of the foundation sizes shown for Torsion or Bending Moment shall be the required foundation size. Lengths are depths below lowest adjacent (proposed) grade.

Chart 1 - Foundation Length (feet) Based on Maximum Torsion

Torsion (foot-kips)	30” diameter	36” diameter	42” diameter
30	10’		
40	10’		
50	12’	10’	
60		11’	
70		12’	
80		13’	10’
90		14’	11’
100		14’	11’
110		15’	12’

Chart 2 - Foundation Length (feet) Based on Maximum Bending Moment

Bending Moment (foot-kips)	30” diameter	36” diameter	42” diameter
30	10’		
40	10’		
50	10’		
60	10’	9’	
70	11’	10’	
80		10’	
90		10’	
100		11’	10’
110		11’	10’

Reinforcing Steel shall be as shown in Standard Detail 626(03) and 626(04) for 30-inch and 36-inch foundations. Reinforcing Steel for 42-inch diameter foundations will be according to the following chart:

Summary of Reinforcing Steel – 42" foundation	
Quantity longitudinal bars	18
Longitudinal bar size	#8
Spiral bar size	#5
Spiral bar spacing (0-2 ft) (inches)	4
Spiral bar spacing (2 ft – L/2) (inches)	8
Spiral bar spacing (L/2 - tip) (inches)	12

Concrete for foundations shall be placed immediately after excavation to prevent water from accumulating in the excavated areas. Concrete shall be Class LP in accordance with Section 502, Structural Concrete. Drilled shaft foundation holes, except in bedrock, shall be excavated by auger method to the neat line of the outside dimensions of the footing without disturbing the soil around or below the proposed footing. Drilled shafts shall not be permanently cased, except for the top 3 feet; concrete shall be cast directly against the surrounding soil. Precast foundations will not be permitted.

All provisions of Section 626.034 Concrete Foundations shall apply to these drilled shaft foundations.

In areas where bedrock is encountered above the proposed bottom of the drilled shaft, the Contractor will have the option of removing rock and placing the shaft at the design depth shown above, or constructing a rock-anchored foundation system to the depth of the foundation shown. Rock-anchored foundations shall be constructed according to Standard Detail 626(06) Foundations for Traffic Signals, Highway Signing and Lighting, or as approved by the Department for drilled shafts greater than 36 inches in diameter.

Section 643.19 Basis of Payment Add the following sentence: Foundations for Mast Arm Poles and Dual Purpose Poles shall be incidental to the Pole Item and shall be full compensation for all labor, equipment and materials for the accepted complete signal foundation installation, including but not limited to foundations, excavation, excavation stabilization, backfill, replacement of subbase gravel, replacement or repair of pavement, slope regarding, and placement of loam, seed and mulch on disturbed slopes.

SPECIAL PROVISION
SECTION 643
(Traffic Signals)

643.02 General

The following paragraphs are added:

All traffic signal and associated equipment shall meet the Signal Standards for the City of Bangor as follows unless otherwise noted or approved by the Resident:

DESIGN FEATURES

Traffic signals installed at intersections shall be installed on cantilever arms. Span wire Installations will not be permitted except in very unusual circumstances. Intersections will be illuminated, with luminaries installed on traffic signal poles as shown on the plans. Pedestrian signals with push buttons shall be installed; however, approved ambulatory Ramps consistent with American Disabilities Act (ADA) requirements must be present at the intersection. All traffic signal heads shall be mounted vertically and have 12-inch diameter LED lenses. Controllers shall be ground-mounted. Vehicle detection systems shall be installed for all approaches. Preemption control system detectors shall be installed on approaches as shown in the plans. All signal installations will conform to the latest Maine DOT specification section 643 and as amended below. The following is additional and more specific information concerning signal hardware for traffic signal installations.

TRAFFIC SIGNAL MAST ARM POLES OR DUAL-PURPOSE POLES

Composition: Galvanized Steel MaineDOT Material Section No. 720.04
Color: Galvanized anodized, non-painted.
Height: As required.

SIGNAL MAST ARMS

Composition: Galvanized Steel MaineDOT Material Section No.720.04
Color: Galvanized anodized, non-painted.
Length: As required.

PEDESTAL POLES

Composition: Aluminum MaineDOT Material Section No.720.01
Color: Galvanized anodized, non-painted.
Aluminum Length: As specified on the plans.

SIGNAL HEADS

Composition: Cast Aluminum MaineDOT Material Section No.718.01
Lenses: LED lenses, 12-inches in diameter Signal Housing
Color: Match mast arm and pole color. Metal Back shades (Black in Color) Mounted Vertically Tunnel visor only. Color must be approved by the City.

LUMINAIRES

Luminaire to be installed on dual purpose poles noted on plans.
Wattage: 250-watt Full Cut-off High Pressure Sodium Luminaire

CONTROLLER

MaineDOT Material Section No.718.07. Current approved controller for standalone installation is Econolite, Cobalt controllers and trafficon trafficam detection with a 4TI circuit board. On installations in a corridor which is coordinated or may be coordinated in the future, the controller must be compatible with the existing equipment in that corridor. On new installations in that corridor, the new controller & Cabinet must contain all equipment, software, communication equipment required to communicate and interface with the existing City equipment and specifications.

Coordinate work with Resident and Bangor Public Works. City of Bangor contact is John Cyr at johncyr@bangormaine.gov or 992-4511.

CONTROLLER CABINET

Composition: Aluminum or Stainless Steel MaineDOT Material Section No.718.08
Controller Type: Ground-mounted.
Color: Shall match color of mast arms and poles
Size: "M" Style with 12" extension base. Must have hinged back panel for access to wire all terminations.

DETECTOR SYSTEMS

Overhead Vehicle Detection shall be installed as shown on mast arms at least 6' above the mast arm. Alternate installation location must be approved by the resident. One set of camera adjustment, set-up, and video monitoring, equipment will be provided with each control cabinet.

CONDUITS

MaineDOT Material Section No.715.03
All conduits installed under roadway shall be 3 inches in diameter and schedule 80 PVC. All conduits shall be at least 3 inches in diameter.

PEDESTRIAN SIGNALS

Color of Housing: Yellow MaineDOT Material Section No.718.02
Display: "Hand" and "Walking Person" symbols with count down timer
Push Buttons: Conform to ADA and (Manual on Uniform Traffic Control Devices).

SIGNAL POLE FOUNDATIONS

All traffic signal pole foundations shall conform to Maine DOT specifications. The size and depth of foundation shall be dependant on length of mast arm, and soil conditions. All foundations shall be approved by MaineDOT prior to installation.

DAMPERS

Dampers shall be installed on all mast arms that extend 40 feet in length or longer.

CONFIRMATION LIGHTS (vehicle pre-empt)

Confirmation red flashing lights shall be installed as shown on the plans.

SIGNS

All approaches having a five-section signal head permitting protected and permissive left turns(green ball and green arrow displays) shall have a LEFT TURN YIELD ON GREEN BALL sign. This sign shall be installed on the mast arm adjacent to the five-section signal head located furthest from the signal pole. The LEFT TURN YIELD ON GREEN BALL sign also may be used where protected left-turn movements are NOT provided (i.e., no green arrow indication is provided) and there is a desire to emphasize the requirement to yield to oncoming traffic.

GROUND BOXES

A 15.25" X 28.25" X 20" ground box shall be installed at all terminations of 3-inch conduits that are placed beneath the roadways, and adjacent to the signal controller. A 11.5" X 21" X 20" pull box shall be installed adjacent to signal poles, unless a larger ground box, installed at the termination of under-roadway conduits or adjacent to the controller, is placed in near proximity to the signal pole. Smaller ground boxes may be used to accommodate conduit containing single or a minimal number of wires (like power cable).All ground boxes shall have concrete aprons.

POWER SOURCE

Power sources have been noted on the plans. At each intersection, power via a power cable shall be extended from meter pole to the signal controller by signal contractor.

Signal installer shall install wire from power source to meter pole. Signal installer shall establish a separate power utility account for each intersection.

PRIORITY CONTROL SYSTEM DETECTORS

Priority detectors shall be installed only on those approaches specified in the plans. The detector card installed will have provisions for all 4 inputs.

WIRING

Wiring for signal heads, pedestrian signals and push buttons, and confirmation lights shall be provided with either 7/c #14 stranded signal cable IMSA 19-1 or equivalent, 5/c #14 signal cable IMSA 19-1 or equivalent, or 3/c #14 signal cable IMSA 19-1 or equivalent. Minimum of one spare conductor at each termination point is required. Luminaires shall be wired with 3 THHN 1/c # 10 luminaire cables. Luminaire cable shall be feed from a dedicated breaker in the control cabinet or meter pedestal. Power cable shall be 3/c #4 wire and shall be placed in a separate conduit. Video cable shall be consistent with the cable recommended by the manufacturer of video system, and shall be placed in a separate conduit. Model M913 Detector Cable for Tomar Priority Control Systems shall be used for Priority Detectors. Wiring provided for an individual signal pole (for signal heads, pedestrian signals, push buttons, confirmation lights, etc.) shall contain sufficient additional conductors for future use. At least 33 percent additional conductors should be provided. All pedestrian signals shall be wired with a 5/c #14 signal cable. All pedestrian push button installations shall be wired with a separate 3/c #14 signal cable. Mast arm signals must have dedicated multi conductor cable from each signal to mast arm base.

DOCUMENTATION

A minimum of 3 complete as-built prints shall be provided for the following:

- All wire terminations in the control cabinet,
- Parts list of all equipment included in control cabinet & traffic signal system,
- A plan view of the intersection with location details of all traffic system equipment including vehicle detector zones, conduits, all ground boxes, signal heads, with phasing.
- The Plan view will also be provided to the Resident in DWG format which can be imported into the town's GIS system.
- Controller programming & timing in both hard copy and electronic form.
- A minimum of 2 sets of operation & maintenance manuals for all control cabinet components will be provided.
- One copy of the documentation will be sent to the City and the other will remain in the traffic cabinet.

BASIS OF PAYMENT

Basis of payment is revised by the addition of the following

PAY ITEM	DESCRIPTION	UNIT
643.712	Preemptive System	Lump Sum

May 31, 2005
Supercedes January 29, 2004

SPECIAL PROVISION
SECTION 643
TRAFFIC SIGNALS

Under 643.023 Design and Fabrication, add the following to the end of the first paragraph:

Cantilevered signal support structures with mast arms shall be classified as Fatigue Category III with Fatigue Importance Factors (I_f) of 0.59 for Natural Wind Gusts and 0.68 for Truck-Induced Gusts unless specified otherwise on the contract plans.

If Category II is specified on the contract plans, the Fatigue Importance Factors (I_f) shall be 0.80 for Natural Wind Gusts and 0.84 for Truck-Induced Gusts. If Category I is specified on the contract plans, the Fatigue Importance Factors (I_f) shall be 1.0 for Natural Wind Gusts and 1.0 for Truck-Induced Gusts.

Designing for fatigue induced by Galloping or Vortex Shedding is not required for traffic signal structures with mast or bracket arms.

Bangor
WIN 19256.00
December 12, 2013

SPECIAL PROVISION
SECTION 645
HIGHWAY SIGNING

Super high intensity microprismatic retroreflective sheeting, ASTM D 4956 – Type VII, Type VIII, or Type IX, is required for all Type I signs.

SPECIAL PROVISION
SECTION 652
MAINTENANCE OF TRAFFIC

652.1 Description: All bridge work traffic control shall be in accordance with the bridge plans and detour plans in the Contract Documents. The Contractor shall submit Traffic Control Plans for lane closures to install the bridge work zone traffic control. Submittals shall meet the requirements of Subsection 652.3.3 Submittal of Traffic Control Plan.

The Contractor shall furnish all signs noted herein or otherwise as required to complete the work. The Contractor shall furnish all sign posts, sign post breakaways and fasteners required to erect and maintain the signs.

652.2 Signs: Detour signing requirements are noted on the bridge plans. Additional signing, required for the interstate work and nighttime lane closures, is as follows:

Interstate Approaches. Approach signing for the work on the Interstate shall include the following signs

Road Work 3 Miles
Road Work 2 Miles
Road Work 1 Mile
Road Work 500 Feet
Road Work Next x Miles

Interstate Work Areas. For temporary night time lane closures, signs, flashing arrow boards and channeling devices shall be provided. Traffic control plans shall be submitted for prior approval. Additional signs and devices may be directed by the Resident. Work Zone Speed Limit and End Work Zone signs shall be incorporated into the temporary night time lane closures.

Signs Include:
Right or Left Lane Closed 2 Miles
Lane Ends 1 mile Merge Right or Left Now
Right or Left Lane Closed 1/2 Mile
Do Not Pass*
Right/Left Merge Symbol (W 4-2)
End Work Zone Speed Limit*
Exit (green with white legend and border)
Merging Traffic Symbol (At on-ramp in right lane closure)
Stop Ahead (At on-ramp in right lane closure)
Single Lane Ahead (At on-ramp in left lane closure)
Stop (At on-ramp in right lane closure)
Directional Arrows (At on-ramp in right lane closure)
Bump
Trucks Entering
Left Turning Trucks with 500 Feet Advisory Plate
Flagger Sign
Grooved Pavement

* Regulatory - white with black legend and border

Work zone speed limit sign packages will also be required at the end of any on-ramps that are within the lane closure

The above list of Interstate Approach signs and Interstate Work Area signs are representative of the contract requirements. Other signs legends may be required.

Road Work Ahead signs shall be used on roads adjacent to the interstate when the Contractor is working on or near an on-ramp or when the on-ramp enters a lane closure area.

652.3.3 Submittal of Traffic Control Plan This Subsection is amended by the addition of the following:

The Department has prepared Traffic Control Plans for detours only. Submittal of traffic control plans for all other components of the bridge project is required. The Contractor shall submit materials required under paragraphs a., e., f., and i.

The traffic control plan shall address the temporary pedestrian detour route including specifics on pedestrian signage, temporary cross walk flashing beacons and temporary crosswalk locations. Temporary cross walk flashing beacon assemblies shall be required at the temporary cross walk locations. R1-6 signage shall be placed in the roadway centerline at the temporary cross walk locations. Beacons assemblies shall be in both directions on both sides of the roadway. Temporary cross walk locations shall be at the limits of work or beyond and shall be field verified and shown on the traffic control plan.

The traffic control plan shall address the temporary relocation of bus stops and associated signage that are located within the project limits to locations at or beyond the limits of work. Temporary locations shall be field verified and shown on the traffic control plan. New locations will require approval by the Resident and Bus Company. Payment for related work is considered incidental to item 659.10.

The Contractor shall submit Traffic Control Plans for temporary lane closures to install the bridge work zone traffic control.

652.3.3.f Notification Procedure
The Contractor shall provide a schedule of anticipated lane closures and bridge work zones to the Resident on a weekly basis, and provide a minimum notice of 72 hours of proposed changes to the lane closures and bridge work zones.

652.3.4 General: The following is added:

The Contractor, his Subcontractors and employees shall conduct all work in a safe and professional manner as it relates to the traveling public (i.e. not adversely disrupting the flow of

traffic in an unsafe manner when exiting or entering a lane closure or crossover, negative verbal or physical gestures).

Channelization.
Channelization devices shall include the following:

Flashing Arrow Boards
Vertical Panel Markers
Drums (In lane closures)
Cones (During actual work the Contractor may use cones in the work areas in lieu of Drums, if approved by the Resident)
Temporary Raised Pavement Markers

Channelization devices shall be installed and maintained at the spacing determined by the MUTCD to delineate travel lanes through the project. Vertical Panel markers shall be placed 2 feet from the outside edge of the shoulder on the passing lane at 600 feet intervals when the travel lane is closed in overnight lane closures. The vertical panel marker size shall be 12 inches x 24 inches. When directed by the Engineer, drums or other channelization devices shall be placed in the closed lane at a maximum spacing of 2 x speed limit.

Crossover Use.
Interstate crossovers shall not be used by the Contractor at any time.

652.3.6 Traffic Control:
Temporary lane closures shall not be set up until work in the area is to be performed and must be removed when no work is being performed.

Existing pavement markings at centerline in the taper to the lane closure shall be removed or painted over with an approved paint beginning at the first drum in the taper in overnight lane closures.

Roadside Recovery Area.
The Contractor shall not temporary store material nor park equipment within 15 feet of the edge of the established travel lanes without a lane or shoulder closure.

No long term storage of equipment or material will be allowed within 30 feet of the edge of the established travel lanes. Temporary storage shall be defined as less than 12 hours.

Speed Limits in Work Zones.
The Contractor shall sign all approved reduced speed limits on construction project according to APM #431 - A Policy on the Establishment of Speed Limits in Work Zones.

Signal Timing:
The Contractor shall coordinate the signal timing modifications at local intersections with the Resident and the City of Bangor. Changes in traffic phasing may require modifications to the

timing and phasing of local road traffic signals. The coordination associated with signal modifications shall be considered incidental to the 652 pay items. No separate payment will be made.

SPECIAL PROVISION
SECTION 652
MAINTENANCE OF TRAFFIC

652.1 Description All traffic control shall be coordinated with the bridge plans and detour plans in the Contract Documents. The Contractor shall submit a Traffic Control Plan for ramp and Interstate lane closures. Submittals shall meet the requirements of Subsection 652.3.3 Submittal of Traffic Control Plan.

The Contractor shall furnish all signs noted herein or otherwise as required to complete the work. The Contractor shall furnish all sign posts, sign post breakaways and fasteners required to erect and maintain the signs.

652.2 Signs Detour signing requirements for temporary closure of the Exit 184 northbound on-ramp are noted in the project plans. Additional signing, required for the interstate work and nighttime lane closures, is as follows:

Interstate Approaches Approach signing for the work on the Interstate shall include the following signs:

Road Work 3 Miles	Road Work 500 Feet
Road Work 2 Miles	Road Work Next x Miles
Road Work 1 Mile	

Interstate Work Areas For temporary night time lane closures, signs, flashing arrow boards and channeling devices shall be provided. Traffic control plans shall be submitted for prior approval. Additional signs and devices may be directed by the Resident. Work Zone Speed Limit and End Work Zone signs shall be incorporated into the temporary night time lane closures.

Signs Include
Right Lane Closed 2 Miles
Lane Ends 1 mile Merge Left Now
Right Lane Closed 1/2 Mile
Do Not Pass*
Left Merge Symbol (W 4-2)
End Work Zone Speed Limit*
Merging Traffic Symbol (At on-ramp in right lane closure)
Stop Ahead (At on-ramp in right lane closure)
Stop (At on-ramp in right lane closure)
Directional Arrows (At on-ramp in right lane closure)
Bump
Trucks Entering
Flagger Sign

* Regulatory - white with black legend and border

Work zone speed limit sign packages will also be required at the end of any on-ramps that are within the lane closure.

The above list of Interstate Approach signs and Interstate Work Area signs are representative of the contract requirements. Other sign legends may be required.

Road Work Ahead signs shall be used on roads adjacent to the interstate when the Contractor is working on or near an on-ramp or when the on-ramp enters a lane closure area.

652.3.3 Submittal of Traffic Control Plan This Subsection is amended by the addition of the following:

The Department has prepared Traffic Control Plans for detours only. Submittal of traffic control plans for all other components of the bridge project is required. The Contractor shall submit materials required under paragraphs a., e., f., and i.

The Contractor shall submit Traffic Control Plans for temporary lane closure to install the work zone traffic control.

652.3.3.f Notification Procedure
The Contractor shall provide a schedule of anticipated lane closures and work zones to the Resident on a weekly basis, and provide a minimum notice of 72 hours of proposed changes to the lane closures and work zones.

652.3.4 General The following is added:

The Contractor, his Subcontractors and employees shall conduct all work in a safe and professional manner as it relates to the traveling public (i.e. not adversely disrupting the flow of traffic in an unsafe manner when exiting or entering a lane closure or crossover, negative verbal or physical gestures).

652.3.6 Traffic Control The following is added:

To alert drivers to the imminent closure, a Portable-Changeable Message Sign (Item 652.41) shall be installed at the intersection of the Ohio Street connector ramp and the Exit 184 northbound on-ramp one week before the Ohio Street connector ramp is closed. After closure of the connector ramp, the Portable-Changeable Message Sign shall be redeployed at the intersection of the Exit 184 northbound on-ramp and Union Street to alert drivers destined for Ohio Street that the connector ramp is closed and to seek alternate routes. No separate payment will be made for redeployment of this Portable-Changeable Message Sign.

Channelization
Channelization devices shall include the following:

Flashing Arrow Boards
Vertical Panel Markers
Drums (In lane closures)
Cones (During actual work the Contractor may use cones in the work areas in lieu of Drums, if approved by the Resident)
Temporary Raised Pavement Markers

When directed by the Engineer, drums or other channelization devices shall be placed in the closed lane at a maximum spacing of 2 x speed limit.

Crossover Use
Interstate crossovers shall not be used by the Contractor at any time.

652.3.6 Traffic Control
Temporary lane closures shall not be set up until work in the area is to be performed and must be removed when no work is being performed.

Existing pavement markings at centerline in the taper to the lane closure shall be removed or painted over with an approved paint beginning at the first drum in the taper in overnight lane closures.

Roadside Recovery Area
The Contractor shall not temporarily store material nor park equipment within 15 feet of the edge of the established travel lanes without a lane or shoulder closure.

No long term storage of equipment or material will be allowed within 30 feet of the edge of the established travel lanes. Temporary storage shall be defined as less than 12 hours.

Speed Limits in Work Zones
The Contractor shall sign all approved reduced speed limits on the construction project according to APM #431 - A Policy on the Establishment of Speed Limits in Work Zones.

February 4, 2011
Supersedes February 27, 2003

SPECIAL PROVISION
SECTION 652
MAINTENANCE OF TRAFFIC

Approaches Approach signing shall include the following signs as a minimum. Field conditions may warrant the use of additional signs as determined by the Resident.

Road work Next x Miles
Road work 500 Feet
End Road Work

Work Area At each work site, signs and channelizing devices shall be used as directed by the Resident. Signs include:

Road Work xxxx [1]
One Lane Road Ahead
Flagger Sign

Other typical signs include:

Be Prepared to Stop
Low Shoulder
Bump
Pavement Ends

The above lists of Approach signs and Work Area signs are representative of the contract Requirements. Other sign legends may be required.

The Contractor shall conduct their operations in such a manner that the roadway will not be restricted to one lane for more than 800 m [2,500 ft] at each work area. To encourage quality paving in warm-weather conditions, the length can be extended to 4,000 ft depending on the traffic impacts. Where more than one work area restricts traffic to one lane operation, these work areas shall be separated by at least 1.6 km [1 mile] of two way operation.

Temporary Centerline A temporary centerline shall be placed each day on all new pavement to be used by traffic. The temporary centerline, when specified of reflectorized traffic paint, shall conform to the standard marking patterns used for permanent markings.

Failure to apply a temporary centerline daily will result in a Traffic Control Violation and suspension of paving operations until temporary markers are applied to all previously placed pavement.

[1] "Road Work Ahead" to be used in mobile operations and "Road Work xx ft" to be used in stationary operations as directed by the Resident.

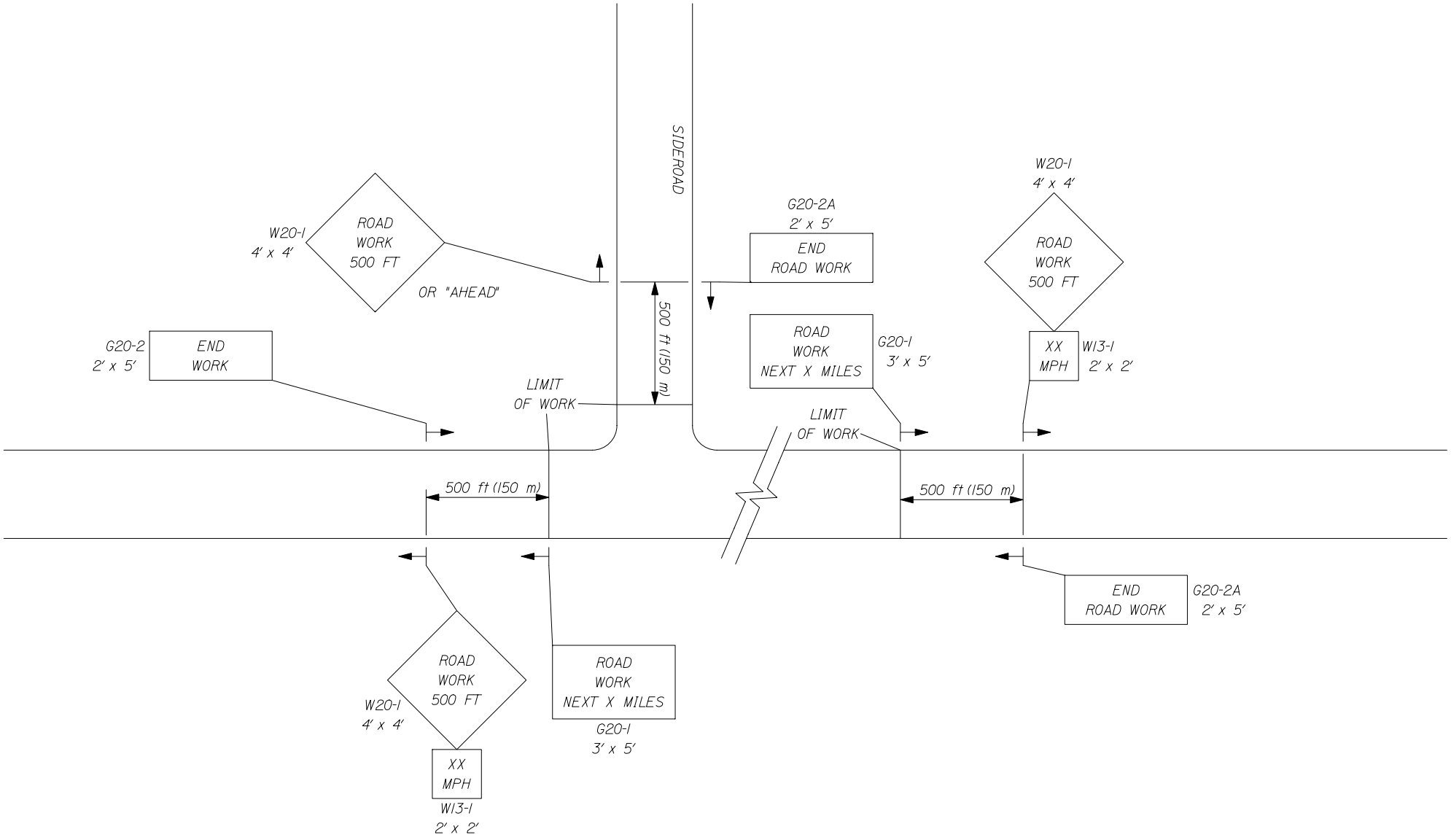

1 of 3

-- PROJECT APPROACH SIGNING --
TWO WAY TRAFFIC

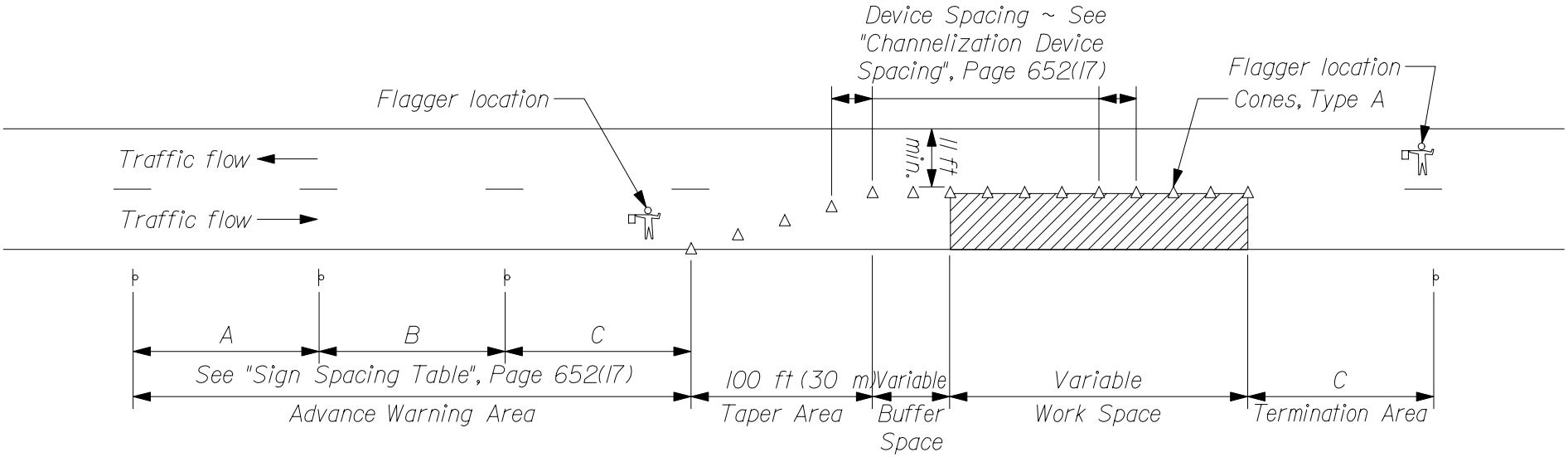

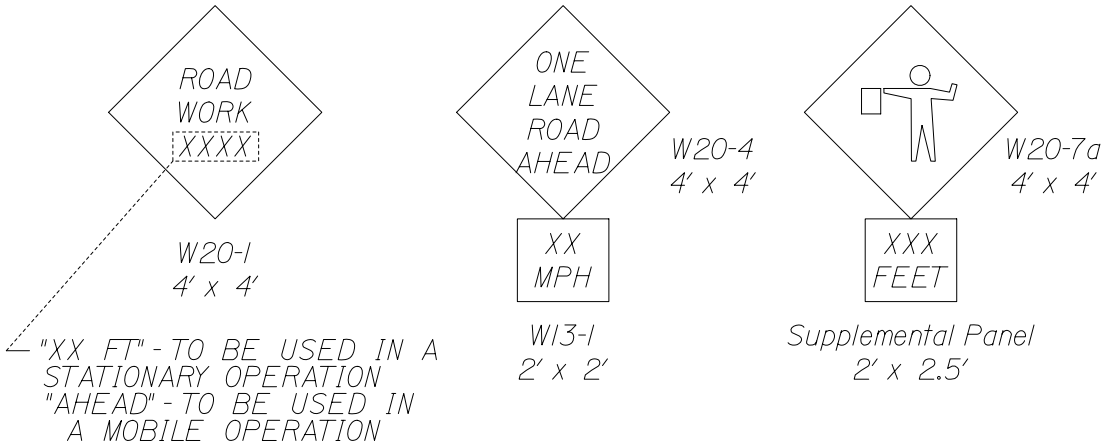

TYPICAL APPLICATION: TWO - WAY, TWO LANE ROADWAY, CLOSING ONE LANE USING FLAGGERS

TYPE OF TAPER	TAPER LENGTH (L)*
Merging Taper	at least L
Shifting Taper	at least 0.5L
Shoulder Taper	at least 0.33L
One-Lane, Two-Way Traffic Taper	100 ft (30 m) maximum
Downstream Taper	100 ft (30 m) per lane

* Formulas for L are as follows:

For speed limits of 40 mph (60 km/h) or less:

$L = \frac{WS^2}{60}$ $\quad (L = \frac{WS^2}{155})$

For speed limits of 45 mph (70 km/h) or greater:

$L = WS$ $\quad (L = \frac{WS}{1.6})$

* Formulas for L are as follows:

A minimum of 5 channelization devices shall be used in the taper.

CHANNELIZATION DEVICE SPACING

The spacing of channelization devices shall not exceed a distance equal to 1.0 times the speed limit in mph when used for taper channelization, and a distance in feet of 2.0 times the speed limit in mph when used for tangent channelization.

SIGN SPACING TABLE			
Road Type	Distance Between Signs**		
	A	B	C
Urban 30 mph (50 km/h) or less	100 (30)	100 (30)	100 (30)
Urban 35 mph (55 km/h) and greater	350 (100)	350 (100)	350 (100)
Rural	500 (150)	500 (150)	500 (150)
Expressway / Urban Parkway	2,640 (800)	1,500 (450)	1000 (300)

**Distances are shown in feet (meters).

GENERAL NOTES;

1. Final placement of signs and devices may be changed to fit field conditions as approved by the Resident.

SUGGESTED BUFFER ZONE LENGTHS

Speed (mph)	Length (feet)	Speed (mph)	Length (feet)
20	115	40	325
25	155	45	360
30	200	50	425
35	250	55	495

SPECIAL PROVISION
SECTION 652
MAINTENANCE OF TRAFFIC
(Temporary Modular Delineator Curb)

Description: This work shall consist of furnishing, installing, and maintaining temporary modular delineator curb system in accordance with the Manufacturer's recommendations in reasonably close conformity with the plans and specifications.

Materials: Temporary modular delineator curb system shall be or approved equal:

Manufacturer	Model
Pexco, LLC.	FG 300 Interstate Grade Curb System

Delineator posts shall be model FG 300 EFX, 36 inches in height, orange in color and with two 3" wraps of white (or silver) color ASTM Type V reflective tape. Posts shall be spaced at 3 feet on center.

Curbs shall be Interstate Grade, yellow in color and contain two recessed acrylic reflective lenses. Adhesive for anchoring curbs shall be approved by manufacturer for cold weather applications. Anchor bolts will not be allowed.

Construction Requirements: Temporary modular delineator curb systems shall be installed in accordance with manufacturer's specifications and Special Provision 652.

Method of Measurement: Temporary modular delineator curb systems will be measured per linear foot, complete in place and accepted.

Basis of Payment: The accepted quantity of Temporary Modular Delineator Curb systems will be paid for at the contract unit bid price per linear. Payment will be full compensation for all materials, labor, equipment, and incidentals necessary to furnish, install and maintain the flexible delineators and all associated hardware complete in place. Payment will also include full compensation for the removal of the delineators, bases and base adhesives to the Resident's satisfaction when the construction activity is complete.

Payment will be made under:

Pay Item		Pay Unit
652.343	Temporary Modular Delineator Curb	LF

SPECIAL PROVISION
SECTION 652
MAINTENANCE OF TRAFFIC
(Traffic Control)

Failure by the contractor to follow the Contracts 652 Special Provisions and Standard Specification and/or The Manual on Uniform Traffic Control Devices (MUTCD) and/or The Contractors own Traffic Control Plan will result in a violation letter and result in a reduction in payment as shown in the schedule below. The Department's Resident or any other representative of The Department reserves the right to suspend the work at any time and request a meeting to discuss violations and remedies. The Department shall not be held responsible for any delay in the work due to any suspension under this item. Any reduction in payment under this Special Provision will be in addition to forfeiting payment of maintenance of traffic control devices for that day.

ORIGINAL CONTRACT AMOUNT				
From	**Up to and**	**Amount of Penalty Damages per Violation**		
More Than	**Including**	**1st**	**2nd**	**3rd & Subsequent**
$0	$1,000,000	$250	$500	$1,250
$1,000,000	$2,000,000	$500	$1,000	$2,500
$2,000,000	$4,000,000	$1,000	$2,000	$5,000
$4,000,000	and more	$2,000	$4,000	$10,000

April 17, 2007
Supersedes May 10, 2006

SPECIAL PROVISION
SECTION 652
MAINTENANCE OF TRAFFIC
Construction Sign Sheeting Material

Super high intensity fluorescent retroreflective sheeting, ASTM D 4956 - Type VII, Type VIII, or Type IX (prismatic), is required for all construction signs.

SPECIAL PROVISION
SECTION 656
Temporary Soil Erosion and Water Pollution Control

The following is added to Section 656 regarding Project Specific Information and Requirements. All references to the Maine Department of Transportation Best Management Practices for Erosion and Sedimentation Control (a.k.a. Best Management Practices manual or BMP Manual) are a reference to the latest revision of said manual. The latest version is dated "February 2008" and is available at:

http://www.maine.gov/mdot/env/documents/pdf/bmp2008/BMP2008full.pdf

Procedures specified shall be according to the BMP Manual unless stated otherwise.

Delete the last sentence of Section 656.4.4, which reads, "After Final Acceptance of the project, the Contractor must submit the log to the Department which will become the property of the Department."

Project Specific Information and Requirements

The following information and requirements apply specifically to this Project. The temporary soil erosion and water pollution control measures associated with this work shall be addressed in the SEWPCP.

1) This project is in the Penobscot River watershed, which is listed as an Outstanding River Segment, as well as contains endangered Atlantic Salmon and Sturgeon. Therefore, the project is considered **SENSITIVE** in accordance with the BMP Manual. The Contractor's SEWPCP shall comply with Section II.B., Guidelines for Sensitive Waterbodies in the BMP Manual.

2) Newly disturbed earth shall be mulched by the end of each workday. Mulch shall be maintained on a daily basis.

3) The SEWPCP shall describe the location and method of temporary erosion and sediment control for existing and proposed catch basins, outlet areas and culvert inlets and outlets.

4) Dust control items other than those under Standard Specification 637 and Special Provision 637, if applicable, shall be included in the plan.

5) Permanent slope stabilization measures shall be applied within one week of the last soil disturbance.

6) Permanent seeding shall be done in accordance with *Special Provision, Section 618, Seeding* unless the Contract states otherwise.

7) Culvert inlet and outlet protection shall be installed within 48 hours of culvert installation, or prior to a storm event, whichever is sooner.

8) After November 1 the Contractor shall use winter stabilization methods, such as Wood Waste Erosion Control Mix as specified in Special Provision § 617. If required, spring procedures for permanent stabilization shall also be described in the plan. Use of this product for over-winter temporary erosion control will be incidental to the contract and be paid for as part of Pay Item 656.75.

SPECIAL PROVISION
SECTION 656
Temporary Soil Erosion and Water Pollution Control

9) All disturbed ditches shall be stabilized by the end of each workday. Stabilization shall be maintained on a daily basis.

10) Erosion control blanket shall be installed in the bottoms of all ditches except where a stone lining is planned. Seed shall be applied prior to the placement of the blanket.

11) Demolition debris (including debris from wearing surface removal, saw cut slurry, dust, etc.) shall be contained and shall not be allowed to discharge to any resource. All demolition debris shall be disposed of in accordance with *Standard Specifications, Section 202.03, Removing Existing Superstructure, Structural Concrete, Railings, Curbs, Sidewalks and Bridges*. Containment and disposal of demolition debris shall be addressed in the Contractor's SEWPCP.

12) **CLEARING LIMIT LINES SHALL BE MINIMIZED.** Clearing shall be minimized as shown on the design plans.

SPECIAL PROVISION
SECTION 656
Temporary Soil Erosion and Water Pollution Control

The following is added to Section 656 regarding Project Specific Information and Requirements. All references to the Maine Department of Transportation Best Management Practices for Erosion and Sedimentation Control (a.k.a. Best Management Practices manual or BMP Manual) are a reference to the latest revision of said manual. The latest version is dated "February 2008" and is available at:

http://www.maine.gov/mdot/env/documents/pdf/bmp2008/BMP2008full.pdf

Procedures specified shall be according to the BMP Manual unless stated otherwise.

Project Specific Information and Requirements

The following information and requirements apply specifically to this Project. The temporary soil erosion and water pollution control measures associated with this work shall be addressed in the Soil Erosion and Water Pollution Control Plan (SEWPCP.)

1) This project is in the Penobscot River watershed, which is listed as a Class B watershed. However, the Penobscot River is listed as an Outstanding River Segment in this area and is located within the Distinct Population Segment (DPS) and Critical Habitat (CH) for endangered Atlantic Salmon. Therefore, this project is considered SENSITIVE in accordance with Section IID of the 2008 BMP Manual.

2) Newly disturbed earth shall be mulched by the end of each workday. Mulch shall be maintained on a daily basis.

3) The SEWPCP shall describe the location and method of temporary erosion and sediment control for existing and proposed catch basins, outlet areas and culvert inlets and outlets.

4) **If water is flowing within the drainage system, the water shall be diverted to a stable area or conduit and work shall be conducted in the dry.** The Contractor's plan shall address when and where the diversions will be necessary.

5) Dust control items other than those under Standard Specification 637, if applicable, shall be included in the plan.

6) Permanent slope stabilization measures shall be applied within one week of the last soil disturbance. Temporary slope stabilization is required on a daily basis.

7) Permanent seeding shall be done in accordance with *Special Provision, Section 618, Seeding* unless the Contract states otherwise.

8) Culvert inlet and outlet protection shall be installed within 48 hours of culvert installation, or prior to a storm event, whichever is sooner.

SPECIAL PROVISION
SECTION 656
Temporary Soil Erosion and Water Pollution Control

9) Temporary winter stabilization must be used between November 1st and April 1st or outside of that time period if the ground is frozen or snow covered. Temporary winter stabilization involves, at a minimum, covering all disturbed soils and seeded ground that is not Acceptable Work with an approved method. If temporary winter stabilization practices are used then spring procedures for permanent stabilization shall also be described in the SEWPCP. Use of these methods for over-winter temporary erosion control will be incidental to the contract and be paid for as part of Pay Item 656.75.

10) All disturbed ditches/slopes shall be stabilized by the end of each workday. Stabilization shall be maintained on a daily basis.

11) Erosion control blanket shall be installed in the bottoms of all ditches except where a stone lining is planned. Seed shall be applied prior to the placement of the blanket.

12) If check dams are used, they shall be constructed of stone in accordance with BMP Manual, Section III.E.1. *Hay Bale Temporary Check Dams* **are not allowed**. Delete all reference to them.

SPECIAL PROVISION 700 - MATERIALS

SECTION 702 - BITUMINOUS MATERIAL

702.01 Asphalt Cement Performance Graded Asphalt Binder shall conform to the requirements of AASHTO M 320 or AASHTO MP 19, whichever is indicated in the contract documents. For Performance-Graded Asphalt Binder (PGAB), the Contractor shall arrange for the Supplier to furnish the following items to the Department's Materials Testing Engineer.

a. A Quality-Control Plan for PGAB that conforms to the requirements of AASHTO R 26 "Certifying Suppliers of Performance-Graded Asphalt Binders" and

b. A CERTIFICATE OF ANALYSIS for all asphalt materials furnished for use on the project. The Certificate shall include the actual test results of the material in storage from which the shipments are being made. Certificates shall be supplied for each lot, batch, or blend of each type and grade of material. A new certificate shall be issued at least every 30 days or upon receiving or manufacture of a new material. The original of each Certificate of Analysis shall be mailed to the Departments Materials Testing Engineer.

The Contractor shall give the supplier sufficient advance notice of orders to permit testing. Material not represented by tests will not be accepted for use on the work.

Deliveries of asphalt materials shall be accompanied by a loading invoice, delivery ticket, or slip, as required under Section l08.1.3 f. The Loading Invoice shall include the applicable certificate number and shall include a printed or stamped statement such as the following:

> "THIS IS TO CERTIFY THAT THE ASPHALT MATERIAL REPRESENTED BY THIS LOADING INVOICE CONFORMS TO THE SPECIFICATIONS OF THE PURCHASER FOR THE MATERIAL TYPE AND GRADE STATED THEREON."

In the event an intermediate hauler of the asphalt material is involved, a copy of their own delivery slip shall be furnished, as well as a copy of the supplier's loading invoice. The hauler's delivery slip and the supplier's loading invoice shall be cross-referenced by use of their respective serial numbers.

702.04 Emulsified Asphalt Emulsified Asphalt shall conform to the requirements of AASHTO M 140. Cationic emulsified asphalt shall conform to the requirements of AASHTO M 208.

Use of all emulsified asphalt shall comply with all Department of Environmental Protection (DEP) regulations regarding maximum amount of oil distillate, seasonal limitations, etc.

For emulsified asphalts, the Contractor shall arrange for the Supplier to furnish the following item to the Department's Materials Testing Engineer.

A CERTIFICATE OF ANALYSIS for all asphalt emulsion materials furnished for use on the project. The Certificate shall include the actual test results of the material in storage from which the shipments are being made. Certificates shall be supplied for each lot or batch for each

grade/type of emulsion. A new certificate shall be issued at least every 30 days or upon receiving or manufacture of a new material. The original of each Certificate of Analysis shall be mailed to the Department's Materials Testing Engineer.

Deliveries of emulsion materials shall be accompanied by a loading invoice, delivery ticket, or slip, as required under Section l08.1.3 f. The Loading Invoice shall include the applicable certificate number and shall include a printed or stamped statement such as the following:

> "THIS IS TO CERTIFY THAT THE ASPHALT MATERIAL REPRESENTED BY THIS LOADING INVOICE CONFORMS TO THE SPECIFICATIONS OF THE PURCHASER FOR THE MATERIAL TYPE AND GRADE STATED THEREON."

In the event an intermediate hauler of the asphalt material is involved, a copy of their own delivery slip shall be furnished, as well as a copy of the supplier's loading invoice. The hauler's delivery slip and the supplier's loading invoice shall be cross-referenced by use of their respective serial numbers.

SECTION 703 - AGGREGATES

<u>703.07 Aggregates for HMA Pavements</u> Coarse aggregate and fine aggregate for hot mix asphalt pavements shall be of such gradation that when combined in the proper proportions, including filler, if required, the resultant blend will meet the composition of mixture for the type of pavement specified.

Coarse aggregate, that material retained on the No. 4 sieve, shall be crushed stone or crushed gravel and, unless otherwise stipulated, shall consist of clean, tough, durable fragments free from an excess of soft or disintegrated pieces and free from stone coated with dirt or other objectionable matter. Coarse aggregate, shall not exceed an absorption of 2.0 percent by weight as determined by AASHTO T 85.

Fine aggregate, material that passes the No. 4 sieve, shall consist of natural sand, manufactured sand, or a combination of these. It shall consist of hard, tough grains, free from injurious amounts of clay, loam, or other deleterious substances. Fine aggregate, shall not exceed an absorption of 2.3 percent by weight as determined by AASHTO T 84.

The composite blend, minus any recycled asphalt pavement used (RAP), shall have a Micro-Deval value of 18.0 percent or less as determined by AASHTO T 327. In the event the material exceeds the Micro-Deval limit, a Washington Degradation test shall be performed. The material shall be acceptable if it has a value of 30 or more as determined by Washington State DOT Test Method T 113, Method of Test for Determination of Degradation Value (January 2009 version) except that the reported degradation value will be the result of testing a single composite specimen from that portion of the sample that passes the ½ inch sieve and is retained on the No. 10 sieve, minus any reclaimed asphalt pavement used.

Aggregates shall also meet the following consensus properties, except that aggregates extracted from RAP will not be included in the sand equivalent test. The Department reserves the right to sample and test the composite aggregate for any of the following properties at any time:

TABLE 3: Aggregate Consensus Properties Criteria

<table>
<tr><th>Estimated Traffic, Million 18 kip ESALs</th><th>AASHTO T 335 Coarse Aggregate Angularity (minimum)</th><th>AASHTO T 304 Method A Uncompacted Void Content of Fine Aggregate (min)</th><th>ASTM D 4791 (8.4) Flat and Elongated Particles (maximum)</th><th>AASHTO T 176 Clay Content/ Sand Equivalent (minimum)</th></tr>
<tr><td>< 0.3</td><td>60/60</td><td rowspan="2">40</td><td rowspan="5">10</td><td rowspan="4">45</td></tr>
<tr><td>0.3 to < 3.0</td><td>75/60</td></tr>
<tr><td>3.0 to < 10</td><td>85/80</td><td rowspan="3">45</td></tr>
<tr><td>10 to < 30</td><td>95/90</td></tr>
<tr><td>≥ 30</td><td>100/100</td><td>50</td></tr>
</table>

ASTM D 5821 - “85/80 denotes that 85 percent of the coarse aggregate has one fractured face and 80 percent has two fractured faces.

AASHTO T 304 - Criteria are presented as percent air voids in loosely compacted fine aggregate, (U).

ASTM D 4791 - Criteria are presented as maximum percent by weight of flat and elongated particles (5:1 ratio).

The entire HMA wearing course shall come from the same source of material and the same job mix formula, except when permission is obtained from the Department to change sources.

703.08 Recycled Asphalt Pavement Recycled asphalt pavement shall consist of salvaged asphalt materials from milled pavements or production waste that has been processed before use to meet the requirements of the job mix formula. It shall be free of winter sand, granular fill, construction debris, or other materials not generally considered asphalt pavement.

703.081 RAP for Asphalt Pavement Recycled Asphalt Pavement (RAP) may be introduced into hot-mix asphalt pavement at percentages approved by the Department according to the MaineDOT Policies and Procedures for HMA Sampling and Testing. If approved by the Department, the Contractor shall provide documentation stating the source, test results for average residual asphalt content, and stockpile gradations showing RAP materials have been sized to meet the maximum aggregate size requirements of each mix designation. The Department will obtain samples for verification and approval prior to its use.

The maximum allowable percent of RAP shall be determined by the asphalt content, the percent passing the 0.075 mm sieve, and Coarse Micro-Deval loss values as tested by the Department. The numerical average of the percent passing the 0.075 mm sieve values will be used for the approval. The maximum percentage of RAP allowable shall be the lowest percentage as determined according to Table 4 below:

TABLE 4: Maximum Percent RAP According to Test Results

Classification	Maximum RAP Percentage Allowed	Asphalt content standard deviation	Percent passing 0.075 mm sieve	Residual aggregate M-D loss value
Class III	10%	N/A	> 11.0	≤ 18
Class II	20%	≤ 0.5	≤ 11.0	
Class I	30%	≤ 0.3	≤ 8.0	

The Department will monitor RAP asphalt content and gradation during production by testing samples from the stockpile at approximately 15,000 T intervals (in terms of mix production). The allowable variance limits (from the numerical average values used for mix designs) for this testing are determined based upon the maximum allowable RAP percentage, and are shown below in Table 5.

TABLE 5: RAP Verification Limits

Classification	Maximum RAP Percentage Allowed	Asphalt content (compared to aim)	Percent passing 0.075 mm sieve (compared to aim)	Percent passing 0.075 mm sieve
Class III	10%	± 1.5	± 2.0	N/A
Class II	20%	± 1.0	± 1.5	≤ 11.0
Class I	30%	± 0.5	± 1.0	≤ 8.0

For specification purposes, RAP will be categorized as follows:

Class III – A maximum of 10.0 percent of Class III RAP may be used in any base, intermediate base, surface, or shim mixture. A maximum of 20.0 percent of Class III RAP may be used in hand-placed mixes for item 403.209.

Class II – A maximum of 20.0 percent Class II RAP in any base, binder, surface, or shim course.

Class I – A maximum of 20.0 percent Class I RAP may be used in any base, intermediate base, surface, or shim mixture without requiring a change to the specified asphalt binder. A maximum of 30.0 percent Class I RAP may be used in in any base or intermediate base mixture provided that a PG 58-28 asphalt binder is used. A maximum of 30.0 percent Class I RAP may be used in any surface or shim mixture provided that PG 58-34 or 52-34 asphalt binder is used. Mixtures exceeding 20.0 percent Class I RAP must be evaluated and approved by the Department.

The Contractor may use up to two different RAP sources in any one mix design. The total RAP percentage of the mix shall not exceed the maximum allowed for the highest classification RAP source used (i.e. if a Class I & Class III used, total RAP must not exceed 30.0%). The blended RAP material must meet all the requirements of the classification for which the RAP is entered (i.e. 10% Class III with 20% Class I, blend must meet Class I criteria). The Department may take belt cuts of the blended RAP to verify the material meets these requirements. If the

Contractor elects to use more than one RAP source in a design, the Contractor shall provide an acceptable point of sampling blended RAP material from the feed belt.

In the event that RAP source or properties change, the Contractor shall notify the Department of the change and submit new documentation stating the new source or properties a minimum of 72 hours prior to the change to allow for obtaining new samples and approval.

703.09 HMA Mixture Composition The coarse and fine aggregate shall meet the requirements of Section 703.07. The several aggregate fractions for mixtures shall be sized, graded, and combined in such proportions that the resulting composite blends, including RAP aggregate will meet the grading requirements of the following table:

Aggregate Gradation Control Points

Sieve Designation	Nominal Maximum Aggregate Size---Control Points (Percent Passing)					
	Type 25 mm	Type 19 mm	Type 12.5 mm	Type 9.5 mm	Type 9.5 mm Thin Lift Mixture (TLM)	Type 4.75 mm
	Percent By Weight Passing - Combined Aggregate					
37.5 mm	100					
25 mm	90-100	100				
19 mm	-90	90-100	100			
12.5 mm		-90	90-100	100	100	100
9.5 mm		-	-90	90-100	95-100	95-100
4.75 mm		-	-	-90	60-95	80-100
2.36 mm	19-45	23-49	28-58	32-67	40-65	40 - 80
1.18 mm		-	-	-	-	-
600 µm		-	-	-	-	-
300 µm		-	-	-	-	-
75 µm	2.0-6.0	2.0-6.0	2.0-6.0	2.0-7.0*	2.0-7.0*	2.0-7.0

* For 9.5 mm nominal maximum aggregate size mixtures, the maximum design aim for the percent passing the 75 µm sieve is 6.5%.

SUPPLEMENTAL SPECIFICATION
SECTION 715
LIGHTING MATERIAL

DELETE paragraph 715.10 and replace with the following new paragraph 715.10:

715.10 PHOTOELECTRIC/TIMER CONTROL The control will meet the following minimum requirements:

a. Unit Design The photoelectric/Timer Control unit will consist of a silicon photocell sensor and solid state timer device which control an integral single pole, single throw relay having contacts which are in the normally closed position at night.
b. Housing The photoelectric/Timer Control housing will be constructed of UV stabilized high-impact polypropylene and be of weatherproof design.
c. Operating Levels The operating levels will be factory set to turn on at dusk (2.6 foot-candles) with a 60 second time delay and turn off at a pre-set time as determined and adjusted by the user.
d. Supply Voltage The photoelectric/Timer Control unit will be capable of operation on a supply voltage of 105 to 285 VAC.
e. Base The base of the unit will be of high temperature engineered polymer material rated at 125 degrees C and be provided with a 3-prong, EEI-NEMA standard twist lock plug mounting.
f. Directional Design The photoelectric/Timer Control unit will be oriented in a northerly direction as recommended by the manufacturer.
g. Surge Protection The photoelectric/Timer Control unit will have built-in surge protection consisting of a 320 joule rated Metal Oxide Varistor for protection of the unit from induced high voltage surges.
h. The photoelectric/Timer Control unit will be Model ESC-124DS as manufactured by Precision Multiple Controls or approved equal by Tork or Intermatic.

SPECIAL PROVISION
SECTION 802
PIPE INSULATION AND JACKETING

Description

This work shall consist of furnishing and installing the water main pipe insulation and accessories where shown on the Drawings.

Materials

Insulation

A. Material: polyurethane foam, field applied
B. Thickness: 2" applied continuously around water main and fittings.
C. Density: (ASTM D 1622) 35 to 46 kg/m^3 (*2.1 TO 3.0 lbs/ft^3*)
D. Closed cell content: (ASTM D 2856) 90%, minimum
E. Water absorption: (ASTM D 2842) 4.0% by volume
F. Thermal conductivity: (ASTM C518) 0.020 to 0.026 W/m °C (*0.14 to .017 Btu·in/ft^2·°F*)

Outer Jacket

A. PVC with 0.03" minimum wall thickness
B. Jacket outer diameter shall be 17.83"
C. Banding shall be stainless steel, installed and spaced according to manufacturers' recommendations.
D. Mastic for sealing ends of joint fittings shall be per manufactures recommendation

Insulation Kits for Fittings

E. Insulation kits for fittings shall consist of polyurethane foam insulation and fabricated PVC outer protective jacket. All kits to be supplied complete with stainless steel bands, band-it clips, and screws to suit.

Quality Assurance

F. Acceptable Installers:
    1. Damon Insulation, Bangor, Maine
G. Contractor shall submit shop drawings for approval.
    1. Shop drawings shall show jacket system, insulation, end seals, joint kits, etc.

Construction Requirements

Installation

Pipe insulation and jacketing will be furnished and installed by Damon Insulation of Bangor, Maine under subcontract to the General Contractor. The General Contractor must coordinate the water main installation with the insulation subcontractor. Install all pipe insulation and jacketing in the general location shown on the Drawings in accordance with manufacturer's recommendations.

Method of Measurement

The quantity of pipe insulation to be paid for under this Item shall be the actual length in linear feet as measured along the center of the pipe as laid including all fittings. The limit of pipe insulation shall be to a point either side of the bridge where rigid pipe trench insulation can be substituted.

Basis of Payment

Pipe Installation shall be paid for at the unit price per linear foot as stated in the Bid Schedule. Said unit price shall be full compensation for furnishing and installing all pipe insulation, adhesive, mastic, banding, and any other items necessary to complete the water main pipe insulation system.

Payment will be made under:

Pay Item		Pay Unit
802.171	16" DIAMETER INSULATION	LF

SPECIAL PROVISIONS
SECTION 827
TRENCH INSULATION

Description: Furnish and install polystyrene rigid board insulation of type indicated and in locations shown on the drawings or as directed by the engineer.

MATERIALS

Materials:

A. Polystyrene rigid board insulation with thickness of 2 inches, and a width of 2 feet.
B. Qualifications of Manufacturer: Products have proven reliable in similar installations over a reasonable number of years. Insulation shall be Dow Styrofoam Highload 40 or approved equal.

CONSTRUCTION REQUIREMENTS

General. Install pipe trench insulation as shown in the details.

Method of Measurement: Trench Insulation measured for payment shall consist of the actual number of square yards of trench insulation installed as directed by the Engineer.

Basis of Payment: The contract unit price for Trench Insulation shall constitute full compensation for all labor, equipment and materials necessary to complete the work including excavation, backfill, compaction, furnishing and installing insulation, coordination with the Bangor Water District and all incidentals needed to complete the item.

Payment will be made under:

Pay Item		Pay Unit
827.331	Trench Insulation	Square Yard

SPECIAL PROVISION
SECTION 830
WATER MAIN BRIDGE CROSSING

Description

This work shall consist of furnishing and installing all materials and labor for installation of water main from near Station 12+90, 26.83' LT to near Station 15+10, 26.83' LT. The work shall include, but not necessarily be limited to, the furnishing and installing of the following:

1. 16” water main
2. 1” temporary chlorination tap and fittings at one abutment end
3. 2” temporary chlorination tap and fittings at other abutment end
4. 16” restrained joint caps at each end
5. Temporary concrete thrust blocks at each end
6. Pipe hangers
7. Pipe hanger threaded rod
8. Nuts and miscellaneous fittings
9. Pipe covering protection saddles

This work shall be in conformance with the Plans, these specifications, and Special Provision Section 104 Utilities.

Required pre-installation meeting

Prior to beginning installation of this work, a utility meeting shall be held with all utilities, the Resident, and the MaineDOT utility coordinator (Jerry Quirion).

Materials

The materials furnished by the Contractor shall be new. All materials shall conform to Plans and applicable standards.

All materials in contact with potable water shall be NSF/ANSI 61 approved.

Water Main - Bridge crossing water main shall be 16” diameter, class 52, cement lined ductile iron in 20 foot lengths, with rigid restrained joints, Mech-Lok, as manufactured by Griffin Pipe Products or approved equal. Flexible restrained joint pipe **will not** be considered equal to rigid restrained joint pipe.

Chlorination taps and fittings shall consist of no lead brass corporations and curb stops, compression style fittings as manufactured by Mueller or approved equal. Tubing shall be Type K copper.

Pipe hangers - All materials in shall be hot-dipped galvanized.

Pipe hangers shall be figure B3114-24 pipe roll with sockets sized for 16 inch diameter pipe with 2" of insulation and jacketing, as manufactured by Cooper B-Line or approved equal. Minimum design load shall be 6,160 lbs. per hanger. Rod size shall be 1 ½" diameter, 6 threads per inch.

Pipe covering protection saddles - shall be as manufactured by Cooper B-Line or approved equal, part number B3162, sized for 16" diameter pipe with 2" of insulation with PVC jacket and 24" roller hangers.

Installation

Install bridge crossing water main in the general location shown on the drawing in accordance with manufactures recommendations, AWWA standards, MDOT requirements and state and local code. Coordinate installation work with piping insulation subcontractor. Provide temporary caps at the end of each work day. Provide restrained joint caps with thrust blocks, provide chlorination taps.

Install all hangers in the general location shown on the drawing in accordance with manufactures recommendation, MDOT requirements and state and local code. Provide a minimum of two hangers per each 20 foot section of bridge crossing main.

Install pipe covering protection saddles at each hanger in the locations shown on the drawing in accordance with manufactures recommendation, MDOT requirements and state and local code.

Pressure testing and chlorination will be done by Bangor Water District. The Contractor is responsible for coordinating work with BWD.

Submittals

The Contractor shall within 60 days following execution of the contract, submit a list of materials which are to be installed. The list shall include the manufacturer, size, and identifying number of each item. The list shall be supplemented by such data as may be required, including detailed scale drawings of proposed minor deviations from the plans. The Contractor shall submit for review design data of the material proposed for use. All of the data shall be submitted in duplicate. The Department or Bangor Water District will not be liable for material purchased, labor performed, or work delayed until the review is complete and the list of materials and associated details are approved.

Method of Measurement

Water Main Bridge Crossing will be measured by the lump sum, complete, and accepted in place.

Basis of Payment

Payment for Water Main Bridge Crossing, shall be full compensation for all labor, materials, equipment and incidentals necessary to complete the work, including but not limited to furnishing and installing the water main; excavating; other special backfill materials that may be specified on the plans; fittings; shields and related incidental work and materials.

Payment will be made under:

Pay Item		Pay Unit
830.10	Water Main Bridge Crossing	LS

SPECIAL PROVISION
SECTION 845
STRUCTURAL STEEL UTILITY SUPPORT

Description

This work shall consist of furnishing and installing structural steel utility supports, denoted *Utility Supports A, B and C* in the plans, and as directed by the Resident. The work also includes structural steel pipe sleeves through the abutment backwalls as specified herein.

Materials

Materials shall meet the requirements of the following Section of Division 700-Materials

Structural Steel	713.01

Steel pipe sleeves through abutment backwalls shall be furnished as follows:

1. 2'-8" diameter galvanized steel pipe sleeve for water main: By Contractor
2. 5" diameter steel pipe sleeves for telecommunications conduits: By FairPoint Communications.
3. 5" diameter steel pipe sleeves for miscellaneous conduits: By Contractor

Installation

The Contractor shall install anchor rods, support channels, threaded rod hangers, nuts and washers to be cast in the superstructure slab at each location indicated on the Drawings.

The Contractor shall install pipe sleeves to be cast in the abutment backwalls at each location indicated on the Drawings.

Submittals

The Contractor shall prepare shop detail, erection and other necessary working drawing in accordance with Section 105.7 - Working Drawings. The drawings will be reviewed and approved in accordance with the applicable requirements of Section 105.7.

Method of Measurement

Structural steel utility supports and steel pipe sleeves properly placed and accepted into the superstructure slab and abutment backwalls, respectively shall be measured for payment as follows:

Structural Steel Utility Support - Bangor Water District shall be measured by the lump sum.
Structural Steel Utility Support - FairPoint shall be measured by the lump sum.
Structural Steel Utility Support - MaineDOT shall be measured by the lump sum.

Basis of Payment

The accepted quantity of Structural Steel Utility Support for the bridge crossing shall be full compensation for furnishing and installing structural steel supports as shown in the details and steel pipe sleeves as specified herein. Price shall include all equipment, tools, labor, and incidental materials incidental thereto. Compensation for furnishing and installing *Utility Supports C* which are shared by the Bangor Water District and FairPoint Communications will be equally divided between the two utilities. Furnishing and installing conduits and conduit support assembly systems and pipe, pipe insulation and pipe roller support assembly system (anything not cast in concrete) shall be paid for under separate items.

Payment will be made under:

Pay Item		**Pay Unit**
845.10	Structural Steel Utility Support - Bangor Water District	Lump Sum
845.10	Structural Steel Utility Support - FairPoint	Lump Sum
845.10	Structural Steel Utility Support - MaineDOT	Lump Sum

STANDARD DETAIL UPDATES

Standard Details and Standard Detail updates are available at:
http://www.maine.gov/mdot/contractor-consultant-information/ss_standard_details_updates.php

Detail #	Description	Revision Date
203(03)	Backslope Rounding	1/29/08
502(03)	Concrete Curb - Bituminous Wearing Surface	8/08/11
502(03)A	Concrete Curb - Concrete Wearing Surface	2/2/09
502(07)	Precast Concrete Deck Panels - Layout Plan	2/2/09
502(07)A	Precast Concrete Deck Panels - Layout Plan	2/2/09
502(08)	Precast Concrete Deck Panels - Panel Plan	2/2/09
502(09)	Precast Concrete Deck Panels - Blocking Detail	2/2/09
502(10)	Precast Concrete Deck Panels	2/2/09
502(11)	Precast Concrete Deck Panels	2/2/09
502(12)	Precast Concrete Deck Panels - Notes	10/28/09
502(12)A	Precast Concrete Deck Panels - Notes	2/2/09
504(15)	Diaphragms	5/19/11
504(21)	Tension Flange Connection for Diaphragm and Cross Frames	10-11-12
504(22)	Diaphragm & Crossframe Notes	10/11/12
504(23)	Hand-Hold Details	12/08/05
502(24)	Hand-Hold Details	10/11/12
507(04)	Steel Bridge Railing	2/05/03
507(04A)	Steel Bridge Railing	7/3/13
507(09)	Steel Bridge Railing	5/19/11
507(09)A	Steel Bridge Railing	5/19/11

526(06)	Permanent Concrete Barrier	2/2/09
526(08)	Permanent Concrete Barrier – Type IIIA	10/07/10
526(08)A	Permanent Concrete Barrier – Type IIIA	12/07/10
526(13)	Permanent Concrete Barrier – Type IIIB	2/2/09
526(14)	Permanent Concrete Barrier – Type IIIB	2/2/09
526(21)	Concrete Transition Barrier	2/2/09
526(29A)	Concrete Transition Barrier	5/1/13
526(29B)	Concrete Transition Barrier	5/1/13
526(29C)	Concrete Transition Barrier	5/1/13
526(33)	Concrete Transition Barrier	5/1/13
526(39)	Texas Classic Rail – Between Window	2/2/09
526(40)	Texas Classic Rail – Through Window	2/2/09
526(41)	Texas Classic Rail – Through Post	2/2/09
526(42)	Texas Classic Rail – Through Nose	2/2/09
535(01)	Precast Superstructure - Shear Key	10/12/06
535(02)	Precast Superstructure - Curb Key & Drip Notch	5/20/08
535(03)	Precast Superstructure - Shear Key	12/5/07
535(04)	Precast Superstructure - Shear Key	12/05/07
535(05)	Precast Superstructure - Post Tensioning	5/20/08
535(06)	Precast Superstructure - Sections	10/12/06
535(07)	Precast Superstructure - Precast Slab & Box	10/12/06
535(08)	Precast Superstructure - Sections	10/12/06
535(09)	Precast Superstructure - Sections	10/12/06
535(10)	Precast Superstructure - Sections	10/12/06
535(11)	Precast Superstructure - Sections	10/12/06

535(12)	Precast Superstructure - Sections	10/12/06
535(13)	Precast Superstructure - Sections	10/12/06
535(14)	Precast Superstructure - Stirrups	10/12/06
535(15)	Precast Superstructure - Plan	10/12/06
535(16)	Precast Superstructure - Reinforcing	10/12/06
535(17)	Precast Superstructure - Notes	12/05/07
604(01)	Catch Basins	11/16/05
604(05)	Type “A” & “B” Catch Basin Tops	11/16/05
604(06)	Type “C” Catch Basin Tops	11/16/05
604(07)	Manhole Top “D”	11/16/05
604(09)	Catch Basin Type “E”	11/16/05
604(18)	Utility Structures	11/29/13
606(02)	Multiple Mailbox Support	11/16/05
606(03)	Guardrail Standard Detail	9/19/12
606(07)	Reflectorized Beam Guardrail Delineator Details	11/16/05
606(20)	Guardrail - Type 3 - Single Rail - Bridge Mounted	2/2/09
606(21)	Guardrail - Type 3 - Single Rail - Bridge Mounted	2/2/09
606(22)	Guardrail - Type 3 - Single Rail - Bridge Mounted	2/2/09
606(23)	Guardrail - Type 3 - Single Rail - Bridge Mounted	2/2/09
609(03)	Curb Type 3	6/27/06
609(06)	Vertical Bridge Curb	2/12/09
609(07)	Curb Type 1	6/27/06
609(08)	Precast Concrete Transition Curb	2/2/09

610(02)	Stone Scour Protection	8/9/11
610(03)	Stone Scour Protection	5/19/11
610(04)	Stone Scour Protection	5/19/11
620(05)	Geotextile Placement for Protection of Slopes Adjacent to Stream & Tidal Areas	5/19/11
626(09)	Electrical Junction Box for Traffic Signals and Lighting	8/27/10
645(06)	H-Beam Posts – Highway Signing	7/21/04
645(09)	Installation of Type II Signs	7/21/04
801(01)	Drives on Sidewalk Sections	12/13/07
801(02)	Drives on Non-Sidewalk Sections	12/13/07

SUPPLEMENTAL SPECIFICATION

(Corrections, Additions, & Revisions to Standard Specifications - Revision of December 2002)

SECTION 101
CONTRACT INTERPRETATION

101.2 Definitions

Closeout Documentation Replace the sentence "A letter stating the amount….. DBE goals." with "DBE Goal Attainment Verification Form"

Add "Environmental Information Hazardous waste assessments, dredge material test results, boring logs, geophysical studies, and other records and reports of the environmental conditions. For a related provision, see Section 104.3.14 - Interpretation and Interpolation."

Add "Fabrication Engineer The Department's representative responsible for Quality Assurance of pre-fabricated products that are produced off-site."

Geotechnical Information Replace with the following: "Boring logs, soil reports, geotechnical design reports, ground penetrating radar evaluations, seismic refraction studies, and other records of subsurface conditions. For a related provision, see Section 104.3.14 - Interpretation and Interpolation."

SECTION 102
DELIVERY OF BIDS

102.7.1 Location and Time Add the following sentence "As a minimum, the Bidder will submit a Bid Package consisting of the Notice to Contractors, the completed Acknowledgement of Bid Amendments form, the completed Schedule of Items, 2 copies of the completed Agreement, Offer, & Award form, a Bid Bond or Bid Guarantee, and any other Certifications or Bid Requirements listed in the Bid Book."

102.11.1 Non-curable Bid Defects Replace E. with "E. The unit price and bid amount is not provided or a lump sum price is not provided or is illegible as determined by the Department."

SECTION 103
AWARD AND CONTRACTING

103.3.1 Notice and Information Gathering Change the first paragraph to read as follows: "After Bid Opening and as a condition for Award of a Contract, the Department may require an Apparent Successful Bidder to demonstrate to the Department's satisfaction that the Bidder is responsible and qualified to perform the Work."

SECTION 104
GENERAL RIGHTS AND RESPONSIBILITIES

104.3.14 Interpretation and Interpolation In the first sentence, change "…and Geotechnical Information." to "…Environmental Information, and Geotechnical Information."

SECTION 105
GENERAL SCOPE OF WORK

Delete the entire Section 105.6 and replace with the following:

105.6.1 Department Provided Services The Department will provide the Contractor with the description and coordinates of vertical and horizontal control points, set by the Department, within the Project Limits, for full construction Projects and other Projects where survey control is necessary. For Projects of 1,500 feet in length, or less: The Department will provide three points. For Projects between 1,500 and 5,000 feet in length: The Department will provide one set of two points at each end of the Project. For Projects in excess of 5,000 feet in length, the Department will provide one set of two points at each end of the Project, plus one additional set of two points for each mile of Project length. For non-full construction Projects and other Projects where survey control is not necessary, the Department will not set any control points and, therefore, will not provide description and coordinates of any control points. Upon request of the Contractor, the Department will provide the Department's survey data management software and Survey Manual to the Contractor, or its survey Subcontractor, for the exclusive use on the Department's Projects.

105.6.2 Contractor Provided Services Utilizing the survey information and points provided by the Department, described in Subsection 105.6.1, Department Provided Services, the Contractor shall provide all additional survey layout necessary to complete the Work. This may include, but not be limited to, reestablishing all points provided by the Department, establishing additional control points, running axis lines, providing layout and maintenance of all other lines, grades, or points, and survey quality control to ensure conformance with the Contract. The Contractor is also responsible for providing construction centerline, or close reference points, for all Utility Facilities relocations and adjustments as necessary to complete the Work. When the Work is to connect with existing Structures, the Contractor shall verify all dimensions before proceeding with the Work. The Contractor shall employ or retain competent engineering and/or surveying personnel to fulfill these responsibilities.

The Contractor must notify the Department of any errors or inconsistencies regarding the data and layout provided by the Department as provided by Section 104.3.3 - Duty to Notify Department If Ambiguities Discovered.

105.6.2.1 Survey Quality Control The Contractor is responsible for all construction survey quality control. Construction survey quality control is generally defined as, first, performing initial field survey layout of the Work and, second, performing an independent check of the initial layout using independent survey data to assure the accuracy of the initial layout; additional iterations of checks may be required if significant discrepancies are discovered in this process. Construction survey layout quality control also requires written documentation of the layout process such that the process can be followed and repeated, if necessary, by an independent survey crew.

105.6.3 Survey Quality Assurance It is the Department's prerogative to perform construction survey quality assurance. Construction survey quality assurance may, or may not, be performed by the Department. Construction survey quality assurance is generally defined as an independent check of the construction survey quality control. The construction survey

quality assurance process may involve physically checking the Contractor's construction survey layout using independent survey data, or may simply involve reviewing the construction survey quality control written documentation. If the Department elects to physically check the Contractor's survey layout, the Contractor's designated surveyor may be required to be present. The Department will provide a minimum notice of 48 hours to the Contractor, whenever possible, if the Contractor's designated surveyor's presence is required. Any errors discovered through the quality assurance process shall be corrected by the Contractor, at no additional cost to the Department.

105.6.4 Boundary Markers The Contractor shall preserve and protect from damage all monuments or other points that mark the boundaries of the Right-of-Way or abutting parcels that are outside the area that must be disturbed to perform the Work. The Contractor indemnifies and holds harmless the Department from all claims to reestablish the former location of all such monuments or points including claims arising from 14 MRSA § 7554-A. For a related provision, see Section 104.3.11 - Responsibility for Property of Others.

SECTION 106
QUALITY

106.4.3 Testing Change the first sentence in paragraph three from "…maintain records of all inspections and tests." to "…maintain original documentation of all inspections, tests, and calculations used to generate reports."

106.6 Acceptance Add the following to paragraph 1 of A: "This includes Sections 401 - Hot Mix Asphalt, 402 - Pavement Smoothness, and 502 - Structural Concrete - Method A - Air Content."

Add the following to the beginning of paragraph 3 of A: "For pay factors based on Quality Level Analysis, and"

106.7.1 Standard Deviation Method Add the following to F: "Note: In cases where the mean of the values is equal to either the USL or the LSL, then the PWL will be 50 regardless of the computed value of s."

Add the following to H: "Method C Hot Mix Asphalt: PF = [55 + (Quality Level *0.5)] * 0.01"

SECTION 107
TIME

107.3.1 General Add the following: "If a Holiday occurs on a Sunday, the following Monday shall be considered a Holiday. Sunday or Holiday work must be approved by the Department, except that the Contractor may work on Martin Luther King Day, President's Day, Patriot's Day, the Friday after Thanksgiving, and Columbus Day without the Department's approval."

107.7.2 Schedule of Liquidated Damages Replace the table of Liquidated Damages as follows:

From More Than	Up to and Including	Amount of Liquidated Damages per Calendar Day
$0	$100,000	$225

$100,000	$250,000	$350
$250,000	$500,000	$475
$500,000	$1,000,000	$675
$1,000,000	$2,000,000	$900
$2,000,000	$4,000,000	$1,000
$4,000,000	and more	$2,100

SECTION 108
PAYMENT

Remove Section 108.4 and replace with the following:

"108.4 Payment for Materials Obtained and Stored Acting upon a request from the Contractor and accompanied by bills or receipted bills, the Department will pay for all or part of the value of acceptable, non-perishable Materials that are to be incorporated in the Work, including Materials that are to be incorporated into the Work, not delivered on the Work site, and stored at places acceptable to the Department. Examples of such Materials include steel piles, stone masonry, curbing, timber and lumber, metal Culverts, stone and sand, gravel, and other Materials. The Department will not make payment on living or perishable Materials until acceptably planted in their final locations.

If payment for Materials is made to the Contractor based on bills, only, then the Contractor must provide receipted bills to the Department for these Materials within 14 days of the date the Contractor receives payment for the Materials. Failure of the Contractor to provide receipted bills for these Materials within 14 days of the dated the Contractor receives payment will result in the paid amount being withheld from the subsequent progress payment, or payments, until such time the receipted bills are received by the Department.

Materials paid for by the Department are the property of the Department, but the risk of loss shall remain with the Contractor. Payment for Materials does not constitute Acceptance of the Material. If Materials for which the Department has paid are later found to be unacceptable, then the Department may withhold amounts reflecting such unacceptable Materials from payments otherwise due the Contractor.

In the event of Default, the Department may use or cause to be used all paid-for Materials in any manner that is in the best interest of the Department."

SECTION 109
CHANGES

109.1.1 Changes Permitted Add the following to the end of the paragraph: "There will be no adjustment to Contract Time due to an increase or decrease in quantities, compared to those estimated, except as addressed through Contract Modification(s)."

109.1.2 Substantial Changes to Major Items Add the following to the end of the paragraph: "Contract Time adjustments may be made for substantial changes to Major Items when the change affects the Critical Path, as determined by the Department"

109.4.4 Investigation / Adjustment Third sentence, delete the words "subsections (A) - (E)"

109.5.1 Definitions - Types of Delays

B. Compensable Delay Replace (1) with the following; "a weather related Uncontrollable Event of such an unusually severe nature that a Federal Emergency Disaster is declared. The Contractor will only be entitled to an Equitable Adjustment if the Project falls within the geographic boundaries prescribed under the disaster declaration."

109.7.2 Basis of Payment Replace with the following: "Adjustments will be established by mutual Agreement based upon Unit or Lump Sum Prices. These agreed Unit or Lump Sum prices will be full compensation and no additions or mark-ups are allowed. If Agreement cannot be reached, the Contractor shall accept payment on a Force Account basis as provided in Section 109.7.5 - Force Account Work, as full and complete compensation for all Work relating to the Equitable Adjustment."

109.7.3 Compensable Items Delete this Section entirely.

109.7.4 Non-Compensable Items Replace with the following: "The Contractor is not entitled to compensation or reimbursement for any of the following items:

A. Total profit or home office overhead in excess of 15%,
B. ……."

109.7.5 Force Account Work

C. Equipment
Paragraph 2, delete sentence 1 which starts; "Equipment leased…."

Paragraph 6, change sentence 2 from "The Contractor may furnish…" to read "If requested by the Department, the Contractor will produce cost data to assist the Department in the establishment of such rental rate, including all records that are relevant to the Actual Costs including rental Receipts, acquisition costs, financing documents, lease Agreements, and maintenance and operational cost records."
Add the following paragraph; "Equipment leased by the Contractor for Force Account Work and actually used on the Project will be paid for at the actual invoice amount plus 10% markup for administrative costs."

Add the following section;

"F. Subcontractor Work When accomplishing Force Account Work that utilizes Subcontractors, the Contractor will be allowed a maximum markup of 5% for profit and overhead on the Subcontractor's portion of the Force Account Work. If the Department does not accept the Subcontractor quote, then the Subcontractor work will be subject to the Force Account provisions with a 5% markup for profit & overhead.."

SECTION 110
INDEMNIFICATION, BONDING, AND INSURANCE

Delete the entire Section 110.2.3 and replace with the following:

110.2.3 Bonding for Landscape Establishment Period The Contractor shall provide a signed, valid, and enforceable Performance, Warranty, or Maintenance Bond complying with the Contract, to the Department at Final Acceptance.

The bond shall be in the full amount for all Pay Items for work pursuant to Sec 621, Landscape, payable to the "Treasurer - State of Maine," and on the Department's forms, on exact copies thereof, or on forms that do not contain any significant variations from the Department's forms as solely determined by the Department.

The Contractor shall pay all premiums and take all other actions necessary to keep said bond in effect for the duration of the Landscape Establishment Period described in Special Provision 621.0036 - Establishment Period. If the Surety becomes financially insolvent, ceases to be licensed or approved to do business in the State of Maine, or stops operating in the United States, the Contractor shall file new bonds complying with this Section within 10 Days of the date the Contractor is notified or becomes aware of such change.

All Bonds shall be procured from a company organized and operating in the United States, licensed or approved to do business in the State of Maine by the State of Maine Department of Business Regulation, Bureau of Insurance, and listed on the latest Federal Department of the Treasury listing for "Companies Holding Certificates of Authority as Acceptable Sureties on Federal Bonds and as Acceptable Reinsuring Companies."

By issuing a bond, the Surety agrees to be bound by all terms of the Contract, including those related to payment, time for performance, quality, warranties, and the Department's self-help remedy provided in Section 112.1 - Default to the same extent as if all terms of the Contract are contained in the bond(s).

Regarding claims related to any obligations covered by the bond, the Surety shall provide, within 60 Days of Receipt of written notice thereof, full payment of the entire claim or written notice of all bases upon which it is denying or contesting payment. Failure of the Surety to provide such notice within the 60-day period constitutes the Surety's waiver of any right to deny or contest payment and the Surety's acknowledgment that the claim is valid and undisputed.

SECTION 202
REMOVING STRUCTURES AND OBSTRUCTIONS

202.02 Removing Buildings Make the following change to the last sentence in the final paragraph, change "…Code of Maine Regulations 401." to "…Department of Environmental Protection Maine Solid Waste Management Rules, 06-096 CMR Ch. 401, Landfill Siting, Design and Operation."

SECTION 203
EXCAVATION AND EMBANKMENT

203.01 Description Under b. Rock Excavation; add the following sentence: "The use of perchlorate is not allowed in blasting operations."

Delete the entire Section 203.041 and replace with the following:
"203.041 Salvage of Existing Hot Mix Asphalt Pavement All existing hot mix asphalt pavement designated to be removed under this contract must be salvaged for utilization. Existing hot mix asphalt pavement material shall not be deposited in any waste area or be placed below subgrade in any embankment.

Methods of utilization may be any of the following:

1. Used as a replacement for untreated aggregate surface course on entrances provided the material contains no particles greater than 50 mm [2 in] in any dimension. Payment will be made under Pay Item 411.09, Untreated Aggregate Surface Course or 411.10, Untreated Aggregate Surface Course, Truck Measure. Material shall be placed, shaped, compacted and stabilized as directed by the Resident.

2. Used as the top 3" of gravel. Recycled Asphalt Pavement (RAP) shall be process to 1½" minus and blending will not be allowed. When this method is utilized, a surcharge will not be required

3. Stockpiled at commercial or approved sites for commercial or MaineDOT use.

4. Other approved methods proposed by the Contractor, and approved by the Resident which will assure proper use of the existing hot mix asphalt pavement.

The cost of salvaging hot mix asphalt material will be included for payment under the applicable pay item, with no additional allowances made, which will be full compensation for removing, temporarily stockpiling, and rehandling, if necessary, and utilizing the material in entrances or other approved uses, or stockpiling at an approved site as described above. The material will also be measured and paid for under the applicable Pay Item if it is reused for aggregate in entrances, or other approved uses."

SECTION 502
STRUCTURAL CONCRETE

502.05 Composition and Proportioning; TABLE #1; NOTE #2; third sentence; Change "…alcohol based saline sealer…" to "alcohol based silane sealer…". Add NOTE #6 to Class S Concrete.

502.0502 Quality Assurance Method A - Rejection by Resident Change the first sentence to read: "For an individual sublot with test results failing to meet the criteria in Table #1, or if the calculated pay factor for Air Content is less than 0.80……"

502.0503 Quality Assurance Method B - Rejection by Resident Change the first sentence to read: "For material represented by a verification test with test results failing to meet the criteria in Table #1, the Department will……"

502.0505 Resolution of Disputed Acceptance Test Results Combine the second and third sentence to read: "Circumstances may arise, however, where the Department may ……"
502.10 Forms and False work
D. Removal of Forms and False work 1., First paragraph; first, second, and third sentence; replace "forms" with "forms and false work"

502.11 Placing Concrete
G. Concrete Wearing Surface and Structural Slabs on Precast Superstructures Last paragraph; third sentence; replace "The temperature of the concrete shall not exceed 24° C [75° F} at the time of placement." with "The temperature of the concrete shall not exceed 24° C [75° F} at the time the concrete is placed in its final position."

502.15 Curing Concrete First paragraph; replace the first sentence with the following; "All concrete surfaces shall be kept wet with clean, fresh water for a curing period of at least 7 days after concrete placing, with the exception of vertical surfaces as provided for in Section 502.10 (D) - Removal of Forms and False work."

Second paragraph; delete the first two sentences.
Third paragraph; delete the entire paragraph which starts "When the ambient temperature…."
Fourth paragraph; delete "approved" to now read "…continuously wet for the entire curing period…"

Fifth paragraph; second sentence; change "…as soon as it is possible to do so without damaging the concrete surface." to "…as soon as possible."

Seventh paragraph; first sentence; change "…until the end of the curing period." to "…until the end of the curing period, except as provided for in Section 502.10(D) - Removal of Forms and False work."

502.19 Basis of Payment First paragraph, second sentence; add "pier nose armor" to the list of items included in the contract price for concrete.

SECTION 503
REINFORCING STEEL

503.06 Placing and Fastening Change the second paragraph, first sentence from: "All tack welding shall be done in accordance with Section 504, Structural Steel." to "All tack welding shall be done in accordance with AWS D1.4 Structural Welding Code - Reinforcing Steel."

SECTION 504
STRUCTURAL STEEL

504.09 Facilities for Inspection Add the follow as the last paragraph: "Failure to comply with the above requirements will be consider to be a denial to allow access to work by the Contractor. The Department will reject any work done when access for inspection is denied."

504.18 Plates for Fabricated Members Change the second paragraph, first sentence from: "…ASTM A 898/A 898 M…" to "…ASTM A 898/A 898 M or ASTM A 435/A 435 M as applicable and…"

504.31 Shop Assembly Add the following as the last sentence: "The minimum assembly length shall include bearing centerlines of at least two substructure units."

504.64 Non Destructive Testing-Ancillary Bridge Products and Support Structures Change the third paragraph, first sentence from "One hundred percent…" to "Twenty five percent…"

SECTION 535
PRECAST, PRESTRESSED CONCRETE SUPERSTRUCTURE

535.02 Materials Change "Steel Strand for Concrete Reinforcement" to "Steel Strand." Add the following to the beginning of the third paragraph; "Concrete shall be Class P conforming to the requirements in this section. 28 day compressive strength shall be as stated on the plans. Coarse aggregate…."

535.05 Inspection Facilities Add the follow as the last paragraph: "If the above requirements are not met, the Contractor shall be considered to be in violation of Standard Specification 104.2.5 – Right to Inspect Work. All work occurring during a violation of this specification will be rejected."

535.26 Lateral Post-Tensioning Replace the first paragraph; "A final tension…" with "Overstressing strands for setting losses cannot be accomplished for chuck to chuck lengths of 7.6 m [25 ft] and less. In such instances, refer to the Plans for all materials and methods. Otherwise, post-tensioning shall be in accordance with PCI standards and shall provide the anchorage force noted in the Plans. The applied jacking force shall be no less than 100% of the design jacking force."

SECTION 603
PIPE CULVERTS AND STORM DRAINS

603.0311 Corrugated Polyethylene Pipe for Option III Replace the Minimum Mandrel Diameter Table with the following:

Nominal Size US Customary (in)	Minimum Mandrel Diameter (in)	Nominal Size Metric (mm)	Minimum Mandrel Diameter (mm)
12	11.23	300	280.73
15	14.04	375	350.91
18	16.84	450	421.09
24	22.46	600	561.45
30	28.07	750	701.81
36	33.69	900	842.18
42	39.30	1050	982.54
48	44.92	1200	1122.90

SECTION 604
MANHOLES, INLETS, AND CATCH BASINS

604.02 Materials Add the following:

"Tops and Traps 712.07

Corrugated Metal Units	712.08
Catch Basin and Manhole Steps	712.09”

SECTION 605
UNDERDRAINS

605.05 Underdrain Outlets Make the following change:

In the first paragraph, second sentence, delete the words “metal pipe”.

SECTION 606
GUARDRAIL

606.02 Materials Delete the entire paragraph which reads “The sole patented supplier of multiple mailbox….” and replace with “Acceptable multiple mailbox assemblies shall be listed on the Department’s Approved Products List and shall be NCHRP 350 tested and approved.” Delete the entire paragraph which reads “Retroreflective beam guardrail delineators….” and replace with “Reflectorized sheeting for Guardrail Delineators shall meet the requirements of Section 719.01 - Reflective Sheeting. Delineators shall be fabricated from high-impact, ultraviolet and weather resistant thermoplastic.

606.09 Basis of Payment First paragraph; delete the second and third sentence in their entirety and replace with “Butterfly-type guardrail reflectorized delineators shall be mounted on all W-beam guardrail at an interval of every 10 posts [62.5 ft] on tangents sections and every 5 posts [31.25 ft] on curved sections as directed by the Resident. On divided highways, the delineators shall be yellow on the left hand side and silver/white on the right hand side. On two-way roadways, the delineators shall be silver/white on the right hand side. All delineators shall have retroreflective sheeting applied to only the traffic facing side. Reflectorized guardrail delineators will not be paid for directly, but will be considered incidental to the guardrail items.”

SECTION 609
CURB

609.04 Bituminous Curb f., Delete the requirement “Color Natural (White)”

SECTION 610
STONE FILL, RIPRAP, STONE BLANKET, AND STONE DITCH PROTECTION

Add the following paragraph to Section 610.02:
“Materials shall meet the requirements of the following Sections of Special Provision 703:

Stone Fill	703.25
Plain and Hand Laid Riprap	703.26
Stone Blanket	703.27
Heavy Riprap	703.28

Definitions 703.32"

Add the following paragraph to Section 610.032.a.
"Stone fill and stone blanket shall be placed on the slope in a well-knit, compact and uniform layer. The surface stones shall be chinked with smaller stone from the same source."

Add the following paragraph to Section 610.032.b:
"Riprap shall be placed on the slope in a well-knit, compact and uniform layer. The surface stones shall be chinked with smaller stone from the same source."

Add the following to Section 610.032: "Section 610.032.d. The grading of riprap, stone fill, stone blanket and stone ditch protection shall be determined by the Resident by visual inspection of the load before it is dumped into place, or, if ordered by the Resident, by dumping individual loads on a flat surface and sorting and measuring the individual rocks contained in the load. A separate, reference pile of stone with the required gradation will be placed by the Contractor at a convenient location where the Resident can see and judge by eye the suitability of the rock being placed during the duration of the project. The Resident reserves the right to reject stone at the job site or stockpile, and in place. Stone rejected at the job site or in place shall be removed from the site at no additional cost to the Department."

SECTION 615
LOAM

615.02 Materials Make the following change:

Organic Content	Percent by Volume
Humus	"5% - 10%", as determined by Ignition Test

SECTION 618
SEEDING

618.01 Description Change the first sentence to read as follows: "This work shall consist of furnishing and applying seed ….." Also remove ",and cellulose fiber mulch" from 618.01(a).
618.03 Rates of Application In 618.03(a), remove the last sentence and replace with the following: "These rates shall apply to Seeding Method 2, 3, and Crown Vetch."

In 618.03(c) "1.8 kg [4 lb]/unit." to "1.95 kg [4 lb]/unit."

618.09 Construction Method In 618.09(a) 1, sentence two, replace "100 mm [4 in]" with "25 mm [1 in] (Method 1 areas) and 50 mm [2 in] (Method 2 areas)"

618.15 Temporary Seeding Change the Pay Unit from Unit to Kg [lb].

SECTION 620
GEOTEXTILES

620.03 Placement Section (c)
Title: Replace "Non-woven" in title with "Erosion Control".

First Paragraph: Replace first word "Non-woven" with "Woven monofilament".
Second Paragraph: Replace second word "Non-woven" with "Erosion Control".

620.07 Shipment, Storage, Protection and Repair of Fabric Section (a)
Replace the second sentence with the following: "Damaged geotextiles, as identified by the Resident, shall be repaired immediately."

620.09 Basis of Payment
Pay Item 620.58: Replace "Non-woven" with "Erosion Control"
Pay Item 620.59: Replace "Non-woven" with "Erosion Control"

SECTION 621
LANDSCAPING

621.0036 Establishment Period In paragraph 4 and 5, change "time of Final Acceptance" to "end of the period of establishment". In Paragraph 7, change "Final Acceptance date" to ""end of the period of establishment" and change "date of Final Acceptance" to "end of the period of establishment".

SECTION 626
HIGHWAY SIGNING

626.034 Concrete Foundations Add to the following to the end of the second paragraph: "Pre-cast and cast-in-place foundations shall be warranteed against leaning and corrosion for two years after the project is completed. If the lean is greater than 2 degrees from normal or the foundation is spalling within the first two years, the Contractor shall replace the foundation at no extra cost."

SECTION 627
PAVEMENT MARKINGS

627.10 Basis of Payment Add to the following to the end of the third paragraph: "If allowed by Special Provision, the Contractor may utilize Temporary Bi-Directional Yellow and White(As required) Delineators as temporary pavement marking lines and paid for at the contract lump sum price. Such payment will include as many applications as required and removal."

SECTION 637
DUST CONTROL

637.06 Basis of Payment Add the following after the second sentence of the third paragraph: "Failure by the Contractor to follow Standard Specification or Special Provision - Section 637 and/or the Contractor's own Soil Erosion and Pollution Control Plan concerning Dust Control and/or the Contractor's own Traffic Control Plan concerning Dust Control and/or visible evidence of excessive dust problems, as determined by the Resident, will result in a reduction in payment, computed by reducing the Lump Sum Total by 5% per occurrence per day. The Department's Resident or any other representative of the Department reserves the right to

suspend the work at any time and request a meeting to discuss violations and remedies. The Department shall not be held responsible for any delay in the work due to any suspension under this item. Additional penalties may also be assessed in accordance with Special Provision 652 - Work Zone Traffic Control and Standard Specification 656 - Temporary Soil Erosion and Water Pollution Control."

SECTION 639
ENGINEERING FACILITIES

639.04 Field Offices Change the forth to last paragraph from: "The Contractor shall provide a fully functional desktop copier…" to "….desktop copier/scanner…"

Description Change "Floor Area" to "Floor Area (Outside Dimension)". Change Type B floor area from "15 (160)" to "20 (217)".

639.09 Telephone Paragraph 1 is amended as follows:
"The contractor shall provide **two** telephone lines and two telephones,…."

Add- "In addition the contractor will supply one computer broadband connection, modem lease and router. The router shall have wireless access and be 802.11n or 802.11g capable and wireless. The type of connection supplied will be contingent upon the availability of services (i.e. DSL or Cable Broadband). It shall be the contractor's option to provide dynamic or static IP addresses through the service. **The selected service will have a minimum downstream connection of 1.5 Mbps and 384 Kbps upstream.** The contractor shall be responsible for the installation charges and all reinstallation charges following suspended periods. Monthly service and maintenance charges shall be billed by the Internet Service Provider (ISP) directly to the contractor."

SECTION 652
MAINTENANCE OF TRAFFIC

652.2.3 Flashing Arrow Board Delete the existing 5 paragraphs and replace with the following: Flashing Arrow Panels (FAP) must be of a type that has been submitted to AASHTO's National Transportation Product Evaluation Program (NTPEP) for evaluation and placed on the Maine Department of Transportations' Approved Products List of Portable Changeable Message Signs & Flashing Arrow Panels.

FAP units shall meet requirements of the current Manual on Uniform Traffic Control Devices (MUTCD) for Type "C" panels as described in Section 6F.56 - Temporary Traffic Control Devices. An FAP shall have matrix of a minimum of 15 low-glare, sealed beam, Par 46 elements capable of either flashing or sequential displays as well as the various operating modes as described in the MUTCD, Chapter 6-F. If an FAP consisting of a bulb matrix is used, each element should be recess-mounted or equipped with an upper hood of not less than 180 degrees. The color presented by the elements shall be yellow.

FAP elements shall be capable of at least a 50 percent dimming from full brilliance. Full brilliance should be used for daytime operation and the dimmed mode shall be used for nighttime operation. FAP shall be at least 2.4 M x 1.2 M [96" x 48"] and finished in non-

reflective black. The FAP shall be interpretable for a distance not less than 1.6 km [1 mile].

Operating modes shall include, flashing arrow, sequential arrow, sequential chevron, flashing double arrow, and flashing caution. In the three arrow signals, the second light from the arrow point shall not operate.

The minimum element on-time shall be 50 percent for the flashing mode, with equal intervals of 25 percent for each sequential phase. The flashing rate shall be not less than 25 nor more than 40 flashes per minute. All on-board circuitry shall be solid state.

Primary power source shall be 12 volt solar with a battery back-up to provide continuous operation when failure of the primary power source occurs, up to 30 days with fully charged batteries. Batteries must be capable of being charged from an onboard 110 volt AC power source and the unit shall be equipped with a cable for this purpose.

Controller and battery compartments shall be enclosed in lockable, weather-tight boxes.
The FAP shall be mounted on a pneumatic-tired trailer or other suitable support for hauling to various locations, as directed. The minimum mounting height of an arrow panel should be 2.1 M [7 feet] from the roadway to the bottom of the panel.

The face of the trailer shall be delineated on a permanent basis by affixing retro-reflective material, known as conspicuity material, in a continuous line as seen by oncoming drivers.

A portable changeable message sign may be used to simulate an arrow panel display."

652.2.4 Other Devices Delete the last paragraph and add the following:
"652.2.5 Portable Changeable Message Sign Trailer mounted Portable Changeable Message Signs (PCMS) must be of a type that has been submitted to AASHTO's National Transportation Product Evaluation Program (NTPEP) for evaluation and placed on the Maine Department of Transportations' Approved Products List of Portable Changeable Message Signs & Flashing Arrow Panels. The PCMS unit shall meet or exceed the current specifications of the Manual on Uniform Traffic Control Devices (MUTCD), 6F.55.

The front face of the sign should be covered with a low-glare protective material. The color of the LED elements shall be amber on a black background. The PCMS should be visible from a distance of 0.8 km [0.5 mile] day and night and have a minimum 15º viewing angle. Characters must be legible from a distance of at least 200 M [650 feet].

The message panel should have adjustable display rates (minimum of 3 seconds per phase), so that the entire message can be read at least twice at the posted speed, the off-peak 85th-percentile speed prior to work starting, or the anticipated operating speed. Each message shall consist of either one or two phases. A phase shall consist of up to eight characters per line. The unit must be capable of displaying at least three lines of text with eight characters per line. Each character shall be 457 mm [18"] high. Each character module shall use at least a five wide and seven high pixel matrix. The text of the messages shall not scroll or travel horizontally or vertically across the face of the sign.

Units shall automatically adjust their brightness under varying light conditions to maintain legibility.

The control system shall include a display screen upon which messages can be reviewed before being displayed on the message sign. The control system shall be capable of maintaining memory when power is unavailable. Message must be changeable with either a notebook computer or an on-board keypad. The controller shall have the capability to store a minimum of 200 user-defined and 200 pre-programmed messages. Controller and battery compartments shall be enclosed in lockable, weather-tight boxes.

PCMS units shall have the capability of being made programmable by means of wireless communications. PCMS units shall also be fully capable of having an on-board radar system installed if required for a particular application.

PCMS' primary power source shall be solar with a battery back-up to provide continuous operation when failure of the primary power source occurs. Batteries must be capable of being charged from a 110 volt AC power source. The unit must also be capable of being operated solely from a 110 volt AC power source and be equipped with a cable for this purpose.

The PCMS shall be mounted on a trailer in such a way that the bottom of the message sign panel shall be a minimum of 2.1 M [7 ft] above the roadway in urban areas and 1.5 M [5 ft] above the roadway in rural areas when it is in the operating mode. PCMS trailers should be of a heavy duty type with a 51 mm [2"] ball hitch and a minimum of four leveling jacks (at each corner). The sign shall be capable of being rotated 360° relative to the trailer. The face of the trailer shall be delineated on a permanent basis by affixing retro-reflective material, known as conspicuity material, in a continuous line as seen by oncoming drivers."

652.3.3 Submittal of Traffic Control Plan In item e. change "A list of all certified flaggers…" to "A list of all the Contractor's certified flaggers…"

Change a. in the list of requirements to: "a. The name, telephone number, and other contact numbers (cellular phone, pager, if any) of the Contractor's Traffic Control Supervisor (the person with overall responsibility for following the TCP), who has received Work Zone Traffic Control Training commensurate with the level of responsibility shown in the requirements of the Contract, and who is empowered to immediately resolve any work zone traffic control deficiencies or issues. Provide documentation that the Traffic Control Supervisor has completed a Work Zone Traffic Control Training Course (AGC, ATSSA, or other industry-recognized training), and a Supervisory refresher training every 5 years thereafter. Submit the course name, training entity, and date of training.

Traffic Control Training Course curriculum must be based on the standards and guidelines of the MUTCD and must include, at a minimum, the following:

1. Parts of Temporary Traffic Control Zone
2. Appropriate use and spacing of signs
3. Use and spacing of channelizing devices
4. Flagging basics
5. Typical examples and applications

The Traffic Control Supervisor, or designee directly overseeing physical installation, adjustment, and dismantling of work zone traffic control, will ensure all personnel performing

those activities are trained to execute the work in a safe and proper manner, in accordance with their level of decision-making and responsibility."

Add the follow to the list of requirements: "k. The plan for unexpected nighttime work along with a list of emergency nighttime equipment available on-site."

In the last paragraph add the following as the second sentence: "The Department will review and provide comments to the Contractor within 14 days of receipt of the TCP." Add the following as the last sentence: "The creation and modification of the TCP will be considered incidental to the related 652 items."

652.3.5 Installation of Traffic Control Devices In the first paragraph, first sentence; change "Signs shall be erected…" to "Portable signs shall be erected.." In the third sentence; change "Signs must be erected so that the sign face…" to "Post-mounted signs must also be erected so that the sign face…"

652.4 Flaggers Replace the first paragraph with the following; "The Contractor shall furnish flaggers as required by the TCP or as otherwise specified by the Resident. All flaggers must have successfully completed a flagger test approved by the Department and administered by a Department-approved Flagger-Certifier who is employing that flagger. All flaggers must carry an official certification card with them while flagging that has been issued by their employer. Flaggers shall wear safety apparel meeting ANSI 107-2004 Class 2 risk exposure that clearly identifies the wearer as a person, and is visible at a minimum distance of 300 m [1000 ft], and shall wear a hardhat with 360° retro-reflectivity. For nighttime conditions, Class 3 apparel, meeting ANSI 107-2004, shall be worn along with a hardhat with 360° retro-reflectivity. Retro-reflective or flashing SLOW/STOP paddles shall be used, and the flagger station shall be illuminated to assure visibility in accordance with 652.6.2."

Second paragraph, first sentence; change "…have sufficient distance to stop before entering the workspace." to "…have sufficient distance to stop at the intended stopping point." Third sentence; change "At a spot obstruction…" to "At a spot obstruction with adequate sight distance,…"

Fourth paragraph, delete and replace with "Flaggers shall be provided as a minimum, a 10 minute break, every 2 hours and a 30 minute or longer lunch period away from the work station. Flaggers may only receive 1 unpaid break per day; all other breaks must be paid. Sufficient certified flaggers shall be available onsite to provide for continuous flagging operations during break periods. If the flaggers are receiving the appropriate breaks, breaker flagger(s) shall be paid starting 2 hours after the work begins and ending 2 hours before the work ends. A maximum of 1 breaker per 6 flaggers will be paid. (1 breaker flagger for 2 to 6 flaggers, 2 breaker flaggers for 7 to 12 flaggers, etc)"

Add the following:

"652.5.1 Rumble Strip Crossing When lane shifts or lane closures require traffic to cross a permanent longitudinal rumble strip for 7 calendar days or less, the Contractor shall install warning signs that read "RUMBLE STRIP CROSSING" with a supplemental Motorcycle Plaque, (W8-15P).

When lane shifts or lane closures require traffic to cross a permanent longitudinal rumble strip for more than 7 calendar days, the Contractor shall pave in the rumble strips in the area that

traffic will cross, unless otherwise directed by the Resident. Rumble strips shall be replaced prior to the end of the project, when it is no longer necessary to cross them."

652.6 Nightwork Delete this section entirely and replace with the following:
"652.6.1 Daylight Work Times Unless otherwise described in the Contract, the Contractor is allowed to commence work and end work daily according to the Sunrise/Sunset Table at: http://www.sunrisesunset.com/usa/Maine.asp . If the Project town is not listed, the closest town on the list will be used as agreed at the Preconstruction Meeting. Any work conducted before sunrise or after sunset will be considered Night Work.

652.6.2 Night Work When Night Work occurs (either scheduled or unscheduled), the Contractor shall provide and maintain lighting on all equipment and at all work stations.

The lighting facilities shall be capable of providing light of sufficient intensity to permit good workmanship, safety and proper inspection at all times. The lighting shall be cut off and arranged on stanchions at a height that will provide perimeter lighting for each piece of equipment and will not interfere with traffic, including commercial vehicles, approaching the work site from either direction.

The Contractor shall have available portable floodlights for special areas.

The Contractor shall utilize padding, shielding or other insulation of mechanical and electrical equipment, if necessary, to minimize noise, and shall provide sufficient fuel, spare lamps, generators, etc. to maintain lighting of the work site.

The Contractor shall submit, as a subset of the Traffic Control Plan, a lighting plan at the Preconstruction Conference, showing the type and location of lights to be used for night work. The Resident may require modifications be made to the lighting set up in actual field conditions.

Prior to beginning any Night Work, the Contractor shall furnish a light meter for the Residents use that is capable of measuring the range of light levels from 5 to 20 foot-candles.

Horizontal illumination, for activities on the ground, shall be measured with the photometer parallel to the road surface. For purposes of roadway lighting, the photometer is placed on the pavement. Vertical illumination, for overhead activities, shall be measured with the photometer perpendicular to the road surface. Measurements shall be taken at the height and location of the overhead activity.

Night Work lighting requirements:

Mobile Operations: For mobile-type operations, each piece of equipment (paver, roller, milling machine, etc) will carry indirect (i.e. balloon type) lights capable of producing at least 10 foot-candles of lighting around the work area of the equipment.

Fixed Operations: For fixed-type operations (flaggers, curb, bridge, pipes, etc.), direct (i.e. tower) lighting will be utilized capable of illuminating the work area with at least 10 foot-candles of light.

Hybrid Operations: For hybrid-type operations (guardrail, sweeping, Inslope excavation, etc.), either direct or indirect lighting may be utilized. The chosen lights must be capable of producing at least 10 foot-candles of light around the work area of the equipment
Inspection Operations: Areas required to be inspected by the Department will require a minimum of 5 foot-candles of lighting. This may be accomplished through direct or indirect means.

All workers shall wear safety apparel labeled as meeting the ANSI 107-2004 standard performance for Class 3 risk exposure.

The Contractor shall apply 2- inch wide retro-reflective tape, with alternating red and white segments, to outline the front back and sides of construction vehicles and equipment, to define their shape and size to the extent practicable. Pickup trucks and personal vehicles are exempt from this requirement. The Contractor shall furnish approved signs reading "Construction Vehicle - Keep Back" to be used on trucks hauling to the project when such signs are deemed necessary by the Resident. The signs shall be a minimum of 30 inches by 60 inches, Black and Orange, ASTM D 4956 - Type VII, Type VIII, or Type IX (prismatic).

All vehicles used on the project, including pickup trucks and personal vehicles, shall be equipped with amber flashing lights, visible from both front and rear, or by means of single, approved type, revolving, flashing or strobe lights mounted so as to be visible 360º. The vehicle flashing system shall be in continuous operation while the vehicle is on any part of the project.

The Resident or any other representative of the Department reserves the right to suspend the work at any time and request a meeting to discuss violations and remedies. The Department shall not be held responsible for any delay in the work due to any suspension under this item. Failure to follow the approved Lighting Plan will result in a Traffic Control violation.

Payment for lighting, vehicle mounted signs and other costs accrued because of night work will not be made directly but will be considered incidental to the related contract items."

652.8.2 Other Items Replace the first paragraph with the following: "The accepted quantities of flagger hours will be paid for at the contract unit price per hour for each flagging station occupied excluding lunch breaks, and for each approved breaker flagger. Overtime hours, as reported on the certified payrolls, will be paid an additional 30% of the bid price for 652.38. The computation and additional payment for overtime hours will occur during the project close-out process and will be paid as additional hours of 652.38 to the nearest ¼ hour. The contract unit price shall be full compensation for hiring, transporting, equipping, supervising, and the payment of flaggers and all overhead and incidentals necessary to complete the work."
Replace the last paragraph with the following: "There will be no payment made under any 652 pay items after the expiration of the adjusted total contract time."

SECTION 653
POLYSTYRENE PLASTIC INSULATION

653.05 Placing Backfill In the second sentence; change "…shall be not less than 150 mm [6 in] loose measure." to "…shall be not less than 250 mm [10 in] loose measure." In the third sentence; change "…crawler type bulldozer of not more than 390 kg/m^2 [80 lb/ft^2] ground contact pressure…" to "…crawler type bulldozer of not more than 4875 kg/m^2 [2000 lb/ft^2] ground contact pressure…"

653.06 Compaction In the last sentence; change "…not more than 390 kg/m^2 [80 lb/ft^2] ground contact…" to "…not more than 4875 kg/m^2 [2000 lb/ft^2] ground contact…"

SECTION 656
TEMPORARY SOIL EROSION AND WATER POLLUTION CONTROL

656.5.1 If Pay Item 656.75 Provided Replace the second paragraph with the following: "Failure by the Contractor to follow Standard Specification or Special Provision - Section 656 and/or the Contractor's own Soil Erosion and Water Pollution Control Plan (SEWPCP) will result in a violation letter and a reduction in payment as shown in the schedule below. The Department's Resident or any other representative of The Department reserves the right to suspend the work at any time and request a meeting to discuss violations and remedies. The Department shall not be held responsible for any delay in the work due to any suspension under this item.

ORIGINAL CONTRACT AMOUNT

From	Up to and	Amount of Penalty Damages per Violation		
More Than	Including	1st	2nd	3rd & Subsequent
$0	$1,000,000	$250	$500	$1,250
$1,000,000	$2,000,000	$500	$1,000	$2,500
$2,000,000	$4,000,000	$1,000	$2,000	$5,000
$4,000,000	and more	$2,000	$4,000	$10,000"

SECTION 701
STRUCTURAL CONCRETE RELATED MATERIALS

701.10 Fly Ash - Chemical Requirements Change all references from "ASTM C311" to "ASTM C114".

SECTION 703
AGGREGATES

703.05 Aggregate for Sand Leveling Change the percent passing the 9.5 mm [3/8 in] sieve from "85 – 10" to "85 – 100"

703.06 Aggregate for Base and Subbase Delete the first paragraph: "The material shall have…" and replace with "The material shall have a minimum degradation value of 15 as determined by Washington State DOT Test Method T113, Method of Test for Determination of Degradation Value (January 2009 version), except that the reported degradation value will be the result of testing a single specimen from that portion of a sample that passes the 12.5 mm [½ in] sieve and is retained on the 2.00 mm [No. 10] sieve, minus any reclaimed asphalt pavement used."

703.07 Aggregates for HMA Pavements Delete the forth paragraph: "The composite blend shall have…" and replace with "The composite blend, minus any reclaimed asphalt pavement used, shall have a Micro-Deval value of 18.0 or less as determined by AASHTO T 327. In the event the material exceeds the Micro Deval limit, a Washington Degradation test shall be performed. The material shall be acceptable if it has a value of 30 or more as determined by Washington State DOT Test Method T 113, Method of Test for Determination of Degradation Value (January 2009 version) except that the reported degradation value will be the result of testing a single composite specimen from that portion of the sample that passes the 12.5mm [1/2 inch] sieve and is retained on the 2.00mm [No 10] sieve, minus any reclaimed asphalt pavement used."

703.09 HMA Mixture Composition The coarse and fine aggregate shall meet the requirements of Section 703.07. The several aggregate fractions for mixtures shall be sized, graded, and combined in such proportions that the resulting composite blends will meet the grading requirements of the following table.

AGGREGATE GRADATION CONTROL POINTS

SIEVE SIZE	Nominal Maximum Aggregate Size---Control Points (Percent Passing)				
	TYPE 25 mm	TYPE 19 mm	TYPE 12.5 mm	TYPE 9.5 mm	TYPE 4.75 mm
	PERCENT BY WEIGHT PASSING - COMBINED AGGREGATE				
37.5 mm	100				
25 mm	90-100	100			
19 mm	-90	90-100	100		
12.5 mm		-90	90-100	100	100
9.5 mm		-	-90	90-100	95-100
4.75 mm		-	-	-90	80-100
2.36 mm	19-45	23-49	28-58	32-67	40 - 80
1.18 mm		-	-	-	-
600 µm		-	-	-	-
300 µm		-	-	-	-
75 µm	1-7	2-8	2-10	2-10	2-10

Gradation Classification---- The combined aggregate gradation shall be classified as coarse-graded when it passes below the Primary Control Sieve (PCS) control point as defined in the following table. All other gradations shall be classified as fine-graded.

GRADATION CLASSIFICATION

PCS Control Point for Mixture Nominal Maximum Aggregate Size (% passing)				
Nominal Maximum Aggregate Size	TYPE 25 mm	TYPE 19 mm	TYPE 12.5 mm	TYPE 9.5 mm
Primary Control Sieve	4.75 mm	4.75 mm	2.36 mm	2.36 mm
PCS Control Point (% passing)	40	47	39	47

If a Grading "D" mixture is allowed per Special Provision Section 403, it shall meet the following gradation and the aggregate requirements of Section 703.07.

Sieve Designation	Percentage by Weight Passing Square Mesh Sieves
½ inch	100
⅜ inch	93-100
No. 4	60-80
No. 8	46-65
No. 16	25-55
No. 30	16-40
No. 50	10-30
No. 100	6-22
No. 200	3.0-8.0

703.18 Common Borrow Replace the first paragraph with the following: "Common borrow shall consist of earth, suitable for embankment construction. It shall be free from frozen material, perishable rubbish, peat, and other unsuitable material including material currently or previously contaminated by chemical, radiological, or biological agents unless the material is from a DOT project and authorized by DEP for use."

703.22 Underdrain Backfill Material Change the first paragraph from "…for Underdrain Type B…" to "…for Underdrain Type B and C…"

Replace subsections 703.25 through 703.28 with the following:
"703.25 Stone Fill Stones for stone fill shall consist of hard, sound, durable rock that will not disintegrate by exposure to water or weather. Stone for stone fill shall be angular and rough. Rounded, subrounded, or long thin stones will not be allowed. Stone for stone fill may be obtained from quarries or by screening oversized rock from earth borrow pits. The maximum allowable length to thickness ratio will be 3:1. The minimum stone size (10 lbs) shall have an average dimension of 5 inches. The maximum stone size (500 lbs) shall have a maximum dimension of approximately 36 inches. Larger stones may be used if approved by the Resident. Fifty percent of the stones by volume shall have an average dimension of 12 inches (200 lbs).

703.26 Plain and Hand Laid Riprap Stone for riprap shall consist of hard, sound durable rock that will not disintegrate by exposure to water or weather. Stone for riprap shall be angular and rough. Rounded, subrounded or long thin stones will not be allowed. The maximum allowable length to width ratio will be 3:1. Stone for riprap may be obtained from quarries or by screening oversized rock from earth borrow pits. The minimum stone size (10 lbs) shall have an average dimension of 5 inches. The maximum stone size (200 lbs) shall have an average dimension of approximately 12 inches. Larger stones may be used if approved by the Resident. Fifty percent of the stones by volume shall have an average dimension greater than 9 inches (50 lbs).

703.27 Stone Blanket Stones for stone blanket shall consist of sound durable rock that will not disintegrate by exposure to water or weather. Stone for stone blanket shall be angular and rough. Rounded or subrounded stones will not be allowed. Stones may be obtained from

quarries or by screening oversized rock from earth borrow pits. The minimum stone size (300 lbs) shall have minimum dimension of 14 inches, and the maximum stone size (3000 lbs) shall have a maximum dimension of approximately 66 inches. Fifty percent of the stones by volume shall have average dimension greater than 24 inches (1000 lbs).

703.28 Heavy Riprap Stone for heavy riprap shall consist of hard, sound, durable rock that will not disintegrate by exposure to water or weather. Stone for heavy riprap shall be angular and rough. Rounded, subrounded, or thin, flat stones will not be allowed. The maximum allowable length to width ratio will be 3:1. Stone for heavy riprap may be obtained from quarries or by screening oversized rock from earth borrow pits. The minimum stone size (500 lbs) shall have minimum dimension of 15 inches, and at least fifty percent of the stones by volume shall have an average dimension greater than 24 inches (1000 lbs)."

Add the following paragraph:
"703.32 Definitions (ASTM D 2488, Table 1).
Angular: Particles have sharp edges and relatively plane sides with unpolished surfaces
Subrounded: Particles have nearly plane sides but have well-rounded corners and edges
Rounded: Particles have smoothly curved sides and no edges"

SECTION 706
NON-METALLIC PIPE

706.06 Corrugated Polyethylene Pipe for Underdrain, Option I and Option III Culvert Pipe Change the first sentence from "…300 mm diameters to 900 mm" to "…300 mm diameters to 1200 mm" Delete, in its' entirety, the last sentence which begins "This pipe and resins…" and replace with the following; "Manufacturers of corrugated polyethylene pipe must participate in, and maintain compliance with, AASHTO's National Transportation Product Evaluation Program (www.ntpep.org) which audits producers of plastic pipe. A certificate of compliance must be provided with each shipment."

SECTION 708
PAINTS AND PERSERVATIVES

708.03 Pavement Marking Paint Change the first sentence from "…AASHTO M248" to "…the Maine DOT Maintenance Fast-Dry Water-Based Traffic Paint on file at the Traffic Section in Augusta". Delete, in its' entirety, the last sentence.

SECTION 709
REINFORCING STEEL AND WELDED STEEL WIRE FABIC

709.03 Steel Strand Change the second paragraph from "…shall be 12mm [½ inch] AASHTO M203M/M203 (ASTM A416/A416M)…" to "…shall be 15.24 mm [0.600 inch] diameter AASHTO M203 (ASTM A416)…"

SECTION 710
FENCE AND GUARDRAIL

710.03 Chain Link Fabric Add the following sentence: "Chain Link fabric for PVC coated shall conform to the requirements of AASHTO M181, Type IV-Class B."

710.04 Metal Beam Rail Replace with the following: "Galvanized steel rail elements shall conform to the requirements of AASHTO M 180, Class A, Type II.

When corrosion resistant steel is specified, rail shall conform to AASHTO M 180, Class A, Type IV. Beams of corrosion resistant steel shall not be painted or galvanized. They shall be so handled and stored that the traffic face of these beams, used in a continuous run of guardrail, shall not show a distinctive color differential.

When metal beam rail is to be installed on a curve having a radius of curvature of 150 ft. or less, the beam sections shall be fabricated on an arc to the required radius and permanently stamped or embossed with the designated radius.

The engineer may take one piece of guardrail, a backup plate, and end or buffer section from each 200 pieces in a lot, or from each lot if less than 200 pieces are included therein for determination of compliance with specification requirements. If one piece fails to conform to the requirements of this specification, two other pieces shall be tested. If either of these pieces fails to conform to the requirements of this specification, the lot of material represented by these samples shall be rejected. A lot shall be considered that quantity of material offered for inspection at one time that bears the same heat and coating identification."

710.07 Guardrail Posts Section b. change "…AASHTO M183/M183M…" to "…AASHTO M 270M/M 270 Grade 250 (36)…"

SECTION 712
MISCELLANEOUS HIGHWAY MATERIALS

712.04 Stone Curbing and Edging Delete the existing and replace with the following: "Stone for curbing and edging shall be approved granite from acceptable sources. The stone shall be hard and durable, predominantly gray in color, free from seams that would be likely to impair its structural integrity, and of a smooth splitting character. Natural grain size and color variations characteristic of the source deposit will be permitted. Such natural variations may include bands or clusters of mineral crystallization provided they do not impair the structural integrity of the curb stone. The Contractor shall submit for approval the name of the quarry that is the proposed source of the granite for curb materials along with full scale color photos of the granite. Such submission shall be made sufficiently in advance of ordering so that the Resident may have an opportunity to judge the stone, both as to quality and appearance. Samples of curbing shall be submitted for approval only when requested by the Resident. The dimensions, shape, and other details shall be as shown on the plans."

712.06 Precast Concrete Units In the first paragraph, change "…ASTM C478M…" to "…AASHTO M199…" Delete the second paragraph and replace with the following; "Approved structural fibers may be used as a replacement of 6 x 6 #10 gauge welded wire fabric when used at an approved dosage rate for the construction of manhole and catch basin units. The material used shall be one of the products listed on the Maine Department of Transportation's Approved Product List of Structural Fiber Reinforcement." Delete the fifth paragraph and replace with the following; "The concrete mix design shall be approved by the Department. Concrete shall contain 6% air content, plus or minus 1½% tolerance when tested according to AASHTO T152. All concrete shall develop a minimum compressive strength of 28 MPa [4000 psi] in 28 days when tested according to AASHTO T22. The absorption of a

specimen, when tested according to AASHTO T280, Test Method "A", shall not exceed nine percent of the dry mass."

Add the following:
"712.07 Tops, and Traps These metal units shall conform to the plan dimensions and to the following specification requirements for the designated materials.

Gray iron or ductile iron castings shall conform to the requirements of AASHTO M306 unless otherwise designated."

712.08 Corrugated Metal Units The units shall conform to plan dimensions and the metal to AASHTO M36/M36M. Bituminous coating, when specified, shall conform to AASHTO M190 Type A.

712.09 Catch Basin and Manhole Steps Steps for catch basins and for manholes shall conform to ASTM C478M [ASTM C478], Section 13 for either of the following material:

(a) Aluminum steps-ASTM B221M, [ASTM B211] Alloy 6061-T6 or 6005-T5.

(b) Reinforced plastic steps Steel reinforcing bar with injection molded plastic coating copolymer polypropylene. Polypropylene shall conform to ASTM D 4101.

712.23 Flashing Lights Flashing Lights shall be power operated or battery operated as specified.

(a) Power operated flashing lights shall consist of housing, adapters, lamps, sockets, reflectors, lens, hoods and other necessary equipment designed to give clearly visible signal indications within an angle of at least 45 degrees and from 3 to 90 m [10 to 300 ft] under all light and atmospheric conditions.

Two circuit flasher controllers with a two-circuit filter capable of providing alternate flashing operations at the rate of not less than 50 nor more than 60 flashes per minute shall be provided.

The lamps shall be 650 lumens, 120 volt traffic signal lamps with sockets constructed to properly focus and hold the lamp firmly in position.
The housing shall have a rotatable sun visor not less than 175 mm [7 in] in length designed to shield the lens.

Reflectors shall be of such design that light from a properly focused lamp will reflect the light rays parallel. Reflectors shall have a maximum diameter at the point of contact with the lens of approximately 200 mm [8 in].

The lens shall consist of a round one-piece convex amber material which, when mounted, shall have a visible diameter of approximately 200 mm [8 in]. They shall distribute light and not diffuse it. The distribution of the light shall be asymmetrical in a downward direction. The light distribution of the lens shall not be uniform, but shall consist of a small high intensity portion with narrow distribution for long distance throw and a larger

low intensity portion with wide distribution for short distance throw. Lenses shall be marked to indicate the top and bottom of the lens.

(b) Battery operated flashing lights shall be self- illuminated by an electric lamp behind the lens. These lights shall also be externally illuminated by reflex-reflective elements built into the lens to enable it to be seen by reflex-reflection of the light from the headlights of oncoming traffic. The batteries must be entirely enclosed in a case. A locking device must secure the case. The light shall have a flash rate of not less than 50 nor more than 60 flashes per minute from minus 30 °C [minus 20 °F] to plus 65 °C [plus 150 °F]. The light shall have an on time of not less than 10 percent of the flash cycle. The light beam projected upon a surface perpendicular to the axis of the light beam shall produce a lighted rectangular projection whose minimum horizontal dimension shall be 5 degrees each side of the horizontal axis. The effective intensity shall not have an initial value greater than 15.0 candelas or drop below 4.0 candelas during the first 336 hours of continuous flashing. The illuminated lens shall appear to be uniformly bright over its entire illuminated surface when viewed from any point within an angle of 9 degrees each side of the vertical axis and 5 degrees each side of the horizontal axis. The lens shall not be less than 175 mm [7 in] in diameter including a reflex-reflector ring of 13 mm [½ in] minimum width around the periphery. The lens shall be yellow in color and have a minimum relative luminous transmittance of 0.440 with a luminance of 2854° Kelvin. The lens shall be one-piece construction. The lens material shall be plastic and meet the luminous transmission requirements of this specification. The case containing the batteries and circuitry shall be constructed of a material capable of withstanding abuse equal to or greater than 1.21 mm thick steel [No. 18 U.S. Standard Gage Steel]. The housing and the lens frame, if of metal shall be properly cleaned, degreased and pretreated to promote adhesion. It shall be given one or more coats of enamel which, when dry shall completely obscure the metal. The enamel coating shall be of such quality that when the coated case is struck a light blow with a sharp tool, the paint will not chip or crack and if scratched with a knife will not powder. The case shall be so constructed and closed as to exclude moisture that would affect the proper operation of light. The case shall have a weep hole to allow the escape of moisture from condensation. Photoelectric controls, if provided, shall keep the light operating whenever the ambient light falls below 215 lx [20 foot candles]. Each light shall be plainly marked as to the manufacturer's name and model number.

If required by the Resident, certification as to conformance to these specifications shall be furnished based on results of tests made by an independent testing laboratory. All lights are subject to random inspection and testing. All necessary random samples shall be provided to the Resident upon request without cost to the Department. All such samples shall be returned to the Contractor upon completion of the tests.

712.32 Copper Tubing Copper tubing and fittings shall conform to the requirements of ASTM B88M Type A [ASTM B88, Type K] or better.

712.33 Non-metallic Pipe, Flexible Non-metallic pipe and pipe fittings shall be acceptable flexible pipe manufactured from virgin polyethylene polymer suitable for transmitting liquids intended for human or animal consumption.

712.34 Non-metallic Pipe, Rigid Non-metallic pipe shall be Schedule 40 polyvinylchloride (PVC) that meets the requirement of ASTM D1785. Fittings shall be of the same material.

712.341 Metallic Pipe Metallic pipe shall be ANSI, Standard B36.10, Schedule 40 steel pipe conforming to the requirements of ASTM A53 Types E or S, Grade B. End plates shall be steel conforming to ASTM A36/A36M.

Both the sleeve and end plates shall be hot dip galvanized. Pipe sleeve splices shall be welded splices with full penetration weld before galvanizing.

712.35 Epoxy Resin Epoxy resin for grouting or sealing shall consist of a mineral filled thixotropic, flexible epoxy resin having a pot life of approximately one hour at 10°C [50°F]. The grout shall be an approved product suitable for cementing steel dowels into the preformed holes of curb inlets and adjacent curbing. The sealant shall be an approved product, light gray in color and suitable for coating the surface.

712.36 Bituminous Curb The asphalt cement for bituminous curb shall be of the grade required for the wearing course, or shall be Viscosity Grade AC-20 meeting the current requirements of Subsection 702.01 Asphalt Cement. The aggregate shall conform to the requirements of Subsection 703.07. The coarse aggregate portion retained on the 2.36 mm [No. 8] sieve may be either crushed rock or crushed gravel.

The mineral constituents of the bituminous mixture shall be sized and graded and combined in a composite blend that will produce a stable durable curbing with an acceptable texture.

Bituminous material for curb shall meet the requirements of Section 403 - Hot Bituminous Pavement.

712.37 Precast Concrete Slab Portland cement concrete for precast slabs shall meet the requirements of Section 502 - Structural Concrete, Class A.

The slabs shall be precast to the dimension shown on the plans and cross section and in accordance with the Standard Detail plans for Concrete Sidewalk Slab. The surface shall be finished with a float finish in accordance with Subsection 502.14(c). Lift devices of sufficient strength to hold the slab while suspended from cables shall be cast into the top or back of the slab.

712.38 Stone Slab Stone slabs shall be of granite from an acceptable source, hard, durable, predominantly gray in color, free from seams which impair the structural integrity and be of smooth splitting character. Natural color variations characteristic of the deposit will be permitted. Exposed surfaces shall be free from drill holes or indications of drill holes. The granite slabs in any one section of backslope must be all the same finish.

The granite slabs shall be scabble dressed or sawed to an approximately true plane having no projections or depressions over 13 mm [½ in] under a 600 mm [2 ft] straightedge or over 25 mm [1 in] under a 1200 mm [4 ft] straightedge. The arris at the intersection of the top surface and exposed front face shall be pitched so that the arris line is uniform throughout the length of the installed slabs. The sides shall be square to the exposed face unless the slabs are to be set

on a radius or other special condition which requires that the joints be cut to fit, but in any case shall be so finished that when the stones are placed side by side no space more than 20 mm [3/4 in] shall show in the joint for the full exposed height.

Liftpin holes in all sides will be allowed except on the exposed face.

SECTION 717
ROADSIDE IMPROVEMENT MATERIAL

717.03 C. Method #3 - Roadside Mixture #3 Change the seed proportions to the following:

Crown Vetch	25%
Perennial Lupine	25%
Red Clover	12.5%
Annual Rye	37.5%

717.05 Mulch Binder Change the third sentence to read as follows:

"Paper fiber mulch may be used as a binder at the rate of 2.3 kg/unit [5 lb/unit]."

SECTION 720
STRUCTURAL SUPPORTS FOR HIGHWAY SIGNS, LUMINAIRES, AND TRAFFIC SIGNALS

720.08 U-Channel Posts Change the first sentence from "…, U-Channel posts…" to "…, Rib Back U-Channel posts…"

SECTION 722
GEOTEXTILES

722.01 Stabilization/Reinforcement Geotextile Add the following to note #3; "The strengths specified in the columns labeled"<50%" and "≥ 50%" refer to the elongation at which the geotextile material was tested. For example; if a fabric is tested at 15% elongation then it must meet or exceed the minimum strength shown in the "<50%" column. Submittals must include the percent elongation at which the material was tested."

722.02 Drainage Geotextile Add the following to note #3; "The strengths specified in the columns labeled"<50%" and "≥ 50%" refer to the elongation at which the geotextile material was tested. For example; if a fabric is tested at 15% elongation then it must meet or exceed the minimum strength shown in the "<50%" column. Submittals must include the percent elongation at which the material was tested."

722.01 Erosion Control Geotextile Add the following note to Elongation in the Mechanical Property Table; "The strengths specified in the columns labeled"<50%" and "≥ 50%" refer to the elongation at which the geotextile material was tested. For example; if a fabric is tested at 15% elongation then it must meet or exceed the minimum strength shown in the "<50%" column. Submittals must include the percent elongation at which the material was tested."

APPENDIX A TO DIVISION 100

SECTION 1 - BIDDING PROVISIONS

A. Federally Required Certifications By signing and delivering a Bid, the Bidder certifies as provided in all certifications set forth in this Appendix A - Federal Contract Provisions Supplement including:

- Certification Regarding No Kickbacks to Procure Contract as provided on this page 1 below.
- Certification Regarding Non-collusion as provided on page 1 below.
- Certification Regarding Non-segregated Facilities as provided by FHWA Form 1273, section III set forth on page 21 below.
- "Certification Regarding Debarment, Suspension, Ineligibility and Voluntary Exclusion" as provided by FHWA Form 1273, section XI set forth on page 32 below.
- "Certification Regarding Use of Contract Funds for Lobbying" as provided by FHWA Form 1273, section XII set forth on page 35 below.

Unless otherwise provided below, the term "Bidder", for the purposes of these certifications, includes the Bidder, its principals, and the person(s) signing the Bid. Upon execution of the Contract, the Bidder (then called the Contractor) will again make all the certifications indicated in this paragraph above.

CERTIFICATION REGARDING NO KICKBACKS TO PROCURE CONTRACT Except expressly stated by the Bidder on sheets submitted with the Bid (if any), the Bidder hereby certifies, to the best of its knowledge and belief, that it has not:

(A) employed or retained for a commission, percentage, brokerage, contingent fee, or other consideration, any firm or person (other then a bona fide employee working solely for me) to solicit or secure this contract;

(B) agreed, as an express or implied condition for obtaining this contract, to employ or retain the services of any firm or person in connection with carrying out the contract, or;

C) paid, or agreed to pay, to any firm, organization, or person (other than a bona fide employee working solely for me) any fee, contribution, donation, or consideration of any kind for, or in connection with, procuring or carrying out the contract;

By signing and submitting a Bid, the Bidder acknowledges that this certification is to be furnished to the Maine Department of Transportation and the Federal Highway Administration, U.S. Department of Transportation in connection with this contract in anticipation of federal aid highway funds and is subject to applicable state and federal laws, both criminal and civil.

CERTIFICATION REGARDING NONCOLLUSION Under penalty of perjury as provided by federal law (28 U.S.C. §1746), the Bidder hereby certifies, to the best of its knowledge and belief, that:

the Bidder has not, either directly or indirectly, entered into any agreement, participated in any collusion, or otherwise taken any action in restraint of competitive bidding in connection with the Contract.

For a related provisions, see Section 102.7.2 (C) of the Standard Specifications - "Effects of Signing and Delivery of Bids" - "Certifications", Section 3 of this Appendix A entitled "Other Federal Requirements" including section XI - "Certification Regarding Debarment, Suspension, Ineligibility, and Voluntary Exclusion" and section XII. - "Certification Regarding Use of Contract Funds for Lobbying."

****

B. Bid Rigging Hotline To report bid rigging activities call: **1-800-424-9071**

The U.S. Department of Transportation (DOT) operates the above toll-free "hotline" Monday through Friday, 8:00 a.m. to 5:00 p.m., eastern time. Anyone with knowledge of possible bid rigging, bidder collusion, or other fraudulent activities should use the "hotline" to report such activities.

The "hotline" is part of the DOT's continuing effort to identify and investigate highway construction contract fraud and abuse and is operated under the direction of the DOT Inspector General. All information will be treated confidentially and caller anonymity will be respected.

****

SECTION 2 - FEDERAL EEO AND CIVIL RIGHTS REQUIREMENTS

Unless expressly otherwise provided in the Bid Documents, the provisions contained in this Section 2 of this "Federal Contract Provisions Supplement" are hereby incorporated into the Bid Documents and Contract.

A. Nondiscrimination & Civil Rights - Title VI The Contractor and its subcontractors shall not discriminate on the basis of race, color, national origin, or sex in the performance of this Contract. The Contractor shall carry out applicable requirements of 49 CFR Part 26 in the award and administration of DOT assisted contracts. Failure by the Contractor to carry out these requirements is a material breach of this contract, which may result in the termination of this contract or such other remedy as the Department deems appropriate. The Contractor and subcontractors shall comply with Title VI of the Civil Rights Act of 1964, as amended, and with all State of Maine and other Federal Civil Rights laws.

For related provisions, see Subsection B - "Nondiscrimination and Affirmative Action - Executive Order 11246" of this Section 2 and Section 3 - Other Federal Requirements of this "Federal Contract Provisions Supplement" including section II - "Nondiscrimination" of the "Required Contract Provisions, Federal Aid Construction Contracts", FHWA-1273.

B. Nondiscrimination and Affirmative Action - Executive Order 11246 Pursuant to Executive Order 11246, which was issued by President Johnson in 1965 and amended in 1967 and 1978, this Contract provides as follows.

The Contractor shall take specific affirmative actions to ensure equal employment opportunity. The evaluation of the Contractor's compliance with these specifications shall be based upon its efforts to achieve maximum results from its actions. The Contractor shall

document these efforts fully, and shall implement affirmative action steps at least as extensive as the following:

Ensure and maintain a working environment free of harassment, intimidations, and coercion at all sites, and in all facilities at which the Contractor's employees are assigned to work. The Contractor, where possible, will assign two or more women to each construction project. The Contractor shall specifically ensure that all forepersons, superintendents, and other on-site supervisory personnel are aware of and carry out the Contractor's obligation to maintain such a working environment, with specific attention to minority or female individuals working at such sites or in such facilities.

Establish and maintain a current list of minority and female recruitment sources, provide written notification to minority and female recruitment sources and to community organizations when the Contractor or its union have employment opportunities available, and to maintain a record of the organization's responses.

Maintain a current file of the names, addresses and telephone numbers of each minority and female off-the-street applicant and minority or female referral from a union, a recruitment source or community organization and of what action was taken with respect to each such individual. If such individual was sent to the union hiring hall for referral and was not referred back to the Contractor by the union or, if referred, not employed by the Contractor, this shall be documented in the file with the reason therefore, along with whatever additional actions the Contractor may have taken.

Provide immediate written notification to the Department's Civil Rights Office when the union or unions with which the Contractor has a collective bargaining agreement has not referred to the Contractor a minority person or woman sent by the Contractor, or when the Contractor has other information that the union referral process has impeded the Design-Builder's efforts to meet its obligations.

Develop on-the-job training opportunities and/or participate in training programs for the area which expressly include minorities and women, including upgrading programs and apprenticeship and trainee programs relevant to the Contractor's employment needs, especially those programs funded or approved by the Department of Labor. The Contractor shall provide notice of these programs to the sources compiled under B above.

Disseminate the Contractor's EEO policy by providing notice of the policy to unions and training programs and requesting their cooperation in assisting the Contractor in meeting its EEO obligation; by including it in any policy manual and collective bargaining agreement; by publicizing it in the company newspaper, annual report, etc.; by specific review of the policy with all management personnel and with all minority and female employees at least once a year; and by posting the company EEO policy on bulletin boards accessible to all employees at each location where construction work is performed.

Review, at least annually, the company's EEO policy and affirmative action obligations under these specifications with all employees having any responsibility for hiring, assignment, layoff, termination, or other employment decisions including specific review

of these items with on-site supervisory personnel such as Superintendents, General Forepersons, etc., prior to the initiation of construction work at any job site. A written record shall be made and maintained identifying the time and place of these meetings, persons attending, subject matter discussed, and disposition of the subject matter.

Disseminate the Contractor's EEO policy externally by including it in any advertising in the news media, specifically including minority and female news media, and providing written notification to and discussing the Contractor's EEO policy with other Contractor's and Subcontractors with whom the Contractor does or anticipates doing business.

Direct its recruitment efforts, both orally and written to minority, female and community organizations, to schools with minority and female students and to minority and female recruitment and training organizations serving the Contractor's recruitment area and employment needs. Not later that one month prior to the date for the acceptance of applications for apprenticeship or other training by any recruitment source, the Contractor shall send written notification to organizations such as the above describing the openings, screenings, procedures, and test to be used in the selection process.

Encourage present minority and female employees to recruit other minority persons and women and, where reasonable, provide after school, summer and vacation employment to minority and female youth, both on the site and in other areas of a Contractor's workforce.

Validate all tests and other selection requirements.

Conduct, at least annually, an inventory and evaluation at least of all minority and female personnel for promotional opportunities and encourage these employees to seek or to prepare for, through appropriate training, etc., such opportunities.

Ensure that seniority practices, job classifications, work assignments and other personnel practices, do not have a discriminatory effect by continually monitoring all personnel and employment related activities to ensure that the EEO policy and the Contractor's obligations under these specifications are being carried out.

Ensure that all facilities and company activities are non segregated except that separate or single-user toilet and necessary changing facilities shall be provided to assure privacy between the sexes.

Document and maintain a record of all solicitations of offers for subcontracts from minority and female construction Contractor's and suppliers, including circulation of solicitations to minority and female Contractor associations and other business associations.

Conduct a review, at least annually, of all supervisors' adherence to and performance under the Contractor's EEO policies and affirmative action obligations.

C. Goals for Employment of Women and Minorities Per Executive Order 11246, craft tradesperson goals are 6.9% women and .5% minorities employed. However, goals may be

adjusted upward at the mutual agreement of the Contractor and the Department. Calculation of these percentages shall not include On-the-Job Training Program trainees, and shall not include clerical or field clerk position employees.

For a more complete presentation of requirements for such Goals, see the federally required document "Goals for Employment of Females and Minorities" set forth in the next 6 pages below.

****

Start of GOALS FOR EMPLOYMENT OF FEMALES AND MINORITIES
Federally Required Contract Document

§60-4.2 Solicitations

(d) The following notice shall be included in, and shall be part of, all solicitations for offers and bids on all Federal and federally assisted construction contracts or subcontracts in excess of $10,000 to be performed in geographical areas designated by the Director pursuant to §60-4.6 of this part (see 41 CFR 60-4.2(a)):

Notice of Requirement for Affirmative Action to Ensure Equal Opportunity (Executive Order 11246)

1. The Offeror's or bidder's attention is called to the "Equal Opportunity Clause" and the "Standard Federal Equal Employment Specifications" set forth herein.

2. The goals and timetables for minority and female participation, expressed in percentage terms for the Contractor's aggregate work force in each trade on all construction work in the covered area, are as follows:

Goals for female participation in each trade 6.9%

Goals for minority participation for each trade
Maine
001 Bangor, ME 0.8%
Non-SMSA Counties (Aroostook, Hancock, Penobscot, Piscataquis, Waldo, Washington)

002 Portland-Lewiston, ME
SMSA Counties: 4243 Lewiston-Auburn, ME 0.5%
(Androscoggin)

6403 Portland, ME 0.6%
(Cumberland, Sagadahoc)

Non-SMSA Counties: 0.5%
(Franklin, Kennebec, Knox, Lincoln, Oxford, Somerset, York)

These goals are applicable to all the Contractor's construction work (whether or not it is Federal or federally assisted) performed in the covered area. If the contractor performs

construction work in a geographical area located outside of the covered area, it shall apply the goals established for such geographical area where the work is actually performed. With regard to this second area, the contractor also is subject to the goals for both its federally involved and non federally involved construction.

The contractor's compliance with the Executive Order and the regulations in 41 CFR Part 60-4 shall be based on its implementation of the Equal Opportunity Clause, specific affirmative action obligations required by the specifications set forth in 41 CFR 60-4.3(a), and its efforts to meet the goals. The hours of minority and female employment and training must be substantially uniform throughout the length of the contract, and in each trade, and the contractor shall make a good faith effort to employ minorities and women evenly on each of its projects. The transfer of minority or female employees or trainees from Contractor to Contractor or from project to project for the sole purpose of meeting the Contractor's goals shall be in violation of the contract, the Executive Order and the regulations in 41 CFR Part 60-4. Compliance with the goals will be measured against the total work hours performed.

3. The Contractor shall provide written notification to the Director of the Office of Federal Contract Compliance Programs within 10 working days of award of any construction subcontract in excess of $10,000 at any tier for construction work under the contract resulting from this solicitation. The notification shall list the name, address and telephone number of the subcontractor, employer identification number of the subcontractor, estimated dollar amount of the subcontract; estimated started and completion dates of the subcontract; and the geographical area in which the subcontract is to be performed.

4. As used in this Notice, and in the Contract resulting from this solicitation, the "covered area" is (insert description of the geographical areas where the contract is to be performed giving the state, county and city, if any).

STANDARD FEDERAL EQUAL EMPLOYMENT OPPORTUNITY CONSTRUCTION CONTRACT SPECIFICATIONS (EXECUTIVE ORDER 11246)

1. As used in these specifications:

   a. "Covered area" means the geographical area described in the solicitation from which this contract resulted;

   b. "Director" means Director, Office of Federal Contract Compliance Programs, United States Department of Labor, or any person to whom the Director delegates authority;

   c. "Employer identification number" means the Federal Social Security number used on the Employer's Quarterly Federal Tax Return, U.S. Treasury Department form 941;

   d. "Minority" includes:
      (i) Black (all persons having origins in any of the Black African racial groups not of Hispanic origin);
      (ii) Hispanic (all persons of Mexican, Puerto Rican, Cuban, Central or South American or other Spanish Culture or origin, regardless of race);

(iii) Asian and Pacific Islander (all persons having origins in any of the original peoples of the Far East, Southeast Asia, the Indian Subcontinent, or the Pacific Islands); and
(iv) American Indian or Alaskan Native (all persons having origins in any of the original peoples of the North America and maintaining identifiable tribal affiliations through membership and participation or community identification).

2. Whenever the Contractor, or any subcontractor at any tier, subcontracts a portion of the work involving any construction trade, it shall physically include in each subcontract in excess of $10,000 the provisions of these specifications and the Notice which contains the applicable goals for minority and female participation and which is set forth in the solicitations from which this contract resulted.

3. If the contractor, is participating (pursuant to 41 CFR 60-4.5) in a Hometown Plan approved by the U.S. Department of Labor in the covered area either individually or through an association, its affirmative action obligations on all work in the Plan area (including goals and timetables) shall be in accordance with that Plan for those trades which have unions participating in the Plan. Contractors must be able to demonstrate their participation in and compliance with the provisions of any such Hometown Plan. Each Contractor or Subcontractor participating in an approved Plan is individually required to comply with its obligations under the EEO clause, and to make a good faith effort to achieve each goal under the Plan in each trade in which it has employees. The overall good faith performance by other Contractors for Subcontractors toward a goal in an approved Plan does not excuse any covered Contractor's or Subcontractor's failure to take good faith efforts to achieve the Plan goals and timetables.

4. The Contractor shall implement the specific affirmative action standards provided in paragraphs 7 a. through p. of these specifications. The goals set forth in the solicitation from which this contract resulted are expressed as percentages of the total hours of employment and training of minority and female utilization the Contractor should reasonably be able to achieve in each construction trade in which it has employees in contractors performing construction work in geographical areas where they do not have a Federal or federally assisted construction contract shall apply the minority and female goals established for the geographical areas where the work is being performed. Goals are published periodically in the Federal Register in notice form and such notices may be obtained from any Office of Federal Contract Compliance Programs office or from Federal procurement contracting officers. The Contractor is expected to make substantially uniform progress in meeting its goals in each craft during the period specific.

5. Neither the provisions of any collective bargaining agreement, nor the failure by a union with whom the Contractor has a collective bargaining agreement, to refer either minorities or women shall excuse the Contractor's obligations under these specifications, Executive Order 11246, or the regulations promulgated pursuant, thereto.

6. In order for the non working training hours of apprentices and trainees to be counted in meeting the goals, such apprentices and trainees must be employed by the Contractor during the training period, and the Contractor must have made a commitment to employ the apprentices and trainees at the completion of their training, subject to the availability of

employment opportunities. Trainees must be trained pursuant to training programs approved by the U.S. Department of Labor.

7. The Contractor shall take specific affirmative actions to ensure equal employment opportunity. The evaluation of the Contractor's compliance with these specifications shall be based upon its effort to achieve maximum results from its actions. The Contractor shall document these efforts fully, and shall implement affirmative action steps at least as expensive as the following:

   a. Ensure and maintain a working environment free of harassment, intimidation, coercion at all sites, and in all facilities at which the Contractor's employees are assigned to work. The Contractor, when possible, will assign two or more women to each construction project. The Contractor shall specifically ensure that all foremen, superintendents, and other on-site supervisory personnel are aware of and carry out the Contractor's obligation to maintain such a working environment, with specific attention to minority or female individuals working at such sites or in such facilities.

   b. Establish and maintain a current list of minority and female recruitment sources provide written notification to minority and female recruitment sources and to community organizations when the Contractor or its unions have employment opportunities available, and maintain a record of the organization's responses.

   c. Maintain a current file of the names, addresses and telephone numbers of each minority and female off-the-street applicant and minority or female referral from a union, a recruitment sources or community organization and of what action was taken with respect to each such individual. If such individual was sent to the union hiring hall for referral and was not referred back to the Contractor by the union or, if referred, not employed by the Contractor, this shall be documented in the file with the reason therefore, along with whatever additional actions the Contractor may have taken.

   d. Provide immediate written notification to the Director when the union or unions with which the Contractor has a collective bargaining agreement has not referred to the Contractor a minority person or woman sent by the Contractor, or when the Contractor has other information that the union referral process has impeded the Contractor's efforts to meet its obligations.

   e. Develop on-the-job training opportunities and/or participate in training programs for the area which expressly include minorities and women, including upgrading programs and apprenticeship and trainee programs relevant to the Contractor's employment needs, especially those programs funded or approved by the Department of Labor. The Contractor shall provide notice of these programs to the sources complied under 7b above.

   f. Disseminate the Contractor's EEO policy by providing notice of the policy to unions and training programs and requesting their cooperation in assisting the Contractor in meeting its EEO obligations; by including in any policy manual and collective bargaining agreement; by publicizing it in the company newspaper, annual report, etc.; by specific review of the policy with all management personnel and with all minority and female

employees at least once a year; and by posting the company EEO policy on bulletin boards accessible to all employees at each location where construction work is performed.

g. Review, at least annually, the company's EEO policy and affirmative action obligations under these specifications with all employees having any responsibility for hiring, assignment, layoff, termination or other employment decisions including specific review of these items with on-site supervisory personnel such as Superintendents, General Foremen, etc., prior to the initiation of construction work at any job site. A written record shall be made and maintained identifying the time and place of these meetings, persons attending, subject matter discussed, and disposition of the subject matter.

h. Disseminate the Contractor's EEO policy externally by including it in any advertising in the news media, specifically including minority and female news media, and providing written notification to and discussing the Contractor's EEO policy with other Contractors and Subcontractors with whom the Contractor does or anticipates doing business.

i. Direct its recruitment, efforts, both oral and written, to minority, female and community organizations, to schools with minority and female students and to minority and female recruitment and training organizations serving the Contractor's recruitment area and employment needs. Not later than one month other training by any recruitment source, the Contractor shall send written notification to organizations such as the above, describing prior to the date for the acceptance of applications for apprenticeship or the openings, screening procedures, and tests to be used in the selection process.

j. Encourage present minority and female employees to recruit other minority persons and women and, where reasonable, provide after school, summer and vacation employment to minority and female youth both on site and in other areas of a Contractor's work force.

k. Validate all tests and other selection requirements where there is an obligation to do so under 41 CFR Part 60-3.

l. Conduct, at least annually, an inventory and evaluation at least of all minority and female personnel for promotional opportunities and encourage these employees to seek or to prepare for, through appropriate training, etc., such opportunities.

m. Ensure that seniority practices, job classifications, work assignments and other personnel practices, do not have a discriminatory effect by continually monitoring all personnel and employment related activities to ensure that the EEO policy and the Contractor's obligations under these specifications are being carried out.

n. Ensure that all facilities and company activities are non segregated except that separate or single-user toilet and necessary changing facilities shall be provided to assure privacy between the sexes.

o. Document and maintain a record of all solicitations of offers for subcontracts from minority and female construction contractors and suppliers, including circulation of

solicitation to minority and female contractor associations and other business associations.

p. Conduct a review, at least annually, of all supervisor's adherence to and performance under the Contractor's EEO policies and affirmative action obligations.

8. Contractors are encouraged to participate in voluntary associations which assist in fulfilling one or more of their affirmative action obligations (7 a through p.). The efforts of a contractor association, joint contractor-union, contractor-community, or other similar group of which the contractor is a member and participant, may be asserted as fulfilling any one or more of its obligations under 7 a through p. of these specifications provided that the contractor actively participates in the group, makes every effort to assure that the group has a positive impact on the employment of minorities and women in the industry, ensures that the concrete benefits of the program and reflected in the Contractor's minority and female work force participation, makes a good faith effort to meet its individual goals and timetables, and can provide access to documentation which demonstrates the effectiveness of actions take on behalf of the Contractor. The obligation to comply, however, is the Contractor's and failure of such a group to fulfill an obligation shall not be a defense for the Contractor's noncompliance.

9. A single goal for minorities and a separate single goal for women have been established. The Contractor, however, is required to provide equal employment opportunity and to take affirmative action for all minority groups, both make and female, and all women, both minority and non-minority. Consequently, the Contractor may be in violation of the Executive Order if a particular group is employed in a substantially disparate manner (for example, specific minority group of women is underutilized.)

10. The Contractor shall not use the goals and timetables or affirmative action even through the Contractor has achieved its goals for women generally, the Contractor may be in violation of the Executive Order if standards to discriminate against any person because of race, color, religion, sex, or national origin.

11. The Contractor shall not enter into any Subcontract with any person or firm debarred from Government contracts pursuant to Executive Order 11246.

12. The Contractor shall carry out such sanctions and penalties for violation of these specifications and of the Equal Opportunity Clause, including suspension, termination and cancellation of existing subcontracts as may be imposed or ordered pursuant to Executive Order 11246, as amended, and its implementation regulations by the Office of Federal Contract Compliance Programs. Any Contractor who fails to carry out such sanctions and penalties shall be in violation of these specifications and Executive Order 11246, as amended.

13. The Contractor, in fulfilling its obligations under these specifications, shall implement specific affirmative action steps, at least as extensive as those standards prescribed in paragraph 7 of these specifications, so as to achieve maximum results from its efforts to ensure equal employment opportunity. If the Contractor fails to comply with the

requirements of the Executive Order, the implementing regulations, or these specifications, the Director shall proceed in accordance with 41 CFR 60-4.6.

14. The Contractor shall designate a responsible official to monitor all employment related activity to ensure that the company EEO policy is being carried out, to submit reports relating to the provisions hereof as may be required by the Government and to keep records. Records shall at least include for each employee the name, address, telephone numbers, construction trade, union affiliation if any, employee identification number when assigned, social security number, race, sex, status (e.g. mechanic, apprentice, trainee, helper, or laborer), dates of changes in status, hours worked per week in the indicated trade, rate of pay, and location sat which the work was performed. Records be maintained in an easily understandable and retrievable form; however, to the degree that existing records satisfy this requirement, contractors shall not be required to maintain separate records.

15. Nothing herein provided shall be construed as a limitation upon the application of other laws which establish different standards of compliance or upon the application of requirements for the hiring of local or other area residents (e.g., those under the Public Works Employment Act of 1977 and the Community Development Block Grant Program).

End of GOALS FOR EMPLOYMENT OF FEMALES AND MINORITIES
Federally Required Contract Document

****

D. Disadvantaged Business Enterprise (DBE) Requirements The Department has established an annual Disadvantaged Business Enterprise goal to be achieved through race neutral means. This goal will be adjusted periodically and will be provided by Supplemental Provision. The Contractor shall comply with all provisions of this section regarding DBE participation and the Department's latest version of the Disadvantaged Business Enterprise Program Manual, said Manual being incorporated herein by reference. In the case of conflict between this Contract and said Manual, this Contract shall control. The Department reserves the right to adjust DBE goals on a project-by-project basis by addendum.

Policy. It is the Department's policy that DBEs as defined in 23 CFR Part 26 and referenced in the Transportation Equity Act for 21st Century of 1998, as amended from the Surface Transportation Uniform Relocation Assistance Act of 1987, and the Intermodal Surface Transportation Efficiency Act of 1991. The intent hereto remains to provide the maximum opportunity for DBEs to participate in the performance of contracts financed in whole or in part with federal funds.

The Department and its Contractors shall not discriminate on the basis of race, color, national origin, ancestry, sex, age, or disability in the award and performance of DOT assisted contracts.

Disadvantaged Business Enterprises are those so certified by the Maine Department of Transportation Civil Rights Office prior to bid opening date.

The Department has determined that elements of a good faith effort to meet the contract goal include but are not limited to the following:

1. Whether the Contractor advertised in general circulation, trade association, and minority/women's-focus media concerning the subcontracting opportunities;

2. Whether the Contractor provided written notice to a reasonable number of specific DBEs that their interest in the contract is being solicited;

3. Whether the Contractor followed up on initial solicitations of interest by contacting DBEs to determine with certainty whether the DBEs were interested;

4. Whether the Contractor selected portions of the work to be performed by DBEs in order to increase the likelihood of meeting the DBE goals;

5. Whether the Contractor provided interested DBEs with adequate information about the plans, specification and requirements of the contract;

6. Whether the Contractor negotiated in good faith with interested DBEs, not rejecting the DBE as unqualified without sound reasons based on a thorough investigation of their capabilities;

7. Whether the Contractor made efforts to assist interested DBEs with other appropriate technical/financial assistance required by the Department or Contractor;

8. Whether the Contractor effectively used the services of available minority/women's community organizations, minority/women's business assistance offices; and other organizations that provide assistance in the recruitment and placement of DBEs.

Substitutions of DBEs. The following may be acceptable reasons for Civil Rights Office approval of such a change order:

- The DBE defaults, voluntarily removes itself or is over-extended;
- The Department deletes portions of the work to by performed by the DBE.

It is not intended that the ability to negotiate a more advantageous contract with another certified DBE be considered a valid basis for such a change in DBE utilization once the DBE Bid Submission review has been passed. Any requests to alter the DBE commitment must be in writing and included with the change order.

Failure to carry out terms of this Standard Specification shall be treated as a violation of this contract and will result in contract sanctions which may include withholding of partial payments totaling the creditable dollars amount which would have been paid for said DBE participation, termination of this contract or other measures which may affect the ability of the Contractor to obtain Department contracts.

Copies of the Maine Department of Transportation's DBE Program may be obtained from:

Maine Department of Transportation
Civil Rights Office
#16 State House Station
Augusta, Maine 04333-0016
tel. (207) 624-3519

Quarterly Reporting Requirement. The Contractor must submit Semi-annual reports of actual dollars paid to Disadvantaged Business Enterprises (DBE's) on this Project to the MaineDOT Civil Rights Office by the end of the third week of April and October for the period covering the preceding six months considered Federal Fiscal Year periods. The reports will be submitted directly to the Civil Rights Office on the form provided in the latest version of the DBE Program Manual. Failure to submit the report by the deadline may result in a withholding of approval of partial payment estimates by the Department.

SECTION 3 - OTHER FEDERAL REQUIREMENTS

Unless expressly otherwise provided in the Bid Documents, the provisions contained in this Section 3 of this "Federal Contract Provisions Supplement" are hereby incorporated into the Bid Documents and Contract.

A. Buy America

If the cost of products purchased for permanent use in this project which are manufactured of steel, iron or the application of any coating to products of these materials exceeds 0.1 percent of the contract amount, or $2,500.00, whichever is greater, the products shall have been manufactured and the coating applied in the United States. The coating materials are not subject to this clause, only the application of the coating. In computing that amount, only the cost of the product and coating application cost will be included.

Ore, for the manufacture of steel or iron, may be from outside the United States; however, all other manufacturing processes of steel or iron must be in the United States to qualify as having been manufactured in the United States.

United States includes the 50 United States and any place subject to the jurisdiction thereof.

Products of steel include, but are not limited to, such products as structural steel, piles, guardrail, steel culverts, reinforcing steel, structural plate and steel supports for signs, luminaries and signals.

Products of iron include, but are not limited to, such products as cast iron grates.

Application of coatings include, but are not limited to, such applications as epoxy, galvanized and paint.

To assure compliance with this section, the Contractor shall submit a certification letter on its letterhead to the Department stating the following:

> "This is to certify that products made of steel, iron or the application of any coating to products of these materials whose costs are in excess of $2,500.00 or 0.1 percent of the original contract amount, whichever is greater, were manufactured and the coating, if one was required, was applied in the United States."

B. Materials

a. Convict Produced Materials References: 23 U.S.C. 114(b)(2), 23 CFR 635.417

Applicability: FHWA's prohibition against the use of convict material only applies to Federal-aid highways. Materials produced after July 1, 1991, by convict labor may only be incorporated in a Federal-aid highway construction project if: 1) such materials have been produced by convicts who are on parole, supervised release, or probation from a prison; or 2) such material has been produced in a qualified prison facility, e.g., prison industry, with the amount produced during any 12-month period, for use in Federal-aid projects, not exceeding the amount produced, for such use, during the 12-month period ending July 1, 1987.

Materials obtained from prison facilities (e.g., prison industries) are subject to the same requirements for Federal-aid participation that are imposed upon materials acquired from other sources. Materials manufactured or produced by convict labor will be given no preferential treatment.

The preferred method of obtaining materials for a project is through normal contracting procedures which require the contractor to furnish all materials to be incorporated in the work. The contractor selects the source, public or private, from which the materials are to be obtained (23 CFR 635.407). Prison industries are prohibited from bidding on projects directly (23 CFR 635.112e), but may act as material supplier to construction contractors.

Prison materials may also be approved as State-furnished material. However, since public agencies may not bid in competition with private firms, direct acquisition of materials from a prison industry for use as State-furnished material is subject to a public interest finding with the Division Administrator's concurrence (23 CFR 635.407d). Selection of materials produced by convict labor as State-furnished materials for mandatory use should be cleared prior to the submittal of the Plans Specifications & Estimates (PS&E).

b. Patented/Proprietary Products References: 23 U.S.C. 112, 23 CFR 635.411

FHWA will not participate, directly or indirectly, in payment for any premium or royalty on any patented or proprietary material, specification, or process specifically set forth in the plans and specifications for a project, unless:

- the item is purchased or obtained through competitive bidding with equally suitable unpatented items,
- the STA certifies either that the proprietary or patented item is essential for synchronization with the existing highway facilities or that no equally suitable alternative exists, or
- the item is used for research or for a special type of construction on relatively short sections of road for experimental purposes. States should follow FHWA's procedures for "Construction Projects Incorporating Experimental Features" (expermnt.htm) for the submittal of work plans and evaluations.

The primary purpose of the policy is to have competition in selection of materials and allow for development of new materials and products. The policy further permits materials and products that are judged equal may be bid under generic specifications. If only patented or proprietary products are acceptable, they shall be bid as alternatives with all, or at least a

reasonable number of, acceptable materials or products listed; and the Division Administrator may approve a single source if it can be found that its utilization is in the public interest.

Trade names are generally the key to identifying patented or proprietary materials. Trade name examples include 3M, Corten, etc. Generally, products identified by their brand or trade name are not to be specified without an "or equal" phrase, and, if trade names are used, all, or at least a reasonable number of acceptable "equal" materials or products should be listed. The licensing of several suppliers to produce a product does not change the fact that it is a single product and should not be specified to the exclusion of other equally suitable products.

c. State Preference References: 23 U.S.C. 112, 23 CFR 635.409

Materials produced within Maine shall not be favored to the exclusion of comparable materials produced outside of Maine. State preference clauses give particular advantage to the designated source and thus restrict competition. Therefore, State preference provisions shall not be used on any Federal-aid construction projects.

This policy also applies to State preference actions against materials of foreign origin, except as otherwise permitted by Federal law. Thus, States cannot give preference to in-State material sources over foreign material sources. Under the Buy America provisions, the States are permitted to expand the Buy America restrictions provided that the STA is legally authorized under State law to impose more stringent requirements.

d. State Owned/Furnished/Designated Materials References: 23 U.S.C. 112, 23 CFR 635.407

Current FHWA policy requires that the contractor must furnish all materials to be incorporated in the work, and the contractor shall be permitted to select the sources from which the materials are to be obtained. Exceptions to this requirement may be made when there is a definite finding, by MaineDOT and concurred in by Federal Highway Administration's (FHWA) Division Administrator, that it is in the public interest to require the contractor to use materials furnished by the MaineDOT or from sources designated by MaineDOT. The exception policy can best be understood by separating State-furnished materials into the categories of manufactured materials and local natural materials.

Manufactured Materials When the use of State-furnished manufactured materials is approved based on a public interest finding, such use must be made mandatory. The optional use of State-furnished manufactured materials is in violation of our policy prohibiting public agencies from competing with private firms. Manufactured materials to be furnished by MaineDOT must be acquired through competitive bidding, unless there is a public interest finding for another method, and concurred in by FHWA's Division Administrator.

Local Natural Materials When MaineDOT owns or controls a local natural materials source such as a borrow pit or a stockpile of salvaged pavement material, etc., the materials may be designated for either optional or mandatory use; however, mandatory use will require a public interest finding (PIF) and FHWA's Division Administrator's concurrence.

In order to permit prospective bidders to properly prepare their bids, the location, cost, and any conditions to be met for obtaining materials that are made available to the contractor shall be stated in the bidding documents.

Mandatory Disposal Sites Normally, the disposal site for surplus excavated materials is to be of the contractor's choosing; although, an optional site(s) may be shown in the contract provisions. A mandatory site shall be specified when there is a finding by MaineDOT, with the concurrence of the Division Administrator, that such placement is the most economical or that the environment would be substantially enhanced without excessive cost. Discussion of the mandatory use of a disposal site in the environmental document may serve as the basis for the public interest finding.

Summarizing FHWA policy for the mandatory use of borrow or disposal sites:

- mandatory use of either requires a public interest finding and FHWA's Division Administrator's concurrence,
- mandatory use of either may be based on environmental consideration where the environment will be substantially enhanced without excessive additional cost, and
- where the use is based on environmental considerations, the discussion in the environmental document may be used as the basis for the public interest finding.

Factors to justify a public interest finding should include such items as cost effectiveness, system integrity, and local shortages of material.

C. Standard FHWA Contract Provisions - FHWA 1273

Unless expressly otherwise provided in the Bid Documents, the following "Required Contract Provisions, Federal Aid Construction Contracts", FHWA-1273, are hereby incorporated into the Bid Documents and Contract.
****

Start of FHWA 1273 REQUIRED CONTRACT PROVISIONS
FEDERAL-AID CONSTRUCTION CONTRACTS (As revised through May 1, 2012)

FHWA-1273 -- Revised May 1, 2012

REQUIRED CONTRACT PROVISIONS
FEDERAL-AID CONSTRUCTION CONTRACTS

I. General
II. Nondiscrimination

III. Nonsegregated Facilities
IV. Davis-Bacon and Related Act Provisions
V. Contract Work Hours and Safety Standards Act Provisions
VI. Subletting or Assigning the Contract
VII. Safety: Accident Prevention
VIII. False Statements Concerning Highway Projects
IX. Implementation of Clean Air Act and Federal Water Pollution Control Act
X. Compliance with Governmentwide Suspension and Debarment Requirements
XI. Certification Regarding Use of Contract Funds for Lobbying

ATTACHMENTS

A. Employment and Materials Preference for Appalachian Development Highway System or Appalachian Local Access Road Contracts (included in Appalachian contracts only)

I. GENERAL

1. Form FHWA-1273 must be physically incorporated in each construction contract funded under Title 23 (excluding emergency contracts solely intended for debris removal). The contractor (or subcontractor) must insert this form in each subcontract and further require its inclusion in all lower tier subcontracts (excluding purchase orders, rental agreements and other agreements for supplies or services).

The applicable requirements of Form FHWA-1273 are incorporated by reference for work done under any purchase order, rental agreement or agreement for other services. The prime contractor shall be responsible for compliance by any subcontractor, lower-tier subcontractor or service provider.

Form FHWA-1273 must be included in all Federal-aid design-build contracts, in all subcontracts and in lower tier subcontracts (excluding subcontracts for design services, purchase orders, rental agreements and other agreements for supplies or services). The design-builder shall be responsible for compliance by any subcontractor, lower-tier subcontractor or service provider.

Contracting agencies may reference Form FHWA-1273 in bid proposal or request for proposal documents, however, the Form FHWA-1273 must be physically incorporated (not referenced) in all contracts, subcontracts and lower-tier subcontracts (excluding purchase orders, rental agreements and other agreements for supplies or services related to a construction contract).

2. Subject to the applicability criteria noted in the following sections, these contract provisions shall apply to all work performed on the contract by the contractor's own organization and with the assistance of workers under the contractor's immediate superintendence and to all work performed on the contract by piecework, station work, or by subcontract.

3. A breach of any of the stipulations contained in these Required Contract Provisions may be sufficient grounds for withholding of progress payments, withholding of final payment, termination of the contract, suspension / debarment or any other action determined to be appropriate by the contracting agency and FHWA.

4. Selection of Labor: During the performance of this contract, the contractor shall not use convict labor for any purpose within the limits of a construction project on a Federal-aid highway unless it is labor performed by convicts who are on parole, supervised release, or probation. The term Federal-aid highway does not include roadways functionally classified as local roads or rural minor collectors.

II. NONDISCRIMINATION

The provisions of this section related to 23 CFR Part 230 are applicable to all Federal-aid construction contracts and to all related construction subcontracts of $10,000 or more. The provisions of 23 CFR Part 230 are not applicable to material supply, engineering, or architectural service contracts.

In addition, the contractor and all subcontractors must comply with the following policies: Executive Order 11246, 41 CFR 60, 29 CFR 1625-1627, Title 23 USC Section 140, the Rehabilitation Act of 1973, as amended (29 USC 794), Title VI of the Civil Rights Act of 1964, as amended, and related regulations including 49 CFR Parts 21, 26 and 27; and 23 CFR Parts 200, 230, and 633.

The contractor and all subcontractors must comply with: the requirements of the Equal Opportunity Clause in 41 CFR 60-1.4(b) and, for all construction contracts exceeding $10,000, the Standard Federal Equal Employment Opportunity Construction Contract Specifications in 41 CFR 60-4.3.

Note: The U.S. Department of Labor has exclusive authority to determine compliance with Executive Order 11246 and the policies of the Secretary of Labor including 41 CFR 60, and 29 CFR 1625-1627. The contracting agency and the FHWA have the authority and the responsibility to ensure compliance with Title 23 USC Section 140, the Rehabilitation Act of 1973, as amended (29 USC 794), and Title VI of the Civil Rights Act of 1964, as amended, and related regulations including 49 CFR Parts 21, 26 and 27; and 23 CFR Parts 200, 230, and 633.

The following provision is adopted from 23 CFR 230, Appendix A, with appropriate revisions to conform to the U.S. Department of Labor (US DOL) and FHWA requirements.

1. Equal Employment Opportunity: Equal employment opportunity (EEO) requirements not to discriminate and to take affirmative action to assure equal opportunity as set forth under laws, executive orders, rules, regulations (28 CFR 35, 29 CFR 1630, 29 CFR 1625-1627, 41 CFR 60 and 49 CFR 27) and orders of the Secretary of Labor as modified by the provisions prescribed herein, and imposed pursuant to 23 U.S.C. 140 shall constitute the EEO and specific affirmative action standards for the contractor's project activities under this contract. The provisions of the Americans with Disabilities Act of 1990 (42 U.S.C. 12101 et seq.) set forth under 28 CFR 35 and 29 CFR 1630 are incorporated by reference in this contract. In the execution of this contract, the contractor agrees to comply with the following minimum specific requirement activities of EEO:

a. The contractor will work with the contracting agency and the Federal Government to ensure that it has made every good faith effort to provide equal opportunity with respect to all of its terms and conditions of employment and in their review of activities under the contract.

b. The contractor will accept as its operating policy the following statement:

"It is the policy of this Company to assure that applicants are employed, and that employees are treated during employment, without regard to their race, religion, sex, color, national origin, age or disability. Such action shall include: employment, upgrading, demotion, or transfer; recruitment or recruitment advertising; layoff or termination; rates of pay or other forms of compensation; and selection for training, including apprenticeship, pre-apprenticeship, and/or on-the-job training."

2. EEO Officer: The contractor will designate and make known to the contracting officers an EEO Officer who will have the responsibility for and must be capable of effectively administering and promoting an active EEO program and who must be assigned adequate authority and responsibility to do so.

3. Dissemination of Policy: All members of the contractor's staff who are authorized to hire, supervise, promote, and discharge employees, or who recommend such action, or who are substantially involved in such action, will be made fully cognizant of, and will implement, the contractor's EEO policy and contractual responsibilities to provide EEO in each grade and classification of employment. To ensure that the above agreement will be met, the following actions will be taken as a minimum:

a. Periodic meetings of supervisory and personnel office employees will be conducted before the start of work and then not less often than once every six months, at which time the contractor's EEO policy and its implementation will be reviewed and explained. The meetings will be conducted by the EEO Officer.

b. All new supervisory or personnel office employees will be given a thorough indoctrination by the EEO Officer, covering all major aspects of the contractor's EEO obligations within thirty days following their reporting for duty with the contractor.

c. All personnel who are engaged in direct recruitment for the project will be instructed by the EEO Officer in the contractor's procedures for locating and hiring minorities and women.

d. Notices and posters setting forth the contractor's EEO policy will be placed in areas readily accessible to employees, applicants for employment and potential employees.

e. The contractor's EEO policy and the procedures to implement such policy will be brought to the attention of employees by means of meetings, employee handbooks, or other appropriate means.

4. Recruitment: When advertising for employees, the contractor will include in all advertisements for employees the notation: "An Equal Opportunity Employer." All such advertisements will be placed in publications having a large circulation among minorities and women in the area from which the project work force would normally be derived.

a. The contractor will, unless precluded by a valid bargaining agreement, conduct systematic and direct recruitment through public and private employee referral sources likely to yield

qualified minorities and women. To meet this requirement, the contractor will identify sources of potential minority group employees, and establish with such identified sources procedures whereby minority and women applicants may be referred to the contractor for employment consideration.

b. In the event the contractor has a valid bargaining agreement providing for exclusive hiring hall referrals, the contractor is expected to observe the provisions of that agreement to the extent that the system meets the contractor's compliance with EEO contract provisions. Where implementation of such an agreement has the effect of discriminating against minorities or women, or obligates the contractor to do the same, such implementation violates Federal nondiscrimination provisions.

c. The contractor will encourage its present employees to refer minorities and women as applicants for employment. Information and procedures with regard to referring such applicants will be discussed with employees.

5. Personnel Actions: Wages, working conditions, and employee benefits shall be established and administered, and personnel actions of every type, including hiring, upgrading, promotion, transfer, demotion, layoff, and termination, shall be taken without regard to race, color, religion, sex, national origin, age or disability. The following procedures shall be followed:

a. The contractor will conduct periodic inspections of project sites to insure that working conditions and employee facilities do not indicate discriminatory treatment of project site personnel.

b. The contractor will periodically evaluate the spread of wages paid within each classification to determine any evidence of discriminatory wage practices.

c. The contractor will periodically review selected personnel actions in depth to determine whether there is evidence of discrimination. Where evidence is found, the contractor will promptly take corrective action. If the review indicates that the discrimination may extend beyond the actions reviewed, such corrective action shall include all affected persons.

d. The contractor will promptly investigate all complaints of alleged discrimination made to the contractor in connection with its obligations under this contract, will attempt to resolve such complaints, and will take appropriate corrective action within a reasonable time. If the investigation indicates that the discrimination may affect persons other than the complainant, such corrective action shall include such other persons. Upon completion of each investigation, the contractor will inform every complainant of all of their avenues of appeal.

6. Training and Promotion:

a. The contractor will assist in locating, qualifying, and increasing the skills of minorities and women who are applicants for employment or current employees. Such efforts should be aimed at developing full journey level status employees in the type of trade or job classification involved.

b. Consistent with the contractor's work force requirements and as permissible under Federal and State regulations, the contractor shall make full use of training programs, i.e., apprenticeship, and on-the-job training programs for the geographical area of contract performance. In the event a special provision for training is provided under this contract, this subparagraph will be superseded as indicated in the special provision. The contracting agency may reserve training positions for persons who receive welfare assistance in accordance with 23 U.S.C. 140(a).

c. The contractor will advise employees and applicants for employment of available training programs and entrance requirements for each.

d. The contractor will periodically review the training and promotion potential of employees who are minorities and women and will encourage eligible employees to apply for such training and promotion.

7. Unions: If the contractor relies in whole or in part upon unions as a source of employees, the contractor will use good faith efforts to obtain the cooperation of such unions to increase opportunities for minorities and women. Actions by the contractor, either directly or through a contractor's association acting as agent, will include the procedures set forth below:

a. The contractor will use good faith efforts to develop, in cooperation with the unions, joint training programs aimed toward qualifying more minorities and women for membership in the unions and increasing the skills of minorities and women so that they may qualify for higher paying employment.

b. The contractor will use good faith efforts to incorporate an EEO clause into each union agreement to the end that such union will be contractually bound to refer applicants without regard to their race, color, religion, sex, national origin, age or disability.

c. The contractor is to obtain information as to the referral practices and policies of the labor union except that to the extent such information is within the exclusive possession of the labor union and such labor union refuses to furnish such information to the contractor, the contractor shall so certify to the contracting agency and shall set forth what efforts have been made to obtain such information.

d. In the event the union is unable to provide the contractor with a reasonable flow of referrals within the time limit set forth in the collective bargaining agreement, the contractor will, through independent recruitment efforts, fill the employment vacancies without regard to race, color, religion, sex, national origin, age or disability; making full efforts to obtain qualified and/or qualifiable minorities and women. The failure of a union to provide sufficient referrals (even though it is obligated to provide exclusive referrals under the terms of a collective bargaining agreement) does not relieve the contractor from the requirements of this paragraph. In the event the union referral practice prevents the contractor from meeting the obligations pursuant to Executive Order 11246, as amended, and these special provisions, such contractor shall immediately notify the contracting agency.

8. Reasonable Accommodation for Applicants / Employees with Disabilities: The contractor must be familiar with the requirements for and comply with the Americans with

Disabilities Act and all rules and regulations established there under. Employers must provide reasonable accommodation in all employment activities unless to do so would cause an undue hardship.

9. Selection of Subcontractors, Procurement of Materials and Leasing of Equipment: The contractor shall not discriminate on the grounds of race, color, religion, sex, national origin, age or disability in the selection and retention of subcontractors, including procurement of materials and leases of equipment. The contractor shall take all necessary and reasonable steps to ensure nondiscrimination in the administration of this contract.

a. The contractor shall notify all potential subcontractors and suppliers and lessors of their EEO obligations under this contract.

b. The contractor will use good faith efforts to ensure subcontractor compliance with their EEO obligations.

10. Assurance Required by 49 CFR 26.13(b):

a. The requirements of 49 CFR Part 26 and the State DOT's U.S. DOT-approved DBE program are incorporated by reference.

b. The contractor or subcontractor shall not discriminate on the basis of race, color, national origin, or sex in the performance of this contract. The contractor shall carry out applicable requirements of 49 CFR Part 26 in the award and administration of DOT-assisted contracts. Failure by the contractor to carry out these requirements is a material breach of this contract, which may result in the termination of this contract or such other remedy as the contracting agency deems appropriate.

11. Records and Reports: The contractor shall keep such records as necessary to document compliance with the EEO requirements. Such records shall be retained for a period of three years following the date of the final payment to the contractor for all contract work and shall be available at reasonable times and places for inspection by authorized representatives of the contracting agency and the FHWA.

a. The records kept by the contractor shall document the following:

(1) The number and work hours of minority and non-minority group members and women employed in each work classification on the project;

(2) The progress and efforts being made in cooperation with unions, when applicable, to increase employment opportunities for minorities and women; and

(3) The progress and efforts being made in locating, hiring, training, qualifying, and upgrading minorities and women;

b. The contractors and subcontractors will submit an annual report to the contracting agency each July for the duration of the project, indicating the number of minority, women, and non-

minority group employees currently engaged in each work classification required by the contract work. This information is to be reported on Form FHWA-1391. The staffing data should represent the project work force on board in all or any part of the last payroll period preceding the end of July. If on-the-job training is being required by special provision, the contractor will be required to collect and report training data. The employment data should reflect the work force on board during all or any part of the last payroll period preceding the end of July.

III. NONSEGREGATED FACILITIES

This provision is applicable to all Federal-aid construction contracts and to all related construction subcontracts of $10,000 or more.

The contractor must ensure that facilities provided for employees are provided in such a manner that segregation on the basis of race, color, religion, sex, or national origin cannot result. The contractor may neither require such segregated use by written or oral policies nor tolerate such use by employee custom. The contractor's obligation extends further to ensure that its employees are not assigned to perform their services at any location, under the contractor's control, where the facilities are segregated. The term "facilities" includes waiting rooms, work areas, restaurants and other eating areas, time clocks, restrooms, washrooms, locker rooms, and other storage or dressing areas, parking lots, drinking fountains, recreation or entertainment areas, transportation, and housing provided for employees. The contractor shall provide separate or single-user restrooms and necessary dressing or sleeping areas to assure privacy between sexes.

IV. DAVIS-BACON AND RELATED ACT PROVISIONS

This section is applicable to all Federal-aid construction projects exceeding $2,000 and to all related subcontracts and lower-tier subcontracts (regardless of subcontract size). The requirements apply to all projects located within the right-of-way of a roadway that is functionally classified as Federal-aid highway. This excludes roadways functionally classified as local roads or rural minor collectors, which are exempt. Contracting agencies may elect to apply these requirements to other projects.

The following provisions are from the U.S. Department of Labor regulations in 29 CFR 5.5 “Contract provisions and related matters” with minor revisions to conform to the FHWA-1273 format and FHWA program requirements.

1. Minimum wages

a. All laborers and mechanics employed or working upon the site of the work, will be paid unconditionally and not less often than once a week, and without subsequent deduction or rebate on any account (except such payroll deductions as are permitted by regulations issued by the Secretary of Labor under the Copeland Act (29 CFR part 3)), the full amount of wages and bona fide fringe benefits (or cash equivalents thereof) due at time of payment computed at rates not less than those contained in the wage determination of the Secretary of Labor which is attached hereto and made a part hereof, regardless of any contractual relationship which may be alleged to exist between the contractor and such laborers and mechanics.

Contributions made or costs reasonably anticipated for bona fide fringe benefits under section 1(b)(2) of the Davis-Bacon Act on behalf of laborers or mechanics are considered wages paid to

such laborers or mechanics, subject to the provisions of paragraph 1.d. of this section; also, regular contributions made or costs incurred for more than a weekly period (but not less often than quarterly) under plans, funds, or programs which cover the particular weekly period, are deemed to be constructively made or incurred during such weekly period. Such laborers and mechanics shall be paid the appropriate wage rate and fringe benefits on the wage determination for the classification of work actually performed, without regard to skill, except as provided in 29 CFR 5.5(a)(4). Laborers or mechanics performing work in more than one classification may be compensated at the rate specified for each classification for the time actually worked therein: Provided, That the employer's payroll records accurately set forth the time spent in each classification in which work is performed. The wage determination (including any additional classification and wage rates conformed under paragraph 1.b. of this section) and the Davis-Bacon poster (WH–1321) shall be posted at all times by the contractor and its subcontractors at the site of the work in a prominent and accessible place where it can be easily seen by the workers.

b. (1) The contracting officer shall require that any class of laborers or mechanics, including helpers, which is not listed in the wage determination and which is to be employed under the contract shall be classified in conformance with the wage determination. The contracting officer shall approve an additional classification and wage rate and fringe benefits therefore only when the following criteria have been met:

(i) The work to be performed by the classification requested is not performed by a classification in the wage determination; and

(ii) The classification is utilized in the area by the construction industry; and

(iii) The proposed wage rate, including any bona fide fringe benefits, bears a reasonable relationship to the wage rates contained in the wage determination.

(2) If the contractor and the laborers and mechanics to be employed in the classification (if known), or their representatives, and the contracting officer agree on the classification and wage rate (including the amount designated for fringe benefits where appropriate), a report of the action taken shall be sent by the contracting officer to the Administrator of the Wage and Hour Division, Employment Standards Administration, U.S. Department of Labor, Washington, DC 20210. The Administrator, or an authorized representative, will approve, modify, or disapprove every additional classification action within 30 days of receipt and so advise the contracting officer or will notify the contracting officer within the 30-day period that additional time is necessary.

(3) In the event the contractor, the laborers or mechanics to be employed in the classification or their representatives, and the contracting officer do not agree on the proposed classification and wage rate (including the amount designated for fringe benefits, where appropriate), the contracting officer shall refer the questions, including the views of all interested parties and the recommendation of the contracting officer, to the Wage and Hour Administrator for determination. The Wage and Hour Administrator, or an authorized representative, will issue a determination within 30 days of receipt and so advise the contracting officer or will notify the contracting officer within the 30-day period that additional time is necessary.

(4) The wage rate (including fringe benefits where appropriate) determined pursuant to paragraphs 1.b.(2) or 1.b.(3) of this section, shall be paid to all workers performing work in the

classification under this contract from the first day on which work is performed in the classification.

c. Whenever the minimum wage rate prescribed in the contract for a class of laborers or mechanics includes a fringe benefit which is not expressed as an hourly rate, the contractor shall either pay the benefit as stated in the wage determination or shall pay another bona fide fringe benefit or an hourly cash equivalent thereof.

d. If the contractor does not make payments to a trustee or other third person, the contractor may consider as part of the wages of any laborer or mechanic the amount of any costs reasonably anticipated in providing bona fide fringe benefits under a plan or program, Provided, That the Secretary of Labor has found, upon the written request of the contractor, that the applicable standards of the Davis-Bacon Act have been met. The Secretary of Labor may require the contractor to set aside in a separate account assets for the meeting of obligations under the plan or program.

2. Withholding

The contracting agency shall upon its own action or upon written request of an authorized representative of the Department of Labor, withhold or cause to be withheld from the contractor under this contract, or any other Federal contract with the same prime contractor, or any other federally-assisted contract subject to Davis-Bacon prevailing wage requirements, which is held by the same prime contractor, so much of the accrued payments or advances as may be considered necessary to pay laborers and mechanics, including apprentices, trainees, and helpers, employed by the contractor or any subcontractor the full amount of wages required by the contract. In the event of failure to pay any laborer or mechanic, including any apprentice, trainee, or helper, employed or working on the site of the work, all or part of the wages required by the contract, the contracting agency may, after written notice to the contractor, take such action as may be necessary to cause the suspension of any further payment, advance, or guarantee of funds until such violations have ceased.

3. Payrolls and basic records

a. Payrolls and basic records relating thereto shall be maintained by the contractor during the course of the work and preserved for a period of three years thereafter for all laborers and mechanics working at the site of the work. Such records shall contain the name, address, and social security number of each such worker, his or her correct classification, hourly rates of wages paid (including rates of contributions or costs anticipated for bona fide fringe benefits or cash equivalents thereof of the types described in section 1(b)(2)(B) of the Davis-Bacon Act), daily and weekly number of hours worked, deductions made and actual wages paid. Whenever the Secretary of Labor has found under 29 CFR 5.5(a)(1)(iv) that the wages of any laborer or mechanic include the amount of any costs reasonably anticipated in providing benefits under a plan or program described in section 1(b)(2)(B) of the Davis-Bacon Act, the contractor shall maintain records which show that the commitment to provide such benefits is enforceable, that the plan or program is financially responsible, and that the plan or program has been communicated in writing to the laborers or mechanics affected, and records which show the costs anticipated or the actual cost incurred in providing such benefits. Contractors employing apprentices or trainees under approved programs shall maintain written evidence of the

registration of apprenticeship programs and certification of trainee programs, the registration of the apprentices and trainees, and the ratios and wage rates prescribed in the applicable programs.

b. (1) The contractor shall submit weekly for each week in which any contract work is performed a copy of all payrolls to the contracting agency. The payrolls submitted shall set out accurately and completely all of the information required to be maintained under 29 CFR 5.5(a)(3)(i), except that full social security numbers and home addresses shall not be included on weekly transmittals. Instead the payrolls shall only need to include an individually identifying number for each employee (e.g. , the last four digits of the employee's social security number). The required weekly payroll information may be submitted in any form desired. Optional Form WH–347 is available for this purpose from the Wage and Hour Division Web site at http://www.dol.gov/esa/whd/forms/wh347instr.htm or its successor site. The prime contractor is responsible for the submission of copies of payrolls by all subcontractors. Contractors and subcontractors shall maintain the full social security number and current address of each covered worker, and shall provide them upon request to the contracting agency for transmission to the State DOT, the FHWA or the Wage and Hour Division of the Department of Labor for purposes of an investigation or audit of compliance with prevailing wage requirements. It is not a violation of this section for a prime contractor to require a subcontractor to provide addresses and social security numbers to the prime contractor for its own records, without weekly submission to the contracting agency..

(2) Each payroll submitted shall be accompanied by a “Statement of Compliance,” signed by the contractor or subcontractor or his or her agent who pays or supervises the payment of the persons employed under the contract and shall certify the following:

(i) That the payroll for the payroll period contains the information required to be provided under §5.5 (a)(3)(ii) of Regulations, 29 CFR part 5, the appropriate information is being maintained under §5.5 (a)(3)(i) of Regulations, 29 CFR part 5, and that such information is correct and complete;

(ii) That each laborer or mechanic (including each helper, apprentice, and trainee) employed on the contract during the payroll period has been paid the full weekly wages earned, without rebate, either directly or indirectly, and that no deductions have been made either directly or indirectly from the full wages earned, other than permissible deductions as set forth in Regulations, 29 CFR part 3;

(iii) That each laborer or mechanic has been paid not less than the applicable wage rates and fringe benefits or cash equivalents for the classification of work performed, as specified in the applicable wage determination incorporated into the contract.

(3) The weekly submission of a properly executed certification set forth on the reverse side of Optional Form WH–347 shall satisfy the requirement for submission of the “Statement of Compliance” required by paragraph 3.b.(2) of this section.

(4) The falsification of any of the above certifications may subject the contractor or subcontractor to civil or criminal prosecution under section 1001 of title 18 and section 231 of title 31 of the United States Code.

c. The contractor or subcontractor shall make the records required under paragraph 3.a. of this section available for inspection, copying, or transcription by authorized representatives of the

contracting agency, the State DOT, the FHWA, or the Department of Labor, and shall permit such representatives to interview employees during working hours on the job. If the contractor or subcontractor fails to submit the required records or to make them available, the FHWA may, after written notice to the contractor, the contracting agency or the State DOT, take such action as may be necessary to cause the suspension of any further payment, advance, or guarantee of funds. Furthermore, failure to submit the required records upon request or to make such records available may be grounds for debarment action pursuant to 29 CFR 5.12.

4. Apprentices and trainees

a. Apprentices (programs of the USDOL).

Apprentices will be permitted to work at less than the predetermined rate for the work they performed when they are employed pursuant to and individually registered in a bona fide apprenticeship program registered with the U.S. Department of Labor, Employment and Training Administration, Office of Apprenticeship Training, Employer and Labor Services, or with a State Apprenticeship Agency recognized by the Office, or if a person is employed in his or her first 90 days of probationary employment as an apprentice in such an apprenticeship program, who is not individually registered in the program, but who has been certified by the Office of Apprenticeship Training, Employer and Labor Services or a State Apprenticeship Agency (where appropriate) to be eligible for probationary employment as an apprentice.

The allowable ratio of apprentices to journeymen on the job site in any craft classification shall not be greater than the ratio permitted to the contractor as to the entire work force under the registered program. Any worker listed on a payroll at an apprentice wage rate, who is not registered or otherwise employed as stated above, shall be paid not less than the applicable wage rate on the wage determination for the classification of work actually performed. In addition, any apprentice performing work on the job site in excess of the ratio permitted under the registered program shall be paid not less than the applicable wage rate on the wage determination for the work actually performed. Where a contractor is performing construction on a project in a locality other than that in which its program is registered, the ratios and wage rates (expressed in percentages of the journeyman's hourly rate) specified in the contractor's or subcontractor's registered program shall be observed.

Every apprentice must be paid at not less than the rate specified in the registered program for the apprentice's level of progress, expressed as a percentage of the journeymen hourly rate specified in the applicable wage determination. Apprentices shall be paid fringe benefits in accordance with the provisions of the apprenticeship program. If the apprenticeship program does not specify fringe benefits, apprentices must be paid the full amount of fringe benefits listed on the wage determination for the applicable classification. If the Administrator determines that a different practice prevails for the applicable apprentice classification, fringes shall be paid in accordance with that determination.

In the event the Office of Apprenticeship Training, Employer and Labor Services, or a State Apprenticeship Agency recognized by the Office, withdraws approval of an apprenticeship program, the contractor will no longer be permitted to utilize apprentices at less than the applicable predetermined rate for the work performed until an acceptable program is approved.

b. Trainees (programs of the USDOL).

Except as provided in 29 CFR 5.16, trainees will not be permitted to work at less than the predetermined rate for the work performed unless they are employed pursuant to and individually registered in a program which has received prior approval, evidenced by formal certification by the U.S. Department of Labor, Employment and Training Administration.

The ratio of trainees to journeymen on the job site shall not be greater than permitted under the plan approved by the Employment and Training Administration.

Every trainee must be paid at not less than the rate specified in the approved program for the trainee's level of progress, expressed as a percentage of the journeyman hourly rate specified in the applicable wage determination. Trainees shall be paid fringe benefits in accordance with the provisions of the trainee program. If the trainee program does not mention fringe benefits, trainees shall be paid the full amount of fringe benefits listed on the wage determination unless the Administrator of the Wage and Hour Division determines that there is an apprenticeship program associated with the corresponding journeyman wage rate on the wage determination which provides for less than full fringe benefits for apprentices. Any employee listed on the payroll at a trainee rate who is not registered and participating in a training plan approved by the Employment and Training Administration shall be paid not less than the applicable wage rate on the wage determination for the classification of work actually performed. In addition, any trainee performing work on the job site in excess of the ratio permitted under the registered program shall be paid not less than the applicable wage rate on the wage determination for the work actually performed.

In the event the Employment and Training Administration withdraws approval of a training program, the contractor will no longer be permitted to utilize trainees at less than the applicable predetermined rate for the work performed until an acceptable program is approved.

c. Equal employment opportunity. The utilization of apprentices, trainees and journeymen under this part shall be in conformity with the equal employment opportunity requirements of Executive Order 11246, as amended, and 29 CFR part 30.

d. Apprentices and Trainees (programs of the U.S. DOT).

Apprentices and trainees working under apprenticeship and skill training programs which have been certified by the Secretary of Transportation as promoting EEO in connection with Federal-aid highway construction programs are not subject to the requirements of paragraph 4 of this Section IV. The straight time hourly wage rates for apprentices and trainees under such programs will be established by the particular programs. The ratio of apprentices and trainees to journeymen shall not be greater than permitted by the terms of the particular program.

5. Compliance with Copeland Act requirements. The contractor shall comply with the requirements of 29 CFR part 3, which are incorporated by reference in this contract.

6. Subcontracts. The contractor or subcontractor shall insert Form FHWA-1273 in any subcontracts and also require the subcontractors to include Form FHWA-1273 in any lower tier subcontracts. The prime contractor shall be responsible for the compliance by any subcontractor or lower tier subcontractor with all the contract clauses in 29 CFR 5.5.

7. Contract termination: debarment. A breach of the contract clauses in 29 CFR 5.5 may be grounds for termination of the contract, and for debarment as a contractor and a subcontractor as provided in 29 CFR 5.12.

8. Compliance with Davis-Bacon and Related Act requirements. All rulings and interpretations of the Davis-Bacon and Related Acts contained in 29 CFR parts 1, 3, and 5 are herein incorporated by reference in this contract.

9. Disputes concerning labor standards. Disputes arising out of the labor standards provisions of this contract shall not be subject to the general disputes clause of this contract. Such disputes shall be resolved in accordance with the procedures of the Department of Labor set forth in 29 CFR parts 5, 6, and 7. Disputes within the meaning of this clause include disputes between the contractor (or any of its subcontractors) and the contracting agency, the U.S. Department of Labor, or the employees or their representatives.

10. Certification of eligibility.

a. By entering into this contract, the contractor certifies that neither it (nor he or she) nor any person or firm who has an interest in the contractor's firm is a person or firm ineligible to be awarded Government contracts by virtue of section 3(a) of the Davis-Bacon Act or 29 CFR 5.12(a)(1).

b. No part of this contract shall be subcontracted to any person or firm ineligible for award of a Government contract by virtue of section 3(a) of the Davis-Bacon Act or 29 CFR 5.12(a)(1).

c. The penalty for making false statements is prescribed in the U.S. Criminal Code, 18 U.S.C. 1001.

V. CONTRACT WORK HOURS AND SAFETY STANDARDS ACT

The following clauses apply to any Federal-aid construction contract in an amount in excess of $100,000 and subject to the overtime provisions of the Contract Work Hours and Safety Standards Act. These clauses shall be inserted in addition to the clauses required by 29 CFR 5.5(a) or 29 CFR 4.6. As used in this paragraph, the terms laborers and mechanics include watchmen and guards.

1. Overtime requirements. No contractor or subcontractor contracting for any part of the contract work which may require or involve the employment of laborers or mechanics shall require or permit any such laborer or mechanic in any workweek in which he or she is employed on such work to work in excess of forty hours in such workweek unless such laborer or mechanic receives compensation at a rate not less than one and one-half times the basic rate of pay for all hours worked in excess of forty hours in such workweek.

2. Violation; liability for unpaid wages; liquidated damages. In the event of any violation of the clause set forth in paragraph (1.) of this section, the contractor and any subcontractor responsible therefor shall be liable for the unpaid wages. In addition, such contractor and subcontractor shall be liable to the United States (in the case of work done under contract for the District of Columbia or a territory, to such District or to such territory), for liquidated damages.

Such liquidated damages shall be computed with respect to each individual laborer or mechanic, including watchmen and guards, employed in violation of the clause set forth in paragraph (1.) of this section, in the sum of $10 for each calendar day on which such individual was required or permitted to work in excess of the standard workweek of forty hours without payment of the overtime wages required by the clause set forth in paragraph (1.) of this section.

3. Withholding for unpaid wages and liquidated damages. The FHWA or the contacting agency shall upon its own action or upon written request of an authorized representative of the Department of Labor withhold or cause to be withheld, from any moneys payable on account of work performed by the contractor or subcontractor under any such contract or any other Federal contract with the same prime contractor, or any other federally-assisted contract subject to the Contract Work Hours and Safety Standards Act, which is held by the same prime contractor, such sums as may be determined to be necessary to satisfy any liabilities of such contractor or subcontractor for unpaid wages and liquidated damages as provided in the clause set forth in paragraph (2.) of this section.

4. Subcontracts. The contractor or subcontractor shall insert in any subcontracts the clauses set forth in paragraph (1.) through (4.) of this section and also a clause requiring the subcontractors to include these clauses in any lower tier subcontracts. The prime contractor shall be responsible for compliance by any subcontractor or lower tier subcontractor with the clauses set forth in paragraphs (1.) through (4.) of this section.

VI. SUBLETTING OR ASSIGNING THE CONTRACT

This provision is applicable to all Federal-aid construction contracts on the National Highway System.

1. The contractor shall perform with its own organization contract work amounting to not less than 30 percent (or a greater percentage if specified elsewhere in the contract) of the total original contract price, excluding any specialty items designated by the contracting agency. Specialty items may be performed by subcontract and the amount of any such specialty items performed may be deducted from the total original contract price before computing the amount of work required to be performed by the contractor's own organization (23 CFR 635.116).

a. The term “perform work with its own organization” refers to workers employed or leased by the prime contractor, and equipment owned or rented by the prime contractor, with or without operators. Such term does not include employees or equipment of a subcontractor or lower tier subcontractor, agents of the prime contractor, or any other assignees. The term may include payments for the costs of hiring leased employees from an employee leasing firm meeting all relevant Federal and State regulatory requirements. Leased employees may only be included in this term if the prime contractor meets all of the following conditions:

(1) the prime contractor maintains control over the supervision of the day-to-day activities of the leased employees;

(2) the prime contractor remains responsible for the quality of the work of the leased employees;

(3) the prime contractor retains all power to accept or exclude individual employees from work on the project; and

(4) the prime contractor remains ultimately responsible for the payment of predetermined minimum wages, the submission of payrolls, statements of compliance and all other Federal regulatory requirements.

b. "Specialty Items" shall be construed to be limited to work that requires highly specialized knowledge, abilities, or equipment not ordinarily available in the type of contracting organizations qualified and expected to bid or propose on the contract as a whole and in general are to be limited to minor components of the overall contract.

2. The contract amount upon which the requirements set forth in paragraph (1) of Section VI is computed includes the cost of material and manufactured products which are to be purchased or produced by the contractor under the contract provisions.

3. The contractor shall furnish (a) a competent superintendent or supervisor who is employed by the firm, has full authority to direct performance of the work in accordance with the contract requirements, and is in charge of all construction operations (regardless of who performs the work) and (b) such other of its own organizational resources (supervision, management, and engineering services) as the contracting officer determines is necessary to assure the performance of the contract.

4. No portion of the contract shall be sublet, assigned or otherwise disposed of except with the written consent of the contracting officer, or authorized representative, and such consent when given shall not be construed to relieve the contractor of any responsibility for the fulfillment of the contract. Written consent will be given only after the contracting agency has assured that each subcontract is evidenced in writing and that it contains all pertinent provisions and requirements of the prime contract.

5. The 30% self-performance requirement of paragraph (1) is not applicable to design-build contracts; however, contracting agencies may establish their own self-performance requirements.

VII. SAFETY: ACCIDENT PREVENTION

This provision is applicable to all Federal-aid construction contracts and to all related subcontracts.

1. In the performance of this contract the contractor shall comply with all applicable Federal, State, and local laws governing safety, health, and sanitation (23 CFR 635). The contractor shall provide all safeguards, safety devices and protective equipment and take any other needed actions as it determines, or as the contracting officer may determine, to be reasonably necessary to protect the life and health of employees on the job and the safety of the public and to protect property in connection with the performance of the work covered by the contract.

2. It is a condition of this contract, and shall be made a condition of each subcontract, which the contractor enters into pursuant to this contract, that the contractor and any subcontractor shall not

permit any employee, in performance of the contract, to work in surroundings or under conditions which are unsanitary, hazardous or dangerous to his/her health or safety, as determined under construction safety and health standards (29 CFR 1926) promulgated by the Secretary of Labor, in accordance with Section 107 of the Contract Work Hours and Safety Standards Act (40 U.S.C. 3704).

3. Pursuant to 29 CFR 1926.3, it is a condition of this contract that the Secretary of Labor or authorized representative thereof, shall have right of entry to any site of contract performance to inspect or investigate the matter of compliance with the construction safety and health standards and to carry out the duties of the Secretary under Section 107 of the Contract Work Hours and Safety Standards Act (40 U.S.C.3704).

VIII. FALSE STATEMENTS CONCERNING HIGHWAY PROJECTS

This provision is applicable to all Federal-aid construction contracts and to all related subcontracts.

In order to assure high quality and durable construction in conformity with approved plans and specifications and a high degree of reliability on statements and representations made by engineers, contractors, suppliers, and workers on Federal-aid highway projects, it is essential that all persons concerned with the project perform their functions as carefully, thoroughly, and honestly as possible. Willful falsification, distortion, or misrepresentation with respect to any facts related to the project is a violation of Federal law. To prevent any misunderstanding regarding the seriousness of these and similar acts, Form FHWA-1022 shall be posted on each Federal-aid highway project (23 CFR 635) in one or more places where it is readily available to all persons concerned with the project:

18 U.S.C. 1020 reads as follows:

"Whoever, being an officer, agent, or employee of the United States, or of any State or Territory, or whoever, whether a person, association, firm, or corporation, knowingly makes any false statement, false representation, or false report as to the character, quality, quantity, or cost of the material used or to be used, or the quantity or quality of the work performed or to be performed, or the cost thereof in connection with the submission of plans, maps, specifications, contracts, or costs of construction on any highway or related project submitted for approval to the Secretary of Transportation; or

Whoever knowingly makes any false statement, false representation, false report or false claim with respect to the character, quality, quantity, or cost of any work performed or to be performed, or materials furnished or to be furnished, in connection with the construction of any highway or related project approved by the Secretary of Transportation; or

Whoever knowingly makes any false statement or false representation as to material fact in any statement, certificate, or report submitted pursuant to provisions of the Federal-aid Roads Act approved July 1, 1916, (39 Stat. 355), as amended and supplemented;

Shall be fined under this title or imprisoned not more than 5 years or both."

IX. IMPLEMENTATION OF CLEAN AIR ACT AND FEDERAL WATER POLLUTION CONTROL ACT

This provision is applicable to all Federal-aid construction contracts and to all related subcontracts.

By submission of this bid/proposal or the execution of this contract, or subcontract, as appropriate, the bidder, proposer, Federal-aid construction contractor, or subcontractor, as appropriate, will be deemed to have stipulated as follows:

1. That any person who is or will be utilized in the performance of this contract is not prohibited from receiving an award due to a violation of Section 508 of the Clean Water Act or Section 306 of the Clean Air Act.
2. That the contractor agrees to include or cause to be included the requirements of paragraph (1) of this Section X in every subcontract, and further agrees to take such action as the contracting agency may direct as a means of enforcing such requirements.

X. CERTIFICATION REGARDING DEBARMENT, SUSPENSION, INELIGIBILITY AND VOLUNTARY EXCLUSION

This provision is applicable to all Federal-aid construction contracts, design-build contracts, subcontracts, lower-tier subcontracts, purchase orders, lease agreements, consultant contracts or any other covered transaction requiring FHWA approval or that is estimated to cost $25,000 or more – as defined in 2 CFR Parts 180 and 1200.

1**. Instructions for Certification – First Tier Participants:**

a. By signing and submitting this proposal, the prospective first tier participant is providing the certification set out below.

b. The inability of a person to provide the certification set out below will not necessarily result in denial of participation in this covered transaction. The prospective first tier participant shall submit an explanation of why it cannot provide the certification set out below. The certification or explanation will be considered in connection with the department or agency's determination whether to enter into this transaction. However, failure of the prospective first tier participant to furnish a certification or an explanation shall disqualify such a person from participation in this transaction.

c. The certification in this clause is a material representation of fact upon which reliance was placed when the contracting agency determined to enter into this transaction. If it is later determined that the prospective participant knowingly rendered an erroneous certification, in addition to other remedies available to the Federal Government, the contracting agency may terminate this transaction for cause of default.

d. The prospective first tier participant shall provide immediate written notice to the contracting agency to whom this proposal is submitted if any time the prospective first tier participant learns that its certification was erroneous when submitted or has become erroneous by reason of changed circumstances.

e. The terms "covered transaction," "debarred," "suspended," "ineligible," "participant," "person," "principal," and "voluntarily excluded," as used in this clause, are defined in 2 CFR Parts 180 and 1200. “First Tier Covered Transactions” refers to any covered transaction between a grantee or subgrantee of Federal funds and a participant (such as the prime or general contract). “Lower Tier Covered Transactions” refers to any covered transaction under a First Tier Covered Transaction (such as subcontracts). “First Tier Participant” refers to the participant who has entered into a covered transaction with a grantee or subgrantee of Federal funds (such as the prime or general contractor). “Lower Tier Participant” refers any participant who has entered into a covered transaction with a First Tier Participant or other Lower Tier Participants (such as subcontractors and suppliers).

f. The prospective first tier participant agrees by submitting this proposal that, should the proposed covered transaction be entered into, it shall not knowingly enter into any lower tier covered transaction with a person who is debarred, suspended, declared ineligible, or voluntarily excluded from participation in this covered transaction, unless authorized by the department or agency entering into this transaction.

g. The prospective first tier participant further agrees by submitting this proposal that it will include the clause titled "Certification Regarding Debarment, Suspension, Ineligibility and Voluntary Exclusion-Lower Tier Covered Transactions," provided by the department or contracting agency, entering into this covered transaction, without modification, in all lower tier covered transactions and in all solicitations for lower tier covered transactions exceeding the $25,000 threshold.

h. A participant in a covered transaction may rely upon a certification of a prospective participant in a lower tier covered transaction that is not debarred, suspended, ineligible, or voluntarily excluded from the covered transaction, unless it knows that the certification is erroneous. A participant is responsible for ensuring that its principals are not suspended, debarred, or otherwise ineligible to participate in covered transactions. To verify the eligibility of its principals, as well as the eligibility of any lower tier prospective participants, each participant may, but is not required to, check the Excluded Parties List System website (https://www.epls.gov/), which is compiled by the General Services Administration.

i. Nothing contained in the foregoing shall be construed to require the establishment of a system of records in order to render in good faith the certification required by this clause. The knowledge and information of the prospective participant is not required to exceed that which is normally possessed by a prudent person in the ordinary course of business dealings.

j. Except for transactions authorized under paragraph (f) of these instructions, if a participant in a covered transaction knowingly enters into a lower tier covered transaction with a person who is suspended, debarred, ineligible, or voluntarily excluded from participation in this transaction, in addition to other remedies available to the Federal Government, the department or agency may terminate this transaction for cause or default.

* * * * *

2. Certification Regarding Debarment, Suspension, Ineligibility and Voluntary Exclusion – First Tier Participants:

a. The prospective first tier participant certifies to the best of its knowledge and belief, that it and its principals:

(1) Are not presently debarred, suspended, proposed for debarment, declared ineligible, or voluntarily excluded from participating in covered transactions by any Federal department or agency;

(2) Have not within a three-year period preceding this proposal been convicted of or had a civil judgment rendered against them for commission of fraud or a criminal offense in connection with obtaining, attempting to obtain, or performing a public (Federal, State or local) transaction or contract under a public transaction; violation of Federal or State antitrust statutes or commission of embezzlement, theft, forgery, bribery, falsification or destruction of records, making false statements, or receiving stolen property;

(3) Are not presently indicted for or otherwise criminally or civilly charged by a governmental entity (Federal, State or local) with commission of any of the offenses enumerated in paragraph (a)(2) of this certification; and

(4) Have not within a three-year period preceding this application/proposal had one or more public transactions (Federal, State or local) terminated for cause or default.

b. Where the prospective participant is unable to certify to any of the statements in this certification, such prospective participant shall attach an explanation to this proposal.

2. **Instructions for Certification - Lower Tier Participants:**

(Applicable to all subcontracts, purchase orders and other lower tier transactions requiring prior FHWA approval or estimated to cost $25,000 or more - 2 CFR Parts 180 and 1200)

a. By signing and submitting this proposal, the prospective lower tier is providing the certification set out below.

b. The certification in this clause is a material representation of fact upon which reliance was placed when this transaction was entered into. If it is later determined that the prospective lower tier participant knowingly rendered an erroneous certification, in addition to other remedies available to the Federal Government, the department, or agency with which this transaction originated may pursue available remedies, including suspension and/or debarment.

c. The prospective lower tier participant shall provide immediate written notice to the person to which this proposal is submitted if at any time the prospective lower tier participant learns that its certification was erroneous by reason of changed circumstances.

d. The terms "covered transaction," "debarred," "suspended," "ineligible," "participant," "person," "principal," and "voluntarily excluded," as used in this clause, are defined in 2 CFR Parts 180 and 1200. You may contact the person to which this proposal is submitted for assistance in obtaining a copy of those regulations. “First Tier Covered Transactions” refers to any covered transaction between a grantee or subgrantee of Federal funds and a participant (such as the prime or general contract). “Lower Tier Covered Transactions” refers to any covered transaction under a First Tier Covered Transaction (such as subcontracts). “First Tier Participant” refers to the participant who has entered into a covered transaction with a grantee or subgrantee of Federal funds (such as the prime or general contractor). “Lower Tier Participant” refers any participant who has entered into a covered transaction with a First Tier Participant or other Lower Tier Participants (such as subcontractors and suppliers).

e. The prospective lower tier participant agrees by submitting this proposal that, should the proposed covered transaction be entered into, it shall not knowingly enter into any lower tier covered transaction with a person who is debarred, suspended, declared ineligible, or voluntarily excluded from participation in this covered transaction, unless authorized by the department or agency with which this transaction originated.

f. The prospective lower tier participant further agrees by submitting this proposal that it will include this clause titled "Certification Regarding Debarment, Suspension, Ineligibility and Voluntary Exclusion-Lower Tier Covered Transaction," without modification, in all lower tier covered transactions and in all solicitations for lower tier covered transactions exceeding the $25,000 threshold.

g. A participant in a covered transaction may rely upon a certification of a prospective participant in a lower tier covered transaction that is not debarred, suspended, ineligible, or voluntarily excluded from the covered transaction, unless it knows that the certification is erroneous. A participant is responsible for ensuring that its principals are not suspended, debarred, or otherwise ineligible to participate in covered transactions. To verify the eligibility of its principals, as well as the eligibility of any lower tier prospective participants, each participant may, but is not required to, check the Excluded Parties List System website (https://www.epls.gov/), which is compiled by the General Services Administration.

h. Nothing contained in the foregoing shall be construed to require establishment of a system of records in order to render in good faith the certification required by this clause. The knowledge and information of participant is not required to exceed that which is normally possessed by a prudent person in the ordinary course of business dealings.

i. Except for transactions authorized under paragraph e of these instructions, if a participant in a covered transaction knowingly enters into a lower tier covered transaction with a person who is suspended, debarred, ineligible, or voluntarily excluded from participation in this transaction, in addition to other remedies available to the Federal Government, the department or agency with which this transaction originated may pursue available remedies, including suspension and/or debarment.

* * * * *

Certification Regarding Debarment, Suspension, Ineligibility and Voluntary Exclusion--Lower Tier Participants:

1. The prospective lower tier participant certifies, by submission of this proposal, that neither it nor its principals is presently debarred, suspended, proposed for debarment, declared ineligible, or voluntarily excluded from participating in covered transactions by any Federal department or agency.

2. Where the prospective lower tier participant is unable to certify to any of the statements in this certification, such prospective participant shall attach an explanation to this proposal.

* * * * *

XI. CERTIFICATION REGARDING USE OF CONTRACT FUNDS FOR LOBBYING

This provision is applicable to all Federal-aid construction contracts and to all related subcontracts which exceed $100,000 (49 CFR 20).

1. The prospective participant certifies, by signing and submitting this bid or proposal, to the best of his or her knowledge and belief, that:

a. No Federal appropriated funds have been paid or will be paid, by or on behalf of the undersigned, to any person for influencing or attempting to influence an officer or employee of any Federal agency, a Member of Congress, an officer or employee of Congress, or an employee of a Member of Congress in connection with the awarding of any Federal contract, the making of any Federal grant, the making of any Federal loan, the entering into of any cooperative agreement, and the extension, continuation, renewal, amendment, or modification of any Federal contract, grant, loan, or cooperative agreement.

b. If any funds other than Federal appropriated funds have been paid or will be paid to any person for influencing or attempting to influence an officer or employee of any Federal agency, a Member of Congress, an officer or employee of Congress, or an employee of a Member of Congress in connection with this Federal contract, grant, loan, or cooperative agreement, the undersigned shall complete and submit Standard Form-LLL, "Disclosure Form to Report Lobbying," in accordance with its instructions.

2. This certification is a material representation of fact upon which reliance was placed when this transaction was made or entered into. Submission of this certification is a prerequisite for making or entering into this transaction imposed by 31 U.S.C. 1352. Any person who fails to file the required certification shall be subject to a civil penalty of not less than $10,000 and not more than $100,000 for each such failure.

3. The prospective participant also agrees by submitting its bid or proposal that the participant shall require that the language of this certification be included in all lower tier subcontracts, which exceed $100,000 and that all such recipients shall certify and disclose accordingly.

ATTACHMENT A - EMPLOYMENT AND MATERIALS PREFERENCE FOR APPALACHIAN DEVELOPMENT HIGHWAY SYSTEM OR APPALACHIAN LOCAL ACCESS ROAD CONTRACTS

This provision is applicable to all Federal-aid projects funded under the Appalachian Regional Development Act of 1965.

1. During the performance of this contract, the contractor undertaking to do work which is, or reasonably may be, done as on-site work, shall give preference to qualified persons who regularly reside in the labor area as designated by the DOL wherein the contract work is situated, or the subregion, or the Appalachian counties of the State wherein the contract work is situated, except:

a. To the extent that qualified persons regularly residing in the area are not available.

b. For the reasonable needs of the contractor to employ supervisory or specially experienced personnel necessary to assure an efficient execution of the contract work.

c. For the obligation of the contractor to offer employment to present or former employees as the result of a lawful collective bargaining contract, provided that the number of nonresident persons employed under this subparagraph (1c) shall not exceed 20 percent of the total number of employees employed by the contractor on the contract work, except as provided in subparagraph (4) below.

2. The contractor shall place a job order with the State Employment Service indicating (a) the classifications of the laborers, mechanics and other employees required to perform the contract work, (b) the number of employees required in each classification, (c) the date on which the participant estimates such employees will be required, and (d) any other pertinent information required by the State Employment Service to complete the job order form. The job order may be placed with the State Employment Service in writing or by telephone. If during the course of the contract work, the information submitted by the contractor in the original job order is substantially modified, the participant shall promptly notify the State Employment Service.

3. The contractor shall give full consideration to all qualified job applicants referred to him by the State Employment Service. The contractor is not required to grant employment to any job applicants who, in his opinion, are not qualified to perform the classification of work required.

4. If, within one week following the placing of a job order by the contractor with the State Employment Service, the State Employment Service is unable to refer any qualified job applicants to the contractor, or less than the number requested, the State Employment Service will forward a certificate to the contractor indicating the unavailability of applicants. Such certificate shall be made a part of the contractor's permanent project records. Upon receipt of this certificate, the contractor may employ persons who do not normally reside in the labor area to fill positions covered by the certificate, notwithstanding the provisions of subparagraph (1c) above.

5. The provisions of 23 CFR 633.207(e) allow the contracting agency to provide a contractual preference for the use of mineral resource materials native to the Appalachian region.

6. The contractor shall include the provisions of Sections 1 through 4 of this Attachment A in every subcontract for work which is, or reasonably may be, done as on-site work.

End of FHWA 1273

STATE OF MAINE
DEPARTMENT OF ENVIRONMENTAL PROTECTION

PAUL R. LEPAGE
GOVERNOR

PATRICIA W. AHO
COMMISSIONER

December 2013

*Maine Department of Transportation
*16 State House Station
*Augusta, ME 04333-0016

RE: Site Location of Development Minor Revision Application, Bangor, DEP #L-2976-22-DD-M (*Corrected Order)

Dear Mrs. Chamberlain:

Please find enclosed a signed copy of your Department of Environmental Protection land use permit. You will note that the permit includes a description of your project, findings of fact that relate to the approval criteria the Department used in evaluating your project, and conditions that are based on those findings and the particulars of your project. Please take several moments to read your permit carefully, paying particular attention to the conditions of the approval. The Department reviews every application thoroughly and strives to formulate reasonable conditions of approval within the context of the Department's environmental laws. You will also find attached some materials that describe the Department's appeal procedures for your information.

If you have any questions about the permit, please get in touch with me directly. I can be reached at (207) 446-7120 or at maria.lentine-eggett@maine.gov.

Sincerely,

Maria Eggett, Project Manager
Division of Land Resource Regulation
Bureau of Land & Water Quality

pc: File

AUGUSTA
17 STATE HOUSE STATION
AUGUSTA, MAINE 04333-0017
(207) 287-7688 FAX: (207) 287-7826

BANGOR
106 HOGAN ROAD, SUITE 6
BANGOR, MAINE 04401
(207) 941-4570 FAX: (207) 941-4584

PORTLAND
312 CANCO ROAD
PORTLAND, MAINE 04103
(207) 822-6300 FAX: (207) 822-6303

PRESQUE ISLE
1235 CENTRAL DRIVE, SKYWAY PARK
PRESQUE ISLE, MAINE 04769
(207) 764-0477 FAX: (207) 760-3143

web site: www.maine.gov/dep

STATE OF MAINE
DEPARTMENT OF ENVIRONMENTAL PROTECTION
17 STATE HOUSE STATION AUGUSTA, MAINE 04333-0017

DEPARTMENT ORDER

IN THE MATTER OF

*ME DEPARTMENT OF TRANSPORTATION	) SITE LOCATION OF DEVELOPMENT ACT
*Bangor, Penobscot County	)
TEMPORARY ROAD	) MINOR REVISION
L-2976-22-DD-M (approval) (*Corrected Order)	) FINDINGS OF FACT AND ORDER

Pursuant to the provisions of 38 M.R.S.A. Sections 481 et seq., the Department of Environmental Protection has considered the application of the *MAINE DEPARTMENT OF TRANSPORTATION with the supporting data, agency review comments, and other related materials on file and FINDS THE FOLLOWING FACTS:

1. PROJECT DESCRIPTION:

A. History: In Board Order #39-2976-19020, dated July 21, 1976, the Board approved the development of the Bangor International Airport Commercial/Industrial Park. Numerous subsequent amendments and modifications received Department approval. The development is located on the University of Maine campus in the City of Bangor.

B. Summary: The applicant proposes to construct a temporary road as a detour during the replacement of the Union Street bridge. Approximately 700 linear feet of the proposed road would be located on the existing campus. The proposed road has a 22-foot travel surface and would result in approximately 33,000 square feet of disturbed area on the campus. Upon completion of the bridge, the road will be removed and the area revegetated.

2. FINDING:

The road as proposed will meet Department erosion and sediment control standards. The proposed project is a minor change and will not significantly affect any other issues identified during previous Department reviews of the project site.

Based on its review of the application, the Department finds the requested minor revision to be in accordance with all relevant Departmental standards. All other findings of fact, conclusions and conditions remain as approved in Board Order #39-2976-19020, and subsequent Orders.

BASED on the above findings of fact, and subject to the conditions listed below, the Department makes the following conclusions pursuant to 38 M.R.S.A. Sections 481 et seq.:

A. The applicant has provided adequate evidence of financial capacity and technical ability to develop the project in a manner consistent with state environmental standards.

B. The applicant has made adequate provision for fitting the development harmoniously into the existing natural environment and the development will not adversely affect existing uses, scenic character, air quality, water quality or other natural resources in the municipality or in neighboring municipalities.

C. The proposed development will be built on soil types which are suitable to the nature of the undertaking and will not cause unreasonable erosion of soil or sediment nor inhibit the natural transfer of soil.

D. The proposed development meets the standards for storm water management in Section 420-D and the standard for erosion and sedimentation control in Section 420-C.

E. The proposed development will not pose an unreasonable risk that a discharge to a significant groundwater aquifer will occur.

F. The applicant has made adequate provision of utilities, including water supplies, sewerage facilities and solid waste disposal required for the development and the development will not have an unreasonable adverse effect on the existing or proposed utilities in the municipality or area served by those services.

G. The activity will not unreasonably cause or increase the flooding of the alteration area or adjacent properties nor create an unreasonable flood hazard to any structure.

THEREFORE, the Department APPROVES the application of the MAINE DEPARTMENT OF TRANSPORTATION to construct a temporary road as described in Finding 1, SUBJECT TO THE FOLLOWING CONDITIONS and all applicable standards and regulations:

1. The Standard Conditions of Approval, a copy attached.

2. In addition to any specific erosion control measures described in this or previous orders, the applicant shall take all necessary actions to ensure that its activities or those of its agents do not result in noticeable erosion of soils or fugitive dust emissions on the site during the construction and operation of the project covered by this approval.

3. Severability. The invalidity or unenforceability of any provision, or part thereof, of this License shall not affect the remainder of the provision or any other provisions. This License shall be construed and enforced in all respects as if such invalid or unenforceable provision or part thereof had been omitted.

4. All other Findings of Fact, Conclusions and Conditions remain as approved in Board Order #39-2976-19020, and subsequent Orders, and are incorporated herein.

THIS APPROVAL DOES NOT CONSTITUTE OR SUBSTITUTE FOR ANY OTHER REQUIRED STATE, FEDERAL OR LOCAL APPROVALS NOR DOES IT VERIFY COMPLIANCE WITH ANY APPLICABLE SHORELAND ZONING ORDINANCES.

DONE AND DATED IN AUGUSTA, MAINE, THIS 9th DAY OF December, 2013.

DEPARTMENT OF ENVIRONMENTAL PROTECTION
*CORRECTING THE ORDER DATED 12/03/2013. The effective date and expiration date remain the same as in the original.

BY: Michael Kuhns
For: Patricia W. Aho, Commissioner

Filed
DEC 09 2013
State of Maine
Board of Environmental Protection

PLEASE NOTE THE ATTACHED SHEET FOR GUIDANCE ON APPEAL PROCEDURES…

ME/L2976ddm/ATS#76296

DEP SITE LOCATION OF DEVELOPMENT (SITE) STANDARD CONDITIONS

STRICT CONFORMANCE WITH THE STANDARD AND SPECIAL CONDITIONS OF THIS APPROVALIS NECESSARY FOR THE PROJECT TO MEET THE STATUTORY CRITERIA FOR APPROVAL.

A. **Approval of Variations from Plans.** The granting of this approval is dependent upon and limited to the proposals and plans contained in the application and supporting documents submitted and affirmed to by the applicant. Any variation from these plans, proposals, and supporting documents is subject to review and approval prior to implementation. Further subdivision of proposed lots by the applicant or future owners is specifically prohibited without prior approval of the Board, and the applicant shall include deed restrictions to that effect.

B. **Compliance with All Applicable Laws.** The applicant shall secure and comply with all applicable federal, state, and local licenses, permits, authorizations, conditions, agreements, and orders prior to or during construction and operation, as appropriate.

C. **Compliance with All Terms and Conditions of Approval.** The applicant shall submit all reports and information requested by the Board or the Department demonstrating that the applicant has complied or will comply with all preconstruction terms and conditions of this approval. All preconstruction terms and conditions must be met before construction begins.

D. **Advertising.** Advertising relating to matters included in this application shall refer to this approval only if it notes that the approval has been granted WITH CONDITIONS, and indicates where copies of those conditions may be obtained.

E. **Transfer of Development.** Unless otherwise provided in this approval, the applicant shall not sell, lease, assign or otherwise transfer the development or any portion thereof without prior written approval of the Board where the purpose or consequence of the transfer is to transfer any of the obligations of the developer as incorporated in this approval. Such approval shall be granted only if the applicant or transferee demonstrates to the Board that the transferee has the technical capacity and financial ability to comply with conditions of this approval and the proposals and plans contained in the application and supporting documents submitted by the applicant.

F. **Time frame for approvals.** If the construction or operation of the activity is not begun within four years, this approval shall lapse and the applicant shall reapply to the Board for a new approval. The applicant may not begin construction or operation of the development until a new approval is granted. A reapplication for approval may include information submitted in the initial application by reference. This approval, if construction is begun within the four-year time frame, is valid for seven years. If construction is not completed within the seven-year time frame, the applicant must reapply for, and receive, approval prior to continuing construction.

G. **Approval Included in Contract Bids.** A copy of this approval must be included in or attached to all contract bid specifications for the development.

H. **Approval Shown to Contractors.** Work done by a contractor pursuant to this approval shall not begin before the contractor has been shown by the developer a copy of this approval.

(2/81)/Revised December 27, 2011

DEP INFORMATION SHEET

Appealing a Department Licensing Decision

Dated: March 2012 **Contact: (207) 287-2811**

SUMMARY

There are two methods available to an aggrieved person seeking to appeal a licensing decision made by the Department of Environmental Protection's ("DEP") Commissioner: (1) in an administrative process before the Board of Environmental Protection ("Board"); or (2) in a judicial process before Maine's Superior Court. An aggrieved person seeking review of a licensing decision over which the Board had original jurisdiction may seek judicial review in Maine's Superior Court.

A judicial appeal of final action by the Commissioner or the Board regarding an application for an expedited wind energy development (35-A M.R.S.A. § 3451(4)) or a general permit for an offshore wind energy demonstration project (38 M.R.S.A. § 480-HH(1)) or a general permit for a tidal energy demonstration project (38 M.R.S.A. § 636-A) must be taken to the Supreme Judicial Court sitting as the Law Court.

This INFORMATION SHEET, in conjunction with a review of the statutory and regulatory provisions referred to herein, can help a person to understand his or her rights and obligations in filing an administrative or judicial appeal.

I. ADMINISTRATIVE APPEALS TO THE BOARD

LEGAL REFERENCES

The laws concerning the DEP's *Organization and Powers*, 38 M.R.S.A. §§ 341-D(4) & 346, the *Maine Administrative Procedure Act*, 5 M.R.S.A. § 11001, and the DEP's *Rules Concerning the Processing of Applications and Other Administrative Matters* ("Chapter 2"), 06-096 CMR 2 (April 1, 2003).

HOW LONG YOU HAVE TO SUBMIT AN APPEAL TO THE BOARD

The Board must receive a written appeal within 30 days of the date on which the Commissioner's decision was filed with the Board. Appeals filed after 30 calendar days of the date on which the Commissioner's decision was filed with the Board will be rejected.

HOW TO SUBMIT AN APPEAL TO THE BOARD

Signed original appeal documents must be sent to: Chair, Board of Environmental Protection, c/o Department of Environmental Protection, 17 State House Station, Augusta, ME 04333-0017; faxes are acceptable for purposes of meeting the deadline when followed by the Board's receipt of mailed original documents within five (5) working days. Receipt on a particular day must be by 5:00 PM at DEP's offices in Augusta; materials received after 5:00 PM are not considered received until the following day. The person appealing a licensing decision must also send the DEP's Commissioner a copy of the appeal documents and if the person appealing is not the applicant in the license proceeding at issue the applicant must also be sent a copy of the appeal documents. All of the information listed in the next section must be submitted at the time the appeal is filed. Only the extraordinary circumstances described at the end of that section will justify evidence not in the DEP's record at the time of decision being added to the record for consideration by the Board as part of an appeal.

WHAT YOUR APPEAL PAPERWORK MUST CONTAIN

Appeal materials must contain the following information at the time submitted:

1. *Aggrieved Status.* The appeal must explain how the person filing the appeal has standing to maintain an appeal. This requires an explanation of how the person filing the appeal may suffer a particularized injury as a result of the Commissioner's decision.
2. *The findings, conclusions or conditions objected to or believed to be in error.* Specific references and facts regarding the appellant's issues with the decision must be provided in the notice of appeal.
3. *The basis of the objections or challenge.* If possible, specific regulations, statutes or other facts should be referenced. This may include citing omissions of relevant requirements, and errors believed to have been made in interpretations, conclusions, and relevant requirements.
4. *The remedy sought.* This can range from reversal of the Commissioner's decision on the license or permit to changes in specific permit conditions.
5. *All the matters to be contested.* The Board will limit its consideration to those arguments specifically raised in the written notice of appeal.
6. *Request for hearing.* The Board will hear presentations on appeals at its regularly scheduled meetings, unless a public hearing on the appeal is requested and granted. A request for public hearing on an appeal must be filed as part of the notice of appeal.
7. *New or additional evidence to be offered.* The Board may allow new or additional evidence, referred to as supplemental evidence, to be considered by the Board in an appeal only when the evidence is relevant and material and that the person seeking to add information to the record can show due diligence in bringing the evidence to the DEP's attention at the earliest possible time in the licensing process or that the evidence itself is newly discovered and could not have been presented earlier in the process. Specific requirements for additional evidence are found in Chapter 2.

OTHER CONSIDERATIONS IN APPEALING A DECISION TO THE BOARD

1. *Be familiar with all relevant material in the DEP record.* A license application file is public information, subject to any applicable statutory exceptions, made easily accessible by DEP. Upon request, the DEP will make the material available during normal working hours, provide space to review the file, and provide opportunity for photocopying materials. There is a charge for copies or copying services.
2. *Be familiar with the regulations and laws under which the application was processed, and the procedural rules governing your appeal.* DEP staff will provide this information on request and answer questions regarding applicable requirements.
3. *The filing of an appeal does not operate as a stay to any decision.* If a license has been granted and it has been appealed the license normally remains in effect pending the processing of the appeal. A license holder may proceed with a project pending the outcome of an appeal but the license holder runs the risk of the decision being reversed or modified as a result of the appeal.

WHAT TO EXPECT ONCE YOU FILE A TIMELY APPEAL WITH THE BOARD

The Board will formally acknowledge receipt of an appeal, including the name of the DEP project manager assigned to the specific appeal. The notice of appeal, any materials accepted by the Board Chair as supplementary evidence, and any materials submitted in response to the appeal will be sent to Board members with a recommendation from DEP staff. Persons filing appeals and interested persons are notified in advance of the date set for Board consideration of an appeal or request for public hearing. With or without holding a public hearing, the Board may affirm, amend, or reverse a Commissioner decision or remand the matter to the Commissioner for further proceedings. The Board will notify the appellant, a license holder, and interested persons of its decision.

II. JUDICIAL APPEALS

Maine law generally allows aggrieved persons to appeal final Commissioner or Board licensing decisions to Maine's Superior Court, see 38 M.R.S.A. § 346(1); 06-096 CMR 2; 5 M.R.S.A. § 11001; & M.R. Civ. P 80C. A party's appeal must be filed with the Superior Court within 30 days of receipt of notice of the Board's or the Commissioner's decision. For any other person, an appeal must be filed within 40 days of the date the decision was rendered. Failure to file a timely appeal will result in the Board's or the Commissioner's decision becoming final.

An appeal to court of a license decision regarding an expedited wind energy development, a general permit for an offshore wind energy demonstration project, or a general permit for a tidal energy demonstration project may only be taken directly to the Maine Supreme Judicial Court. See 38 M.R.S.A. § 346(4).

Maine's Administrative Procedure Act, DEP statutes governing a particular matter, and the Maine Rules of Civil Procedure must be consulted for the substantive and procedural details applicable to judicial appeals.

ADDITIONAL INFORMATION

If you have questions or need additional information on the appeal process, for administrative appeals contact the Board's Executive Analyst at (207) 287-2452 or for judicial appeals contact the court clerk's office in which your appeal will be filed.

Note: The DEP provides this INFORMATION SHEET for general guidance only; it is not intended for use as a legal reference. Maine law governs an appellant's rights.

Environmental Summary Sheet

Pin: **16681.00** **Date Submitted: 12/18/13**
Town: **Bangor**
CPD Team Leader: Kristen Chamberlain
ENV Field Contact: **Ryan Annis**

NEPA Complete: **5/7/13 Programmatic Categorical Exclusion**

☒ **Section 106**

SHPO Concurrence-No Effect
Section 106 Resources: none

☒ **Section 4(f) and 6(f)**

Section 4(f)
Review Complete-No properties
Section 6(f)
Not Applicable

☒ **Maine Department of Inland Fisheries and Wildlife Essential Habitat**

Not Applicable **Timing Window: Not Applicable**

☒ **Section 7**

No Effect
Species of Concern: Atlantic Salmon DPS
Atlantic Salmon-Critical Habitat
Comments/References: Project does not include in-water work; therefore it will have No Effect on the species or its Critical Habitat.

☒ **Maine Department of Conservation/Public Lands, Submerged Land Lease**

Not Applicable

☒ **Maine Land Use Regulation Commission**

N/A

☒ **Maine Department of Environmental Protection**

Natural Resources Protection Act: No natural resource permits required.
Site Location of Development Act Minor Revision Permit: Temporary detour will be constructed on University of Maine System property, which is encumbered by a Site Location of Development Act Permit. MaineDOT received a Site Minor Revision to construct the temporary road with appropriate stormwater treatment measures consisting of compost slopes and berms as described in Special Provisions.

☒ **Army Corps of Engineers, Section 10 of the Rivers and Harbors Act and Section 404 of the Clean Water Act.**

Not Applicable

☒ **Stormwater Review**

Review complete.

☒ **Special Provisions Required**

Special Provision 105-Timing of Work Restriction	N/A☒	Applicable☐
Special Provision 656-Erosion Control Plan	N/A☐	Applicable☒
Special Provision 203-Dredge Spec	N/A☒	Applicable☐
General Note for Hazardous Waste	N/A☒	Applicable☐
Special Provision 203-Hazardous Waste	N/A☒	Applicable☐
Special Provision 105.9	N/A☒	Applicable☐

**All permits and approvals based on plans/scope as of: 12/18/13*

Environmental Summary Sheet

WIN: 19256.00 **Date Submitted: 12/18/13**
Town: Bangor
CPD Team Leader: Kristen Chamberlain
ENV Field Contact: Ryan Annis

NEPA Complete: **Programmatic Categorical Exclusion-10/15/13**

☒ **Section 106**
PA-E
Section 106 Resources: None

☒ **Section 4(f) and 6(f)**
Section 4(f)
Review Complete-no properties
Section 6(f)
Not Applicable

☒ **Maine Department of Inland Fisheries and Wildlife Essential Habitat**
Not Applicable **Timing Window: Not Applicable**

☒ **Section 7**
No Effect- Atlantic Salmon-Critical Habitat; Atlantic Salmon DPS; based on no in-water work
No Jeopardy-Northern long eared bat; if clearing activities are not complete by 10/1/13 Section 7 review/ consultation may be required

☒ **Maine Department of Conservation/Public Lands, Submerged Land Lease**
Not Applicable

☒ **Maine Land Use Regulation Commission**
Not Applicable

☒ **Maine Department of Environmental Protection**
Not Applicable

☒ **Army Corps of Engineers, Section 10 of the Rivers and Harbors Act and Section 404 of the Clean Water Act.**
Not Applicable

☒ **Stormwater Review**
N/A

☒ **Special Provisions Required**

Special Provision 105-Timing of Work Restriction	N/A☒	Applicable☐
Special Provision 656-Erosion Control Plan	N/A☐	Applicable☒
Special Provision 203-Dredge Spec	N/A☒	Applicable☐
General Note for Hazardous Waste	N/A☒	Applicable☐
Special Provision 203-Hazardous Waste	N/A☒	Applicable☐
Special Provision 105.9	N/A☒	Applicable☐

**All permits and approvals based on plans/scope as of:12/18/13*