Materials

REINFORCED CONCRETE PIPE

WOODLAND

019247.00

2013

MAINTENANCE & OPERATIONS

STATE PROJECT

BIDDING INSTRUCTIONS

1. Complete the bid forms with pen and ink.

2. The following are to be completed and returned with the bid:

    a. A copy of the Notice to Contractors
    b. the completed Acknowledgement of Bid Amendments form
    c. the completed Schedule of Items in Appendix A
    d. two (2) copies of the completed and signed Contract to Purchase Supplies, Materials and/or Equipment for a Specific Project form
    e. The completed Contractor Information Sheet
    f. Any other certifications or Bid requirements listed in the Bid Documents as due by Bid opening

3. For security and other reasons, all Bid Packages which are mailed or delivered, shall be provided in double (one envelope inside the other) envelopes. The *Inner Envelope* shall have the following information provided on it:

    Bid Enclosed - Do Not Open
    Title:
    Town:
    Date of Bid Opening:
    Name of Contractor with mailing address and telephone number:

    In Addition to the usual address information, the *Outer Envelope* should have written or typed on it:

    Double Envelope: Bid Enclosed
    Title:
    Town:
    Date of Bid Opening:
    Name of Contractor:

    Hand-carried Bids may be in one envelope, and should be marked with the following information:

    Bid Enclosed: Do Not Open
    Title:
    Town:
    Name of Contractor:

4. If a paper Bid is to be hand carried, deliver directly to the Reception Desk using the "Public Entrance" which is located on the Capitol Street side of the DOT Headquarters Building in Augusta. If a paper Bid is to be sent express, "FedEx First Overnight" delivery is suggested as the package is delivered directly to the DOT Headquarters Building, Mailroom, in Augusta located at 24 Child Street in Augusta. Other means, such as U.S. Postal's Service Express Mail has proven not to be reliable. If a paper bid is to be mailed, the mailing address is Maine Department of Transportation, 16 State House Station, Augusta, ME 04333-0016.

5. If you need further information regarding Bid preparation, call the DOT Contracts Section at (207) 624-3410. For complete bidding requirements, refer to Section 102 of the Maine Department of Transportation, Standard Specification, Revision of December 2002.

January 19, 2012
Supersedes September 09, 2011

NOTICE

The Maine Department of Transportation is attempting to improve the way Bid Amendments/Addendums are handled, and allow for an electronic downloading of bid packages from our website, while continuing to maintain an optional planholders list.

Prospective bidders, subcontractors or suppliers who wish to download a copy of the bid package and receive a courtesy notification of project specific bid amendments, must provide an email address to Diane Barnes or David Venner at the MDOT Contracts mailbox at: MDOT.contracts@maine.gov. Each bid package will require a separate request.

Additionally, interested parties will be responsible for reviewing and retrieving the Bid Amendments from our web site, and acknowledging receipt and incorporating those Bid Amendments in their bids using the Acknowledgement of Bid Amendment Form.

The downloading of bid packages from the MDOT website is not the same as providing an electronic bid to the Department. Electronic bids must be submitted via http://www.BIDX.com. For information on electronic bidding contact Patrick Corum at patrick.corum@maine.gov , Rebecca Snowden at rebecca.snowden@maine.gov or Diane Barnes at diane.barnes@maine.gov.

NOTICE

Bidders:

Please use the attached “Request for Information” form when faxing questions and comments concerning specific Contracts that have been Advertised for Bid. Include additional numbered pages as required. Questions are to be faxed to the number listed in the Notice to Contractors. This is the only allowable mechanism for answering Project specific questions. Maine DOT will not be bound to any answers to Project specific questions received during the Bidding phase through other processes.

State of Maine
Department of Transportation

REQUEST FOR INFORMATION

Date _____ Time _____

Information Requested: **PIN:** _____ **Town(s):** _____

_____

_____

_____

_____

_____

_____

_____

_____

_____

_____

_____

_____

Request by: _____ **Phone: (_____)**_____
Bid Date: _____ **Fax: (_____)**_____

Complete top portion of form and transmit to the number listed in the Notice to Contractors

RFI No: _____ **RFI received:** _____

Response:_____

_____

_____

_____

_____

_____

_____

_____

_____

_____

_____

Response By:_____ Date: _____

Vendor Registration

Prospective Bidders must register as a vendor with the Department of Administrative & Financial Services if the vendor is awarded a contract. Vendors will not be able to receive payment without first being registered. Vendors/Contractors will find information and register through the following link –
http://www.maine.gov/purchases/venbid/index.shtml

CONTRACTOR INFORMATION

_____ _____

(Date) **(Signature)**

_____

(Name and Title Printed)

_____

(Contractor Name)

_____

Vendor Customer Number

Mailing Address:

_____

Street/PO Box **City** **State** **Zip**

_____ _____ _____

phone **fax** **email**

Sole Proprietorship - Partnership - (circle one)

Corporation – Company - Association - Estate - (circle one)

STATE OF MAINE DEPARTMENT OF TRANSPORTATION
NOTICE TO CONTRACTORS

Sealed Bids addressed to the Maine Department of Transportation, Augusta, Maine 04333 and endorsed on the wrapper "Bids for **Reinforced Concrete Pipe** in the town of **WOODLAND**" will be received from contractors at the Reception Desk, Maine DOT Building, Capitol Street, Augusta, Maine, until 11:00 o'clock A.M. (prevailing time) on May 15, 2013 and at that time and place publicly opened and read. Bids will be accepted from all bidders. The lowest responsive bidder must demonstrate successful completion of projects of similar size and scope to be considered for the award of this contract.

Description: Reinforced Concrete Pipe

Location: Delivered to MaineDOT Project Site, located in Woodland, on Carson Road approximately 0.8 miles easterly of the Perham-Woodland town line.

Outline of Work: Furnish and deliver Reinforced Concrete Pipe and other incidental work.

For general information regarding Bidding and Contracting procedures, contact George Macdougall at (207)624-3410. Our webpage at http://www.maine.gov/mdot/contractors/ contains a copy of the schedule of items, Plan Holders List, written portions of bid amendments (not drawings), and bid results. For Project-specific information fax all questions to **Gail MacMunn** at (207)624-3431. Questions received after 12:00 noon of Friday prior to bid date will not be answered. Bidders shall not contact any other Departmental staff for clarification of Contract provisions, and the Department will not be responsible for any interpretations so obtained. TTY users call Maine Relay 711.

Bid Documents, specifications and bid forms are available at http://www.maine.gov/mdot/contractors/. They may be seen at the Maine DOT Building in Augusta, Maine and at the Department of Transportation's Regional Office in Presque Isle. They can be obtained at no cost at the Department at 24 Child Street, Augusta, ME, between the hours of 8:00 a.m. to 4:30 p.m., may be requested by telephone at (207) 624-3536 between the hours of 8:00 a.m. to 4:30 p.m, or from Maine Department of Transportation, Attn.: Mailroom, 16 State House Station, Augusta, Maine 04333-0016.

There will be no bid bonds, performance bonds or payment bond required.

Each Bid must be made upon blank forms provided by the Department.

This Contract is subject to all applicable State Laws.

All work shall be governed by "State of Maine, Department of Transportation, Standard Specifications, Revision of December 2002", price $10 [$13 by mail], and Standard Details, Revision of December 2002, price $20 [$25 by mail]. They also may be purchased by telephone at (207) 624-3536 between the hours of 8:00 a.m. to 4:30 p.m. Standard Detail updates can be found at http://www.maine.gov/mdot/contractors/publications/ .

The right is hereby reserved to the Maine DOT to reject any or all bids.

Augusta, Maine
April 24, 2013

Bradford P. Foley
Program Manager
Highway Program

Strut replacement
19247.00 Woodland
Precast Reinforced Concrete Pipe
April 14, 2011
Supersedes August 3, 2004

SPECIAL PROVISION 102.7.3
ACKNOWLEDGMENT OF BID AMENDMENTS

With this form, the Bidder acknowledges its responsibility to check for all Amendments to the Bid Package. For each Project under Advertisement, Amendments are located at http://www.maine.gov/mdot/contractors/ . It is the responsibility of the Bidder to determine if there are Amendments to the Project, to download them, to incorporate them into their Bid Package, and to reference the Amendment number and the date on the form below. The Maine DOT will not post Bid Amendments any later than noon the day before Bid opening without individually notifying all the planholders.

Amendment Number	Date

The Contractor, for itself, its successors and assigns, hereby acknowledges that it has received all of the above referenced Amendments to the Bid Package.

CONTRACTOR

_____ _____
Date Signature of authorized representative

_____
(Name and Title Printed)

MAINE DEPARTMENT OF TRANSPORTATION

CONTRACT TO PURCHASE SUPPLIES, MATERIALS AND/OR EQUIPMENT FOR A SPECIFIC PROJECT

This Agreement (the "Contract") is entered into between the Maine Department of Transportation ("Department" or "MaineDOT") with its principal office located at Child Street, Augusta, Maine, and a mailing address of 16 State House Station, Augusta, Maine 04333-0016, and _____ ("Contractor"), a corporation or other legal entity organized under the laws of the State of _____ with its principal place of business located at _____, and a mailing address of_____ and a telephone number as follows: _____.

The Vendor Customer Number of the Contractor is _____.

MaineDOT, pursuant to 23 M.R.S.A. §52, requested bids for the sale and delivery of the Materials, Supplies, and Equipment (the "Materials") described in attached Appendix A. The offer submitted by Contractor (the "Bid Price") is accepted by MaineDOT as the successful bid. The terms and conditions of the purchase of the Materials are set forth below:

A. Deliverables.

The Contractor agrees to provide the Materials known as **Precast Reinforced Concrete Pipe**, more specifically described in Appendix A for use in MaineDOT Project **19247.00 Woodland, Strut Replacement** (the "Project").

B. Time.

This Contract becomes effective on the date last signed below. The Contractor agrees to deliver the Materials on or before **June 4, 2013**. in accordance with the requirements Appendix A. This Contract expires on December 31, 2013**.**

C. Bid Price.

The Bid Price(s) offered by Contractor and accepted by MaineDOT are as provided in Appendix A. These Bid Prices will serve as a basis for the Contract amount set forth in section F below.

D. Contract Documents.

The Contract consists of this Agreement and the following attachments which are hereby incorporated into the Contract as part of its terms and conditions:

Appendix A--Description of Materials, Supplies, Equipment and Bid Price
Appendix B--Special Provisions for Purchase of Project Materials

By agreement, this Contract may be amended, modified, or supplemented by written agreement signed by both parties.

MAINE DEPARTMENT OF TRANSPORTATION

CONTRACT TO PURCHASE SUPPLIES, MATERIALS AND/OR EQUIPMENT FOR A SPECIFIC PROJECT

E. Certifications.

By signing below, the Contractor hereby certifies that to the best of the Contractor's knowledge and belief:

1. All of the statements, representations, covenants, and/or certifications required or set forth in Appendix B are accurate as of the date of this Contract.

2. The Contractor certifies that it has not been debarred, suspended, declared ineligible or voluntarily excluded from contracts by the Federal Government or any state agency within the last 3 years.

3. The Contractor knows of no legal, contractual, or financial impediment to entering into this Contract.

4. The person signing below is legally authorized by the Contractor to sign this Contract on behalf of the Contractor and to legally bind the Contractor to the terms of the Contract.

IN WITNESS WHEREOF, the Contractor, for itself, its successors and assigns, hereby execute two duplicate originals of this Contract and thereby binds itself to all covenants, terms, and obligations contained in the Contract Documents.

Dated: _____ **CONTRACTOR**

_____

_____
(Name and Title Printed)

F. Award.

By signing below, an authorized representative of MaineDOT hereby accepts Contractor's offer and awards this Contract to Contractor in the amount of $_____ under the terms and conditions set forth above.

Dated: _____

MAINE DEPARTMENT OF TRANSPORTATION

_____

_____
(Name and Title Printed)

MAINE DEPARTMENT OF TRANSPORTATION

CONTRACT TO PURCHASE SUPPLIES, MATERIALS AND/OR EQUIPMENT FOR A SPECIFIC PROJECT

This Agreement (the "Contract") is entered into between the Maine Department of Transportation ("Department" or "MaineDOT") with its principal office located at Child Street, Augusta, Maine, and a mailing address of 16 State House Station, Augusta, Maine 04333-0016, and _____ ("Contractor"), a corporation or other legal entity organized under the laws of the State of _____ with its principal place of business located at _____, and a mailing address of_____ and a telephone number as follows: _____.

The Vendor Customer Number of the Contractor is _____.

MaineDOT, pursuant to 23 M.R.S.A. §52, requested bids for the sale and delivery of the Materials, Supplies, and Equipment (the "Materials") described in attached Appendix A. The offer submitted by Contractor (the "Bid Price") is accepted by MaineDOT as the successful bid. The terms and conditions of the purchase of the Materials are set forth below:

A. Deliverables.

The Contractor agrees to provide the Materials known as **Precast Reinforced Concrete Pipe**, more specifically described in Appendix A for use in MaineDOT Project **19247.00 Woodland, Strut Replacement** (the "Project").

B. Time.

This Contract becomes effective on the date last signed below. The Contractor agrees to deliver the Materials on or before **June 4, 2013**. in accordance with the requirements Appendix A. This Contract expires on December 31, 2013**.**

C. Bid Price.

The Bid Price(s) offered by Contractor and accepted by MaineDOT are as provided in Appendix A. These Bid Prices will serve as a basis for the Contract amount set forth in section F below.

D. Contract Documents.

The Contract consists of this Agreement and the following attachments which are hereby incorporated into the Contract as part of its terms and conditions:

Appendix A--Description of Materials, Supplies, Equipment and Bid Price
Appendix B--Special Provisions for Purchase of Project Materials

By agreement, this Contract may be amended, modified, or supplemented by written agreement signed by both parties.

MAINE DEPARTMENT OF TRANSPORTATION

CONTRACT TO PURCHASE SUPPLIES, MATERIALS AND/OR EQUIPMENT FOR A SPECIFIC PROJECT

E. Certifications.

By signing below, the Contractor hereby certifies that to the best of the Contractor's knowledge and belief:

1. All of the statements, representations, covenants, and/or certifications required or set forth in Appendix B are accurate as of the date of this Contract.

2. The Contractor certifies that it has not been debarred, suspended, declared ineligible or voluntarily excluded from contracts by the Federal Government or any state agency within the last 3 years.

3. The Contractor knows of no legal, contractual, or financial impediment to entering into this Contract.

4. The person signing below is legally authorized by the Contractor to sign this Contract on behalf of the Contractor and to legally bind the Contractor to the terms of the Contract.

IN WITNESS WHEREOF, the Contractor, for itself, its successors and assigns, hereby execute two duplicate originals of this Contract and thereby binds itself to all covenants, terms, and obligations contained in the Contract Documents.

Dated: _____ **CONTRACTOR**

_____

_____
(Name and Title Printed)

F. Award.

By signing below, an authorized representative of MaineDOT hereby accepts Contractor's offer and awards this Contract to Contractor in the amount of $_____ under the terms and conditions set forth above.

Dated: _____

MAINE DEPARTMENT OF TRANSPORTATION

_____

_____
(Name and Title Printed)

MAINE DEPARTMENT OF TRANSPORTATION

CONTRACT TO PURCHASE SUPPLIES, MATERIALS AND/OR EQUIPMENT FOR A SPECIFIC PROJECT

This Agreement (the "Contract") is entered into between the Maine Department of Transportation ("Department" or "MaineDOT") with its principal office located at Child Street, Augusta, Maine, and a mailing address of 16 State House Station, Augusta, Maine 04333-0016, and **CONTRACTOR ABC INC** ("Contractor"), a corporation or other legal entity organized under the laws of the State of **MAINE** with its principal place of business located at **ABC STREET, ABC, Maine 00000**, and a mailing address of **ABC STREET, ABC, MAINE** and a telephone number as follows: **207-999-9999**.

The Vendor Customer Number of the Contractor is **VC9999999999**.

MaineDOT, pursuant to 23 M.R.S.A. §52, requested bids for the sale and delivery of the Materials, Supplies, and Equipment (the "Materials") described in attached Appendix A. The offer submitted by Contractor (the "Bid Price") is accepted by MaineDOT as the successful bid. The terms and conditions of the purchase of the Materials are set forth below:

SAMPLE

A. Deliverables.

The Contractor agrees to provide the Materials known as **SOMETHING,** more specifically described in Appendix A for use in MaineDOT Project No. **99999.00 SOME TOWN.** (the "Project").

B. Time.

This Contract becomes effective on the date last signed below. The Contractor agrees to deliver the Materials on or before **SOME DAY, 20XX**. This Contract expires on **DECEMBER 31, 20XX**.

C. Bid Price.

The Bid Price(s) offered by Contractor and accepted by MaineDOT are as provided in Appendix A. These Bid Prices will serve as a basis for the Contract amount set forth in section F below

D. Contract Documents.

The Contract consists of this Agreement and the following attachments which are hereby incorporated into the Contract as part of its terms and conditions:

Appendix A--Description of Materials, Supplies, Equipment and Bid Price
Appendix B--Special Provisions for Purchase of Project Materials

MAINE DEPARTMENT OF TRANSPORTATION

CONTRACT TO PURCHASE SUPPLIES, MATERIALS AND/OR EQUIPMENT FOR A SPECIFIC PROJECT

By agreement, this Contract may be amended, modified, or supplemented by written agreement signed by both parties.

E. Certifications.

By signing below, the Contractor hereby certifies that to the best of the Contractor's knowledge and belief:

1. All of the statements, representations, covenants, and/or certifications required or set forth in Appendix B are accurate as of the date of this Contract.

2. The Contractor certifies that it has not been debarred, suspended, declared ineligible or voluntarily excluded from contracts by the Federal Government or any state agency within the last 3 years.

3. The Contractor knows of no legal, contractual, or financial impediment to entering into this Contract.

4. The person signing below is legally authorized by the Contractor to sign this Contract on behalf of the Contractor and to legally bind the Contractor to the terms of the Contract.

IN WITNESS WHEREOF, the Contractor, for itself, its successors and assigns, hereby execute two duplicate originals of this Contract and thereby binds itself to all covenants, terms, and obligations contained in the Contract Documents.

Dated: **(Date Here)**_____

CONTRACTOR

(Sign Here)

_____

(Print Name Here)

_____

(Name and Title Printed)

F. Award.

By signing below, an authorized representative of MaineDOT hereby accepts Contractor's offer and awards this Contract to Contractor in the amount of $_____ under the terms and conditions set forth above.

SAMPLE

MAINE DEPARTMENT OF TRANSPORTATION

CONTRACT TO PURCHASE SUPPLIES, MATERIALS AND/OR EQUIPMENT FOR A SPECIFIC PROJECT

Dated: _____

MAINE DEPARTMENT OF TRANSPORTATION

_____

_____

(Name and Title Printed)

SAMPLE

APPENDIX A
Description of Materials, Supplies, Equipment and Bid Price

Contractor _____

SCHEDULE OF ITEMS

Price

Item Description	Approx. Quantity and Units	Unit Price	Price
603.2750 **72" REINFORCED CONCRETE PIPE, CLASS III. ONE SILL PLACED EVERY OTHER SECTION WITH ALTERNATING SIDE NOTCH** **and** **504.07** **CONCRETE PIPE TIES 4 GRP**	**80 LF**	**$**	**$**
TOTAL			**$**

Description: The Contractor shall furnish and deliver the materials listed in the Schedule of Items in this Appendix in accordance with the contract documents. The culvert pipe and associated pipe ties must meet the requirements of the State of Maine, Department of Transportation, Standard Specifications, Revision of December 2002 including, but not limited to Section 603 - Pipe Culverts and Storm Drains, Subsections 603.02 – Materials and 603.03 - Construction Requirements, Section 700 – Materials, Standard Details Revision of December 2002, as updated through advertisement, Supplemental Specifications, Special Provisions, and Contract Agreement. The Concrete Pipe Ties shall meet the requirements shown in the Standard Details. Pipe of the different types and sizes, will be measured by the length in linear foot along the invert, delivered and accepted. The accepted quantities of pipe will be paid for at the contract unit price per linear foot, for the types and sizes specified, complete and delivered. The pipe ties, weirs, gaskets, O-rings, lubricant and other related items will not be paid for separately but will be incidental to the pipe.

For design purposes, it was assumed that each RCP section is 8' long. One sill will be placed in every other section. Sill dimensional details and spacing are shown on the Woodland Sill sketches. This is a structural design detail; the designer may use a different (smaller) thickness if appropriate and approved by the Department.

Delivery: Delivery of finished product shall be on or before June 4, 2013. The Contractor shall notify MaineDOT, Roger Soucy, State Project Construction Superintendent of Region 5 at 207-764-2060 or cell phone 207- 215-8739 a minimum of 48 hours prior to delivery. Alternative

contacts are: Brent Bubar @ 557-3886 or Darren Hanson @ 441-3548. The Contractor shall deliver the materials only during the following times: Monday through Thursday, 6:00 AM through 4:30 PM except for they may not deliver on holidays. The Department will off-load the materials at the delivery site. The materials are to be delivered to the project on the Carson Road in the town of Woodland, Maine. Located .8 miles easterly of the Perham-Woodland town line (Latitude 46.848324, longitude -68.160819)

Contract Administrator: The contract administrator for this contract will be:

Name:	Roger Soucy
Title:	State Projects Construction Superintendent
Address:	Maine Department of Transportation 41 Rice street, Presque Isle Maine.

Invoices and Payments: The Contractor shall submit an itemized bill to the Department for materials following delivery for approval and payment. At a minimum, invoices shall include the following information:

Contractor name, address & Contract Number
Invoice Date & Number
Dates of Delivery

The Department will pay based upon the materials delivered at the prices bid and the invoices approved. Payments to the Contractor shall be full compensation for furnishing all labor, equipment, materials, services, and incidentals used to supply the materials under the Contract in a complete and acceptable manner, and for all risk, loss, damage, or expense of any kind arising from the nature or prosecution of the Work. The Department may withhold payments claimed by the Contractor on account of incomplete or incorrect invoices or materials that are defective or not in conformance with the contract.

Material Quality: Materials and manufactured products shall be new unless otherwise specified, free from defect, and in conformity with the contract. If there is no applicable standard set forth in this Contract for a particular item, then the item shall be in accordance with industry standards prevailing at the time of bid. The Department has the authority to inspect all Materials and every detail of the Work. The Department may reject the finished product if any of the components do not comply with the specifications. The Department may reject materials not con-forming to the Specifications at any time.

Liquidated Damages Except as expressly provided otherwise in this Contract, the Contractor shall owe the Department Damages in the per diem amount of $100 per day for each Calendar Day that any portion of the Materials that are delivered after the Contract Delivery Date. This will be deducted from amounts otherwise due the Contractor. Permission for the Contractor to deliver the Materials after the Contract Delivery Date shall not waive the Department's rights to assess Damages.

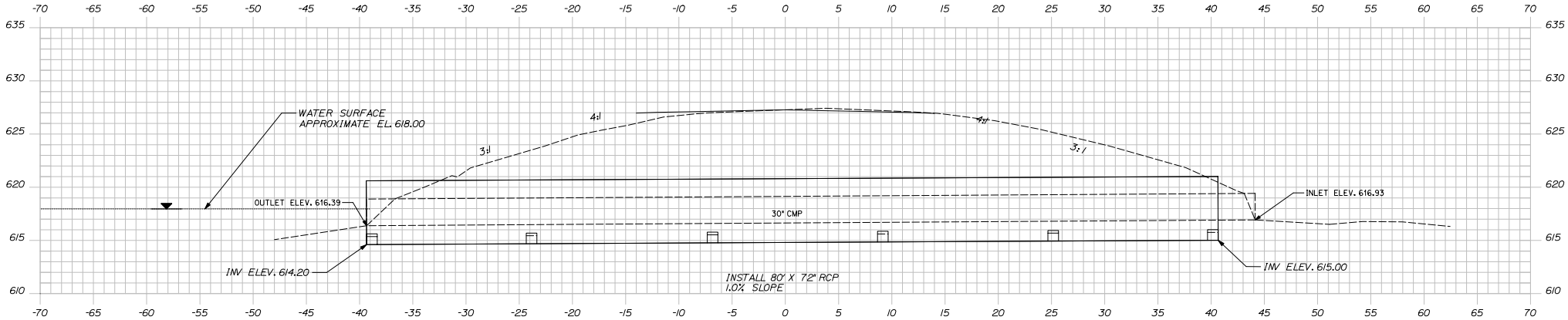

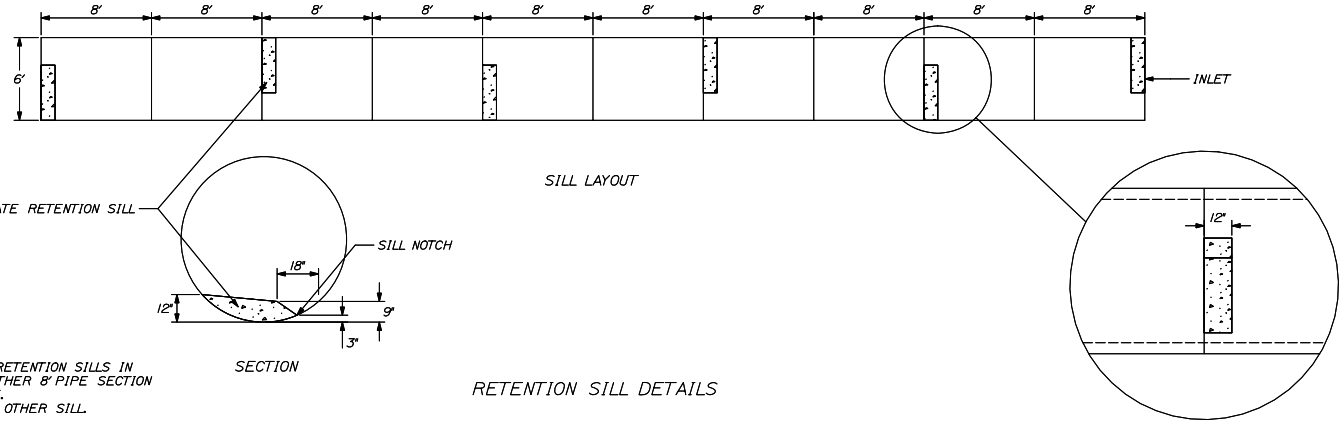

NOTES:
1. INSTALL PRECAST SUBSTRATE RETENTION SILLS IN INLET AND OUTLET AND EVERY OTHER 8' PIPE SECTION AS SHOWN IN SILL LAYOUT ABOVE.
2. ALTERNATE SILL NOTCH EVERY OTHER SILL.
3. EMBED PIPE 18"

RETENTION SILL DETAILS

STATE OF MAINE

Department of Transportation

Standard Details

Revision of December 2002

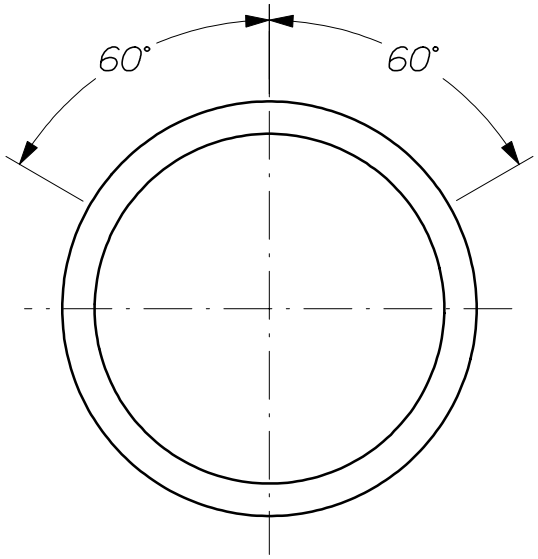

~ PLACEMENT OF ANCHORS ~

Anchors shall be installed 400 mm from centerline of joint.

Holes for anchors shall be drilled larger than the anchor bolt diameter specified in the table below to allow for anchoring materials.

PIPE SIZE (I.D.)	THREAD ϕ
300 - 685	16 mm (5/8")
760 - 1 675	19 mm (3/4")
1 828 - 3 352	24 mm (1")

GENERAL NOTES

1. For new concrete pipe or pipe designated to be removed and reset, ties shall be used at all pipe inlets and outlets as specified in the construction notes.

2. Ties shall be used only to hold pipe sections laterally together, not for pulling the pipe section together.

3. Tie rods and connections shall be placed on the outside of all pipe sections unless otherwise directed.

4. Tie rod shall be galvanized steel, including all hardware required. Any welded areas shall be treated with an approved galvanized paint. All welding shall meet current MDOT Specifications. Steel shall conform to ASTM - 8307 or equivalent.

CONCRETE PIPE TIES

504(25)

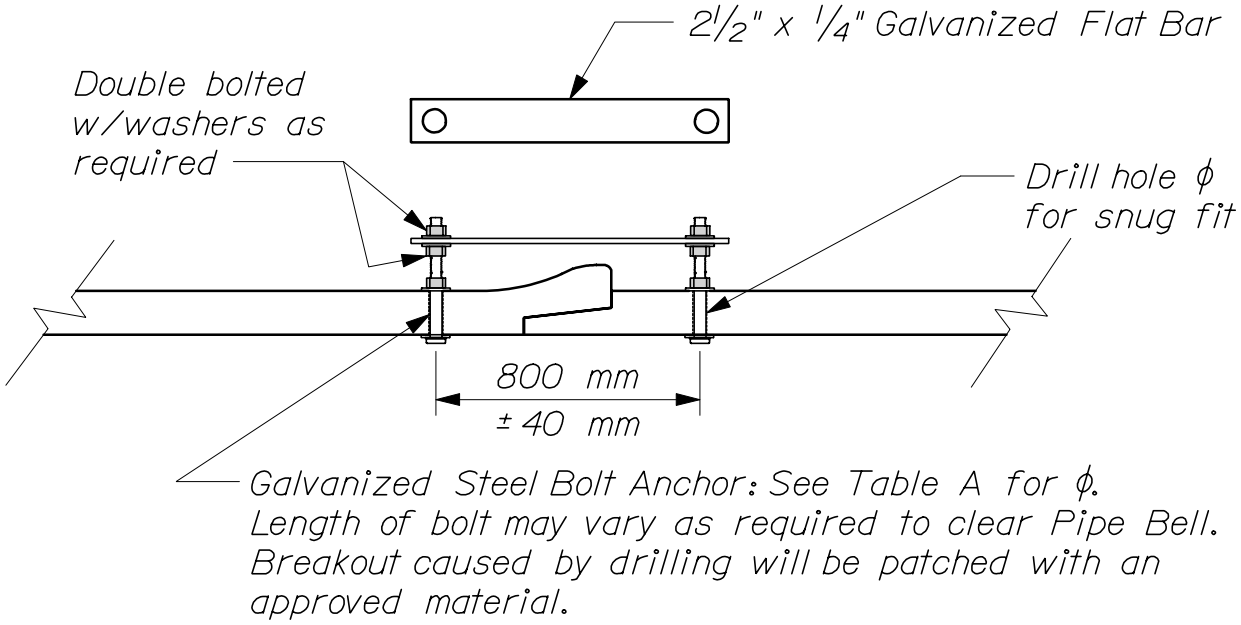

GALVANIZED BOLTED ANCHOR
~ W/GALVANIZED FLATBAR CONNECTION ~

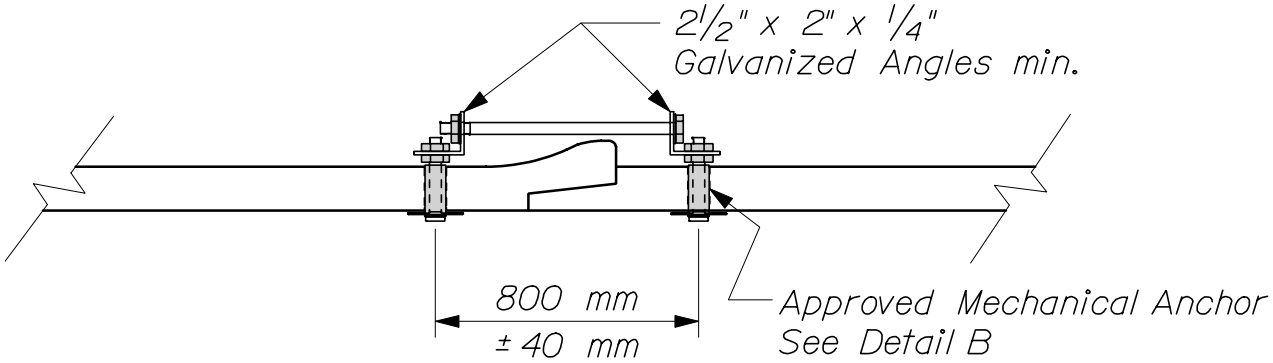

~ MECHANICAL ANCHOR W/ GALVANIZED PLATE ~
CORE DRILL HOLES

TABLE A	
THREAD ϕ	PIPE I.D.
16 mm	19 mm
19 mm	25 mm
25 mm	32 mm

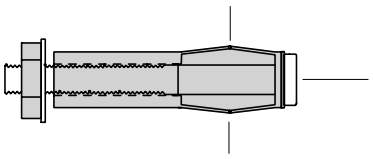

Compression/Expansion Type
Mechanical Anchor

~ DETAIL B ~

CONCRETE PIPE TIES

504(26)

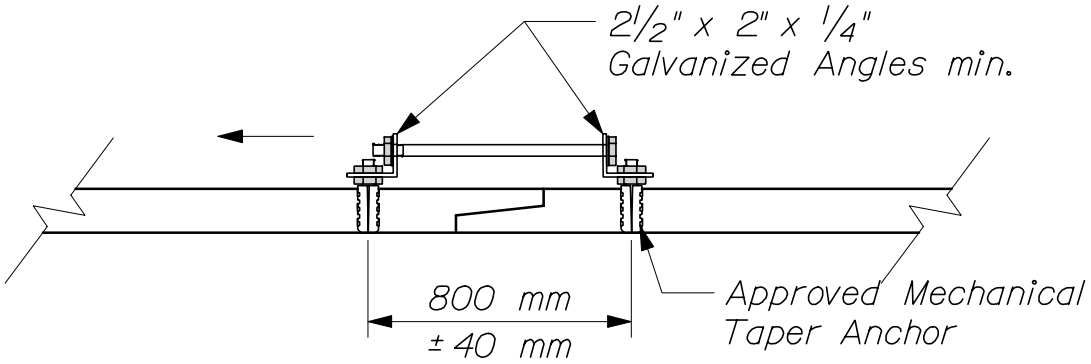

~ MECHANICAL ANCHOR W/GALVANIZED ANGLE PLATE ~

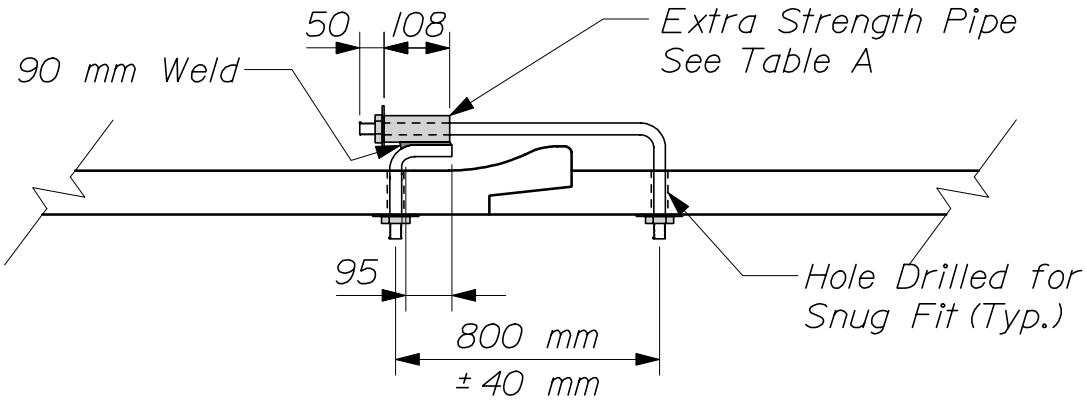

~ WELDED PIPE TIE ~

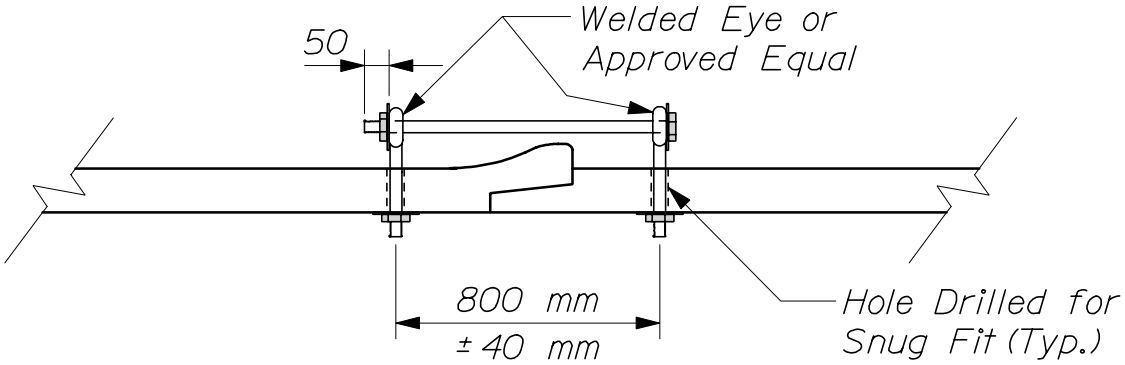

~ EYE BOLT TIE ~

TABLE A	
THREAD ϕ	PIPE I.D.
16 mm	19 mm
19 mm	25 mm
25 mm	32 mm

CONCRETE PIPE TIES

504(27)

Appendix B

Maine Department of Transportation
Special Provisions for the Purchase of
Supplies, Materials or Equipment for a Specific Project
Pursuant to 23 MRSA § 52

1) **WARRANTY.** Contractor warrants:

   a) That all articles and services to be supplied by it under this contract are fit and sufficient for the purpose intended;
   b) That all articles and services covered by this contract will conform to the specifications, drawing samples, symbols or other description specified by the Department;
   c) That such articles are merchantable, good quality and free from defects whether patent or latent in material and workmanship;
   d) That all workmanship, materials and articles to be provided are of the best grade and quality; and,
   e) That it has good and clear title to all articles to be supplied by it and the same are free and clear from all liens, encumbrances and security interest.

   Neither the final certificate of payment nor any provision herein, nor partial nor entire use of the articles provided shall constitute an acceptance of work not done in accordance with this Contract or relieve the Contractor from liability in respect of any warranties or responsibility for faulty material or workmanship. The Contractor shall remedy any defects in the materials and articles delivered pursuant to this Contract and pay any damages resulting from such defects which shall appear within 1 year from the date of final acceptance of the materials and articles provided hereunder. The Department shall give written notice of observed defects with reasonable promptness.

2) **TAXES.** Contractor agrees that, unless otherwise indicated in this Contract, the prices herein do not include federal, state or local sales, or use the tax from which an exemption is available for purposes of this order. Contractor agrees to accept and use tax exemption certificates when supplied by the Department as applicable. In case it shall ever be determined that any tax included in the prices herein was not required to be paid by Contractor, Contractor agrees to notify the Department and to make prompt application for the refund thereof, to take all proper steps to procure the same and when received to pay the same to the Department.

3) **PACKING & SHIPMENT.** Deliveries shall be made as specified without charge for boxing, shipping or storage, unless otherwise specified. Articles shall be suitably packed to secure lowest transportation cost and to conform with the requirements of common carriers and any applicable specifications. Order numbers and symbols must be plainly marked on all invoices, packages, bills of lading and shipping orders. Bill of lading should accompany each invoice. Count or weight shall be final and conclusive on shipments not accompanied by packing lists. Shipping terms F.O.B. destination.

4) **DELIVERY.** Delivery should be strictly in accordance with delivery schedule. Articles fabricated beyond the Department's releases are at Contractor's risk. Contractor shall not make material commitments or production arrangements in excess of the amount or in advance of the time necessary to meet delivery schedule. Unless otherwise specified herein, or receipt of written approval, no deliveries shall be made in advance of the Department's delivery schedule. Neither party shall be liable for excess costs of deliveries or defaults due to causes beyond its control and without its fault or negligence, provided, however, that when the Contractor has reason to believe that the deliveries will not be made as scheduled, written notice setting forth the cause of the anticipated delay will be given immediately to the Department. If the Contractor's delay or default is caused by the delay or default of a subcontractor, such delay or default shall be excusable only if it arose out of causes beyond the control of both Contractor and subcontractor and without fault of negligence or either of them and the articles or services to be furnished were not obtainable from other sources in sufficient time to permit Contractor to meet the required delivery schedule.

5) **REMEDY.** If Contractor's deliveries fail to meet such schedule, the Department, without limiting its other remedies, may direct expedited shipping, and the difference between the expedited routing and the order routing costs shall be paid by the Contractor.

6) **INSPECTION.** All articles and work will be subject to final inspection and approval after delivery, notwithstanding prior payment, it being expressly agreed that payment will not constitute final acceptance. The Department at its option may either reject any article or work not in conformity with the requirements and terms of this order, or re-work the same at Contractor's expense. The Department may reject an entire shipment of similar articles if a sample inspection discloses that ten (10%) percent of the articles inspected are defective. This may be waived if the Contractor agrees to reimburse the Department for the cost of a complete inspection of the articles included in such shipment. Rejected material will be returned at Contractor's risk and expense at the full invoice price plus applicable transportation charges, if any. No replacement of defective articles of work shall be made unless specified by the Department.

7) **BENEFITS AND DEDUCTIONS.** If the Contractor is an individual, the Contractor understands and agrees that he/she is an independent contractor for whom no Federal or State Income Tax will be deducted by the Department, and for whom no retirement benefits, survivor benefit insurance, group life insurance, vacation and sick leave, and similar benefits available to State employees will accrue. The Contractor further

understands that annual information returns, as required by the Internal Revenue Code or State of Maine Income Tax Law, will be filed by the State Controller with the Internal Revenue Service and the State of Maine Bureau of Revenue Services, copies of which will be furnished to the Contractor for his/her Income Tax records.

8) **INDEPENDENT CAPACITY.** In the performance of this Contract, the parties hereto agree that the Contractor, and any agents and employees of the Contractor shall act in the capacity of an independent contractor and not as officers or employees or agents of the State.

9) **DEPARTMENT'S REPRESENTATIVE.** The Contract Administrator shall be the Department's representative during the period of this Contract. He/she has authority to curtail services if necessary to ensure proper execution. He/she shall certify to the Department when payments under the Contract are due and the amounts to be paid. He/she shall make decisions on all claims of the Contractor.

10) **CHANGES IN THE WORK.** The Department may make changes to its order, the Contract Amount will be amended accordingly, these changes will not invalidate this Contract. In no event shall Contractor fail or refuse to continue the performance of its obligations under this Contract because of the inability of the parties to agree on an adjustment or adjustments. Any monetary adjustment or any substantive change in the articles or materials shall be in the form of an amendment, signed by both parties and approved by the MaineDOT. Said amendment must be effective prior to delivery of the articles or materials.

11) **SUBLETTING, ASSIGNMENT OR TRANSFER.** The Contractor shall not sublet, sell, transfer, assign or otherwise dispose of this Contract or any portion thereof, or of its right, title or interest therein, without written request to and written consent of the Contract Administrator. No subcontracts or transfer of Contract shall in any case release the Contractor of its liability under this Contract.

12) **PERSONNEL.** The Contractor warrants that it has not employed or contracted with any company or person, other than for assistance with the normal study and preparation of a proposal, to solicit or secure this Contract and that it has not paid, or agreed to pay, any company or person, other than a bona fide employee working solely for the Contractor, any fee, commission, percentage, brokerage fee, gifts, or any other consideration, contingent upon, or resulting from the award for making this Contract. For breach or violation of this warranty, the Department shall have the right to annul this Contract without liability or, in its discretion to otherwise recover the full amount of such fee, commission, percentage, brokerage fee, gift, or contingent fee.

Maine Department of Transportation
Special Provisions for the Purchase of
Supplies, Materials or Equipment for a Specific Project
Pursuant to 23 MRSA § 52

13) **EQUAL EMPLOYMENT OPPORTUNITY.** During the performance of this Contract, the Contractor agrees as follows:

a) The Contractor shall not discriminate against any employee or applicant for employment relating to this Contract because of race, color, religious creed, sex, national origin, ancestry, age, physical or mental disability, or sexual orientation, unless related to a bona fide occupational qualification. The Contractor shall take affirmative action to ensure that applicants are employed and employees are treated during employment, without regard to their race, color, religion, sex, age, national origin, physical or mental disability, or sexual orientation.

   Such action shall include but not be limited to the following: employment, upgrading, demotions, or transfers; recruitment or recruitment advertising; layoffs or terminations; rates of pay or other forms of compensation; and selection for training including apprenticeship. The Contractor agrees to post in conspicuous places available to employees and applicants for employment notices setting forth the provisions of this nondiscrimination clause.

b) The Contractor shall, in all solicitations or advertising for employees placed by or on behalf of the Contractor relating to this Contract, state that all qualified applicants shall receive consideration for employment without regard to race, color, religious creed, sex, national origin, ancestry, age, physical or mental disability, or sexual orientation.

c) The Contractor shall send to each labor union or representative of the workers with which it has a collective bargaining agreement, or other agreement or understanding, whereby it is furnished with labor for the performance of this Contract a notice to be provided by the contracting agency, advising the said labor union or workers' representative of the Contractor's commitment under this section and shall post copies of the notice in conspicuous places available to employees and applicants for employment.

d) The Contractor shall inform the Department’s Equal Employment Opportunity Coordinator of any discrimination complaints brought to an external regulatory body (Maine Human Rights Commission, EEOC, Office of Civil Rights) against their agency by any individual as well as any lawsuit regarding alleged discriminatory practice.

e) The Contractor shall comply with all aspects of the Americans with Disabilities Act (ADA) in employment and in the provision of service to include accessibility and reasonable accommodations for employees and clients.

f) Contractors and subcontractors with contracts in excess of $50,000 shall also pursue in good faith affirmative action programs.

g) The Contractor shall cause the foregoing provisions to be inserted in any subcontract for any work covered by this Contract so that such provisions shall be binding upon each subcontractor, provided that the foregoing provisions shall not apply to contracts or subcontracts for standard commercial supplies or raw materials.

14) **STATE EMPLOYEES NOT TO BENEFIT.** No individual employed by the State at the time this Contract is executed or any time thereafter shall be admitted to any share or part of this Contract or to any benefit that might arise therefrom directly or indirectly that would constitute a violation of 5 MRSA § 18 or 17 MRSA § 3104. No other individual employed by the State at the time this Contract is executed or any time thereafter shall be admitted to any share or part of this Contract or to any benefit that might arise therefrom directly or indirectly due to his employment by or financial interest in the Contractor or any affiliate of the Contractor. The Contractor shall cause the foregoing provisions to be inserted in any subcontract for any work covered by this Contract so that such provisions shall be binding upon each subcontractor, provided that the foregoing provisions shall not apply to contracts or subcontracts for standard commercial supplies or raw materials.

15) **MATERIAL SAFETY DATA SHEETS.** All manufacturers, importers, suppliers, or distributors of hazardous chemicals doing business in this State must provide a copy of the current material safety data sheet for any hazardous chemical to their direct purchasers of that chemical.

16) **ACCESS TO RECORDS.** The Contractor shall maintain all books, documents, payrolls, papers, accounting records and other evidence pertaining to this Contract and make such materials available at its offices at all reasonable times during the period of this Contract and for such subsequent period as specified under Maine Uniform Accounting and Auditing Practices for Community Agencies (MAAP) rules. The Contractor shall allow inspection of pertinent documents by the Department or any authorized representative of the State of Maine or Federal Government, and shall furnish copies thereof, if requested.

17) **TERMINATION.** The performance of work under the Contract may be terminated by the Department in whole, or in part, whenever the Contract Administrator determines that such termination is in the best interest of the Department including but not limited to the following circumstances:

(a) The Contractor fails to make delivery of articles, or to perform services within the time or time specified herein, or
(b) The Contractor fails to make delivery of articles, or specified materials, or
(c) If Contractor defaults under any other term or condition of this contract, or
(d) If Contractor fails to make progress as to endanger the performance of this contract in accordance with its terms; or,
(e) If Contractor is adjudged bankrupt, or if it makes a general assignment for the benefit of its creditors or if a receiver is appointed on account of its insolvency.

In the event that the Division terminates this agreement in whole or in part pursuant to this paragraph, the Division may procure (articles and services similar to those so terminated) upon such terms and in such manner as deemed appropriate by the Department, and Contractor shall be liable to the Department for any excess cost incurred.

18) **GOVERNMENTAL REQUIREMENTS**. The Contractor warrants and represents that it will comply with all governmental ordinances, laws and regulations.

19) **GOVERNING LAW.** This Contract is pursuant to 23 M.R.S.A. §52, and shall be governed in all respects by the laws, statutes, and regulations of the United States of America and of the State of Maine. Any legal proceeding against the State regarding this Contract shall be brought in State of Maine administrative or judicial forums. The Contractor consents to personal jurisdiction in the State of Maine.

20) **STATE HELD HARMLESS.** The Contractor agrees to indemnify, defend and save harmless the State, its officers, agents and employees from any and all claims, costs, expenses, injuries, liabilities, losses and damages of every kind and description (hereinafter in this paragraph referred to as "claims") resulting from or arising out of the performance of this Contract by the Contractor, its employees, agents, or subcontractors. This indemnification includes all legal costs and other expenses of defense against any asserted claims to which this indemnification applies. This indemnification does not extend to a claim that results solely and directly from (i) the Department's negligence or unlawful act, or (ii) action by the Contractor taken in reasonable reliance upon an instruction or direction given by an authorized person acting on behalf of the Department in accordance with this Contract.

21) **NOTICE OF CLAIMS**. The Contractor shall give the Department Contract Administrator immediate notice in writing of any legal action or suit filed related in any way to the Contract or which may affect the performance of duties under the Contract, and prompt notice of any claim made against the Contractor by any

subcontractor which may result in litigation related in any way to the Contract or which may affect the performance of duties under the Contract.

22) **NON-APPROPRIATION.** Notwithstanding any other provision of this Contract, if the State does not receive sufficient funds to fund this Contract and other obligations of the State, if funds are de-appropriated, or if the State does not receive legal authority to expend funds from the Maine State Legislature or Maine courts, then the State is not obligated to make payment under this Contract.

23) **SEVERABILITY.** The invalidity or unenforceability of any particular provision or part thereof of this Contract shall not affect the remainder of said provision or any other provisions, and this Contract shall be construed in all respects as if such invalid or unenforceable provision or part thereof had been omitted.

24) **FORCE MAJEURE.** The Department may, at its discretion, excuse the performance of an obligation by a party under this Contract in the event that performance of that obligation by that party is prevented by an act of God, act of war, riot, fire, explosion, flood or other catastrophe, sabotage, severe shortage of fuel, power or raw materials, change in law, court order, national defense requirement, or strike or labor dispute, provided that any such event and the delay caused thereby is beyond the control of, and could not reasonably be avoided by, that party. The Department may, at its discretion, extend the time period for performance of the obligation excused under this section by the period of the excused delay together with a reasonable period to reinstate compliance with the terms of this Contract.

25) **DEBARMENT, SUSPENSION, INELIGIBILITY, OR EXCLUSION.** By signing the Contract, the Contractor certifies that it has not been debarred, suspended, declared ineligible or voluntarily excluded from contracts by the Federal Government or any state agency within the last 3 years.

26) **SET-OFF RIGHTS.** The State shall have all of its common law, equitable and statutory rights of set-off. These rights shall include, but not be limited to, the State's option to withhold for the purposes of set-off any monies due to the Contractor under this Contract up to any amounts due and owing to the State with regard to this Contract, any other Contract, any other Contract with any State department or agency, including any Contract for a term commencing prior to the term of this Contract, plus any amounts due and owing to the State for any other reason including, without limitation, tax delinquencies, fee delinquencies or monetary penalties relative thereto. The State shall exercise its set-off rights in accordance with normal State practices including, in cases of set-off pursuant to an audit, the finalization of such audit by the State agency, its representatives, or the State Controller.