BATH

Materials
PRECAST REINFORCED CONCRETE BOX

2013

STATE PROJECT

BIDDING INSTRUCTIONS

1. Complete the bid forms with pen and ink.

2. The following are to be completed and returned with the bid:

    a. A copy of the Notice to Contractors
    b. the completed Acknowledgement of Bid Amendments form
    c. the completed Schedule of Items in Appendix A
    d. two (2) copies of the completed and signed Contract to Purchase Supplies, Materials and/or Equipment for a Specific Project form
    e. The completed Contractor Information Sheet
    f. Any other certifications or Bid requirements listed in the Bid Documents as due by Bid opening

3. For security and other reasons, all Bid Packages which are mailed or delivered, shall be provided in double (one envelope inside the other) envelopes. The *Inner Envelope* shall have the following information provided on it:

    Bid Enclosed - Do Not Open
    Title:
    Town:
    Date of Bid Opening:
    Name of Contractor with mailing address and telephone number:

    In Addition to the usual address information, the *Outer Envelope* should have written or typed on it:

    Double Envelope: Bid Enclosed
    Title:
    Town:
    Date of Bid Opening:
    Name of Contractor:

    Hand-carried Bids may be in one envelope, and should be marked with the following information:

    Bid Enclosed: Do Not Open
    Title:
    Town:
    Name of Contractor:

4. If a paper Bid is to be hand carried, deliver directly to the Reception Desk using the "Public Entrance" which is located on the Capitol Street side of the DOT Headquarters Building in Augusta. If a paper Bid is to be sent express, "FedEx First Overnight" delivery is suggested as the package is delivered directly to the DOT Headquarters Building, Mailroom, in Augusta located at 24 Child Street in Augusta. Other means, such as U.S. Postal's Service Express Mail has proven not to be reliable. If a paper bid is to be mailed, the mailing address is Maine Department of Transportation, 16 State House Station, Augusta, ME 04333-0016.

5. If you need further information regarding Bid preparation, call the DOT Contracts Section at (207) 624-3410. For complete bidding requirements, refer to Section 102 of the Maine Department of Transportation, Standard Specification, Revision of December 2002.

January 19, 2012
Supersedes September 09, 2011

NOTICE

The Maine Department of Transportation is attempting to improve the way Bid Amendments/Addendums are handled, and allow for an electronic downloading of bid packages from our website, while continuing to maintain an optional planholders list.

Prospective bidders, subcontractors or suppliers who wish to download a copy of the bid package and receive a courtesy notification of project specific bid amendments, must provide an email address to Diane Barnes or David Venner at the MDOT Contracts mailbox at: MDOT.contracts@maine.gov. Each bid package will require a separate request.

Additionally, interested parties will be responsible for reviewing and retrieving the Bid Amendments from our web site, and acknowledging receipt and incorporating those Bid Amendments in their bids using the Acknowledgement of Bid Amendment Form.

The downloading of bid packages from the MDOT website is not the same as providing an electronic bid to the Department. Electronic bids must be submitted via http://www.BIDX.com. For information on electronic bidding contact Patrick Corum at patrick.corum@maine.gov , Rebecca Snowden at rebecca.snowden@maine.gov or Diane Barnes at diane.barnes@maine.gov.

NOTICE

Bidders:

Please use the attached “Request for Information” form when faxing questions and comments concerning specific Contracts that have been Advertised for Bid. Include additional numbered pages as required. Questions are to be faxed to the number listed in the Notice to Contractors. This is the only allowable mechanism for answering Project specific questions. Maine DOT will not be bound to any answers to Project specific questions received during the Bidding phase through other processes.

State of Maine
Department of Transportation

REQUEST FOR INFORMATION

Date _____ Time _____

Information Requested: **PIN:** _____ **Town(s):** _____

_____

_____

_____

_____

_____

_____

_____

_____

_____

_____

_____

_____

Request by: _____ **Phone: (_____)**_____
Bid Date: _____ **Fax: (_____)**_____

Complete top portion of form and transmit to the number listed in the Notice to Contractors

RFI No: _____ **RFI received:** _____

Response:_____

_____

_____

_____

_____

_____

_____

_____

_____

_____

_____

Response By:_____ Date: _____

Vendor Registration

Prospective Bidders must register as a vendor with the Department of Administrative & Financial Services if the vendor is awarded a contract. Vendors will not be able to receive payment without first being registered. Vendors/Contractors will find information and register through the following link –
http://www.maine.gov/purchases/venbid/index.shtml

CONTRACTOR INFORMATION

_____ _____

(Date) **(Signature)**

_____

(Name and Title Printed)

_____

(Contractor Name)

_____

Vendor Customer Number

Mailing Address:

_____

Street/PO Box **City** **State** **Zip**

_____ _____ _____

phone **fax** **email**

Sole Proprietorship - Partnership - (circle one)

Corporation – Company - Association - Estate - (circle one)

STATE OF MAINE DEPARTMENT OF TRANSPORTATION
NOTICE TO CONTRACTORS

Sealed Bids addressed to the Maine Department of Transportation, Augusta, Maine 04333 and endorsed on the wrapper "Bids for **Reinforced Concrete Box** in the town/city of **BATH**" will be received from contractors at the Reception Desk, Maine DOT Building, Capitol Street, Augusta, Maine, until 11:00 o'clock A.M. (prevailing time) on March 13, 2013 and at that time and place publicly opened and read. Bids will be accepted from all bidders. The lowest responsive bidder must demonstrate successful completion of projects of similar size and scope to be considered for the award of this contract.

Description: Reinforced Concrete Box

Location: Delivered to MaineDOT Project Site, located in Bath, on State Road 0.03 miles southwesterly of Congress Avenue.

Outline of Work: Furnish and deliver Reinforced Concrete Box and other incidental work.

For general information regarding Bidding and Contracting procedures, contact George Macdougall at (207)624-3410. Our webpage at http://www.maine.gov/mdot/contractors/ contains a copy of the schedule of items, Plan Holders List, written portions of bid amendments (not drawings), and bid results. For Project-specific information fax all questions to **Gail MacMunn** at (207)624-3431. Questions received after 12:00 noon of Friday prior to bid date will not be answered. Bidders shall not contact any other Departmental staff for clarification of Contract provisions, and the Department will not be responsible for any interpretations so obtained. TTY users call Maine Relay 711.

Bid Documents, specifications and bid forms are available at http://www.maine.gov/mdot/contractors/. They may be seen at the Maine DOT Building in Augusta, Maine and at the Department of Transportation's Regional Office in Augusta. They can be obtained at no cost at the Department at 24 Child Street, Augusta, ME, between the hours of 8:00 a.m. to 4:30 p.m., may be requested by telephone at (207) 624-3536 between the hours of 8:00 a.m. to 4:30 p.m, or from Maine Department of Transportation, Attn.: Mailroom, 16 State House Station, Augusta, Maine 04333-0016.

There will be no bid bonds, performance bonds or payment bond required.

Each Bid must be made upon blank forms provided by the Department.

This Contract is subject to all applicable State Laws.

All work shall be governed by "State of Maine, Department of Transportation, Standard Specifications, Revision of December 2002", price $10 [$13 by mail], and Standard Details, Revision of December 2002, price $20 [$25 by mail]. They also may be purchased by telephone at (207) 624-3536 between the hours of 8:00 a.m. to 4:30 p.m. Standard Detail updates can be found at http://www.maine.gov/mdot/contractors/publications/ .

The right is hereby reserved to the Maine DOT to reject any or all bids.

Augusta, Maine
February 20, 2013

Dale Doughty
Director
Bureau of Maintenance & Operations

Strut replacement
Bath, Region 1
Precast Box Culvert w/ Wing Walls
April 14, 2011
Supersedes August 3, 2004

SPECIAL PROVISION 102.7.3
ACKNOWLEDGMENT OF BID AMENDMENTS

With this form, the Bidder acknowledges its responsibility to check for all Amendments to the Bid Package. For each Project under Advertisement, Amendments are located at http://www.maine.gov/mdot/contractors/ . It is the responsibility of the Bidder to determine if there are Amendments to the Project, to download them, to incorporate them into their Bid Package, and to reference the Amendment number and the date on the form below. The Maine DOT will not post Bid Amendments any later than noon the day before Bid opening without individually notifying all the planholders.

Amendment Number	Date

The Contractor, for itself, its successors and assigns, hereby acknowledges that it has received all of the above referenced Amendments to the Bid Package.

CONTRACTOR

_____
Date

_____
Signature of authorized representative

_____
(Name and Title Printed)

MAINE DEPARTMENT OF TRANSPORTATION

CONTRACT TO PURCHASE SUPPLIES, MATERIALS AND/OR EQUIPMENT FOR A SPECIFIC PROJECT

This Agreement (the "Contract") is entered into between the Maine Department of Transportation ("Department" or "MaineDOT") with its principal office located at Child Street, Augusta, Maine, and a mailing address of 16 State House Station, Augusta, Maine 04333-0016, and _____ ("Contractor"), a corporation or other legal entity organized under the laws of the State of _____ with its principal place of business located at _____, and a mailing address of_____ and a telephone number as follows: _____.

The Vendor Customer Number of the Contractor is _____.

MaineDOT, pursuant to 23 M.R.S.A. §52, requested bids for the sale and delivery of the Materials, Supplies, and Equipment (the "Materials") described in attached Appendix A. The offer submitted by Contractor (the "Bid Price") is accepted by MaineDOT as the successful bid. The terms and conditions of the purchase of the Materials are set forth below:

A. Deliverables.

The Contractor agrees to provide the Materials known as **Precast Concrete Box Culvert with Wing Walls**, more specifically described in Appendix A for use in MaineDOT Project **Bath, State Road, Strut Replacement** (the "Project").

B. Time.

This Contract becomes effective on the date last signed below. The Contractor agrees to deliver the Materials in accordance with the requirements Appendix A. This Contract expires on December 15, 2013**.**

C. Bid Price.

The Bid Price(s) offered by Contractor and accepted by MaineDOT are as provided in Appendix A. These Bid Prices will serve as a basis for the Contract amount set forth in section F below.

D. Contract Documents.

The Contract consists of this Agreement and the following attachments which are hereby incorporated into the Contract as part of its terms and conditions:

Appendix A--Description of Materials, Supplies, Equipment and Bid Price
Appendix B--Special Provisions for Purchase of Project Materials

By agreement, this Contract may be amended, modified, or supplemented by written agreement signed by both parties.

MAINE DEPARTMENT OF TRANSPORTATION

CONTRACT TO PURCHASE SUPPLIES, MATERIALS AND/OR EQUIPMENT FOR A SPECIFIC PROJECT

E. Certifications.

By signing below, the Contractor hereby certifies that to the best of the Contractor's knowledge and belief:

1. All of the statements, representations, covenants, and/or certifications required or set forth in Appendix B are accurate as of the date of this Contract.

2. The Contractor certifies that it has not been debarred, suspended, declared ineligible or voluntarily excluded from contracts by the Federal Government or any state agency within the last 3 years.

3. The Contractor knows of no legal, contractual, or financial impediment to entering into this Contract.

4. The person signing below is legally authorized by the Contractor to sign this Contract on behalf of the Contractor and to legally bind the Contractor to the terms of the Contract.

IN WITNESS WHEREOF, the Contractor, for itself, its successors and assigns, hereby execute two duplicate originals of this Contract and thereby binds itself to all covenants, terms, and obligations contained in the Contract Documents.

Dated: _____ **CONTRACTOR**

_____

_____
(Name and Title Printed)

F. Award.

By signing below, an authorized representative of MaineDOT hereby accepts Contractor's offer and awards this Contract to Contractor in the amount of $_____ under the terms and conditions set forth above.

Dated: _____

MAINE DEPARTMENT OF TRANSPORTATION

_____

_____
(Name and Title Printed)

MAINE DEPARTMENT OF TRANSPORTATION

CONTRACT TO PURCHASE SUPPLIES, MATERIALS AND/OR EQUIPMENT FOR A SPECIFIC PROJECT

This Agreement (the "Contract") is entered into between the Maine Department of Transportation ("Department" or "MaineDOT") with its principal office located at Child Street, Augusta, Maine, and a mailing address of 16 State House Station, Augusta, Maine 04333-0016, and _____ ("Contractor"), a corporation or other legal entity organized under the laws of the State of _____ with its principal place of business located at _____, and a mailing address of_____ and a telephone number as follows: _____.

The Vendor Customer Number of the Contractor is _____.

MaineDOT, pursuant to 23 M.R.S.A. §52, requested bids for the sale and delivery of the Materials, Supplies, and Equipment (the "Materials") described in attached Appendix A. The offer submitted by Contractor (the "Bid Price") is accepted by MaineDOT as the successful bid. The terms and conditions of the purchase of the Materials are set forth below:

A. Deliverables.

The Contractor agrees to provide the Materials known as **Precast Concrete Box Culvert with Wing Walls**, more specifically described in Appendix A for use in MaineDOT Project **Bath, State Road, Strut Replacement** (the "Project").

B. Time.

This Contract becomes effective on the date last signed below. The Contractor agrees to deliver the Materials in accordance with the requirements Appendix A. This Contract expires on December 15, 2013**.**

C. Bid Price.

The Bid Price(s) offered by Contractor and accepted by MaineDOT are as provided in Appendix A. These Bid Prices will serve as a basis for the Contract amount set forth in section F below.

D. Contract Documents.

The Contract consists of this Agreement and the following attachments which are hereby incorporated into the Contract as part of its terms and conditions:

Appendix A--Description of Materials, Supplies, Equipment and Bid Price
Appendix B--Special Provisions for Purchase of Project Materials

By agreement, this Contract may be amended, modified, or supplemented by written agreement signed by both parties.

MAINE DEPARTMENT OF TRANSPORTATION

CONTRACT TO PURCHASE SUPPLIES, MATERIALS AND/OR EQUIPMENT FOR A SPECIFIC PROJECT

E. Certifications.

By signing below, the Contractor hereby certifies that to the best of the Contractor's knowledge and belief:

1. All of the statements, representations, covenants, and/or certifications required or set forth in Appendix B are accurate as of the date of this Contract.

2. The Contractor certifies that it has not been debarred, suspended, declared ineligible or voluntarily excluded from contracts by the Federal Government or any state agency within the last 3 years.

3. The Contractor knows of no legal, contractual, or financial impediment to entering into this Contract.

4. The person signing below is legally authorized by the Contractor to sign this Contract on behalf of the Contractor and to legally bind the Contractor to the terms of the Contract.

IN WITNESS WHEREOF, the Contractor, for itself, its successors and assigns, hereby execute two duplicate originals of this Contract and thereby binds itself to all covenants, terms, and obligations contained in the Contract Documents.

Dated: _____ **CONTRACTOR**

_____

_____
(Name and Title Printed)

F. Award.

By signing below, an authorized representative of MaineDOT hereby accepts Contractor's offer and awards this Contract to Contractor in the amount of $_____ under the terms and conditions set forth above.

Dated: _____

MAINE DEPARTMENT OF TRANSPORTATION

_____

_____
(Name and Title Printed)

MAINE DEPARTMENT OF TRANSPORTATION

CONTRACT TO PURCHASE SUPPLIES, MATERIALS AND/OR EQUIPMENT FOR A SPECIFIC PROJECT

This Agreement (the "Contract") is entered into between the Maine Department of Transportation ("Department" or "MaineDOT") with its principal office located at Child Street, Augusta, Maine, and a mailing address of 16 State House Station, Augusta, Maine 04333-0016, and **CONTRACTOR ABC INC** ("Contractor"), a corporation or other legal entity organized under the laws of the State of **MAINE** with its principal place of business located at **ABC STREET, ABC, Maine 00000**, and a mailing address of **ABC STREET, ABC, MAINE** and a telephone number as follows: **207-999-9999**.

The Vendor Customer Number of the Contractor is **VC9999999999**.

MaineDOT, pursuant to 23 M.R.S.A. §52, requested bids for the sale and delivery of the Materials, Supplies, and Equipment (the "Materials") described in attached Appendix A. The offer submitted by Contractor (the "Bid Price") is accepted by MaineDOT as the successful bid. The terms and conditions of the purchase of the Materials are set forth below:

SAMPLE

A. Deliverables.

The Contractor agrees to provide the Materials known as **SOMETHING,** more specifically described in Appendix A for use in MaineDOT Project No. **99999.00 SOME TOWN.** (the "Project").

B. Time.

This Contract becomes effective on the date last signed below. The Contractor agrees to deliver the Materials on or before **SOME DAY, 20XX**. This Contract expires on **DECEMBER 31, 20XX**.

C. Bid Price.

The Bid Price(s) offered by Contractor and accepted by MaineDOT are as provided in Appendix A. These Bid Prices will serve as a basis for the Contract amount set forth in section F below

D. Contract Documents.

The Contract consists of this Agreement and the following attachments which are hereby incorporated into the Contract as part of its terms and conditions:

Appendix A--Description of Materials, Supplies, Equipment and Bid Price
Appendix B--Special Provisions for Purchase of Project Materials

MAINE DEPARTMENT OF TRANSPORTATION

CONTRACT TO PURCHASE SUPPLIES, MATERIALS AND/OR EQUIPMENT FOR A SPECIFIC PROJECT

By agreement, this Contract may be amended, modified, or supplemented by written agreement signed by both parties.

E. Certifications.

By signing below, the Contractor hereby certifies that to the best of the Contractor's knowledge and belief:

1. All of the statements, representations, covenants, and/or certifications required or set forth in Appendix B are accurate as of the date of this Contract.

2. The Contractor certifies that it has not been debarred, suspended, declared ineligible or voluntarily excluded from contracts by the Federal Government or any state agency within the last 3 years.

3. The Contractor knows of no legal, contractual, or financial impediment to entering into this Contract.

4. The person signing below is legally authorized by the Contractor to sign this Contract on behalf of the Contractor and to legally bind the Contractor to the terms of the Contract.

IN WITNESS WHEREOF, the Contractor, for itself, its successors and assigns, hereby execute two duplicate originals of this Contract and thereby binds itself to all covenants, terms, and obligations contained in the Contract Documents.

Dated: **(Date Here)**_____

CONTRACTOR

(Sign Here)

_____

(Print Name Here)

_____

(Name and Title Printed)

F. Award.

By signing below, an authorized representative of MaineDOT hereby accepts Contractor's offer and awards this Contract to Contractor in the amount of $_____ under the terms and conditions set forth above.

SAMPLE

MAINE DEPARTMENT OF TRANSPORTATION

CONTRACT TO PURCHASE SUPPLIES, MATERIALS AND/OR EQUIPMENT FOR A SPECIFIC PROJECT

Dated: _____

MAINE DEPARTMENT OF TRANSPORTATION

_____

_____

(Name and Title Printed)

SAMPLE

APPENDIX A
Description of Materials, Supplies, Equipment and Bid Price

Contractor _____

SCHEDULE OF ITEMS

Price

Item Description	**Approx. Quantity and Units**	**Unit Price**	**Bid Amount**
534.71 Precast Concrete Box Culvert w/ precast Wing Walls. 5'R x 10'S. Manufacture and deliver. See attached plan views and cross section.	**1 LS**	**$**	**$**
TOTAL			**$**

Description: The Contractor shall furnish and deliver the materials listed in the Schedule of Items in this Appendix in accordance with the contract documents. The structure must meet the requirements of this Contract, the Plans, the State of Maine, Department of Transportation, Standard Specifications, Revision of December 2002 including, but not limited to Section 712.061 – Structural Precast Units and Standard Details Revision of December 2002 as updated through advertisement, Supplemental Specifications, and Special Provisions including, but not limited to Special Provision, Section 534, Precast Structural Concrete, Precast Structural Concrete Arches, Box Culverts, Design, Manufacture and Furnish.

Delivery: The materials shall be ready for delivery on or before July 15, 2013. The actual delivery date of the materials shall be determined by the project schedule and coordinated with the Department. The Contractor shall deliver the materials to the project site. The Contractor shall notify MaineDOT, Travis Moore, Transportation Operations Manger of Region 1 at 207-885-7013 or cell phone 207- 215-3529 a minimum of 48 hours prior to delivery. Alternative contacts are: Steve Cady @ 592-3030 or Henry McFerren @ 615-6924. The Contractor shall deliver the materials only during the following times: Monday through Thursday, 6:00 AM through 4:30 PM except for they may not deliver on holidays. The Department will not off-load the materials at the delivery site. The materials are to be delivered to the project on Bath Road in the town of Bath, Maine.

Contract Administrator: The contract administrator for this contract will be:

Name: Travis Moore
Title: Transportation Operations Manager
Address: Maine Department of Transportation

PO Box 358, Scarborough, ME 04070

Invoices and Payments: The Contractor shall submit an itemized bill to the Department for materials following delivery for approval and payment. At a minimum, invoices shall include the following information:

Contractor name, address & Contract Number
Invoice Date & Number
Dates of Delivery

The Department will pay based upon the materials delivered at the prices bid and the invoices approved. Payments to the Contractor shall be full compensation for furnishing all labor, equipment, materials, services, and incidentals used to supply the materials under the Contract in a complete and acceptable manner, and for all risk, loss, damage, or expense of any kind arising from the nature or prosecution of the Work. The Department may withhold payments claimed by the Contractor on account of incomplete or incorrect invoices or materials that are defective or not in conformance with the contract.

Conformity with Standards Unless otherwise provided in the contract, all materials shall conform to the following standards, as applicable.

A. MDOT
B. AASHTO
C. ASTM
D. AREMA
E. Standard conditions and special conditions contained in any permit
F. Manual on Uniform Traffic Control Devices (MUTCD)
G. American with Disabilities Act (ADA)

Material Quality Materials and manufactured products shall be new unless otherwise specified, free from defect, and in conformity with the contract. If there is no applicable standard set forth in this Contract for a particular item, then the item shall be in accordance with industry standards prevailing at the time of bid. The Department has the authority to inspect all Materials and every detail of the Work. The Contractor shall provide the Department with safe access to all portions of the Work in Conformity with all applicable OSHA requirements. The Contractor shall furnish the Department with all information and assistance required to make a detailed inspection.

When material is fabricated or treated with another material or where any combination of materials is assembled to form a finished product, any or all of which are covered by specifications, the Department may reject the finished product if any of the components do not comply with the specifications. The Department may reject materials not con-forming to the Specifications at any time.

STATE OF MAINE
DEPARTMENT OF TRANSPORTATION

PLAN LEGEND

Town, County, State
Property Lines
R/W Lines-Existing
R/W Lines-Proposed
Culvert-Existing
Culvert Proposed
Curbing — Existing — Proposed
Type 1
Type 3
Type 5
Outline of Bodies of Water
Ledge
Buildings
Trees — Conifer — Deciduous
Tree Line
Clearing Limit Line — CLL
Centerline-Existing
Centerline-Proposed — 10+00
Travelway-Existing
Travelway-Proposed
Railroad
Catch Basins — Existing — Proposed
Manholes — Existing — Proposed
Proposed Underdrain
Proposed Ditch
Existing Ditch
Utility Poles — Existing — Proposed
Fire Hydrants — Existing — Proposed
Existing Water Line — W
Existing San. Sewer
Existing San. Sewer Manhole
Guardrail-Existing
Guardrail-Proposed
Guardrail-Cable, Other

BATH
SAGADAHOC COUNTY
STATE ROAD
STATE PROJECT NO. 18392.10
PROJECT LENGTH : 0.01 MILES

INDEX OF SHEETS

Description	Sheet No.
Title Sheet	1
Structure Plan	2
Plan / Cross Section	3

TRAFFIC DATA

Current (2012) AADT	8140
Future (2024) AADT	10240
DHV - % of AADT	10%
Design Hour Volume	1024
% Heavy Trucks (AADT)	5%
% Heavy Trucks (DHV)	3%
Directional Distribution (DHV)	62%
18 kip Equivalent P 2.0	232
18 kip Equivalent P 2.5	221
Design Speed (mph)	30
Highway Corridor Priority	4
Functional Class:	Maj.Urban Coll.

PROJECT LOCATION:	State Road at the Bath / West Bath Town Line
PROGRAM AREA:	Highway Program
SCOPE OF WORK:	Manufacture and Deliver Precast Structure

WIN 18392.10 18392.10

STATE OF MAINE
DEPARTMENT OF TRANSPORTATION
APPROVED — DATE
COMMISSIONER:
CHIEF ENGINEER:

SIGNATURE
P.E. NUMBER
DATE

PROJECT INFORMATION
PROGRAM
PROJECT MANAGER
DESIGNER
CONSULTANT
PROJECT RESIDENT
CONTRACTOR
PROJECT COMPLETION DATE

BATH
STATE ROAD

TITLE SHEET

SHEET NUMBER
1
OF 3

Filename: ...\10\HIGHWAY\MSTA\001_Title.dgn Division: HIGHWAY Username: Christopher.Gallant Date:1/30/2013

PROJ. MANAGER	D. LOVELY	BY	DATE
DESIGN-DETAILED	C. GALLANT		
CHECKED-REVIEWED	CJG		12\21\2012
DESIGN2-DETAILED2			
DESIGN3-DETAILED3			
REVISIONS 1			
REVISIONS 2			
REVISIONS 3			
REVISIONS 4			
FIELD CHANGES			

SIGNATURE
P.E. NUMBER
DATE

BATH STATE ROAD PLANS

SHEET NUMBER 2 OF 3

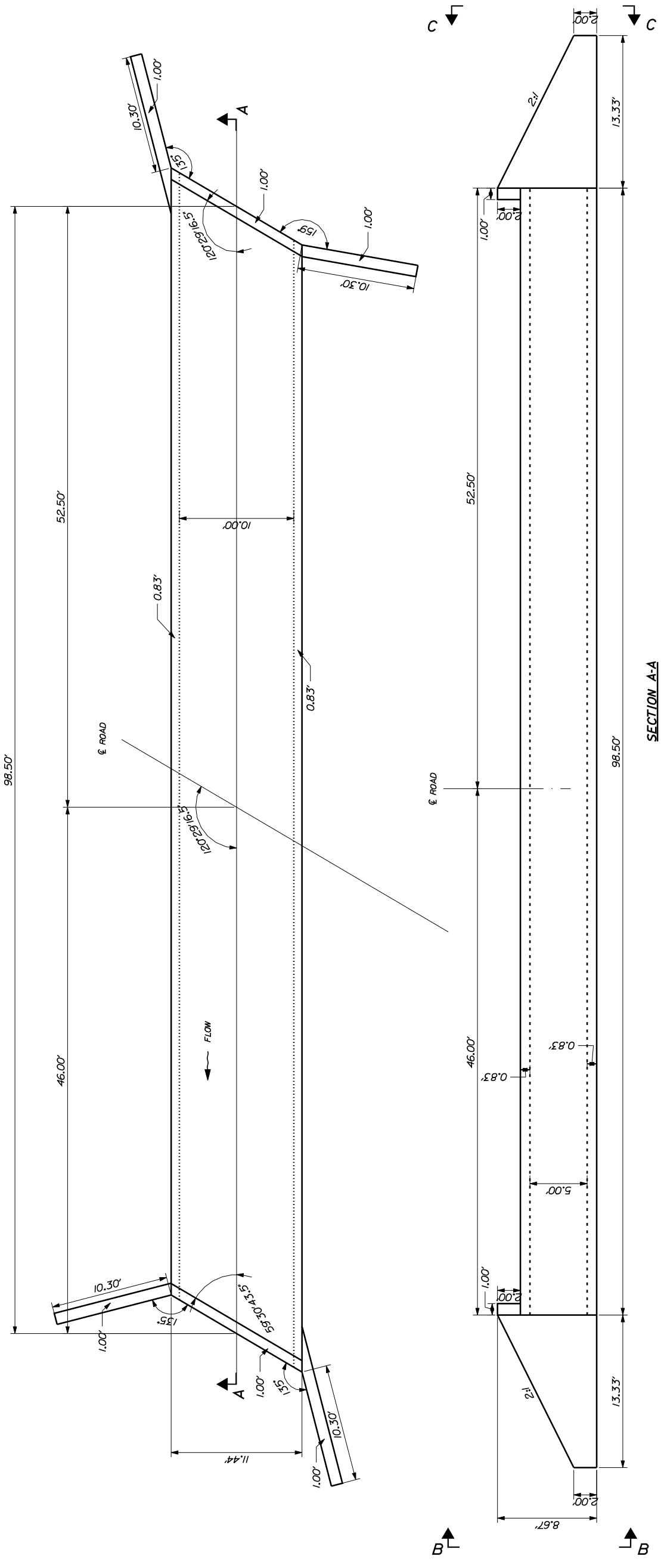

PAY LIMITS

SECTION A-A

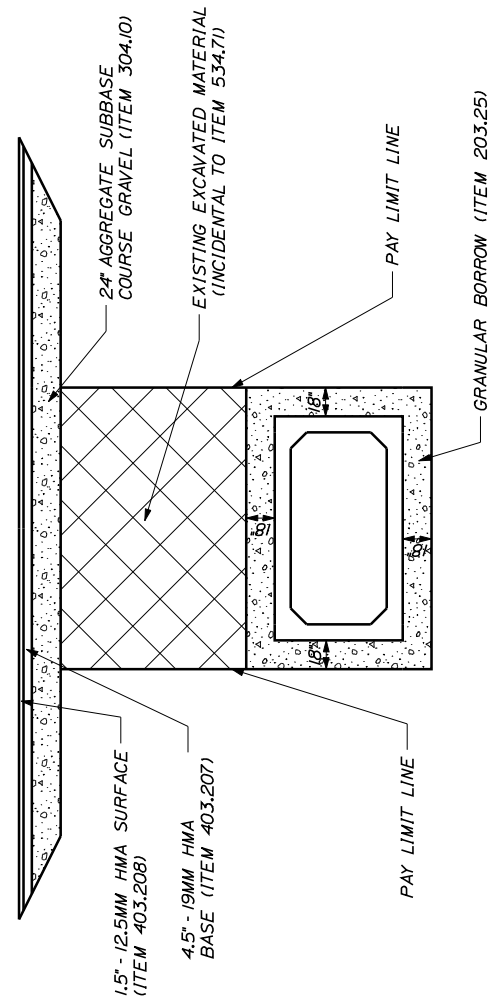

NOTE: ANY EXCAVATION (OUTSIDE OF THE PAY LIMITS) NECESSARY TO PROPERLY SLOPE THE EMBANKMENTS FOR INSTALLATION IS CONSIDERED INCIDENTAL TO ITEM 534.7102. ALL BACKFILLING IS CONSIDERED INCIDENTAL TO ITEM 534.71 AS WELL.

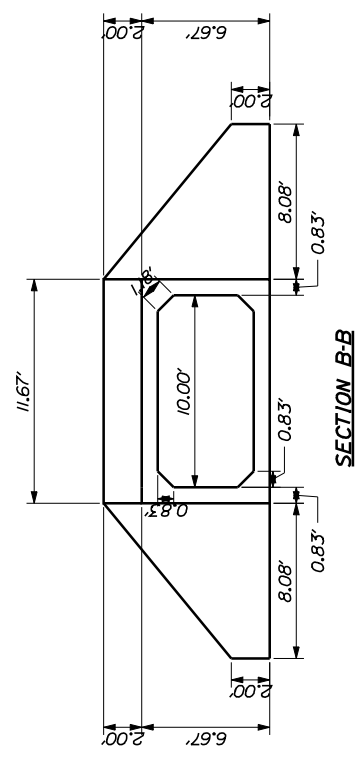

SECTION B-B

SECTION C-C

STATE OF MAINE
DEPARTMENT OF TRANSPORTATION

18392.10

PIN
18392.10

HIGHWAY PLANS

PROJ. MANAGER	D. LOVELY	BY	DATE
DESIGN-DETAILED	C. GALLANT		
CHECKED-REVIEWED	CJG	-----	12\21\2012
DESIGN2-DETAILED2	----------	----------	------
DESIGN3-DETAILED3	----------	----------	------
REVISIONS 1	------		------
REVISIONS 2	------		------
REVISIONS 3	------		------
REVISIONS 4	------		------
FIELD CHANGES	------		------

SIGNATURE
P.E. NUMBER
DATE

BATH
STATE ROAD

PLANS

SHEET NUMBER 3 OF 3

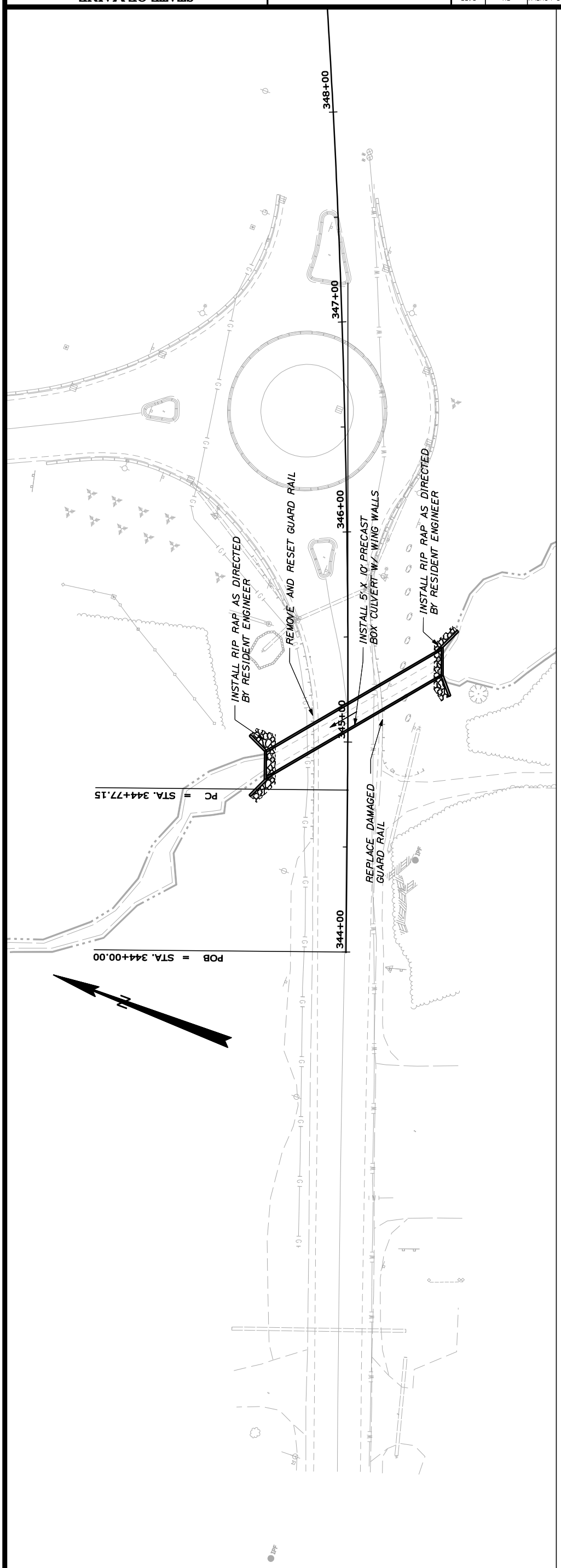

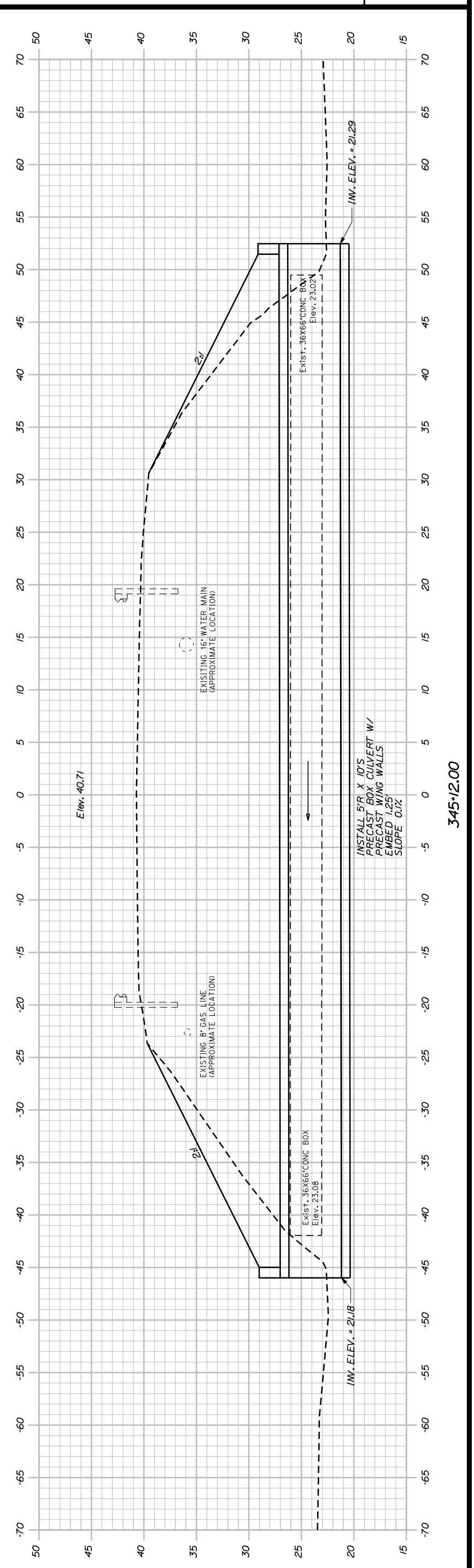

Filename: ...\10\highway\msta\003_Plan.dgn Division: HIGHWAY Username: Christopher.Gallant Date:1/30/2013

Appendix B

Maine Department of Transportation
Special Provisions for the Purchase of
Supplies, Materials or Equipment for a Specific Project
Pursuant to 23 MRSA § 52

1) **WARRANTY.** Contractor warrants:

   a) That all articles and services to be supplied by it under this contract are fit and sufficient for the purpose intended;
   b) That all articles and services covered by this contract will conform to the specifications, drawing samples, symbols or other description specified by the Department;
   c) That such articles are merchantable, good quality and free from defects whether patent or latent in material and workmanship;
   d) That all workmanship, materials and articles to be provided are of the best grade and quality; and,
   e) That it has good and clear title to all articles to be supplied by it and the same are free and clear from all liens, encumbrances and security interest.

   Neither the final certificate of payment nor any provision herein, nor partial nor entire use of the articles provided shall constitute an acceptance of work not done in accordance with this Contract or relieve the Contractor from liability in respect of any warranties or responsibility for faulty material or workmanship. The Contractor shall remedy any defects in the materials and articles delivered pursuant to this Contract and pay any damages resulting from such defects which shall appear within 1 year from the date of final acceptance of the materials and articles provided hereunder. The Department shall give written notice of observed defects with reasonable promptness.

2) **TAXES.** Contractor agrees that, unless otherwise indicated in this Contract, the prices herein do not include federal, state or local sales, or use the tax from which an exemption is available for purposes of this order. Contractor agrees to accept and use tax exemption certificates when supplied by the Department as applicable. In case it shall ever be determined that any tax included in the prices herein was not required to be paid by Contractor, Contractor agrees to notify the Department and to make prompt application for the refund thereof, to take all proper steps to procure the same and when received to pay the same to the Department.

3) **PACKING & SHIPMENT.** Deliveries shall be made as specified without charge for boxing, shipping or storage, unless otherwise specified. Articles shall be suitably packed to secure lowest transportation cost and to conform with the requirements of common carriers and any applicable specifications. Order numbers and symbols must be plainly marked on all invoices, packages, bills of lading and shipping orders. Bill of lading should accompany each invoice. Count or weight shall be final and conclusive on shipments not accompanied by packing lists. Shipping terms F.O.B. destination.

4) **DELIVERY.** Delivery should be strictly in accordance with delivery schedule. Articles fabricated beyond the Department's releases are at Contractor's risk. Contractor shall not make material commitments or production arrangements in excess of the amount or in advance of the time necessary to meet delivery schedule. Unless otherwise specified herein, or receipt of written approval, no deliveries shall be made in advance of the Department's delivery schedule. Neither party shall be liable for excess costs of deliveries or defaults due to causes beyond its control and without its fault or negligence, provided, however, that when the Contractor has reason to believe that the deliveries will not be made as scheduled, written notice setting forth the cause of the anticipated delay will be given immediately to the Department. If the Contractor's delay or default is caused by the delay or default of a subcontractor, such delay or default shall be excusable only if it arose out of causes beyond the control of both Contractor and subcontractor and without fault of negligence or either of them and the articles or services to be furnished were not obtainable from other sources in sufficient time to permit Contractor to meet the required delivery schedule.

5) **REMEDY.** If Contractor's deliveries fail to meet such schedule, the Department, without limiting its other remedies, may direct expedited shipping, and the difference between the expedited routing and the order routing costs shall be paid by the Contractor.

6) **INSPECTION.** All articles and work will be subject to final inspection and approval after delivery, notwithstanding prior payment, it being expressly agreed that payment will not constitute final acceptance. The Department at its option may either reject any article or work not in conformity with the requirements and terms of this order, or re-work the same at Contractor's expense. The Department may reject an entire shipment of similar articles if a sample inspection discloses that ten (10%) percent of the articles inspected are defective. This may be waived if the Contractor agrees to reimburse the Department for the cost of a complete inspection of the articles included in such shipment. Rejected material will be returned at Contractor's risk and expense at the full invoice price plus applicable transportation charges, if any. No replacement of defective articles of work shall be made unless specified by the Department.

7) **BENEFITS AND DEDUCTIONS.** If the Contractor is an individual, the Contractor understands and agrees that he/she is an independent contractor for whom no Federal or State Income Tax will be deducted by the Department, and for whom no retirement benefits, survivor benefit insurance, group life insurance, vacation and sick leave, and similar benefits available to State employees will accrue. The Contractor further

understands that annual information returns, as required by the Internal Revenue Code or State of Maine Income Tax Law, will be filed by the State Controller with the Internal Revenue Service and the State of Maine Bureau of Revenue Services, copies of which will be furnished to the Contractor for his/her Income Tax records.

8) **INDEPENDENT CAPACITY.** In the performance of this Contract, the parties hereto agree that the Contractor, and any agents and employees of the Contractor shall act in the capacity of an independent contractor and not as officers or employees or agents of the State.

9) **DEPARTMENT'S REPRESENTATIVE.** The Contract Administrator shall be the Department's representative during the period of this Contract. He/she has authority to curtail services if necessary to ensure proper execution. He/she shall certify to the Department when payments under the Contract are due and the amounts to be paid. He/she shall make decisions on all claims of the Contractor.

10) **CHANGES IN THE WORK.** The Department may make changes to its order, the Contract Amount will be amended accordingly, these changes will not invalidate this Contract. In no event shall Contractor fail or refuse to continue the performance of its obligations under this Contract because of the inability of the parties to agree on an adjustment or adjustments. Any monetary adjustment or any substantive change in the articles or materials shall be in the form of an amendment, signed by both parties and approved by the MaineDOT. Said amendment must be effective prior to delivery of the articles or materials.

11) **SUBLETTING, ASSIGNMENT OR TRANSFER.** The Contractor shall not sublet, sell, transfer, assign or otherwise dispose of this Contract or any portion thereof, or of its right, title or interest therein, without written request to and written consent of the Contract Administrator. No subcontracts or transfer of Contract shall in any case release the Contractor of its liability under this Contract.

12) **PERSONNEL.** The Contractor warrants that it has not employed or contracted with any company or person, other than for assistance with the normal study and preparation of a proposal, to solicit or secure this Contract and that it has not paid, or agreed to pay, any company or person, other than a bona fide employee working solely for the Contractor, any fee, commission, percentage, brokerage fee, gifts, or any other consideration, contingent upon, or resulting from the award for making this Contract. For breach or violation of this warranty, the Department shall have the right to annul this Contract without liability or, in its discretion to otherwise recover the full amount of such fee, commission, percentage, brokerage fee, gift, or contingent fee.

Maine Department of Transportation
Special Provisions for the Purchase of
Supplies, Materials or Equipment for a Specific Project
Pursuant to 23 MRSA § 52

13) **EQUAL EMPLOYMENT OPPORTUNITY.** During the performance of this Contract, the Contractor agrees as follows:

a) The Contractor shall not discriminate against any employee or applicant for employment relating to this Contract because of race, color, religious creed, sex, national origin, ancestry, age, physical or mental disability, or sexual orientation, unless related to a bona fide occupational qualification. The Contractor shall take affirmative action to ensure that applicants are employed and employees are treated during employment, without regard to their race, color, religion, sex, age, national origin, physical or mental disability, or sexual orientation.

   Such action shall include but not be limited to the following: employment, upgrading, demotions, or transfers; recruitment or recruitment advertising; layoffs or terminations; rates of pay or other forms of compensation; and selection for training including apprenticeship. The Contractor agrees to post in conspicuous places available to employees and applicants for employment notices setting forth the provisions of this nondiscrimination clause.

b) The Contractor shall, in all solicitations or advertising for employees placed by or on behalf of the Contractor relating to this Contract, state that all qualified applicants shall receive consideration for employment without regard to race, color, religious creed, sex, national origin, ancestry, age, physical or mental disability, or sexual orientation.

c) The Contractor shall send to each labor union or representative of the workers with which it has a collective bargaining agreement, or other agreement or understanding, whereby it is furnished with labor for the performance of this Contract a notice to be provided by the contracting agency, advising the said labor union or workers' representative of the Contractor's commitment under this section and shall post copies of the notice in conspicuous places available to employees and applicants for employment.

d) The Contractor shall inform the Department’s Equal Employment Opportunity Coordinator of any discrimination complaints brought to an external regulatory body (Maine Human Rights Commission, EEOC, Office of Civil Rights) against their agency by any individual as well as any lawsuit regarding alleged discriminatory practice.

e) The Contractor shall comply with all aspects of the Americans with Disabilities Act (ADA) in employment and in the provision of service to include accessibility and reasonable accommodations for employees and clients.

f) Contractors and subcontractors with contracts in excess of $50,000 shall also pursue in good faith affirmative action programs.

g) The Contractor shall cause the foregoing provisions to be inserted in any subcontract for any work covered by this Contract so that such provisions shall be binding upon each subcontractor, provided that the foregoing provisions shall not apply to contracts or subcontracts for standard commercial supplies or raw materials.

14) **STATE EMPLOYEES NOT TO BENEFIT.** No individual employed by the State at the time this Contract is executed or any time thereafter shall be admitted to any share or part of this Contract or to any benefit that might arise therefrom directly or indirectly that would constitute a violation of 5 MRSA § 18 or 17 MRSA § 3104. No other individual employed by the State at the time this Contract is executed or any time thereafter shall be admitted to any share or part of this Contract or to any benefit that might arise therefrom directly or indirectly due to his employment by or financial interest in the Contractor or any affiliate of the Contractor. The Contractor shall cause the foregoing provisions to be inserted in any subcontract for any work covered by this Contract so that such provisions shall be binding upon each subcontractor, provided that the foregoing provisions shall not apply to contracts or subcontracts for standard commercial supplies or raw materials.

15) **MATERIAL SAFETY DATA SHEETS.** All manufacturers, importers, suppliers, or distributors of hazardous chemicals doing business in this State must provide a copy of the current material safety data sheet for any hazardous chemical to their direct purchasers of that chemical.

16) **ACCESS TO RECORDS.** The Contractor shall maintain all books, documents, payrolls, papers, accounting records and other evidence pertaining to this Contract and make such materials available at its offices at all reasonable times during the period of this Contract and for such subsequent period as specified under Maine Uniform Accounting and Auditing Practices for Community Agencies (MAAP) rules. The Contractor shall allow inspection of pertinent documents by the Department or any authorized representative of the State of Maine or Federal Government, and shall furnish copies thereof, if requested.

17) **TERMINATION.** The performance of work under the Contract may be terminated by the Department in whole, or in part, whenever the Contract Administrator determines that such termination is in the best interest of the Department including but not limited to the following circumstances:

(a) The Contractor fails to make delivery of articles, or to perform services within the time or time specified herein, or
(b) The Contractor fails to make delivery of articles, or specified materials, or
(c) If Contractor defaults under any other term or condition of this contract, or
(d) If Contractor fails to make progress as to endanger the performance of this contract in accordance with its terms; or,
(e) If Contractor is adjudged bankrupt, or if it makes a general assignment for the benefit of its creditors or if a receiver is appointed on account of its insolvency.

In the event that the Division terminates this agreement in whole or in part pursuant to this paragraph, the Division may procure (articles and services similar to those so terminated) upon such terms and in such manner as deemed appropriate by the Department, and Contractor shall be liable to the Department for any excess cost incurred.

18) **GOVERNMENTAL REQUIREMENTS**. The Contractor warrants and represents that it will comply with all governmental ordinances, laws and regulations.

19) **GOVERNING LAW.** This Contract is pursuant to 23 M.R.S.A. §52, and shall be governed in all respects by the laws, statutes, and regulations of the United States of America and of the State of Maine. Any legal proceeding against the State regarding this Contract shall be brought in State of Maine administrative or judicial forums. The Contractor consents to personal jurisdiction in the State of Maine.

20) **STATE HELD HARMLESS.** The Contractor agrees to indemnify, defend and save harmless the State, its officers, agents and employees from any and all claims, costs, expenses, injuries, liabilities, losses and damages of every kind and description (hereinafter in this paragraph referred to as "claims") resulting from or arising out of the performance of this Contract by the Contractor, its employees, agents, or subcontractors. This indemnification includes all legal costs and other expenses of defense against any asserted claims to which this indemnification applies. This indemnification does not extend to a claim that results solely and directly from (i) the Department's negligence or unlawful act, or (ii) action by the Contractor taken in reasonable reliance upon an instruction or direction given by an authorized person acting on behalf of the Department in accordance with this Contract.

21) **NOTICE OF CLAIMS**. The Contractor shall give the Department Contract Administrator immediate notice in writing of any legal action or suit filed related in any way to the Contract or which may affect the performance of duties under the Contract, and prompt notice of any claim made against the Contractor by any

subcontractor which may result in litigation related in any way to the Contract or which may affect the performance of duties under the Contract.

22) **NON-APPROPRIATION.** Notwithstanding any other provision of this Contract, if the State does not receive sufficient funds to fund this Contract and other obligations of the State, if funds are de-appropriated, or if the State does not receive legal authority to expend funds from the Maine State Legislature or Maine courts, then the State is not obligated to make payment under this Contract.

23) **SEVERABILITY.** The invalidity or unenforceability of any particular provision or part thereof of this Contract shall not affect the remainder of said provision or any other provisions, and this Contract shall be construed in all respects as if such invalid or unenforceable provision or part thereof had been omitted.

24) **FORCE MAJEURE.** The Department may, at its discretion, excuse the performance of an obligation by a party under this Contract in the event that performance of that obligation by that party is prevented by an act of God, act of war, riot, fire, explosion, flood or other catastrophe, sabotage, severe shortage of fuel, power or raw materials, change in law, court order, national defense requirement, or strike or labor dispute, provided that any such event and the delay caused thereby is beyond the control of, and could not reasonably be avoided by, that party. The Department may, at its discretion, extend the time period for performance of the obligation excused under this section by the period of the excused delay together with a reasonable period to reinstate compliance with the terms of this Contract.

25) **DEBARMENT, SUSPENSION, INELIGIBILITY, OR EXCLUSION.** By signing the Contract, the Contractor certifies that it has not been debarred, suspended, declared ineligible or voluntarily excluded from contracts by the Federal Government or any state agency within the last 3 years.

26) **SET-OFF RIGHTS.** The State shall have all of its common law, equitable and statutory rights of set-off. These rights shall include, but not be limited to, the State's option to withhold for the purposes of set-off any monies due to the Contractor under this Contract up to any amounts due and owing to the State with regard to this Contract, any other Contract, any other Contract with any State department or agency, including any Contract for a term commencing prior to the term of this Contract, plus any amounts due and owing to the State for any other reason including, without limitation, tax delinquencies, fee delinquencies or monetary penalties relative thereto. The State shall exercise its set-off rights in accordance with normal State practices including, in cases of set-off pursuant to an audit, the finalization of such audit by the State agency, its representatives, or the State Controller.

Appendix C

SPECIAL PROVISION
SECTION 534
PRECAST STRUCTURAL CONCRETE
(Precast Structural Concrete Arches, Box Culverts)
(Design, Manufacture and Furnish)

534.10 Description The Contractor shall design, manufacture and furnish, precast structural concrete structures, arches, box culverts or extensions and associated wings, headwalls, and appurtenances, in accordance with the contract documents.

534.20 Materials Structural precast elements for the arch or box culvert and associated precast elements shall meet the requirements of the following Subsection:

Structural Precast Concrete Units	712.061

Grout and concrete patching material shall be one of the products listed on the Department's list of prequalified materials, unless otherwise approved by the Department.

534.30 Design Requirements The Contractor shall design the precast structural concrete structure in accordance with the AASHTO Standard Specifications for Highway Bridges, current edition, by either the Load Factor Design (LFD) or Load and Resistance Factor Design (LRFD) method. The design live load shall be as follows: MS-22.5 (HS-25) for LFD method, *modified HL-93 Strength I for LRFD method. *(modify HL-93 by increasing all wheel loads by a factor of 1.25)

The Contractor shall submit design calculations and shop drawings for the precast structure to the Department for approval. A Registered Professional Engineer, licensed in accordance with State of Maine laws, shall sign and seal all design calculations and drawings. The Contractor shall submit a bridge rating on the Department's Standard Bridge Rating Summary Sheet with the design calculations. Drawings shall conform with Section 105.7 - Working Drawings.

The Contractor shall submit the following items for review by the Resident at least ten working days prior to production:

A) The name and location of the manufacturer.
B) Method of manufacture and material certificates.
C) Description of method of handling, storing, and transporting, the members.
D) Shop Drawings with the following minimum details:

1) Fully dimensioned views showing the geometry of the members, including all projections, recesses, notches, openings, block outs, and keyways.
2) Details and bending schedules of reinforcing steel including the size, spacing, and location. Reinforcing provided under lifting devices shall be shown in detail.
3) Details and locations of all items to be embedded.
4) Total mass (weight) of each member.

Appendix C

534.40 Construction Requirements The applicable provisions of Subsection 535.10 - Forms and Casting Beds and Subsection 535.20 – Finishing Concrete and Repairing Defects shall be met.

Manufacture of Precast Units The internal dimensions shall not vary by more than 1 percent from the design dimensions or 38 mm [1 ½ in], whichever is less. The haunch dimensions shall not vary by more than 19 mm [¾ in] from the design dimension. The dimension of the legs shall not vary by more than 6 mm [¼ in] from the dimension shown on the approved shop drawings.

The slab and wall thickness shall not be less than the design thickness by more than 6 mm [¼ in]. A thickness greater than the design thickness shall not be cause for rejection.

Variations in laying lengths of two opposite surfaces shall not be more than 15 mm [⅝ in] in any section, except where beveled ends for laying of curves are specified.

The under-run in length of any section shall not be more than 12 mm [½ in].

The cover of concrete over the outside circumferential reinforcement shall be 50 mm [2 in] minimum. The concrete cover over the inside reinforcement shall be 38 mm [1 ½ in] minimum. The clear distance of the end of circumferential wires shall not be less than 25 mm [1 in] or more than 50 mm [2 in] from the end of the sections. Reinforcement shall be single or multiple layers of welded wire fabric or a single layer of deformed billet steel bars.

Welded wire fabric shall meet the space requirements and contain sufficient longitudinal wires extending through the section to maintain the shape and position of the reinforcement. Longitudinal distribution reinforcement may be welded wire fabric or deformed billet steel bars which meet the spacing requirements. The ends of the longitudinal distribution reinforcement shall be not more than 75 mm [3 in] from the ends of the sections.

The inside circumferential reinforcing steel for the haunch radii or fillet shall be bent to match the radii or fillets of the forms.

Tension splices in the reinforcement will not be permitted. For splices other than tension splices, the overlap shall be a minimum of 300 mm [12 in] for welded wire fabric or billet steel bars. The spacing center to center of the circumferential wires in a wire fabric sheet shall be not less than 50 mm [2 in] or more than 100 mm [4 in]. For the wire fabric, the spacing center to center of the longitudinal wires shall not be more than 200 mm [8 in]. The spacing center to center of the longitudinal distribution steel for either line of reinforcing in the top slab shall be not more than 375 mm [15 in].

The members shall be free of fractures. The ends of the members shall be normal to the walls and centerline of the section, within the limits of variation provided, except where beveled ends are specified. The surfaces of the members shall be a smooth steel form or troweled

surface finish, unless a form liner is specified. The ends and interior of the assembled structure shall make a continuous line of members with a smooth interior surface.

Defects which may cause rejection of precast units include the following:

1) Any discontinuity (crack or rock pocket etc.) of the concrete which could allow moisture to reach the reinforcing steel.
2) Rock pockets or honeycomb over 4000 mm² [6 in²] in area or over 25 mm [1 in] deep.
3) Edge or corner breakage exceeding 300 mm [12 in] in length or 25 mm [1 in] in depth.
4) Extensive fine hair cracks or checks.
5) Any other defect that clearly and substantially impacts the quality, durability, or maintainability of the structure as measured by accepted industry standards.

The Contractor shall store and transport members in a manner to prevent cracking or damage. The Contractor shall not place precast members in an upright position until a compressive strength of at least 30 MPa [4350 psi] is attained.

Shipment of Precast Units The Contractor shall not ship precast members until sufficient strength has been attained to withstand shipping, handling and erection stresses without cracking, deformation, or spalling (but in no case less than 30 MPa [4350 psi].

The Contractor shall set precast members on 12 mm [½ in] neoprene pads during shipment to prevent damage to the section legs. The Contractor shall repair any damage to precast members resulting from shipping or handling by saw cutting a minimum of 12 mm [½ in] deep around the perimeter of the damaged area and placing a polymer-modified cementitious patching material.

534.50 Method of Measurement The Department will measure Precast Structural Concrete Arch or Box Culvert for payment per Lump Sum each, complete, delivered and accepted. The Department will measure Outlet and Inlet Box Extensions as one box for payment as one lump sum each box, complete, delivered and accepted.

534.60 Basis of Payment The Department will pay for the accepted quantity of Precast Structural Concrete Arch or Box Culvert at the Contract Lump Sum price, such payment being full compensation for all labor, equipment, materials, professional services, and incidentals for furnishing the precast concrete elements and accessories. Falsework, reinforcing steel, jointing tape and grout are incidental to the Lump Sum pay item. Pay adjustments for quality level will not be made for precast concrete.

Payment will be made under:

Pay Item		Pay Unit
534.70	Precast Structural Concrete Arch	Lump Sum
534.71	Precast Concrete Box Culvert	Lump Sum