SERVICE AND CONSTRUCTION

POLAND
CONCRETE SLAB
20125.55

2013

MAINTENANCE & OPERATIONS

STATE PROJECT

BIDDING INSTRUCTIONS

1. Complete the bid forms with pen and ink.

2. The following are to be completed and returned with the bid:

    a. A copy of the Notice to Contractors
    b. the completed Acknowledgement of Bid Amendments form
    c. the completed Schedule of Items
    d. two (2) copies of the completed and signed Contract Agreement, Offer & Award form
    e. The completed Contractor Information Sheet
    f. Any other certifications or Bid requirements listed in the Bid Documents as due by Bid opening

3. Include prices for all items in the Schedule of Items.

4. For security and other reasons, all Bid Packages which are mailed or delivered, shall be provided in double (one envelope inside the other) envelopes. The *Inner Envelope* shall have the following information provided on it:

    Bid Enclosed - Do Not Open
    Title:
    Town:
    Date of Bid Opening:
    Name of Contractor with mailing address and telephone number:

    In Addition to the usual address information, the *Outer Envelope* should have written or typed on it:

    Double Envelope: Bid Enclosed
    Title:
    Town:
    Date of Bid Opening:
    Name of Contractor:

    Hand-carried Bids may be in one envelope, and should be marked with the following information:

    Bid Enclosed: Do Not Open
    Title:
    Town:
    Name of Contractor:

5. If a paper Bid is to be hand carried, deliver directly to the Reception Desk using the "Public Entrance" which is located on the Capitol Street side of the DOT Headquarters Building in Augusta. If a paper Bid is to be sent express, "FedEx First Overnight" delivery is suggested as the package is delivered directly to the DOT Headquarters Building, Mailroom, in Augusta located at 24 Child Street in Augusta. Other means, such as U.S. Postal's Service Express Mail has proven not to be reliable. If a paper bid is to be mailed, the mailing address is Maine Department of Transportation, 16 State House Station, Augusta, ME 04333-0016.

6. If you need further information regarding Bid preparation, call the DOT Contracts Section at (207) 624-3410. For complete bidding requirements, refer to Section 102 of the Maine Department of Transportation, Standard Specification, Revision of December 2002.

January 19, 2012
Supersedes September 09, 2011

NOTICE

The Maine Department of Transportation is attempting to improve the way Bid Amendments/Addendums are handled, and allow for an electronic downloading of bid packages from our website, while continuing to maintain an optional planholders list.

Prospective bidders, subcontractors or suppliers who wish to download a copy of the bid package and receive a courtesy notification of project specific bid amendments, must provide an email address to Diane Barnes or David Venner at the MDOT Contracts mailbox at: MDOT.contracts@maine.gov. Each bid package will require a separate request.

Additionally, interested parties will be responsible for reviewing and retrieving the Bid Amendments from our web site, and acknowledging receipt and incorporating those Bid Amendments in their bids using the Acknowledgement of Bid Amendment Form.

The downloading of bid packages from the MDOT website is not the same as providing an electronic bid to the Department. Electronic bids must be submitted via http://www.BIDX.com. For information on electronic bidding contact Patrick Corum at patrick.corum@maine.gov , Rebecca Snowden at rebecca.snowden@maine.gov or Diane Barnes at diane.barnes@maine.gov.

NOTICE

Bidders:

Please use the attached “Request for Information” form when faxing questions and comments concerning specific Contracts that have been Advertised for Bid. Include additional numbered pages as required. Questions are to be faxed to the number listed in the Notice to Contractors. This is the only allowable mechanism for answering Project specific questions. Maine DOT will not be bound to any answers to Project specific questions received during the Bidding phase through other processes.

State of Maine
Department of Transportation

REQUEST FOR INFORMATION

Date _____ Time _____

Information Requested: **PIN:** _____ **Town(s):** _____

_____

_____

_____

_____

_____

_____

_____

_____

_____

_____

_____

_____

Request by: _____ **Phone: (_____)**_____
Bid Date: _____ **Fax: (_____)**_____

Complete top portion of form and transmit to the number listed in the Notice to Contractors

RFI No: _____ **RFI received:** _____

Response:_____

_____

_____

_____

_____

_____

_____

_____

_____

_____

_____

Response By:_____ Date: _____

Vendor Registration

Prospective Bidders must register as a vendor with the Department of Administrative & Financial Services if the vendor is awarded a contract. Vendors will not be able to receive payment without first being registered. Vendors/Contractors will find information and register through the following link –
http://www.maine.gov/purchases/venbid/index.shtml

CONTRACTOR INFORMATION

_____ _____
(Date) **(Signature)**

_____
(Name and Title Printed)

_____
(Contractor Name)

_____
Vendor Customer Number

Mailing Address:

_____
Street/PO Box **City** **State** **Zip**

_____ _____ _____
phone **fax** **email**

Sole Proprietorship - Partnership - (circle one)

Corporation – Company - Association - Estate - (circle one)

STATE OF MAINE DEPARTMENT OF TRANSPORTATION
NOTICE TO CONTRACTORS

Sealed Bids addressed to the Maine Department of Transportation, Augusta, Maine 04333 and endorsed on the wrapper "Bids for **Poland Slab** in the town of **Poland** will be received from contractors at the Reception Desk, Maine DOT Building, Capitol Street, Augusta, Maine, until 11:00 o'clock A.M.(prevailing time) on August 28, 2013 and at that time and place publicly opened and read. Bids will be accepted from all bidders. The lowest responsive bidder must demonstrate successful completion of projects of similar size and scope to be considered for the award of this contract.

Description: WIN 20125.55

Location: In Androscoggin County, project is located on the Route 26, 1341 Maine Street, Poland.

Outline of Work: Labor, equipment and Materials for slab for garage expansion at Poland Maintenance Facility.

For general information regarding Bidding and Contracting procedures, contact George Macdougall at (207) 624-3410. Our webpage at http://www.maine.gov/mdot/contractors/ contains a copy of the schedule of items, Plan Holders List, written portions of bid amendments (not drawings), and bid results. For Project-specific information fax all questions to **Gail MacMunn** at (207) 624-3431. Questions received after 12:00 noon of Friday prior to bid date will not be answered. Bidders shall not contact any other Departmental staff for clarification of Contract provisions, and the Department will not be responsible for any interpretations so obtained. TTY users call Maine Relay 711.

Plans, specifications and bid forms may be seen at the Maine DOT Building in Augusta, Maine and at the Department of Transportation's Regional Office in Augusta. They may be purchased from the Department between the hours of 8:00 a.m. to 4:30 p.m. by cash, credit card (Visa/Mastercard) or check payable to Treasurer, State of Maine sent to Maine Department of Transportation, Attn.: Mailroom, 16 State House Station, Augusta, Maine 04333-0016. They also may be purchased by telephone at (207) 624-3536 between the hours of 8:00 a.m. to 4:30 p.m. Bid Book $10 ($13 by mail), payment in advance, all non-refundable.

There will be no bid bonds, performance bonds or payment bond required.

This Contract is subject to all applicable State Laws.

All work shall be governed by "State of Maine, Department of Transportation, Standard Specifications, Revision of December 2002", price $10 [$13 by mail], and Standard Details, Revision of December 2002, price $20 [$25 by mail]. They also may be purchased by telephone at (207) 624-3536 between the hours of 8:00 a.m. to 4:30 p.m. Standard Detail updates can be found at http://www.maine.gov/mdot/contractors/publications/ .

The right is hereby reserved to the Maine DOT to reject any or all bids.

Augusta, Maine
August 14, 2013

Clifton Curtis
Asst. Highway Maintenance Engineer
Bureau of Maintenance & Operations

Poland
20125.55
Concrete Slab
April 14, 2011
Supersedes August 3, 2004

SPECIAL PROVISION 102.7.3
ACKNOWLEDGMENT OF BID AMENDMENTS

With this form, the Bidder acknowledges its responsibility to check for all Amendments to the Bid Package. For each Project under Advertisement, Amendments are located at http://www.maine.gov/mdot/contractors/ . It is the responsibility of the Bidder to determine if there are Amendments to the Project, to download them, to incorporate them into their Bid Package, and to reference the Amendment number and the date on the form below. The Maine DOT will not post Bid Amendments any later than noon the day before Bid opening without individually notifying all the planholders.

Amendment Number	Date

The Contractor, for itself, its successors and assigns, hereby acknowledges that it has received all of the above referenced Amendments to the Bid Package.

CONTRACTOR

_____
Date

_____
Signature of authorized representative

_____
(Name and Title Printed)

BIDDERS MUST ENTER BID AMOUNT

MAINE DEPARTMENT OF TRANSPORTATION

SCHEDULE OF ITEMS

CONTRACTOR:
_____

ITEM DESCRIPTION	APPROX. QUANTITY AND UNITS	TOTAL BID AMOUNT
ALL LABOR, EQUIPMENT AND MATERIALS FOR SLAB FOR GARAGE EXPANSION AT POLAND MAINTENANCE LOT	1 LUMP SUM	$

Bid price must be quoted as specified on this worksheet. The Department will reject bids if any one of the following occurs:

a) the Bid is not Delivered to the precise location and by the precise time set forth in the Notice to Contractors or any applicable Bid Amendment,
b) the Bid is not signed
c) the unit price/lump sum price for any item is not provided or is unreadable
d) the Bid contains any handwritten changes to the bid documents such as: additional charges for transportation, supplemental fees or surcharges

The Bidder will have no opportunity to cure the above Non-curable Bid Defects. For clarification, questions, comments/recommendations use the "Request for Information" form as directed in the Bid Book instructions. For a related provision see Standard Specification, Section 102.11 – Bid Responsiveness.

Contract Administrator The contract administrator for this contract will be:

Name: Travis Moore
Title: Data Manager
Address: Maine Department of Transportation
P O Box 358
Scarborough, Maine 04070-0358

The contractor shall contact the Contract Administrator in order to coordinate the work. The Contractor shall submit invoices to the Contract Administrator as described in this contract.

CONTRACT AGREEMENT, OFFER & AWARD

AGREEMENT made on the date last signed below, by and between the State of Maine, acting through and by its Department of Transportation (Department), an agency of state government with its principal administrative offices located at Child Street, Augusta, Maine, with a mailing address at 16 State House Station, Augusta, Maine 04333-0016, and **_____(Contractor)_** a corporation or other legal entity organized under the laws of the State of **_____**, with its principal place of business located at **_____ _____.**

The Department and the Contractor, in consideration of the mutual promises set forth in this Agreement (the "Contract"), hereby agree as follows:

A. The Work.

The Contractor agrees to complete all Work as specified or indicated in the Contract including Extra Work in conformity with the Contract, WIN No. **20125.55**, for the **_Slab for the Garage Expansion _**in the town of **Poland**, County of **Androscoggin**, Maine. The Work includes construction, maintenance during construction, warranty as provided in the Contract, and other incidental work.

The Contractor shall be responsible for furnishing all supervision, labor, equipment, tools supplies, permanent materials and temporary materials required to perform the Work including construction quality control including inspection, testing and documentation, all required documentation at the conclusion of the project, warranting its work and performing all other work indicated in the Contract.

The Department shall have the right to alter the nature and extent of the Work as provided in the Contract; payment to be made as provided in the same.

B. Time.

The Contractor agrees to complete all Work, except warranty work, on or before **September 27, 2013.** Further, the Department may deduct from moneys otherwise due the Contractor, not as a penalty, but as Liquidated Damages in accordance with Sections 107.7 and 107.8 of the State of Maine Department of Transportation Standard Specifications, Revision of December 2002 and related Special Provisions.

C. Price.

The quantities given in the Schedule of Items of the Bid Package will be used as the basis for determining the original Contract amount and that the amount of this offer is

$_ _____.

D. Contract.

This Contract, which may be amended, modified, or supplemented in writing only, consists of the Contract documents as defined in the Plans, Standard Specifications, Revision of December 2002, Standard Details Revision of December 2002 as updated through advertisement, Supplemental Specifications, Special Provisions, Contract Agreement; and Contract Bonds. It is agreed and understood that this Contract will be governed by the documents listed above.

E. Certifications.

By signing below, the Contractor hereby certifies that to the best of the Contractor's knowledge and belief:

1. All of the statements, representations, covenants, and/or certifications required or set forth in the Bid and the Bid Documents, including those in the Federal Contract Provisions Supplement, and the Contract are still complete and accurate as of the date of this Agreement.

2. The Contractor knows of no legal, contractual, or financial impediment to entering into this Contract.

3. The person signing below is legally authorized by the Contractor to sign this Contract on behalf of the Contractor and to legally bind the Contractor to the terms of the Contract.

F. Offer.

The undersigned, having carefully examined the site of work, the Plans, Standard Specifications Revision of December 2002, Standard Details Revision of December 2002 as updated through advertisement, Supplemental Specifications, Special Provisions, Contract Agreement; and Contract Bonds contained herein for construction of: WIN No. **20125.55**, for the **_Slab for the Crew Quarters Expansion _** in the town of **Poland**, State of Maine, on which bids will be received until the time specified in the "Notice to Contractors" do(es) hereby bid and offer to enter into this contract to supply all the materials, tools, equipment and labor to construct the whole of the Work

in strict accordance with the terms and conditions of this Contract at the unit prices in the attached "Schedule of Items".

The Offeror agrees to perform the work required at the price specified above and in accordance with the bids provided in the attached "Schedule of Items" in strict accordance with the terms of this solicitation, and to provide the appropriate insurance and bonds if this offer is accepted by the Government in writing.

As Offeror also agrees:

First: To do any extra work, not covered by the attached "Schedule of Items", which may be ordered by the Resident, and to accept as full compensation the amount determined upon a "Force Account" basis as provided in the Standard Specifications, Revision of December 2002, and as addressed in the contract documents.

Second: To begin the Work as stated in Section 107.2 of the Standard Specifications Revision of December 2002 and complete the Work within the time limits given in the Special Provisions of this Contract.

Third: That this offer shall remain open for 30 calendar days after the date of opening of bids.

Fourth: The Bidder hereby certifies, to the best of its knowledge and belief that: the Bidder has not, either directly or indirectly, entered into any agreement, participated in any collusion, or otherwise taken any action in restraint of competitive bidding in connection with its bid, and its subsequent contract with the Department.

IN WITNESS WHEREOF, the Contractor, for itself, its successors and assigns, hereby execute two duplicate originals of this Agreement and thereby binds itself to all covenants, terms, and obligations contained in the Contract Documents.

CONTRACTOR

_____	_____
Date	(Signature of Legally Authorized Representative of the Contractor)
_____	_____
Witness	(Name and Title Printed)

G. Award.

Your offer is hereby accepted. This award consummates the Contract, and the documents referenced herein.

MAINE DEPARTMENT OF TRANSPORTATION

_____ _____

Date By: (Name and Title Printed)

Maintenance & Operations

_____

Witness

CONTRACT AGREEMENT, OFFER & AWARD

AGREEMENT made on the date last signed below, by and between the State of Maine, acting through and by its Department of Transportation (Department), an agency of state government with its principal administrative offices located at Child Street, Augusta, Maine, with a mailing address at 16 State House Station, Augusta, Maine 04333-0016, and **_____(Contractor)__** a corporation or other legal entity organized under the laws of the State of **_____**, with its principal place of business located at **_____ _____.**

The Department and the Contractor, in consideration of the mutual promises set forth in this Agreement (the "Contract"), hereby agree as follows:

A. The Work.

The Contractor agrees to complete all Work as specified or indicated in the Contract including Extra Work in conformity with the Contract, WIN No. **20125.55**, for the **_Slab for the Garage Expansion _** in the town of **Poland**, County of **Androscoggin**, Maine. The Work includes construction, maintenance during construction, warranty as provided in the Contract, and other incidental work.

The Contractor shall be responsible for furnishing all supervision, labor, equipment, tools supplies, permanent materials and temporary materials required to perform the Work including construction quality control including inspection, testing and documentation, all required documentation at the conclusion of the project, warranting its work and performing all other work indicated in the Contract.

The Department shall have the right to alter the nature and extent of the Work as provided in the Contract; payment to be made as provided in the same.

B. Time.

The Contractor agrees to complete all Work, except warranty work, on or before **September 27, 2013.** Further, the Department may deduct from moneys otherwise due the Contractor, not as a penalty, but as Liquidated Damages in accordance with Sections 107.7 and 107.8 of the State of Maine Department of Transportation Standard Specifications, Revision of December 2002 and related Special Provisions.

C. Price.

The quantities given in the Schedule of Items of the Bid Package will be used as the basis for determining the original Contract amount and that the amount of this offer is

$_ _____.

D. Contract.

This Contract, which may be amended, modified, or supplemented in writing only, consists of the Contract documents as defined in the Plans, Standard Specifications, Revision of December 2002, Standard Details Revision of December 2002 as updated through advertisement, Supplemental Specifications, Special Provisions, Contract Agreement; and Contract Bonds. It is agreed and understood that this Contract will be governed by the documents listed above.

E. Certifications.

By signing below, the Contractor hereby certifies that to the best of the Contractor's knowledge and belief:

1. All of the statements, representations, covenants, and/or certifications required or set forth in the Bid and the Bid Documents, including those in the Federal Contract Provisions Supplement, and the Contract are still complete and accurate as of the date of this Agreement.

2. The Contractor knows of no legal, contractual, or financial impediment to entering into this Contract.

3. The person signing below is legally authorized by the Contractor to sign this Contract on behalf of the Contractor and to legally bind the Contractor to the terms of the Contract.

F. Offer.

The undersigned, having carefully examined the site of work, the Plans, Standard Specifications Revision of December 2002, Standard Details Revision of December 2002 as updated through advertisement, Supplemental Specifications, Special Provisions, Contract Agreement; and Contract Bonds contained herein for construction of: WIN No. **20125.55**, for the **_Slab for the Crew Quarters Expansion _** in the town of **Poland**, State of Maine, on which bids will be received until the time specified in the "Notice to Contractors" do(es) hereby bid and offer to enter into this contract to supply all the materials, tools, equipment and labor to construct the whole of the Work

in strict accordance with the terms and conditions of this Contract at the unit prices in the attached "Schedule of Items".

The Offeror agrees to perform the work required at the price specified above and in accordance with the bids provided in the attached "Schedule of Items" in strict accordance with the terms of this solicitation, and to provide the appropriate insurance and bonds if this offer is accepted by the Government in writing.

As Offeror also agrees:

First: To do any extra work, not covered by the attached "Schedule of Items", which may be ordered by the Resident, and to accept as full compensation the amount determined upon a "Force Account" basis as provided in the Standard Specifications, Revision of December 2002, and as addressed in the contract documents.

Second: To begin the Work as stated in Section 107.2 of the Standard Specifications Revision of December 2002 and complete the Work within the time limits given in the Special Provisions of this Contract.

Third: That this offer shall remain open for 30 calendar days after the date of opening of bids.

Fourth: The Bidder hereby certifies, to the best of its knowledge and belief that: the Bidder has not, either directly or indirectly, entered into any agreement, participated in any collusion, or otherwise taken any action in restraint of competitive bidding in connection with its bid, and its subsequent contract with the Department.

IN WITNESS WHEREOF, the Contractor, for itself, its successors and assigns, hereby execute two duplicate originals of this Agreement and thereby binds itself to all covenants, terms, and obligations contained in the Contract Documents.

CONTRACTOR

_____	_____
Date	(Signature of Legally Authorized Representative of the Contractor)
_____	_____
Witness	(Name and Title Printed)

G. Award.

Your offer is hereby accepted. This award consummates the Contract, and the documents referenced herein.

MAINE DEPARTMENT OF TRANSPORTATION

_____ _____

Date By: (Name and Title Printed)

Maintenance & Operations

_____

Witness

CONTRACT AGREEMENT, OFFER & AWARD

AGREEMENT made on the date last signed below, by and between the State of Maine, acting through and by its Department of Transportation (Department), an agency of state government with its principal administrative offices located at Child Street, Augusta, Maine, with a mailing address at 16 State House Station, Augusta, Maine 04333-0016, and ***(Name of firm bidding the job)*** **(Contractor)** a corporation or other legal entity organized under the laws of the State of ***(State)***, with its principal place of business located at ***(Address of firm bidding the job)***.

The Department and the Contractor, in consideration of the mutual promises set forth in this Agreement (the "Contract"), hereby agree as follows:

A. The Work.

The Contractor agrees to complete all Work as specified or indicated in the Contract including Extra Work in conformity with the Contract, WIN No. **20125.55**, for the **Slab for the Garage Expansion** in the town of **Poland**, County of **Androscoggin**, Maine. The Work includes construction, maintenance during construction, warranty as provided in the Contract, and other incidental work.

The Contractor shall be responsible for furnishing all supervision, labor, equipment, tools supplies, permanent materials and temporary materials required to perform the Work including construction quality control including inspection, testing and documentation, all required documentation at the conclusion of the project, warranting its work and performing all other work indicated in the Contract.

The Department shall have the right to alter the nature and extent of the Work as provided in the Contract; payment to be made as provided in the same.

B. Time.

The Contractor agrees to complete all Work, except warranty work, on or before **September 27, 2013.** Further, the Department may deduct from moneys otherwise due the Contractor, not as a penalty, but as Liquidated Damages in accordance with Sections 107.7 and 107.8 of the State of Maine Department of Transportation Standard Specifications, Revision of December 2002 and related Special Provisions.

SAMPLE

C. Price.

The quantities given in the Schedule of Items of the Bid Package will be used as the basis for determining the original Contract amount and that the amount of this offer is

$_____.

D. Contract.

This Contract, which may be amended, modified, or supplemented in writing only, consists of the Contract documents as defined in the Plans, Standard Specifications, Revision of December 2002, Standard Details Revision of December 2002 as updated through advertisement, Supplemental Specifications, Special Provisions, Contract Agreement; and Contract Bonds. It is agreed and understood that this Contract will be governed by the documents listed above.

E. Certifications.

By signing below, the Contractor hereby certifies that to the best of the Contractor's knowledge and belief:

1. All of the statements, representations, covenants, and/or certifications required or set forth in the Bid and the Bid Documents, including those in the Federal Contract Provisions Supplement, and the Contract are still complete and accurate as of the date of this Agreement.

2. The Contractor knows of no legal, contractual, or financial impediment to entering into this Contract.

3. The person signing below is legally authorized by the Contractor to sign this Contract on behalf of the Contractor and to legally bind the Contractor to the terms of the Contract.

F. Offer.

The undersigned, having carefully examined the site of work, the Plans, Standard Specifications Revision of December 2002, Standard Details Revision of December 2002 as updated through advertisement, Supplemental Specifications, Special Provisions, Contract Agreement; and Contract Bonds contained herein for construction of: WIN No. **20125.55**, for the **_Slab for the Crew Quarters Expansion_** in the town of **Poland**, State of Maine, on which bids will be received until the time specified in the "Notice to Contractors" do(es) hereby bid and offer to enter into this contract to supply all the materials, tools, equipment and labor to construct the whole of the Work

SAMPLE

in strict accordance with the terms and conditions of this Contract at the unit prices in the attached "Schedule of Items".

The Offeror agrees to perform the work required at the price specified above and in accordance with the bids provided in the attached "Schedule of Items" in strict accordance with the terms of this solicitation, and to provide the appropriate insurance and bonds if this offer is accepted by the Government in writing.

As Offeror also agrees:

First: To do any extra work, not covered by the attached "Schedule of Items", which may be ordered by the Resident, and to accept as full compensation the amount determined upon a "Force Account" basis as provided in the Standard Specifications, Revision of December 2002, and as addressed in the contract documents.

Second: To begin the Work as stated in Section 107.2 of the Standard Specifications Revision of December 2002 and complete the Work within the time limits given in the Special Provisions of this Contract.

Third: That this offer shall remain open for 30 calendar days after the date of opening of bids.

Fourth: The Bidder hereby certifies, to the best of its knowledge and belief that: the Bidder has not, either directly or indirectly, entered into any agreement, participated in any collusion, or otherwise taken any action in restraint of competitive bidding in connection with its bid, and its subsequent contract with the Department.

IN WITNESS WHEREOF, the Contractor, for itself, its successors and assigns, hereby execute two duplicate originals of this Agreement and thereby binds itself to all covenants, terms, and obligations contained in the Contract Documents.

	CONTRACTOR
(Date Here)	***(Sign Here)***
_____	_____
Date	(Signature of Legally Authorized Representative of the Contractor)
(Witness Sign Here)	***(Print Contractor's name & Title)***
_____	_____
Witness	(Name and Title Printed)

SAMPLE

G. Award.

Your offer is hereby accepted. This award consummates the Contract, and the documents referenced herein.

MAINE DEPARTMENT OF TRANSPORTATION

_____ _____

Date By: (Name and Title Printed)

Maintenance & Operations

_____

Witness

SAMPLE

GENERAL NOTES

1) All waste material not used on the project shall be disposed of in acceptable waste areas and reviewed by the Resident. Grading, seeding, and mulching of waste areas shall be considered incidental.

2) No existing drainage shall be abandoned, removed or plugged without prior approval of the Resident.

3) Any damage to the slopes caused by the contractor's equipment, personnel, or operation shall be repaired to the satisfaction of the resident. All work, equipment, and materials required to make repairs shall be at the contractor's expense.

4) All work shall be done in accordance with the Maine Department of Transportation's Best Management Practices for Erosion & Sedimentation Control, February, 2008.

March 14, 2007
Supersedes March 3, 1966

Non-federal Projects Only

NOTICE TO CONTRACTORS - PREFERRED EMPLOYEES

Sec. 1303. Public Works; minimum wage

In the employment of laborers in the construction of public works, including state highways, by the State or by persons contracting for the construction, preference must first be given to citizens of the State who are qualified to perform the work to which the employment relates and, if they can not be obtained in sufficient numbers, then to citizens of the United States. Every contract for public works construction must contain a provision for employing citizens of this State or the United States. The hourly wage and benefit rate paid to laborers employed in the construction of public works, including state highways, may not be less than the fair minimum rate as determined in accordance with section 1308. Any contractor who knowingly and willfully violates this section is subject to a fine of not less than $250 per employee violation. Each day that any contractor employs a laborer at less than the wage and benefit minimum stipulated in this section constitutes a separate violation of this section. [1997, c. 757, §1 (amd).]

SPECIAL PROVISION

STRUCTURAL CONCRETE

Poland

Description This work shall consist of forming, furnishing and placing all cast-in-place concrete as shown on the plans and the grade provided and in accordance with contract documents. This work includes all concrete, steel reinforcement, form work, anchor bolts, sleeves, vapor barriers, rigid insulation and any other accessories necessary to complete the work.

This work shall include all excavation, filling, backfilling and removal of materials as shown on the plans and the grade provided and in accordance with contract documents.

Location The Maine DOT Maintenance Lot at 1341 Maine Street, Poland, Maine

Contract Time

1. The contractor will be allowed to commence work anytime provided that all required submittals have been received and approved by MaineDOT.
2. The completion date for this cast-in-place concrete work is September 27, 2013.

Method of Measurement The Concrete satisfactorily placed and accepted will be measured as one lump sum.

Basis of Payment The accepted item for cast-in-place concrete will be paid for at the Contract lump sum price complete in place and accepted which shall be full compensation for all labor, equipment, materials, including furnishing and placing of reinforcing steel, anchor bolts, sleeves, vapor barriers, rigid insulation, excavation, backfill, aggregate and grading of the aggregate, and all incidental items necessary to complete the work.

Quality Assurance

1. Testing is not required of the contractor, the owner reserves the right to test the concrete as they seem fit. The owner may reject the concrete if test results returned are not in accordance with this specification and the approved design

Concrete

A. Cement
   1. Cement shall be Portland Cement conforming to ASTM C-150 for Type I, II or III as specified.
B. Aggregates
   1. Concrete aggregate shall conform to ASTM Specification C-33. All aggregates shall be free from frozen materials and other impurities.
   2. Fine aggregates shall be clean sand free from clay, loam and other deleterious substances.
   3. Coarse aggregate shall be durable, clean, crushed stone or gravel, free from clay, loam and other deleterious substances.
C. Water
   1. Water shall be clean and potable containing no deleterious impurities which may be harmful to concrete or accessories.

E. Admixtures
   1. Prohibited admixture: Calcium chloride, thiocyanates or admixture containing more than 0.05% chloride ions are not permitted.
   2. All admixtures products shall be listed on the Maine DOT Qualified Products List. (http://www.maine.gov/mdot/tr/qpl/index.htm).
   3. Certification: Written conformance to the above mentioned requirements and the chloride ion content of the admixture will be required from the admixture manufacturer prior to mix design review by the Department.

Concrete Proportioning

A. Concrete shall conform to the following requirements

Use	Min. Strength 28 Day-psi	Max. Size Coarse Agg	% Air (1%)	Min-Max Slump	Min Chem. Fac.	Max W/C
Footings	4000	3/4"	5-7.5*	2-4**	611 #/CY	0.45

*Target Air is 6% with -1% ; +1.5% Range
**Min-Max slump is before the addition of water reducing admixtures.

Finishing

A. Exposed Concrete
   1. After the removal of forms, remove all form ties to at least 1 inch below surfaces. Remove all loose and honeycombed concrete, fins and other surface irregularities.
   2. Concrete patching – After cleaning out all holes, honeycombs and other areas to be patched, moisten surface and apply non-shrink grout or a mixture of one part Portland Cement and 3 parts sand, taking care to match the concrete.
   3. All concrete which will be exposed to view, shall have a float finish. A steel trowel finish is not required or acceptable.
B. Unexposed Concrete
   1. All unexposed concrete shall have tie holes, honeycombs and other holes filled with patching mortar as above. Fins and other irregularities shall be removed so as to present a uniform surface.
   2. Unexposed concrete will not require a rubbed finish after patching.
C. Penetrations – All wall or floor penetrations by pipes, conduit and other inserts shall be sealed with non-shrink grout around entire penetration to provide a watertight finish.

Reinforcing Materials Materials shall meet the requirements of the following Sections of Division 700 - Materials:

Reinforcing Steel	709.01
Welded Steel Wire Fabric	709.02

709.01 Reinforcing Steel Reinforcing steel, both plain and epoxy coated, shall be deformed bars conforming to the requirements of AASHTO M31/M31M (ASTM A615/A615M). Bars shall be Grade 420 [Grade 60] unless otherwise specified on the plans. Epoxy coated reinforcing steel shall also conform to the requirements of AASHTO M284/M284M (ASTM 7-25 A775/A775M). The requirements of AASHTO M284/M284M (ASTM A775/A775M), Sections 5.2.1, 5.3, 5.4, and 15.1 shall be mandatory.

Fabricated deformed steel bar mats shall conform to the requirements of AASHTO M54/M54M (ASTM A184/A184M).

709.02 Welded Steel Wire Fabric Welded steel wire fabric shall meet the requirements of AASHTO M55 (ASTM A185) Steel Welded Wire Fabric, Plain, for Concrete Reinforcement or AASHTO M221 (ASTM A497) Steel Welded Wire Fabric, Deformed, for Concrete Reinforcement as specified.

Splicing Reinforcing bars shall be spliced in accordance with the requirements of this section, and in the locations shown on the plans. No modifications of, or additions to,

the splice arrangements shown on the plans shall be made without the Resident's prior approval. Any additional splices authorized shall be staggered as much as possible. All splices shall be made in a manner that will ensure that not less than 75% of the clear concrete cover and not less than 75% of the minimum clear distance to other bars will be maintained, as compared to the cover and clear distance requirements for the unspliced bar.

Lapped splices shall be made by placing the bars in contact and wiring them together. Splice laps shall be made in accordance with the following table, unless otherwise noted on the plans

US CUSTOMERY UNITS

Minimum Lap Splice Length (inches)[1]

Bar Type	Bar Size								
	#3	#4	#5	#6	#7	#8	#9	#10	#11
Plain	14	18	22	26	33	43	54	68	83
Epoxy	21	27	33	39	50	64	80	103	124

[1] Lap Splice lengths are based on the following parameters: Minimum center to- center spacing between bars of 6 in; nominal yield strength of the reinforcing steel of 60 ksi; minimum 28-day compressive strength of concrete of 4350 psi. When any of the preceding parameters is altered, appropriate minimum lap splice lengths will be determined by the Resident.

Welded splices may be made by the "Thermit" process or, with the approval of the Resident, by the shielded metal arc welding process or the self-shielded flux-core arc welding process. The latter two processes shall be used in strict conformance with the requirements of the latest edition of AWS D1.4 "Structural Welding Code - Welding Reinforcing Steel" and any applicable provisions of Section 504, Structural Steel. The Contractor shall submit complete details of their proposed method of making welded splices for the Resident's approval.

Lapping Sections of welded steel wire fabric shall securely fasten to adjoining sections and overlap. All laps shall be in accordance with Wire Reinforcement Institute Manual of Standard Practice.

Bar mats shall be spliced as required for the individual bars.

Substitution Substitution of different size bars shall not be permitted except with the written authorization of the Resident.

SPECIAL PROVISIONS

SPECIAL PROVISION SECTION 104
GENERAL RIGHTS AND RESPONSIBILITIES

104.3.8A. Federal Wage Rates and Labor Laws Delete the entire section 104.3.8A.

104.3.8B State Wage Rates and Labor Laws Delete the entire section 104.3.8B

SPECIAL PROVISION
SECTION 105
General Scope of Work
(Limitations of Operations)

A 24 hour notice is required for any change in work schedule.

A 48 hour notice is required prior to working any Saturdays.

Work can be performed at any time except Sundays and Holidays and as provided in Special Provision, Section 107, and Contract Time.

SPECIAL PROVISION
SECTION 107
Prosecution and Progress
(Contract Time)

The contractor will be allowed to commence work provided that all required plans/submittals have been received and approved by the Department.

The Contractor will be allowed to commence work on the Contract on **September 2, 2013** provided that all required plans/submittals have been received and approved by the Department.

The contractor will be allowed to commence work on this project as long as all applicable plans as required under this contract have been submitted and approved and required notice has been provided, subject to the following restrictions:

The specified completion date is **September 27, 2013.**

The contractor shall not carry on construction operations on Sundays or Holidays as per Section 107.3.3.

All work schedule changes must be submitted for approval to the Department a minimum of 10 calendar days prior to the requested change.

SPECIAL PROVISION SECTION 108
(Invoices and Payment)

The Contractor shall submit an itemized invoice to the Department for services monthly, at the completion of the Work or as otherwise noted in the Contract documents for approval and payment. At a minimum, invoices shall include the following information:

Contractor name, address
Contract Number
Invoice Date & Number
Dates of Service
Description and Location of Service
Quantities at the Prices contained in the Contractor's Bid
Extra Work agreed to by written Contract Modification
Total amount due

The Department will approve complete and correct invoices for accepted Work invoiced at bid prices. Payments to the Contractor shall be full compensation for furnishing all labor, Equipment, Materials, services, and Incidentals used to perform all Work under the Contract in a complete and acceptable manner, and for all risk, loss, damage, or expense of any kind arising from the nature or prosecution of the Work. No payments due the Contractor will be adjusted for inflation. No interest shall be due and payable on any payment due the Contractor.

The Department may withhold payments claimed by the Contractor on account of:

A. Incomplete, Inaccurate or Incorrect Invoices,
B. Defective Work or non-conforming Work,
C. Damages for Non-conforming, Defective or Unauthorized Work or Equipment,
D. Damage to a third party,
E. Claims filed or reasonable evidence indicating probable filing of claims,
F. Failure of the Contractor to make payments to Subcontractors or for Materials or labor,
G. Regulatory non-compliance or enforcement,
H. Failure to provide the Department the opportunity to inspect the Work,
I. Failure to submit Documentation
J. All other causes that the Department reasonably determines negatively affect the State's interest.

SPECIAL PROVISIONS

SPECIAL PROVISION SECTION 102
BIDDING

102.1.1 Basic Requirements Change the first sentence from: "…(A) comply with the Prequalification Procedure adopted by the Department, (B) not have been debarred or suspended from Bidding, and (C) not be in Default with respect to any outstanding Contract with the Department…" to "(A) not have been debarred or suspended from Bidding, and (B) not be in Default with respect to any outstanding Contract with the Department…".

102.6 Bid Guaranty Delete the entire section 102.6.

SPECIAL PROVISION SECTION 103
AWARD AND CONTRACTING

103.5.1 Performance and Payment Bonds Delete the entire section 103.5.1.

SPECIAL PROVISION SECTION 105
GENERAL SCOPE OF WORK

105.2.1 Contractor's Safety Program Change the first sentence from: "…a copy of the Contractor's Safety Plan must be on file…" to "…a copy of the Contractor's Safety Plan may be on file…"

Change the second sentence from: "…copy of the Safety Plan will be provided…" to "…copy of the Safety Plan may be provided…"

Add the following after the fourth sentence in paragraph 1:

"If a copy of the Contractor's Safety Plan is not on file with the Contracts Section of the Department, the Contractor must submit, at or before the Preconstruction meeting, a project specific Safety Plan to the Regional Office of the Department. The Contractor's Safety Plan shall identify and address job hazards of the expected contract work and shall comply with all applicable federal, State, and local laws governing safety including all applicable laws and regulations of OSHA."

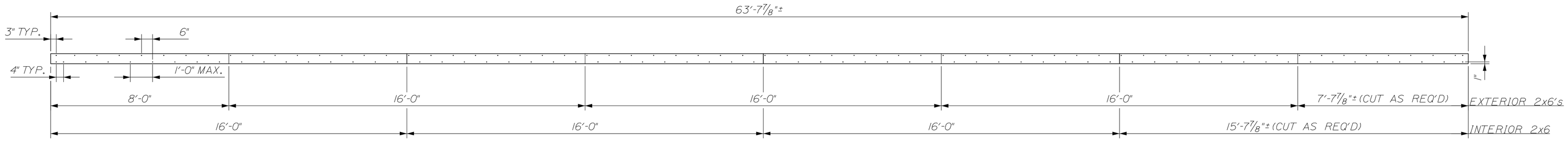

TEMPORARY HEADER NAILING SCHEDULE

3/8" = 1'-0" COLUMNS NOT SHOWN FOR CLARITY

STAGGER SPACING AS SHOWN TOP TO BOTTOM & NEAR SIDE FAR SIDE

ALL NAILS SHOWN ARE 16D COMMON (BRIGHT OR GALV.)

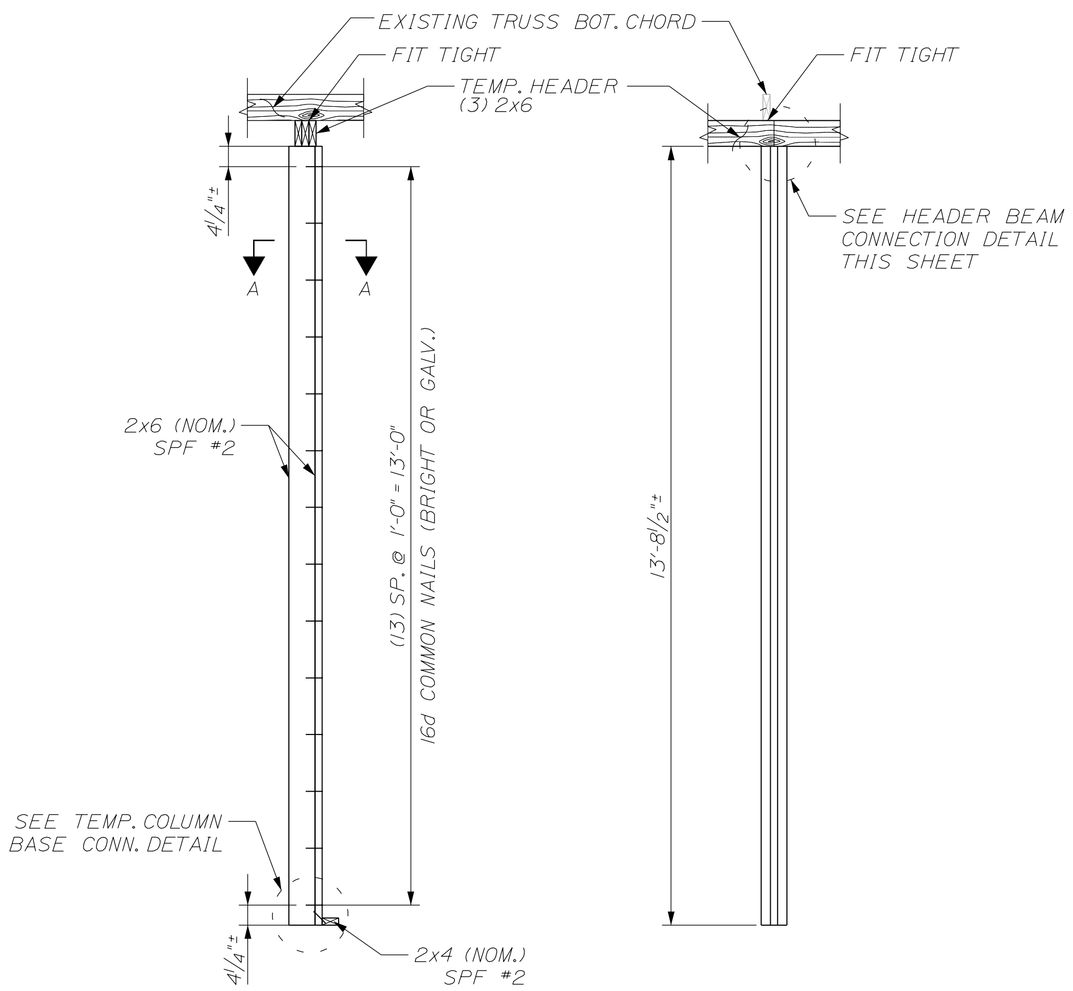

TEMPORARY COLUMN DETAILS

1/2" = 1'-0"

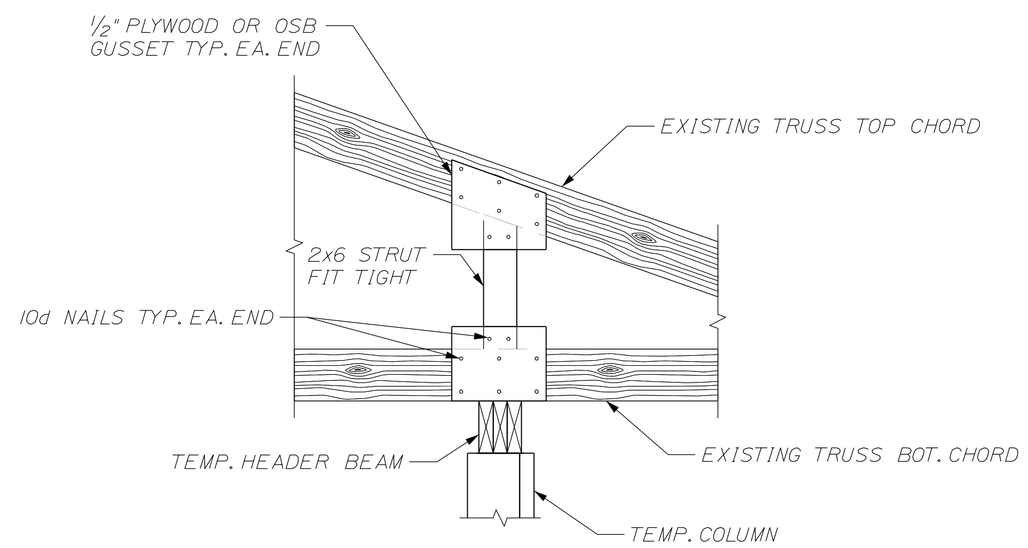

TEMPORARY STRUT DETAIL

1" = 1'-0"

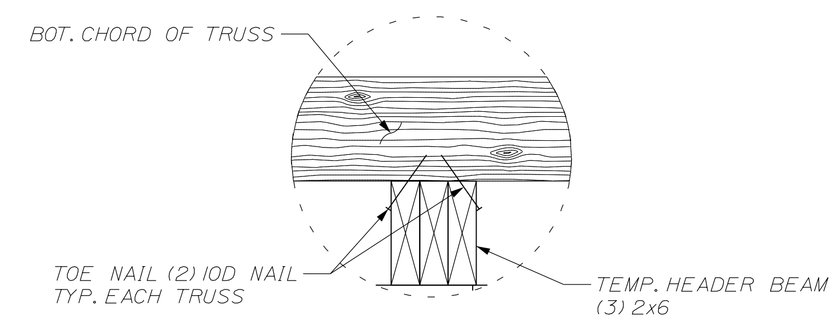

TRUSS CONNECTION DETAIL

2" = 1'-0"

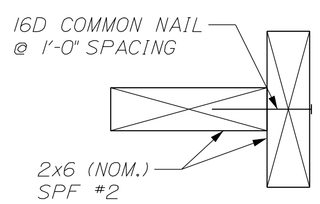

SECTION A-A

3" = 1'-0"

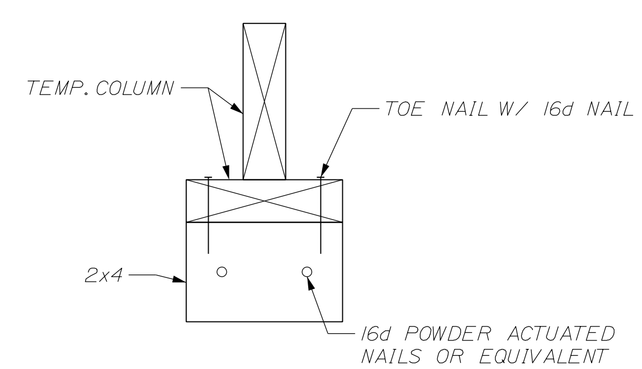

TEMPORARY COLUMN BASE CONNECTION DETAIL

3" = 1'-0"

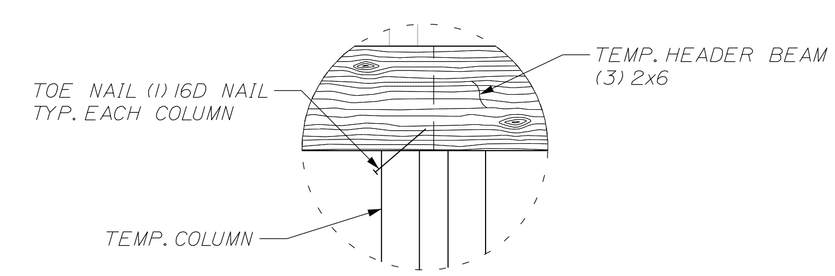

HEADER BEAM CONNECTION DETAIL

2" = 1'-0"

CALDERWOOD ENGINEERING, ETC.
STRUCTURAL ENGINEERING • DETAILING SERVICES

PREPARED FOR
MAINE DEPT. OF TRANSPORTATION

POLAND MAINTENANCE FACILITY

STATE OF MAINE — PAUL T. CALDERWOOD — REGISTERED PROFESSIONAL ENGINEER

P.E. NUMBER 9099

DATE 5/30/13

	BY	DATE
DESIGN-DETAILED	GNM	MAY 13
CHECKED-REVIEWED		
REVISIONS 1		
REVISIONS 2		
REVISIONS 3		
REVISIONS 4		
FIELD CHANGES		

STRUCTURAL MODIFICATIONS TO THE POLAND MAINTENANCE FACILITY

TEMPORARY COLUMN & HEADER DETAILS

SHEET NUMBER

D1

Filename: ...\0D1_034_ST_13 Poland.dgn

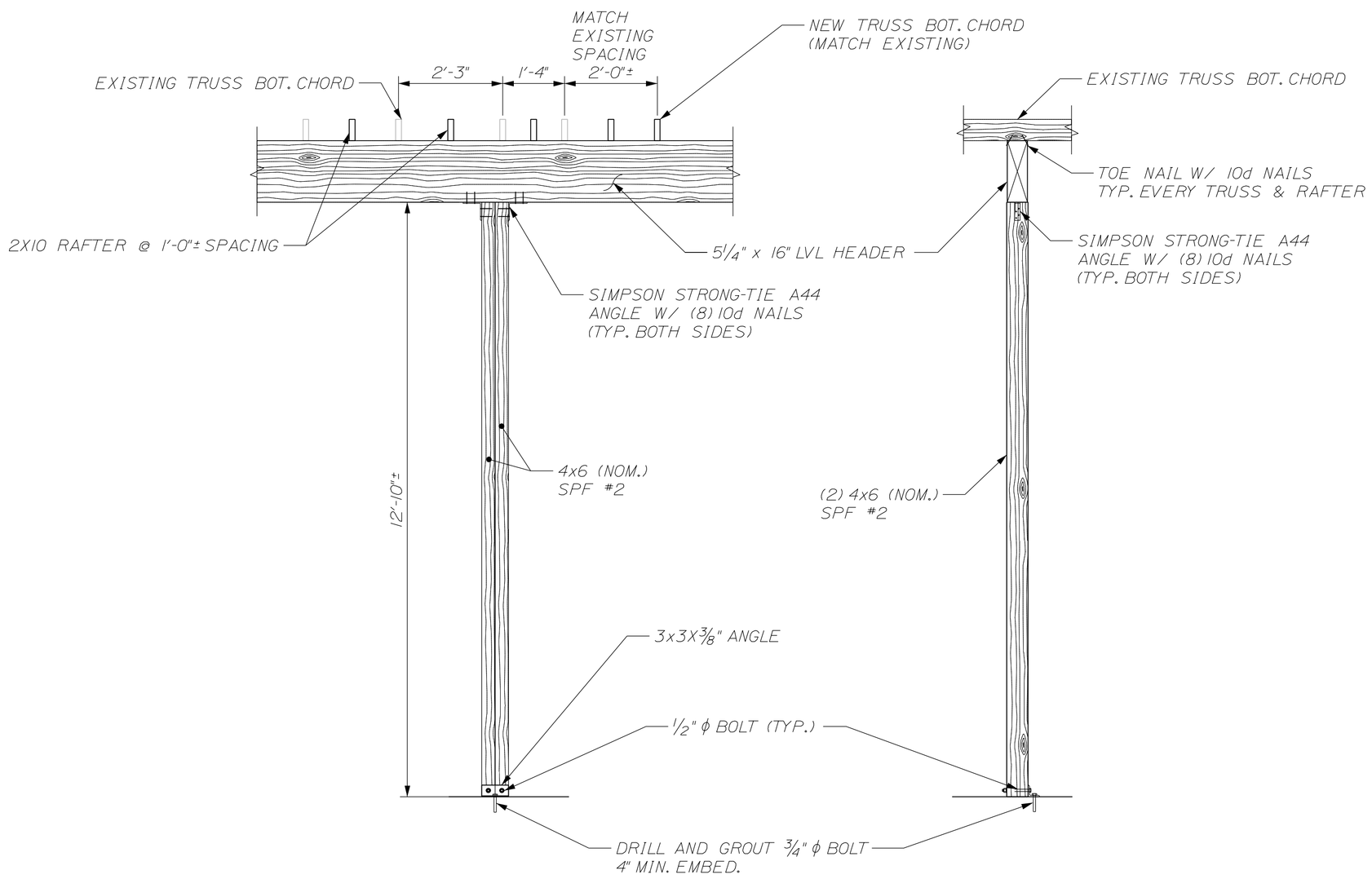

PROPOSED COLUMN DETAILS
½" = 1'-0"

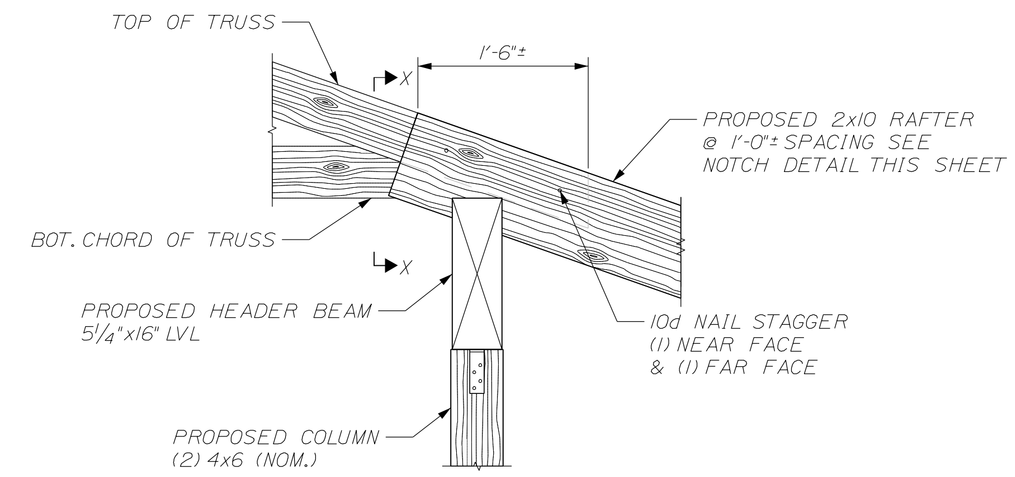

PROPOSED TRUSS CONNECTION DETAIL
1" = 1'-0"

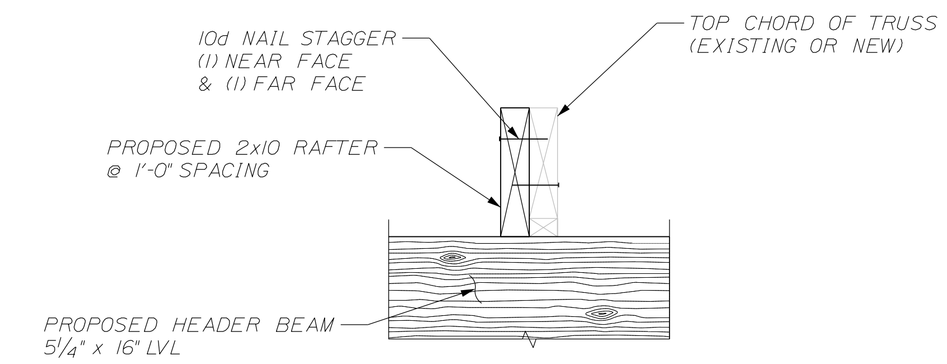

SECTION X-X
2" = 1'-0"

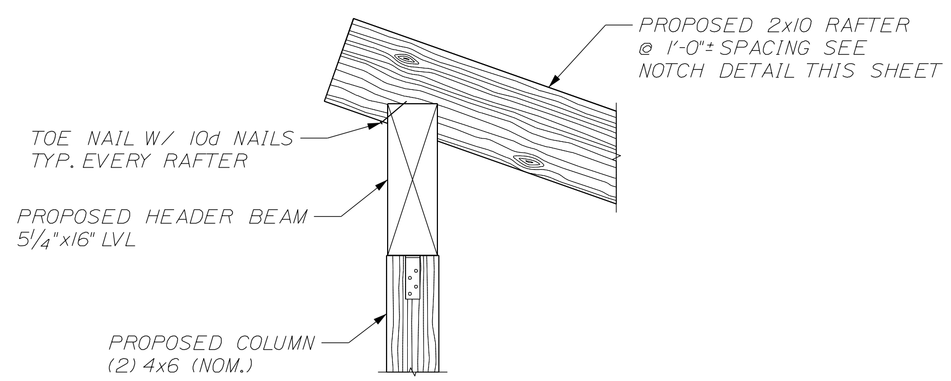

PROPOSED RAFTER CONNECTION DETAIL
1" = 1'-0"
NOTE: THIS DETAIL IS WHERE THE RAFTERS FALL IN BETWEEN THE TRUSSES

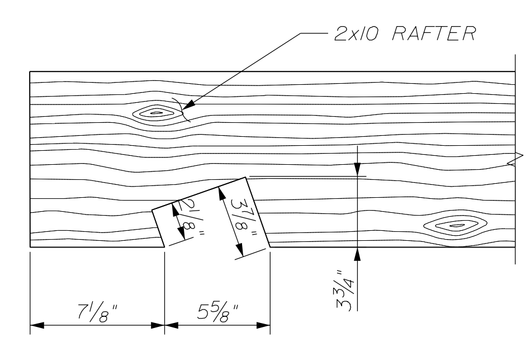

2x10 RAFTER NOTCH DETAIL
2" = 1'-0"
CONTRACTOR TO VERIFY DIMENSIONS

CALDERWOOD ENGINEERING, ETC.
STRUCTURAL ENGINEERING • DETAILING SERVICES

PREPARED FOR
MAINE DEPT. OF TRANSPORTATION

POLAND MAINTENANCE FACILITY

STATE OF MAINE
CALDERWOOD
PAUL T.
REGISTERED
PROFESSIONAL ENGINEER

P.E. NUMBER 9099
DATE 5/30/13

	BY	DATE
DESIGN-DETAILED	GNM	MAY 13
CHECKED-REVIEWED		
REVISIONS 1		
REVISIONS 2		
REVISIONS 3		
REVISIONS 4		
FIELD CHANGES		

STRUCTURAL MODIFICATIONS TO THE POLAND MAINTENANCE FACILITY

PROPOSED COLUMN & HEADER DETAILS

SHEET NUMBER
D2

Filename: ...\0D2_034_ST_13 Poland.dgn

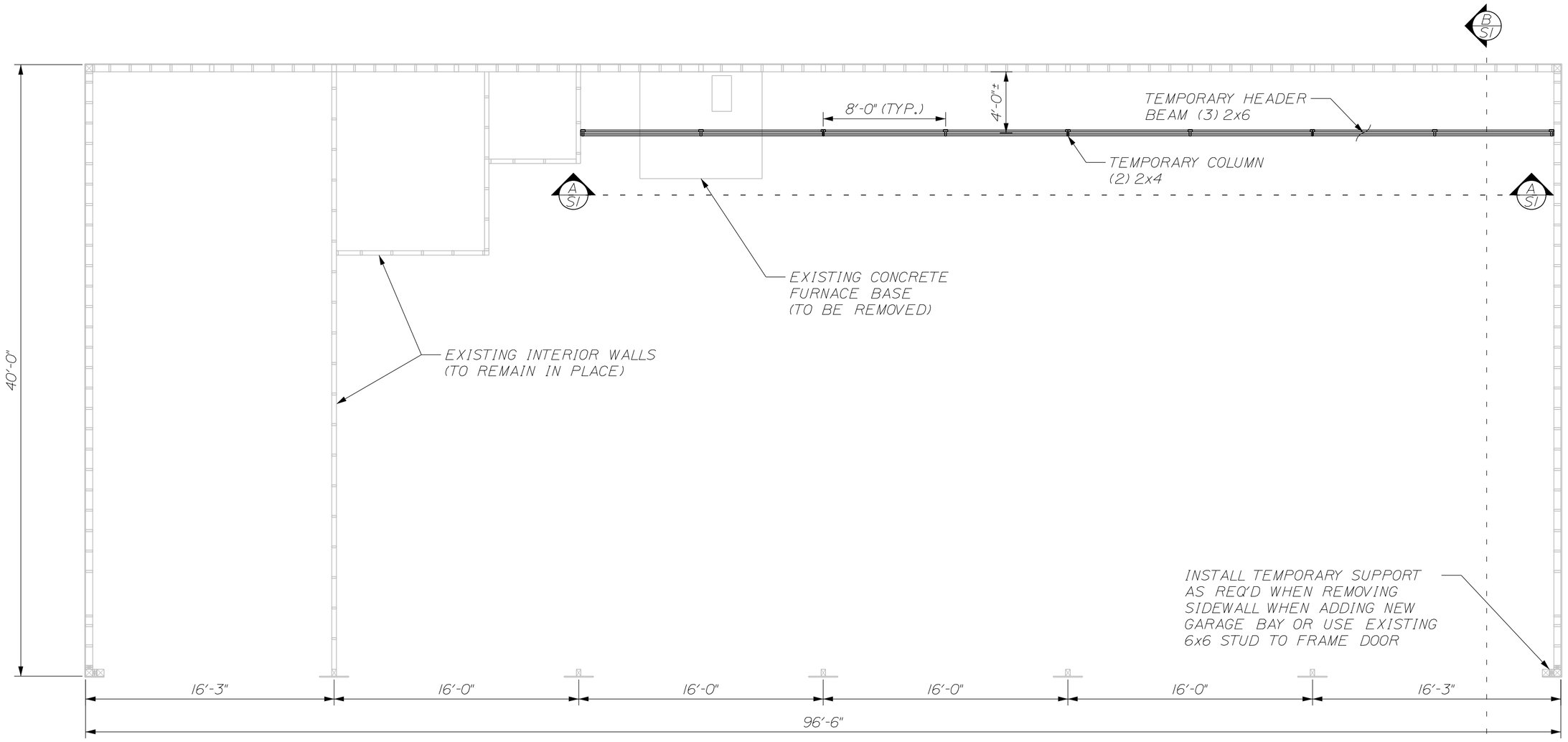

EXISTING FRAMING PLAN AND TEMPORARY SUPPORT PLAN VIEW
3/16" = 1'-0"

NOTES

1. LAMINATED VENEER LUMBER SHALL HAVE A MINIMUM MODULUS OF ELASTICITY OF E=2,000,000 PSI AND A MINIMUM F =3100 PSI

2. ALL SAWN DIMENSION LUMBER IS NOMINAL SIZE. SPF #2 GRADE

3. ALL STEEL SHALL BE IN NEW OR GOOD USED CONDITION

4. ALL STEEL TO MEET THE REQUIREMENTS OF ASTM A36 OR BETTER

5. ALL SHEATHING TO BE REMOVED TO ACCESS THE WORK SHALL BE REMOVED CAREFULLY SO AS TO PREVENT DAMAGE TO THE SHEATHING. SHEATHING MAY BE THEN STORED IN A SUITABLE LOCATION, AND REINSTALLED USING WOOD SCREWS. ANY SHEATHING LOST OR DAMAGED DURING STORAGE SHALL BE REPLACED IN KIND WITH NEW MATERIAL.

6. ALL MATERIALS STORED ON THE PROJECT SHALL BE PROTECTED FROM THE ELEMENTS BY BEING STORED INDOORS ABOVE GROUND LEVEL ON SUITABLE DUNNAGE.

7. ANY CONFLICT BETWEEN THESE PLANS AND EXISTING CONDITIONS SHOULD BE ADDRESSED BY THE ENGINEER OF RECORD. DO NOT PROCEED WITH DEPENDENT WORK UNTIL ANY CONFLICT HAS BEEN ADDRESSED BY THE ENGINEER OF RECORD.

8 ALL DIMENSIONS WITHIN THESE DETAILS ARE APPROXIMATE. THE CONTRACTOR IS RESPONSIBLE TO DETERMINE THE EXACT DIMENSIONS IN THE FIELD.

9. ALL MATERIALS REQUIRED TO BE REMOVED AND REUSED, SHALL BE MAINTAINED IN SERVICEABLE CONDITION, STORED IN A MOISTURE FREE ENVIRONMENT INDOORS, AND ABOVE THE GROUND LEVEL.

10. ALL MODIFICATION WORK MUST BE DONE WITH ONLY STRUCTURAL DEAD LOAD ON THE ROOF. DO NOT PERFORM THIS WORK WHEN THE ROOF IS SUBJECT TO SNOW OR LIVE LOAD CONDITIONS.

11. CONCRETE SHALL HAVE A MINIMUM 28 DAY COMPRESSIVE STRENGTH OF f'c = 4,000PSI

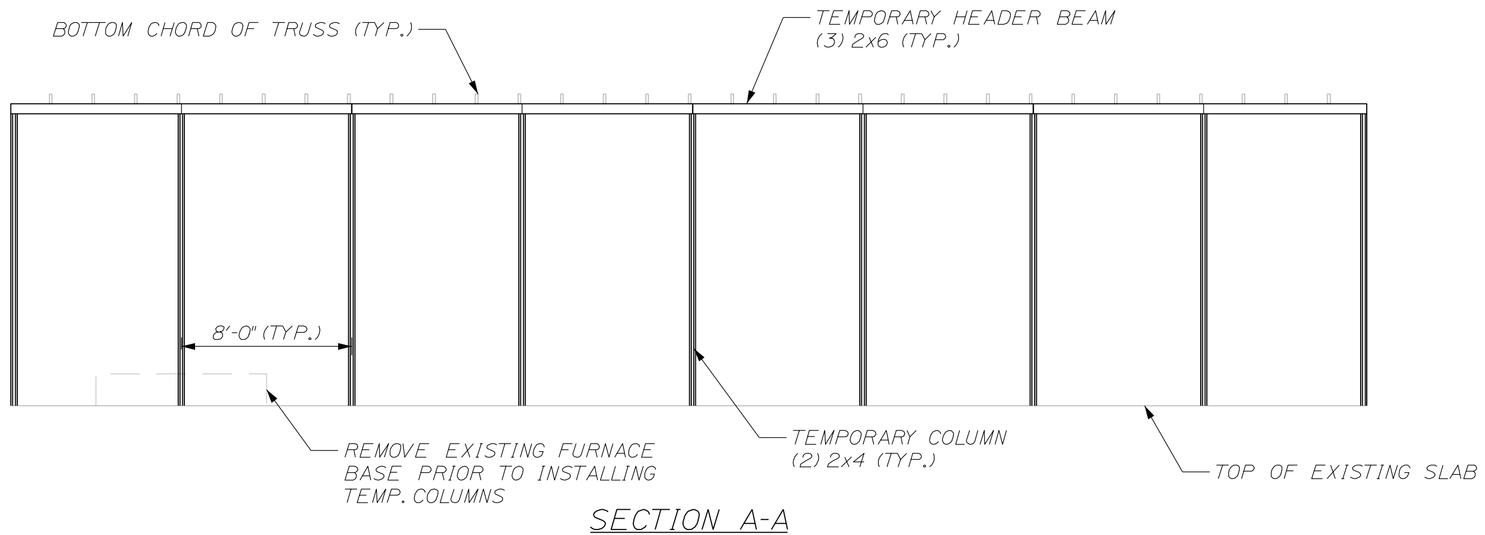

SECTION A-A
3/16" = 1'-0"

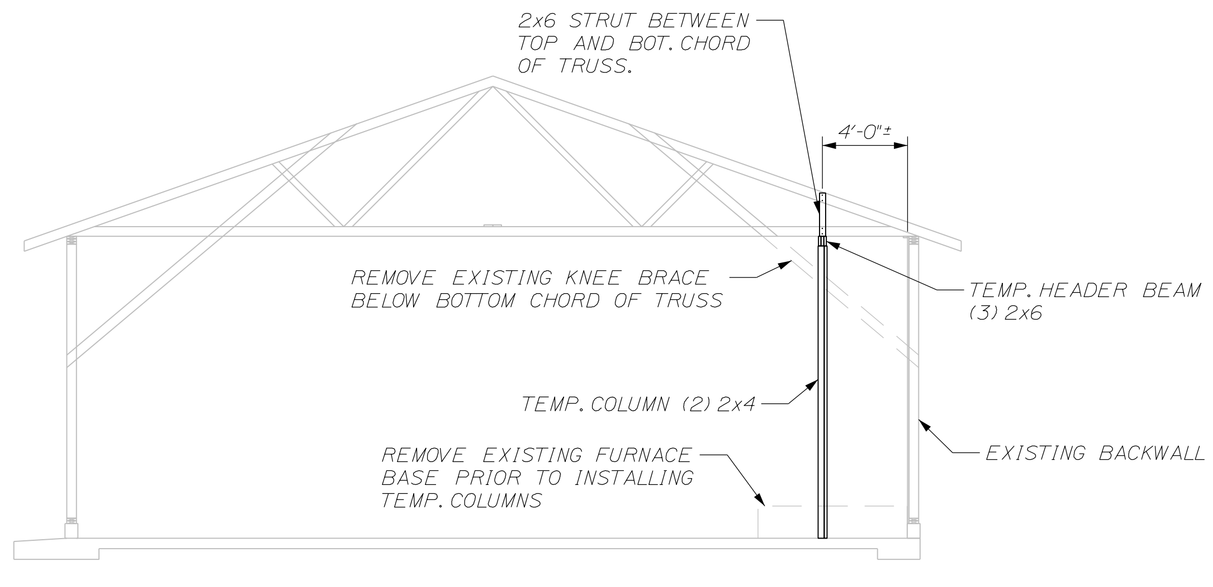

SECTION B-B
3/16" = 1'-0"
EXISTING CHIMNEY NOT SHOWN FOR CLARITY

CALDERWOOD ENGINEERING, ETC.
STRUCTURAL ENGINEERING • DETAILING SERVICES

PREPARED FOR
MAINE DEPT. OF TRANSPORTATION

POLAND MAINTENANCE FACILITY

STATE OF MAINE
PAUL T. CALDERWOOD
REGISTERED PROFESSIONAL ENGINEER

P.E. NUMBER 9099
DATE 5/30/13

	BY	DATE
DESIGN-DETAILED	GNM	MAY 13
CHECKED-REVIEWED		
REVISIONS 1		
REVISIONS 2		
REVISIONS 3		
REVISIONS 4		
FIELD CHANGES		

STRUCTURAL MODIFICATIONS TO THE POLAND MAINTENANCE FACILITY

TEMPORARY SUPPORT DETAILS

SHEET NUMBER
S1

Filename: ...\OS1_034_ST_13 Poland.dgn

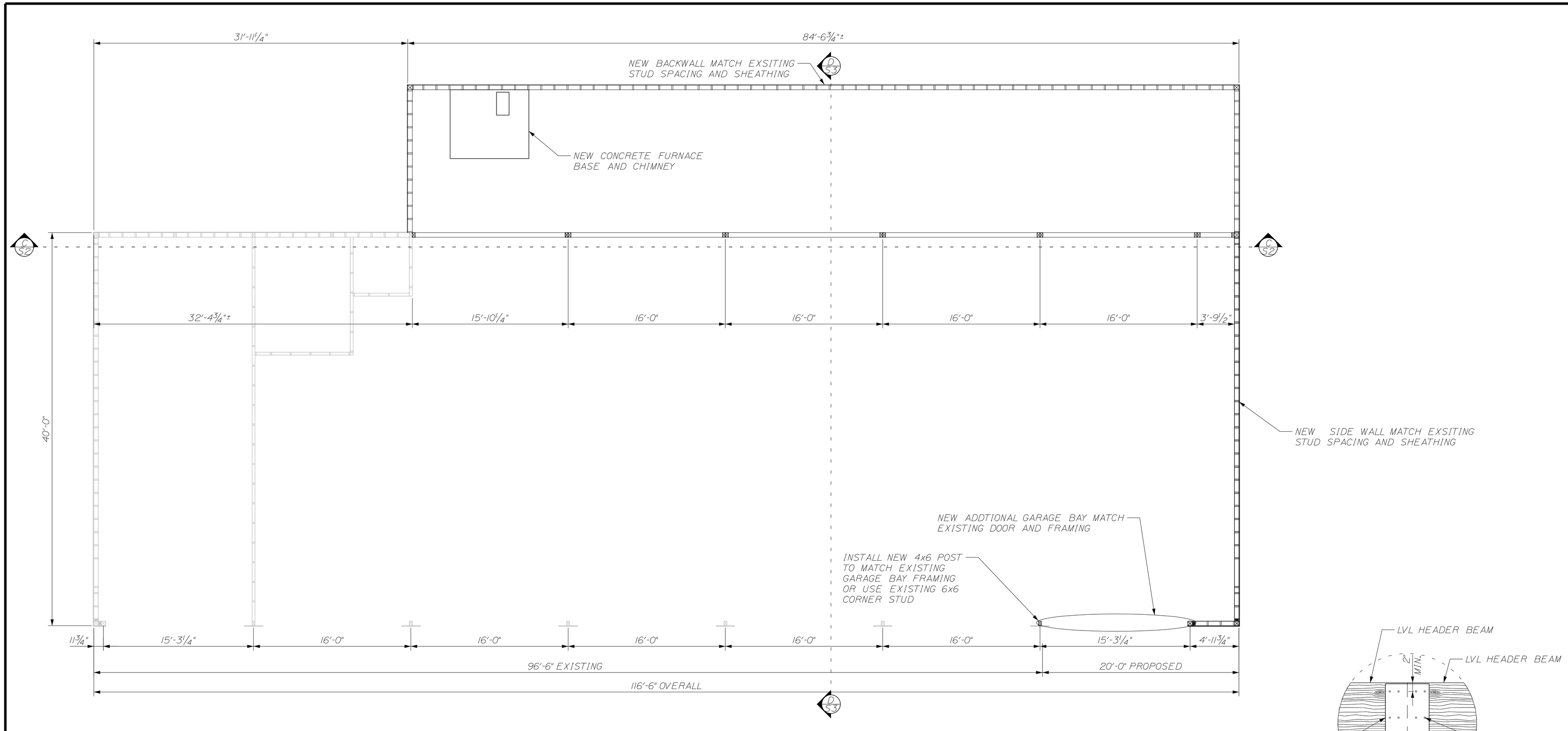

PROPOSED FRAMING PLAN VIEW
3/16" = 1'-0"

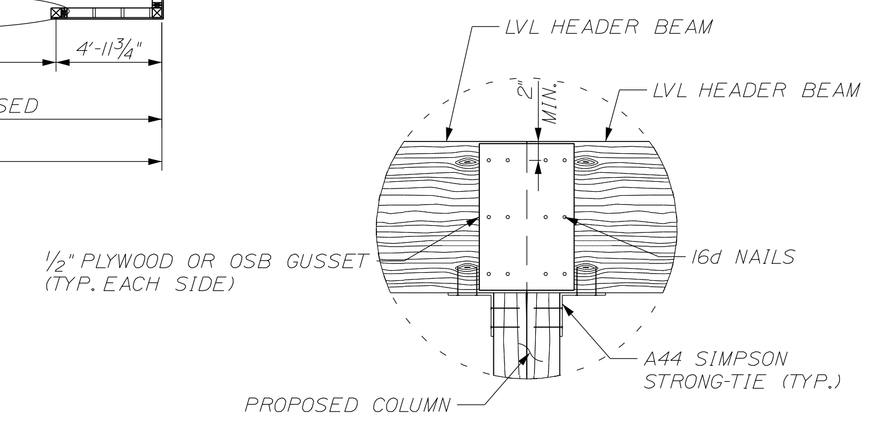

LVL HEADER BEAM SPLICE
1" = 1'-0"

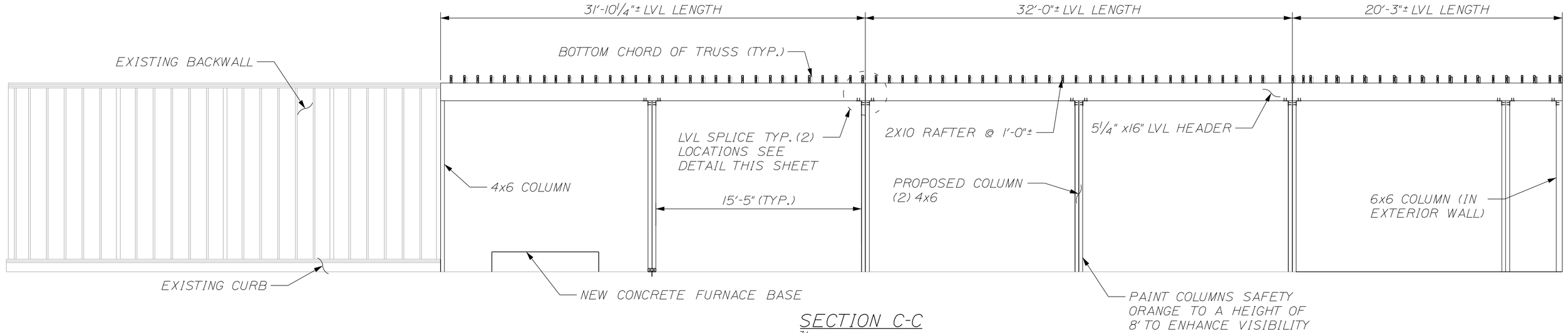

SECTION C-C
3/16" = 1'-0"
NEW CHIMNEY AND TOP CHORD OF TRUSS NOT SHOWN FOR CLARITY

CALDERWOOD ENGINEERING, ETC.
STRUCTURAL ENGINEERING • DETAILING SERVICES

PREPARED FOR
MAINE DEPT. OF TRANSPORTATION

POLAND MAINTENANCE FACILITY

STATE OF MAINE
PAUL T. CALDERWOOD
Registered
PROFESSIONAL ENGINEER

P.E. NUMBER 9099
DATE 5/30/13

	BY	DATE
DESIGN-DETAILED	GNM	MAY 13
CHECKED-REVIEWED		
REVISIONS 1		
REVISIONS 2		
REVISIONS 3		
REVISIONS 4		
FIELD CHANGES		

STRUCTURAL MODIFICATIONS TO THE POLAND MAINTENANCE FACILITY

PROPOSED MODIFICATION DETAILS

SHEET NUMBER
S2

Filename: ...\0S2_034_ST_13 Poland.dgn

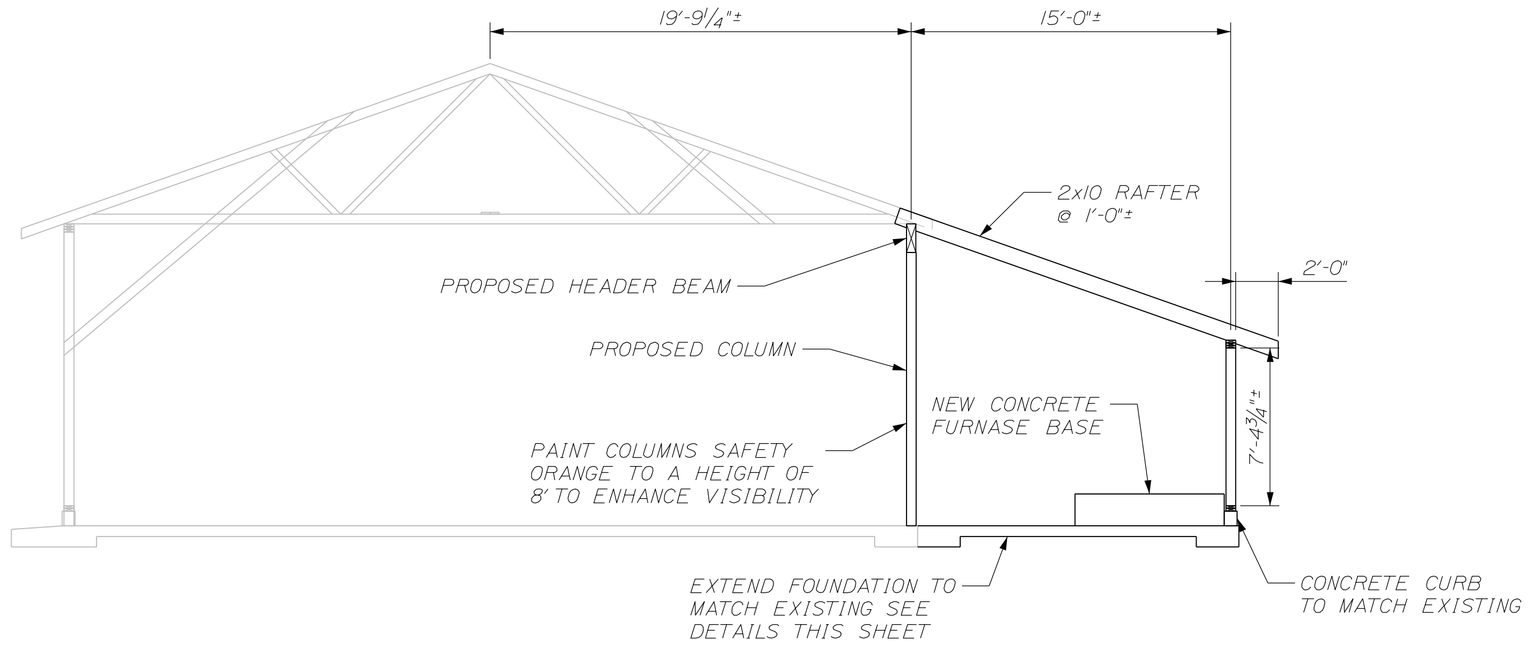

SECTION D-D

3/16" = 1'-0"
NEW CHIMNEY AND SHEATHING NOT SHOWN FOR CLARITY

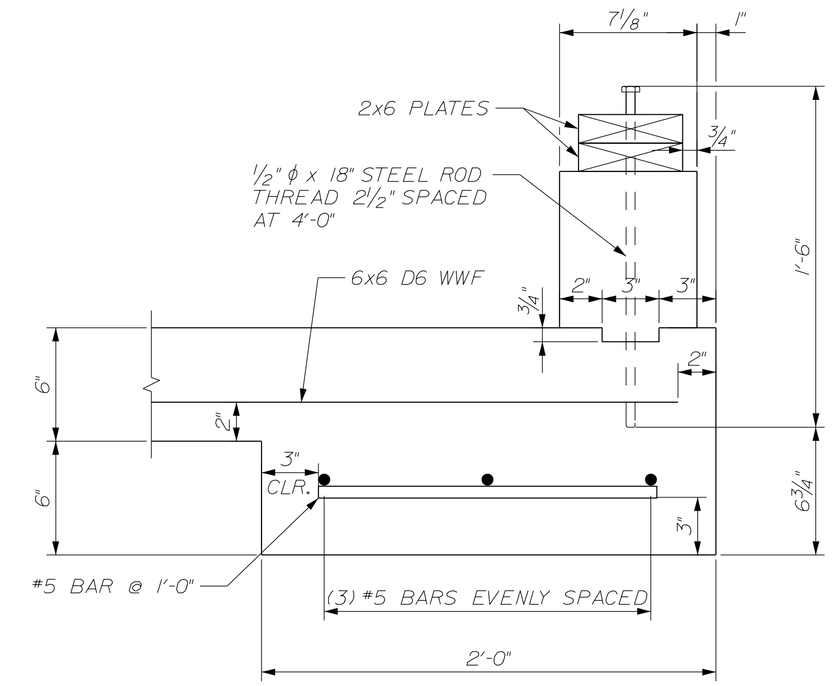

CURB AND ANCHOR BOLT DETAIL

2" = 1'-0"
NOTE: 12" GRAVEL BASE REQUIRED UNDER CONCRETE SLAB

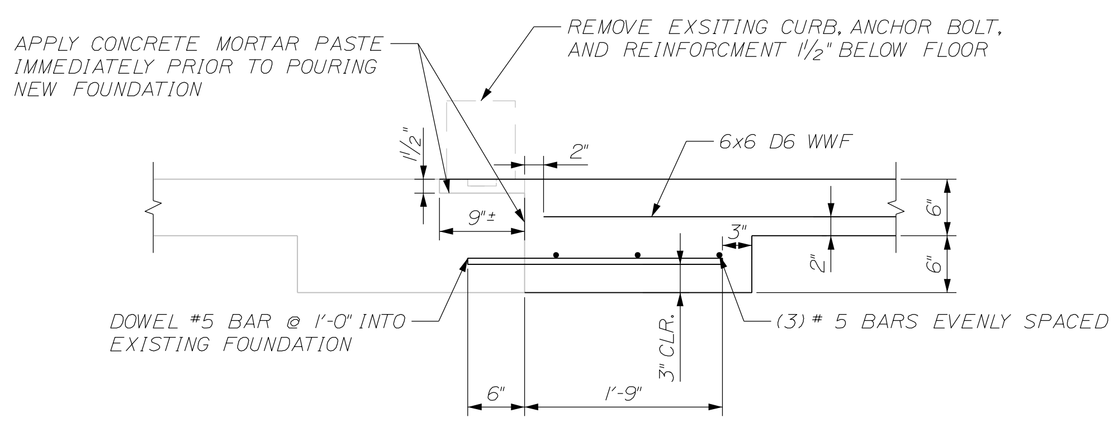

EXISTING AND NEW FOUNDATION INTERFACE DETAILS

1" = 1'-0"
NOTE: 12" GRAVEL BASE REQUIRED UNDER CONCRETE SLAB

CONCRETE SHALL HAVE A MINIMUM 28 DAY COMPRESSIVE STRENGTH OF 4,000PSI

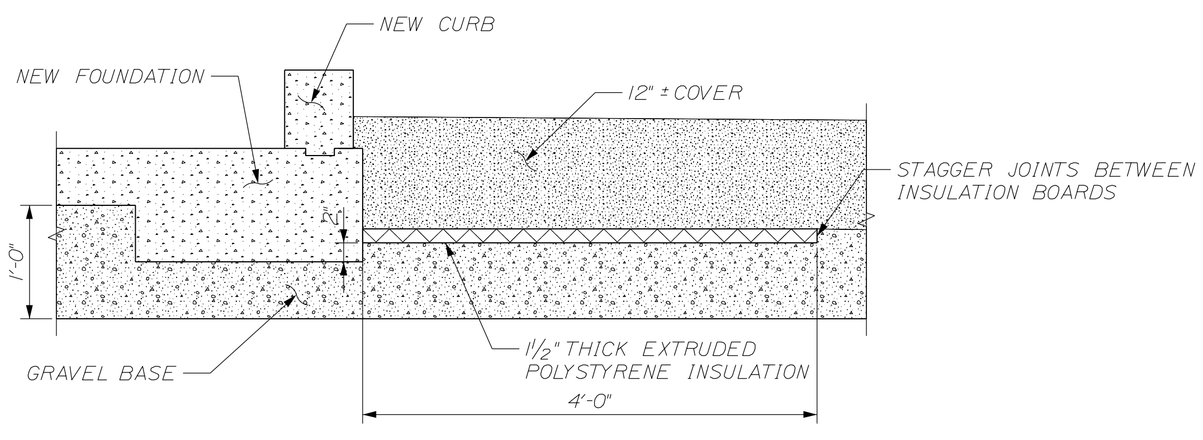

BACKWALL AND SIDEWALL INSULATION DETAIL

1" = 1'-0"
DRIVE THREE OR FOUR 3/8" x 6" POINTED HARDWOOD DOWEL PEGS THROUGH EACH INSULATION PANEL TO SECURE FOR TIGHT JOINTS DURING BACKFILLING

GENERAL PROCEDURE

1. REMOVE SHEATHING ON WALLS AND BELOW TRUSS TO ALLOW ACCESS TO STRUCTURAL COMPONENTS.

2. REMOVE EXISTING CHIMNEY, CONCRETE FURNACE BASE, AND FURNACE

3. LOCATE EXISTING 4x6 STUDS IN BACK WALL AND INSTALL TEMPORARY COLUMNS ADJACENT TO 4x6 STUDS ACCORDING TO DETAILS ON SHEET D1 AND S1, REMOVING EXISTING KNEE BRACE TO THE BOTTOM OF THE TRUSS.

4. INSTALL TEMPORARY HEADER BEAM TIGHTLY BENEATH EXISTING TRUSSES, INSTALLING TEMPORARY STRUTS BETWEEN BOTTOM AND TOP CHORDS IN THE EXISTING TRUSSES AS SHOWN ON SHEET S1.

5. REMOVE EXISTING BACK AND SIDE WALLS AS SHOWN, INCLUDING CURB FROM THE FOUNDATIONS AS REQ'D. REMOVE PORTION OF ROOF REQUIRED TO EXTEND THE ROOF.

6. LAYOUT AND POUR NEW FOUNDATION AND EXTERIOR CURB TO MATCH EXISTING FLOOR. SLOPE NEW FLOOR TO MATCH EXISTING DRAINAGE AND INSTALL DRAIN IN NEW BAY TO TO MATCH EXISTING DRAINS. INSTALL NEW FURNACE AND CHIMNEY.

7. INSTALL NEW COLUMNS, HEADER BEAMS ACCORDING TO DETAILS ON SHEET S2 & S3. PAINT NEW COLUMNS SAFETY ORANGE TO A HEIGHT TO 8' TO ENHANCE VISIBILITY.

8. INSTALL NEW BACK & SIDE WALLS, ELECTRICAL CONDUITS, FAN, DOOR, AND WINDOWS ON SIDEWALL SHOULD MATCH THE EXISTING LAYOUT.

9. INSTALL NEW GARAGE BAY DOOR. NEW GARAGE DOOR SHALL BE FRAMED OUT AND MATCH THE EXISTING DOORS.

10. INSTALL NEW TRUSSES AND RAFTERS ACCORDING TO SHEET D2 TO MATCH EXISTING ROOFING.

11. REMOVE TEMPORARY SUPPORT AND RE-APPLY SHEATHING TO CEILING. INSTALL NEW ROOFING TO MATCH EXISTING.

CALDERWOOD ENGINEERING, ETC.
STRUCTURAL ENGINEERING • DETAILING SERVICES

PREPARED FOR
MAINE DEPT. OF TRANSPORTATION

POLAND MAINTENANCE FACILITY

STATE OF MAINE
PAUL T. CALDERWOOD
Reg. No. 9099
PROFESSIONAL ENGINEER

P.E. NUMBER 9099

DATE 5/30/13

	BY	DATE
DESIGN-DETAILED	GNM	MAY 13
CHECKED-REVIEWED		
REVISIONS 1		
REVISIONS 2		
REVISIONS 3		
REVISIONS 4		
FIELD CHANGES		

STRUCTURAL MODIFICATIONS TO THE POLAND MAINTENANCE FACILITY

PROPOSED MODIFICATION DETAILS

SHEET NUMBER

S3

Filename: ...\0S3_034_ST_13 Poland.dgn

SPECIAL PROVISION
SECTION 656
Temporary Soil Erosion and Water Pollution Control

The following is added to Section 656 regarding Project Specific Information and Requirements. All references to the Maine Department of Transportation Best Management Practices for Erosion and Sedimentation Control (a.k.a. Best Management Practices manual or BMP Manual) are a reference to the latest revision of said manual. The latest version is dated "February 2008" (available at http://www.maine.gov/mdot/environmental-office-homepage/surface-water-resources.php .) **Procedures specified shall be according to the BMP Manual unless stated otherwise.**

Project Specific Information and Requirements

The following information and requirements apply specifically to this Project. The temporary soil erosion and water pollution control measures associated with this work shall be addressed in the Soil Erosion and Water Pollution Control Plan (SEWPCP.)

Procedures specified shall be according to the BMP Manual unless stated otherwise.

1. The on-site person responsible for implementation of this plan, shall be the Contractor's Superintendent or other supervisory employee (the "Environmental Coordinator") with the authority to immediately remedy any deficient controls and shall provide the Resident with their numbers (telephone number, cellular phone and pager numbers, if applicable) where the Environmental Coordinator can be reached 24 hours a day.
2. All areas where soil is disturbed shall be permanently mulched on a daily basis and seeded on a weekly basis (if seeded by hand, it shall be done on a daily basis). All previously mulched areas shall be maintained and re-mulched on a daily basis if bare areas develop until an acceptable growth of grass has been obtained.
3. All disturbed ditches shall receive erosion control blanket or stone rip rap, as required, prior to leaving the site each day.
4. Winter stabilization BMPs shall be applied in accordance with the MDOT BMP Manual between November 1 and April 15 or during frozen ground conditions.
5. If the Work includes the handling or storage of petroleum products or Hazardous Materials including the on site fueling of Equipment, the Resident must be provided with a Spill Prevention Control and Countermeasure Plan (SPCCP) plan. At a minimum, the SPCCP shall include:
    - The name and emergency response numbers (telephone number, cellular phone and pager numbers, if applicable) of the Contractor's representative responsible for spill prevention;
    - General description and location of (1) handling, transfer, storage, and containment facilities of such products or Materials ("activities and facilities") and (2) potential receptors of such products or Materials including oceans, lakes, ponds, rivers, streams, wetlands, and sand and gravel aquifers ("sensitive resources") including the distances between said activities and facilities and said sensitive resources;

SPECIAL PROVISION
SECTION 656
Temporary Soil Erosion and Water Pollution Control

- Description of preventative measures to be used to minimize the possibility of a spill including Equipment and/or Materials to be used to prevent discharges including absorbent Materials,
- A contingency response plan to be implemented if a spill should occur including a list of emergency phone/pager numbers including the Contractor's representative, MDEP Spill Response, the Resident, and local police and fire authorities. For a related provision, see *Standard Specification, Section, 105.2.2 - Project Specific Emergency Planning*.

6. The Environmental Coordinator must inspect and maintain daily all controls for the duration of the project.

October 11, 2012
Supersedes September 19, 2012

STANDARD DETAIL UPDATES

Standard Details and Standard Detail updates are available at:
http://www.maine.gov/mdot/contractor-consultant-information/ss_standard_details_updates.php

Detail #	Description	Revision Date
203(03)	Backslope Rounding	1/29/08
502(03)	Concrete Curb - Bituminous Wearing Surface	8/08/11
502(03)A	Concrete Curb - Concrete Wearing Surface	2/2/09
502(07)	Precast Concrete Deck Panels - Layout Plan	2/2/09
502(07)A	Precast Concrete Deck Panels - Layout Plan	2/2/09
502(08)	Precast Concrete Deck Panels - Panel Plan	2/2/09
502(09)	Precast Concrete Deck Panels - Blocking Detail	2/2/09
502(10)	Precast Concrete Deck Panels	2/2/09
502(11)	Precast Concrete Deck Panels	2/2/09
502(12)	Precast Concrete Deck Panels - Notes	10/28/09
502(12)A	Precast Concrete Deck Panels - Notes	2/2/09
504(15)	Diaphragms	5/19/11
504(21)	Tension Flange Connection for Diaphragm and Cross Frames	10-11-12
504(22)	Diaphragm & Crossframe Notes	10/11/12
504(23)	Hand-Hold Details	12/08/05
502(24)	Hand-Hold Details	10/11/12
507(04)	Steel Bridge Railing	2/05/03
507(09)	Steel Bridge Railing	5/19/11

507(09)A	Steel Bridge Railing	5/19/11
526(06)	Permanent Concrete Barrier	2/2/09
526(08)	Permanent Concrete Barrier – Type IIIA	10/07/10
526(08)A	Permanent Concrete Barrier – Type IIIA	12/07/10
526(13)	Permanent Concrete Barrier – Type IIIB	2/2/09
526(14)	Permanent Concrete Barrier – Type IIIB	2/2/09
526(21)	Concrete Transition Barrier	2/2/09
526(33)	Concrete Transition Barrier	8/18/03
526(39)	Texas Classic Rail – Between Window	2/2/09
526(40)	Texas Classic Rail – Through Window	2/2/09
526(41)	Texas Classic Rail – Through Post	2/2/09
526(42)	Texas Classic Rail – Through Nose	2/2/09
535(01)	Precast Superstructure - Shear Key	10/12/06
535(02)	Precast Superstructure - Curb Key & Drip Notch	5/20/08
535(03)	Precast Superstructure - Shear Key	12/5/07
535(04)	Precast Superstructure - Shear Key	12/05/07
535(05)	Precast Superstructure - Post Tensioning	5/20/08
535(06)	Precast Superstructure - Sections	10/12/06
535(07)	Precast Superstructure - Precast Slab & Box	10/12/06
535(08)	Precast Superstructure - Sections	10/12/06
535(09)	Precast Superstructure - Sections	10/12/06
535(10)	Precast Superstructure - Sections	10/12/06
535(11)	Precast Superstructure - Sections	10/12/06

535(12)	Precast Superstructure - Sections	10/12/06
535(13)	Precast Superstructure - Sections	10/12/06
535(14)	Precast Superstructure - Stirrups	10/12/06
535(15)	Precast Superstructure - Plan	10/12/06
535(16)	Precast Superstructure - Reinforcing	10/12/06
535(17)	Precast Superstructure - Notes	12/05/07
604(01)	Catch Basins	11/16/05
604(05)	Type "A" & "B" Catch Basin Tops	11/16/05
604(06)	Type "C" Catch Basin Tops	11/16/05
604(07)	Manhole Top "D"	11/16/05
604(09)	Catch Basin Type "E"	11/16/05
606(02)	Multiple Mailbox Support	11/16/05
606(03)	Guardrail Standard Detail	9/19/12
606(07)	Reflectorized Beam Guardrail Delineator Details	11/16/05
606(20)	Guardrail - Type 3 - Single Rail - Bridge Mounted	2/2/09
606(21)	Guardrail - Type 3 - Single Rail - Bridge Mounted	2/2/09
606(22)	Guardrail - Type 3 - Single Rail - Bridge Mounted	2/2/09
606(23)	Guardrail - Type 3 - Single Rail - Bridge Mounted	2/2/09
609(03)	Curb Type 3	6/27/06
609(06)	Vertical Bridge Curb	2/12/09
609(07)	Curb Type 1	6/27/06

609(08)	Precast Concrete Transition Curb	2/2/09
610(02)	Stone Scour Protection	8/9/11
610(03)	Stone Scour Protection	5/19/11
610(04)	Stone Scour Protection	5/19/11
620(05)	Geotextile Placement for Protection of Slopes Adjacent to Stream & Tidal Areas	5/19/11
626(09)	Electrical Junction Box for Traffic Signals and Lighting	8/27/10
645(06)	H-Beam Posts – Highway Signing	7/21/04
645(09)	Installation of Type II Signs	7/21/04
801(01)	Drives on Sidewalk Sections	12/13/07
801(02)	Drives on Non-Sidewalk Sections	12/13/07

SUPPLEMENTAL SPECIFICATION

(Corrections, Additions, & Revisions to Standard Specifications - Revision of December 2002)

SECTION 101
CONTRACT INTERPRETATION

101.2 Definitions

Closeout Documentation Replace the sentence "A letter stating the amount….. DBE goals." with "DBE Goal Attainment Verification Form"

Add "Environmental Information Hazardous waste assessments, dredge material test results, boring logs, geophysical studies, and other records and reports of the environmental conditions. For a related provision, see Section 104.3.14 - Interpretation and Interpolation."

Add "Fabrication Engineer The Department's representative responsible for Quality Assurance of pre-fabricated products that are produced off-site."

Geotechnical Information Replace with the following: "Boring logs, soil reports, geotechnical design reports, ground penetrating radar evaluations, seismic refraction studies, and other records of subsurface conditions. For a related provision, see Section 104.3.14 - Interpretation and Interpolation."

SECTION 102
DELIVERY OF BIDS

102.7.1 Location and Time Add the following sentence "As a minimum, the Bidder will submit a Bid Package consisting of the Notice to Contractors, the completed Acknowledgement of Bid Amendments form, the completed Schedule of Items, 2 copies of the completed Agreement, Offer, & Award form, a Bid Bond or Bid Guarantee, and any other Certifications or Bid Requirements listed in the Bid Book."

102.11.1 Non-curable Bid Defects Replace E. with "E. The unit price and bid amount is not provided or a lump sum price is not provided or is illegible as determined by the Department."

SECTION 103
AWARD AND CONTRACTING

103.3.1 Notice and Information Gathering Change the first paragraph to read as follows: "After Bid Opening and as a condition for Award of a Contract, the Department may require an Apparent Successful Bidder to demonstrate to the Department's satisfaction that the Bidder is responsible and qualified to perform the Work."

SECTION 104
GENERAL RIGHTS AND RESPONSIBILITIES

104.3.14 Interpretation and Interpolation In the first sentence, change "…and Geotechnical Information." to "…Environmental Information, and Geotechnical Information."

SECTION 105
GENERAL SCOPE OF WORK

Delete the entire Section 105.6 and replace with the following:

105.6.1 Department Provided Services The Department will provide the Contractor with the description and coordinates of vertical and horizontal control points, set by the Department, within the Project Limits, for full construction Projects and other Projects where survey control is necessary. For Projects of 1,500 feet in length, or less: The Department will provide three points. For Projects between 1,500 and 5,000 feet in length: The Department will provide one set of two points at each end of the Project. For Projects in excess of 5,000 feet in length, the Department will provide one set of two points at each end of the Project, plus one additional set of two points for each mile of Project length. For non-full construction Projects and other Projects where survey control is not necessary, the Department will not set any control points and, therefore, will not provide description and coordinates of any control points. Upon request of the Contractor, the Department will provide the Department's survey data management software and Survey Manual to the Contractor, or its survey Subcontractor, for the exclusive use on the Department's Projects.

105.6.2 Contractor Provided Services Utilizing the survey information and points provided by the Department, described in Subsection 105.6.1, Department Provided Services, the Contractor shall provide all additional survey layout necessary to complete the Work. This may include, but not be limited to, reestablishing all points provided by the Department, establishing additional control points, running axis lines, providing layout and maintenance of all other lines, grades, or points, and survey quality control to ensure conformance with the Contract. The Contractor is also responsible for providing construction centerline, or close reference points, for all Utility Facilities relocations and adjustments as necessary to complete the Work. When the Work is to connect with existing Structures, the Contractor shall verify all dimensions before proceeding with the Work. The Contractor shall employ or retain competent engineering and/or surveying personnel to fulfill these responsibilities.

The Contractor must notify the Department of any errors or inconsistencies regarding the data and layout provided by the Department as provided by Section 104.3.3 - Duty to Notify Department If Ambiguities Discovered.

105.6.2.1 Survey Quality Control The Contractor is responsible for all construction survey quality control. Construction survey quality control is generally defined as, first, performing initial field survey layout of the Work and, second, performing an independent check of the initial layout using independent survey data to assure the accuracy of the initial layout; additional iterations of checks may be required if significant discrepancies are discovered in this process. Construction survey layout quality control also requires written documentation of the layout process such that the process can be followed and repeated, if necessary, by an independent survey crew.

105.6.3 Survey Quality Assurance It is the Department's prerogative to perform construction survey quality assurance. Construction survey quality assurance may, or may not, be performed by the Department. Construction survey quality assurance is generally defined as an independent check of the construction survey quality control. The construction survey

quality assurance process may involve physically checking the Contractor's construction survey layout using independent survey data, or may simply involve reviewing the construction survey quality control written documentation. If the Department elects to physically check the Contractor's survey layout, the Contractor's designated surveyor may be required to be present. The Department will provide a minimum notice of 48 hours to the Contractor, whenever possible, if the Contractor's designated surveyor's presence is required. Any errors discovered through the quality assurance process shall be corrected by the Contractor, at no additional cost to the Department.

105.6.4 Boundary Markers The Contractor shall preserve and protect from damage all monuments or other points that mark the boundaries of the Right-of-Way or abutting parcels that are outside the area that must be disturbed to perform the Work. The Contractor indemnifies and holds harmless the Department from all claims to reestablish the former location of all such monuments or points including claims arising from 14 MRSA § 7554-A. For a related provision, see Section 104.3.11 - Responsibility for Property of Others.

SECTION 106
QUALITY

106.4.3 Testing Change the first sentence in paragraph three from "…maintain records of all inspections and tests." to "…maintain original documentation of all inspections, tests, and calculations used to generate reports."

106.6 Acceptance Add the following to paragraph 1 of A: "This includes Sections 401 - Hot Mix Asphalt, 402 - Pavement Smoothness, and 502 - Structural Concrete - Method A - Air Content."

Add the following to the beginning of paragraph 3 of A: "For pay factors based on Quality Level Analysis, and"

106.7.1 Standard Deviation Method Add the following to F: "Note: In cases where the mean of the values is equal to either the USL or the LSL, then the PWL will be 50 regardless of the computed value of s."

Add the following to H: "Method C Hot Mix Asphalt: PF = [55 + (Quality Level *0.5)] * 0.01"

SECTION 107
TIME

107.3.1 General Add the following: "If a Holiday occurs on a Sunday, the following Monday shall be considered a Holiday. Sunday or Holiday work must be approved by the Department, except that the Contractor may work on Martin Luther King Day, President's Day, Patriot's Day, the Friday after Thanksgiving, and Columbus Day without the Department's approval."

107.7.2 Schedule of Liquidated Damages Replace the table of Liquidated Damages as follows:

From More Than	Up to and Including	Amount of Liquidated Damages per Calendar Day
$0	$100,000	$225

$100,000	$250,000	$350
$250,000	$500,000	$475
$500,000	$1,000,000	$675
$1,000,000	$2,000,000	$900
$2,000,000	$4,000,000	$1,000
$4,000,000	and more	$2,100

SECTION 108
PAYMENT

Remove Section 108.4 and replace with the following:

"108.4 Payment for Materials Obtained and Stored Acting upon a request from the Contractor and accompanied by bills or receipted bills, the Department will pay for all or part of the value of acceptable, non-perishable Materials that are to be incorporated in the Work, including Materials that are to be incorporated into the Work, not delivered on the Work site, and stored at places acceptable to the Department. Examples of such Materials include steel piles, stone masonry, curbing, timber and lumber, metal Culverts, stone and sand, gravel, and other Materials. The Department will not make payment on living or perishable Materials until acceptably planted in their final locations.

If payment for Materials is made to the Contractor based on bills, only, then the Contractor must provide receipted bills to the Department for these Materials within 14 days of the date the Contractor receives payment for the Materials. Failure of the Contractor to provide receipted bills for these Materials within 14 days of the dated the Contractor receives payment will result in the paid amount being withheld from the subsequent progress payment, or payments, until such time the receipted bills are received by the Department.

Materials paid for by the Department are the property of the Department, but the risk of loss shall remain with the Contractor. Payment for Materials does not constitute Acceptance of the Material. If Materials for which the Department has paid are later found to be unacceptable, then the Department may withhold amounts reflecting such unacceptable Materials from payments otherwise due the Contractor.

In the event of Default, the Department may use or cause to be used all paid-for Materials in any manner that is in the best interest of the Department."

SECTION 109
CHANGES

109.1.1 Changes Permitted Add the following to the end of the paragraph: "There will be no adjustment to Contract Time due to an increase or decrease in quantities, compared to those estimated, except as addressed through Contract Modification(s)."

109.1.2 Substantial Changes to Major Items Add the following to the end of the paragraph: "Contract Time adjustments may be made for substantial changes to Major Items when the change affects the Critical Path, as determined by the Department"

109.4.4 Investigation / Adjustment Third sentence, delete the words "subsections (A) - (E)"

109.5.1 Definitions - Types of Delays

B. Compensable Delay Replace (1) with the following; "a weather related Uncontrollable Event of such an unusually severe nature that a Federal Emergency Disaster is declared. The Contractor will only be entitled to an Equitable Adjustment if the Project falls within the geographic boundaries prescribed under the disaster declaration."

109.7.2 Basis of Payment Replace with the following: "Adjustments will be established by mutual Agreement based upon Unit or Lump Sum Prices. These agreed Unit or Lump Sum prices will be full compensation and no additions or mark-ups are allowed. If Agreement cannot be reached, the Contractor shall accept payment on a Force Account basis as provided in Section 109.7.5 - Force Account Work, as full and complete compensation for all Work relating to the Equitable Adjustment."

109.7.3 Compensable Items Delete this Section entirely.

109.7.4 Non-Compensable Items Replace with the following: "The Contractor is not entitled to compensation or reimbursement for any of the following items:

A. Total profit or home office overhead in excess of 15%,
B. ……."

109.7.5 Force Account Work

C. Equipment
Paragraph 2, delete sentence 1 which starts; "Equipment leased…."

Paragraph 6, change sentence 2 from "The Contractor may furnish…" to read "If requested by the Department, the Contractor will produce cost data to assist the Department in the establishment of such rental rate, including all records that are relevant to the Actual Costs including rental Receipts, acquisition costs, financing documents, lease Agreements, and maintenance and operational cost records."
Add the following paragraph; "Equipment leased by the Contractor for Force Account Work and actually used on the Project will be paid for at the actual invoice amount plus 10% markup for administrative costs."

Add the following section;

"F. Subcontractor Work When accomplishing Force Account Work that utilizes Subcontractors, the Contractor will be allowed a maximum markup of 5% for profit and overhead on the Subcontractor's portion of the Force Account Work. If the Department does not accept the Subcontractor quote, then the Subcontractor work will be subject to the Force Account provisions with a 5% markup for profit & overhead.."

SECTION 110
INDEMNIFICATION, BONDING, AND INSURANCE

Delete the entire Section 110.2.3 and replace with the following:

110.2.3 Bonding for Landscape Establishment Period The Contractor shall provide a signed, valid, and enforceable Performance, Warranty, or Maintenance Bond complying with the Contract, to the Department at Final Acceptance.

The bond shall be in the full amount for all Pay Items for work pursuant to Sec 621, Landscape, payable to the "Treasurer - State of Maine," and on the Department's forms, on exact copies thereof, or on forms that do not contain any significant variations from the Department's forms as solely determined by the Department.

The Contractor shall pay all premiums and take all other actions necessary to keep said bond in effect for the duration of the Landscape Establishment Period described in Special Provision 621.0036 - Establishment Period. If the Surety becomes financially insolvent, ceases to be licensed or approved to do business in the State of Maine, or stops operating in the United States, the Contractor shall file new bonds complying with this Section within 10 Days of the date the Contractor is notified or becomes aware of such change.

All Bonds shall be procured from a company organized and operating in the United States, licensed or approved to do business in the State of Maine by the State of Maine Department of Business Regulation, Bureau of Insurance, and listed on the latest Federal Department of the Treasury listing for "Companies Holding Certificates of Authority as Acceptable Sureties on Federal Bonds and as Acceptable Reinsuring Companies."

By issuing a bond, the Surety agrees to be bound by all terms of the Contract, including those related to payment, time for performance, quality, warranties, and the Department's self-help remedy provided in Section 112.1 - Default to the same extent as if all terms of the Contract are contained in the bond(s).

Regarding claims related to any obligations covered by the bond, the Surety shall provide, within 60 Days of Receipt of written notice thereof, full payment of the entire claim or written notice of all bases upon which it is denying or contesting payment. Failure of the Surety to provide such notice within the 60-day period constitutes the Surety's waiver of any right to deny or contest payment and the Surety's acknowledgment that the claim is valid and undisputed.

SECTION 202
REMOVING STRUCTURES AND OBSTRUCTIONS

202.02 Removing Buildings Make the following change to the last sentence in the final paragraph, change "…Code of Maine Regulations 401." to "…Department of Environmental Protection Maine Solid Waste Management Rules, 06-096 CMR Ch. 401, Landfill Siting, Design and Operation."

SECTION 203
EXCAVATION AND EMBANKMENT

203.01 Description Under b. Rock Excavation; add the following sentence: "The use of perchlorate is not allowed in blasting operations."

Delete the entire Section 203.041 and replace with the following:
"203.041 Salvage of Existing Hot Mix Asphalt Pavement All existing hot mix asphalt pavement designated to be removed under this contract must be salvaged for utilization. Existing hot mix asphalt pavement material shall not be deposited in any waste area or be placed below subgrade in any embankment.

Methods of utilization may be any of the following:

1. Used as a replacement for untreated aggregate surface course on entrances provided the material contains no particles greater than 50 mm [2 in] in any dimension. Payment will be made under Pay Item 411.09, Untreated Aggregate Surface Course or 411.10, Untreated Aggregate Surface Course, Truck Measure. Material shall be placed, shaped, compacted and stabilized as directed by the Resident.

2. Used as the top 3" of gravel. Recycled Asphalt Pavement (RAP) shall be process to 1½" minus and blending will not be allowed. When this method is utilized, a surcharge will not be required

3. Stockpiled at commercial or approved sites for commercial or MaineDOT use.

4. Other approved methods proposed by the Contractor, and approved by the Resident which will assure proper use of the existing hot mix asphalt pavement.

The cost of salvaging hot mix asphalt material will be included for payment under the applicable pay item, with no additional allowances made, which will be full compensation for removing, temporarily stockpiling, and rehandling, if necessary, and utilizing the material in entrances or other approved uses, or stockpiling at an approved site as described above. The material will also be measured and paid for under the applicable Pay Item if it is reused for aggregate in entrances, or other approved uses."

SECTION 502
STRUCTURAL CONCRETE

502.05 Composition and Proportioning; TABLE #1; NOTE #2; third sentence; Change "…alcohol based saline sealer…" to "alcohol based silane sealer…". Add NOTE #6 to Class S Concrete.

502.0502 Quality Assurance Method A - Rejection by Resident Change the first sentence to read: "For an individual sublot with test results failing to meet the criteria in Table #1, or if the calculated pay factor for Air Content is less than 0.80……"

502.0503 Quality Assurance Method B - Rejection by Resident Change the first sentence to read: "For material represented by a verification test with test results failing to meet the criteria in Table #1, the Department will……"

502.0505 Resolution of Disputed Acceptance Test Results Combine the second and third sentence to read: "Circumstances may arise, however, where the Department may ……"
502.10 Forms and False work
D. Removal of Forms and False work 1., First paragraph; first, second, and third sentence; replace "forms" with "forms and false work"

502.11 Placing Concrete
G. Concrete Wearing Surface and Structural Slabs on Precast Superstructures Last paragraph; third sentence; replace "The temperature of the concrete shall not exceed 24° C [75° F} at the time of placement." with "The temperature of the concrete shall not exceed 24° C [75° F} at the time the concrete is placed in its final position."

502.15 Curing Concrete First paragraph; replace the first sentence with the following; "All concrete surfaces shall be kept wet with clean, fresh water for a curing period of at least 7 days after concrete placing, with the exception of vertical surfaces as provided for in Section 502.10 (D) - Removal of Forms and False work."

Second paragraph; delete the first two sentences.
Third paragraph; delete the entire paragraph which starts "When the ambient temperature…."
Fourth paragraph; delete "approved" to now read "…continuously wet for the entire curing period…"

Fifth paragraph; second sentence; change "…as soon as it is possible to do so without damaging the concrete surface." to "…as soon as possible."

Seventh paragraph; first sentence; change "…until the end of the curing period." to "…until the end of the curing period, except as provided for in Section 502.10(D) - Removal of Forms and False work."

502.19 Basis of Payment First paragraph, second sentence; add "pier nose armor" to the list of items included in the contract price for concrete.

SECTION 503
REINFORCING STEEL

503.06 Placing and Fastening Change the second paragraph, first sentence from: "All tack welding shall be done in accordance with Section 504, Structural Steel." to "All tack welding shall be done in accordance with AWS D1.4 Structural Welding Code - Reinforcing Steel."

SECTION 504
STRUCTURAL STEEL

504.09 Facilities for Inspection Add the follow as the last paragraph: "Failure to comply with the above requirements will be consider to be a denial to allow access to work by the Contractor. The Department will reject any work done when access for inspection is denied."

504.18 Plates for Fabricated Members Change the second paragraph, first sentence from: "…ASTM A 898/A 898 M…" to "…ASTM A 898/A 898 M or ASTM A 435/A 435 M as applicable and…"

504.31 Shop Assembly Add the following as the last sentence: "The minimum assembly length shall include bearing centerlines of at least two substructure units."

504.64 Non Destructive Testing-Ancillary Bridge Products and Support Structures Change the third paragraph, first sentence from "One hundred percent…" to "Twenty five percent…"

SECTION 535
PRECAST, PRESTRESSED CONCRETE SUPERSTRUCTURE

535.02 Materials Change "Steel Strand for Concrete Reinforcement" to "Steel Strand." Add the following to the beginning of the third paragraph; "Concrete shall be Class P conforming to the requirements in this section. 28 day compressive strength shall be as stated on the plans. Coarse aggregate…."

535.05 Inspection Facilities Add the follow as the last paragraph: "If the above requirements are not met, the Contractor shall be considered to be in violation of Standard Specification 104.2.5 – Right to Inspect Work. All work occurring during a violation of this specification will be rejected."

535.26 Lateral Post-Tensioning Replace the first paragraph; "A final tension…" with "Overstressing strands for setting losses cannot be accomplished for chuck to chuck lengths of 7.6 m [25 ft] and less. In such instances, refer to the Plans for all materials and methods. Otherwise, post-tensioning shall be in accordance with PCI standards and shall provide the anchorage force noted in the Plans. The applied jacking force shall be no less than 100% of the design jacking force."

SECTION 603
PIPE CULVERTS AND STORM DRAINS

603.0311 Corrugated Polyethylene Pipe for Option III Replace the Minimum Mandrel Diameter Table with the following:

Nominal Size US Customary (in)	Minimum Mandrel Diameter (in)	Nominal Size Metric (mm)	Minimum Mandrel Diameter (mm)
12	11.23	300	280.73
15	14.04	375	350.91
18	16.84	450	421.09
24	22.46	600	561.45
30	28.07	750	701.81
36	33.69	900	842.18
42	39.30	1050	982.54
48	44.92	1200	1122.90

SECTION 604
MANHOLES, INLETS, AND CATCH BASINS

604.02 Materials Add the following:

"Tops and Traps 712.07

Corrugated Metal Units	712.08
Catch Basin and Manhole Steps	712.09”

SECTION 605
UNDERDRAINS

605.05 Underdrain Outlets Make the following change:

In the first paragraph, second sentence, delete the words “metal pipe”.

SECTION 606
GUARDRAIL

606.02 Materials Delete the entire paragraph which reads “The sole patented supplier of multiple mailbox….” and replace with “Acceptable multiple mailbox assemblies shall be listed on the Department’s Approved Products List and shall be NCHRP 350 tested and approved.”
Delete the entire paragraph which reads “Retroreflective beam guardrail delineators….” and replace with “Reflectorized sheeting for Guardrail Delineators shall meet the requirements of Section 719.01 - Reflective Sheeting. Delineators shall be fabricated from high-impact, ultraviolet and weather resistant thermoplastic.

606.09 Basis of Payment First paragraph; delete the second and third sentence in their entirety and replace with “Butterfly-type guardrail reflectorized delineators shall be mounted on all W-beam guardrail at an interval of every 10 posts [62.5 ft] on tangents sections and every 5 posts [31.25 ft] on curved sections as directed by the Resident. On divided highways, the delineators shall be yellow on the left hand side and silver/white on the right hand side. On two-way roadways, the delineators shall be silver/white on the right hand side. All delineators shall have retroreflective sheeting applied to only the traffic facing side. Reflectorized guardrail delineators will not be paid for directly, but will be considered incidental to the guardrail items.”

SECTION 609
CURB

609.04 Bituminous Curb f., Delete the requirement “Color Natural (White)”

SECTION 610
STONE FILL, RIPRAP, STONE BLANKET, AND STONE DITCH PROTECTION

Add the following paragraph to Section 610.02:
“Materials shall meet the requirements of the following Sections of Special Provision 703:

Stone Fill	703.25
Plain and Hand Laid Riprap	703.26
Stone Blanket	703.27
Heavy Riprap	703.28

Definitions	703.32”

Add the following paragraph to Section 610.032.a.
“Stone fill and stone blanket shall be placed on the slope in a well-knit, compact and uniform layer. The surface stones shall be chinked with smaller stone from the same source.”

Add the following paragraph to Section 610.032.b:
“Riprap shall be placed on the slope in a well-knit, compact and uniform layer. The surface stones shall be chinked with smaller stone from the same source.”

Add the following to Section 610.032: “Section 610.032.d. The grading of riprap, stone fill, stone blanket and stone ditch protection shall be determined by the Resident by visual inspection of the load before it is dumped into place, or, if ordered by the Resident, by dumping individual loads on a flat surface and sorting and measuring the individual rocks contained in the load. A separate, reference pile of stone with the required gradation will be placed by the Contractor at a convenient location where the Resident can see and judge by eye the suitability of the rock being placed during the duration of the project. The Resident reserves the right to reject stone at the job site or stockpile, and in place. Stone rejected at the job site or in place shall be removed from the site at no additional cost to the Department.”

SECTION 615
LOAM

615.02 Materials Make the following change:

Organic Content	Percent by Volume
Humus	“5% - 10%”, as determined by Ignition Test

SECTION 618
SEEDING

618.01 Description Change the first sentence to read as follows: “This work shall consist of furnishing and applying seed …..” Also remove “,and cellulose fiber mulch” from 618.01(a).
618.03 Rates of Application In 618.03(a), remove the last sentence and replace with the following: “These rates shall apply to Seeding Method 2, 3, and Crown Vetch.”

In 618.03(c) “1.8 kg [4 lb]/unit.” to “1.95 kg [4 lb]/unit.”

618.09 Construction Method In 618.09(a) 1, sentence two, replace “100 mm [4 in]” with “25 mm [1 in] (Method 1 areas) and 50 mm [2 in] (Method 2 areas)”

618.15 Temporary Seeding Change the Pay Unit from Unit to Kg [lb].

SECTION 620
GEOTEXTILES

620.03 Placement Section (c)
Title: Replace “Non-woven” in title with “Erosion Control”.

First Paragraph: Replace first word "Non-woven" with "Woven monofilament".
Second Paragraph: Replace second word "Non-woven" with "Erosion Control".

620.07 Shipment, Storage, Protection and Repair of Fabric Section (a)
Replace the second sentence with the following: "Damaged geotextiles, as identified by the Resident, shall be repaired immediately."

620.09 Basis of Payment
Pay Item 620.58: Replace "Non-woven" with "Erosion Control"
Pay Item 620.59: Replace "Non-woven" with "Erosion Control"

SECTION 621
LANDSCAPING

621.0036 Establishment Period In paragraph 4 and 5, change "time of Final Acceptance" to "end of the period of establishment". In Paragraph 7, change "Final Acceptance date" to ""end of the period of establishment" and change "date of Final Acceptance" to "end of the period of establishment".

SECTION 626
HIGHWAY SIGNING

626.034 Concrete Foundations Add to the following to the end of the second paragraph: "Pre-cast and cast-in-place foundations shall be warranteed against leaning and corrosion for two years after the project is completed. If the lean is greater than 2 degrees from normal or the foundation is spalling within the first two years, the Contractor shall replace the foundation at no extra cost."

SECTION 627
PAVEMENT MARKINGS

627.10 Basis of Payment Add to the following to the end of the third paragraph: "If allowed by Special Provision, the Contractor may utilize Temporary Bi-Directional Yellow and White(As required) Delineators as temporary pavement marking lines and paid for at the contract lump sum price. Such payment will include as many applications as required and removal."

SECTION 637
DUST CONTROL

637.06 Basis of Payment Add the following after the second sentence of the third paragraph: "Failure by the Contractor to follow Standard Specification or Special Provision - Section 637 and/or the Contractor's own Soil Erosion and Pollution Control Plan concerning Dust Control and/or the Contractor's own Traffic Control Plan concerning Dust Control and/or visible evidence of excessive dust problems, as determined by the Resident, will result in a reduction in payment, computed by reducing the Lump Sum Total by 5% per occurrence per day. The Department's Resident or any other representative of the Department reserves the right to

suspend the work at any time and request a meeting to discuss violations and remedies. The Department shall not be held responsible for any delay in the work due to any suspension under this item. Additional penalties may also be assessed in accordance with Special Provision 652 - Work Zone Traffic Control and Standard Specification 656 - Temporary Soil Erosion and Water Pollution Control."

SECTION 639
ENGINEERING FACILITIES

639.04 Field Offices Change the forth to last paragraph from: "The Contractor shall provide a fully functional desktop copier…" to "….desktop copier/scanner…"

Description Change "Floor Area" to "Floor Area (Outside Dimension)". Change Type B floor area from "15 (160)" to "20 (217)".

639.09 Telephone Paragraph 1 is amended as follows:
"The contractor shall provide **two** telephone lines and two telephones,…."

Add- "In addition the contractor will supply one computer broadband connection, modem lease and router. The router shall have wireless access and be 802.11n or 802.11g capable and wireless. The type of connection supplied will be contingent upon the availability of services (i.e. DSL or Cable Broadband). It shall be the contractor's option to provide dynamic or static IP addresses through the service. **The selected service will have a minimum downstream connection of 1.5 Mbps and 384 Kbps upstream.** The contractor shall be responsible for the installation charges and all reinstallation charges following suspended periods. Monthly service and maintenance charges shall be billed by the Internet Service Provider (ISP) directly to the contractor."

SECTION 652
MAINTENANCE OF TRAFFIC

652.2.3 Flashing Arrow Board Delete the existing 5 paragraphs and replace with the following: Flashing Arrow Panels (FAP) must be of a type that has been submitted to AASHTO's National Transportation Product Evaluation Program (NTPEP) for evaluation and placed on the Maine Department of Transportations' Approved Products List of Portable Changeable Message Signs & Flashing Arrow Panels.

FAP units shall meet requirements of the current Manual on Uniform Traffic Control Devices (MUTCD) for Type "C" panels as described in Section 6F.56 - Temporary Traffic Control Devices. An FAP shall have matrix of a minimum of 15 low-glare, sealed beam, Par 46 elements capable of either flashing or sequential displays as well as the various operating modes as described in the MUTCD, Chapter 6-F. If an FAP consisting of a bulb matrix is used, each element should be recess-mounted or equipped with an upper hood of not less than 180 degrees. The color presented by the elements shall be yellow.

FAP elements shall be capable of at least a 50 percent dimming from full brilliance. Full brilliance should be used for daytime operation and the dimmed mode shall be used for nighttime operation. FAP shall be at least 2.4 M x 1.2 M [96" x 48"] and finished in non-

reflective black. The FAP shall be interpretable for a distance not less than 1.6 km [1 mile].

Operating modes shall include, flashing arrow, sequential arrow, sequential chevron, flashing double arrow, and flashing caution. In the three arrow signals, the second light from the arrow point shall not operate.

The minimum element on-time shall be 50 percent for the flashing mode, with equal intervals of 25 percent for each sequential phase. The flashing rate shall be not less than 25 nor more than 40 flashes per minute. All on-board circuitry shall be solid state.

Primary power source shall be 12 volt solar with a battery back-up to provide continuous operation when failure of the primary power source occurs, up to 30 days with fully charged batteries. Batteries must be capable of being charged from an onboard 110 volt AC power source and the unit shall be equipped with a cable for this purpose.

Controller and battery compartments shall be enclosed in lockable, weather-tight boxes.
The FAP shall be mounted on a pneumatic-tired trailer or other suitable support for hauling to various locations, as directed. The minimum mounting height of an arrow panel should be 2.1 M [7 feet] from the roadway to the bottom of the panel.

The face of the trailer shall be delineated on a permanent basis by affixing retro-reflective material, known as conspicuity material, in a continuous line as seen by oncoming drivers.

A portable changeable message sign may be used to simulate an arrow panel display."

652.2.4 Other Devices Delete the last paragraph and add the following:
"652.2.5 Portable Changeable Message Sign Trailer mounted Portable Changeable Message Signs (PCMS) must be of a type that has been submitted to AASHTO's National Transportation Product Evaluation Program (NTPEP) for evaluation and placed on the Maine Department of Transportations' Approved Products List of Portable Changeable Message Signs & Flashing Arrow Panels. The PCMS unit shall meet or exceed the current specifications of the Manual on Uniform Traffic Control Devices (MUTCD), 6F.55.

The front face of the sign should be covered with a low-glare protective material. The color of the LED elements shall be amber on a black background. The PCMS should be visible from a distance of 0.8 km [0.5 mile] day and night and have a minimum 15º viewing angle. Characters must be legible from a distance of at least 200 M [650 feet].

The message panel should have adjustable display rates (minimum of 3 seconds per phase), so that the entire message can be read at least twice at the posted speed, the off-peak 85th-percentile speed prior to work starting, or the anticipated operating speed. Each message shall consist of either one or two phases. A phase shall consist of up to eight characters per line. The unit must be capable of displaying at least three lines of text with eight characters per line. Each character shall be 457 mm [18"] high. Each character module shall use at least a five wide and seven high pixel matrix. The text of the messages shall not scroll or travel horizontally or vertically across the face of the sign.

Units shall automatically adjust their brightness under varying light conditions to maintain legibility.

The control system shall include a display screen upon which messages can be reviewed before being displayed on the message sign. The control system shall be capable of maintaining memory when power is unavailable. Message must be changeable with either a notebook computer or an on-board keypad. The controller shall have the capability to store a minimum of 200 user-defined and 200 pre-programmed messages. Controller and battery compartments shall be enclosed in lockable, weather-tight boxes.

PCMS units shall have the capability of being made programmable by means of wireless communications. PCMS units shall also be fully capable of having an on-board radar system installed if required for a particular application.

PCMS' primary power source shall be solar with a battery back-up to provide continuous operation when failure of the primary power source occurs. Batteries must be capable of being charged from a 110 volt AC power source. The unit must also be capable of being operated solely from a 110 volt AC power source and be equipped with a cable for this purpose.

The PCMS shall be mounted on a trailer in such a way that the bottom of the message sign panel shall be a minimum of 2.1 M [7 ft] above the roadway in urban areas and 1.5 M [5 ft] above the roadway in rural areas when it is in the operating mode. PCMS trailers should be of a heavy duty type with a 51 mm [2"] ball hitch and a minimum of four leveling jacks (at each corner). The sign shall be capable of being rotated 360° relative to the trailer. The face of the trailer shall be delineated on a permanent basis by affixing retro-reflective material, known as conspicuity material, in a continuous line as seen by oncoming drivers."

652.3.3 Submittal of Traffic Control Plan In item e. change "A list of all certified flaggers…" to "A list of all the Contractor's certified flaggers…"

Change a. in the list of requirements to: "a. The name, telephone number, and other contact numbers (cellular phone, pager, if any) of the Contractor's Traffic Control Supervisor (the person with overall responsibility for following the TCP), who has received Work Zone Traffic Control Training commensurate with the level of responsibility shown in the requirements of the Contract, and who is empowered to immediately resolve any work zone traffic control deficiencies or issues. Provide documentation that the Traffic Control Supervisor has completed a Work Zone Traffic Control Training Course (AGC, ATSSA, or other industry-recognized training), and a Supervisory refresher training every 5 years thereafter. Submit the course name, training entity, and date of training.

Traffic Control Training Course curriculum must be based on the standards and guidelines of the MUTCD and must include, at a minimum, the following:

1. Parts of Temporary Traffic Control Zone
2. Appropriate use and spacing of signs
3. Use and spacing of channelizing devices
4. Flagging basics
5. Typical examples and applications

The Traffic Control Supervisor, or designee directly overseeing physical installation, adjustment, and dismantling of work zone traffic control, will ensure all personnel performing

those activities are trained to execute the work in a safe and proper manner, in accordance with their level of decision-making and responsibility."

Add the follow to the list of requirements: "k. The plan for unexpected nighttime work along with a list of emergency nighttime equipment available on-site."

In the last paragraph add the following as the second sentence: "The Department will review and provide comments to the Contractor within 14 days of receipt of the TCP." Add the following as the last sentence: "The creation and modification of the TCP will be considered incidental to the related 652 items."

652.3.5 Installation of Traffic Control Devices In the first paragraph, first sentence; change "Signs shall be erected…" to "Portable signs shall be erected.." In the third sentence; change "Signs must be erected so that the sign face…" to "Post-mounted signs must also be erected so that the sign face…"

652.4 Flaggers Replace the first paragraph with the following; "The Contractor shall furnish flaggers as required by the TCP or as otherwise specified by the Resident. All flaggers must have successfully completed a flagger test approved by the Department and administered by a Department-approved Flagger-Certifier who is employing that flagger. All flaggers must carry an official certification card with them while flagging that has been issued by their employer. Flaggers shall wear safety apparel meeting ANSI 107-2004 Class 2 risk exposure that clearly identifies the wearer as a person, and is visible at a minimum distance of 300 m [1000 ft], and shall wear a hardhat with 360° retro-reflectivity. For nighttime conditions, Class 3 apparel, meeting ANSI 107-2004, shall be worn along with a hardhat with 360° retro-reflectivity. Retro-reflective or flashing SLOW/STOP paddles shall be used, and the flagger station shall be illuminated to assure visibility in accordance with 652.6.2."

Second paragraph, first sentence; change "…have sufficient distance to stop before entering the workspace." to "…have sufficient distance to stop at the intended stopping point." Third sentence; change "At a spot obstruction…" to "At a spot obstruction with adequate sight distance,…"

Fourth paragraph, delete and replace with "Flaggers shall be provided as a minimum, a 10 minute break, every 2 hours and a 30 minute or longer lunch period away from the work station. Flaggers may only receive 1 unpaid break per day; all other breaks must be paid. Sufficient certified flaggers shall be available onsite to provide for continuous flagging operations during break periods. If the flaggers are receiving the appropriate breaks, breaker flagger(s) shall be paid starting 2 hours after the work begins and ending 2 hours before the work ends. A maximum of 1 breaker per 6 flaggers will be paid. (1 breaker flagger for 2 to 6 flaggers, 2 breaker flaggers for 7 to 12 flaggers, etc)"

Add the following:

"652.5.1 Rumble Strip Crossing When lane shifts or lane closures require traffic to cross a permanent longitudinal rumble strip for 7 calendar days or less, the Contractor shall install warning signs that read "RUMBLE STRIP CROSSING" with a supplemental Motorcycle Plaque, (W8-15P).

When lane shifts or lane closures require traffic to cross a permanent longitudinal rumble strip for more than 7 calendar days, the Contractor shall pave in the rumble strips in the area that

traffic will cross, unless otherwise directed by the Resident. Rumble strips shall be replaced prior to the end of the project, when it is no longer necessary to cross them."

652.6 Nightwork Delete this section entirely and replace with the following:
"652.6.1 Daylight Work Times Unless otherwise described in the Contract, the Contractor is allowed to commence work and end work daily according to the Sunrise/Sunset Table at: http://www.sunrisesunset.com/usa/Maine.asp . If the Project town is not listed, the closest town on the list will be used as agreed at the Preconstruction Meeting. Any work conducted before sunrise or after sunset will be considered Night Work.

652.6.2 Night Work When Night Work occurs (either scheduled or unscheduled), the Contractor shall provide and maintain lighting on all equipment and at all work stations.

The lighting facilities shall be capable of providing light of sufficient intensity to permit good workmanship, safety and proper inspection at all times. The lighting shall be cut off and arranged on stanchions at a height that will provide perimeter lighting for each piece of equipment and will not interfere with traffic, including commercial vehicles, approaching the work site from either direction.

The Contractor shall have available portable floodlights for special areas.

The Contractor shall utilize padding, shielding or other insulation of mechanical and electrical equipment, if necessary, to minimize noise, and shall provide sufficient fuel, spare lamps, generators, etc. to maintain lighting of the work site.

The Contractor shall submit, as a subset of the Traffic Control Plan, a lighting plan at the Preconstruction Conference, showing the type and location of lights to be used for night work. The Resident may require modifications be made to the lighting set up in actual field conditions.

Prior to beginning any Night Work, the Contractor shall furnish a light meter for the Residents use that is capable of measuring the range of light levels from 5 to 20 foot-candles.

Horizontal illumination, for activities on the ground, shall be measured with the photometer parallel to the road surface. For purposes of roadway lighting, the photometer is placed on the pavement. Vertical illumination, for overhead activities, shall be measured with the photometer perpendicular to the road surface. Measurements shall be taken at the height and location of the overhead activity.

Night Work lighting requirements:

Mobile Operations: For mobile-type operations, each piece of equipment (paver, roller, milling machine, etc) will carry indirect (i.e. balloon type) lights capable of producing at least 10 foot-candles of lighting around the work area of the equipment.

Fixed Operations: For fixed-type operations (flaggers, curb, bridge, pipes, etc.), direct (i.e. tower) lighting will be utilized capable of illuminating the work area with at least 10 foot-candles of light.

Hybrid Operations: For hybrid-type operations (guardrail, sweeping, Inslope excavation, etc.), either direct or indirect lighting may be utilized. The chosen lights must be capable of producing at least 10 foot-candles of light around the work area of the equipment
Inspection Operations: Areas required to be inspected by the Department will require a minimum of 5 foot-candles of lighting. This may be accomplished through direct or indirect means.

All workers shall wear safety apparel labeled as meeting the ANSI 107-2004 standard performance for Class 3 risk exposure.

The Contractor shall apply 2- inch wide retro-reflective tape, with alternating red and white segments, to outline the front back and sides of construction vehicles and equipment, to define their shape and size to the extent practicable. Pickup trucks and personal vehicles are exempt from this requirement. The Contractor shall furnish approved signs reading "Construction Vehicle - Keep Back" to be used on trucks hauling to the project when such signs are deemed necessary by the Resident. The signs shall be a minimum of 30 inches by 60 inches, Black and Orange, ASTM D 4956 - Type VII, Type VIII, or Type IX (prismatic).

All vehicles used on the project, including pickup trucks and personal vehicles, shall be equipped with amber flashing lights, visible from both front and rear, or by means of single, approved type, revolving, flashing or strobe lights mounted so as to be visible 360º. The vehicle flashing system shall be in continuous operation while the vehicle is on any part of the project.

The Resident or any other representative of the Department reserves the right to suspend the work at any time and request a meeting to discuss violations and remedies. The Department shall not be held responsible for any delay in the work due to any suspension under this item. Failure to follow the approved Lighting Plan will result in a Traffic Control violation.

Payment for lighting, vehicle mounted signs and other costs accrued because of night work will not be made directly but will be considered incidental to the related contract items."

652.8.2 Other Items Replace the first paragraph with the following: "The accepted quantities of flagger hours will be paid for at the contract unit price per hour for each flagging station occupied excluding lunch breaks, and for each approved breaker flagger. Overtime hours, as reported on the certified payrolls, will be paid an additional 30% of the bid price for 652.38. The computation and additional payment for overtime hours will occur during the project close-out process and will be paid as additional hours of 652.38 to the nearest ¼ hour. The contract unit price shall be full compensation for hiring, transporting, equipping, supervising, and the payment of flaggers and all overhead and incidentals necessary to complete the work."
Replace the last paragraph with the following: "There will be no payment made under any 652 pay items after the expiration of the adjusted total contract time."

SECTION 653
POLYSTYRENE PLASTIC INSULATION

653.05 Placing Backfill In the second sentence; change "…shall be not less than 150 mm [6 in] loose measure." to "…shall be not less than 250 mm [10 in] loose measure." In the third sentence; change "…crawler type bulldozer of not more than 390 kg/m^2 [80 lb/ft^2] ground contact pressure…" to "…crawler type bulldozer of not more than 4875 kg/m^2 [2000 lb/ft^2] ground contact pressure…"

653.06 Compaction In the last sentence; change "…not more than 390 kg/m^2 [80 lb/ft^2] ground contact…" to "…not more than 4875 kg/m^2 [2000 lb/ft^2] ground contact…"

SECTION 656
TEMPORARY SOIL EROSION AND WATER POLLUTION CONTROL

656.5.1 If Pay Item 656.75 Provided Replace the second paragraph with the following: "Failure by the Contractor to follow Standard Specification or Special Provision - Section 656 and/or the Contractor's own Soil Erosion and Water Pollution Control Plan (SEWPCP) will result in a violation letter and a reduction in payment as shown in the schedule below. The Department's Resident or any other representative of The Department reserves the right to suspend the work at any time and request a meeting to discuss violations and remedies. The Department shall not be held responsible for any delay in the work due to any suspension under this item.

ORIGINAL CONTRACT AMOUNT

From More Than	**Up to and Including**	**Amount of Penalty Damages per Violation 1st**	**2nd**	**3rd & Subsequent**
$0	$1,000,000	$250	$500	$1,250
$1,000,000	$2,000,000	$500	$1,000	$2,500
$2,000,000	$4,000,000	$1,000	$2,000	$5,000
$4,000,000	and more	$2,000	$4,000	$10,000"

SECTION 701
STRUCTURAL CONCRETE RELATED MATERIALS

701.10 Fly Ash - Chemical Requirements Change all references from "ASTM C311" to "ASTM C114".

SECTION 703
AGGREGATES

703.05 Aggregate for Sand Leveling Change the percent passing the 9.5 mm [3/8 in] sieve from "85 – 10" to "85 – 100"

703.06 Aggregate for Base and Subbase Delete the first paragraph: "The material shall have…" and replace with "The material shall have a minimum degradation value of 15 as determined by Washington State DOT Test Method T113, Method of Test for Determination of Degradation Value (January 2009 version), except that the reported degradation value will be the result of testing a single specimen from that portion of a sample that passes the 12.5 mm [½ in] sieve and is retained on the 2.00 mm [No. 10] sieve, minus any reclaimed asphalt pavement used."

703.07 Aggregates for HMA Pavements Delete the forth paragraph: "The composite blend shall have…" and replace with "The composite blend, minus any reclaimed asphalt pavement used, shall have a Micro-Deval value of 18.0 or less as determined by AASHTO T 327. In the event the material exceeds the Micro Deval limit, a Washington Degradation test shall be performed. The material shall be acceptable if it has a value of 30 or more as determined by Washington State DOT Test Method T 113, Method of Test for Determination of Degradation Value (January 2009 version) except that the reported degradation value will be the result of testing a single composite specimen from that portion of the sample that passes the 12.5mm [1/2 inch] sieve and is retained on the 2.00mm [No 10] sieve, minus any reclaimed asphalt pavement used."

703.09 HMA Mixture Composition The coarse and fine aggregate shall meet the requirements of Section 703.07. The several aggregate fractions for mixtures shall be sized, graded, and combined in such proportions that the resulting composite blends will meet the grading requirements of the following table.

AGGREGATE GRADATION CONTROL POINTS

SIEVE SIZE	Nominal Maximum Aggregate Size---Control Points (Percent Passing)				
	TYPE 25 mm	TYPE 19 mm	TYPE 12.5 mm	TYPE 9.5 mm	TYPE 4.75 mm
	PERCENT BY WEIGHT PASSING - COMBINED AGGREGATE				
37.5 mm	100				
25 mm	90-100	100			
19 mm	-90	90-100	100		
12.5 mm		-90	90-100	100	100
9.5 mm		-	-90	90-100	95-100
4.75 mm		-	-	-90	80-100
2.36 mm	19-45	23-49	28-58	32-67	40 - 80
1.18 mm		-	-	-	-
600 µm		-	-	-	-
300 µm		-	-	-	-
75 µm	1-7	2-8	2-10	2-10	2-10

Gradation Classification---- The combined aggregate gradation shall be classified as coarse-graded when it passes below the Primary Control Sieve (PCS) control point as defined in the following table. All other gradations shall be classified as fine-graded.

GRADATION CLASSIFICATION

PCS Control Point for Mixture Nominal Maximum Aggregate Size (% passing)				
Nominal Maximum Aggregate Size	TYPE 25 mm	TYPE 19 mm	TYPE 12.5 mm	TYPE 9.5 mm
Primary Control Sieve	4.75 mm	4.75 mm	2.36 mm	2.36 mm
PCS Control Point (% passing)	40	47	39	47

If a Grading "D" mixture is allowed per Special Provision Section 403, it shall meet the following gradation and the aggregate requirements of Section 703.07.

Sieve Designation	Percentage by Weight Passing Square Mesh Sieves
½ inch	100
⅜ inch	93-100
No. 4	60-80
No. 8	46-65
No. 16	25-55
No. 30	16-40
No. 50	10-30
No. 100	6-22
No. 200	3.0-8.0

703.18 Common Borrow Replace the first paragraph with the following: "Common borrow shall consist of earth, suitable for embankment construction. It shall be free from frozen material, perishable rubbish, peat, and other unsuitable material including material currently or previously contaminated by chemical, radiological, or biological agents unless the material is from a DOT project and authorized by DEP for use."

703.22 Underdrain Backfill Material Change the first paragraph from "…for Underdrain Type B…" to "…for Underdrain Type B and C…"

Replace subsections 703.25 through 703.28 with the following:
"703.25 Stone Fill Stones for stone fill shall consist of hard, sound, durable rock that will not disintegrate by exposure to water or weather. Stone for stone fill shall be angular and rough. Rounded, subrounded, or long thin stones will not be allowed. Stone for stone fill may be obtained from quarries or by screening oversized rock from earth borrow pits. The maximum allowable length to thickness ratio will be 3:1. The minimum stone size (10 lbs) shall have an average dimension of 5 inches. The maximum stone size (500 lbs) shall have a maximum dimension of approximately 36 inches. Larger stones may be used if approved by the Resident. Fifty percent of the stones by volume shall have an average dimension of 12 inches (200 lbs).

703.26 Plain and Hand Laid Riprap Stone for riprap shall consist of hard, sound durable rock that will not disintegrate by exposure to water or weather. Stone for riprap shall be angular and rough. Rounded, subrounded or long thin stones will not be allowed. The maximum allowable length to width ratio will be 3:1. Stone for riprap may be obtained from quarries or by screening oversized rock from earth borrow pits. The minimum stone size (10 lbs) shall have an average dimension of 5 inches. The maximum stone size (200 lbs) shall have an average dimension of approximately 12 inches. Larger stones may be used if approved by the Resident. Fifty percent of the stones by volume shall have an average dimension greater than 9 inches (50 lbs).

703.27 Stone Blanket Stones for stone blanket shall consist of sound durable rock that will not disintegrate by exposure to water or weather. Stone for stone blanket shall be angular and rough. Rounded or subrounded stones will not be allowed. Stones may be obtained from

quarries or by screening oversized rock from earth borrow pits. The minimum stone size (300 lbs) shall have minimum dimension of 14 inches, and the maximum stone size (3000 lbs) shall have a maximum dimension of approximately 66 inches. Fifty percent of the stones by volume shall have average dimension greater than 24 inches (1000 lbs).

703.28 Heavy Riprap Stone for heavy riprap shall consist of hard, sound, durable rock that will not disintegrate by exposure to water or weather. Stone for heavy riprap shall be angular and rough. Rounded, subrounded, or thin, flat stones will not be allowed. The maximum allowable length to width ratio will be 3:1. Stone for heavy riprap may be obtained from quarries or by screening oversized rock from earth borrow pits. The minimum stone size (500 lbs) shall have minimum dimension of 15 inches, and at least fifty percent of the stones by volume shall have an average dimension greater than 24 inches (1000 lbs)."

Add the following paragraph:
"703.32 Definitions (ASTM D 2488, Table 1).
Angular: Particles have sharp edges and relatively plane sides with unpolished surfaces
Subrounded: Particles have nearly plane sides but have well-rounded corners and edges
Rounded: Particles have smoothly curved sides and no edges"

SECTION 706
NON-METALLIC PIPE

706.06 Corrugated Polyethylene Pipe for Underdrain, Option I and Option III Culvert Pipe Change the first sentence from "…300 mm diameters to 900 mm" to "…300 mm diameters to 1200 mm" Delete, in its' entirety, the last sentence which begins "This pipe and resins…" and replace with the following; "Manufacturers of corrugated polyethylene pipe must participate in, and maintain compliance with, AASHTO's National Transportation Product Evaluation Program (www.ntpep.org) which audits producers of plastic pipe. A certificate of compliance must be provided with each shipment."

SECTION 708
PAINTS AND PERSERVATIVES

708.03 Pavement Marking Paint Change the first sentence from "…AASHTO M248" to "…the Maine DOT Maintenance Fast-Dry Water-Based Traffic Paint on file at the Traffic Section in Augusta". Delete, in its' entirety, the last sentence.

SECTION 709
REINFORCING STEEL AND WELDED STEEL WIRE FABIC

709.03 Steel Strand Change the second paragraph from "…shall be 12mm [½ inch] AASHTO M203M/M203 (ASTM A416/A416M)…" to "…shall be 15.24 mm [0.600 inch] diameter AASHTO M203 (ASTM A416)…"

SECTION 710
FENCE AND GUARDRAIL

710.03 Chain Link Fabric Add the following sentence: "Chain Link fabric for PVC coated shall conform to the requirements of AASHTO M181, Type IV-Class B."

710.04 Metal Beam Rail Replace with the following: "Galvanized steel rail elements shall conform to the requirements of AASHTO M 180, Class A, Type II.

When corrosion resistant steel is specified, rail shall conform to AASHTO M 180, Class A, Type IV. Beams of corrosion resistant steel shall not be painted or galvanized. They shall be so handled and stored that the traffic face of these beams, used in a continuous run of guardrail, shall not show a distinctive color differential.

When metal beam rail is to be installed on a curve having a radius of curvature of 150 ft. or less, the beam sections shall be fabricated on an arc to the required radius and permanently stamped or embossed with the designated radius.

The engineer may take one piece of guardrail, a backup plate, and end or buffer section from each 200 pieces in a lot, or from each lot if less than 200 pieces are included therein for determination of compliance with specification requirements. If one piece fails to conform to the requirements of this specification, two other pieces shall be tested. If either of these pieces fails to conform to the requirements of this specification, the lot of material represented by these samples shall be rejected. A lot shall be considered that quantity of material offered for inspection at one time that bears the same heat and coating identification."

710.07 Guardrail Posts Section b. change "…AASHTO M183/M183M…" to "…AASHTO M 270M/M 270 Grade 250 (36)…"

SECTION 712
MISCELLANEOUS HIGHWAY MATERIALS

712.04 Stone Curbing and Edging Delete the existing and replace with the following: "Stone for curbing and edging shall be approved granite from acceptable sources. The stone shall be hard and durable, predominantly gray in color, free from seams that would be likely to impair its structural integrity, and of a smooth splitting character. Natural grain size and color variations characteristic of the source deposit will be permitted. Such natural variations may include bands or clusters of mineral crystallization provided they do not impair the structural integrity of the curb stone. The Contractor shall submit for approval the name of the quarry that is the proposed source of the granite for curb materials along with full scale color photos of the granite. Such submission shall be made sufficiently in advance of ordering so that the Resident may have an opportunity to judge the stone, both as to quality and appearance. Samples of curbing shall be submitted for approval only when requested by the Resident. The dimensions, shape, and other details shall be as shown on the plans."

712.06 Precast Concrete Units In the first paragraph, change "…ASTM C478M…" to "…AASHTO M199…" Delete the second paragraph and replace with the following; "Approved structural fibers may be used as a replacement of 6 x 6 #10 gauge welded wire fabric when used at an approved dosage rate for the construction of manhole and catch basin units. The material used shall be one of the products listed on the Maine Department of Transportation's Approved Product List of Structural Fiber Reinforcement." Delete the fifth paragraph and replace with the following; "The concrete mix design shall be approved by the Department. Concrete shall contain 6% air content, plus or minus 1½% tolerance when tested according to AASHTO T152. All concrete shall develop a minimum compressive strength of 28 MPa [4000 psi] in 28 days when tested according to AASHTO T22. The absorption of a

specimen, when tested according to AASHTO T280, Test Method "A", shall not exceed nine percent of the dry mass."

Add the following:
"712.07 Tops, and Traps These metal units shall conform to the plan dimensions and to the following specification requirements for the designated materials.

Gray iron or ductile iron castings shall conform to the requirements of AASHTO M306 unless otherwise designated."

712.08 Corrugated Metal Units The units shall conform to plan dimensions and the metal to AASHTO M36/M36M. Bituminous coating, when specified, shall conform to AASHTO M190 Type A.

712.09 Catch Basin and Manhole Steps Steps for catch basins and for manholes shall conform to ASTM C478M [ASTM C478], Section 13 for either of the following material:

(a) Aluminum steps-ASTM B221M, [ASTM B211] Alloy 6061-T6 or 6005-T5.

(b) Reinforced plastic steps Steel reinforcing bar with injection molded plastic coating copolymer polypropylene. Polypropylene shall conform to ASTM D 4101.

712.23 Flashing Lights Flashing Lights shall be power operated or battery operated as specified.

(a) Power operated flashing lights shall consist of housing, adapters, lamps, sockets, reflectors, lens, hoods and other necessary equipment designed to give clearly visible signal indications within an angle of at least 45 degrees and from 3 to 90 m [10 to 300 ft] under all light and atmospheric conditions.

Two circuit flasher controllers with a two-circuit filter capable of providing alternate flashing operations at the rate of not less than 50 nor more than 60 flashes per minute shall be provided.

The lamps shall be 650 lumens, 120 volt traffic signal lamps with sockets constructed to properly focus and hold the lamp firmly in position.
The housing shall have a rotatable sun visor not less than 175 mm [7 in] in length designed to shield the lens.

Reflectors shall be of such design that light from a properly focused lamp will reflect the light rays parallel. Reflectors shall have a maximum diameter at the point of contact with the lens of approximately 200 mm [8 in].

The lens shall consist of a round one-piece convex amber material which, when mounted, shall have a visible diameter of approximately 200 mm [8 in]. They shall distribute light and not diffuse it. The distribution of the light shall be asymmetrical in a downward direction. The light distribution of the lens shall not be uniform, but shall consist of a small high intensity portion with narrow distribution for long distance throw and a larger

low intensity portion with wide distribution for short distance throw. Lenses shall be marked to indicate the top and bottom of the lens.

(b) Battery operated flashing lights shall be self- illuminated by an electric lamp behind the lens. These lights shall also be externally illuminated by reflex-reflective elements built into the lens to enable it to be seen by reflex-reflection of the light from the headlights of oncoming traffic. The batteries must be entirely enclosed in a case. A locking device must secure the case. The light shall have a flash rate of not less than 50 nor more than 60 flashes per minute from minus 30 °C [minus 20 °F] to plus 65 °C [plus 150 °F]. The light shall have an on time of not less than 10 percent of the flash cycle. The light beam projected upon a surface perpendicular to the axis of the light beam shall produce a lighted rectangular projection whose minimum horizontal dimension shall be 5 degrees each side of the horizontal axis. The effective intensity shall not have an initial value greater than 15.0 candelas or drop below 4.0 candelas during the first 336 hours of continuous flashing. The illuminated lens shall appear to be uniformly bright over its entire illuminated surface when viewed from any point within an angle of 9 degrees each side of the vertical axis and 5 degrees each side of the horizontal axis. The lens shall not be less than 175 mm [7 in] in diameter including a reflex-reflector ring of 13 mm [½ in] minimum width around the periphery. The lens shall be yellow in color and have a minimum relative luminous transmittance of 0.440 with a luminance of 2854° Kelvin. The lens shall be one-piece construction. The lens material shall be plastic and meet the luminous transmission requirements of this specification. The case containing the batteries and circuitry shall be constructed of a material capable of withstanding abuse equal to or greater than 1.21 mm thick steel [No. 18 U.S. Standard Gage Steel]. The housing and the lens frame, if of metal shall be properly cleaned, degreased and pretreated to promote adhesion. It shall be given one or more coats of enamel which, when dry shall completely obscure the metal. The enamel coating shall be of such quality that when the coated case is struck a light blow with a sharp tool, the paint will not chip or crack and if scratched with a knife will not powder. The case shall be so constructed and closed as to exclude moisture that would affect the proper operation of light. The case shall have a weep hole to allow the escape of moisture from condensation. Photoelectric controls, if provided, shall keep the light operating whenever the ambient light falls below 215 lx [20 foot candles]. Each light shall be plainly marked as to the manufacturer's name and model number.

If required by the Resident, certification as to conformance to these specifications shall be furnished based on results of tests made by an independent testing laboratory. All lights are subject to random inspection and testing. All necessary random samples shall be provided to the Resident upon request without cost to the Department. All such samples shall be returned to the Contractor upon completion of the tests.

<u>712.32 Copper Tubing</u> Copper tubing and fittings shall conform to the requirements of ASTM B88M Type A [ASTM B88, Type K] or better.

<u>712.33 Non-metallic Pipe, Flexible</u> Non-metallic pipe and pipe fittings shall be acceptable flexible pipe manufactured from virgin polyethylene polymer suitable for transmitting liquids intended for human or animal consumption.

712.34 Non-metallic Pipe, Rigid Non-metallic pipe shall be Schedule 40 polyvinylchloride (PVC) that meets the requirement of ASTM D1785. Fittings shall be of the same material.

712.341 Metallic Pipe Metallic pipe shall be ANSI, Standard B36.10, Schedule 40 steel pipe conforming to the requirements of ASTM A53 Types E or S, Grade B. End plates shall be steel conforming to ASTM A36/A36M.

Both the sleeve and end plates shall be hot dip galvanized. Pipe sleeve splices shall be welded splices with full penetration weld before galvanizing.

712.35 Epoxy Resin Epoxy resin for grouting or sealing shall consist of a mineral filled thixotropic, flexible epoxy resin having a pot life of approximately one hour at 10°C [50°F]. The grout shall be an approved product suitable for cementing steel dowels into the preformed holes of curb inlets and adjacent curbing. The sealant shall be an approved product, light gray in color and suitable for coating the surface.

712.36 Bituminous Curb The asphalt cement for bituminous curb shall be of the grade required for the wearing course, or shall be Viscosity Grade AC-20 meeting the current requirements of Subsection 702.01 Asphalt Cement. The aggregate shall conform to the requirements of Subsection 703.07. The coarse aggregate portion retained on the 2.36 mm [No. 8] sieve may be either crushed rock or crushed gravel.

The mineral constituents of the bituminous mixture shall be sized and graded and combined in a composite blend that will produce a stable durable curbing with an acceptable texture.

Bituminous material for curb shall meet the requirements of Section 403 - Hot Bituminous Pavement.

712.37 Precast Concrete Slab Portland cement concrete for precast slabs shall meet the requirements of Section 502 - Structural Concrete, Class A.

The slabs shall be precast to the dimension shown on the plans and cross section and in accordance with the Standard Detail plans for Concrete Sidewalk Slab. The surface shall be finished with a float finish in accordance with Subsection 502.14(c). Lift devices of sufficient strength to hold the slab while suspended from cables shall be cast into the top or back of the slab.

712.38 Stone Slab Stone slabs shall be of granite from an acceptable source, hard, durable, predominantly gray in color, free from seams which impair the structural integrity and be of smooth splitting character. Natural color variations characteristic of the deposit will be permitted. Exposed surfaces shall be free from drill holes or indications of drill holes. The granite slabs in any one section of backslope must be all the same finish.

The granite slabs shall be scabble dressed or sawed to an approximately true plane having no projections or depressions over 13 mm [½ in] under a 600 mm [2 ft] straightedge or over 25 mm [1 in] under a 1200 mm [4 ft] straightedge. The arris at the intersection of the top surface and exposed front face shall be pitched so that the arris line is uniform throughout the length of the installed slabs. The sides shall be square to the exposed face unless the slabs are to be set

on a radius or other special condition which requires that the joints be cut to fit, but in any case shall be so finished that when the stones are placed side by side no space more than 20 mm [3/4 in] shall show in the joint for the full exposed height.

Liftpin holes in all sides will be allowed except on the exposed face.

SECTION 717
ROADSIDE IMPROVEMENT MATERIAL

717.03 C. Method #3 - Roadside Mixture #3 Change the seed proportions to the following:

Crown Vetch	25%
Perennial Lupine	25%
Red Clover	12.5%
Annual Rye	37.5%

717.05 Mulch Binder Change the third sentence to read as follows:

"Paper fiber mulch may be used as a binder at the rate of 2.3 kg/unit [5 lb/unit]."

SECTION 720
STRUCTURAL SUPPORTS FOR HIGHWAY SIGNS, LUMINAIRES, AND TRAFFIC SIGNALS

720.08 U-Channel Posts Change the first sentence from "…, U-Channel posts…" to "…, Rib Back U-Channel posts…"

SECTION 722
GEOTEXTILES

722.01 Stabilization/Reinforcement Geotextile Add the following to note #3; "The strengths specified in the columns labeled"<50%" and "≥ 50%" refer to the elongation at which the geotextile material was tested. For example; if a fabric is tested at 15% elongation then it must meet or exceed the minimum strength shown in the "<50%" column. Submittals must include the percent elongation at which the material was tested."

722.02 Drainage Geotextile Add the following to note #3; "The strengths specified in the columns labeled"<50%" and "≥ 50%" refer to the elongation at which the geotextile material was tested. For example; if a fabric is tested at 15% elongation then it must meet or exceed the minimum strength shown in the "<50%" column. Submittals must include the percent elongation at which the material was tested."

722.01 Erosion Control Geotextile Add the following note to Elongation in the Mechanical Property Table; "The strengths specified in the columns labeled"<50%" and "≥ 50%" refer to the elongation at which the geotextile material was tested. For example; if a fabric is tested at 15% elongation then it must meet or exceed the minimum strength shown in the "<50%" column. Submittals must include the percent elongation at which the material was tested."