STATE OF MAINE
DEPARTMENT OF TRANSPORTATION

TRAFFIC DATA

Current (2008) AADT 2750

HYDROLOGIC DATA

Drainage Area	10.1 sq mi
Design Discharge (Q50)	1677 cfs
Check Discharge (Q100)	1969 cfs
Headwater Elevation (Q50)	101.4 ft
Headwater Elevation (Q100)	102.7 ft
Discharge Velocity (Q100)	6.87 fps

LIST OF DRAWINGS

Title Sheet 1
Quantities and General Notes 2
General Plan and Profile 3
Countermeasure Details 4
Right of Way Map 5

KNOX
WALDO COUNTY
KNOX CENTER BRIDGE
OVER
HALF MOON STREAM
ROUTE 137
FEDERAL AID PROJECT NO. BR-1992(100)
BRIDGE NO. 2440

WIN 19921.00

UTILITIES

Central Maine Power
Fairpoint Classic

Unitel inc.

MAINTENANCE OF TRAFFIC

Maintain two-way traffic whenever possible and when necessary, alternating 1 way traffic can be used.

WIN 19921.00

PROJECT LOCATION:	Located on Belfast Rd., Rt. 137, 1.5 miles South of the intersection of Rt. 220. 44° 31' 23.89"N 69° 14' 39.17"W
PROGRAM AREA:	Bridge
OUTLINE OF WORK:	Bridge Scour Countermeasures: Installation of Countermeasures over full channel width, on adjacent banks and incidental work.

STATE OF MAINE
DEPARTMENT OF TRANSPORTATION
APPROVED
COMMISSIONER: DATE 4/5/13
CHIEF ENGINEER: 4/5/13

STATE OF MAINE · Michael Harry Wight · 8089 · LICENSED · PROFESSIONAL ENGINEER
SIGNATURE: Michael Wight
P.E. NUMBER: 8089
DATE: 4/12/2013

PROJECT INFORMATION

PROGRAM	BRIDGE
PROJECT MANAGER	STEVE BODGE
DESIGNER	MICHAEL WIGHT
CONSULTANT	
PROJECT RESIDENT	
CONTRACTOR	
PROJECT COMPLETION DATE	

KNOX
KNOX CENTER BRIDGE
TITLE SHEET

SHEET NUMBER
1
OF 5

Filename:\00\BRIDGE\MSTA\001_Title.dgn Division: BRIDGE Username: David.Sullivan Date:4/3/2013

ESTIMATED QUANTITIES			
ITEM NO.	DESCRIPTION	QUANTITY	UNIT
	ITEMS COMMON TO BOTH ALTERNATES		
203.20	COMMON EXCAVATION	20	CY
203.2315	DISPOSAL OF DREDGE MATERIAL	200	T
511.07	COFFERDAM: (LEFT ABUTMENT)	1	LS
511.07	COFFERDAM: (RIGHT ABUTMENT)	1	LS
610.07	STONE FILL	120	CY
613.319	EROSION CONTROL BLANKET	26	SY
620.50	EROSION CONTROL FILTER LAYER - FOR STONE FILL	200	SY
629.05	HAND LABOR, STRAIGHT TIME	10	HR
631.121	HEAVY DUTY ALL PURPOSE EXCAVATOR (INCLUDING OPERATOR)	10	HR
631.172	TRUCK - LARGE (INCLUDING OPERATOR)	10	HR
652.33	DRUM	25	EA
652.34	CONE	50	EA
652.35	CONSTRUCTION SIGNS	100	SF
652.361	MAINTENANCE OF TRAFFIC CONTROL DEVICES (60 CD)	1	LS
652.38	FLAGGER	40	HR
656.75	TEMPORARY SOIL EROSION AND WATER POLLUTION CONTROL	1	LS
659.10	MOBILIZATION	1	LS
	ITEMS COMMON TO ALTERNATE NO. 1 (PRECAST BLOCK MAT)		
502.83	PRECAST BLOCK MAT	2800	SF
	ITEMS COMMON TO ALTERNATE NO. 2 (PARTIALLY GROUTED RIPRAP)		
610.522	PARTIALLY GROUTED RIPRAP - 9 INCH	250	CY
620.50	EROSION CONTROL FILTER LAYER - FOR PRECAST BLOCK MAT	400	SY

GENERAL CONSTRUCTION NOTES

1. Left and Right designations are based on looking downsteam.

2. Payment for equipment, labor, and materials to access the work, as well as re-establish original ground, will be considered incidental to related Contract Items.

3. The clearing limits as shown on the plans are approximate. The exact limits will be established in the field by the Resident. Payment for clearing will be considered incidental to Contract items.

4. The Contractor shall be aware of overhead utilities that run parallel to the road on the upstream side. The Contractor shall be aware of the public water supply wellhead protection zone.

5. Project information referred to below may be accessed at the following MaineDOT web address: http://www.maine.gov/mdot/contractors/

6. The existing bridge plans may be accessed at the MaineDOT web address. The plans are reproductions of the original drawings as prepared for the construction of the bridge. It is very unlikely that the plans will show any construction field changes or any alterations which may have been made to the bridge during its life span.

7. The Contractor shall field verify stream bed elevations along the upstream bridge fascia, downstream bridge fascia and along the centerline of the bridge. Streambed elevations shall be taken every five (5) feet along all three lines and provided to the Resident. The Resident will determine final streambed elevation(s) based on this information. This work shall not be paid for directly. Payment shall be considered incidental to related Contract Items.

8. Sections shown on the design plans depict "typical" conditions and the intent of the installation which may have to be altered to fit actual site conditions as directed by the Resident.

9. Areas shown of the countermeasure installation are approximate and represent the minimum dimensions desired. The Resident may direct modifications to fit site conditions.

10. Estimates of quantities are necessarily approximate. Payment will be made on an actual quantities installed to the satisfaction of the Resident.

11. Quantities included for pay items measured and paid for by Lump Sum are estimated quantities and are provided by MaineDOT for informational purposes only. Lump Sum pay items will be paid for at the Contract Bid amount, with no addition or reduction in payment to the Contractor if the actual final quantities are different from the MaineDOT provided estimated quantities, except as follows:

a. If a Lump Sum pay item is eliminated, the requirements of Standard Specifications Section 109.2, Elimination of Items, will take precedence.

b. If other Contract Documents specifically allow a change in payment for a Lump Sum pay item, those requirements will be followed.

c. If a design change results in changes to estimated quantities for Lump Sum pay items, price adjustments will be made in accordance with Standard Specifications Section 109.7, Equitable Adjustments to Compensation.

12. Excavation required for installation of countermeasures as shown on the plans shall be considered incidental to related Contract Items. Quantity estimate for Item 203.20 shall be for any additional miscellaneous excavation as directed by the Resident.

14. Grout testing and curing boxes shall be considered incidental to related Contract Items.

15. Countermeasure material to be placed on the adjacent wingwall banks of the bridge shall be similar to that described for the work in the streambed in front of the abuments, except that if stone protection exists on the banks, additional stone may be added to augment the protection, if approved by the Resident. The Resident may require removal of existing material judged unacceptable and installation of geotextile and filter material.

16. The Contractor shall remove and properly dispose of a pile of reinforced concrete debris located at approximately station 3+75, 60'+/- left as directed by the Resident. This work shall be paid for under items 629.05, 631.121 and 631.172.

STATE OF MAINE
DEPARTMENT OF TRANSPORTATION

WIN 19921.00

BRIDGE NO. 2440 — WIN 19921.00 — BRIDGE PLANS

PROJ. MANAGER	S. Bodge	BY	DATE
DESIGN-DETAILED	M. Wight	D. Sullivan	MAR 2013
CHECKED-REVIEWED	R. Myers	------	------
DESIGN2-DETAILED2	------	------	------
DESIGN3-DETAILED3	------	------	------
REVISIONS 1	------	------	------
REVISIONS 2	------	------	------
REVISIONS 3	------	------	------
REVISIONS 4	------	------	------
FIELD CHANGES	------	------	------

SIGNATURE

P.E. NUMBER

DATE

KNOX CENTER BRIDGE
HALF MOON STREAM
WALDO COUNTY
KNOX

ESTIMATED QUANTITIES

SHEET NUMBER
2
OF 5

Filename: ...\BRIDGE\MSTA\002_Estimate.dgn Division: BRIDGE Username: David.Sullivan Date:4/18/2013

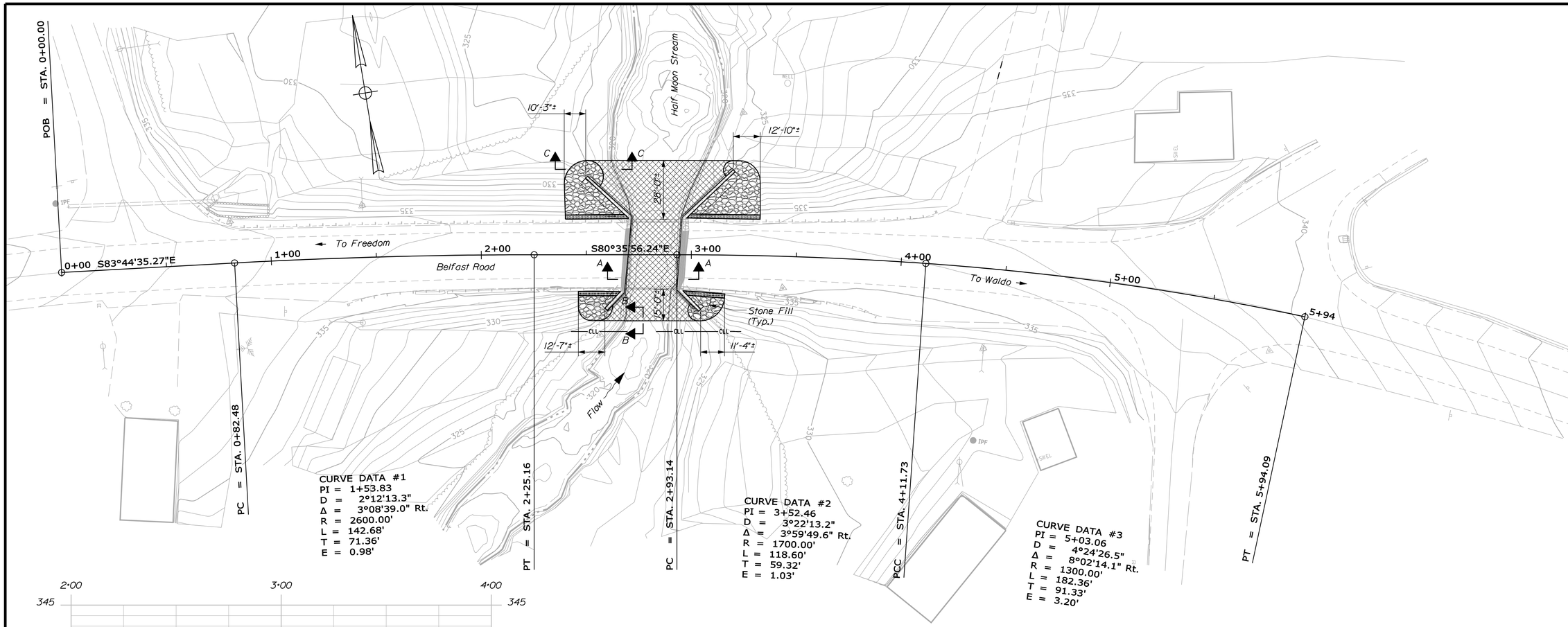

PLAN

25 0 25 50
Scale in Feet

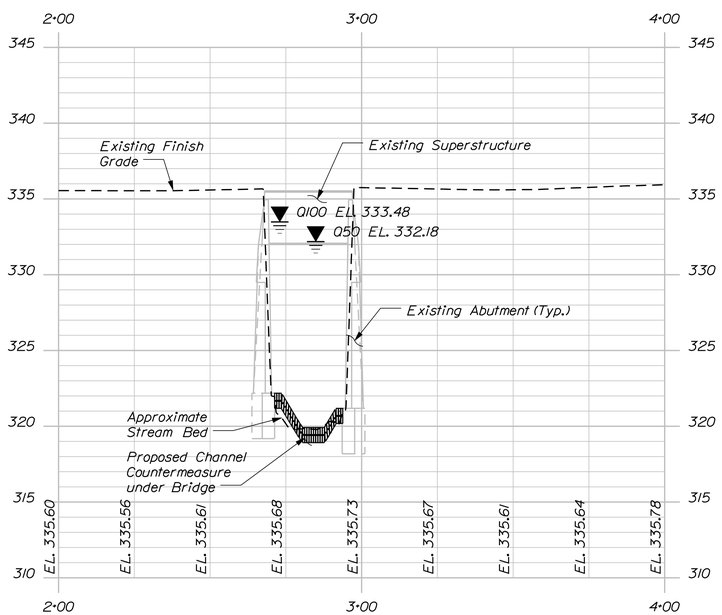

PROFILE

Horiz. 25 0 25 50
Vert. 5 0 5 10
Scale of Feet

PLAN LEGEND

- Proposed Stone Fill (Item 610.07)
- Proposed Channel Countermeasure *
- Proposed Erosion Control Blanket

* See sections on Countermeasure Detail sheet for minimum thickness requirements.

NOTES:

1. See countermeasure detail sheet for Sections A-A, B-B and C-C.

2. Channel countermeasures shall extend a minimum of tweenty eight (28) feet from the downstream fascia and a minimum of fifteen (15) feet from the upstream fascia.

STATE OF MAINE
DEPARTMENT OF TRANSPORTATION

WIN 19921.00

PIN 19921.00

BRIDGE NO. 2440

BRIDGE PLANS

		BY	DATE
PROJ. MANAGER	S. Bodge		
DESIGN-DETAILED	M. Wight	D. Sullivan	MAR 2013
CHECKED-REVIEWED	------	------	------
DESIGN2-DETAILED2	------	------	------
DESIGN3-DETAILED3	------	------	------
REVISIONS 1	------	------	------
REVISIONS 2	------	------	------
REVISIONS 3	------	------	------
REVISIONS 4	------	------	------
FIELD CHANGES	------	------	------

SIGNATURE

P.E. NUMBER

DATE

KNOX CENTER BRIDGE
HALF MOON STREAM
KNOX WALDO COUNTY

PLAN AND PROFILE

SHEET NUMBER

3

OF 5

Filename: ...\00\bridge\msta\003_BDPlan1.dgn Division: BRIDGE Username: David.Sullivan Date:4/3/2013

NOTES:
1. The protective aggregate cushion of the erosion control filter layer shall be six (6) inches thick beneath partially grouted riprap or stone fill. Concrete cable mats and grout mattress shall bear directly on geotextile fabric. Geotextile fabric under concrete cable mats shall be considered incidental to Item 502.83.

2. For required low flow channel dimensions, see the related countermeasure specification. Upstream and downstream transition of low flow channel to existing streambed shall be as directed by the Resident.

3. To the maximum extent possible, except to create a low flow channel, the top surface of the scour countermeasure shall match the existing streambed. The Contractor work shall not undermine or otherwise threaten the stability of the bridge foundations or retaining wall foundation.

4. Dimension A for partially grouted riprap is the D50 stonesize either 9, 12 or 15 inches.

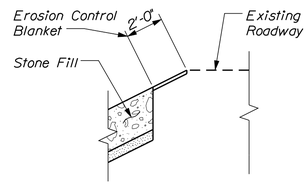

BERM DETAIL (TYP.)

ALTERNATE 1 - PRECAST BLOCK MAT

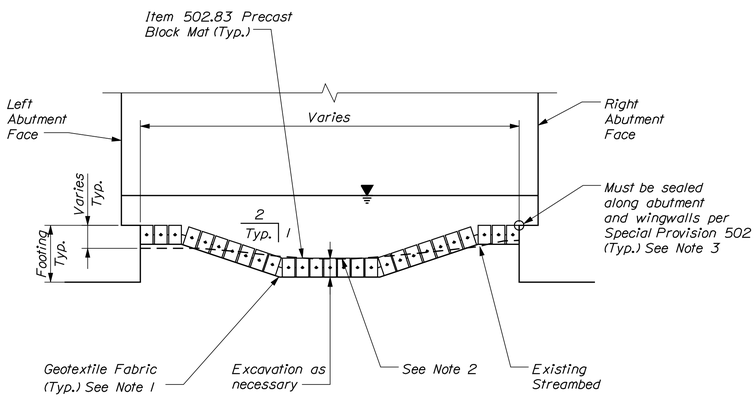

SECTION A-A

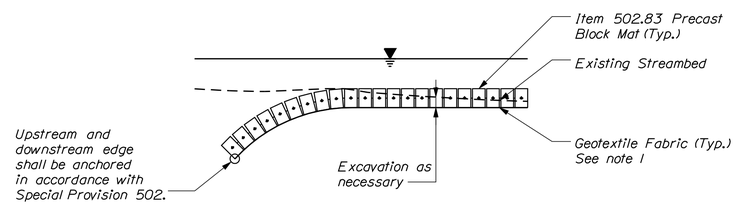

SECTION B-B

NOTE: Upstream shown, downstream similar

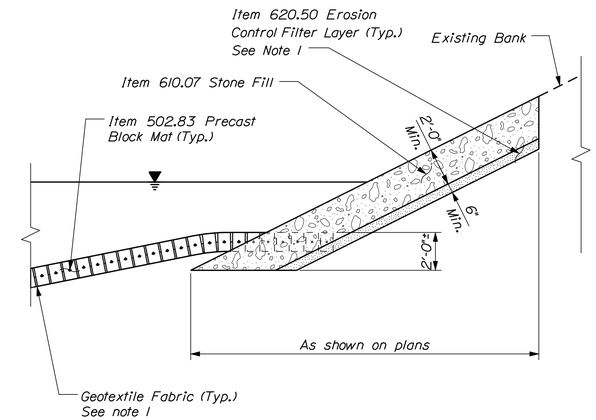

SECTION C-C

ALTERNATE 2 - PARTIALLY GROUTED RIPRAP

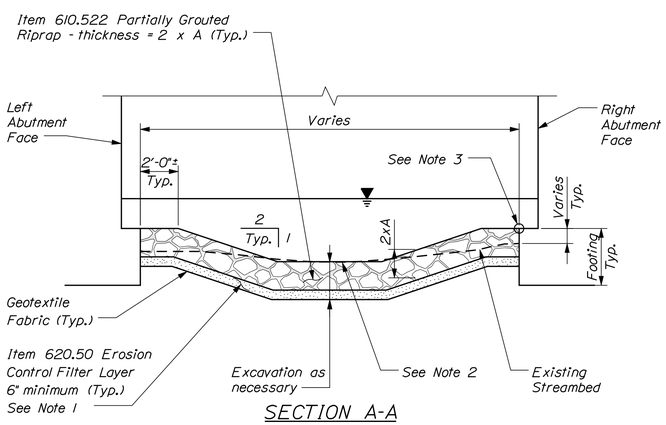

SECTION A-A

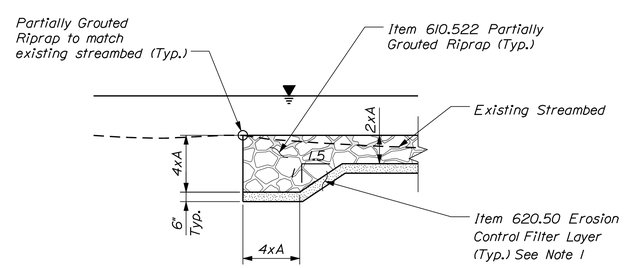

SECTION B-B

NOTE: Upstream shown, downstream similar

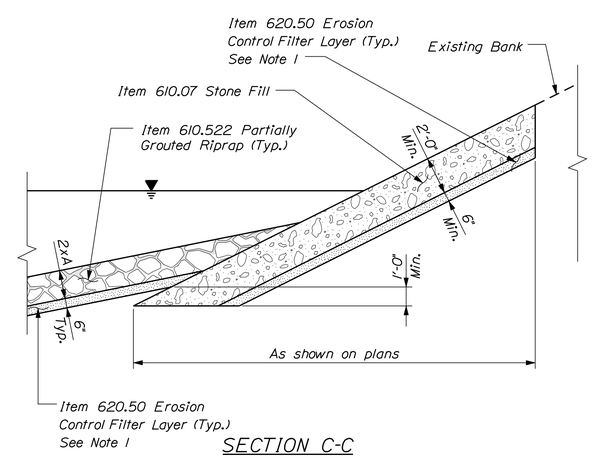

SECTION C-C

STATE OF MAINE
DEPARTMENT OF TRANSPORTATION

WIN 19921.00

PIN 19921.00

BRIDGE NO. 2440

BRIDGE PLANS

PROJ. MANAGER	S. Bodge	BY	DATE
DESIGN-DETAILED	M. Wight	D. Sullivan	MAR 2013
CHECKED-REVIEWED	------	------	------
DESIGN2-DETAILED2	------	------	------
DESIGN3-DETAILED3	------	------	------
REVISIONS 1	------	------	------
REVISIONS 2	------	------	------
REVISIONS 3	------	------	------
REVISIONS 4	------	------	------
FIELD CHANGES	------	------	------

SIGNATURE

P.E. NUMBER

DATE

KNOX CENTER BRIDGE
HALF MOON STREAM
KNOX WALDO COUNTY

COUNTERMEASURE DETAILS

SHEET NUMBER

4

OF 5

Filename: ...\004_Countermeasure_Details.dgn Division: BRIDGE Username: David.Sullivan Date:4/3/2013

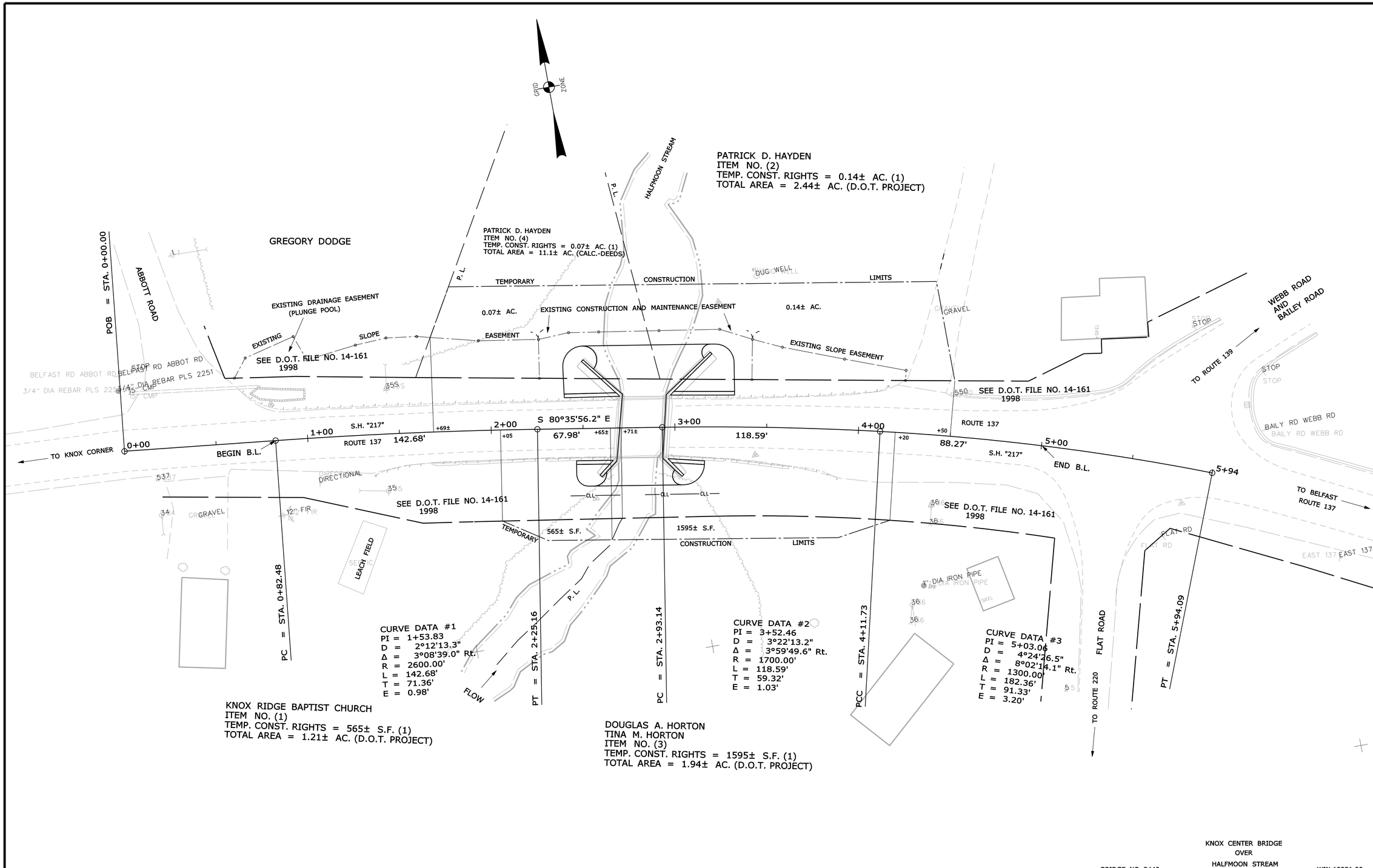

SYMBOLS

- IP or ● IPF (IRON PIPE or PIN FOUND)
- ☐ S.T. (SEPTIC TANK)
- ⊡ (ROW MONUMENT)
- ⚠BM (TRAVERSE POINT)
- WATER LINE
- GAS LINE
- ELECTRIC LINE
- TELEPHONE LINE
- SEWER LINE
- WELL (WELL)
- GRADING LIMIT LINE
- CONSTRUCTION LIMIT LINE
- PROPERTY LINE
- LIMITS OF WROUGHT PORTION (L.O.W.P.)
- EXISTING RIGHT OF WAY
- NEW RIGHT OF WAY
- NEW ROW WITHIN EXIST. ROW
- CONTROL OF ACCESS

ITEM	TECH	CHECKED
BASE MAP		
EXIST. R/W	M.A.D.	
PROP. LINES	D.O.T. FILE NO. 14-161	
AREAS	D.W.B.	P.N.S.

STATE OF MAINE
DEPARTMENT OF TRANSPORTATION
16 STATE HOUSE STATION - AUGUSTA, ME 04333-0016
KNOX
RIGHT OF WAY MAP

REVISIONS			
NO.	DATE	DESCRIPTION	BY

PLAN FILED IN PLAN BOOK PAGE COUNTY RECORD

NO.	GRANTOR	INSTRUMENT	DATE	BOOK	PAGE

DAVID BERNHARDT
COMMISSIONER
KENNETH L. SWEENEY
CHIEF ENGINEER
DATE

STATE HIGHWAY "217"
ROUTE 137
KNOX WALDO COUNTY
FEDERAL AID PROJECT NO. BR-1992(100)

MARCH 2013 | RIGHT-OF-WAY MAP | D.O.T. FILE NO. 14-198
SCALE 1" = 25' | SHEET 1 OF 1

SHEET NUMBER
5
OF 5

Filename: ...\00\ROW\MSTA\001_RWPLAN1.dgn Division: BRIDGE Username: David.Sullivan Date:4/3/2013