Caribou, Hardwood Brook Bridge #6306, WIN 019319.00

(Route 1 over Hardwood Brook)

Two sources of flow data are available for the subject bridge. The first is flows computed using the 1999 USGS full regression equation as provided by Maine Department of Transportation Office of the Environment-Hydrology Section. A summary of this data is as follows:

USGS 1999 Regression Equation

Drainage Area = 5.72 Square miles
Fish passage flow (September) = 1.1 cfs
Ordinary High Water ($Q_{1.1}$) = 125.8cfs
10 Year Flood (Q_{10}) = 593 cfs
25 Year Flood (Q_{25}) = 784cfs
Design Discharge (Q_{50}) = 938 cfs
Check Discharge (Q_{100}) = 1104cfs
Q_{500} = 1528 cfs

The other source of flow data is the USGS gage # 01017060 located immediately upstream from the culvert. Real time flow data from the gage is available at the following web address:

http://waterdata.usgs.gov/me/nwis/uv?site_no=01017060

The gage has been in operation since December 2008. The maximum peak flow between December 2008 and September 2011 was 506 cfs on December 14, 2011. The lowest daily mean flow was 0.71 cfs on September 11, 2009. The low flow period is in September of each year. In September 2009 the flow ranged between 0.71 cfs and 2.0 cfs. The flow in August and September has been between 0.78 cfs and 23 cfs. USGS has not computed 50 or 100 year flows at this site. A reliable estimate for a 50 year flow requires at least 20 years of data. The following is a summary of minimum, mean and maximum flows based on three years of data at the gage for the four months with the lowest flows:

December 2008 to September 2011

Month	July	August	September	October
Minimum flow (cfs)	4.56	2.2	1.02	5.20
Mean flow (cfs)	8.87	9.48	5.53	7.54
Maximum flow (cfs)	9.99	8.87	9.48	5.53

Other flow data such as existing studies or reports from local residents is not available. Fish passage flows are based on recorded flow data from the USGS gage. Flood flows such as Q50 and Q100 are based on the USGS regression equation. Therefore the following flows will be used in the hydraulic analysis:

Summary

Drainage Area = 5.72 Square miles
Fish passage flow (low) = 0.71 cfs
Fish passage flow (high) = 9.48 cfs
Ordinary High Water ($Q_{1.1}$) = 125.8 cfs
10 Year Flood (Q_{10}) = 593 cfs
25 Year Flood (Q_{25}) = 784 cfs
Design Discharge (Q_{50}) = 938 cfs
Check Discharge (Q_{100}) = 1104cfs
Q_{500} = 1528 cfs

Reported By: Michael Wight, PE
Date: June 25, 2012

HYDRAULIC REPORT
(Existing Bridge)

Hardwood Brook Bridge #6306 is located in Caribou under Route 1 over Hardwood Brook. The bridge is about 0.43 miles north of the town line with Presque Isle. The bridge is a 10' diameter by 139.39' long steel structural plate pipe. The pipe appears to be more of a vertical ellipse at both ends. The ends of the culvert are cut to match the side slope of 2 H:1 V with a single bottom step with a concrete headwall at both ends. Hardwood Brook flows from west to east and empties into the Aroostook River about 1.2 miles downstream from the bridge. Glidden Brook empties into Hardwood Brook about 500' upstream from the bridge. A well defined and well established scour hole is located downstream of the culvert. The scour hole is 30' wide, 60' long and 5' deep. The streambed at the downstream end of the scour hole is between elevation 486.6' and 487.3'. The top of stream bank at the end of the scour hole is at elevation 487.4' +/-. This results in water backing up into the culvert at all times. On July 10, 2012, the water was 2'-6" deep at the outlet. The stream banks downstream are wooded with alders and small trees on both sides. The streambed is gravelly with a few cobbles.

On July 10, 2012, the water depth at the culvert inlet was 9 inches with a flow of 5.7 cfs. On September 4, 2012 the water depth at the culvert inlet was 5 inches with a flow of 1.1 cfs. The lowest flow period of the year was from August 20 to September 30, 2012 with the flow between 1 and 2 cfs.

Existing culvert data:

Inlet invert elevation 487.76'
Outlet invert elevation 485.01'
Elevation difference 2.75'
Culvert Length 139.39'
Culvert Slope 2%

The existing culvert was analyzed using HY 8 version 7.2 that is distributed by the Federal Highway Administration. The tailwater conditions were modeled as an irregular cross section based on a cross section just downstream of the scour hole. The following Manning's n values were used:

Manning's n – main channel: 0.035
Manning's n – over bank areas: 0.12

Hardwood Brook immediately downstream of the scour hole has a slope of about 0.01 ft/ft. The slope increases slightly closer to the Aroostook River.

Hydraulics at the culvert are inlet controlled. The finished grade at the low point in the road is elevation 509.94'. Low point on the westerly shoulder is elevation 507.6'. The rating curve (elevation vs. flow) for the culvert and the gaging station compare well especially for flows between 250 cfs and 500 cfs. The elevations are within 0.2 feet of each other

Summary

(Existing Bridge)

	Existing Structure 10' pipe
Total Area of Waterway Opening	79 ft^2
Headwater Elevation @ low fish passage flow	487.90 ft
Headwater Elevation @ high fish passage flow	488.43 ft
Headwater Elevation @ $Q_{1.1}$	491.45 ft
Headwater Elevation @ Q_{10}	496.66 ft
Headwater Elevation @ Q_{25}	498.00 ft
Headwater Elevation @ Q_{50}	501.04 ft
Headwater Elevation @ Q_{100}	503.85 ft
HW/D @ Q_{50}	1.36
Outlet Velocity @ low fish passage flow	3.25 ft/s
Outlet Velocity @ high fish passage flow	3.73 ft/s
Outlet Velocity @ $Q_{1.1}$	10.28 ft/s
Outlet Velocity @ Q_{10}	16.28 ft/s
Outlet Velocity @ Q_{25}	16.28 ft/s
Outlet Velocity @ Q_{50}	17.34 ft/s
Outlet Velocity @ Q_{100}	17.94 ft/s

Reported by: Michael Wight, P.E.

Date: July 17, 2012

Note: All elevations based on the North American Vertical Datum (NAVD) of 1988.

HYDRAULIC REPORT
(Proposed Bridge)

The proposed alternatives were analyzed using HY 8 version 7.2 that is distributed by the Federal Highway Administration. The bridge was built in 1972 therefore the current age is only 40 years. Use of steel for the proposed structure is allowed only if the existing structure has lasted over 50 years. Any new culvert used would have to be aluminum, plastic or reinforced concrete.

The following alternatives were considered:

Culvert Rehabilitation Options:

Invert Lining – Invert lining consists of placing 5" of reinforced concrete or FRP panels over the bottom rusted plates. Invert lining is a good option when the remainder of the culvert is in good condition and the rust line is not too high. The rust line on the pipe extends only about 1/4 of the way up the sides of the pipe. The pipe has sagged and distorted over time. Near the middle of the pipe is a 6 to 12 inch bulge in the bottom quarter over at least 6'. The pipe has serious cracks in the metal plates along a longitudinal bolt line halfway up the south side of the pipe. The ends of the pipe on top are bent inward. Invert lining will not address the distortion issue, cracked plates, bent end plates and pavement settlement. Invert lining is not a practical alternative and has been dismissed from further consideration.

Slipline – Slip lining is the second alternative considered. Two general options are available. The first is a traditional slip lining when a small size culvert is slide inside the existing culvert then the annular space is grouted. Due to distortions of the existing pipe, the largest circle that can fit at the middle of the pipe near a bulge would be 8'-6" diameter assuming no annular space. A 7' diameter aluminum structural plate pipe could be used with 7 inch annular space and 5.5 inch clearance at bolt locations. A 7'. diameter pipe has an opening area of 37.8 square feet. A 7'-6" diameter aluminum structural plate pipe could be used with only a 4 inch annular space and 2.5 inch clearance at the bolt locations. A 7'-6" diameter pipe has an opening area of 43.6 square feet. MaineDOT typically tries to have a 6 inch annular space to insure adequate clearances during construction. A 7' diameter pipe is preferable to avoid any fit up issues. At Q100 with a 7' diameter pipe, the headwater is at elevation 510.91 or 7.06' higher than the existing pipe. FEMA regulations limit headwater increases at Q100 to 1 foot. Sliplining using a 7' diameter pipe is not feasible.

Another option for a traditional slip lining would be a 6'-6" inside diameter Weholite pipe (33 square feet opening area) with an 8 inch annular space. The outside diameter is 7'-2" (86 inch). The loss of opening area is 58% when compared to the existing. This drastic of a change in opening area is not practical or feasible. The lower manning's n with a plastic pipe does not make up for the reduction in opening area. This option was eliminated from further consideration.

Culvert data (slipline):

Inlet invert elevation 488.78
Outlet invert elevation 485.99'
Elevation difference 2.79'
Culvert Length 139.39'
Culvert Slope 2%

Culvert Lining -Several relatively new lining products are now available to rehabilitate culverts. Sekisui SPR produces two products that could be used at this site. The options are SPR and SPR PE. SPR utilizes steel reinforced interlocking PVC strips. The PVC strips have a mechanical lock. SPR can be used for pipes up to 16.4' in diameter. SPR PE can be used to structurally rehabilitate culverts with diameters up to 9.84' .The product consists of steel that is surrounded by HDPE. The HDPE at the edges of the strip is welded together. SPR PE is a structural stand alone liner that does not need to bond to the host pipe. The company's website is as follows:

http://www.sekisuispr.com/public/spr/en/technology/wickelrohr.html

Due to the structural problems with the existing culvert, the use of SPR PE is recommended. A 9.5 diameter pipe was assumed for the hydraulic analysis. At Q100 with a 9.5' diameter HDPE pipe, the headwater is at elevation 506.10 or 2.25' higher than the existing pipe. FEMA regulations limit headwater increases at Q100 to 1 foot. Lining the culvert using SPR PE is not feasible.

The other new technology is a spray on product by Hydratech. The specific product would be Poly Spray FS-250. PolySpray 250 is a polyurea- based, spray applied, rapid curing rigid liner. A case study on the company's website calls the liner semi structural. The supplier did not recommend use of Polyspray for this specific culvert due to the very poor condition of the culvert. Due to concerns about the structural capacities of this product, this product was not investigated further. The Company's website is as follows:

http://www.hydratechllc.com/.

Culvert lining with new overflow pipes-Another alternative investigated is sliplining the existing culvert and adding over flow pipes over the existing culvert. Ideally any rehabilitated culvert would not cause an increase in the water surface elevation at Q100. The no rise option is as follows:

Slipline the existing pipe with Sekisui spiral wound liner SPR PE with 9.5' diameter with three 4' diameter steel corrugated pipes for over flow culverts. The total opening area is 108.70 SF (70.9 SF + 3 X 12.6 SF). Heavy riprap would be needed for the slope protection and aprons. In fact, with outlet velocities of 20 fps for more even for q10, the entire scour hole would need to be armored with heavy riprap. Velocities greater than 20 fps for Q50 and Q100 are relatively rare in Maine. These high velocities will pose erosion and stream stability issues during large flood events. At Q100 the headwater elevation is 503.65'.

Outlet Structure

The water surface elevation for the scour hole at low flows is approximately 487.40'. With the outlet invert at elevation 486.73' or below, 8" of water will back into the pipe even at times of very low flow. On July 10, 2012 during low flow, 2'-6" of water was in the downstream end of the existing culvert. Even at times of extreme low flow, the water depth at the outlet of the existing culvert should not drop below 2'. Therefore no structure is needed outside of the pipe to back up water into the culvert for all the culvert rehabilitation options.

Weirs inside the existing culvert

The existing culvert has water depths less 8 inches from just past the inlet to about 40%+/- of the way into the culvert. At about the half way point of the pipe water depths are 1 foot or greater at low flows. To maintain minimum flow depth, weirs are needed inside the rehabilitated pipe from the inlet to about 50 feet inside the inlet A minimum of 5 weirs should be used with a maximum spacing of 10'. The weirs in profile are sloped down with a low flow notch. In plan view, the weirs will be angled in the upstream direction. The weirs will create a system of pools were the fish can rest as they traverse the culvert.

Culvert Replacement Options:

Bank full width – precast concrete box culvert built in stages The bank full width is 13'. The first option is a 13' span by 13' rise by 144' long single precast concrete box culvert with precast toe walls and the ends are mitered to match the 2:1 side slope. 1' by 1'precast head walls will be used at both ends of the culvert. The ends of box will have a single bottom step at least 4' tall. The stream is well aligned with the culvert. The wingwalls are in line with the box culvert. The box culvert will be embedded 2' with special fill placed inside the culvert. The special fill will be granular material with occasional boulders to simulate the natural streambed. One foot tall sediment sills will be placed along the bottom of the culvert at about 15' spacing. The waterway opening area is 143 square feet with a total culvert area of 169 square feet. The headwater to depth ratio at Q50 is 0.88. MaineDOT's policy has maximum head water to depth ratio of 0.90.

An aluminum structural plate pipe arch with a minimum span of 13' was briefly considered. 2' of embedment significantly reduces the available water way opening. To provide an equivalent opening, a drastically large span is needed. Due to this problem, a pipe arch shape was dismissed as an alternative for replacement.

1.2 times bankfull width - precast concrete box culvert built in stages The bank full width is 13'. The 1.2 bankfull width is 16' +/-. The 1.2 bankfull option is a 16' span by 11' rise by 144' long single precast concrete box culvert with toe walls and ends mitered to match the 2:1 side slope. 1' by 1'precast head walls will be used at both ends of the culvert. The ends of box will have a single bottom step at least 4' tall. The stream is well aligned with the culvert. The wingwalls are in line with the box culvert. The box culvert will be embedded 2' with special fill placed inside the culvert. The special fill will be granular material with occasional boulders to simulate the natural streambed. One foot tall sediment sills will be placed along the bottom of the culvert at

about 15' spacing. The waterway opening area is 160 square feet with a total culvert area of 192 square feet. The headwater to depth ratio at AQ50 is 0.85. MaineDOT policy has maximum head water to depth ratio of 0.90.

Bridge Replacement Options:

1.2 times bankfull width – Bottomless culvert with spread footing on existing soil

At the current time, no soil borings have been done. A boring will be completed later this year. It is assumed that a spread footing will be used that is 6' below the thalweg of the stream per MaineDOT Bridge Design Guide policy. The bottom of the scour hole is at elevation 482'; therefore, the bottom of footing is at a minimum of elevation 476'. The top of the stem wall on top of the footing will be at elevation 491.5' which is slightly above the Q1.1 elevation. The proposed span is 20'. With minimum 3' wide stem walls and a 20' span, the clear distance between the stem walls is 17'. To provide the same opening area as the 1.2 bankfull box culvert, a 20' span by 6' rise Conspan or a 20' span by 5' rise three sided precast frame is needed. Formal hydraulic computations for the bottomless culvert were not performed. The bottomless culvert will have similar or slightly better hydraulic performance then the 16' span by 12' rise concrete box culvert.

For both of the replacement options, 10' heavy riprap aprons and slope protection will be adequate. The Q50 outlet velocity for both culvert replacement options is around 15 fps.

Conclusion

From a hydraulic standpoint, the preferred alternative is replacement with a large single opening. The use of culverts is preferable to the bottomless culvert to eliminate scour concerns and costly foundations. Lining using SPR PE with overflow culverts will be prone to collecting debris and has much higher velocities at design flows. The much higher velocities will require that the entire scour hole to be armored with heavy riprap. The final decision on what alternative to use will be based on other factors such as constructability, initial cost, life cycle cost, corridor priority and available funding. Please refer to the Summary of Preliminary Design for additional discussion about the proposed alternatives.

SUMMARY

Culvert Rehabilitation Options
(Traditional slip lining)

	Sliplining 7' diameter aluminum pipe	Sliplining 7.5' diameter aluminum pipe	Sliplining 6.5' diameter Weholite pipe
Total Area of Waterway Opening	44 ft^2	38 ft^2	33 ft^2
Headwater Elevation @ low fish passage flow	488.92 ft	488.92 ft	488.92 ft
Headwater Elevation @ high fish passage flow	489.85 ft	489.94 ft	489.87 ft
Headwater Elevation @ $Q_{1.1}$	492.87 ft	492.99 ft	493.12 ft
Headwater Elevation @ Q_{10}	502.49 ft	505.76 ft	508.55 ft
Headwater Elevation @ Q_{25}	509.87 ft	510.52 ft	510.66 ft
Headwater Elevation @ Q_{50}	510.62 ft	510.83 ft	510.92 ft
Headwater Elevation @ Q_{100}	510.91 ft	511.05 ft	511.12 ft
HW/Depth @ Q_{50}	3.12	2.94	3.4
Change in Q100 elevation	+7.06 ft	+7.2 ft	+7.27 ft
Outlet Velocity @ low fish passage flow	2.06 ft/s	2.31 ft/s	2.14 ft/s
Outlet Velocity @ high fish passage flow	4.76 ft/s	6.74 ft/s	4.12 ft/s
Outlet Velocity @ $Q_{1.1}$	8.85 ft/s	15.31 ft/s	8.73 ft/s
Outlet Velocity @ Q_{10}	18.18 ft/s	22.27 ft/s	15.11 ft/s
Outlet Velocity @ Q_{25}	18.16 ft/s	22.83 ft/s	18.43 ft/s
Outlet Velocity @ Q_{50}	18.23 ft/s	22.90 ft/s	18.76 ft/s
Outlet Velocity @ Q_{100}	18.30 ft/s	19.21 ft/s	18.86 ft/s

SUMMARY

Culvert Rehabilitation Options
(Culvert lining products)

	Hydratech Polyspray FS-250	Lining Spiral wound pipe SPR PE
Total Area of Waterway Opening	75.4 ft^2	71 ft^2
Headwater Elevation @ low fish passage flow	487.90 ft	488.14 ft
Headwater Elevation @ high fish passage flow	488.45 ft	488.72 ft
Headwater Elevation @ $Q_{1.1}$	491.47 ft	491.75 ft
Headwater Elevation @ Q_{10}	496.80 ft	497.28 ft
Headwater Elevation @ Q_{25}	499.16 ft	499.94 ft
Headwater Elevation @ Q_{50}	501.53 ft	502.64 ft
Headwater Elevation @ Q_{100}	504.59 ft	506.10 ft
HW/Depth @ Q_{50}	1.39	1.9
Change in Q100 elevation	+0.74 ft	+2.25 ft
Outlet Velocity @ low fish passage flow	2.31 ft/s	3.19 ft/s
Outlet Velocity @ high fish passage flow	6.74 ft/s	3.71 ft/s
Outlet Velocity @ $Q_{1.1}$	10.32 ft/s	14.69 ft/s
Outlet Velocity @ Q_{10}	15.78 ft/s	19.8 ft/s
Outlet Velocity @ Q_{25}	16.55 ft/s	21.07 ft/s
Outlet Velocity @ Q_{50}	17.33 ft/s	22.08 ft/s
Outlet Velocity @ Q_{100}	17.85 ft/s	23.14 ft/s

SUMMARY

Culvert Rehabilitation Options - Slip lining with overflow pipes
No rise alternatives

	Lining Spiral wound pipe SPR PE with 3 - 4'cmp overflow pipes
Total Area of Waterway Opening	108.7 ft^2
Headwater Elevation @ low fish passage flow	488.14 ft
Headwater Elevation @ high fish passage flow	488.72 ft
Headwater Elevation @ $Q_{1.1}$	491.75 ft
Headwater Elevation @ Q_{10}	497.28 ft
Headwater Elevation @ Q_{25}	499.94 ft
Headwater Elevation @ Q_{50}	502.04 ft
Headwater Elevation @ Q_{100}	503.63 ft
HW/Depth @ Q_{50}	
Change in Q100 elevation	-0.22 ft
Outlet Velocity @ low fish passage flow	3.09 ft/s
Outlet Velocity @ high fish passage flow	6.16 ft/s
Outlet Velocity @ $Q_{1.1}$	14.68 ft/s
Outlet Velocity @ Q_{10}	19.80 ft/s
Outlet Velocity @ Q_{25}	21.07 ft/s
Outlet Velocity @ Q_{50}	21.86 ft/s
Outlet Velocity @ Q_{100}	22.37 ft/s

SUMMARY

Culvert Replacement Options

	Bank full width 13' span by13' rise precast concrete box culvert	1.2 Bank full width 16' span by 11' rise precast concrete box culvert
Total Area of Waterway Opening	143 ft^2	144 ft^2
Total area of culvert	169 ft^2	176 ft^2
Inlet invert elevation	485.00 ft	485.00 ft
Outlet invert elevation	481.00 ft	481.00 ft
Headwater Elevation @ low fish passage flow	487.52 ft	487.90 ft
Headwater Elevation @ high fish passage flow	487.70 ft	488.04 ft
Headwater Elevation @ $Q_{1.1}$	489.78 ft	490.00 ft
Headwater Elevation @ Q_{10}	493.77 ft	494.04 ft
Headwater Elevation @ Q_{25}	495.01 ft	495.30 ft
Headwater Elevation @ Q_{50}	496.01 ft	496.25 ft
Headwater Elevation @ Q_{100}	497.05 ft	497.22 ft
HW/Depth @ Q_{50}	0.82 < 0.9	0.83 < 0.9
Outlet Velocity @ low fish passage flow	3.35 ft/s	3.25 ft/s
Outlet Velocity @ high fish passage flow	3.41 ft/s	3.73 ft/s
Outlet Velocity @ $Q_{1.1}$	7.57 ft/s	6.83 ft/s
Outlet Velocity @ Q_{10}	13.01 ft/s	10.60 ft/s
Outlet Velocity @ Q_{25}	14.13 ft/s	11.64 ft/s
Outlet Velocity @ Q_{50}	15.11 ft/s	12.36 ft/s
Outlet Velocity @ Q_{100}	16.08 ft/s	13.05 ft/s
Inlet Depth @ low fish passage flow	0.52 ft	2.05 ft
Inlet Depth @ high fish passage flow	0.70 ft	2.29 ft
Outlet Depth @ low fish passage flow	2.0 ft	2.0 ft
Outlet Depth @ high fish passage flow	2.0 ft	2.0 ft

Reported by: Michael Wight, P.E.

Date: August 22, 2012

Note: All elevations based on North American Vertical Datum (NAVD) of 1988.

STATE OF MAINE
DEPARTMENT OF TRANSPORTATION

CARIBOU
AROOSTOOK COUNTY
HARDWOOD BROOK BRIDGE
OVER
HARDWOOD BROOK
U.S. ROUTE 1
STATE PROJECT NO. 19319.00
PROJECT LENGTH 0.01 mi.
BRIDGE NO. 6306

SPECIFICATIONS

Design: Load and Resistance Factor Design per AASHTO LRFD Bridge Design Specifications, Sixth Edition 2012.

DESIGN LOADING

Live Load ..... HL - 93 Modified

TRAFFIC DATA

Current (2012) AADT	7540
Future (2022) AADT	9540
DHV - % of AADT	10
Design Hour Volume	1040
Heavy Trucks (% of AADT)	8
Heavy Trucks (% of DHV)	6
Directional Distribution (% of DHV)	55
18 kip Equivalent P 2.0	556
18 kip Equivalent P 2.5	529
Design Speed (mph)	55

HYDROLOGIC DATA

Drainage Area	5.72 sq mi
Design Discharge (Q50)	938.3 cfs
Check Discharge (Q100)	1104.4 cfs
Headwater Elevation (Q50)	496.01 ft
Headwater Elevation (Q100)	497.05 ft
Discharge Velocity (Q50)	15.11 fps
Discharge Velocity (Q100)	16.08 fps
Headwater Elevation (Q1.1)	489.78 ft
Discharge Velocity (Q1.1)	7.57 fps
Headwater Elevation (Q25)	495.01 ft

MATERIALS

Concrete:	
Precast	Class "P"
All Other	Class "A"
Reinforcing Steel	ASTM A615/A615M, Grade 60
Welded Wire Reinforcement	ASTM A185/A185M or ASTM A497/A497M

BASIC DESIGN STRESSES

Precast Concrete	f 'c = 5,000 psi min.
Reinforcing Steel	f y = 60,000 psi
Welded Wire Reinforcement	f y = 65,000 psi min.

LIST OF DRAWINGS

Title Sheet 1
General Plan 2
Profile 3
Typical Sections 4

UTILITIES

Maine Fiber Company
Maine Public Service Company
Northern New England Telephone Operations LLC
Pioneer Wireless, Inc.
Time Warner Cable

MAINTENANCE OF TRAFFIC

Maintain one 12'-0" wide lane of alternating two - way traffic using traffic signals.

APPROXIMATE COST

Including Engineering: $830,000.00

PROJECT LOCATION:	0.15 miles North from the intersection of Route 1 and Maysville Siding Road. Lat.: 46° 47' 0.906"N, Long.: -67° 59' 19.8054"W
PROGRAM AREA:	Bridge Program
OUTLINE OF WORK:	Bridge Culvert Replacement

WIN 19319.00

19319.00

STATE OF MAINE
DEPARTMENT OF TRANSPORTATION
APPROVED
COMMISSIONER: DATE
CHIEF ENGINEER:

PROJECT INFORMATION

PROGRAM	BRIDGE	SIGNATURE
PROJECT MANAGER	S. RIDGE	
DESIGNER	M. WIGHT	P.E. NUMBER
CONSULTANT		
PROJECT RESIDENT		
CONTRACTOR		DATE
PROJECT COMPLETION DATE		

CARIBOU
HARDWOOD BROOK BRIDGE
TITLE SHEET

SHEET NUMBER
1
OF 4

25

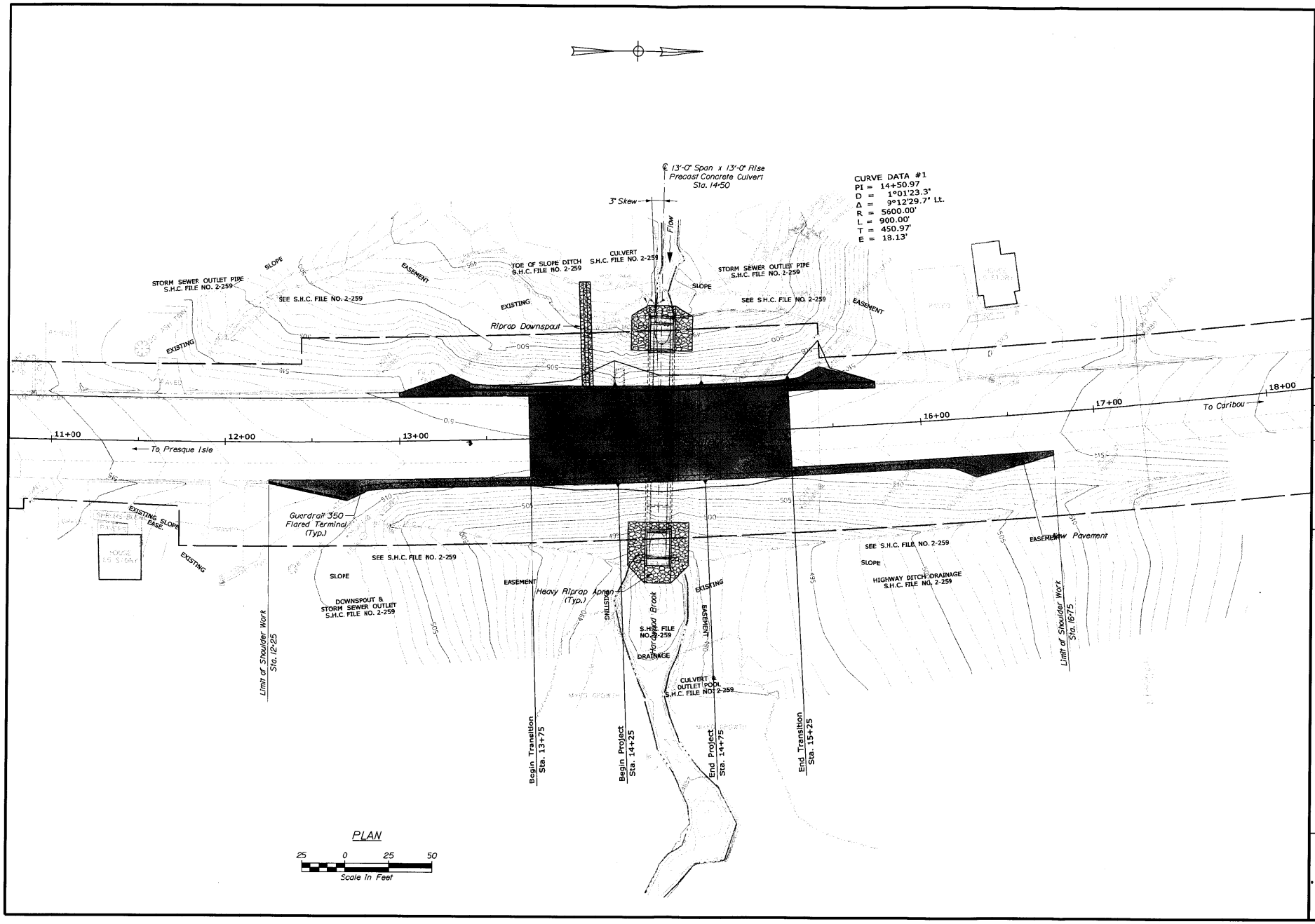

STATE OF MAINE
DEPARTMENT OF TRANSPORTATION

19319.00

WIN 19319.00

BRIDGE NO. 6306

BRIDGE PLANS

PROJ. MANAGER	STEVE BOOZE		
DESIGNED BY	M. WIGHT	D. SHAW	Nov. 2012
CHECKED BY	M. WIGHT		
REVISED BY	M. WIGHT		
REVISIONS 1			
REVISIONS 2			
REVISIONS 3			
REVISIONS 4			
FINAL CHANGES			

SIGNATURE

P.E. NUMBER

DATE

HARDWOOD BROOK BRIDGE
HARDWOOD BROOK
AROOSTOOK COUNTY
CARIBOU

GENERAL PLAN

SHEET NUMBER

2

OF 4

26

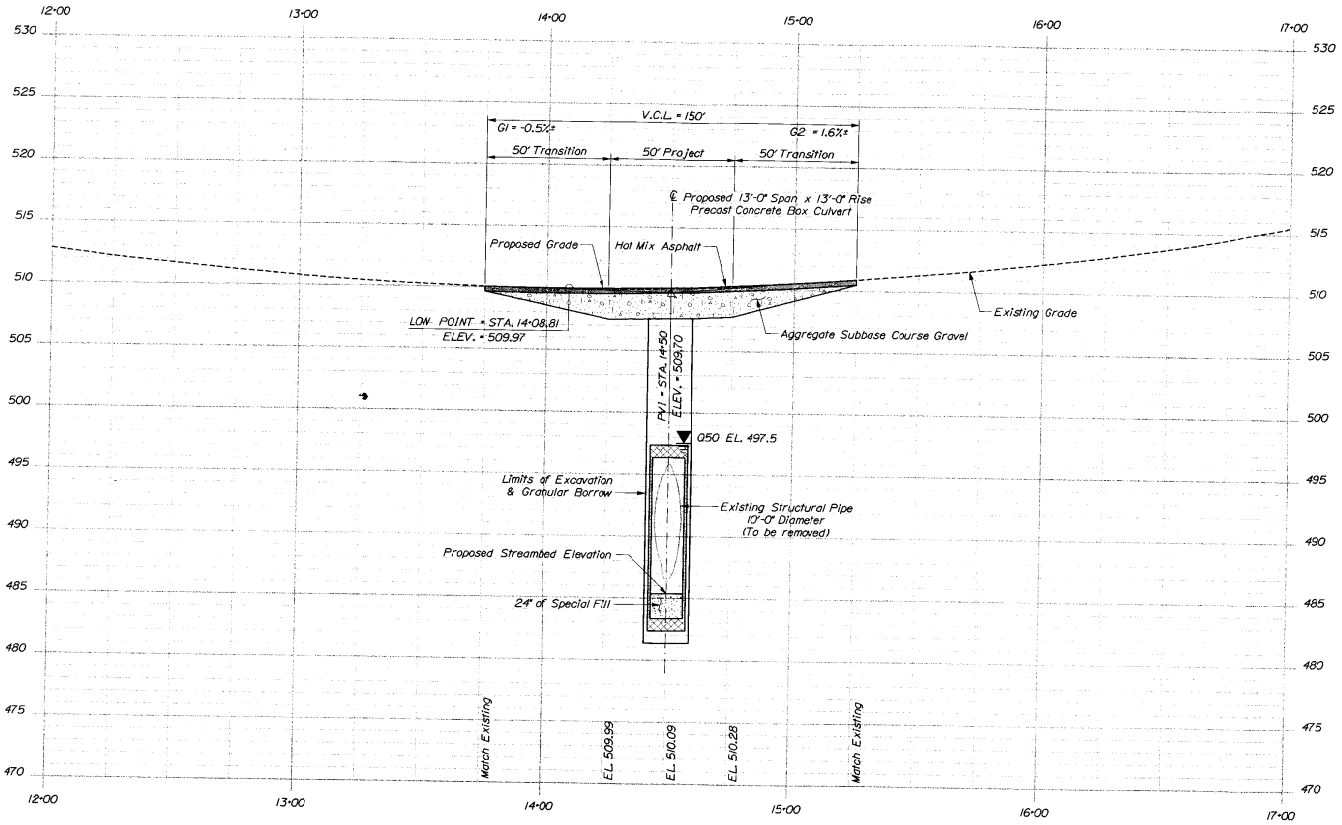

PROFILE

STATE OF MAINE
DEPARTMENT OF TRANSPORTATION

19319.00

WIN 19319.00

BRIDGE NO. 6306

BRIDGE PLANS

PROJ. MANAGER	STEVE BRIDGE			
DESIGN DETAILED	M. WIGHT	D. SHAW	Nov. 2012	SIGNATURE
CHECKED REVIEWED				
DESIGN DETAILED2				
DESIGN DETAILED3				P.E. NUMBER
REVISIONS 1				
REVISIONS 2				
REVISIONS 3				DATE
REVISIONS 4				
FIELD CHANGES				

HARDWOOD BROOK BRIDGE
HARDWOOD BROOK
AROOSTOOK COUNTY
CARIBOU

PROFILE

SHEET NUMBER
3
OF 4

27

Filename: ...\00\bridge\mste\003_Profile.dgn Division: BRIDGE Username: David.Shaw Date:10/9/2012

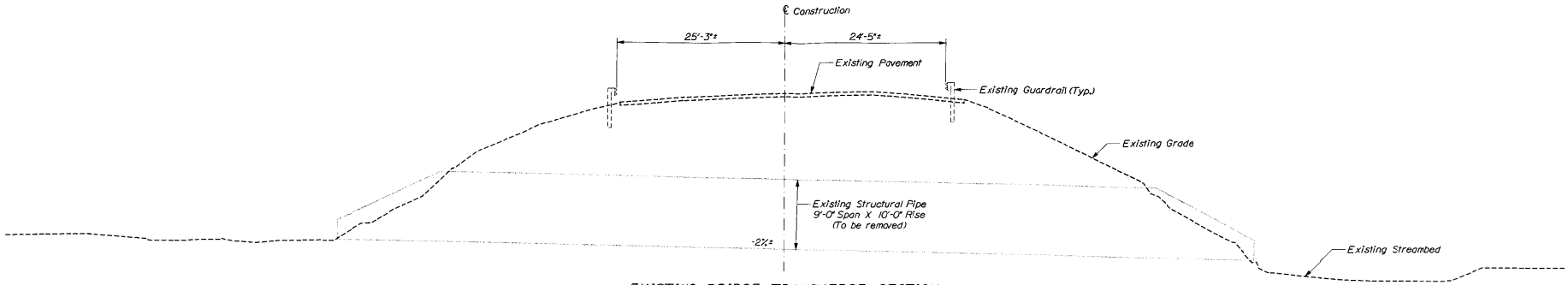

EXISTING BRIDGE TRANSVERSE SECTION

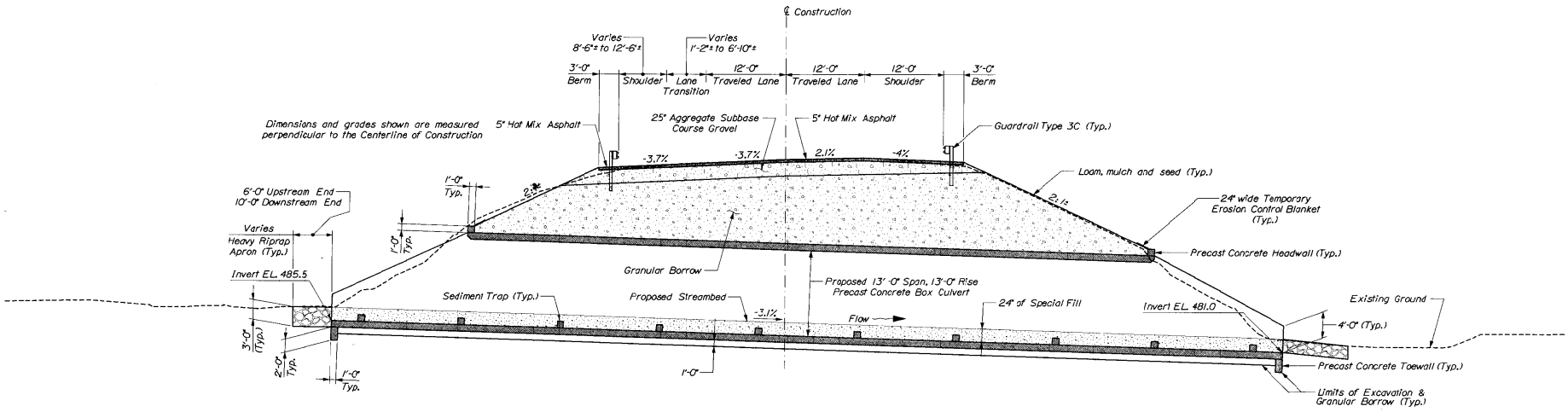

PROPOSED BRIDGE TRANSVERSE SECTION AND APPROACH SECTION
(Along center-line of concrete box)

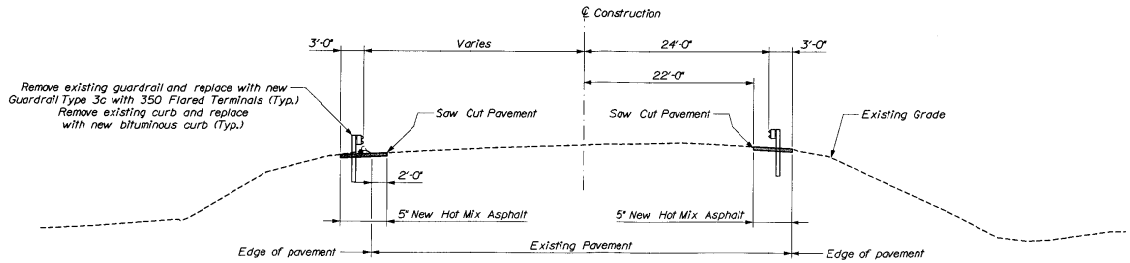

PROPOSED APPROACH SECTION
Guardrail replacement and new shoulder pavement

STATE OF MAINE
DEPARTMENT OF TRANSPORTATION

19319.00

WIN 19319.00

BRIDGE NO. 6306

BRIDGE PLANS

PROJ. MANAGER	STEVE BOSOC	BY	DATE
DESIGN-QC FIELD			
DESIGN-QC MANAGER	M. WIGHT	D. SHAW	Nov. 2012
DESIGN-QC FIELD2			
DESIGN-QC FIELD3			
REVISIONS 1			
REVISIONS 2			
REVISIONS 3			
REVISIONS 4			
FIELD CHANGES			

SIGNATURE

P.E. NUMBER

DATE

HARDWOOD BROOK BRIDGE
HARDWOOD BROOK
CARIBOU AROOSTOOK COUNTY

TYPICAL SECTIONS

SHEET NUMBER
4
OF 4

28

Filename: ...\msta\004_Typical_Sections.dgn Division: BRIDGE Username: David.Shaw Date:10/9/2012

APPENDIX A

(Photographs)

Caribou, Maine
Hardwood Brook Bridge #6306
May 5, 2011

Downstream scour hole

Downstream end of culvert

Caribou, Maine
Hardwood Brook Bridge #6306
May 5, 2011

Upstream end of culvert

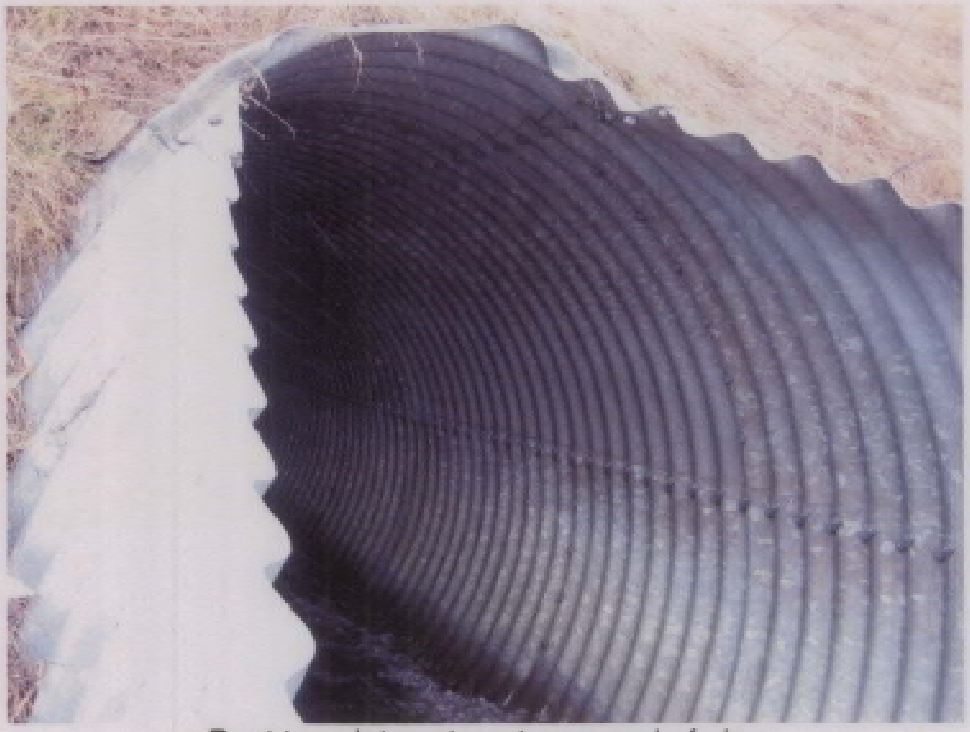

Bent top plates at upstream end of pipe

Caribou, Maine
Hardwood Brook Bridge #6306
May 5, 2011

Downstream end of culvert

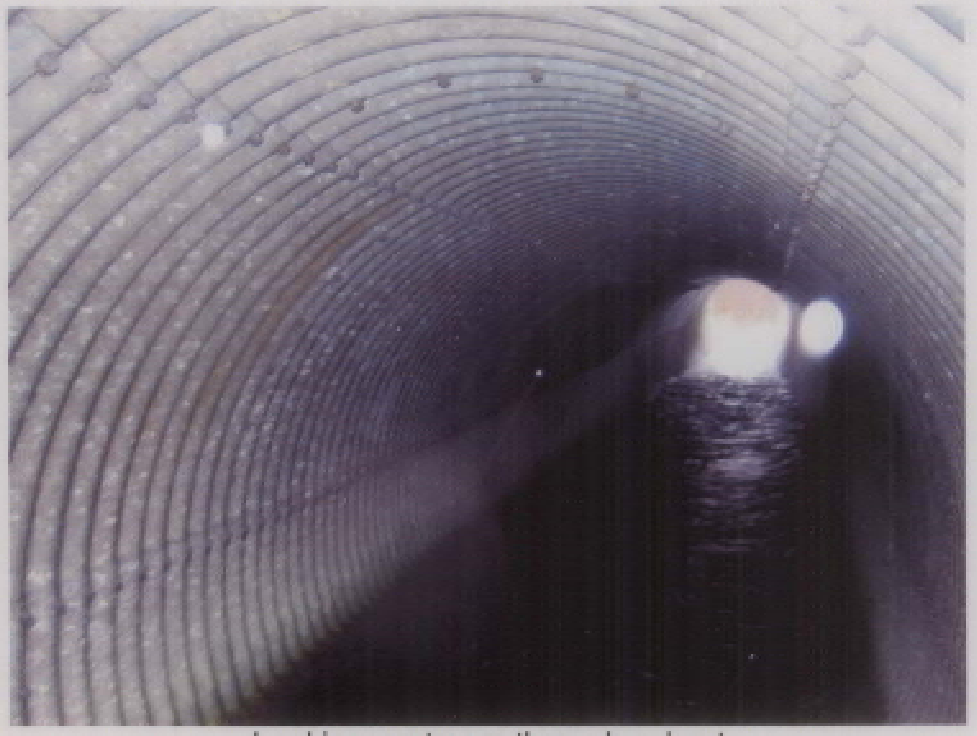

Looking upstream through culvert

Caribou, Maine
Hardwood Brook Bridge #6306
May 5, 2011

Looking south along Route 1

Looking north along Route 1

Caribou, Maine
Hardwood Brook Bridge #6306
May 5, 2011

Northeast corner of culvert
(Note: best access for the contractor for the downstream end)

Upstream end of culvert looking southerly

APPENDIX B

Site Inspection Reports

Structure Inventory and Appraisal Sheet (English Units)

Bridge Key: 6306 Agency ID: 6306 SR: 41 SD/FO: N

IDENTIFICATION

State 1: 23 Maine Struc Num 8: 6306
Facility Carried 7: US 1 Location 9: .5MI N TL
Rte.(On/Under)5A: Route On Structure Rte. Signing Prefix 5B: 3 State Hwy
Level of Service 5C: 1 Mainline Rte. Number 5D: 00001
Directional Suffix 5E: 0 N/A (NBI) % Responsibility : 0
SHD District 2: 05 Northern County Code 3: 003 Aroostook
Place Code 4: 03080 Caribou Mile Post 11: 453.390 mi
Feature Intersected 6: HARDWOOD BROOK
Latitude 16: 46d 47' 03" Longitude 17: 067d 59' 20"
Border Bridge Code 98: Not Applicable (P)
Border Bridge Number 99: n/a

INSPECTION

Frequency 91: 24 months Inspection Date 90: 1/4/2012 Next Inspection: 01/04/2014
FC Frequency 92A: NA FC Inspection Date 93A: NA Next FC Inspection: NA
UW Frequency 92B: NA UW Inspection Date 93B: NA Next UW Inspection: NA
SI Frequency 92C: NA SI Date 93C: NA Next SI: NA
Element Frequency: 24 months Element Inspection Date: 01/04/2012 Next Elem. Insp. Due: 01/04/2014

CLASSIFICATION

Defense Highway 100: 0 Not a STRAHNET hwy Parallel Structure 101: No || bridge exists
Direction of Traffic 102: 2 2-way traffic Temporary Structure 103: Not Applicable (P)
Highway System 104: 1 On the NHS NBIS Length 112: Too Short
Toll Facility 20: 3 On free road Functional Class 26: 02 Rural Other Princ
Defense Hwy 110: 0 Not a STRAHNET Historical Significance 37: 4 Hist sign not determin
Owner 22: 01 State Highway Agency
Custodian 21: 01 State Highway Agency

STRUCTURE TYPE AND MATERIALS

Number of Approach Spans 46: 0 Number of Spans Main Unit 45: 1
Main Span Material/Design 43A/B:
3 Steel 19 Culvert

Deck Type 107: N N/A (NBI)
Wearing Surface 108A: N N/A (no deck (NBI))
Membrane 108B: N N/A (no deck (NBI))
Deck Protection 108C: N N/A (no deck (NBI))

CONDITION

Deck 58: N N/A (NBI) Super 59: N N/A (NBI) Sub 60: N N/A (NBI)
Culvert 62: 3 Excessive Damage Channel/Channel Protection 61: 6 Bank Slumping

LOAD RATING AND POSTING

Inventory Rating Method 65: 2 AS Allowable Stres Operating Rating Method 63: 2 AS Allowable Stress
Inventory Rating 66: HS20.0 Operating Rating 64: HS33.3
Design Load 31: 0 Other or Unknown Posting 70: 5 At/Above Legal Loads
Posting status 41: A Open, no restriction

AGE AND SERVICE

Year Built 27: 1972 Year Reconstructed 106: 0
Type of Service on 42A: 1 Highway
Type of Service under 42B: 5 Waterway
Lanes on 28A: 2 Lanes Under 28B: 0 Detour Length 19: 43.7 mi
ADT 29: 7,548 Truck ADT 109: 9 % Year of ADT 30: 2011

APPRAISAL

Bridge Rail 36A: N N/A or not required Approach Rail 36C: 1 Meets Standards
Transition 36B: N N/A or not required Approach Rail Ends 36D: 1 Meets Standards
Str. Evaluation 67: 3 Deck Geometry 68: N Not applicable (NBI)
Underclearance, Vertical and Horizontal 69: N Not applicable (NBI)
Waterway Adequacy 71: 6 Equal Minimum Approach Alignment 72: 8 Equal Desirable Crit
Scour Critical 113: 6 Calcs not made

GEOMETRIC DATA

Length Max Span 48: 10.0 ft Structure Length 49: 10.0 ft
Curb/Sdwlk Width L 50A: 0.0 ft Curb/Sidewalk Width R 50B: 0.6 ft
Width Curb to Curb 51: 0.0 ft Width Out to Out 52: 0.0 ft
Approach Roadway Width 32: (w/ shoulders) 42.0 ft Median 33: 0 No median
Deck Area: 420. sq. ft
Skew 34: 0.00 ° Structure Flared 35: 0 No flare
Vertical Clearance 10: 99.99 ft Horiz. Clearance 47: 42.00 ft
Minimum Vertical Clearance Over Bridge 53: 327.8 ft
Minimum Vertical Underclearance Reference 54A: N Feature not hwy or RR
Minimum Vertical Underclearance 54B: 0.0 ft
Minimum Lateral Underclearance Reference R 55A: N Feature not hwy or RR
Minimum Lateral Underclearance R 55: 6.6 ft
Minimum Lateral Underclearance L 56: 7.9 ft

PROPOSED IMPROVEMENTS

Bridge Cost 94: NA Type of Work 75: Unknown (P)
Roadway Cost 95: Unknown Length of Improvement 76:
Total Cost 96: Unknown Future ADT 114: 10,567
Year of Cost Estimate 97: Unknown Year of Future ADT 115: 2031

NAVIGATION DATA

Navigation Control 38: 0 Permit Not Required
Vertical Clearance 39: 0.0 ft Horizontal Clearance 40: 0.0 ft
Pier Protection 111: Not Applicable (P) Lift Bridge Vertical Clearance 116: 0.0 ft

ELEMENT CONDITION STATE DATA

Str Unit	Elm/Env	Description	Units	Total Qty	% in 1	Qty. St. 1	% in 2	Qty. St. 2	% in 3	Qty. St. 3	% in 4	Qty. St. 4	% in 5	Qty. St. 5
1	240/2	Steel Culvert	(LF)	148	0 %	0	40 %	59	10 %	15	50 %	74	0 %	0

Pontis 4.4.3 - You are currently logged in as BROWSER

File View Tools Window Help

Bridge Inspection Mode: Edit Type: Regular NBI Key: ADHY

Bridge: 6306 Find... Inspections (4): 07/29/2009 Metric English Reports... Save

1 CONDITION | 2 NOTES | 3 WORK | 4 APPRAISAL | 5 INVENTORY | 6 MAINE DOT | 7 SCHEDULE | 8 MEDIA

Show: All Notes Structure Notes Only Inspection Notes Only

Structure Notes:

1972 10' Steel bolted pipe culvert with concrete headwalls.

Inspection Notes:

Structure in Poor and Serviceable condition.
Severe deterioration of bottom plate throughout the entire lenght of pipe. Appears to be worse from upstream end to about midway through pipe. Prevalent scattered holes (70% of the bottom plates), severe pitting and abrasion, distortion at center of pipe and buckling of the upstream end. Upstream end of pipe buckles in at top,out at center and in at bottom and looking at the bolt line looks to be raised at this end. 2005 report NBI rating was 6, 2007 was 5. No holes were noted on bottom plate in either inspection which leads me to believe this pipe is deteriorating quickly at the bottom plates.
Recommend replacement.

Channel:
Alignment - Satisfactory
Gradient - Mod. Severe
Opening - Satisfactory
Composition - Gravel

Ready | prod_pontis (browser) | EDIT OFF | 05/02/2011 15:03:34

Looking upstream

Looking downstream. Note water level at pipe inlet and water level inside pipe. Pipe end is sloped up. See opposite picture.

Downstream end of pipe. Note embankment erosion. Arrow denotes concrete headwall. Assumed end of original slope.

Upstream end of pipe. Note embankment erosion. Arrows denote concrete headwall. Assumed end of original slope.

Br.#6306	CARIBOU	HARDWOOD BROOK	11-8-2005

Roadway looking South

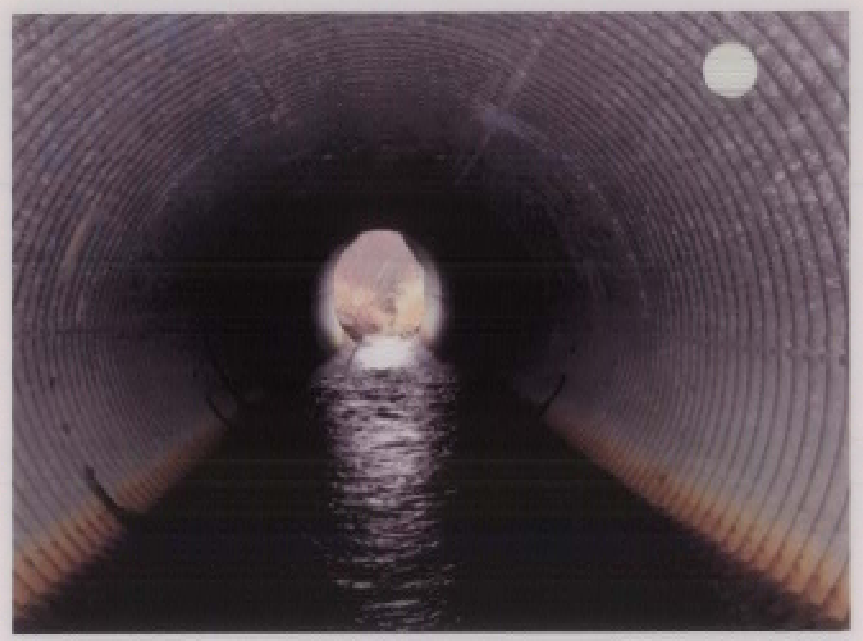

Looking up stream

Looking up stream

Looking down stream

6306	Caribou	Hardwood Brook	11-6-07

Roadway looking South

General view

Looking upstream

Looking downstream

6306	Caribou	Hardwood Brook	7/29/09

Typical holes throughout entire length of bottom plates – Worse from upstream end to about midway through pipe

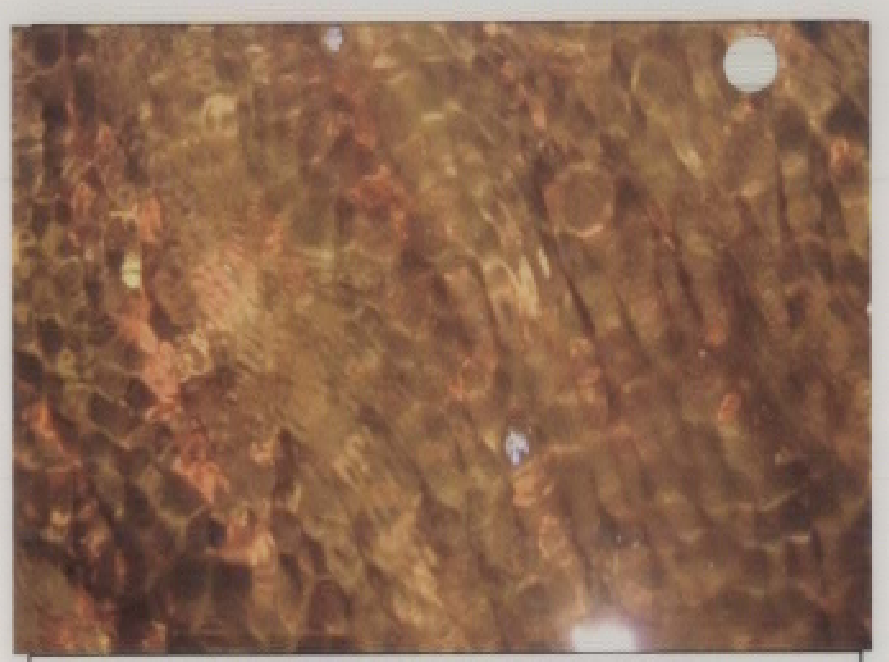

Typical heavy rust nodules, pitting and holes

Severe deterioration at upstream end about 20' in

Hole found above water line at downstream end

6306	Caribou	Hardwood Brook	7/29/09

Roadway looking South

General view

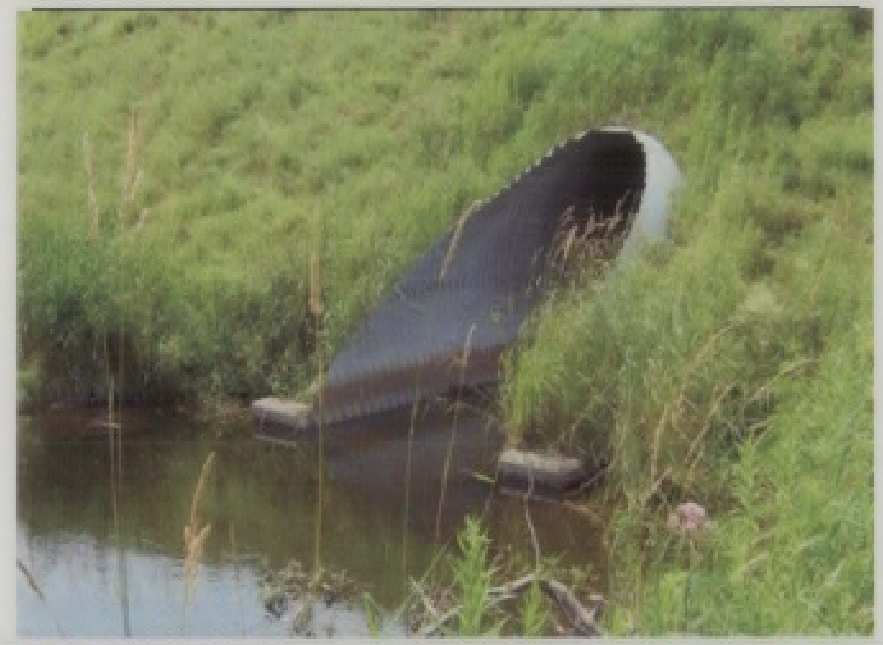

Looking upstream

Looking downstream

6306	Caribou	Hardwood Brook	7/29/09

MAINE DEPARTMENT OF TRANSPORTATION
INTERDEPARTMENTAL MEMORANDUM

DATE July 11, 2012

FROM: Michael Wight, Bridge Program

TO: Project file

SUBJECT: Caribou, Hardwood Brook Bridge #6306, WIN 019319.00

(Route 1 over Hardwood Brook)

Site inspection report for 7/10/2012

Dave Shaw and I visited the subject bridge on Tuesday July 10, 2012 between 10:15 am and 11:30 am. We visited the culvert during low flow conditions. A USGS gaging station is located immediately upstream of the bridge. Based on the gaging data the flow in July, August and September typically varies between 0.71 cfs and 9.48 cfs. On July 11, 2012, the flow was 5.7 cfs (see attachment). The gage height was 2.08'. The resulting water surface elevation at the gage is 488.74 feet based on a gage datum of 486.66'.

We had the following observations:

- The top plates at the upstream end of the culvert on both sides are bent inward.
- The bottom of the culvert has heavy rust with some holes near the upstream and downstream ends near the water surface. At locations with holes, we could penetrate about 6" behind the plates with a folding ruler.
- Along the south side of the pipe, half way up the side along the longitudinal bolt line; the plates are 50% to 75% cracked. The cracks extend out from the bolt hole on both sides. This cracking is along approximately 60% to 80% of the pipe length.
- A bulge is located near the bottom of the pipe on the south side about 50 feet to 60 feet from the inlet. The bulged area is about 10 long '. The bulge is at least 6" to 12" high. The worst part of the bulge is along a longitudinal bolt line. This location has heavy rust with cracking on both sides of the bolt holes. Could penetrate about 6" behind the plates through the cracks with a folding ruler.
- A rust line up the pipe about 2/3's of the height along the top of one corrugation roughly in the middle of the bulges area. Water was occasionally dripping at this location.

- A kink is located along the longitudinal bolt line where the top plate and side plate are bolted together on the south side of the pipe. The kink is worst on the downstream end of the pipe.

- The bottom of the pipe is clean with no fill material.

- The rust line is about 3'-9" to 4' above the invert.

- Minor erosion behind the southeast concrete headwall.

- Minor to moderate erosion at the edge of the shoulder on the west side of the road at the low point. The existing riprap downspout has partially failed.

- The push bar at end of scour hole appears stable with mostly cobbles.

- W beam guardrail over the pipe has been flattened. One damaged offset bracket.

Water depths:

Upstream of culvert about 25': 9 to 10 inches

At inlet invert: 9 inches

15'+/- from upstream end of culvert: 6 inches

50'+/- from upstream end of culvert – 1'- 4" (16 inches)

At outlet invert: 2'-6" (30 inches)

At push bar at downstream end of downstream scour hole: 9" to 1'-1"

Summary:

Based on the distortion of the pipe and cracking of the plates, invert lining is not recommended. Sliplining and/or replacement options need to be investigated.

Inspection photos on July 10, 2012

Bulge in south side of pipe near middle of pipe

Crack in bottom plate in area of bulge

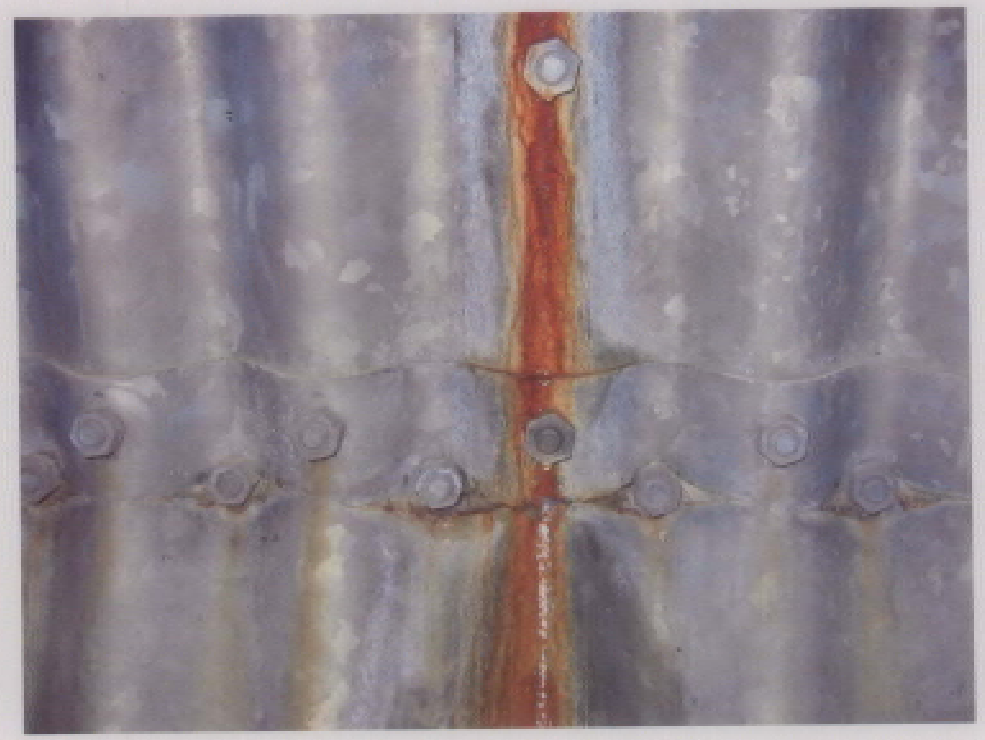

Vertical rust line up the side of pipe near the area of the bulge

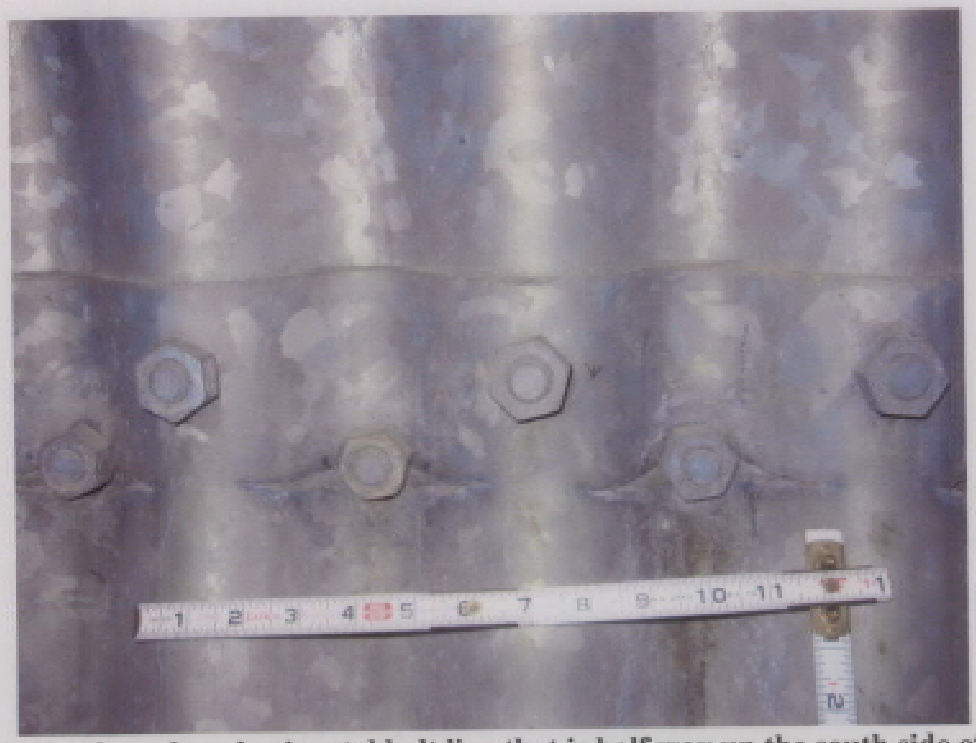

Cracks in plate along horizontal bolt line that is half way up the south side of pipe

Holes in pipe about 15' from upstream end on north side of pipe

Erosion behind southeast concrete headwall

Kink where top plate and side plates bolt together toward the downstream end of the culvert

Bent top plate at upstream end of pipe

Looking at downstream end of pipe (7/10/2012)

Looking upstream from 70' from inlet (7/10/2012)

Note: Bulge in south side (left side) of pipe below rust line

Markings inside steel culvert

7/10/2012

#6306

Downstream End

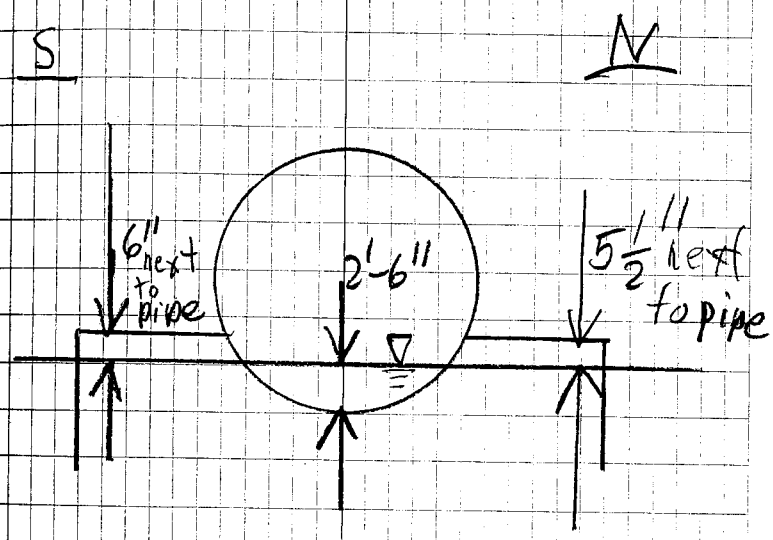

7/10/2012

#6306

Upstream End

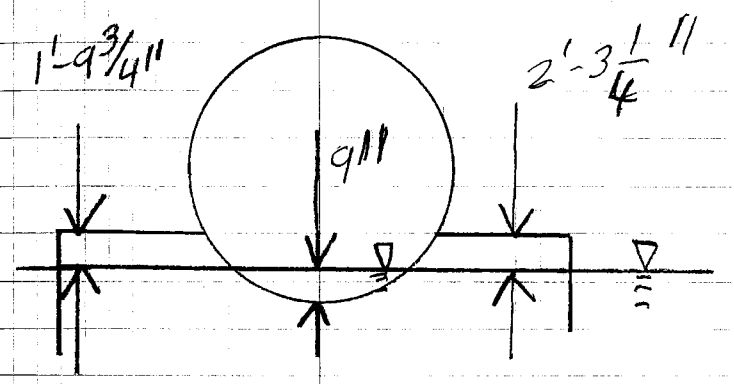

bolt 5/8" tall
head @ north end of NW
headwall

APPENDIX C

Hydrology Data

Project Name:	Hardwood Brook Bridge	**PIN:**	19319
Stream Name:	Hardwood Brook	**Town:**	Caribou
Bridge Name:		**Bridge No.**	6306
Route No.	US 1	**USGS Quad:**	
Analysis by:	CSH	**Date:**	3/23/2012

Peak Flow Calculations by USGS Regression Equations (Hodgkins, 1999)

Enter data in blue cells only!

	km^2	mi^2	ac	
A	14.82	5.72	3662.1	Watershed Area
W	0.72	0.28	177.4	Wetlands area (by NWI)
P_c	575446	5181258		watershed centroid (E, N; UTM 19N; meters)
County	Aroostook N			*choose county from drop-down menu*
pptA	36.1			mean annual precipitation (inches; by look-up)
SG	0.00			sand & gravel aquifer as decimal fraction of watershed A

Enter data in [mi^2]

A (km^2)	14.82	**Conf Lvl**	0.67
W (%)	4.84		

Worksheet prepared by:
Charles S. Hebson, PE
Environmental Office
Maine Dept. Transportation
Augusta, ME 04333-0016
207-557-1052
Charles.Hebson@maine.gov

Ret Pd T (yr)	Peak Flow Estimate Lower	Q_T (m^3/s)	Upper	Q_T (ft^3/s)
1.1		3.56		125.8
2	5.58	7.86	11.06	277.5
5	9.13	12.91	18.27	456.0
10	11.76	16.81	24.03	593.5
25	15.30	22.22	32.25	784.5
50	18.08	26.57	39.07	938.3
100	21.00	31.28	46.58	1104.4
500	28.09	43.28	66.69	1528.2

Reference:

Hodgkins, G., 1999.
Estimating the magnitude of peak flows for streams in Maine for selected recurrence intervals
Water-Resources Investigations Report 99-4008
US Geological Survey, Augusta, Maine

$Q_T = b \times A^a \times 10^{-wW}$

Project Name:	Hardwood Brook Bridge	**PIN:**	19319
Stream Name:	Hardwood Brook	**Town:**	Caribou
Bridge Name:	0	**Bridge No.**	3987
Route No.	US 1	**USGS Quad:**	
Analysis by:	CSH	**Date:**	3/23/2012

DO NOT ENTER ANY DATA ON THIS PAGE; EVERYTHING IS CALCULATED

MAINE MONTHLY MEDIAN FLOWS BY USGS REGRESSION EQUATIONS (2004)

Worksheet prepared by:
Charles S. Hebson, PE
Chief Hydrologist
Maine Dept. Transportation
Augusta, ME 04333-0016
207-624-3073
Charles.Hebson@maine.gov

	Value	Variable	Explanation
	5.722	*A*	Area (mi^2)
575446	5181258	P_c	Watershed centroid (E,N; UTM; Zone 19; meters)
	164.69	*DIST*	Distance from Coastal reference line (mi)
	36.1	*pptA*	Mean Annual Precipitation (inches)
	0.00	*SG*	Sand & Gravel Aquifer (decimal fraction of watershed area)

Month	Q_{median} (ft3/s)	(m^3/s)
Jan	**2.58**	0.0732
Feb	**2.29**	0.0650
Mar	**3.09**	0.0875
Apr	**13.55**	0.3840
May	**17.81**	0.5048
Jun	**4.80**	0.1359
Jul	**1.56**	0.0442
Aug	**1.07**	0.0304
Sep	**1.14**	0.0322
Oct	**2.00**	0.0566
Nov	**7.04**	0.1995
Dec	**5.01**	0.1419

Q_{bf}	**32.4**
ann avg	**10.5**
ann med	**4.5**
$Q_{1.002}$	**50.3**
$Q_{1.01}$	69.7
$Q_{1.05}$	103.2

W_{bf}	18.9	
d_{bf}	1.5	
Q_{bf}	111.1	assume v = 4ft/s

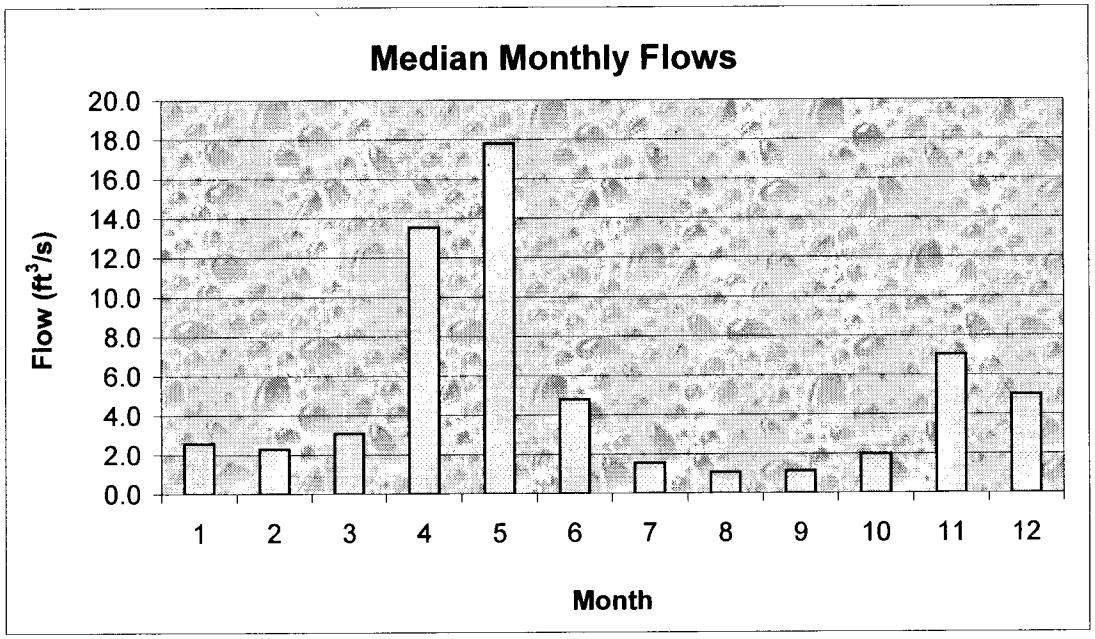

USGS Home
Contact USGS
Search USGS

National Water Information System: Web Interface

USGS Water Resources

Data Category: Current Conditions | Geographic Area: Maine | GO

News updated April, 2012

USGS 01017060 Hardwood Brook below Glidden Brk nr Caribou, Maine

PROVISIONAL DATA SUBJECT TO REVISION

Available data for this site Time-series: Current/Historical Observations GO

Station operated in cooperation with Aroostook Band of Micmacs.

- **Current shift-adjusted rating in tab-delimited format. These are updated daily and can change often! If you use these ratings it is important that you update often so that you have the most current version.**
  What is a shift-adjusted rating?

This station managed by the Augusta, ME Field Office.

Available Parameters	Available Period	Output format	Begin date	
☐ All 2 Available Parameters for this site		○ Graph	2012-07-10	
☑ 00065 Gage height	2008-12-01 2012-07-11	○ Graph w/ stats	End date	GO
☑ 00060 Discharge	2008-12-01 2012-07-11	○ Graph w/o stats	2012-07-10	
		◉ Table		
		○ Tab-separated		

Summary of all available data for this site

Instantaneous-data availability statement

Date / Time	Gage height, feet,	Dis-charge, ft3/s,
07/10/2012 00:00 EDT	2.053[P]	5.3[P]
07/10/2012 00:05 EDT	2.053[P]	5.3[P]
07/10/2012 00:10 EDT	2.053[P]	5.3[P]

07/10/2012 00:15 EDT	2.054[P]	5.3[P]
07/10/2012 00:20 EDT	2.054[P]	5.3[P]
07/10/2012 00:25 EDT	2.053[P]	5.3[P]
07/10/2012 00:30 EDT	2.055[P]	5.3[P]
07/10/2012 00:35 EDT	2.055[P]	5.3[P]
07/10/2012 00:40 EDT	2.054[P]	5.3[P]
07/10/2012 00:45 EDT	2.056[P]	5.3[P]
07/10/2012 00:50 EDT	2.057[P]	5.4[P]
07/10/2012 00:55 EDT	2.057[P]	5.4[P]
07/10/2012 01:00 EDT	2.058[P]	5.4[P]
07/10/2012 01:05 EDT	2.057[P]	5.4[P]
07/10/2012 01:10 EDT	2.059[P]	5.4[P]
07/10/2012 01:15 EDT	2.058[P]	5.4[P]
07/10/2012 01:20 EDT	2.056[P]	5.3[P]
07/10/2012 01:25 EDT	2.055[P]	5.3[P]
07/10/2012 01:30 EDT	2.055[P]	5.3[P]
07/10/2012 01:35 EDT	2.052[P]	5.3[P]
07/10/2012 01:40 EDT	2.051[P]	5.3[P]
07/10/2012 01:45 EDT	2.050[P]	5.3[P]
07/10/2012 01:50 EDT	2.048[P]	5.2[P]
07/10/2012 01:55 EDT	2.049[P]	5.2[P]
07/10/2012 02:00 EDT	2.049[P]	5.2[P]
07/10/2012 02:05 EDT	2.048[P]	5.2[P]
07/10/2012 02:10 EDT	2.050[P]	5.3[P]
07/10/2012 02:15 EDT	2.050[P]	5.3[P]
07/10/2012 02:20 EDT	2.054[P]	5.3[P]
07/10/2012 02:25 EDT	2.057[P]	5.4[P]
07/10/2012 02:30 EDT	2.059[P]	5.4[P]
07/10/2012 02:35 EDT	2.061[P]	5.4[P]
07/10/2012 02:40 EDT	2.059[P]	5.4[P]
07/10/2012 02:45 EDT	2.055[P]	5.3[P]
07/10/2012 02:50 EDT	2.054[P]	5.3[P]
07/10/2012 02:55 EDT	2.054[P]	5.3[P]
07/10/2012 03:00 EDT	2.053[P]	5.3[P]
07/10/2012 03:05 EDT	2.055[P]	5.3[P]
07/10/2012 03:10 EDT	2.055[P]	5.3[P]
07/10/2012 03:15 EDT	2.058[P]	5.4[P]

07/10/2012 03:20 EDT	2.060[P]	5.4[P]
07/10/2012 03:25 EDT	2.060[P]	5.4[P]
07/10/2012 03:30 EDT	2.061[P]	5.4[P]
07/10/2012 03:35 EDT	2.062[P]	5.4[P]
07/10/2012 03:40 EDT	2.062[P]	5.4[P]
07/10/2012 03:45 EDT	2.064[P]	5.4[P]
07/10/2012 03:50 EDT	2.064[P]	5.4[P]
07/10/2012 03:55 EDT	2.064[P]	5.4[P]
07/10/2012 04:00 EDT	2.066[P]	5.5[P]
07/10/2012 04:05 EDT	2.066[P]	5.5[P]
07/10/2012 04:10 EDT	2.067[P]	5.5[P]
07/10/2012 04:15 EDT	2.067[P]	5.5[P]
07/10/2012 04:20 EDT	2.066[P]	5.5[P]
07/10/2012 04:25 EDT	2.068[P]	5.5[P]
07/10/2012 04:30 EDT	2.068[P]	5.5[P]
07/10/2012 04:35 EDT	2.067[P]	5.5[P]
07/10/2012 04:40 EDT	2.068[P]	5.5[P]
07/10/2012 04:45 EDT	2.067[P]	5.5[P]
07/10/2012 04:50 EDT	2.066[P]	5.5[P]
07/10/2012 04:55 EDT	2.067[P]	5.5[P]
07/10/2012 05:00 EDT	2.067[P]	5.5[P]
07/10/2012 05:05 EDT	2.069[P]	5.5[P]
07/10/2012 05:10 EDT	2.072[P]	5.6[P]
07/10/2012 05:15 EDT	2.073[P]	5.6[P]
07/10/2012 05:20 EDT	2.076[P]	5.6[P]
07/10/2012 05:25 EDT	2.077[P]	5.6[P]
07/10/2012 05:30 EDT	2.077[P]	5.6[P]
07/10/2012 05:35 EDT	2.079[P]	5.7[P]
07/10/2012 05:40 EDT	2.079[P]	5.7[P]
07/10/2012 05:45 EDT	2.079[P]	5.7[P]
07/10/2012 05:50 EDT	2.080[P]	5.7[P]
07/10/2012 05:55 EDT	2.080[P]	5.7[P]
07/10/2012 06:00 EDT	2.080[P]	5.7[P]
07/10/2012 06:05 EDT	2.080[P]	5.7[P]
07/10/2012 06:10 EDT	2.080[P]	5.7[P]
07/10/2012 06:15 EDT	2.078[P]	5.6[P]
07/10/2012 06:20 EDT	2.079[P]	5.7[P]

07/10/2012 06:25 EDT	2.078[P]	5.6[P]
07/10/2012 06:30 EDT	2.076[P]	5.6[P]
07/10/2012 06:35 EDT	2.076[P]	5.6[P]
07/10/2012 06:40 EDT	2.075[P]	5.6[P]
07/10/2012 06:45 EDT	2.074[P]	5.6[P]
07/10/2012 06:50 EDT	2.074[P]	5.6[P]
07/10/2012 06:55 EDT	2.072[P]	5.6[P]
07/10/2012 07:00 EDT	2.070[P]	5.5[P]
07/10/2012 07:05 EDT	2.071[P]	5.5[P]
07/10/2012 07:10 EDT	2.070[P]	5.5[P]
07/10/2012 07:15 EDT	2.069[P]	5.5[P]
07/10/2012 07:20 EDT	2.070[P]	5.5[P]
07/10/2012 07:25 EDT	2.070[P]	5.5[P]
07/10/2012 07:30 EDT	2.069[P]	5.5[P]
07/10/2012 07:35 EDT	2.071[P]	5.5[P]
07/10/2012 07:40 EDT	2.072[P]	5.6[P]
07/10/2012 07:45 EDT	2.071[P]	5.5[P]
07/10/2012 07:50 EDT	2.073[P]	5.6[P]
07/10/2012 07:55 EDT	2.074[P]	5.6[P]
07/10/2012 08:00 EDT	2.074[P]	5.6[P]
07/10/2012 08:05 EDT	2.076[P]	5.6[P]
07/10/2012 08:10 EDT	2.077[P]	5.6[P]
07/10/2012 08:15 EDT	2.077[P]	5.6[P]
07/10/2012 08:20 EDT	2.080[P]	5.7[P]
07/10/2012 08:25 EDT	2.080[P]	5.7[P]
07/10/2012 08:30 EDT	2.080[P]	5.7[P]
07/10/2012 08:35 EDT	2.081[P]	5.7[P]
07/10/2012 08:40 EDT	2.082[P]	5.7[P]
07/10/2012 08:45 EDT	2.081[P]	5.7[P]
07/10/2012 08:50 EDT	2.083[P]	5.7[P]
07/10/2012 08:55 EDT	2.082[P]	5.7[P]
07/10/2012 09:00 EDT	2.081[P]	5.7[P]
07/10/2012 09:05 EDT	2.083[P]	5.7[P]
07/10/2012 09:10 EDT	2.082[P]	5.7[P]
07/10/2012 09:15 EDT	2.081[P]	5.7[P]
07/10/2012 09:20 EDT	2.081[P]	5.7[P]
07/10/2012 09:25 EDT	2.082[P]	5.7[P]

07/10/2012 09:30 EDT	2.081[P]	5.7[P]
07/10/2012 09:35 EDT	2.082[P]	5.7[P]
07/10/2012 09:40 EDT	2.083[P]	5.7[P]
07/10/2012 09:45 EDT	2.082[P]	5.7[P]
07/10/2012 09:50 EDT	2.083[P]	5.7[P]
07/10/2012 09:55 EDT	2.082[P]	5.7[P]
07/10/2012 10:00 EDT	2.081[P]	5.7[P]
07/10/2012 10:05 EDT	2.082[P]	5.7[P]
07/10/2012 10:10 EDT	2.081[P]	5.7[P]
07/10/2012 10:15 EDT	2.084[P]	5.7[P]
07/10/2012 10:20 EDT	2.084[P]	5.7[P]
07/10/2012 10:25 EDT	2.083[P]	5.7[P]
07/10/2012 10:30 EDT	2.082[P]	5.7[P]
07/10/2012 10:35 EDT	2.082[P]	5.7[P]
07/10/2012 10:40 EDT	2.080[P]	5.7[P]
07/10/2012 10:45 EDT	2.079[P]	5.7[P]
07/10/2012 10:50 EDT	2.079[P]	5.7[P]
07/10/2012 10:55 EDT	2.078[P]	5.6[P]
07/10/2012 11:00 EDT	2.079[P]	5.7[P]
07/10/2012 11:05 EDT	2.080[P]	5.7[P]
07/10/2012 11:10 EDT	2.081[P]	5.7[P]
07/10/2012 11:15 EDT	2.081[P]	5.7[P]
07/10/2012 11:20 EDT	2.079[P]	5.7[P]
07/10/2012 11:25 EDT	2.076[P]	5.6[P]
07/10/2012 11:30 EDT	2.076[P]	5.6[P]
07/10/2012 11:35 EDT	2.076[P]	5.6[P]
07/10/2012 11:40 EDT	2.074[P]	5.6[P]
07/10/2012 11:45 EDT	2.076[P]	5.6[P]
07/10/2012 11:50 EDT	2.076[P]	5.6[P]
07/10/2012 11:55 EDT	2.074[P]	5.6[P]
07/10/2012 12:00 EDT	2.076[P]	5.6[P]
07/10/2012 12:05 EDT	2.075[P]	5.6[P]
07/10/2012 12:10 EDT	2.074[P]	5.6[P]
07/10/2012 12:15 EDT	2.074[P]	5.6[P]
07/10/2012 12:20 EDT	2.074[P]	5.6[P]
07/10/2012 12:25 EDT	2.074[P]	5.6[P]
07/10/2012 12:30 EDT	2.073[P]	5.6[P]

Time of site visit on 7/10/2012

07/10/2012 12:35 EDT	2.072[P]	5.6[P]
07/10/2012 12:40 EDT	2.073[P]	5.6[P]
07/10/2012 12:45 EDT	2.072[P]	5.6[P]
07/10/2012 12:50 EDT	2.070[P]	5.5[P]
07/10/2012 12:55 EDT	2.071[P]	5.5[P]
07/10/2012 13:00 EDT	2.070[P]	5.5[P]
07/10/2012 13:05 EDT	2.069[P]	5.5[P]
07/10/2012 13:10 EDT	2.068[P]	5.5[P]
07/10/2012 13:15 EDT	2.065[P]	5.5[P]
07/10/2012 13:20 EDT	2.065[P]	5.5[P]
07/10/2012 13:25 EDT	2.063[P]	5.4[P]
07/10/2012 13:30 EDT	2.061[P]	5.4[P]
07/10/2012 13:35 EDT	2.060[P]	5.4[P]
07/10/2012 13:40 EDT	2.059[P]	5.4[P]
07/10/2012 13:45 EDT	2.057[P]	5.4[P]
07/10/2012 13:50 EDT	2.058[P]	5.4[P]
07/10/2012 13:55 EDT	2.058[P]	5.4[P]
07/10/2012 14:00 EDT	2.056[P]	5.3[P]
07/10/2012 14:05 EDT	2.057[P]	5.4[P]
07/10/2012 14:10 EDT	2.056[P]	5.3[P]
07/10/2012 14:15 EDT	2.056[P]	5.3[P]
07/10/2012 14:20 EDT	2.053[P]	5.3[P]
07/10/2012 14:25 EDT	2.053[P]	5.3[P]
07/10/2012 14:30 EDT	2.053[P]	5.3[P]
07/10/2012 14:35 EDT	2.052[P]	5.3[P]
07/10/2012 14:40 EDT	2.052[P]	5.3[P]
07/10/2012 14:45 EDT	2.052[P]	5.3[P]
07/10/2012 14:50 EDT	2.050[P]	5.3[P]
07/10/2012 14:55 EDT	2.051[P]	5.3[P]
07/10/2012 15:00 EDT	2.049[P]	5.2[P]
07/10/2012 15:05 EDT	2.048[P]	5.2[P]
07/10/2012 15:10 EDT	2.049[P]	5.2[P]
07/10/2012 15:15 EDT	2.048[P]	5.2[P]
07/10/2012 15:20 EDT	2.046[P]	5.2[P]
07/10/2012 15:25 EDT	2.047[P]	5.2[P]
07/10/2012 15:30 EDT	2.045[P]	5.2[P]
07/10/2012 15:35 EDT	2.042[P]	5.2[P]

07/10/2012 15:40 EDT	2.043[P]	5.2[P]
07/10/2012 15:45 EDT	2.041[P]	5.1[P]
07/10/2012 15:50 EDT	2.041[P]	5.1[P]
07/10/2012 15:55 EDT	2.041[P]	5.1[P]
07/10/2012 16:00 EDT	2.040[P]	5.1[P]
07/10/2012 16:05 EDT	2.040[P]	5.1[P]
07/10/2012 16:10 EDT	2.038[P]	5.1[P]
07/10/2012 16:15 EDT	2.036[P]	5.1[P]
07/10/2012 16:20 EDT	2.036[P]	5.1[P]
07/10/2012 16:25 EDT	2.035[P]	5.1[P]
07/10/2012 16:30 EDT	2.035[P]	5.1[P]
07/10/2012 16:35 EDT	2.036[P]	5.1[P]
07/10/2012 16:40 EDT	2.036[P]	5.1[P]
07/10/2012 16:45 EDT	2.035[P]	5.1[P]
07/10/2012 16:50 EDT	2.033[P]	5.0[P]
07/10/2012 16:55 EDT	2.031[P]	5.0[P]
07/10/2012 17:00 EDT	2.030[P]	5.0[P]
07/10/2012 17:05 EDT	2.029[P]	5.0[P]
07/10/2012 17:10 EDT	2.025[P]	4.9[P]
07/10/2012 17:15 EDT	2.024[P]	4.9[P]
07/10/2012 17:20 EDT	2.022[P]	4.9[P]
07/10/2012 17:25 EDT	2.022[P]	4.9[P]
07/10/2012 17:30 EDT	2.021[P]	4.9[P]
07/10/2012 17:35 EDT	2.018[P]	4.8[P]
07/10/2012 17:40 EDT	2.017[P]	4.8[P]
07/10/2012 17:45 EDT	2.016[P]	4.8[P]
07/10/2012 17:50 EDT	2.014[P]	4.8[P]
07/10/2012 17:55 EDT	2.013[P]	4.8[P]
07/10/2012 18:00 EDT	2.012[P]	4.8[P]
07/10/2012 18:05 EDT	2.012[P]	4.8[P]
07/10/2012 18:10 EDT	2.011[P]	4.8[P]
07/10/2012 18:15 EDT	2.009[P]	4.7[P]
07/10/2012 18:20 EDT	2.009[P]	4.7[P]
07/10/2012 18:25 EDT	2.009[P]	4.7[P]
07/10/2012 18:30 EDT	2.009[P]	4.7[P]
07/10/2012 18:35 EDT	2.009[P]	4.7[P]
07/10/2012 18:40 EDT	2.008[P]	4.7[P]

07/10/2012 18:45 EDT	2.008[P]	4.7[P]
07/10/2012 18:50 EDT	2.006[P]	4.7[P]
07/10/2012 18:55 EDT	2.004[P]	4.7[P]
07/10/2012 19:00 EDT	2.005[P]	4.7[P]
07/10/2012 19:05 EDT	2.004[P]	4.7[P]
07/10/2012 19:10 EDT	2.003[P]	4.7[P]
07/10/2012 19:15 EDT	2.004[P]	4.7[P]
07/10/2012 19:20 EDT	2.004[P]	4.7[P]
07/10/2012 19:25 EDT	2.003[P]	4.7[P]
07/10/2012 19:30 EDT	2.004[P]	4.7[P]
07/10/2012 19:35 EDT	2.004[P]	4.7[P]
07/10/2012 19:40 EDT	2.005[P]	4.7[P]
07/10/2012 19:45 EDT	2.005[P]	4.7[P]
07/10/2012 19:50 EDT	2.005[P]	4.7[P]
07/10/2012 19:55 EDT	2.006[P]	4.7[P]
07/10/2012 20:00 EDT	2.006[P]	4.7[P]
07/10/2012 20:05 EDT	2.007[P]	4.7[P]
07/10/2012 20:10 EDT	2.006[P]	4.7[P]
07/10/2012 20:15 EDT	2.006[P]	4.7[P]
07/10/2012 20:20 EDT	2.005[P]	4.7[P]
07/10/2012 20:25 EDT	2.004[P]	4.7[P]
07/10/2012 20:30 EDT	2.005[P]	4.7[P]
07/10/2012 20:35 EDT	2.006[P]	4.7[P]
07/10/2012 20:40 EDT	2.005[P]	4.7[P]
07/10/2012 20:45 EDT	2.007[P]	4.7[P]
07/10/2012 20:50 EDT	2.007[P]	4.7[P]
07/10/2012 20:55 EDT	2.009[P]	4.7[P]
07/10/2012 21:00 EDT	2.008[P]	4.7[P]
07/10/2012 21:05 EDT	2.007[P]	4.7[P]
07/10/2012 21:10 EDT	2.009[P]	4.7[P]
07/10/2012 21:15 EDT	2.008[P]	4.7[P]
07/10/2012 21:20 EDT	2.009[P]	4.7[P]
07/10/2012 21:25 EDT	2.009[P]	4.7[P]
07/10/2012 21:30 EDT	2.008[P]	4.7[P]
07/10/2012 21:35 EDT	2.010[P]	4.7[P]
07/10/2012 21:40 EDT	2.010[P]	4.7[P]
07/10/2012 21:45 EDT	2.012[P]	4.8[P]

07/10/2012 21:50 EDT	2.012[P]	4.8[P]
07/10/2012 21:55 EDT	2.011[P]	4.8[P]
07/10/2012 22:00 EDT	2.013[P]	4.8[P]
07/10/2012 22:05 EDT	2.011[P]	4.8[P]
07/10/2012 22:10 EDT	2.010[P]	4.7[P]
07/10/2012 22:15 EDT	2.009[P]	4.7[P]
07/10/2012 22:20 EDT	2.005[P]	4.7[P]
07/10/2012 22:25 EDT	2.004[P]	4.7[P]
07/10/2012 22:30 EDT	2.001[P]	4.6[P]
07/10/2012 22:35 EDT	2.000[P]	4.6[P]
07/10/2012 22:40 EDT	1.998[P]	4.6[P]
07/10/2012 22:45 EDT	1.996[P]	4.6[P]
07/10/2012 22:50 EDT	1.996[P]	4.6[P]
07/10/2012 22:55 EDT	1.995[P]	4.5[P]
07/10/2012 23:00 EDT	1.995[P]	4.5[P]
07/10/2012 23:05 EDT	1.995[P]	4.5[P]
07/10/2012 23:10 EDT	1.995[P]	4.5[P]
07/10/2012 23:15 EDT	1.996[P]	4.6[P]
07/10/2012 23:20 EDT	1.997[P]	4.6[P]
07/10/2012 23:25 EDT	1.997[P]	4.6[P]
07/10/2012 23:30 EDT	1.998[P]	4.6[P]
07/10/2012 23:35 EDT	1.998[P]	4.6[P]
07/10/2012 23:40 EDT	1.999[P]	4.6[P]
07/10/2012 23:45 EDT	2.000[P]	4.6[P]
07/10/2012 23:50 EDT	2.000[P]	4.6[P]
07/10/2012 23:55 EDT	2.003[P]	4.7[P]

Explanation

P	Provisional data subject to revision.

Questions about sites/data?
Feedback on this web site
Automated retrievals
Help

Data Tips
Explanation of terms
Subscribe for system changes
News

Accessibility Plug-Ins FOIA Privacy Policies and Notices

U.S. Department of the Interior | U.S. Geological Survey
Title: USGS Current Conditions for Maine
URL: http://waterdata.usgs.gov/me/nwis/uv?

Page Contact Information: Maine Water Data Support Team
Page Last Modified: 2012-07-11 11:54:21 EDT
0.38 0.34 caww01

USGS science for a changing world

USGS Home
Contact USGS
Search USGS

National Water Information System: Web Interface

USGS Water Resources

Data Category: Current Conditions | Geographic Area: Maine | GO

News - updated September 2012

USGS 01017060 Hardwood Brook below Glidden Brk nr Caribou, Maine

PROVISIONAL DATA SUBJECT TO REVISION

Available data for this site: Time-series: Current/Historical Observations | GO

Station operated in cooperation with Aroostook Band of Micmacs.

- **Current shift-adjusted rating in tab-delimited format. These are updated daily and can change often! If you use these ratings it is important that you update often so that you have the most current version.**
  What is a shift-adjusted rating?

This station managed by the Augusta, ME Field Office.

Available Parameters	Available Period
All 2 Available Parameters for this site	
00065 Gage height	2008-12-01 2012-10-03
00060 Discharge	2008-12-01 2012-10-03

Output format: Graph / Graph w/ stats / Graph w/o stats / Table / Tab-separated

Days (0) -- or -- Begin date 2012-09-04 End date 2012-09-04 GO

Summary of all available data for this site

Instantaneous-data availability statement

Discharge, cubic feet per second

TIME	Sep 4
00:00 EDT	2.0[P]
00:05 EDT	2.0[P]
00:10 EDT	2.0[P]
00:15 EDT	2.0[P]

00:20 EDT	2.0[P]
00:25 EDT	2.0[P]
00:30 EDT	2.0[P]
00:35 EDT	2.0[P]
00:40 EDT	1.9[P]
00:45 EDT	1.9[P]
00:50 EDT	1.9[P]
00:55 EDT	1.9[P]
01:00 EDT	1.9[P]
01:05 EDT	1.9[P]
01:10 EDT	1.9[P]
01:15 EDT	1.9[P]
01:20 EDT	1.9[P]
01:25 EDT	1.9[P]
01:30 EDT	1.9[P]
01:35 EDT	1.9[P]
01:40 EDT	1.8[P]
01:45 EDT	1.8[P]
01:50 EDT	1.8[P]
01:55 EDT	1.7[P]
02:00 EDT	1.7[P]
02:05 EDT	1.6[P]
02:10 EDT	1.6[P]
02:15 EDT	1.5[P]
02:20 EDT	1.5[P]
02:25 EDT	1.4[P]
02:30 EDT	1.4[P]
02:35 EDT	1.4[P]
02:40 EDT	1.3[P]
02:45 EDT	1.3[P]
02:50 EDT	1.3[P]
02:55 EDT	1.3[P]

03:00 EDT	1.2[P]
03:05 EDT	1.2[P]
03:10 EDT	1.2[P]
03:15 EDT	1.2[P]
03:20 EDT	1.1[P]
03:25 EDT	1.1[P]
03:30 EDT	1.1[P]
03:35 EDT	1.1[P]
03:40 EDT	1.1[P]
03:45 EDT	1.1[P]
03:50 EDT	1.0[P]
03:55 EDT	1.0[P]
04:00 EDT	1.0[P]
04:05 EDT	1.0[P]
04:10 EDT	0.99[P]
04:15 EDT	0.95[P]
04:20 EDT	0.91[P]
04:25 EDT	0.88[P]
04:30 EDT	0.86[P]
04:35 EDT	0.85[P]
04:40 EDT	0.84[P]
04:45 EDT	0.84[P]
04:50 EDT	0.85[P]
04:55 EDT	0.85[P]
05:00 EDT	0.85[P]
05:05 EDT	0.87[P]
05:10 EDT	0.87[P]
05:15 EDT	0.87[P]
05:20 EDT	0.87[P]
05:25 EDT	0.87[P]
05:30 EDT	0.88[P]
05:35 EDT	0.88[P]

05:40 EDT	0.87[P]
05:45 EDT	0.86[P]
05:50 EDT	0.86[P]
05:55 EDT	0.86[P]
06:00 EDT	0.87[P]
06:05 EDT	0.87[P]
06:10 EDT	0.87[P]
06:15 EDT	0.87[P]
06:20 EDT	0.86[P]
06:25 EDT	0.85[P]
06:30 EDT	0.84[P]
06:35 EDT	0.81[P]
06:40 EDT	0.79[P]
06:45 EDT	0.78[P]
06:50 EDT	0.76[P]
06:55 EDT	0.74[P]
07:00 EDT	0.73[P]
07:05 EDT	0.72[P]
07:10 EDT	0.74[P]
07:15 EDT	0.76[P]
07:20 EDT	0.78[P]
07:25 EDT	0.82[P]
07:30 EDT	0.82[P]
07:35 EDT	0.82[P]
07:40 EDT	0.84[P]
07:45 EDT	0.85[P]
07:50 EDT	0.86[P]
07:55 EDT	0.88[P]
08:00 EDT	0.89[P]
08:05 EDT	0.90[P]
08:10 EDT	0.91[P]
08:15 EDT	0.92[P]

08:20 EDT	0.91[P]
08:25 EDT	0.92[P]
08:30 EDT	0.92[P]
08:35 EDT	0.92[P]
08:40 EDT	0.93[P]
08:45 EDT	0.93[P]
08:50 EDT	0.92[P]
08:55 EDT	0.93[P]
09:00 EDT	0.93[P]
09:05 EDT	0.92[P]
09:10 EDT	0.93[P]
09:15 EDT	0.93[P]
09:20 EDT	0.93[P]
09:25 EDT	0.95[P]
09:30 EDT	0.95[P]
09:35 EDT	0.95[P]
09:40 EDT	0.95[P]
09:45 EDT	0.95[P]
09:50 EDT	0.94[P]
09:55 EDT	0.94[P]
10:00 EDT	0.94[P]
10:05 EDT	0.93[P]
10:10 EDT	0.94[P]
10:15 EDT	0.93[P]
10:20 EDT	0.93[P]
10:25 EDT	0.93[P]
10:30 EDT	0.93[P]
10:35 EDT	0.93[P]
10:40 EDT	0.95[P]
10:45 EDT	0.96[P]
10:50 EDT	0.96[P]
10:55 EDT	0.98[P]

11:00 EDT	0.97[P]
11:05 EDT	0.96[P]
11:10 EDT	0.95[P]
11:15 EDT	0.95[P]
11:20 EDT	0.95[P]
11:25 EDT	0.95[P]
11:30 EDT	0.95[P]
11:35 EDT	0.95[P]
11:40 EDT	0.94[P]
11:45 EDT	0.95[P]
11:50 EDT	0.95[P]
11:55 EDT	0.95[P]
12:00 EDT	0.95[P]
12:05 EDT	0.95[P]
12:10 EDT	0.95[P]
12:15 EDT	0.96[P]
12:20 EDT	0.96[P]
12:25 EDT	0.97[P]
12:30 EDT	0.98[P]
12:35 EDT	0.98[P]
12:40 EDT	0.98[P]
12:45 EDT	0.99[P]
12:50 EDT	0.99[P]
12:55 EDT	0.99[P]
13:00 EDT	1.00[P]
13:05 EDT	1.0[P]
13:10 EDT	1.0[P]
13:15 EDT	1.0[P]
13:20 EDT	1.0[P]
13:25 EDT	1.0[P]
13:30 EDT	1.0[P]
13:35 EDT	1.0[P]

13:40 EDT	1.0[P]
13:45 EDT	1.0[P]
13:50 EDT	1.0[P]
13:55 EDT	1.0[P]
14:00 EDT	1.0[P]
14:05 EDT	1.0[P]
14:10 EDT	1.1[P]
14:15 EDT	1.1[P]
14:20 EDT	1.1[P]
14:25 EDT	1.1[P]
14:30 EDT	1.1[P]
14:35 EDT	1.1[P]
14:40 EDT	1.1[P]
14:45 EDT	1.1[P]
14:50 EDT	1.1[P]
14:55 EDT	1.1[P]
15:00 EDT	1.1[P]
15:05 EDT	1.1[P]
15:10 EDT	1.1[P]
15:15 EDT	1.1[P]
15:20 EDT	1.1[P]
15:25 EDT	1.1[P]
15:30 EDT	1.1[P]
15:35 EDT	1.2[P]
15:40 EDT	1.1[P]
15:45 EDT	1.1[P]
15:50 EDT	1.2[P]
15:55 EDT	1.1[P]
16:00 EDT	1.1[P]
16:05 EDT	1.1[P]
16:10 EDT	1.1[P]
16:15 EDT	1.2[P]

site visit on 9/4/2012
water depth @ inlet
was 5"

16:20 EDT	1.2[P]
16:25 EDT	1.2[P]
16:30 EDT	1.2[P]
16:35 EDT	1.2[P]
16:40 EDT	1.2[P]
16:45 EDT	1.2[P]
16:50 EDT	1.2[P]
16:55 EDT	1.2[P]
17:00 EDT	1.2[P]
17:05 EDT	1.2[P]
17:10 EDT	1.2[P]
17:15 EDT	1.2[P]
17:20 EDT	1.2[P]
17:25 EDT	1.2[P]
17:30 EDT	1.2[P]
17:35 EDT	1.2[P]
17:40 EDT	1.2[P]
17:45 EDT	1.2[P]
17:50 EDT	1.2[P]
17:55 EDT	1.2[P]
18:00 EDT	1.2[P]
18:05 EDT	1.2[P]
18:10 EDT	1.2[P]
18:15 EDT	1.2[P]
18:20 EDT	1.2[P]
18:25 EDT	1.2[P]
18:30 EDT	1.2[P]
18:35 EDT	1.2[P]
18:40 EDT	1.2[P]
18:45 EDT	1.2[P]
18:50 EDT	1.2[P]
18:55 EDT	1.2[P]

19:00 EDT	1.2[P]
19:05 EDT	1.2[P]
19:10 EDT	1.2[P]
19:15 EDT	1.2[P]
19:20 EDT	1.2[P]
19:25 EDT	1.2[P]
19:30 EDT	1.2[P]
19:35 EDT	1.2[P]
19:40 EDT	1.2[P]
19:45 EDT	1.2[P]
19:50 EDT	1.2[P]
19:55 EDT	1.2[P]
20:00 EDT	1.2[P]
20:05 EDT	1.2[P]
20:10 EDT	1.2[P]
20:15 EDT	1.2[P]
20:20 EDT	1.2[P]
20:25 EDT	1.2[P]
20:30 EDT	1.2[P]
20:35 EDT	1.2[P]
20:40 EDT	1.3[P]
20:45 EDT	1.3[P]
20:50 EDT	1.3[P]
20:55 EDT	1.3[P]
21:00 EDT	1.3[P]
21:05 EDT	1.3[P]
21:10 EDT	1.3[P]
21:15 EDT	1.3[P]
21:20 EDT	1.3[P]
21:25 EDT	1.3[P]
21:30 EDT	1.4[P]
21:35 EDT	1.4[P]

21:40 EDT	1.4[P]
21:45 EDT	1.4[P]
21:50 EDT	1.4[P]
21:55 EDT	1.3[P]
22:00 EDT	1.3[P]
22:05 EDT	1.3[P]
22:10 EDT	1.3[P]
22:15 EDT	1.3[P]
22:20 EDT	1.3[P]
22:25 EDT	1.3[P]
22:30 EDT	1.3[P]
22:35 EDT	1.3[P]
22:40 EDT	1.3[P]
22:45 EDT	1.3[P]
22:50 EDT	1.3[P]
22:55 EDT	1.3[P]
23:00 EDT	1.3[P]
23:05 EDT	1.3[P]
23:10 EDT	1.3[P]
23:15 EDT	1.3[P]
23:20 EDT	1.3[P]
23:25 EDT	1.3[P]
23:30 EDT	1.3[P]
23:35 EDT	1.2[P]
23:40 EDT	1.2[P]
23:45 EDT	1.2[P]
23:50 EDT	1.2[P]
23:55 EDT	1.2[P]
COUNT	**288**
MAX	**2.0**
MIN	**0.72**

Explanation

P	Provisional data subject to revision.

Questions about sites/data?
Feedback on this web site
Automated retrievals
Help

Data Tips
Explanation of terms
Subscribe for system changes
News

Accessibility Plug-Ins FOIA Privacy Policies and Notices

U.S. Department of the Interior | U.S. Geological Survey
Title: USGS Current Conditions for Maine
URL: http://waterdata.usgs.gov/me/nwis/uv?

Page Contact Information: Maine Water Data Support Team
Page Last Modified: 2012-10-03 15:15:14 EDT
0.5 0.46 vaww02

01017060 HARDWOOD BROOK NEAR CARIBOU, ME

St. John Basin
Aroostook Subbasin

LOCATION.--Lat 46°47′01″, long 67°59′21″ referenced to North American Datum of 1983, Aroostook County, ME, Hydrologic Unit 01010004, on left bank at upstream side of State Route 1 highway culvert, 1.2 mi upstream of mouth, 5.5 mi south of Caribou.

DRAINAGE AREA.--5.70 mi^2.

SURFACE-WATER RECORDS

PERIOD OF RECORD.--
DISCHARGE: December 2008 to September 2009.

GAGE.--Water-stage recorder and crest-stage gage. Datum of gage is 480 ft above National Geodetic Vertical Datum of 1929.

REMARKS.--Records good, except for periods of no gage-height record, Dec. 16-17, Jan. 5-6, and periods of ice effect, Dec. 5-11, and Dec. 16 to Apr. 2, which are poor. Satellite telemeter at station.

EXTREMES FOR CURRENT YEAR.--Peak discharges greater than base discharge of 120 ft^3/s and (or) maximum (*):

Date	Time	Discharge (ft^3/s)	Gage height (ft)
Apr 4	2055	146	5.09
Apr 8	0220	*168	*5.34

Minimum daily discharge, 0.71 ft^3/s, Sept. 17.

01017060 HARDWOOD BROOK NEAR CARIBOU, ME—Continued

DISCHARGE, CUBIC FEET PER SECOND
WATER YEAR OCTOBER 2008 TO SEPTEMBER 2009
DAILY MEAN VALUES
[e, estimated]

Day	Oct	Nov	Dec	Jan	Feb	Mar	Apr	May	Jun	Jul	Aug	Sep
1	---	---	13	e6.9	e3.5	e5.8	e11	18	25	7.4	7.8	1.1
2	---	---	14	e6.1	e3.4	e4.8	e16	20	10	5.9	5.5	0.89
3	---	---	11	e5.5	e3.4	e4.2	30	15	6.7	5.6	4.9	0.79
4	---	---	9.7	e5.0	e3.3	e3.7	95	12	5.4	7.1	4.2	0.85
5	---	---	e8.5	e4.5	e3.2	e3.5	128	11	5.2	13	4.0	0.84
6	---	---	e7.9	e4.2	e3.2	e3.8	89	9.0	4.9	7.4	3.4	0.80
7	---	---	e7.4	e4.0	e3.1	e6.1	124	11	4.5	6.0	3.4	0.95
8	---	---	e6.8	e5.1	e3.1	e5.8	131	12	4.1	4.9	3.4	0.94
9	---	---	e6.1	e5.6	e3.0	e5.1	70	17	4.7	4.2	3.2	0.92
10	---	---	e7.6	e5.5	e3.0	e4.6	57	60	5.8	3.7	5.4	0.86
11	---	---	e7.7	e5.3	e3.0	e4.6	55	21	3.6	3.3	4.6	0.79
12	---	---	14	e5.2	e3.6	e4.6	49	13	6.7	4.2	3.9	0.74
13	---	---	17	e5.1	e3.9	e4.4	36	10	7.3	3.9	3.9	0.78
14	---	---	13	e5.1	e3.5	e4.2	32	9.1	5.3	3.2	2.6	0.83
15	---	---	11	e5.0	e3.3	e4.0	37	9.0	4.4	2.8	2.6	0.83
16	---	---	e20	e4.6	e3.1	e3.9	38	8.1	5.0	2.6	2.5	0.77
17	---	---	e12	e4.4	e3.0	e3.8	36	16	4.0	3.1	2.5	0.71
18	---	---	e10	e4.4	e3.0	e3.8	37	13	3.5	9.9	2.3	0.87
19	---	---	e8.5	e4.7	e2.9	e4.0	32	9.2	3.3	7.8	2.1	1.1
20	---	---	e8.1	e4.6	e2.9	e4.2	27	7.8	6.3	4.5	1.9	0.93
21	---	---	e7.8	e4.4	e2.8	e4.0	28	7.2	12	3.4	1.7	0.89
22	---	---	e8.4	e4.3	e2.7	e3.9	57	6.6	6.2	8.3	1.9	0.78
23	---	---	e7.5	e4.2	e3.0	e3.8	67	6.1	4.4	7.5	1.7	1.0
24	---	---	e7.3	e4.0	e2.8	e3.8	45	6.1	3.9	5.2	1.3	1.3
25	---	---	e8.3	e3.8	e2.6	e3.8	29	5.5	3.5	7.0	1.1	1.6
26	---	---	e7.6	e3.7	e2.5	e4.0	24	5.2	33	5.3	1.3	1.2
27	---	---	e7.2	e3.6	e3.1	e4.4	19	5.0	11	5.4	1.2	1.1
28	---	---	e12	e3.6	e6.2	e5.6	18	5.0	7.7	4.7	1.2	1.5
29	---	---	e12	e3.9	---	e9.4	17	8.7	10	3.7	1.0	2.0
30	---	---	e9.3	e3.8	---	e18	14	11	8.7	23	1.7	1.9
31	---	---	e7.9	e3.6	---	e15	---	13	---	12	1.4	---
Total	---	---	308.6	143.7	90.1	164.6	1,448	380.6	226.1	196.0	89.6	30.56
Mean	---	---	9.95	4.64	3.22	5.31	48.3	12.3	7.54	6.32	2.89	1.02
Max	---	---	20	6.9	6.2	18	131	60	33	23	7.8	2.0
Min	---	---	6.1	3.6	2.5	3.5	11	5.0	3.3	2.6	1.0	0.71
Cfsm	---	---	1.75	0.81	0.56	0.93	8.47	2.15	1.32	1.11	0.51	0.18
In.	---	---	2.01	0.94	0.59	1.07	9.45	2.48	1.48	1.28	0.58	0.20

STATISTICS OF MONTHLY MEAN DATA FOR WATER YEARS 2008 - 2009, BY WATER YEAR (WY)

	Oct	Nov	Dec	Jan	Feb	Mar	Apr	May	Jun	Jul	Aug	Sep
Mean	---	---	9.95	4.64	3.22	5.31	48.3	12.3	7.54	6.32	2.89	1.02
Max	---	---	9.95	4.64	3.22	5.31	48.3	12.3	7.54	6.32	2.89	1.02
(WY)	(---)	(---)	(2009)	(2009)	(2009)	(2009)	(2009)	(2009)	(2009)	(2009)	(2009)	(2009)
Min	---	---	9.95	4.64	3.22	5.31	48.3	12.3	7.54	6.32	2.89	1.02
(WY)	(---)	(---)	(2009)	(2009)	(2009)	(2009)	(2009)	(2009)	(2009)	(2009)	(2009)	(2009)

01017060 HARDWOOD BROOK NEAR CARIBOU, ME—Continued

SUMMARY STATISTICS

	Water Years 2008 - 2009	
Highest daily mean	131	Apr 8, 2009
Lowest daily mean	0.71	Sep 17, 2009
Annual seven-day minimum	0.78	Sep 11, 2009
Maximum peak flow	168	Apr 8, 2009
Maximum peak stage	5.34	Apr 8, 2009

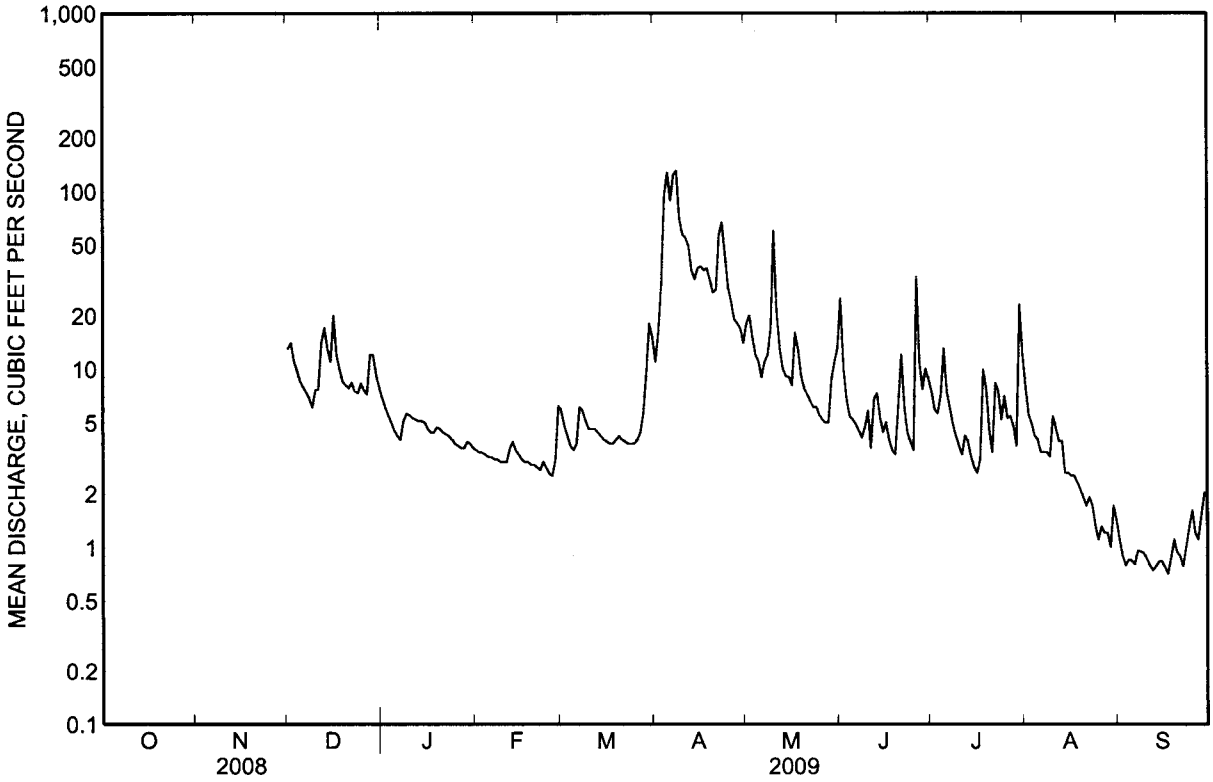

Water-Data Report 2010

01017060 HARDWOOD BROOK NEAR CARIBOU, ME

St. John Basin
Aroostook Subbasin

LOCATION.--Lat 46°47′01″, long 67°59′21″ referenced to North American Datum of 1983, Aroostook County, ME, Hydrologic Unit 01010004, on left bank at upstream side of State Route 1 highway culvert, 1.2 mi upstream of mouth, 5.5 mi south of Caribou.

DRAINAGE AREA.--5.70 mi^2.

SURFACE-WATER RECORDS

PERIOD OF RECORD.--
DISCHARGE: December 2008 to current year.

GAGE.--Water-stage recorder and crest-stage gage. Datum of gage is 480 ft above National Geodetic Vertical Datum of 1929.

REMARKS.--Records good, except for periods of ice effect, Dec. 23-25, 29-30, Jan. 9-10, 12-26, and Jan. 28 to Feb. 6, which are fair. Satellite telemeter at station.

EXTREMES FOR PERIOD OF RECORD.--Maximum discharge, 168 ft^3/s, Apr. 8, 2009, gage height 5.34 ft; minimum daily discharge, 0.71 ft^3/s, Sept. 17, 2009.

EXTREMES FOR CURRENT YEAR.--Peak discharges greater than base discharge of 120 ft^3/s and (or) maximum (*):

Date	Time	Discharge (ft^3/s)	Gage height (ft)
Mar 31	1515	*113[a]	*4.65

Minimum daily discharge, 0.97 ft^3/s, Aug. 24.

[a] No peaks greater than base discharge.

01017060 HARDWOOD BROOK NEAR CARIBOU, ME—Continued

DISCHARGE, CUBIC FEET PER SECOND
WATER YEAR OCTOBER 2009 TO SEPTEMBER 2010
DAILY MEAN VALUES
[e, estimated]

Day	Oct	Nov	Dec	Jan	Feb	Mar	Apr	May	Jun	Jul	Aug	Sep
1	1.8	5.1	11	5.2	e4.5	6.4	57	6.2	2.5	4.3	2.2	1.3
2	1.6	4.6	9.1	5.2	e4.2	5.9	45	5.7	2.8	3.5	2.0	1.6
3	1.2	4.5	39	5.8	e4.7	5.8	42	6.5	11	3.2	4.9	4.2
4	7.2	4.4	37	5.6	e4.5	5.4	36	7.1	8.8	2.8	4.0	6.3
5	5.9	4.4	19	5.6	e4.3	4.8	27	5.9	5.8	2.8	3.4	5.7
6	3.3	3.9	14	5.2	e4.2	4.7	21	8.3	15	2.6	2.8	3.6
7	3.6	4.0	12	4.9	4.6	5.1	20	12	18	2.2	2.0	3.3
8	6.6	3.8	9.7	4.6	4.3	5.9	18	8.1	7.9	2.3	1.9	6.1
9	4.5	3.6	8.7	e4.4	4.0	5.9	18	8.4	5.2	2.2	2.4	7.4
10	7.4	3.6	10	e4.1	3.9	5.3	71	7.5	3.7	2.8	2.1	5.3
11	4.4	3.1	9.5	3.9	3.7	5.0	32	6.0	3.2	2.7	2.0	3.7
12	3.5	3.1	8.6	e3.9	3.6	4.8	20	4.8	3.0	2.8	1.8	3.0
13	5.4	3.2	8.0	e3.3	3.5	4.9	15	5.2	2.9	11	1.6	2.8
14	3.1	3.4	8.4	e3.0	3.5	5.8	14	6.2	2.9	26	1.5	2.7
15	2.5	31	8.4	e3.0	3.4	8.2	13	3.6	2.7	9.5	1.4	2.7
16	2.0	16	8.3	e3.0	3.3	11	12	2.5	2.9	5.2	1.4	2.6
17	2.0	9.2	7.7	e2.6	3.2	14	12	3.7	2.6	4.2	1.4	2.9
18	1.7	6.7	7.2	e2.6	3.6	17	11	3.0	2.5	3.8	1.3	2.7
19	1.7	6.1	6.3	e2.6	4.2	16	12	2.4	2.4	4.1	1.3	2.5
20	1.5	11	5.7	e2.6	3.9	14	11	4.8	5.7	5.2	1.2	2.5
21	1.5	17	6.1	e2.6	3.9	14	11	4.1	7.5	4.2	1.0	2.4
22	1.7	10	6.1	e2.5	4.3	14	11	3.9	4.5	4.1	1.0	2.3
23	2.1	7.6	e6.5	e2.5	5.0	16	9.1	3.6	3.8	3.9	1.1	2.3
24	6.0	6.9	e6.3	e2.7	5.5	21	10	3.1	7.5	3.3	0.97	2.7
25	34	6.7	e5.8	e3.2	5.0	20	11	3.0	6.9	4.5	2.1	5.1
26	17	6.7	5.7	e15	4.8	18	9.3	3.7	4.5	4.3	7.5	4.2
27	8.5	9.1	6.3	11	5.0	13	9.2	2.0	3.4	3.6	4.4	3.3
28	5.2	37	9.3	e7.3	5.8	10	11	2.0	4.1	2.8	2.3	5.1
29	5.0	19	e7.4	e5.8	---	21	8.5	2.0	4.6	2.8	1.9	6.7
30	4.6	13	e6.0	e5.2	---	71	7.5	2.3	5.6	2.5	1.7	7.6
31	4.8	---	5.3	e4.8	---	86	---	3.2	---	2.3	1.5	---
Total	161.3	267.7	318.4	143.7	118.4	459.9	604.6	150.8	163.9	141.5	68.07	114.6
Mean	5.20	8.92	10.3	4.64	4.23	14.8	20.2	4.86	5.46	4.56	2.20	3.82
Max	34	37	39	15	5.8	86	71	12	18	26	7.5	7.6
Min	1.2	3.1	5.3	2.5	3.2	4.7	7.5	2.0	2.4	2.2	0.97	1.3
Cfsm	0.91	1.57	1.80	0.81	0.74	2.60	3.54	0.85	0.96	0.80	0.39	0.67
In.	1.05	1.75	2.08	0.94	0.77	3.00	3.95	0.98	1.07	0.92	0.44	0.75

STATISTICS OF MONTHLY MEAN DATA FOR WATER YEARS 2008 - 2010, BY WATER YEAR (WY)

	Oct	Nov	Dec	Jan	Feb	Mar	Apr	May	Jun	Jul	Aug	Sep
Mean	5.20	8.92	10.1	4.64	3.72	10.1	34.2	8.57	6.50	5.44	2.54	2.42
Max	5.20	8.92	10.3	4.64	4.23	14.8	48.3	12.3	7.54	6.32	2.89	3.82
(WY)	(2010)	(2010)	(2010)	(2010)	(2010)	(2010)	(2009)	(2009)	(2009)	(2009)	(2009)	(2010)
Min	5.20	8.92	9.95	4.64	3.22	5.31	20.2	4.86	5.46	4.56	2.20	1.02
(WY)	(2010)	(2010)	(2009)	(2009)	(2009)	(2009)	(2010)	(2010)	(2010)	(2010)	(2010)	(2009)

01017060 HARDWOOD BROOK NEAR CARIBOU, ME—Continued

SUMMARY STATISTICS

	Calendar Year 2009		Water Year 2010		Water Years 2008 - 2010	
Annual total	3,516.66		2,712.87			
Annual mean	9.63		7.43		7.43	
Highest annual mean					7.43	2010
Lowest annual mean					7.43	2010
Highest daily mean	131	Apr 8	86	Mar 31	131	Apr 8, 2009
Lowest daily mean	0.71	Sep 17	0.97	Aug 24	0.71	Sep 17, 2009
Annual seven-day minimum	0.78	Sep 11	1.1	Aug 18	0.78	Sep 11, 2009
Maximum peak flow			113	Mar 31	168	Apr 8, 2009
Maximum peak stage			4.65	Mar 31	5.34	Apr 8, 2009
Annual runoff (cfsm)	1.69		1.30		1.30	
Annual runoff (inches)	22.95		17.71		17.72	
10 percent exceeds	19		14		14	
50 percent exceeds	4.8		4.7		4.7	
90 percent exceeds	1.5		2.1		2.1	

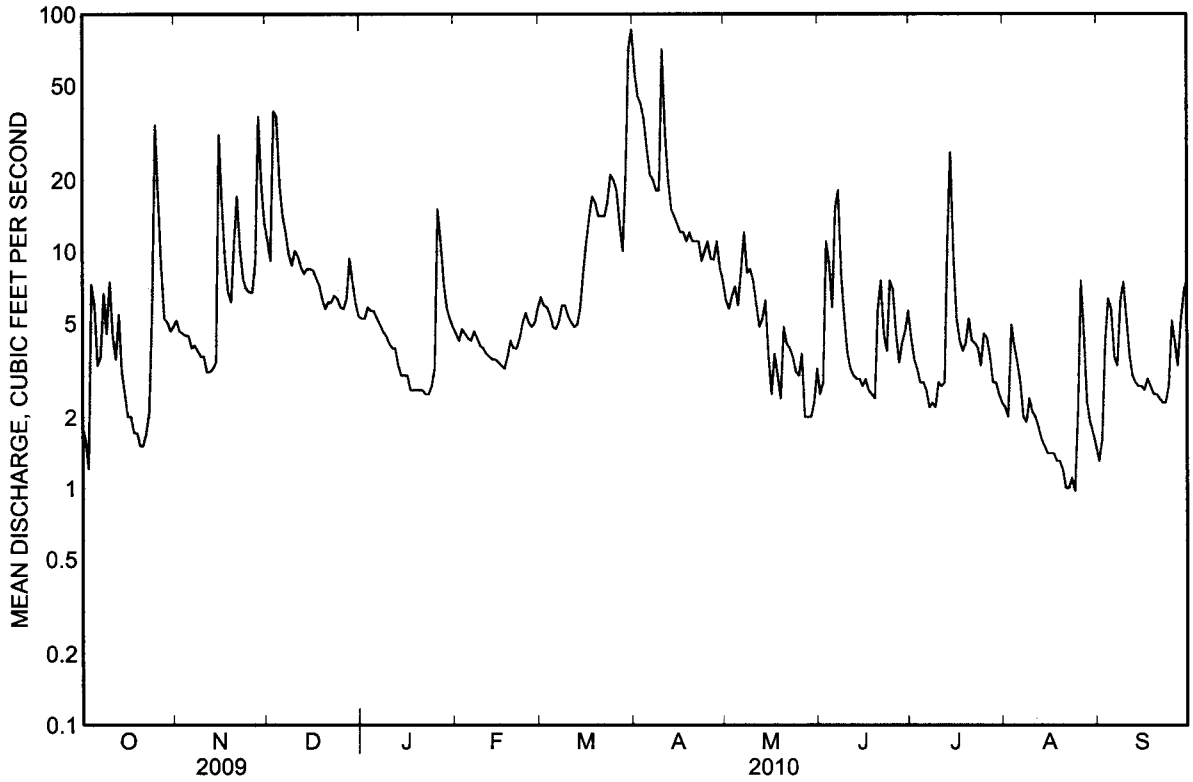

Water-Data Report 2011

01017060 HARDWOOD BROOK BELOW GLIDDEN BRK NR CARIBOU, ME

St. John Basin
Aroostook Subbasin

LOCATION.--Lat 46°47′01″, long 67°59′21″ referenced to North American Datum of 1983, Aroostook County, ME, Hydrologic Unit 01010004, on left bank at upstream side of State Route 1 highway culvert, 1.2 mi upstream of mouth, 5.5 mi south of Caribou.

DRAINAGE AREA.--5.70 mi^2.

SURFACE-WATER RECORDS

PERIOD OF RECORD.--
DISCHARGE: December 2008 to current year. Prior to October 2010, published as "near Caribou."

GAGE.--Water-stage recorder and crest-stage gage. Datum of gage is 480 ft above National Geodetic Vertical Datum of 1929.

REMARKS.--Records good, except for periods of ice effect, Nov. 22, Nov. 26 to Dec. 1, Dec. 9-12, and Dec. 16 to Apr. 9, which are poor. Satellite telemeter at station.

EXTREMES FOR PERIOD OF RECORD.--Maximum discharge, 506 ft^3/s, Dec. 14, 2010, gage height 9.32 ft, from rating curve extended above 104 ft^3/s; minimum daily discharge, 0.71 ft^3/s, Sept. 17, 2009.

REVISIONS.--The maximum discharge (*) and peak discharges greater than base discharge of 120 ft^3/s for water year 2009 have been revised as shown in the following table. The values supercede those published in the 2009 report.

Date	Discharge (ft^3/s)	Gage height (ft)
Apr 4, 2009	132	5.09
Apr 8, 2009	*149	*5.34

EXTREMES FOR CURRENT YEAR.--Peak discharges greater than base discharge of 120 ft^3/s and (or) maximum (*):

Date	Time	Discharge (ft^3/s)	Gage height (ft)
Dec 14	0045	*506[a]	*9.32
Apr 12	1815	141	5.22
Jul 4	1735	384[a]	8.14
Jul 30	0650	165	5.55
Aug 1	2115	168	5.60
Aug 21	2050	331[a]	7.59

Minimum daily discharge, 2.0 ft^3/s (estimated), Mar. 2, 4.

[a] From rating curve extended above 104 ft^3/s.

Suggested citation: U.S. Geological Survey, 2012, Water-resources data for the United States, Water Year 2011: U.S. Geological Survey Water-Data Report WDR-US-2011, site 01017060, accessed at http://wdr.water.usgs.gov/wy2011/pdfs/01017060.2011.pdf

01017060 HARDWOOD BROOK BELOW GLIDDEN BRK NR CARIBOU, ME—Continued

DISCHARGE, CUBIC FEET PER SECOND
WATER YEAR OCTOBER 2010 TO SEPTEMBER 2011
DAILY MEAN VALUES
[e, estimated]

Day	Oct	Nov	Dec	Jan	Feb	Mar	Apr	May	Jun	Jul	Aug	Sep
1	21	7.6	e6.3	e7.0	e2.5	e2.1	e11	18	8.1	18	29	13
2	29	7.0	17	e8.9	e2.5	e2.0	e10	15	8.0	12	50	12
3	12	6.5	29	e8.7	e2.5	e2.1	e8.9	15	7.3	10	21	13
4	8.1	6.8	43	e7.3	e2.5	e2.0	e8.7	36	6.4	88	13	13
5	6.8	30	27	e6.3	e2.4	e2.1	e11	56	5.9	52	9.8	21
6	6.7	20	30	e5.5	e2.7	e11	e19	44	5.8	17	8.8	39
7	14	13	28	e5.1	e2.7	e16	e17	25	5.0	13	9.1	20
8	12	36	18	e5.4	e2.6	e18	e14	19	6.3	11	13	15
9	8.7	35	e14	e5.4	e2.5	e17	e16	15	45	9.7	12	13
10	8.6	20	e11	e5.2	e2.4	e12	31	15	36	8.7	11	11
11	7.1	14	e11	e5.1	e2.4	e8.7	57	14	12	9.1	18	10
12	6.6	13	e10	e4.9	e2.4	e24	98	12	8.9	15	20	10
13	6.5	12	90	e4.8	e2.6	e33	68	11	33	17	13	10
14	5.9	11	165	e4.6	e2.5	e32	71	15	24	10	13	15
15	7.0	11	39	e4.2	e2.5	e27	46	20	13	7.9	11	14
16	11	11	e23	e4.0	e2.4	e18	28	16	10	7.1	28	16
17	9.1	12	e16	e3.6	e2.3	e14	28	12	11	6.6	18	12
18	7.0	15	e14	e3.5	e3.5	e19	33	16	30	6.8	11	9.6
19	6.2	12	e13	e3.9	e3.4	e25	29	14	29	6.0	9.6	8.7
20	5.9	9.7	e12	e3.9	e3.0	e20	27	11	16	5.5	12	8.5
21	6.4	8.8	e12	e3.6	e2.7	e16	23	10	12	10	51	8.1
22	9.1	e8.1	e12	e3.5	e2.5	e13	25	8.6	10	13	134	8.1
23	7.9	10	e11	e3.3	e2.4	e11	26	8.4	9.1	17	40	7.8
24	6.4	13	e9.6	e3.1	e2.3	e9.9	33	8.5	8.7	12	19	7.2
25	6.6	10	e8.5	e3.0	e2.2	e9.2	32	7.5	12	7.9	15	6.8
26	8.8	e9.0	e7.7	e2.9	e2.2	e8.6	29	7.2	16	6.9	15	6.6
27	14	e8.1	e7.8	e2.9	e2.1	e8.2	31	7.9	19	7.1	13	6.3
28	16	e7.4	e7.5	e2.8	e2.1	e7.9	28	19	11	6.3	28	5.7
29	12	e6.9	e6.9	e2.8	---	e7.9	32	21	30	5.9	44	5.7
30	11	e6.5	e6.5	e2.7	---	e8.3	25	18	40	53	20	6.1
31	8.9	---	e6.3	e2.6	---	e9.3	---	10	---	18	15	---
Total	306.3	390.4	712.1	140.5	70.8	414.3	915.6	525.1	488.5	487.5	724.3	352.2
Mean	9.88	13.0	23.0	4.53	2.53	13.4	30.5	16.9	16.3	15.7	23.4	11.7
Max	29	36	165	8.9	3.5	33	98	56	45	88	134	39
Min	5.9	6.5	6.3	2.6	2.1	2.0	8.7	7.2	5.0	5.5	8.8	5.7
Cfsm	1.73	2.28	4.03	0.80	0.44	2.34	5.35	2.97	2.86	2.76	4.10	2.06
In.	2.00	2.55	4.65	0.92	0.46	2.70	5.98	3.43	3.19	3.18	4.73	2.30

STATISTICS OF MONTHLY MEAN DATA FOR WATER YEARS 2008 - 2011, BY WATER YEAR (WY)

	Oct	Nov	Dec	Jan	Feb	Mar	Apr	May	Jun	Jul	Aug	Sep
Mean	7.54	11.0	14.4	4.60	3.33	11.2	33.0	11.4	9.76	8.87	9.48	5.53
Max	9.88	13.0	23.0	4.64	4.23	14.8	48.3	16.9	16.3	15.7	23.4	11.7
(WY)	(2011)	(2011)	(2011)	(2010)	(2010)	(2010)	(2009)	(2011)	(2011)	(2011)	(2011)	(2011)
Min	5.20	8.92	9.95	4.53	2.53	5.31	20.2	4.86	5.46	4.56	2.20	1.02
(WY)	(2010)	(2010)	(2009)	(2011)	(2011)	(2009)	(2010)	(2010)	(2010)	(2010)	(2010)	(2009)

01017060 HARDWOOD BROOK BELOW GLIDDEN BRK NR CARIBOU, ME—Continued

SUMMARY STATISTICS

	Calendar Year 2010		Water Year 2011		Water Years 2008 - 2011	
Annual total	3,374.27		5,527.6			
Annual mean	9.24		15.1		11.3	
Highest annual mean					15.1	2011
Lowest annual mean					7.43	2010
Highest daily mean	165	Dec 14	165	Dec 14	165	Dec 14, 2010
Lowest daily mean	0.97	Aug 24	2.0	Mar 2	0.71	Sep 17, 2009
Annual seven-day minimum	1.1	Aug 18	2.1	Feb 27	0.78	Sep 11, 2009
Maximum peak flow			506	Dec 14	506	Dec 14, 2010
Maximum peak stage			9.32	Dec 14	9.32	Dec 14, 2010
Annual runoff (cfsm)	1.62		2.66		1.98	
Annual runoff (inches)	22.02		36.07		26.91	
10 percent exceeds	18		30		25	
50 percent exceeds	5.7		11		7.2	
90 percent exceeds	2.4		3.0		2.5	

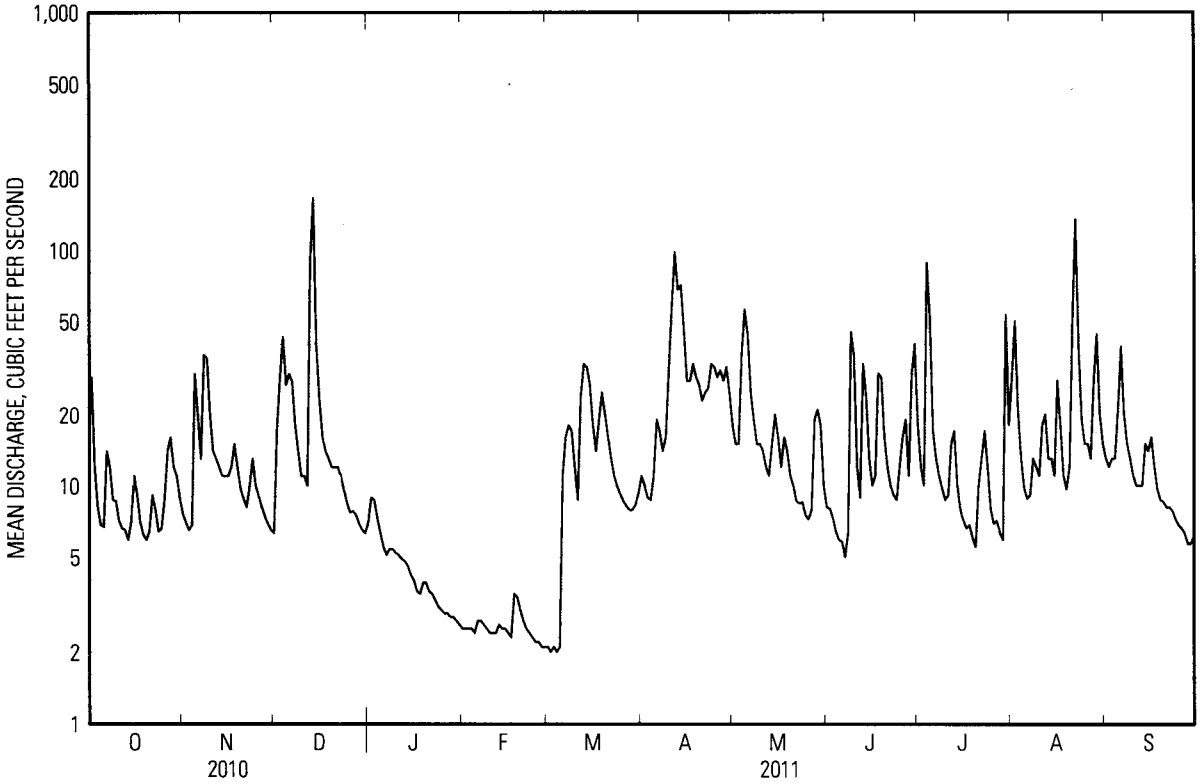

Elevation vs. flow at gaging station

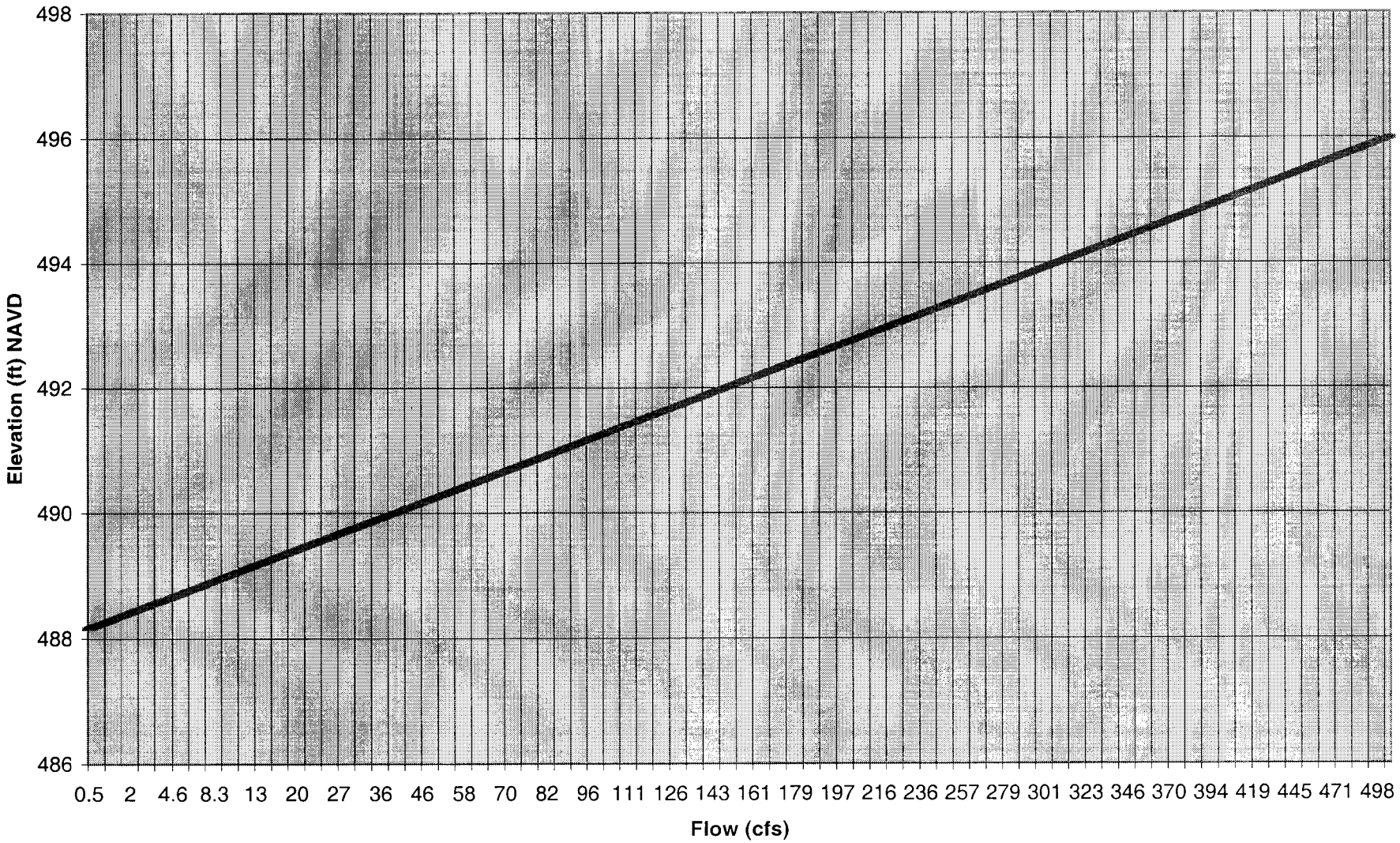

Stage vs Discharge
Gage 01017060

Gage datum elevation 486.66 ft

Flow cfs	Stage ft	Elevation NAVD ft
0.5	1.5	488.16
0.54	1.51	488.17
0.58	1.52	488.18
0.62	1.53	488.19
0.67	1.54	488.2
0.71	1.55	488.21
0.76	1.56	488.22
0.81	1.57	488.23
0.86	1.58	488.24
0.92	1.59	488.25
0.97	1.6	488.26
1	1.61	488.27
1.1	1.62	488.28
1.1	1.63	488.29
1.2	1.64	488.3
1.3	1.65	488.31
1.3	1.66	488.32
1.4	1.67	488.33
1.5	1.68	488.34
1.5	1.69	488.35
1.6	1.7	488.36
1.7	1.71	488.37
11.8	1.72	488.38
1.8	1.73	488.39
1.9	1.74	488.4
2	1.75	488.41
2.1	1.76	488.42
2.2	1.77	488.43
2.3	1.78	488.44
2.3	1.79	488.45
2.4	1.8	488.46
2.5	1.81	488.47
2.6	1.82	488.48
2.7	1.83	488.49

Flow cfs	Elevation NAVD ft
0.5	488.16
0.54	488.17
0.58	488.18
0.62	488.19
0.67	488.2
0.71	488.21
0.76	488.22
0.81	488.23
0.86	488.24
0.92	488.25
0.97	488.26
1	488.27
1.1	488.28
1.1	488.29
1.2	488.3
1.3	488.31
1.3	488.32
1.4	488.33
1.5	488.34
1.5	488.35
1.6	488.36
1.7	488.37
11.8	488.38
1.8	488.39
1.9	488.4
2	488.41
2.1	488.42
2.2	488.43
2.3	488.44
2.3	488.45
2.4	488.46
2.5	488.47
2.6	488.48
2.7	488.49

Flow cfs	Water Depth at Culvert Inlet ft
0.5	0.4
0.54	0.41
0.58	0.42
0.62	0.43
0.67	0.44
0.71	0.45
0.76	0.46
0.81	0.47
0.86	0.48
0.92	0.49
0.97	0.5
1	0.51
1.1	0.52
1.1	0.53
1.2	0.54
1.3	0.55
1.3	0.56
1.4	0.57
1.5	0.58
1.5	0.59
1.6	0.6
1.7	0.61
11.8	0.62
1.8	0.63
1.9	0.64
2	0.65
2.1	0.66
2.2	0.67
2.3	0.68
2.3	0.69
2.4	0.7
2.5	0.71
2.6	0.72
2.7	0.73

2.8	1.84	488.5
2.9	1.85	488.51
3	1.86	488.52
3.1	1.87	488.53
3.2	1.88	488.54
3.3	1.89	488.55
3.4	1.9	488.56
3.5	1.91	488.57
3.6	1.92	488.58
3.8	1.93	488.59
3.9	1.94	488.6
4	1.95	488.61
4.1	1.96	488.62
4.2	1.97	488.63
4.4	1.98	488.64
4.5	1.99	488.65
4.6	2	488.66
4.7	2.01	488.67
4.9	2.02	488.68
5	2.03	488.69
5.1	2.04	488.7
5.3	2.05	488.71
5.4	2.06	488.72
5.5	2.07	488.73
5.7	2.08	488.74
5.8	2.09	488.75
6	2.1	488.76
6.1	2.11	488.77
6.2	2.12	488.78
6.4	2.13	488.79
6.5	2.14	488.8
6.7	2.15	488.81
6.8	2.16	488.82
7	2.17	488.83
7.1	2.18	488.84
7.3	2.19	488.85
7.5	2.2	488.86
7.6	2.21	488.87
7.8	2.22	488.88
8	2.23	488.89
8.1	2.24	488.9
8.3	2.25	488.91
8.5	2.26	488.92
8.6	2.27	488.93

2.8	488.5
2.9	488.51
3	488.52
3.1	488.53
3.2	488.54
3.3	488.55
3.4	488.56
3.5	488.57
3.6	488.58
3.8	488.59
3.9	488.6
4	488.61
4.1	488.62
4.2	488.63
4.4	488.64
4.5	488.65
4.6	488.66
4.7	488.67
4.9	488.68
5	488.69
5.1	488.7
5.3	488.71
5.4	488.72
5.5	488.73
5.7	488.74
5.8	488.75
6	488.76
6.1	488.77
6.2	488.78
6.4	488.79
6.5	488.8
6.7	488.81
6.8	488.82
7	488.83
7.1	488.84
7.3	488.85
7.5	488.86
7.6	488.87
7.8	488.88
8	488.89
8.1	488.9
8.3	488.91
8.5	488.92
8.6	488.93

2.8	0.74
2.9	0.75
3	0.76
3.1	0.77
3.2	0.78
3.3	0.79
3.4	0.8
3.5	0.81
3.6	0.82
3.8	0.83
3.9	0.84
4	0.85
4.1	0.86
4.2	0.87
4.4	0.88
4.5	0.89
4.6	0.9
4.7	0.91
4.9	0.92
5	0.93
5.1	0.94
5.3	0.95
5.4	0.96
5.5	0.97
5.7	0.98
5.8	0.99
6	1
6.1	1.01
6.2	1.02
6.4	1.03
6.5	1.04
6.7	1.05
6.8	1.06
7	1.07
7.1	1.08
7.3	1.09
7.5	1.1
7.6	1.11
7.8	1.12
8	1.13
8.1	1.14
8.3	1.15
8.5	1.16
8.6	1.17

8.8	2.28	488.94
9	2.29	488.95
9.2	2.3	488.96
9.4	2.31	488.97
9.6	2.32	488.98
9.7	2.33	488.99
9.9	2.34	489
10	2.35	489.01
10	2.36	489.02
11	2.37	489.03
11	2.38	489.04
11	2.39	489.05
11	2.4	489.06
11	2.41	489.07
12	2.42	489.08
12	2.43	489.09
12	2.44	489.1
12	2.45	489.11
12	2.46	489.12
13	2.47	489.13
13	2.48	489.14
13	2.49	489.15
13	2.5	489.16
13	2.51	489.17
14	2.52	489.18
14	2.53	489.19
14	2.54	489.2
14	2.55	489.21
15	2.56	489.22
15	2.57	489.23
15	2.58	489.24
15	2.59	489.25
16	2.6	489.26
16	2.61	489.27
16	2.62	489.28
16	2.63	489.29
17	2.64	489.3
17	2.65	489.31
17	2.66	489.32
17	2.67	489.33
18	2.68	489.34
18	2.69	489.35
18	2.7	489.36
18	2.71	489.37

8.8	488.94
9	488.95
9.2	488.96
9.4	488.97
9.6	488.98
9.7	488.99
9.9	489
10	489.01
10	489.02
11	489.03
11	489.04
11	489.05
11	489.06
11	489.07
12	489.08
12	489.09
12	489.1
12	489.11
12	489.12
13	489.13
13	489.14
13	489.15
13	489.16
13	489.17
14	489.18
14	489.19
14	489.2
14	489.21
15	489.22
15	489.23
15	489.24
15	489.25
16	489.26
16	489.27
16	489.28
16	489.29
17	489.3
17	489.31
17	489.32
17	489.33
18	489.34
18	489.35
18	489.36
18	489.37

8.8	1.18
9	1.19
9.2	1.2
9.4	1.21
9.6	1.22
9.7	1.23
9.9	1.24
10	1.25
10	1.26
11	1.27
11	1.28
11	1.29
11	1.3
11	1.31
12	1.32
12	1.33
12	1.34
12	1.35
12	1.36
13	1.37
13	1.38
13	1.39
13	1.4
13	1.41
14	1.42
14	1.43
14	1.44
14	1.45
15	1.46
15	1.47
15	1.48
15	1.49
16	1.5
16	1.51
16	1.52
16	1.53
17	1.54
17	1.55
17	1.56
17	1.57
18	1.58
18	1.59
18	1.6
18	1.61

19	2.72	489.38
19	2.73	489.39
19	2.74	489.4
20	2.75	489.41
20	2.76	489.42
20	2.77	489.43
20	2.78	489.44
21	2.79	489.45
21	2.8	489.46
21	2.81	489.47
22	2.82	489.48
22	2.83	489.49
22	2.84	489.5
22	2.85	489.51
23	2.86	489.52
23	2.87	489.53
23	2.88	489.54
24	2.89	489.55
24	2.9	489.56
24	2.91	489.57
25	2.92	489.58
25	2.93	489.59
25	2.94	489.6
26	2.95	489.61
26	2.96	489.62
26	2.97	489.63
26	2.98	489.64
27	2.99	489.65
27	3	489.66
27	3.01	489.67
28	3.02	489.68
28	3.03	489.69
28	3.04	489.7
29	3.05	489.71
29	3.06	489.72
30	3.07	489.73
30	3.08	489.74
30	3.09	489.75
21	3.1	489.76
31	3.11	489.77
31	3.12	489.78
32	3.13	489.79
32	3.14	489.8
32	3.15	489.81

19	489.38
19	489.39
19	489.4
20	489.41
20	489.42
20	489.43
20	489.44
21	489.45
21	489.46
21	489.47
22	489.48
22	489.49
22	489.5
22	489.51
23	489.52
23	489.53
23	489.54
24	489.55
24	489.56
24	489.57
25	489.58
25	489.59
25	489.6
26	489.61
26	489.62
26	489.63
26	489.64
27	489.65
27	489.66
27	489.67
28	489.68
28	489.69
28	489.7
29	489.71
29	489.72
30	489.73
30	489.74
30	489.75
21	489.76
31	489.77
31	489.78
32	489.79
32	489.8
32	489.81

19	1.62
19	1.63
19	1.64
20	1.65
20	1.66
20	1.67
20	1.68
21	1.69
21	1.7
21	1.71
22	1.72
22	1.73
22	1.74
22	1.75
23	1.76
23	1.77
23	1.78
24	1.79
24	1.8
24	1.81
25	1.82
25	1.83
25	1.84
26	1.85
26	1.86
26	1.87
26	1.88
27	1.89
27	1.9
27	1.91
28	1.92
28	1.93
28	1.94
29	1.95
29	1.96
30	1.97
30	1.98
30	1.99
21	2
31	2.01
31	2.02
32	2.03
32	2.04
32	2.05

33	3.16	489.82
33	3.17	489.83
33	3.18	489.84
34	3.19	489.85
34	3.2	489.86
35	3.21	489.87
35	3.22	489.88
35	3.23	489.89
36	3.24	489.9
36	3.25	489.91
36	3.26	489.92
37	3.27	489.93
37	3.28	489.94
38	3.29	489.95
38	3.3	489.96
38	3.31	489.97
39	3.32	489.98
39	3.33	489.99
40	3.34	490
40	3.35	490.01
40	3.36	490.02
41	3.37	490.03
41	3.38	490.04
42	3.39	490.05
42	3.4	490.06
43	3.41	490.07
43	3.42	490.08
43	3.43	490.09
44	3.44	490.1
44	3.45	490.11
45	3.46	490.12
45	3.47	490.13
46	3.48	490.14
46	3.49	490.15
46	3.5	490.16
47	3.51	490.17
47	3.52	490.18
48	3.53	490.19
48	3.54	490.2
49	3.55	490.21
49	3.56	490.22
50	3.57	490.23
50	3.58	490.24
51	3.59	490.25

33	489.82
33	489.83
33	489.84
34	489.85
34	489.86
35	489.87
35	489.88
35	489.89
36	489.9
36	489.91
36	489.92
37	489.93
37	489.94
38	489.95
38	489.96
38	489.97
39	489.98
39	489.99
40	490
40	490.01
40	490.02
41	490.03
41	490.04
42	490.05
42	490.06
43	490.07
43	490.08
43	490.09
44	490.1
44	490.11
45	490.12
45	490.13
46	490.14
46	490.15
46	490.16
47	490.17
47	490.18
48	490.19
48	490.2
49	490.21
49	490.22
50	490.23
50	490.24
51	490.25

33	2.06
33	2.07
33	2.08
34	2.09
34	2.1
35	2.11
35	2.12
35	2.13
36	2.14
36	2.15
36	2.16
37	2.17
37	2.18
38	2.19
38	2.2
38	2.21
39	2.22
39	2.23
40	2.24
40	2.25
40	2.26
41	2.27
41	2.28
42	2.29
42	2.3
43	2.31
43	2.32
43	2.33
44	2.34
44	2.35
45	2.36
45	2.37
46	2.38
46	2.39
46	2.4
47	2.41
47	2.42
48	2.43
48	2.44
49	2.45
49	2.46
50	2.47
50	2.48
51	2.49

51	3.6	490.26
51	3.61	490.27
52	3.62	490.28
52	3.63	490.29
53	3.64	490.3
53	3.65	490.31
54	3.66	490.32
54	3.67	490.33
55	3.68	490.34
55	3.69	490.35
56	3.7	490.36
56	3.71	490.37
57	3.72	490.38
57	3.73	490.39
58	3.74	490.4
58	3.75	490.41
59	3.76	490.42
59	3.77	490.43
59	3.78	490.44
60	3.79	490.45
60	3.8	490.46
61	3.81	490.47
61	3.82	490.48
62	3.83	490.49
62	3.84	490.5
63	3.85	490.51
63	3.86	490.52
64	3.87	490.53
64	3.88	490.54
64	3.89	490.55
65	3.9	490.56
65	3.91	490.57
66	3.92	490.58
66	3.93	490.59
67	3.94	490.6
67	3.95	490.61
68	3.96	490.62
68	3.97	490.63
69	3.98	490.64
69	3.99	490.65
70	4	490.66
70	4.01	490.67
71	4.02	490.68
71	4.03	490.69

51	490.26
51	490.27
52	490.28
52	490.29
53	490.3
53	490.31
54	490.32
54	490.33
55	490.34
55	490.35
56	490.36
56	490.37
57	490.38
57	490.39
58	490.4
58	490.41
59	490.42
59	490.43
59	490.44
60	490.45
60	490.46
61	490.47
61	490.48
62	490.49
62	490.5
63	490.51
63	490.52
64	490.53
64	490.54
64	490.55
65	490.56
65	490.57
66	490.58
66	490.59
67	490.6
67	490.61
68	490.62
68	490.63
69	490.64
69	490.65
70	490.66
70	490.67
71	490.68
71	490.69

51	2.5
51	2.51
52	2.52
52	2.53
53	2.54
53	2.55
54	2.56
54	2.57
55	2.58
55	2.59
56	2.6
56	2.61
57	2.62
57	2.63
58	2.64
58	2.65
59	2.66
59	2.67
59	2.68
60	2.69
60	2.7
61	2.71
61	2.72
62	2.73
62	2.74
63	2.75
63	2.76
64	2.77
64	2.78
64	2.79
65	2.8
65	2.81
66	2.82
66	2.83
67	2.84
67	2.85
68	2.86
68	2.87
69	2.88
69	2.89
70	2.9
70	2.91
71	2.92
71	2.93

72	4.04	490.7
72	4.05	490.71
73	4.06	490.72
73	4.07	490.73
74	4.08	490.74
74	4.09	490.75
75	4.1	490.76
75	4.11	490.77
76	4.12	490.78
76	4.13	490.79
77	4.14	490.8
77	4.15	490.81
78	4.16	490.82
78	4.17	490.83
79	4.18	490.84
79	4.19	490.85
80	4.2	490.86
80	4.21	490.87
81	4.22	490.88
81	4.23	490.89
82	4.24	490.9
82	4.25	490.91
83	4.26	490.92
83	4.27	490.93
84	4.28	490.94
85	4.29	490.95
85	4.3	490.96
86	4.31	490.97
86	4.32	490.98
87	4.33	490.99
87	4.34	491
88	4.35	491.01
88	4.36	491.02
89	4.37	491.03
89	4.38	491.04
90	4.39	491.05
90	4.4	491.06
91	4.41	491.07
92	4.42	491.08
92	4.43	491.09
93	4.44	491.1
93	4.45	491.11
94	4.46	491.12
94	4.47	491.13

72	490.7
72	490.71
73	490.72
73	490.73
74	490.74
74	490.75
75	490.76
75	490.77
76	490.78
76	490.79
77	490.8
77	490.81
78	490.82
78	490.83
79	490.84
79	490.85
80	490.86
80	490.87
81	490.88
81	490.89
82	490.9
82	490.91
83	490.92
83	490.93
84	490.94
85	490.95
85	490.96
86	490.97
86	490.98
87	490.99
87	491
88	491.01
88	491.02
89	491.03
89	491.04
90	491.05
90	491.06
91	491.07
92	491.08
92	491.09
93	491.1
93	491.11
94	491.12
94	491.13

72	2.94
72	2.95
73	2.96
73	2.97
74	2.98
74	2.99
75	3
75	3.01
76	3.02
76	3.03
77	3.04
77	3.05
78	3.06
78	3.07
79	3.08
79	3.09
80	3.1
80	3.11
81	3.12
81	3.13
82	3.14
82	3.15
83	3.16
83	3.17
84	3.18
85	3.19
85	3.2
86	3.21
86	3.22
87	3.23
87	3.24
88	3.25
88	3.26
89	3.27
89	3.28
90	3.29
90	3.3
91	3.31
92	3.32
92	3.33
93	3.34
93	3.35
94	3.36
94	3.37

95	4.48	491.14
95	4.49	491.15
96	4.5	491.16
97	4.51	491.17
97	4.52	491.18
98	4.53	491.19
98	4.54	491.2
99	4.55	491.21
99	4.56	491.22
100	4.57	491.23
101	4.58	491.24
101	4.59	491.25
102	4.6	491.26
102	4.61	491.27
103	4.62	491.28
104	4.63	491.29
104	4.64	491.3
105	4.65	491.31
105	4.66	491.32
106	4.67	491.33
107	4.68	491.34
107	4.69	491.35
108	4.7	491.36
108	4.71	491.37
109	4.72	491.38
110	4.73	491.39
110	4.74	491.4
111	4.75	491.41
111	4.76	491.42
112	4.77	491.43
113	4.78	491.44
113	4.79	491.45
114	4.8	491.46
114	4.81	491.47
115	4.82	491.48
116	4.83	491.49
116	4.84	491.5
117	4.85	491.51
118	4.86	491.52
118	4.87	491.53
119	4.88	491.54
119	4.89	491.55
120	4.9	491.56
121	4.91	491.57

95	491.14
95	491.15
96	491.16
97	491.17
97	491.18
98	491.19
98	491.2
99	491.21
99	491.22
100	491.23
101	491.24
101	491.25
102	491.26
102	491.27
103	491.28
104	491.29
104	491.3
105	491.31
105	491.32
106	491.33
107	491.34
107	491.35
108	491.36
108	491.37
109	491.38
110	491.39
110	491.4
111	491.41
111	491.42
112	491.43
113	491.44
113	491.45
114	491.46
114	491.47
115	491.48
116	491.49
116	491.5
117	491.51
118	491.52
118	491.53
119	491.54
119	491.55
120	491.56
121	491.57

95	3.38
95	3.39
96	3.4
97	3.41
97	3.42
98	3.43
98	3.44
99	3.45
99	3.46
100	3.47
101	3.48
101	3.49
102	3.5
102	3.51
103	3.52
104	3.53
104	3.54
105	3.55
105	3.56
106	3.57
107	3.58
107	3.59
108	3.6
108	3.61
109	3.62
110	3.63
110	3.64
111	3.65
111	3.66
112	3.67
113	3.68
113	3.69
114	3.7
114	3.71
115	3.72
116	3.73
116	3.74
117	3.75
118	3.76
118	3.77
119	3.78
119	3.79
120	3.8
121	3.81

121	4.92	491.58
122	4.93	491.59
123	4.94	491.6
123	4.95	491.61
124	4.96	491.62
125	4.97	491.63
125	4.98	491.64
126	4.99	491.65
126	5	491.66
127	5.01	491.67
128	5.02	491.68
128	5.03	491.69
129	5.04	491.7
130	5.05	491.71
130	5.06	491.72
131	5.07	491.73
132	5.08	491.74
132	5.09	491.75
133	5.1	491.76
134	5.11	491.77
134	5.12	491.78
135	5.13	491.79
135	5.14	491.8
136	5.15	491.81
137	5.16	491.82
138	5.17	491.83
138	5.18	491.84
139	5.19	491.85
140	5.2	491.86
140	5.21	491.87
141	5.22	491.88
142	5.23	491.89
142	5.24	491.9
143	5.25	491.91
144	5.26	491.92
145	5.27	491.93
145	5.28	491.94
146	5.29	491.95
147	5.3	491.96
147	5.31	491.97
148	5.32	491.98
149	5.33	491.99
149	5.34	492
150	5.35	492.01

121	491.58
122	491.59
123	491.6
123	491.61
124	491.62
125	491.63
125	491.64
126	491.65
126	491.66
127	491.67
128	491.68
128	491.69
129	491.7
130	491.71
130	491.72
131	491.73
132	491.74
132	491.75
133	491.76
134	491.77
134	491.78
135	491.79
135	491.8
136	491.81
137	491.82
138	491.83
138	491.84
139	491.85
140	491.86
140	491.87
141	491.88
142	491.89
142	491.9
143	491.91
144	491.92
145	491.93
145	491.94
146	491.95
147	491.96
147	491.97
148	491.98
149	491.99
149	492
150	492.01

121	3.82
122	3.83
123	3.84
123	3.85
124	3.86
125	3.87
125	3.88
126	3.89
126	3.9
127	3.91
128	3.92
128	3.93
129	3.94
130	3.95
130	3.96
131	3.97
132	3.98
132	3.99
133	4
134	4.01
134	4.02
135	4.03
135	4.04
136	4.05
137	4.06
138	4.07
138	4.08
139	4.09
140	4.1
140	4.11
141	4.12
142	4.13
142	4.14
143	4.15
144	4.16
145	4.17
145	4.18
146	4.19
147	4.2
147	4.21
148	4.22
149	4.23
149	4.24
150	4.25

151	5.36	492.02
152	5.37	492.03
152	5.38	492.04
153	5.39	492.05
154	5.4	492.06
154	5.41	492.07
155	5.42	492.08
156	5.43	492.09
157	5.44	492.1
157	5.45	492.11
158	5.46	492.12
159	5.47	492.13
159	5.48	492.14
160	5.49	492.15
161	5.5	492.16
162	5.51	492.17
162	5.52	492.18
163	5.53	492.19
164	5.54	492.2
164	5.55	492.21
165	5.56	492.22
166	5.57	492.23
167	5.58	492.24
167	5.59	492.25
168	5.6	492.26
169	5.61	492.27
169	5.62	492.28
170	5.63	492.29
171	5.64	492.3
171	5.65	492.31
172	5.66	492.32
173	5.67	492.33
174	5.68	492.34
174	5.69	492.35
175	5.7	492.36
176	5.71	492.37
176	5.72	492.38
177	5.73	492.39
178	5.74	492.4
179	5.75	492.41
179	5.76	492.42
180	5.77	492.43
181	5.78	492.44
182	5.79	492.45

151	492.02
152	492.03
152	492.04
153	492.05
154	492.06
154	492.07
155	492.08
156	492.09
157	492.1
157	492.11
158	492.12
159	492.13
159	492.14
160	492.15
161	492.16
162	492.17
162	492.18
163	492.19
164	492.2
164	492.21
165	492.22
166	492.23
167	492.24
167	492.25
168	492.26
169	492.27
169	492.28
170	492.29
171	492.3
171	492.31
172	492.32
173	492.33
174	492.34
174	492.35
175	492.36
176	492.37
176	492.38
177	492.39
178	492.4
179	492.41
179	492.42
180	492.43
181	492.44
182	492.45

151	4.26
152	4.27
152	4.28
153	4.29
154	4.3
154	4.31
155	4.32
156	4.33
157	4.34
157	4.35
158	4.36
159	4.37
159	4.38
160	4.39
161	4.4
162	4.41
162	4.42
163	4.43
164	4.44
164	4.45
165	4.46
166	4.47
167	4.48
167	4.49
168	4.5
169	4.51
169	4.52
170	4.53
171	4.54
171	4.55
172	4.56
173	4.57
174	4.58
174	4.59
175	4.6
176	4.61
176	4.62
177	4.63
178	4.64
179	4.65
179	4.66
180	4.67
181	4.68
182	4.69

182	5.8	492.46
183	5.81	492.47
184	5.82	492.48
184	5.83	492.49
185	5.84	492.5
186	5.85	492.51
187	5.86	492.52
187	5.87	492.53
188	5.88	492.54
189	5.89	492.55
190	5.9	492.56
190	5.91	492.57
191	5.92	492.58
192	5.93	492.59
193	5.94	492.6
193	5.95	492.61
194	5.96	492.62
195	5.97	492.63
196	5.98	492.64
196	5.99	492.65
197	6	492.66
198	6.01	492.67
199	6.02	492.68
199	6.03	492.69
200	6.04	492.7
201	6.05	492.71
202	6.06	492.72
202	6.07	492.73
203	6.08	492.74
204	6.09	492.75
205	6.1	492.76
205	6.11	492.77
206	6.12	492.78
207	6.13	492.79
208	6.14	492.8
209	6.15	492.81
209	6.16	492.82
210	6.17	492.83
211	6.18	492.84
212	6.19	492.85
212	6.2	492.86
213	6.21	492.87
214	6.22	492.88
215	6.23	492.89

182	492.46
183	492.47
184	492.48
184	492.49
185	492.5
186	492.51
187	492.52
187	492.53
188	492.54
189	492.55
190	492.56
190	492.57
191	492.58
192	492.59
193	492.6
193	492.61
194	492.62
195	492.63
196	492.64
196	492.65
197	492.66
198	492.67
199	492.68
199	492.69
200	492.7
201	492.71
202	492.72
202	492.73
203	492.74
204	492.75
205	492.76
205	492.77
206	492.78
207	492.79
208	492.8
209	492.81
209	492.82
210	492.83
211	492.84
212	492.85
212	492.86
213	492.87
214	492.88
215	492.89

182	4.7
183	4.71
184	4.72
184	4.73
185	4.74
186	4.75
187	4.76
187	4.77
188	4.78
189	4.79
190	4.8
190	4.81
191	4.82
192	4.83
193	4.84
193	4.85
194	4.86
195	4.87
196	4.88
196	4.89
197	4.9
198	4.91
199	4.92
199	4.93
200	4.94
201	4.95
202	4.96
202	4.97
203	4.98
204	4.99
205	5
205	5.01
206	5.02
207	5.03
208	5.04
209	5.05
209	5.06
210	5.07
211	5.08
212	5.09
212	5.1
213	5.11
214	5.12
215	5.13

216	6.24	492.9
216	6.25	492.91
217	6.26	492.92
218	6.27	492.93
219	6.28	492.94
220	6.29	492.95
220	6.3	492.96
221	6.31	492.97
222	6.32	492.98
223	6.33	492.99
223	6.34	493
224	6.35	493.01
225	6.36	493.02
226	6.37	493.03
227	6.38	493.04
227	6.39	493.05
228	6.4	493.06
229	6.41	493.07
230	6.42	493.08
231	6.43	493.09
232	6.44	493.1
232	6.45	493.11
233	6.46	493.12
234	6.47	493.13
235	6.48	493.14
236	6.49	493.15
236	6.5	493.16
237	6.51	493.17
238	6.52	493.18
239	6.53	493.19
240	6.54	493.2
241	6.55	493.21
241	6.56	493.22
242	6.57	493.23
243	6.58	493.24
244	6.59	493.25
245	6.6	493.26
246	6.61	493.27
246	6.62	493.28
247	6.63	493.29
248	6.64	493.3
249	6.65	493.31
251	6.66	493.32
251	6.67	493.33

216	492.9
216	492.91
217	492.92
218	492.93
219	492.94
220	492.95
220	492.96
221	492.97
222	492.98
223	492.99
223	493
224	493.01
225	493.02
226	493.03
227	493.04
227	493.05
228	493.06
229	493.07
230	493.08
231	493.09
232	493.1
232	493.11
233	493.12
234	493.13
235	493.14
236	493.15
236	493.16
237	493.17
238	493.18
239	493.19
240	493.2
241	493.21
241	493.22
242	493.23
243	493.24
244	493.25
245	493.26
246	493.27
246	493.28
247	493.29
248	493.3
249	493.31
251	493.32
251	493.33

216	5.14
216	5.15
217	5.16
218	5.17
219	5.18
220	5.19
220	5.2
221	5.21
222	5.22
223	5.23
223	5.24
224	5.25
225	5.26
226	5.27
227	5.28
227	5.29
228	5.3
229	5.31
230	5.32
231	5.33
232	5.34
232	5.35
233	5.36
234	5.37
235	5.38
236	5.39
236	5.4
237	5.41
238	5.42
239	5.43
240	5.44
241	5.45
241	5.46
242	5.47
243	5.48
244	5.49
245	5.5
246	5.51
246	5.52
247	5.53
248	5.54
249	5.55
251	5.56
251	5.57

251	6.68	493.34
252	6.69	493.35
253	6.7	493.36
254	6.71	493.37
255	6.72	493.38
256	6.73	493.39
256	6.74	493.4
257	6.75	493.41
258	6.76	493.42
259	6.77	493.43
260	6.78	493.44
261	6.79	493.45
262	6.8	493.46
262	6.81	493.47
263	6.82	493.48
264	6.83	493.49
265	6.84	493.5
266	6.85	493.51
267	6.86	493.52
268	6.87	493.53
268	6.88	493.54
269	6.89	493.55
270	6.9	493.56
271	6.91	493.57
272	6.92	493.58
273	6.93	493.59
274	6.94	493.6
275	6.95	493.61
275	6.96	493.62
276	6.97	493.63
277	6.98	493.64
278	6.99	493.65
279	7	493.66
280	7.01	493.67
281	7.02	493.68
282	7.03	493.69
282	7.04	493.7
283	7.05	493.71
284	7.06	493.72
285	7.07	493.73
286	7.08	493.74
287	7.09	493.75
288	7.1	493.76
289	7.11	493.77

251	493.34
252	493.35
253	493.36
254	493.37
255	493.38
256	493.39
256	493.4
257	493.41
258	493.42
259	493.43
260	493.44
261	493.45
262	493.46
262	493.47
263	493.48
264	493.49
265	493.5
266	493.51
267	493.52
268	493.53
268	493.54
269	493.55
270	493.56
271	493.57
272	493.58
273	493.59
274	493.6
275	493.61
275	493.62
276	493.63
277	493.64
278	493.65
279	493.66
280	493.67
281	493.68
282	493.69
282	493.7
283	493.71
284	493.72
285	493.73
286	493.74
287	493.75
288	493.76
289	493.77

251	5.58
252	5.59
253	5.6
254	5.61
255	5.62
256	5.63
256	5.64
257	5.65
258	5.66
259	5.67
260	5.68
261	5.69
262	5.7
262	5.71
263	5.72
264	5.73
265	5.74
266	5.75
267	5.76
268	5.77
268	5.78
269	5.79
270	5.8
271	5.81
272	5.82
273	5.83
274	5.84
275	5.85
275	5.86
276	5.87
277	5.88
278	5.89
279	5.9
280	5.91
281	5.92
282	5.93
282	5.94
283	5.95
284	5.96
285	5.97
286	5.98
287	5.99
288	6
289	6.01

289	7.12	493.78
290	7.13	493.79
291	7.14	493.8
292	7.15	493.81
293	7.16	493.82
294	7.17	493.83
295	7.18	493.84
295	7.19	493.85
296	7.2	493.86
297	7.21	493.87
298	7.22	493.88
299	7.23	493.89
300	7.24	493.9
301	7.25	493.91
302	7.26	493.92
302	7.27	493.93
303	7.28	493.94
304	7.29	493.95
305	7.3	493.96
306	7.31	493.97
307	7.32	493.98
308	7.33	493.99
309	7.34	494
310	7.35	494.01
310	7.36	494.02
311	7.37	494.03
312	7.38	494.04
313	7.39	494.05
314	7.4	494.06
315	7.41	494.07
316	7.42	494.08
317	7.43	494.09
318	7.44	494.1
318	7.45	494.11
319	7.46	494.12
320	7.47	494.13
321	7.48	494.14
322	7.49	494.15
323	7.5	494.16
324	7.51	494.17
325	7.52	494.18
326	7.53	494.19
327	7.54	494.2
328	7.55	494.21

289	493.78
290	493.79
291	493.8
292	493.81
293	493.82
294	493.83
295	493.84
295	493.85
296	493.86
297	493.87
298	493.88
299	493.89
300	493.9
301	493.91
302	493.92
302	493.93
303	493.94
304	493.95
305	493.96
306	493.97
307	493.98
308	493.99
309	494
310	494.01
310	494.02
311	494.03
312	494.04
313	494.05
314	494.06
315	494.07
316	494.08
317	494.09
318	494.1
318	494.11
319	494.12
320	494.13
321	494.14
322	494.15
323	494.16
324	494.17
325	494.18
326	494.19
327	494.2
328	494.21

289	6.02
290	6.03
291	6.04
292	6.05
293	6.06
294	6.07
295	6.08
295	6.09
296	6.1
297	6.11
298	6.12
299	6.13
300	6.14
301	6.15
302	6.16
302	6.17
303	6.18
304	6.19
305	6.2
306	6.21
307	6.22
308	6.23
309	6.24
310	6.25
310	6.26
311	6.27
312	6.28
313	6.29
314	6.3
315	6.31
316	6.32
317	6.33
318	6.34
318	6.35
319	6.36
320	6.37
321	6.38
322	6.39
323	6.4
324	6.41
325	6.42
326	6.43
327	6.44
328	6.45

328	7.56	494.22
329	7.57	494.23
330	7.58	494.24
331	7.59	494.25
332	7.6	494.26
333	7.61	494.27
334	7.62	494.28
335	7.63	494.29
336	7.64	494.3
337	7.65	494.31
338	7.66	494.32
339	7.67	494.33
339	7.68	494.34
340	7.69	494.35
341	7.7	494.36
342	7.71	494.37
343	7.72	494.38
344	7.73	494.39
345	7.74	494.4
346	7.75	494.41
347	7.76	494.42
348	7.77	494.43
349	7.78	494.44
350	7.79	494.45
351	7.8	494.46
352	7.81	494.47
353	7.82	494.48
353	7.83	494.49
354	7.84	494.5
355	7.85	494.51
356	7.86	494.52
357	7.87	494.53
358	7.88	494.54
359	7.89	494.55
360	7.9	494.56
361	7.91	494.57
362	7.92	494.58
363	7.93	494.59
364	7.94	494.6
365	7.95	494.61
366	7.96	494.62
367	7.97	494.63
368	7.98	494.64
369	7.99	494.65

328	494.22
329	494.23
330	494.24
331	494.25
332	494.26
333	494.27
334	494.28
335	494.29
336	494.3
337	494.31
338	494.32
339	494.33
339	494.34
340	494.35
341	494.36
342	494.37
343	494.38
344	494.39
345	494.4
346	494.41
347	494.42
348	494.43
349	494.44
350	494.45
351	494.46
352	494.47
353	494.48
353	494.49
354	494.5
355	494.51
356	494.52
357	494.53
358	494.54
359	494.55
360	494.56
361	494.57
362	494.58
363	494.59
364	494.6
365	494.61
366	494.62
367	494.63
368	494.64
369	494.65

328	6.46
329	6.47
330	6.48
331	6.49
332	6.5
333	6.51
334	6.52
335	6.53
336	6.54
337	6.55
338	6.56
339	6.57
339	6.58
340	6.59
341	6.6
342	6.61
343	6.62
344	6.63
345	6.64
346	6.65
347	6.66
348	6.67
349	6.68
350	6.69
351	6.7
352	6.71
353	6.72
353	6.73
354	6.74
355	6.75
356	6.76
357	6.77
358	6.78
359	6.79
360	6.8
361	6.81
362	6.82
363	6.83
364	6.84
365	6.85
366	6.86
367	6.87
368	6.88
369	6.89

370	8	494.66
371	8.01	494.67
372	8.02	494.68
373	8.03	494.69
374	8.04	494.7
374	8.05	494.71
375	8.06	494.72
376	8.07	494.73
377	8.08	494.74
378	8.09	494.75
379	8.1	494.76
380	8.11	494.77
381	8.12	494.78
382	8.13	494.79
383	8.14	494.8
384	8.15	494.81
385	8.16	494.82
386	8.17	494.83
387	8.18	494.84
388	8.19	494.85
389	8.2	494.86
390	8.21	494.87
391	8.22	494.88
392	8.23	494.89
393	8.24	494.9
394	8.25	494.91
395	8.26	494.92
396	8.27	494.93
397	8.28	494.94
398	8.29	494.95
399	8.3	494.96
400	8.31	494.97
401	8.32	494.98
402	8.33	494.99
403	8.34	495
404	8.35	495.01
405	8.36	495.02
406	8.37	495.03
407	8.38	495.04
408	8.39	495.05
409	8.4	495.06
410	8.41	495.07
411	8.42	495.08
412	8.43	495.09

370	494.66
371	494.67
372	494.68
373	494.69
374	494.7
374	494.71
375	494.72
376	494.73
377	494.74
378	494.75
379	494.76
380	494.77
381	494.78
382	494.79
383	494.8
384	494.81
385	494.82
386	494.83
387	494.84
388	494.85
389	494.86
390	494.87
391	494.88
392	494.89
393	494.9
394	494.91
395	494.92
396	494.93
397	494.94
398	494.95
399	494.96
400	494.97
401	494.98
402	494.99
403	495
404	495.01
405	495.02
406	495.03
407	495.04
408	495.05
409	495.06
410	495.07
411	495.08
412	495.09

370	6.9
371	6.91
372	6.92
373	6.93
374	6.94
374	6.95
375	6.96
376	6.97
377	6.98
378	6.99
379	7
380	7.01
381	7.02
382	7.03
383	7.04
384	7.05
385	7.06
386	7.07
387	7.08
388	7.09
389	7.1
390	7.11
391	7.12
392	7.13
393	7.14
394	7.15
395	7.16
396	7.17
397	7.18
398	7.19
399	7.2
400	7.21
401	7.22
402	7.23
403	7.24
404	7.25
405	7.26
406	7.27
407	7.28
408	7.29
409	7.3
410	7.31
411	7.32
412	7.33

413	8.44	495.1
414	8.45	495.11
415	8.46	495.12
416	8.47	495.13
417	8.48	495.14
418	8.49	495.15
419	8.5	495.16
420	8.51	495.17
421	8.52	495.18
422	8.53	495.19
423	8.54	495.2
424	8.55	495.21
425	8.56	495.22
426	8.57	495.23
427	8.58	495.24
428	8.59	495.25
429	8.6	495.26
430	8.61	495.27
431	8.62	495.28
432	8.63	495.29
433	8.64	495.3
434	8.65	495.31
435	8.66	495.32
436	8.67	495.33
437	8.68	495.34
438	8.69	495.35
440	8.7	495.36
441	8.71	495.37
442	8.72	495.38
443	8.73	495.39
444	8.74	495.4
445	8.75	495.41
446	8.76	495.42
447	8.77	495.43
448	8.78	495.44
449	8.79	495.45
450	8.8	495.46
451	8.81	495.47
452	8.82	495.48
453	8.83	495.49
454	8.84	495.5
455	8.85	495.51
456	8.86	495.52
457	8.87	495.53

413	495.1
414	495.11
415	495.12
416	495.13
417	495.14
418	495.15
419	495.16
420	495.17
421	495.18
422	495.19
423	495.2
424	495.21
425	495.22
426	495.23
427	495.24
428	495.25
429	495.26
430	495.27
431	495.28
432	495.29
433	495.3
434	495.31
435	495.32
436	495.33
437	495.34
438	495.35
440	495.36
441	495.37
442	495.38
443	495.39
444	495.4
445	495.41
446	495.42
447	495.43
448	495.44
449	495.45
450	495.46
451	495.47
452	495.48
453	495.49
454	495.5
455	495.51
456	495.52
457	495.53

413	7.34
414	7.35
415	7.36
416	7.37
417	7.38
418	7.39
419	7.4
420	7.41
421	7.42
422	7.43
423	7.44
424	7.45
425	7.46
426	7.47
427	7.48
428	7.49
429	7.5
430	7.51
431	7.52
432	7.53
433	7.54
434	7.55
435	7.56
436	7.57
437	7.58
438	7.59
440	7.6
441	7.61
442	7.62
443	7.63
444	7.64
445	7.65
446	7.66
447	7.67
448	7.68
449	7.69
450	7.7
451	7.71
452	7.72
453	7.73
454	7.74
455	7.75
456	7.76
457	7.77

458	8.88	495.54
459	8.89	495.55
460	8.9	495.56
461	8.91	495.57
463	8.92	495.58
464	8.93	495.59
465	8.94	495.6
466	8.95	495.61
467	8.96	495.62
468	8.97	495.63
469	8.98	495.64
470	8.99	495.65
471	9	495.66
472	9.01	495.67
473	9.02	495.68
474	9.03	495.69
475	9.04	495.7
476	9.05	495.71
477	9.06	495.72
479	9.07	495.73
480	9.08	495.74
481	9.09	495.75
482	9.1	495.76
483	9.11	495.77
484	9.12	495.78
485	9.13	495.79
486	9.14	495.8
487	9.15	495.81
488	9.16	495.82
489	9.17	495.83
490	9.18	495.84
491	9.19	495.85
493	9.2	495.86
494	9.21	495.87
495	9.22	495.88
496	9.23	495.89
497	9.24	495.9
498	9.25	495.91
499	9.26	495.92
50	9.27	495.93
501	9.28	495.94
502	9.29	495.95
503	9.3	495.96
505	9.31	495.97

458	495.54
459	495.55
460	495.56
461	495.57
463	495.58
464	495.59
465	495.6
466	495.61
467	495.62
468	495.63
469	495.64
470	495.65
471	495.66
472	495.67
473	495.68
474	495.69
475	495.7
476	495.71
477	495.72
479	495.73
480	495.74
481	495.75
482	495.76
483	495.77
484	495.78
485	495.79
486	495.8
487	495.81
488	495.82
489	495.83
490	495.84
491	495.85
493	495.86
494	495.87
495	495.88
496	495.89
497	495.9
498	495.91
499	495.92
50	495.93
501	495.94
502	495.95
503	495.96
505	495.97

458	7.78
459	7.79
460	7.8
461	7.81
463	7.82
464	7.83
465	7.84
466	7.85
467	7.86
468	7.87
469	7.88
470	7.89
471	7.9
472	7.91
473	7.92
474	7.93
475	7.94
476	7.95
477	7.96
479	7.97
480	7.98
481	7.99
482	8
483	8.01
484	8.02
485	8.03
486	8.04
487	8.05
488	8.06
489	8.07
490	8.08
491	8.09
493	8.1
494	8.11
495	8.12
496	8.13
497	8.14
498	8.15
499	8.16
50	8.17
501	8.18
502	8.19
503	8.2
505	8.21

506	9.32	495.98
507	9.33	495.99

506	495.98
507	495.99

506	8.22
507	8.23

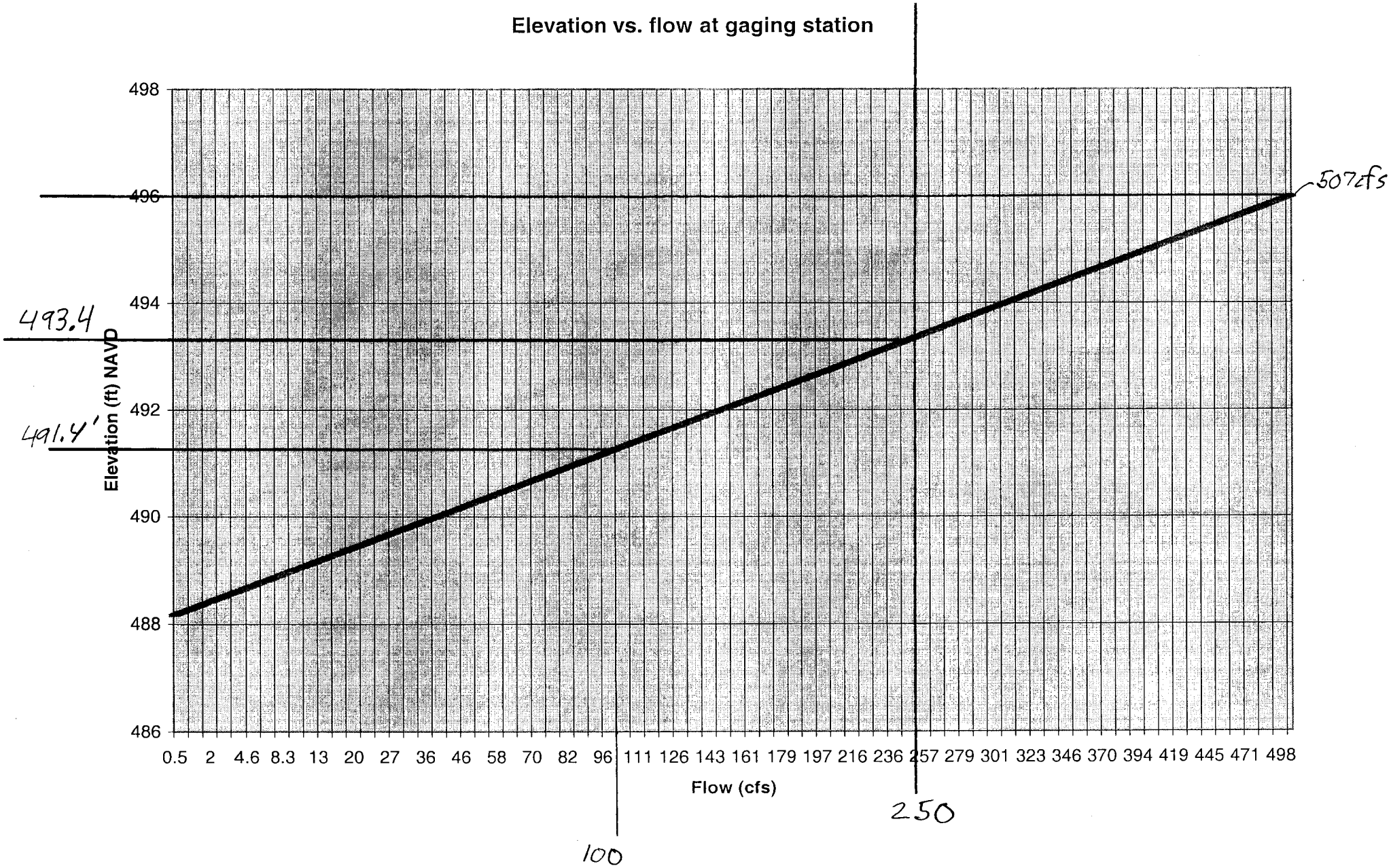
Elevation vs. flow at gaging station
Elevation (ft) NAVD
498
496
494
492
490
488
486
493.4
491.4'
507cfs
0.5 2 4.6 8.3 13 20 27 36 46 58 70 82 96 111 126 143 161 179 197 216 236 257 279 301 323 346 370 394 419 445 471 498
Flow (cfs)
250
100

APPENDIX D

Hydraulic Data

Total Rating Curve (Performance)

Crossing: Existing

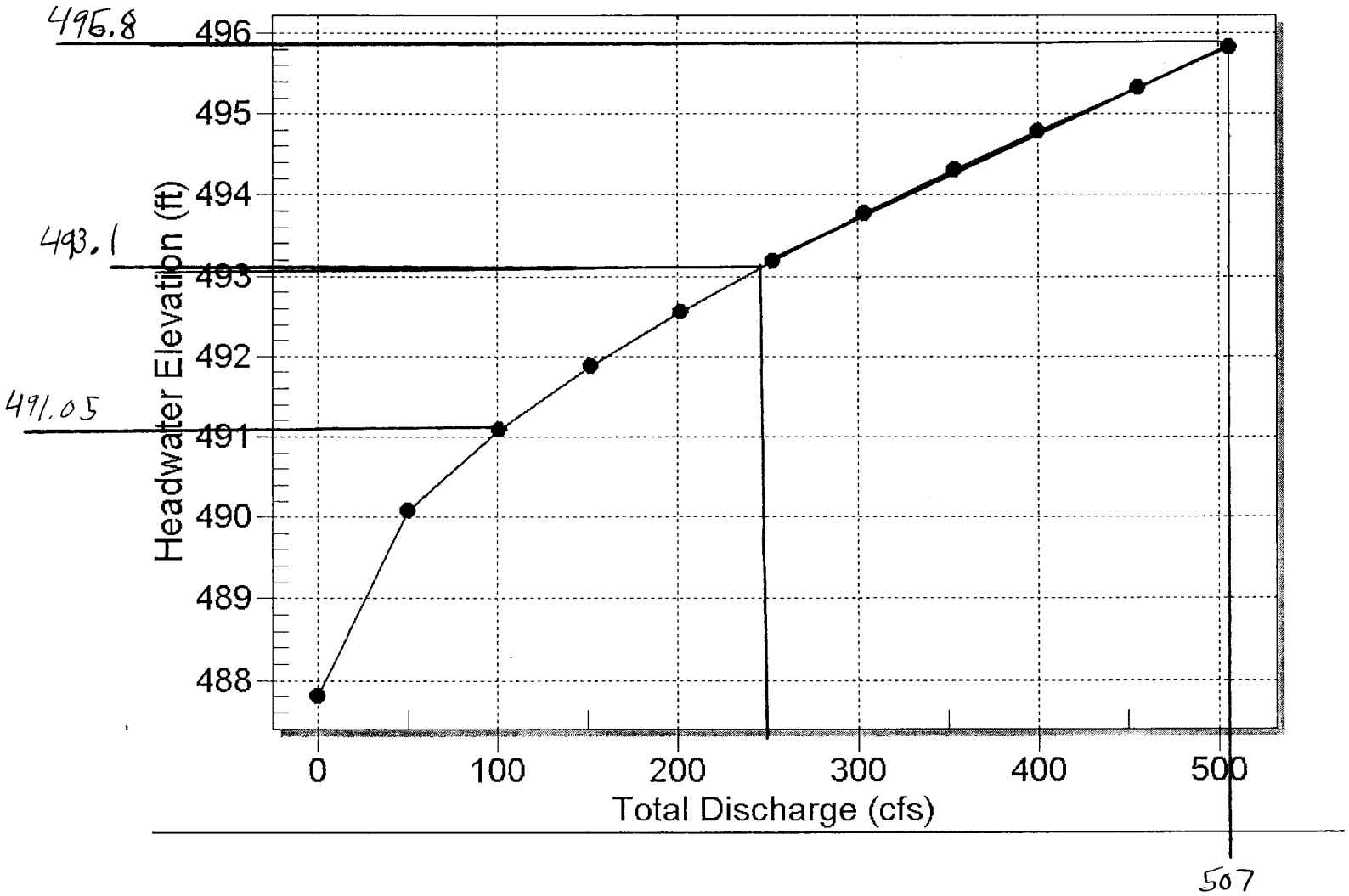

HY-8 Culvert Analysis Report Existing

Site Data - Culvert 1

Site Data Option: Culvert Invert Data

Inlet Station: 0.00 ft

Inlet Elevation: 487.76 ft

Outlet Station: 139.39 ft

Outlet Elevation: 485.01 ft

Number of Barrels: 1

Culvert Data Summary - Culvert 1

Barrel Shape: Circular

Barrel Diameter: 10.00 ft

Barrel Material: Corrugated Steel

Embedment: 0.00 in

Barrel Manning's n: 0.0240

Inlet Type: Conventional

Inlet Edge Condition: Mitered to Conform to Slope

Inlet Depression: None

Table 1 - Downstream Channel Rating Curve (Crossing: Existing)

Flow (cfs)	Water Surface Elev (ft)	Depth (ft)	Velocity (ft/s)	Shear (psf)	Froude Number
0.00	486.49	0.00	0.00	0.00	0.00
50.60	487.36	0.87	3.18	0.54	0.76
101.20	487.70	1.21	3.58	0.76	0.77
151.80	487.95	1.46	3.78	0.91	0.76
202.40	488.16	1.67	3.92	1.04	0.74
253.00	488.33	1.84	4.04	1.15	0.73
303.60	488.49	2.00	4.13	1.25	0.72
354.20	488.63	2.14	4.22	1.33	0.71
400.00	488.75	2.26	4.29	1.41	0.71
455.40	488.88	2.39	4.36	1.49	0.70
506.00	488.99	2.50	4.43	1.56	0.70

Tailwater Channel Data - Existing

Tailwater Channel Option: Irregular Channel

Channel Slope: 0.0100

User Defined Channel Cross-Section:

Coord No.	Station (ft)	Elevation (ft)	Manning's n
1	0.00	510.00	0.1200
2	22.00	505.00	0.1200
3	61.00	500.00	0.1200
4	122.00	495.00	0.1200
5	182.00	490.00	0.1200
6	245.00	487.19	0.0350
7	247.00	486.49	0.0350
8	255.00	486.49	0.0350
9	257.00	486.49	0.0350
10	312.00	490.00	0.1200
11	337.00	500.00	0.1200
12	417.00	510.00	0.1200
13	511.00	515.00	0.0000

Tailwater Rating Curve Plot for Crossing: Existing

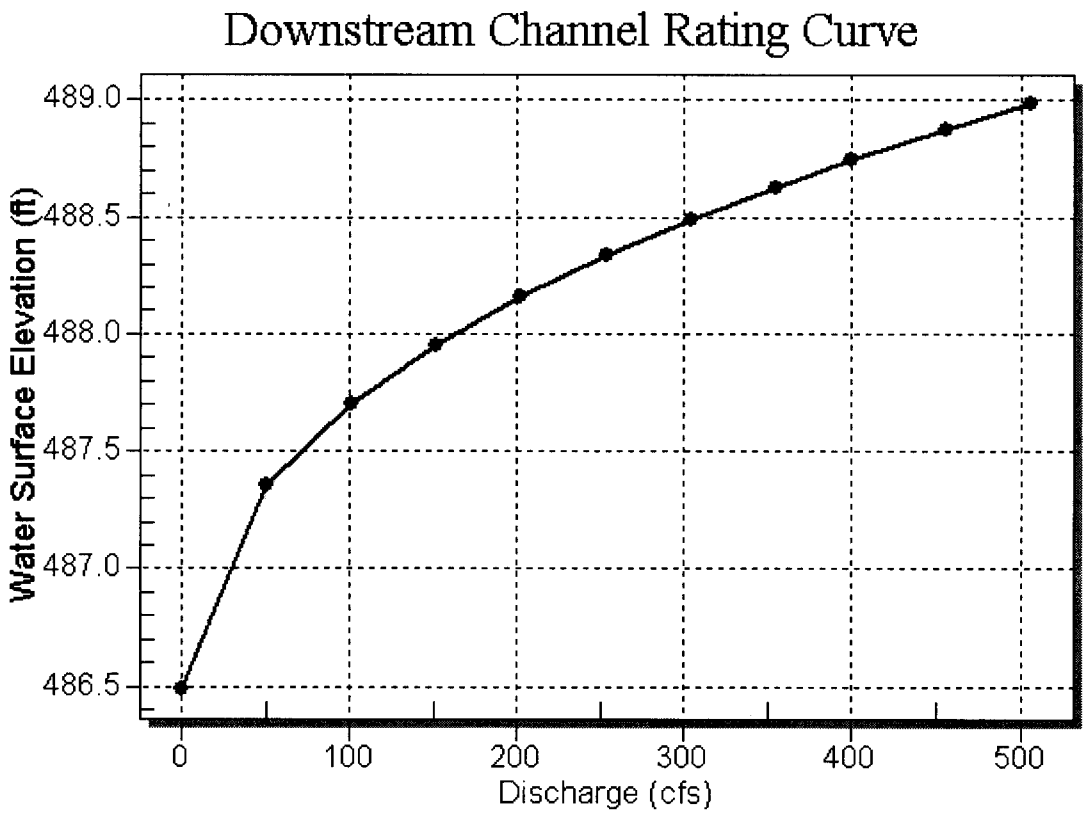

Roadway Data for Crossing: Existing

Roadway Profile Shape: Constant Roadway Elevation

Crest Length: 200.00 ft

Crest Elevation: 510.00 ft

Roadway Surface: Paved

Roadway Top Width: 55.00 ft

HY-8 Analysis Results

Culvert Summary Table - Culvert 1 (Existing) @ Fish passage flows

Culvert Crossing: Existing

Total Discharge (cfs)	Culvert Discharge (cfs)	Headwater Elevation (ft)	Inlet Control Depth(ft)	Outlet Control Depth(ft)	Flow Type	Normal Depth (ft)	Critical Depth (ft)	Outlet Depth (ft)	Tailwater Depth (ft)	Outlet Velocity (ft/s)	Tailwater Velocity (ft/s)
0.71	0.71	487.90	0.14	0.0*	1-S2n	0.03	0.04	0.03	0.08	3.25	0.78
1.59	1.59	487.95	0.19	0.0*	1-S2n	0.06	0.08	0.07	0.14	2.76	1.04
2.46	2.46	488.00	0.24	0.0*	1-S2n	0.09	0.13	0.12	0.17	2.70	1.21
3.34	3.34	488.05	0.29	0.0*	1-S2n	0.13	0.17	0.16	0.21	2.71	1.35
4.22	4.22	488.11	0.35	0.0*	1-S2n	0.16	0.22	0.21	0.24	2.74	1.46
5.09	5.09	488.16	0.40	0.0*	1-S2n	0.19	0.27	0.26	0.26	2.79	1.55
5.97	5.97	488.21	0.45	0.0*	1-S2n	0.23	0.31	0.30	0.29	2.85	1.63
6.85	6.85	488.27	0.51	0.0*	1-S2n	0.26	0.36	0.35	0.31	2.92	1.70
7.73	7.73	488.32	0.56	0.0*	1-S2n	0.29	0.40	0.29	0.33	3.77	1.77
8.00	8.00	488.34	0.58	0.0*	1-S2n	0.30	0.42	0.31	0.34	3.76	1.79
9.48	9.48	488.43	0.67	0.0*	1-S2n	0.36	0.50	0.39	0.37	3.73	1.89

HY-8 Analysis Results

Culvert Summary Table - Culvert 1 (Existing)

Culvert Crossing: Existing

	Total Discharge (cfs)	Culvert Discharge (cfs)	Headwater Elevation (ft)	Inlet Control Depth(ft)	Outlet Control Depth(ft)	Flow Type	Normal Depth (ft)	Critical Depth (ft)	Outlet Depth (ft)	Tailwater Depth (ft)	Outlet Velocity (ft/s)	Tailwater Velocity (ft/s)
Q1.1	125.80	125.80	491.45	3.69	0.0*	1-S2n	2.11	2.56	2.12	1.34	10.28	3.69
	191.62	191.62	492.38	4.62	0.0*	1-S2n	2.60	3.21	2.64	1.63	11.49	3.89
	257.44	257.44	493.20	5.44	0.0*	1-S2n	3.06	3.75	3.06	1.86	12.62	4.04
	323.26	323.26	493.95	6.19	0.0*	1-S2n	3.43	4.23	3.48	2.05	13.27	4.17
	389.08	389.08	494.63	6.87	0.96	1-S2n	3.80	4.66	3.81	2.23	14.14	4.27
	454.90	454.90	495.28	7.52	1.11	1-S2n	4.15	5.07	4.20	2.38	14.51	4.36
	520.72	520.72	495.93	8.17	1.26	1-S2n	4.47	5.43	4.53	2.53	15.05	4.45
	586.54	586.54	496.59	8.83	1.39	1-S2n	4.79	5.79	4.86	2.66	15.50	4.52
Q10	593.00	593.00	496.66	8.90	1.40	1-S2n	4.82	5.82	4.89	2.67	15.54	4.53
	718.18	718.18	498.04	10.28	1.63	5-S2n	5.41	6.42	5.49	2.90	16.28	4.66
Q25	784.00	784.00	498.85	11.09	1.74	5-S2n	5.71	6.73	5.79	3.01	16.64	4.72

HY-8 Analysis Results

Culvert Summary Table - Culvert 1 (Existing)

Culvert Crossing: Existing

	Total Discharge (cfs)	Culvert Discharge (cfs)	Headwater Elevation (ft)	Inlet Control Depth(ft)	Outlet Control Depth(ft)	Flow Type	Normal Depth (ft)	Critical Depth (ft)	Outlet Depth (ft)	Tailwater Depth (ft)	Outlet Velocity (ft/s)	Tailwater Velocity (ft/s)
	0.00	0.00	487.76	0.00	0.0*	0-NF	0.00	0.00	0.00	0.00	0.00	0.00
	110.40	110.40	491.20	3.44	0.0*	1-S2n	2.00	2.39	2.00	1.26	9.87	3.62
	220.80	220.80	492.74	4.98	0.0*	1-S2n	2.81	3.45	2.84	1.73	11.97	3.97
	331.20	331.20	494.04	6.28	0.0*	1-S2n	3.47	4.28	3.52	2.08	13.35	4.18
	441.60	441.60	495.15	7.39	1.08	1-S2n	4.08	5.00	4.13	2.35	14.41	4.34
	552.00	552.00	496.24	8.48	1.32	1-S2n	4.62	5.60	4.63	2.59	15.51	4.48
	662.40	662.40	497.40	9.64	1.53	1-S2n	5.15	6.17	5.23	2.80	15.96	4.60
	772.80	772.80	498.71	10.95	1.72	5-S2n	5.66	6.68	5.74	2.99	16.57	4.71
	883.20	883.20	500.21	12.45	1.89	5-S2n	6.17	7.15	6.26	3.16	17.10	4.81
Q50	938.00	938.00	501.04	13.28	1.97	5-S2n	6.44	7.36	6.51	3.24	17.34	4.85
Q100	1104.00	1104.00	503.85	16.09	2.20	5-S2n	7.27	7.98	7.33	3.47	17.94	4.98

PRELIM. BY _____ DATE _____ PROJ. NO. _____ FILE NO. _____ OF _____
FINAL CHK. BY _____ DATE _____ LOCATION _____ SH. NO. _____ OF _____
ITEM NO. _____ SUBJECT _____

Existing Culvert

HW/D @ Q50

503.85' - 487.76' = 16.09'
497.37' - 487.76' = 9.61'

$$\frac{16.09'}{9.61'} = 1.67 > 0.80$$

HY-8 Analysis Results

Culvert Summary Table - Culvert 1

Culvert Crossing: Slipline 7 ft

Total Discharge (cfs)	Culvert Discharge (cfs)	Headwater Elevation (ft)	Inlet Control Depth(ft)	Outlet Control Depth(ft)	Flow Type	Normal Depth (ft)	Critical Depth (ft)	Outlet Depth (ft)	Tailwater Depth (ft)	Outlet Velocity (ft/s)	Tailwater Velocity (ft/s)
0.00	0.00	488.78	0.00	0.0*	0-NF	0.00	0.00	0.00	0.00	0.00	0.00
110.40	110.40	492.69	3.91	0.0*	1-S2n	2.57	2.69	2.58	1.26	8.54	3.62
220.80	220.80	494.62	5.84	0.0*	1-S2n	3.83	3.87	3.84	1.73	10.22	3.97
331.20	331.20	497.11	7.98	8.33	2-M2c	5.07	4.79	4.79	2.08	11.79	4.18
441.60	441.60	499.70	10.92	10.58	7-M2c	7.00	5.52	5.52	2.35	13.57	4.34
552.00	552.00	503.93	14.70	15.15	7-M2c	7.00	6.04	6.08	2.59	15.55	4.48
662.40	662.40	509.15	19.08	20.37	7-M2c	7.00	6.54	6.45	2.80	17.86	4.60
772.80	687.98	510.48	20.16	21.70	7-M2c	7.00	6.65	6.69	2.99	18.15	4.71
883.20	692.66	510.73	20.36	21.95	7-M2c	7.00	6.67	6.75	3.16	18.20	4.81
938.00	694.44	510.83	20.43	22.05	7-M2c	7.00	6.68	6.77	3.24	18.23	4.85
1104.00	698.65	511.05	20.61	22.27	7-M2c	7.00	6.70	6.80	3.47	18.30	4.98

HY-8 Analysis Results

Culvert Summary Table - Culvert 1

Culvert Crossing: Slipline 7 ft

Total Discharge (cfs)	Culvert Discharge (cfs)	Headwater Elevation (ft)	Inlet Control Depth(ft)	Outlet Control Depth(ft)	Flow Type	Normal Depth (ft)	Critical Depth (ft)	Outlet Depth (ft)	Tailwater Depth (ft)	Outlet Velocity (ft/s)	Tailwater Velocity (ft/s)
0.71	0.71	488.92	0.14	0.0*	1-S2n	0.06	0.06	0.06	0.08	2.06	0.78
1.59	1.59	489.01	0.23	0.0*	1-S2n	0.14	0.14	0.14	0.14	2.19	1.04
2.46	2.46	489.10	0.32	0.0*	1-S2n	0.22	0.22	0.22	0.17	2.33	1.21
3.34	3.34	489.19	0.41	0.0*	1-S2n	0.29	0.30	0.30	0.21	2.50	1.35
4.22	4.22	489.29	0.51	0.0*	1-S2n	0.37	0.38	0.38	0.24	2.68	1.46
5.09	5.09	489.39	0.61	0.0*	1-S2n	0.45	0.45	0.45	0.26	2.92	1.55
5.97	5.97	489.50	0.72	0.0*	1-S2n	0.53	0.53	0.53	0.29	3.18	1.63
6.85	6.85	489.61	0.83	0.0*	1-S2n	0.60	0.61	0.60	0.31	3.48	1.70
7.73	7.73	489.74	0.96	0.0*	1-S2n	0.68	0.69	0.68	0.33	3.86	1.77
8.00	8.00	489.78	1.00	0.0*	1-S2n	0.70	0.70	0.70	0.34	3.99	1.79
9.48	9.48	489.94	1.16	0.0*	1-S2n	0.74	0.75	0.75	0.37	4.76	1.89

HY-8 Analysis Results

Culvert Summary Table - Culvert 1

Culvert Crossing: Slipline 7 ft

Total Discharge (cfs)	Culvert Discharge (cfs)	Headwater Elevation (ft)	Inlet Control Depth(ft)	Outlet Control Depth(ft)	Flow Type	Normal Depth (ft)	Critical Depth (ft)	Outlet Depth (ft)	Tailwater Depth (ft)	Outlet Velocity (ft/s)	Tailwater Velocity (ft/s)
125.80	125.80	492.99	4.21	0.0*	1-S2n	2.77	2.89	2.78	1.34	8.85	3.69
191.62	191.62	494.13	5.35	0.0*	1-S2n	3.52	3.60	3.52	1.63	9.89	3.89
257.44	257.44	495.97	6.49	7.19	2-M2c	4.23	4.21	4.21	1.86	10.65	4.04
323.26	323.26	496.98	7.81	8.20	2-M2c	4.97	4.72	4.73	2.05	11.67	4.17
389.08	389.08	498.19	9.41	9.26	2-M2c	5.97	5.18	5.20	2.23	12.73	4.27
454.90	454.90	500.12	11.34	11.11	7-M2c	7.00	5.60	5.60	2.38	13.78	4.36
520.72	520.72	502.59	13.55	13.81	7-M2c	7.00	5.90	5.94	2.53	14.96	4.45
586.54	586.54	505.46	16.02	16.68	7-M2c	7.00	6.19	6.22	2.66	16.23	4.52
593.00	593.00	505.75	16.27	16.97	7-M2c	7.00	6.22	6.24	2.67	16.37	4.53
718.18	684.40	510.30	20.00	21.52	7-M2c	7.00	6.63	6.61	2.90	18.18	4.66
784.00	688.56	510.52	20.18	21.74	7-M2c	7.00	6.65	6.70	3.01	18.16	4.72

HY-8 Culvert Analysis Report 7.5'ø Al. pipe

Site Data - Culvert 1

Site Data Option: Culvert Invert Data

Inlet Station: 0.00 ft

Inlet Elevation: 488.78 ft

Outlet Station: 139.39 ft

Outlet Elevation: 485.99 ft

Number of Barrels: 1

Culvert Data Summary - Culvert 1

Barrel Shape: Circular

Barrel Diameter: 7.50 ft

Barrel Material: Corrugated Aluminum

Embedment: 0.00 in

Barrel Manning's n: 0.0310

Inlet Type: Conventional

Inlet Edge Condition: Mitered to Conform to Slope

Inlet Depression: None

Table 1 - Downstream Channel Rating Curve (Crossing: Slipline 7.5 ft)

Flow (cfs)	Water Surface Elev (ft)	Depth (ft)	Velocity (ft/s)	Shear (psf)	Froude Number
125.80	487.83	1.34	3.69	0.84	0.77
223.62	488.23	1.74	3.97	1.09	0.74
321.44	488.54	2.05	4.16	1.28	0.72
419.26	488.79	2.30	4.31	1.44	0.71
517.08	489.01	2.52	4.44	1.57	0.70
593.00	489.16	2.67	4.53	1.67	0.69
712.72	489.38	2.89	4.65	1.80	0.68
810.54	489.54	3.05	4.75	1.90	0.68
908.36	489.69	3.20	4.83	2.00	0.67
1006.18	489.83	3.34	4.91	2.08	0.67
1104.00	489.96	3.47	4.98	2.17	0.67

Tailwater Channel Data - Slipline 7.5 ft

Tailwater Channel Option: Irregular Channel

Channel Slope: 0.0100

User Defined Channel Cross-Section:

Coord No.	Station (ft)	Elevation (ft)	Manning's n
1	0.00	510.00	0.1200
2	22.00	505.00	0.1200
3	61.00	500.00	0.1200
4	122.00	495.00	0.1200
5	182.00	490.00	0.1200
6	245.00	487.19	0.0350
7	247.00	486.49	0.0350
8	255.00	486.49	0.0350
9	257.00	486.49	0.0350
10	312.00	490.00	0.1200
11	337.00	500.00	0.1200
12	417.00	510.00	0.1200
13	511.00	515.00	0.0000

Tailwater Rating Curve Plot for Crossing: Slipline 7.5 ft

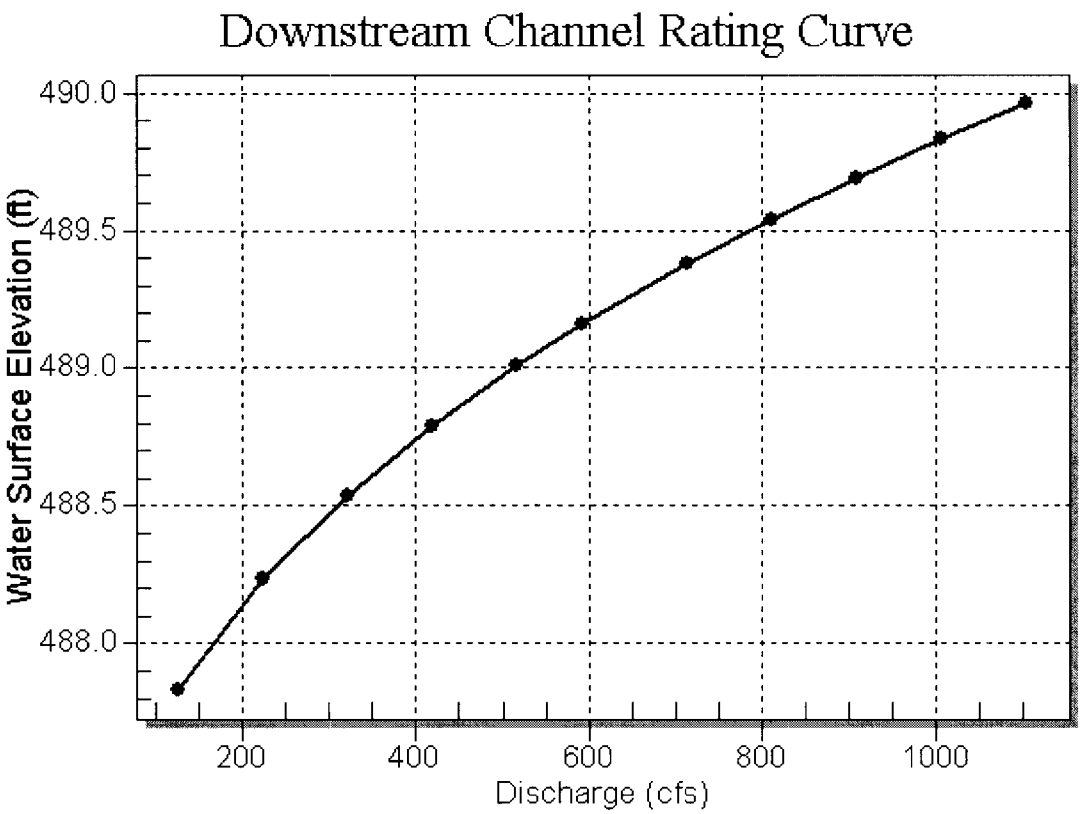

Roadway Data for Crossing: Slipline 7.5 ft

Roadway Profile Shape: Irregular Roadway Shape (coordinates)

Irregular Roadway Cross-Section:

Coord No.	Station (ft)	Elevation (ft)
1	0.00	515.00
2	27.00	514.00
3	60.00	513.00
4	102.00	512.00
5	159.00	511.00
6	245.00	510.00
7	295.00	510.00
8	403.00	511.00
9	456.00	512.00
10	498.00	513.00
11	530.00	514.00
12	559.00	515.00

Roadway Surface: Paved

Roadway Top Width: 55.00 ft

HY-8 Analysis Results

Culvert Summary Table - Culvert 1

Culvert Crossing: Slipline 7.5 ft

Total Discharge (cfs)	Culvert Discharge (cfs)	Headwater Elevation (ft)	Inlet Control Depth(ft)	Outlet Control Depth(ft)	Flow Type	Normal Depth (ft)	Critical Depth (ft)	Outlet Depth (ft)	Tailwater Depth (ft)	Outlet Velocity (ft/s)	Tailwater Velocity (ft/s)
0.00	0.00	488.78	0.00	0.0*	0-NF	0.00	0.00	0.00	0.00	0.00	0.00
110.40	110.40	492.57	3.79	0.0*	1-S2n	2.49	2.62	2.51	1.26	8.47	3.62
220.80	220.80	494.41	5.63	0.0*	1-S2n	3.67	3.80	3.69	1.73	10.21	3.97
331.20	331.20	496.84	7.38	8.06	2-M2c	4.74	4.69	4.70	2.08	11.37	4.18
441.60	441.60	498.38	9.60	9.60	2-M2c	5.95	5.43	5.44	2.35	12.86	4.34
552.00	552.00	501.26	12.48	12.12	7-M2c	7.50	6.05	6.06	2.59	14.45	4.48
662.40	662.40	504.90	15.97	16.12	7-M2c	7.50	6.50	6.54	2.80	16.21	4.60
772.80	772.80	509.37	19.91	20.59	7-M2c	7.50	6.94	6.88	2.99	18.21	4.71
883.20	797.89	510.49	20.85	21.71	7-M2c	7.50	7.05	6.95	3.16	18.68	4.81
938.00	800.88	510.62	20.96	21.84	7-M2c	7.50	7.06	6.94	3.24	18.76	4.85
1104.00	807.33	510.91	21.21	22.13	7-M2c	7.50	7.08	6.97	3.47	18.86	4.98

HY-8 Analysis Results

Culvert Summary Table - Culvert 1

Culvert Crossing: Slipline 7.5 ft

Total Discharge (cfs)	Culvert Discharge (cfs)	Headwater Elevation (ft)	Inlet Control Depth(ft)	Outlet Control Depth(ft)	Flow Type	Normal Depth (ft)	Critical Depth (ft)	Outlet Depth (ft)	Tailwater Depth (ft)	Outlet Velocity (ft/s)	Tailwater Velocity (ft/s)
0.71	0.71	488.92	0.14	0.0*	1-S2n	0.06	0.06	0.06	0.08	2.14	0.78
1.59	1.59	489.00	0.22	0.0*	1-S2n	0.12	0.13	0.13	0.14	2.23	1.04
2.46	2.46	489.08	0.30	0.0*	1-S2n	0.19	0.20	0.20	0.17	2.35	1.21
3.34	3.34	489.16	0.38	0.0*	1-S2n	0.26	0.27	0.27	0.21	2.48	1.35
4.22	4.22	489.24	0.46	0.0*	1-S2n	0.33	0.34	0.34	0.24	2.63	1.46
5.09	5.09	489.33	0.55	0.0*	1-S2n	0.40	0.41	0.41	0.26	2.79	1.55
5.97	5.97	489.42	0.64	0.0*	1-S2n	0.47	0.48	0.47	0.29	3.02	1.63
6.85	6.85	489.52	0.74	0.0*	1-S2n	0.54	0.55	0.54	0.31	3.23	1.70
7.73	7.73	489.62	0.84	0.0*	1-S2n	0.61	0.62	0.61	0.33	3.49	1.77
8.00	8.00	489.65	0.87	0.0*	1-S2n	0.63	0.64	0.63	0.34	3.57	1.79
9.48	9.48	489.85	1.07	0.0*	1-S2n	0.75	0.75	0.75	0.37	4.12	1.89

HY-8 Analysis Results

Culvert Summary Table - Culvert 1

Culvert Crossing: Slipline 7.5 ft

Total Discharge (cfs)	Culvert Discharge (cfs)	Headwater Elevation (ft)	Inlet Control Depth(ft)	Outlet Control Depth(ft)	Flow Type	Normal Depth (ft)	Critical Depth (ft)	Outlet Depth (ft)	Tailwater Depth (ft)	Outlet Velocity (ft/s)	Tailwater Velocity (ft/s)
125.80	125.80	492.87	4.09	0.0*	1-S2n	2.67	2.82	2.71	1.34	8.73	3.69
191.62	191.62	493.97	5.19	0.0*	1-S2n	3.38	3.51	3.40	1.63	9.82	3.89
257.44	257.44	494.96	6.18	0.0*	1-S2n	4.03	4.10	4.03	1.86	10.64	4.04
323.26	323.26	496.75	7.24	7.97	2-M2c	4.66	4.63	4.64	2.05	11.26	4.17
389.08	389.08	497.66	8.46	8.88	2-M2c	5.33	5.10	5.11	2.23	12.15	4.27
454.90	454.90	498.69	9.91	9.80	2-M2c	6.16	5.51	5.52	2.38	13.07	4.36
520.72	520.72	500.37	11.59	11.05	2-M2c	7.50	5.89	5.90	2.53	13.99	4.45
586.54	586.54	502.29	13.51	13.34	7-M2c	7.50	6.19	6.23	2.66	15.01	4.52
593.00	593.00	502.49	13.71	13.58	7-M2c	7.50	6.21	6.25	2.67	15.11	4.53
718.18	718.18	507.05	17.91	18.27	7-M2c	7.50	6.72	6.73	2.90	17.18	4.66
784.00	784.00	509.87	20.33	21.09	7-M2c	7.50	6.99	6.91	3.01	18.43	4.72

HY-8 Culvert Analysis Report

6.5' Ø
Weholite
Pipe

Site Data - Culvert 1

Site Data Option: Culvert Invert Data

Inlet Station: 0.00 ft

Inlet Elevation: 488.78 ft

Outlet Station: 139.39 ft

Outlet Elevation: 485.99 ft

Number of Barrels: 1

Culvert Data Summary - Culvert 1

Barrel Shape: Circular

Barrel Diameter: 6.50 ft

Barrel Material: Smooth HDPE

Embedment: 0.00 in

Barrel Manning's n: 0.0120

Inlet Type: Conventional

Inlet Edge Condition: Mitered to Conform to Slope

Inlet Depression: None

Table 1 - Downstream Channel Rating Curve (Crossing: Slipline 6.5ft Weholite)

Flow (cfs)	Water Surface Elev (ft)	Depth (ft)	Velocity (ft/s)	Shear (psf)	Froude Number
125.80	487.83	1.34	3.69	0.84	0.77
191.62	488.12	1.63	3.89	1.02	0.75
257.44	488.35	1.86	4.04	1.16	0.73
323.26	488.54	2.05	4.17	1.28	0.72
389.08	488.72	2.23	4.27	1.39	0.71
454.90	488.87	2.38	4.36	1.49	0.70
520.72	489.02	2.53	4.45	1.58	0.70
586.54	489.15	2.66	4.52	1.66	0.69
593.00	489.16	2.67	4.53	1.67	0.69
718.18	489.39	2.90	4.66	1.81	0.68
784.00	489.50	3.01	4.72	1.88	0.68

Tailwater Channel Data - Slipline 6.5ft Weholite

Tailwater Channel Option: Irregular Channel

Channel Slope: 0.0100

User Defined Channel Cross-Section:

Coord No.	Station (ft)	Elevation (ft)	Manning's n
1	0.00	510.00	0.1200
2	22.00	505.00	0.1200
3	61.00	500.00	0.1200
4	122.00	495.00	0.1200
5	182.00	490.00	0.1200
6	245.00	487.19	0.0350
7	247.00	486.49	0.0350
8	255.00	486.49	0.0350
9	257.00	486.49	0.0350
10	312.00	490.00	0.1200
11	337.00	500.00	0.1200
12	417.00	510.00	0.1200
13	511.00	515.00	0.0000

Tailwater Rating Curve Plot for Crossing: Slipline 6.5ft Weholite

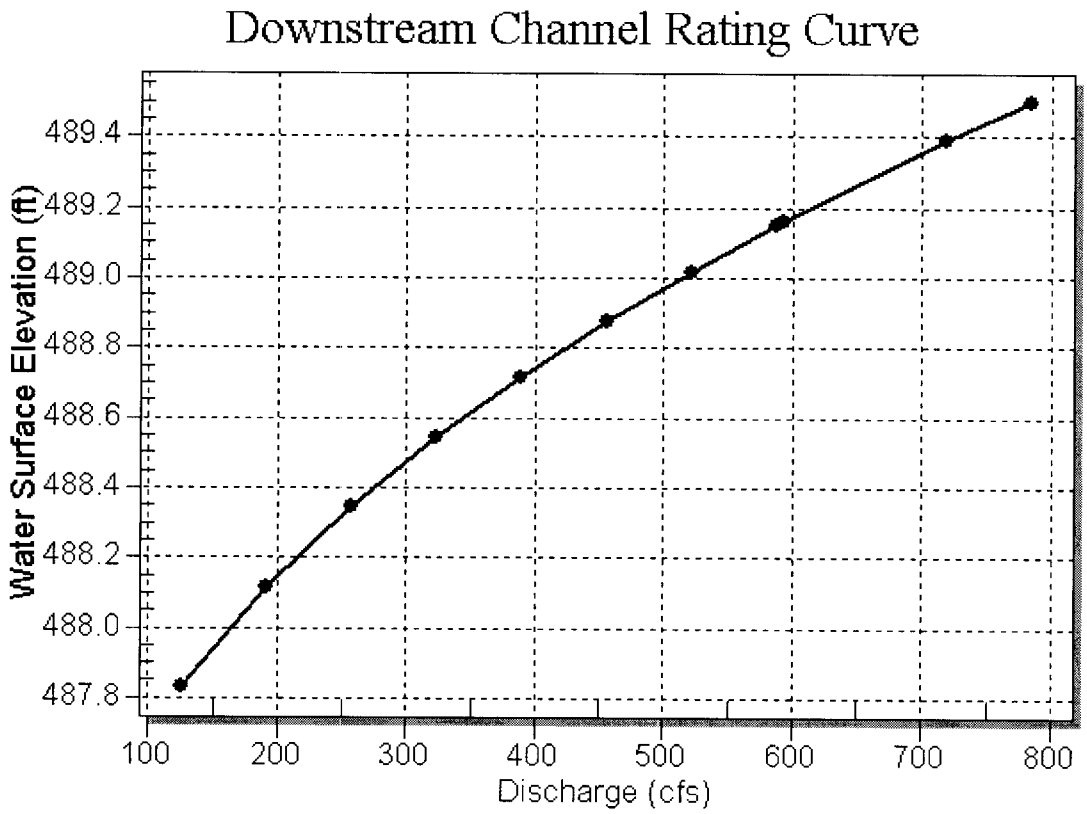

Roadway Data for Crossing: Slipline 6.5ft Weholite

Roadway Profile Shape: Irregular Roadway Shape (coordinates)

Irregular Roadway Cross-Section:

Coord No.	Station (ft)	Elevation (ft)
1	0.00	515.00
2	27.00	514.00
3	60.00	513.00
4	102.00	512.00
5	159.00	511.00
6	245.00	510.00
7	295.00	510.00
8	403.00	511.00
9	456.00	512.00
10	498.00	513.00
11	530.00	514.00
12	559.00	515.00

Roadway Surface: Paved

Roadway Top Width: 55.00 ft

HY-8 Analysis Results

Culvert Summary Table - Culvert 1

Culvert Crossing: Slipline 6.5ft Weholite

Total Discharge (cfs)	Culvert Discharge (cfs)	Headwater Elevation (ft)	Inlet Control Depth(ft)	Outlet Control Depth(ft)	Flow Type	Normal Depth (ft)	Critical Depth (ft)	Outlet Depth (ft)	Tailwater Depth (ft)	Outlet Velocity (ft/s)	Tailwater Velocity (ft/s)
0.71	0.71	488.92	0.14	0.0*	1-S2n	0.03	0.07	0.06	0.08	2.31	0.78
1.59	1.59	489.02	0.24	0.0*	1-S2n	0.06	0.16	0.10	0.14	3.29	1.04
2.46	2.46	489.12	0.34	0.0*	1-S2n	0.10	0.25	0.14	0.17	3.82	1.21
3.34	3.34	489.23	0.45	0.0*	1-S2n	0.13	0.33	0.13	0.21	5.30	1.35
4.22	4.22	489.34	0.56	0.0*	1-S2n	0.16	0.42	0.21	0.24	4.50	1.46
5.09	5.09	489.46	0.68	0.0*	1-S2n	0.20	0.51	0.20	0.26	5.72	1.55
5.97	5.97	489.60	0.82	0.0*	1-S2n	0.23	0.60	0.29	0.29	5.05	1.63
6.85	6.85	489.73	0.95	0.0*	1-S2n	0.26	0.66	0.28	0.31	5.85	1.70
7.73	7.73	489.84	1.06	0.0*	1-S2n	0.30	0.69	0.31	0.33	6.14	1.77
8.00	8.00	489.79	1.01	0.0*	1-S2n	0.31	0.70	0.32	0.34	6.23	1.79
9.48	9.48	489.87	1.09	0.0*	1-S2n	0.37	0.75	0.37	0.37	6.74	1.89

HY-8 Analysis Results

Culvert Summary Table - Culvert 1

Culvert Crossing: Slipline 6.5ft Weholite

Total Discharge (cfs)	Culvert Discharge (cfs)	Headwater Elevation (ft)	Inlet Control Depth(ft)	Outlet Control Depth(ft)	Flow Type	Normal Depth (ft)	Critical Depth (ft)	Outlet Depth (ft)	Tailwater Depth (ft)	Outlet Velocity (ft/s)	Tailwater Velocity (ft/s)
125.80	125.80	493.12	4.34	0.0*	1-S2n	1.71	2.94	1.92	1.34	15.31	3.69
191.62	191.62	494.36	5.58	0.0*	1-S2n	2.14	3.68	2.46	1.63	16.65	3.89
257.44	257.44	495.76	6.98	0.0*	5-S2n	2.52	4.29	2.94	1.86	17.68	4.04
323.26	323.26	497.52	8.74	0.0*	5-S2n	2.86	4.81	3.37	2.05	18.58	4.17
389.08	389.08	499.70	10.92	0.0*	5-S2n	3.18	5.26	3.78	2.23	19.43	4.27
454.90	454.90	502.27	13.49	0.09	5-S2n	3.50	5.59	4.16	2.38	20.29	4.36
520.72	520.72	505.13	16.35	0.24	5-S2n	3.80	5.92	4.52	2.53	21.17	4.45
586.54	586.54	508.21	19.43	0.37	5-S2n	4.12	6.25	4.84	2.66	22.18	4.52
593.00	593.00	508.55	19.77	0.38	5-S2n	4.15	6.28	4.87	2.67	22.27	4.53
718.18	627.16	510.50	21.72	0.61	5-S2n	4.32	6.46	5.03	2.90	22.79	4.66
784.00	629.79	510.66	21.88	0.72	5-S2n	4.33	6.47	5.04	3.01	22.83	4.72

HY-8 Analysis Results

Culvert Summary Table - Culvert 1

Culvert Crossing: Slipline 6.5ft Weholite

Total Discharge (cfs)	Culvert Discharge (cfs)	Headwater Elevation (ft)	Inlet Control Depth(ft)	Outlet Control Depth(ft)	Flow Type	Normal Depth (ft)	Critical Depth (ft)	Outlet Depth (ft)	Tailwater Depth (ft)	Outlet Velocity (ft/s)	Tailwater Velocity (ft/s)
0.00	0.00	488.78	0.00	0.0*	0-NF	0.00	0.00	0.00	0.00	0.00	0.00
110.40	110.40	492.81	4.03	0.0*	1-S2n	1.60	2.75	1.78	1.26	14.92	3.62
220.80	220.80	494.95	6.17	0.0*	1-S2n	2.31	3.97	2.68	1.73	17.12	3.97
331.20	331.20	497.76	8.98	0.0*	5-S2n	2.90	4.87	3.42	2.08	18.69	4.18
441.60	441.60	501.73	12.95	0.06	5-S2n	3.43	5.52	4.09	2.35	20.12	4.34
552.00	552.00	506.57	17.79	0.30	5-S2n	3.95	6.08	4.67	2.59	21.64	4.48
662.40	623.99	510.32	21.54	0.51	5-S2n	4.31	6.44	5.02	2.80	22.74	4.60
772.80	629.40	510.64	21.86	0.70	5-S2n	4.33	6.47	5.04	2.99	22.83	4.71
883.20	632.83	510.84	22.06	0.87	5-S2n	4.35	6.48	5.06	3.16	22.88	4.81
938.00	634.21	510.92	22.14	0.95	5-S2n	4.36	6.49	5.06	3.24	22.90	4.85
1104.00	637.52	511.12	22.34	15.20	6-FFc	4.37	6.50	6.50	3.47	19.21	4.98

HY-8 Culvert Analysis Report 9.5'Ø SRR PE

Site Data - Culvert 1

Site Data Option: Culvert Invert Data

Inlet Station: 0.00 ft

Inlet Elevation: 488.00 ft

Outlet Station: 139.39 ft

Outlet Elevation: 485.26 ft

Number of Barrels: 1

Culvert Data Summary - Culvert 1

Barrel Shape: Circular

Barrel Diameter: 9.50 ft

Barrel Material: Smooth HDPE

Embedment: 0.00 in

Barrel Manning's n: 0.0120

Inlet Type: Conventional

Inlet Edge Condition: Square Edge with Headwall

Inlet Depression: None

Table 1 - Downstream Channel Rating Curve (Crossing: Slipline 9.5 ft SPR PE)

Flow (cfs)	Water Surface Elev (ft)	Depth (ft)	Velocity (ft/s)	Shear (psf)	Froude Number
0.71	486.57	0.08	0.78	0.05	0.49
1.59	486.63	0.14	1.04	0.08	0.53
2.46	486.66	0.17	1.21	0.11	0.55
3.34	486.70	0.21	1.35	0.13	0.56
4.22	486.73	0.24	1.46	0.15	0.57
5.09	486.75	0.26	1.55	0.16	0.58
5.97	486.78	0.29	1.63	0.18	0.59
6.85	486.80	0.31	1.70	0.19	0.59
7.73	486.82	0.33	1.77	0.21	0.60
8.00	486.83	0.34	1.79	0.21	0.60
9.48	486.86	0.37	1.89	0.23	0.61

Tailwater Channel Data - Slipline 9.5 ft SPR PE

Tailwater Channel Option: Irregular Channel

Channel Slope: 0.0100

User Defined Channel Cross-Section:

Coord No.	Station (ft)	Elevation (ft)	Manning's n
1	0.00	510.00	0.1200
2	22.00	505.00	0.1200
3	61.00	500.00	0.1200
4	122.00	495.00	0.1200
5	182.00	490.00	0.1200
6	245.00	487.19	0.0350
7	247.00	486.49	0.0350
8	255.00	486.49	0.0350
9	257.00	486.49	0.0350
10	312.00	490.00	0.1200
11	337.00	500.00	0.1200
12	417.00	510.00	0.1200
13	511.00	515.00	0.0000

Tailwater Rating Curve Plot for Crossing: Slipline 9.5 ft SPR PE

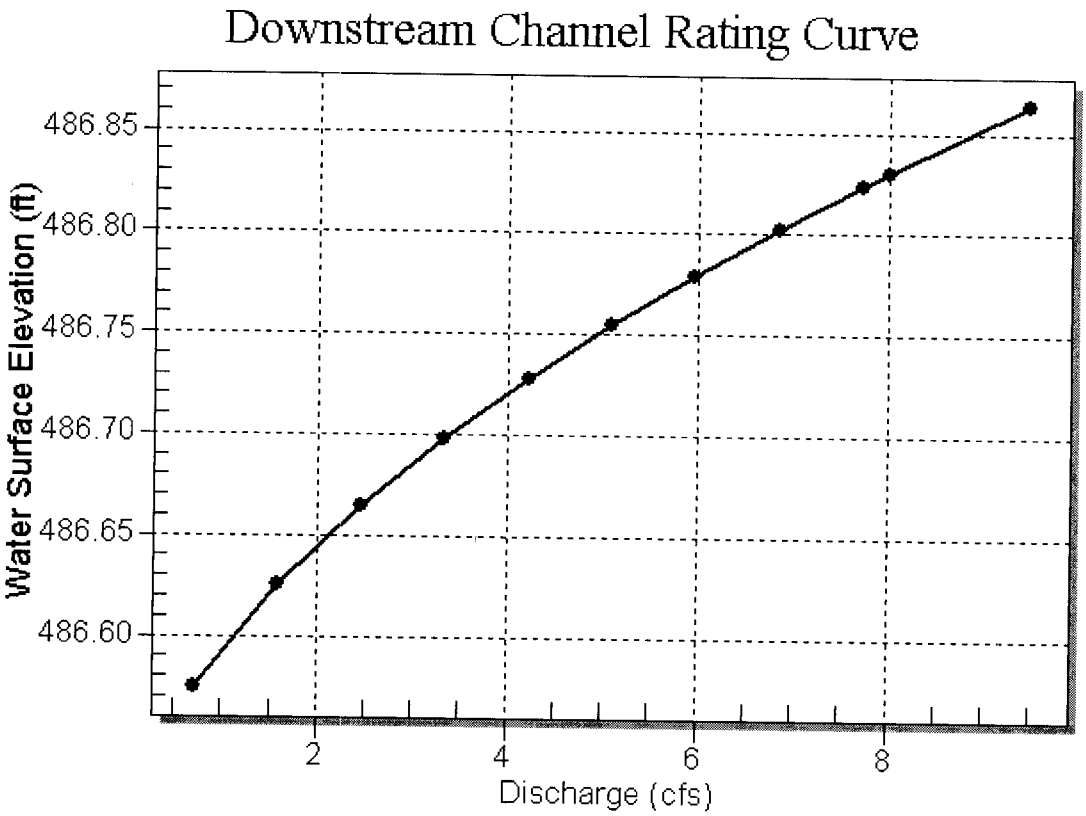

Roadway Data for Crossing: Slipline 9.5 ft SPR PE

Roadway Profile Shape: Irregular Roadway Shape (coordinates)

Irregular Roadway Cross-Section:

Coord No.	Station (ft)	Elevation (ft)
1	0.00	515.00
2	27.00	514.00
3	60.00	513.00
4	102.00	512.00
5	159.00	511.00
6	245.00	510.00
7	295.00	510.00
8	403.00	511.00
9	456.00	512.00
10	498.00	513.00
11	530.00	514.00
12	559.00	515.00

Roadway Surface: Paved

Roadway Top Width: 55.00 ft

HY-8 Analysis Results

Culvert Summary Table - Culvert 1

Culvert Crossing: Slipline 9.5 ft SPR PE

Total Discharge (cfs)	Culvert Discharge (cfs)	Headwater Elevation (ft)	Inlet Control Depth(ft)	Outlet Control Depth(ft)	Flow Type	Normal Depth (ft)	Critical Depth (ft)	Outlet Depth (ft)	Tailwater Depth (ft)	Outlet Velocity (ft/s)	Tailwater Velocity (ft/s)
0.71	0.71	488.14	0.14	0.0*	1-S2n	0.01	0.04	0.03	0.08	3.09	0.78
1.59	1.59	488.19	0.19	0.0*	1-S2n	0.03	0.09	0.08	0.14	2.68	1.04
2.46	2.46	488.25	0.25	0.0*	1-S2n	0.05	0.14	0.13	0.17	2.64	1.21
3.34	3.34	488.31	0.31	0.0*	1-S2n	0.07	0.19	0.08	0.21	5.72	1.35
4.22	4.22	488.36	0.36	0.0*	1-S2n	0.09	0.24	0.13	0.24	4.55	1.46
5.09	5.09	488.42	0.42	0.0*	1-S2n	0.11	0.29	0.18	0.26	4.08	1.55
5.97	5.97	488.48	0.48	0.0*	1-S2n	0.12	0.34	0.19	0.29	4.56	1.63
6.85	6.85	488.54	0.54	0.0*	1-S2n	0.14	0.39	0.18	0.31	5.51	1.70
7.73	7.73	488.60	0.60	0.0*	1-S2n	0.16	0.44	0.23	0.33	5.00	1.77
8.00	8.00	488.62	0.62	0.0*	1-S2n	0.17	0.45	0.24	0.34	4.89	1.79
9.48	9.48	488.72	0.72	0.0*	1-S2n	0.20	0.53	0.22	0.37	6.16	1.89

HY-8 Analysis Results

Culvert Summary Table - Culvert 1

Culvert Crossing: Slipline 9.5 ft SPR PE

Total Discharge (cfs)	Culvert Discharge (cfs)	Headwater Elevation (ft)	Inlet Control Depth(ft)	Outlet Control Depth(ft)	Flow Type	Normal Depth (ft)	Critical Depth (ft)	Outlet Depth (ft)	Tailwater Depth (ft)	Outlet Velocity (ft/s)	Tailwater Velocity (ft/s)
0.00	0.00	488.00	0.00	0.0*	0-NF	0.00	0.00	0.00	0.00	0.00	0.00
110.40	110.40	491.50	3.50	0.0*	1-S2n	1.37	2.43	1.55	1.26	14.28	3.62
220.80	220.80	493.10	5.10	0.0*	1-S2n	2.01	3.51	2.32	1.73	16.34	3.97
331.20	331.20	494.41	6.41	0.0*	1-S2n	2.46	4.35	2.95	2.08	17.65	4.18
441.60	441.60	495.59	7.59	0.0*	1-S2n	2.89	5.06	3.49	2.35	18.65	4.34
552.00	552.00	496.80	8.80	0.0*	1-S2n	3.22	5.71	4.00	2.59	19.49	4.48
662.40	662.40	498.17	10.17	0.0*	5-S2n	3.56	6.26	4.46	2.80	20.28	4.60
772.80	772.80	499.77	11.77	0.0*	5-S2n	3.89	6.78	4.89	2.99	21.00	4.71
883.20	883.20	501.62	13.62	0.0*	5-S2n	4.18	7.22	5.30	3.16	21.72	4.81
938.00	938.00	502.64	14.64	0.0*	5-S2n	4.33	7.45	5.50	3.24	22.08	4.85
1104.00	1104.00	506.10	18.10	1.96	5-S2n	4.77	7.97	6.07	3.47	23.14	4.98

HY-8 Analysis Results

Culvert Summary Table - Culvert 1

Culvert Crossing: Slipline 9.5 ft SPR PE

	Total Discharge (cfs)	Culvert Discharge (cfs)	Headwater Elevation (ft)	Inlet Control Depth(ft)	Outlet Control Depth(ft)	Flow Type	Normal Depth (ft)	Critical Depth (ft)	Outlet Depth (ft)	Tailwater Depth (ft)	Outlet Velocity (ft/s)	Tailwater Velocity (ft/s)
$Q_{1.1}$ →	125.80	125.80	491.75	3.75	0.0*	1-S2n	1.47	2.62	1.67	1.34	14.69	3.69
	191.62	191.62	492.70	4.70	0.0*	1-S2n	1.90	3.26	2.14	1.63	15.91	3.89
	257.44	257.44	493.56	5.56	0.0*	1-S2n	2.16	3.83	2.53	1.86	16.83	4.04
	323.26	323.26	494.32	6.32	0.0*	1-S2n	2.42	4.29	2.91	2.05	17.55	4.17
	389.08	389.08	495.03	7.03	0.0*	1-S2n	2.69	4.75	3.24	2.23	18.19	4.27
	454.90	454.90	495.73	7.73	0.0*	1-S2n	2.93	5.14	3.55	2.38	18.79	4.36
	520.72	520.72	496.44	8.44	0.0*	1-S2n	3.13	5.53	3.86	2.53	19.28	4.45
	586.54	586.54	497.21	9.21	0.0*	1-S2n	3.33	5.88	4.14	2.66	19.76	4.52
Q_{10} —	593.00	593.00	497.28	9.28	0.0*	1-S2n	3.35	5.91	4.17	2.67	19.80	4.53
	718.18	718.18	498.94	10.94	0.0*	5-S2n	3.73	6.53	4.68	2.90	20.64	4.66
Q_{25} —	784.00	784.00	499.94	11.94	0.0*	5-S2n	3.92	6.82	4.94	3.01	21.07	4.72

HY-8 Culvert Analysis Report

7.5'Ø Al slipline with over flow Culverts

Site Data - Culvert 1

Site Data Option: Culvert Invert Data
Inlet Station: 0.00 ft
Inlet Elevation: 488.78 ft
Outlet Station: 139.39 ft
Outlet Elevation: 485.99 ft
Number of Barrels: 1

Culvert Data Summary - Culvert 1

Barrel Shape: Circular
Barrel Diameter: 7.50 ft
Barrel Material: Corrugated Aluminum
Embedment: 0.00 in
Barrel Manning's n: 0.0310
Inlet Type: Conventional
Inlet Edge Condition: Mitered to Conform to Slope
Inlet Depression: None

Site Data - Culvert 2

Site Data Option: Culvert Invert Data
Inlet Station: 0.00 ft
Inlet Elevation: 500.50 ft
Outlet Station: 100.00 ft
Outlet Elevation: 499.50 ft
Number of Barrels: 1

Culvert Data Summary - Culvert 2

Barrel Shape: Circular
Barrel Diameter: 4.50 ft
Barrel Material: Corrugated Steel
Embedment: 0.00 in
Barrel Manning's n: 0.0240
Inlet Type: Conventional
Inlet Edge Condition: Thin Edge Projecting
Inlet Depression: None

Site Data - Culvert 2 (Copy)

Site Data Option: Culvert Invert Data
Inlet Station: 0.00 ft

Table 1 - Downstream Channel Rating Curve (Crossing: Slipline 7.5 ft alum (Copy))

Flow (cfs)	Water Surface Elev (ft)	Depth (ft)	Velocity (ft/s)	Shear (psf)	Froude Number
0.00	486.49	0.00	0.00	0.00	0.00
110.40	487.75	1.26	3.62	0.79	0.77
220.80	488.22	1.73	3.97	1.08	0.74
331.20	488.57	2.08	4.18	1.30	0.72
441.60	488.84	2.35	4.34	1.47	0.70
552.00	489.08	2.59	4.48	1.62	0.69
662.40	489.29	2.80	4.60	1.75	0.69
772.80	489.48	2.99	4.71	1.87	0.68
883.20	489.65	3.16	4.81	1.97	0.68
938.00	489.73	3.24	4.85	2.02	0.67
1104.00	489.96	3.47	4.98	2.17	0.67

Tailwater Channel Data - Slipline 7.5 ft alum (Copy)

Tailwater Channel Option: Irregular Channel

Channel Slope: 0.0100

User Defined Channel Cross-Section:

Coord No.	Station (ft)	Elevation (ft)	Manning's n
1	0.00	510.00	0.1200
2	22.00	505.00	0.1200
3	61.00	500.00	0.1200
4	122.00	495.00	0.1200
5	182.00	490.00	0.1200
6	245.00	487.19	0.0350
7	247.00	486.49	0.0350
8	255.00	486.49	0.0350
9	257.00	486.49	0.0350
10	312.00	490.00	0.1200
11	337.00	500.00	0.1200
12	417.00	510.00	0.1200
13	511.00	515.00	0.0000

Tailwater Rating Curve Plot for Crossing: Slipline 7.5 ft alum (Copy)

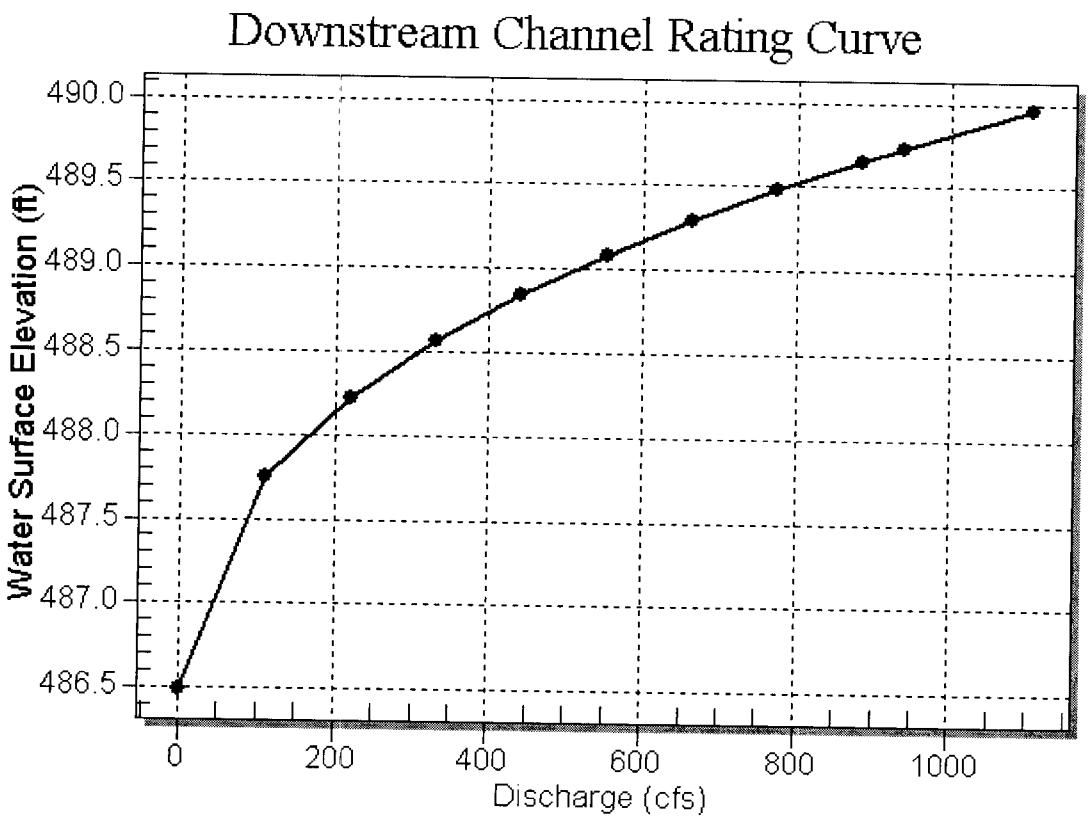

Roadway Data for Crossing: Slipline 7.5 ft alum (Copy)

Roadway Profile Shape: Irregular Roadway Shape (coordinates)

Irregular Roadway Cross-Section:

Coord No.	Station (ft)	Elevation (ft)
1	0.00	515.00
2	27.00	514.00
3	60.00	513.00
4	102.00	512.00
5	159.00	511.00
6	245.00	510.00
7	295.00	510.00
8	403.00	511.00
9	456.00	512.00
10	498.00	513.00
11	530.00	514.00
12	559.00	515.00

Roadway Surface: Paved

Roadway Top Width: 55.00 ft

HY-8 Analysis Results

Culvert Summary Table - Culvert 1

Culvert Crossing: Slipline 7.5 ft and overflow

Total Discharge (cfs)	Culvert Discharge (cfs)	Headwater Elevation (ft)	Inlet Control Depth(ft)	Outlet Control Depth(ft)	Flow Type	Normal Depth (ft)	Critical Depth (ft)	Outlet Depth (ft)	Tailwater Depth (ft)	Outlet Velocity (ft/s)	Tailwater Velocity (ft/s)
0.00	0.00	488.78	0.00	0.0*	0-NF	0.00	0.00	0.00	0.00	0.00	0.00
110.40	110.37	492.57	3.79	0.0*	1-S2n	2.49	2.62	2.51	1.26	8.47	3.62
220.80	220.78	494.41	5.63	0.0*	1-S2n	3.67	3.80	3.69	1.73	10.21	3.97
331.20	331.23	496.84	7.38	8.06	2-M2c	4.74	4.69	4.70	2.08	11.37	4.18
441.60	441.65	498.38	9.60	9.60	2-M2c	5.95	5.43	5.44	2.35	12.88	4.34
552.00	512.83	500.16	11.38	10.84	2-M2c	7.50	5.84	5.86	2.59	13.88	4.48
662.40	548.54	501.16	12.38	12.00	7-M2c	7.50	6.03	6.04	2.80	14.38	4.60
772.80	579.54	502.08	13.30	13.10	7-M2c	7.50	6.16	6.19	2.99	14.89	4.71
883.20	614.30	503.16	14.38	14.34	7-M2c	7.50	6.30	6.35	3.16	15.46	4.81
938.00	627.10	503.59	14.79	14.81	7-M2c	7.50	6.35	6.40	3.24	15.61	4.85
1104.00	660.62	504.83	15.91	16.05	7-M2c	7.50	6.49	6.53	3.47	16.18	4.98

HY-8 Analysis Results

Culvert Summary Table - Culvert 1

Culvert Crossing: Slipline 7.5 ft and overflow

Total Discharge (cfs)	Culvert Discharge (cfs)	Headwater Elevation (ft)	Inlet Control Depth(ft)	Outlet Control Depth(ft)	Flow Type	Normal Depth (ft)	Critical Depth (ft)	Outlet Depth (ft)	Tailwater Depth (ft)	Outlet Velocity (ft/s)	Tailwater Velocity (ft/s)
0.71	0.71	488.92	0.14	0.0*	1-S2n	0.06	0.06	0.06	0.08	2.14	0.78
1.59	1.59	489.00	0.22	0.0*	1-S2n	0.13	0.13	0.13	0.14	2.23	1.04
2.46	2.45	489.08	0.30	0.0*	1-S2n	0.19	0.20	0.20	0.17	2.35	1.21
3.34	3.33	489.16	0.38	0.0*	1-S2n	0.26	0.27	0.27	0.21	2.48	1.35
4.22	4.21	489.24	0.46	0.0*	1-S2n	0.33	0.34	0.34	0.24	2.62	1.46
5.09	5.09	489.33	0.55	0.0*	1-S2n	0.40	0.41	0.41	0.26	2.79	1.55
5.97	5.96	489.42	0.64	0.0*	1-S2n	0.47	0.48	0.47	0.29	3.02	1.63
6.85	6.84	489.52	0.74	0.0*	1-S2n	0.54	0.55	0.54	0.31	3.23	1.70
7.73	7.71	489.62	0.84	0.0*	1-S2n	0.61	0.62	0.61	0.33	3.48	1.77
8.00	7.99	489.65	0.87	0.0*	1-S2n	0.63	0.64	0.63	0.34	3.57	1.79
9.48	9.46	489.84	1.06	0.0*	1-S2n	0.74	0.75	0.74	0.37	4.11	1.89

HY-8 Analysis Results

Culvert Summary Table - Culvert 1

Culvert Crossing: Slipline 7.5 ft and overflow

Total Discharge (cfs)	Culvert Discharge (cfs)	Headwater Elevation (ft)	Inlet Control Depth(ft)	Outlet Control Depth(ft)	Flow Type	Normal Depth (ft)	Critical Depth (ft)	Outlet Depth (ft)	Tailwater Depth (ft)	Outlet Velocity (ft/s)	Tailwater Velocity (ft/s)
125.80	125.76	492.87	4.09	0.0*	1-S2n	2.67	2.82	2.71	1.34	8.73	3.69
191.62	191.61	493.97	5.19	0.0*	1-S2n	3.38	3.51	3.40	1.63	9.82	3.89
257.44	257.46	494.97	6.19	0.0*	1-S2n	4.03	4.10	4.03	1.86	10.64	4.04
323.26	323.23	496.75	7.24	7.97	2-M2c	4.66	4.63	4.64	2.05	11.26	4.17
389.08	389.06	497.66	8.46	8.88	2-M2c	5.33	5.10	5.11	2.23	12.15	4.27
454.90	454.86	498.69	9.91	9.80	2-M2c	6.16	5.50	5.52	2.38	13.07	4.36
520.72	499.17	499.80	11.02	10.50	2-M2c	7.50	5.76	5.78	2.53	13.69	4.45
586.54	525.49	500.50	11.72	11.15	2-M2c	7.50	5.91	5.92	2.66	14.05	4.52
593.00	527.72	500.57	11.79	11.26	2-M2c	7.50	5.93	5.93	2.67	14.08	4.53
718.18	563.54	501.60	12.81	12.53	7-M2c	7.50	6.09	6.12	2.90	14.64	4.66
784.00	587.44	502.32	13.54	13.37	7-M2c	7.50	6.19	6.23	3.01	15.02	4.72

HY-8 Analysis Results

Culvert Summary Table - Culvert 1

Culvert Crossing: Slipline 9.5 ft SPR PE and overflow

Total Discharge (cfs)	Culvert Discharge (cfs)	Headwater Elevation (ft)	Inlet Control Depth(ft)	Outlet Control Depth(ft)	Flow Type	Normal Depth (ft)	Critical Depth (ft)	Outlet Depth (ft)	Tailwater Depth (ft)	Outlet Velocity (ft/s)	Tailwater Velocity (ft/s)
0.00	0.00	488.00	0.00	0.0*	0-NF	0.00	0.00	0.00	0.00	0.00	0.00
110.40	110.35	491.50	3.50	0.0*	1-S2n	1.37	2.43	1.55	1.26	14.28	3.62
220.80	220.76	493.10	5.10	0.0*	1-S2n	2.01	3.51	2.32	1.73	16.34	3.97
331.20	331.13	494.41	6.41	0.0*	1-S2n	2.46	4.35	2.95	2.08	17.65	4.18
441.60	441.61	495.59	7.59	0.0*	1-S2n	2.89	5.06	3.49	2.35	18.65	4.34
552.00	552.05	496.80	8.80	0.0*	1-S2n	3.22	5.71	4.00	2.59	19.49	4.48
662.40	662.41	498.17	10.17	0.0*	5-S2n	3.56	6.26	4.46	2.80	20.28	4.60
772.80	772.86	499.77	11.77	0.0*	5-S2n	3.89	6.78	4.89	2.99	21.00	4.71
883.20	882.80	501.62	13.61	0.0*	5-S2n	4.18	7.22	5.30	3.16	21.71	4.81
938.00	931.23	502.51	14.51	0.0*	5-S2n	4.31	7.42	5.48	3.24	22.01	4.85
1104.00	1043.86	504.78	16.78	0.0*	5-S2n	4.61	7.79	5.86	3.47	22.75	4.98

HY-8 Culvert Analysis Report

Polyspray 250 Lining

Site Data - Culvert 1

Site Data Option: Culvert Invert Data

Inlet Station: 0.00 ft

Inlet Elevation: 487.76 ft

Outlet Station: 139.39 ft

Outlet Elevation: 485.01 ft

Number of Barrels: 1

Culvert Data Summary - Culvert 1

Barrel Shape: Circular

Barrel Diameter: 9.80 ft

Barrel Material: Corrugated Steel

Embedment: 0.00 in

Barrel Manning's n: 0.0240

Inlet Type: Conventional

Inlet Edge Condition: Mitered to Conform to Slope

Inlet Depression: None

Table 1 - Downstream Channel Rating Curve (Crossing: Polyspray FS 250 Lining)

Flow (cfs)	Water Surface Elev (ft)	Depth (ft)	Velocity (ft/s)	Shear (psf)	Froude Number
125.80	487.83	1.34	3.69	0.84	0.77
191.62	488.12	1.63	3.89	1.02	0.75
257.44	488.35	1.86	4.04	1.16	0.73
323.26	488.54	2.05	4.17	1.28	0.72
389.08	488.72	2.23	4.27	1.39	0.71
454.90	488.87	2.38	4.36	1.49	0.70
520.72	489.02	2.53	4.45	1.58	0.70
586.54	489.15	2.66	4.52	1.66	0.69
593.00	489.16	2.67	4.53	1.67	0.69
718.18	489.39	2.90	4.66	1.81	0.68
784.00	489.50	3.01	4.72	1.88	0.68

Tailwater Channel Data - Polyspray FS 250 Lining

Tailwater Channel Option: Irregular Channel

Channel Slope: 0.0100

User Defined Channel Cross-Section:

Coord No.	Station (ft)	Elevation (ft)	Manning's n
1	0.00	510.00	0.1200
2	22.00	505.00	0.1200
3	61.00	500.00	0.1200
4	122.00	495.00	0.1200
5	182.00	490.00	0.1200
6	245.00	487.19	0.0350
7	247.00	486.49	0.0350
8	255.00	486.49	0.0350
9	257.00	486.49	0.0350
10	312.00	490.00	0.1200
11	337.00	500.00	0.1200
12	417.00	510.00	0.1200
13	511.00	515.00	0.0000

Tailwater Rating Curve Plot for Crossing: Polyspray FS 250 Lining

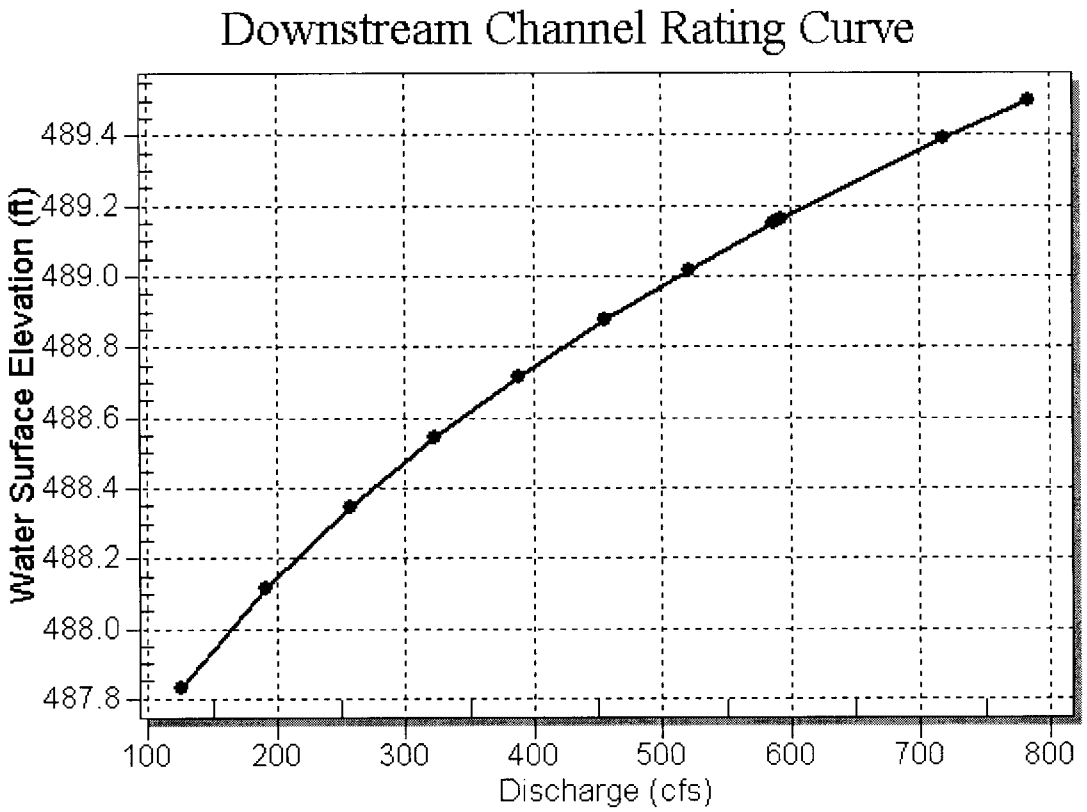

Roadway Data for Crossing: Polyspray FS 250 Lining

Roadway Profile Shape: Constant Roadway Elevation

Crest Length: 200.00 ft

Crest Elevation: 510.00 ft

Roadway Surface: Paved

Roadway Top Width: 55.00 ft

HY-8 Analysis Results

Culvert Summary Table - Culvert 1

Culvert Crossing: Polyspray FS 250 Lining

Total Discharge (cfs)	Culvert Discharge (cfs)	Headwater Elevation (ft)	Inlet Control Depth(ft)	Outlet Control Depth(ft)	Flow Type	Normal Depth (ft)	Critical Depth (ft)	Outlet Depth (ft)	Tailwater Depth (ft)	Outlet Velocity (ft/s)	Tailwater Velocity (ft/s)
125.80	125.80	491.47	3.71	0.0*	1-S2n	2.12	2.58	2.13	1.34	10.32	3.69
191.62	191.62	492.41	4.65	0.0*	1-S2n	2.62	3.23	2.66	1.63	11.52	3.89
257.44	257.44	493.25	5.49	0.0*	1-S2n	3.08	3.78	3.11	1.86	12.50	4.04
323.26	323.26	494.00	6.24	0.0*	1-S2n	3.46	4.25	3.48	2.05	13.41	4.17
389.08	389.08	494.69	6.93	0.96	1-S2n	3.84	4.69	3.84	2.23	14.17	4.27
454.90	454.90	495.36	7.60	1.11	1-S2n	4.18	5.10	4.24	2.38	14.53	4.36
520.72	520.72	496.03	8.27	1.26	1-S2n	4.51	5.46	4.58	2.53	15.05	4.45
586.54	586.54	496.73	8.97	1.39	1-S2n	4.85	5.83	4.86	2.66	15.73	4.52
593.00	593.00	496.80	9.04	1.40	1-S2n	4.88	5.87	4.89	2.67	15.78	4.53
718.18	718.18	498.28	10.52	1.63	5-S2n	5.48	6.46	5.48	2.90	16.55	4.66
784.00	784.00	499.16	11.40	1.74	5-S2n	5.79	6.78	5.80	3.01	16.89	4.72

HY-8 Analysis Results

Culvert Summary Table - Culvert 1

Culvert Crossing: Polyspray lining FS 250

Total Discharge (cfs)	Culvert Discharge (cfs)	Headwater Elevation (ft)	Inlet Control Depth(ft)	Outlet Control Depth(ft)	Flow Type	Normal Depth (ft)	Critical Depth (ft)	Outlet Depth (ft)	Tailwater Depth (ft)	Outlet Velocity (ft/s)	Tailwater Velocity (ft/s)
0.00	0.00	487.76	0.00	0.0*	0-NF	0.00	0.00	0.00	0.00	0.00	0.00
110.40	110.40	491.22	3.46	0.0*	1-S2n	2.00	2.41	2.00	1.26	9.99	3.62
220.80	220.80	492.79	5.03	0.0*	1-S2n	2.84	3.47	2.86	1.73	12.01	3.97
331.20	331.20	494.09	6.33	0.0*	1-S2n	3.51	4.30	3.52	2.08	13.52	4.18
441.60	441.60	495.23	7.47	1.08	1-S2n	4.12	5.02	4.17	2.35	14.42	4.34
552.00	552.00	496.36	8.60	1.32	1-S2n	4.67	5.64	4.68	2.59	15.52	4.48
662.40	662.40	497.59	9.83	1.53	5-S2n	5.21	6.20	5.22	2.80	16.22	4.60
772.80	772.80	499.00	11.24	1.72	5-S2n	5.74	6.72	5.74	2.99	16.83	4.71
883.20	883.20	500.63	12.87	1.89	5-S2n	6.28	7.18	6.29	3.16	17.31	4.81
938.00	938.00	501.53	13.77	1.97	5-S2n	6.55	7.39	6.62	3.24	17.33	4.85
1104.00	1104.00	504.59	16.83	2.20	5-S2n	7.47	7.97	7.50	3.47	17.85	4.98

HY-8 Analysis Results

Culvert Summary Table - Culvert 1

Culvert Crossing: Polyspray FS 250 Lining

Total Discharge (cfs)	Culvert Discharge (cfs)	Headwater Elevation (ft)	Inlet Control Depth(ft)	Outlet Control Depth(ft)	Flow Type	Normal Depth (ft)	Critical Depth (ft)	Outlet Depth (ft)	Tailwater Depth (ft)	Outlet Velocity (ft/s)	Tailwater Velocity (ft/s)
0.71	0.71	487.90	0.14	0.0*	1-S2n	0.03	0.04	0.03	0.08	3.19	0.78
1.59	1.59	487.95	0.19	0.0*	1-S2n	0.06	0.09	0.08	0.14	2.73	1.04
2.46	2.46	488.01	0.25	0.0*	1-S2n	0.10	0.13	0.12	0.17	2.67	1.21
3.34	3.34	488.06	0.30	0.0*	1-S2n	0.13	0.18	0.17	0.21	2.69	1.35
4.22	4.22	488.11	0.35	0.0*	1-S2n	0.17	0.23	0.22	0.24	2.73	1.46
5.09	5.09	488.17	0.41	0.0*	1-S2n	0.20	0.27	0.26	0.26	2.78	1.55
5.97	5.97	488.22	0.46	0.0*	1-S2n	0.23	0.32	0.31	0.29	2.84	1.63
6.85	6.85	488.28	0.52	0.0*	1-S2n	0.27	0.37	0.36	0.31	2.92	1.70
7.73	7.73	488.33	0.57	0.0*	1-S2n	0.30	0.42	0.31	0.33	3.73	1.77
8.00	8.00	488.35	0.59	0.0*	1-S2n	0.31	0.43	0.32	0.34	3.72	1.79
9.48	9.48	488.45	0.69	0.0*	1-S2n	0.37	0.51	0.40	0.37	3.71	1.89

PRELIM. BY MHW DATE 7/9/12 PROJ. NO. _____ FILE NO. _____ OF _____
FINAL CHK. BY _____ DATE _____ LOCATION _____ SH. NO. _____ OF _____
ITEM NO. _____ SUBJECT _____

HW ID @ Q50

Hydra tech Poly spray F5250

$$\frac{501.53 - 487.86}{9.8'} = 1.39$$

Spiral wound pipe

$$\frac{506.10 - 488.01'}{9.5'} = 1.9'$$

HY-8 Culvert Analysis Report 13' x 13' Box

Site Data - Culvert 1

Site Data Option: Culvert Invert Data

Inlet Station: 0.00 ft

Inlet Elevation: 485.50 ft

Outlet Station: 144.00 ft

Outlet Elevation: 481.00 ft

Number of Barrels: 1

Culvert Data Summary - Culvert 1

Barrel Shape: Concrete Box

Barrel Span: 13.00 ft

Barrel Rise: 13.00 ft

Barrel Material: Concrete

Embedment: 24.00 in

Barrel Manning's n: 0.0120 (top and sides)

Manning's n: 0.0350 (bottom)

Inlet Type: Conventional

Inlet Edge Condition: Mitered to Conform to Slope

Inlet Depression: None

Table 1 - Downstream Channel Rating Curve (Crossing: BF 13 x 13 box culvert)

Flow (cfs)	Water Surface Elev (ft)	Depth (ft)	Velocity (ft/s)	Shear (psf)	Froude Number
125.80	487.83	1.34	3.69	0.84	0.77
191.62	488.12	1.63	3.89	1.02	0.75
257.44	488.35	1.86	4.04	1.16	0.73
323.26	488.54	2.05	4.17	1.28	0.72
389.08	488.72	2.23	4.27	1.39	0.71
454.90	488.87	2.38	4.36	1.49	0.70
520.72	489.02	2.53	4.45	1.58	0.70
586.54	489.15	2.66	4.52	1.66	0.69
593.00	489.16	2.67	4.53	1.67	0.69
718.18	489.39	2.90	4.66	1.81	0.68
784.00	489.50	3.01	4.72	1.88	0.68

Tailwater Channel Data - BF 13 x 13 box culvert

Tailwater Channel Option: Irregular Channel

Channel Slope: 0.0100

User Defined Channel Cross-Section:

Coord No.	Station (ft)	Elevation (ft)	Manning's n
1	0.00	510.00	0.1200
2	22.00	505.00	0.1200
3	61.00	500.00	0.1200
4	122.00	495.00	0.1200
5	182.00	490.00	0.1200
6	245.00	487.19	0.0350
7	247.00	486.49	0.0350
8	255.00	486.49	0.0350
9	257.00	486.49	0.0350
10	312.00	490.00	0.1200
11	337.00	500.00	0.1200
12	417.00	510.00	0.1200
13	511.00	515.00	0.0000

Tailwater Rating Curve Plot for Crossing: BF 13 x 13 box culvert

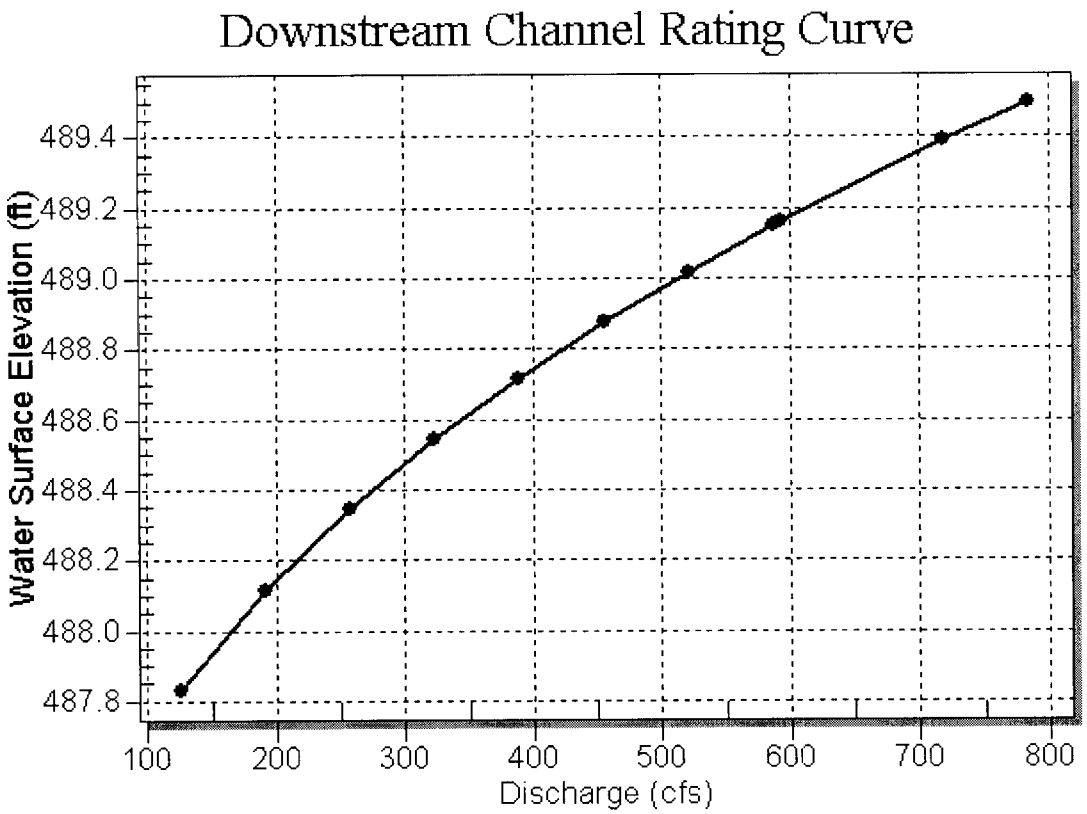

Roadway Data for Crossing: BF 13 x 13 box culvert

Roadway Profile Shape: Irregular Roadway Shape (coordinates)

Irregular Roadway Cross-Section:

Coord No.	Station (ft)	Elevation (ft)
1	0.00	515.00
2	27.00	514.00
3	60.00	513.00
4	102.00	512.00
5	159.00	511.00
6	245.00	510.00
7	295.00	510.00
8	403.00	511.00
9	456.00	512.00
10	498.00	513.00
11	530.00	514.00
12	559.00	515.00

Roadway Surface: Paved

Roadway Top Width: 55.00 ft

HY-8 Analysis Results

Culvert Summary Table - Culvert 1

Culvert Crossing: BF 13 x 13 box culvert

Total Discharge (cfs)	Culvert Discharge (cfs)	Headwater Elevation (ft)	Inlet Control Depth(ft)	Outlet Control Depth(ft)	Flow Type	Normal Depth (ft)	Critical Depth (ft)	Outlet Depth (ft)	Tailwater Depth (ft)	Outlet Velocity (ft/s)	Tailwater Velocity (ft/s)
0.00	0.00	487.50	0.00	0.0*	0-NF	0.00	0.00	0.00	0.00	0.00	0.00
110.40	110.40	489.59	2.09	0.0*	1-S2n	1.14	1.28	1.17	1.26	7.27	3.62
220.80	220.80	490.81	3.31	0.0*	1-S2n	1.76	2.06	1.76	1.73	9.65	3.97
331.20	331.20	491.83	4.33	0.0*	1-S2n	2.34	2.69	2.35	2.08	10.82	4.18
441.60	441.60	492.74	5.24	0.0*	1-S2n	2.84	3.30	2.89	2.35	11.77	4.34
552.00	552.00	493.50	6.00	0.0*	1-S2n	3.33	3.81	3.34	2.59	12.73	4.48
662.40	662.40	494.22	6.72	0.0*	1-S2n	3.77	4.31	3.80	2.80	13.39	4.60
772.80	772.80	494.94	7.44	0.0*	1-S2n	4.22	4.77	4.22	2.99	14.07	4.71
883.20	883.20	495.66	8.16	0.0*	1-S2n	4.60	5.22	4.61	3.16	14.73	4.81
938.00	938.00	496.01	8.51	0.0*	1-S2n	4.76	5.45	4.78	3.24	15.11	4.85
1104.00	1104.00	497.05	9.55	0.0*	1-S2n	5.27	6.06	5.28	3.47	16.08	4.98

HY-8 Analysis Results

Culvert Summary Table - Culvert 1

Culvert Crossing: BF 13 x 13 box culvert

Total Discharge (cfs)	Culvert Discharge (cfs)	Headwater Elevation (ft)	Inlet Control Depth(ft)	Outlet Control Depth(ft)	Flow Type	Normal Depth (ft)	Critical Depth (ft)	Outlet Depth (ft)	Tailwater Depth (ft)	Outlet Velocity (ft/s)	Tailwater Velocity (ft/s)
0.71	0.71	487.52	0.02	0.0*	1-S2n	0.01	0.01	0.01	0.08	3.35	0.78
1.59	1.59	487.53	0.03	0.0*	1-S2n	0.02	0.02	0.02	0.14	3.16	1.04
2.46	2.46	487.55	0.05	0.0*	1-S2n	0.03	0.03	0.03	0.17	3.12	1.21
3.34	3.34	487.57	0.07	0.0*	1-S2n	0.04	0.04	0.04	0.21	3.11	1.35
4.22	4.22	487.59	0.09	0.0*	1-S2n	0.04	0.05	0.05	0.24	3.11	1.46
5.09	5.09	487.61	0.11	0.0*	1-S2n	0.05	0.07	0.06	0.26	3.60	1.55
5.97	5.97	487.63	0.13	0.0*	1-S2n	0.06	0.08	0.07	0.29	3.53	1.63
6.85	6.85	487.64	0.14	0.0*	1-S2n	0.07	0.09	0.08	0.31	3.48	1.70
7.73	7.73	487.66	0.16	0.0*	1-S2n	0.08	0.10	0.09	0.33	3.45	1.77
8.00	8.00	487.67	0.17	0.0*	1-S2n	0.09	0.10	0.09	0.34	3.44	1.79
9.48	9.48	487.70	0.20	0.0*	1-S2n	0.10	0.12	0.11	0.37	3.41	1.89

HY-8 Analysis Results

Culvert Summary Table - Culvert 1

Culvert Crossing: BF 13 x 13 box culvert

Total Discharge (cfs)	Culvert Discharge (cfs)	Headwater Elevation (ft)	Inlet Control Depth(ft)	Outlet Control Depth(ft)	Flow Type	Normal Depth (ft)	Critical Depth (ft)	Outlet Depth (ft)	Tailwater Depth (ft)	Outlet Velocity (ft/s)	Tailwater Velocity (ft/s)
125.80	125.80	489.78	2.28	0.0*	1-S2n	1.23	1.39	1.28	1.34	7.57	3.69
191.62	191.62	490.51	3.01	0.0*	1-S2n	1.60	1.85	1.64	1.63	8.97	3.89
257.44	257.44	491.16	3.66	0.0*	1-S2n	1.96	2.29	1.98	1.86	10.00	4.04
323.26	323.26	491.76	4.26	0.0*	1-S2n	2.31	2.65	2.31	2.05	10.76	4.17
389.08	389.08	492.32	4.82	0.0*	1-S2n	2.60	3.01	2.61	2.23	11.47	4.27
454.90	454.90	492.85	5.35	0.0*	1-S2n	2.90	3.36	2.95	2.38	11.87	4.36
520.72	520.72	493.30	5.80	0.0*	1-S2n	3.20	3.66	3.20	2.53	12.51	4.45
586.54	586.54	493.73	6.23	0.0*	1-S2n	3.47	3.97	3.48	2.66	12.98	4.52
593.00	593.00	493.77	6.27	0.0*	1-S2n	3.50	4.00	3.51	2.67	13.01	4.53
718.18	718.18	494.58	7.08	0.0*	1-S2n	4.00	4.55	4.04	2.90	13.67	4.66
784.00	784.00	495.01	7.51	0.0*	1-S2n	4.26	4.82	4.27	3.01	14.13	4.72

HY-8 Culvert Analysis Report 16's x 11'r Box

Site Data - Culvert 1

Site Data Option: Culvert Invert Data

Inlet Station: 0.00 ft

Inlet Elevation: 485.00 ft

Outlet Station: 144.00 ft

Outlet Elevation: 481.00 ft

Number of Barrels: 1

Culvert Data Summary - Culvert 1

Barrel Shape: Concrete Box

Barrel Span: 16.00 ft

Barrel Rise: 11.00 ft

Barrel Material: Concrete

Embedment: 24.00 in

Barrel Manning's n: 0.0120 (top and sides)

Manning's n: 0.0350 (bottom)

Inlet Type: Conventional

Inlet Edge Condition: Mitered to Conform to Slope

Inlet Depression: None

Table 1 - Downstream Channel Rating Curve (Crossing: BF 16 x 11 box culvert)

Flow (cfs)	Water Surface Elev (ft)	Depth (ft)	Velocity (ft/s)	Shear (psf)	Froude Number
0.00	486.49	0.00	0.00	0.00	0.00
110.40	487.75	1.26	3.62	0.79	0.77
220.80	488.22	1.73	3.97	1.08	0.74
331.20	488.57	2.08	4.18	1.30	0.72
441.60	488.84	2.35	4.34	1.47	0.70
552.00	489.08	2.59	4.48	1.62	0.69
662.40	489.29	2.80	4.60	1.75	0.69
772.80	489.48	2.99	4.71	1.87	0.68
883.20	489.65	3.16	4.81	1.97	0.68
938.00	489.73	3.24	4.85	2.02	0.67
1104.00	489.96	3.47	4.98	2.17	0.67

Tailwater Channel Data - BF 16 x 11 box culvert

Tailwater Channel Option: Irregular Channel

Channel Slope: 0.0100

User Defined Channel Cross-Section:

Coord No.	Station (ft)	Elevation (ft)	Manning's n
1	0.00	510.00	0.1200
2	22.00	505.00	0.1200
3	61.00	500.00	0.1200
4	122.00	495.00	0.1200
5	182.00	490.00	0.1200
6	245.00	487.19	0.0350
7	247.00	486.49	0.0350
8	255.00	486.49	0.0350
9	257.00	486.49	0.0350
10	312.00	490.00	0.1200
11	337.00	500.00	0.1200
12	417.00	510.00	0.1200
13	511.00	515.00	0.0000

Tailwater Rating Curve Plot for Crossing: BF 16 x 11 box culvert

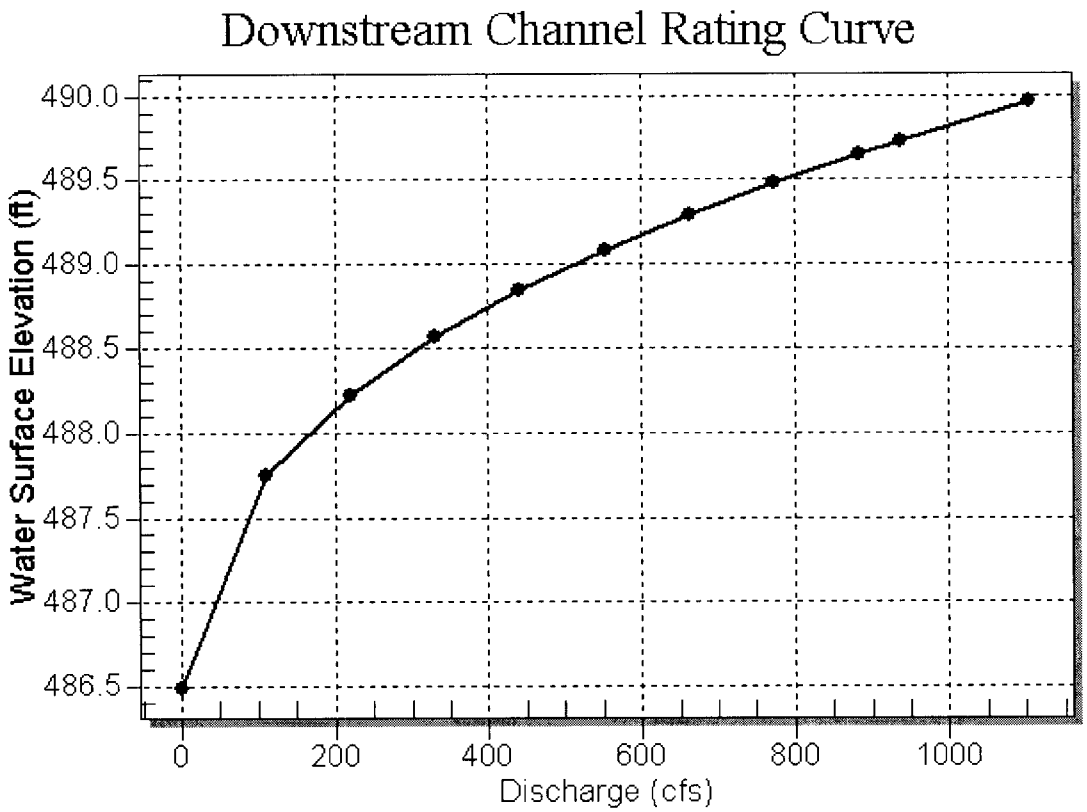

Roadway Data for Crossing: BF 16 x 11 box culvert

Roadway Profile Shape: Irregular Roadway Shape (coordinates)

Irregular Roadway Cross-Section:

Coord No.	Station (ft)	Elevation (ft)
1	0.00	515.00
2	27.00	514.00
3	60.00	513.00
4	102.00	512.00
5	159.00	511.00
6	245.00	510.00
7	295.00	510.00
8	403.00	511.00
9	456.00	512.00
10	498.00	513.00
11	530.00	514.00
12	559.00	515.00

Roadway Surface: Paved

Roadway Top Width: 55.00 ft

HY-8 Analysis Results

Culvert Summary Table - Culvert 1

Culvert Crossing: BF 16 x 11 box culvert

Total Discharge (cfs)	Culvert Discharge (cfs)	Headwater Elevation (ft)	Inlet Control Depth(ft)	Outlet Control Depth(ft)	Flow Type	Normal Depth (ft)	Critical Depth (ft)	Outlet Depth (ft)	Tailwater Depth (ft)	Outlet Velocity (ft/s)	Tailwater Velocity (ft/s)
0.00	0.00	487.00	0.00	0.0*	0-NF	0.00	0.00	0.00	0.00	0.00	0.00
110.40	110.40	488.82	1.82	0.0*	1-S2n	1.01	1.11	1.03	1.26	6.71	3.62
220.80	220.80	489.88	2.88	0.0*	1-S2n	1.58	1.81	1.60	1.73	8.64	3.97
331.20	331.20	490.77	3.77	0.0*	1-S2n	2.07	2.35	2.09	2.08	9.91	4.18
441.60	441.60	491.56	4.56	0.0*	1-S2n	2.51	2.86	2.52	2.35	10.95	4.34
552.00	552.00	492.20	5.20	0.0*	1-S2n	2.91	3.32	2.92	2.59	11.83	4.48
662.40	662.40	492.84	5.84	0.0*	1-S2n	3.29	3.75	3.30	2.80	12.53	4.60
772.80	772.80	493.49	6.49	0.0*	1-S2n	3.65	4.16	3.66	2.99	13.21	4.71
883.20	883.20	494.13	7.13	0.0*	1-S2n	3.94	4.55	3.95	3.16	13.96	4.81
938.00	938.00	494.44	7.44	0.0*	1-S2n	4.09	4.74	4.13	3.24	14.21	4.85
1104.00	1104.00	495.37	8.37	0.0*	1-S2n	4.53	5.28	4.53	3.47	15.22	4.98

HY-8 Analysis Results

Culvert Summary Table - Culvert 1

Culvert Crossing: BF 16 x 11 box culvert

Total Discharge (cfs)	Culvert Discharge (cfs)	Headwater Elevation (ft)	Inlet Control Depth(ft)	Outlet Control Depth(ft)	Flow Type	Normal Depth (ft)	Critical Depth (ft)	Outlet Depth (ft)	Tailwater Depth (ft)	Outlet Velocity (ft/s)	Tailwater Velocity (ft/s)
125.80	125.80	488.98	1.98	0.0*	1-S2n	1.09	1.21	1.10	1.34	7.17	3.69
191.62	191.62	489.62	2.62	0.0*	1-S2n	1.43	1.62	1.51	1.63	7.91	3.89
257.44	257.44	490.19	3.19	0.0*	1-S2n	1.77	1.99	1.78	1.86	9.05	4.04
323.26	323.26	490.71	3.71	0.0*	1-S2n	2.04	2.31	2.05	2.05	9.86	4.17
389.08	389.08	491.20	4.20	0.0*	1-S2n	2.30	2.63	2.32	2.23	10.47	4.27
454.90	454.90	491.63	4.63	0.0*	1-S2n	2.56	2.92	2.57	2.38	11.08	4.36
520.72	520.72	492.02	5.02	0.0*	1-S2n	2.81	3.19	2.81	2.53	11.59	4.45
586.54	586.54	492.40	5.40	0.0*	1-S2n	3.03	3.46	3.05	2.66	12.02	4.52
593.00	593.00	492.44	5.44	0.0*	1-S2n	3.05	3.49	3.08	2.67	12.04	4.53
718.18	718.18	493.17	6.17	0.0*	1-S2n	3.48	3.96	3.49	2.90	12.85	4.66
784.00	784.00	493.55	6.55	0.0*	1-S2n	3.68	4.20	3.69	3.01	13.29	4.72

HY-8 Analysis Results

Culvert Summary Table - Culvert 1

Culvert Crossing: BF 16 x 11 box culvert

Total Discharge (cfs)	Culvert Discharge (cfs)	Headwater Elevation (ft)	Inlet Control Depth(ft)	Outlet Control Depth(ft)	Flow Type	Normal Depth (ft)	Critical Depth (ft)	Outlet Depth (ft)	Tailwater Depth (ft)	Outlet Velocity (ft/s)	Tailwater Velocity (ft/s)
0.71	0.71	487.01	0.01	0.0*	1-S2n	0.01	0.01	0.01	0.08	3.08	0.78
1.59	1.59	487.03	0.03	0.0*	1-S2n	0.02	0.02	0.02	0.14	2.87	1.04
2.46	2.46	487.05	0.05	0.0*	1-S2n	0.03	0.03	0.03	0.17	2.83	1.21
3.34	3.34	487.06	0.06	0.0*	1-S2n	0.03	0.04	0.04	0.21	2.82	1.35
4.22	4.22	487.08	0.08	0.0*	1-S2n	0.04	0.05	0.05	0.24	2.82	1.46
5.09	5.09	487.10	0.10	0.0*	1-S2n	0.05	0.06	0.06	0.26	2.83	1.55
5.97	5.97	487.11	0.11	0.0*	1-S2n	0.06	0.07	0.07	0.29	2.84	1.63
6.85	6.85	487.13	0.13	0.0*	1-S2n	0.07	0.08	0.08	0.31	2.85	1.70
7.73	7.73	487.15	0.15	0.0*	1-S2n	0.08	0.09	0.08	0.33	3.17	1.77
8.00	8.00	487.15	0.15	0.0*	1-S2n	0.08	0.09	0.08	0.34	3.16	1.79
9.48	9.48	487.18	0.18	0.0*	1-S2n	0.10	0.11	0.10	0.37	3.13	1.89

PRELIM. BY MHW DATE 10/4 PROJ. NO. _____ FILE NO. _____ OF _____
FINAL CHK. BY _____ DATE _____ LOCATION _____ SH. NO. _____ OF _____
ITEM NO. _____ SUBJECT _____

Check HW/D @ Q50 (note 2' embedment)

13' x 13' box

$$\frac{496.01 - (485' + 2')}{13' - 2'} = 0.82 < 0.9$$

OK

16 x 11' box

$$\frac{494.44 - (485' + 2')}{11' - 2'} = 0.83 < 0.9$$

OK

PRELIM. BY _____ DATE _____ PROJ. NO. _____ FILE NO. _____ OF _____
FINAL CHK. BY _____ DATE _____ LOCATION _____ SH. NO. _____ OF _____
ITEM NO. _____ SUBJECT _____

Bottomless Culvert Opening

491.5' − 487.76 = 3.74'

3.74'(19') = 71.06 SF

160 SF − 71.06 SF = 88.94 SF

88.94 SF / 20' = 4.45'

use 20'x5'r precast frame
20'x5' = 100 SF > 88.9 SF

use 20'sx 6'r Conspan
105 SF > 88.9 SF

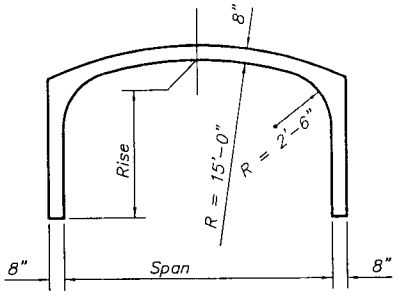

SHORT SPAN SERIES

WATERWAY AREA (SQUARE FEET)		
RISE (FT.)	SPAN (FT.) 12	14
4	42	50
5	54	64
6	66	78
7	78	92
8	90	106
9	102	120
10	114	134
11	*	148

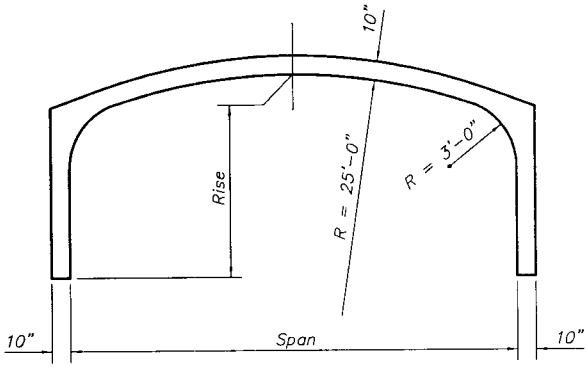

INTERMEDIATE SPAN SERIES

WATERWAY AREA (SQUARE FEET)			
RISE (FT.)	SPAN (FT.) 16	20	24
5	71	85	*
6	87	105	119
7	103	125	143
8	119	145	167
9	135	165	191
10	151	185	215

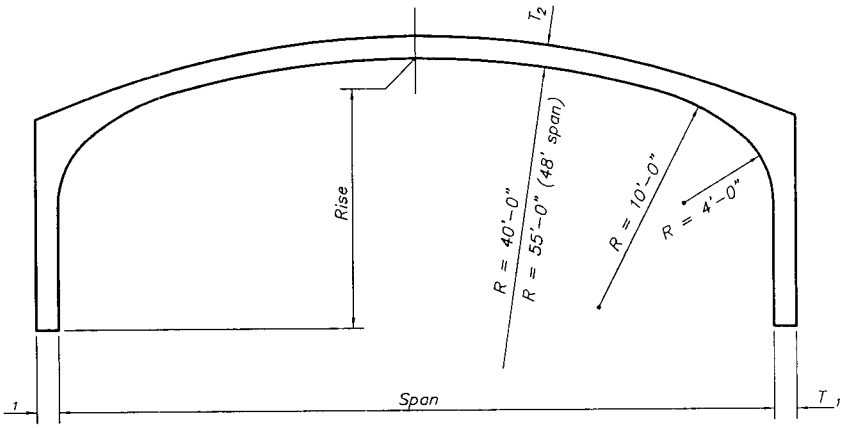

T_1 = 12" (28' & 32' spans)
14" (36' & 42' spans)
16" (48' span)

T_2 = 10" (28' span)
12" (32', 36', 42' & 48' spans)

WATERWAY AREA (SQUARE FEET)					
RISE (FT.)	SPAN (FT.) 28	32	36	42 **	48
8	195	216	*	*	*
9	223	248	268	*	*
10	251	280	304	334	*
11	279	312	340	376	435
12	*	344	376	418	483
13	*	*	412	460	*
14	*	*	*	502	*

** Note: Geometry may vary slightly depending upon location of production, call CON/SPAN for details.

LONG SPAN SERIES

*Contact local provider for more information regarding this Span and Rise combination.

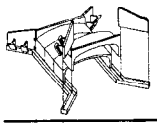

CON/SPAN® BRIDGE SYSTEMS

© 2003 CON/SPAN®

Revised 4/10/03

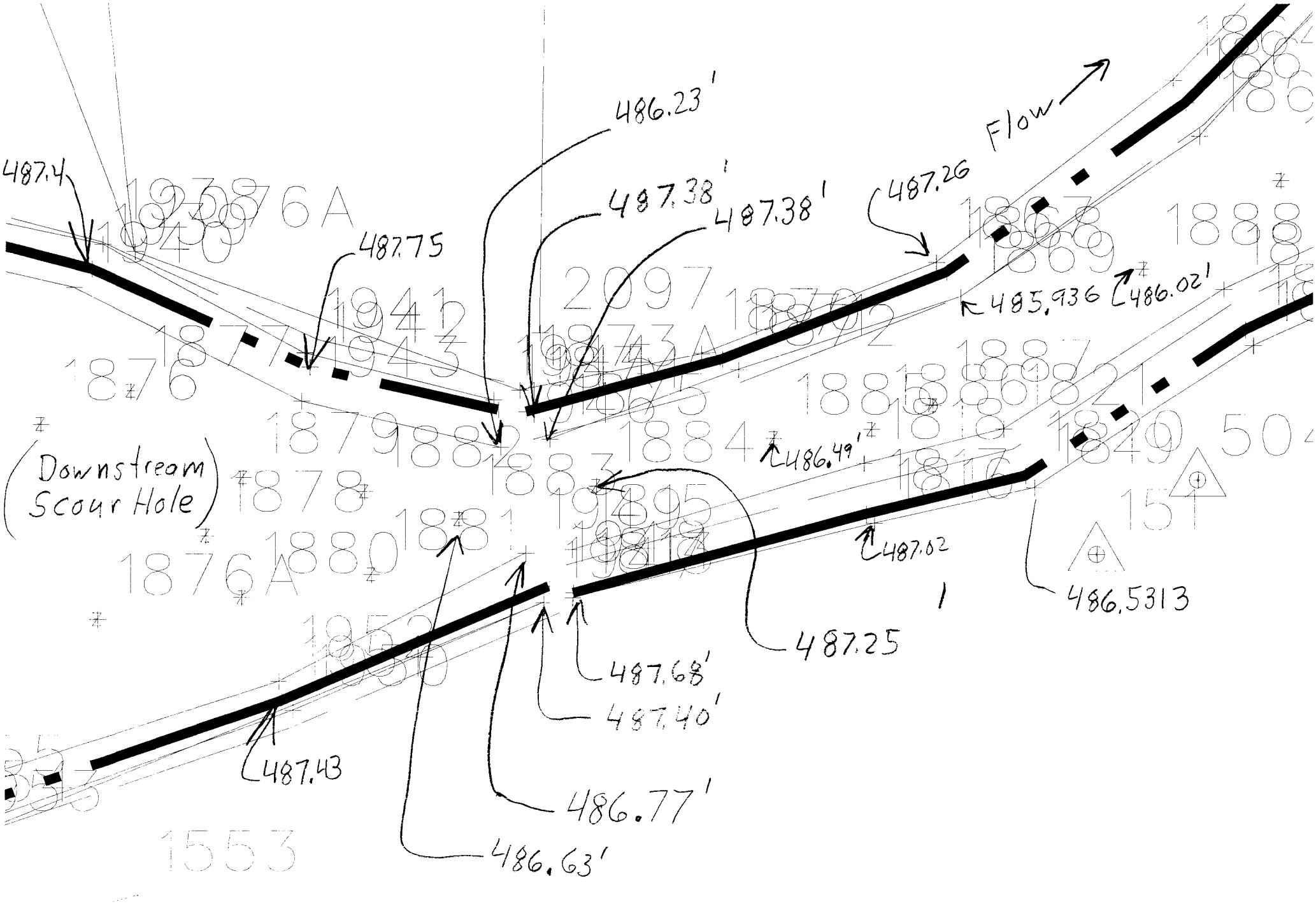
487.4
487.75
486.23'
487.38'
487.38'
487.26
Flow
485.936
486.02'
(Downstream Scour Hole)
486.49'
487.02
486.5313
487.25
487.68'
487.40'
487.43
486.77'
486.63'

Cross Section - Overflow/Overtopping
elevation
Stat 1+61
HOUSE 1.5 STORY
PAVED
CONC
3X3X3'
18" CMP
STREAM ALIGNING SYSTEM
JOINT #05989
JOINT #05988
JOINT #05986
JOINT #05984
DELINEATOR
FIELD EVT
15" SPRUCE
7" SPRUCE
6" DIA LILAC
IRON PIPE 3" GAL PIPE HORIZONTAL
IRON PIPE 3" GAL PIPE
ATTA CONC WATER MONITOR
6" DIA WOOD 3 TALBOS
20" ASH TWIN
8" WILLOW
18" CMP
8" PVC
SHRUBS-BUSHES
PAVERS
GRAVEL
MIXED GROWTH
19" WIDE 1.5" THICK WALL PLATE
KEEP RIGHT
201
154
69
27
513
512
511
514
245
270
295
403
456
498
520
559
509.44'
507.6'
510
505
500
495
490

Stream slope

$\frac{10'}{1000'} = 0.01 \frac{ft}{ft}$

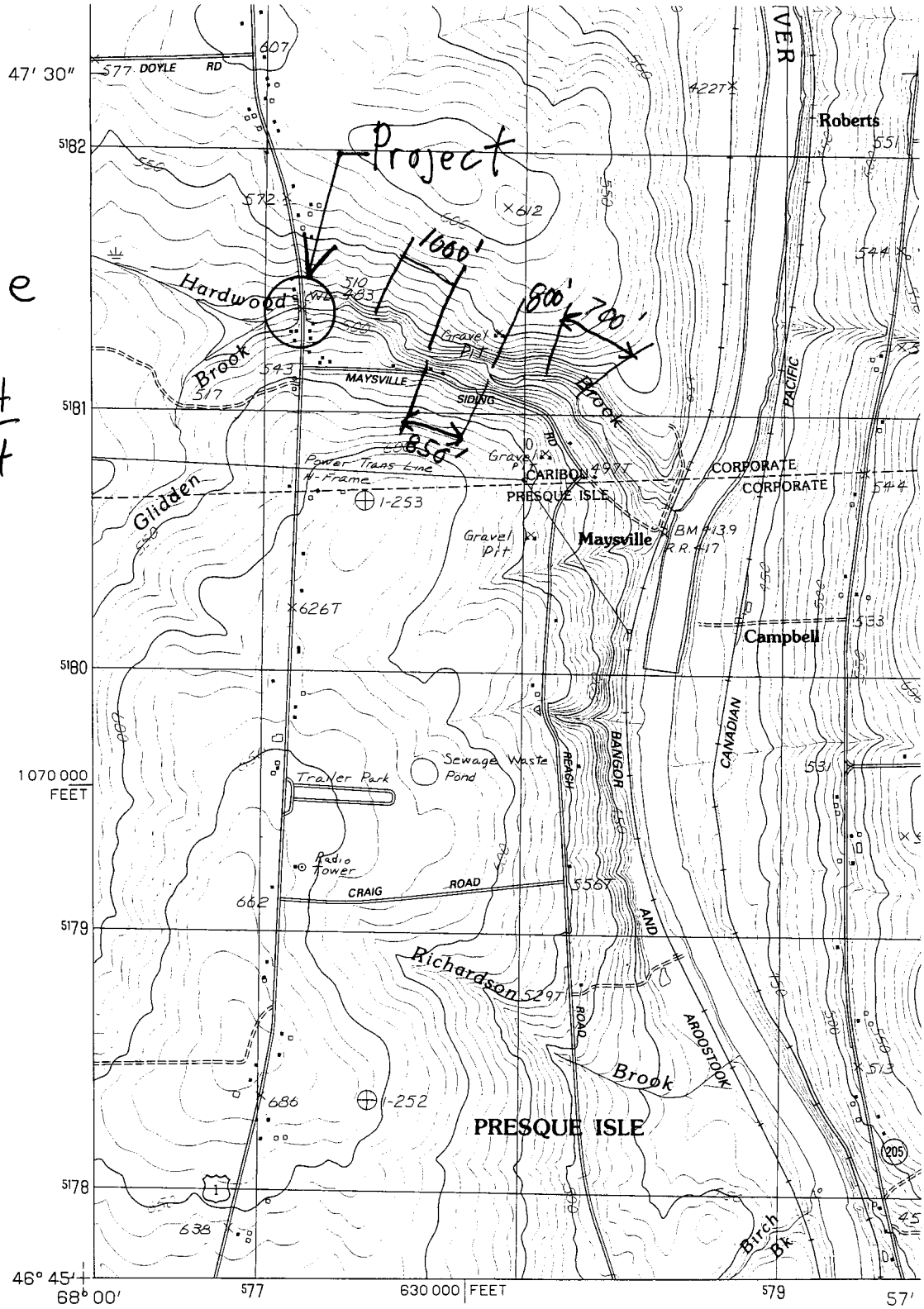

PRODUCED BY THE UNITED STATES GEOLOGICAL SURVEY
CONTROL BY . . . . . USGS AND NOS/NOAA
COMPILED FROM AERIAL PHOTOGRAPHS TAKEN 1980
FIELD CHECKED . . . . . 1981. MAP EDITED 1984
PROJECTION . . . . . TRANSVERSE MERCATOR
GRID: 1000-METER UNIVERSAL TRANSVERSE MERCATOR . . . . . ZONE 19
10,000-FOOT STATE GRID TICKS . . . . . MAINE, EAST ZONE
UTM GRID DECLINATION . . . . . 0°46' EAST
1984 MAGNETIC NORTH DECLINATION . . . . . 20°30' WEST
VERTICAL DATUM . . . . . NATIONAL GEODETIC VERTICAL DATUM OF 1929
HORIZONTAL DATUM . . . . . 1927 NORTH AMERICAN DATUM

To place on the predicted North American Datum of 1983, move the projection lines as shown by dashed corner ticks (42 meters west)

There may be private inholdings within the boundaries of any National or State reservations shown on this map

NORTH

1000

PROVISIONAL MAP

Produced from origina manuscript drawings. Infor mation shown as of date c field check

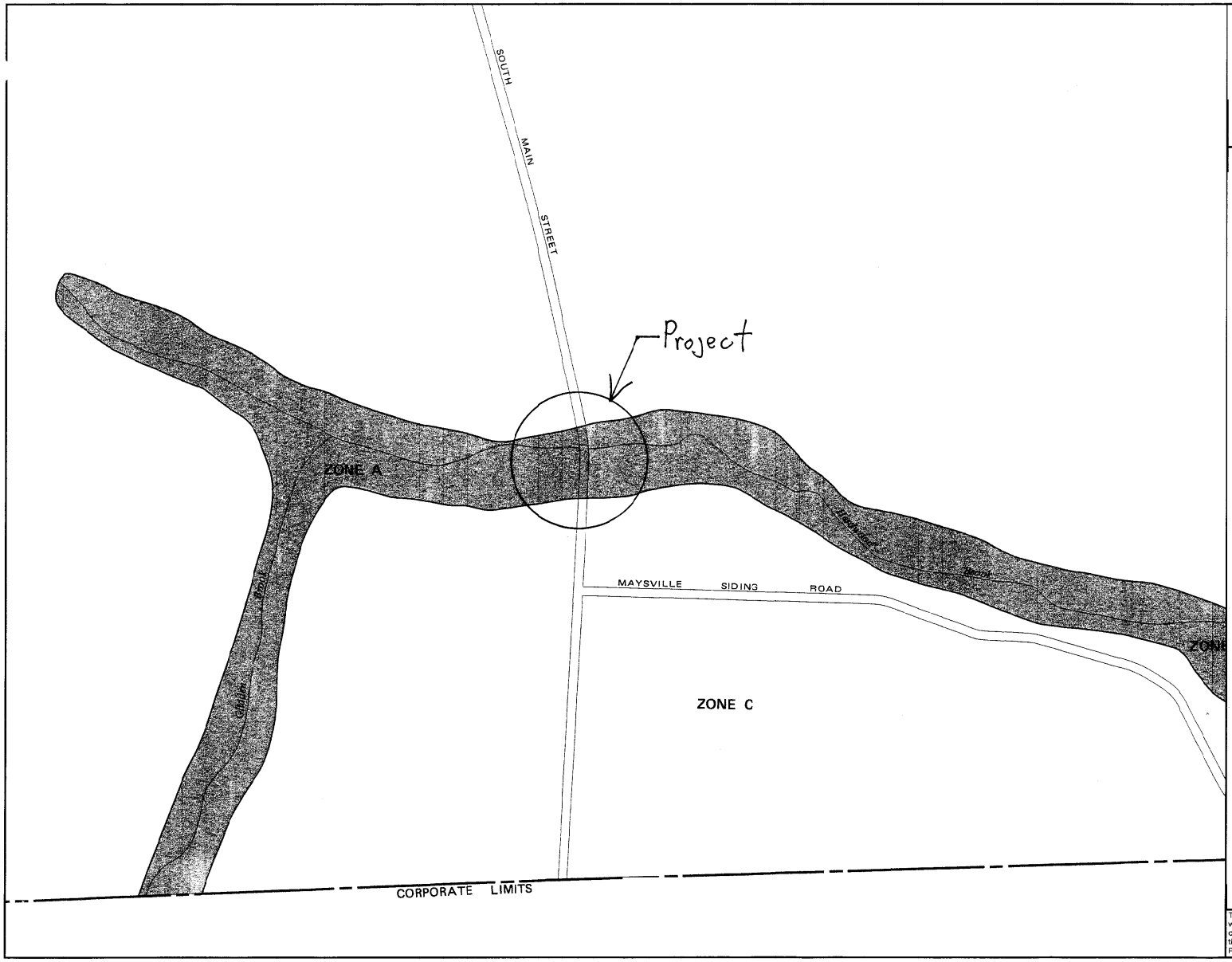

APPROXIMATE SCALE

500 0 500 FEET

NATIONAL FLOOD INSURANCE PROGRAM

FIRM
FLOOD INSURANCE RATE MAP

CITY OF
CARIBOU, MAINE
AROOSTOOK COUNTY

PANEL 17 OF 18
(SEE MAP INDEX FOR PANELS NOT PRINTED)

COMMUNITY-PANEL NUMBER
230014 0017 C

EFFECTIVE DATE:
AUGUST 1, 1980

U.S. DEPARTMENT OF HOUSING AND URBAN DEVELOPMENT
FEDERAL INSURANCE ADMINISTRATION

This is an official copy of a portion of the above referenced flood map. It was extracted using F-MIT On-Line. This map does not reflect changes or amendments which may have been made subsequent to the date on the title block. For the latest product information about National Flood Insurance Program flood maps check the FEMA Flood Map Store at www.msc.fema.gov

REPORT FROM BRIDGE MAINTENANCE SUPERVISOR

TOWN: Caribou

BRIDGE NO. & NAME: 6306 Hardwood Brook Bridge

CLEAR SPAN: 10'

CLEARANCE TO WATER (upstream side): 10'5" top of pipe to water level

AVERAGE DEPTH OF WATER (upstream side): 12"-14"

SPAN AND RISE DOWNSTREAM: 10' with 9' top of pipe to water level
(if significantly different from above)

EVIDENCE OF SCOUR: none _____ slight X ___ much _____

EVIDENCE OF LENGTH:
unlikely _____ likely _____ positive _____ uncertain _____

ADEQUACY OF OPENING:
undersized ____ appropriate ? oversized ____ uncertain ____

HIGH WATER INFORMATION

Has water been over the road? No **Date (if known)** _____

Estimated Depth over the road: N/A

Reliability of Estimate: poor _____ fair ____ good X

Highest known water elevation relative to bottom of bridge: 3' – 4'
Date (if known) _____

Was high water caused by a downstream constriction:

no ____ likely ____ positive ____ uncertain X Likely rainfall

Was high water caused by ice:
no ____ likely ____ positive ____ uncertain X Likely rainfall

GENERAL COMMENTS: I spoke to the TCS for this area, he stated he has not paid much attention to water depths here because he has never known of an issue at this location. The only issues seem to be with roadway runoff washing inslopes & should be looked at for correction when replacing bridge.

COMMENTS PERTAINING TO UPSTREAM OR DOWNSTREAM BRIDGES:
There appears to be some minor scouring at both the inlet and outlet ends of the pipe but it does not appear to be a critical issue at this time but should be considered when replacing.

DEGREE OF FAMILIARITY WITH SUBJECT BRIDGE:
negligible ____ some X considerable ___

Reported by: Joseph Tedford **Date:** 7/11/12

APPENDIX E

Miscellaneous

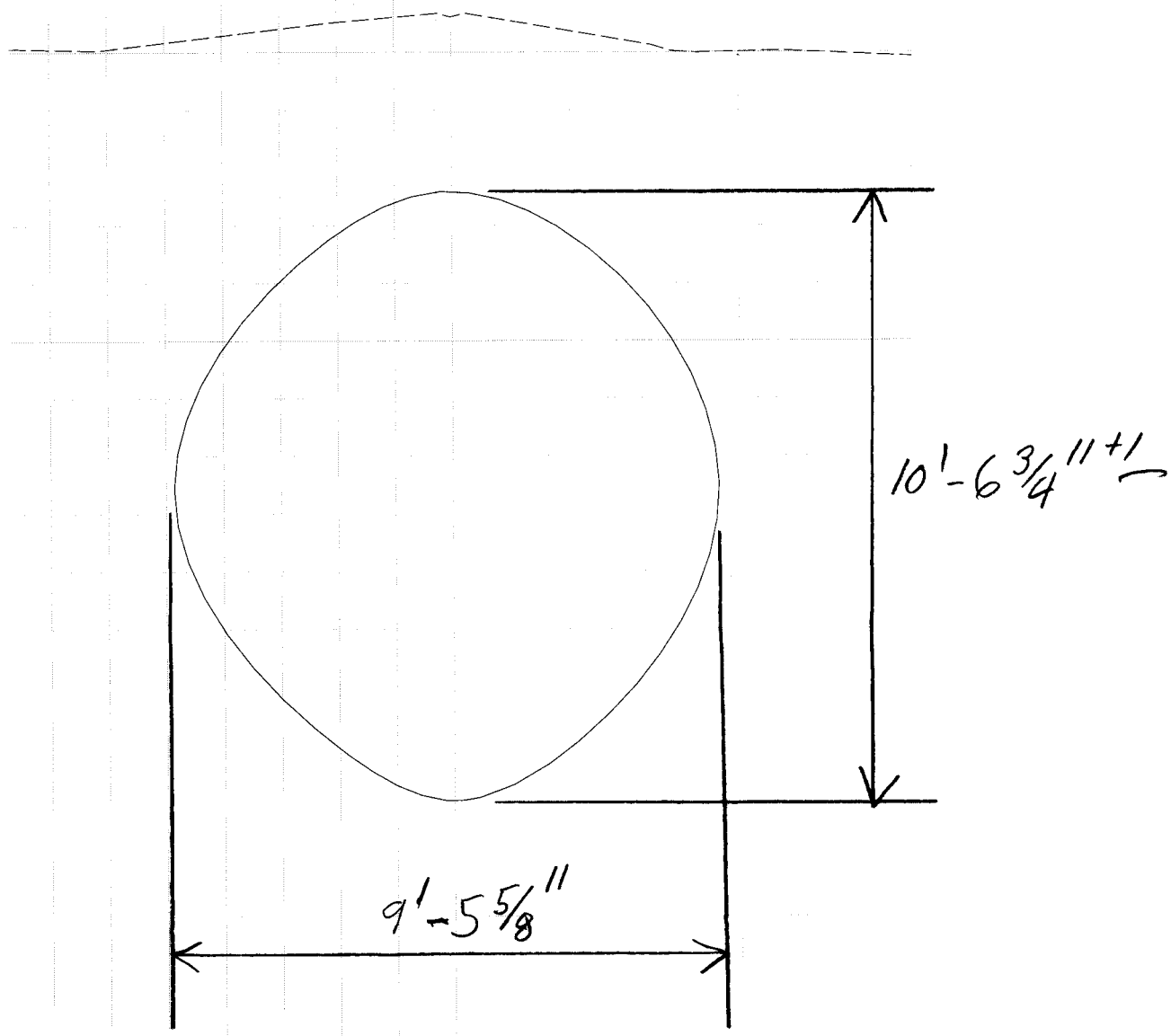

Sta 0+73 (20' from inlet)

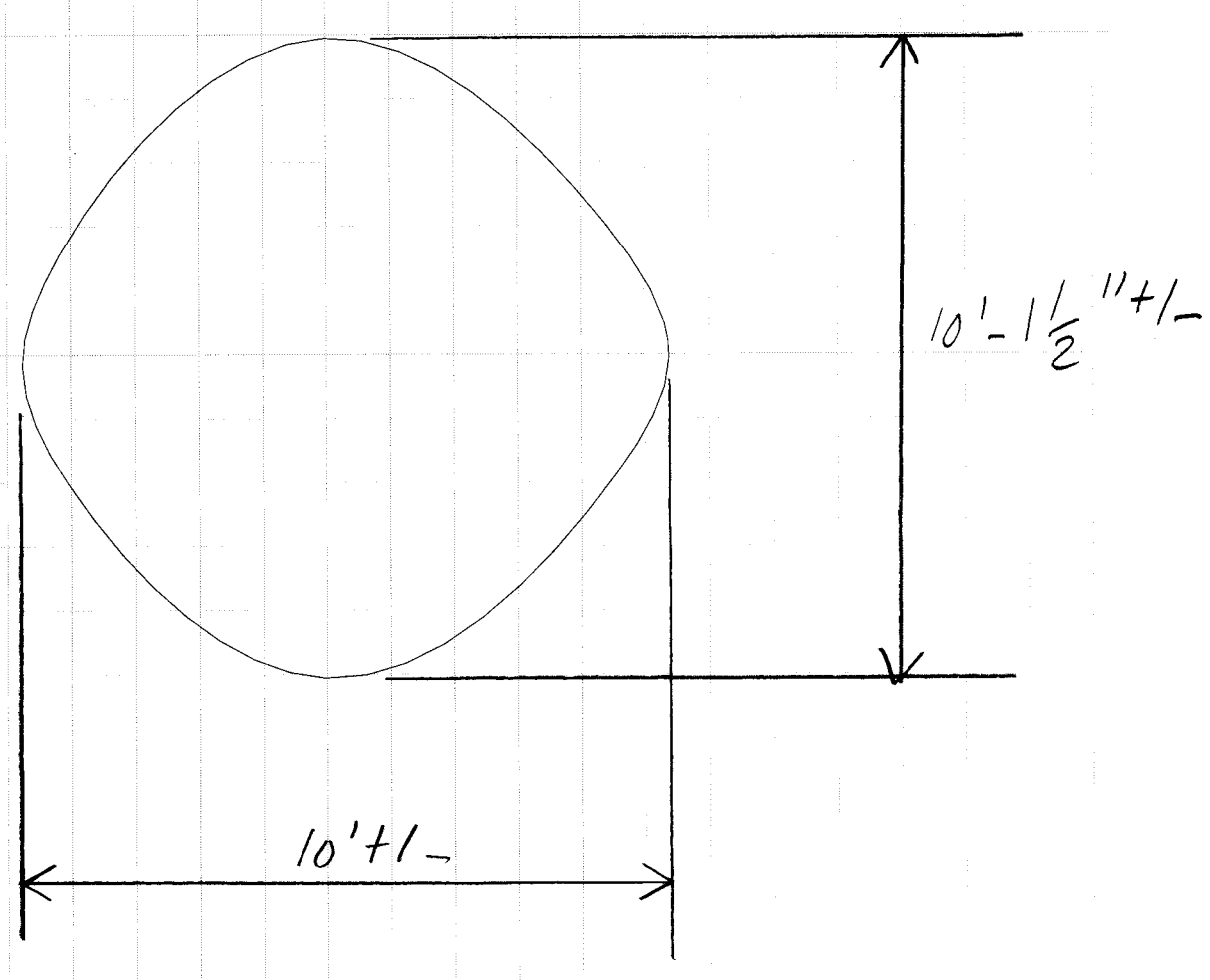

Sta 0+83 (30' from inlet)

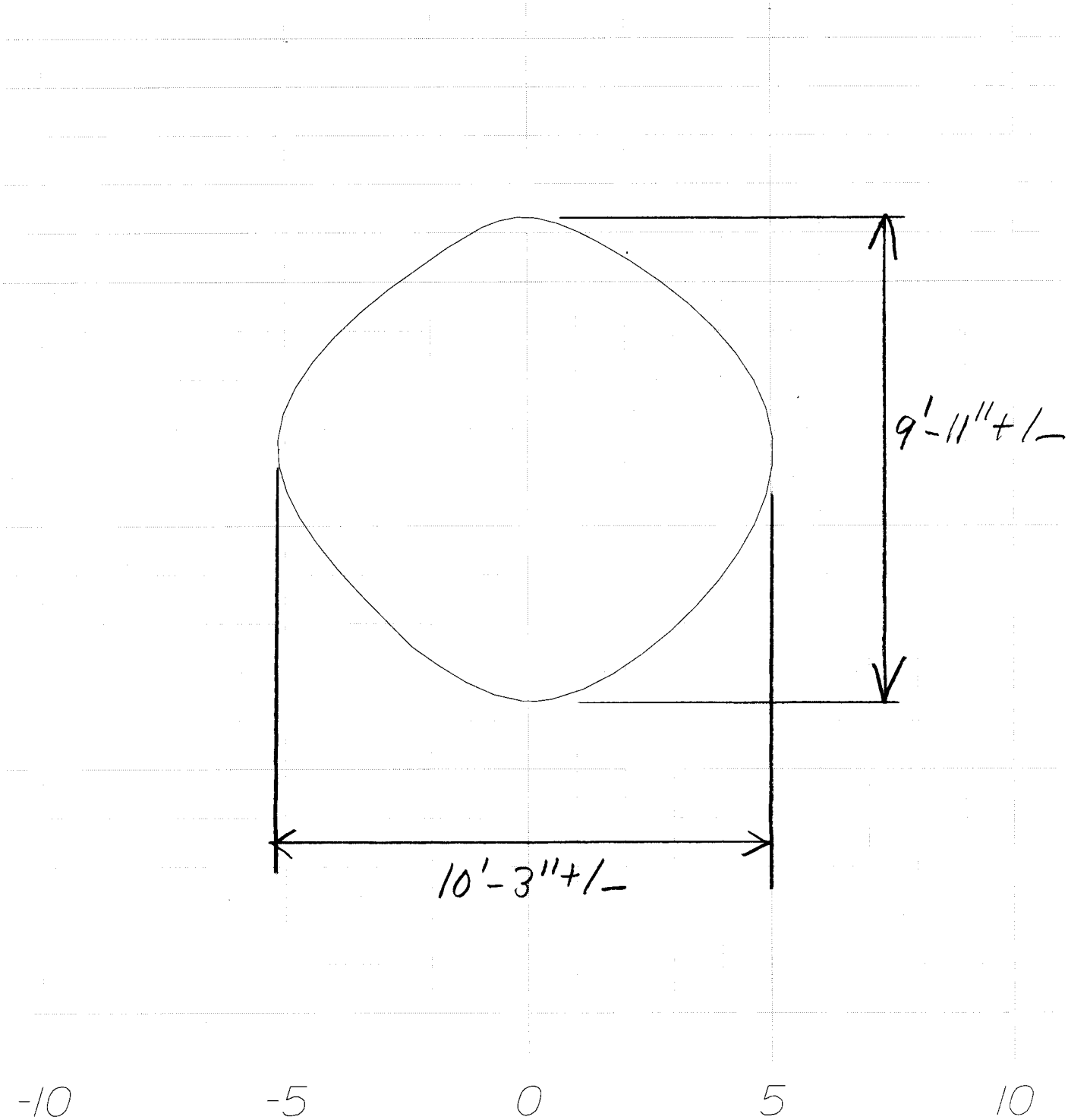

sta. 0+93.00 (40' from inlet)

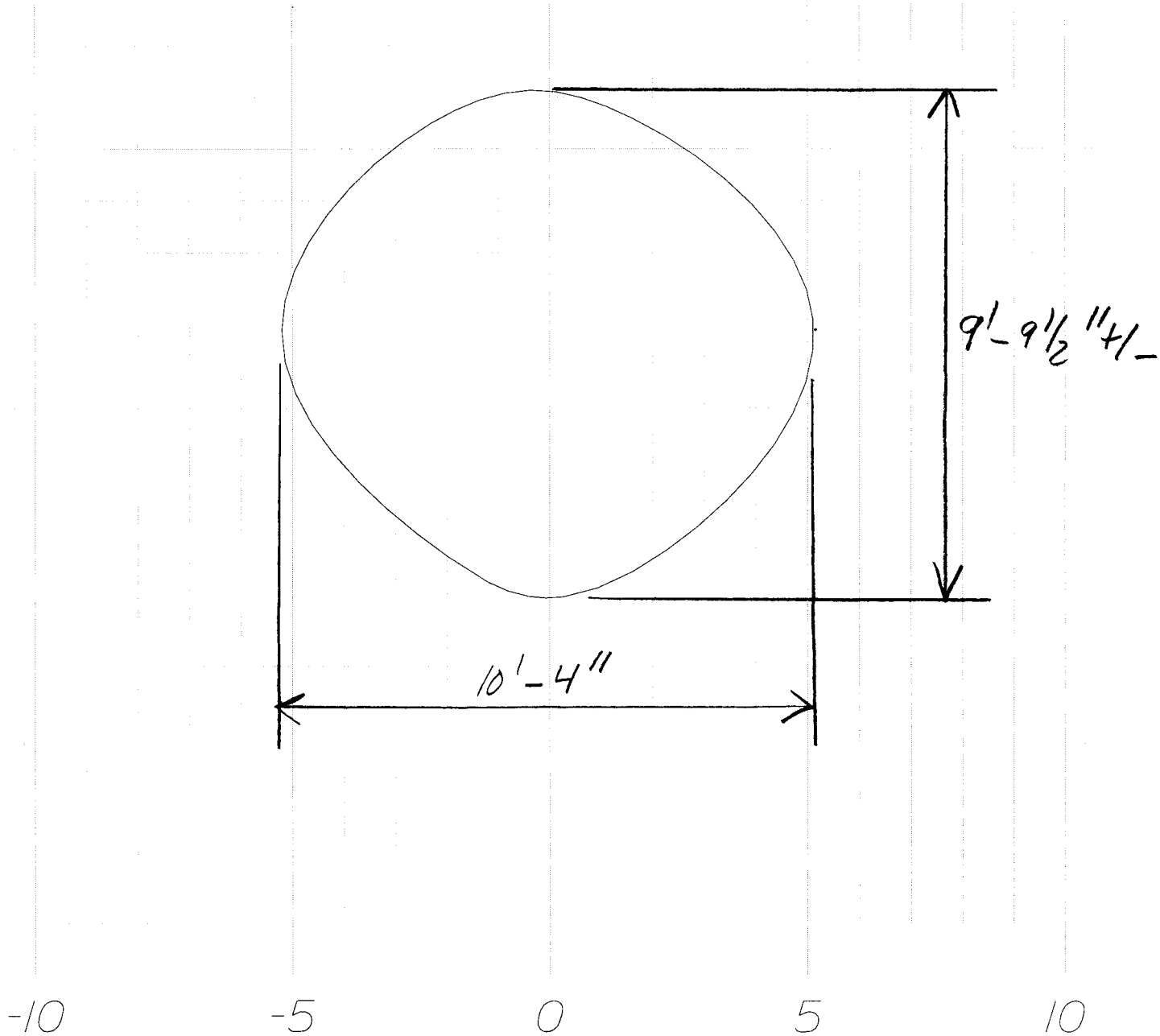

sta. 1+03.00 (50' from inlet)

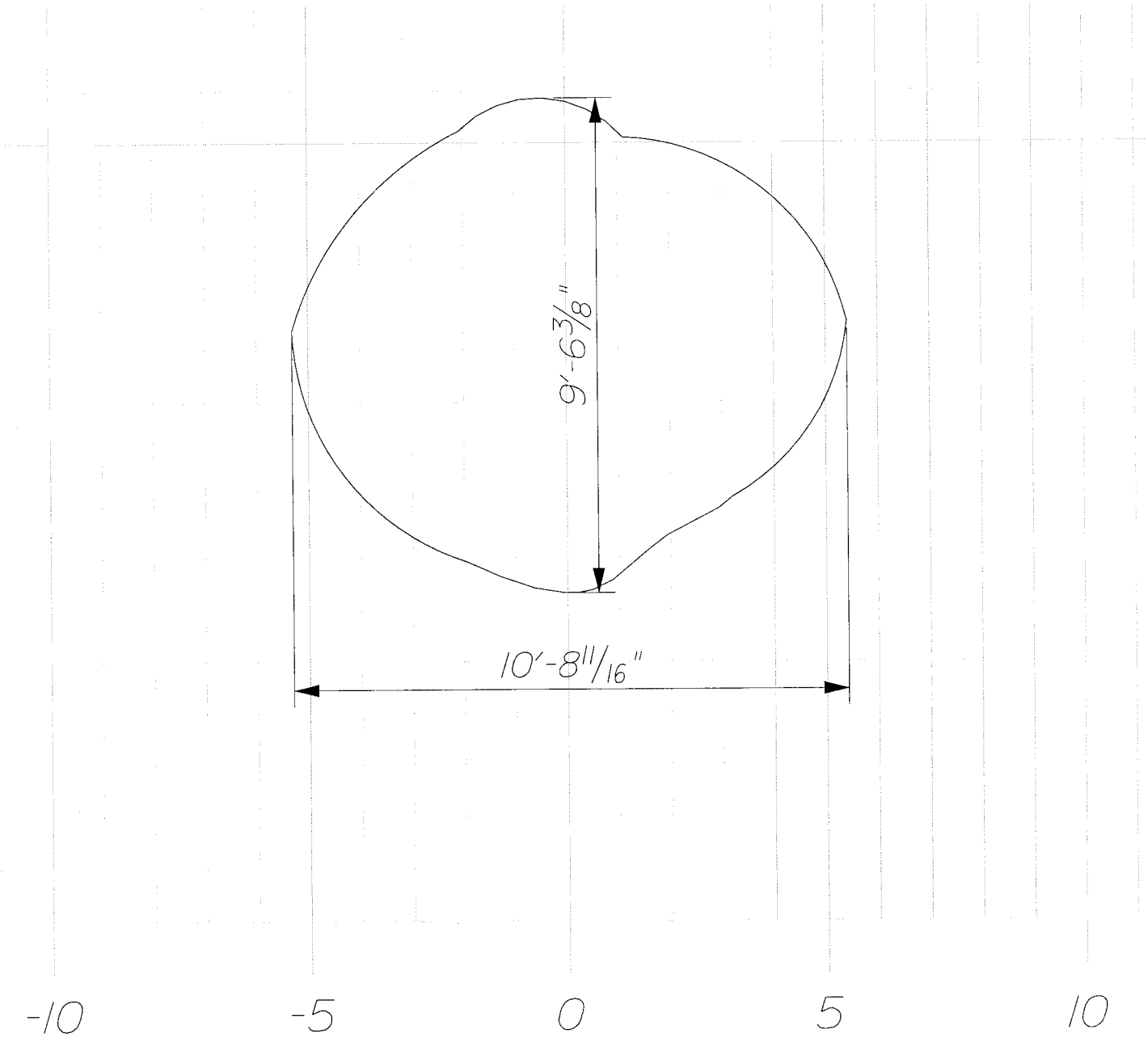

sta. 1+15.00 (62' from inlet)

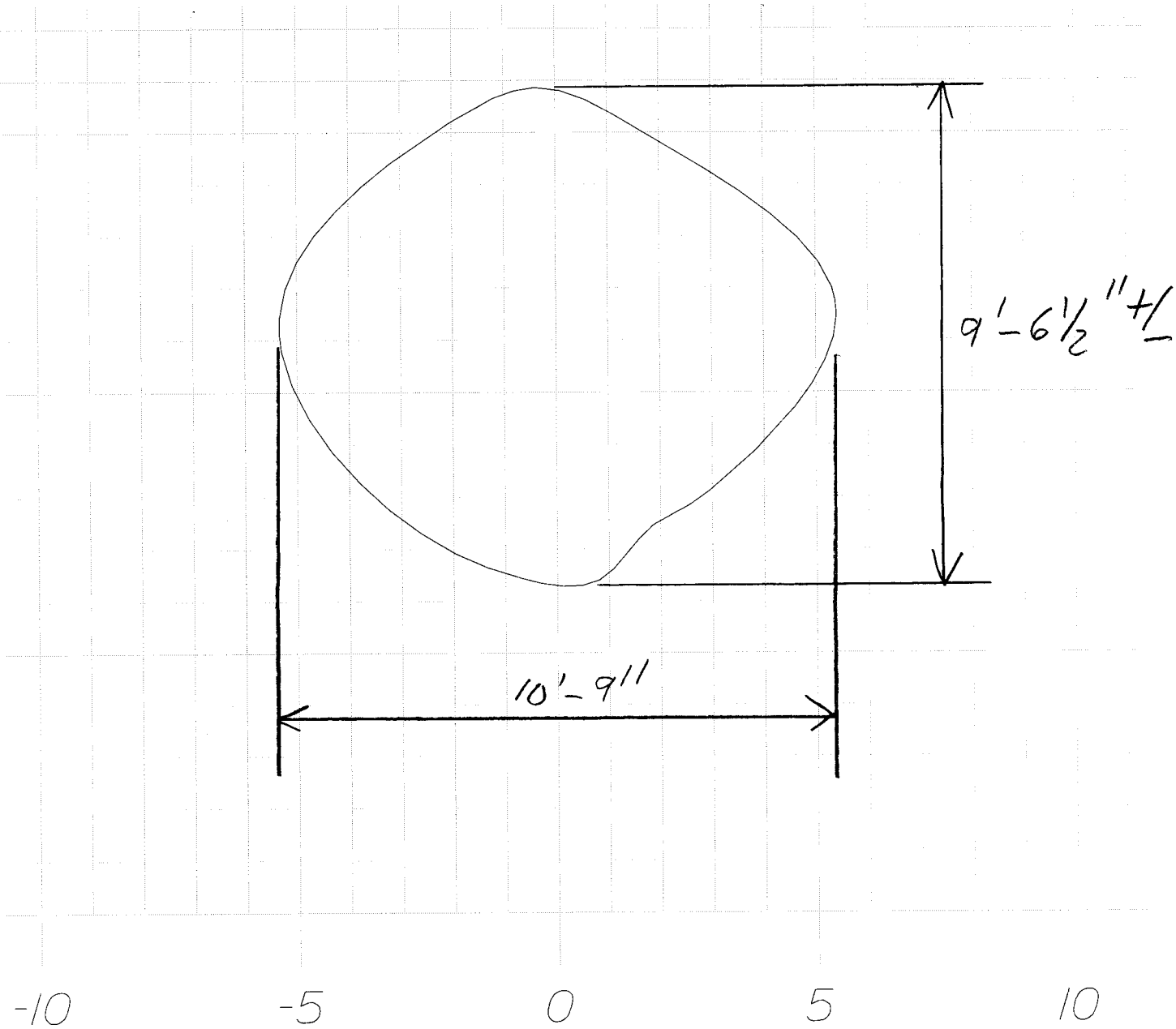

sta. 1+17.00 (64' from inlet)

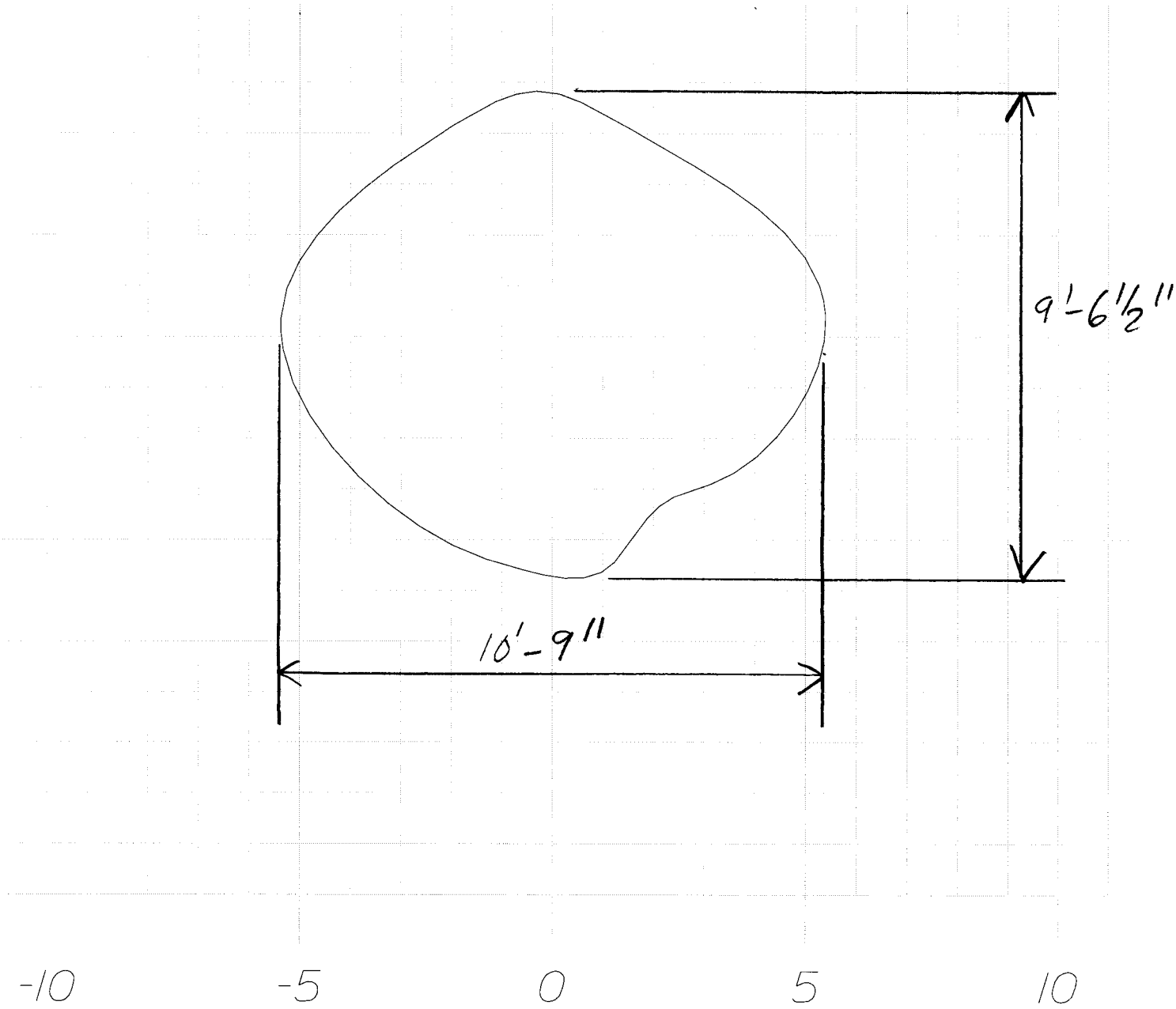

sta. 1+19.00 (66' from inlet)

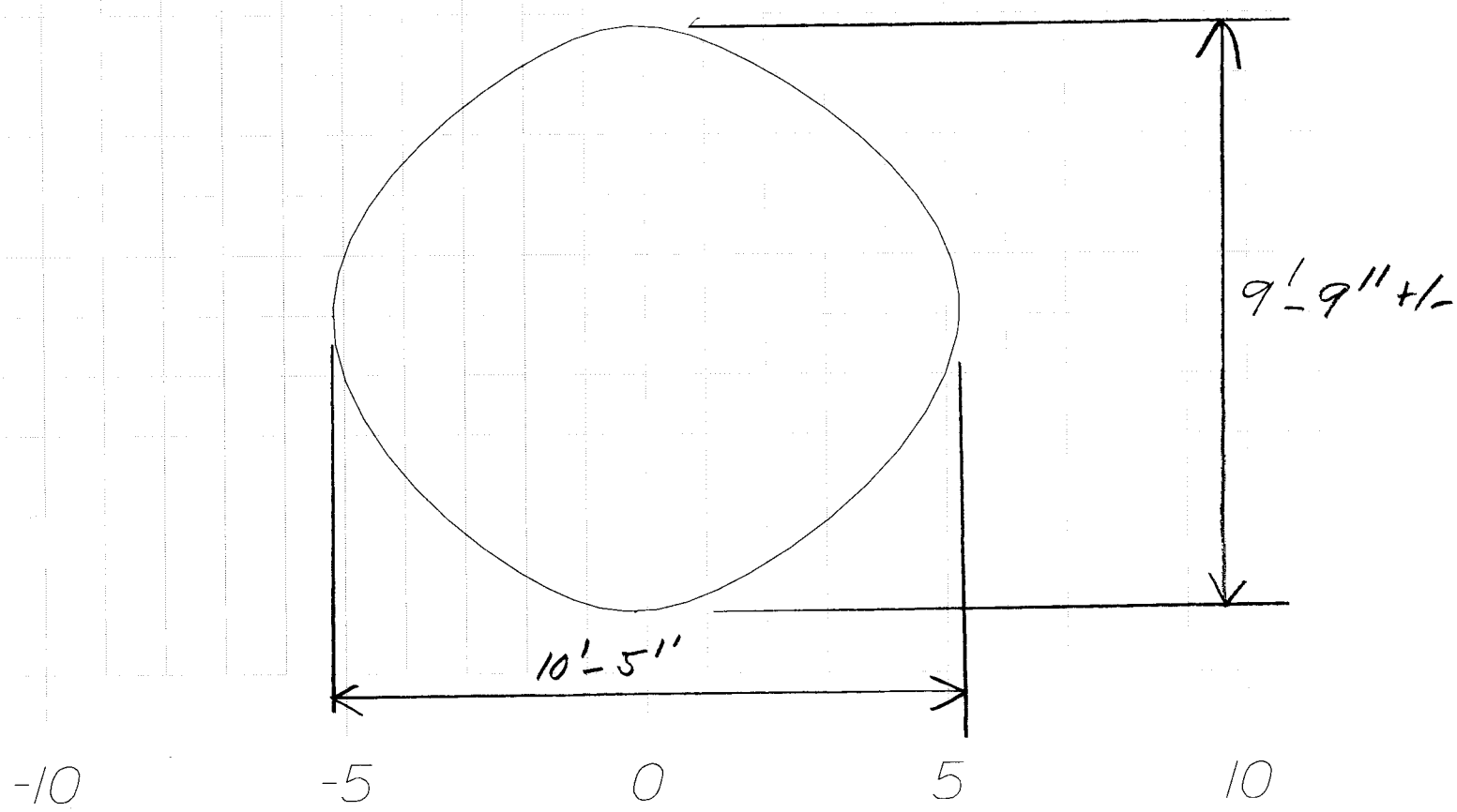

sta 1+33.00 (80' from inlet)

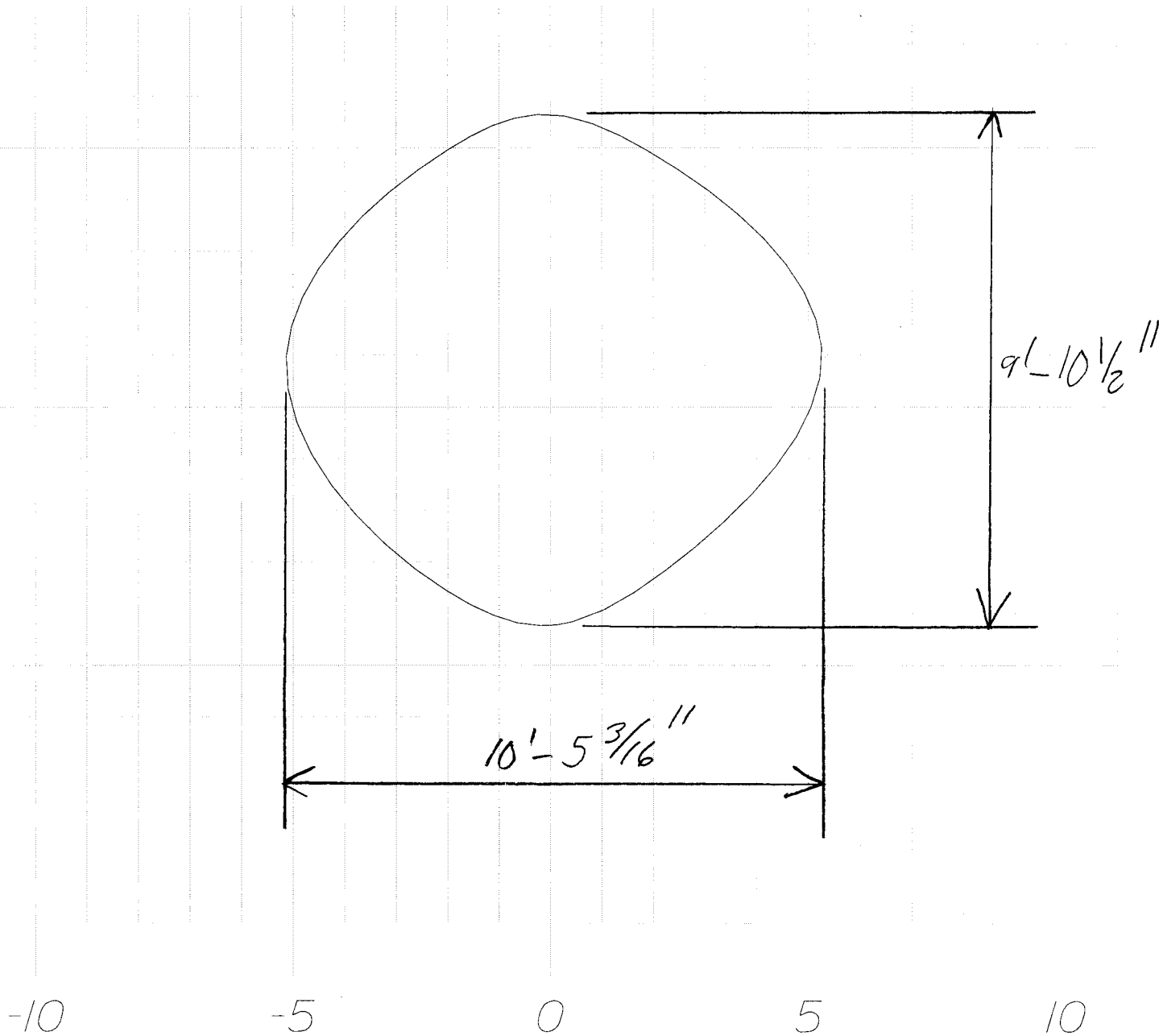

sta. 1+43.00 (90' from inlet)

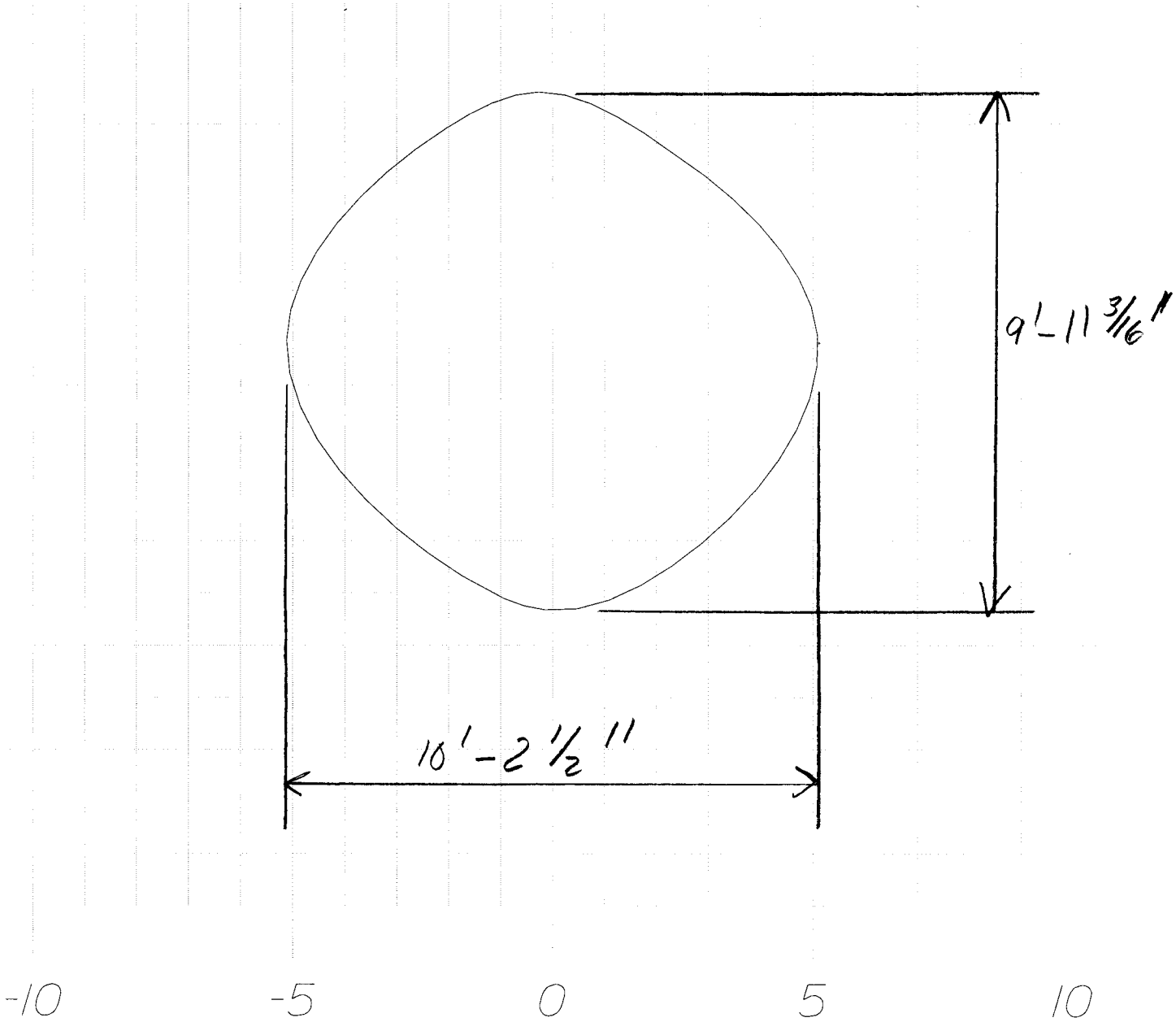

sta 1+53.00 (100' from inlet).

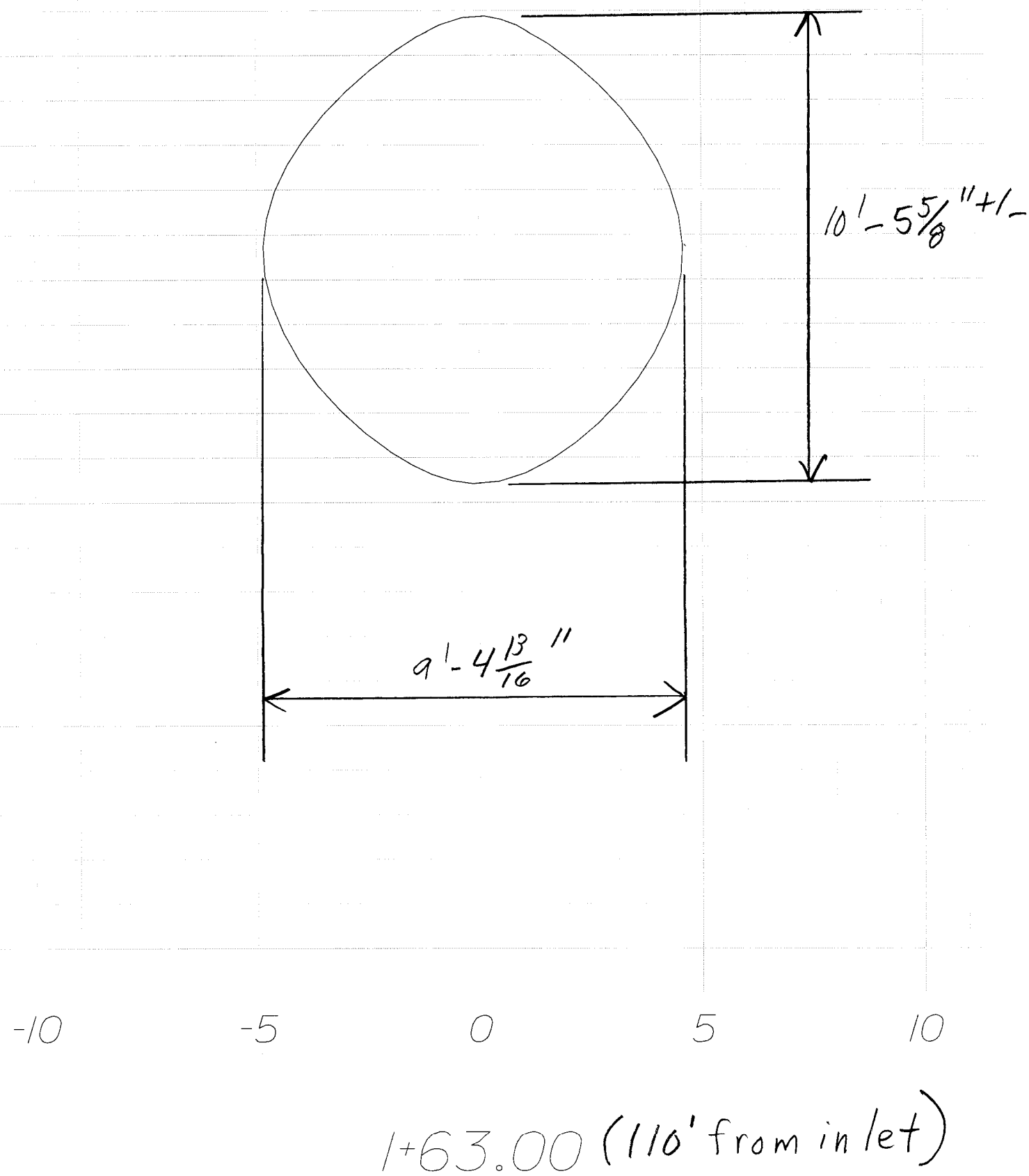
10'-5 5/8" +/-
9'-4 13/16"
-10
-5
0
5
10
1+63.00 (110' from inlet)

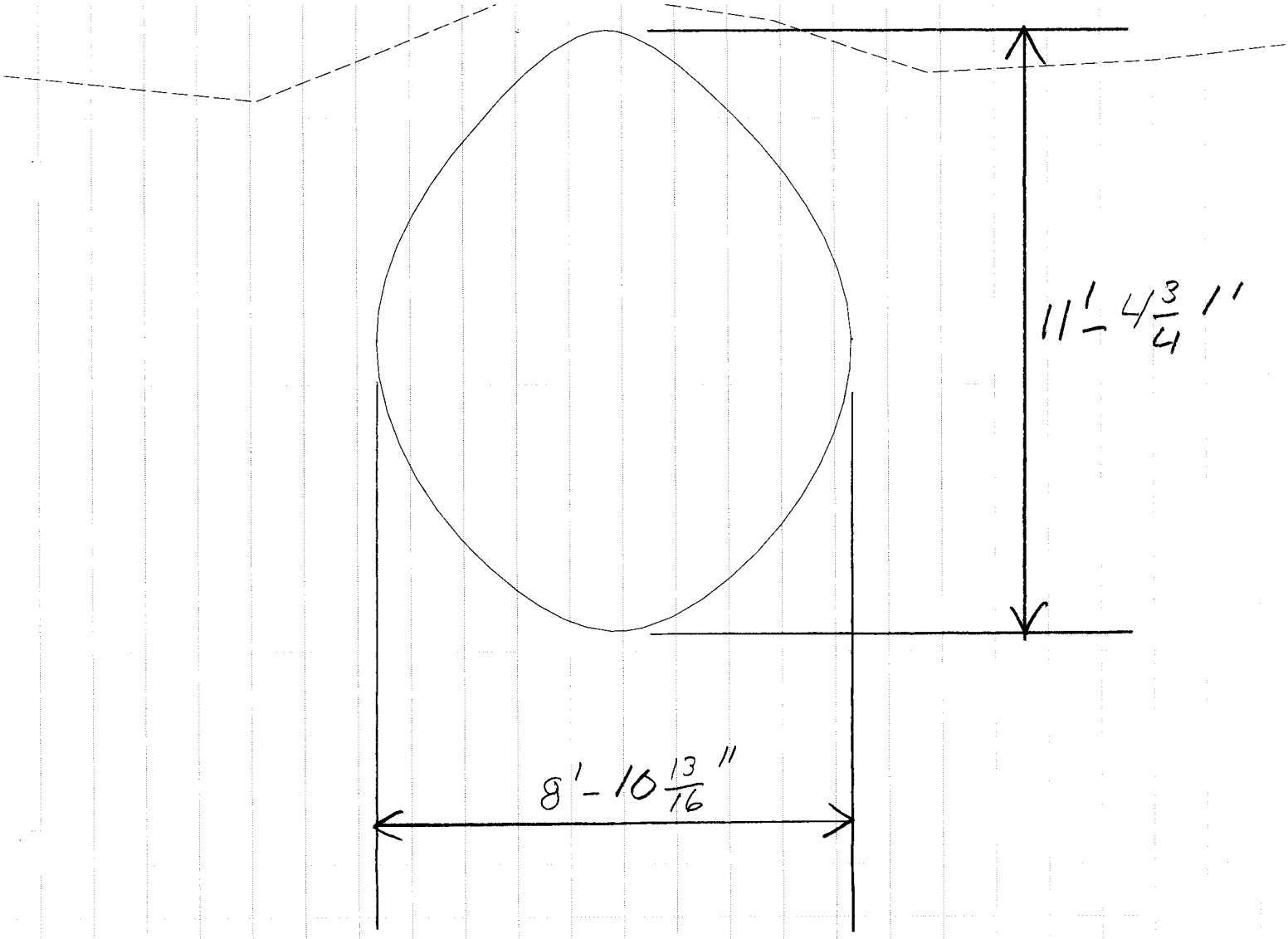

-10 -5 0 5 10

sta. 1+73.00 (120' from inlet)

19319.00 CARIBOU, HARDWOOD BROOK

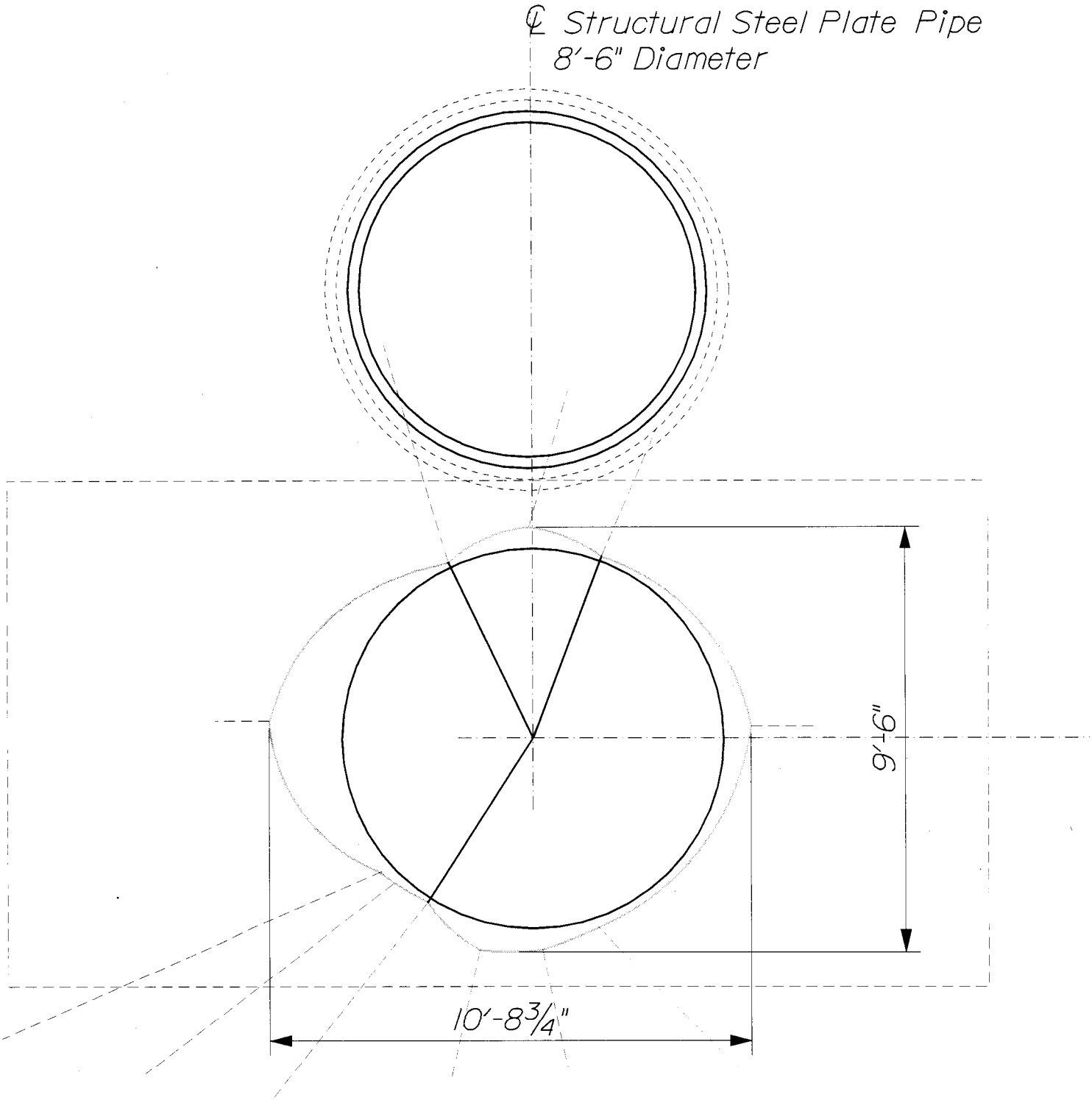

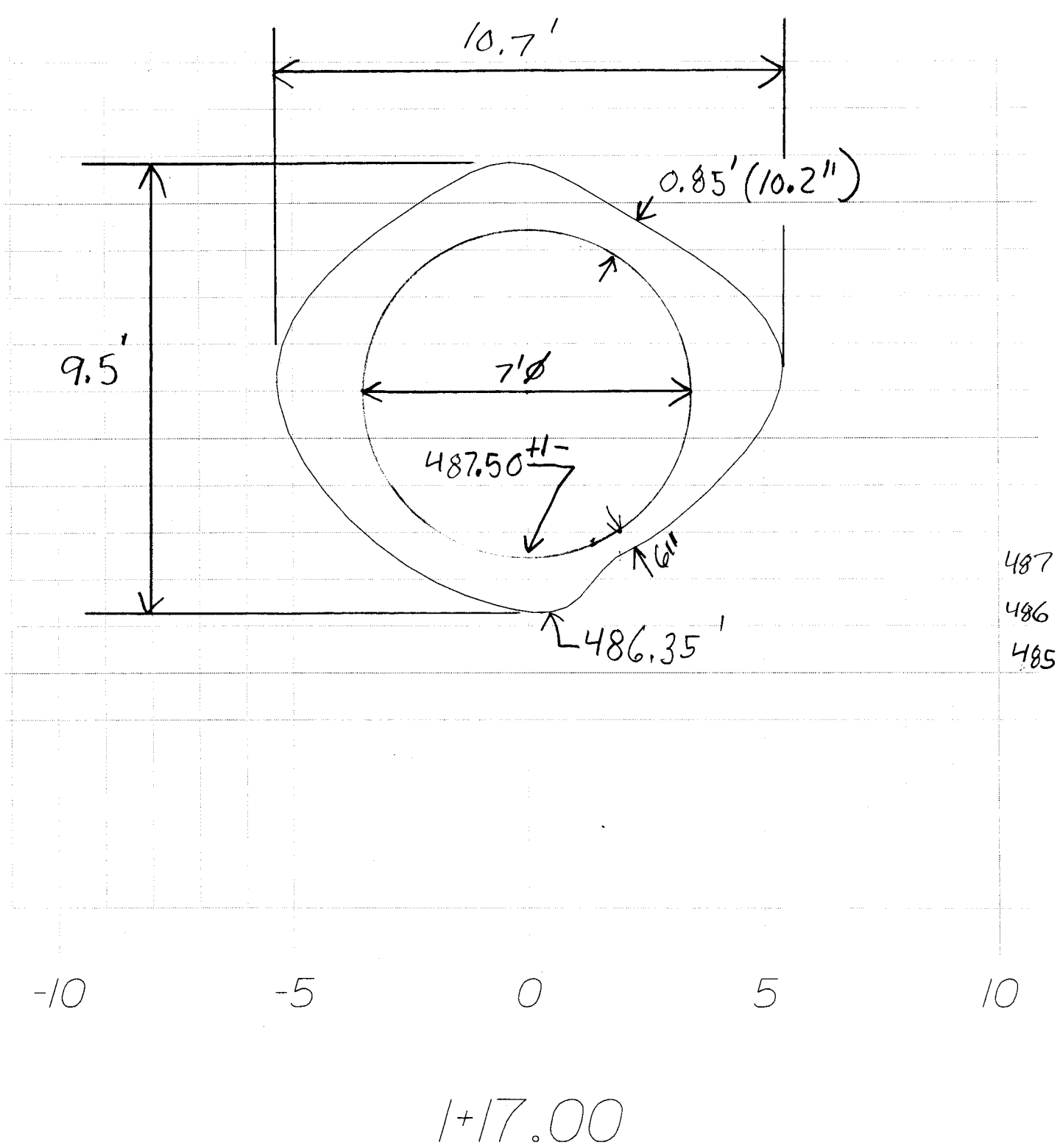

30 scale

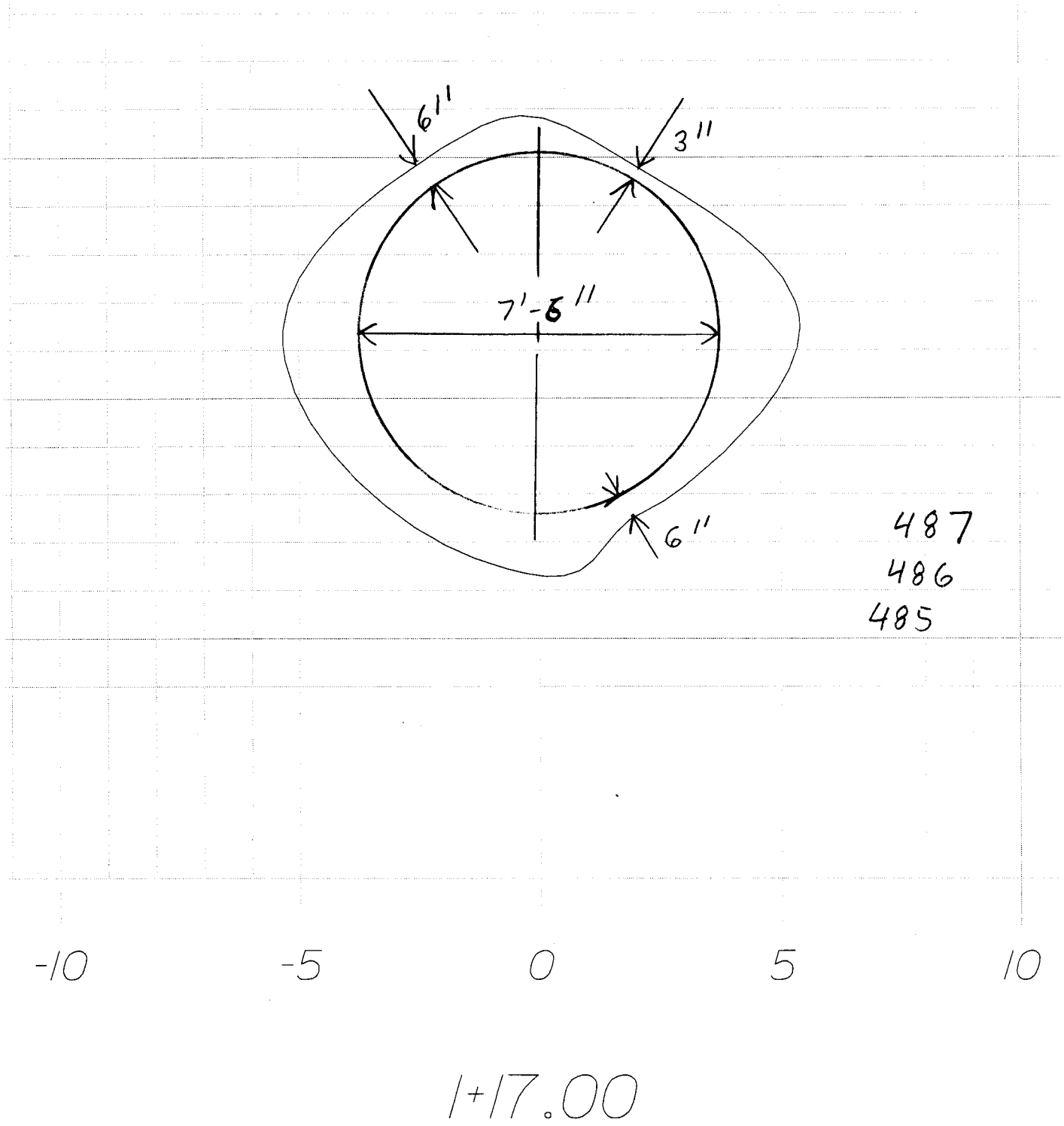

30 scale

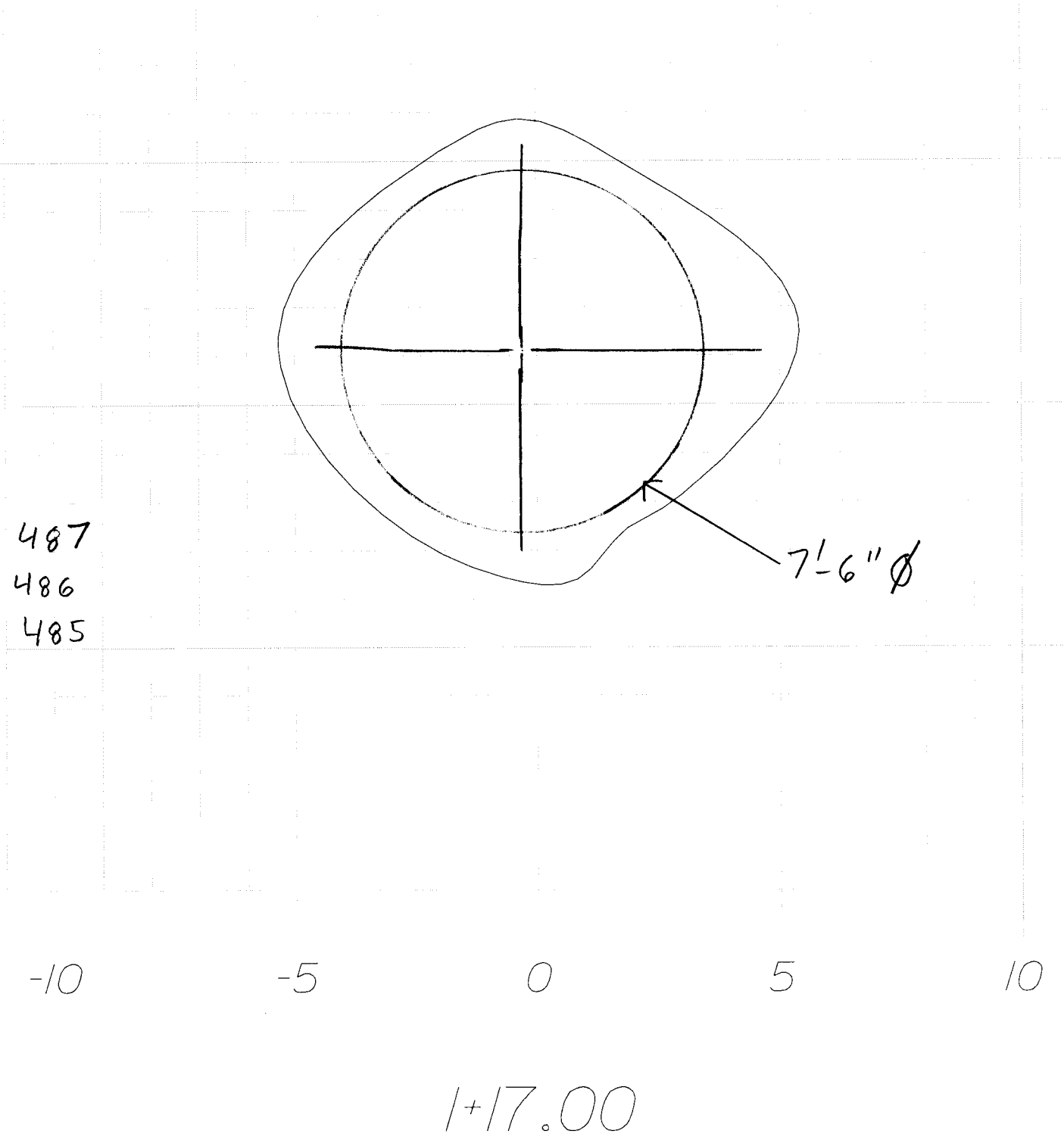

30 scale

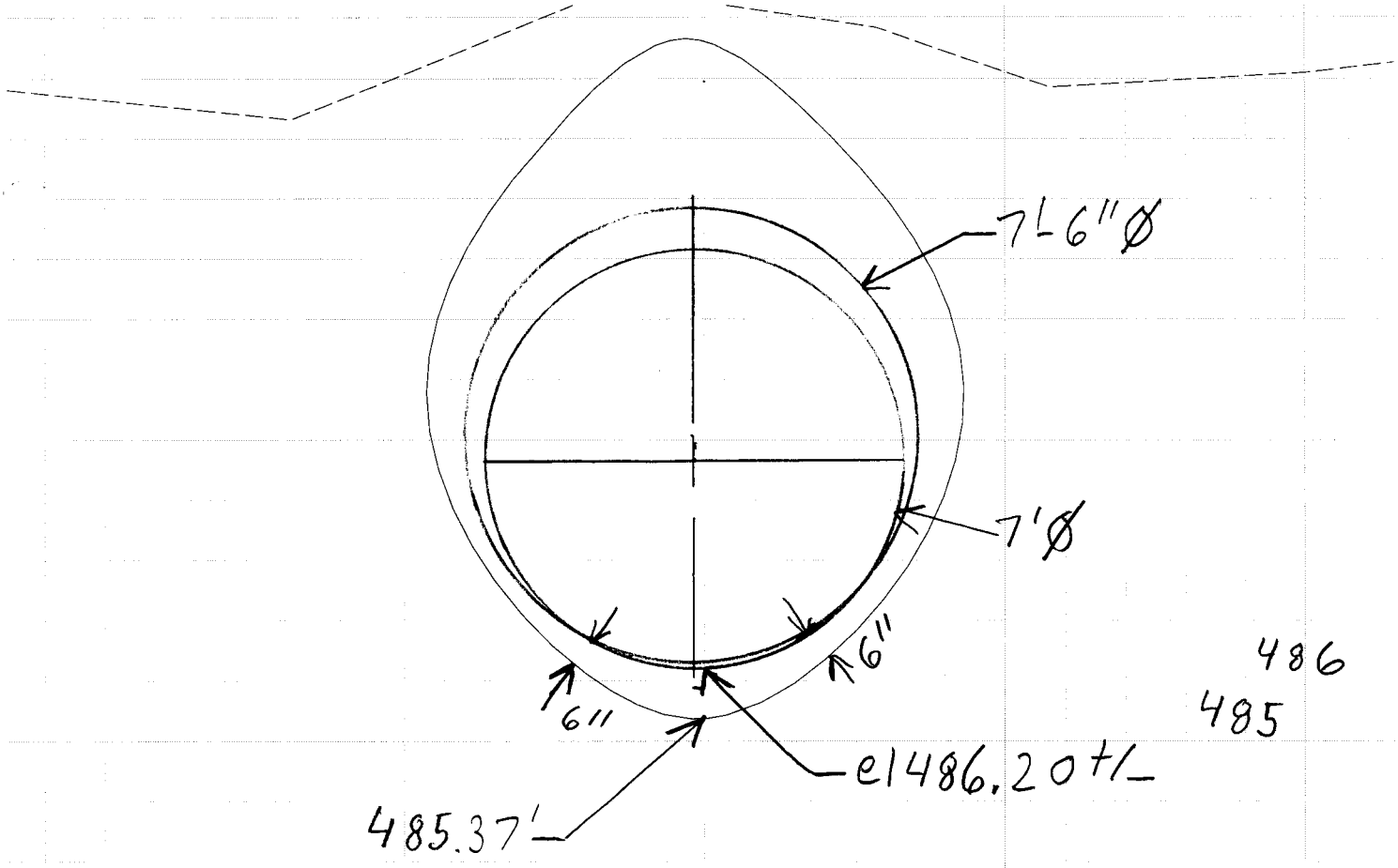

-10 -5 0 5 10

30 scale

1+73 00

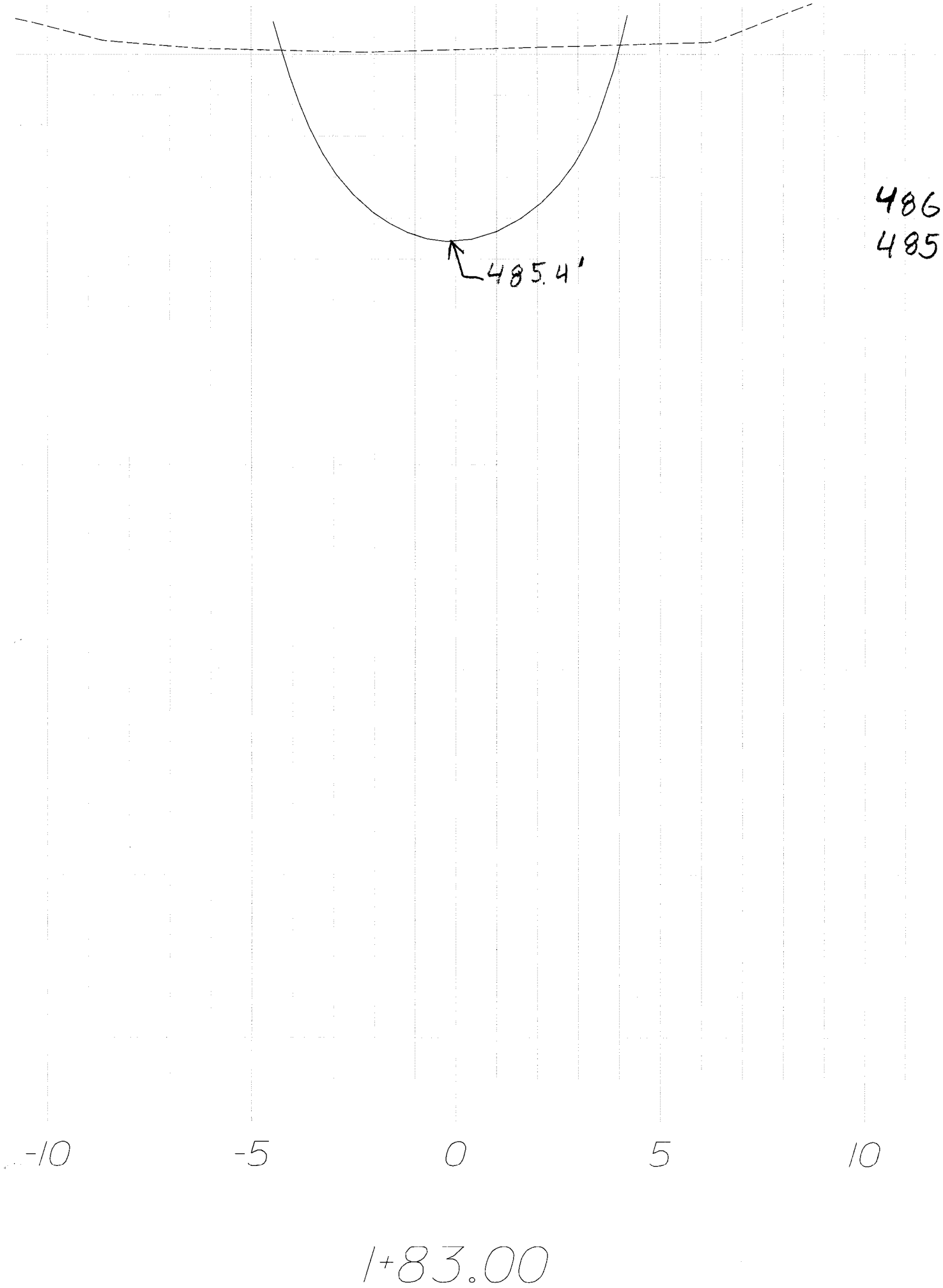
486
485
485.4'
-10
-5
0
5
10
1+83.00

Questions concerning the VERTCON process may be mailed to NGS

Latitude: 46 47 03

Longitude: 67 59 20

NGVD 29 height: 146.341 480' NGVD

Datum shift (NAVD 88 minus NGVD 29): -0.187 meter ~ 0.6135'

Converted to NAVD 88 height: 146.154 meters 479.502'