STATE OF MAINE
DEPARTMENT OF TRANSPORTATION

SPECIFICATIONS

Design: Load and Resistance Factor Design per AASHTO LRFD Bridge Design Specifications, Sixth Edition 2012. With Interim Revsions Through 2012.

TRAFFIC DATA

Current (2012) AADT	2510
Future (2022) AADT	2760
DHV - % of AADT	11
Design Hour Volume	331
Heavy Trucks (% of AADT)	11
Heavy Trucks (% of DHV)	11
Directional Distribution (% of DHV)	55
18 kip Equivalent P 2.0	237
18 kip Equivalent P 2.5	255
Design Speed (mph)	35

HYDROLOGIC DATA

Drainage Area	4.28 sq mi
Design Discharge (Q50)	602.30 cfs
Check Discharge (Q100)	707.80 cfs
Headwater Elevation (Q50)	229.56 ft
Headwater Elevation (Q100)	230.44 ft
Discharge Velocity (Q50)	11.44 fps
Discharge Velocity (Q100)	12.21 fps
Headwater Elevation (Q1.1)	224.30 ft
Discharge Velocity (Q1.1)	3.48 fps
Headwater Elevation (Q25)	228.78 ft

MATERIALS

Concrete	Class "A"
Reinforcing Steel	ASTM A 615/A 615M, Grade 60

BASIC DESIGN STRESSES

Concrete	f 'c = 4,350 psi
Reinforcing Steel	f y = 60,000 psi

UTILITIES

Time Warner Cable
Central Maine Power Company
Hartland & St. Albans Telephone Company

MAINTENANCE OF TRAFFIC

Two lanes of traffic are to be maintained virtually all of the time. One lane may need to be closed during some phases of construction and traffic maintained using flaggers.

ST. ALBANS
SOMERSET COUNTY
RAY BROOK BRIDGE
OVER
RAY BROOK
ROUTE 23-43-152
STATE PROJECT NO. 19298.00
CULVERT INVERT LINING
BRIDGE NO. 5330

LIST OF DRAWINGS

Title Sheet 1
Estimated Quantities, Rebar Schedule & Construction Notes 2
General Plan & Profile 3
Cross Sections 4-9
Pipe Arch Invert Liner & Fish Weirs 10
External Fish Weirs 11
Right of Way Map 12

PROJECT LOCATION:	0.34 Miles North East Of The Intersection Of Rte. 151 And 152 Latitude 44° -53'-6.83" N - Longitude 69° -26'-29.46" W
PROGRAM AREA:	Bridge
OUTLINE OF WORK:	Invert Lining Of Existing Plate Arch, Place Riprap On Side Slopes And Construct Riprap Apron At Upstream End Of Plate Arch, Reconstruct Gravel Shoulders, Place New Guardrail And Construct Fish Weir's.

WIN 19298.00

19298.00

STATE OF MAINE
DEPARTMENT OF TRANSPORTATION
APPROVED
COMMISSIONER: DATE 4/12/13
CHIEF ENGINEER: DATE 4/12/13

STATE OF MAINE · Michael Henry Wight · 8089 · LICENSED · PROFESSIONAL ENGINEER

SIGNATURE: Michael Wight
P.E. NUMBER: 8089
DATE: 4/11/2013

PROJECT INFORMATION

PROGRAM	BRIDGE
PROJECT MANAGER	S. BODGE
DESIGNER	M. WIGHT / B. REEVES
CONSULTANT	
PROJECT RESIDENT	
CONTRACTOR	
PROJECT COMPLETION DATE	

ST. ALBANS
RAY BROOK BRIDGE

TITLE SHEET

SHEET NUMBER
1
OF 12

Filename:\00\BRIDGE\MSTA\001_Title.dgn Division: BRIDGE Username: Mark.Poulin Date:4/11/2013

ESTIMATED QUANTITIES

ITEM NO.	DESCRIPTION	QUANTITY	UNIT
203.20	COMMON EXCAVATION	10	CY
203.21	ROCK EXCAVATION	10	CY
205.51	WIDENING OF EXISTING SHOULDER - PLAN QUANTITY	535	SY
502.325	STRUCTURAL CONCRETE CULVERT INVERT LINING (37 CY)	1	LS
502.326	STRUCTURAL CONCRETE - FISH WEIRS (4 CY)	1	LS
503.12	REINFORCING STEEL, FABRICATED AND DELIVERED	3740	LB
503.13	REINFORCING STEEL, PLACING	3740	LB
511.07	COFFERDAM: UPSTREAM	1	LS
511.07	COFFERDAM: DOWNSTREAM	1	LS
606.23	GUARDRAIL TYPE 3C - SINGLE RAIL	225	LF
606.353	REFLECTORIZED FLEXIBLE GUARDRAIL MARKER	8	EA
606.363	GUARDRAIL REMOVE AND DISPOSE	187	LF
606.754	WIDEN SHOULDER FOR GUARDRAIL 350 FLARED TERMINAL	4	EA
606.79	GUARDRAIL 350 FLARED TERMINAL	4	EA
610.08	PLAIN RIPRAP	200	CY
613.319	EROSION CONTROL BLANKET	85	SY
620.58	EROSION CONTROL GEOTEXTILE	275	SY
629.05	HAND LABOR, STRAIGHT TIME	10	HR
631.12	ALL PURPOSE EXCAVATOR (INCLUDING OPERATOR)	10	HR
631.131	SMALL BULLDOZER-GRADER (INCLUDING OPERATOR)	10	HR
631.15	ROLLER, EARTH AND BASE COURSE (INCLUDING OPERATOR)	10	HR
631.172	TRUCK - LARGE (INCLUDING OPERATOR)	10	HR
639.19	FIELD OFFICE TYPE B	1	EA
652.33	DRUM	20	EA
652.34	CONE	20	EA
652.35	CONSTRUCTION SIGNS	150	SF
652.36	MAINTENANCE OF TRAFFIC CONTROL DEVICES	30	CD
652.38	FLAGGER	100	HR
656.75	TEMPORARY SOIL EROSION AND WATER POLLUTION CONTROL	1	LS
659.10	MOBILIZATION	1	LS

GENERAL CONSTRUCTION NOTES

1. For easements, construction limits and right of way lines, refer to Right of Way Map.

2. The clearing limits as shown on the plans are approximate. The exact limits will be established in the field by the Resident. Payment for clearing will be considered incidental to Contract items.

3. All utility facilities shall be adjusted by the respective utilities unless otherwise noted.

4. Stones which cannot be rolled or compacted into the surface of the shoulder shall be removed by hand raking. Payment for hand raking will be considered incidental to Item No. 205.51, Widening of existing shoulder.

5. Place loam 2 inches deep on all new or reconstructed sideslopes or as directed by the Resident.

6. Erosion Control Mix may be substituted in those areas normally receiving loam and seed as directed by the Resident. Placement shall be in accordance with Standard Specifications Section 619, Mulch. Payment will be made under Item No. 205.51, Widening of existing shoulder.

7. Place a 24-in. wide strip of Temporary Erosion Control Blanket on the sideslopes along the top of the riprap and behind the wingwalls.

8. An NCHRP350 compliant guardrail end treatment shall be installed concurrently with the placement of each section of beam guardrail.

9. Extended-use Erosion Control Blanket, seeded gutters, riprap downspouts, and other gutters lined with Stone Ditch Protection shall be constructed after paving and shoulder work is completed, where it is apparent that runoff will cause continual erosion. Payment will be made under the appropriate Contract items.

10. Debris removal at inlet shall be considered incidental to pay item 502.325, Structural concrete culvert invert lining.

11. Project information referred to below may be accessed at the following MaineDOT web address: http://www.maine.gov/mdot/contractors/*projecttbl .

12. The existing bridge plans may be accessed at the MaineDOT web address. The plans are reproductions of the original drawings as prepared for the construction of the bridge. It is very unlikely that the plans will show any construction field changes or any alterations which may have been made to the bridge during its life span.

13. The hydrologic report of the bridge site may be accessed at the MaineDOT web address. The hydrologic report is based on MaineDOT's interpretation of the information obtained for the subject site. No assurance is given that the information or the conclusions of the report will be representative of actual conditions at the time of construction.

14. Quantities included for pay items measured and paid for by Lump Sum are estimated quantities and are provided by MaineDOT for informational purposes only. Lump Sum pay items will be paid for at the Contract Bid amount, with no addition or reduction in payment to the Contractor if the actual final quantities are different from the MaineDOT provided estimated quantities, except as follows:

a. If a Lump Sum pay item is eliminated, the requirements of Standard Specifications Section 109.2, Elimination of Items, will take precedence.

b. If other Contract Documents specifically allow a change in payment for a Lump Sum pay item, those requirements will be followed.

c. If a design change results in changes to estimated quantities for Lump Sum pay items, price adjustments will be made in accordance with Standard Specifications Section 109.7, Equitable Adjustments to Compensation.

15. After existing wood guardrail post have been removed, fill and compact holes with A.S.G.G. payment for material and labor will be paid for under pay item no. 205.51 existing shoulder widening.

REINFORCING STEEL SCHEDULE

INVERT LINER

STRAIGHT BARS

MARK	QTY.	LENGTH	LOCATION
A500	51	30'-0"	Invert Lining
A501	17	13'-2"	Invert Lining

BENT BARS

MARK	QTY.	LENGTH	TYPE	A	B	C	D	E	H	O	R1	R2	LOCATION
A550	196	9'-4"	C	2'-1/2"	2"	7'-11/2"			2'-10 1/2"	7'-8"	2"	24'-7"	Invert Lining

INTERNAL FISH WEIRS

MARK	QTY.	LENGTH	LOCATION
FW500	4	10'-8"	FISH WEIR

MARK	QTY.	LENGTH	TYPE	A	B	C	D	E	H	O	R1	R2	LOCATION
FW550	2	3'-4"	SL	6"	10"	8"	10"	6"					FISH WEIR
FW551	2	3'-9"	SL	6"	1'-1/2"	8"	1'-1/2"	6"					FISH WEIR
FW552	2	4'-1"	SL	6"	1'-2 1/2"	8"	1'-2 1/2"	6"					FISH WEIR
FW553	2	4'-4"	SL	6"	1'-4"	8"	1'-4"	6"					FISH WEIR
FW554	4	4'-7"	SL	6"	1'-5 1/2"	8"	1'-5 1/2"	6"					FISH WEIR
FW555	4	4'-8"	SL	6"	1'-6"	8"	1'-6"	6"					FISH WEIR
FW556	2	4'-5"	SL	6"	1'-4 1/2"	8"	1'-4 1/2"	6"					FISH WEIR
FW557	2	4'-2"	SL	6"	1'-3"	8"	1'-3"	6"					FISH WEIR
FW558	2	3'-10"	SL	6"	1'-1"	8"	1'-1"	6"					FISH WEIR
FW559	4	10'-11 1/2"	V	10'-2 1/2"	1 1/2"	7 1/2"			5 1/2"	10'-9 1/2"	2"		FISH WEIR

EXTERNAL FISH WEIRS

MARK	QTY.	LENGTH	LOCATION
FW501	90	2'-0"	FISH WEIR
FW502	2	11'-2"	FISH WEIR
FW503	4	9'-2"	FISH WEIR
FW504	2	8'-11 1/2"	FISH WEIR
FW505	2	22'-9 1/2"	FISH WEIR
FW506	2	19'-8 1/2"	FISH WEIR

MARK	QTY.	LENGTH	TYPE	A	B	C	D	E	H	O	R1	R2	LOCATION
FW560	45	5'-0"	U		2'-0"	8"	2'-0"						FISH WEIR
FW561	2	7'-0"	K	2'-0"	3'-0"	2'-0"			2"				FISH WEIR

TYPE - BENDING DIAGRAMS

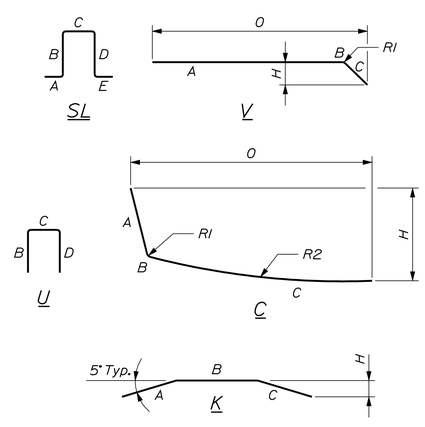

All dimensions are out-to-out of bar.

Bending details and hooks shall conform to the recommendations of the current revision of ACI Standard 315 and ACI Standard 318.

Reinforcing Bar: ASTM A 615/A 615M, Grade 60

GENERAL NOTES

1. The first two digits following the letter(s) of the mark indicate the size of the bar:

Mark "A502" = bar size #5
Mark "P805" = bar size #8
Mark "S650" = bar size #6

2. Each crank bar, Type B, may be replaced by two (2) straight bars (one top and one bottom) of the same bar size as the crank bar. Payment in either case will be based on crank bars as scheduled on the plans.

STATE OF MAINE
DEPARTMENT OF TRANSPORTATION

19298.00

WIN 19298.00

BRIDGE NO. 5330

BRIDGE PLANS

PROJ. MANAGER	S. Bodge	BY	DATE
DESIGN-DETAILED	B. REEVES	M. POULIN	
CHECKED-REVIEWED	D. SHAW	M. POULIN	
DESIGN2-DETAILED2			
DESIGN3-DETAILED3			
REVISIONS 1			
REVISIONS 2			
REVISIONS 3			
REVISIONS 4			
FIELD CHANGES			

SIGNATURE

P.E. NUMBER

DATE

RAY BROOK BRIDGE
RAY BROOK
ST. ALBANS SOMERSET COUNTY

ESTIMATED QUANTITIES
GENERAL CONSTRUCTION NOTES
REINFORCING STEEL SCHEDULE

SHEET NUMBER
2
OF 12

Filename: ...\msta\002_Est-Rebar-Con.dgn Division: BRIDGE Username: David.Sullivan Date:4/16/2013

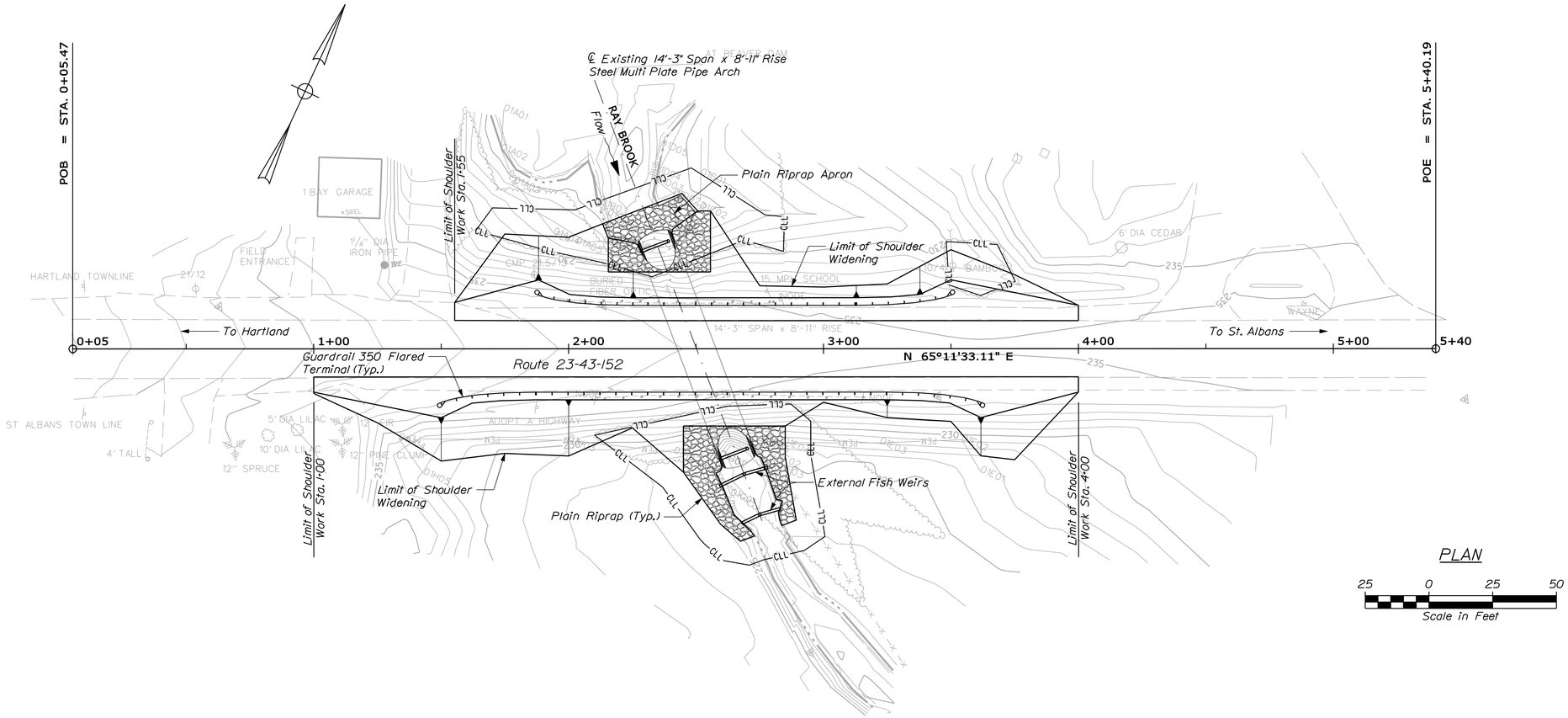

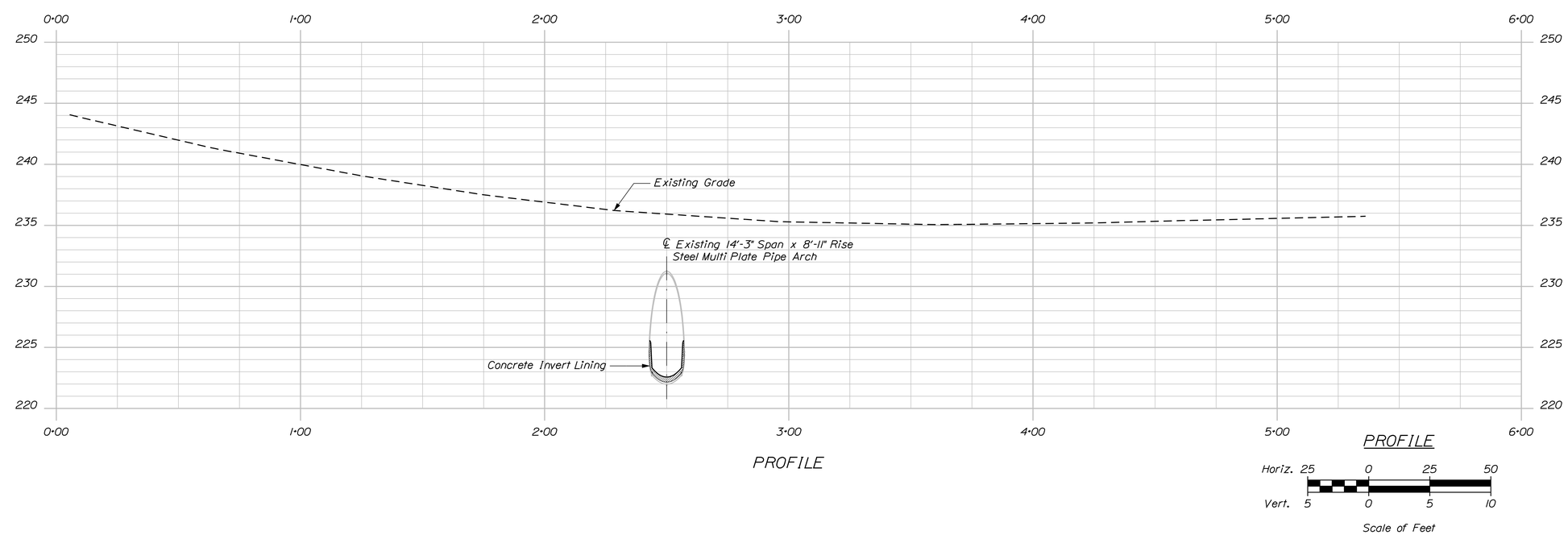

STATE OF MAINE
DEPARTMENT OF TRANSPORTATION

19298.00

PIN 19298.00

BRIDGE NO. 5330

BRIDGE PLANS

PROJ. MANAGER	S. Bodge	BY	DATE
DESIGN-DETAILED	B. REEVES	M. POULIN	
CHECKED-REVIEWED			
DESIGN2-DETAILED2			
DESIGN3-DETAILED3			
REVISIONS 1			
REVISIONS 2			
REVISIONS 3			
REVISIONS 4			
FIELD CHANGES			

SIGNATURE

P.E. NUMBER

DATE

RAY BROOK BRIDGE
RAY BROOK
ST. ALBANS SOMERSET COUNTY

PLAN & PROFILE

SHEET NUMBER

3

OF 12

Filename: ...\00\bridge\msto\003_BDPlan1.dgn Division: BRIDGE Username: David.Sullivan Date:4/16/2013

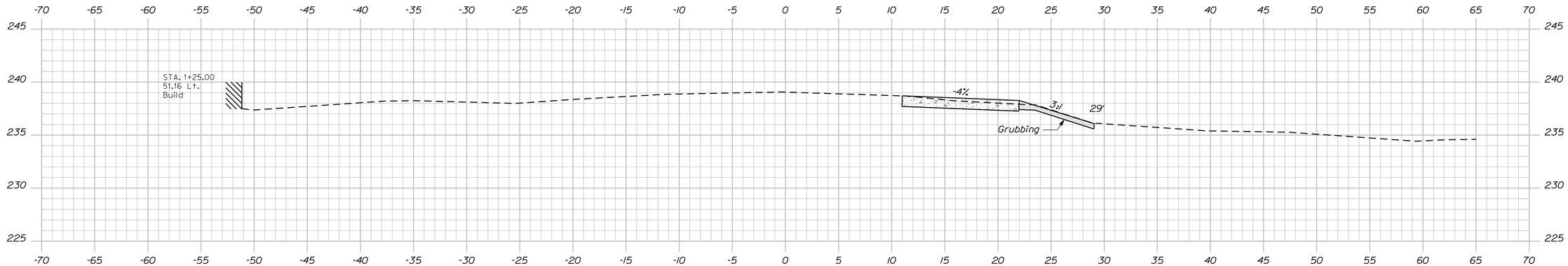

1+25.00

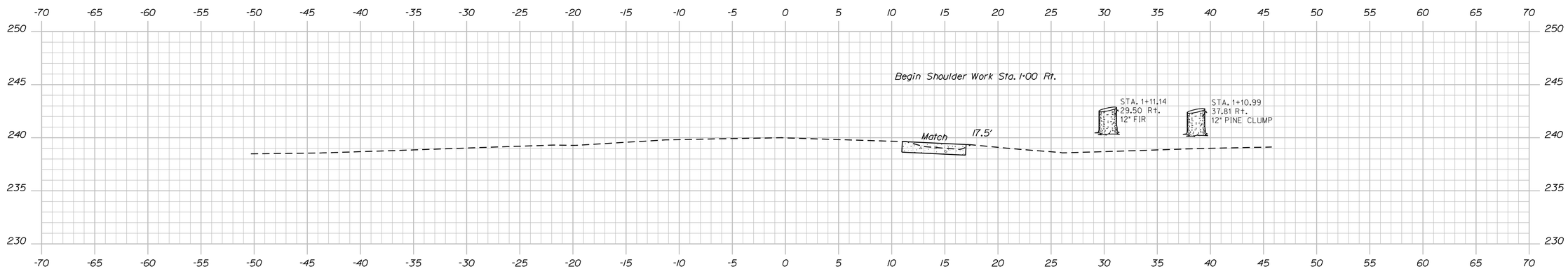

1+00.00

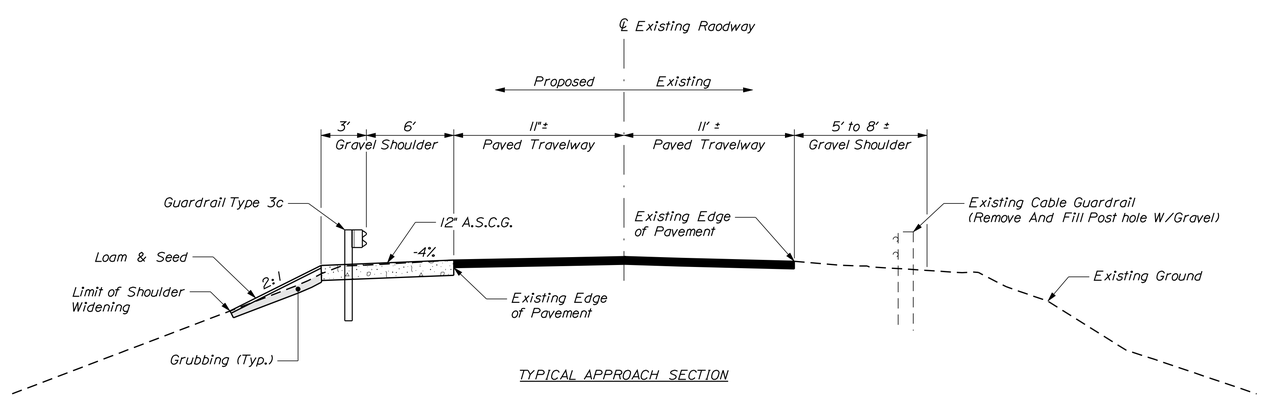

TYPICAL APPROACH SECTION

STATE OF MAINE
DEPARTMENT OF TRANSPORTATION

19298.00

WIN 19298.00

BRIDGE PLANS

BRIDGE NO. 5330

PROJ. MANAGER	S. Bodge	BY	DATE
DESIGN-DETAILED	B. REEVES	M. POULIN	
CHECKED-REVIEWED			
DESIGN2-DETAILED2			
DESIGN3-DETAILED3			
REVISIONS 1			
REVISIONS 2			
REVISIONS 3			
REVISIONS 4			
FIELD CHANGES			

SIGNATURE

P.E. NUMBER

DATE

RAY BROOK BRIDGE
RAY BROOK
ST. ALBANS SOMERSET COUNTY

CROSS SECTIONS

SHEET NUMBER

4

OF 12

Filename: ...\msta\004_z_Xsect_1+00_001.dgn Division: BRIDGE Username: David.Sullivan Date:4/16/2013

Sta. 1+00 to Sta. 1+25

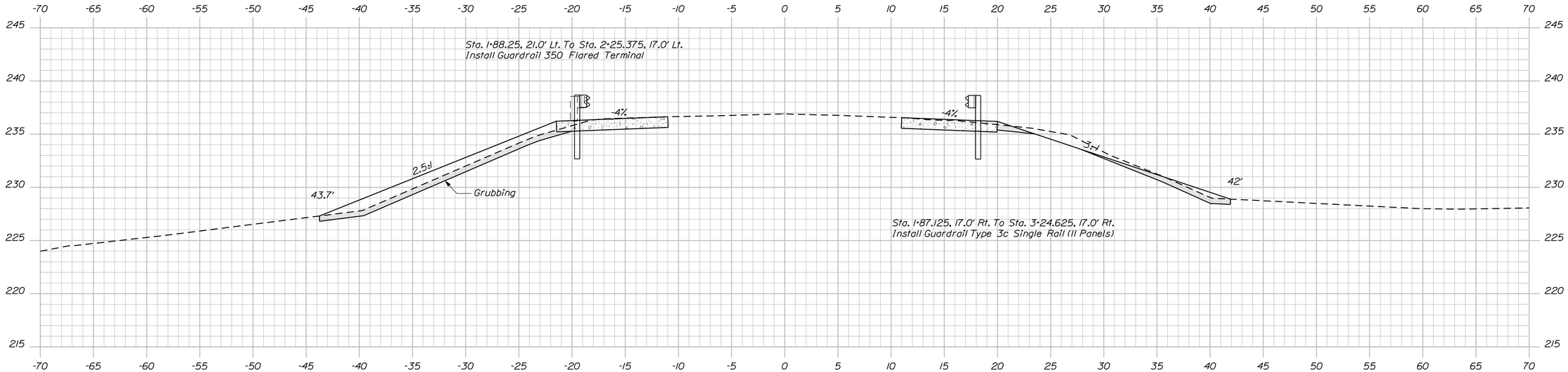

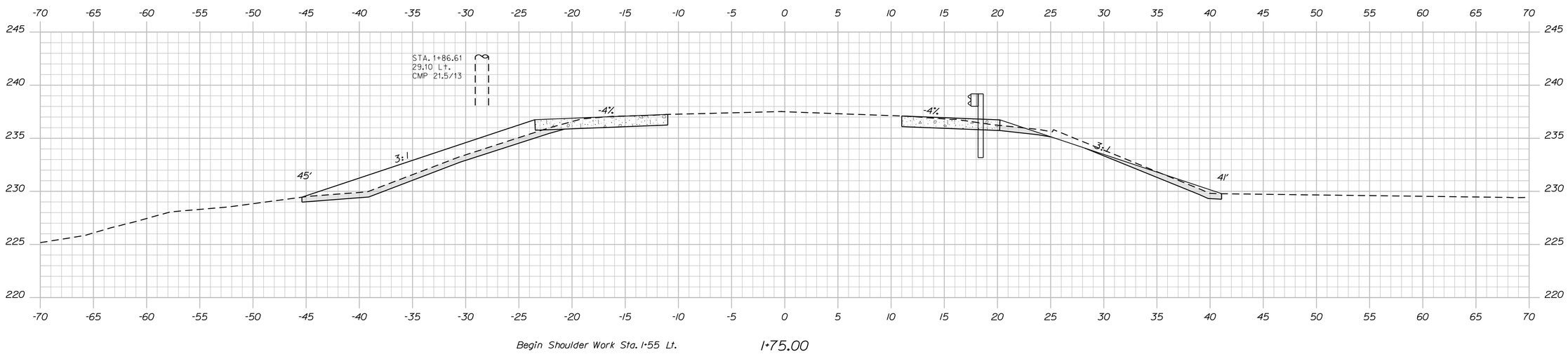

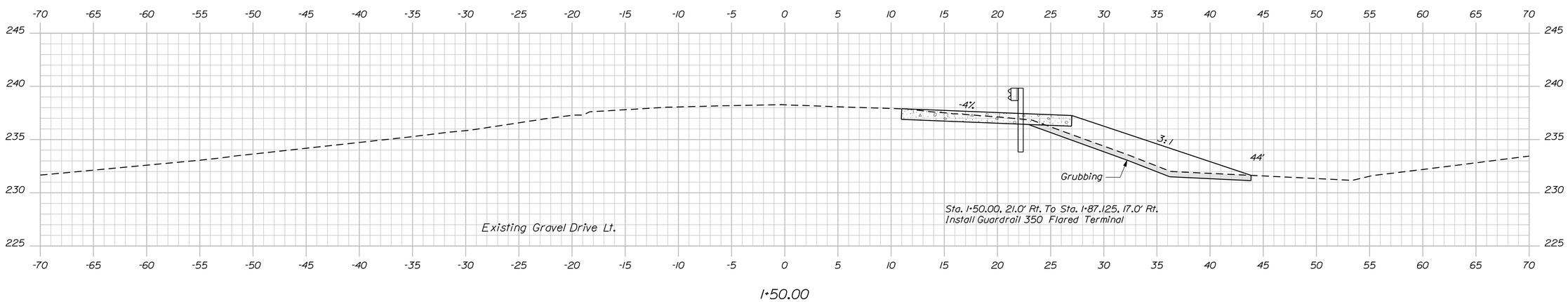

STATE OF MAINE
DEPARTMENT OF TRANSPORTATION

19298.00

WIN 19298.00

BRIDGE NO. 5330

BRIDGE PLANS

PROJ. MANAGER	S. Bedge	BY	DATE
DESIGN-DETAILED	B. REEVES	M. POULIN	
CHECKED-REVIEWED			
DESIGN2-DETAILED2			
DESIGN3-DETAILED3			
REVISIONS: 1			
REVISIONS: 2			
REVISIONS: 3			
REVISIONS: 4			
FIELD CHANGES			

SIGNATURE

P.E. NUMBER

DATE

RAY BROOK BRIDGE
RAY BROOK
ST. ALBANS SOMERSET COUNTY

CROSS SECTIONS

SHEET NUMBER

5

OF 12

Filename: ...\msto\005_z_Xsect_1+75_002.dgn Division: BRIDGE Username: David.Sullivan Date:4/16/2013

Sta. 1+50 to Sta. 2+00

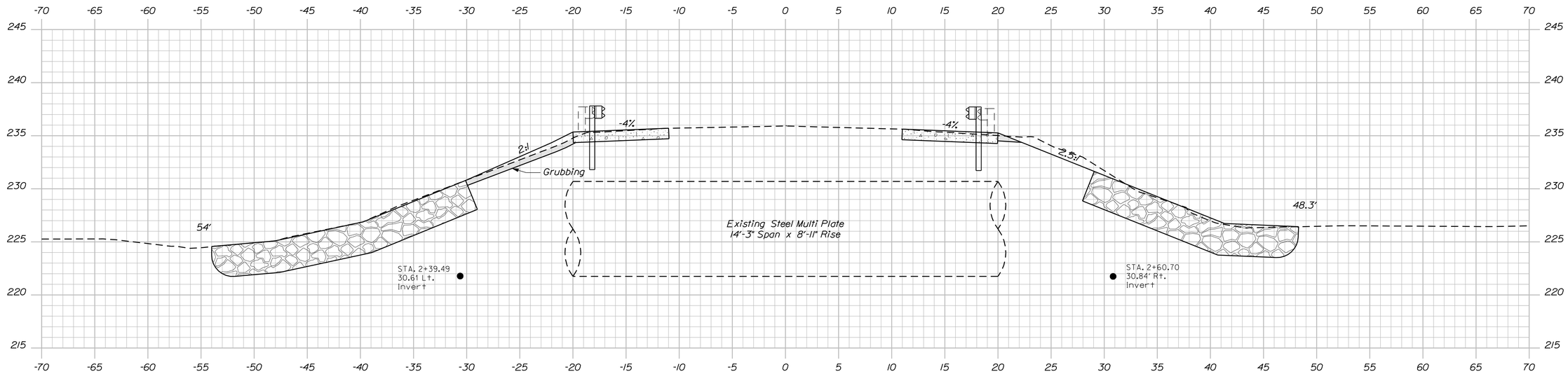

2+50.00

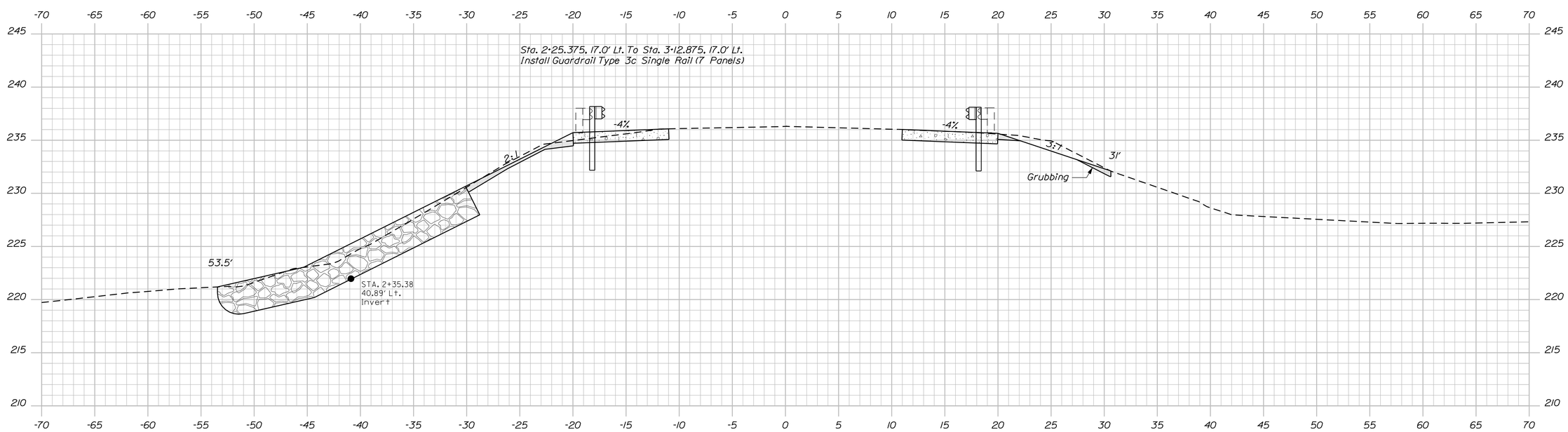

2+25.00

STATE OF MAINE
DEPARTMENT OF TRANSPORTATION

19298.00

WIN 19298.00

BRIDGE NO. 5330

BRIDGE PLANS

PROJ. MANAGER	S. Bodge	BY	DATE
DESIGN-DETAILED	B. REEVES	M. POULIN	
CHECKED-REVIEWED			
DESIGN2-DETAILED2			
DESIGN3-DETAILED3			
REVISIONS 1			
REVISIONS 2			
REVISIONS 3			
REVISIONS 4			
FIELD CHANGES			

SIGNATURE

P.E. NUMBER

DATE

RAY BROOK BRIDGE
RAY BROOK
ST. ALBANS SOMERSET COUNTY

CROSS SECTIONS

SHEET NUMBER

6

OF 12

Sta. 2+25 to Sta. 2+50

Filename: ...\msta\006_z_Xsect_2+25_003.dgn Division: BRIDGE Username: David.Sullivan Date:4/16/2013

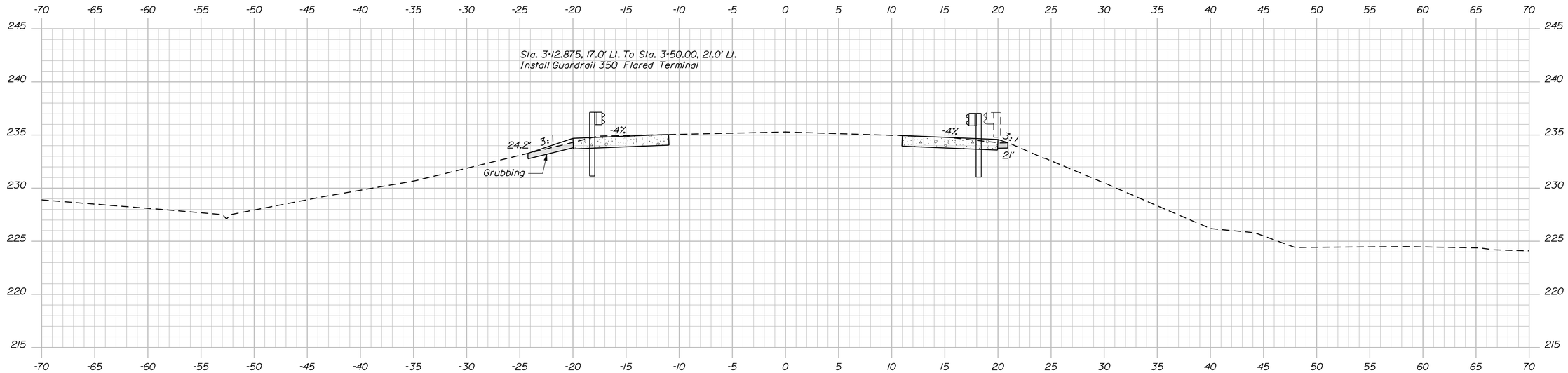

3+00.00

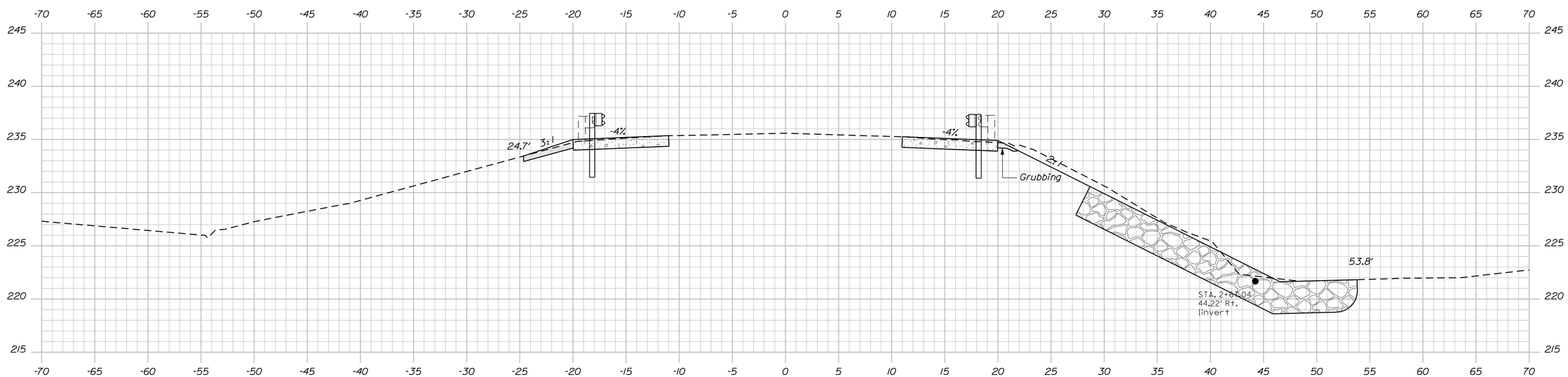

2+75.00

Sta. 2+75 to Sta. 3+00

STATE OF MAINE
DEPARTMENT OF TRANSPORTATION

19298.00

WIN 19298.00

BRIDGE NO. 5330

BRIDGE PLANS

PROJ. MANAGER	S. Bodge	BY	DATE
DESIGN-DETAILED	B. REEVES	M. POULIN	
CHECKED-REVIEWED			
DESIGN2-DETAILED2			
DESIGN3-DETAILED3			
REVISIONS 1			
REVISIONS 2			
REVISIONS 3			
REVISIONS 4			
FIELD CHANGES			

SIGNATURE

P.E. NUMBER

DATE

RAY BROOK BRIDGE
RAY BROOK
ST. ALBANS SOMERSET COUNTY

CROSS SECTIONS

SHEET NUMBER

7

OF 12

Filename: ...\msta\007_z_Xsect_2+75_004.dgn Division: BRIDGE Username: David.Sullivan Date:4/16/2013

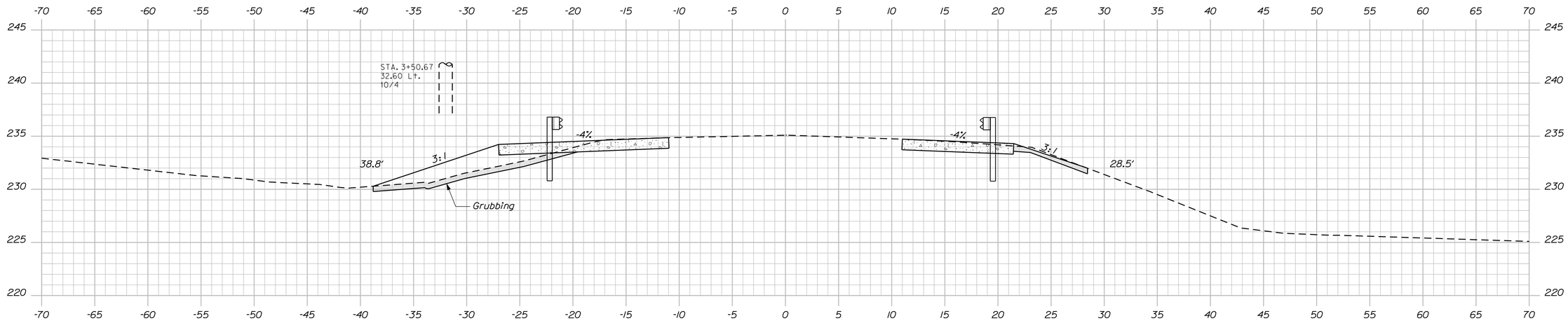

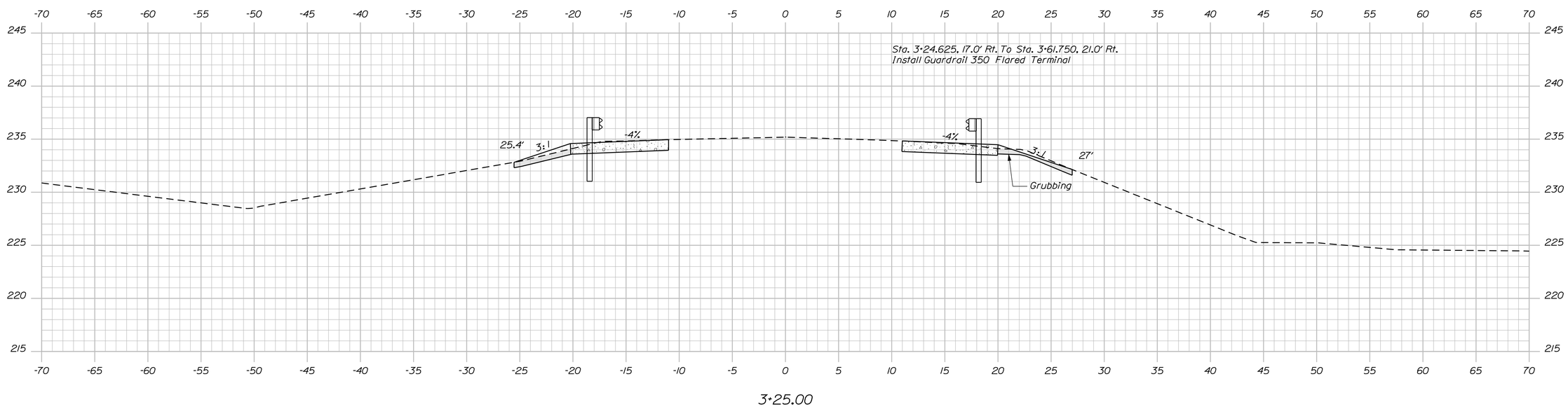

STATE OF MAINE
DEPARTMENT OF TRANSPORTATION

19298.00

WIN 19298.00

BRIDGE NO. 5330

BRIDGE PLANS

PROJ. MANAGER	S. Bodge	BY	DATE
DESIGN-DETAILED	B. REEVES	M. POULIN	
CHECKED-REVIEWED			
DESIGN2-DETAILED2			
DESIGN3-DETAILED3			
REVISIONS 1			
REVISIONS 2			
REVISIONS 3			
REVISIONS 4			
FIELD CHANGES			

SIGNATURE

P.E. NUMBER

DATE

RAY BROOK BRIDGE
RAY BROOK
ST. ALBANS SOMERSET COUNTY

CROSS SECTIONS

SHEET NUMBER

8

OF 12

Sta. 3+25 to Sta. 3+50

Filename: ...\msta\008_z_Xsect_3+25_005.dgn Division: BRIDGE Username: David.Sullivan Date:4/16/2013

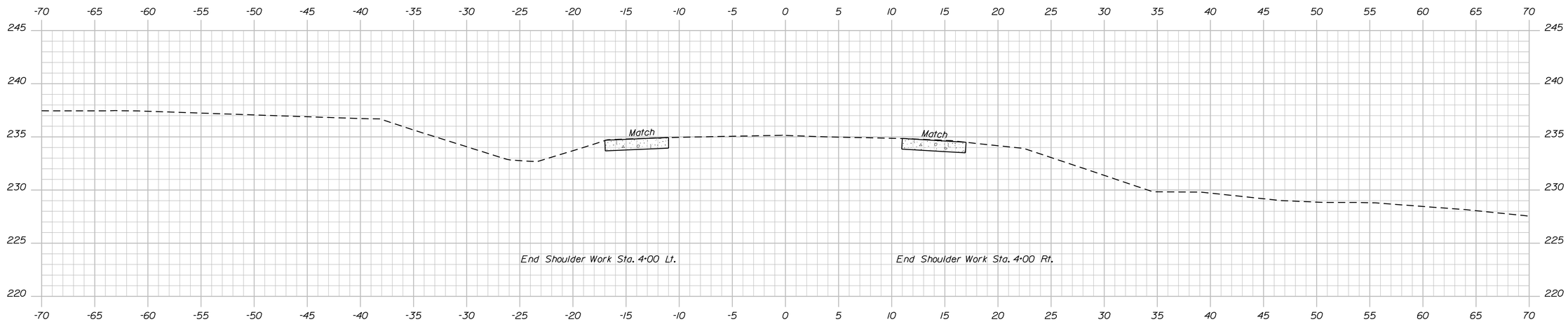

4+00.00

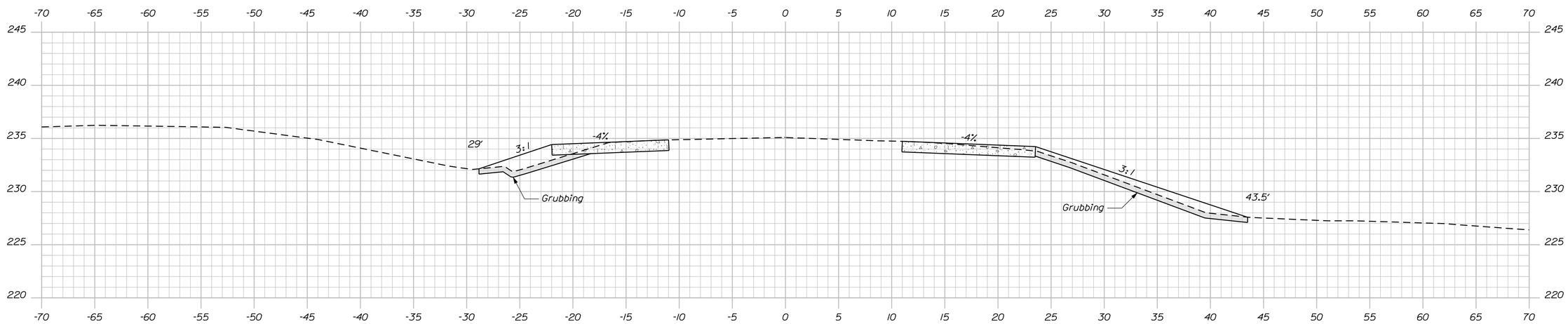

3+75.00

Sta. 3+75 to Sta. 4+00

STATE OF MAINE
DEPARTMENT OF TRANSPORTATION

19298.00

WIN 19298.00

BRIDGE NO. 5330

BRIDGE PLANS

PROJ. MANAGER	S. Budgel	BY	DATE
DESIGN-DETAILED	B. REEVES	M. POULIN	
CHECKED-REVIEWED			
DESIGN2-DETAILED2			
DESIGN3-DETAILED3			
REVISIONS 1			
REVISIONS 2			
REVISIONS 3			
REVISIONS 4			
FIELD CHANGES			

SIGNATURE

P.E. NUMBER

DATE

RAY BROOK BRIDGE
RAY BROOK
ST. ALBANS SOMERSET COUNTY

CROSS SECTIONS

SHEET NUMBER

9

OF 12

Filename: ...\msta\009_z_Xsect_3+75_006.dgn Division: BRIDGE Username: David.Sullivan Date:4/16/2013

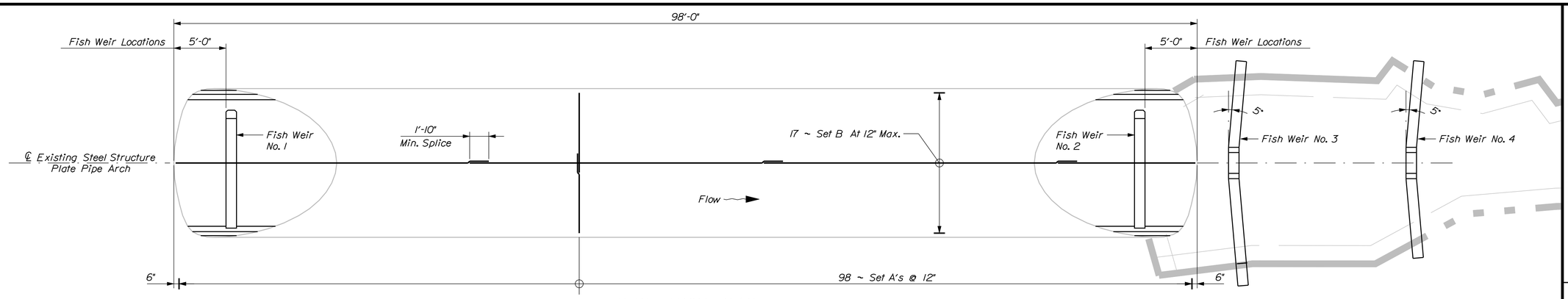

PIPE ARCH PLAN

Note:
The first 6 set A's and the last 6 set A's will requied field bending and cutting.

Set A = 2 ~ A550
Set B = 3 ~ A500 + 1 ~ A501
Alternate Bar Splice's

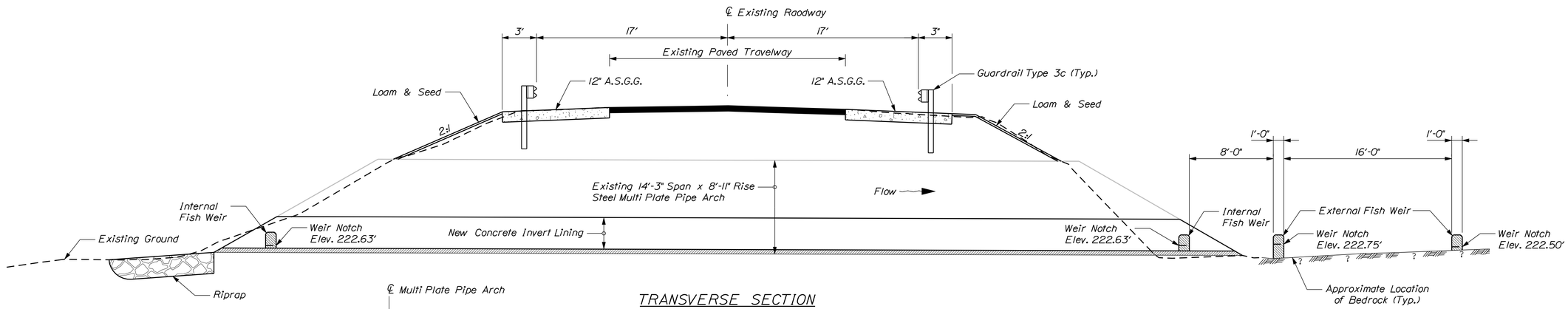

TRANSVERSE SECTION

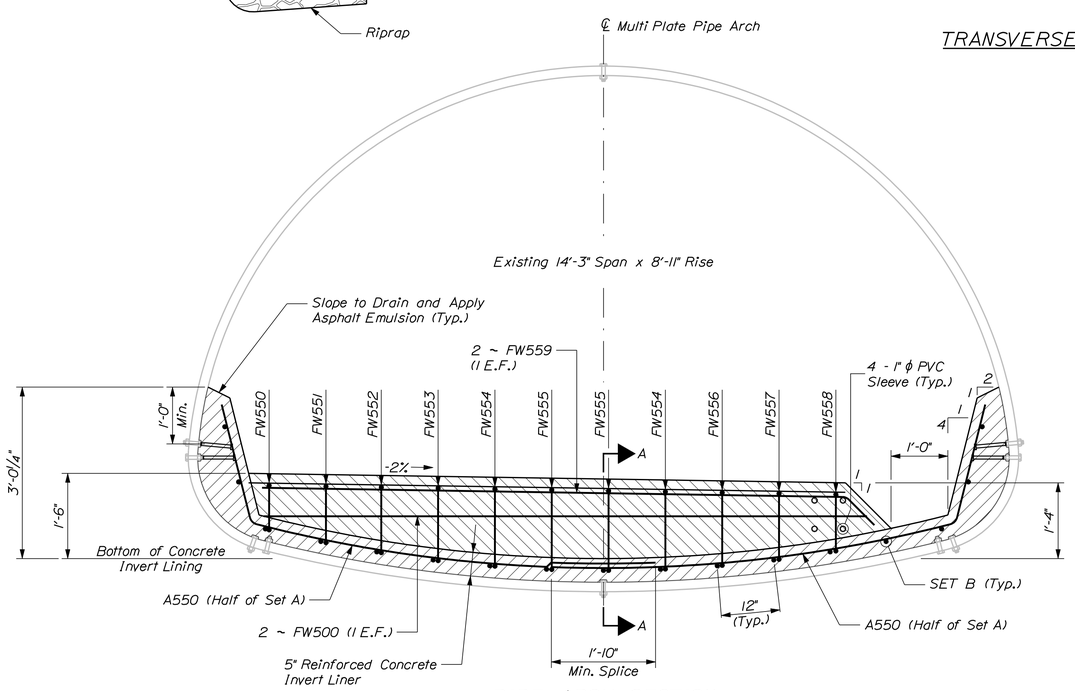

PIPE ARCH SECTION

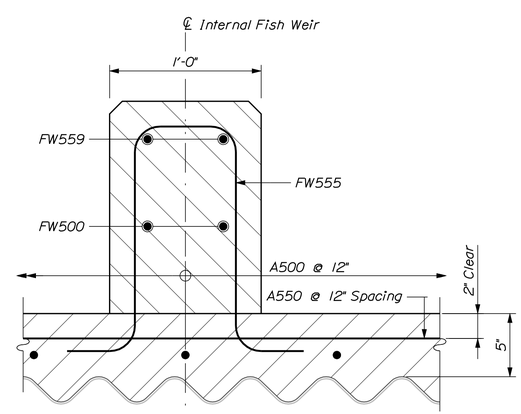

SECTION A-A

PIPE NOTES

1. Surfaces of the pipe against which concrete is to be placed shall be thoroughly cleaned so as to remove all loose corrosion. In areas where the metal is non - existant, a preliminary concrete placement shall be made, using forms where required, to fill voids and to establish the original lines of the pipe. The final placement shall then be made as shown. Payment for this work will be considered incidental to Item No. 502.325, Structural Concrete Invert Lining.
2. Two rows of shear connectors shall be staggered longitudinally at 12" spacing along each side of the pipe barrel. Shear connectors shall be 1/2" x 6 1/2" or 1/2" x 8 1/2" studs or machine bolts welded to the crests of the corrugations. Approximately 400 shear connectors are required. Payment will be con-sidered incidental to contract items.
3. Reinforcing steel shall have a minimum concrete cover of 2" unless otherwise shown.
4. The existing structural plate pipe may have a slight deformation requiring field bending and/or cutting of the reinforcing steel. Any cutting and bending to field fit reinforcing steel shall be considered incidental to Item No. 503.13, Reinforcing Steel-Placing
5. The concrete shall have a rough broom or gun finish along the entire length of the pipe invert.
6. Asphalt Emulsion will be considered incidental to item No. 502.325 Structural Concrete Invert Lining.

STATE OF MAINE
DEPARTMENT OF TRANSPORTATION

19298.00

PIN 19298.00

BRIDGE PLANS

BRIDGE NO. 5330

		BY	DATE
PROJ. MANAGER	S. Budge		
DESIGN-DETAILED	B. REEVES	M. POULIN	
CHECKED-REVIEWED			
DESIGN2-DETAILED2			
DESIGN3-DETAILED3			
REVISIONS 1			
REVISIONS 2			
REVISIONS 3			
REVISIONS 4			
FIELD CHANGES			

SIGNATURE

P.E. NUMBER

DATE

RAY BROOK BRIDGE
RAY BROOK
ST. ALBANS SOMERSET COUNTY

PIPE ARCH INVERT LINER
FISH WEIRS

SHEET NUMBER
10
OF 12

Filename: ...\msta\010_Pipe_Details.dgn Division: BRIDGE Username: David.Sullivan Date:4/16/2013

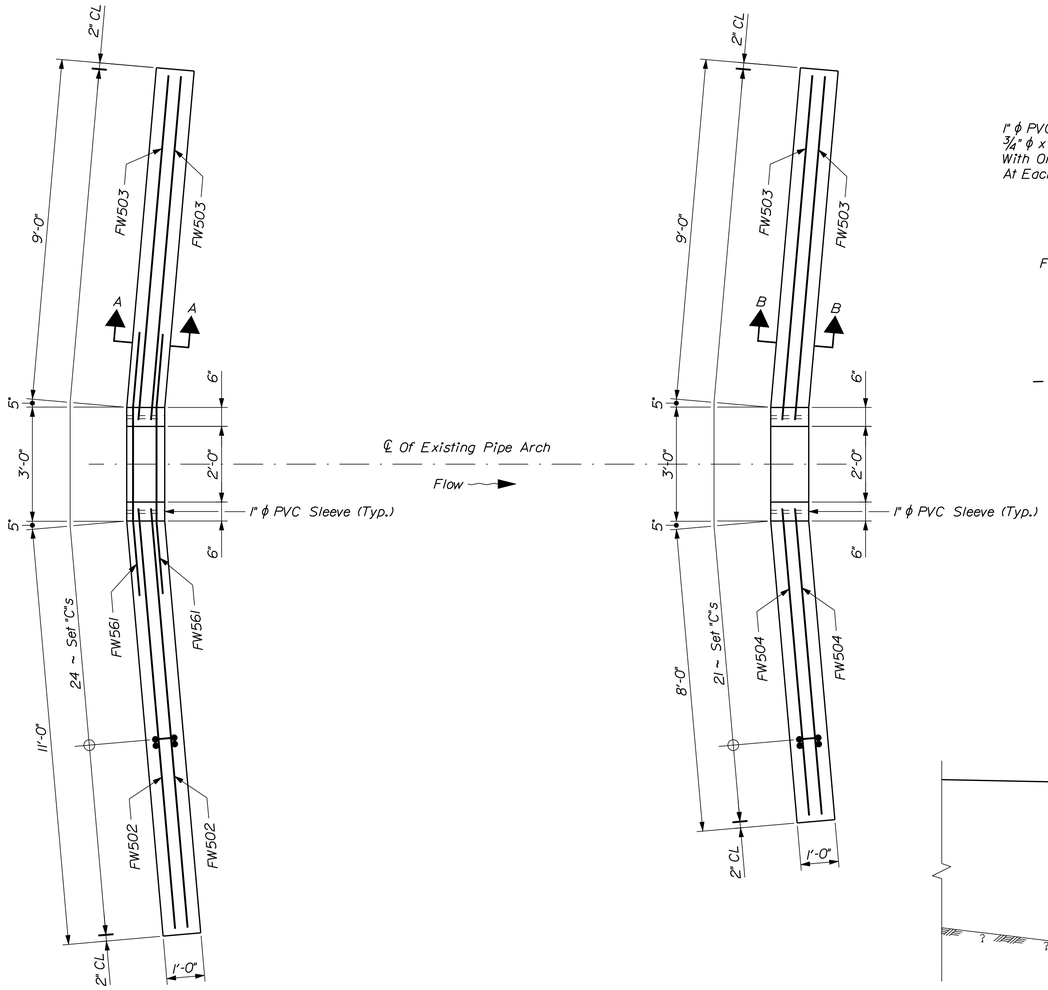

EXTERNAL FISH WEIR NO. 3

EXTERNAL FISH WEIR NO. 4

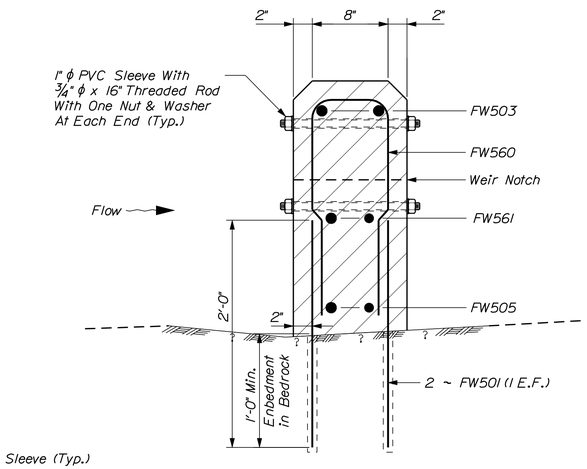

SECTION A-A

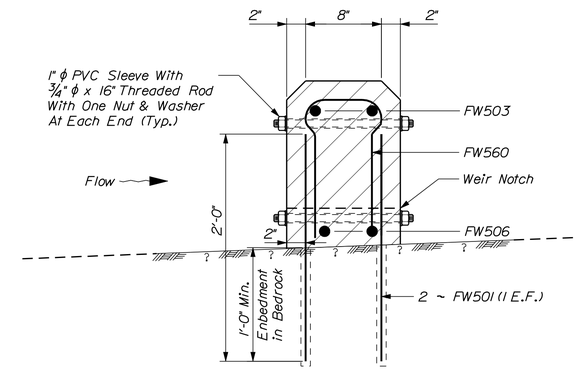

SECTION B-B

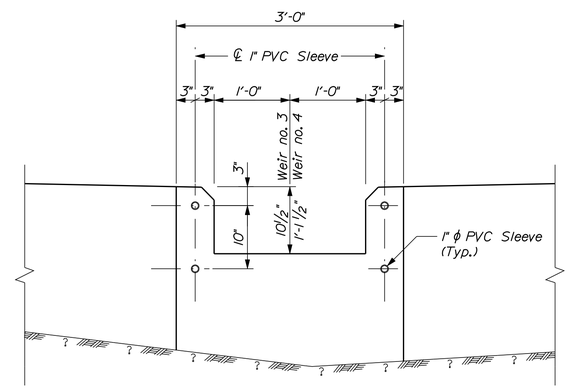

WEIR NOTCH DETAIL

Rebar Not Shown For Clarity

EXTERNAL FISH WEIR NOTES

1. Reinforcing steel shall have a minimum concrete cover of 2" unless otherwise noted.

2. A 1" ϕ x 12" PVC sleeve (12 total) and 3/4" ϕ x 16" threaded rod (12 total) with one nut (24 total) & one washer (24 total) at each end. All hardware shall be galvanized in accordance with ASTM A153. Payment shall be incidental to item no. 502.326 Structural concrete fish weirs.

3. Reinforcing Steel in fish weir no. 3 & no. 4 may have to be field fitted and cut. Payment shall be incidental to item no. 503.326 Structural concrete fish weirs.

4. There are bedrock outcrop in the down stream side. There maybe some removing of existing bedrock to maintain a 8" minimum of concrete on top of bedrock. Rock removal shall be paid under item no. 203.21 Rock excavation.

5. Drilling and anchoring bars into bedrock shall be incidental to item no. 502.326 Structural concrete fish weirs. Anchor materials shall be selected from the Maine DOT qualified product list.

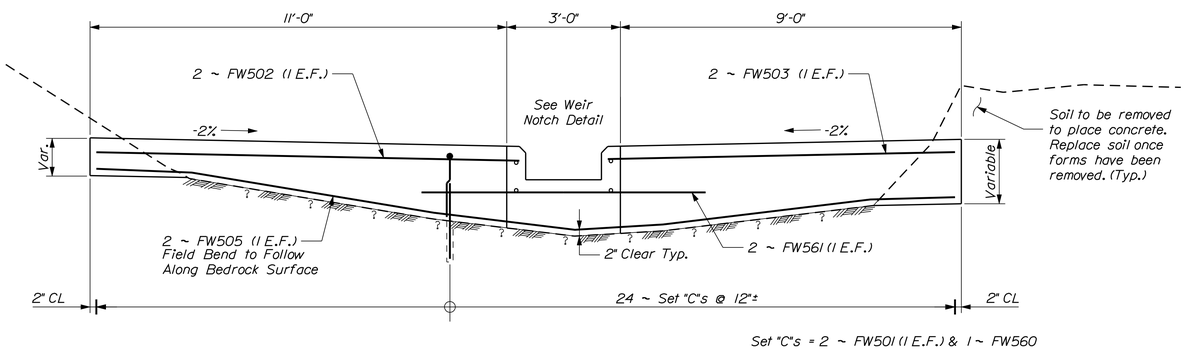

Set "C"s = 2 ~ FW501 (1 E.F.) & 1 ~ FW560

FISH WEIR NO. 3 SECTION

Looking Down Stream

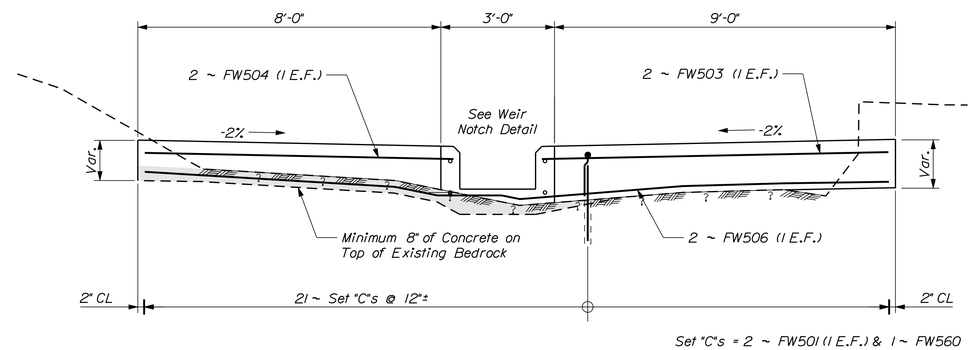

Set "C"s = 2 ~ FW501 (1 E.F.) & 1 ~ FW560

FISH WEIR NO. 4 SECTION

Looking Down Stream

STATE OF MAINE
DEPARTMENT OF TRANSPORTATION

19298.00

WIN 19298.00

BRIDGE NO. 5330

BRIDGE PLANS

		BY	DATE
PROJ. MANAGER	S. Bodge		
DESIGN-DETAILED	B. REEVES	M. POULIN	
CHECKED-REVIEWED			
DESIGN2-DETAILED2			
DESIGN3-DETAILED3			
REVISIONS 1			
REVISIONS 2			
REVISIONS 3			
REVISIONS 4			
FIELD CHANGES			

SIGNATURE

P.E. NUMBER

DATE

RAY BROOK BRIDGE
RAY BROOK
ST. ALBANS SOMERSET COUNTY

EXTERNAL FISH WEIR

SHEET NUMBER

11

OF 12

Filename: ...\011_External_Fish Weir.dgn Division: BRIDGE Username: David.Sullivan Date:4/16/2013

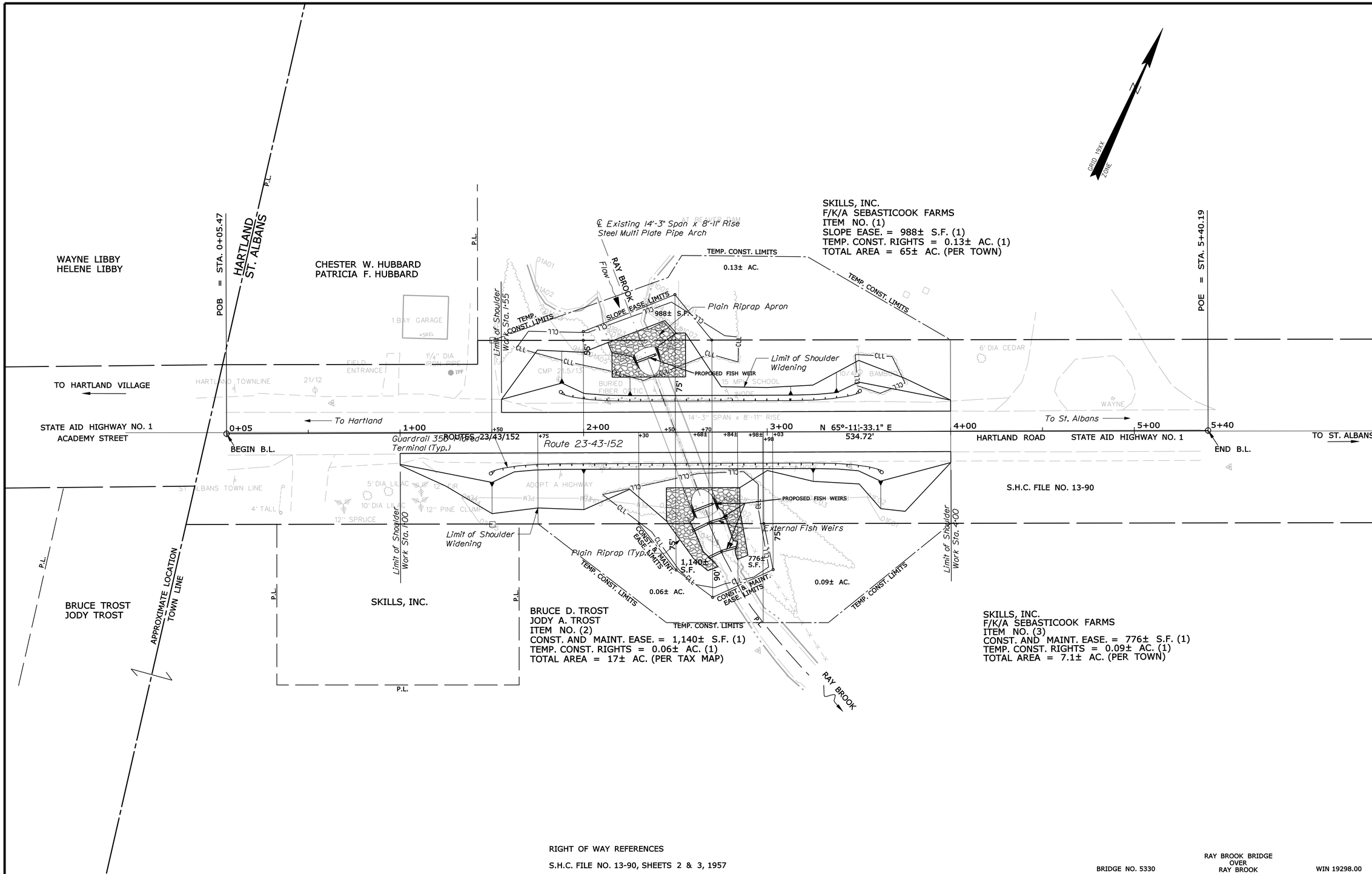

RIGHT OF WAY REFERENCES

S.H.C. FILE NO. 13-90, SHEETS 2 & 3, 1957

BRIDGE NO. 5330 — RAY BROOK BRIDGE OVER RAY BROOK — WIN 19298.00

THIS PLAN WAS PREPARED IN CONNECTION WITH THE DEPARTMENT'S ACQUISITION OF REAL PROPERTY FOR TRANSPORTATION PURPOSES. IT CANNOT BE USED TO ESTABLISH LEGAL BOUNDARIES BETWEEN ABUTTING PROPERTY OWNERS.

SYMBOLS

- IP or ● IPF (IRON PIPE or PIN FOUND)
- ST. (SEPTIC TANK)
- (ROW MONUMENT)
- &BM (TRAVERSE POINT)
- ○WELL (WELL)
- GROUNDING UNIT LINE
- CONSTRUCTION UNIT LINE
- PROPERTY LINE
- PL
- LIMITS OF "PROJECT" PORTION (L.O.W.P.)
- EXISTING RIGHT OF WAY
- NEW RIGHT OF WAY
- NEW ROW WITHIN EXIST. ROW
- CONTROL OF ACCESS
- WL WATER LINE
- GL GAS LINE
- EL ELECTRIC LINE
- TL TELEPHONE LINE
- SEWER LINE

ITEM	TECH	CHECKED
BASE MAP		
EXIST. R/W	PNS	
PROP. LINES	PNS	
AREAS		

STATE OF MAINE
DEPARTMENT OF TRANSPORTATION
16 STATE HOUSE STATION - AUGUSTA, ME 04333-0016

ST. ALBANS
RIGHT OF WAY MAP

REVISIONS

NO.	DATE	DESCRIPTION	BY

PLAN FILED IN PLAN BOOK			PAGE	COUNTY RECORD		
NO.	GRANTOR	INSTRUMENT	DATE	BOOK	PAGE	
		COND.	4/1/13	4642	356	

DAVID BERNHARDT
COMMISSIONER

KENNETH L. SWEENEY
CHIEF ENGINEER

DATE

STATE OF MAINE — PETER A. BELANGER 1341 — PROFESSIONAL LAND SURVEYOR

To the best of my knowledge and belief, this map constitutes an accurate graphical representation of the Highway Right of Way lines shown hereon. Other boundary lines, including lines between abutters, are approximate and for general reference only. See sheet X of this plan set for reference coordinates.

STATE AID HIGHWAY NO. 1
HARTLAND ROAD — ROUTES 23, 43, & 152
ST. ALBANS — SOMERSET COUNTY
STATE PROJECT NO. 19298.00

SEPTEMBER 2012 | RIGHT-OF-WAY MAP | D.O.T. FILE NO. 13-374
SCALE 1" = 25' | SHEET 1 OF 1

SHEET NUMBER
12
OF 12

Filename: ...\00\ROW\MSTA\001_RWPLAN1.dgn Division: BRIDGE Username: David.Sullivan Date:4/16/2013