STATE OF MAINE
DEPARTMENT OF TRANSPORTATION

SPECIFICATIONS

Design: Load and Resistance Factor Design per AASHTO LRFD Bridge Design Specifications, Sixth Edition, 2012, with Interim Specifications through 2012.

DESIGN LOADING

Live Load ..... HL - 93 Modified for Strength I

TRAFFIC DATA

Current (2012) AADT	780
Future (2032) AADT	1010
DHV - % of AADT	11
Design Hour Volume	111
Heavy Trucks (% of AADT)	20
Heavy Trucks (% of DHV)	13
Directional Distribution (% of DHV)	56
18 kip Equivalent P 2.0	222
18 kip Equivalent P 2.5	212
Design Speed (mph)	50

HYDROLOGIC DATA

Drainage Area	62 sq mi
Design Discharge (Q50)	4,829.5 cfs
Check Discharge (Q100)	5,540.5 cfs
Headwater Elevation (Q50)	381.10 ft
Headwater Elevation (Q100)	382.11 ft
Discharge Velocity (Q50)	4.08 fps
Discharge Velocity (Q100)	4.68 fps
Headwater Elevation (Q1.1)	372.86 ft
Discharge Velocity (Q1.1)	1.69 fps
Headwater Elevation (Q25)	380.10 ft

MATERIALS

Concrete:
- Curbs & Transition Barriers ..... Class "LP"
- All Other ..... Class "A"

Reinforcing Steel (u.n.o.) ..... ASTM A 615/A 615 M, Grade 60

Structural Steel:
- All Material (except as noted) ..... ASTM A 709, Grade 50
- High Strength Bolts ..... ASTM A 325, Type 1

BASIC DESIGN STRESSES

Concrete ..... f 'c = 4,350 psi

Reinforcing Steel ..... f y = 60,000 psi

Structural Steel:
- ASTM A 709, Grade 50 ..... F y = 50,000 psi
- ASTM A 709, Grade 36 ..... F y = 36,000 psi
- ASTM A 325 ..... F µ = 120,000 psi

LEXINGTON TWP
SOMERSET COUNTY
LOWER SANDY BRIDGE
OVER
SANDY STREAM
LONG FALLS DAM ROAD
FEDERAL AID PROJECT NO. AC-BR-1929(100)X
PROJECT LENGTH 0.104 mi.
BRIDGE NO. 5128

LIST OF DRAWINGS

Title Sheet	1
Quantities and Notes	2
General Plan	3
Profile	4
Boring Location Plan	5
Interpretive Subsurface Profile	6
Boring Logs	7-8
Highway Approach Cross - Sections	9-18
Abutments No. 1 & 2	19
Abutments No. 1 & 2 Details	20
Abutments No. 1 & 2 Reinforcment	21
Abutments No. 1 & 2 Sections	22
Retaining Wall	23
Framing Plan	24
Framing Details	25
Superstructure	26
Bridge Drain Details	27
Reinforcing Steel Schedule	28
Right of Way Map	29

UTILITIES

Central Maine Power Company
Somerset Telephone

MAINTENANCE OF TRAFFIC

Alternating two-way traffic will be maintained on a 10'-7" wide single lane temporary bridge with traffic signals. Refer to Special Provision Section 510 for more information.

PROJECT LOCATION:	Located on Long Falls Dam Road over Sandy Stream; 4.2 miles Northerly of junction with Route 16. Lat.: 44° 58' 37.00" , Long.: 70° 02' 49.00"
PROGRAM AREA:	Bridge Program
OUTLINE OF WORK:	Bridge Replacement

STATE OF MAINE
DEPARTMENT OF TRANSPORTATION

		DATE
APPROVED		
COMMISSIONER:		3/22/13
CHIEF ENGINEER:		3/20/13

STATE OF MAINE · Richard E. Myers · 12670 · LICENSED · PROFESSIONAL ENGINEER

SIGNATURE	
P.E. NUMBER	12670
DATE	3/20/13

PROJECT INFORMATION

PROGRAM	BRIDGE
PROJECT MANAGER	S. BODGE
DESIGNER	R. MYERS
CONSULTANT	
PROJECT RESIDENT	
CONTRACTOR	
PROJECT COMPLETION DATE	

WIN 19291.00

AC-BR-1929(100)X

LEXINGTON TWP
LOWER SANDY BRIDGE

TITLE SHEET

SHEET NUMBER
1
OF 29

Filename: \00\BRIDGE\MSTA\001_Title.dgn Division: BRIDGE Username: David.Sullivan Date:3/20/2013

ESTIMATED QUANTITIES

ITEM NO.	DESCRIPTION	QUANTITY	UNIT
202.10	REMOVING EXISTING SUPERSTRUCTURE - PROPERTY OF CONTRACTOR (43 CY)	1	LS
202.12	REMOVING EXISTING STRUCTURAL CONCRETE	89	CY
203.20	COMMON EXCAVATION	993	CY
203.25	GRANULAR BORROW	319	CY
206.082	STRUCTURAL EARTH EXCAVATION - MAJOR STRUCTURES	230	CY
304.10	AGGREGATE SUBBASE COURSE - GRAVEL	1215	CY
403.208	HOT MIX ASPHALT 12.5 MM HMA SURFACE	155	T
403.213	HOT MIX ASPHALT 12.5 MM BASE	155	T
409.15	BITUMINOUS TACK COAT - APPLIED	36	G
501.231	DYNAMIC LOADING TEST	2	EA
501.301	STEEL SHEET PILING	1	LS
501.46	STEEL H-BEAM PILES 73 LBS/FT. DELIVERED	1072	LF
501.461	STEEL H-BEAM PILES 73 LBS/FT. IN PLACE	1072	LF
501.90	PILE TIPS	8	EA
501.91	PILE SPLICES	24	EA
501.92	PILE DRIVING EQUIPMENT MOBILIZATION	1	LS
502.219	STRUCTURAL CONCRETE, ABUTMENTS & RETAINING WALLS (105 CY)	1	LS
502.26	STRUCTURAL CONCRETE ROADWAY AND SIDEWALK SLABS ON STEEL BRIDGES (89 CY)	1	LS
502.31	STRUCTURAL CONCRETE APPROACH SLABS (21 CY)	1	LS
502.49	STRUCTURAL CONCRETE CURBS AND SIDEWALK (10 CY)	1	LS
503.12	REINFORCING STEEL, FABRICATED AND DELIVERED	8500	LB
503.13	REINFORCING STEEL, PLACING	8500	LB
504.702	STRUCT. STEEL FABRICATED & DELIVERED, WELDED (122600 LB)	1	LS
504.71	STRUCTURAL STEEL ERECTION (122600 LB)	1	LS
505.08	SHEAR CONNECTORS (656 EA)	1	LS
507.0811	STEEL BRIDGE RAILING, 2 BAR (197 LF)	1	LS
512.081	FRENCH DRAINS (80 LF)	1	LS
514.06	CURING BOX FOR CONCRETE CYLINDERS	1	EA
515.21	PROTECTIVE COATING FOR CONCRETE SURFACES (440 SY)	1	LS
519.301	GALVANIZING NEW STRUCTURAL STEEL (122600 LB)	1	LS
526.301	TEMPORARY CONCRETE BARRIER - TYPE 1 (20 LF)	1	LS
526.34	PERMANENT CONCRETE TRANSITION BARRIER	4	EA
527.34	WORK ZONE CRASH CUSHIONS	3	UN
606.1721	BRIDGE TRANSITION - TYPE 1	4	EA
606.23	GUARDRAIL TYPE 3C - SINGLE RAIL	200	LF
606.231	GUARDRAIL TYPE 3C - 15 FOOT RADIUS AND LESS	25	LF
606.265	TERMINAL END - SINGLE RAIL - GALVANIZED STEEL	1	EA
606.353	REFLECTORIZED FLEXIBLE GUARDRAIL MARKER	8	EA
606.79	GUARDRAIL 350 FLARED TERMINAL	3	EA
610.08	PLAIN RIPRAP	690	CY
610.18	STONE DITCH PROTECTION	7	CY
613.319	EROSION CONTROL BLANKET	18	SY
615.07	LOAM	111	CY
618.1411	SEEDING METHOD NUMBER 3 - PLAN QUANTITY	9	UN
619.1201	MULCH - PLAN QUANTITY	9	UN
619.1401	EROSION CONTROL MIX	111	CY
620.58	EROSION CONTROL GEOTEXTILE	1100	SY
627.733	4 INCH WHITE OR YELLOW PAINTED PAVE MRK LINE	1700	LF
629.05	HAND LABOR, STRAIGHT TIME	20	HR
631.12	ALL PURPOSE EXCAVATOR (INCLUDING OPERATOR)	20	HR
631.14	GRADER (INCLUDING OPERATOR)	10	HR
631.15	ROLLER, EARTH AND BASE COURSE (INCLUDING OPERATOR)	10	HR
631.172	TRUCK - LARGE (INCLUDING OPERATOR)	20	HR
631.22	FRONT END LOADER (INCLUDING OPERATOR)	20	HR
631.36	FOREPERSON	20	HR
637.071	DUST CONTROL	1	LS
639.19	FIELD OFFICE TYPE B	1	EA
643.72	TEMPORARY TRAFFIC SIGNAL	1	LS
652.312	TYPE III BARRICADE	4	EA
652.33	DRUM	20	EA
652.34	CONE	40	EA
652.35	CONSTRUCTION SIGNS	190	SF
652.361	MAINTENANCE OF TRAFFIC CONTROL DEVICES (150 CD)	1	LS
652.38	FLAGGER	200	HR
656.75	TEMPORARY SOIL EROSION AND WATER POLLUTION CONTROL	1	LS
659.10	MOBILIZATION	1	LS
890.01	SPECIAL WORK #1 - TEMPORARY DETOUR REMOVAL	1	LS

GENERAL CONSTRUCTION NOTES

1. For easements, construction limits, and right of way lines, refer to the Right of Way Map.

2. The clearing limits as shown on the plans are approximate. The exact limits will be established in the field by the Resident. Payment for clearing will be considered incidental to Contract items. Clearing on the west side of the road will done by the Department for the Special Detour, except for the small area shown for the end of the water access road.

3. All utility facilities shall be adjusted by the respective utilities unless otherwise noted.

4. Do not excavate for Aggregate Subbase Course where existing material is suitable as determined by the Resident.

5. In areas where the Resident directs the Contractor not to excavate to the subgrade line shown on the plans, payment for removing existing pavement, grubbing, shaping, ditching, and compacting the existing subbase and layers of new subbase 6 inches or less thick will be made under appropriate equipment rental items.

6. All embankment material, except as otherwise shown, shall be Granular Borrow meeting the requirements of Subsection 703.19, Material for Underwater Backfill.

7. Place riprap on sideslopes as shown on the Highway Approach Cross - Sections.

8. Construct the riprap shelf at each abutment at EL. 378.50'.

9. Stones which cannot be rolled or compacted into exposed surfaces shall be removed by hand raking. Payment for hand raking will be considered incidental to Item No. 304.10, Aggregate Subbase Course - Gravel.

10. Place loam 2 inches deep on all new or reconstructed sideslopes or as directed by the Resident.

11. Erosion Control Mix may be substituted in those areas normally receiving loam and seed as directed by the Resident. Placement shall be in accordance with Standard Specifications Section 619, Mulch. Payment will be made under Item No. 619.1401, Erosion Control Mix.

12. Place a 24-in. wide strip of Temporary Erosion Control Blanket on the sideslopes along the top of the riprap and behind the wingwalls.

13. Guardrail posts as shown in the Standard Details shall be modified from the indicated length of 6 feet to a length of 7 feet with an embedment of 4.5 feet. Payment will be considered incidental to the guardrail pay items.

14. An NCHRP350 compliant guardrail end treatment shall be installed concurrently with the placement of each section of beam guardrail.

15. Extended-use Erosion Control Blanket, seeded gutters, and riprap downspouts shall be constructed after paving and shoulder work is completed, where it is apparent that runoff will cause continual erosion. Payment will be made under the appropriate Contract items.

16. Protective Coating for Concrete Surfaces shall be applied to the following areas:

All exposed surfaces of concrete curbs.
Fascias down to the drip notch.
All exposed surfaces of Concrete Transition Barriers.
Concrete wearing surfaces.
Top of wingwalls and to one foot below the top of wingwalls on the back side.

17. Project information referred to below may be accessed at the following MaineDOT web address: http://www.maine.gov/mdot/contractors/ .

18. The existing bridge plans may be accessed at the MaineDOT web address. The plans are reproductions of the original drawings as prepared for the construction of the bridge. It is very unlikely that the plans will show any construction field changes or any alterations which may have been made to the bridge during its life span.

19. The hydrologic report of the bridge site may be accessed at the MaineDOT web address. The hydrologic report is based on MaineDOT's interpretation of the information obtained for the subject site. No assurance is given that the information or the conclusions of the report will be representative of actual conditions at the time of construction.

20. The project geotechnical report titled "Geotechnical Design Report for the Replacement of: Lower Sandy Stream Bridge over Sandy Stream, Lexington TWP, Maine," Soils Report No. 2012-32, December 20, 2012, may be accessed at the MaineDOT web address.

21. Geotechnical information furnished or referred to in this plan set is for the use of the Bidders and the Contractor. No assurance is given that the information or interpretations will be representative of actual subsurface conditions at the construction site. MaineDOT will not be responsible for the Bidders' or Contractor's interpretations of, or conclusions drawn from, the geotechnical information. The boring logs contained in the plan set present factual and interpretive subsurface information collected at discrete locations. Data provided may not be representative of the subsurface conditions between the boring locations.

22. Quantities included for pay items measured and paid for by Lump Sum are estimated quantities and are provided by MaineDOT for informational purposes only. Lump Sum pay items will be paid for at the Contract Bid amount, with no addition or reduction in payment to the Contractor if the actual final quantities are different from the MaineDOT provided estimated quantities, except as follows:

a. If a Lump Sum pay item is eliminated, the requirements of Standard Specifications Section 109.2, Elimination of Items, will take precedence.

b. If other Contract Documents specifically allow a change in payment for a Lump Sum pay item, those requirements will be followed.

c. If a design change results in changes to estimated quantities for Lump Sum pay items, price adjustments will be made in accordance with Standard Specifications Section 109.7, Equitable Adjustments to Compensation.

23. All costs for cofferdams, including pumping, maintenance, related temporary soil erosion and water pollution controls and removal, will not be paid for directly, but will be considered incidental to related Contract items.

24. The Contractor shall submit a Bridge Demolition Plan to the Resident at least 10 business days prior to the start of demolition work. The plan shall outline the methods and equipment to be used to remove and dispose of all materials included in the existing bridge. No work related to the removal of the bridge shall be undertaken by the Contractor until MaineDOT has reviewed the Bridge Demolition Plan for appropriateness and completeness. Payment for all work necessary for developing, submitting and finalizing the Demolition Plan will be considered incidental to the bridge removal pay item.

25. The existing bridge shall be removed by and become the property of the Contractor. The steel portions of the existing bridge are coated with a lead-based paint system. The Contractor is responsible for the containment, proper management and disposal of all lead-contaminated hazardous waste generated by the process of demolishing the bridge. The Contractor is responsible for implementing appropriate OSHA mandated personal protection standards related to this process. Once the existing bridge is removed, the Contractor is solely responsible for the care, custody and control of the components of the existing bridge and any hazardous waste generated as a result of the storage, recycling or disposal of the bridge components, including lead-coated steel. The Contractor shall recycle or reuse the steel in accordance with the Maine Department of Environmental Protection's "Maine Hazardous Waste Management Regulations," Chapter 850. A copy of this regulation is available at MaineDOT's offices on Child Street in Augusta. Payment for all labor, materials, equipment and other costs required to remove and dispose of the existing bridge will be considered incidental to the bridge removal pay item.

26. The Contractor shall take precaution when excavating for the proposed abutments so as not to undermine the temporary bridge abutments and approach fills. If the Special Detour is damaged by the Contractor's excavation procedures, the Contractor shall repair the Special Detour at his/her own expense. Due to the anticipated depth of excavation needed for the proposed structure, temporary bracing/shoring may be needed. Any temporary bracing/shoring needed for excavation for the construction of the proposed abutments shall be considered incidental to the applicable pay item.

STATE OF MAINE
DEPARTMENT OF TRANSPORTATION

AC-BR-1929(100)X

WIN 19291.00

BRIDGE NO. 5128

BRIDGE PLANS

PROJ. MANAGER	S. BODGE	BY	DATE
DESIGN-DETAILED	R. MYERS	D. SULLIVAN	
CHECKED-REVIEWED	B. REEVES	D.P.B.	MAR. 2013
DESIGN2-DETAILED2	K. MAGUIRE	T. WHITE	MAR. 2013
DESIGN3-DETAILED3	------	------	------
REVISIONS 1	------	------	------
REVISIONS 2	------	------	------
REVISIONS 3	------	------	------
REVISIONS 4	------	------	------
FIELD CHANGES	------	------	------

SIGNATURE

P.E. NUMBER

DATE

LOWER SANDY BRIDGE
SANDY STREAM
LEXINGTON TWP SOMERSET COUNTY

QUANTITIES and NOTES

SHEET NUMBER
2
OF 29

Filename: ...\BRIDGE\MSTA\002_Estimate.dgn Division: BRIDGE Username: David.Sullivan Date:3/18/2013

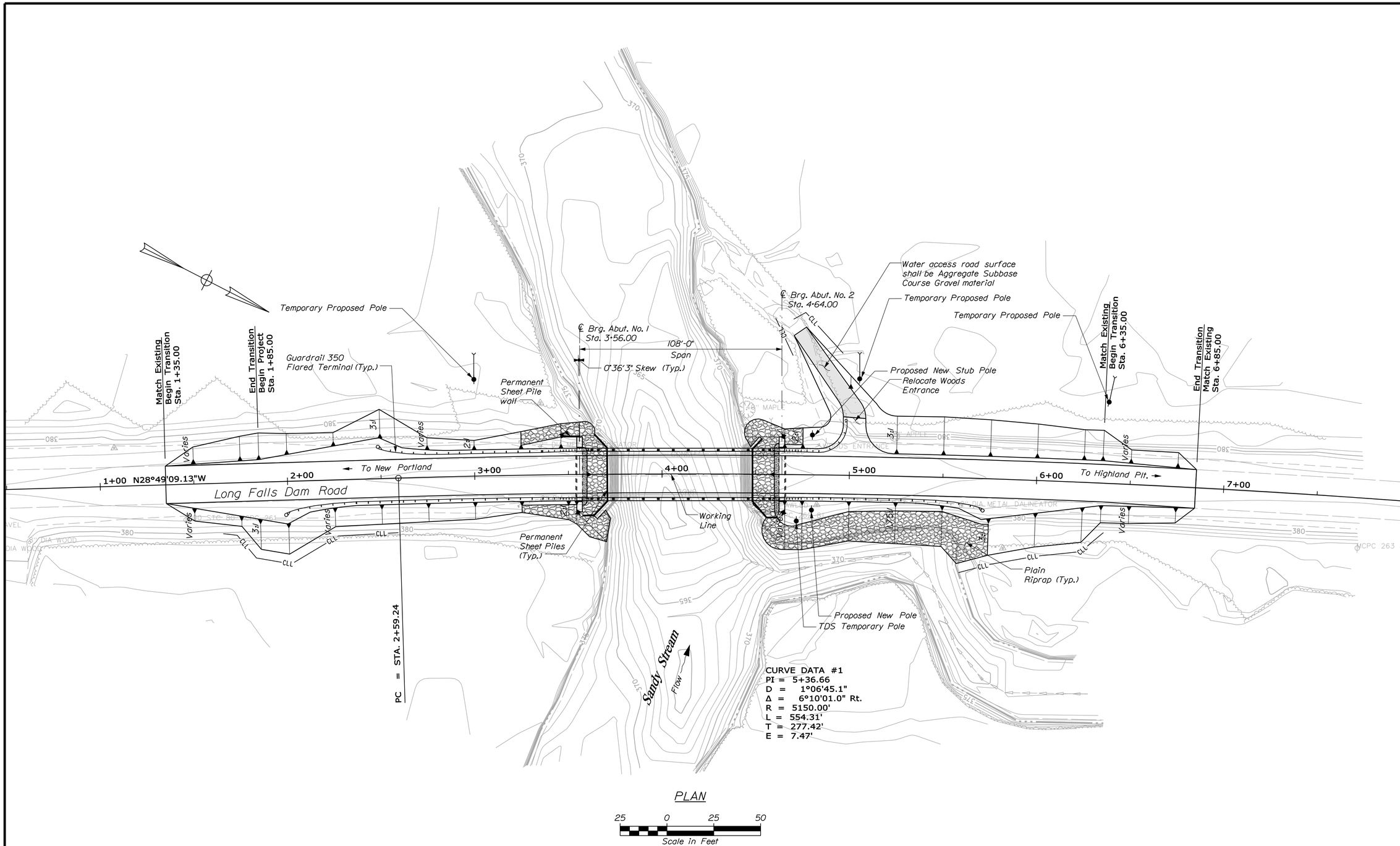

STATE OF MAINE
DEPARTMENT OF TRANSPORTATION

AC-BR-1929(100)X

WIN 19291.00

BRIDGE NO. 5128

BRIDGE PLANS

		BY	DATE
PROJ. MANAGER	S. BIDGE		
DESIGN-DETAILED	R. MYERS	D. SULLIVAN	
CHECKED-REVIEWED	B. REEVES	D.P.B.	MAR. 2013
DESIGN2-DETAILED2	K. MAGUIRE	T. WHITE	MAR. 2013
DESIGN3-DETAILED3	------	------	------
REVISIONS 1	------	------	------
REVISIONS 2	------	------	------
REVISIONS 3	------	------	------
REVISIONS 4	------	------	------
FIELD CHANGES	------	------	------

SIGNATURE

P.E. NUMBER

DATE

LOWER SANDY BRIDGE
SANDY STREAM
LEXINGTON TWP SOMERSET COUNTY

GENERAL PLAN

SHEET NUMBER

3

OF 29

Filename: ...\00\bridge\msta\003_BDPlan1.dgn Division: BRIDGE Username: David.Sullivan Date:3/18/2013

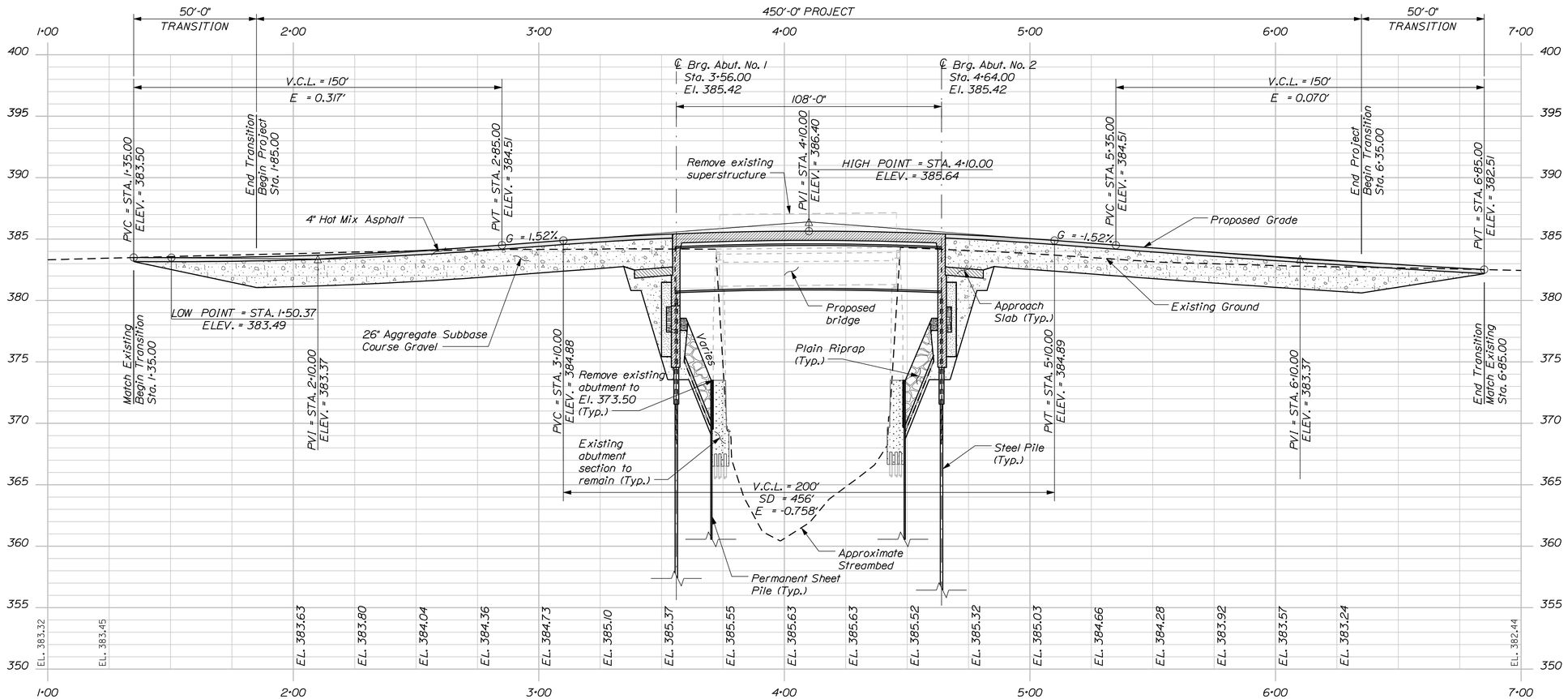

PROFILE

Horiz. 25 0 25 50

Vert. 5 0 5 10

Scale of Feet

STATE OF MAINE
DEPARTMENT OF TRANSPORTATION

AC-BR-1929(100)X

WIN 19291.00

BRIDGE NO. 5128

BRIDGE PLANS

PROJ. MANAGER	S. BRIDGE	BY	DATE
DESIGN-DETAILED	R. MYERS	D. SULLIVAN	
CHECKED-REVIEWED	B. REEVES	D.P.B.	MAR. 2013
DESIGN2-DETAILED2	K. MAGUIRE	T. WHITE	MAR. 2013
DESIGN3-DETAILED3	------	------	------
REVISIONS 1	------	------	------
REVISIONS 2	------	------	------
REVISIONS 3	------	------	------
REVISIONS 4	------	------	------
FIELD CHANGES	------	------	------

SIGNATURE

P.E. NUMBER

DATE

LOWER SANDY BRIDGE
SANDY STREAM
LEXINGTON TWP SOMERSET COUNTY

PROFILE

SHEET NUMBER

4

OF 29

Filename: ...\00\bridge\msta\004_Profile.dgn Division: BRIDGE Username: David.Sullivan Date:3/18/2013

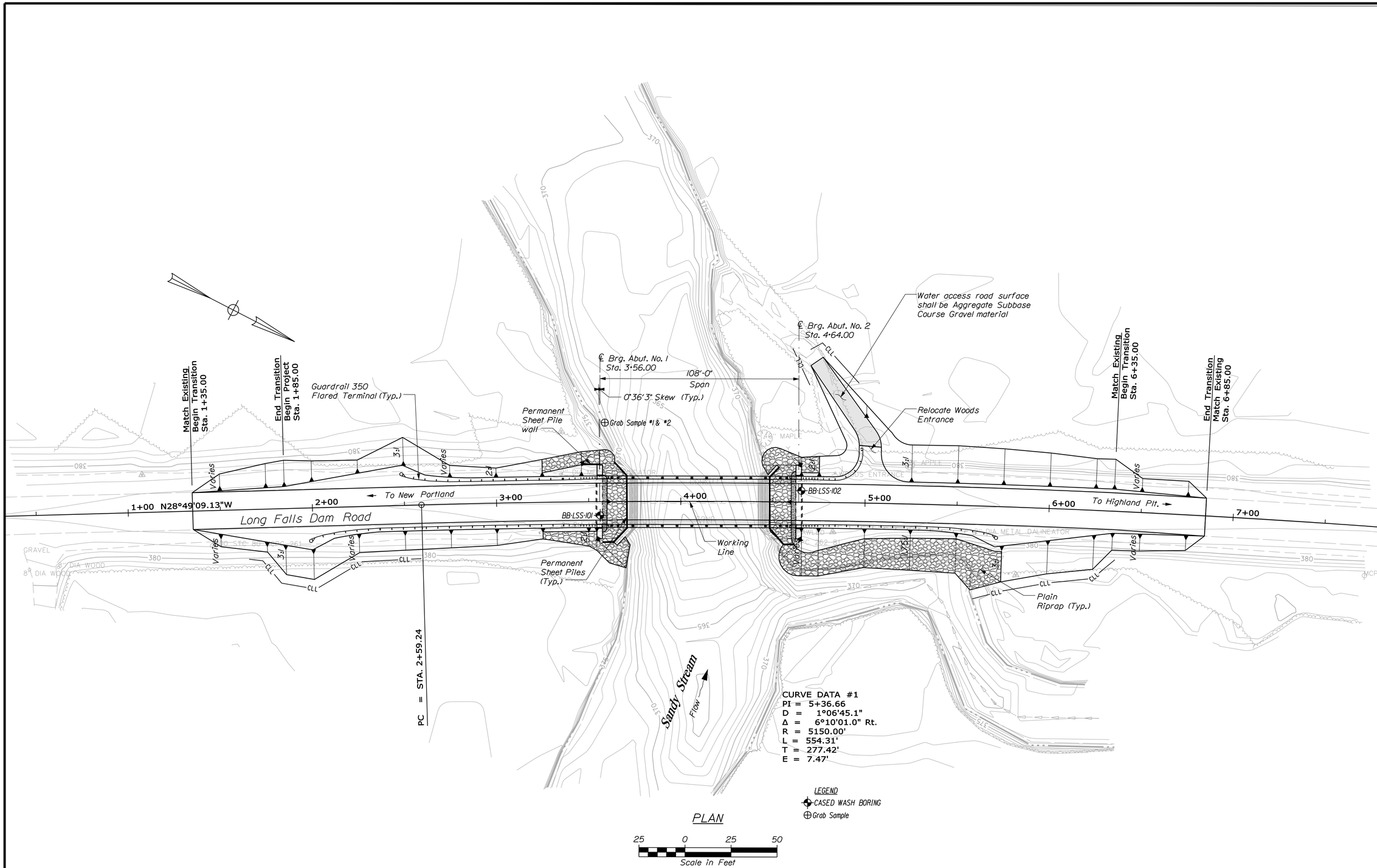

Filename: ...\00\GEOTECH\MSTA\005_BLP1.dgn Division: BRIDGE Username: David.Sullivan Date:3/18/2013

STATE OF MAINE
DEPARTMENT OF TRANSPORTATION

AC-BR-1929(100)X

WIN 19291.00

BRIDGE NO. 5128 BRIDGE PLANS

		BY	DATE
PROJ. MANAGER	S. BOOSE		
DESIGN-DETAILED	R. MYERS	D. SULLIVAN	
CHECKED-REVIEWED	------	------	
DESIGN2-DETAILED2	L. KRUSINSKI	T. WHITE	MAR. 2013
DESIGN3-DETAILED3	------	------	------
REVISIONS 1	------	------	------
REVISIONS 2	------	------	------
REVISIONS 3	------	------	------
REVISIONS 4	------	------	------
FIELD CHANGES	------	------	------

SIGNATURE

P.E. NUMBER

DATE

LOWER SANDY BRIDGE
SANDY STREAM
LEXINGTON TWP SOMERSET COUNTY

BORING LOCATION PLAN

SHEET NUMBER

5

OF 29

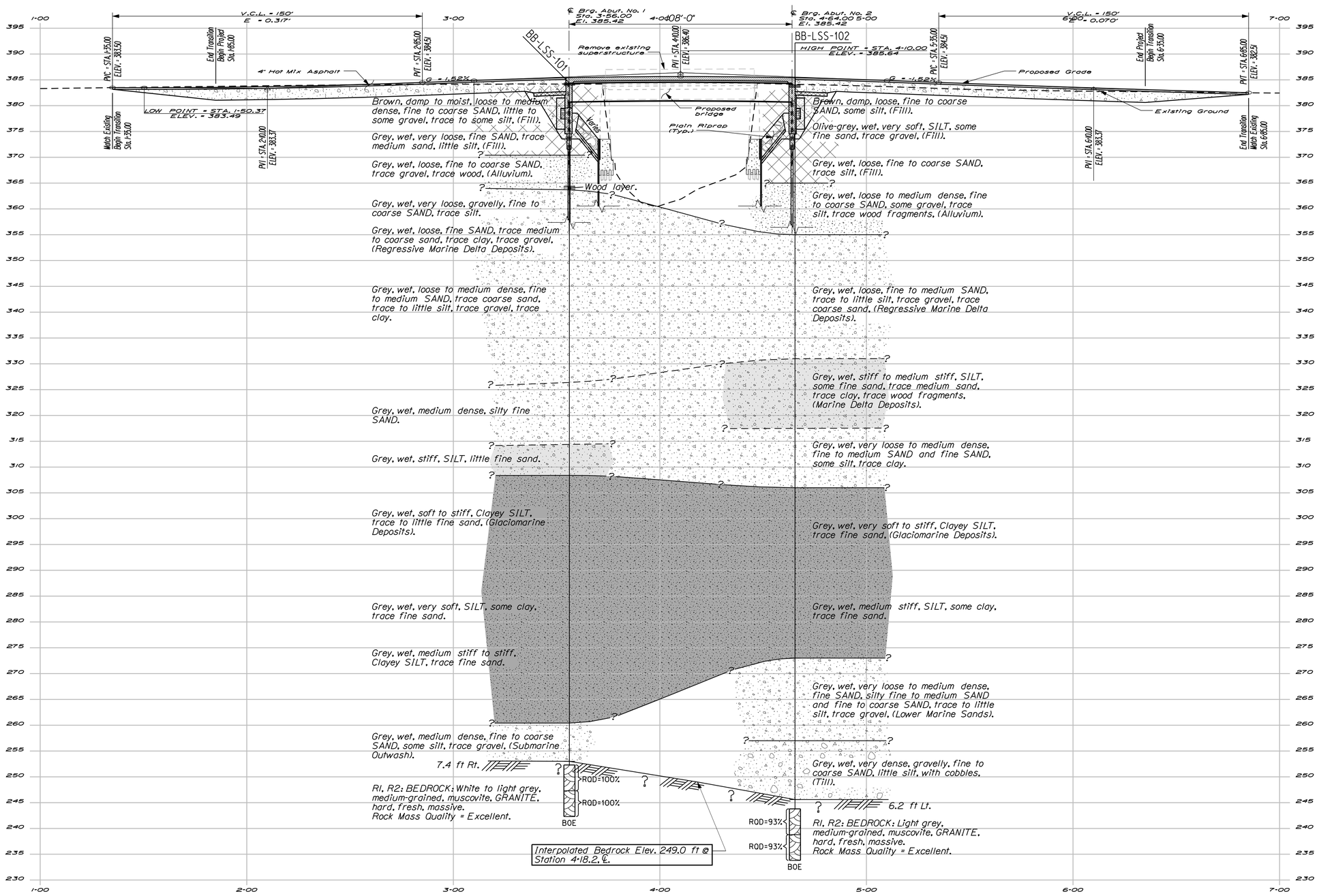

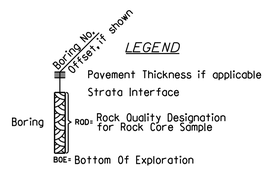

Note: This generalized interpretive soil profile is intended to convey trends in subsurface conditions. The boundaries between strata are approximate and idealized, and have been developed by interpretations of widely spaced explorations and samples. Actual soil transitions may vary and are probably more erratic. For more specific information refer to the exploration logs.

STATE OF MAINE
DEPARTMENT OF TRANSPORTATION

AC-BR-1929(100)X

WIN 19291.00

BRIDGE NO. 5128

BRIDGE PLANS

		BY	DATE
PROJ. MANAGER	S. BOOGE		
DESIGN-DETAILED	R. MYERS	D. SULLIVAN	
CHECKED-REVIEWED	-----	-----	
DESIGN2-DETAILED2	L. KRUSINSKI	T. WHITE	MAR. 2013
DESIGN3-DETAILED3	-----	-----	-----
REVISIONS 1	-----	-----	-----
REVISIONS 2	-----	-----	-----
REVISIONS 3	-----	-----	-----
REVISIONS 4	-----	-----	-----
FIELD CHANGES	-----	-----	-----

SIGNATURE

P.E. NUMBER

DATE

LOWER SANDY BRIDGE
SANDY STREAM
LEXINGTON TWP SOMERSET COUNTY

INTERPRETIVE SUBSURFACE PROFILE

SHEET NUMBER

6

OF 29

Filename: ...\00\GEOTECH\MSTA\006_ISP1.dgn Division: BRIDGE Username: David.Sullivan Date:3/18/2013

Filename: ...\MSTA\007_BORING LOGS1.dgn   Division: BRIDGE   Username: David.Sullivan   Date:3/18/2013

Maine Department of Transportation

Soil/Rock Exploration Log

US CUSTOMARY UNITS

Project: Lower Sandy Stream Bridge #5128 carries Long Falls Dam Rd. over
Location: Lexington Township, Maine

Boring No.: BB-LSS-101

WIN: 19291.00

Driller:	MaineDOT	Elevation (ft.)	384.4	Auger ID/OD:	5" Solid Stem
Operator:	Giguere/Giles/Daggett	Datum:	NAVD88	Sampler:	Standard Split Spoon
Logged By:	B. Wilder	Rig Type:	CME 45C	Hammer Wt./Fall:	140#/30"
Date Start/Finish:	5/2,3,7,8/2012	Drilling Method:	Cased Wash Boring	Core Barrel:	NQ-2"
Boring Location:	3+56.2, 7.4 ft Rt.	Casing ID/OD:	HW & NW	Water Level*:	15.0 ft bgs.
Hammer Efficiency Factor: 0.84		Hammer Type:	Automatic ☒ Hydraulic ☐ Rope & Cathead ☐		

Definitions:
D = Split Spoon Sample
MD = Unsuccessful Split Spoon Sample attempt
U = Thin Wall Tube Sample
MU = Unsuccessful Thin Wall Tube Sample attempt
V = Insitu Vane Shear Test, PP = Pocket Penetrometer
MV = Unsuccessful Insitu Vane Shear Test attempt
R = Rock Core Sample
SSA = Solid Stem Auger
HSA = Hollow Stem Auger
RC = Roller Cone
WOH = weight of 140lb. hammer
WOR/C = weight of rods or casing
WO1P = Weight of one person
S_u = Insitu Field Vane Shear Strength (psf)
T_v = Pocket Torvane Shear Strength (psf)
q_p = Unconfined Compressive Strength (ksf)
N-uncorrected = Raw field SPT N-value
Hammer Efficiency Factor = Annual Calibration Value
N_{60} = SPT N-uncorrected corrected for hammer efficiency
N_{60} = (Hammer Efficiency Factor/60%)*N-uncorrected
$S_{u(lab)}$ = Lab Vane Shear Strength (psf)
WC = water content, percent
LL = Liquid Limit
PL = Plastic Limit
PI = Plasticity Index
G = Grain Size Analysis
C = Consolidation Test

Depth (ft.)	Sample No.	Pen./Rec. (in.)	Sample Depth (ft.)	Blows (/6 in. Shear Strength (psf) or RQD (%)	N-uncorrected	N_{60}	Casing Blows	Elevation (ft.)	Visual Description and Remarks	Laboratory Testing Results/ AASHTO and Unified Class.
0							SSA	383.98	5" Pavement 0.42	
	1D	24/12	1.00 - 3.00	5/5/5/6	10	14			Brown, damp, medium dense, fine to coarse SAND, some gravel, trace silt, (Fill).	
								380.40	4.00	
5	2D	24/14	5.00 - 7.00	2/3/3/2	6	8	18		Brown, moist, loose, fine to coarse SAND, little gravel, some silt, (Fill).	
							11			
							11			
							8			
							11	375.40	9.00	
10	3D	24/14	10.00 - 12.00	1/2/1/2	3	4	13		Grey, wet, very loose, fine SAND, trace medium sand, little silt, (Fill)	G#261888 A-2-4, SM WC=31.1%
							12			
							16			
							19			
							25	370.40	14.00	
15	4D	24/13	15.00 - 17.00	3/4/3/4	7	10	15		Grey, wet, loose, fine to coarse SAND, trace gravel, trace wood fragments, (piles, cribbing?), (Reworked Alluvial).	
							26			
							26			
							25			
							36	364.40	20.00	
20	5D	24/4	20.70 - 22.70	1/1/2/2	3	4	23	363.70	WOOD layer from 20.0-20.7 ft bgs. 20.70 Grey, wet, very loose, gravelly, fine to coarse SAND, trace silt.	
							28			
							33			
							35			
							53			
25	6D	24/14	25.00 - 27.00	2/2/2/2	4	6	41		Grey, wet, loose, fine SAND, trace medium to coarse sand, trace silt, trace clay, trace gravel. (Regressive Marine Delta Deposits)	G#261889 A-2-4, SP-SC WC=19.9%
							54			
							73			
							79			
							84			
30	7D	24/18	30.00 - 32.00	2/2/2/2	4	6	46		Grey, wet, loose, fine to medium SAND, trace coarse sand, trace silt, trace gravel.	G#261890 A-3, SP-SM WC=18.4%
							63			
							92			
							126			
							131			
35	8D	24/17	35.00 - 37.00	2/2/3/3	5	7	78		Grey, wet, loose, fine to medium SAND, trace coarse sand, little silt, trace gravel.	G#261891 A-2-4, SM WC=20.2%
							83			
							99			
							114			
							156			
40	9D	24/20	40.00 - 42.00	4/4/4/4	8	11	8		Similar to above, except medium dense. Switched to NW casing at 40.0 ft bgs.	
							11			
							32			
							52			
							56			
45	10D	24/18	45.00 - 47.00	1/2/3/3	5	7	21		Similar to above, except loose.	
							72		2" running sand	
							193			
							219			
							224			
50	11D	24/21	50.00 - 52.00	2/3/5/6	8	11	90		Grey, wet, medium dense, fine to medium SAND, little silt, trace coarse sand, trace gravel, trace clay.	G#261892 A-2-4, SC-SM WC=23.2%
							76			
							176			
							221			
							230			
55	12D	24/18	55.00 - 57.00	3/4/4/5	8	11	122		Similar to above.	
							162			
							232			
							272	326.40	58.00	
							281			
60	13D	24/20	60.00 - 62.00	5/6/5/6	11	15	135		Grey, wet, medium dense, Silty fine SAND.	
							129			
							165			
							230			
							281			
65	14D	24/15	65.00 - 67.00	4/4/4/5	8	11	165		Grey, wet, medium dense, Silty fine SAND.	
							162			
							165			
							170			
							216	314.40	70.00	
70	15D	24/19	70.50 - 72.50	4/2/6/6	8	11	195		Grey, wet, stiff, SILT, little fine sand, trace clay.	G#261893 A-4, ML WC=21.3%
							99			
							101			
							93			
							99			
75										

Remarks:

100-150# down pressure on core barrel.
Running sand kept ahead of water on boring.

Stratification lines represent approximate boundaries between soil types; transitions may be gradual.

* Water level readings have been made at times and under conditions stated. Groundwater fluctuations may occur due to conditions other than those present at the time measurements were made.

Maine Department of Transportation

Soil/Rock Exploration Log

US CUSTOMARY UNITS

Project: Lower Sandy Stream Bridge #5128 carries Long Falls Dam Rd. over
Location: Lexington Township, Maine

Boring No.: BB-LSS-101

WIN: 19291.00

Driller:	MaineDOT	Elevation (ft.)	384.4	Auger ID/OD:	5" Solid Stem
Operator:	Giguere/Giles/Daggett	Datum:	NAVD88	Sampler:	Standard Split Spoon
Logged By:	B. Wilder	Rig Type:	CME 45C	Hammer Wt./Fall:	140#/30"
Date Start/Finish:	5/2,3,7,8/2012	Drilling Method:	Cased Wash Boring	Core Barrel:	NQ-2"
Boring Location:	3+56.2, 7.4 ft Rt.	Casing ID/OD:	HW & NW	Water Level*:	15.0 ft bgs.
Hammer Efficiency Factor: 0.84		Hammer Type:	Automatic ☒ Hydraulic ☐ Rope & Cathead ☐		

Definitions:
D = Split Spoon Sample
MD = Unsuccessful Split Spoon Sample attempt
U = Thin Wall Tube Sample
MU = Unsuccessful Thin Wall Tube Sample attempt
V = Insitu Vane Shear Test, PP = Pocket Penetrometer
MV = Unsuccessful Insitu Vane Shear Test attempt
R = Rock Core Sample
SSA = Solid Stem Auger
HSA = Hollow Stem Auger
RC = Roller Cone
WOH = weight of 140lb. hammer
WOR/C = weight of rods or casing
WO1P = Weight of one person
S_u = Insitu Field Vane Shear Strength (psf)
T_v = Pocket Torvane Shear Strength (psf)
q_p = Unconfined Compressive Strength (ksf)
N-uncorrected = Raw field SPT N-value
Hammer Efficiency Factor = Annual Calibration Value
N_{60} = SPT N-uncorrected corrected for hammer efficiency
N_{60} = (Hammer Efficiency Factor/60%)*N-uncorrected
$S_{u(lab)}$ = Lab Vane Shear Strength (psf)
WC = water content, percent
LL = Liquid Limit
PL = Plastic Limit
PI = Plasticity Index
G = Grain Size Analysis
C = Consolidation Test

Depth (ft.)	Sample No.	Pen./Rec. (in.)	Sample Depth (ft.)	Blows (/6 in. Shear Strength (psf) or RQD (%)	N-uncorrected	N_{60}	Casing Blows	Elevation (ft.)	Visual Description and Remarks	Laboratory Testing Results/ AASHTO and Unified Class.
75	16D	24/20	75.00 - 77.00	3/2/WOR/WOR	2	3	132			
							107	308.40	76.00 Grey, wet, soft, Clayey SILT, little fine sand, (Glaciomarine Deposit)	
							103			
							103			
							106			
80	17D V1	24/22	80.00 - 82.00 80.63 - 81.00	WOR/WOR/WOR/WOR Su=1652/134 psf	---		139		Grey, wet, stiff, Clayey SILT, trace fine sand. 55x110 mm vane raw torque readings: V1: 37.0/3.0 ft-lbs	G#261894 A-4, CL-ML WC=28.0% LL=26 PL=19 PI=7
	V2		81.63 - 82.00	Su=1384/112 psf			127		V2: 31.0/2.5 ft-lbs	
							125			
							126			
							116			
85							135		Washed ahead to 86.0 ft bgs.	
	18D V3	24/20	86.00 - 88.00 86.63 - 87.00	WOR/WOR/6/4 Su=915/223 psf	6	8	120		55x110 mm vane raw torque readings: V3: 20.5/5.0 ft-lbs	
	MV			Would not push			77		Grey, wet, medium stiff, Clayey SILT, with 1"-2.5" fine sand layers. Failed 55x110 mm vane attempt.	
							81			
							76			
90	19D V4	24/24	90.00 - 92.00 90.63 - 91.00	WOR/WOR/WOR/WOR Su=759/268 psf	---		78		Grey, wet, medium stiff, Clayey SILT, trace fine sand in layers. 55x110 mm vane raw torque readings: V4: 17.0/6.0 ft-lbs	
	V5		91.63 - 92.00	Su=625/223 psf			79		V5: 14.0/5.0 ft-lbs	
							78			
							62			
							63			
95	20D V6	24/20	95.00 - 97.00 95.63 - 96.00	WOR/WOR/WOR/WOR Su=714/179 psf	---		90		Similar to above. 55x110 mm vane raw torque readings: V6: 16.0/4.0 ft-lbs	
	MV			Would not push			76		Failed 55x110 mm vane attempt.	
							67			
							65			
							70			
100	21D V7	24/24	100.00 - 102.00 100.63 - 101.00	WOR/WOR/WOR/WOR Su=937/246 psf	---		81		Grey, wet, medium stiff to stiff, Clayey SILT, trace fine sand in layers. 55x110 mm vane raw torque readings: V7: 21.0/5.5 ft-lbs	G#261895 A-6, CL WC=27.7% LL=29 PL=15 PI=14
	V8		101.63 - 102.00	Su=1161/268 psf			73		V8: 26.0/6.0 ft-lbs	
							70			
							76			
							78			
105	22D MV	24/20	105.00 - 107.00	WOR/WOR/WOR/WOR Would not push	---		113		Grey, wet, very soft, SILT, some clay, trace fine sand. Failed 55x110 mm vane attempt.	G#261896 A-4, CL-ML WC=26.5% LL=27 PL=21 PI=6
							111			
							81			
							83			
							83			
110	23D V9	24/24	110.00 - 112.00 110.63 - 111.00	WOR/WOR/WOR/WOR Su=1116/312 psf	---		116		Grey, wet, medium stiff to stiff, Clayey SILT, trace fine sand. 55x110 mm vane raw torque readings: V9: 25.0/7.0 ft-lbs	
	V10		111.63 - 112.00	Su=982/246 psf			85		V10: 22.0/5.5 ft-lbs	
							79			
							79			
							108			
115	24D V11	24/24	115.00 - 117.00 115.63 - 116.00	WOR/WOR/WOR/WOR Su=1161/402 psf	---		116		Similar to above, stiff. 55x110 mm vane raw torque readings: V11: 26.0-9.0 ft-lbs	
	MV			Would not push			117		Failed 55x110 mm vane attempt.	
							111			
							115			
							119			
120	25D V12	24/17	120.00 - 122.00 120.63 - 121.00	WOR/WOR/WOR/WOR Su=1339/246 psf	---		130		Similar to above. 55x110 mm vane raw torque readings: V12: 30.0/5.5 ft-lbs	
							126			
							111			
							110			
							127	260.40	124.00	
125	26D	24/18	125.00 - 127.00	6/10/10/11	20	28	135		Grey, wet, medium dense, fine to coarse SAND, some silt, trace gravel, (Submarine outwash).	G#261897 A-2-4, SM WC=14.7%
							116			
							111			
							84			
							111			
130							94			
							a110	253.00	a110 blows for 0.4 ft. 131.40 Top of Bedrock at Elev. 253.0 ft. Roller Coned ahead to 132.1 ft bgs.	
	R1	60/60	132.10 - 137.10	RQD = 100%			NQ-2		R1:Bedrock: White to light grey, medium-grained, muscovite GRANITE, hard, fresh, massive. Rock Mass Quality = Excellent. R1:Core Times (min:sec) 132.1-133.1 ft (2:00) 133.1-134.1 ft (2:15) 134.1-135.1 ft (2:00) 135.1-136.1 ft (2:00) 136.1-137.1 ft (2:15) 100% Recovery	
135										
	R2	60/60	137.10 - 142.10	RQD = 100%					R2:Bedrock: Similar to R1. Rock Mass Quality = Excellent. R2:Core Times (min:sec) 137.1-138.1 ft (2:00) 138.1-139.1 ft (1:50) 139.1-140.1 ft (1:40) 140.1-141.1 ft (1:40) 141.1-142.1 ft (1:55) 100% Recovery	
140										
								242.30	142.10 Bottom of Exploration at 142.10 feet below ground surface.	
145										
150										

Remarks:

100-150# down pressure on core barrel.
Running sand kept ahead of water on boring.

Stratification lines represent approximate boundaries between soil types; transitions may be gradual.

* Water level readings have been made at times and under conditions stated. Groundwater fluctuations may occur due to conditions other than those present at the time measurements were made.

STATE OF MAINE
DEPARTMENT OF TRANSPORTATION

AC-BR-1929(100)X

BRIDGE PLANS

BRIDGE NO. 5128

WIN 19291.00

PROJ. MANAGER	S. BODGE	BY	DATE
DESIGN-DETAILED	R. MYERS	D. SULLIVAN	
CHECKED-REVIEWED	-----	-----	-----
DESIGN2-DETAILED2	L. KRUSINSKI	T. WHITE	MAR. 2013
DESIGN3-DETAILED3	-----	-----	-----
REVISIONS 1	-----		
REVISIONS 2	-----		
REVISIONS 3	-----		
REVISIONS 4	-----		
FIELD CHANGES	-----		

SIGNATURE

P.E. NUMBER

DATE

LOWER SANDY BRIDGE
SANDY STREAM
LEXINGTON TWP   SOMERSET COUNTY

BORING LOGS

Filename: ...\MSTA\008_BORING LOGS2.dgn   Division: BRIDGE   Username: David.Sullivan   Date:3/18/2013

Maine Department of Transportation
Soil/Rock Exploration Log
US CUSTOMARY UNITS

Project: Lower Sandy Stream Bridge #5128 carries Long Falls Dam Rd. over
Location: Lexington Township, Maine

Boring No.: BB-LSS-102
WIN: 19291.00

Driller:	MaineDOT	Elevation (ft.)	384.0	Auger ID/OD:	5" Solid Stem
Operator:	Giguere/Giles/Daggett	Datum:	NAVD88	Sampler:	Standard Split Spoon
Logged By:	B. Wilder	Rig Type:	CME 45C	Hammer Wt./Fall:	140#/30"
Date Start/Finish:	5/14,16,17,21/2012	Drilling Method:	Cased Wash Boring	Core Barrel:	NQ-2"
Boring Location:	4+65.4, 6.2 ft Lt.	Casing ID/OD:	HW & NW	Water Level*:	14.0 ft bgs.

Hammer Efficiency Factor: 0.84
Hammer Type: Automatic ☒ Hydraulic ☐ Rope & Cathead ☐

Definitions:
D = Split Spoon Sample
MD = Unsuccessful Split Spoon Sample attempt
U = Thin Wall Tube Sample
MU = Unsuccessful Thin Wall Tube Sample attempt
V = Insitu Vane Shear Test, PP = Pocket Penetrometer
MV = Unsuccessful Insitu Vane Shear Test attempt
R = Rock Core Sample
SSA = Solid Stem Auger
HSA = Hollow Stem Auger
RC = Roller Cone
WOH = weight of 140lb. hammer
WOR/C = weight of rods or casing
WO1P = Weight of one person
S_u = Insitu Field Vane Shear Strength (psf)
T_v = Pocket Torvane Shear Strength (psf)
q_p = Unconfined Compressive Strength (ksf)
N-uncorrected = Raw field SPT N-value
Hammer Efficiency Factor = Annual Calibration Value
N_{60} = SPT N-uncorrected corrected for hammer efficiency
N_{60} = (Hammer Efficiency Factor/60%)*N-uncorrected
$S_{u(lab)}$ = Lab Vane Shear Strength (psf)
WC = water content, percent
LL = Liquid Limit
PL = Plastic Limit
PI = Plasticity Index
G = Grain Size Analysis
C = Consolidation Test

Depth (ft.)	Sample No.	Pen./Rec. (in.)	Sample Depth (ft.)	Blows (/6 in.) Shear Strength (psf) or RQD (%)	N-uncorrected	N_{60}	Casing Blows	Elevation (ft.)	Visual Description and Remarks	Laboratory Testing Results/ AASHTO and Unified Class
0							SSA	383.58	5" Pavement 0.42 Brown, damp, gravelly, fine to coarse SAND, trace silt, (Fill.)	
5	1D	24/13	5.00 - 7.00	1/2/3/1	5	7			Brown, damp, loose, fine to coarse SAND, some silt, (Fill).	
								375.50	8.50	
10	2D	24/24	10.00 - 12.00	WOH/WOH/WOH/WOH	---		7		Olive-grey, wet, very soft, SILT, some fine sand, trace clay, (Fill: Reworked native soils). Set in HW Casing at 10.0 ft bgs.	G#261898 A-4, ML WC=40.4%
							8			
							8			
							11			
							28	370.00	14.00	
15	3D	24/16	15.00 - 17.00	3/3/3/2	6	8	33		Grey, wet, loose, fine to coarse SAND, trace silt, (Fill: Reworked native soils).	
							27			
							32			
							33	365.00	19.00	
							54			
20	4D	24/13	20.00 - 22.00	2/3/5/5	8	11	62		Grey, wet, medium dense, fine to coarse SAND, some gravel, trace silt, trace wood fragments, (Alluvium; reworked?).	
							62			
							60			
							58			
							59			
25	5D	24/12	25.00 - 27.00	2/3/2/2	5	7	57		Similar to above, except loose.	
							60			
							59			
							67	355.00	29.00	
							60			
30	6D	24/15	30.00 - 32.00	3/2/3/3	5	7	62		Grey, wet, loose, fine SAND, little silt, trace gravel, (Regressive Marine Delta Deposits)	G#261899 A-2-4, SM WC=22.6%
							72			
							78			
							73			
							75			
35	7D	24/17	35.00 - 37.00	1/2/3/2	5	7	101		Grey, wet, loose, fine to medium SAND, trace silt, trace gravel, trace coarse sand, (Regressive Marine Delta Deposits).	
							79			
							79			
							104			
							122			
40	8D	24/18	40.00 - 42.00	3/3/3/3	6	8	110		Grey, wet, loose, fine to medium SAND, trace silt, trace gravel, trace coarse sand.	G#261900 A-3, SP WC=18.8%
							111			
							111			
							111			
							112			
45	9D	24/16	45.00 - 47.00	1/2/2/2	4	6	116		Similar to above.	
							131			
							169			
							222			
							243			
50	10D	24/19	50.00 - 52.00	2/2/2/2	4	6	126		Grey, wet, loose, fine to medium SAND, trace silt, trace coarse sand, trace gravel.	
							162			
							221	331.00	53.00	
							283			
							354			
55	11D	24/17	55.00 - 57.00	5/5/4/4	9	13	180		Grey, wet, stiff, SILT, some fine sand, trace clay, trace medium sand, trace wood fragments, (Marine Delta Deposits).	
							163			
							229			
							336			
							396			
60	12D	24/20	60.00 - 62.00	3/4/5/5	9	13	231		Grey, wet, stiff, SILT, some fine sand, trace medium sand, trace clay.	G#267501 A-4, ML WC=21.2%
							229			
							287			
							384			
							393			
65	13D	24/19	65.00 - 67.00	2/2/3/4	5	7	273		Similar to above, except medium stiff.	
							242	317.50	66.50 Grey, wet, loose, fine to medium SAND, some silt, trace clay.	
							233			
							298			
							338			
70	14D	24/18	70.50 - 72.50	3/5/8/8	13	18	277		Grey, wet, medium dense, fine SAND, some silt, trace medium sand, trace clay. Roller coned ahead to 75.0 ft bgs.	G#267502 A-4, SC-SM WC=22.3%
							119			
							119			
							122			
							132			
75										

Remarks:
100-200# down pressure on core barrel.

Stratification lines represent approximate boundaries between soil types; transitions may be gradual.

* Water level readings have been made at times and under conditions stated. Groundwater fluctuations may occur due to conditions other than those present at the time measurements were made.

Page 1 of 3
Boring No.: BB-LSS-102

Maine Department of Transportation
Soil/Rock Exploration Log
US CUSTOMARY UNITS

Project: Lower Sandy Stream Bridge #5128 carries Long Falls Dam Rd. over
Location: Lexington Township, Maine

Boring No.: BB-LSS-102
WIN: 19291.00

Depth (ft.)	Sample No.	Pen./Rec. (in.)	Sample Depth (ft.)	Blows (/6 in.) Shear Strength (psf) or RQD (%)	N-uncorrected	N_{60}	Casing Blows	Elevation (ft.)	Visual Description and Remarks	Laboratory Testing Results/ AASHTO and Unified Class
75	15D	24/17	75.00 - 77.00	WOR/WOR/3/4	3	4	176		Similar to above, except very loose.	
							218			
							193	306.00	78.00	
							216			
							224			
80	16D	24/24	80.00 - 82.00	WOR/WOR/WOR/WOH	---		OPEN HOLE		Grey, wet, very soft, Clayey SILT, trace fine sand, (Glaciomarine Deposit).	
85	1U	24/24	85.00 - 87.00	WOR/WOR	---				Grey, wet, very soft, Clayey SILT with fine sand layers, (Glaciomarine Deposit).	
	V1		87.63 - 88.00	Su=1116/179 psf					55x110 mm vane raw torque readings: V1: 25.0/4.0 ft-lbs	
	V2		88.63 - 89.00	Su=491/134 psf					V2: 11.0/3.0 ft-lbs	
90	17D	24/24	90.00 - 92.00	WOR/WOR/WOR/WOR	---				Grey, wet, stiff, Clayey SILT, trace sand, (Glaciomarine Deposit).	G#267504 A-4, ML WC=27.9% LL=25 PL=23 PI=2
	V3		90.63 - 91.00	Su=1049/156 psf					55x110 mm vane raw torque readings: V3: 23.5/3.5 ft-lbs	
	V4		91.63 - 92.00	Su=1384/223 psf					V4: 31.0/5.0 ft-lbs	
95	V5		95.00 - 95.37	Su=1451/179 psf					55x110 mm vane raw torque readings: V5: 32.5/4.0 ft-lbs	
	V6		96.00 - 96.37	Su=1406/312 psf					V6: 31.5/7.0 ft-lbs	
	2U	24/24	97.00 - 99.00	WOR/WOR	---				Similar to above.	
100	18D	24/24	100.00 - 102.00	WOR/WOR/WOR/WOR	---					
	V7		100.63 - 101.00	Su=982/223 psf					55x110 mm vane raw torque readings: V7: 22.0/5.0 ft-lbs Grey, wet, medium stiff, SILT, some clay, trace fine sand.	G#267503 A-4, CL-ML WC=27.1% LL=28 PL=21 PI=7
	V8		101.63 - 102.00	Su=580/223 psf					V8: 13.0./5.0 ft-lbs	
105	3U	24/24	105.00 - 107.00	WOR/WOR	---				Similar to above.	
	V9		107.00 - 107.37	Su=402/134 psf					55x110 mm vane raw torque readings: V9: 29.0/3.0 ft-lbs	
	V10		108.00 - 108.37	Su=1161/312 psf					V10: 26.0/7.0 ft-lbs	
110	19D	24/20	110.00 - 112.00	WOR/WOR/2/2	2	3	15		Set in NW Casing at 110.0 ft bgs.	
	V11		110.63 - 111.00	Su=1161/312 psf				273.00	55x110 mm vane raw torque readings: V11: 26.0/7.0 ft-lbs 111.00	
	MV		111.00	Would not push			16		Grey, wet, very loose, fine SAND, trace silt, (Lower Marine Sands). Failed 55x110 mm vane attempt.	
							14			
							16			
							16			
115	20D	24/22	115.00 - 117.00	WOR/WOH/WOH/WOH	---		23		Grey, wet, very loose, Silty fine to medium SAND, (Lower Marine Sands).	
							32			
							35			
							30			
							21			
120	21D	24/21	120.00 - 122.00	1/3/4/6	7	10	59		Grey, wet, loose, fine to coarse SAND, little silt, trace gravel, (Lower Marine Sands).	G#267505 A-2-4, SM WC=12.0%
							55			
							62			
							48			
							37			
125	22D	24/22	125.00 - 127.00	1/5/11/15	16	22	57		Similar to above, except medium dense.	
							121	257.00	127.00	
							236		Roller Coned ahead from 127.5-130.0 ft bgs.	
							279			
							299			
130	23D	14.4/7	130.00 - 131.20	15/14/40(2.4")	---		283		Grey, wet, very dense, Gravelly, fine to coarse SAND, little silt, with cobbles. (Glacial Till).	
							150			
							191		Roller Coned ahead from 133.0-135.5 ft bgs.	
							195			
							186			
135	MD	24/0	135.50 - 137.50	50/36/40/58	76	106	182		Roller Coned ahead to 140.2 ft bgs.	
							184			
							271			
							a134	245.60	a134 blows for 0.4 ft. 138.40 Top of Bedrock at Elev. 245.6 ft.	
140	R1	60/58	140.20 - 145.20	RQD = 93%			NQ-2		R1:Bedrock: Light grey, medium grained, muscovite GRANITE, hard, fresh, massive. Rock Mass Quality = Excellent. R1:Core Times (min:sec) 140.2-141.2 ft (2:00) 141.2-142.2 ft (2:00) 142.2-143.2 ft (2:00) 143.2-144.2 ft (1:55) 144.2-145.2 ft (2:10) 97% Recovery	
145	R2	60/59	145.20 - 150.20	RQD = 93%					R2:Bedrock: Same as R1. Rock Mass Quality = Excellent. R2:Core Times (min:sec) 145.2-146.2 ft (2:00) 146.2-147.2 ft (2:00) 147.2-148.2 ft (2:00) 148.2-149.2 ft (1:55) 149.2-150.2 ft (2:10) 98% Recovery	
150										

Remarks:
100-200# down pressure on core barrel.

Stratification lines represent approximate boundaries between soil types; transitions may be gradual.

* Water level readings have been made at times and under conditions stated. Groundwater fluctuations may occur due to conditions other than those present at the time measurements were made.

Page 2 of 3
Boring No.: BB-LSS-102

Maine Department of Transportation
Soil/Rock Exploration Log
US CUSTOMARY UNITS

Project: Lower Sandy Stream Bridge #5128 carries Long Falls Dam Rd. over
Location: Lexington Township, Maine

Boring No.: BB-LSS-102
WIN: 19291.00

Depth (ft.)	Sample No.	Pen./Rec. (in.)	Sample Depth (ft.)	Blows (/6 in.) Shear Strength (psf) or RQD (%)	N-uncorrected	N_{60}	Casing Blows	Elevation (ft.)	Visual Description and Remarks	Laboratory Testing Results/ AASHTO and Unified Class
150								233.80	150.20 Bottom of Exploration at 150.20 feet below ground surface.	
155										
160										
165										
170										
175										

Remarks:
100-200# down pressure on core barrel.

Stratification lines represent approximate boundaries between soil types; transitions may be gradual.

* Water level readings have been made at times and under conditions stated. Groundwater fluctuations may occur due to conditions other than those present at the time measurements were made.

Page 3 of 3
Boring No.: BB-LSS-102

STATE OF MAINE
DEPARTMENT OF TRANSPORTATION
AC-BR-1929(100)X
BRIDGE PLANS
BRIDGE NO. 5128 WIN 19291.00

PROJ. MANAGER	S. BODGE	BY	DATE
DESIGN-DETAILED	R. MYERS	D. SULLIVAN	
CHECKED-REVIEWED	-----	-----	-----
DESIGN2-DETAILED2	L. KRUSINSKI	T. WHITE	MAR. 2013
DESIGN3-DETAILED3	-----	-----	-----
REVISIONS 1	-----	-----	-----
REVISIONS 2	-----	-----	-----
REVISIONS 3	-----	-----	-----
REVISIONS 4	-----	-----	-----
FIELD CHANGES	-----	-----	-----

SIGNATURE
P.E. NUMBER
DATE

LOWER SANDY BRIDGE
SANDY STREAM
LEXINGTON TWP SOMERSET COUNTY

BORING LOGS

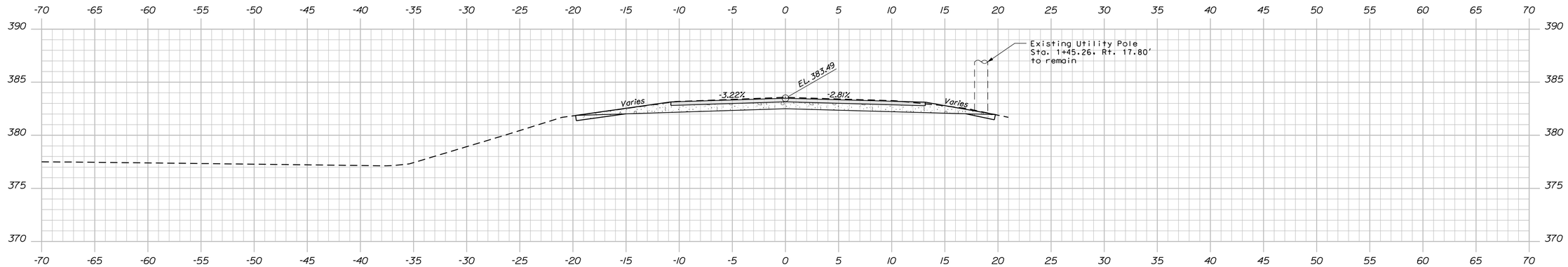

1+50.00

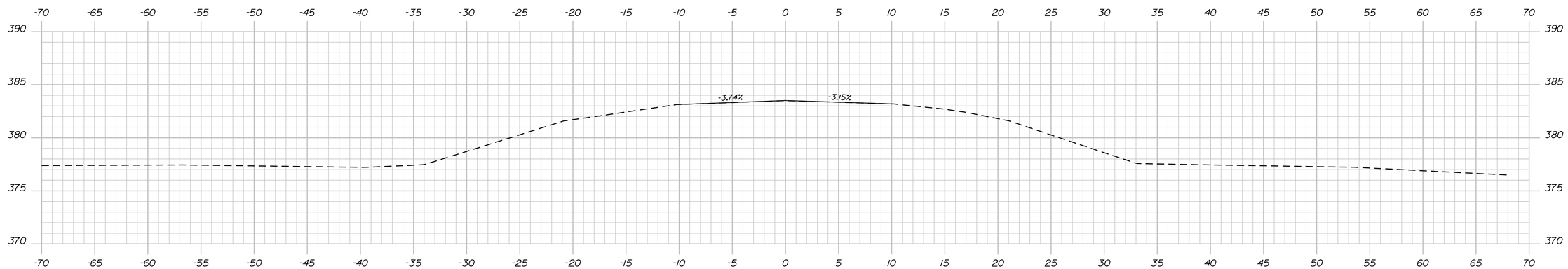

1+35.00 MATCH EXISTING BEGIN TRANSITION

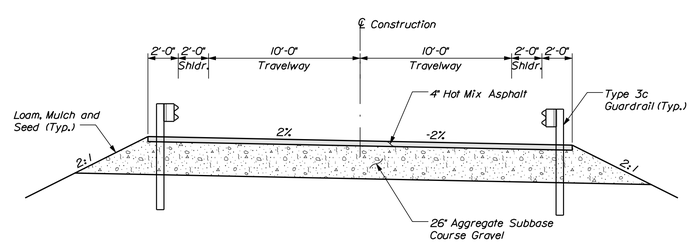

TYPICAL APPROACH SECTION

STATE OF MAINE
DEPARTMENT OF TRANSPORTATION

AC-BR-1929(100)X

WIN 19291.00

BRIDGE NO. 5128

BRIDGE PLANS

PROJ. MANAGER	S. BODGE	BY	DATE
DESIGN-DETAILED	R. MYERS	D. SULLIVAN	
CHECKED-REVIEWED	B. REEVES	D.P.B.	MAR. 2013
DESIGN2-DETAILED2	K. MAGUIRE	T. WHITE	MAR. 2013
DESIGN3-DETAILED3	------	------	------
REVISIONS 1	------	------	------
REVISIONS 2	------	------	------
REVISIONS 3	------	------	------
REVISIONS 4	------	------	------
FIELD CHANGES	------	------	------

SIGNATURE

P.E. NUMBER

DATE

LOWER SANDY BRIDGE
SANDY STREAM
LEXINGTON TWP SOMERSET COUNTY

CROSS SECTIONS

SHEET NUMBER

9

OF 29

Filename: ...\MSTA\009_Xsect_1+35_001.dgn Division: BRIDGE Username: David.Sullivan Date:3/18/2013

Sta. 1+35.00 to Sta. 1+50.00

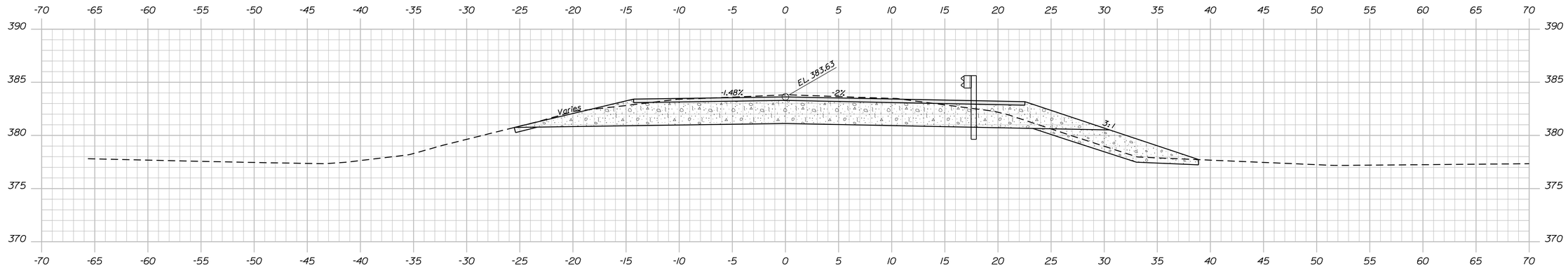

2+00.00

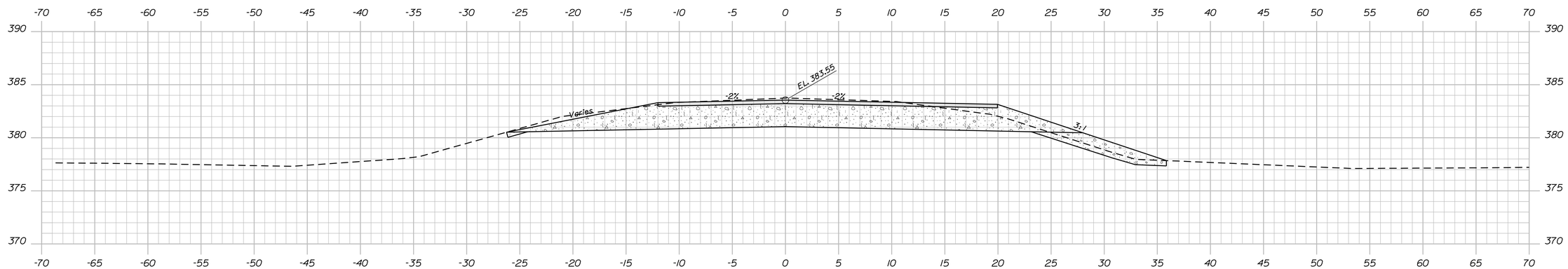

1+85.00 END TRANSITION
BEGIN PROJECT
START SUPERELEVATION TRANSITION

Sta. 1+97.91, 17.94' Rt. to 2+36.43, 12.00' Rt.
Install Guardrail 350 Flared Terminal

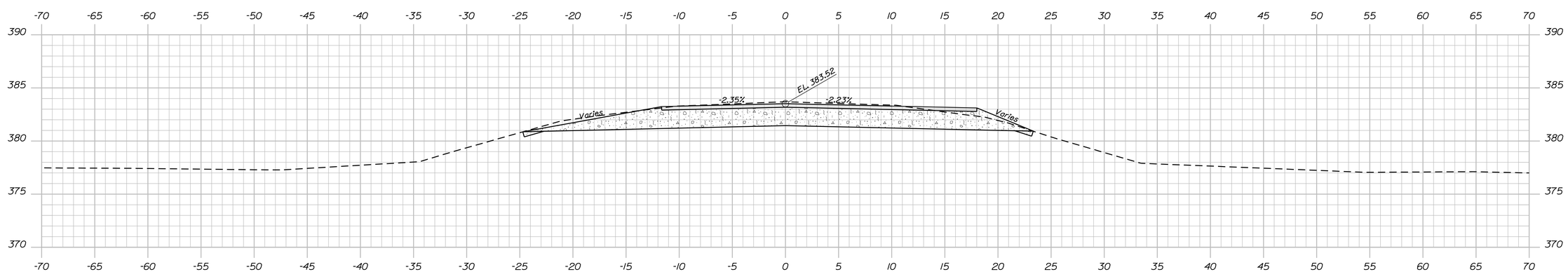

1+75.00

STATE OF MAINE
DEPARTMENT OF TRANSPORTATION

AC-BR-1929(100)X

WIN 19291.00

BRIDGE NO. 5128

BRIDGE PLANS

		BY	DATE
PROJ. MANAGER	S. BODGE		
DESIGN-DETAILED	R. MYERS	D. SULLIVAN	
CHECKED-REVIEWED	B. REEVES	D.P.B.	MAR. 2013
DESIGN2-DETAILED2	K. MAGUIRE	T. WHITE	MAR. 2013
DESIGN3-DETAILED3	------	------	------
REVISIONS 1	------	------	------
REVISIONS 2	------	------	------
REVISIONS 3	------	------	------
REVISIONS 4	------	------	------
FIELD CHANGES	------	------	------

SIGNATURE

P.E. NUMBER

DATE

LOWER SANDY BRIDGE
SANDY STREAM
LEXINGTON TWP SOMERSET COUNTY

CROSS SECTIONS

SHEET NUMBER

10

OF 29

Filename: ...\MSTA\010_Xsect_1+75_002.dgn Division: BRIDGE Username: David.Sullivan Date:3/18/2013

Sta. 1+75.00 to Sta. 2+00.00

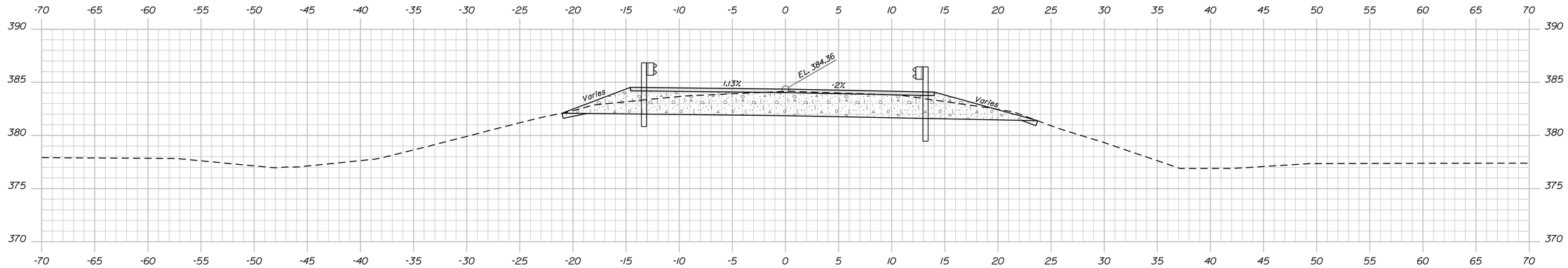

Sta. 2+86.05, 12.00' Lt. to 3+36.52, 12.00' Lt.
Install 50 ft. Guardrail Type 3c

2+75.00

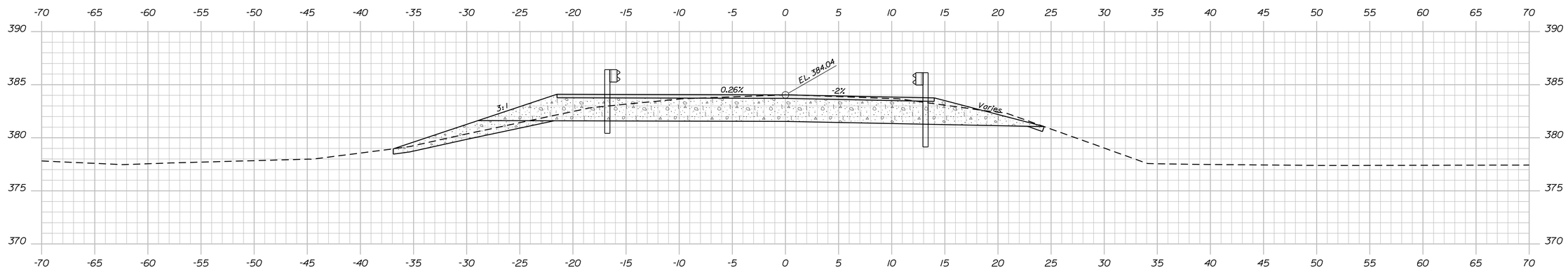

2+50.00

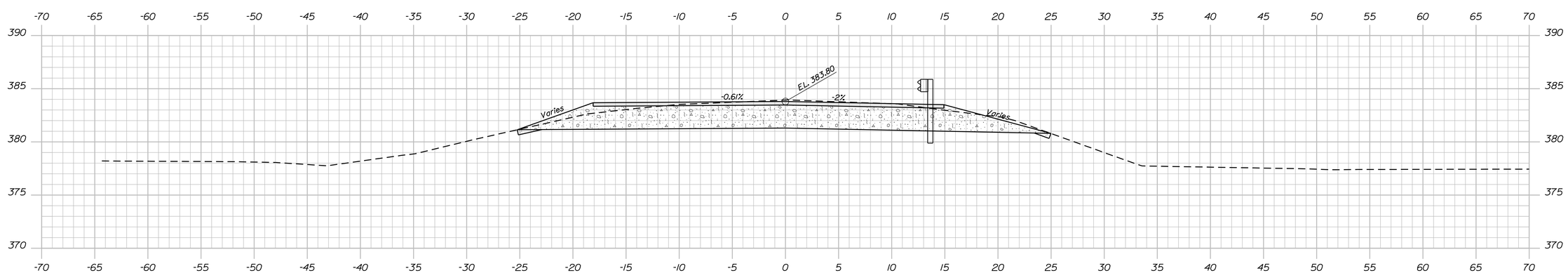

Sta. 2+47.84, 16.96' Lt. to 2+86.05, 12.00' Lt.
Install Guardrail 350 Flared Terminal

2+25.00

Sta. 2+36.43, 12.00' Rt. to 3+36.18, 12.00' Rt.
Install 100 ft. Guardrail Type 3c

STATE OF MAINE
DEPARTMENT OF TRANSPORTATION

AC-BR-1929(100)X

WIN
19291.00

BRIDGE NO. 5128

BRIDGE PLANS

PROJ. MANAGER	S. BRIDGE	BY	DATE
DESIGN-DETAILED	R. MYERS	D. SULLIVAN	
CHECKED-REVIEWED	B. REEVES	D.P.B.	MAR. 2013
DESIGN2-DETAILED2	K. MAGUIRE	T. WHITE	MAR. 2013
DESIGN3-DETAILED3	------	------	------
REVISIONS 1	------	------	------
REVISIONS 2	------	------	------
REVISIONS 3	------	------	------
REVISIONS 4	------	------	------
FIELD CHANGES	------	------	------

SIGNATURE

P.E. NUMBER

DATE

LOWER SANDY BRIDGE
SANDY STREAM
LEXINGTON TWP SOMERSET COUNTY

CROSS SECTIONS

SHEET NUMBER

11

OF 29

Filename: ...\MSTA\011_Xsect_2+25_003.dgn Division: BRIDGE Username: David.Sullivan Date:3/18/2013

Sta. 2+25.00 to Sta. 2+75.00

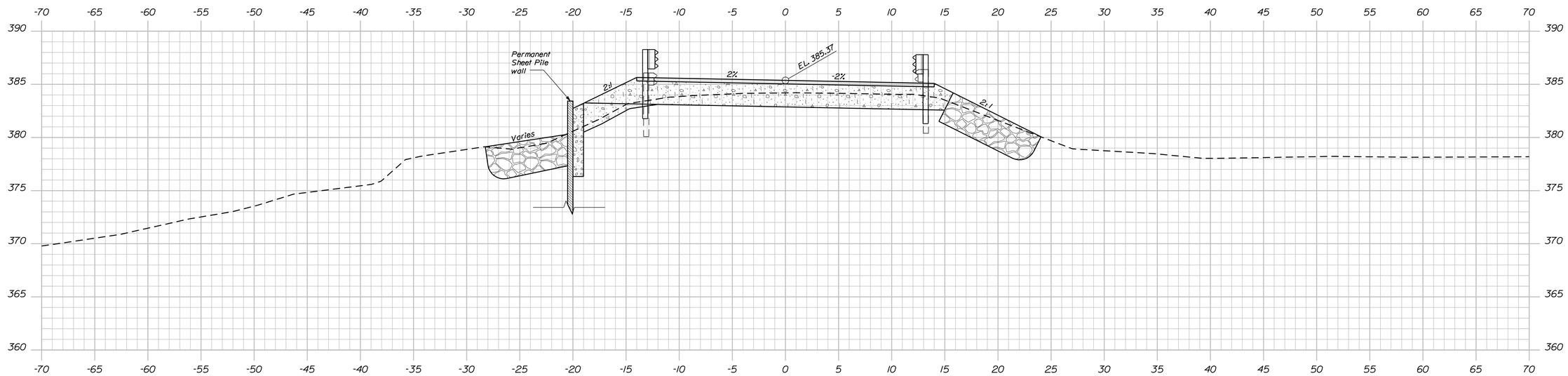

3+50.00

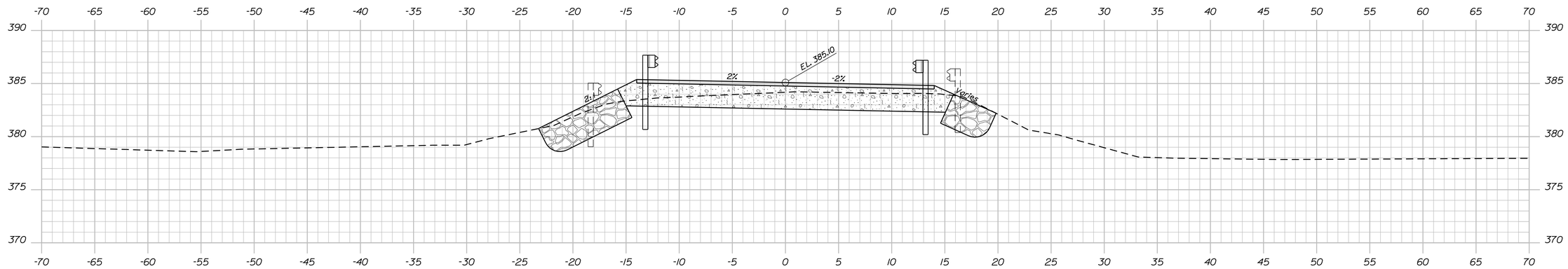

Sta. 3+46.25, 20.11' Lt. to 3+56.00, 20.00' Lt.
Install PCMG wall

Sta. 3+36.52, 12.00' Lt. to 3+56.96, 12.43' Lt.
Install Bridge Transition Type I

3+25.00

Sta. 3+36.16, 12.00' Rt. to 3+56.70, 12.42' Rt.
Install Bridge Transition Type I

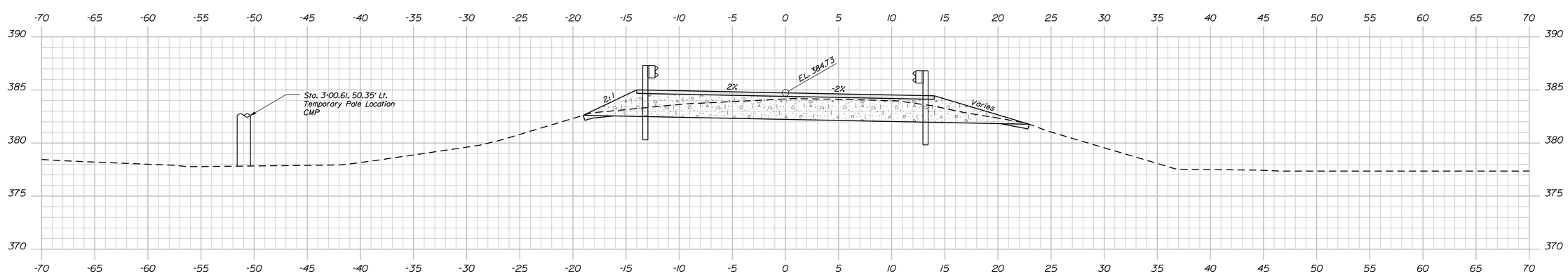

3+00.00 BEGIN FULL SUPERELEVATION

STATE OF MAINE
DEPARTMENT OF TRANSPORTATION

AC-BR-1929(100)X

WIN 19291.00

BRIDGE NO. 5128

BRIDGE PLANS

		BY	DATE
PROJ. MANAGER	S. BRIDGE		
DESIGN-DETAILED	R. MYERS	D. SULLIVAN	MAR. 2013
CHECKED-REVIEWED	B. REEVES	D.P.B.	MAR. 2013
DESIGN2-DETAILED2	K. MAGUIRE	T. WHITE	------
DESIGN3-DETAILED3	------	------	------
REVISIONS 1	------	------	------
REVISIONS 2	------	------	------
REVISIONS 3	------	------	------
REVISIONS 4	------	------	------
FIELD CHANGES	------	------	------

SIGNATURE

P.E. NUMBER

DATE

LOWER SANDY BRIDGE
SANDY STREAM
LEXINGTON TWP SOMERSET COUNTY

CROSS SECTIONS

SHEET NUMBER

12

OF 29

Filename: ...\MSTA\012_Xsect_3+00_004.dgn Division: BRIDGE Username: David.Sullivan Date:3/18/2013

Sta. 3+00.00 to Sta. 3+50.00

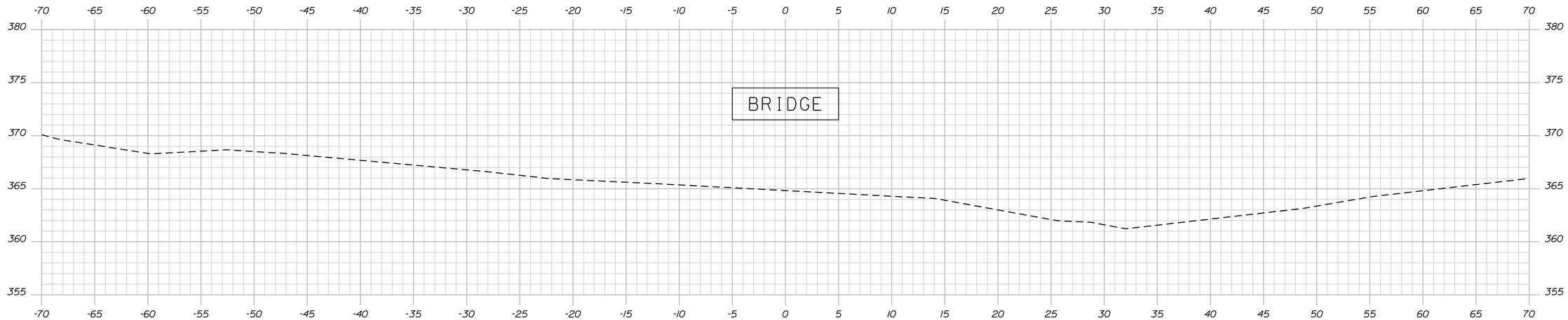

4+25.00

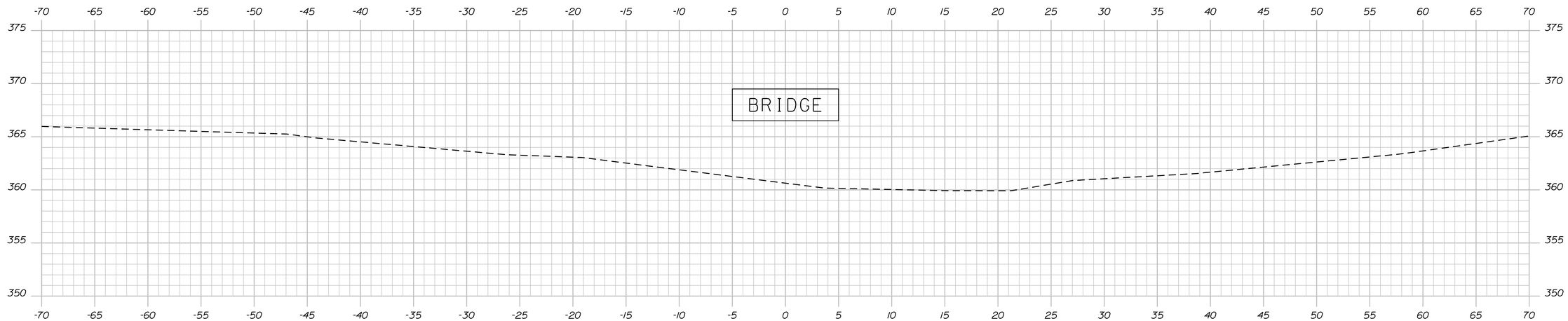

4+00.00

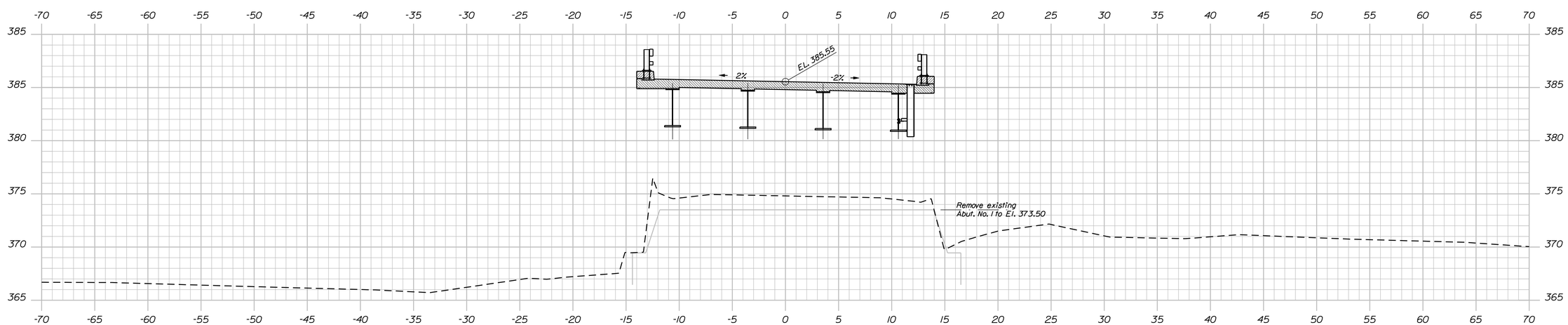

3+75.00

STATE OF MAINE
DEPARTMENT OF TRANSPORTATION

AC-BR-1929(100)X

WIN
19291.00

BRIDGE NO. 5128

BRIDGE PLANS

PROJ. MANAGER	S. BOOGE	BY	DATE
DESIGN-DETAILED	R. MYERS	D. SULLIVAN	MAR. 2013
CHECKED-REVIEWED	B. REEVES	D.P.B.	MAR. 2013
DESIGN2-DETAILED2	K. MAGUIRE	T. WHITE	MAR. 2013
DESIGN3-DETAILED3	------	------	------
REVISIONS 1	------	------	------
REVISIONS 2	------	------	------
REVISIONS 3	------	------	------
REVISIONS 4	------	------	------
FIELD CHANGES	------	------	------

SIGNATURE

P.E. NUMBER

DATE

LOWER SANDY BRIDGE
SANDY STREAM
LEXINGTON TWP SOMERSET COUNTY

CROSS SECTIONS

SHEET NUMBER

13

OF 29

Sta. 3+75.00 to Sta. 4+25.00

Filename: ...\MSTA\013_Xsect_3+75_005.dgn Division: BRIDGE Username: David.Sullivan Date:3/18/2013

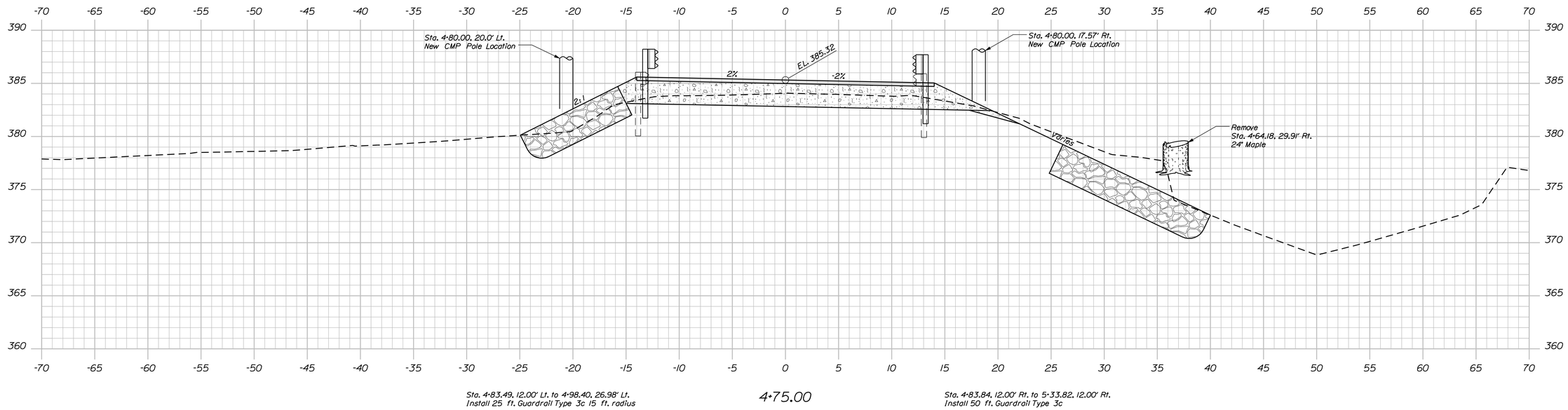

STATE OF MAINE
DEPARTMENT OF TRANSPORTATION

AC-BR-1929(100)X

WIN 19291.00

BRIDGE NO. 5128

BRIDGE PLANS

		BY	DATE
PROJ. MANAGER	S. BODGE		
DESIGN-DETAILED	R. MYERS	D. SULLIVAN	
CHECKED-REVIEWED	B. REEVES	D.P.B.	MAR. 2013
DESIGN2-DETAILED2	K. MAGUIRE	T. WHITE	MAR. 2013
DESIGN3-DETAILED3	------	------	------
REVISIONS 1	------	------	------
REVISIONS 2	------	------	------
REVISIONS 3	------	------	------
REVISIONS 4	------	------	------
FIELD CHANGES	------	------	------

SIGNATURE

P.E. NUMBER

DATE

LOWER SANDY BRIDGE
SANDY STREAM
LEXINGTON TWP SOMERSET COUNTY

CROSS SECTIONS

SHEET NUMBER

14

OF 29

Sta. 4+50.00 to Sta. 4+75.00

Filename: ...\MSTA\014_Xsect_4+50_006.dgn Division: BRIDGE Username: David.Sullivan Date:3/18/2013

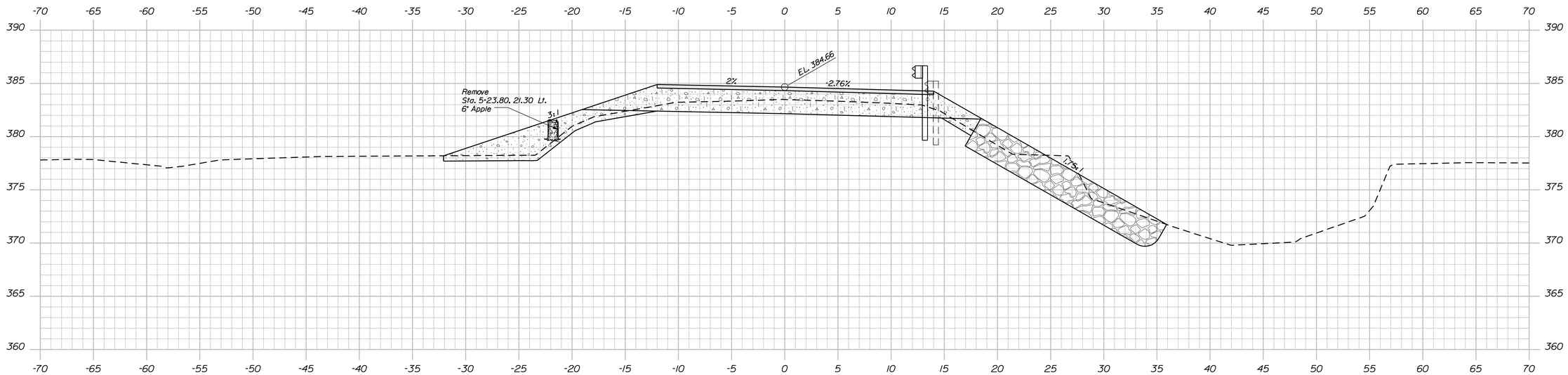

5+25.00

Sta. 5+33.82, 12.00' Rt. to 5+72.58, 17.01' Rt.
Install Guardrail 350 Flared Terminal

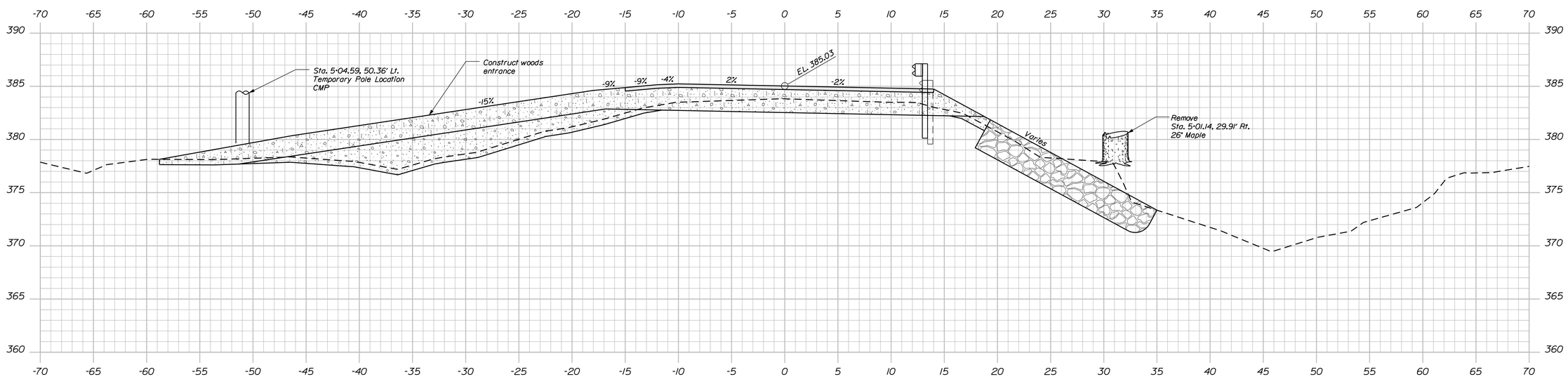

5+00.00 END FULL SUPERELEVATION
START SUPERELEVATION TRANSITION

STATE OF MAINE
DEPARTMENT OF TRANSPORTATION

AC-BR-1929(100)X

WIN 19291.00

BRIDGE NO. 5128

BRIDGE PLANS

		BY	DATE
PROJ. MANAGER	S. BODGE		
DESIGN-DETAILED	R. MYERS	D. SULLIVAN	
CHECKED-REVIEWED	B. REEVES	D.P.B.	MAR. 2013
DESIGN2-DETAILED2	K. MAGUIRE	T. WHITE	MAR. 2013
DESIGN3-DETAILED3	------	------	------
REVISIONS 1	------	------	------
REVISIONS 2	------	------	------
REVISIONS 3	------	------	------
REVISIONS 4	------	------	------
FIELD CHANGES	------	------	------

SIGNATURE

P.E. NUMBER

DATE

LOWER SANDY BRIDGE
SANDY STREAM
LEXINGTON TWP SOMERSET COUNTY

CROSS SECTIONS

SHEET NUMBER

15

OF 29

Sta. 5+00.00 to Sta. 5+25.00

Filename: ...\MSTA\015_Xsect_5+00_007.dgn Division: BRIDGE Username: David.Sullivan Date:3/18/2013

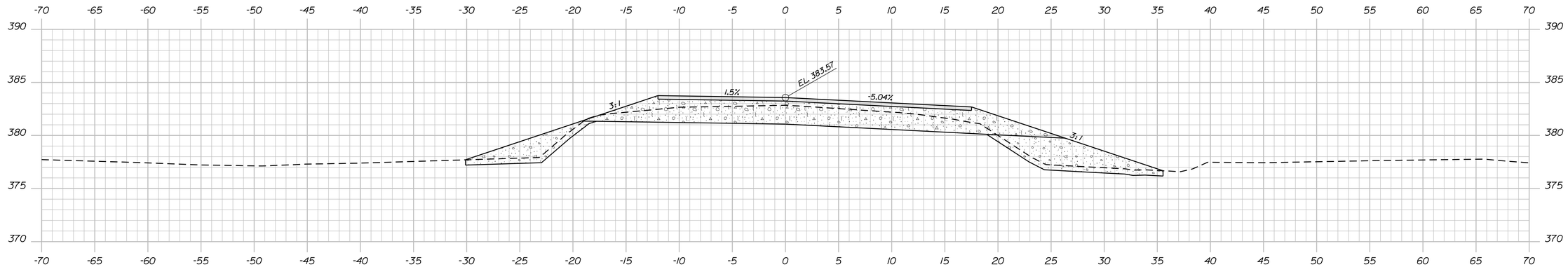

6+00.00

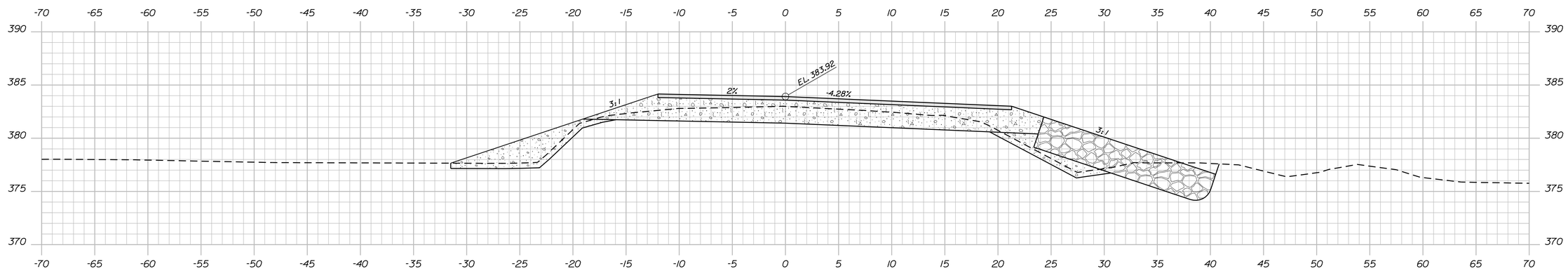

5+75.00

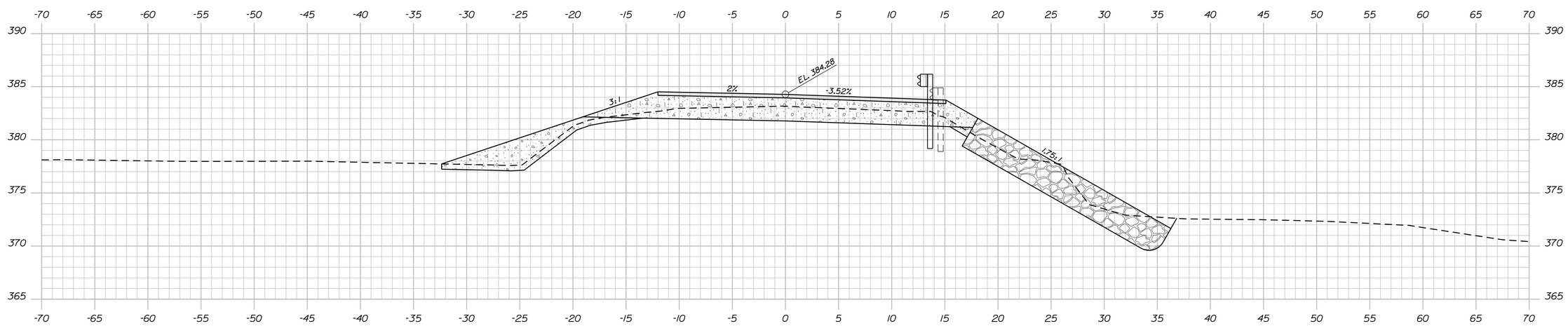

5+50.00

STATE OF MAINE
DEPARTMENT OF TRANSPORTATION

AC-BR-1929(100)X

WIN 19291.00

BRIDGE NO. 5128

BRIDGE PLANS

		BY	DATE
PROJ. MANAGER	S. BODGE		
DESIGN-DETAILED	R. MYERS	D. SULLIVAN	MAR. 2013
CHECKED-REVIEWED	B. REEVES	D.P.B.	MAR. 2013
DESIGN2-DETAILED2	K. MAGUIRE	T. WHITE	MAR. 2013
DESIGN3-DETAILED3	------	------	------
REVISIONS 1	------	------	------
REVISIONS 2	------	------	------
REVISIONS 3	------	------	------
REVISIONS 4	------	------	------
FIELD CHANGES	------	------	------

SIGNATURE

P.E. NUMBER

DATE

LOWER SANDY BRIDGE
SANDY STREAM
LEXINGTON TWP SOMERSET COUNTY

CROSS SECTIONS

SHEET NUMBER

16

OF 29

Filename: ...\MSTA\016_Xsect_5+50_008.dgn Division: BRIDGE Username: David.Sullivan Date:3/18/2013

Sta. 5+50.00 to Sta. 6+00.00

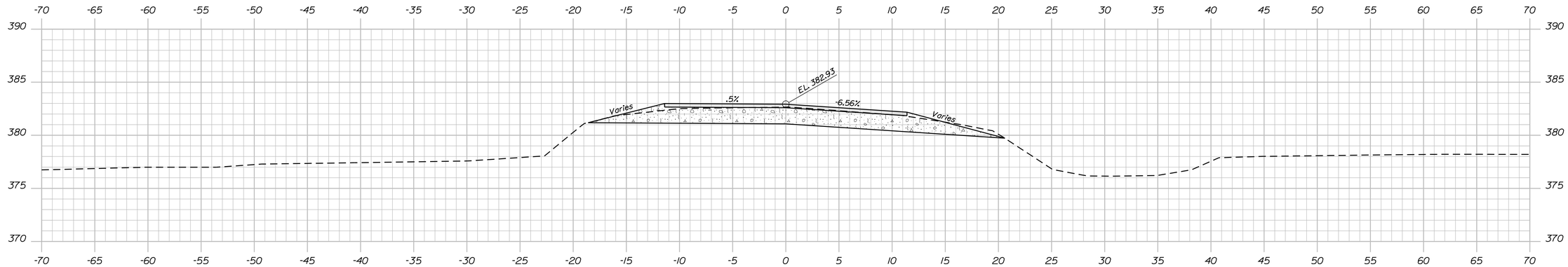

6+50.00

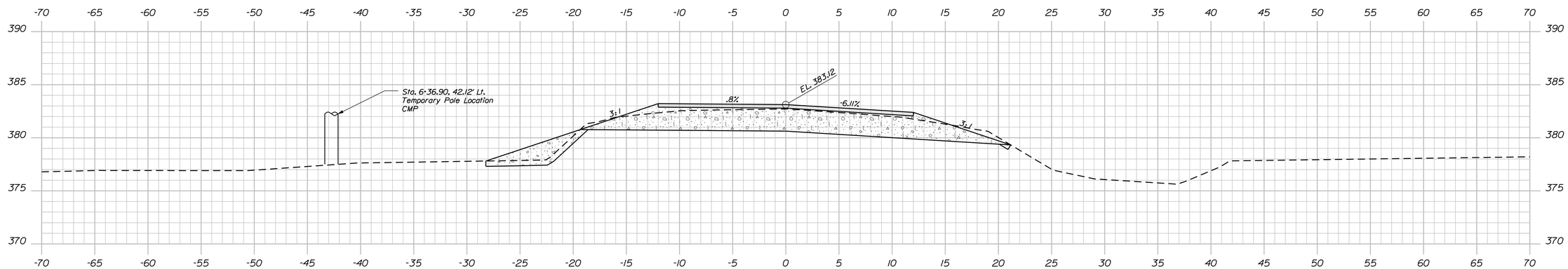

6+35.00 END PROJECT
BEGIN TRANSITION

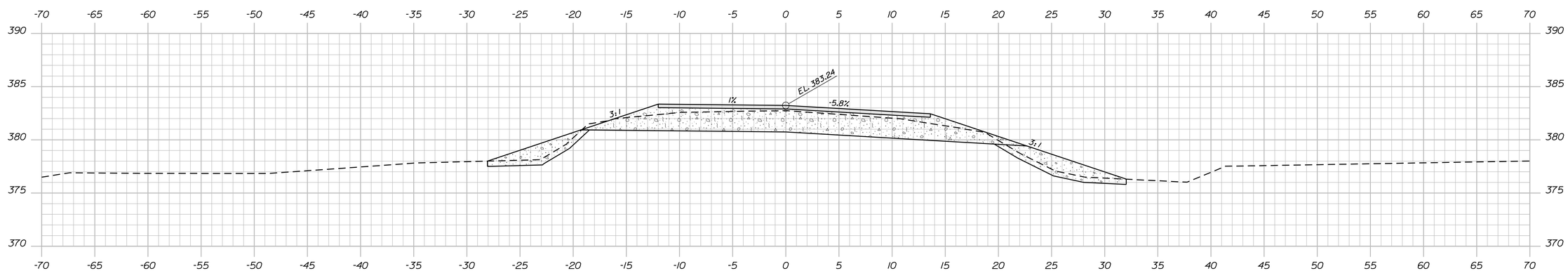

6+25.00

STATE OF MAINE
DEPARTMENT OF TRANSPORTATION

AC-BR-1929(100)X

WIN 19291.00

BRIDGE NO. 5128

BRIDGE PLANS

PROJ. MANAGER	S. BRIDGE	BY	DATE
DESIGN-DETAILED	R. MYERS	D. SULLIVAN	
CHECKED-REVIEWED	B. REEVES	D.P.B.	MAR. 2013
DESIGN2-DETAILED2	K. MAGUIRE	T. WHITE	MAR. 2013
DESIGN3-DETAILED3	------	------	------
REVISIONS 1	------	------	------
REVISIONS 2	------	------	------
REVISIONS 3	------	------	------
REVISIONS 4	------	------	------
FIELD CHANGES	------	------	------

SIGNATURE

P.E. NUMBER

DATE

LOWER SANDY BRIDGE
SANDY STREAM
LEXINGTON TWP SOMERSET COUNTY

CROSS SECTIONS

SHEET NUMBER

17

OF 29

Sta. 6+25.00 to Sta. 6+50.00

Filename: ...\MSTA\017_Xsect_6+25_009.dgn Division: BRIDGE Username: David.Sullivan Date:3/18/2013

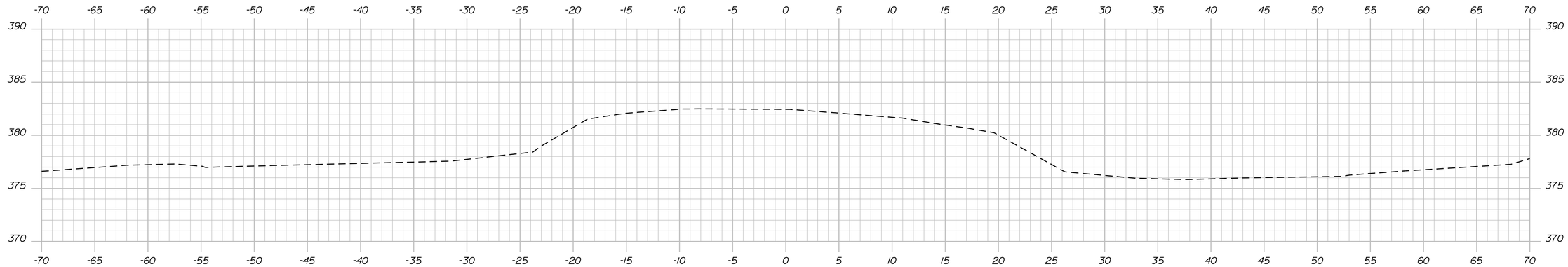

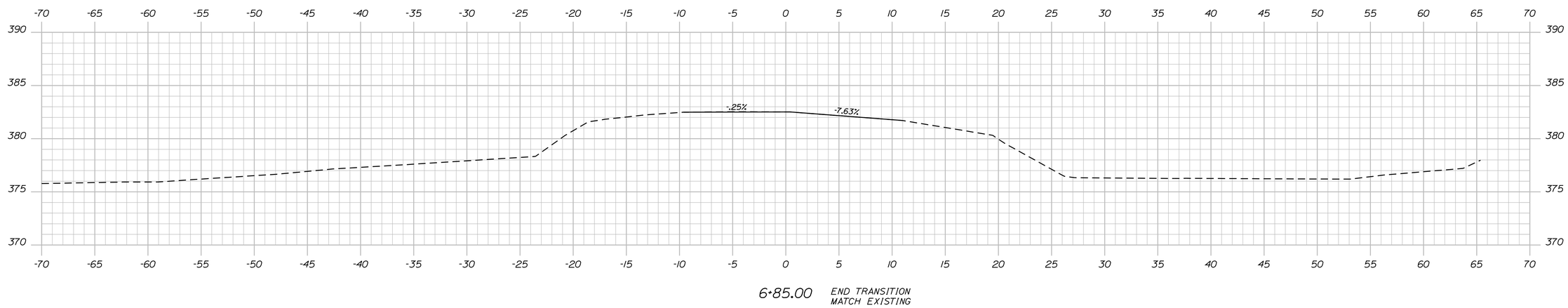

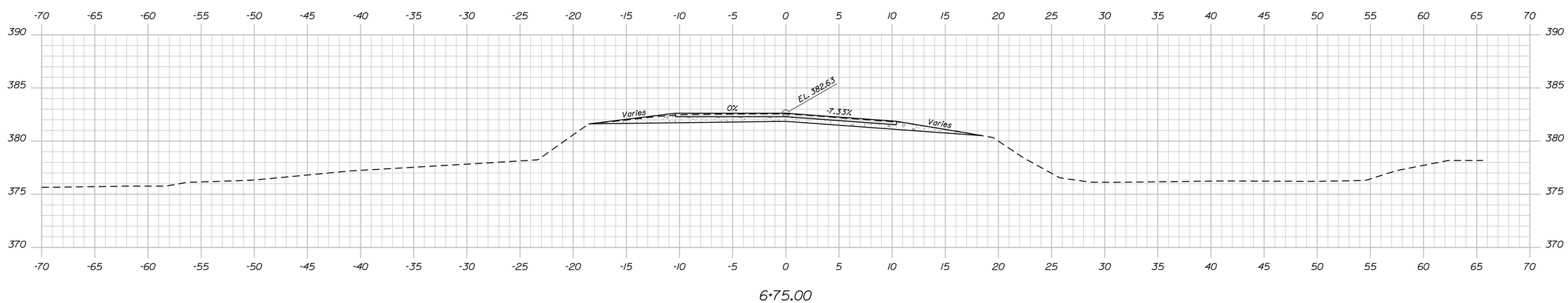

STATE OF MAINE
DEPARTMENT OF TRANSPORTATION

AC-BR-1929(100)X

WIN 19291.00

BRIDGE NO. 5128

BRIDGE PLANS

PROJ. MANAGER	S. BODGE	BY	DATE
DESIGN-DETAILED	R. MYERS	D. SULLIVAN	
CHECKED-REVIEWED	B. REEVES	D.P.B.	MAR. 2013
DESIGN2-DETAILED2	K. MAGUIRE	T. WHITE	MAR. 2013
DESIGN3-DETAILED3	------	------	------
REVISIONS 1	------	------	------
REVISIONS 2	------	------	------
REVISIONS 3	------	------	------
REVISIONS 4	------	------	------
FIELD CHANGES	------	------	------

SIGNATURE

P.E. NUMBER

DATE

LOWER SANDY BRIDGE
SANDY STREAM
LEXINGTON TWP SOMERSET COUNTY

CROSS SECTIONS

SHEET NUMBER

18

OF 29

Sta. 6+75.00 to Sta. 7+00.00

Filename: ...\MSTA\018_Xsect_6+75_010.dgn Division: BRIDGE Username: David.Sullivan Date:3/18/2013

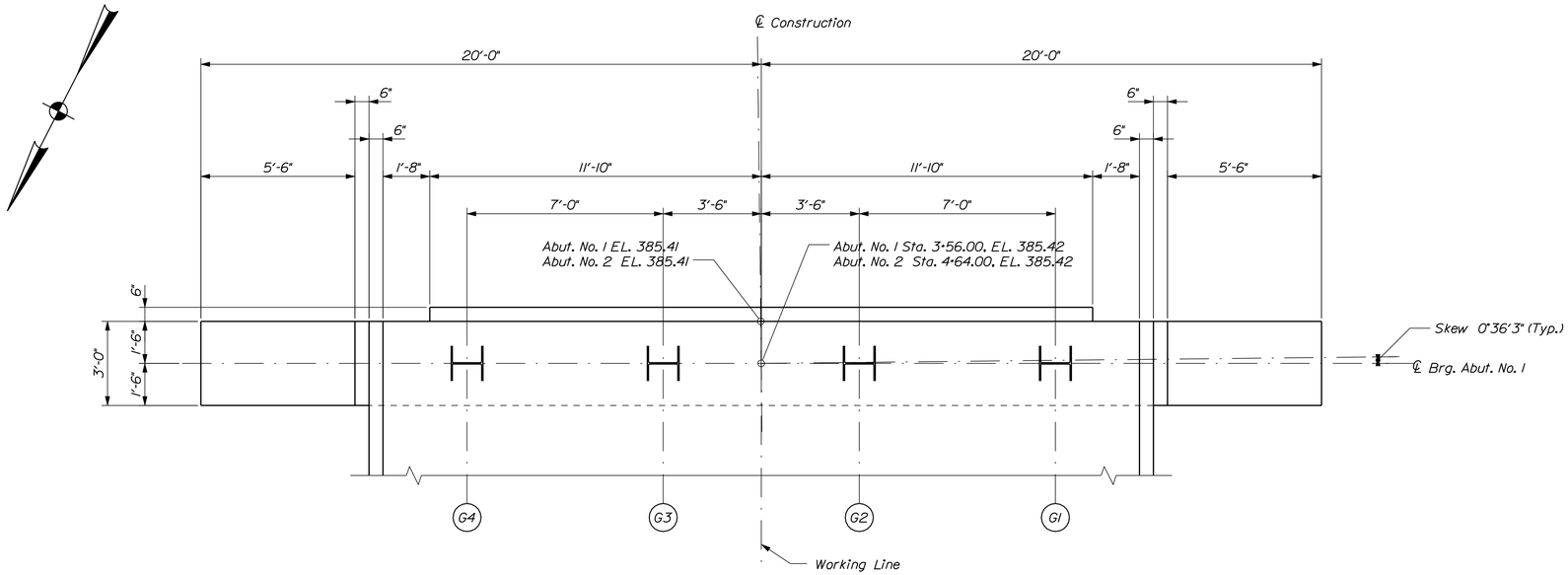

ABUTMENT No. 1 PLAN

Abutment No. 2 similar, opposite hand
(Skew at Abut. No. 2 is back on left)

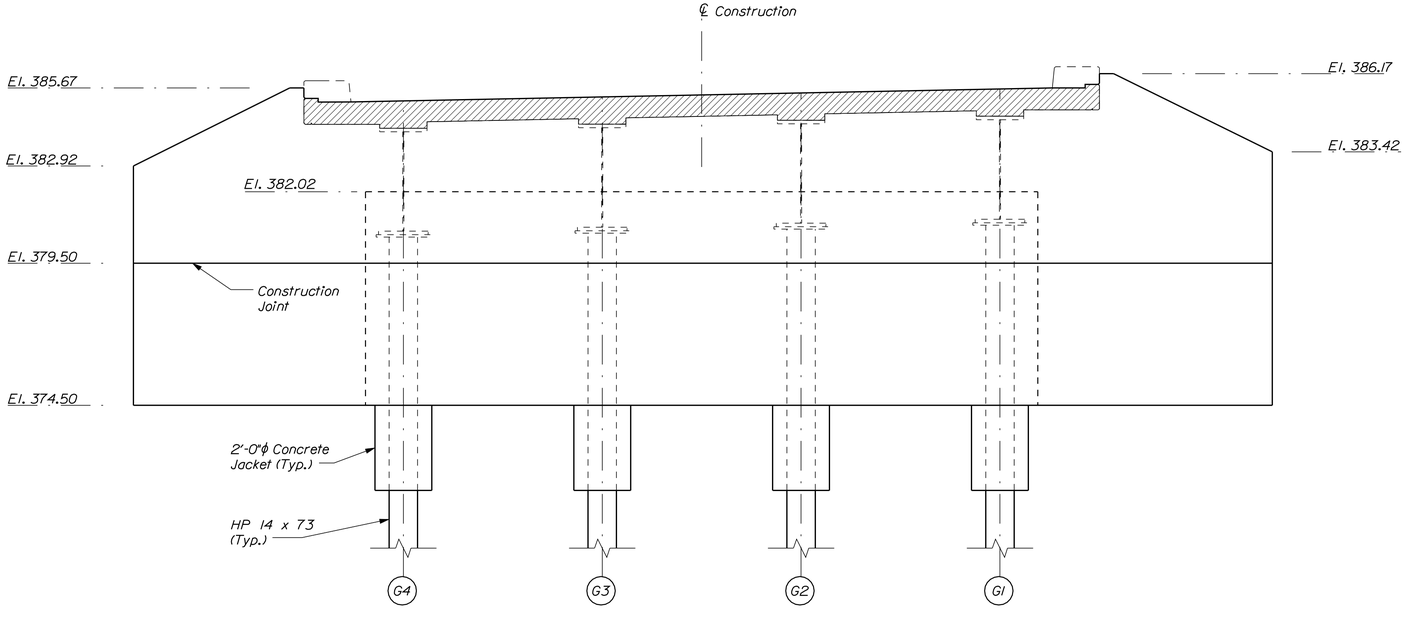

ABUTMENT No. 1 ELEVATION

Abutment No. 2 similar, opposite hand
(Shown looking back Station)

ABUTMENT NOTES

1. Structural Earth Excavation, Abutments and Retaining Walls, required more than 12 inches below the bottom of the structure, will be paid for in accordance with Standard Specifications Section 206, Structural Excavation.

2. Reinforcing steel shall have a minimum concrete cover of 2 inches unless otherwise noted.

3. Place 4-in. diameter drains in the breastwall and wingwalls at 10-ft maximum spacing. The exact location will be determined by the Resident.

4. Cover joints where waterstops are not required in accordance with Standard Details Section 502.

5. Construct French Drains behind the abutments and wingwalls in accordance with Standard Specifications Section 512, French Drains.

6. Abutments and wingwalls shall be backfilled with Granular Borrow, Material for Underwater Backfill. Pay limits will be as shown in the "Abutment Backfill Detail/Section"

7. Payment for the concrete jacket around the tops of the H - piles will not be paid for directly, but shall be considered incidental to Pay Item No. 502.219, Structural Concrete, Abutments and Retaining Walls. Fill concrete may be used for the concrete jackets.

PILE NOTES

1. The maximum factored pile load is 335 kips (Strength 1).

2. H-pile material shall be ASTM A 572, Grade 50.

3. Estimate of piles required:

   Abutment No. 1: 4 ~ HP14x73 @ 130 feet
   Abutment No. 2: 4 ~ HP14x73 @ 138 feet

4. All piles shall be equipped with a pile tip in accordance with Standard Specifications Section 501.10, Prefabricated Pile Tips.

5. Piles shall not be out of position shown by more than 2 inches in any direction.

6. The Contractor shall perform and submit a wave equation analysis for review and acceptance by the Resident. The maximum allowable driving stress is 0.90 times Fy. The submittal analyses shall include the proposed stopping criteria based on the wave equation analysis and the proposed driving system. The stopping criteria shall include the blows per inch and the number of 1-in. intervals at which pile installation may be terminated. The cost of performing the wave equation analysis will be considered incidental to Item No. 501.92, Pile Driving Equipment Mobilization.

7. The Contractor shall perform two (2) dynamic load test(s), one at each abutment, to confirm the ultimate capacity of the piles. The required nominal resistance for the pile is the factored axial pile load divided by a resistance factor of 0.65 per LRFD Specifications. The dynamic test shall be performed on the first production pile driven at each abutment.

8. The sole plates and installation of the sole plates at the top of the H-piles shall not be paid for directly. Payment shall be incidental to Pay Item No. 501.461, Steel H-beam Piles 73 lb/ft, in place.

9. Piles shall be driven to bedrock in accordance with Section 501 of the Standard Specifications.

10. It is anticipated that the Contractor will encounter obstructions during pile driving operations. Clearing of obstructions shall be as specified in Section 501 of the Standard Specifications. The method of clearing obstructions shall be approved by the Resident. The cost of clearing obstructions shall be considered incidental to related contract items.

ABUTMENT NO. 1 PILE CUT - OFF ELEVATIONS		ABUTMENT NO. 2 PILE CUT - OFF ELEVATIONS	
Pile	Elevation	Pile	Elevation
G1	380.84	G1	380.84
G2	380.70	G2	380.70
G3	380.56	G3	380.56
G4	380.42	G4	380.42

STATE OF MAINE
DEPARTMENT OF TRANSPORTATION

AC-BR-1929(100)X

WIN 19291.00

BRIDGE NO. 5128

BRIDGE PLANS

PROJ. MANAGER	S. BODGE	BY	DATE	
DESIGN-DETAILED	R. MYERS	D. SULLIVAN	MAR. 2013	SIGNATURE
CHECKED-REVIEWED	B. REEVES	D.P.B.	MAR. 2013	
DESIGN2-DETAILED2	K. MAGUIRE	T. WHITE	MAR. 2013	P.E. NUMBER
DESIGN3-DETAILED3	------	------	------	
REVISIONS 1	------	------	------	DATE
REVISIONS 2	------	------	------	
REVISIONS 3	------	------	------	
REVISIONS 4	------	------	------	
FIELD CHANGES	------	------	------	

LOWER SANDY BRIDGE
SANDY STREAM
LEXINGTON TWP SOMERSET COUNTY

ABUTMENTS No. 1 & 2 PLAN

SHEET NUMBER
19
OF 29

Filename: ...\MSTA\019_Abutments_No1-2.dgn Division: BRIDGE Username: David.Sullivan Date:3/18/2013

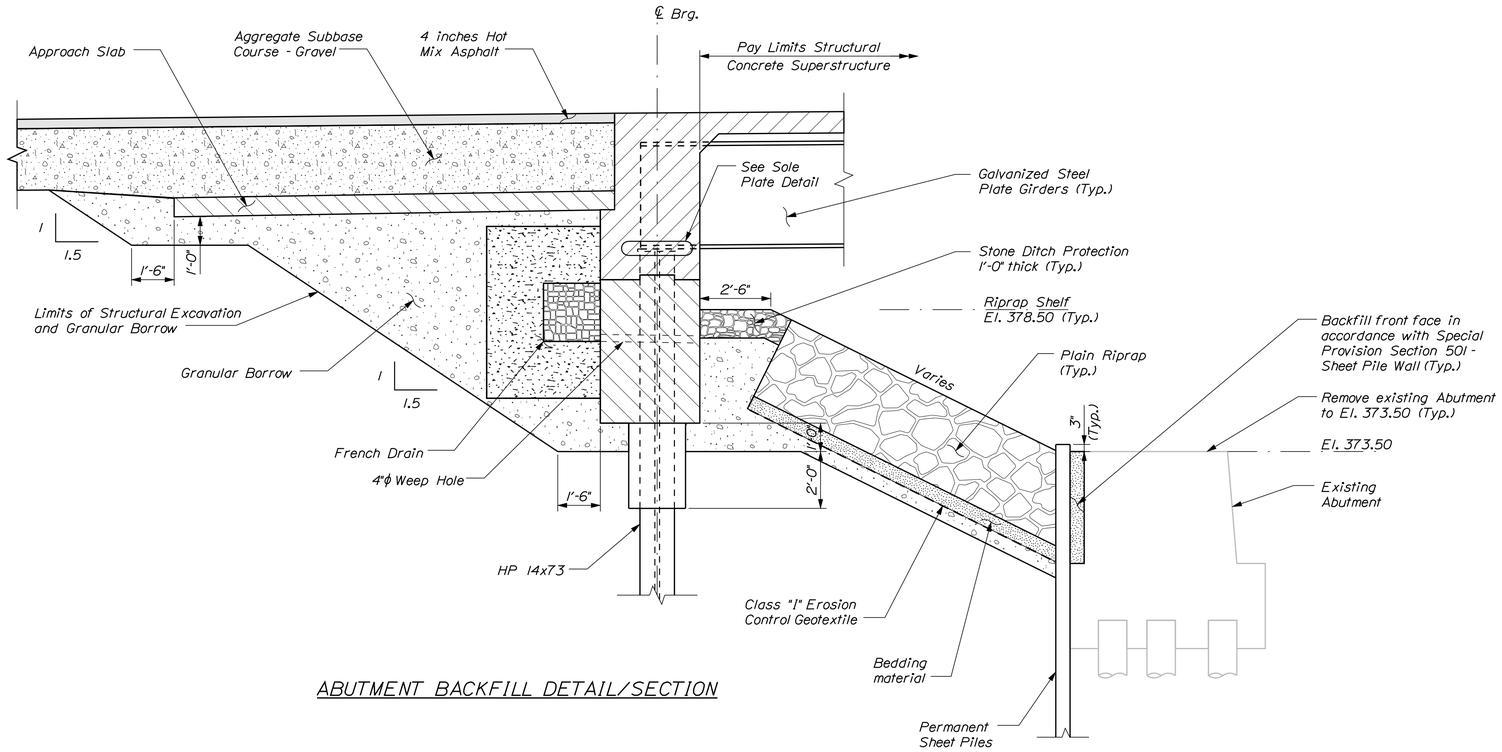

ABUTMENT BACKFILL DETAIL/SECTION

SHEET PILE NOTES

1. The permanent Sheet Piles shall be designed, furnished, and installed in accordance with Special Provision Section 501 - Sheet Pile Wall.

2. The permanent Sheet Pile walls shall be designed for 21 feet of unsupported length.

3. At a minimum, the permanent Sheet Piles shall have an additional 1/8 of an inch in thickness over design to account for corrosion loss.

4. This work shall be designed by a licensed Professional Engineer registered to practice in the State of Maine.

5. It is anticipated that the Contractor will encounter obstructions during sheet pile driving operations. Clearing of obstructions shall be as specified in Special Provision Section 501 - Sheet Pile Wall.

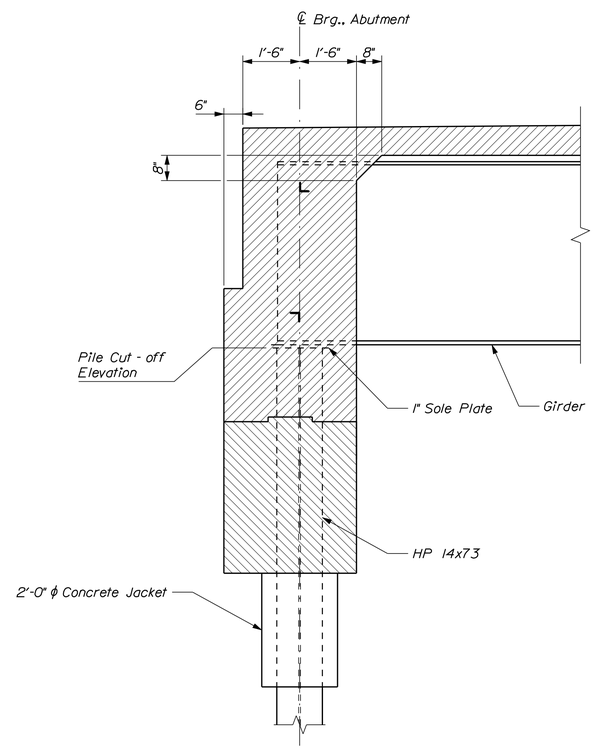

TYPICAL ABUTMENT SECTION

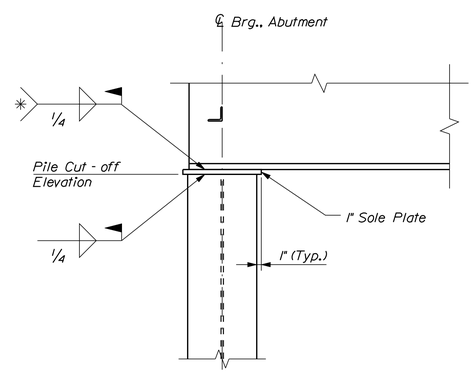

SOLE PLATE DETAIL

* Zinc coating on galvinized Girders shall be removed to 2 inches away from the weld on all sides by grinding prior to welding. The weld should only be done on bare steel.

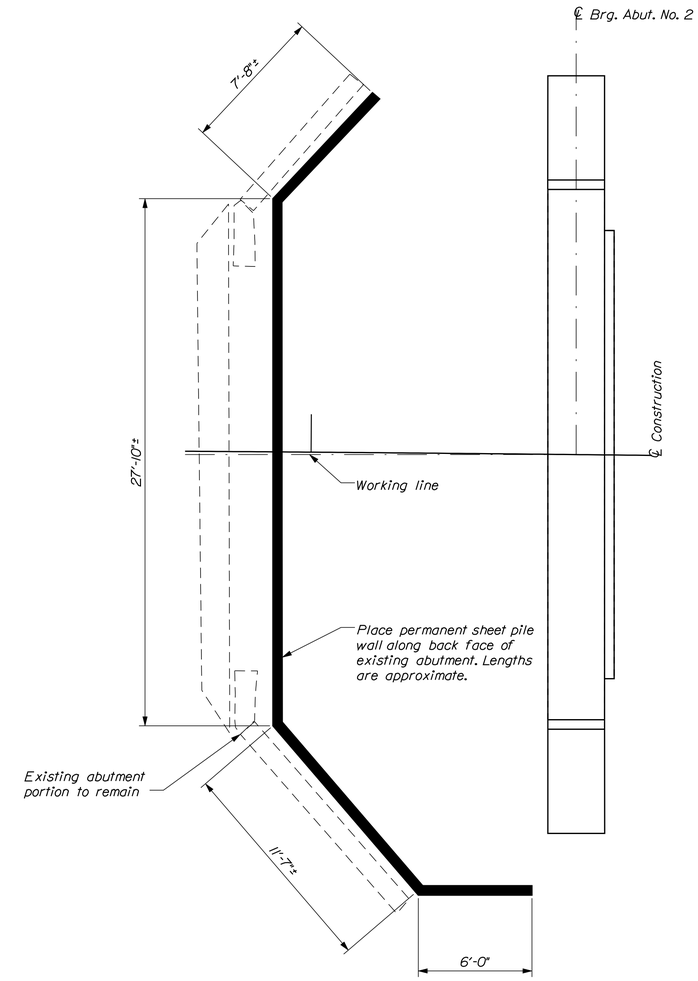

PERMANENT SHEET PILE WALL PLAN

Abutment No. 2 shown
Abutment No. 1 similar

STATE OF MAINE
DEPARTMENT OF TRANSPORTATION

AC-BR-1929(100)X

WIN 19291.00

BRIDGE NO. 5128

BRIDGE PLANS

		BY	DATE
PROJ. MANAGER	S. BOOGE		
DESIGN-DETAILED	R. MYERS	D. SULLIVAN	MAR. 2013
CHECKED-REVIEWED	B. REEVES	D.P.B.	MAR. 2013
DESIGN2-DETAILED2	K. MAGUIRE	T. WHITE	MAR. 2013
DESIGN3-DETAILED3	------	------	------
REVISIONS 1	------	------	------
REVISIONS 2	------	------	------
REVISIONS 3	------	------	------
REVISIONS 4	------	------	------
FIELD CHANGES	------	------	------

SIGNATURE

P.E. NUMBER

DATE

LOWER SANDY BRIDGE
SANDY STREAM
LEXINGTON TWP SOMERSET COUNTY

ABUTMENTS No. 1 & 2 DETAILS

SHEET NUMBER
20
OF 29

Filename: ...\MSTA\020_Abutment_Details.dgn Division: BRIDGE Username: David.Sullivan Date:3/18/2013

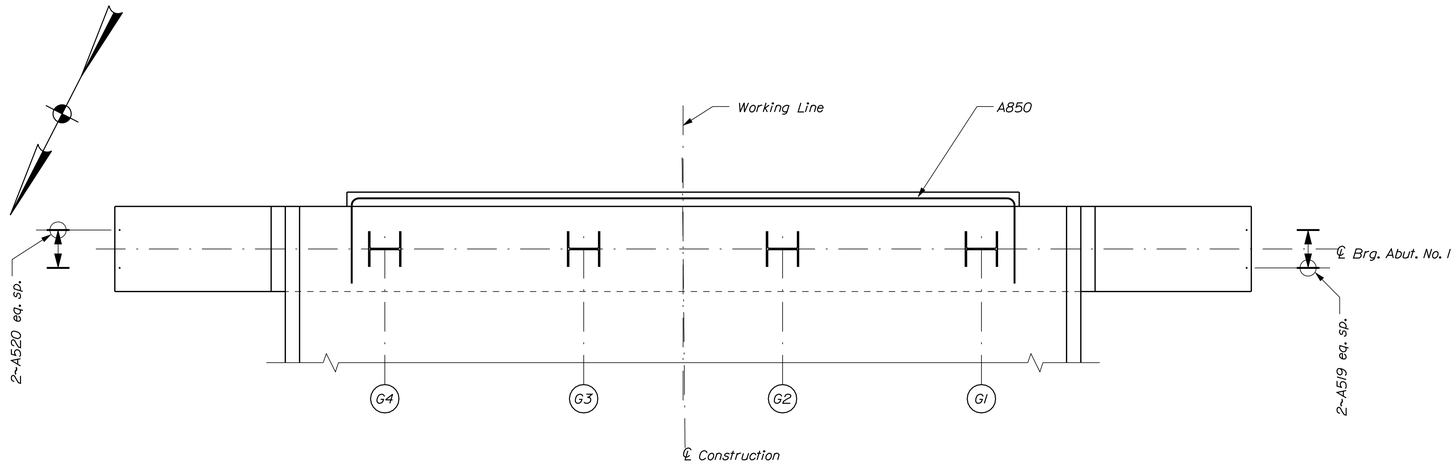

ABUTMENT No. 1 REINFORCING PLAN

Abutment No. 1 shown.
Abutment No. 2 similar, opposite hand
(Shown looking back Station)

Flow

NOTE:
Reinforcing steel shown and others omitted for clarity.

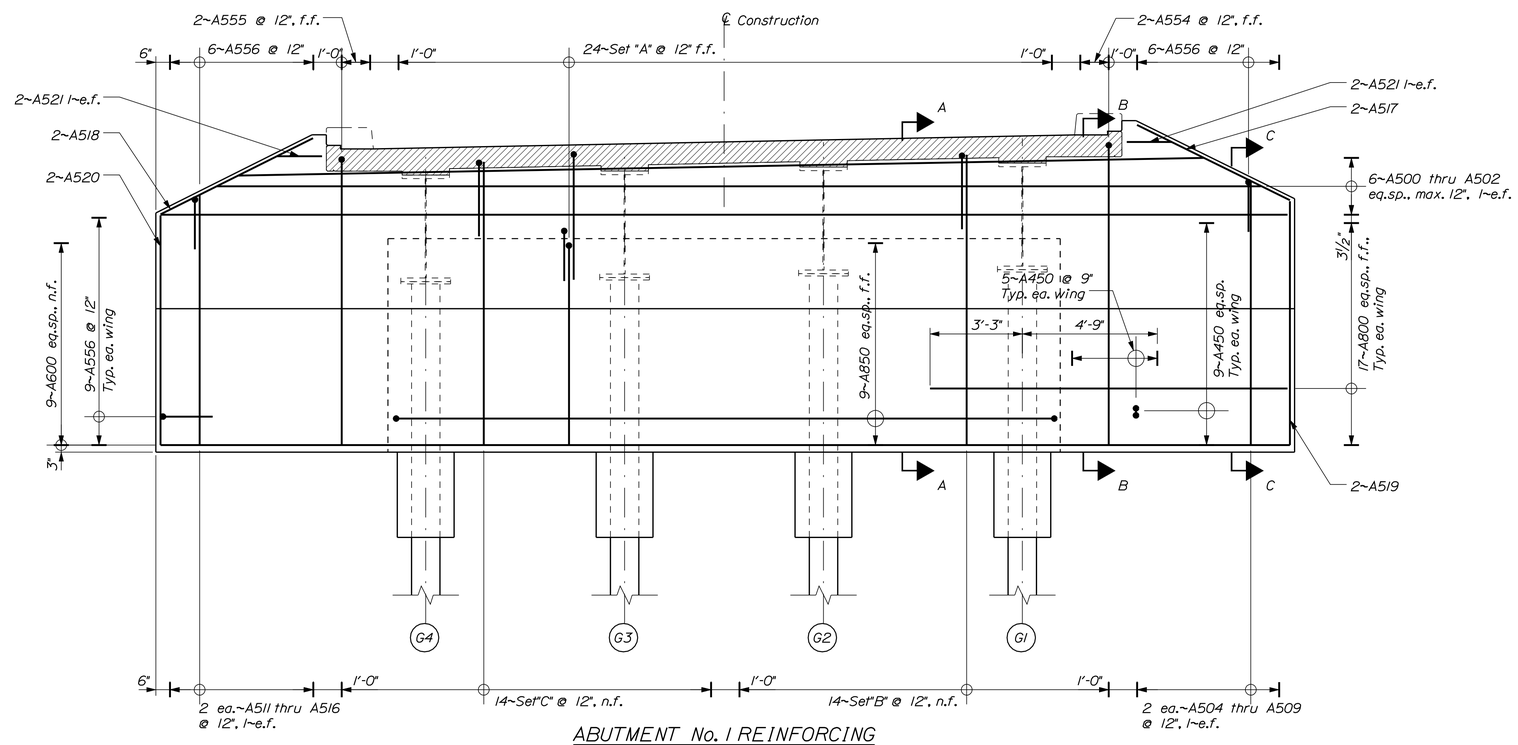

ABUTMENT No. 1 REINFORCING

SETS:
Set "A" = 1~A550, 1~A551, 1~A552
Set "B" = 1~A503, 1~A553
Set "C" = 1~A510, 1~A553

Abutment No. 2 similar, opposite hand
(Shown looking back Station)

NOTE:
Field cut reinforcing steel as needed to clear Girders.

STATE OF MAINE
DEPARTMENT OF TRANSPORTATION

AC-BR-1929(100)X

WIN 19291.00

BRIDGE NO. 5128

BRIDGE PLANS

		BY	DATE
PROJ. MANAGER	S. BRIDGE		
DESIGN-DETAILED	R. MYERS	D. SULLIVAN	
CHECKED-REVIEWED	B. REEVES	D.P.B.	MAR. 2013
DESIGN2-DETAILED2	K. MAGUIRE	T. WHITE	MAR. 2013
DESIGN3-DETAILED3	------	------	------
REVISIONS 1	------	------	------
REVISIONS 2	------	------	------
REVISIONS 3	------	------	------
REVISIONS 4	------	------	------
FIELD CHANGES	------	------	------

SIGNATURE

P.E. NUMBER

DATE

LOWER SANDY BRIDGE
SANDY STREAM
LEXINGTON TWP SOMERSET COUNTY

ABUTMENTS No. 1 & 2 REINFORCING

SHEET NUMBER

21

OF 29

Filename: ...\021_Abutment_Reinforcing.dgn Division: BRIDGE Username: David.Sullivan Date:3/18/2013

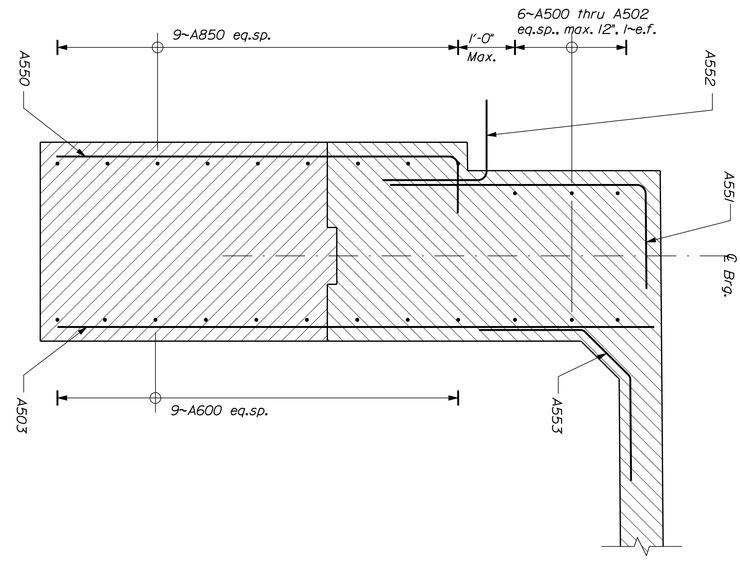

ABUTMENT SECTION A-A

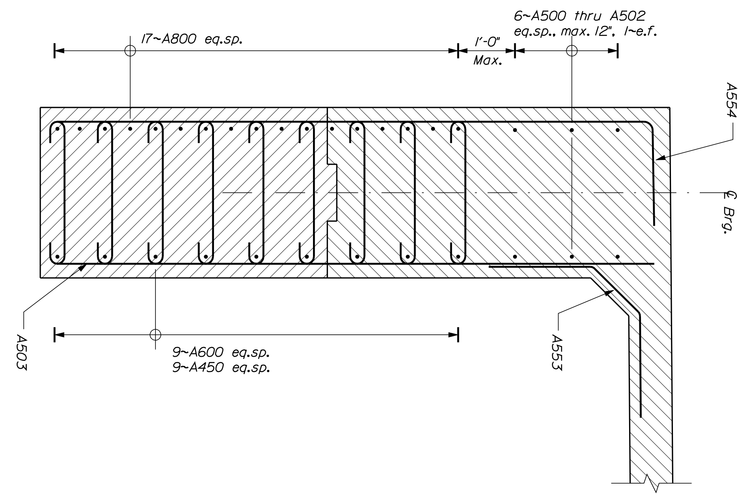

ABUTMENT SECTION B-B

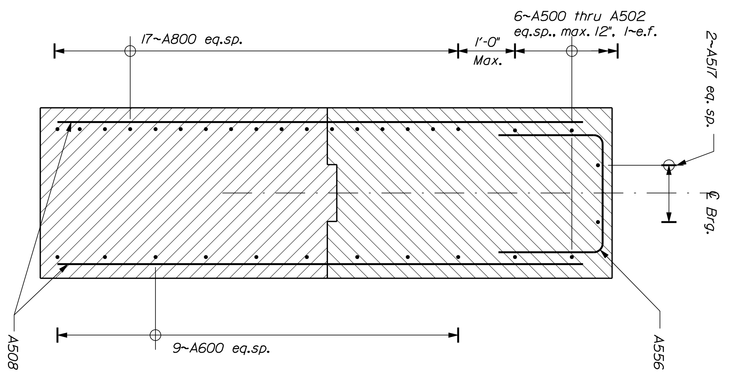

ABUTMENT SECTION C-C

LOWER SANDY BRIDGE SANDY STREAM LEXINGTON TWP SOMERSET COUNTY	PROJ. MANAGER	S. BODGE	BY	DATE
	DESIGN-DETAILED	R. MYERS	D. SULLIVAN	
	CHECKED-REVIEWED	B. REEVES	D.P.B.	MAR. 2013
	DESIGN2-DETAILED2	K. MAGUIRE	T. WHITE	MAR. 2013
	DESIGN3-DETAILED3	_____	_____	_____
	REVISIONS 1	_____		_____
	REVISIONS 2	_____		_____
	REVISIONS 3	_____		_____
	REVISIONS 4	_____		_____
	FIELD CHANGES	_____		_____

SIGNATURE

P.E. NUMBER

DATE

STATE OF MAINE
DEPARTMENT OF TRANSPORTATION

AC-BR-1929(100)X

BRIDGE NO. 5128 WIN 19291.00 BRIDGE PLANS

ABUTMENTS No. 1 & 2 SECTIONS

SHEET NUMBER 22 OF 29

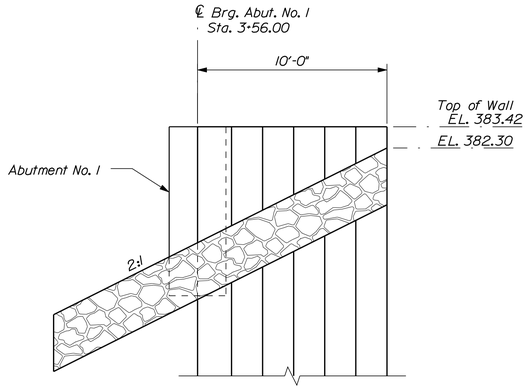

SOUTHWEST SHEET PILE WALL ELEVATION

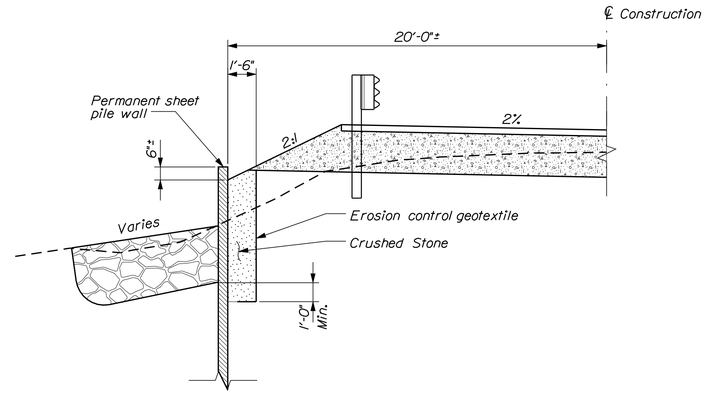

TYPICAL SOUTHWEST SHEET PILE WALL SECTION

ADDITIONAL SHEET PILE NOTES:

1. The Southwest permanent sheet pile wall shall be constructed with a 1.5 foot thick layer of crushed stone (MaineDOT 703.31) placed vertically along the inside face of the wall. The layer of crushed stone shall extend vertically from 1 foot below the riprap on the front face to the top of the wall. The crushed stone shall be separated from the surrounding backfill with erosion control geotextile (MaineDOT 722.03). A minimum of 1.5 feet of overlap is required between adjacent lengths of geotextile. Payment for crushed stone and erosion control geotextile shall be considered incidental to Pay Item 501.301 - Steel Sheet Piling.

2. High water elevation for hydrostatic design condition is 381.1 ft.

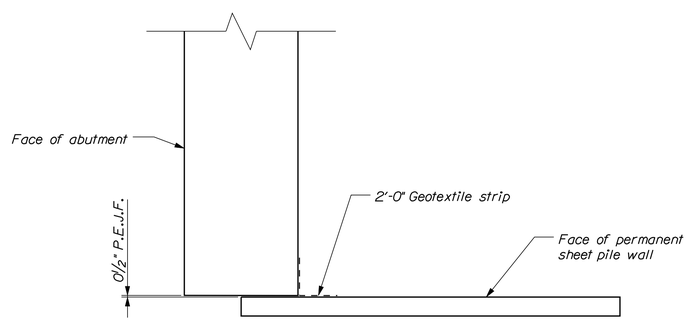

SOUTHWEST SHEET PILE WALL JOINT DETAIL

(Plan view)

STATE OF MAINE
DEPARTMENT OF TRANSPORTATION

AC-BR-1929(100)X

WIN 19291.00

BRIDGE NO. 5128

BRIDGE PLANS

PROJ. MANAGER	S. BODGE	BY	DATE
DESIGN-DETAILED	R. MYERS	D. SULLIVAN	
CHECKED-REVIEWED	B. REEVES	D.P.B.	MAR. 2013
DESIGN2-DETAILED2	K. MAGUIRE	T. WHITE	MAR. 2013
DESIGN3-DETAILED3	------	------	------
REVISIONS 1	------	------	------
REVISIONS 2	------	------	------
REVISIONS 3	------	------	------
REVISIONS 4	------	------	------
FIELD CHANGES	------	------	------

SIGNATURE

P.E. NUMBER

DATE

LOWER SANDY BRIDGE
SANDY STREAM
LEXINGTON TWP SOMERSET COUNTY

RETAINING WALL

SHEET NUMBER

23

OF 29

Filename: ...\00\BRIDGE\MSTA\023_Wall.dgn Division: BRIDGE Username: David.Sullivan Date:3/18/2013

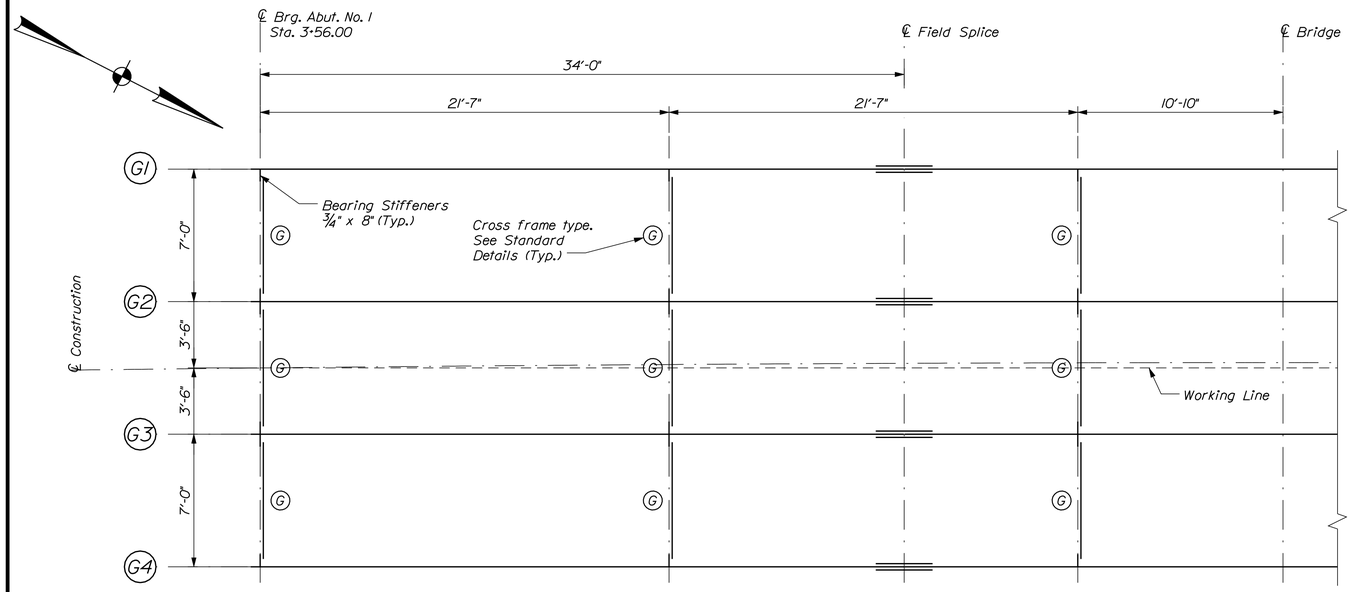

FRAMING PLAN

Framing symmetrical about ℄ of Bridge.

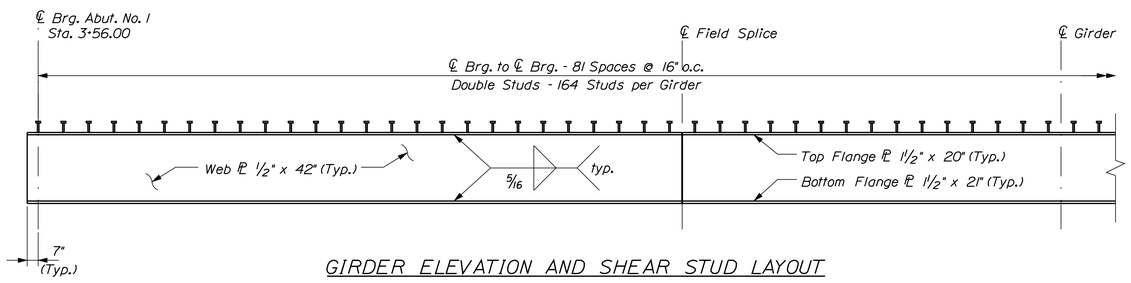

GIRDER ELEVATION AND SHEAR STUD LAYOUT

Shear studs symmetrical about ℄ of Girder
(Transverse plates not shown)

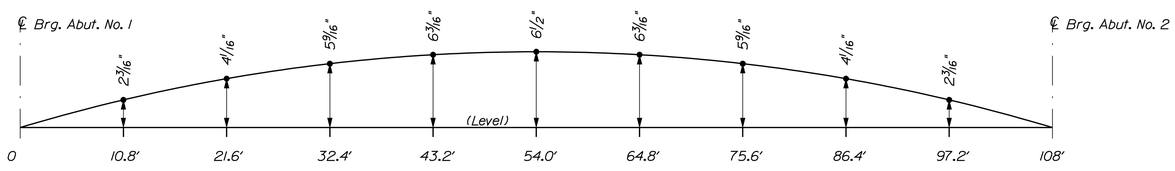

CAMBER DIAGRAM

STRUCTURAL STEEL NOTES

1. Camber ordinates, as shown, are computed to compensate for all dead load deflections and for the curvature of the finished grade profile.

2. No transverse butt weld splices are allowed in the flange plates or web plates.

3. Bearing stiffeners shall be plumb after erection and dead loading of the structure.

4. Crossframe or diaphragm connection plates may be either plumb or normal to the top flange.

5. Deck overhang brackets used to support the concrete slab on the overhang during construction shall have their bottom vertex supported at the bottom flange to web juncture.

6. Connection plates for crossframes shall be 8" wide minimum.

7. Bearing stiffeners shall be ¾" x 8".

8. Hot-dip Galvanize all structural steel in accordance with Special Provision Section 506.

9. All faying surfaces at the bolted splices, including those on the girder and splice plates, shall be roughened by means of hand wire brushing after galvanizing. Power brushing is not permitted.

10. The bridge structure is straight, i.e., no skew with respect to the working line. The roadway alignment is curved, resulting in a skew of the roadway alignment at the abutments with respect to the structure. The structure dimensions are in relation to the working line.

11. Prior to welding studs to top flange, remove zinc coating by spot grinding. Use caution so as not to damage the top flange.

STATE OF MAINE
DEPARTMENT OF TRANSPORTATION

AC-BR-1929(100)X

WIN 19291.00

BRIDGE NO. 5128

BRIDGE PLANS

PROJ. MANAGER	S. BOOGE	BY	DATE
DESIGN-DETAILED	R. MYERS	D. SULLIVAN	
CHECKED-REVIEWED	B. REEVES	D.P.B.	MAR. 2013
DESIGN2-DETAILED2	K. MAGUIRE	T. WHITE	MAR. 2013
DESIGN3-DETAILED3			
REVISIONS 1			
REVISIONS 2			
REVISIONS 3			
REVISIONS 4			
FIELD CHANGES			

SIGNATURE

P.E. NUMBER

DATE

LOWER SANDY BRIDGE
SANDY STREAM
LEXINGTON TWP SOMERSET COUNTY

FRAMING PLAN

SHEET NUMBER
24
OF 29

Filename: ...\MSTA\024_Framing_Plan.dgn Division: BRIDGE Username: David.Sullivan Date:3/18/2013

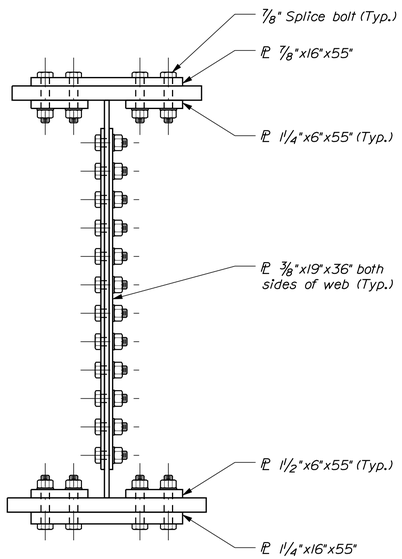

TYPICAL SPLICE SECTION

Typical section

All bolt holes shall be 15/16" ϕ

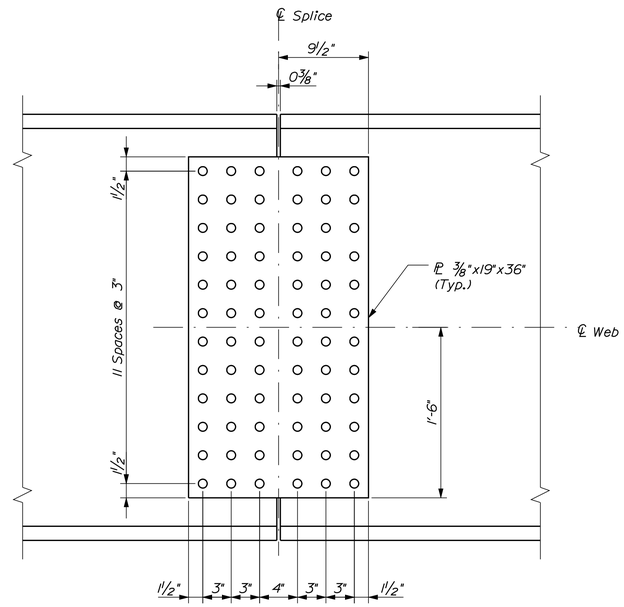

TYPICAL BOLTED FIELD SPLICE ELEVATION

Flange splice plates not shown for clarity

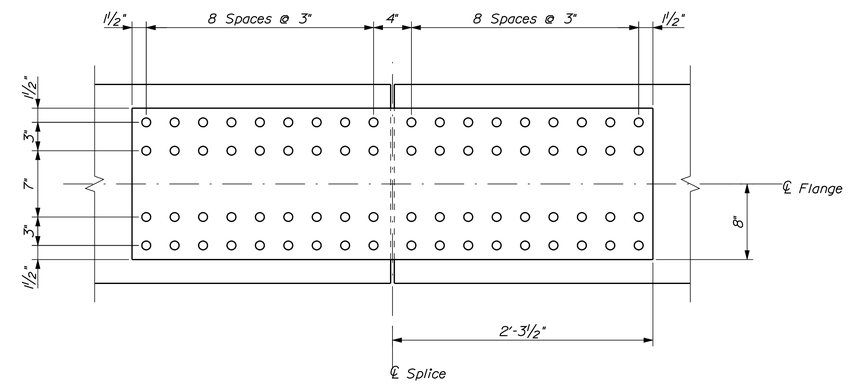

TYPICAL FLANGE SPLICE

Bottom flange shown, top flange similar

Bottom of Slab Elevation in Feet											
Girder	℄ Brg	0.1 Span	0.2 Span	0.3 Span	0.4 Span	0.5 Span	0.6 Span	0.7 Span	0.8 Span	0.9 Span	℄ Brg.
G1	384.88	385.04	385.17	385.27	385.32	385.34	385.32	385.27	385.17	385.04	384.88
G2	384.74	384.90	385.03	385.13	385.18	385.20	385.18	385.13	385.03	384.90	384.74
G3	384.60	384.76	384.89	384.99	385.04	385.06	385.04	384.99	384.89	384.76	384.60
G4	384.46	384.62	384.75	384.85	384.90	384.92	384.90	384.85	384.75	384.62	384.46

Dead Load Deflections (inches)											
	℄ Brg	0.1 Span	0.2 Span	0.3 Span	0.4 Span	0.5 Span	0.6 Span	0.7 Span	0.8 Span	0.9 Span	℄ Brg.
Steel	0.00	0.31	0.59	0.80	0.94	0.99	0.94	0.80	0.59	0.31	0.00
Fluid Concrete	0.00	0.86	1.64	2.24	2.62	2.75	2.62	2.24	1.64	0.86	0.00
Superimposed	0.00	0.08	0.15	0.21	0.25	0.26	0.25	0.21	0.15	0.08	0.00
Vertical Alignment Adust. G1	0.00	0.96	1.68	2.28	2.40	2.52	2.40	2.28	1.68	0.96	0.00
G2	0.00	0.96	1.68	2.28	2.40	2.52	2.40	2.28	1.68	0.96	0.00
G3	0.00	0.96	1.68	2.28	2.40	2.52	2.40	2.28	1.68	0.96	0.00
G4	0.00	0.96	1.68	2.28	2.40	2.52	2.40	2.28	1.68	0.96	0.00

STATE OF MAINE
DEPARTMENT OF TRANSPORTATION

AC-BR-1929(100)X

WIN 19291.00

BRIDGE NO. 5128

BRIDGE PLANS

PROJ. MANAGER	S. BODGE	BY	DATE	
DESIGN-DETAILED	R. MYERS	D. SULLIVAN	MAR. 2013	SIGNATURE
CHECKED-REVIEWED	B. REEVES	D.P.B.	MAR. 2013	
DESIGN2-DETAILED2	K. MAGUIRE	T. WHITE	MAR. 2013	P.E. NUMBER
DESIGN3-DETAILED3				
REVISIONS 1				DATE
REVISIONS 2				
REVISIONS 3				
REVISIONS 4				
FIELD CHANGES				

LOWER SANDY BRIDGE
SANDY STREAM
LEXINGTON TWP SOMERSET COUNTY

FRAMING DETAILS

SHEET NUMBER
25
OF 29

Filename: ...\MSTA\025_Framing_Details.dgn Division: BRIDGE Username: David.Sullivan Date:3/18/2013

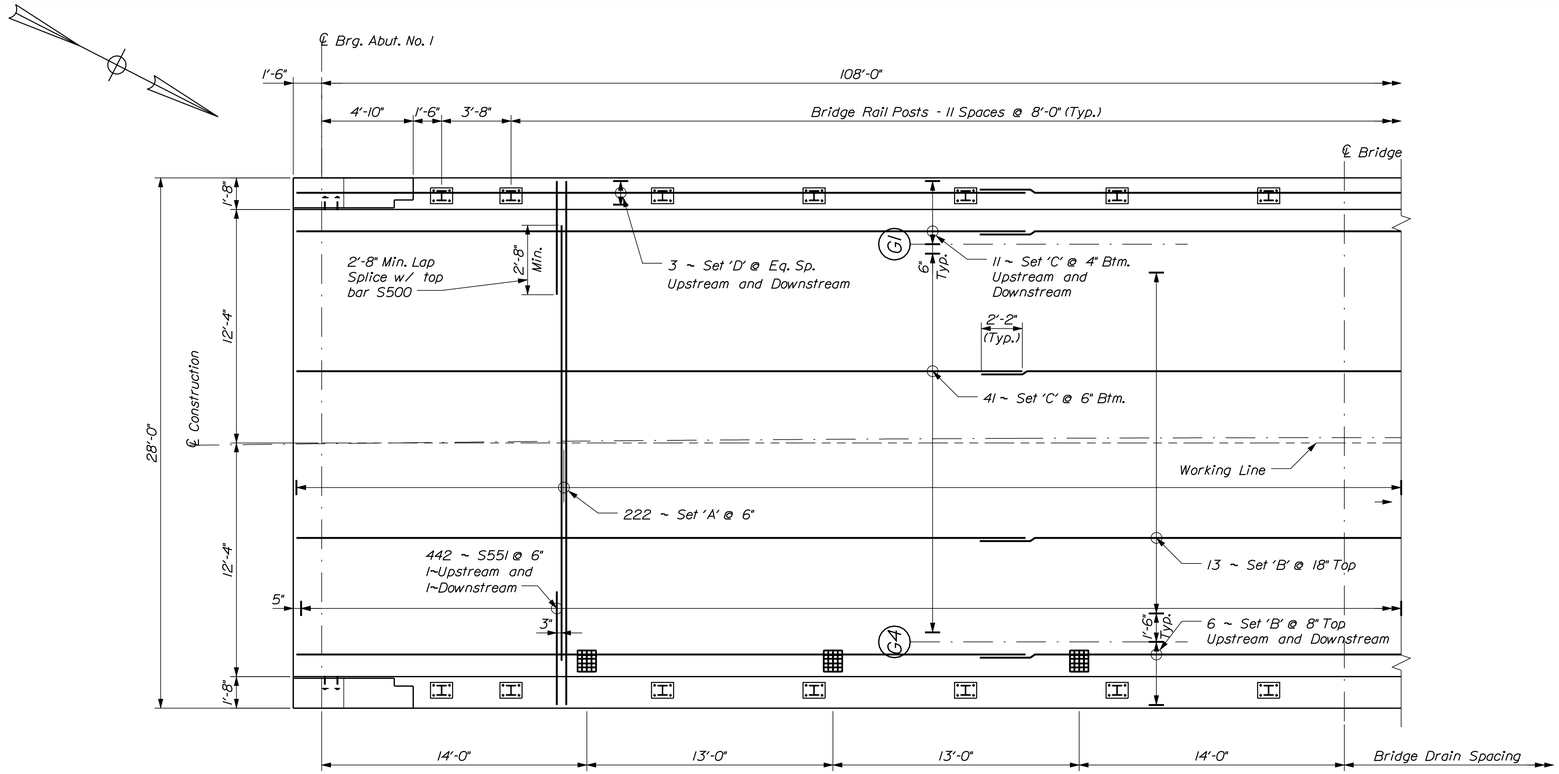

Set 'A' = 1 ~ S500 Top, 1 ~ S503 Btm., 2 ~ S550 (1~Upstream, 1~Downstream)
Set 'B' = 3 ~ S501
Set 'C' = 3 ~ S502
Set 'D' = 3 ~ C500

SUPERSTRUCTURE PLAN

Symmetrical about Bridge centerline

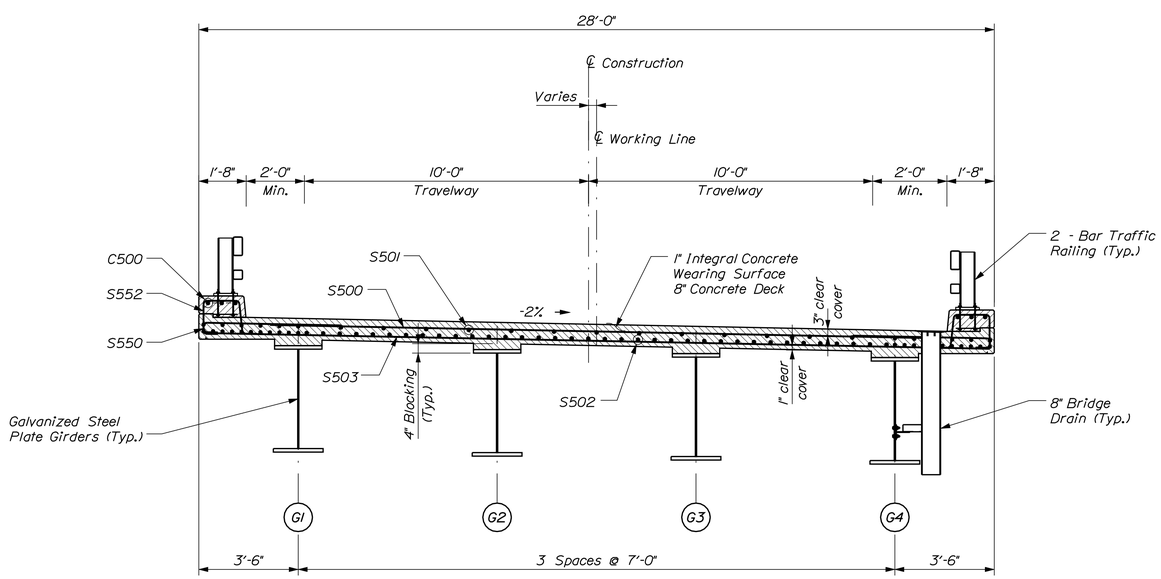

TYPICAL BRIDGE SECTION

SUPERSTRUCTURE NOTES

1. The theoretical blocking used for design of the structure is 4 inches at the centerline of bearing of the abutments. Refer to Standard Detail 502(02) for blocking details.

2. Reinforcing steel shall have a minimum concrete cover of 2 inches unless otherwise noted.

3. Adjust reinforcing steel to fit around the bridge drains in a manner approved by the Resident. Do not cut transverse reinforcing bars.

4. Form a one inch V-groove on the fascias at the horizontal joint between the curb and slab.

5. The superstructure slab concrete shall be placed continuously and shall be kept plastic until the entire placement has been made.

6. Precast concrete deck panels shall not be used in place of the full depth cast-in-place concrete deck slab.

7. Payment for reinforcing steel, fabricated, delivered, and placed in the cast-in-place portion of the structural concrete slab and curb will be considered incidental to the appropriate Standard Specifications Section 502 pay item.

8. Provide 3 additional stirrups in the curbs at each Transition Barrier location.

9. The Contractor shall install Transition Barrier vertical closed stirrups, as shown in Standard Details Section 526, prior to the placement of the curb concrete.

10. All superstructure reinforcing steel (as designated in the schedule), including that which is in the curbs and transition barriers, shall meet the requirements of ASTM A 1055/A 1055M - 10el, Zinc and Epoxy Dual - Coated Steel Reinforcing Bars.

11. Section X1, Guidelines for Job - Site Practices of ASTM A1055/A1055M - 10el, Zinc and Epoxy Dual - Coated Steel Reinforcing Bars shall apply and shall be enforced. The Resident will be provided with a copy of these guidelines.

12. Surface preparation and patching of field - cut, dual - coated reinforcing bar ends shall conform to X1.3.12 of ASTM A1055/A1055M - 10el, Zinc and Epoxy Dual-Coated Steel Reinforcing Bars.

STATE OF MAINE
DEPARTMENT OF TRANSPORTATION

AC-BR-1929(100)X

WIN 19291.00

BRIDGE NO. 5128

BRIDGE PLANS

		BY	DATE
PROJ. MANAGER	S. BOOGE		
DESIGN-DETAILED	R. MYERS	D. SULLIVAN	MAR. 2013
CHECKED-REVIEWED	B. REEVES	D.P.B.	MAR. 2013
DESIGN2-DETAILED2	K. MAGUIRE	T. WHITE	MAR. 2013
DESIGN3-DETAILED3	------	------	------
REVISIONS 1	------	------	------
REVISIONS 2	------	------	------
REVISIONS 3	------	------	------
REVISIONS 4	------	------	------
FIELD CHANGES	------	------	------

SIGNATURE

P.E. NUMBER

DATE

LOWER SANDY BRIDGE
SANDY STREAM
LEXINGTON TWP SOMERSET COUNTY

SUPERSTRUCTURE PLAN

SHEET NUMBER

26

OF 29

Filename: ...\MSTA\026_Superstructure.dgn Division: BRIDGE Username: David.Sullivan Date:3/18/2013

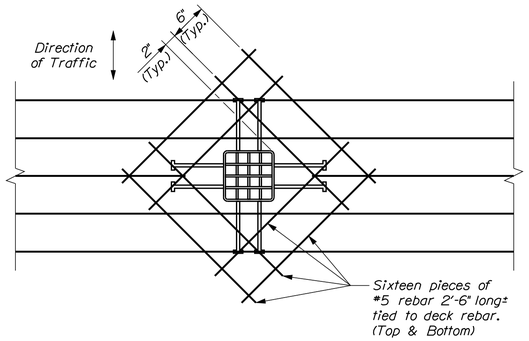

REINFORCING STEEL PLAN

Reinforcement around bridge drain

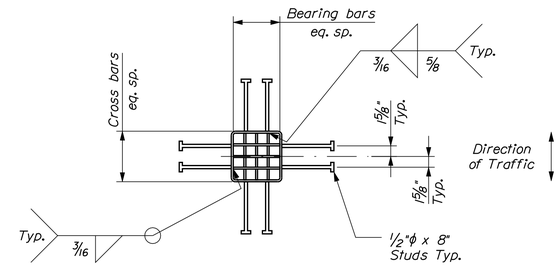

Bridge Drain Plan

NOTES:

1. All plates, if any, shall be 5/16" thick and shall conform to ASTM A 36.
2. The downspout shall conform to ASTM A500.
3. Grating shall be a commercial heavy - duty grating with 1 1/2"x5/16" bearing bars and 3/8" ϕ cross bars.
4. Drains and L 3"x3"x5/16" shall be blast cleaned to the requirements of SSPC-SP6/NACE 3 and hot-dipped galvanized in accordance with ASTM A 123. Steel beam attachment: WT 6 x 13 and associated fasteners shall meet the same material specification and protective coating requirements as the structural steel.
5. Payment for bridge drains will be as specified under Subsection 502.19 of the Standard Specifications.
6. The additional reinforcing steel around each bridge drain will not be paid for directly. Payment will be considered incidental to related contract items.

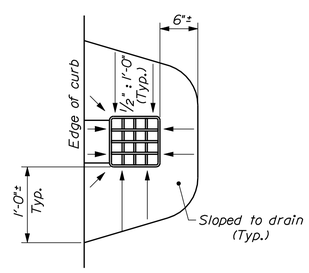

BRIDGE DRAIN DECK SURFACE PLAN

Pavement depression around bridge drains

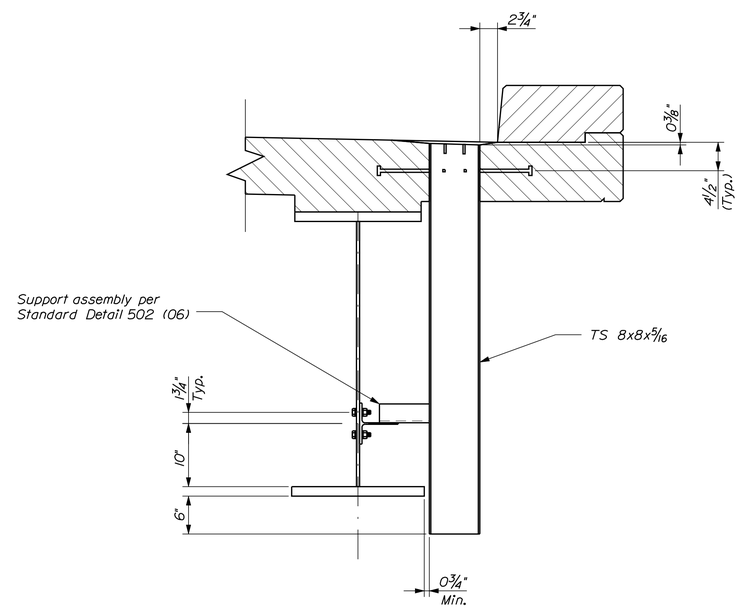

Bridge Drain Section

STATE OF MAINE
DEPARTMENT OF TRANSPORTATION

AC-BR-1929(100)X

WIN 19291.00

BRIDGE NO. 5128

BRIDGE PLANS

PROJ. MANAGER	S. BODGE	BY	DATE
DESIGN-DETAILED	R. MYERS	D. SULLIVAN	
CHECKED-REVIEWED	B. REEVES	D.P.B.	MAR. 2013
DESIGN2-DETAILED2	K. MAGUIRE	T. WHITE	MAR. 2013
DESIGN3-DETAILED3	------	------	------
REVISIONS 1	------	------	------
REVISIONS 2	------	------	------
REVISIONS 3	------	------	------
REVISIONS 4	------	------	------
FIELD CHANGES	------	------	------

SIGNATURE

P.E. NUMBER

DATE

LOWER SANDY BRIDGE
SANDY STREAM
LEXINGTON TWP SOMERSET COUNTY

BRIDGE DRAIN DETAILS

SHEET NUMBER

27

OF 29

Filename: ...\00\BRIDGE\MSTA\027_Drains.dgn Division: BRIDGE Username: David.Sullivan Date:3/18/2013

STRAIGHT BARS

MARK	QTY.	LENGTH	LOCATION	MARK	QTY.	LENGTH	LOCATION
ABUTMENT No. 1				X	X	X	X
A500	2	39'-8"	Horiz. Transverse n.f. & f.f.	X	X	X	X
A501	2	36'-9"	Horiz. Transverse n.f. & f.f.				
A502	2	34'-0"	Horiz. Transverse n.f. & f.f.				
A503	14	10'-2"	Vert. n.f. Downstream				
A504	2	11'-3"	Vert. e.f. Wing Downstream				
A505	2	10'-9"	Vert. e.f. Wing Downstream				
A506	2	10'-3"	Vert. e.f. Wing Downstream				
A507	2	9'-9"	Vert. e.f. Wing Downstream				
A508	2	9'-3"	Vert. e.f. Wing Downstream				
A509	2	8'-9"	Vert. e.f. Wing Downstream				
A510	14	9'-11"	Vert. n.f. Upstream				
A511	2	10'-9"	Vert. e.f. Wing Upstream				
A512	2	10'-3"	Vert. e.f. Wing Upstream				
A513	2	9'-9"	Vert. e.f. Wing Upstream				
A514	2	9'-3"	Vert. e.f. Wing Upstream				
A515	2	8'-9"	Vert. e.f. Wing Upstream				
A516	2	8'-3"	Vert. e.f. Wing Upstream				
A517	2	6'-0"	Horiz. Wing Downstream				
A518	2	6'-0"	Horiz. Wing Upstream				
A519	2	8'-7"	Vert. Wing Downstream End				
A520	2	8'-1"	Vert. Wing Upstream End				
A521	4	1'-7"	Horiz. Wing e.f. ea. Wing				
A600	9	39'-7½"	Horiz. Transverse n.f.				
A800	34	12'-7"	Horiz. Transverse f.f.				
ABUTMENT No. 2							
B500	2	39'-8"	Horiz. Transverse n.f. & f.f.				
B501	2	36'-9"	Horiz. Transverse n.f. & f.f.				
B502	2	34'-0"	Horiz. Transverse n.f. & f.f.				
B503	14	10'-2"	Vert. n.f. Downstream				
B504	2	11'-3"	Vert. e.f. Wing Downstream				
B505	2	10'-9"	Vert. e.f. Wing Downstream				
B506	2	10'-3"	Vert. e.f. Wing Downstream				
B507	2	9'-9"	Vert. e.f. Wing Downstream				
B508	2	9'-3"	Vert. e.f. Wing Downstream				
B509	2	8'-9"	Vert. e.f. Wing Downstream				
B510	14	9'-11"	Vert. n.f. Upstream				
B511	2	10'-9"	Vert. e.f. Wing Upstream				
B512	2	10'-3"	Vert. e.f. Wing Upstream				
B513	2	9'-9"	Vert. e.f. Wing Upstream				
B514	2	9'-3"	Vert. e.f. Wing Upstream				
B515	2	8'-9"	Vert. e.f. Wing Upstream				
B516	2	8'-3"	Vert. e.f. Wing Upstream				
B517	2	6'-0"	Horiz. Wing Downstream				
B518	2	6'-0"	Horiz. Wing Upstream				
B519	2	8'-7"	Vert. Wing Downstream End				
B520	2	8'-1"	Vert. Wing Upstream End				
B521	4	1'-7"	Horiz. Wing e.f. ea. Wing				
B600	9	39'-7½"	Horiz. Transverse n.f.				
B800	34	12'-7"	Horiz. Transverse f.f.				
SUPERSTRUCTURE							
S500	222	23'-0"	Main Top Transverse				
S501	75	38'-4"	Top Longitudinal				
S502	189	38'-4"	Btm. Longitudinal				
S503	222	27'-8"	Main Btm. Transverse				
C500	18	38'-4"	Longitudinal Curb				

BENT BARS

MARK	QTY.	LENGTH	TYPE	A	B	C	D	E	F	G	H	O	R	LOCATION
ABUTMENT No. 1														
A450	90	3'-8"	C	0'-6"	2'-8"	0'-6"								Horiz. Longitudinal Tie
A550	24	8'-1"	L	7'-1"	1'-0"									Vertical Longitudinal Stirrup
A551	24	5'-7"	L	4'-7"	1'-0"									Vertical Longitudinal Stirrup
A552	24	3'-0"	L	1'-6"	1'-6"									Approach Slab Connection
A553	28	4'-10"	W				1'-10"	1'-2"			1'-3½"			Vert. Abut. Deck Slab Connection
A554	2	11'-6"	L	10'-6"	1'-0"									Vertical Downstream
A555	2	11'-0"	L	10'-0"	1'-0"									Vertical Upstream
A556	30	6'-1"	S		1'-10"	2'-5"	1'-10"							Vert. Wing Wall Top Stirrup
A850	9	29'-4"	S	3'-0"	23'-4"	3'-0"								Horiz. Approach Slab Shelf
ABUTMENT No. 2														
B450	90	3'-8"	C	0'-6"	2'-8"	0'-6"								Horiz. Longitudinal Tie
B550	24	8'-1"	L	7'-1"	1'-0"									Vertical Longitudinal Stirrup
B551	24	5'-7"	L	4'-7"	1'-0"									Vertical Longitudinal Stirrup
B552	24	3'-0"	L	1'-6"	1'-6"									Approach Slab Connection
B553	28	4'-10"	W				1'-10"	1'-2"			1'-3½"			Vert. Abut. Deck Slab Connection
B554	2	11'-6"	L	10'-6"	1'-0"									Vertical Downstream
B555	2	11'-0"	L	10'-0"	1'-0"									Vertical Upstream
B556	30	6'-1"	S		1'-10"	2'-5"	1'-10"							Vert. Wing Wall Top Stirrup
B850	9	29'-4"	S	3'-0"	23'-4"	3'-0"								Horiz. Approach Slab Shelf
SUPERSTRUCTURE														
S550	444	5'-9"	C	0'-7"	5'-2"									Transverse Overhang
S551	442	6'-9"	C	0'-7"	6'-2"									Transverse Overhang
S552	320	4'-7"	SC	0'-6"	1'-2"	1'-3"				0'-6"				Curb (See Standard Details)

TYPE - BENDING DIAGRAMS

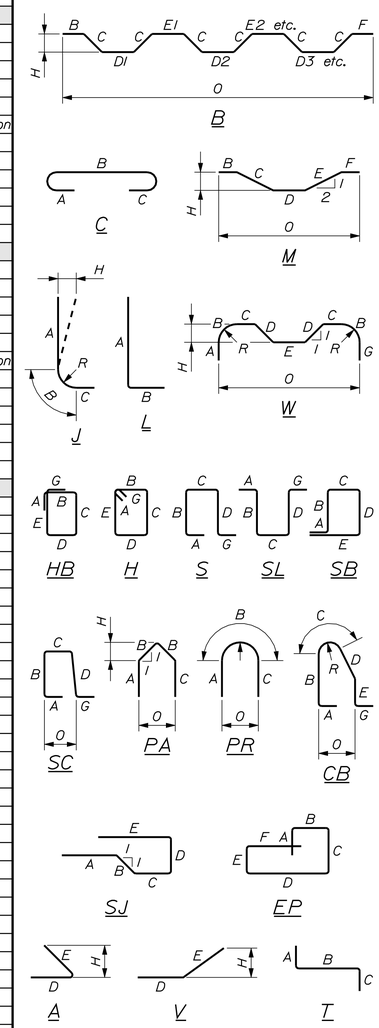

All dimensions are out-to-out of bar.

Bending details and hooks shall conform to the recommendations of the current revision of ACI Standard 315 and ACI Standard 318.

Reinforcing Bar: ASTM A 615/A 615M, Grade 60

GENERAL NOTES

1. The first two digits following the letter(s) of the mark indicate the size of the bar:

   Mark "A502" = bar size #5
   Mark "P805" = bar size #8
   Mark "S650" = bar size #6

2. Each crank bar, Type B, may be replaced by two (2) straight bars (one top and one bottom) of the same bar size as the crank bar. Payment in either case will be based on crank bars as scheduled on the plans.

STATE OF MAINE
DEPARTMENT OF TRANSPORTATION

AC-BR-1929(100)X

WIN 19291.00

BRIDGE PLANS

BRIDGE NO. 5128

PROJ. MANAGER	S. BODGE	BY	DATE
DESIGN-DETAILED	R. MYERS	D. SULLIVAN	MAR. 2013
CHECKED-REVIEWED	B. REEVES	D.P.B.	MAR. 2013
DESIGN2-DETAILED2	K. MAGUIRE	T. WHITE	------
DESIGN3-DETAILED3	------	------	------
REVISIONS 1	------	------	------
REVISIONS 2	------	------	------
REVISIONS 3	------	------	------
REVISIONS 4	------	------	------
FIELD CHANGES	------	------	------

SIGNATURE

P.E. NUMBER

DATE

LOWER SANDY BRIDGE
SANDY STREAM
LEXINGTON TWP SOMERSET COUNTY

REINFORCING STEEL SCHEDULE

SHEET NUMBER

28

OF 29

Filename: ...\00\BRIDGE\MSTA\028_Rebar.dgn Division: BRIDGE Username: David.Sullivan Date:3/18/2013

CHERYL A. LUPIEN
GARRY E. DUPILL
ITEM NO. (5)
TEMP. ROAD RIGHTS = 0.22± AC. (1)
TOTAL AREA = 27± AC. (PER MAINE REVENUE SERVICE)

JAMES W. LYONS
NOREEN LYONS
ITEM NO. (6)
TEMP. ROAD RIGHTS = 0.14± AC. (2)
TOTAL AREA = 22.6± AC. (PER MAINE REVENUE SERVICE)

CHERYL A. LUPIEN
GARRY E. DUPILL
ITEM NO. (1)
TEMP. ROAD RIGHTS = 0.09± AC. (1)
TOTAL AREA = 27± AC. (PER MAINE REVENUE SERVICE)

JAMES W. LYONS
NOREEN LYONS
ITEM NO. (3)
TEMP. ROAD RIGHTS = 0.08± AC. (1)
TEMP. CONST. RIGHTS = 925± S.F. (1)
TOTAL AREA = 22.6± AC. (PER MAINE REVENUE SERVICE)

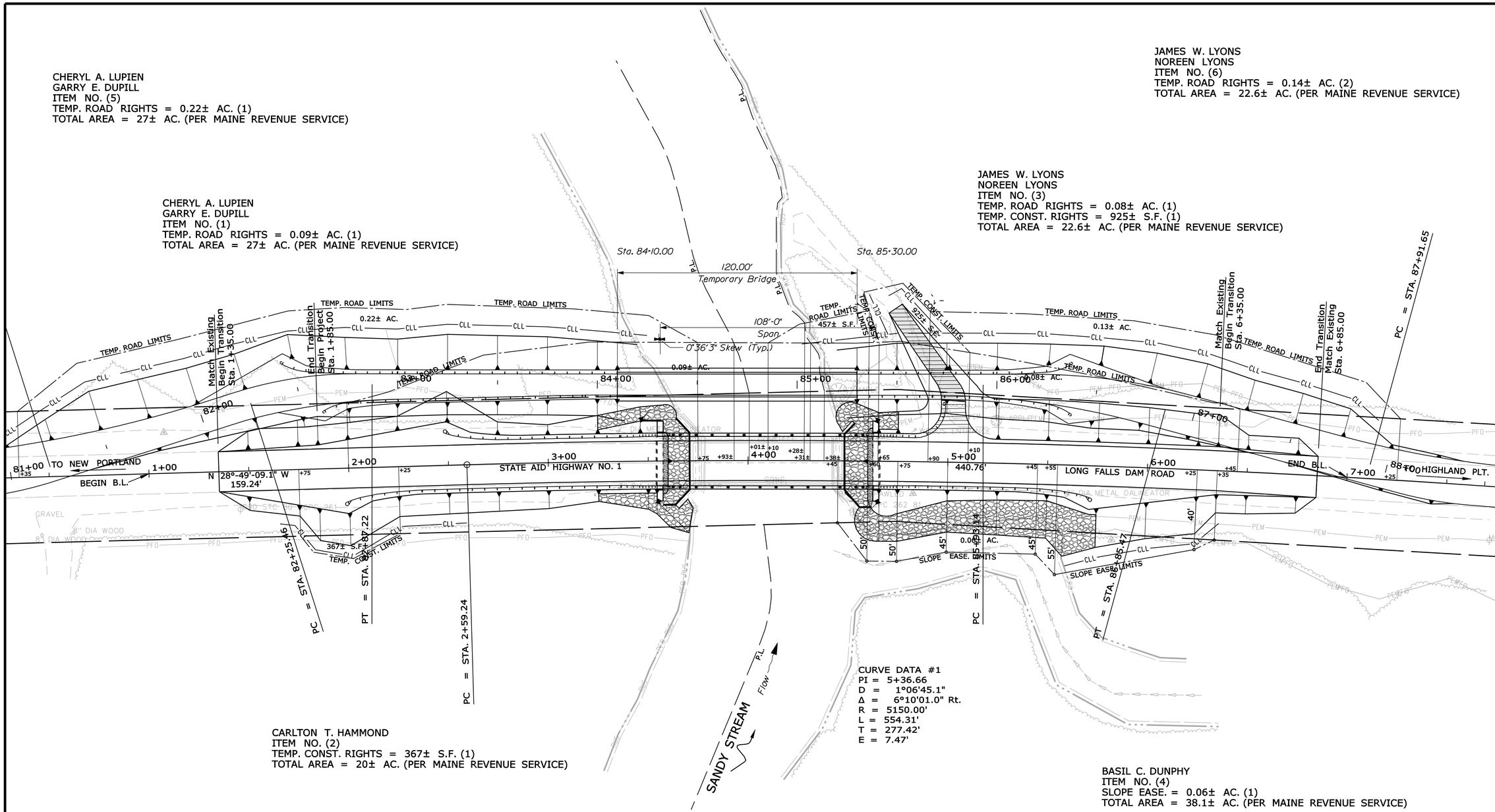

CURVE DATA #1
PI = 5+36.66
D = 1°06'45.1"
Δ = 6°10'01.0" Rt.
R = 5150.00'
L = 554.31'
T = 277.42'
E = 7.47'

CARLTON T. HAMMOND
ITEM NO. (2)
TEMP. CONST. RIGHTS = 367± S.F. (1)
TOTAL AREA = 20± AC. (PER MAINE REVENUE SERVICE)

BASIL C. DUNPHY
ITEM NO. (4)
SLOPE EASE. = 0.06± AC. (1)
TOTAL AREA = 38.1± AC. (PER MAINE REVENUE SERVICE)

EXISTING RIGHT OF WAY REFERENCE:

SOMERSET COUNTY
VOL. 1 PAGE 276
1830, 4 RODS WIDE

THIS PLAN WAS PREPARED IN CONNECTION WITH THE DEPARTMENT'S ACQUISITION OF REAL PROPERTY FOR TRANSPORTATION PURPOSES. IT CANNOT BE USED TO ESTABLISH LEGAL BOUNDARIES BETWEEN ABUTTING PROPERTY OWNERS.

SYMBOLS
- IP or IPF (IRON PIPE or PIN FOUND)
- ST. (SEPTIC TANK)
- (ROW MONUMENT)
- BM (TRAVERSE POINT)
- (WELL)
- GRADING LIMIT LINE
- CONSTRUCTION LIMIT LINE
- PROPERTY LINE
- PL
- LIMITS OF "ROW" RIGHT PORTION (L.O.W.P.)
- NEW RIGHT OF WAY
- NEW ROW WITHIN EXIST. ROW
- CONTROL OF ACCESS
- WATER LINE
- GAS LINE
- ELECTRIC LINE
- TELEPHONE LINE
- SEWER LINE

ITEM	TECH	CHECKED
BASE MAP		
EXIST. R/W	PNS	
PROP. LINES	PNS	
AREAS		

STATE OF MAINE
DEPARTMENT OF TRANSPORTATION
16 STATE HOUSE STATION - AUGUSTA, ME 04333-0016
LEXINGTON TWP.
RIGHT OF WAY MAP

BRIDGE NO. 5128 — LOWER SANDY STREAM BRIDGE OVER SANDY STREAM — WIN 19291.00

REVISIONS

NO.	DATE	DESCRIPTION	BY

PLAN FILED IN PLAN BOOK PAGE COUNTY RECORD

NO.	GRANTOR	INSTRUMENT	DATE	BOOK	PAGE
4	BASIL C. DUNPHY	EASEMENT	12/12/12	4608	223
1	GARRY E. DUPILL & CHERYL A. LUPIEN		12/12/12		
2	CARLTONT. HAMMOND		1/4/13		
3	JAMES W. & NOREEN LYONS		12/12/12		
5	GARRY E. DUPILL & CHERYL A. LUPIEN		3/11/13		
6	JAMES W. & NOREEN LYONS		3/5/13		

DAVID BERNHARDT
COMMISSIONER
KENNETH L. SWEENEY
CHIEF ENGINEER
DATE

STATE AID HIGHWAY NO. 1
LONG FALLS DAM ROAD
LEXINGTON TOWNSHIP SOMERSET COUNTY
FEDERAL AID PROJECT NO. BR-1929(100)X

SEPTEMBER 2012 | RIGHT-OF-WAY MAP | D.O.T. FILE NO 13-375
SCALE 1" = 25' | SHEET 1 OF 1

SHEET NUMBER
29
OF 29

Filename: ...\00\ROW\MSTA\001_RWPLAN1.dgn Division: BRIDGE Username: David.Sullivan Date:3/18/2013