STATE OF MAINE
DEPARTMENT OF TRANSPORTATION

SPECIFICATIONS

Design: AASHTO LRFD Bridge Design Specifications, 2012
with 2013 Interim Revisions.

DESIGN LOADING

Live Load ..... HL - 93 Modified

TRAFFIC DATA

Current (2012) AADT	15,700
Future (2032) AADT	18,840
DHV - % of AADT	9
Design Hour Volume	1696
Heavy Trucks (% of AADT)	3
Heavy Trucks (% of DHV)	1
Directional Distribution (% of DHV)	64
18 kip Equivalent P 2.0	197
18 kip Equivalent P 2.5	188

HYDROLOGIC DATA

Drainage Area	223 sq mi
Discharge (Q1.1)	1,985 cfs
Design Discharge (Q50)	8,110 cfs
Check Discharge (Q100)	9,114 cfs
Discharge (Q500)	11,493 cfs
Headwater Elevation (Q50)	174.0 ft
Headwater Elevation (Q100)	174.8 ft
Headwater Elevation (Q500)	177.8 ft

MATERIALS

Concrete (Unless noted otherwise)	Class "A"
Concrete (Precast)	Class "P"
Concrete (Wearing Surface, Curbs, Sidewalks & Barrier Railings)	Class "LP"
Reinforcing Steel	Epoxy Coated ASTM A615 and ASTM A775 (with Corrosion Inhibitor Additive)(Unless Noted)
Structural Steel:	
All Material (except as noted)	ASTM A709/A709M, Grade 50
High Strength Bolts	ASTM A325, Type 1
Prestressing Strand	AASHTO M203 (ASTM A416), Grade 270, Low Relaxation

BASIC DESIGN STRESSES

Concrete Class A	f 'c = 4,350 psi
Concrete Class P	f 'c = 5,000 psi
Concrete Class P (Prestressed Deck Panels)	f ' c = 5,000 psi f ' ci = 4,000 psi
Class LP	f ' c = 5,075 psi
Reinforcing Steel	f y = 60,000 psi
Structural Steel:	
ASTM A 709/A 709M, Grade 50	F y = 50,000 psi
ASTM A 709/A 709M, Grade 36	F y = 36,000 psi
ASTM A 325	F μ = 120,000 psi
ASTM A1554, Grade 105	F μ = 105,000 psi
Prestressing Strand	F μ = 270,000 psi

UTILITIES & RAILROAD

Central Maine Power Company
Comcast
Public Service of New Hampshire
New Hampshire North Coast Railroad
Fairpoint Communications
Berwick Water Department
Unitil
Somersworth Water Department

MAINTENANCE OF TRAFFIC

Maintain two-way traffic in 11'-0" wide lanes (two lanes, one each direction).

BERWICK
YORK COUNTY
SOMERSWORTH, NH
STRAFFORD COUNTY

BERWICK BRIDGE
OVER
SALMON FALLS RIVER
ROUTE 9 OVER SALMON FALLS RIVER
PROJECT NO. BR-1927(400)
MAINEDOT BRIDGE NO. 2068

NH PROJECT NO. 12228
NHDOT BRIDGE NO. 101/114
NH PROJECT NO. 12228A
A000(460)/X-A002(540)

INDEX OF SHEETS

Title Sheet	1
Quantities and Notes	2
General Plan	3
Profile	4
Boring Location Plan	5
Boring Logs	6
Typical Section and Details	7
Cross Sections (2 Sheets)	8-9
Grading Plan	10
Railroad Plan and Profile (2 Sheets)	11-12
Construction Phasing	13
Traffic Control Plans (2 Sheets)	14-15
HSM Case Details Phase I	16
HSM Case Details Phase II	17
HSM Case Details Phase III	18
Temp. Flasher Foundation & Cable Trough	19
Barrier Mounted RR Flasher	20
Portable Concrete Barrier (Braced) (2 Sheets)	21-22
Portable Concrete Barrier (Anchored)	23
Temporary Railroad Crossing Barrier	24
Local Detour Plan	25
Bridge Closure Detour Plan	26
Signing and Pavement Marking Plan	27
Traffic Signal Plan	28
Bridge Plan and Elevation	29
Abutment No. 1 Removal	30
Abutment No. 1 Modifications	31
Abutment No. 2 Removal	32
Abutment No. 2 Modifications	33
Bearing Details	34
Superstructure Section and Details	35
Framing Plan and Girder Elevation	36
Girder Details (2 Sheets)	37-38
Deck Reinforcement (2 Sheets)	39-40
Bridge Rail Details (5 Sheets)	41-45
Approach Rail Details (3 Sheets)	46-48
Expansion Joint Details	49
Moment Slab Details (2 Sheets)	50-51
Bridge Drain Details	52
Lighting Details	53
Reinforcing Steel Schedule	54
NH Right of Way Map	55
Right of Way Map	56

PROJECT LOCATION:	Berwick Bridge (#2068) on Route 9, over Salmon Falls River. Located at the New Hampshire State Line. Latitude: 43°15'56"N Longitude:70°51'52"W
PROGRAM AREA:	Bridge
OUTLINE OF WORK:	Bridge Superstructure Replacement and Substructure Rehabilitation with Approach Work including Railroad Crossing and Signals.

PROJECT NO. BR-1927(400) WIN 19274.00 AND WIN 19274.10

STATE OF MAINE
DEPARTMENT OF TRANSPORTATION
APPROVED
COMMISSIONER: DATE 11-18-13
CHIEF ENGINEER: DATE 11-18-13

STATE OF MAINE
Steven M. Hodgdon
Number 11206
LICENSED PROFESSIONAL ENGINEER

PROJECT INFORMATION		
PROGRAM	BRIDGE	SIGNATURE
PROJECT MANAGER	N. BENOIT	11206
DESIGNER	S. HODGDON	P.E. NUMBER
CONSULTANT	VHB	11/13/2013
PROJECT RESIDENT		DATE
CONTRACTOR		
PROJECT COMPLETION DATE		

BERWICK, ME - SOMERSWORTH, NH
BERWICK BRIDGE
TITLE SHEET

SHEET NUMBER
1
OF 56

Filename:\cad\st\planset\001_cover.dgn Division: Structures Username: kwentworth Date:$date$

WIN 19274.00

ESTIMATED QUANTITIES			
ITEM NO.	DESCRIPTION	TOTAL	UNIT
202.10	Removing Existing Superstructure - Property of Contractor (189 CY)	1	LS
202.12	Removing Existing Structural Concrete	40	CY
202.1910	Remove Abandoned Waterline	1	LS
202.202	Removing Pavement Surface	500	SY
203.20	Common Excavation	250	CY
203.2312	Health and Safety Plan (HASP)	0.81	LS
203.2333	Disposal/Treatment of Special Excavation	667	T
203.25	Granular Borrow	6	CY
304.10	Aggregate Subbase Course - Gravel	290	CY
403.208	Hot Mix Asphalt, 12.5 mm Nominal Maximum Size, Surface	95	T
403.209	Hot Mix Asphalt, 9.5 mm Nominal Maximum Size (sidewalks, drives, islands & incidentals)	5	T
403.213	Hot Mix Asphalt, 12.5 mm Nominal Maximum Size, Base	75	T
409.15	Bituminous Tack Coat, Applied	43	GAL
411.09	Untreated Aggregate Surface Course	50	CY
461.131	Temporary Pavement	20	T
502.21	Structural Concrete, Abutments and Retaining Walls	35	CY
502.26	Structural Concrete Roadway and Sidewalk Slab on Steel Bridges (232 CY)	1	LS
502.3415	Structural Concrete, Rapid Setting with Coarse Aggregate	295	CF
502.44	Structural Concrete Wearing Surface on Bridges	50	CY
503.14	Epoxy-Coated Reinforcing Steel, Fabricated and Delivered	17300	LB
503.15	Epoxy-Coated Reinforcing Steel, Placing	17300	LB
504.702	Structural Steel Fabricated and Delivered, Welded (194222 lbs)	1	LS
504.71	Structural Steel Erection (194222 lbs)	1	LS
505.08	Shear Connectors (1554 EA)	1	LS
506.9103	Galvanizing	1	LS
506.9104	Thermal Spray Coating (Shop Applied)	1	LS
507.0815	Steel Approach Rail, 3 Bar Tubular (12 LF)	1	LS
507.0816	Steel Approach Rail, 4 Bar Tubular (49 LF)	1	LS
507.0841	Steel Pipe Hand Railing, Two Bar (202 LF)	1	LS
507.0851	Steel Hand Railing Repair	11	LF
514.06	Curing Box for Concrete Cylinders	1	EA
515.20	Protective Coating for Concrete Surface	1000	SY
520.223	Armorless Bridge Joint (59 LF)	1	LS
523.52	Bearing Installation	14	EA
523.5401	Laminated Elastomeric Bearings, Fixed	7	EA
523.5402	Laminated Elastomeric Bearings, Expansion	7	EA
526.301	Temporary Concrete Barrier, Type I (90 LF)	1	LS
526.302	Portable Concrete Barrier, Anchored	160	LF
526.302	Portable Concrete Barrier, Braced	120	LF
526.326	Concrete Barrier Architectural Treatment	700	SF
526.341	Permanent Concrete Barrier, Special (32 CY)	1	LS
534.7103	Precast Structural Concrete Moment Slab	1	LS
604.18	Adjusting Manhole or Catch Basin to Grade	1	EA
608.08	Reinforced Concrete Sidewalk	90	SY
608.26	Curb Ramp Detectable Warning Field	25	SF
609.11	Vertical Curb Type I	105	LF
609.12	Vertical Curb Type I - Circular	34	LF
609.38	Reset Curb Type I	44	LF
615.07	Loam	10	CY
618.1301	Seeding Method Number 1, Plan Quantity	1	U
619.1201	Mulch, Plan Quantity	1	U
620.58	Erosion Control Geotextile	427	SY
626.11	Precast Concrete Junction Box	2	EA
626.21	Metallic Conduit	200	LF
626.22	Non-metallic Conduit	40	LF
627.18	12 in Solid White Pavement Marking Line	75	LF
627.407	Reflectorized Plastic, White or Yellow Pavement Marking	400	SF
627.733	4" White or Yellow Painted Pavement Marking Line	915	LF
627.76	Temporary Pavement Marking Line, White or Yellow	1	LS
629.05	Hand Labor, Straight Time	40	HR
631.12	All Purpose Excavator (including operator)	40	HR
631.172	Truck-large (including operator)	40	HR
634.711	Ornamental Lighting, Fabricated and Delivered	6	EA
634.712	Ornamental Lighting, Install Only	6	EA
638.01	Embedded Work In Structure - Lighting Conduit & Wiring System	1	LS
639.18	Field Office, Type A	1	EA
643.71	Traffic Signal Modification: ME Route 9 at Sullivan Street	1	LS
643.72	Temporary Traffic Signal: ME Route 9 at Sullivan Street	1	LS
643.86	Traffic Signal Loop Detector	1	EA
645.106	Demount Regulatory, Warning, Confirmation and Route Marker Assembly Sign	22	EA
645.116	Reinstall Regulatory, Warning, Confirmation and Route Marker Assembly Sign	13	EA
645.271	Regulatory, Warning, Confirmation and Route Assembly Sign, Type I	28	SF
652.312	Type III Barricades	9	EA
652.32	Battery Operated Light	15	EA
652.33	Drum	25	EA
652.34	Cone	25	EA
652.35	Construction Signs	665	SF
652.361	Maintenance of Traffic Control Devices (400 CD)	1	LS
652.38	Flaggers	480	HR
652.41	Portable-Changeable Message Sign	8	EA
656.75	Temporary Soil Erosion and Water Pollution Control	1	LS
659.10	Mobilization	0.81	LS

WIN 19274.10

ESTIMATED QUANTITIES			
ITEM NO.	DESCRIPTION	TOTAL	UNIT
203.2312	Health and Safety Plan (HASP)	0.19	LS
203.2333	Disposal/Treatment of Special Excavation	333	T
648.5205	Reconstruct Grade Crossings	1	LS
648.5206	Highway Grade Crossing Signal System	1	LS
648.5207	Highway Grade Temporary Crossing	1	LS
659.10	Mobilization	0.19	LS

GENERAL CONSTRUCTION NOTES

1. During construction, the road will be closed to traffic for limited time periods specified in the Special Provisions.

2. For easements, construction limits and right of way lines, refer to Right of Way Map.

3. Significant clearing is not required for this project. All tree or shrub removal shall be approved by the Resident prior to the work. Payment for clearing will be considered incidental to Contract items.

4. All utility facilities shall be adjusted by the respective utilities unless otherwise noted.

5. Protective Coating for Concrete Surfaces shall be applied to the following areas:

All exposed surfaces of concrete curbs , sidewalks, and bump-outs
Fascias down to the drip notch.
Concrete wearing surfaces.
Concrete barrier railing.
Top of abutment backwalls and to one foot below the top of backwalls on the back side.

6. Project information referred to below may be accessed at the following MaineDOT web address: http://www.maine.gov/mdot/comprehensive-list-projects/project-information.php

The existing bridge plans may be accessed at the MaineDOT web address. The plans are reproductions of the original drawings as prepared for the construction of the bridge. It is very unlikely that the plans will show any construction field changes or any alterations which may have been made to the bridge during its life span.

The hydrologic report of the bridge site may be accessed at the MaineDOT web address. The hydrologic report is based on MaineDOT's interpretation of the information obtained for the subject site. No assurance is given that the information or the conclusion of the report will be representative of actual conditions at the time of construction.

The project geotechnical report titled: Geotechnical Design Report for the Rehabilitation of Berwick Bridge over Salmon Falls River, Berwick, Maine and Somersworth, New Hampshire, Soils Report No. 2012-20, September 10, 2012 may be accessed at the MaineDOT web address.

7. Geotechnical information furnished or referred to in this plan set is for the use of the Bidders and the Contractor. No assurance is given that the information or interpretations will be representative of actual subsurface conditions at the construction site. MaineDOT will not be responsible for the Bidders' or Contractor's interpretations of, or conclusions drawn from, the geotechnical information. The boring logs contained in the plan set present factual and interpretive subsurface information collected at discrete locations. Data provided may not be representative of the subsurface conditions between the boring locations.

8. All costs for cofferdams, including pumping, maintenance, related temporary soil erosion and water pollution controls and removal, will not be paid for directly, but will be considered incidental to related Contract items.

9. The Contractor shall submit a Bridge Demolition Plan to the Resident at least 10 business days prior to the start of demolition work. The plan shall outline the methods and equipment to be used to remove and dispose of all materials included in the existing bridge. No work related to the removal of the bridge shall be undertaken by the Contractor until MaineDOT has reviewed the Bridge Demolition Plan for appropriateness and completeness. Payment for all work necessary for developing, submitting and finalizing the Demolition Plan will be considered incidental to the bridge removal pay item.

10. The existing bridge superstructure shall be removed by and become the property of the Contractor. The steel portions of the existing bridge are coated with a lead-based paint system. The Contractor is responsible for the containment, proper management and disposal of all lead-contaminated hazardous waste generated by the process of demolishing the bridge. The Contractor is responsible for implementing appropriate OSHA mandated personal protection standards related to this process. Once the existing bridge is removed, the Contractor is solely responsible for the care, custody and control of the components of the existing bridge and any hazardous waste generated as a result of the storage, recycling or disposal of the bridge components, including lead-coated steel. The Contractor shall recycle or reuse the steel in accordance with the Maine Department of Environmental Protection's "Maine Hazardous Waste Management Regulations," Chapter 850. A copy of this regulation is available at MaineDOT's offices on Child Street in Augusta. Payment for all labor, materials, equipment and other costs required to remove and dispose of the existing bridge will be considered incidental to the bridge removal pay item.

11. The Contractor shall completely remove the existing superstructure including the deck slab, curbs, railings, and structural steel. Cost shall be included in Item 202.10, Removing Existing Superstructure - Property of Contractor.

12. The Contractor shall remove portions of the existing backwalls, existing masonry connected to abutment no. 1, existing concrete coating on abutment no. 1 backwall and bridge seat, and adjacent retaining walls as indicated in the plans. Cost shall be included in Item 202.12, Removing Existing Structural Concrete.

13. Unless otherwise noted, dimensions, angles, bearings, and elevations of the existing bridges shown on these plans have been obtained from plans of the existing structures and limited field investigations and may not accurately reflect actual field conditions. Accordingly, the Contractor will be responsible for making field measurements of all existing structure components impacted by the work to assure consistency with the proposed modifications. Any discrepancies in the dimensions, character or extent of existing features shall be brought to the attention of the Engineer before advancing the work. Shop drawings required for various items of the work shall indicate the actual field measurements and shall be so noted.

14. The Contractor shall take all necessary measures to ensure that debris or other materials does not fall into the waterway including erection, maintenance and removal of temporary structures or other such methods as approved by the Resident.

DRILLED AND ANCHORED BOLTS AND REINFORCING STEEL NOTES

1. For drilling and anchoring bolts size 7/8 -in. diameter or greater, the anchoring material shall be chosen from the MaineDOT pre qualified list and shall be submitted to the Resident for approval.

2. Mechanical connectors or splices for reinforcing steel will be considered incidental to the appropriate Section 502 pay item.

STATE OF MAINE
DEPARTMENT OF TRANSPORTATION

PROJECT NO. BR-1927(400)

BRIDGE NO. 2068

WIN 19274.00

BRIDGE PLANS

STATE OF MAINE
Steven M. Hodgdon
11206
PROFESSIONAL ENGINEER
LICENSED

	BY	DATE
PROJ. MANAGER	N. BENOIT	
DESIGN-DETAILED	JQM	KDW	12-2-13
CHECKED-REVIEWED	JAW	SMH	12-2-13
DESIGN2-DETAILED2	---	---	---
DESIGN3-DETAILED3	---	---	---
REVISIONS 1	---	---	---
REVISIONS 2	---	---	---
REVISIONS 3	---	---	---
REVISIONS 4	---	---	---
FIELD CHANGES	---	---	---

SIGNATURE
11206
P.E. NUMBER
12\2\2013
DATE

BERWICK BRIDGE
SALMON FALLS RIVER
BERWICK YORK COUNTY

QUANTITIES AND NOTES

SHEET NUMBER
2
OF 56

Filename: ...\st\planset\002_gen notes.dgn Division: Structures Username: kwentworth Date:$date$

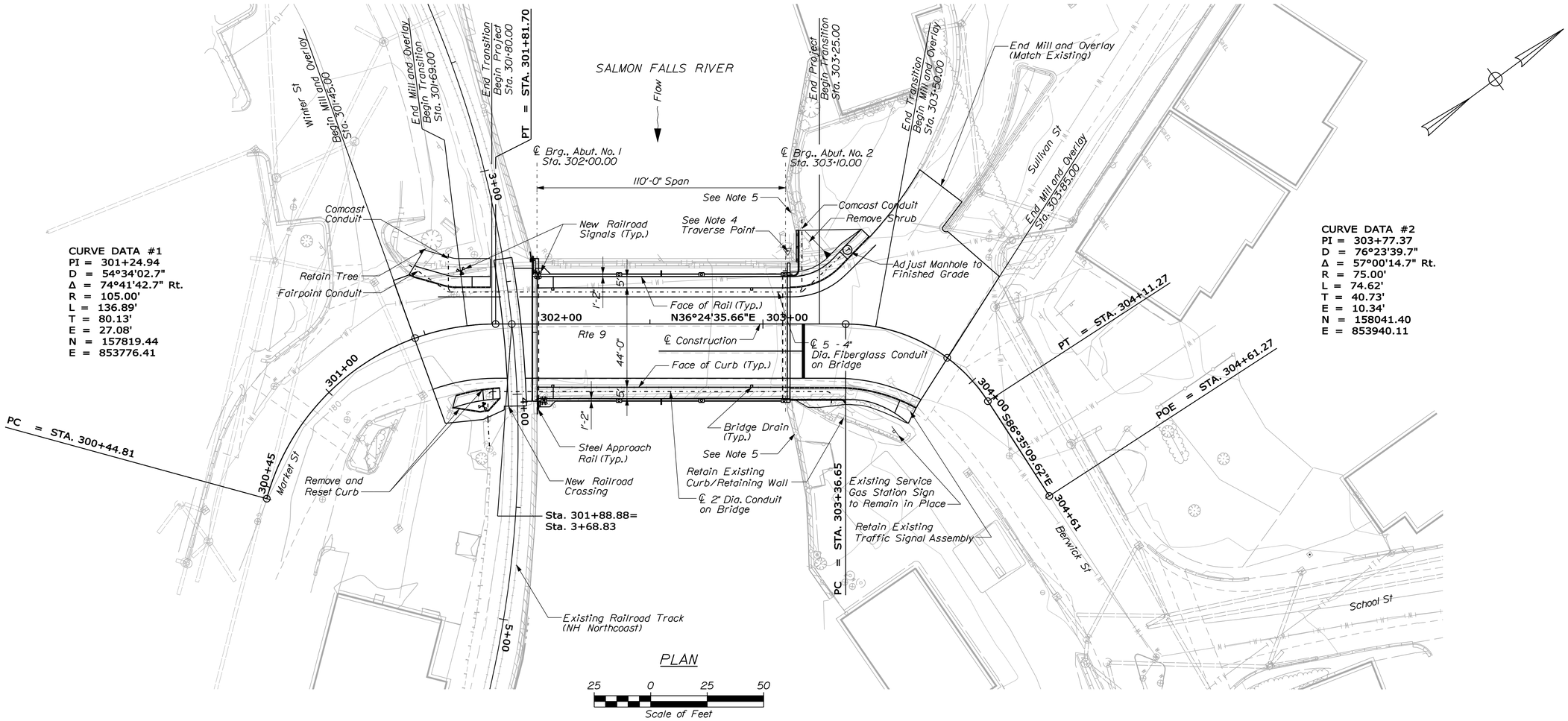

Item 609.11 - Vertical Curb Type I

Sta. 301+52.9, LT 25.2' to Sta. 301+62.1, LT 19.0'
Sta. 301+66.9, LT 17.2' to Sta. 301+79.7, LT 16.0'
Sta. 303+12.0, RT 28.0' to Sta. 303+33.2, RT 28.0'
Sta. 303+34.3, LT 25.1' to Sta. 303+43.6, LT 39.0'

Item 609.12 - Vertical Curb Type I - Circular

Sta. 301+50.8, LT 27.4' to Sta. 301+52.9, LT 25.2'
Sta. 301+62.1, LT 19.0' to Sta. 301+66.9, LT 17.2'
Sta. 303+12.0, LT 16.0' to Sta. 303+34.3, LT 25.1'
Sta. 303+33.2, RT 28.0' to Sta. 303+88.3, RT 25.7'

Item 609.38 - Reset Curb Type I

Sta. 301+53.0, RT 34.5' to Sta. 301+83.7, RT 33.1'
Sta. 301+57.2, RT 29.4' to Sta. 301+83.5, RT 28.1'

Remove Existing Vertical Curb Type I

Sta. 303+11.7, RT 27.6' to Sta. 303+88.3, RT 25.7'
Sta. 303+11.8, LT 25.5' to Sta. 303+43.6, LT 39.0'
Sta. 303+16.7, LT 30.9' to Sta. 303+40.7, LT 41.9'

NOTES

1. Plan information and coordinate system based on NAD83(96) ME 2000 west zone.
2. Vertical Datum based on NAVD88 without corrections.
3. Approximate location of bronze disk BNB-9-A with a bench mark elevation of 178.356 (NAVD88).
4. There is a 0.1' to 0.2' difference in elevations between this project and the currently scheduled project in the City of Somersworth. The Contractor shall use the benchmarks established for this project for all vertical control.
5. Within the Limits of Temporary Rights, Remove and Replace Fence. Payment shall be incidental to Related Contract Items.
6. Permanent railroad flasher conduit and junction boxes not shown.

STATE OF MAINE
DEPARTMENT OF TRANSPORTATION

PROJECT NO. BR-1927(400)

WIN 19274.00

BRIDGE NO. 2068

BRIDGE PLANS

STATE OF MAINE
Steven M. Hodgdon
11206
LICENSED
PROFESSIONAL ENGINEER

PROJ. MANAGER	N. BENOIT		
		BY	DATE
DESIGN-DETAILED	JAW	KDW	10-14-13
CHECKED-REVIEWED	CLC	SMH	10-14-13
DESIGN2-DETAILED2	---	---	---
DESIGN3-DETAILED3	---	---	---
REVISIONS 1	---	---	---
REVISIONS 2	---	---	---
REVISIONS 3	---	---	---
REVISIONS 4	---	---	---
FIELD CHANGES	---	---	---

Steven M. Hodgdon
SIGNATURE
11206
P.E. NUMBER
11\13\2013
DATE

BERWICK BRIDGE
SALMON FALLS RIVER
BERWICK YORK COUNTY

GENERAL PLAN

SHEET NUMBER
3
OF 56

Filename: ...\cad\st\planset\003_plan.dgn Division: Structures Username: kwentworth Date:$date$

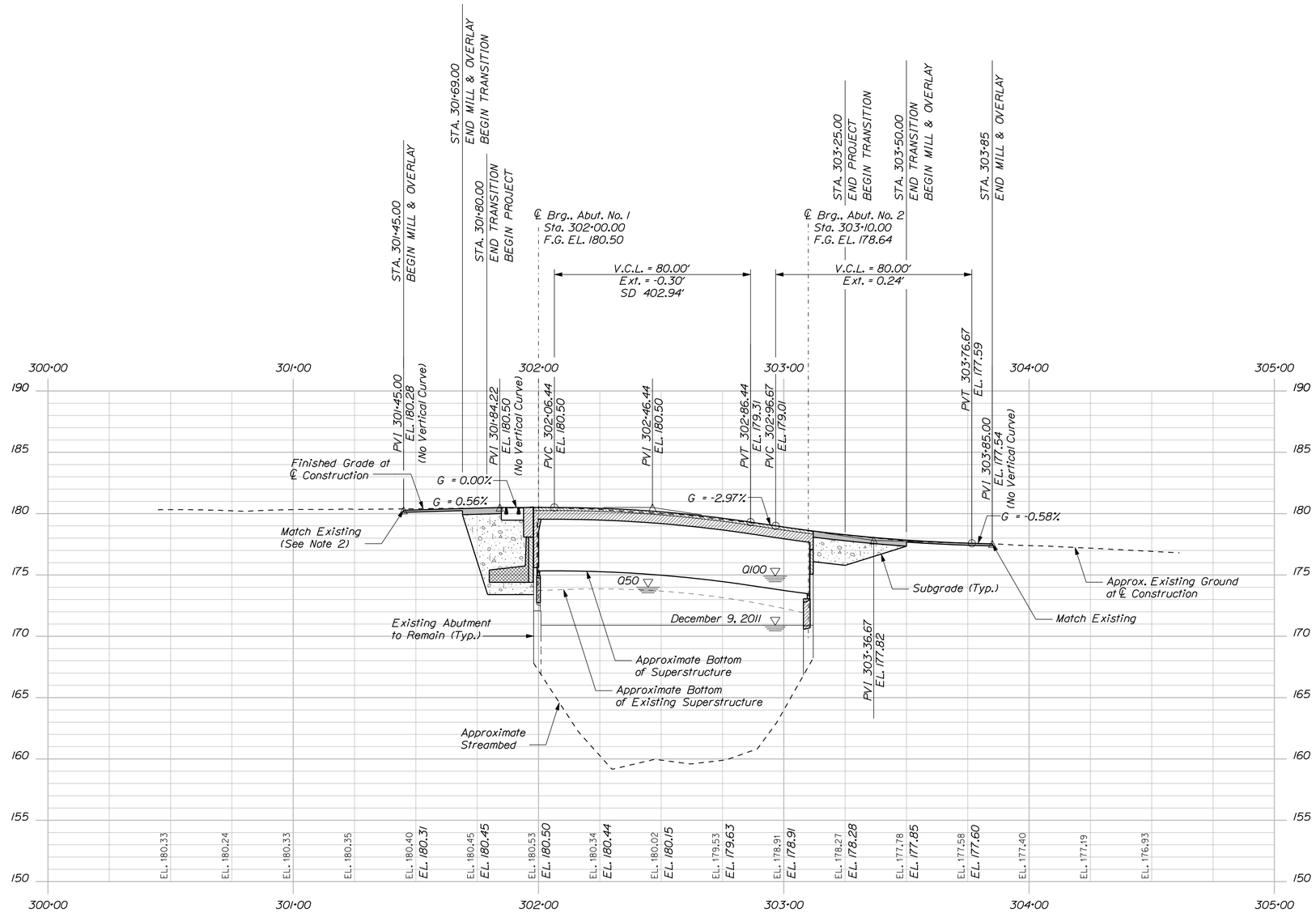

PROFILE

HORIZ 25 0 25 50

VERT 5 0 5 10

SCALE

NOTES

1. Flood elevations based on Flood Insurance Study, 1982. adjusted to NAVD 88.
2. Verify elevation at Sta. 301+45.00 matches Somersworth, NH Project No. 553604.

STATE OF MAINE
DEPARTMENT OF TRANSPORTATION

PROJECT NO. BR-1927(400)

BRIDGE NO. 2068 — WIN 19274.00 — BRIDGE PLANS

STATE OF MAINE — Steven M. Hodgdon — 11206 — LICENSED PROFESSIONAL ENGINEER

PROJ. MANAGER	N. BENOIT	BY	DATE
DESIGN-DETAILED	JAW	KDW	10-14-13
CHECKED-REVIEWED	CLC	SMH	10-14-13
DESIGN2-DETAILED2	---	---	---
DESIGN3-DETAILED3	---	---	---
REVISIONS 1	---	---	---
REVISIONS 2	---	---	---
REVISIONS 3	---	---	---
REVISIONS 4	---	---	---
FIELD CHANGES	---	---	---

SIGNATURE: Steven M. Hodgdon
P.E. NUMBER: 11206
DATE: 11\13\2013

BERWICK BRIDGE
SALMON FALLS RIVER
BERWICK — YORK COUNTY

PROFILE

SHEET NUMBER
4
OF 56

Filename: ...\cad\st\planset\004_profile.dgn Division: Structures Username: kwentworth Date:$date$

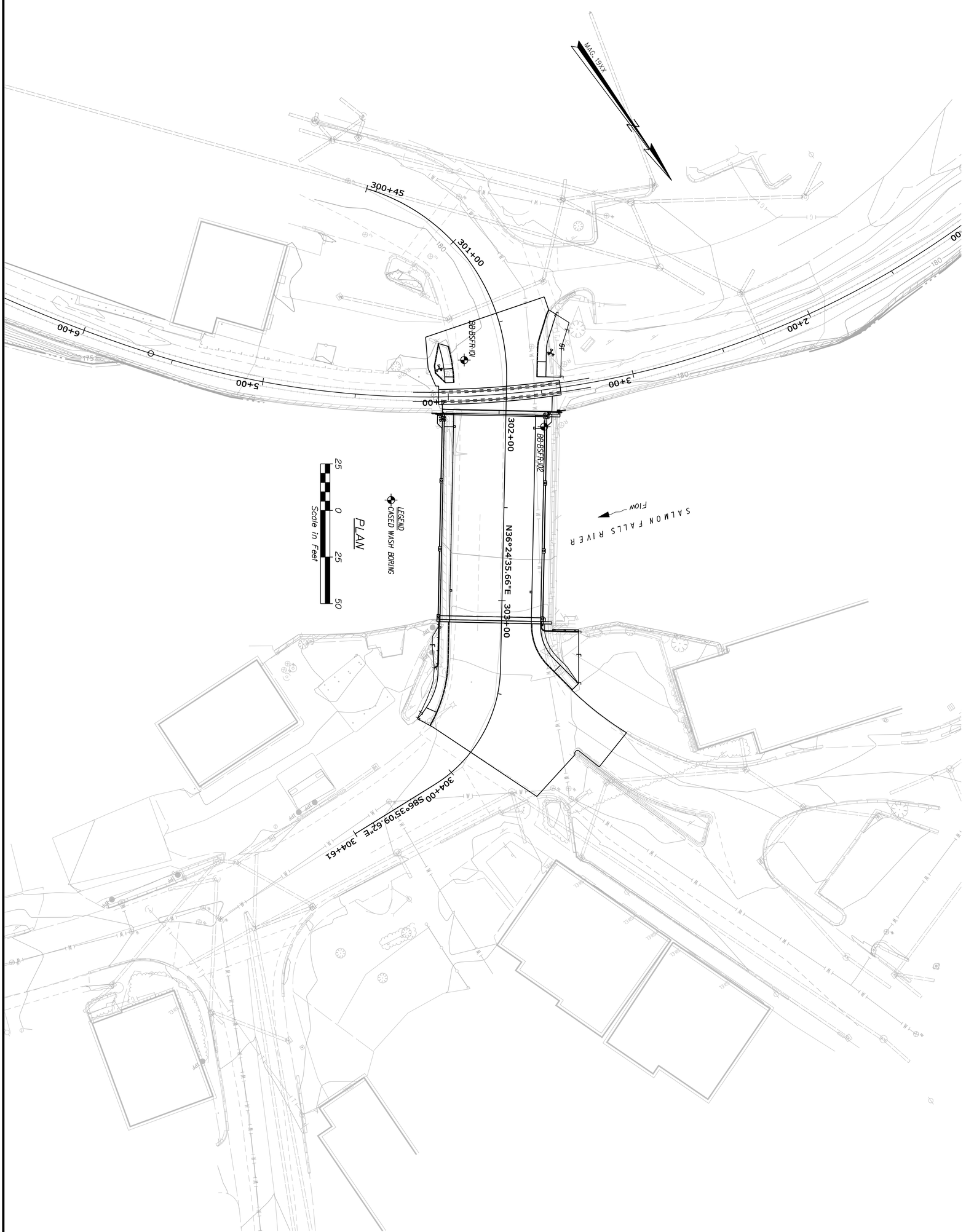

SHEET NUMBER 5 OF 56

BERWICK BRIDGE
SALMON FALLS RIVER
BERWICK YORK COUNTY

BORING LOCATION PLAN

PROJ. MANAGER	N. BENOIT	BY	DATE
DESIGN-DETAILED	JAW	KDW	10-14-13
CHECKED-REVIEWED	CLC	SMH	10-14-13
DESIGN2-DETAILED2	---	---	---
DESIGN3-DETAILED3	---	---	---
REVISIONS 1	---		---
REVISIONS 2	---		---
REVISIONS 3	---		---
REVISIONS 4	---		---
FIELD CHANGES	---		---

Steven M. Hodgdon
SIGNATURE
11206
P.E. NUMBER
11\13\2013
DATE

STATE OF MAINE
Steven M. Hodgdon
11206
LICENSED
PROFESSIONAL ENGINEER

STATE OF MAINE
DEPARTMENT OF TRANSPORTATION

PROJECT NO. BR-1927(400)

BRIDGE NO. 2068 WIN 19274.00 BRIDGE PLANS

Maine Department of Transportation

Soil/Rock Exploration Log

US CUSTOMARY UNITS

Project: Berwick Bridge #2068 carries Route 9 over Salmon Falls River
Location: Berwick, Maine

Boring No.: BB-BSFR-101
WIN: 19274.00

Driller:	MaineDOT	Elevation (ft.)	180.0	Auger ID/OD:	5" Dia. Solid Stem
Operator:	Giguere/Giles/Daggett	Datum:	NAVD88	Sampler:	Standard Split Spoon
Logged By:	B. Wilder	Rig Type:	CME 45C	Hammer Wt./Fall:	140#/30"
Date Start/Finish:	3/21/12-3/22/12	Drilling Method:	Cased Wash Boring	Core Barrel:	NQ-2"
Boring Location:	301+68.4, 22.3 ft Rt.	Casing ID/OD:	NW	Water Level*:	10.0 ft bgs.
Hammer Efficiency Factor: 0.84		Hammer Type:	Automatic ☒ Hydraulic ☐ Rope & Cathead ☐		

Definitions:
D = Split Spoon Sample
MD = Unsuccessful Split Spoon Sample attempt
U = Thin Wall Tube Sample
MU = Unsuccessful Thin Wall Tube Sample attempt
V = Insitu Vane Shear Test, PP = Pocket Penetrometer
MV = Unsuccessful Insitu Vane Shear Test attempt
R = Rock Core Sample
SSA = Solid Stem Auger
HSA = Hollow Stem Auger
RC = Roller Cone
WOH = weight of 140lb. hammer
WOR/C = weight of rods or casing
WO1P = Weight of one person
S_u = Insitu Field Vane Shear Strength (psf)
T_v = Pocket Torvane Shear Strength (psf)
q_p = Unconfined Compressive Strength (ksf)
N-uncorrected = Raw field SPT N-value
Hammer Efficiency Factor = Annual Calibration Value
N_{60} = SPT N-uncorrected corrected for hammer efficiency
N_{60} = (Hammer Efficiency Factor/60%)*N-uncorrected
$S_{u(lab)}$ = Lab Vane Shear Strength (psf)
WC = water content, percent
LL = Liquid Limit
PL = Plastic Limit
PI = Plasticity Index
G = Grain Size Analysis
C = Consolidation Test

Depth (ft.)	Sample No.	Pen./Rec. (in.)	Sample Depth (ft.)	Blows (/6 in. Shear Strength (psf) or RQD (%)	N-uncorrected	N_{60}	Casing Blows	Elevation (ft.)	Visual Description and Remarks	Laboratory Testing Results/ AASHTO and Unified Class
0							SSA	179.42	7" Pavement — 0.58	
	1D	24/17	1.00 - 3.00	8/9/11/9	20	28			Light brown, moist, medium dense, fine to coarse SAND, some silt, little gravel.	G#244134 A-2-4, SM WC=7.5%
								176.00	— 4.00	
5	2D	24/14	5.00 - 7.00	3/3/5/22	8	11			Brown, moist, medium dense, fine to coarse SAND, some silt, little gravel.	G#244135 A-2-4, SM WC=6.8%
							SPUN CASE	171.00	— 9.00	
10									Very dense Cobbles and gravel. Roller Coned ahead to 13.0 ft bgs.	
	3D	24/16	13.00 - 15.00	3/3/4/5	7	10		167.20	— 12.80	
15									Olive-brown, wet, loose, silty, fine to coarse SAND, little gravel.	G#244136 A-4, SM WC=21.7%
								163.00	— 17.00	
20	4D	24/18	19.00 - 21.00	12/18/40/38	58	81			Grey-brown, wet, very dense, fine to coarse SAND, some silt, some gravel.	G#244137 A-2-4, SM WC=12.5%
	R1	60/55	23.80 - 28.80	RQD = 55%			NQ-2	156.80	— 23.20	
25									Top of Bedrock at Elev. 156.8 ft. Spun casing into Bedrock to 23.8 ft bgs. R1:Bedrock: Dark grey, fine grained, SANDSTONE, with numerous healed joints dipping at 0 to 20 degrees and 0 to 30 degrees. (Berwick Formation). Rock Mass Quality = Fair. R1:Core Times (min:sec) 23.8-24.8 ft (2:15) 24.8-25.8 ft (2:00) 25.8-26.8 ft (2:20) 26.8-27.8 ft (2:00) 27.8-28.8 ft (2:20) 92% Recovery	
	R2	60/60	28.80 - 33.80	RQD = 100%					R2:Bedrock: Similar to above, with some pyrite. Rock Mass Quality = Excellent. R2:Core Times (min:sec) 28.8-29.8 ft (1:30) 29.8-30.8 ft (1:30) 30.8-31.8 ft (2:00) 31.8-32.8 ft (2:10) 32.8-33.8 ft (2:20) 100% Recovery	
30								146.20	— 33.80	
35									Bottom of Exploration at 33.80 feet below ground surface.	

Remarks:

Stratification lines represent approximate boundaries between soil types; transitions may be gradual.

* Water level readings have been made at times and under conditions stated. Groundwater fluctuations may occur due to conditions other than those present at the time measurements were made.

Page 1 of 1

Boring No.: BB-BSFR-101

Maine Department of Transportation

Soil/Rock Exploration Log

US CUSTOMARY UNITS

Project: Berwick Bridge #2068 carries Route 9 over Salmon Falls River
Location: Berwick, Maine

Boring No.: BB-BSFR-102
WIN: 19274.00

Driller:	MaineDOT	Elevation (ft.)	164.9	Auger ID/OD:	N/A
Operator:	Giguere/Giles/Daggett	Datum:	NAVD88	Sampler:	Standard Split Spoon
Logged By:	B. Wilder	Rig Type:	CME 45C	Hammer Wt./Fall:	140#/30"
Date Start/Finish:	3/21/12: 08:30-13:00	Drilling Method:	Cased Wash Boring	Core Barrel:	NQ-2"
Boring Location:	302+06.1, 20.7 ft Lt.	Casing ID/OD:	HW & NW	Water Level*:	10.0 ft from Deck to Water
Hammer Efficiency Factor: 0.84		Hammer Type:	Automatic ☒ Hydraulic ☐ Rope & Cathead ☐		

Definitions:
D = Split Spoon Sample
MD = Unsuccessful Split Spoon Sample attempt
U = Thin Wall Tube Sample
MU = Unsuccessful Thin Wall Tube Sample attempt
V = Insitu Vane Shear Test, PP = Pocket Penetrometer
MV = Unsuccessful Insitu Vane Shear Test attempt
R = Rock Core Sample
SSA = Solid Stem Auger
HSA = Hollow Stem Auger
RC = Roller Cone
WOH = weight of 140lb. hammer
WOR/C = weight of rods or casing
WO1P = Weight of one person
S_u = Insitu Field Vane Shear Strength (psf)
T_v = Pocket Torvane Shear Strength (psf)
q_p = Unconfined Compressive Strength (ksf)
N-uncorrected = Raw field SPT N-value
Hammer Efficiency Factor = Annual Calibration Value
N_{60} = SPT N-uncorrected corrected for hammer efficiency
N_{60} = (Hammer Efficiency Factor/60%)*N-uncorrected
$S_{u(lab)}$ = Lab Vane Shear Strength (psf)
WC = water content, percent
LL = Liquid Limit
PL = Plastic Limit
PI = Plasticity Index
G = Grain Size Analysis
C = Consolidation Test

Depth (ft.)	Sample No.	Pen./Rec. (in.)	Sample Depth (ft.)	Blows (/6 in. Shear Strength (psf) or RQD (%)	N-uncorrected	N_{60}	Casing Blows	Elevation (ft.)	Visual Description and Remarks	Laboratory Testing Results/ AASHTO and Unified Class
0	1D	12/9	0.00 - 1.00	6/30	---		43		Brown, wet, medium dense, fine to coarse SAND, some gravel, trace silt, occasional cobbles. Spoon was bending, only drove 1.0 ft.	G#244138 A-1-b, SW-SM WC=26.9%
							60			
							66			
							92	161.90	— 3.00	
							47			
5	2D	24/16	5.00 - 7.00	18/22/12/31	34	48	38		Brown, wet, dense, fine to coarse SAND, some gravel, little silt, occasional cobbles. Broke HW Casing, telescoped NW Casing at 6.0 ft bgs. Roller Coned ahead to 8.7 ft bgs.	G#244139 A-1-b, SM WC=12.2%
							150			
							29			
	R1	60/48	8.70 - 13.70				060 NQ-2	156.20	060 blows for 0.7 ft. — 8.70	
10									R1:Cobbles and Boulders. R1:Core Times (min:sec) 8.7-9.7 ft (2:00) 9.7-10.7 ft (3:05) 10.7-11.7 ft (1:30) 11.7-12.7 ft (2:15)	
				RQD = 0%				152.50	— 12.40	
	R2	60/60	13.70 - 18.70	RQD = 48%					Top of Bedrock at Elev. 152.5 ft. R1:Con't:Bedrock: Yellow-green, fine grained, SANDSTONE, joints dipping at 30 to 60 degrees. (Berwick Formation). Rock Mass Quality = Very Poor. 12.7-13.7 (2:46) 80% Recovery R2:Bedrock: Similar to above, changing to dark grey, slightly banded, SANDSTONE, with biotite mica and amphibole, joints at 30 degrees. Rock Mass Quality = Poor. R2:Core Times (min:sec) 13.7-14.7 ft (3:25) 14.7-15.7 ft (3:25) 15.7-16.7 ft (3:00) 16.7-17.7 ft (2:25) 17.7-18.7 ft (2:20) 100% Recovery	
15										
								146.20	— 18.70	
20									Bottom of Exploration at 18.70 feet below ground surface.	
25										

Remarks:

Bridge Deck: 1" Pavement, 8" Concrete.
Bridge Deck to Ground 15.1 ft.
Broke casing in river, had dive team come in on 3/22/12 to help locate and pull casing out of the river, casing is out of the river.

Stratification lines represent approximate boundaries between soil types; transitions may be gradual.

* Water level readings have been made at times and under conditions stated. Groundwater fluctuations may occur due to conditions other than those present at the time measurements were made.

Page 1 of 1

Boring No.: BB-BSFR-102

STATE OF MAINE
DEPARTMENT OF TRANSPORTATION

PROJECT NO. BR-1927(400)

WIN 19274.00

BRIDGE NO. 2068

BRIDGE PLANS

STATE OF MAINE
Steven M. Hodgdon
11206
LICENSED
PROFESSIONAL ENGINEER

PROJ. MANAGER	N. BENOIT	BY	DATE
DESIGN-DETAILED	JAW	KDW	10-14-13
CHECKED-REVIEWED	CLC	SMH	10-14-13
DESIGN2-DETAILED2	---	---	---
DESIGN3-DETAILED3	---	---	---
REVISIONS 1	---	---	---
REVISIONS 2	---	---	---
REVISIONS 3	---	---	---
REVISIONS 4	---	---	---
FIELD CHANGES	---	---	---

SIGNATURE
11206
P.E. NUMBER
11\13\2013
DATE

BERWICK BRIDGE
SALMON FALLS RIVER
BERWICK YORK COUNTY

BORING LOGS

SHEET NUMBER
6
OF 56

Filename: ...\planset\006_BORING LOGS1.dgn Division: Structures Username: kwentworth Date:$date$

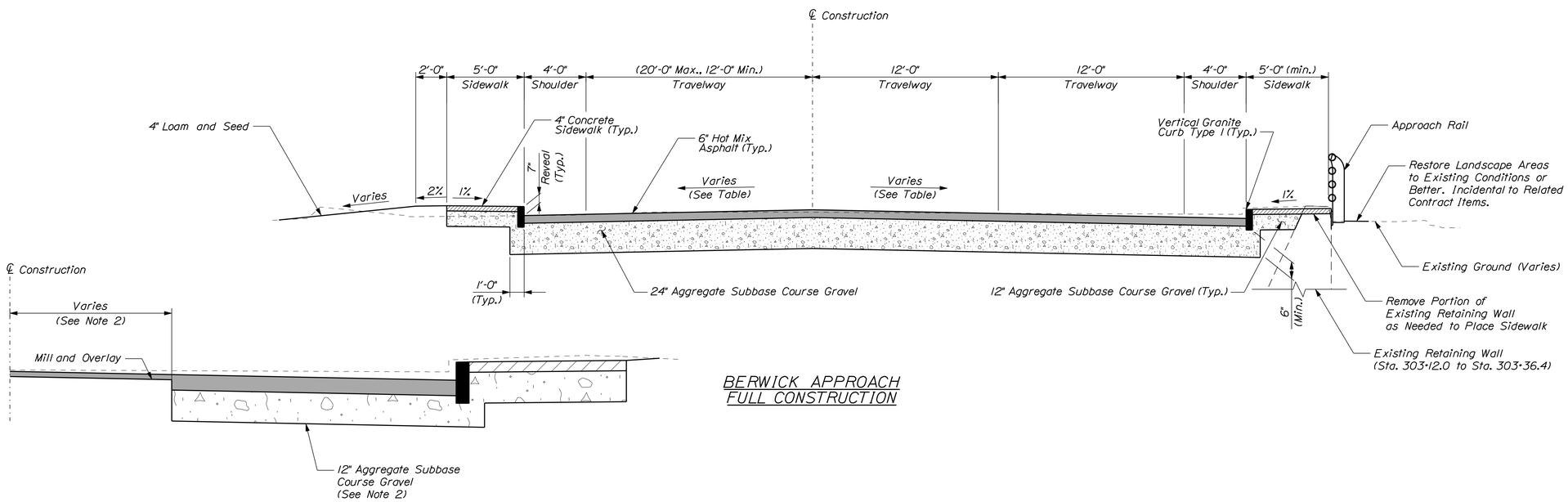

BERWICK APPROACH
FULL CONSTRUCTION

STEP-BOX DETAIL
(Sta. 303+50.00, RT to Sta. 303+85.00, RT)

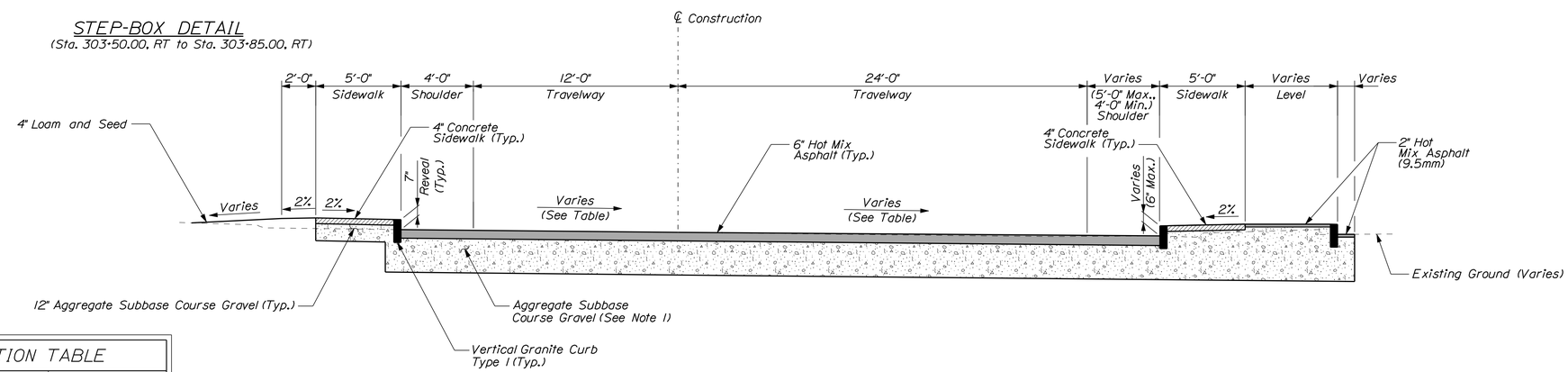

SOMERSWORTH APPROACH
FULL CONSTRUCTION

TRAVELWAY AND SHOULDER HMA

2" Hot Mix Asphalt (12.5mm) Wearing
2" Hot Mix Asphalt (12.5mm) Base
2" Hot Mix Asphalt (12.5mm) Base

SUPERELEVATION TABLE

Left Travelway and 4' Projected Shoulder	Station	Right Travelway and 4' Projected Shoulder
Match Existing	301+45.00	Match Existing
1.75%	301+50.00	-3.09%
0.87%	301+75.00	-1.15%
0.61%	301+82.00	-0.61%
0.61%	302+10.00	-0.61%
0.61%	302+25.00	-1.13%
0.00%	302+35.39	-1.49%
-0.84%	302+50.00	-2.00%
-2.00%	302+70.00	
	TO	
	303+40.00	
-2.15%	303+43.60	
-1.91%	303+50.00	
-0.96%	303+75.00	
Match Existing	303+85.00	Match Existing

See Note 3

NOTES

1. Depth of roadway material varies. See Moment Slab Details (2 of 2)
2. In mill and overlay area, provide 12" subbase material where existing ground is 2" or more above finished grade. If existing pavement is thicker than 2", additional subbase may not be required.
3. Refer to Grading Plan beyond left travelway from Sta. 303+43.00 to Sta. 303+85.00.

STATE OF MAINE
DEPARTMENT OF TRANSPORTATION

PROJECT NO. BR-1927(400)

BRIDGE NO. 2068 | WIN 19274.00 | BRIDGE PLANS

STATE OF MAINE — Steven M. Hodgdon — 11206 — LICENSED PROFESSIONAL ENGINEER

		BY	DATE
PROJ. MANAGER	N. BENOIT		
DESIGN-DETAILED	JAW	KDW	10-14-13
CHECKED-REVIEWED	CLC	SMH	10-14-13
DESIGN2-DETAILED2	---	---	---
DESIGN3-DETAILED3	---	---	---
REVISIONS 1	---	---	---
REVISIONS 2	---	---	---
REVISIONS 3	---	---	---
REVISIONS 4	---	---	---
FIELD CHANGES	---	---	---

SIGNATURE: 11206
P.E. NUMBER
11\13\2013
DATE

BERWICK BRIDGE
SALMON FALLS RIVER
BERWICK YORK COUNTY

TYPICAL SECTION AND DETAILS

SHEET NUMBER
7
OF 56

Filename: ...\cad\st\planset\007_typ.dgn Division: Structures Username: kwentworth Date:$date$

BRIDGE

301+80.00
End Transition
Begin Project

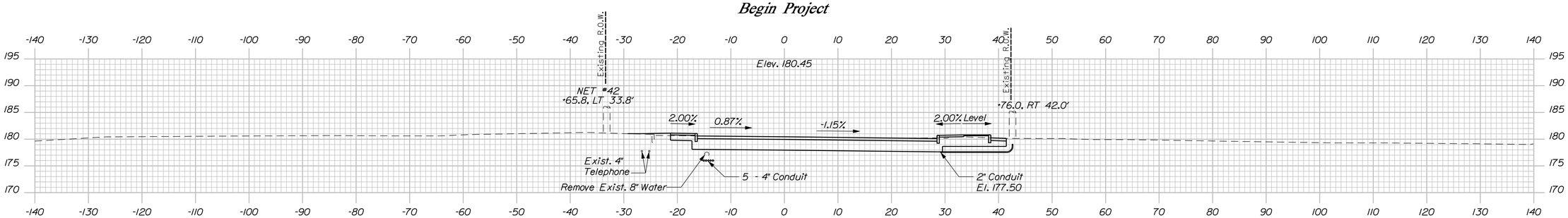

301+75.00

301+69.00
End Mill and Overlay
Begin Transition

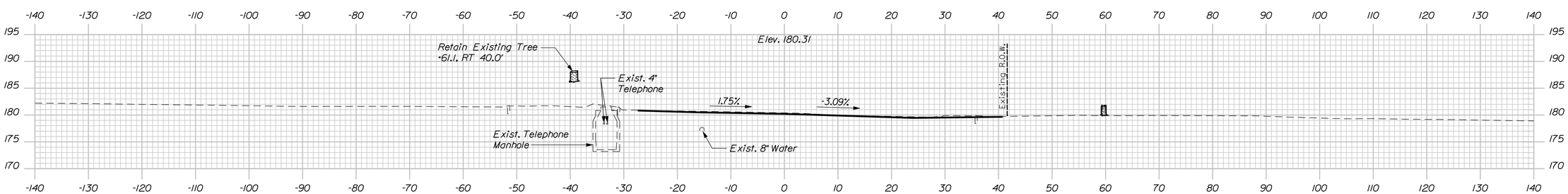

301+50.00

Sta. 301+45.00
Begin Mill and Overlay
Match Existing

NOTE
1. Excavation and fill for moment slab not shown.

STATE OF MAINE
DEPARTMENT OF TRANSPORTATION

PROJECT NO. BR-1927(400)

WIN 19274.00

BRIDGE NO. 2068

BRIDGE PLANS

STATE OF MAINE — Steven M. Hodgdon — 11206 — LICENSED PROFESSIONAL ENGINEER

Steven M. Hodgdon		
SIGNATURE	10-14-13	DATE
11206	10-14-13	BY
P.E. NUMBER		
11\13\2013		
DATE		

PROJ. MANAGER	N. BENOIT	BY
DESIGN-DETAILED	JAW	KDW
CHECKED-REVIEWED	CLC	SMH
DESIGN2-DETAILED2		
DESIGN3-DETAILED3		
REVISIONS 1		
REVISIONS 2		
REVISIONS 3		
REVISIONS 4		
FIELD CHANGES		

BERWICK

BERWICK BRIDGE
SALMON FALLS RIVER
YORK COUNTY

CROSS SECTIONS
(1 OF 2)

SHEET NUMBER
8
OF 56

Filename: ...\st\planset\008_sections_01.dgn Division: Structures Username: kwentworth Date:$date$

Sta. 301+50.00 to Sta. 301+75.00

303+85.00
End Mill and Overlay
Match Existing

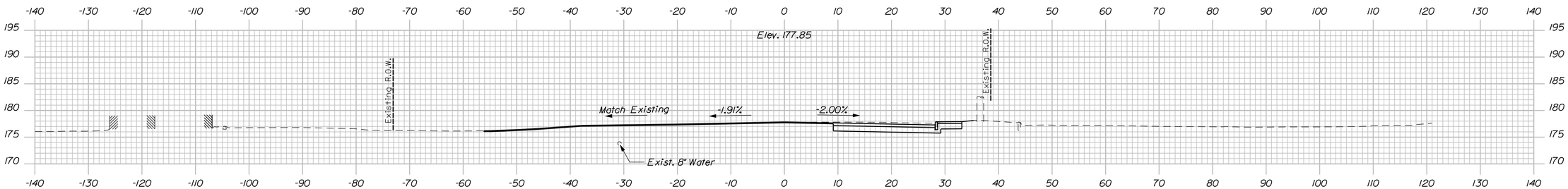

303+50.00
End Transition
Begin Mill and Overlay

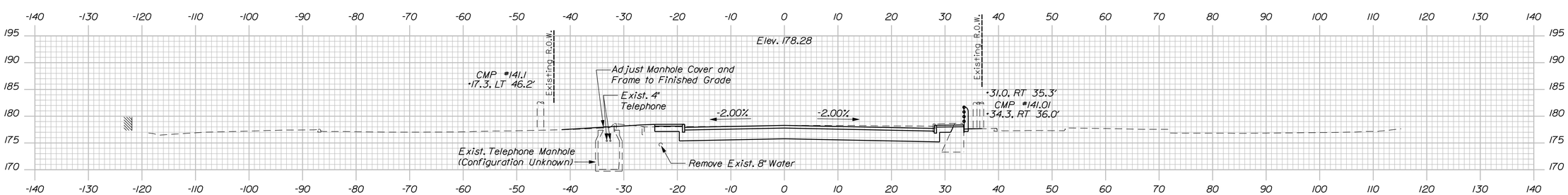

303+25.00
End Project
Begin Transition

STATE OF MAINE
DEPARTMENT OF TRANSPORTATION

PROJECT NO. BR-1927(400)

BRIDGE NO. 2068 | **WIN 19274.00** | BRIDGE PLANS

STATE OF MAINE — Steven M. Hodgdon — No. 11206 — LICENSED PROFESSIONAL ENGINEER

PROJ. MANAGER	N. BENOIT	BY	DATE
DESIGN-DETAILED	JAW	KDW	10-14-13
CHECKED-REVIEWED	CLC	SMH	10-14-13
DESIGN2-DETAILED2	---	---	---
DESIGN3-DETAILED3	---	---	---
REVISIONS 1	---	---	---
REVISIONS 2	---	---	---
REVISIONS 3	---	---	---
REVISIONS 4	---	---	---
FIELD CHANGES	---	---	---

Steven M. Hodgdon — SIGNATURE
11206 — P.E. NUMBER
11\13\2013 — DATE

BERWICK BRIDGE
SALMON FALLS RIVER
BERWICK YORK COUNTY

CROSS SECTIONS (2 OF 2)

SHEET NUMBER
9
OF 56

Sta. 303+25.00 to Sta. 303+50.00

Filename: ...\st\planset\009_sections_02.dgn Division: Structures Username: kwentworth $date$

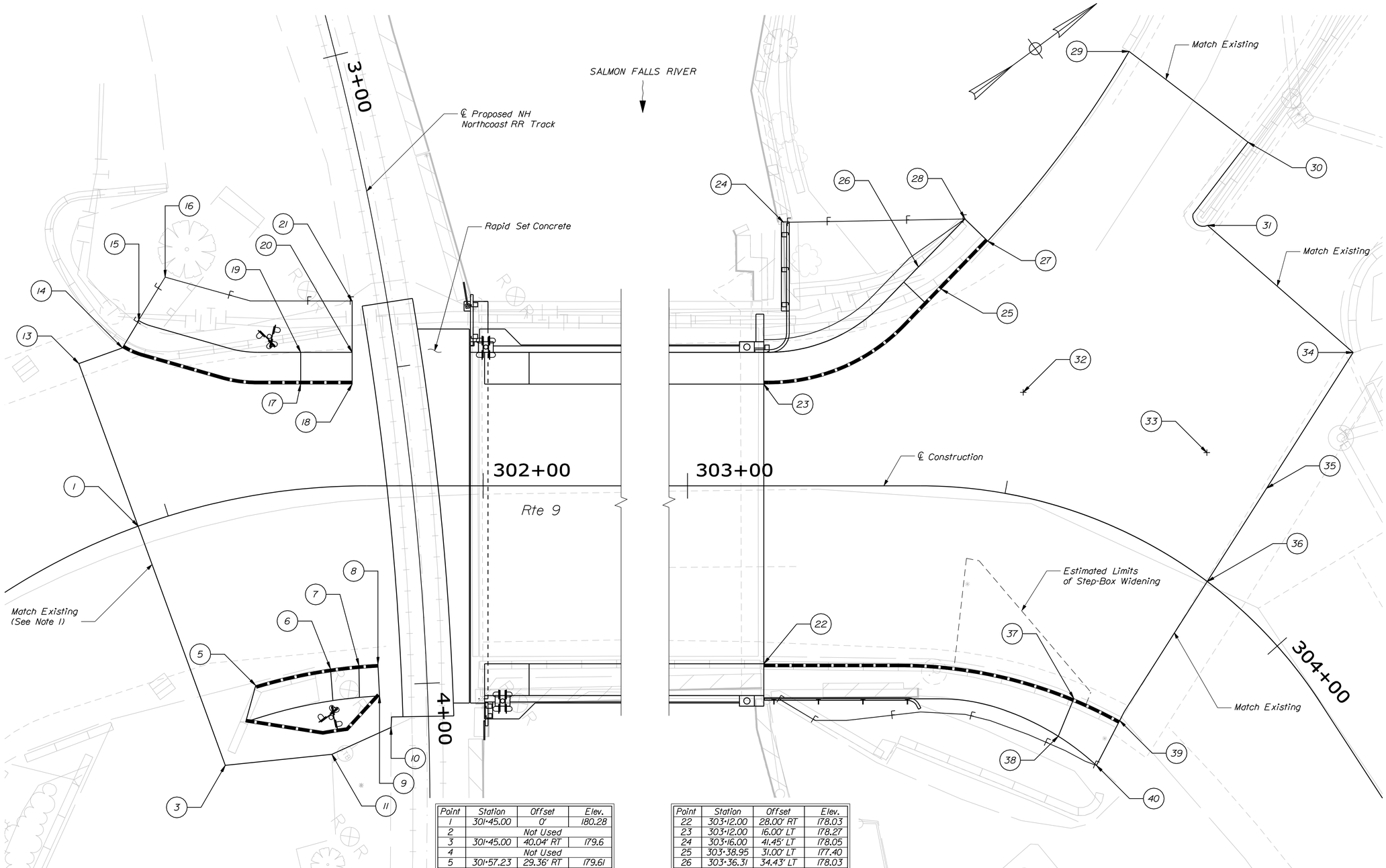

Point	Station	Offset	Elev.
1	301+45.00	0'	180.28
2		Not Used	
3	301+45.00	40.04' RT	179.6
4		Not Used	
5	301+57.23	29.36' RT	179.61
6	301+73.85	28.57' RT	180.09
7	301+80.00	28.26' RT	180.32
8	301+83.45	28.06' RT	180.33
9	301+83.70	33.05' RT	180.30
10	301+85.52	38.01' RT	180.2
11	301+72.54	42.00' RT	180.1
12		Not Used	
13	301+45.00	27.22' LT	180.7
14	301+50.78	27.39' LT	180.8
15	301+53.65	30.79' LT	181.50
16	301+57.95	36.43' LT	181.7
17	301+72.70	16.45' LT	180.59
18	301+79.70	16.02' LT	180.57
19	301+73.06	21.43' LT	181.27
20	301+79.78	21.02' LT	180.63
21	301+79.89	29.02' LT	180.72

Point	Station	Offset	Elev.
22	303+12.00	28.00' RT	178.03
23	303+12.00	16.00' LT	178.27
24	303+16.00	41.45' LT	178.05
25	303+38.95	31.00' LT	177.40
26	303+36.31	34.43' LT	178.03
27	303+43.60	38.99' LT	177.10
28	303+41.10	42.18' LT	177.16
29	303+53.51	72.03' LT	176.0
30	303+65.11	63.94' LT	176.7
31	303+64.48	49.43' LT	177.1
32	303+50.00	16.14' LT	177.54
33	303+75.00	16.99' LT	177.44
34	303+82.89	42.63' LT	177.2
35	303+83.91	17.38' LT	177.4
36	303+85.00	0'	177.54
37	303+76.08	26.98' RT	177.04
38	303+77.61	33.32' RT	177.62
39	303+88.26	25.71' RT	177.0
40	303+91.26	33.45' RT	177.0

NOTE

1. Match grades with Somersworth, NH Project No. 553604.

STATE OF MAINE
DEPARTMENT OF TRANSPORTATION

PROJECT NO. BR-1927(400)

WIN 19274.00

BRIDGE NO. 2068

BRIDGE PLANS

STATE OF MAINE
Steven M. Hodgdon
11206
LICENSED PROFESSIONAL ENGINEER

PROJ. MANAGER	N. BENOIT	BY	DATE
DESIGN-DETAILED	JAW	KDW	10-14-13
CHECKED-REVIEWED	CLC	SMH	10-14-13
DESIGN2-DETAILED2	---	---	---
DESIGN3-DETAILED3	---	---	---
REVISIONS 1	---	---	---
REVISIONS 2	---	---	---
REVISIONS 3	---	---	---
REVISIONS 4	---	---	---
FIELD CHANGES	---	---	---

SIGNATURE
11206
P.E. NUMBER
11\13\2013
DATE

BERWICK BRIDGE
SALMON FALLS RIVER
BERWICK YORK COUNTY

GRADING PLAN

SHEET NUMBER
10
OF 56

Filename: ...\cad\st\planset\010_grading.dgn Division: Structures Username: kwentworth Date:$date$

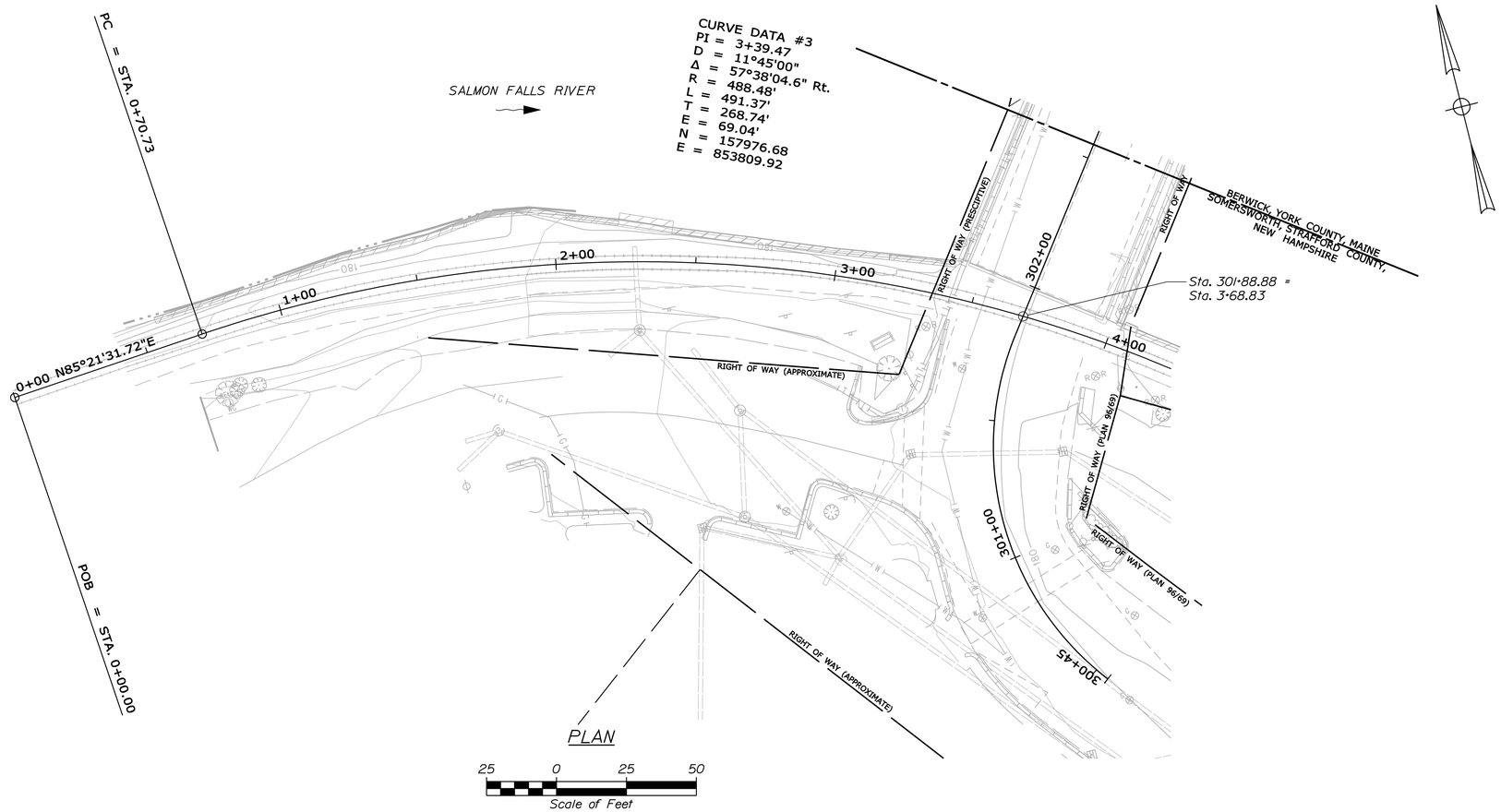

PLAN

25 0 25 50
Scale of Feet

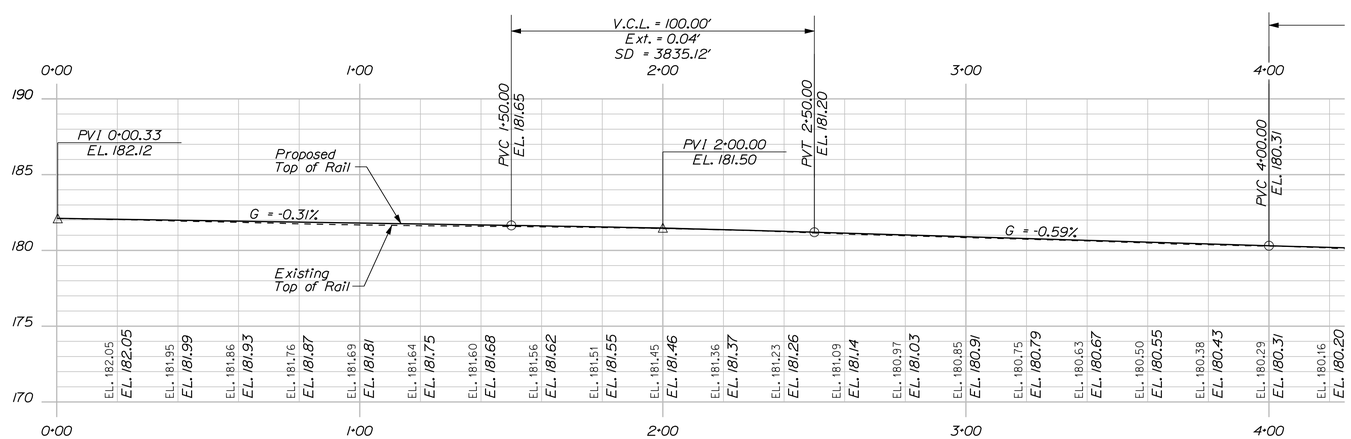

PROFILE

HORIZ 25 0 25 50
VERT 5 0 5 10
SCALE

NOTES

1. Plan information and coordinate system based on NAD83 (96) ME2000 West Zone.
2. Vertical Datum based on NAVD88 without corrections.

STATE OF MAINE
DEPARTMENT OF TRANSPORTATION

PROJECT NO. BR-1927(400)

BRIDGE NO. 2068 — WIN 19274.00 — BRIDGE PLANS

STATE OF MAINE — Steven M. Hodgdon — 11206 — LICENSED PROFESSIONAL ENGINEER

PROJ. MANAGER	N. BENOIT	BY	DATE
DESIGN-DETAILED	JCM	KDW	10-14-13
CHECKED-REVIEWED	JAW	SMH	10-14-13
DESIGN2-DETAILED2	---	---	---
DESIGN3-DETAILED3	---	---	---
REVISIONS 1	---	---	---
REVISIONS 2	---	---	---
REVISIONS 3	---	---	---
REVISIONS 4	---	---	---
FIELD CHANGES	---	---	---

Steven M. Hodgdon
SIGNATURE
11206
P.E. NUMBER
11\13\2013
DATE

BERWICK BRIDGE
SALMON FALLS RIVER
BERWICK YORK COUNTY

RAILROAD PLAN AND PROFILE (1 OF 2)

SHEET NUMBER
11
OF 56

Filename: ...\st\planset\011_rrplan_01.dgn Division: Structures Username: kwentworth Date:$date$

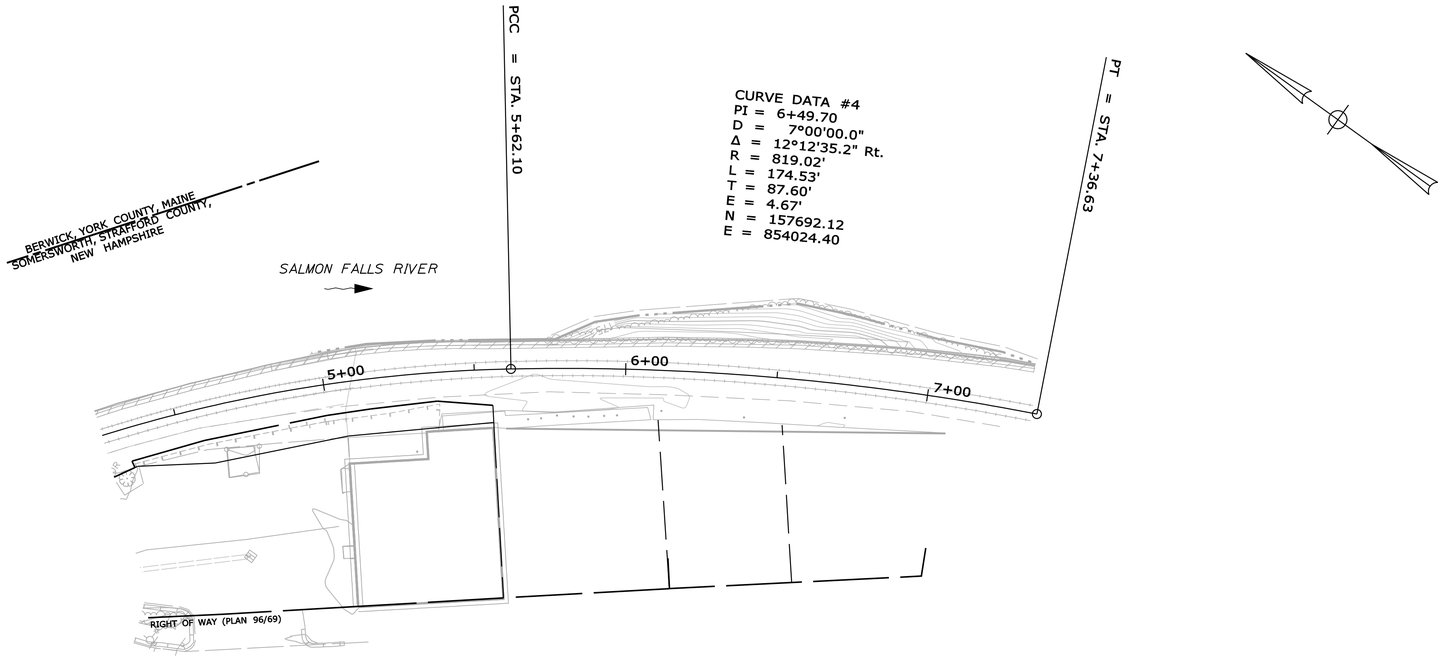

PLAN

25 0 25 50
Scale of Feet

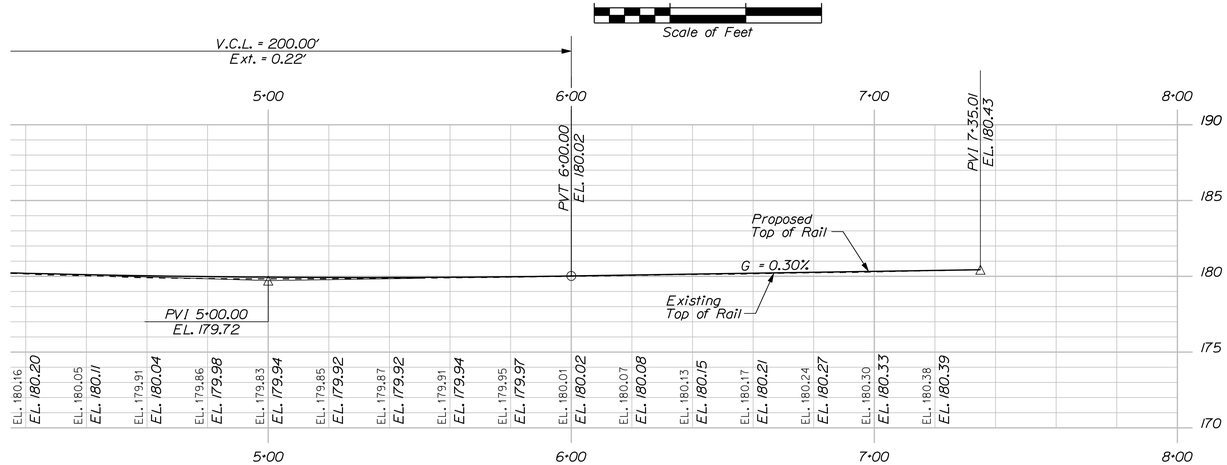

PROFILE

HORIZ 25 0 25 50
VERT 5 0 5 10
SCALE

NOTES

1. Plan information and coordinate system based on NAD83 (96) ME2000 West Zone.
2. Vertical Datum based on NAVD88 without corrections.

STATE OF MAINE
DEPARTMENT OF TRANSPORTATION

PROJECT NO. BR-1927(400)

WIN 19274.00

BRIDGE NO. 2068

BRIDGE PLANS

STATE OF MAINE
Steven M. Hodgdon
11206
LICENSED PROFESSIONAL ENGINEER

PROJ. MANAGER	N. BENOIT		
DESIGN-DETAILED	JGM	KDW	10-14-13
CHECKED-REVIEWED	JAW	SMH	10-14-13
DESIGN2-DETAILED2	---	---	---
DESIGN3-DETAILED3	---	---	---
REVISIONS 1	---	---	---
REVISIONS 2	---	---	---
REVISIONS 3	---	---	---
REVISIONS 4	---	---	---
FIELD CHANGES	---	---	---

SIGNATURE
11206
P.E. NUMBER
11\13\2013
DATE

BERWICK BRIDGE
SALMON FALLS RIVER
BERWICK YORK COUNTY

RAILROAD PLAN AND PROFILE (2 OF 2)

SHEET NUMBER
12
OF 56

Filename: ...\st\planset\012_rrplan_02.dgn Division: Structures Username: kwentworth Date:$date$

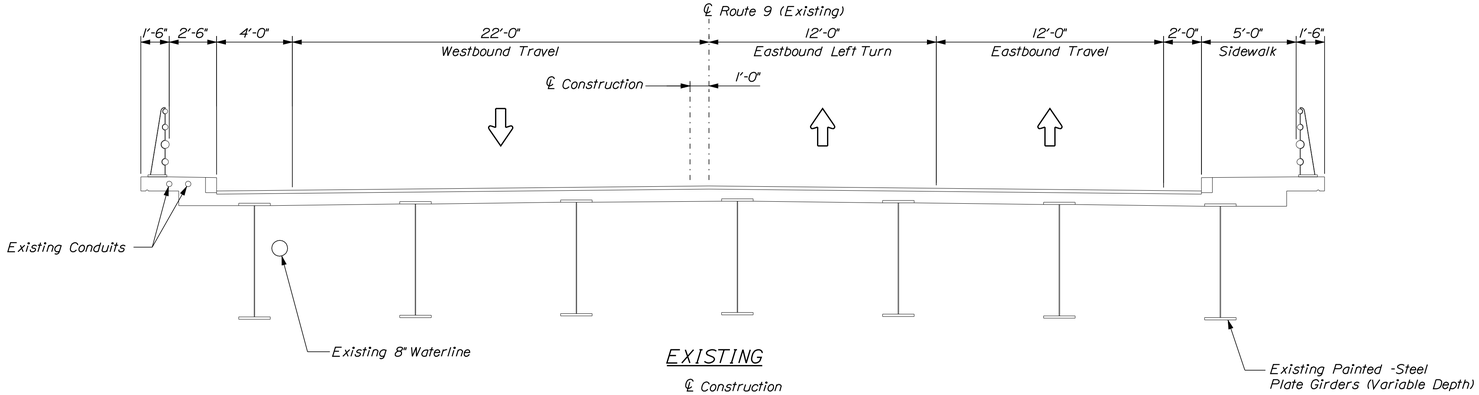

EXISTING

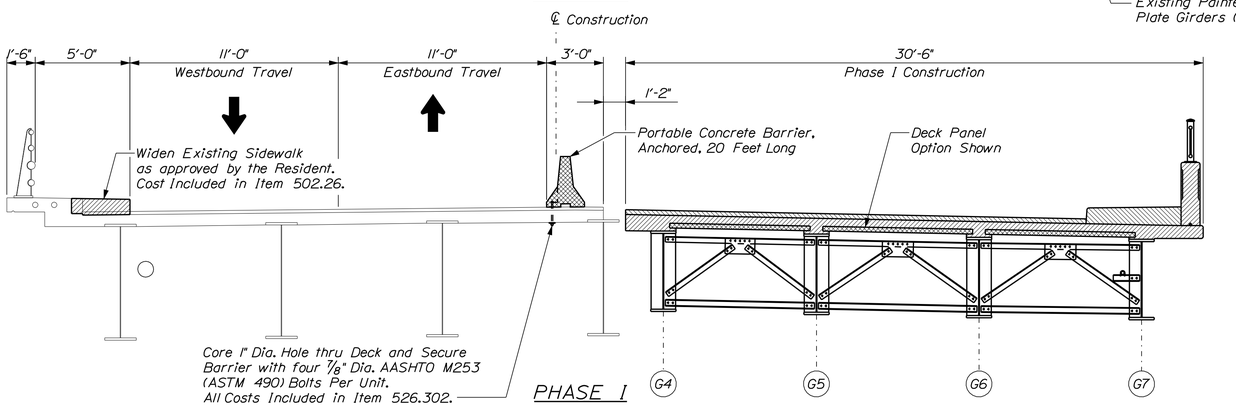

PHASE I

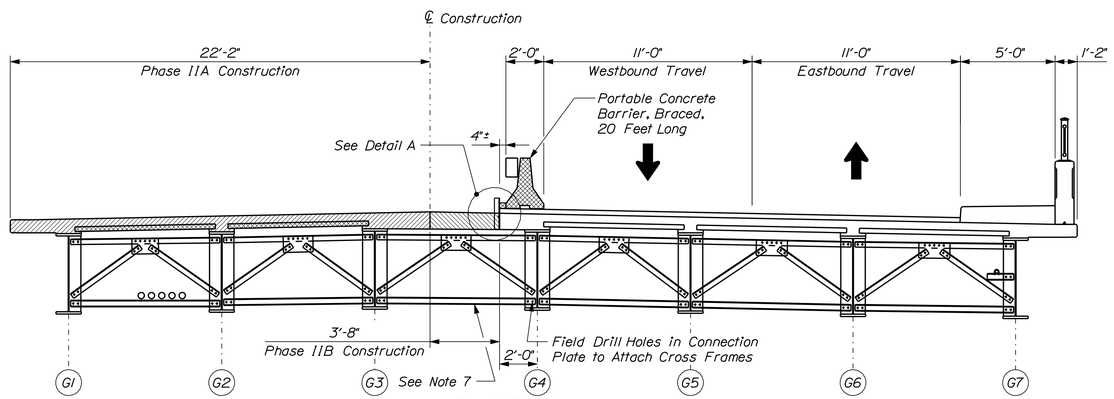

PHASE II

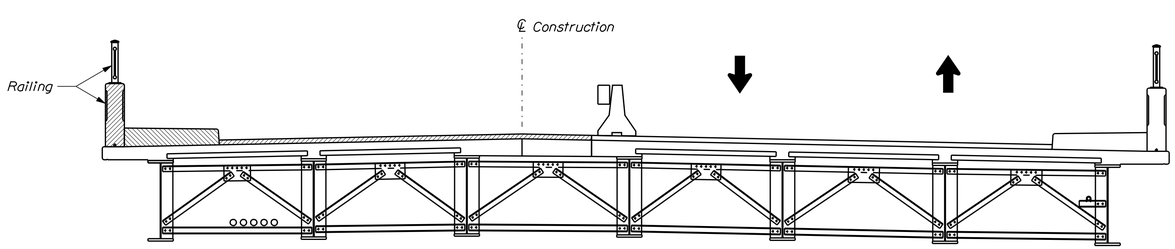

PHASE III

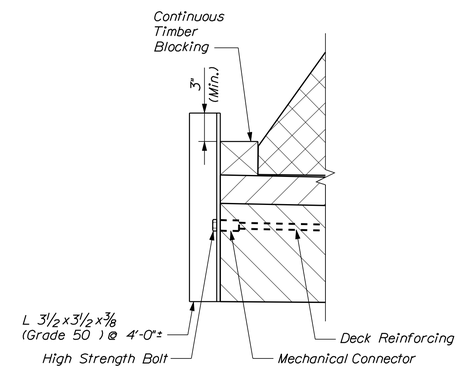

DETAIL A
(See Note 5)

CONSTRUCTION PHASING NOTES

1. All construction shall be completed using approved Traffic Control Procedures and in accordance with approved Traffic Control Plans.
2. Prior to Phase I, install the new Moment Slab and Temporary Track Crossing.
3. Deck formwork between G3 and G4 shall be designed for HL-93 loading and all applicable dead loads. Cost included in Item 502.26.
4. Closure Pour between G3 and G4 shall not be placed for a minimum of 72 hours after placement of Deck Slab in Phase IIA.
5. Remove Temporary Angle Bracing as shown in Detail A once deck formwork is in place between G3 and G4. All costs included in Item 526.302.
6. See Traffic Control Plans and Concrete Barrier sheets for additional information.
7. Install cross frames between G3 and G4 after Phase IIA deck placement and prior to forming Phase IIB Closure Pour. Field Drill connection plate on G3 or G4 using holes in cross frame members as a template.

STATE OF MAINE
DEPARTMENT OF TRANSPORTATION

PROJECT NO. BR-1927(400)

BRIDGE NO. 2068

WIN 19274.00

BRIDGE PLANS

STATE OF MAINE
Steven M. Hodgdon
11206
LICENSED PROFESSIONAL ENGINEER

PROJ. MANAGER	N. BENOIT	BY	DATE
DESIGN-DETAILED	JCM	KDW	10-14-13
CHECKED-REVIEWED	JAW	SMH	10-14-13
DESIGN2-DETAILED2	---	---	---
DESIGN3-DETAILED3	---	---	---
REVISIONS 1	---	---	---
REVISIONS 2	---	---	---
REVISIONS 3	---	---	---
REVISIONS 4	---	---	---
FIELD CHANGES	---	---	---

SIGNATURE
11206
P.E. NUMBER
11\13\2013
DATE

BERWICK BRIDGE
SALMON FALLS RIVER
BERWICK YORK COUNTY

CONSTRUCTION PHASING

SHEET NUMBER
13
OF 56

Filename: ...\cad\st\planset\013_tcp_01.dgn Division: Structures Username: kwentworth Date:$date$

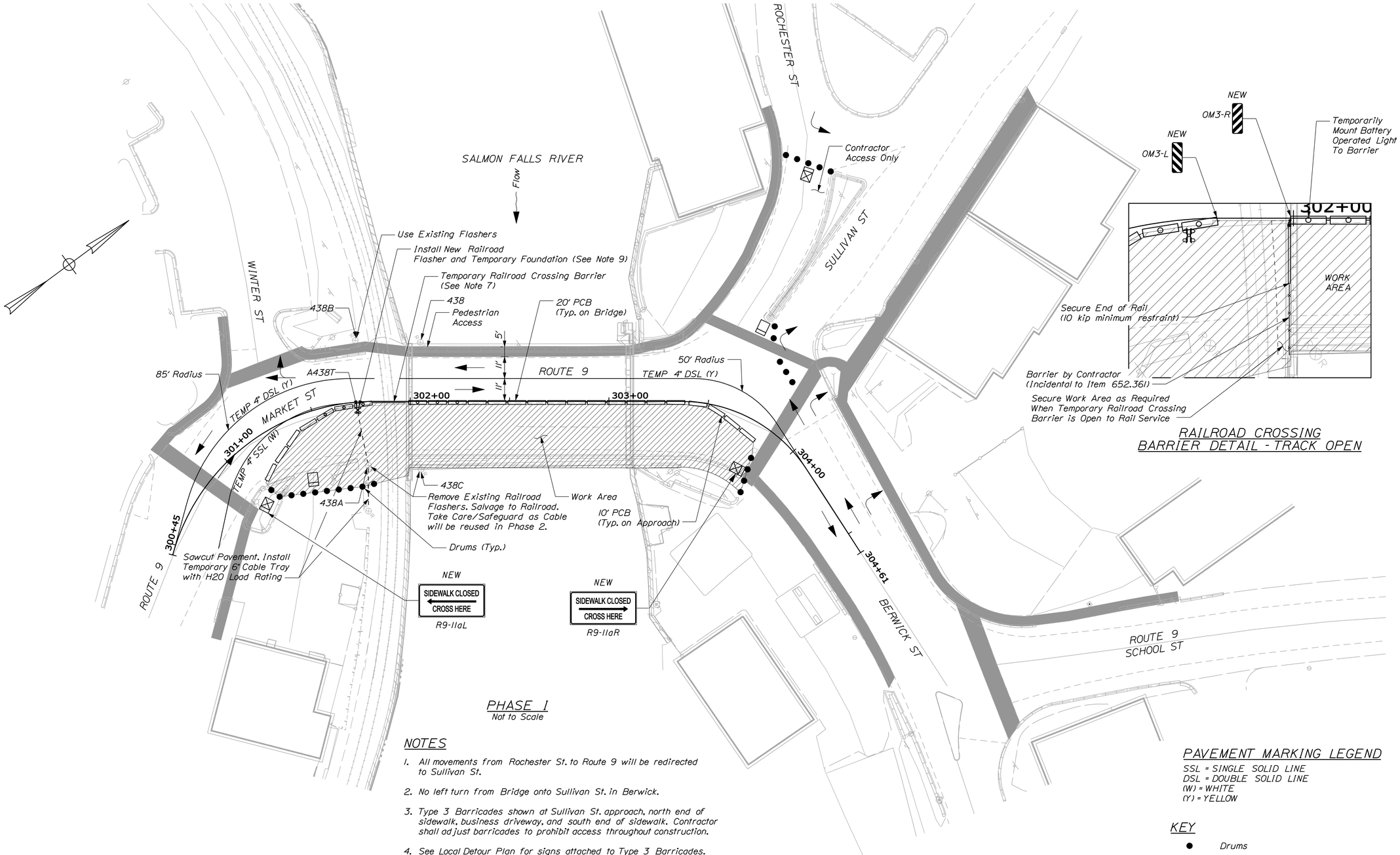

PHASE I
Not to Scale

RAILROAD CROSSING
BARRIER DETAIL - TRACK OPEN

NOTES

1. All movements from Rochester St. to Route 9 will be redirected to Sullivan St.
2. No left turn from Bridge onto Sullivan St. in Berwick.
3. Type 3 Barricades shown at Sullivan St. approach, north end of sidewalk, business driveway, and south end of sidewalk. Contractor shall adjust barricades to prohibit access throughout construction.
4. See Local Detour Plan for signs attached to Type 3 Barricades.
5. See Local Detour Plan for sidewalk closed sign details.
6. Temporary pavement markings on bridge deck shall be removable reflectorized tape.
7. See Temporary Railroad Crossing Barrier for details.
8. Contractor shall maintain RR pre-emption connection throughout construction.
9. Temporary flasher shall consist of back-to-back 12" LED flashers. All materials and construction shall conform to the latest edition of the AREMA Signal Manual. All costs shall be included in Item 652.361, Maintenance of Traffic Control Devices.

Item 526.301 - Temporary Concrete Barrier, Type I
Sta. 301+06.0, RT 20.0' to Sta. 301+61.3, RT 1.9'
Sta. 303+39.5, RT 0.5' to Sta. 303+81.6, RT 8.8'

Item 526.302 - Portable Concrete Barrier, Anchored
Sta. 301+61.3, RT 1.9' to Sta. 301+81.5, RT 0.5'
Sta. 301+99.0, RT 0.5' to Sta. 303+39.5, RT 0.5'

PAVEMENT MARKING LEGEND

SSL = SINGLE SOLID LINE
DSL = DOUBLE SOLID LINE
(W) = WHITE
(Y) = YELLOW

KEY

- Drums
- Portable Concrete Barrier (PCB) or Temporary Concrete Barrier
- Direction of Vehicular Traffic
- Pedestrian Access
- Work Area
- Type 3 Barricade with sign
- Type 3 Barricade
- Portable Concrete Barrier with Light

STATE OF MAINE
DEPARTMENT OF TRANSPORTATION

PROJECT NO. BR-1927(400)

BRIDGE NO. 2068 | WIN 19274.00 | BRIDGE PLANS

STATE OF MAINE
Steven M. Hodgdon
11206
LICENSED PROFESSIONAL ENGINEER

SIGNATURE		
11206		
P.E. NUMBER		
11\13\2013		
DATE		

PROJ. MANAGER	N. BENOIT	BY	DATE
DESIGN-DETAILED	JQM	KDW	10-14-13
CHECKED-REVIEWED	JAW	SMH	10-14-13
DESIGN2-DETAILED2	---	---	---
DESIGN3-DETAILED3	---	---	---
REVISIONS 1	---	---	---
REVISIONS 2	---	---	---
REVISIONS 3	---	---	---
REVISIONS 4	---	---	---
FIELD CHANGES	---	---	---

BERWICK BRIDGE
SALMON FALLS RIVER
BERWICK YORK COUNTY

TRAFFIC CONTROL PLANS (1 OF 2)

SHEET NUMBER
14
OF 56

Filename: ...\cad\st\planset\014_tcp_02.dgn Division: Structures Username: kwentworth Date:$date$

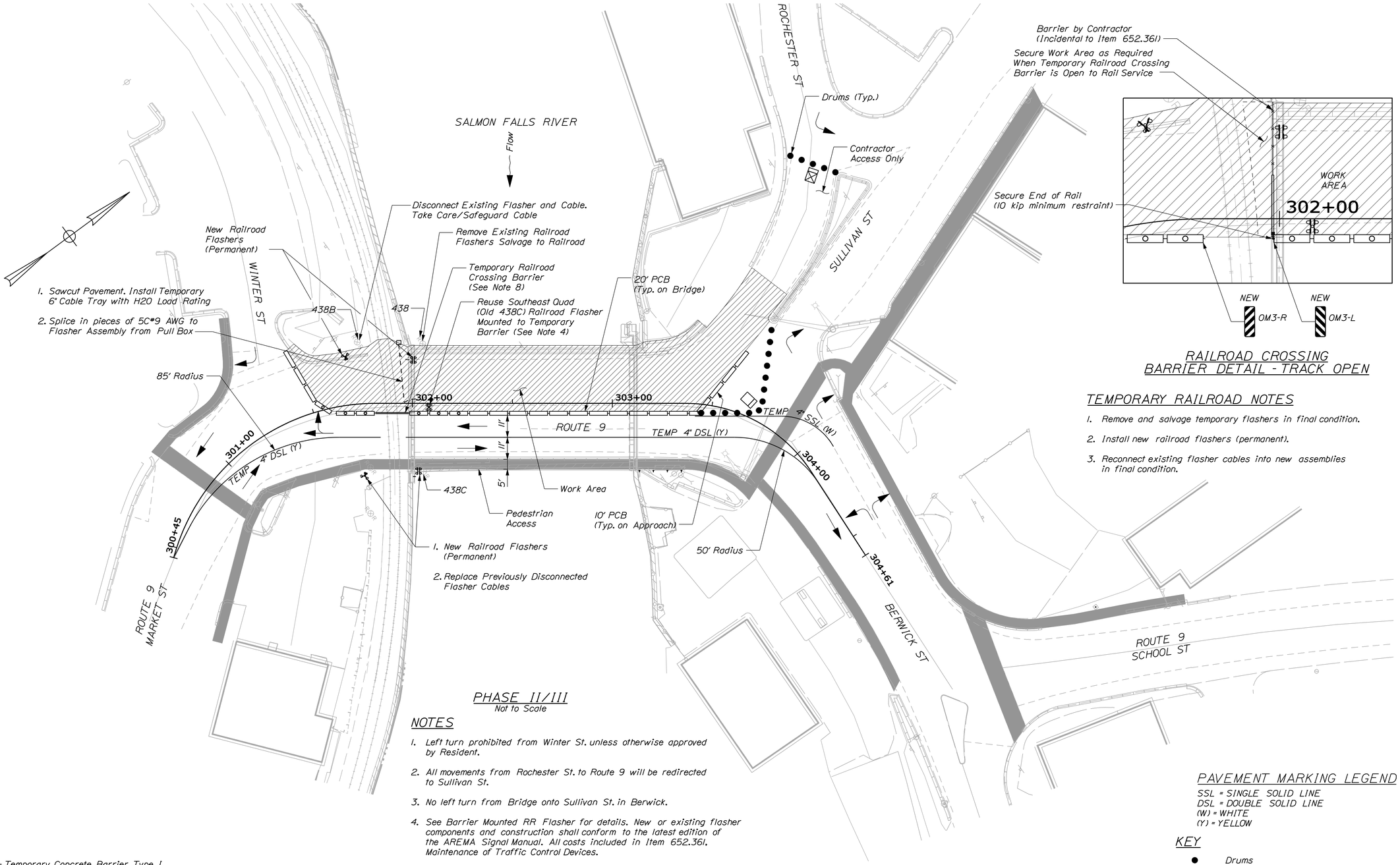

RAILROAD CROSSING BARRIER DETAIL - TRACK OPEN

TEMPORARY RAILROAD NOTES

1. Remove and salvage temporary flashers in final condition.
2. Install new railroad flashers (permanent).
3. Reconnect existing flasher cables into new assemblies in final condition.

PHASE II/III

Not to Scale

NOTES

1. Left turn prohibited from Winter St. unless otherwise approved by Resident.
2. All movements from Rochester St. to Route 9 will be redirected to Sullivan St.
3. No left turn from Bridge onto Sullivan St. in Berwick.
4. See Barrier Mounted RR Flasher for details. New or existing flasher components and construction shall conform to the latest edition of the AREMA Signal Manual. All costs included in Item 652.361, Maintenance of Traffic Control Devices.
5. Type 3 Barricades shown at Sullivan Street approach and north end of work area. Contractor shall adjust barricades to prohibit access throughout construction.
6. See Local Detour Plan for signs attached to Type 3 Barricades.
7. Temporary pavement markings on bridge deck shall be removable reflectorized tape.
8. See Temporary Railroad Crossing Barrier for details.
9. Contractor shall maintain RR pre-emption connection throughout construction.
10. New conduits and junction boxes for permanent flashers not shown. Details and location are subject to NHDOT and Railroad approval.

Item 526.301 - Temporary Concrete Barrier, Type 1
Sta. 301+46.6, LT 34.4' to Sta. 301+60.8, RT 3.0'
Sta. 303+39.7, RT 4.9' to Sta. 303+58.9, LT 29.9'

Item 526.302 - Portable Concrete Barrier, Anchored
Sta. 301+60.8, RT 3.0' to Sta. 301+81.5, RT 5.0'
Sta. 303+19.4, RT 5.0' to Sta. 303+39.7, RT 4.9'

Item 526.302 - Portable Concrete Barrier, Braced
Sta. 301+99.0, RT 5.0' to Sta. 303+19.4, RT 5.0'

PAVEMENT MARKING LEGEND

SSL = SINGLE SOLID LINE
DSL = DOUBLE SOLID LINE
(W) = WHITE
(Y) = YELLOW

KEY

- Drums
- Portable Concrete Barrier (PCB) or Temporary Concrete Barrier
- Direction of Vehicular Traffic
- Pedestrian Access
- Work Area
- Type 3 Barricade with sign
- Type 3 Barricade
- Portable Concrete Barrier with Light

STATE OF MAINE
DEPARTMENT OF TRANSPORTATION

PROJECT NO. BR-1927(400)

WIN 19274.00

BRIDGE NO. 2068

BRIDGE PLANS

STATE OF MAINE
Steven M. Hodgdon
11206
LICENSED PROFESSIONAL ENGINEER

PROJ. MANAGER	N. BENOIT		
DESIGN-DETAILED	JCM	KDW	10-14-13
CHECKED-REVIEWED	JAW	SMH	10-14-13
DESIGN2-DETAILED2	---	---	---
DESIGN3-DETAILED3	---	---	---
REVISIONS 1	---	---	---
REVISIONS 2	---	---	---
REVISIONS 3	---	---	---
REVISIONS 4	---	---	---
FIELD CHANGES	---	---	---

SIGNATURE
11206
P.E. NUMBER
11\13\2013
DATE

BERWICK BRIDGE
SALMON FALLS RIVER
BERWICK YORK COUNTY

TRAFFIC CONTROL PLANS (2 OF 2)

SHEET NUMBER
15
OF 56

Filename: ...\cad\st\planset\015_tcp_03.dgn Division: Structures Username: kwentworth Date:$date$

E

B438TR	B438TPSR	438TPSR	438TR
K2–4w 16w	K4–500w	K4–500w	K2–4w 16w

D

B438TER	A438TR	A438TPR	438TER	ZR
(5 SEC)	2N–.5w DN22–BH	K4–500w	(5 SEC)	K4–1000w

C

NXSR	SXSR	XPR	XR
K4–500w SLOW RELEASE	K4–500w SLOW RELEASE	DN11–1000w 2&3 HEAVY DUTY	K2–500w

B

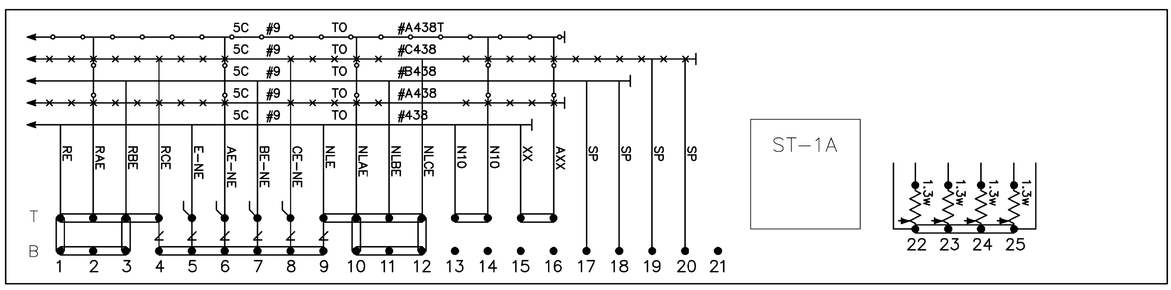

A

POR	LIGHTING TRANS.	EOR	CAPACITOR BANK
K4–50/50w HEAVY DUTY		FN16–500w	(2) 5000 MFD (1) 2500 MFD

LEGEND

– TEMPORARY OPEN

– NEW ADDED OR CABLE RESTORED

SHEET NUMBER 16 OF 56

BERWICK BRIDGE
SALMON FALLS RIVER
BERWICK YORK COUNTY

HSM CASE DETAILS
PHASE I

PROJ. MANAGER	N. BENOIT	BY	DATE
DESIGN-DETAILED	GB	KDW	10-14-13
CHECKED-REVIEWED	DC	SMH	10-14-13
DESIGN2-DETAILED2	---	---	---
DESIGN3-DETAILED3	---	---	---
REVISIONS 1	---		---
REVISIONS 2	---		---
REVISIONS 3	---		---
REVISIONS 4	---		---
FIELD CHANGES	---		---

SIGNATURE
11206
P.E. NUMBER
11\13\2013
DATE

STATE OF MAINE
Steven M. Hodgdon
11206
LICENSED
PROFESSIONAL ENGINEER

STATE OF MAINE
DEPARTMENT OF TRANSPORTATION

PROJECT NO. BR-1927(400)

BRIDGE NO. 2068 WIN 19274.00 BRIDGE PLANS

E

B438TR	B438TPSR	438TPSR	438TR
K2–4w 16w	K4–500w	K4–500w	K2–4w 16w

D

B438TER	A438TR	A438TPR	438TER	ZR
(5 SEC)	2N–.5w DN22–BH	K4–500w	(5 SEC)	K4–1000w

C

NXSR	SXSR	XPR	XR
K4–500w SLOW RELEASE	K4–500w SLOW RELEASE	DN11–1000w 2&3 HEAVY DUTY	K2–500w

B

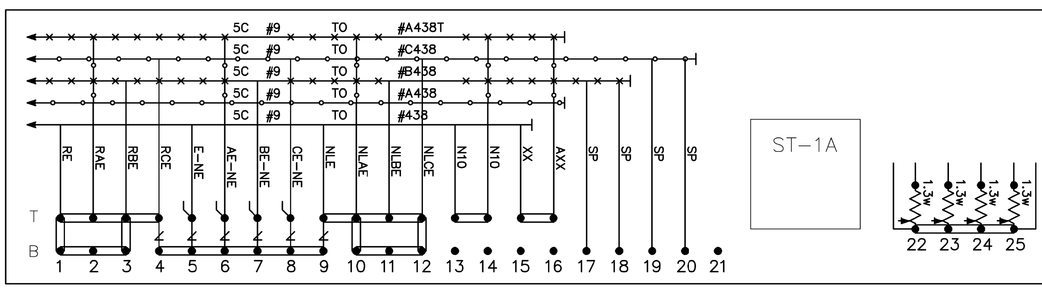

A

POR	LIGHTING TRANS.	EOR	CAPACITOR BANK
K4–50/50w HEAVY DUTY		FN16–500w	(2) 5000 MFD (1) 2500 MFD

LEGEND

–⊠– TEMPORARY OPEN

–o|o– NEW ADDED OR CABLE RESTORED

SHEET NUMBER 17 OF 56

BERWICK BRIDGE
SALMON FALLS RIVER
BERWICK YORK COUNTY

HSM CASE DETAILS PHASE II

PROJ. MANAGER	N. BENOIT	BY	DATE
DESIGN-DETAILED	GB	KDW	10-14-13
CHECKED-REVIEWED	DC	SMH	10-14-13
DESIGN2-DETAILED2	---	---	---
DESIGN3-DETAILED3	---	---	---
REVISIONS 1	---		---
REVISIONS 2	---		---
REVISIONS 3	---		---
REVISIONS 4	---		---
FIELD CHANGES	---		---

Steven M. Hodgdon
SIGNATURE
11206
P.E. NUMBER
11\13\2013
DATE

STATE OF MAINE Steven M. Hodgdon 11206 LICENSED PROFESSIONAL ENGINEER

STATE OF MAINE
DEPARTMENT OF TRANSPORTATION

PROJECT NO. BR-1927(400)

BRIDGE NO. 2068 WIN 19274.00 BRIDGE PLANS

E

B438TR	B438TPSR	438TPSR	438TR
K2–4w 16w	K4–500w	K4–500w	K2–4w 16w

D

B438TER	A438TR	A438TPR	438TER	ZR
(5 SEC)	2N–.5w DN22–BH	K4–500w	(5 SEC)	K4–1000w

C

NXSR	SXSR	XPR	XR
K4–500w SLOW RELEASE	K4–500w SLOW RELEASE	DN11–1000w 2&3 HEAVY DUTY	K2–500w

B

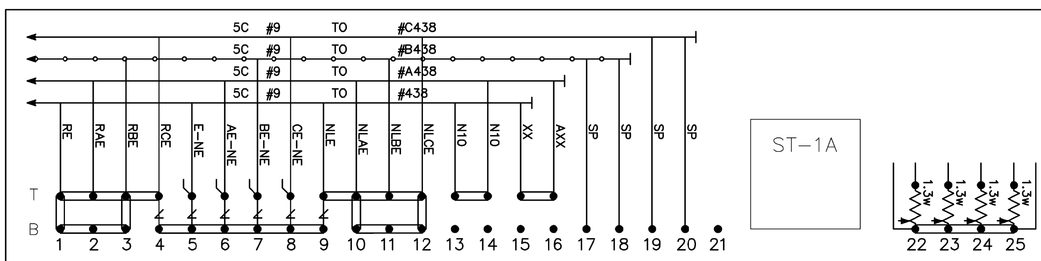

A

POR	LIGHTING TRANS.	EOR	CAPACITOR BANK
K4–50/50w HEAVY DUTY		FN16–500w	(2) 5000 MFD (1) 2500 MFD

LEGEND

– TEMPORARY OPEN

– NEW ADDED OR CABLE RESTORED

PROJ. MANAGER	N. BENOIT	BY	DATE
DESIGN-DETAILED	GB	KDW	10-14-13
CHECKED-REVIEWED	DC	SMH	10-14-13
DESIGN2-DETAILED2	---	---	---
DESIGN3-DETAILED3	---	---	---
REVISIONS 1	---		---
REVISIONS 2	---		---
REVISIONS 3	---		---
REVISIONS 4	---		---
FIELD CHANGES	---		---

SIGNATURE
11206
P.E. NUMBER
11\13\2013
DATE

STATE OF MAINE
Steven M. Hodgdon
11206
LICENSED
PROFESSIONAL ENGINEER

BERWICK BRIDGE
SALMON FALLS RIVER
BERWICK YORK COUNTY

HSM CASE DETAILS
PHASE III

STATE OF MAINE
DEPARTMENT OF TRANSPORTATION

PROJECT NO. BR-1927(400)

BRIDGE NO. 2068 WIN 19274.00 BRIDGE PLANS

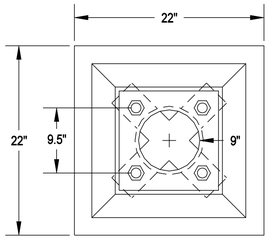

TOP VIEW
N.T.S.

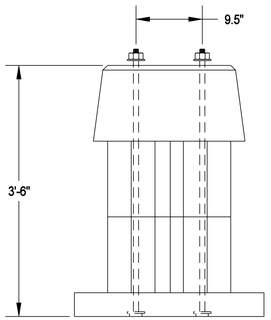

SIDE VIEW
N.T.S.

TEMPORARY PRECAST FLASHER FOUNDATION

TEMPORARY PRECAST FLASHER FOUNDATION NOTES:

1. TOP OF FOUNDATION SHALL BE SET LEVEL WITH THE TOP OF RAIL.
2. REINFORCEMENT SHALL BE PLACED NOT LESS THAN ONE INCH FROM OUTSIDE SURFACES.
3. BOLTS, NUTS AND WASHERS SHALL BE GALVANIZED. ANCHOR BOLTS SHALL BE MADE OF SAE-1020 STEEL, PLATED AFTER THREADING AND DRILLING.
4. TOP AND BOTTOM SURFACES OF ALL PARTS TO BE FLAT AND PARALLEL.
5. CONCRETE SHALL PRODUCE A COMPRESSIVE STRENGTH OF NOT LESS THAN 5,000 POUNDS PER SQUARE INCH AFTER 28 DAYS.

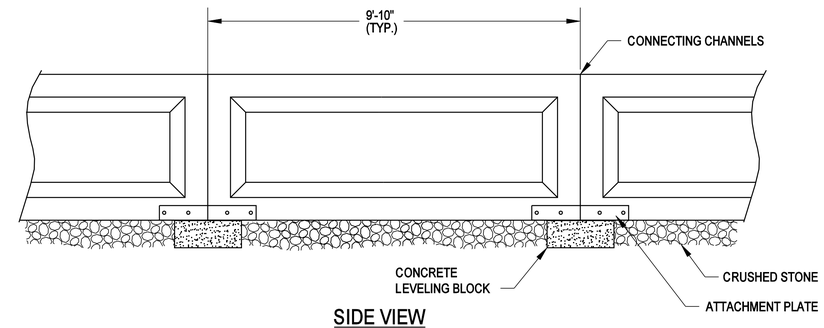

SIDE VIEW
N.T.S.

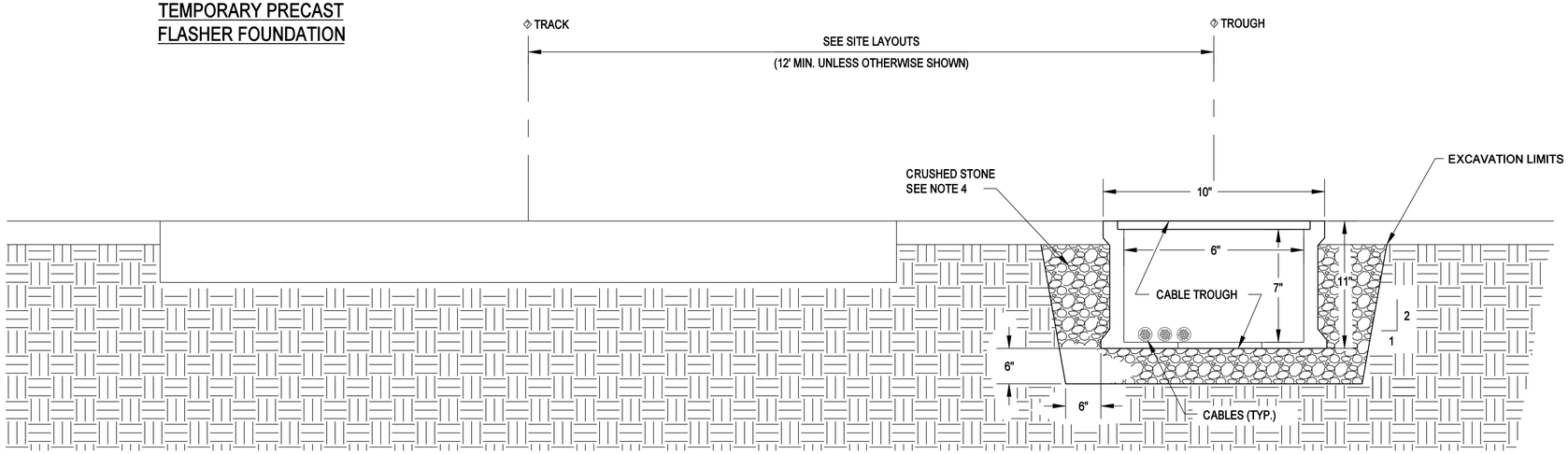

SECTION VIEW
N.T.S.

CABLE TROUGH NOTES:

1. LEVELING BLOCKS SHALL BE PLACED EVERY 9'-10" AND EVERY JOINT FOR SMALLER PIECES. BACK FILL TO TOP OF LEVELING BLOCKS WITH CRUSHED STONE.
2. BACK FILL WITH CRUSHED STONE PLACED AGAINST SIDES OF CHANNELS, SIMULTANEOUSLY IN SUCCESSIVE LAYERS OF 8" AND COMPACTED.
3. IF TROUGH IS LOCATED WITHIN THE INFLUENCE LINE MEASURES ARE REQUIRED TO FORTIFY CABLE TROUGH TO WITHSTAND APPROPRIATE COOPER SURCHARGE LOADS.
4. IF TROUGH IS WITHIN BALLAST, SUBSTITUTE BALLAST FOR CRUSHED STONE TO EXIST. BOTTOM OF BALLAST.
5. 6" CABLE TRAY TO BE H20 LOADING COMPLIANT

STATE OF MAINE
DEPARTMENT OF TRANSPORTATION

PROJECT NO. BR-1927(400)

BRIDGE NO. 2068

WIN 19274.00

BRIDGE PLANS

STATE OF MAINE
Steven M. Hodgdon
11206
LICENSED PROFESSIONAL ENGINEER

PROJ. MANAGER	N. BENOIT	BY	DATE
DESIGN-DETAILED	GB	KDW	10-14-13
CHECKED-REVIEWED	DC	SMH	10-14-13
DESIGN2-DETAILED2	---	---	---
DESIGN3-DETAILED3	---	---	---
REVISIONS 1	---	---	---
REVISIONS 2	---	---	---
REVISIONS 3	---	---	---
REVISIONS 4	---	---	---
FIELD CHANGES	---	---	---

SIGNATURE
11206
P.E. NUMBER
11\13\2013
DATE

BERWICK BRIDGE
SALMON FALLS RIVER
BERWICK YORK COUNTY

TEMP. FLASHER FOUNDATION & CABLE TROUGH

SHEET NUMBER
19
OF 56

Filename: ...\st\plonset\019_rrdetail_01.dgn Division: Structures Username: kwentworth Date:$date$

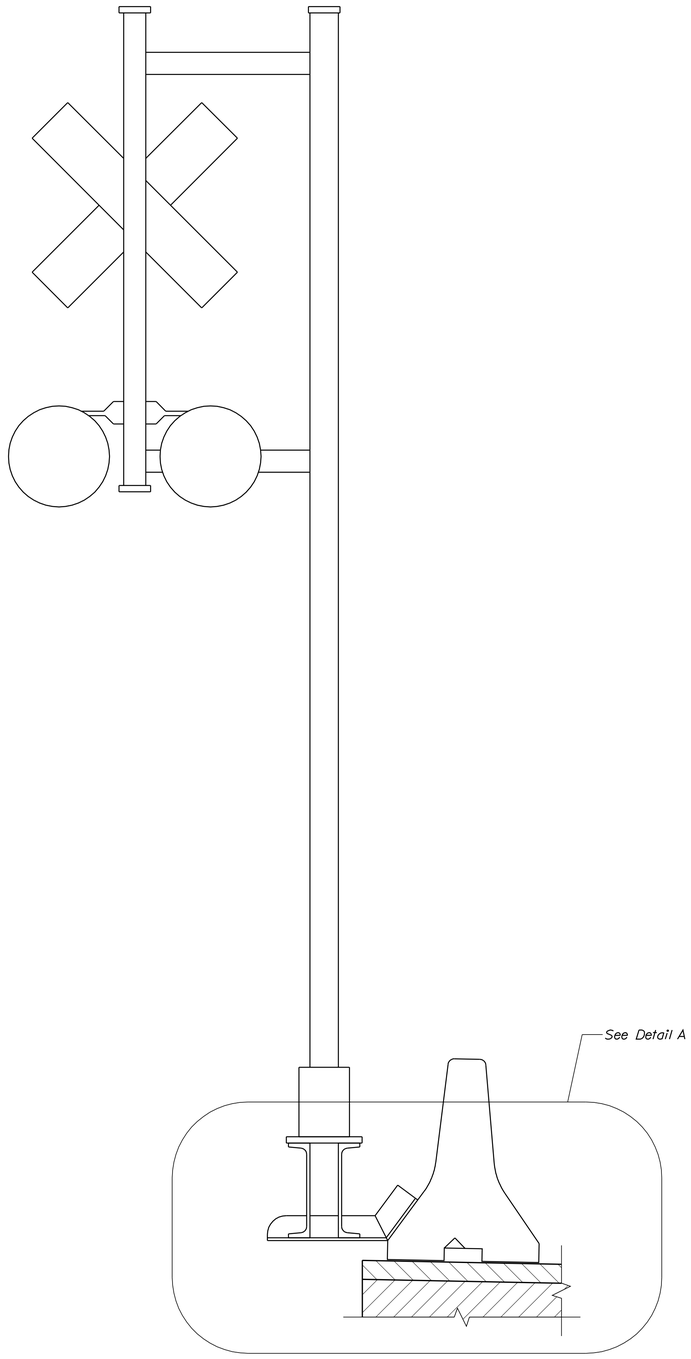

BARRIER MOUNTED RAILROAD FLASHER
Scale: 1" = 1'-0"

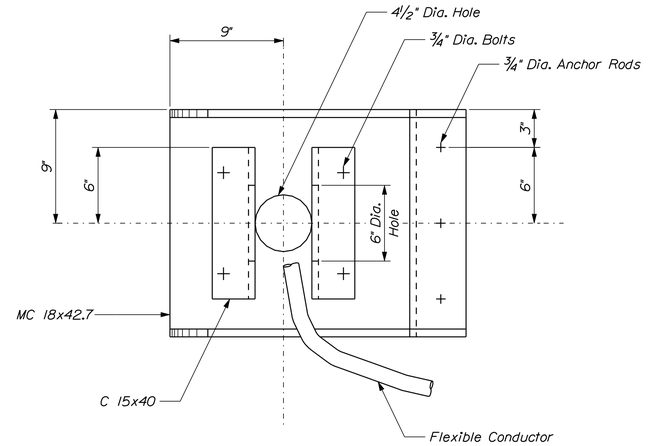

VIEW A-A
Scale: 2" = 1'-0"

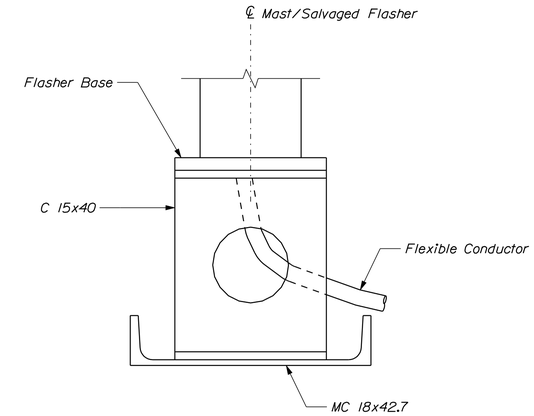

VIEW B-B
Scale: 2" = 1'-0"

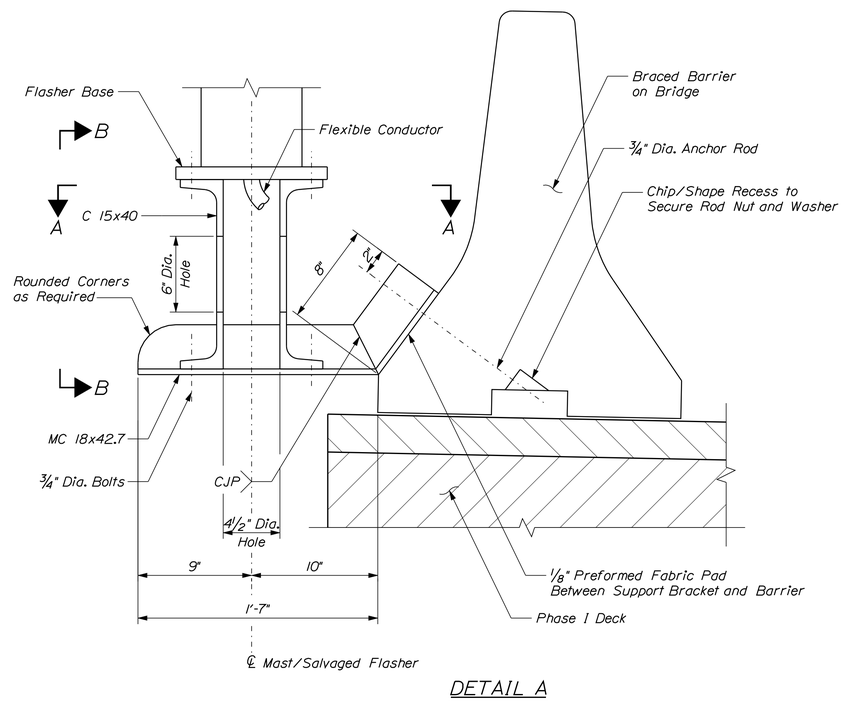

DETAIL A
Scale: 2" = 1'-0"

STATE OF MAINE
DEPARTMENT OF TRANSPORTATION

PROJECT NO. BR-1927(400)

BRIDGE NO. 2068

WIN 19274.00

BRIDGE PLANS

STATE OF MAINE
Steven M. Hodgdon
11206
LICENSED PROFESSIONAL ENGINEER

PROJ. MANAGER	N. BENOIT		
DESIGN-DETAILED	JGM	KDW	10-14-13
CHECKED-REVIEWED	JAW	SMH	10-14-13
DESIGN2-DETAILED2	---	---	---
DESIGN3-DETAILED3	---	---	---
REVISIONS 1	---	---	---
REVISIONS 2	---	---	---
REVISIONS 3	---	---	---
REVISIONS 4	---	---	---
FIELD CHANGES	---	---	---

SIGNATURE
11206
P.E. NUMBER
11\13\2013
DATE

BERWICK
BERWICK BRIDGE
SALMON FALLS RIVER
YORK COUNTY

BARRIER MOUNTED
RR FLASHER

SHEET NUMBER
20
OF 56

Filename: ...\st\planset\020_tempflasher.dgn Division: Structures Username: kwentworth Date:$date$

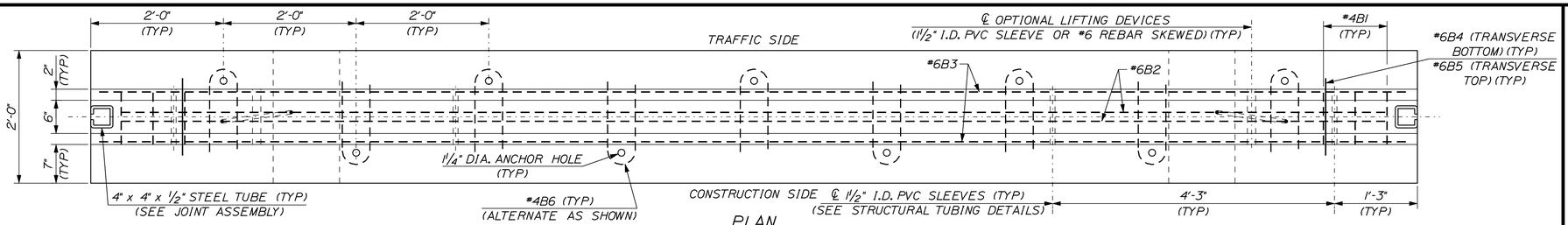

PLAN

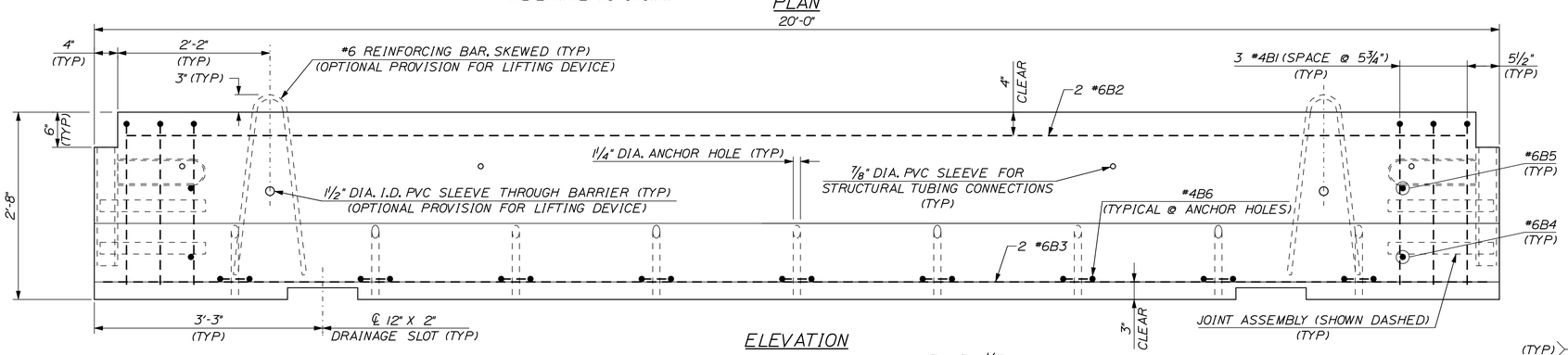

ELEVATION

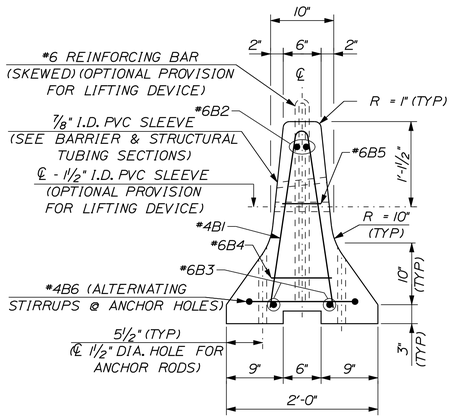

TYPICAL SECTION

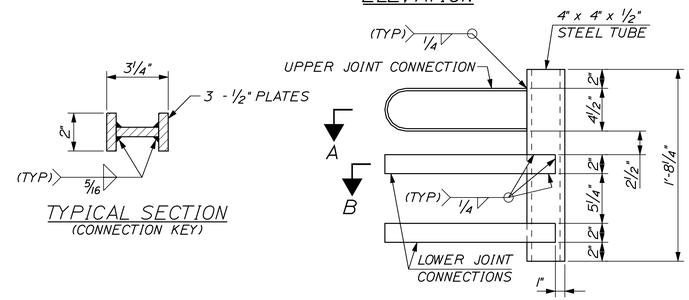

JOINT ASSEMBLY

TYPICAL SECTION
(CONNECTION KEY)

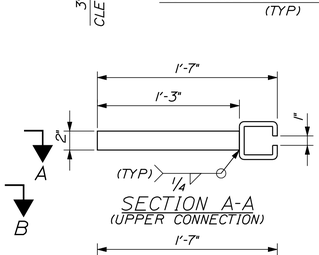

SECTION A-A
(UPPER CONNECTION)

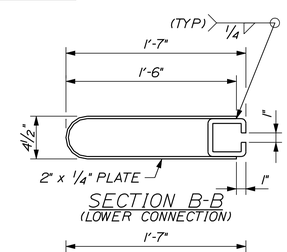

SECTION B-B
(LOWER CONNECTION)

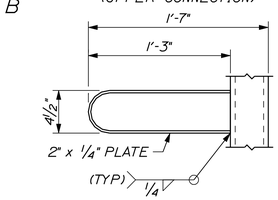

ELEVATION
(UPPER CONNECTION)

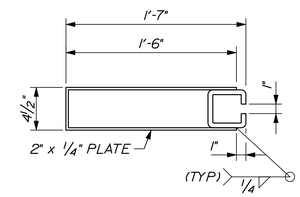

SECTION B-B
(LOWER CONNECTIONS - ALTERNATE)

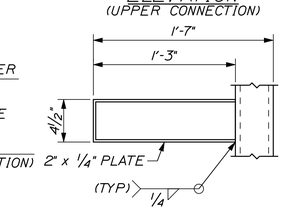

ELEVATION
(UPPER CONNECTION - ALTERNATE)

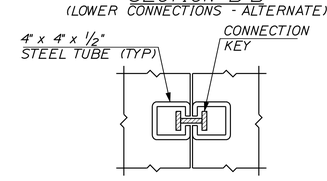

CONNECTION JOINT DETAIL

JOINT CONNECTION DETAILS

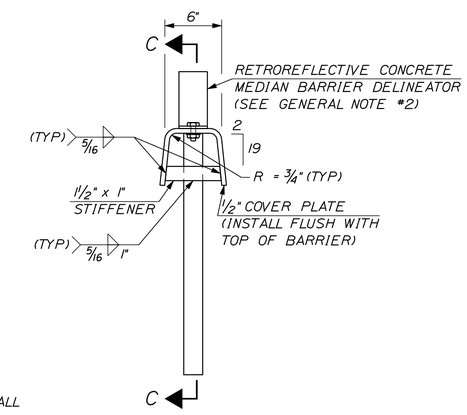

END VIEW

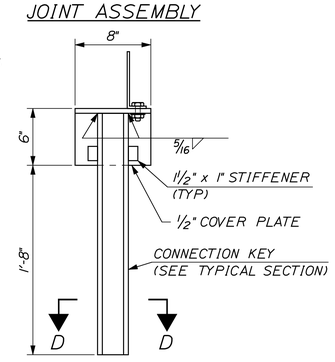

SECTION C-C

CONNECTION KEY ASSEMBLY DETAILS

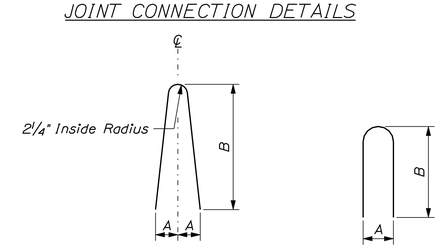

TYPE "I" REBAR

TYPE "II" REBAR

GENERAL NOTES

1. PORTABLE CONCRETE BARRIER SHALL BE FURNISHED BY THE CONTRACTOR AND PAID FOR AS ITEM 526.302, PORTABLE CONCRETE BARRIER, BRACED. CONCRETE BARRIER AND ALL ATTACHMENTS SHALL BE FABRICATED IN ACCORDANCE WITH SPECIAL PROVISIONS. ALL BARRIER UNITS FOR BRACED SYSTEMS SHALL BE 20' LONG.
2. THE CONTRACTOR SHALL FURNISH AND INSTALL APPROVED RETROREFLECTIVE DELINEATORS AT 25-FOOT INTERVALS ALONG TOP AND/OR ONE FOOT DOWN THE SIDE OF PORTABLE CONCRETE BARRIER, SUBSIDIARY TO ITEM 526.302 (SEE STANDARD NO. DL-1 OF NHDOT STANDARD PLANS FOR ROAD CONSTRUCTION). THE COLOR OF DELINEATORS SHALL, IN ALL INSTANCES, CONFORM TO THE COLOR OF EDGE LINE MARKINGS.

MATERIAL NOTES

1. BARRIERS SHALL HAVE MINIMUM COMPRESSIVE STRENGTH OF 4000 psi, AND SHALL HAVE A SMOOTH UNIFORM SURFACE FREE OF DEFECTS AND IRREGULARITIES. CASTING DATE SHALL BE SHOWN ON BARRIER. ALL EXPOSED EDGES OF CONCRETE SHALL BE CHAMFERED 3/4", UNLESS OTHERWISE NOTED.
2. ALL REINFORCING STEEL SHALL BE AASHTO M31 (ASTM A615) GRADE 60. ALL REINFORCEMENT SHALL HAVE 1 1/2" MINIMUM CLEAR COVER, UNLESS OTHERWISE NOTED.
3. STRUCTURAL STEEL, EXCEPT THE STEEL TUBES, SHALL BE ASTM A36 OR A572. ALL STEEL SHALL BE FABRICATED IN ACCORDANCE WITH SECTION 504.
4. STEEL TUBES, 6x6x3/16 & 4x4x1/2, SHALL BE ASTM A 500 GRADE B OR C. THE 6x6x3/16 TUBES SHALL BE 12' LONG AND GALVANIZED IN ACCORDANCE WITH SECTION 504.
5. A MINIMUM OF 2 RECESSED LIFTING DEVICES, EACH WITH THE CAPACITY TO LIFT A MASS OF 6 TONS (MINIMUM), SHALL BE INSTALLED TO EACH BARRIER UNIT. TWENTY FOOT LONG CONCRETE BARRIER UNITS ARE APPROXIMATELY 400 LBS./FT.
6. DELINEATORS SHALL BE ATTACHED TO BARRIER USING AN APPROVED ADHESIVE MATERIAL OR AS SHOWN ON THIS SHEET.

REINFORCING SCHEDULE (PER 20' BARRIER UNIT)

MARK	SIZE	LENGTH	# PIECES	TYPE	A	B	C	LOCATION
B1	#4	4'-10"	6	I	5"	2'-4"	1"	STIRRUPS
B2	#6	19'-1"	2	—				LONGITUDINAL (TOP)
B3	#6	19'-9"	2	—				LONGITUDINAL (BOTTOM)
B4	#6	1'-2"	2	—				TRANSVERSE (BOTTOM)
B5	#6	6"	2	—				TRANSVERSE (TOP)
B6	#4	2'-9"	9	II	5"	1'-3"		STIRRUPS

STATE OF MAINE
DEPARTMENT OF TRANSPORTATION

PROJECT NO. BR-1927(400)

BRIDGE NO. 2068

WIN 19274.00

BRIDGE PLANS

STATE OF MAINE — Steven M. Hodgdon — 11206 — PROFESSIONAL ENGINEER — LICENSED

PROJ. MANAGER	N. BENOIT		
DESIGN-DETAILED	JGM	KDW	10-14-13
CHECKED-REVIEWED	JAW	SMH	10-14-13
DESIGN2-DETAILED2	---	---	---
DESIGN3-DETAILED3	---	---	---
REVISIONS 1	---	---	---
REVISIONS 2	---	---	---
REVISIONS 3	---	---	---
REVISIONS 4	---	---	---
FIELD CHANGES	---	---	---

SIGNATURE: Steven M. Hodgdon
P.E. NUMBER: 11206
DATE: 11\13\2013

BERWICK BRIDGE
SALMON FALLS RIVER
YORK COUNTY
BERWICK

PORTABLE CONCRETE BARRIER (BRACED) (1 OF 2)

SHEET NUMBER
21
OF 56

Filename: ...\cad\st\planset\021_tcp_01.dgn Division: Structures Username: kwentworth Date:$date$

Filename: ...\cad\st\planset\022_tcp_02.dgn Division: Structures Username: kwentworth Date:$date$

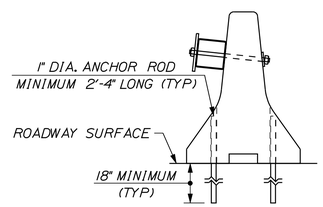

ANCHORAGE DETAIL

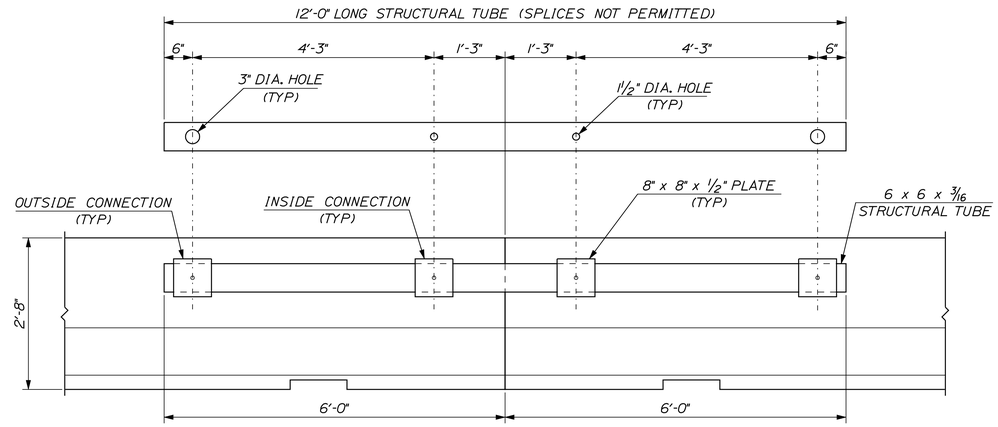

STRUCTURAL TUBING DETAILS

PVC SLEEVE OPENINGS SHALL BE MODIFIED/DRILLED AS REQUIRED TO PROPERLY ALIGN STRUCTURAL TUBE BRACING UNITS FOR CURVED ALIGNMENTS

THE PRESENCE OF NORMAL HOLES WHICH HAVE BEEN MODIFIED/DRILLED WILL NOT AFFECT THE REUSE OF CONCRETE BARRIER UNITS

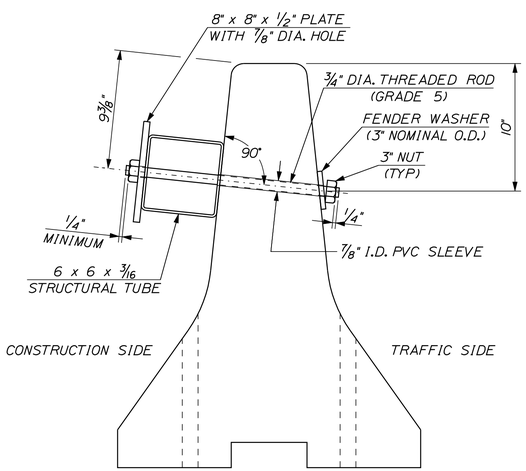

BARRIER & STRUCTURAL TUBING SECTIONS

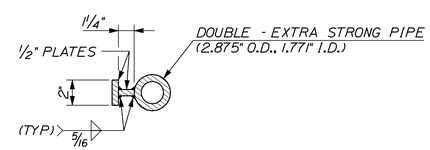

TYPICAL SECTION
(TRANSITION KEY)

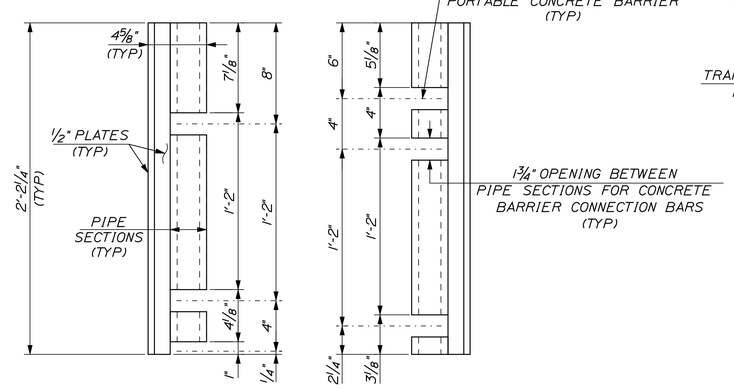

TRANSITION KEY ELEVATIONS

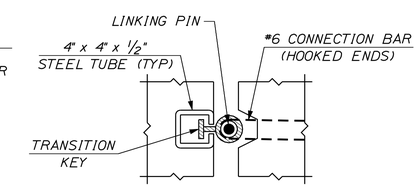

TRANSITION JOINT DETAILS

STATE OF MAINE
DEPARTMENT OF TRANSPORTATION

PROJECT NO. BR-1927(400)

BRIDGE NO. 2068 | WIN 19274.00 | BRIDGE PLANS

STATE OF MAINE
Steven M. Hodgdon
11206
LICENSED PROFESSIONAL ENGINEER

		BY	DATE
PROJ. MANAGER	N. BENOIT		
DESIGN-DETAILED	JCM	KDW	10-14-13
CHECKED-REVIEWED	JAW	SMH	10-14-13
DESIGN2-DETAILED2	---	---	---
DESIGN3-DETAILED3	---	---	---
REVISIONS 1	---	---	---
REVISIONS 2	---	---	---
REVISIONS 3	---	---	---
REVISIONS 4	---	---	---
FIELD CHANGES	---	---	---

Steven M. Hodgdon
SIGNATURE
11206
P.E. NUMBER
11\13\2013
DATE

BERWICK BRIDGE
SALMON FALLS RIVER
BERWICK YORK COUNTY

PORTABLE CONCRETE BARRIER (BRACED) (2 OF 2)

SHEET NUMBER
22
OF 56

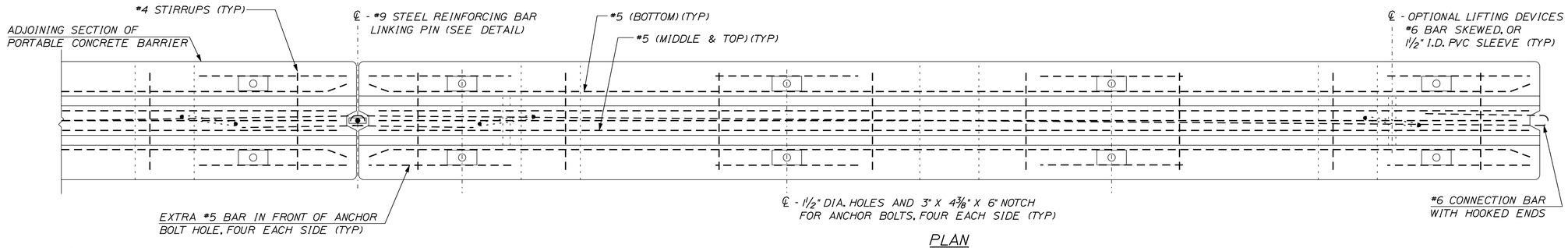

PLAN

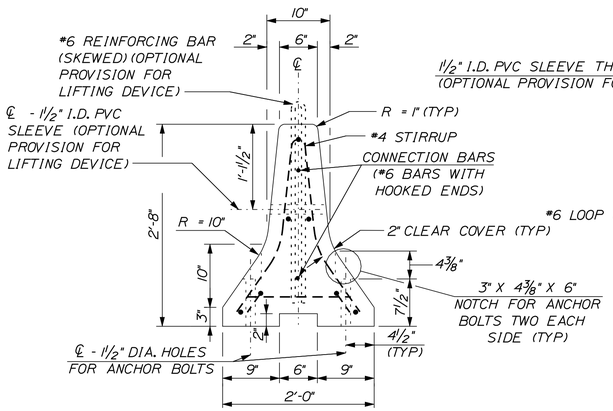

TYPICAL SECTION

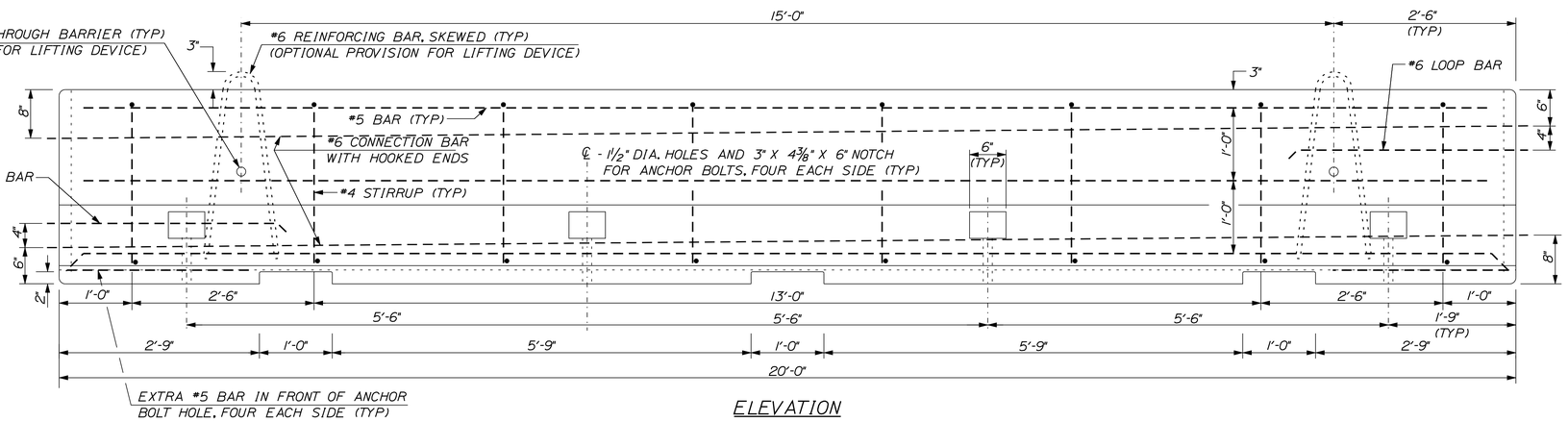

ELEVATION

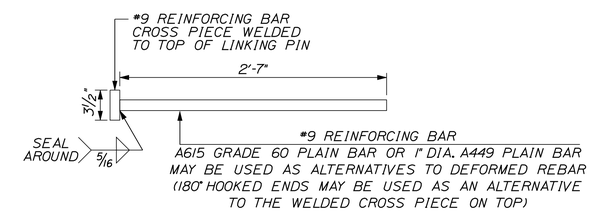

LINKING PIN

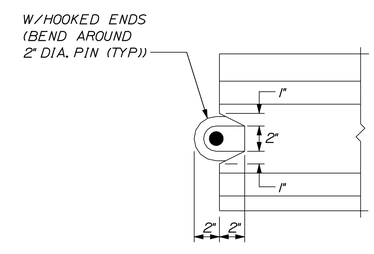

END NOTCH DETAIL

GENERAL NOTES

1. THE PORTABLE CONCRETE BARRIER DETAILS, AS SHOWN ON THIS SHEET, ARE IN COMPLIANCE WITH THE REQUIREMENTS OF NCHRP REPORT 350.
2. CONCRETE BARRIER SHALL BE FURNISHED BY THE CONTRACTOR AND PAID AS ITEM 526.302, PORTABLE CONCRETE BARRIER, ANCHORED. END TREATMENTS AND CONNECTIONS TO EXISTING BARRIERS, WHEN REQUIRED, SHALL BE SUBSIDIARY TO ITEM 526.302.
3. THE CONTRACTOR SHALL FURNISH AND INSTALL APPROVED RETROREFLECTIVE DELINEATORS AT 25-FOOT INTERVALS ALONG THE TOP AND/OR ONE FOOT DOWN THE SIDE OF THE PORTABLE CONCRETE BARRIER, SUBSIDIARY TO ITEM 526.302. THE COLOR OF DELINEATORS SHALL, IN ALL CASES, CONFORM TO THE COLOR OF EDGE LINE MARKINGS.
4. UNPROTECTED OPENINGS IN PORTABLE CONCRETE BARRIER WILL NOT BE PERMITTED, UNLESS SPECIFICALLY AUTHORIZED BY THE RESIDENT.
5. OTHER BARRIER CONFIGURATIONS AND END CONNECTIONS ARE SUBJECT TO APPROVAL BY THE RESIDENT. BARRIERS OF DIFFERENT GEOMETRIC SHAPES SHALL NOT BE MIXED ON THE SAME RUN.

MATERIAL NOTES

1. BARRIERS SHALL HAVE A MINIMUM 28 DAY COMPRESSION STRENGTH OF 4,000 PSI. BARRIERS SHALL HAVE A SMOOTH UNIFORM SURFACE FREE OF DEFECTS AND IRREGULARITIES. CASTING DATE SHALL BE SHOWN ON BARRIER. ALL EXPOSED EDGES OF CONCRETE SHALL BE CHAMFERED ¾" UNLESS OTHERWISE NOTED.
2. ALL REINFORCING STEEL SHALL BE AASHTO M31 (ASTM-A615) GRADE 60. REINFORCEMENT SHOWN IS THE MINIMUM REQUIRED.
3. EACH BARRIER UNIT SHALL INCLUDE ONE LINKING PIN.
4. LIFTING OPTIONS SHOWN ARE ADVISORY ONLY. IT SHALL BE THE CONTRACTORS' RESPONSIBILITY TO PROVIDE ADEQUATE LIFTING POINTS ON EACH BARRIER.
5. CONNECTING DEVICES SHALL BE COMPATIBLE WITH OTHER UNITS.
6. DELINEATORS SHALL BE ATTACHED TO THE BARRIER USING AN APPROVED ADHESIVE MATERIAL OR BY BOLTS AND ANCHORS AS SHOWN ON NHDOT STANDARD NO. DL-1.

PORTABLE CONCRETE BARRIER REINFORCING SCHEDULE

DESCRIPTION	SIZE	NO.	UNBENT LENGTH	TYPE
CONNECTION BARS	#6	2	24'-9½"	
BOTTOM LONGITUDINAL	#5	2	19'-10"	
CENTER & TOP LONGITUDINAL	#5	3	19'-4"	
BOTTOM TRANSVERSE	#5	8	1'-4"	
STIRRUPS	#4	8	5'-0"	
EXTRA ANCHOR HOLE BARS	#5	8	2'-5"	
LIFTING DEVICE (OPTIONAL)	#6	2	5'-4"	
LOOP BAR	#6	2	6'-10¼"	

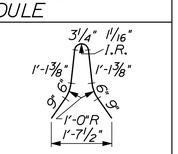

#4 STIRRUP BARS

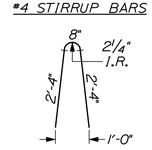

#6 LIFTING DEVICES (OPTIONAL)

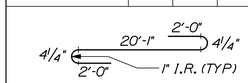

#6 CONNECTION BARS

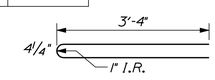

#6 LOOP BAR (TOP VIEW)

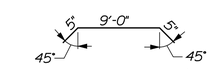

#5 BOTTOM LONGITUDINAL BARS

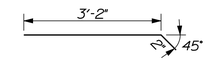

#6 LOOP BAR (SIDE VIEW)

STATE OF MAINE
DEPARTMENT OF TRANSPORTATION

PROJECT NO. BR-1927(400)

BRIDGE NO. 2068

WIN 19274.00

BRIDGE PLANS

STATE OF MAINE — Steven M. Hodgdon — 11206 — PROFESSIONAL ENGINEER — LICENSED

		BY	DATE
PROJ. MANAGER	N. BENOIT		
DESIGN-DETAILED	JCM	KDW	10-14-13
CHECKED-REVIEWED	JAW	SMH	10-14-13
DESIGN2-DETAILED2	---	---	---
DESIGN3-DETAILED3	---	---	---
REVISIONS 1	---	---	---
REVISIONS 2	---	---	---
REVISIONS 3	---	---	---
REVISIONS 4	---	---	---
FIELD CHANGES	---	---	---

SIGNATURE
11206
P.E. NUMBER
11\13\2013
DATE

BERWICK BRIDGE
SALMON FALLS RIVER
BERWICK YORK COUNTY

PORTABLE CONCRETE BARRIER (ANCHORED)

SHEET NUMBER
23
OF 56

Filename: ...\cad\st\planset\023_tcp_03.dgn Division: Structures Username: kwentworth Date:$date$

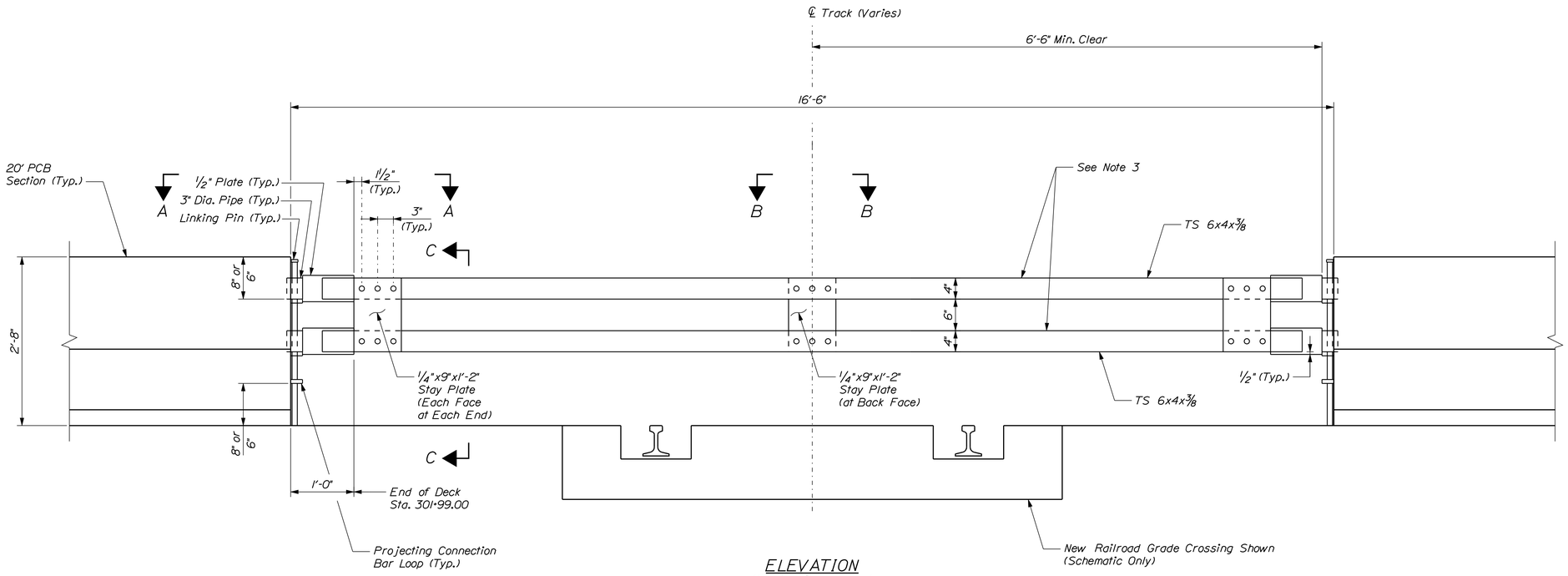

ELEVATION
(Looking Downstream)

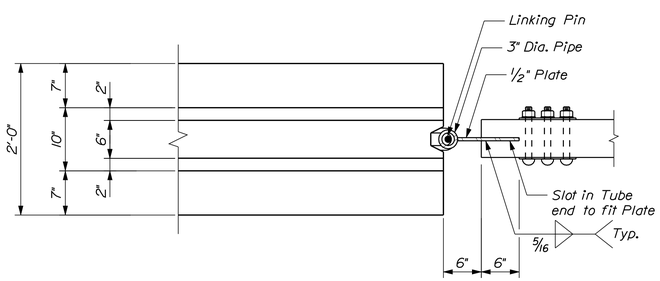

VIEW A-A

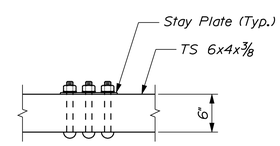

VIEW B-B

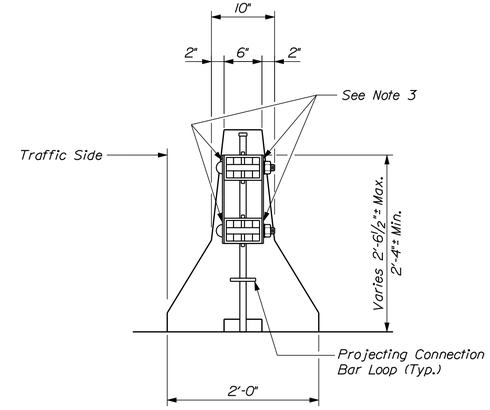

VIEW C-C
(Phase I Shown, Phase II Similar, Opposite Hand)

MATERIALS

Tubular Steel. . . . . ASTM A500 Grade B or C
Pipe. . . . . ASTM A53
Other Structural Steel. . . . . ASTM A36 or A572
Bolts. . . . . ASTM A307 or Better

NOTES

1. Temporary steel barrier and hardware shall be painted a bright yellow on all exposed surfaces.
2. All cut edges shall be smooth and free of burrs.
3. Apply 2-inch wide retro-reflective tape, with alternating red and white segments along faces of tubes as shown.
4. All cost for furnishing, installing, and maintaining the Temporary Steel Railroad Crossing Barrier shall be incidental to the contract items for Maintenance of Traffic Control Devices and Portable Concrete Barrier.

STATE OF MAINE
DEPARTMENT OF TRANSPORTATION
PROJECT NO. BR-1927(400)
BRIDGE NO. 2068
WIN 19274.00
BRIDGE PLANS

STATE OF MAINE Steven M. Hodgdon 11206 LICENSED PROFESSIONAL ENGINEER

	BY	DATE
PROJ. MANAGER	N. BENOIT	
DESIGN-DETAILED	JGM	KDW	10-14-13
CHECKED-REVIEWED	JAW	SMH	10-14-13
DESIGN2-DETAILED2	---	---	---
DESIGN3-DETAILED3	---	---	---
REVISIONS 1	---	---	---
REVISIONS 2	---	---	---
REVISIONS 3	---	---	---
REVISIONS 4	---	---	---
FIELD CHANGES	---	---	---

Steven M. Hodgdon — SIGNATURE
11206 — P.E. NUMBER
11\13\2013 — DATE

BERWICK BRIDGE
SALMON FALLS RIVER
BERWICK YORK COUNTY

TEMPORARY RAILROAD CROSSING BARRIER

SHEET NUMBER
24
OF 56

Filename: ...\024_railbarrier_01.dgn Division: Structures Username: kwentworth Date:$date$

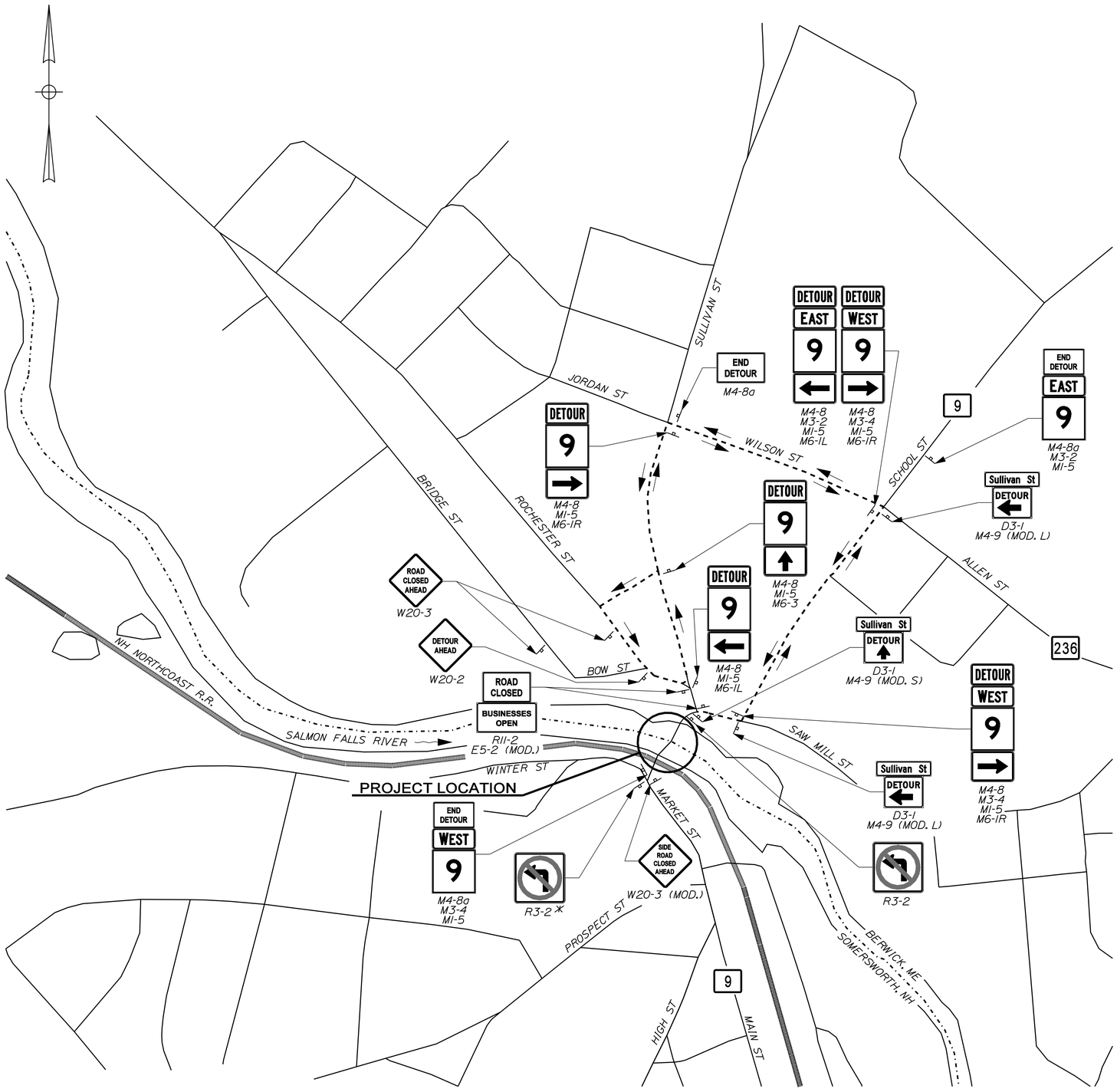

PLAN

200 0 200 400
Scale of Feet

* - PLACE R3-2 AT WINTER STREET DURING TRAFFIC CONTROL PHASE 2 ONLY

DETOUR SIGN SUMMARY

Sign		Text Dimensions (Inches) Letter Height	Text Dimensions (Inches) Vertical Spacing	Size	Quantity and Color
M1-5	9	SHSB		24"x24"	8 - Black on White
M3-2	EAST			24"x12"	2 - Black on White
M3-4	WEST			24"x12"	3 - Black on White
M4-8	DETOUR			24"x12"	6 - Black on Orange
M4-8a	END DETOUR			24"x18"	3 - Black on Orange
M4-9 (MOD. L)	DETOUR ←			30"x24"	2 - Black on Orange
M4-9 (MOD. S)	DETOUR ↑	5"		30"x24"	1 - Black on Orange
M6-1 (L or R)	←	SHSB		21"x15"	5 - Black on Orange
M6-3	↑			21"x15"	1 - Black on Orange
W20-2	DETOUR AHEAD			36"x36"	1 - Black on Orange
W20-3	ROAD CLOSED AHEAD			36"x36"	2 - Black on Orange
W20-3 (MOD.)	SIDE ROAD CLOSED AHEAD	5" 5" 5" 5"	2.5" 2.5" 2.5"	36"x36"	1 - Black on Orange
R3-2		SHSB		30"x30"	2 - Black/Red on White
R9-11aR	SIDEWALK CLOSED → CROSS HERE			24"x12"	1 - Black on White
R9-11aL	SIDEWALK CLOSED ← CROSS HERE			24"x12"	1 - Black on White
R11-2	ROAD CLOSED			48"x30"	2 - Black on White
D3-1	Sullivan St	6"/4.5"		44"x9"	3 - Black on Orange
E5-2 (MOD.)	BUSINESSES OPEN	5" 5"	4"	48"x24"	2 - Black on Orange

SHSB - Text Dimensions Shall Conform to "Standard Highway Signs Book" - 2012 Edition.

STATE OF MAINE
DEPARTMENT OF TRANSPORTATION

PROJECT NO. BR-1927(400)

WIN 19274.00

BRIDGE NO. 2068

BRIDGE PLANS

STATE OF MAINE
Steven M. Hodgdon
11206
LICENSED PROFESSIONAL ENGINEER

		BY	DATE
PROJ. MANAGER	N. BENOIT		
DESIGN-DETAILED	MLG	JAR	10-14-13
CHECKED-REVIEWED	MDS	SMH	10-14-13
DESIGN2-DETAILED2	---	---	---
DESIGN3-DETAILED3	---	---	---
REVISIONS 1	---	---	---
REVISIONS 2	---	---	---
REVISIONS 3	---	---	---
REVISIONS 4	---	---	---
FIELD CHANGES	---	---	---

SIGNATURE
11206
P.E. NUMBER
11\13\2013
DATE

BERWICK BRIDGE
SALMON FALLS RIVER
BERWICK YORK COUNTY

LOCAL DETOUR PLAN

SHEET NUMBER
25
OF 56

Filename: ...\cad\st\planset\025_detplan.dgn Division: Structures Username: kwentworth Date:$date$

Filename: ...\st\planset\026_detour_01.dgn Division: Structures Username: kwentworth Date:$date$

1 DETOUR AHEAD

2 BRIDGE CLOSED 500 FT.

3 BRIDGE CLOSED 1000 FT.

4 DETOUR EAST 9

5 DETOUR EAST 9

6 DETOUR EAST 9

7 DETOUR EAST 9

8 DETOUR WEST 9

9 DETOUR WEST 9

10 DETOUR WEST 9

11 DETOUR WEST 9

12 DETOUR EAST 9

13 9 BRIDGE CLOSED AT ME./N.H. BORDER

14 DETOUR EAST 9

15 DETOUR EAST 9

16 DETOUR WEST 9

17 BRIDGE CLOSED DETOUR L or R Arrow

18 DETOUR WEST 9

19 END DETOUR WEST 9

20 END DETOUR EAST 9

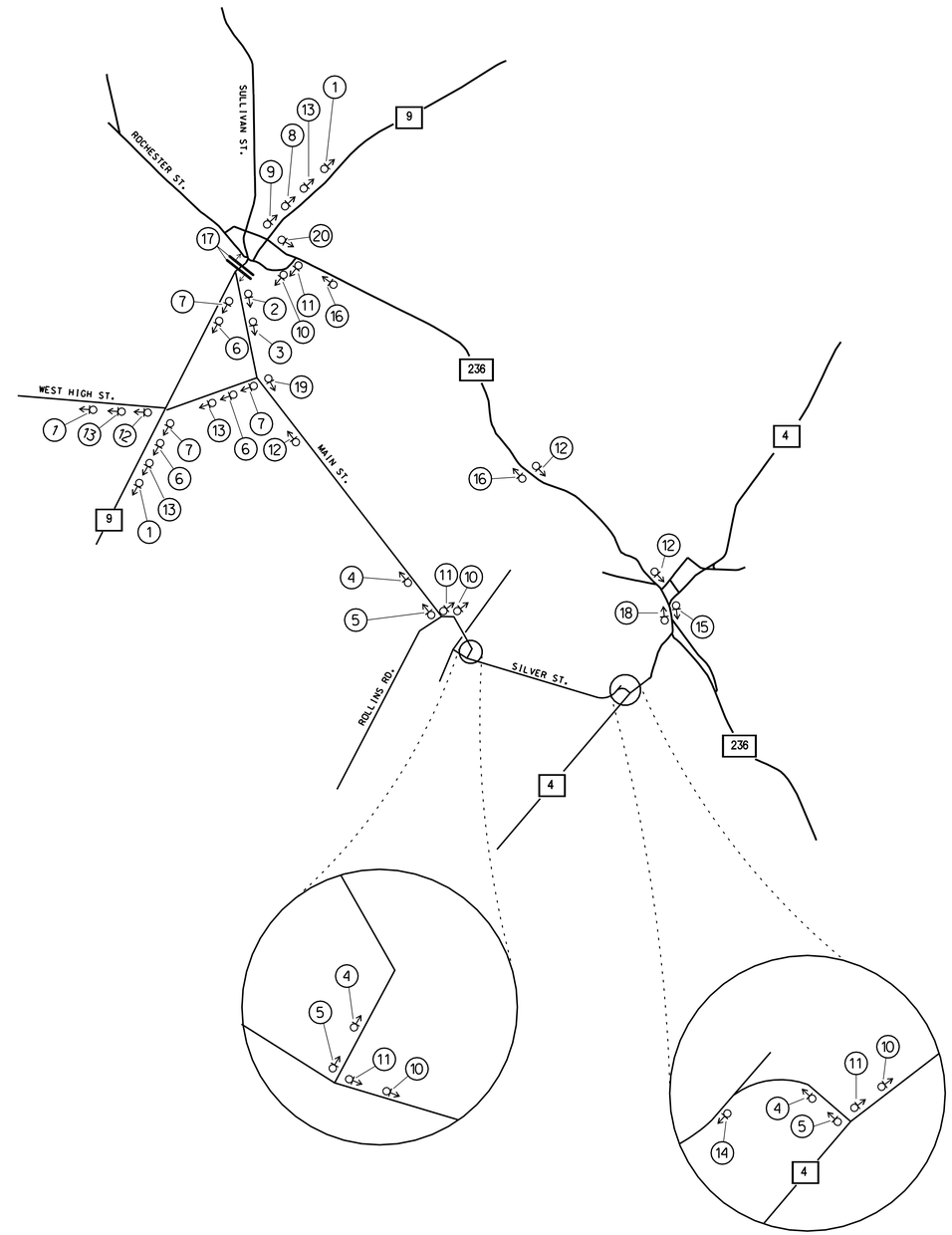

GENERAL NOTES

1) Cover all conflicting route and directional signs.
2) Other signs may be needed as directed by the Resident.
3) Exact location of all traffic control devices shall be determined in the field by the Resident.
4) Cover detour signs as directed by Resident when not in use.

NOT TO SCALE

STATE OF MAINE
DEPARTMENT OF TRANSPORTATION

PROJECT NO. BR-1927(400)

BRIDGE NO. 2068 — WIN 19274.00 — BRIDGE PLANS

STATE OF MAINE — Steven M. Hodgdon — 11206 — LICENSED PROFESSIONAL ENGINEER

PROJ. MANAGER	N. BENOIT	BY	DATE
DESIGN-DETAILED	MaineDOT	MaineDOT	10-14-13
CHECKED-REVIEWED	MaineDOT	SMH	10-14-13
DESIGN2-DETAILED2	---	---	---
DESIGN3-DETAILED3	---	---	---
REVISIONS 1	---	---	---
REVISIONS 2	---	---	---
REVISIONS 3	---	---	---
REVISIONS 4	---	---	---
FIELD CHANGES	---	---	---

SIGNATURE — P.E. NUMBER 11206 — DATE 11\13\2013

BERWICK BRIDGE
SALMON FALLS RIVER
BERWICK YORK COUNTY

BRIDGE CLOSURE
DETOUR PLAN

SHEET NUMBER
26
OF 56

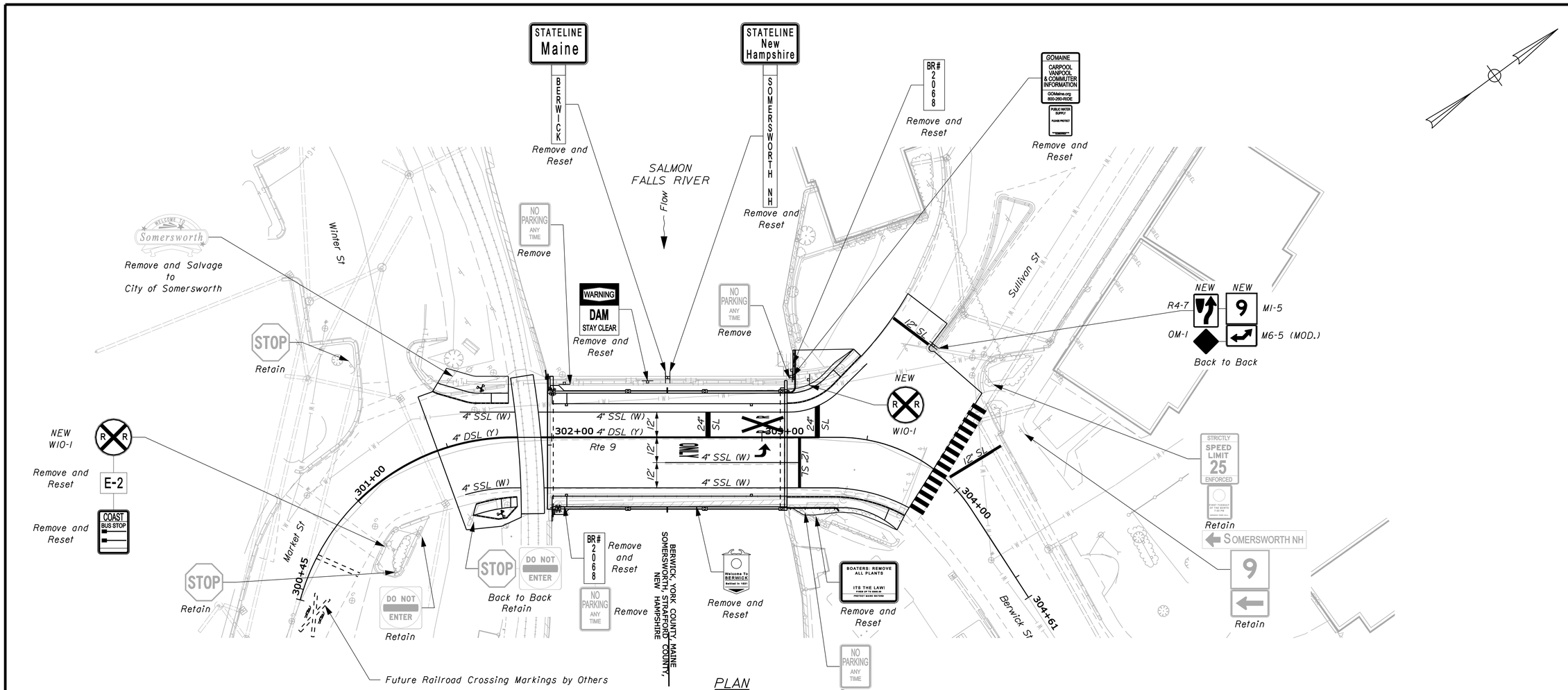

PERMANENT SIGN SUMMARY

Sign	Text Dimensions (Inches) Letter Height	Text Dimensions (Inches) Vertical Spacing	Size	Quantity and Color
R4-7	SHSB		24"x30"	1 - Black on White
OM-1			18"x18"	1 - Yellow
M1-5			24"x24"	1 - Black on White
M6-5 (MOD.)			21"x15"	1 - Black on White
W10-1			36" DIA	2 - Black on Yellow

SHSB - Text Dimensions Shall Conform to "Standard Highway Signs Book" - 2012 Edition.

PAVEMENT MARKING LEGEND

SL = SINGLE SOLID LINE (STOPLINE)
SSL = SINGLE SOLID LINE
SBL = SINGLE BROKEN LINE
DSL = DOUBLE SOLID LINE
(W) = WHITE
(Y) = YELLOW
= WHITE LEFT OR RIGHT ARROW
= CROSS WALK

SIGNING NOTES:

1. Contractor shall contact MaineDOT Region 1 District Engineer (207-885-7041) 2 weeks prior to reinstalling demounted signs.

STATE OF MAINE
DEPARTMENT OF TRANSPORTATION

PROJECT NO. BR-1927(400)

BRIDGE NO. 2068 — WIN 19274.00 — BRIDGE PLANS

STATE OF MAINE — Steven M. Hodgdon — 11206 — LICENSED PROFESSIONAL ENGINEER

PROJ. MANAGER	N. BENOIT		
DESIGN-DETAILED	JCM	KDW	10-14-13
CHECKED-REVIEWED	JAW	SMH	10-14-13
DESIGN2-DETAILED2	---	---	---
DESIGN3-DETAILED3	---	---	---
REVISIONS 1	---	---	---
REVISIONS 2	---	---	---
REVISIONS 3	---	---	---
REVISIONS 4	---	---	---
FIELD CHANGES	---	---	---

SIGNATURE — P.E. NUMBER 11206 — DATE 11\13\2013

BERWICK BRIDGE
SALMON FALLS RIVER
BERWICK YORK COUNTY

SIGNING AND PAVEMENT MARKING PLAN

SHEET NUMBER 27 OF 56

Filename: ...\st\planset\027_signplan.dgn Division: Structures Username: kwentworth Date:$date$

SIGNAL HEAD DATA

Existing	Proposed	
A2.B1. B2.C1.C2	P1-P2	A1
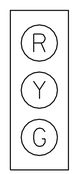		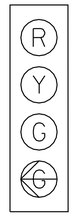
12" LED Lens	16" X 18" Pedestrian Signal	12" LED Lens

PROPOSED PHASE SEQUENCE

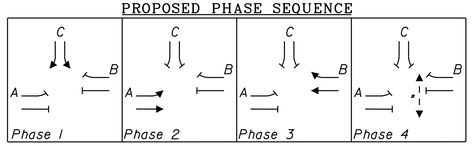

* = Normal DW. Upon pedestrian actuation. W/FDW Countdown

TEMPORARY PHASE SEQUENCE

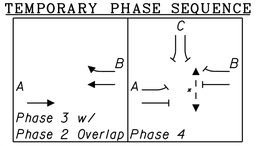

* = Normal DW. Upon pedestrian actuation. W/FDW Countdown

LIST OF MAJOR ITEMS

Item Description	Qty
One-way, 4-Section, 12-Inch Astrobracket mounted Traffic Signal Head (Item 643.71)	1
Pedestrian Signal Head (Item 643.71)	2
Pedestrian Pushbutton with sign (Item 643.71)	2
Overhead Sign (Item 643.72)	1
Conductor for Railroad Preemption (Item 643.71)	415 LF
Precast Concrete Junction Box (Item 626.11)	2
3-Inch Non-Metallic Conduit (Item 626.22)	40 LF

EXISTING MAST ARM MOUNTED SIGNS

R10-17a(MOD)
3 - Retained

M1-5
1 - Retained
M6-5
1 - Retained

TEMPORARY MAST ARM MOUNTED SIGNS

R3-2
36"x36"
1 - Proposed

EMERGENCY VEHICLE PRE-EMPTION OPERATION

ID	Preempt Assignment	Active Phase
R1	1	Ø2
R2	2	Ø1
R3	3	Ø3
R4	4	Ø2

EMERGENCY VEHICLE PRE-EMPTION NOTES:

1. Pre-emption signals shall be serviced on a priority basis with receivers assigned descending priorities (1 = highest, 4 = lowest)

2. In response to a pre-emption signal received at an intersection by an optical detector, the controller shall hold or advance to and hold the emergency active phase green for a minimum of 10 seconds or until the pre-emption signal ceases. The controller shall then time pre-emption phase clearance (3.5 seconds yellow and 2.0 seconds all red) and service subsequent emergency active phases as necessary. At the completion of the pre-emption cycle, the controller shall time the pre-emption clearance and resume normal signal operation.

3. Minimum green and normal vehicle and pedestrian clearance shall be provided on phases that are to be terminated by pre-emption demand.

4. Preempt assignment 1 is railroad preemption.

5. Confirmation strobes shall be illuminated whenever any emergency vehicle preemption green is on.

6. Existing preemption shall be maintained throughout the temporary and proposed signal phasing sequences.

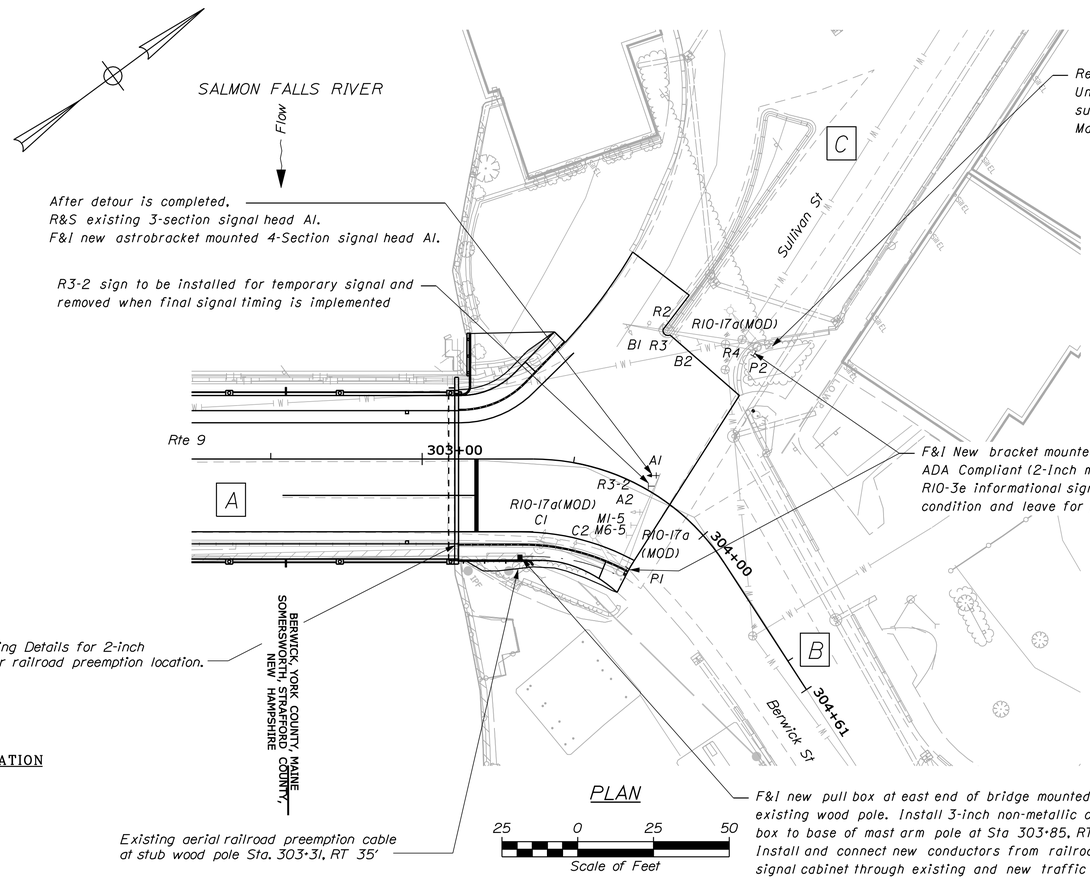

After detour is completed.
R&S existing 3-section signal head A1.
F&I new astrobracket mounted 4-Section signal head A1.

R3-2 sign to be installed for temporary signal and removed when final signal timing is implemented

Retain existing post mounted controller and cabinet.
Under temporary signal operation install an overlap on phase 3 such that phase 2 and phase 3 will operate together.
Maintain railroad and emergency vehicle preemption during temporary signal.

F&I New bracket mounted countdown pedestrian signal heads with ADA Compliant (2-Inch mushroom type) push buttons and R10-3e informational signs (typ). Install for temporary signal condition and leave for permanent signal operation.

See Lighting Details for 2-inch conduit for railroad preemption location.

Existing aerial railroad preemption cable at stub wood pole Sta. 303+31, RT 35'

F&I new pull box at east end of bridge mounted conduit near base of existing wood pole. Install 3-inch non-metallic conduit from new pull box to base of mast arm pole at Sta 303+85, RT 28'.
Install and connect new conductors from railroad preemption relay at traffic signal cabinet through existing and new traffic signal conduit system, across bridge mounted conduit to new pull box on west end of bridge mounted conduit.
F&I new pull box to intercept existing underground conduit between wood pole at Sta 301+75, RT 42' and railroad cabinet.
Install and connect new conductors from new pull box near west end of bridge to railroad cabinet.

PLAN

25 0 25 50
Scale of Feet

PROPOSED SIGNAL TIMING SCHEDULE

	Phase 1	Phase 2	Phase 3	Phase 4
Min Green	6	20	6	
Extension	3	3	3	
Max I	30	35	30	
Max II	35	35	35	
Veh Clear	3.5	3.5	3.5	
Red Clear	2	2	2	
Walk				7
Ped Clear				17
Recall				

TEMPORARY SIGNAL TIMING SCHEDULE

	Phase 1	Phase 2	Phase 3	Phase 4
Min Green		10	10	
Extension		3	3	
Max I		35	30	
Max II		35	35	
Veh Clear		3.5	3.5	
Red Clear		2	2	
Walk				7
Ped Clear				17
Recall				

SYSTEM DESIGN VOLUMES AM (PM)

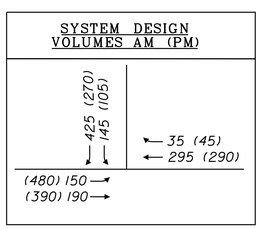

NOTE

1. See General Plan and Lighting Details for additional utilities not shown.

STATE OF MAINE
DEPARTMENT OF TRANSPORTATION

PROJECT NO. BR-1927(400)

BRIDGE NO. 2068

WIN 19274.00

BRIDGE PLANS

STATE OF MAINE
Steven M. Hodgdon
11206
LICENSED PROFESSIONAL ENGINEER

		BY	DATE
PROJ. MANAGER	N. BENOIT		
DESIGN-DETAILED	JGM	KDW	10-14-13
CHECKED-REVIEWED	JAW	SMH	10-14-13
DESIGN2-DETAILED2	---	---	---
DESIGN3-DETAILED3	---	---	---
REVISIONS 1	---	---	---
REVISIONS 2	---	---	---
REVISIONS 3	---	---	---
REVISIONS 4	---	---	---
FIELD CHANGES	---	---	---

Steven M. Hodgdon
SIGNATURE
11206
P.E. NUMBER
11\13\2013
DATE

BERWICK BRIDGE
SALMON FALLS RIVER
BERWICK YORK COUNTY

TRAFFIC SIGNAL PLAN

SHEET NUMBER
28
OF 56

Filename: ...\st\planset\028_signalplan.dgn Division: Structures Username: kwentworth Date:$date$

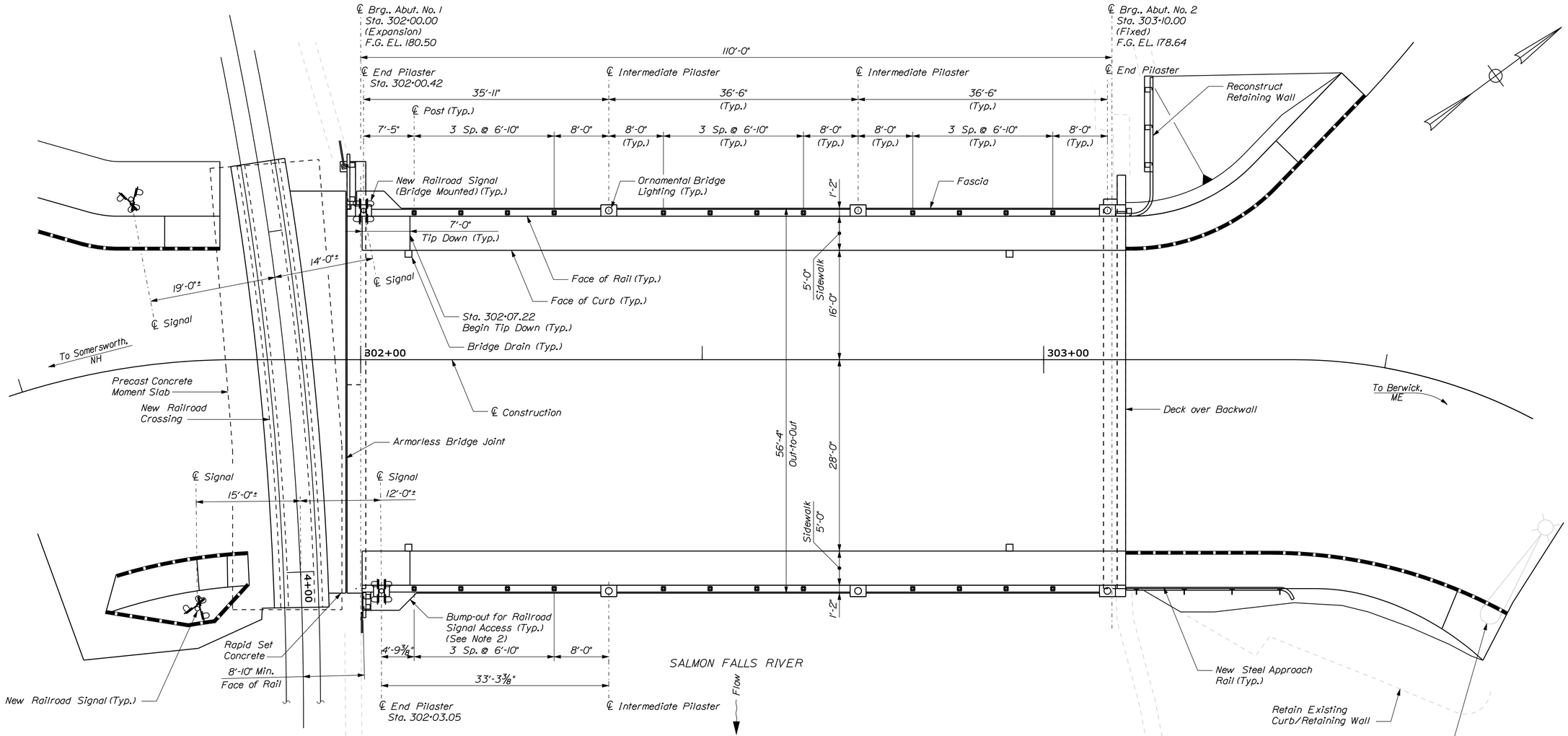

PLAN
Scale: 1/8" = 1'-0"

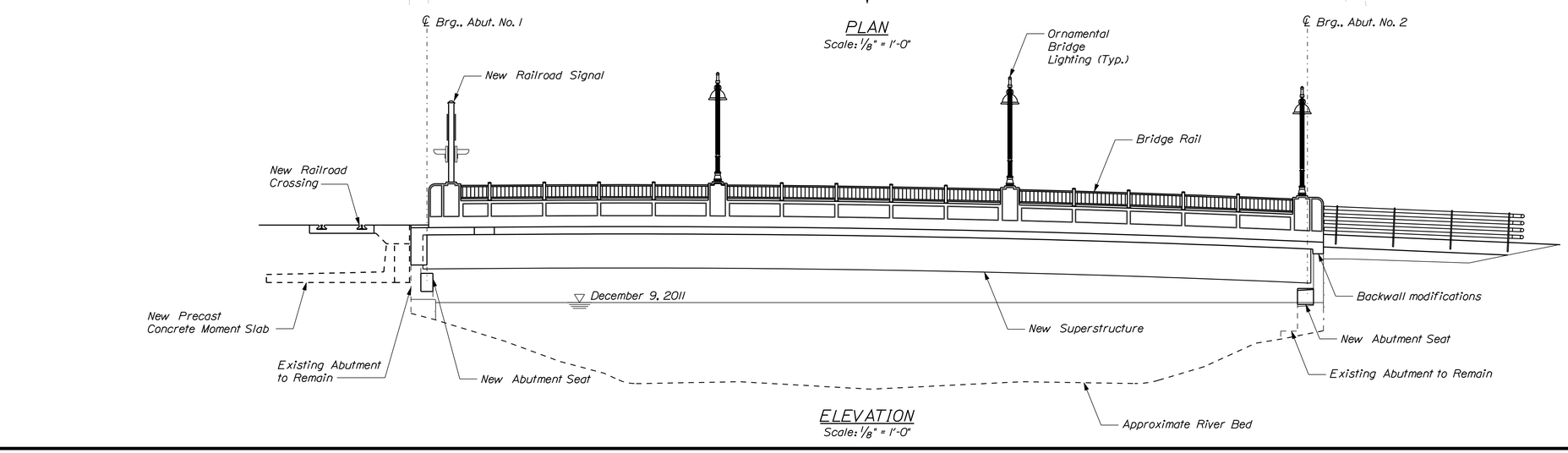

ELEVATION
Scale: 1/8" = 1'-0"

NOTES

1. Signs and utilities not shown.
2. See Approach Rail Details (1 of 3) for bump-out details.

STATE OF MAINE
DEPARTMENT OF TRANSPORTATION

PROJECT NO. BR-1927(400)

WIN 19274.00

BRIDGE NO. 2068

BRIDGE PLANS

STATE OF MAINE
Steven M. Hodgdon
11206
LICENSED PROFESSIONAL ENGINEER

Steven M. Hodgdon

SIGNATURE		
11206		
P.E. NUMBER		
11\13\2013		
DATE		

PROJ. MANAGER	N. BENOIT	BY	DATE
DESIGN-DETAILED	JGM	KDW	10-14-13
CHECKED-REVIEWED	JAW	SMH	10-14-13
DESIGN2-DETAILED2	---	---	---
DESIGN3-DETAILED3	---	---	---
REVISIONS 1	---	---	---
REVISIONS 2	---	---	---
REVISIONS 3	---	---	---
REVISIONS 4	---	---	---
FIELD CHANGES	---	---	---

BERWICK BRIDGE
SALMON FALLS RIVER
BERWICK YORK COUNTY

BRIDGE PLAN AND ELEVATION

SHEET NUMBER
29
OF 56

Filename: ...\cad\st\planset\029_bdplan.dgn Division: Structures Username: kwentworth Date:$date$

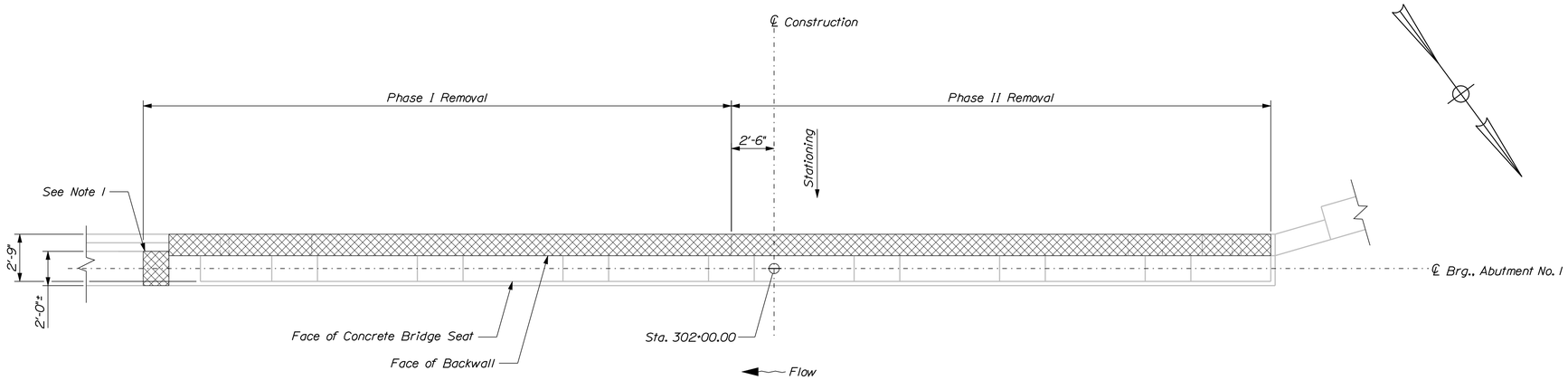

PLAN

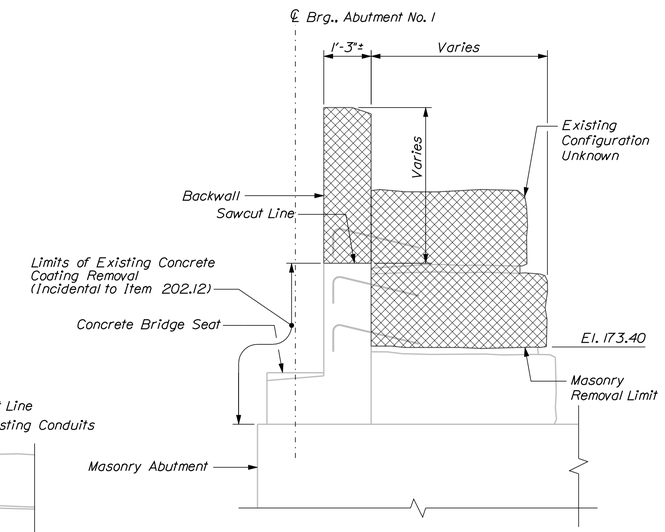

SECTION A-A

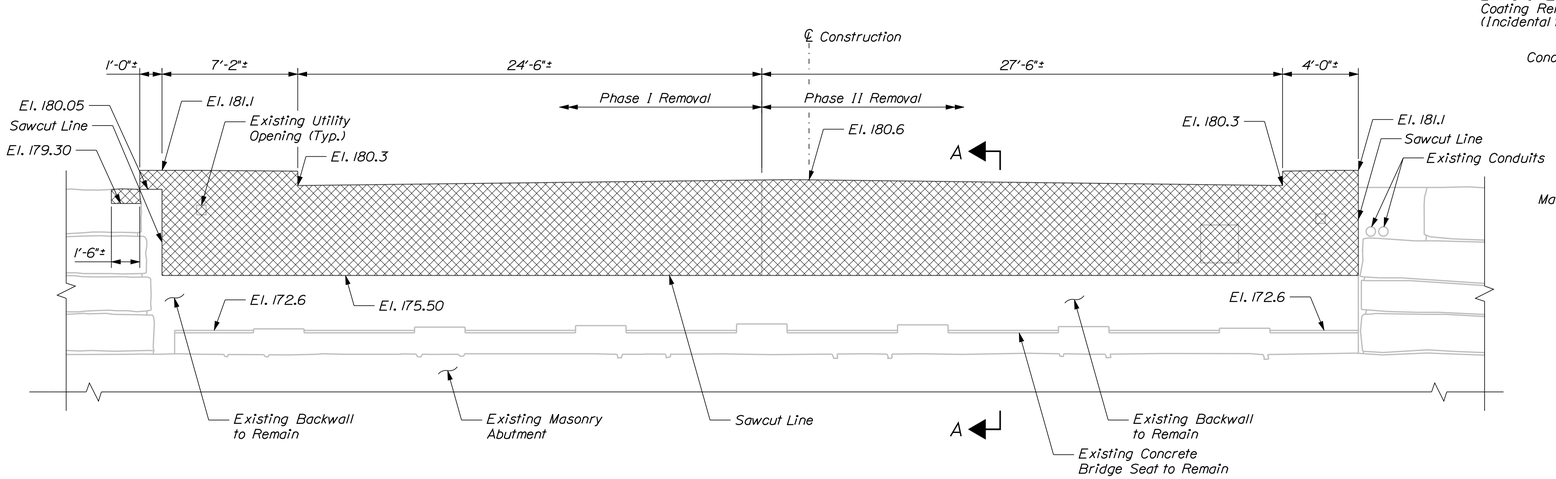

ELEVATION
(Looking Back Station)

NOTES

1. Remove portion of existing granite block. Provide 1" min. gap below deck. Cost to be incidental to Item 202.12.
2. Existing elevations are approximate.

KEY

= Concrete and Masonry Removal

STATE OF MAINE
DEPARTMENT OF TRANSPORTATION

PROJECT NO. BR-1927(400)

WIN 19274.00

BRIDGE NO. 2068

BRIDGE PLANS

STATE OF MAINE — Steven M. Hodgdon — 11206 — LICENSED PROFESSIONAL ENGINEER

PROJ. MANAGER	N. BENOIT		
DESIGN-DETAILED	JCM	KDW	10-14-13
CHECKED-REVIEWED	JAW	SMH	10-14-13
DESIGN2-DETAILED2	---	---	---
DESIGN3-DETAILED3	---	---	---
REVISIONS 1	---	---	---
REVISIONS 2	---	---	---
REVISIONS 3	---	---	---
REVISIONS 4	---	---	---
FIELD CHANGES	---	---	---

SIGNATURE
11206
P.E. NUMBER
11\13\2013
DATE

BERWICK BRIDGE
SALMON FALLS RIVER
YORK COUNTY
BERWICK

ABUTMENT NO. 1
REMOVAL

SHEET NUMBER
30
OF 56

Filename: ...\st\planset\030_abut1_01.dgn Division: Structures Username: kwentworth Date:$date$

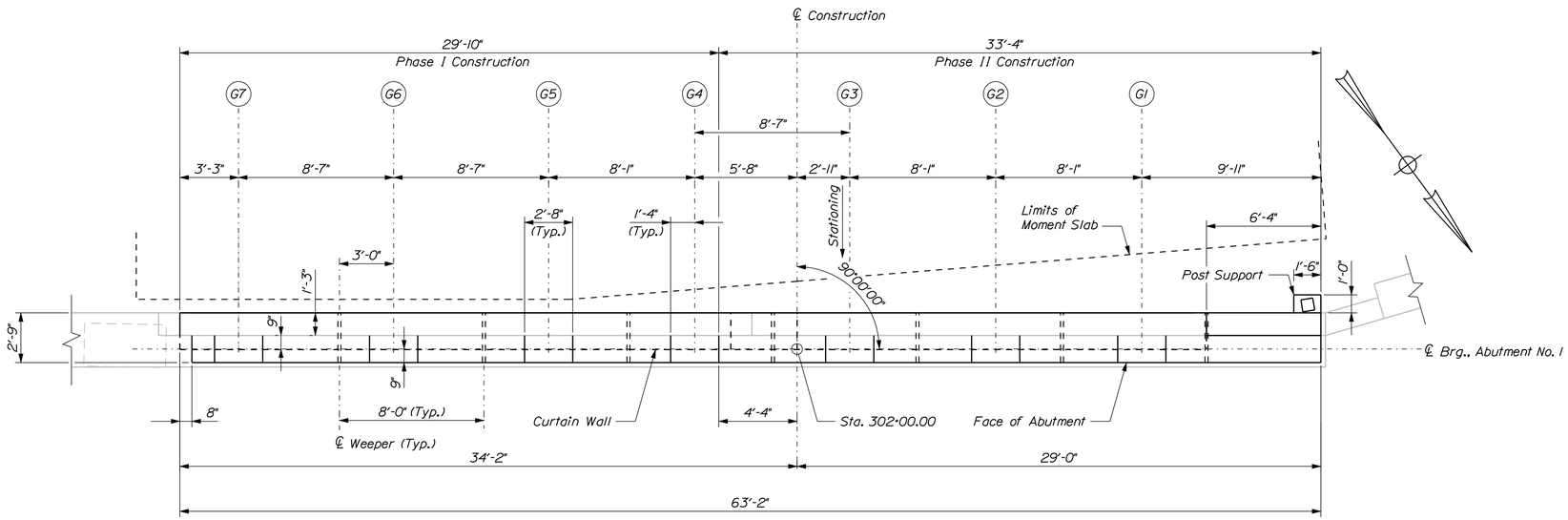

PLAN

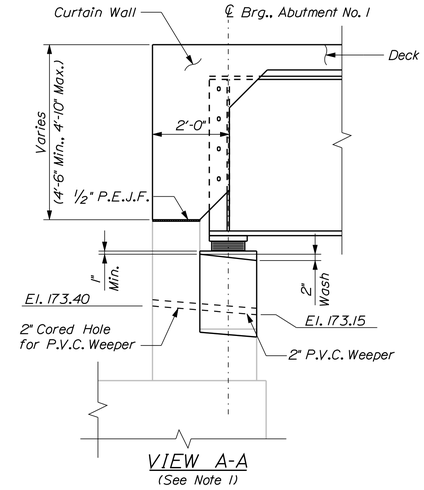

VIEW A-A
(See Note 1)

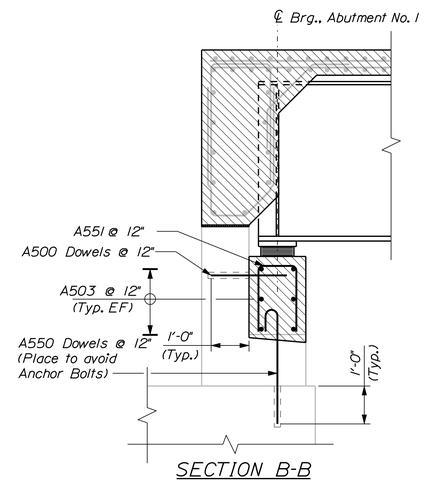

SECTION B-B
(See Note 1)

ABUTMENT NOTES

1. Reinforcing steel shall have a minimum concrete cover of 2 inches unless otherwise noted.
2. Cover joints where waterstops are not required in accordance with Standard Detail 502(01).
3. See Moment Slab Details for backfill information not shown.
4. See Deck Reinforcement (2 of 2) for Curtain Wall elevations and reinforcing.
5. Permanent railroad flasher conduit and junction boxes not shown. Details and locations are subject to NHDOT and Railroad approval.

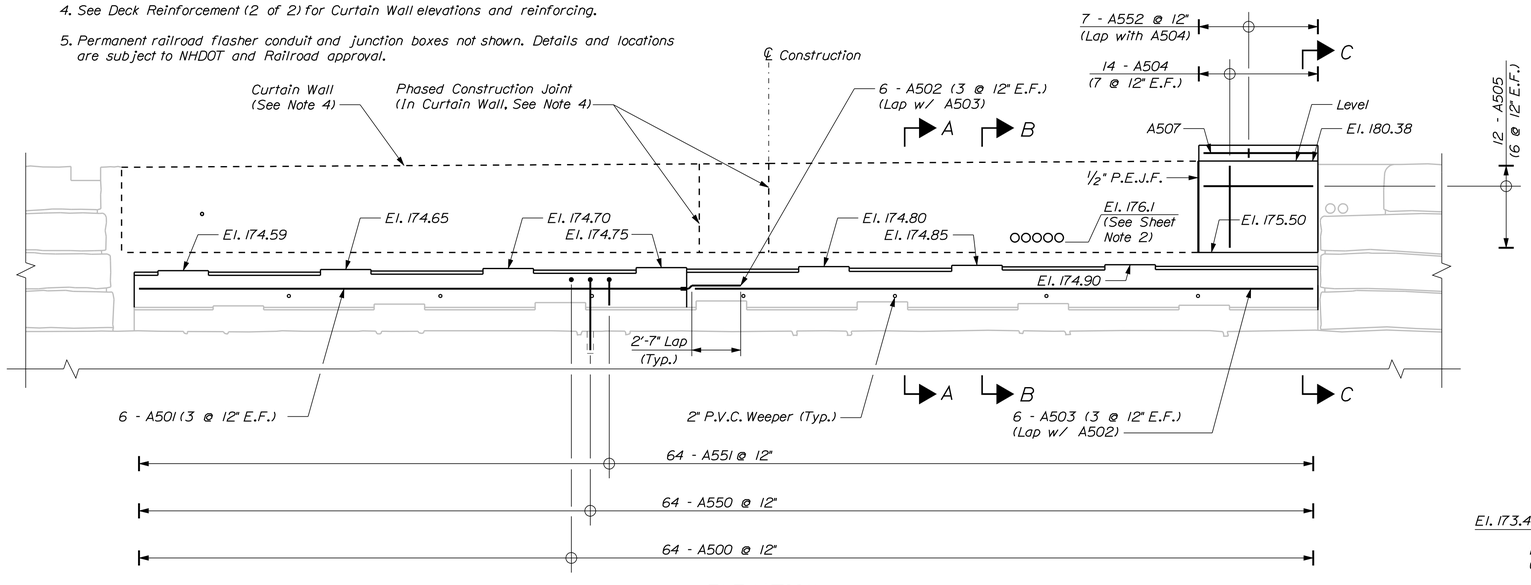

ELEVATION
(Looking Back Station)
(Reinforcing Shown for Abutment only)

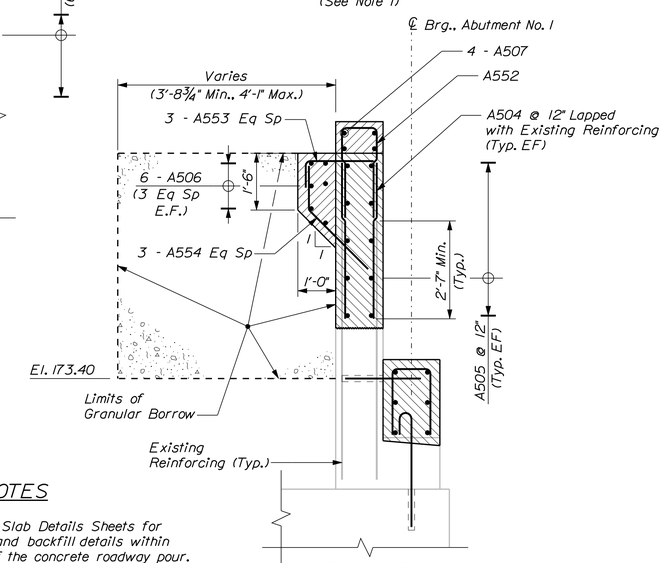

SECTION C-C
(See Note 1)

SHEET NOTES

1. See Moment Slab Details Sheets for excavation and backfill details within the limits of the concrete roadway pour.
2. See Moment Slab Details and Utility Plans.

STATE OF MAINE
DEPARTMENT OF TRANSPORTATION

PROJECT NO. BR-1927(400)

WIN 19274.00

BRIDGE NO. 2068

BRIDGE PLANS

STATE OF MAINE — Steven M. Hodgdon — 11206 — LICENSED PROFESSIONAL ENGINEER

Steven M. Hodgdon

	BY	DATE
PROJ. MANAGER	N. BENOIT	
DESIGN-DETAILED	KDW	10-14-13
CHECKED-REVIEWED	SMH	10-14-13
DESIGN2-DETAILED2	---	---
DESIGN3-DETAILED3	---	---
REVISIONS 1	---	---
REVISIONS 2	---	---
REVISIONS 3	---	---
REVISIONS 4	---	---
FIELD CHANGES	---	---

SIGNATURE
11206
P.E. NUMBER
11\13\2013
DATE

BERWICK
BERWICK BRIDGE
SALMON FALLS RIVER
YORK COUNTY

ABUTMENT NO. 1
MODIFICATIONS

SHEET NUMBER
31
OF 56

Filename: ...\st\planset\031_abut1_02.dgn Division: Structures Username: kwentworth Date:$date$

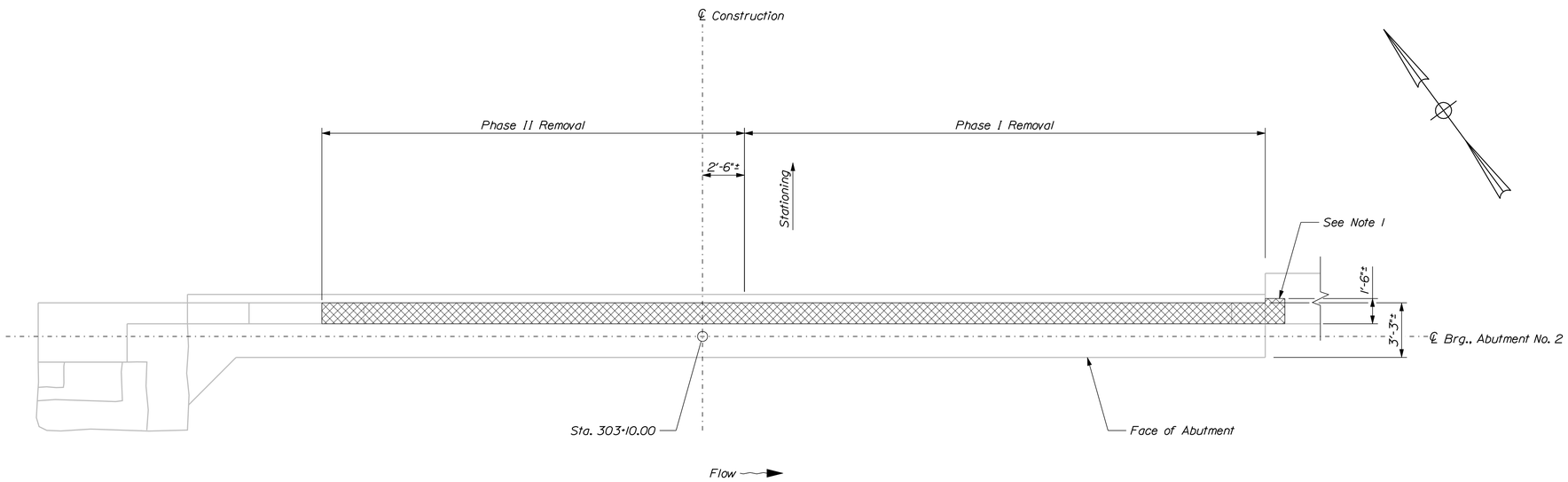

PLAN

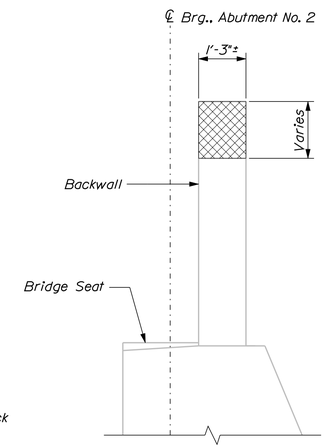

SECTION A-A

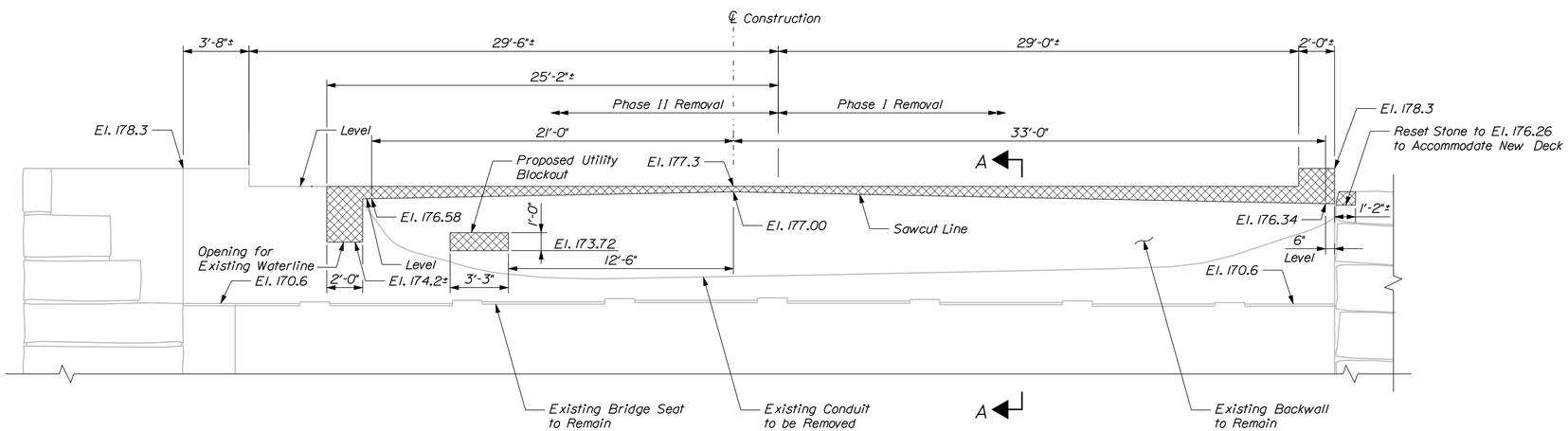

ELEVATION

NOTES

1. Remove portion of existing granite block. Provide 1" min. gap below deck. Cost to be incidental to Item 202.12.
2. Existing elevations are approximate.
3. Proposed elevations (after removal) are at the back face of the backwall.

KEY

= Concrete and Masonry Removal

STATE OF MAINE
DEPARTMENT OF TRANSPORTATION

PROJECT NO. BR-1927(400)

BRIDGE NO. 2068

WIN 19274.00

BRIDGE PLANS

STATE OF MAINE
Steven M. Hodgdon
11206
LICENSED
PROFESSIONAL ENGINEER

PROJ. MANAGER	N. BENOIT	BY	DATE
DESIGN-DETAILED	JCM	KDW	10-14-13
CHECKED-REVIEWED	JAW	SMH	10-14-13
DESIGN2-DETAILED2	---	---	---
DESIGN3-DETAILED3	---	---	---
REVISIONS 1	---	---	---
REVISIONS 2	---	---	---
REVISIONS 3	---	---	---
REVISIONS 4	---	---	---
FIELD CHANGES	---	---	---

SIGNATURE
11206
P.E. NUMBER
11\13\2013
DATE

BERWICK BRIDGE
SALMON FALLS RIVER
BERWICK YORK COUNTY

ABUTMENT NO. 2
REMOVAL

SHEET NUMBER
32
OF 56

Filename: ...\st\planset\032_abut2_01.dgn Division: Structures Username: kwentworth Date:$date$

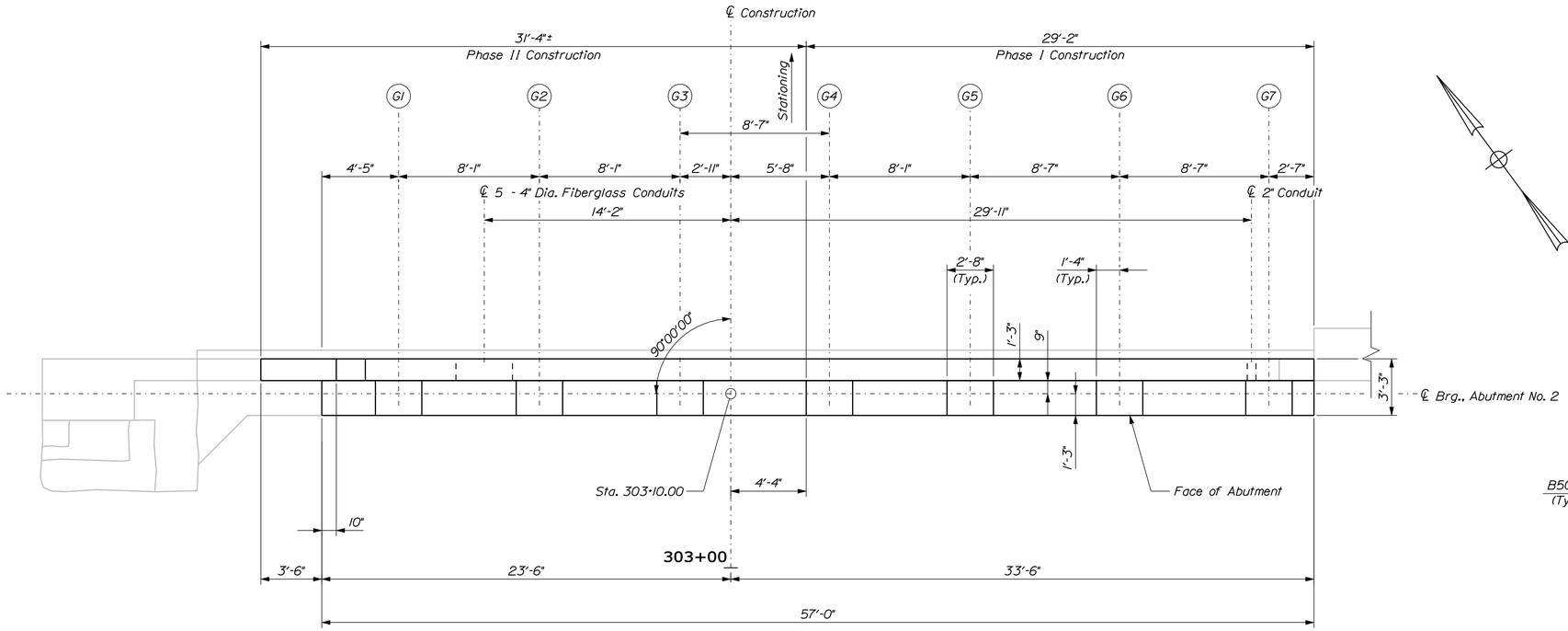

PLAN

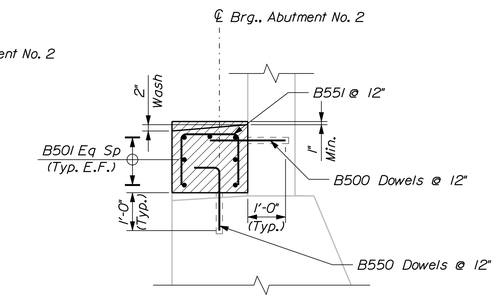

SECTION A-A

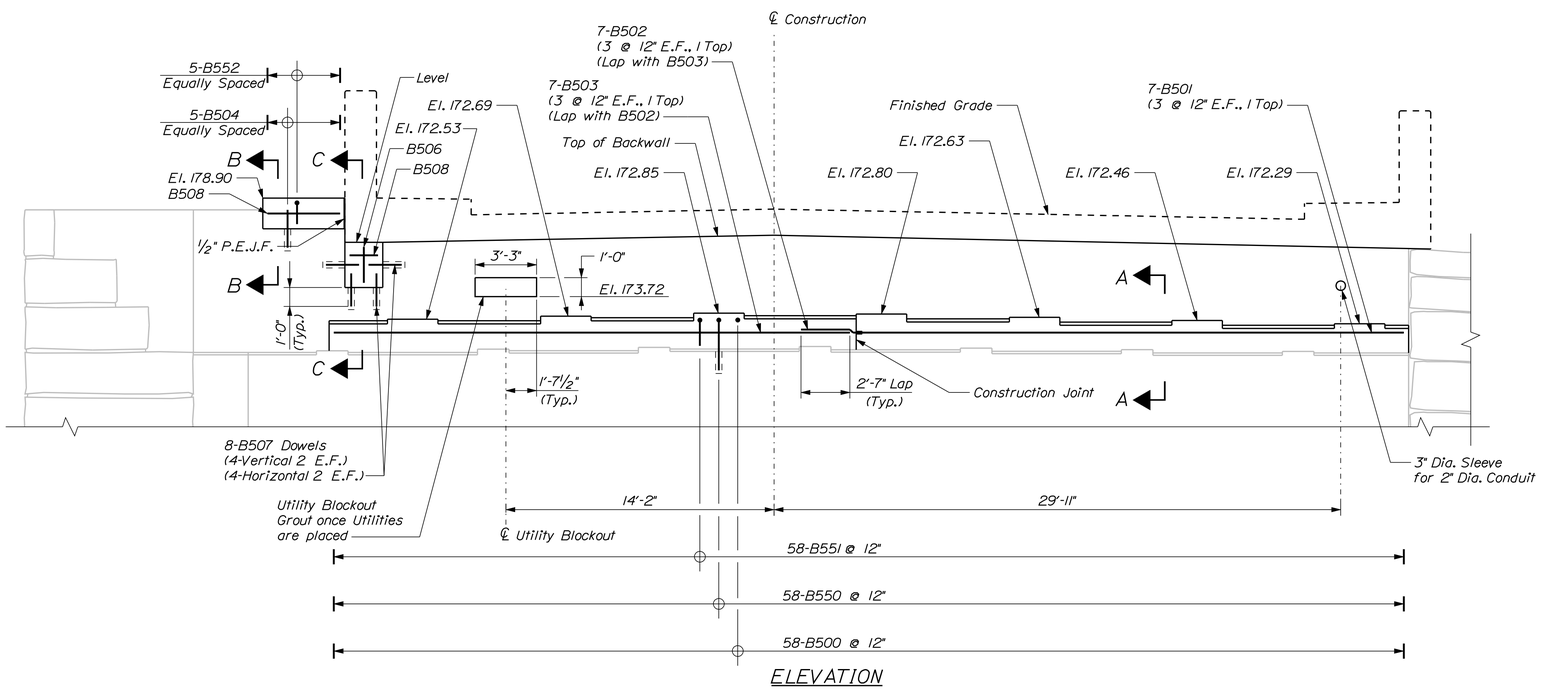

ELEVATION

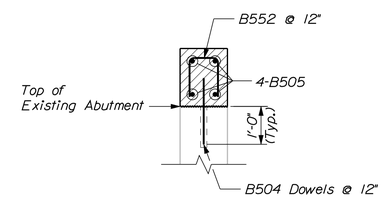

SECTION B-B

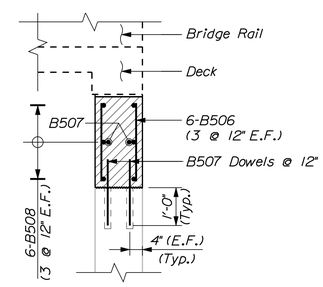

SECTION C-C

STATE OF MAINE
DEPARTMENT OF TRANSPORTATION

PROJECT NO. BR-1927(400)

WIN 19274.00

BRIDGE NO. 2068

BRIDGE PLANS

STATE OF MAINE
Steven M. Hodgdon
No. 11206
LICENSED PROFESSIONAL ENGINEER

Steven M. Hodgdon	SIGNATURE	10-14-13	DATE
11206	P.E. NUMBER	10-14-13	DATE
11\13\2013	DATE		

PROJ. MANAGER	N. BENOIT		BY	DATE
DESIGN-DETAILED	JGM	KDW		10-14-13
CHECKED-REVIEWED	JAW	SMH		10-14-13
DESIGN2-DETAILED2	---	---	---	---
DESIGN3-DETAILED3	---	---	---	---
REVISIONS 1	---	---	---	---
REVISIONS 2	---	---	---	---
REVISIONS 3	---	---	---	---
REVISIONS 4	---	---	---	---
FIELD CHANGES	---	---	---	---

BERWICK BRIDGE
SALMON FALLS RIVER
YORK COUNTY
BERWICK

ABUTMENT NO. 2
MODIFICATIONS

SHEET NUMBER

33

OF 56

Filename: ...\st\planset\033_abut2_02.dgn Division: Structures Username: kwentworth Date:$date$

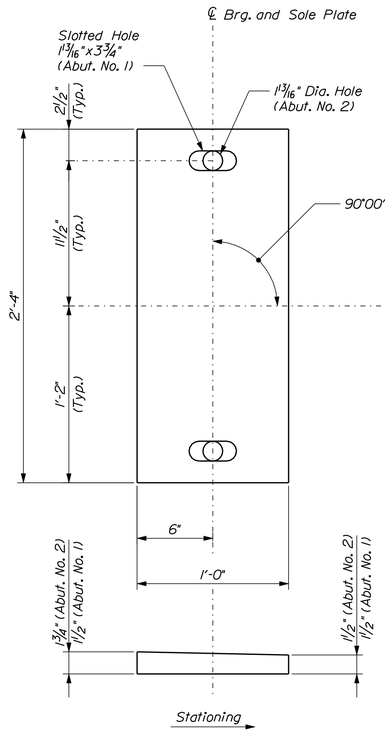

BEVELED SOLE PLATE

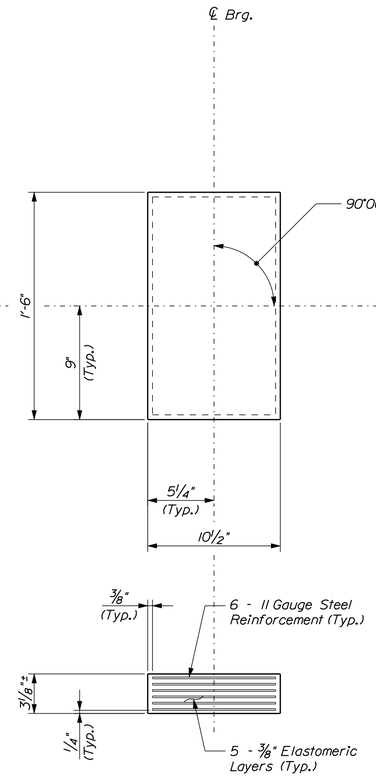

ELASTOMERIC BEARING

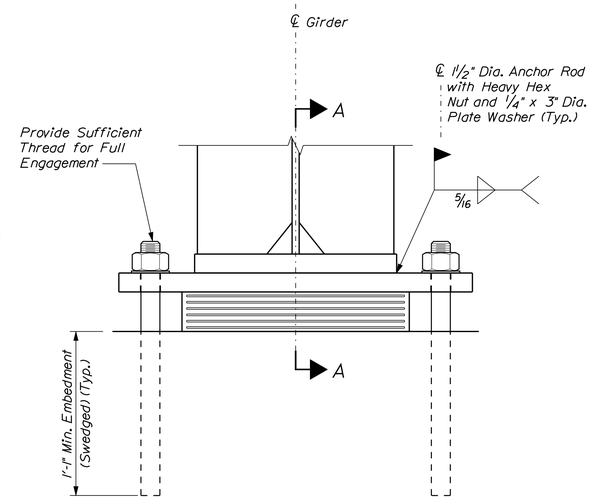

ELEVATION

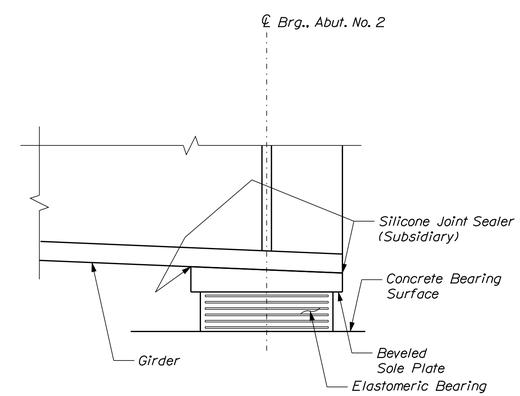

SECTION A-A
(Anchor Rod Not Shown)
(Abutment No. 2 Shown.
Abutment No. 1 Similar.
Opposite Hand)

ELASTOMERIC BEARING NOTES

1. The shear modulus of the elastomer shall be between 130 psi ± 15%.

2. Vulcanizing of the elastomer to the steel plates shall be done during the primary mold process.

3. Sole plates shall meet the requirements of ASTM A 709, Grade 50. Anchor rods shall meet the requirements of ASTM F 1554, Grade 105 and shall be swedged on the embedded portion of the rod.

4. Sole plates for steel superstructures shall be treated in the same manner as the structural steel. Anchor rods, washers, and nuts shall be galvanized to ASTM A 153 or ASTM B 695, Class 50, Type 1.

5. All bearings shall be marked prior to shipping. The marks shall include the bearing location on the bridge and a direction arrow which points upstation. All marks shall be permanent and shall be visible after the bearing is installed.

6. Bearings shall be covered during transit.

7. The bearings are designed so that the superstructure may be erected when the ambient air temperature is within the range of 45 °F and 90 °F. If the ambient air temperature is outside this range, the bearings shall be reset as directed by the Resident.

8. All necessary precautions shall be taken to protect bearing components from field weld flash and spatter. Heat from welding operations shall be controlled such that steel adjacent to the elastomer does not exceed 200 °F. The temperature shall be verified by the use of temperature indicating crayons or other suitable means.

9. Burr the threads on the anchor rods after assembly of the bearing. Touch up any damaged galvanizing with zinc-rich paint. Cost included in the applicable bearing items.

10. At Abutment No. 1, back-off anchor rod nut 1 1/2" turns to allow for girder end rotation and movement at the slotted hole.

BEARING DESIGN CRITERIA					
LOCATION	TYPE	DEAD LOAD ROTATION (rad)	VERTICAL REACTIONS (k)		
			DEAD	LIVE	TOTAL
Abutment No. 1	Expansion	0.0154	104	112	216
Abutment No. 2	Fixed	0.0154	104	112	216

Reactions Provided are Unfactored and do not include Impact

STATE OF MAINE
DEPARTMENT OF TRANSPORTATION

PROJECT NO. BR-1927(400)

BRIDGE NO. 2068 — WIN 19274.00 — BRIDGE PLANS

STATE OF MAINE — Steven M. Hodgdon — 11206 — LICENSED PROFESSIONAL ENGINEER

Steven M. Hodgdon	SIGNATURE	10-14-13	DATE
	11206		
	P.E. NUMBER		
	11\13\2013		
	DATE		

PROJ. MANAGER	N. BENOIT	BY	DATE
DESIGN-DETAILED	JGM	KDW	10-14-13
CHECKED-REVIEWED	JAW	SMH	
DESIGN2-DETAILED2			
DESIGN3-DETAILED3			
REVISIONS 1			
REVISIONS 2			
REVISIONS 3			
REVISIONS 4			
FIELD CHANGES			

BERWICK BRIDGE
SALMON FALLS RIVER
BERWICK — YORK COUNTY

BEARING DETAILS

SHEET NUMBER
34
OF 56

Filename: ...\cad\st\planset\034_brg_01.dgn Division: Structures Username: kwentworth Date:$date$

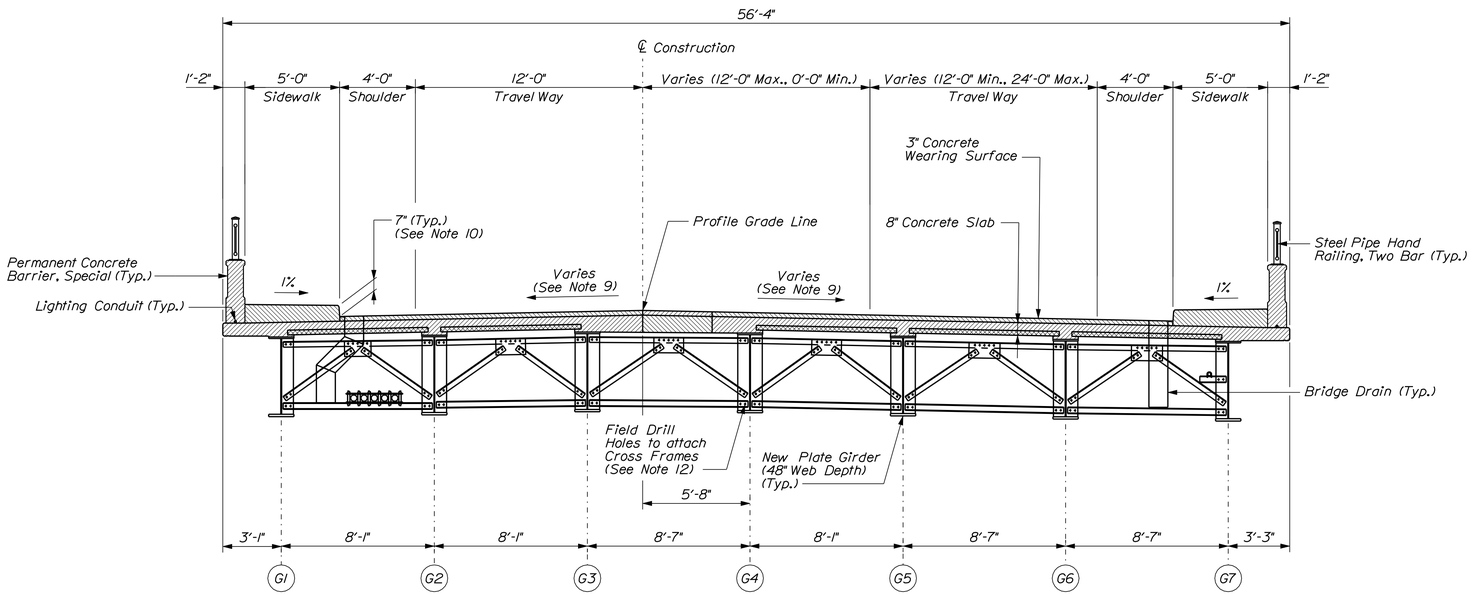

SUPERSTRUCTURE SECTION

SUPERSTRUCTURE NOTES

1. The theoretical blocking used for design of the structure is 3.5 inches at the centerline of bearing at the abutments. See Standard Detail 502(02) for blocking details of welded beams.

2. Reinforcing steel shall have a minimum concrete cover of 2 inches unless otherwise noted.

3. Adjust reinforcing steel to fit around the bridge drains in a manner approved by the Resident. Do not cut transverse reinforcing bars.

4. The superstructure slab concrete shall be placed in one continuous operation and shall be kept plastic until the entire placement has been made.

5. At the Contractor's option, Precast Deck Panels may be used in place of the full depth cast-in-place deck slab, in accordance with Special Provisions Section 502, Structural Concrete - Precast Deck Panels, and in accordance with the Standard Details. Deck Panels shall not be used between G3 and G4.

6. Payment for reinforcing steel fabricated, delivered, and placed in the cast-in-place portion of the structural concrete slab will be considered incidental to the appropriate Section 502 pay item.

7. The expansion joint seal to be furnished shall have minimum Movement Rating as follows:

   Abutment No. 1 = 1.6 inches

8. The Resident shall approve the expansion joint seal prior to fabrication of the Expansion Device.

9. See Superelevation Table on Typical Section and Details Sheet.

10. See Bridge Plan and Elevation for sidewalk tip down locations.

11. Anchor bolts for superstructure mounted Railroad flashers shall be incidental to the Permanent Concrete Barrier pay item.

12. See Construction Phasing Notes on Construction Phasing Sheet.

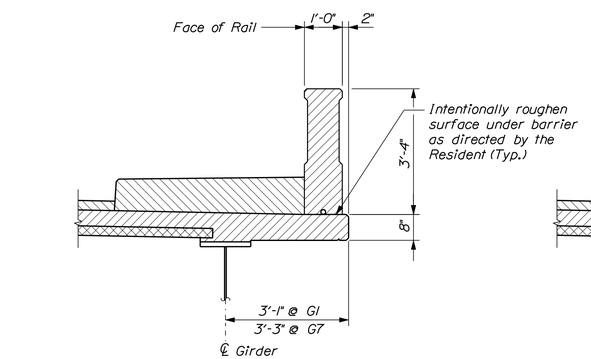

TYPICAL FASCIA DETAIL

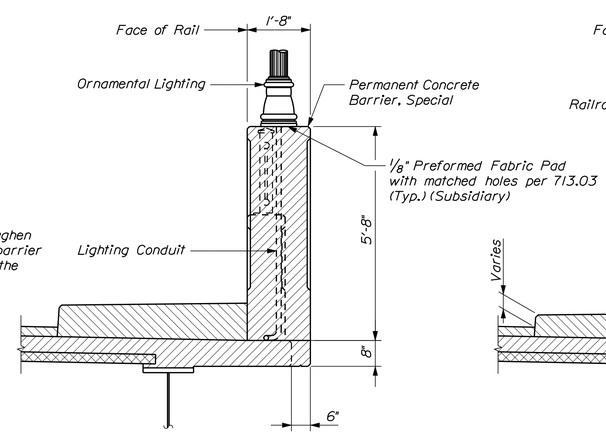

LIGHT POLE DETAIL
(Downstream Fascia Shown, Upstream Fascia Similar)

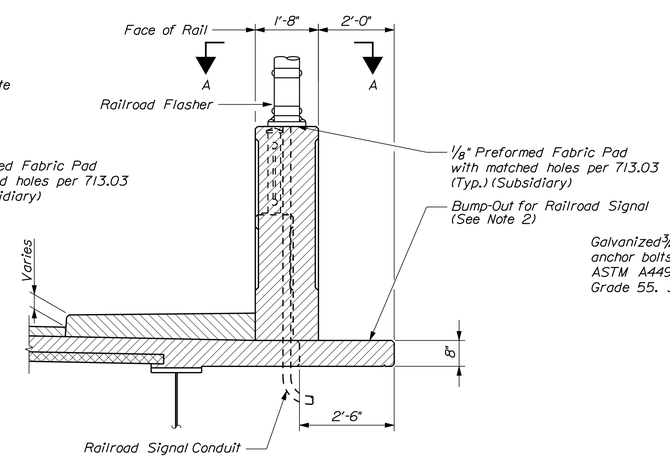

RAILROAD SIGNAL BUMP-OUT DETAIL
(Downstream Fascia Shown, Upstream Fascia Similar)

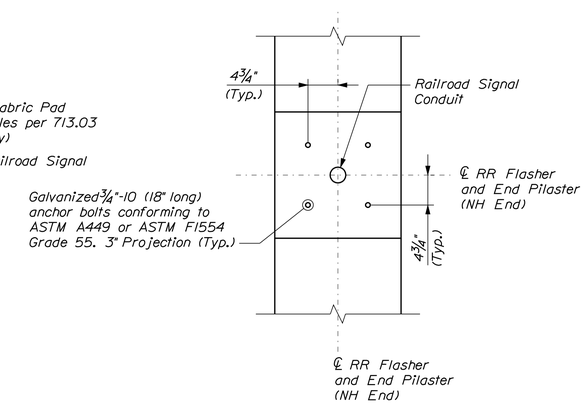

VIEW A-A
Anchor Bolt Layout (See Note 11)

NOTES

1. Precast Deck Panel option shown.
2. See Approach Rail Details (1 of 3) for Bump-Out Details.

STATE OF MAINE
DEPARTMENT OF TRANSPORTATION

PROJECT NO. BR-1927(400)

BRIDGE NO. 2068

WIN 19274.00

BRIDGE PLANS

STATE OF MAINE — Steven M. Hodgdon — 11206 — LICENSED PROFESSIONAL ENGINEER

PROJ. MANAGER	N. BENOIT		
DESIGN-DETAILED	JGM	KDW	12-2-13
CHECKED-REVIEWED	JAW	SMH	12-2-13
DESIGN2-DETAILED2	---	---	---
DESIGN3-DETAILED3	---	---	---
REVISIONS 1	---	---	---
REVISIONS 2	---	---	---
REVISIONS 3	---	---	---
REVISIONS 4	---	---	---
FIELD CHANGES	---	---	---

Steven M. Hodgdon — SIGNATURE — 12-2-13
11206 — P.E. NUMBER
12\2\2013 — DATE

BERWICK BRIDGE
SALMON FALLS RIVER
BERWICK YORK COUNTY

SUPERSTRUCTURE SECTION AND DETAILS

SHEET NUMBER
35
OF 56

Filename: ...\cad\st\planset\035_btyp.dgn Division: Structures Username: kwentworth Date:$date$

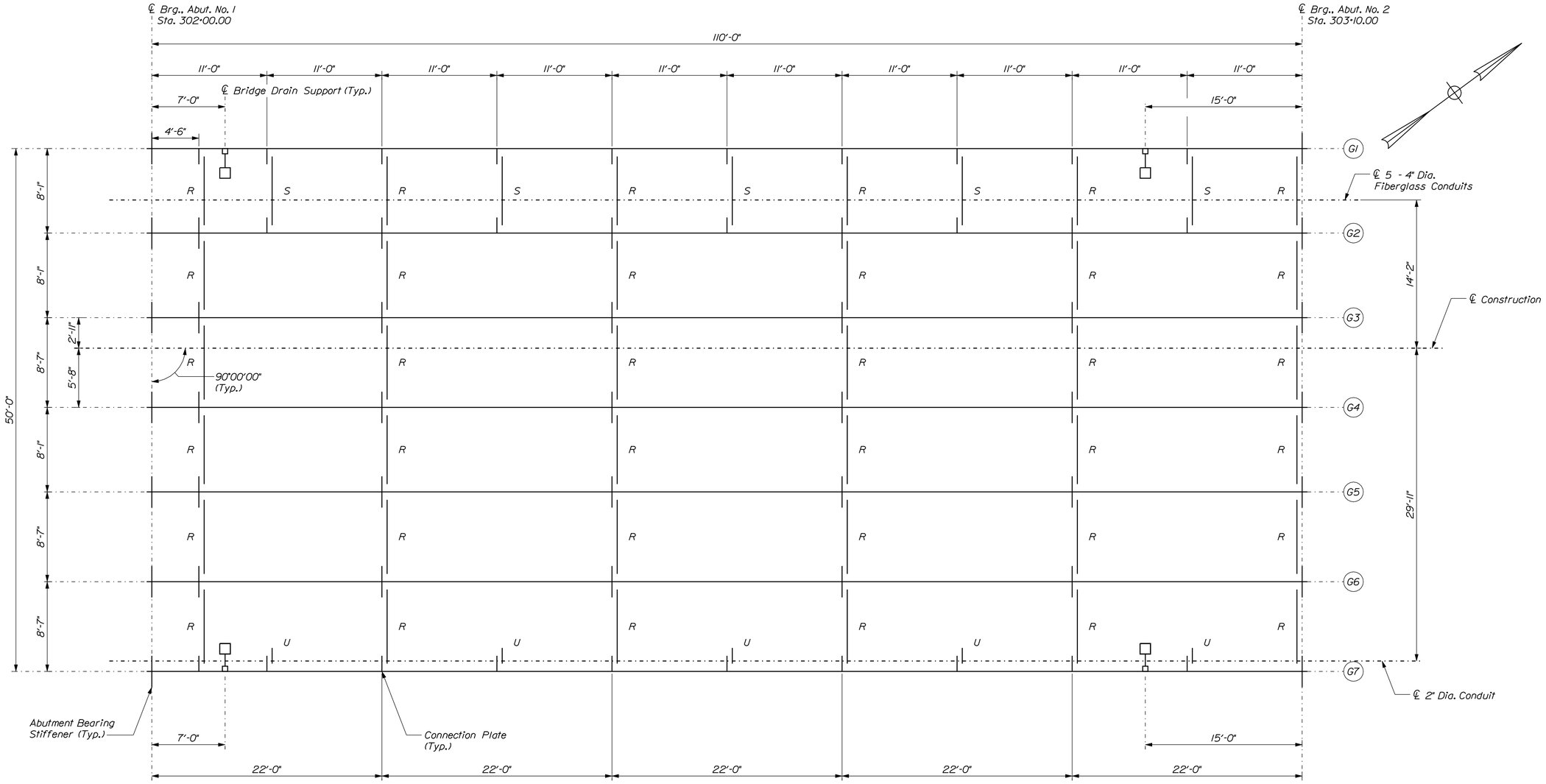

FRAMING PLAN

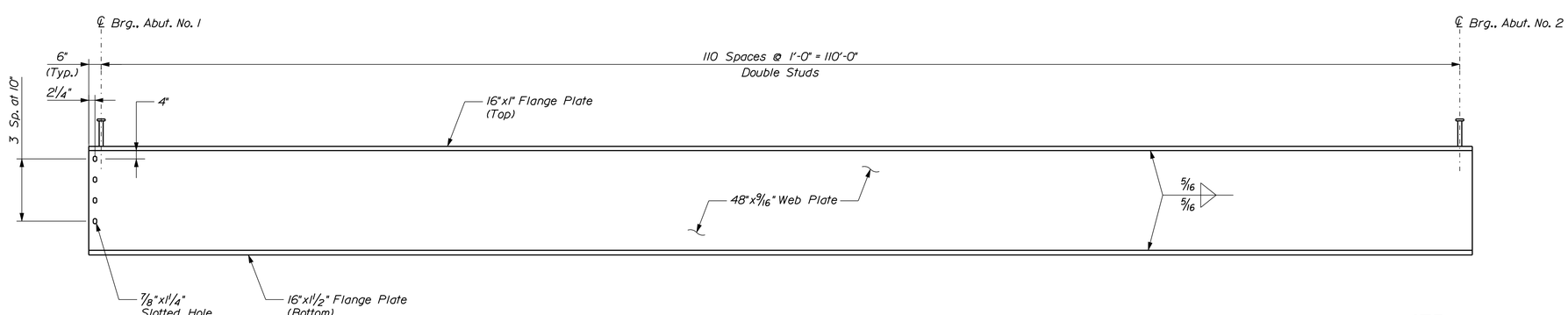

GIRDER ELEVATION

(222 Studs Per Girder x 7 Girders = 1554 Studs)
(Connection Plates or Bearing Stiffeners Not Shown)

NOTE

1. See Girder Details (2 of 2) for Cross Frame and Utility Support Details for R, S, and U.

STATE OF MAINE
DEPARTMENT OF TRANSPORTATION

PROJECT NO. BR-1927(400)

BRIDGE NO. 2068

WIN 19274.00

BRIDGE PLANS

STATE OF MAINE
Steven M. Hodgdon
11206
LICENSED
PROFESSIONAL ENGINEER

PROJ. MANAGER	N. BENOIT		
DESIGN-DETAILED	JOM	KOW	10-14-13
CHECKED-REVIEWED	JAW	SMH	10-14-13
DESIGN2-DETAILED2	---	---	---
DESIGN3-DETAILED3	---	---	---
REVISIONS 1	---	---	---
REVISIONS 2	---	---	---
REVISIONS 3	---	---	---
REVISIONS 4	---	---	---
FIELD CHANGES	---	---	---

SIGNATURE
11206
P.E. NUMBER
11\13\2013
DATE

BERWICK BRIDGE
SALMON FALLS RIVER
BERWICK YORK COUNTY

FRAMING PLAN
AND GIRDER ELEVATION

SHEET NUMBER
36
OF 56

Filename: ...\st\planset\036_frame_01.dgn Division: Structures Username: kwentworth Date:$date$

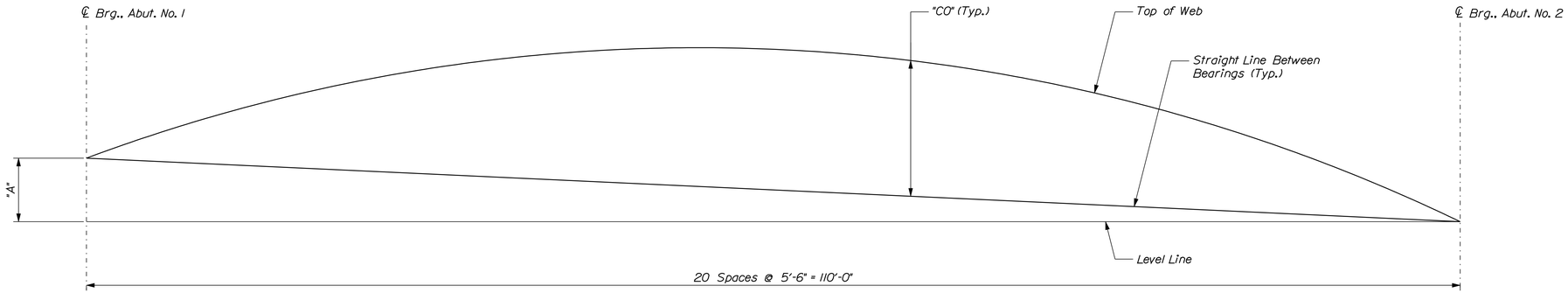

CAMBER DIAGRAM
Not to Scale

"A" (ft)	
G1	2.36
G2	2.15
G3	1.94
G4	1.94
G5	2.05
G6	2.17
G7	2.29

TABLE OF DEFLECTIONS (in)

	℄ Brg., Abut. No. 1	0.05	0.10	0.15	0.20	0.25	0.30	0.35	0.40	0.45	0.50	0.55	0.60	0.65	0.70	0.75	0.80	0.85	0.90	0.95	℄ Brg., Abut. No. 2
Steel Dead Load	0.00	-0.16	-0.31	-0.45	-0.59	-0.70	-0.80	-0.88	-0.94	-0.97	-0.99	-0.97	-0.94	-0.88	-0.80	-0.70	-0.59	-0.45	-0.31	-0.16	0.00
Fluid Dead Load	0.00	-0.51	-1.01	-1.48	-1.92	-2.30	-2.62	-2.88	-3.07	-3.19	-3.22	-3.19	-3.07	-2.88	-2.62	-2.30	-1.92	-1.48	-1.01	-0.51	0.00
Superimposed Dead Load	0.00	-0.21	-0.42	-0.61	-0.79	-0.95	-1.08	-1.19	-1.27	-1.31	-1.33	-1.31	-1.27	-1.19	-1.08	-0.95	-0.79	-0.61	-0.42	-0.21	0.00

BOTTOM OF SLAB ELEVATIONS @ 20TH POINTS

Girder	℄ Brg., Abut. No. 1	0.05	0.10	0.15	0.20	0.25	0.30	0.35	0.40	0.45	0.50	0.55	0.60	0.65	0.70	0.75	0.80	0.85	0.90	0.95	℄ Brg., Abut. No. 2
G1	179.70	179.76	179.82	179.86	179.88	179.86	179.79	179.70	179.59	179.46	179.31	179.14	178.95	178.76	178.59	178.40	178.19	177.98	177.76	177.55	177.34
G2	179.65	179.71	179.77	179.81	179.83	179.82	179.78	179.71	179.63	179.52	179.40	179.26	179.09	178.92	178.75	178.56	178.35	178.14	177.92	177.71	177.50
G3	179.60	179.66	179.72	179.76	179.78	179.78	179.77	179.73	179.67	179.59	179.49	179.37	179.23	179.08	178.91	178.72	178.52	178.30	178.08	177.87	177.66
G4	179.55	179.61	179.66	179.69	179.71	179.70	179.68	179.64	179.58	179.50	179.41	179.30	179.17	179.02	178.85	178.67	178.46	178.25	178.03	177.82	177.61
G5	179.50	179.56	179.61	179.62	179.62	179.60	179.57	179.51	179.44	179.34	179.25	179.14	179.01	178.86	178.69	178.50	178.30	178.09	177.87	177.65	177.45
G6	179.45	179.51	179.55	179.55	179.53	179.50	179.45	179.37	179.28	179.17	179.08	178.97	178.84	178.69	178.52	178.33	178.13	177.91	177.70	177.48	177.28
G7	179.39	179.46	179.50	179.48	179.45	179.39	179.33	179.24	179.13	179.00	178.91	178.80	178.67	178.52	178.35	178.16	177.96	177.74	177.52	177.31	177.10

TABLE OF CAMBER ORDINATES ("CO") (in)

Girder	℄ Brg., Abut. No. 1	0.05	0.10	0.15	0.20	0.25	0.30	0.35	0.40	0.45	0.50	0.55	0.60	0.65	0.70	0.75	0.80	0.85	0.90	0.95	℄ Brg., Abut. No. 2
G1	0.00	2.30	4.52	6.57	8.41	9.71	10.36	10.78	10.94	10.83	10.46	9.82	8.92	7.95	7.26	6.32	5.15	3.86	2.52	1.22	0.00
G2	0.00	2.17	4.27	6.19	7.91	9.21	10.06	10.65	10.99	11.07	10.88	10.43	9.70	8.83	8.02	6.95	5.66	4.24	2.77	1.34	0.00
G3	0.00	2.04	4.02	5.81	7.40	8.72	9.75	10.52	11.05	11.31	11.30	11.03	10.49	9.72	8.78	7.58	6.16	4.62	3.03	1.47	0.00
G4	0.00	2.05	4.00	5.66	7.12	8.37	9.37	10.14	10.64	10.89	10.98	10.82	10.40	9.71	8.77	7.58	6.16	4.62	3.02	1.47	0.00
G5	0.00	2.11	4.10	5.65	6.99	8.11	9.00	9.65	10.04	10.20	10.31	10.22	9.86	9.24	8.36	7.24	5.89	4.42	2.89	1.40	0.00
G6	0.00	2.19	4.21	5.63	6.85	7.85	8.61	9.13	9.39	9.50	9.59	9.57	9.29	8.74	7.93	6.88	5.60	4.20	2.74	1.33	0.00
G7	0.00	2.26	4.31	5.61	6.70	7.58	8.22	8.61	8.75	8.80	8.88	8.93	8.71	8.24	7.50	6.52	5.31	3.99	2.60	1.26	0.00

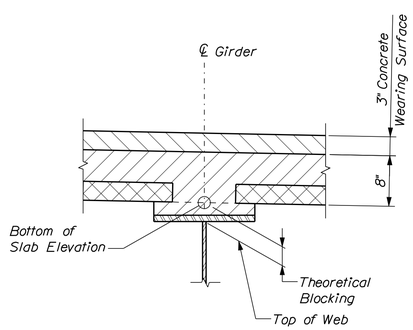

BLOCKING DETAIL
Theoretical Blocking is 3½" at ℄ Brg., Abutments
(Do not use Theoretical Blocking to set Forms)
(Shear studs not shown)

STRUCTURAL STEEL NOTES

1. Camber ordinates, as shown, are computed to compensate for all dead load deflections and for the curvature of the finished grade profile.

2. No transverse butt weld splices will be allowed in the flange plates or web plates within 10 feet or 10 percent of the span length (whichever is greater) from the point of maximum positive moment. Butt weld splices in flanges shall be not less than 3 feet from transverse butt welds in the web plates and no transverse web or flange butt welds shall be located within 3 feet of other transverse welds (e.g. connection plates to web welds) on either flange or web.

3. Bearing stiffeners shall be plumb under full dead load.

4. Crossframe connection plates may be either plumb or normal to the top flange.

5. Structural steel plate girders shall be metalized and seal coated.

6. Crossframes and utility supports shall be galvanized or metalized.

STATE OF MAINE
DEPARTMENT OF TRANSPORTATION

PROJECT NO. BR-1927(400)

BRIDGE NO. 2068

WIN 19274.00

BRIDGE PLANS

STATE OF MAINE
Steven M. Hodgdon
No. 11206
LICENSED PROFESSIONAL ENGINEER

PROJ. MANAGER	N. BENOIT	BY	DATE
DESIGN-DETAILED	JQM	KDW	10-14-13
CHECKED-REVIEWED	JAW	SMH	10-14-13
DESIGN2-DETAILED2	---	---	---
DESIGN3-DETAILED3	---	---	---
REVISIONS 1	---		---
REVISIONS 2	---		---
REVISIONS 3	---		---
REVISIONS 4	---		---
FIELD CHANGES	---		---

SIGNATURE
11206
P.E. NUMBER
11\13\2013
DATE

BERWICK BRIDGE
SALMON FALLS RIVER
BERWICK YORK COUNTY

GIRDER DETAILS
(1 OF 2)

SHEET NUMBER
37
OF 56

Filename: ...\037_girder details_01.dgn Division: Structures Username: kwentworth Date:$date$

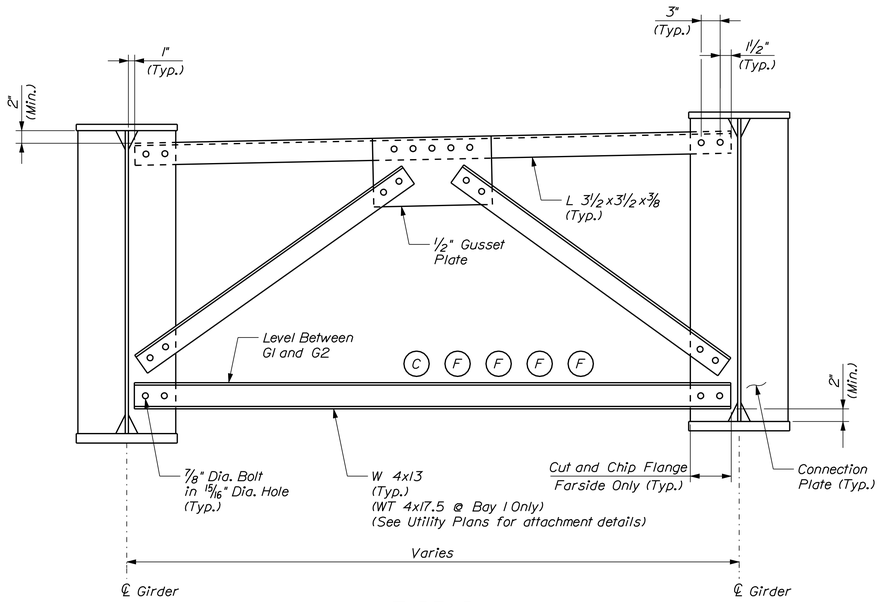

TYPE R
(Looking Upstation)

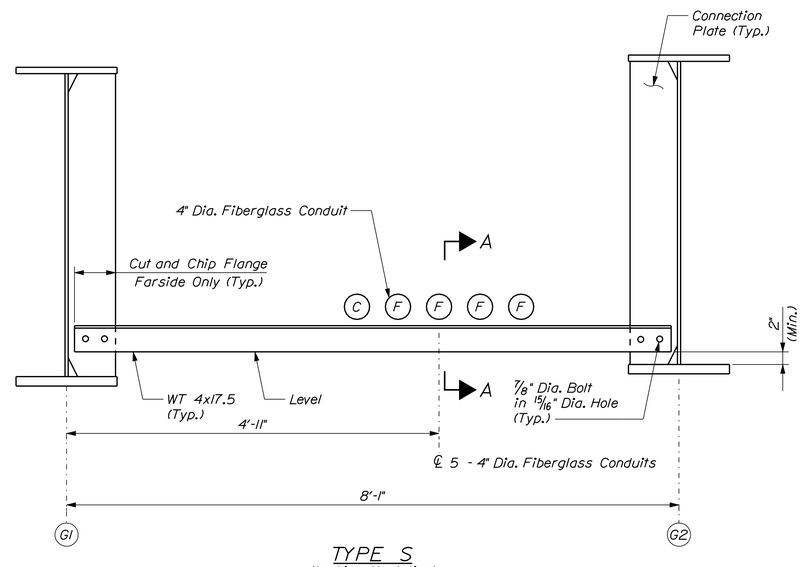

TYPE S
(Looking Upstation)
(See Utility Plans for attachment details)

KEY

C = Comcast Conduit

F = Fairpoint Conduit

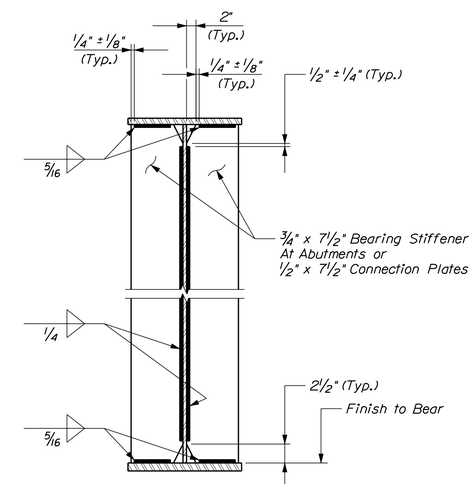

BEARING STIFFENER/CONNECTION PLATE DETAIL
Not to Scale

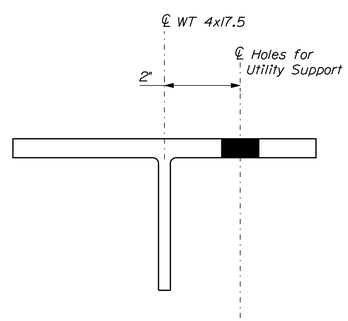

SECTION A-A
(Utilities and FRP Plate Not Shown)
(See Utility Plans for attachment details)

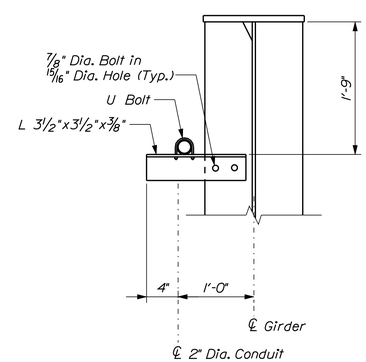

TYPE U
(Looking Upstation)

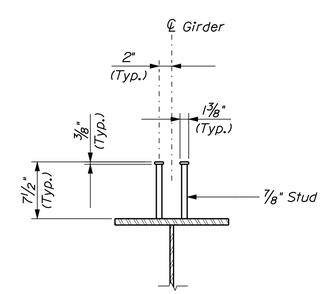

SHEAR STUD DETAIL
Not to Scale

STATE OF MAINE
DEPARTMENT OF TRANSPORTATION

PROJECT NO. BR-1927(400)

BRIDGE NO. 2068 | WIN 19274.00 | BRIDGE PLANS

STATE OF MAINE — Steven M. Hodgdon — 11206 — PROFESSIONAL ENGINEER — LICENSED

PROJ. MANAGER	N. BENOIT	BY	DATE	
DESIGN-DETAILED	JQM	KDW	10-14-13	SIGNATURE
CHECKED-REVIEWED	JAW	SMH	10-14-13	11206
DESIGN2-DETAILED2	---	---	---	P.E. NUMBER
DESIGN3-DETAILED3	---	---	---	11\13\2013
REVISIONS 1	---	---	---	DATE
REVISIONS 2	---	---	---	
REVISIONS 3	---	---	---	
REVISIONS 4	---	---	---	
FIELD CHANGES	---	---	---	

BERWICK BRIDGE
SALMON FALLS RIVER
BERWICK YORK COUNTY

GIRDER DETAILS
(2 OF 2)

SHEET NUMBER
38
OF 56

Filename: ...\038_girder details_02.dgn Division: Structures Username: kwentworth Date:$date$

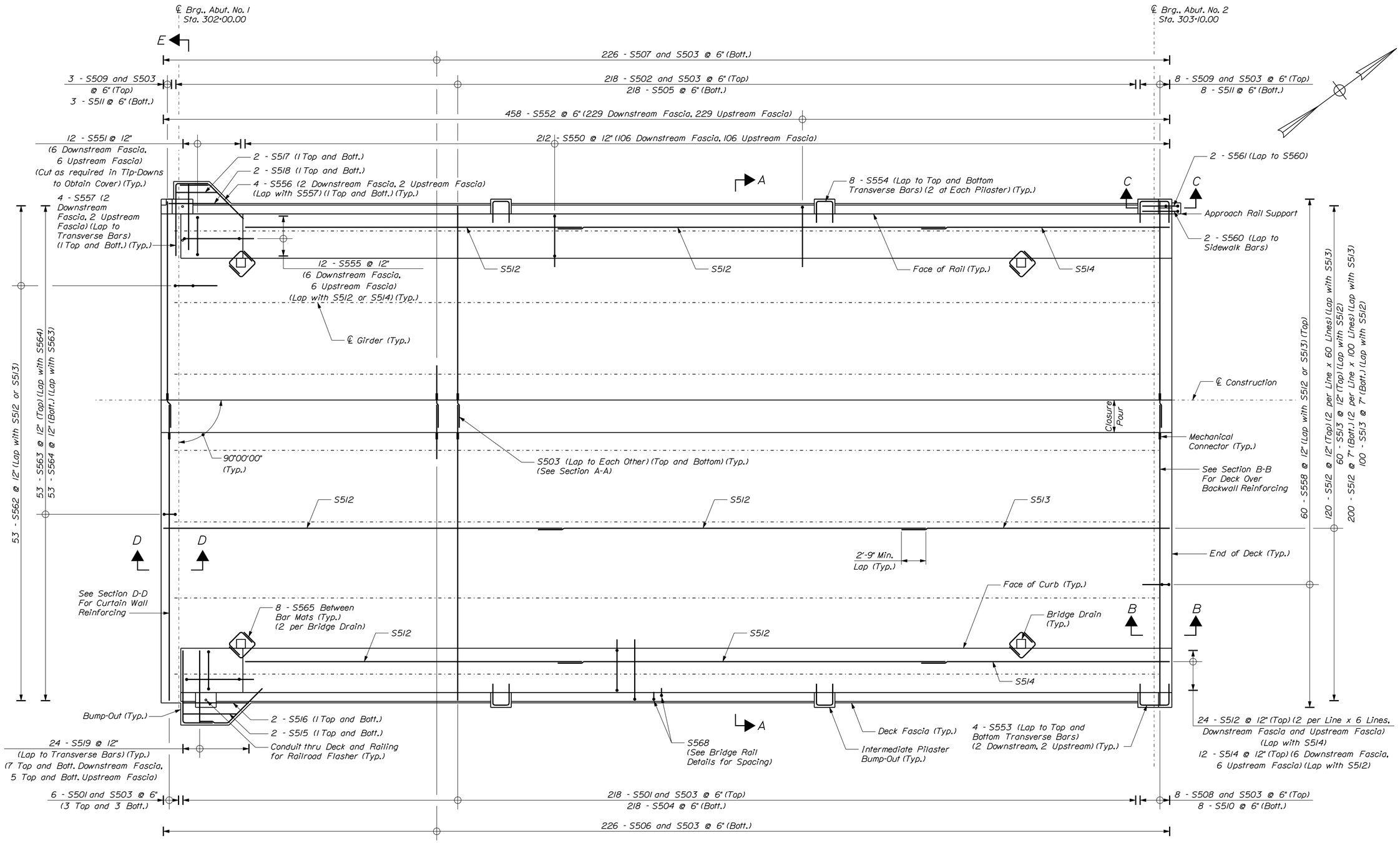

DECK REINFORCEMENT PLAN

Note:

1. Alternate position of S512 and S513 bars such that longitudinal bar laps are staggered between adjacent lines of reinforcement.

2. See Deck Reinforcement (2 of 2) for additional information.

STATE OF MAINE
DEPARTMENT OF TRANSPORTATION

PROJECT NO. BR-1927(400)

WIN 19274.00

BRIDGE NO. 2068

BRIDGE PLANS

STATE OF MAINE
Steven M. Hodgdon
11206
LICENSED PROFESSIONAL ENGINEER

PROJ. MANAGER	N. BENOIT	BY	DATE
DESIGN-DETAILED	JQM	KDW	10-14-13
CHECKED-REVIEWED	JAW	SMH	10-14-13
DESIGN2-DETAILED2	---	---	---
DESIGN3-DETAILED3	---	---	---
REVISIONS 1	---	---	---
REVISIONS 2	---	---	---
REVISIONS 3	---	---	---
REVISIONS 4	---	---	---
FIELD CHANGES	---	---	---

SIGNATURE	P.E. NUMBER	DATE
11206	---	---
	---	11\13\2013
	---	---
	---	---
	---	---

BERWICK BRIDGE
SALMON FALLS RIVER
BERWICK YORK COUNTY

DECK REINFORCEMENT
(1 OF 2)

SHEET NUMBER
39
OF 56

Filename: ...\cad\st\planset\039_deck_01.dgn Division: Structures Username: kwentworth Date:$date$

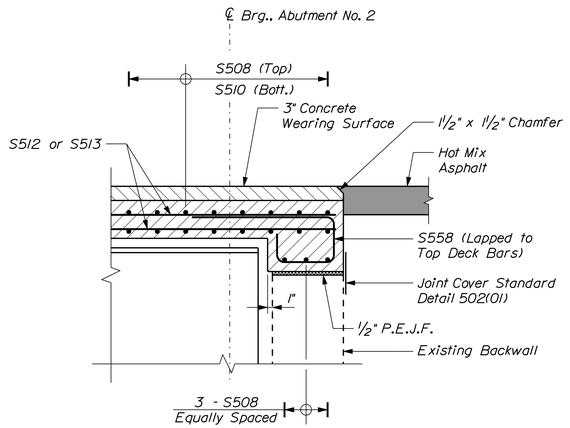

SECTION B-B

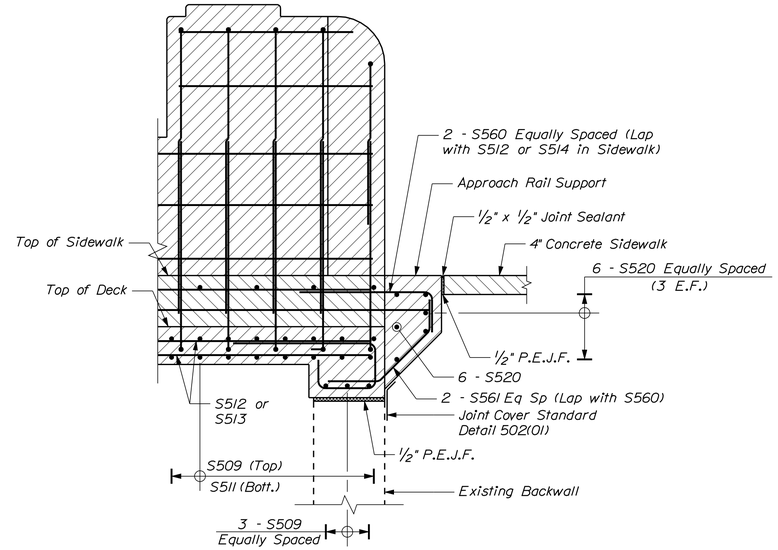

SECTION C-C

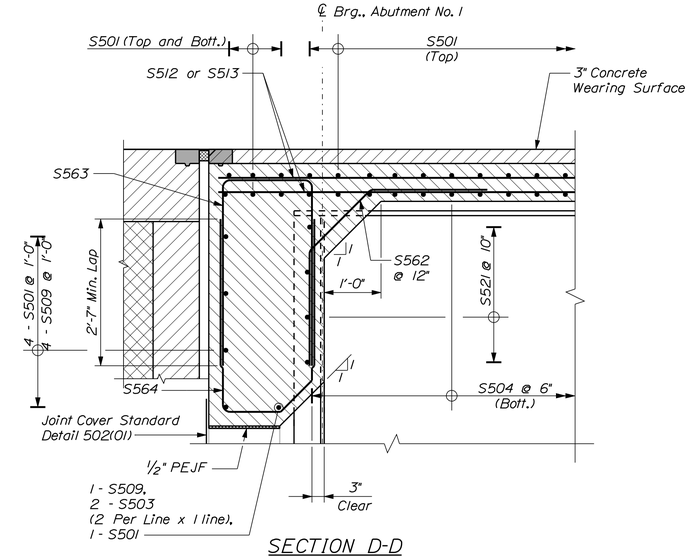

SECTION D-D

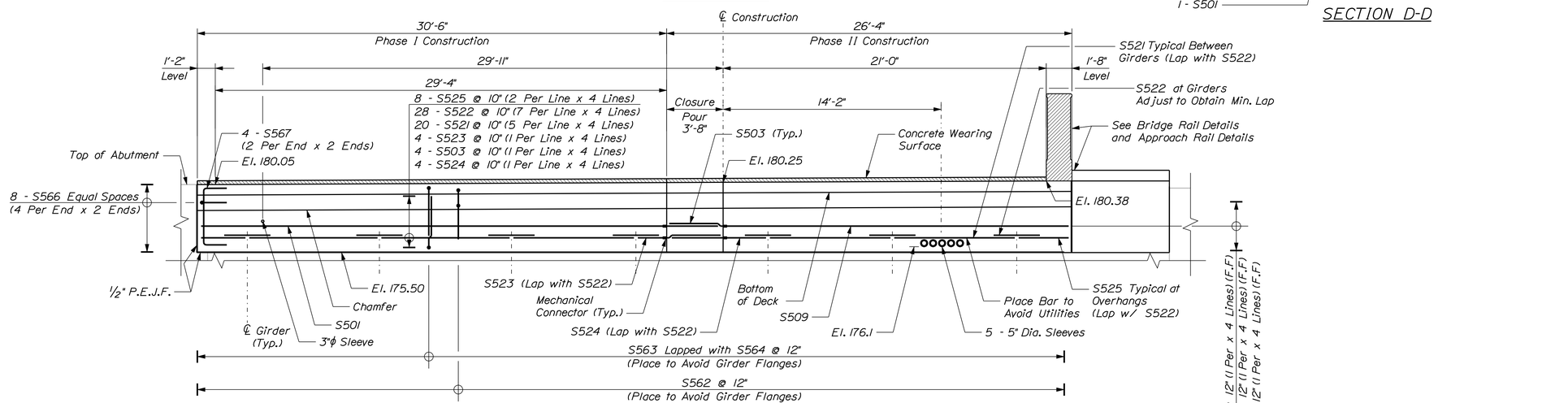

VIEW E-E
(Looking Downstream)
(Bridge Seat Not Shown)
(Deck Reinforcement Not Shown)

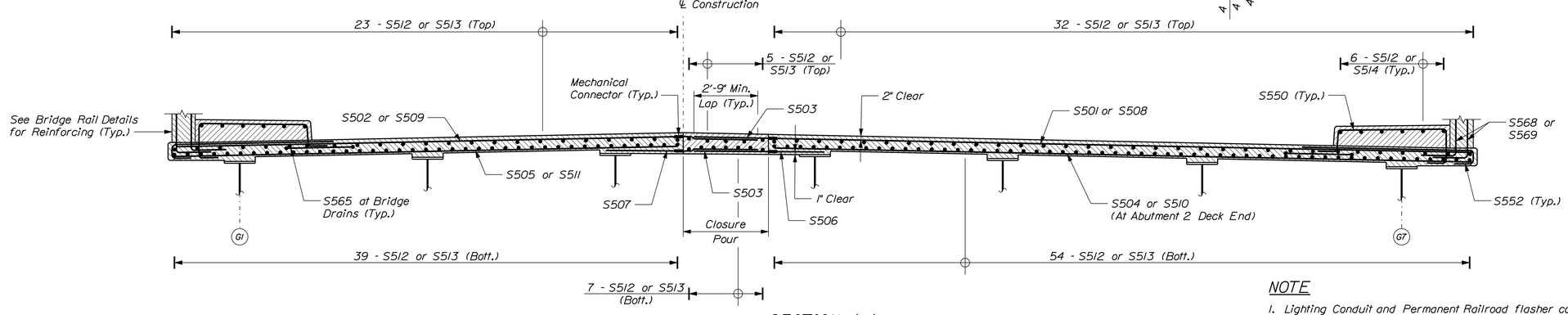

SECTION A-A

NOTE

1. Lighting Conduit and Permanent Railroad flasher conduit and junction boxes not shown.

STATE OF MAINE
DEPARTMENT OF TRANSPORTATION

PROJECT NO. BR-1927(400)

WIN 19274.00

BRIDGE NO. 2068

BRIDGE PLANS

STATE OF MAINE
Steven M. Hodgdon
11206
LICENSED PROFESSIONAL ENGINEER

Steven M. Hodgdon	SIGNATURE	P.E. NUMBER	DATE
	11206	11\13\2013	

PROJ. MANAGER	N. BENOIT		BY	DATE
DESIGN-DETAILED	JQM	KDW	KDW	10-14-13
CHECKED-REVIEWED	JAW	SMH	SMH	10-14-13
DESIGN2-DETAILED2	---	---	---	---
DESIGN3-DETAILED3	---	---	---	---
REVISIONS 1	---	---	---	---
REVISIONS 2	---	---	---	---
REVISIONS 3	---	---	---	---
REVISIONS 4	---	---	---	---
FIELD CHANGES	---	---	---	---

BERWICK BRIDGE
SALMON FALLS RIVER
BERWICK YORK COUNTY

DECK REINFORCEMENT
(2 OF 2)

SHEET NUMBER
40
OF 56

Filename: ...\cad\st\planset\040_deck_02.dgn Division: Structures Username: kwentworth Date:$date$

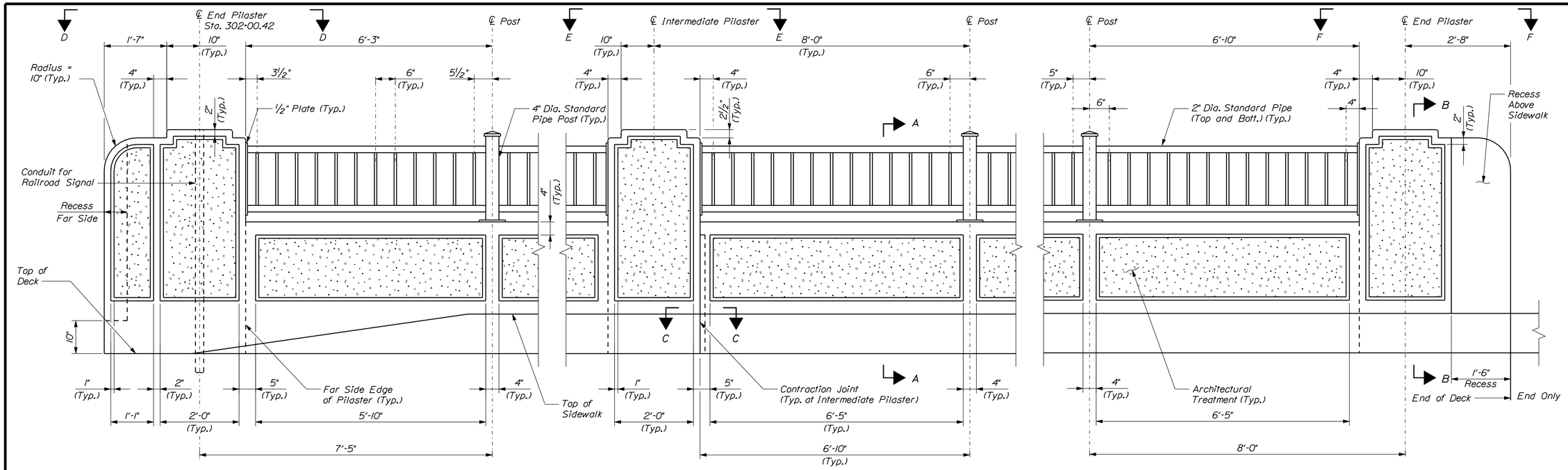

UPSTREAM BARRIER PARTIAL ELEVATION
(Looking Upstream)

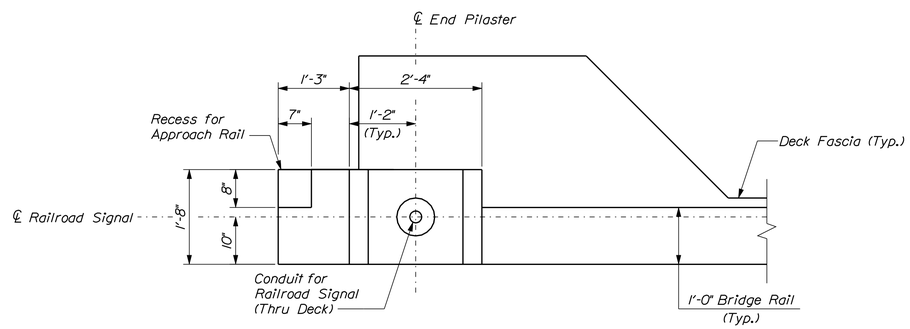

VIEW D-D

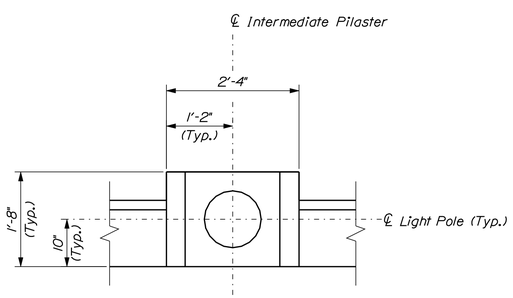

VIEW E-E
(Typical at All Intermediate Pilasters)

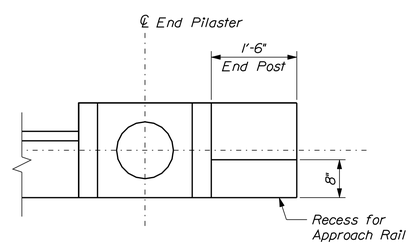

VIEW F-F

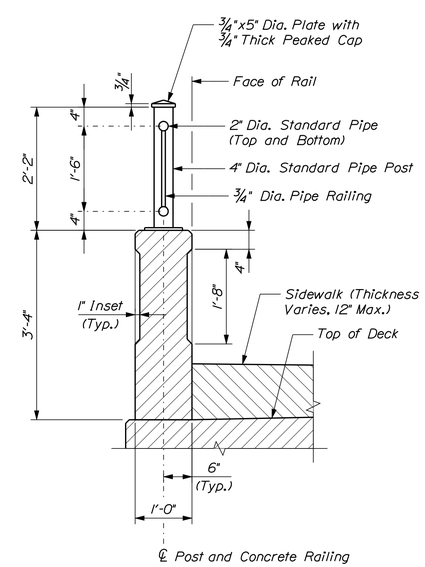

VIEW A-A

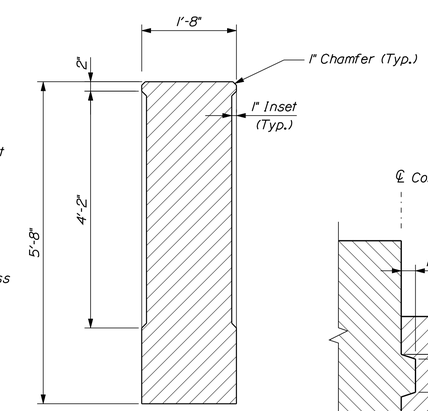

SECTION B-B
(Deck, Sidewalk and Post Not Shown)

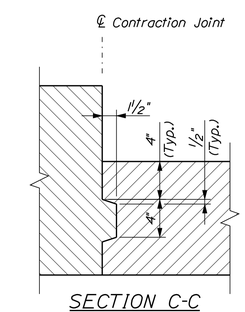

SECTION C-C

NOTES

1. See Bridge Plan and Elevation for Bridge Rail Layout.
2. See Bridge Rail Details (2 of 5) for Typical Layout between Posts.
3. Conduit for Ornamental Lighting not Shown.
4. See Lighting Details Sheet for Light Locations and Conduit Information.

STATE OF MAINE
DEPARTMENT OF TRANSPORTATION

PROJECT NO. BR-1927(400)

WIN 19274.00

BRIDGE NO. 2068

BRIDGE PLANS

STATE OF MAINE
Steven M. Hodgdon
11206
LICENSED PROFESSIONAL ENGINEER

Steven M. Hodgdon
SIGNATURE
11206
P.E. NUMBER
11\13\2013
DATE

PROJ. MANAGER	N. BENOIT		
DESIGN-DETAILED	JGM	KDW	10-14-13
CHECKED-REVIEWED	JAW	SMH	10-14-13
DESIGN2-DETAILED2	---	---	---
DESIGN3-DETAILED3	---	---	---
REVISIONS 1	---	---	---
REVISIONS 2	---	---	---
REVISIONS 3	---	---	---
REVISIONS 4	---	---	---
FIELD CHANGES	---	---	---

BERWICK BRIDGE
SALMON FALLS RIVER
BERWICK YORK COUNTY

BRIDGE RAIL DETAILS
(1 OF 5)

SHEET NUMBER
41
OF 56

Filename: ...\planset\041_bridge rail_01.dgn Division: Structures Username: kwentworth Date:$date$

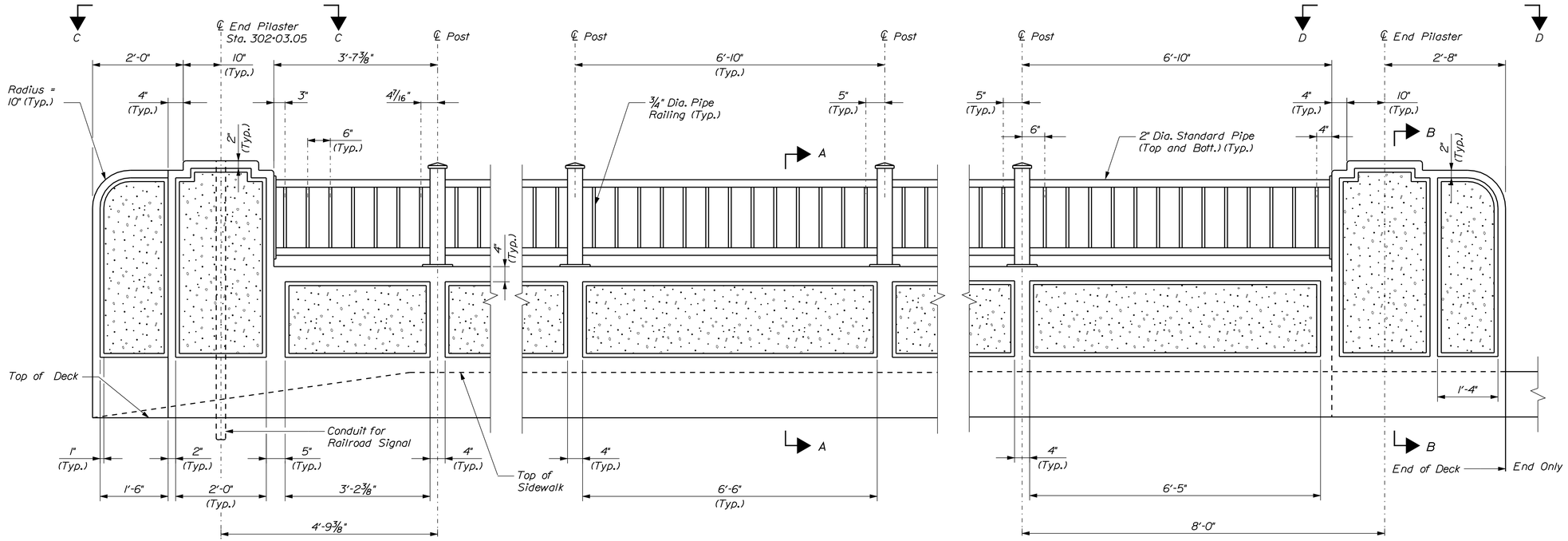

DOWNSTREAM BARRIER PARTIAL ELEVATION
(Looking Upstream)

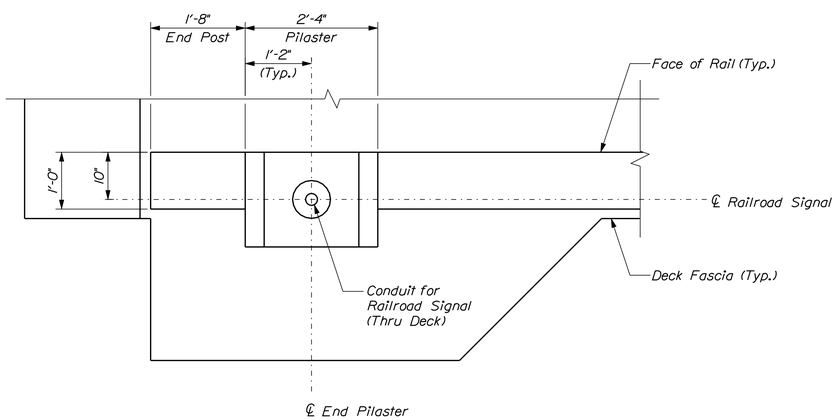

VIEW C-C

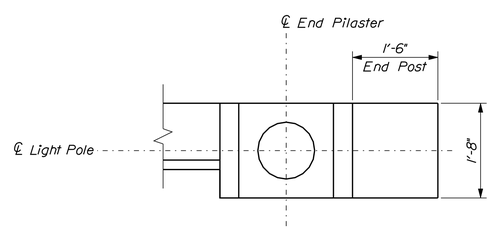

VIEW D-D

NOTES

1. See Bridge Rail Details (1 of 5) for View A-A, Section B-B, and Typical Layout at Intermediate Pilaster.
2. Conduit for Ornamental Lighting not Shown.
3. See Lighting Details Sheet for Light Locations and Conduit Information.

STATE OF MAINE
DEPARTMENT OF TRANSPORTATION

PROJECT NO. BR-1927(400)

BRIDGE NO. 2068

WIN 19274.00

BRIDGE PLANS

STATE OF MAINE
Steven M. Hodgdon
11206
LICENSED PROFESSIONAL ENGINEER

PROJ. MANAGER	N. BENOIT		
DESIGN-DETAILED	JCM	KDW	10-14-13
CHECKED-REVIEWED	JAW	SMH	10-14-13
DESIGN2-DETAILED2	---	---	---
DESIGN3-DETAILED3	---	---	---
REVISIONS 1	---	---	---
REVISIONS 2	---	---	---
REVISIONS 3	---	---	---
REVISIONS 4	---	---	---
FIELD CHANGES	---	---	---

Steven M. Hodgdon
SIGNATURE
11206
P.E. NUMBER
11\13\2013
DATE

BERWICK BRIDGE
SALMON FALLS RIVER
BERWICK YORK COUNTY

BRIDGE RAIL DETAILS
(2 OF 5)

SHEET NUMBER
42
OF 56

Filename: ...\planset\042_bridge rail_02.dgn Division: Structures Username: kwentworth Date:$date$

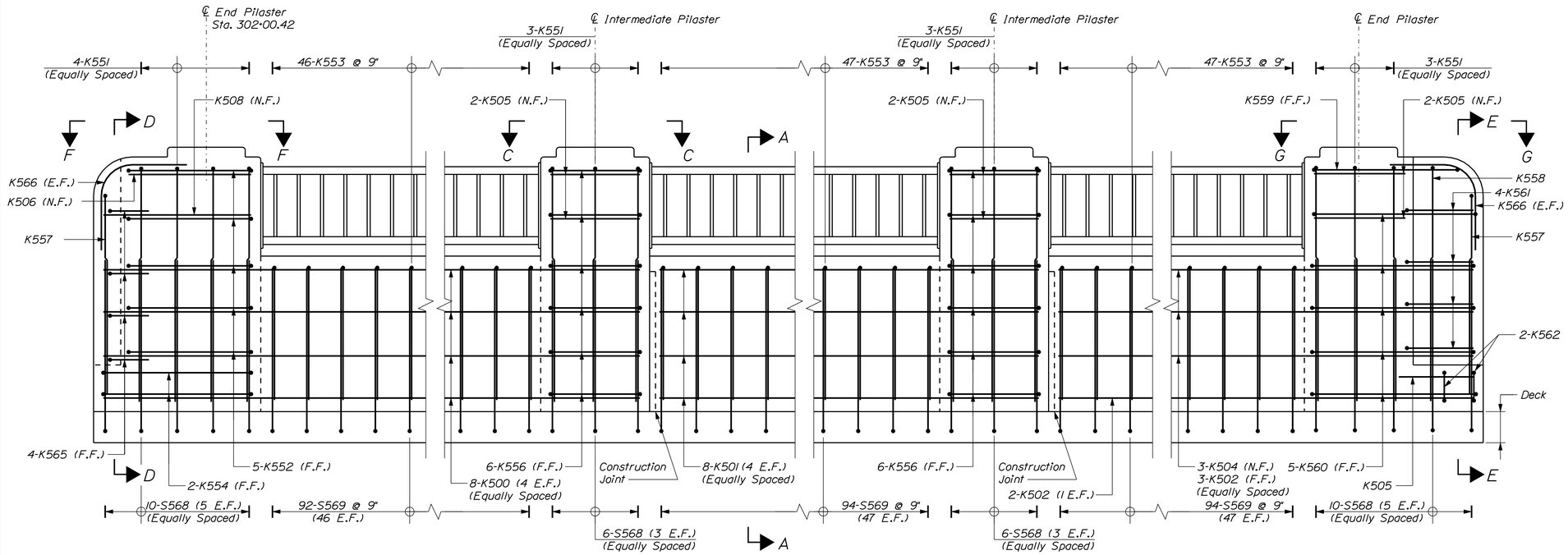

UPSTREAM
(Looking Upstream)

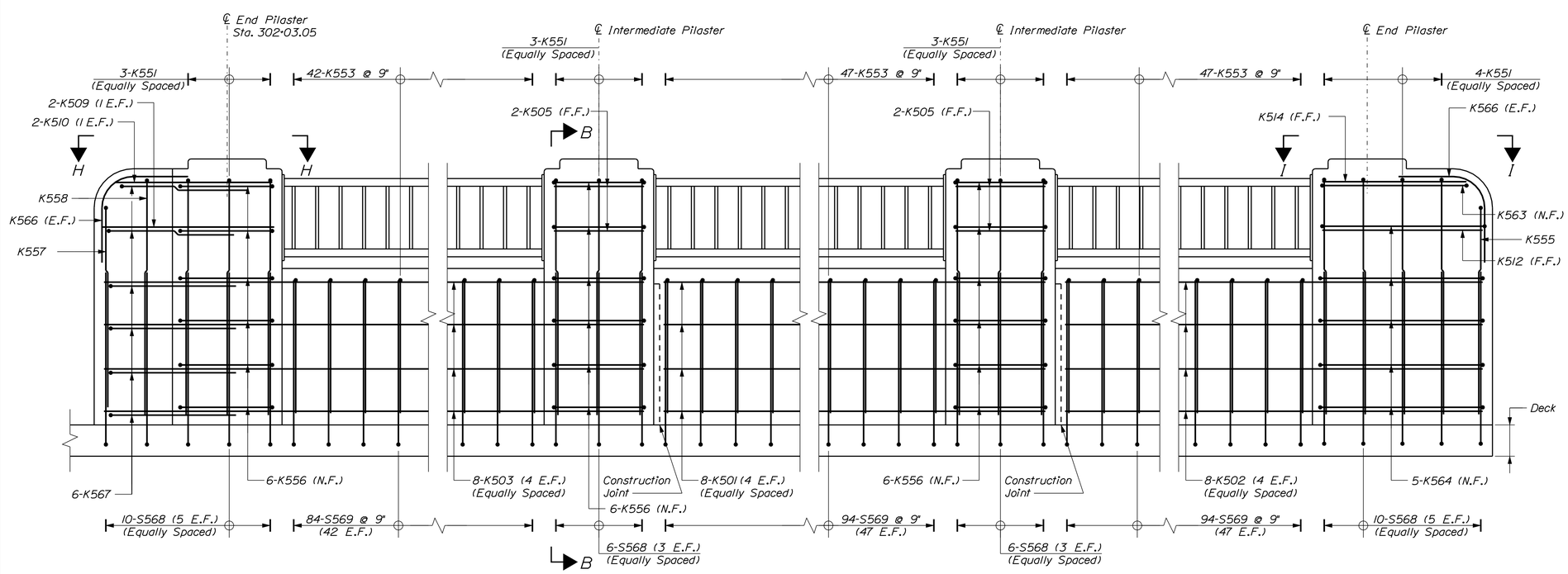

DOWNSTREAM
(Looking Upstream)

NOTE
1. Conduits and Anchor Bolts not Shown.

STATE OF MAINE
DEPARTMENT OF TRANSPORTATION

PROJECT NO. BR-1927(400)

WIN 19274.00

BRIDGE NO. 2068

BRIDGE PLANS

STATE OF MAINE
Steven M. Hodgdon
11206
LICENSED PROFESSIONAL ENGINEER

PROJ. MANAGER	N. BENOIT		
DESIGN-DETAILED	JGM	KDW	10-14-13
CHECKED-REVIEWED	JAW	SMH	10-14-13
DESIGN2-DETAILED2	---	---	---
DESIGN3-DETAILED3	---	---	---
REVISIONS 1	---	---	---
REVISIONS 2	---	---	---
REVISIONS 3	---	---	---
REVISIONS 4	---	---	---
FIELD CHANGES	---	---	---

SIGNATURE
11206
P.E. NUMBER
11\13\2013
DATE

BERWICK BRIDGE
SALMON FALLS RIVER
YORK COUNTY
BERWICK

BRIDGE RAIL DETAILS
(3 OF 5)

SHEET NUMBER
43
OF 56

Filename: ...\planset\043_bridge rail_03.dgn Division: Structures Username: kwentworth Date:$date$

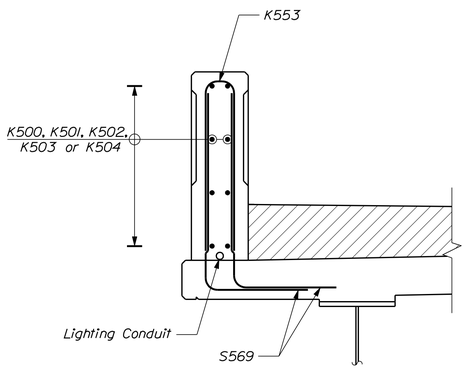

SECTION A-A
(Post Not Shown)
(Deck and Sidewalk Reinforcing Not Shown)

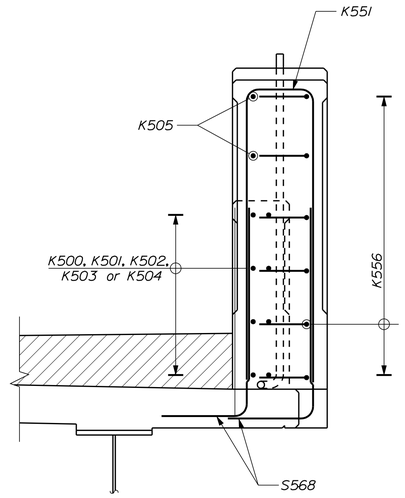

SECTION B-B
(Post Not Shown)
(Deck and Sidewalk Reinforcing Not Shown)

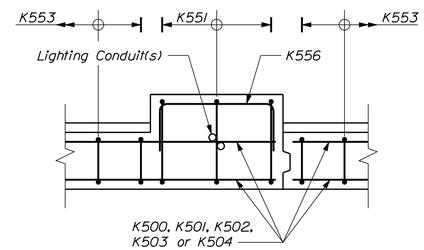

VIEW C-C

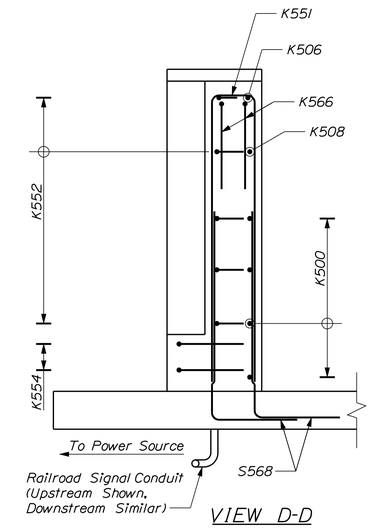

VIEW D-D

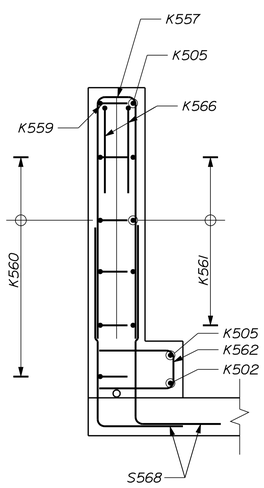

VIEW E-E

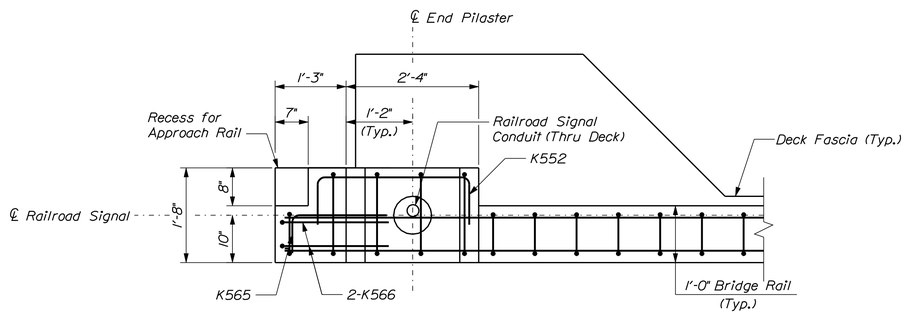

VIEW F-F

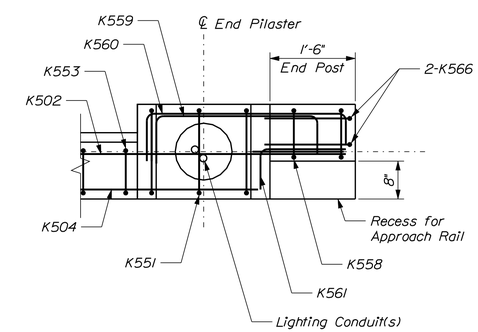

VIEW G-G

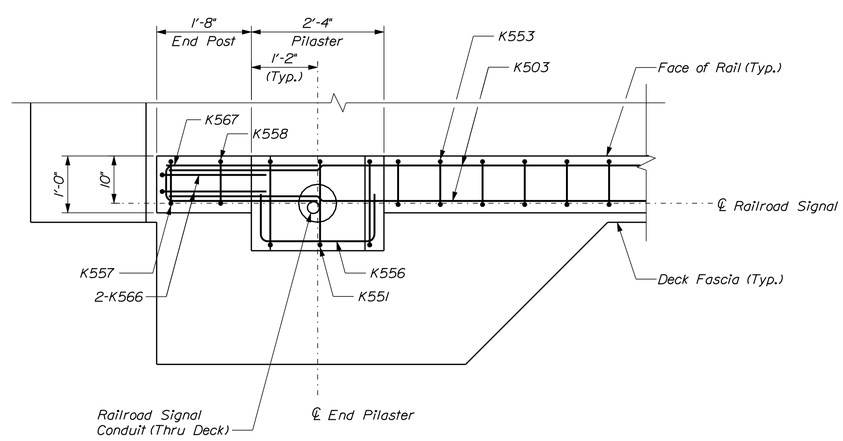

VIEW H-H

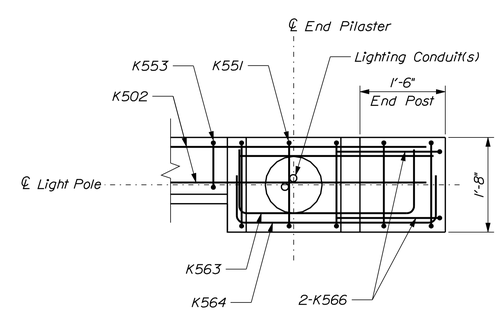

VIEW I-I

STATE OF MAINE
DEPARTMENT OF TRANSPORTATION

PROJECT NO. BR-1927(400)

WIN 19274.00

BRIDGE NO. 2068

BRIDGE PLANS

STATE OF MAINE
Steven M. Hodgdon
11206
LICENSED PROFESSIONAL ENGINEER

	SIGNATURE	
	11206	
	P.E. NUMBER	
	11\13\2013	
	DATE	

PROJ. MANAGER	N. BENOIT	BY	DATE
DESIGN-DETAILED	JGM	KDW	10-14-13
CHECKED-REVIEWED	JAW	SMH	10-14-13
DESIGN2-DETAILED2	---	---	---
DESIGN3-DETAILED3	---	---	---
REVISIONS 1	---	---	---
REVISIONS 2	---	---	---
REVISIONS 3	---	---	---
REVISIONS 4	---	---	---
FIELD CHANGES	---	---	---

BERWICK BRIDGE
SALMON FALLS RIVER
BERWICK YORK COUNTY

BRIDGE RAIL DETAILS
(4 OF 5)

SHEET NUMBER
44
OF 56

Filename: ...\plonset\044_bridge rail_04.dgn Division: Structures Username: kwentworth Date:$date$

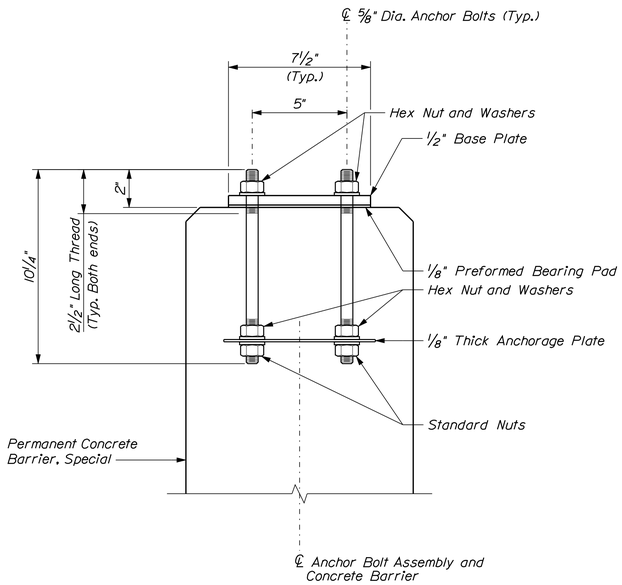

ANCHOR BOLT ASSEMBLY

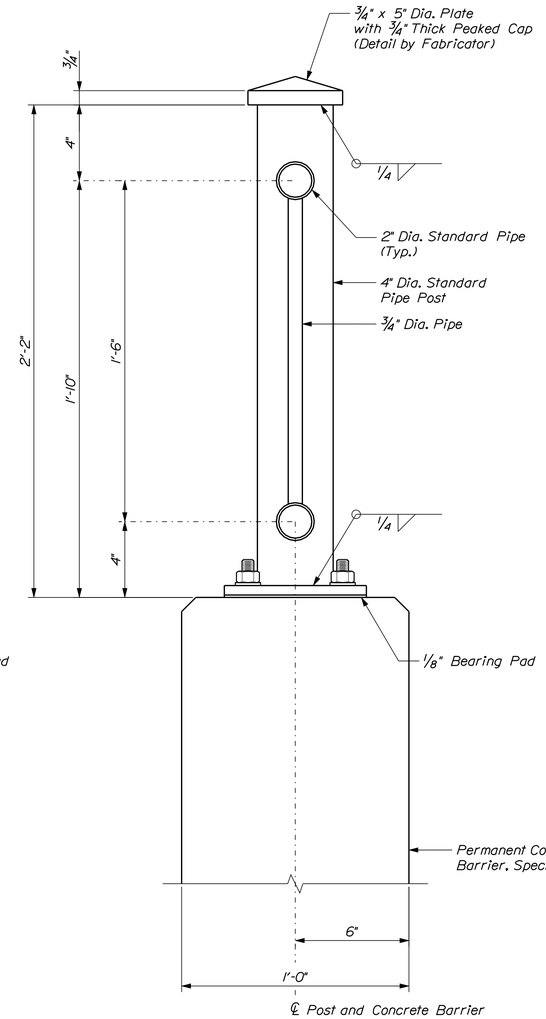

METAL RAILING DETAIL

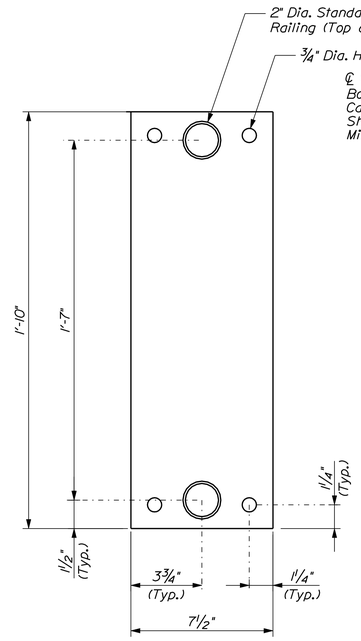

TYPICAL SIDE PLATE DETAIL

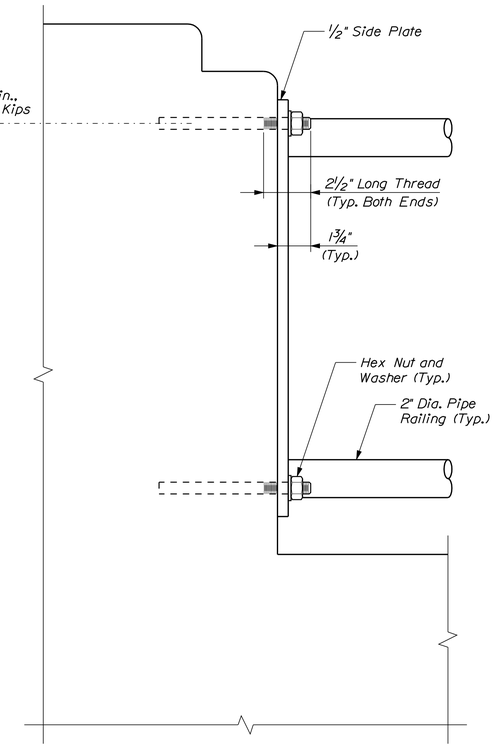

TYPICAL SIDE PLATE CONNECTION DETAIL
(3/4" Dia. Pipes Not Shown)

NOTE

1. Metal hand railing, posts, caps, connection plates, base plates, and other related components and hardware shall be included in Item 507.0841, Steel Pipe Hand Railing, Two Bar.

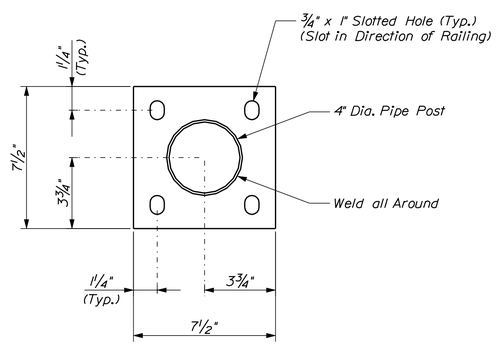

TYPICAL BASE PLATE DETAIL

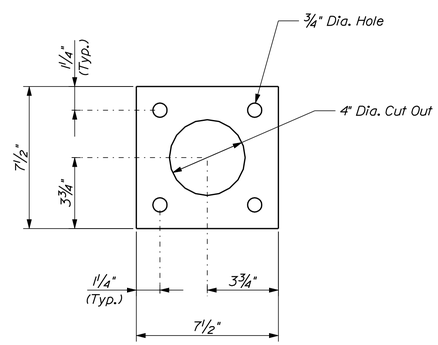

TYPICAL ANCHORAGE PLATE DETAIL

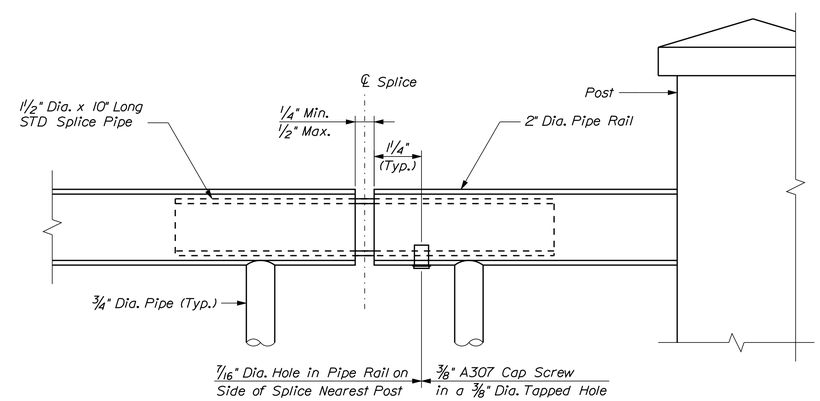

SPLICE DETAIL
(Provide 2 Splices Between Each Pilaster)

STATE OF MAINE
DEPARTMENT OF TRANSPORTATION

PROJECT NO. BR-1927(400)

BRIDGE NO. 2068

WIN 19274.00

BRIDGE PLANS

STATE OF MAINE
Steven M. Hodgdon
11206
LICENSED PROFESSIONAL ENGINEER

		BY	DATE
PROJ. MANAGER	N. BENOIT		
DESIGN-DETAILED	JCM	KDW	10-14-13
CHECKED-REVIEWED	JAW	SMH	10-14-13
DESIGN2-DETAILED2	---	---	---
DESIGN3-DETAILED3	---	---	---
REVISIONS 1	---	---	---
REVISIONS 2	---	---	---
REVISIONS 3	---	---	---
REVISIONS 4	---	---	---
FIELD CHANGES	---	---	---

SIGNATURE
11206
P.E. NUMBER
11\13\2013
DATE

BERWICK BRIDGE
SALMON FALLS RIVER
BERWICK YORK COUNTY

BRIDGE RAIL DETAILS
(5 OF 5)

SHEET NUMBER
45
OF 56

Filename: ...\planset\045_bridge rail_06.dgn Division: Structures Username: kwentworth Date:$date$

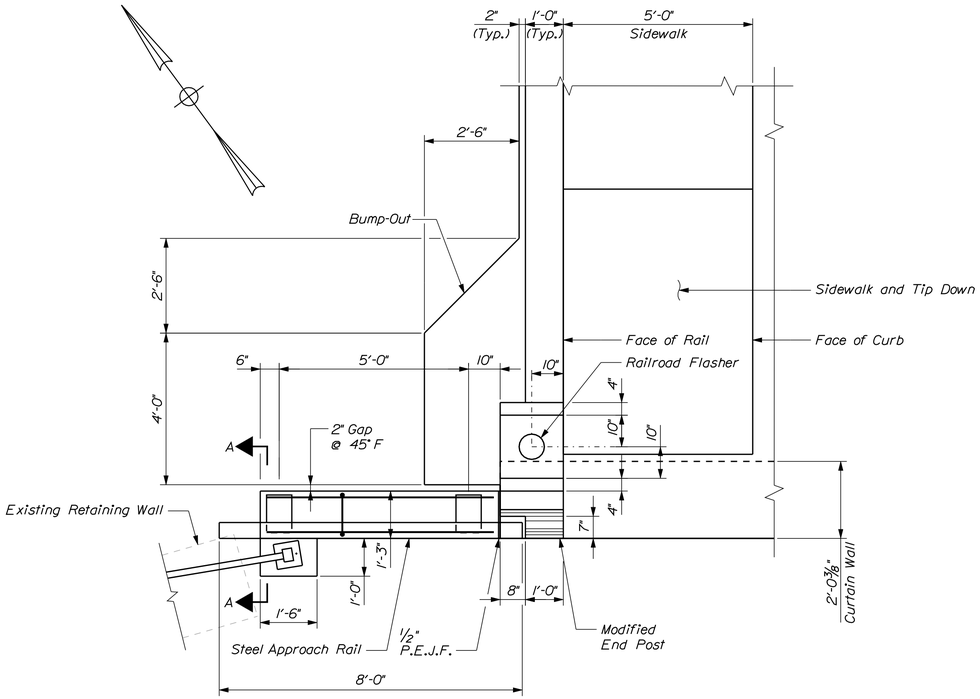

PLAN - SOMERSWORTH DEPARTURE
(Track Not Shown)
Scale: 1/2" = 1'-0"

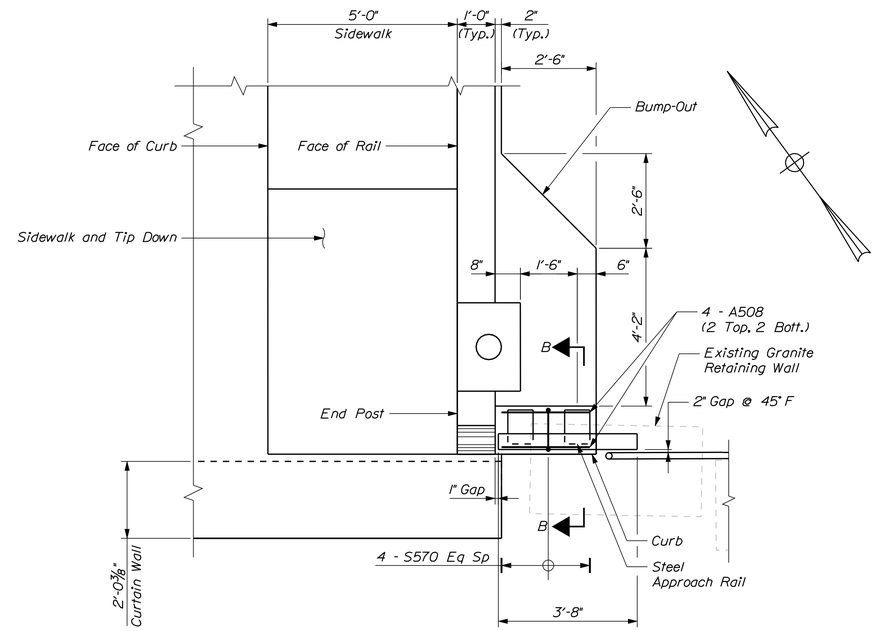

PLAN - SOMERSWORTH APPROACH
(Track Not Shown)
Scale: 1/2" = 1'-0"

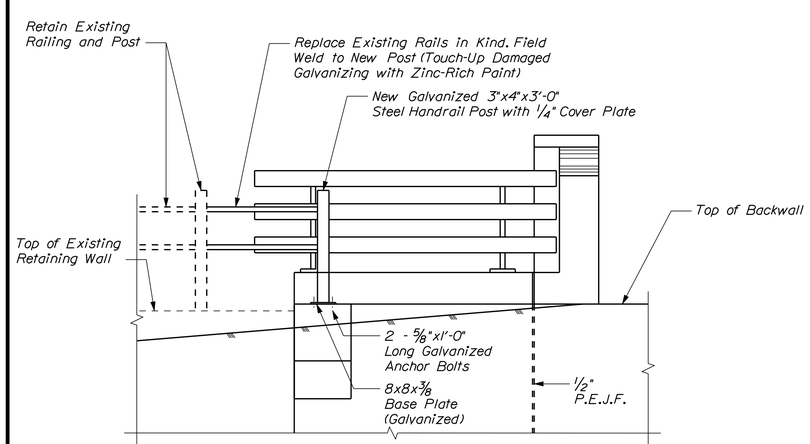

ELEVATION - SOMERSWORTH DEPARTURE
Scale: 1/2" = 1'-0"

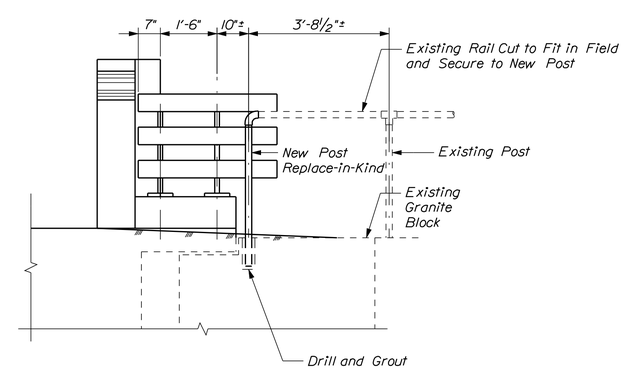

ELEVATION - SOMERSWORTH APPROACH
Scale: 1/2" = 1'-0"

NOTES

1. See Approach Rail Details (3 of 3) for Section A-A. and Section B-B.

2. Repairs and modifications to to existing hand railing system as shown near Abutment No. 1 shall be included in Item 507.0851, Steel Hand Railing Repair.

STATE OF MAINE
DEPARTMENT OF TRANSPORTATION

PROJECT NO. BR-1927(400)

BRIDGE NO. 2068 — WIN 19274.00 — BRIDGE PLANS

STATE OF MAINE — Steven M. Hodgdon — 11206 — LICENSED PROFESSIONAL ENGINEER

PROJ. MANAGER	N. BENOIT		
DESIGN-DETAILED	JCM	KDW	10-14-13
CHECKED-REVIEWED	JAW	SMH	10-14-13
DESIGN2-DETAILED2	---	---	---
DESIGN3-DETAILED3	---	---	---
REVISIONS 1	---	---	---
REVISIONS 2	---	---	---
REVISIONS 3	---	---	---
REVISIONS 4	---	---	---
FIELD CHANGES	---	---	---

SIGNATURE
11206
P.E. NUMBER
11\13\2013
DATE

BERWICK BRIDGE
SALMON FALLS RIVER
BERWICK YORK COUNTY

APPROACH RAIL DETAILS
(1 OF 3)

SHEET NUMBER
46
OF 56

Filename: ...\st\planset\046_aprail_01.dgn Division: Structures Username: kwentworth Date:$date$

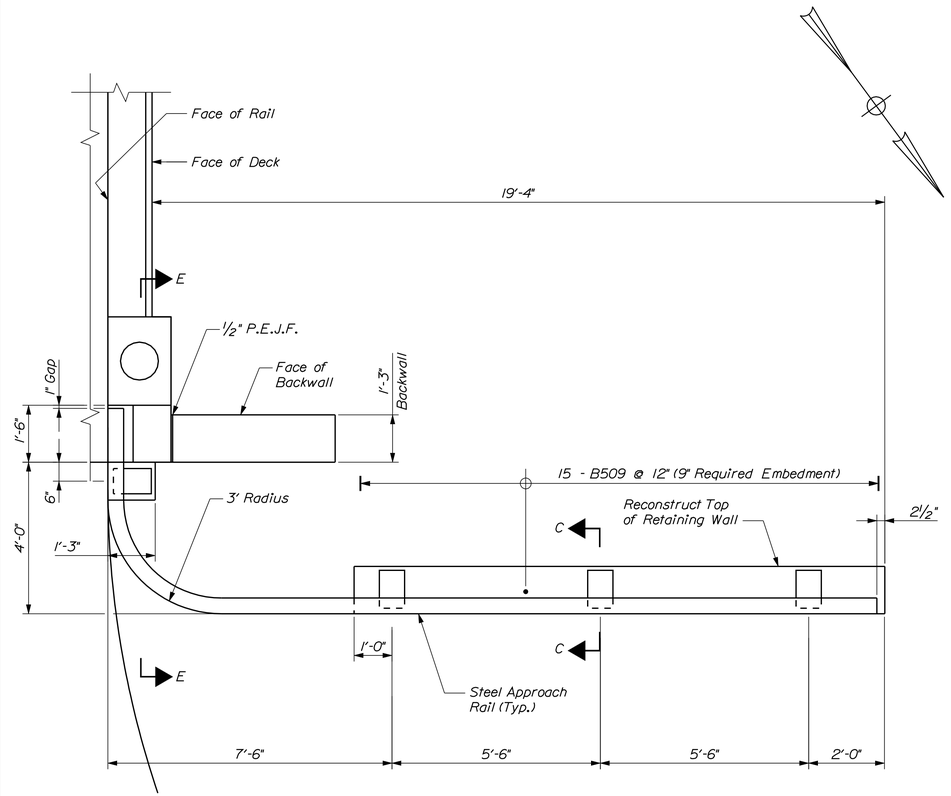

PLAN - BERWICK APPROACH
Scale: 1/2" = 1'-0"

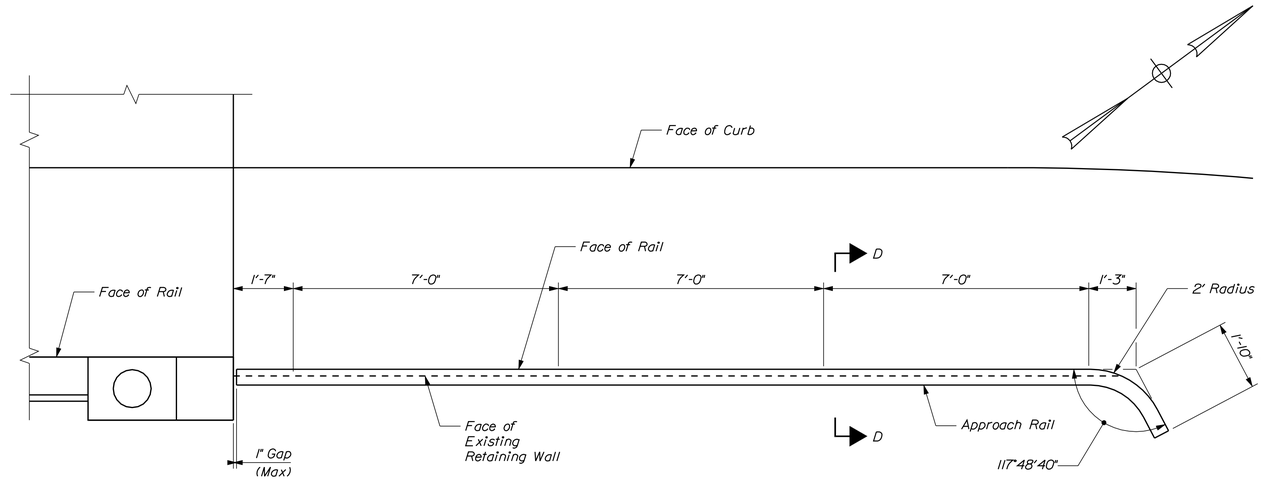

PLAN - BERWICK DEPARTURE
Scale: 1/2" = 1'-0"

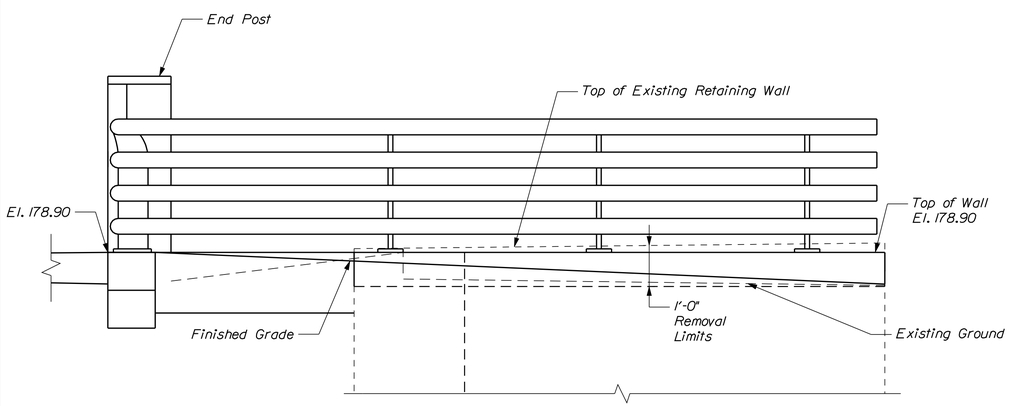

ELEVATION - BERWICK APPROACH
Scale: 1/2" = 1'-0"

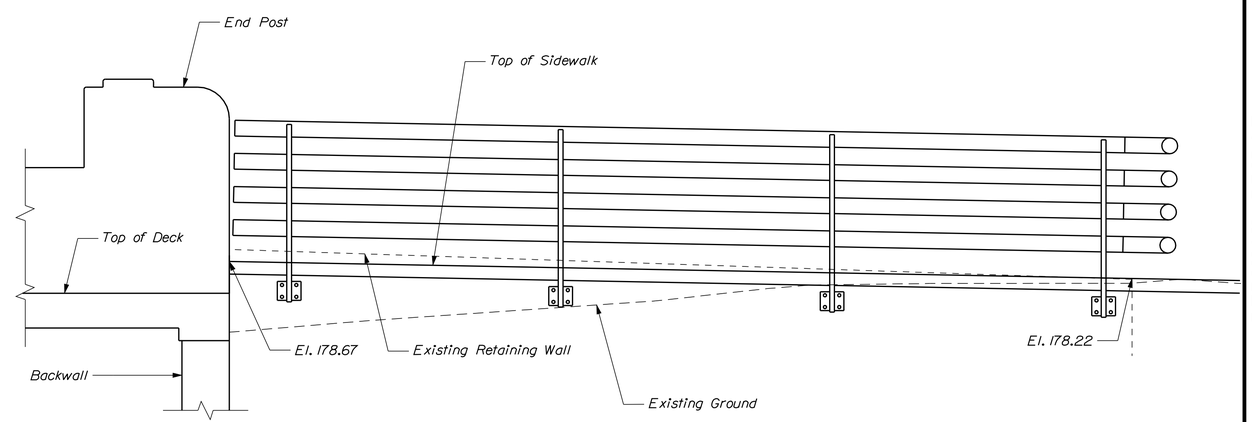

ELEVATION - BERWICK DEPARTURE
Scale: 1/2" = 1'-0"

NOTES

1. See Approach Rail Details (3 of 3) for Section C-C, Section D-D and Section E-E.

STATE OF MAINE
DEPARTMENT OF TRANSPORTATION

PROJECT NO. BR-1927(400)

BRIDGE NO. 2068 | WIN 19274.00 | BRIDGE PLANS

STATE OF MAINE Steven M. Hodgdon 11206 LICENSED PROFESSIONAL ENGINEER

PROJ. MANAGER	N. BENOIT		
DESIGN-DETAILED	JGM	KDW	10-14-13
CHECKED-REVIEWED	JAW	SMH	10-14-13
DESIGN2-DETAILED2	---	---	---
DESIGN3-DETAILED3	---	---	---
REVISIONS 1	---	---	---
REVISIONS 2	---	---	---
REVISIONS 3	---	---	---
REVISIONS 4	---	---	---
FIELD CHANGES	---	---	---

SIGNATURE: Steven M. Hodgdon
P.E. NUMBER: 11206
DATE: 11\13\2013

BERWICK BRIDGE
SALMON FALLS RIVER
YORK COUNTY

APPROACH RAIL DETAILS
(2 OF 3)

SHEET NUMBER
47
OF 56

Filename: ...\st\planset\047_aproil_02.dgn Division: Structures Username: kwentworth Date:$date$

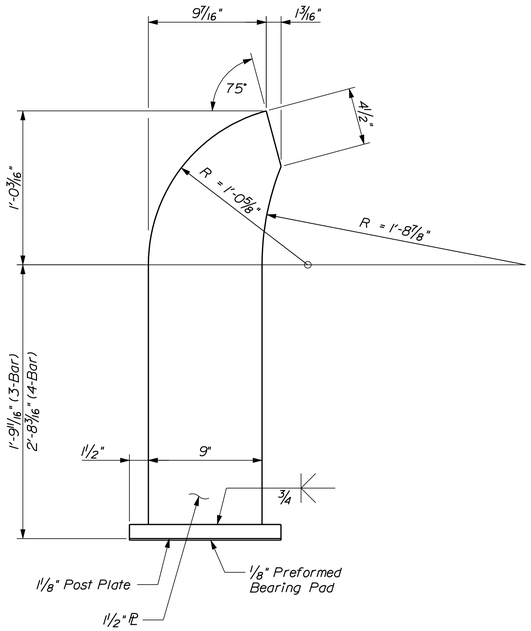

BASE-MOUNTED POST DETAIL

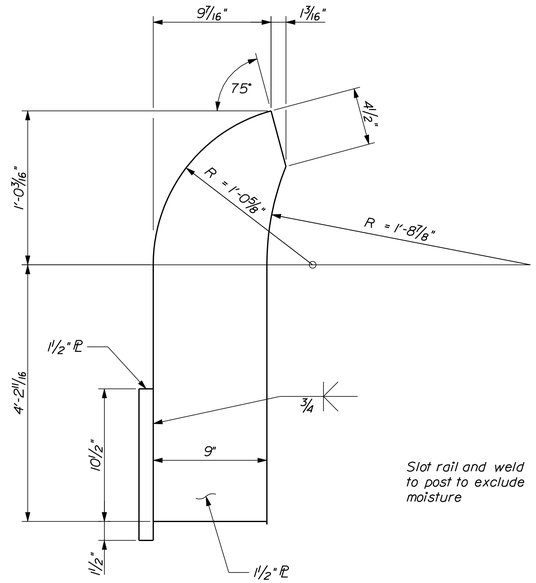

FACE-MOUNTED POST DETAIL

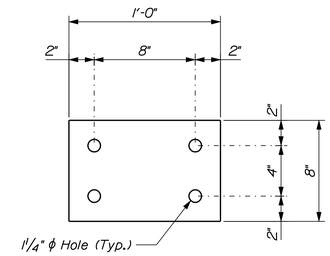

POST PLATE DETAIL

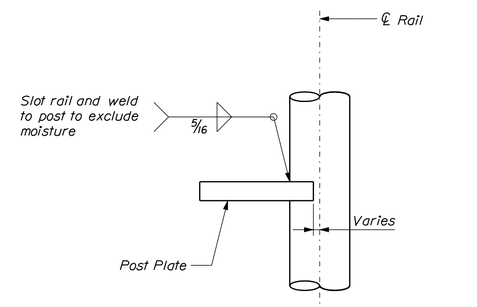

RAILING CONNECTION DETAIL
(Typical for the two lower rails)

APPROACH RAILING NOTES

1. All work and materials shall conform to the Provisions of Section 507 - Railings of the Standard Specifications.
2. Posts, base plates, and mounting plates shall conform to ASTM A572 Grade 50, except anchor plates may be ASTM A36.
3. Rails shall conform to ASTM A53 Grade B.
4. Anchor bolts shall conform to ASTM A449 or ASTM F1554, Grade 55.
5. All parts shall be galvanized after fabrication in accordance with ASTM A123, except that hardware shall meet the requirements of either ASTM A153 or ASTM B695, Class 50 Type 1.
6. Railings, posts, base plates, and side mounting plates shall be galvanized in accordance with AASHTO M111 (ASTM A123) and coated in accordance with Special Provision 506.
7. Twenty-five percent of the post-to-base (including side mounting plate) welds in a production lot shall be tested by the magnetic particle method. If rejectable discontinuities are found, another twenty-five percent of that production lot shall be tested. If rejectable discontinuities are found in the second twenty-five percent, all post-to-base (including side mounting plate) welds in that lot shall be tested. Acceptance criteria shall be in accordance with the latest edition of the AWS D1.5 Bridge Welding Code.
8. Venting and pick-up holes shall be shown on the shop drawings.
9. All exposed cut or sheared edges shall be broken and free of burrs.
10. Set rail posts normal to grade.
11. Post base plates and side mounting plates shall be flat after fabrication.
12. Rail tubes shall not be spliced between posts.

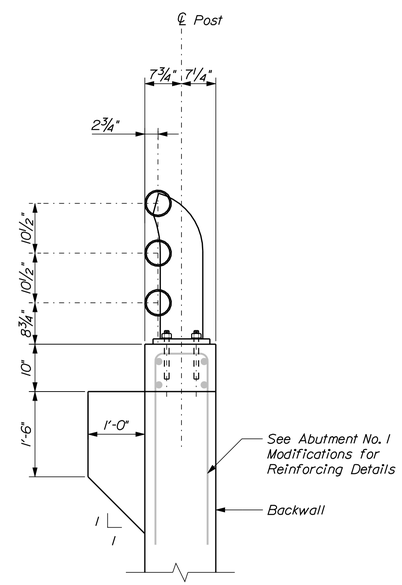

SECTION A-A

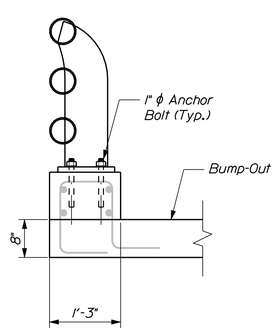

SECTION B-B
(See Section A-A for Typical Rail and Curb Dimensions)

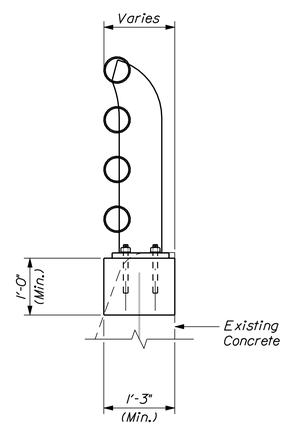

SECTION C-C
(See Section D-D for Typical Rail Dimensions)

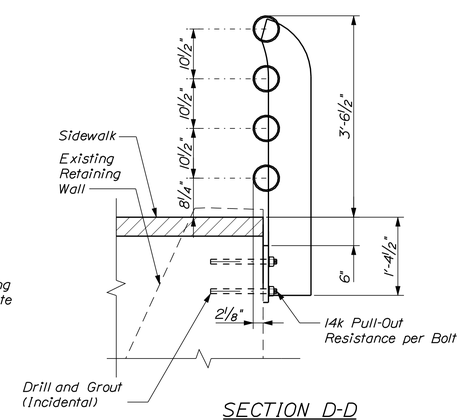

SECTION D-D

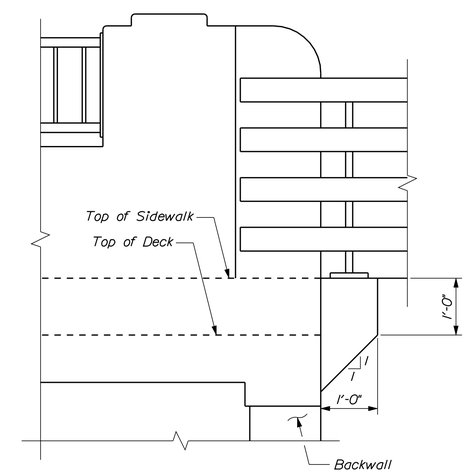

SECTION E-E

STATE OF MAINE
DEPARTMENT OF TRANSPORTATION

PROJECT NO. BR-1927(400)

BRIDGE NO. 2068 | WIN 19274.00 | BRIDGE PLANS

STATE OF MAINE — Steven M. Hodgdon — 11206 — LICENSED PROFESSIONAL ENGINEER

PROJ. MANAGER	N. BENOIT		
DESIGN-DETAILED	JGM	KDW	10-14-13
CHECKED-REVIEWED	JAW	SMH	10-14-13
DESIGN2-DETAILED2	---	---	---
DESIGN3-DETAILED3	---	---	---
REVISIONS 1	---	---	---
REVISIONS 2	---	---	---
REVISIONS 3	---	---	---
REVISIONS 4	---	---	---
FIELD CHANGES	---	---	---

SIGNATURE: Steven M. Hodgdon
P.E. NUMBER: 11206
DATE: 11\13\2013

BERWICK BRIDGE
SALMON FALLS RIVER
BERWICK YORK COUNTY

APPROACH RAIL DETAILS (3 OF 3)

SHEET NUMBER
48
OF 56

Filename: ...\st\planset\048_aproil_03.dgn Division: Structures Username: kwentworth Date:$date$

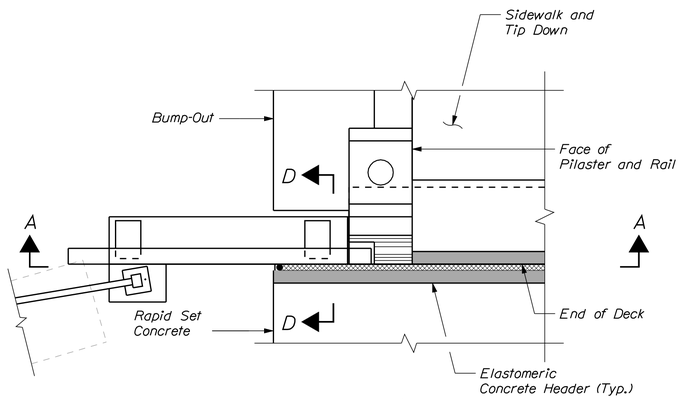

PLAN - SOMERSWORTH DEPARTURE

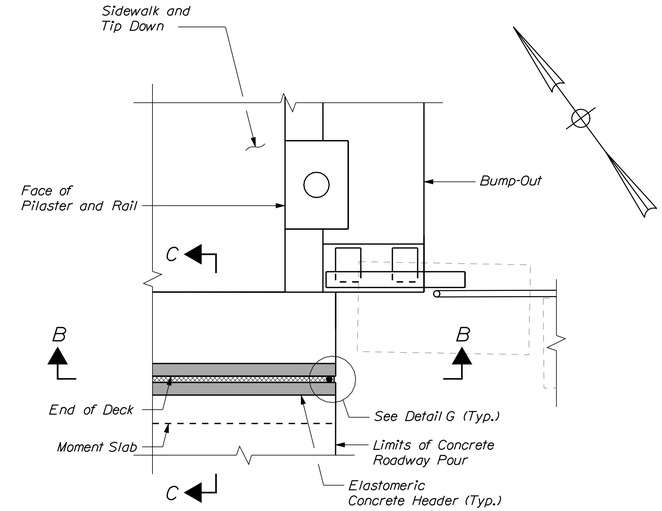

PLAN - SOMERSWORTH APPROACH

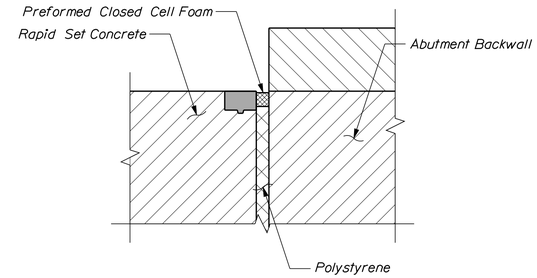

SECTION D-D

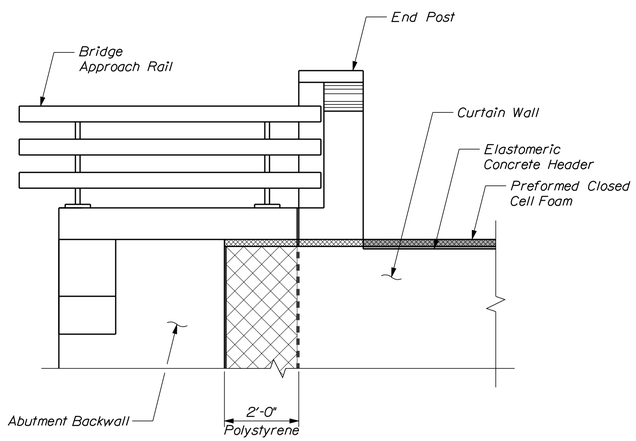

SECTION A-A

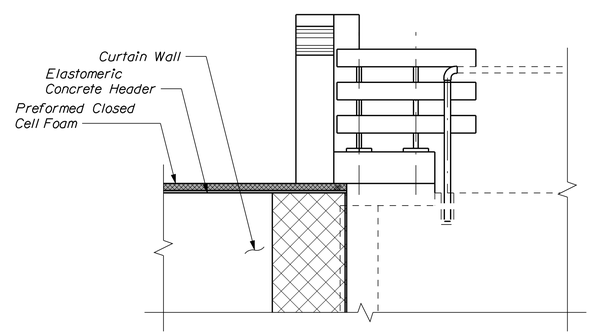

SECTION B-B

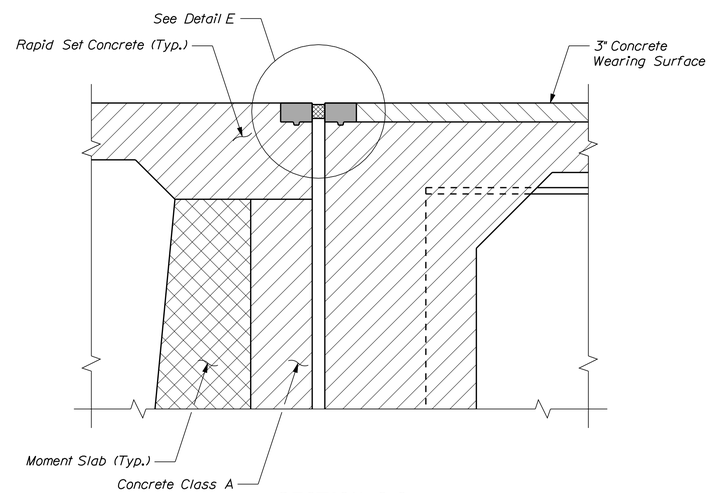

SECTION C-C

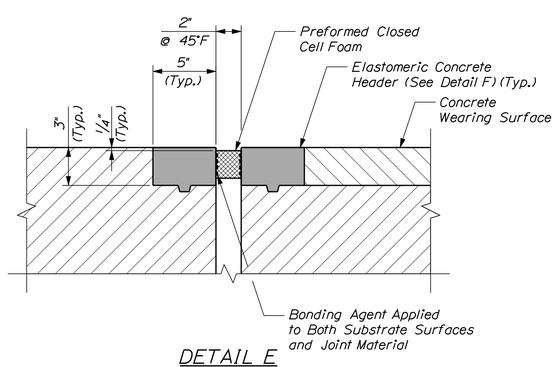

DETAIL E

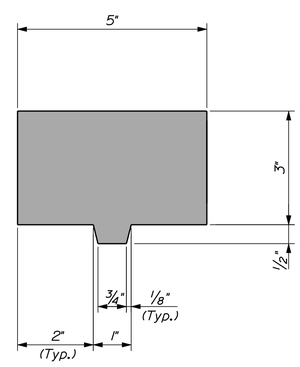

DETAIL F

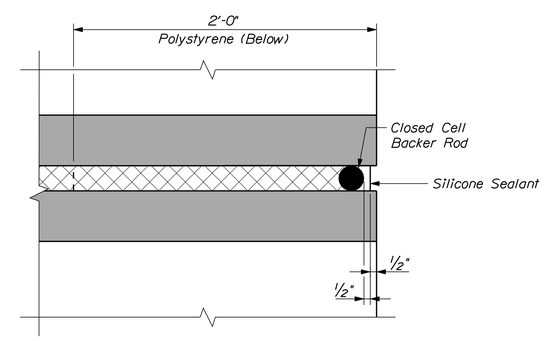

DETAIL G

STATE OF MAINE
DEPARTMENT OF TRANSPORTATION

PROJECT NO. BR-1927(400)

BRIDGE NO. 2068

WIN 19274.00

BRIDGE PLANS

STATE OF MAINE
Steven M. Hodgdon
11206
LICENSED PROFESSIONAL ENGINEER

PROJ. MANAGER	N. BENOIT	BY	DATE
DESIGN-DETAILED	JCM	KDW	10-14-13
CHECKED-REVIEWED	JAW	SMH	10-14-13
DESIGN2-DETAILED2	---	---	---
DESIGN3-DETAILED3	---	---	---
REVISIONS 1	---	---	---
REVISIONS 2	---	---	---
REVISIONS 3	---	---	---
REVISIONS 4	---	---	---
FIELD CHANGES	---	---	---

SIGNATURE
11206
P.E. NUMBER
11\13\2013
DATE

BERWICK BRIDGE
SALMON FALLS RIVER
BERWICK YORK COUNTY

EXPANSION JOINT DETAILS

SHEET NUMBER
49
OF 56

Filename: ...\planset\049_exp joint_01.dgn Division: Structures Username: kwentworth Date:$date$

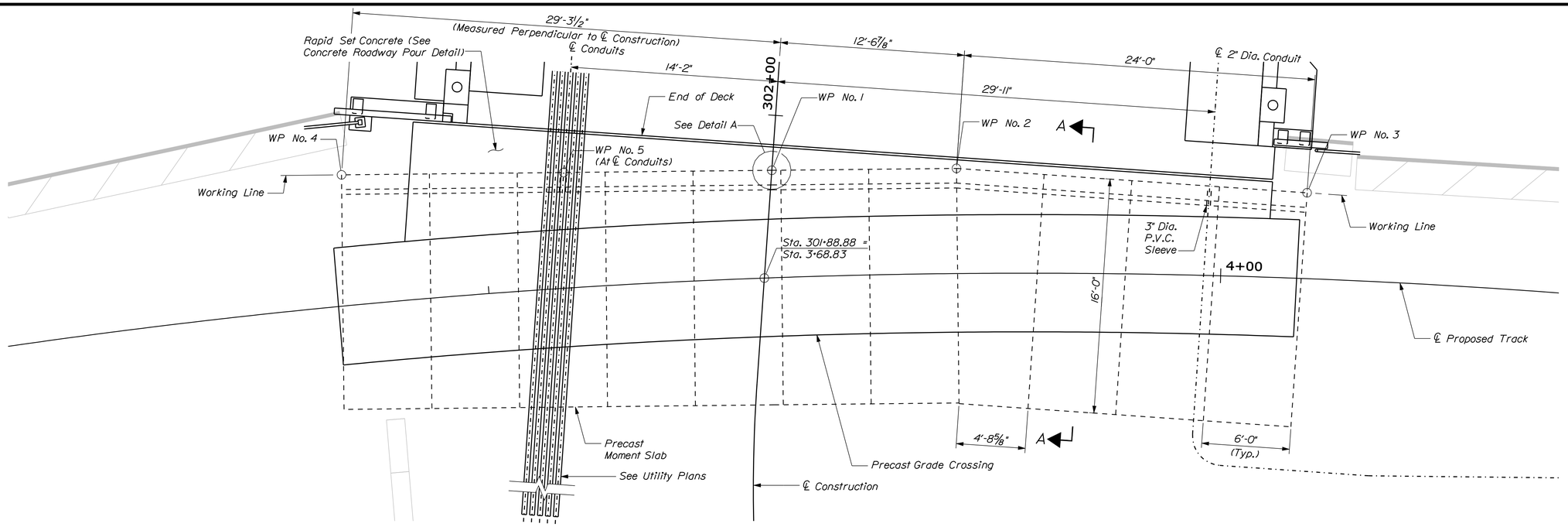

MOMENT SLAB PLAN

Scale: ¼" = 1'-0"

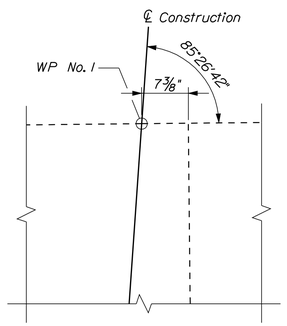

DETAIL A

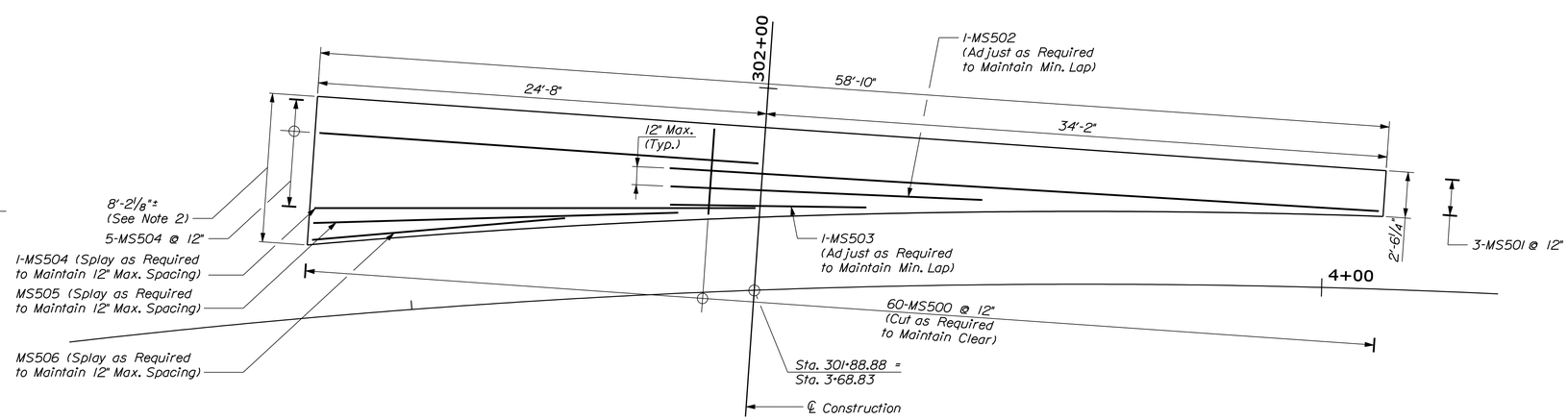

CONCRETE ROADWAY POUR

Scale: ¼" = 1'-0"

MOMENT SLAB WORKING POINTS		
WP No.	Northing	Easting
1	157895.63	853832.60
2	157888.98	853843.32
3	157874.73	853862.64
4	157911.13	853807.64
5	157903.13	853820.53

CONCRETE ROADWAY POUR NOTES

1. Concrete Roadway Pour shall be included in Item 502.3415 Structural Concrete, Rapid Setting with Coarse Aggregate.
2. Concrete Roadway Pour shall be constructed immediately after the final precast grade crossing is installed while bridge is closed unless approved otherwise by the Resident.

MOMENT SLAB PLAN

1. Working Points No. 3 and 4 may vary from those shown on the plans.
2. Dimension based on 2" gap at expansion joint and ½" joint between rapid set concrete and 8' precast grade crossing.
3. See Moment Slab Details (2 of 2) for additional details.

STATE OF MAINE
DEPARTMENT OF TRANSPORTATION

PROJECT NO. BR-1927(400)

BRIDGE NO. 2068

WIN 19274.00

BRIDGE PLANS

STATE OF MAINE — Steven M. Hodgdon — 11206 — LICENSED PROFESSIONAL ENGINEER

Steven M. Hodgdon	SIGNATURE	
11206	P.E. NUMBER	
11\13\2013	DATE	

PROJ. MANAGER	N. BENOIT	BY	DATE
DESIGN-DETAILED	JGM	KDW	10-14-13
CHECKED-REVIEWED	JAW	SMH	10-14-13
DESIGN2-DETAILED2	---	---	---
DESIGN3-DETAILED3	---	---	---
REVISIONS 1	---	---	---
REVISIONS 2	---	---	---
REVISIONS 3	---	---	---
REVISIONS 4	---	---	---
FIELD CHANGES	---	---	---

BERWICK BRIDGE
SALMON FALLS RIVER
BERWICK YORK COUNTY

MOMENT SLAB DETAILS (1 OF 2)

SHEET NUMBER
50
OF 56

Filename: ...\planset\050_slab_details.dgn Division: Structures Username: kwentworth Date:$date$

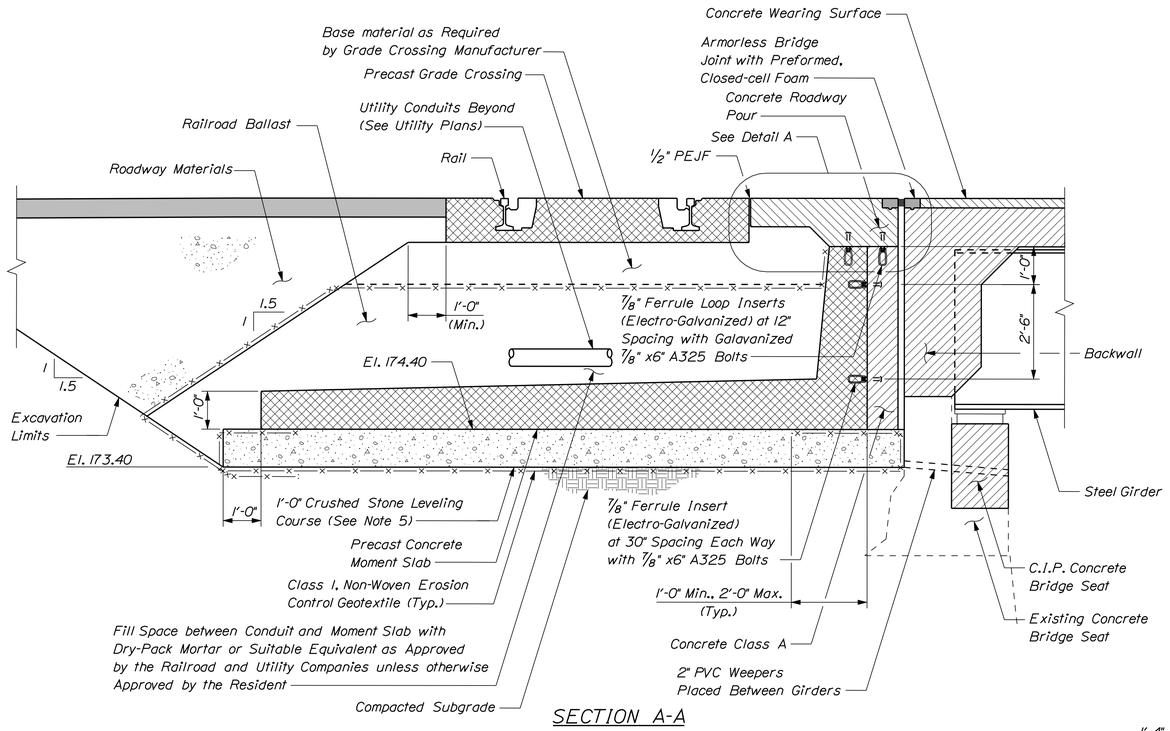

SECTION A-A

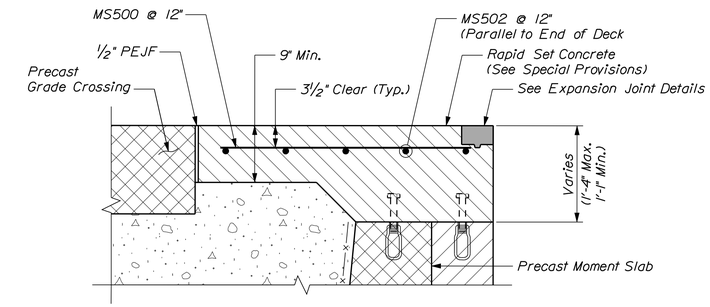

DETAIL A

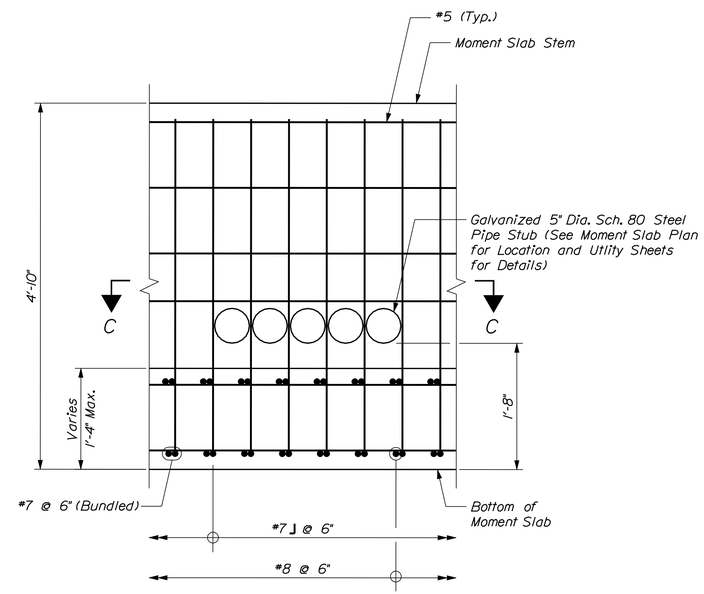

VIEW B-B

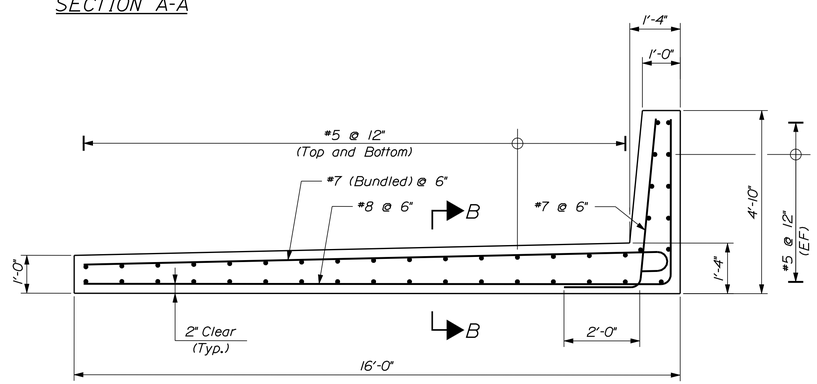

MOMENT SLAB TYPICAL SECTION

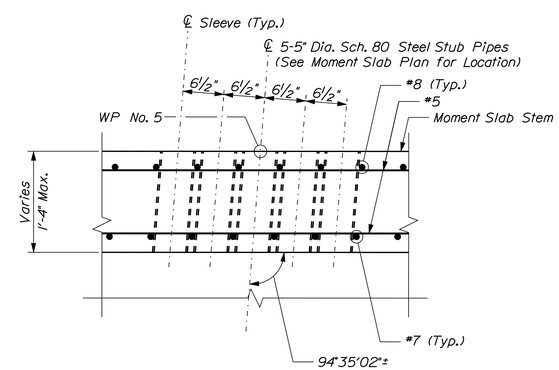

SECTION C-C
(Stub Pipes not Shown)

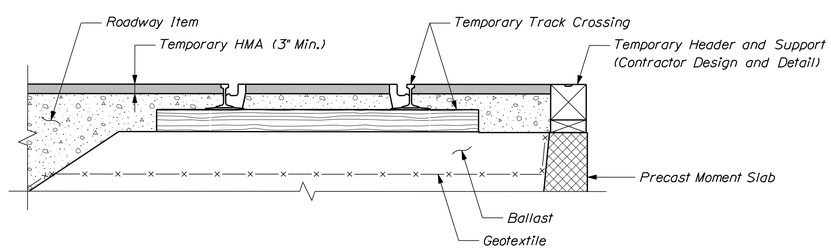

TEMPORARY GRADE CROSSING DETAIL

UTILITY PENETRATION DETAILS
(See Utility Plans for Details)

MOMENT SLAB NOTES

1. Precast moment slabs shall be concrete Class "P" with a minimum compressive strength of 5,000 psi. Concrete shall include a calcium nitrite corrosion inhibitor (3 gal/cy). Maximum permeability shall be 3000 coulombs.
2. A silane sealer from the MaineDOT prequalified products list shall be shop-applied to all surfaces of the precast moment slab sections excluding the bottom. Cost included in the precast moment slab item.
3. All reinforcing steel shall be epoxy coated with a minimum concrete cover of 2 inches. Reinforcing steel shall conform to ASTM A615 grade 60. Reinforcing steel shall not be measured separately for payment but shall be included in the precast moment slab item.
4. The subgrade shall be excavated to the elevation shown unless otherwise directed by the resident. Boulders and other obstructions that extend more than 6 inches above the design subgrade elevation shall be removed as approved by the resident. Voids more than 6 inches below the design subgrade elevation shall be backfilled with granular borrow and compacted to the satisfaction of the resident. All excavated soil shall be removed and disposed of in accordance with contract documents.
5. Crushed stone leveling base shall be constructed in accordance with section 411 and paid under Item 411.09. Untreated Aggregate Surface Course. Aggregate shall conform to the requirements of Section 703.10.
6. Ballast material, gradation, and installation requirements shall be in accordance with the Special Provisions and the latest AREMA manual and as approved by NHDOT and the Railroad. All cost for ballast within the moment slab limits of excavation as shown shall be incidental to the Precast Moment Slab.
7. Geotextile shall be paid under Item 620.58, Erosion Control Geotextile.
8. Ferrule inserts shall be plugged with temporary cap screws or other means as approved by the resident to prevent debris and foreign material from plugging or fouling the threads. Cost included in the precast moment slab item.

STATE OF MAINE
DEPARTMENT OF TRANSPORTATION

PROJECT NO. BR-1927(400)

WIN 19274.00

BRIDGE NO. 2068

BRIDGE PLANS

STATE OF MAINE
Steven M. Hodgdon
11206
LICENSED PROFESSIONAL ENGINEER

		BY	DATE
PROJ. MANAGER	N. BENOIT		
DESIGN-DETAILED	JGM	KDW	10-14-13
CHECKED-REVIEWED	JAW	SMH	10-14-13
DESIGN2-DETAILED2	---	---	---
DESIGN3-DETAILED3	---	---	---
REVISIONS 1	---	---	---
REVISIONS 2	---	---	---
REVISIONS 3	---	---	---
REVISIONS 4	---	---	---
FIELD CHANGES	---	---	---

SIGNATURE
11206
P.E. NUMBER
11\13\2013
DATE

BERWICK BRIDGE
SALMON FALLS RIVER
BERWICK YORK COUNTY

MOMENT SLAB DETAILS
(2 OF 2)

SHEET NUMBER
51
OF 56

Filename: ...\051_slab_details_02.dgn Division: Structures Username: kwentworth Date:$date$

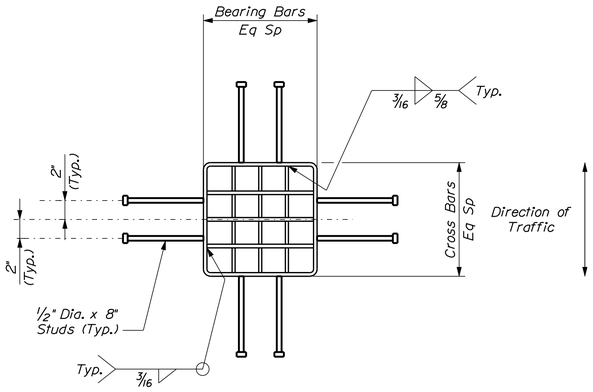

BRIDGE DRAIN PLAN

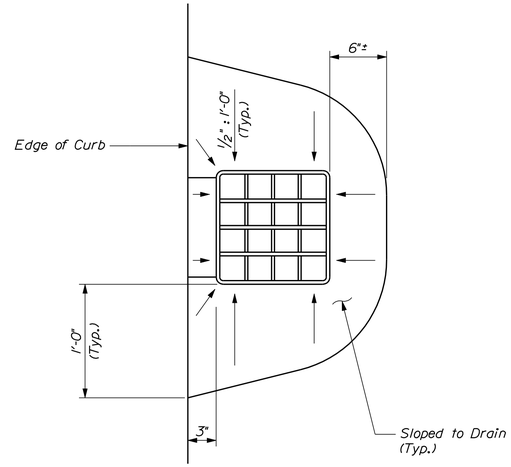

BRIDGE DRAIN DECK SURFACE PLAN
(Pavement Depression around Bridge Drains)

BRIDGE DRAIN NOTES

1. All plates, if any, shall be 5/16" thick and shall conform to ASTM A 36.
2. The downspout shall conform to ASTM A500.
3. Grating shall be a commercial heavy - duty grating with 1 1/2" x 5/16" bearing bars and 3/8" dia. cross bars.
4. Drains and L 3x3x5/16 shall be blast cleaned to the requirements of SSPC-SP6/NACE 3 and hot-dipped galvanized in accordance with ASTM A 123. Steel beam attachment: WT 6x13 and associated fasteners shall meet the same material specification and protective coating requirements as the structural steel.
5. Payment for bridge drains will be as specified under Subsection 502.19 of the Standard Specifications.
6. The additional reinforcing steel around each bridge drain will not be paid for directly. Payment will be considered incidental to related contract items.
7. Cross-slope varies. See Typical Section and Details for Superelevation Table.

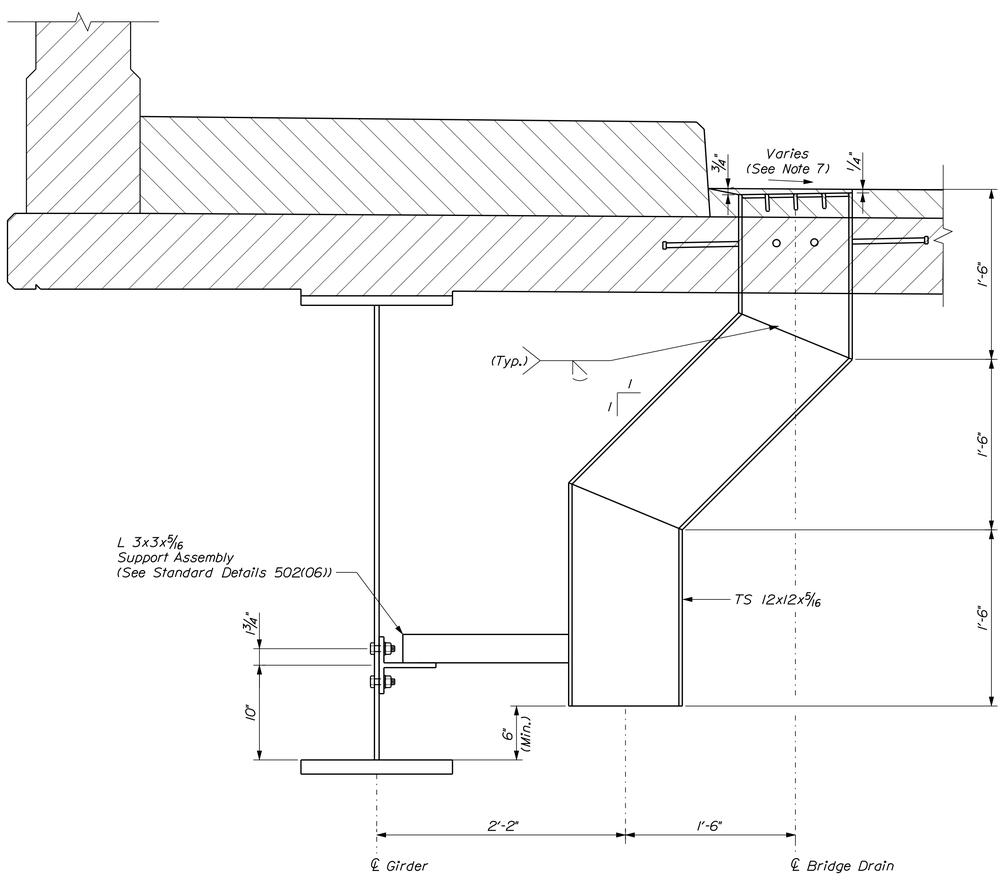

BRIDGE DRAIN SECTION, LEFT

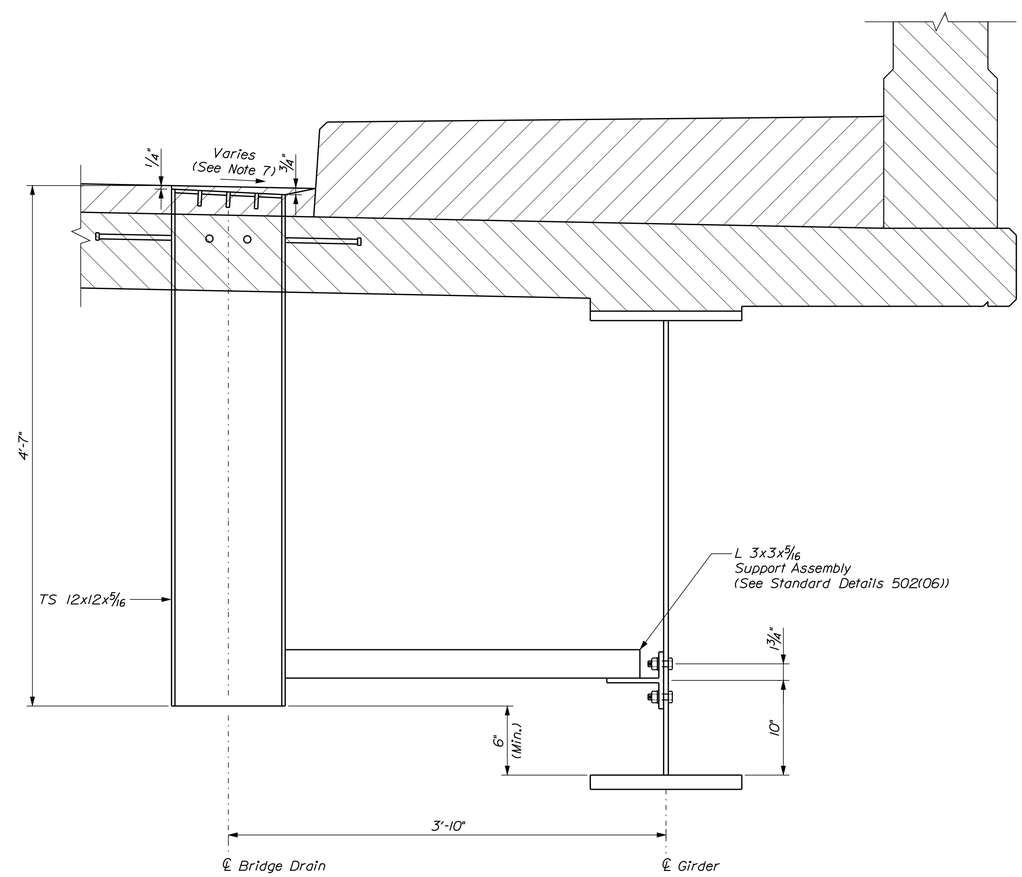

BRIDGE DRAIN SECTION, RIGHT

STATE OF MAINE
DEPARTMENT OF TRANSPORTATION

PROJECT NO. BR-1927(400)

BRIDGE NO. 2068

WIN 19274.00

BRIDGE PLANS

STATE OF MAINE
Steven M. Hodgdon
11206
LICENSED PROFESSIONAL ENGINEER

Steven M. Hodgdon

SIGNATURE		
11206		
P.E. NUMBER		
11\13\2013		
DATE		

PROJ. MANAGER	N. BENOIT	
DESIGN-DETAILED	JGM	KDW
CHECKED-REVIEWED	JAW	SMH
DESIGN2-DETAILED2	---	---
DESIGN3-DETAILED3	---	---
REVISIONS 1	---	---
REVISIONS 2	---	---
REVISIONS 3	---	---
REVISIONS 4	---	---
FIELD CHANGES	---	---

10-14-13		
10-14-13		

BERWICK BRIDGE
SALMON FALLS RIVER
BERWICK YORK COUNTY

BRIDGE DRAIN DETAILS

SHEET NUMBER
52
OF 56

Filename: ...\st\planset\052_drain_01.dgn Division: Structures Username: kwentworth Date:$date$

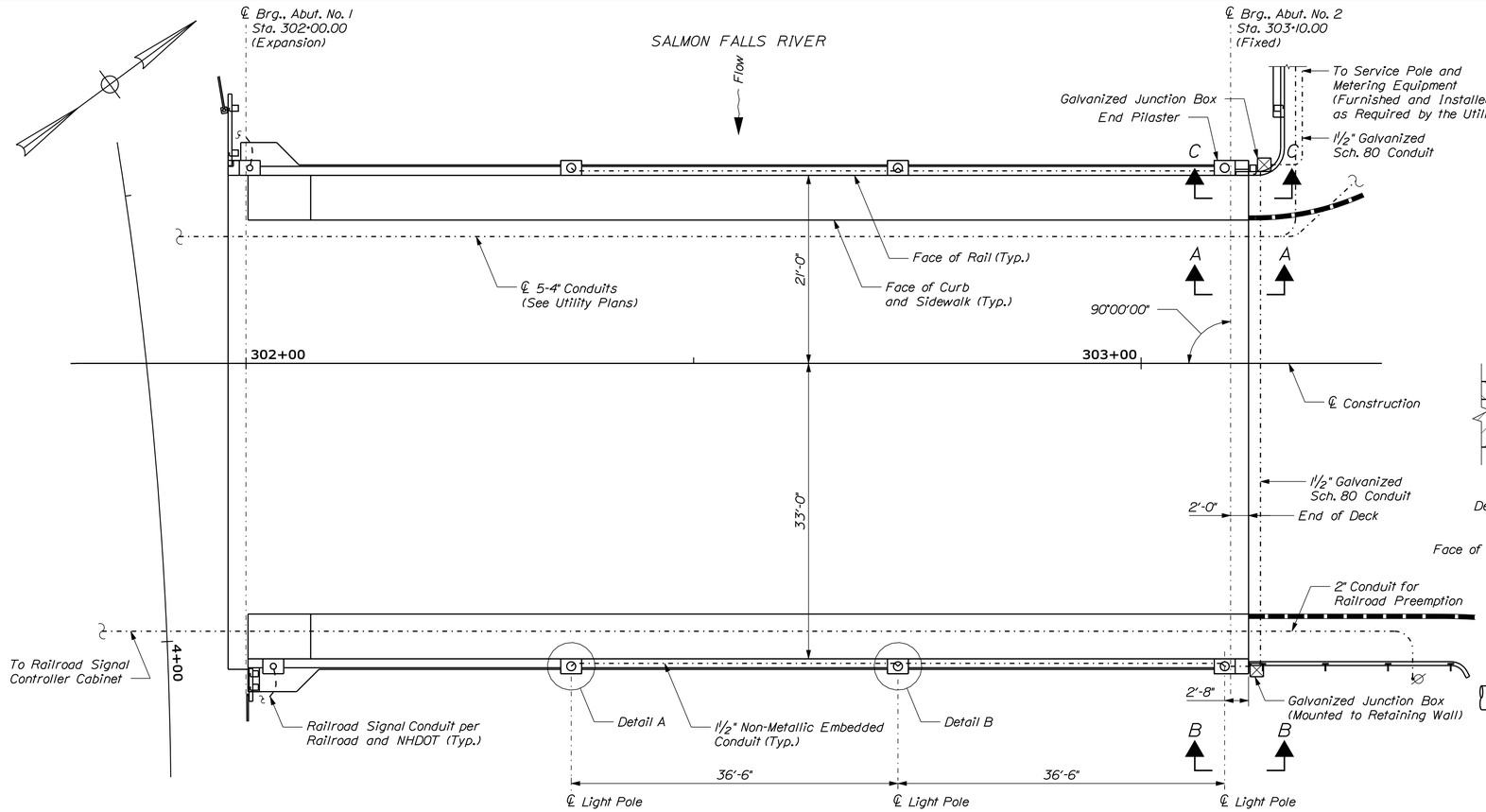

LIGHTING PLAN

ORNAMENTAL LIGHTING NOTES

1. All work shall conform to the applicable provisions of the Maine DOT Standard Specifications, Standard Details, National Electric Code, and meet the requirements of Central Maine Power unless otherwise noted.
2. See Special Provisions for requirements and pay items related to Ornamental Bridge Lighting and the associated conduit and wiring system.
3. All conduits shall be schedule 80 unless otherwise noted.
4. All conduits on CMP poles shall meet CMP standards.

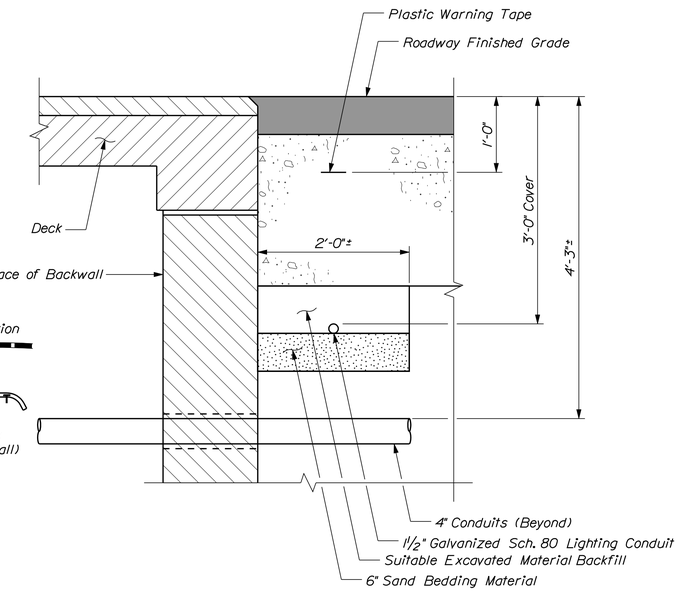

VIEW A-A

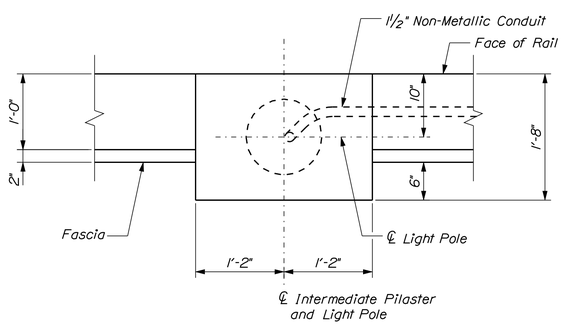

DETAIL A

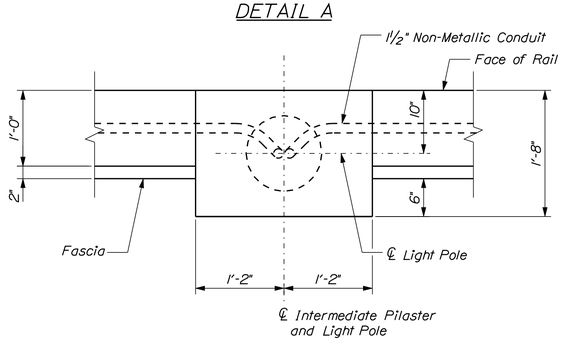

DETAIL B

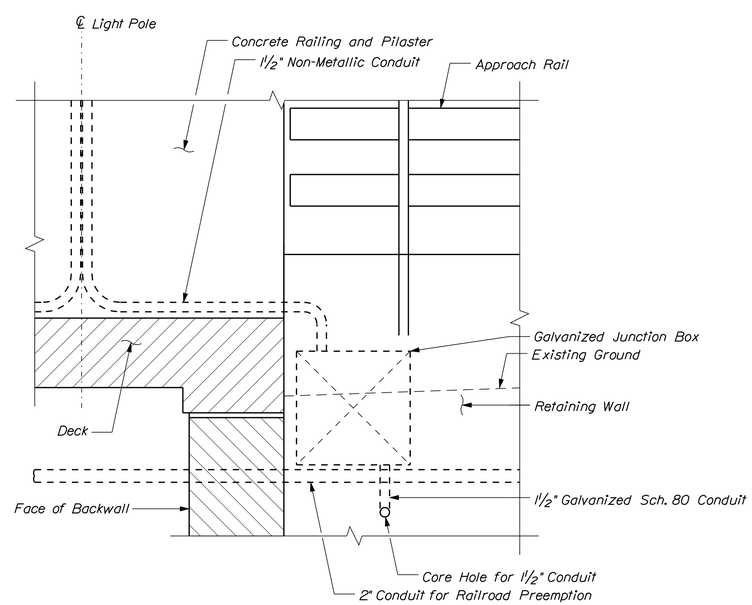

VIEW B-B

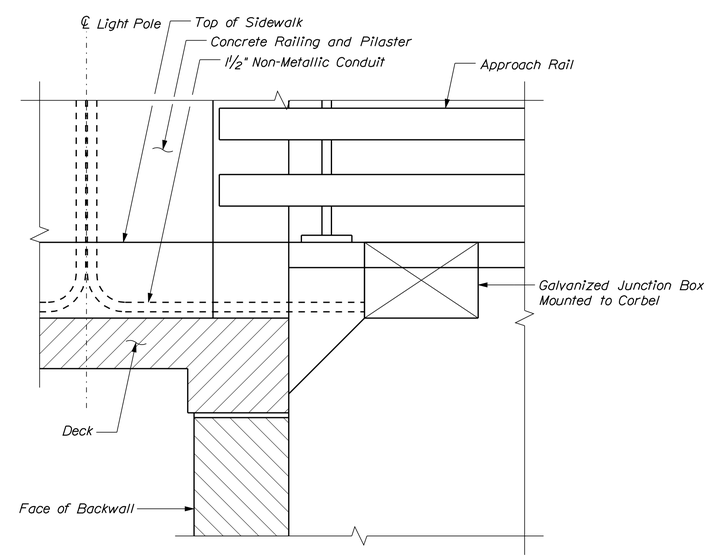

VIEW C-C

STATE OF MAINE
DEPARTMENT OF TRANSPORTATION

PROJECT NO. BR-1927(400)

BRIDGE NO. 2068

WIN 19274.00

BRIDGE PLANS

STATE OF MAINE
Steven M. Hodgdon
11206
LICENSED PROFESSIONAL ENGINEER

PROJ. MANAGER	N. BENOIT	BY	DATE
DESIGN-DETAILED	JCM	KDW	10-14-13
CHECKED-REVIEWED	JAW	SMH	10-14-13
DESIGN2-DETAILED2	---	---	---
DESIGN3-DETAILED3	---	---	---
REVISIONS 1	---	---	---
REVISIONS 2	---	---	---
REVISIONS 3	---	---	---
REVISIONS 4	---	---	---
FIELD CHANGES	---	---	---

SIGNATURE
11206
P.E. NUMBER
11\13\2013
DATE

BERWICK BRIDGE
SALMON FALLS RIVER
BERWICK YORK COUNTY

LIGHTING DETAILS

SHEET NUMBER
53
OF 56

Filename: ...\st\planset\053_lighting.dgn Division: Structures Username: kwentworth Date:$date$

STRAIGHT BARS

MARK	QTY.	LENGTH	LOCATION	
A500	64	2'-0"	Abutment No. 1	
A501	6	29'-0"		
A502	6	2'-9"		
A503	6	33'-0"		
A504	14	4'-6"		
A505	12	6'-0"		
A506	6	1'-2"		
A507	4	5'-11"		
A508	4	2'-4"	Curb RR Bumpout	
B500	58	2'-0"	Abutment No. 2	
B501	7	28'-10"		Cut-To-Fit
B502	7	2'-9"		
B503	7	27'-6"		
B504	5	2'-0"		
B505	4	4'-0"		
B506	6	2'-0"		
B507	8	2'-0"		
B508	6	1'-8"		
B509	15	1'-6"		
MS500	60	7'-10"	Concrete Roadway Pour	Cut-To-Fit
MS501	3	36'-7"		
MS502	1	18'-7"		
MS503	1	6'-9"		
MS504	6	24'-8"		
MS505	1	21'-6"		
MS506	1	16'-9"		
S501	229	30'-3"	Deck Slab and Sidewalks	
S502	218	21'-11"		
S503	937	3'-3"		
S504	218	30'-1"		
S505	218	21'-9"		
S506	226	2'-6"		
S507	226	3'-5"		
S508	11	30'-9"		
S509	19	22'-5"		
S510	8	30'-7"		
S511	11	22'-3"		
S512	344	45'-0"		
S513	160	29'-2"		
S514	12	19'-11"		
S515	2	6'-2"		
S516	2	7'-2"		
S517	2	4'-9"		
S518	2	7'-2"		
S519	24	8'-0"		
S520	6	0'-11"		
S521	20	7'-11"		
S522	28	6'-4"		
S523	4	1'-11"		
S524	4	2'-10"		
S525	8	3'-0"		
K500	8	39'-1"	Bridge Rail Barrier	
K501	16	36'-2'		
K502	13	37'-8"		
K503	8	36'-11"		
K504	3	36'-2"		
K505	10	2'-0"		
K506	1	2'-7"		
K508	1	3'-3"		
K509	2	3'-8"		
K510	2	3'-0"		
K512	1	3'-6"		
K514	1	2'-10"		
MARK	QTY.	LENGTH	LOCATION	

BENT BARS

MARK	QTY.	LENGTH	TYPE	A	B	C	D	E	F	G	H	O	R	LOCATION	
A550	64	3'-8"	C	0'-7"	3'-1"	0'-0"								Abutment No. 1	
A551	64	3'-4"	S	0'-0"	1'-1"	1'-2"	1'-1"			0'-0"					
A552	7	7'-11"	S	0'-0"	3'-6"	0'-11"	3'-6"			0'-0"					
A553	3	3'-1"	L	1'-11"	1'-2"										
A554	3	3'-10"	V				2'-8"	1'-2"			0'-9 7/8"				
B550	58	2'-10"	L	2'-0"	0'-10"									Abutment No. 2	
B551	58	4'-2"	S	0'-0"	1'-3"	1'-8"	1'-3"			0'-0"					
B552	5	3'-5"	S	0'-0"	1'-3"	0'-11"	1'-3"			0'-0"					
S550	212	8'-5"	S	0'-10"	1'-2"	4'-7"	1'-0"			0'-10"				Deck Slab and Sidewalks	
S551	12	6'-9"	S	0'-0"	1'-2"	4'-7"	1'-0"			0'-0"					Cut-To-Fit
S552	458	6'-1"	C	0'-7"	5'-6"	0'-0"									
S553	4	10'-2"	S	0'-0"	3'-4"	3'-6"	3'-4"			0'-0"					
S554	8	8'-8"	S	0'-0"	3'-4"	2'-0"	3'-4"			0'-0"					
S555	12	8'-0"	V				1'-0"	7'-0"			0'-10"				
S556	4	9'-2"	V				3'-8"	5'-6"			3'-10 1/2"				
S557	4	11'-8"	L	8'-0"	3'-8"										
S558	60	5'-5"	EP	0'-5"	1'-0"	0'-11"	3'-1"	0'-0"	0'-0"						
S560	2	4'-4"	L	3'-8"	0'-8"										
S561	2	2'-7"	W	0'-0"		0'-0"	0'-8"	1'-3"	0'-8"	0'-0"					
S562	53	5'-10"	W	0'-0"		0'-0"	2'-0"	1'-10"	2'-0"	0'-0"					
S563	53	8'-2"	S	0'-0"	3'-4"	1'-6"	3'-4"			0'-0"					
S564	53	8'-3 1/2"	G	3'-7"	0'-10"	0'-11 1/2"	2'-11"								
S565	8	5'-6"	S	0'-0"	1'-9"	2'-0"	1'-9"			0'-0"					
S566	8	4'-4"	S	0'-0"	1'-6"	1'-4"	1'-6"			0'-0"					
S567	4	7'-2"	S	0'-0"	1'-6"	4'-2"	1'-6"			0'-0"					
S568	64	5'-2"	L	3'-8"	1'-6"										
S569	552	5'-3"	L	3'-6"	1'-9"										
S570	4	6'-1"	S	1'-6"	1'-2"	0'-11"	1'-0"			1'-6"					
K551	27	11'-2"	S	0'-0"	5'-0"	1'-2"	5'-0"			0'-0"				Bridge Rail Barrier	
K552	5	4'-4"	S	0'-0"	0'-10"	2'-8"	0'-10"			0'-0"					
K553	276	6'-2"	S	0'-0"	2'-10"	0'-6"	2'-10"			0'-0"					
K554	2	5'-5"	S	0'-0"	1'-4"	3'-3"	0'-10"			0'-0"					
K555	1	9'-8"	S	0'-0"	4'-3"	1'-2"	4'-3"			0'-0"					
K556	30	3'-8"	S	0'-0"	0'-10"	2'-0"	0'-10"			0'-0"					
K557	3	9'-0"	S	0'-0"	4'-3"	0'-6"	4'-3"			0'-0"					
K558	2	10'-6"	S	0'-0"	5'-0"	0'-6"	5'-0"			0'-0"					
K559	1	4'-4"	S	0'-0"	0'-10"	2'-10"	0'-8"			0'-0"					
K560	5	5'-0"	S	0'-0"	0'-10"	3'-6"	0'-8"			0'-0"					
K561	4	2'-2"	L	0'-8"	1'-6"										
K562	2	3'-3"	S	0'-0"	1'-4"	0'-7"	1'-4"			0'-0"					
K563	1	5'-2"	S	0'-0"	1'-2"	2'-10"	1'-2"			0'-0"					
K564	5	5'-10"	S	0'-0"	1'-2"	3'-6"	1'-2"			0'-0"					
K565	4	1'-6"	L	0'-10"	0'-8"										
K566	8	2'-9"	W	1'-6"		1'-6"	0'-0"						0'-8"		
K567	6	5'-9"	S	0'-0"	2'-8"	0'-5"	2'-8"			0'-0"					
MARK	QTY.	LENGTH	TYPE	A	B	C	D	E	F	G	H	O	R	LOCATION	

TYPE - BENDING DIAGRAMS

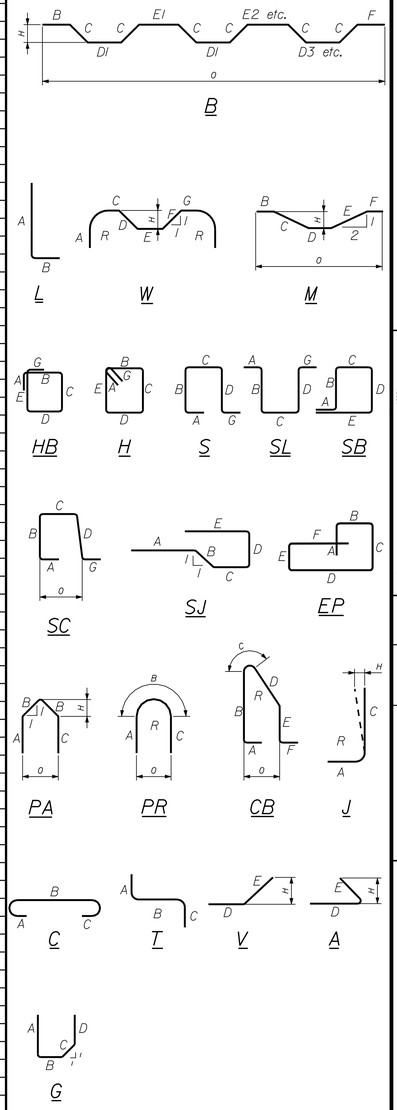

All dimensions are out-to-out of bar.

Bending details and hooks shall conform to the recommendations of the current revision of ACI Standard 315 and ACI Standard 318.

Reinforcing Bar: ASTM A615/A615M, Grade 60

NOTES

1. The first two digits following the letter(s) of the mark indicate the size ofthe bar:

   Mark "A502" = bar size #5
   Mark "P805" = bar size #8
   Mark "S650" = bar size #6

2. Each crank bar, Type B, may be replaced by two (2) straight bars (one top and one bottom) of the same bar size as the crank bar. Payment in either case shall be based on crank bars as schedule on the plans.

3. See Superstructure Note #6 on Superstructure Section and Details Sheet and Bridge Drain Note #5 on Bridge Drain Details Sheet.

STATE OF MAINE
DEPARTMENT OF TRANSPORTATION

PROJECT NO. BR-1927(400)

WIN 19274.00

BRIDGE NO. 2068

BRIDGE PLANS

STATE OF MAINE — Steven M. Hodgdon — 11206 — LICENSED PROFESSIONAL ENGINEER

	BY	DATE
PROJ. MANAGER	N. BENOIT	
DESIGN-DETAILED	JQM	KDW	10-14-13
CHECKED-REVIEWED	JAW	SMH	10-14-13
DESIGN2-DETAILED2	---	---	---
DESIGN3-DETAILED3	---	---	---
REVISIONS 1	---	---	---
REVISIONS 2	---	---	---
REVISIONS 3	---	---	---
REVISIONS 4	---	---	---
FIELD CHANGES	---	---	---

SIGNATURE: 11206
P.E. NUMBER: 11\13\2013
DATE

BERWICK BRIDGE
SALMON FALLS RIVER
BERWICK YORK COUNTY

REINFORCING STEEL SCHEDULE

SHEET NUMBER

54

OF 56

Filename: ...\st\planset\054_reinsch_01.dgn Division: Structures Username: kwentworth Date:$date$

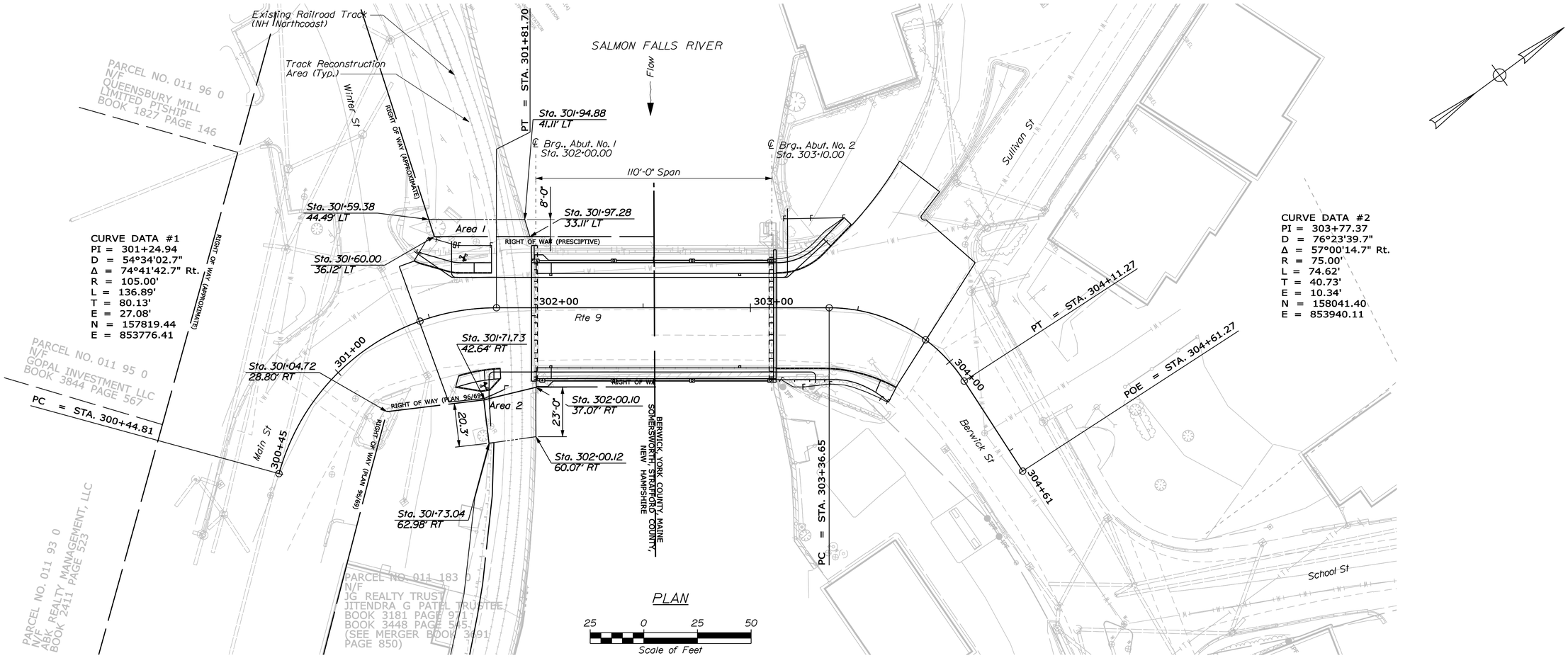

Area No.	Area (SF)	DESCRIPTION
1	360	CONSTRUCTION ACCESS
2	505	CONSTRUCTION ACCESS

STATE OF MAINE
DEPARTMENT OF TRANSPORTATION

PROJECT NO. BR-1927(400)

WIN 19274.00

BRIDGE NO. 2068

BRIDGE PLANS

STATE OF MAINE
Steven M. Hodgdon
11206
LICENSED
PROFESSIONAL ENGINEER

PROJ. MANAGER	N. BENOIT		
DESIGN-DETAILED	JGM	KDW	10-14-13
CHECKED-REVIEWED	JAW	SMH	10-14-13
DESIGN2-DETAILED2	---	---	---
DESIGN3-DETAILED3	---	---	---
REVISIONS 1	---	---	---
REVISIONS 2	---	---	---
REVISIONS 3	---	---	---
REVISIONS 4	---	---	---
FIELD CHANGES	---	---	---

SIGNATURE

11206
P.E. NUMBER

11\13\2013
DATE

BERWICK BRIDGE
SALMON FALLS RIVER
BERWICK YORK COUNTY

NH RIGHT OF WAY MAP

SHEET NUMBER
55
OF 56

Filename: ...\cad\st\planset\055_rowplan.dgn Division: Structures Username: kwentworth Date:$date$

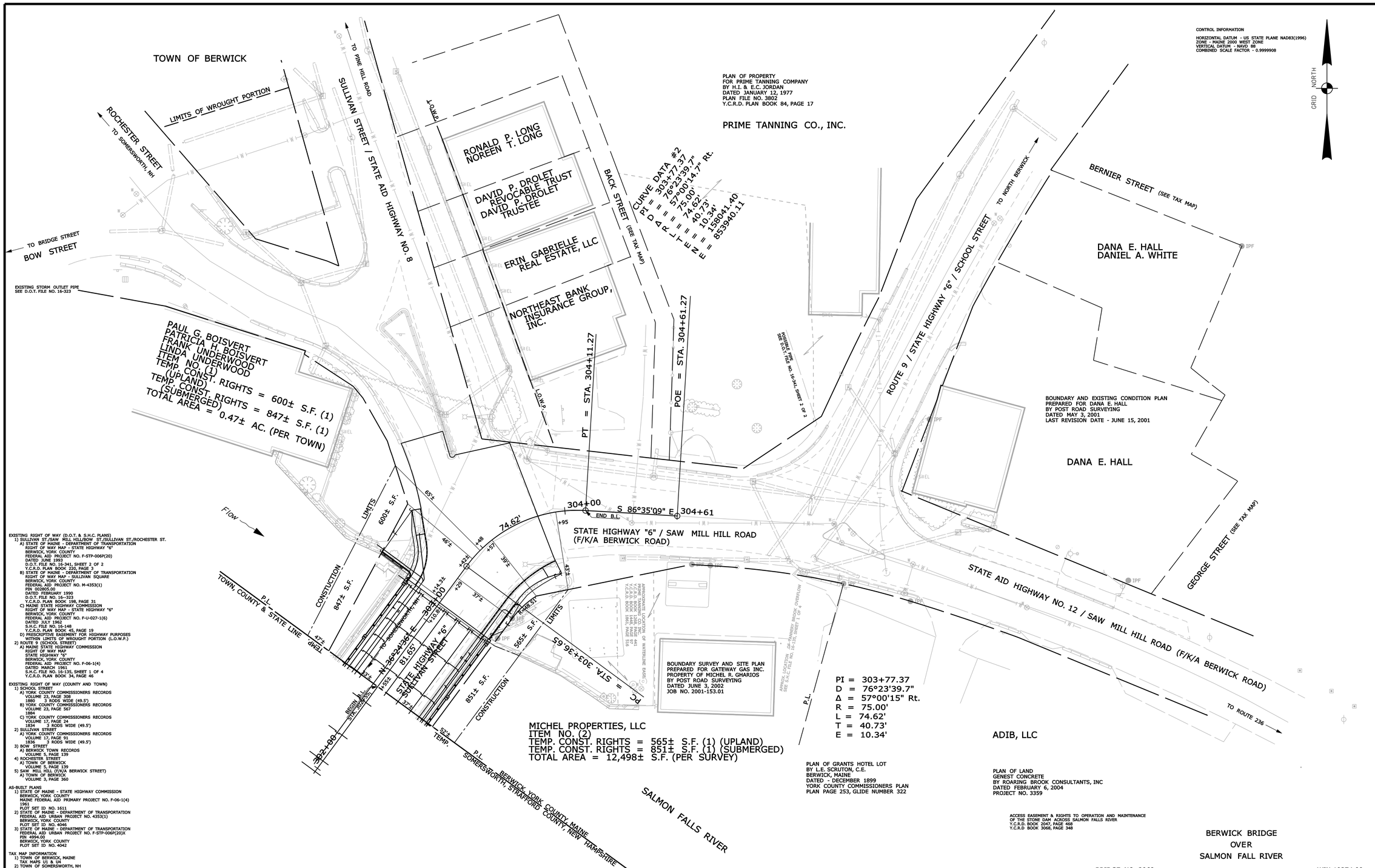

EXISTING RIGHT OF WAY (D.O.T. & S.H.C. PLANS)
1) SULLIVAN ST./SAW MILL HILL/BOW ST./SULLIVAN ST./ROCHESTER ST.
A) STATE OF MAINE - DEPARTMENT OF TRANSPORTATION
RIGHT OF WAY MAP - STATE HIGHWAY "6"
BERWICK, YORK COUNTY
FEDERAL AID PROJECT NO. F-STP-006P(20)
DATED JUNE 1998
D.O.T. FILE NO. 16-341, SHEET 2 OF 2
Y.C.R.D. PLAN BOOK 220, PAGE 1
B) STATE OF MAINE - DEPARTMENT OF TRANSPORTATION
RIGHT OF WAY MAP - SULLIVAN SQUARE
BERWICK, YORK COUNTY
FEDERAL AID PROJECT NO. M-4353(1)
PIN 003805.00
DATED FEBRUARY 1990
D.O.T. FILE NO. 16-323
Y.C.R.D. PLAN BOOK 198, PAGE 31
C) MAINE STATE HIGHWAY COMMISSION
RIGHT OF WAY MAP - STATE HIGHWAY "6"
BERWICK, YORK COUNTY
FEDERAL AID PROJECT NO. F-U-027-1(6)
DATED JULY 1962
S.H.C. FILE NO. 16-148
Y.C.R.D. PLAN BOOK 45, PAGE 19
D) PRESCRIPTIVE EASEMENT FOR HIGHWAY PURPOSES
WITHIN LIMITS OF WROUGHT PORTION (L.O.W.P.)
2) ROUTE 9 (SCHOOL STREET)
A) MAINE STATE HIGHWAY COMMISSION
RIGHT OF WAY MAP
STATE HIGHWAY "6"
BERWICK, YORK COUNTY
FEDERAL AID PROJECT NO. F-06-1(4)
DATED MARCH 1961
S.H.C. FILE NO. 16-135, SHEET 1 OF 4
Y.C.R.D. PLAN BOOK 34, PAGE 46

EXISTING RIGHT OF WAY (COUNTY AND TOWN)
1) SCHOOL STREET
A) YORK COUNTY COMMISSIONERS RECORDS
VOLUME 23, PAGE 308
1880 3 RODS WIDE (49.5')
B) YORK COUNTY COMMISSIONERS RECORDS
VOLUME 23, PAGE 567
1886
C) YORK COUNTY COMMISSIONERS RECORDS
VOLUME 17, PAGE 34
1834 3 RODS WIDE (49.5')
2) SULLIVAN STREET
A) YORK COUNTY COMMISSIONERS RECORDS
VOLUME 17, PAGE 91
1836 3 RODS WIDE (49.5')
3) BOW STREET
A) BERWICK TOWN RECORDS
VOLUME 5, PAGE 139
4) ROCHESTER STREET
A) TOWN OF BERWICK
VOLUME 5, PAGE 139
5) SAW MILL HILL (F/K/A BERWICK STREET)
A) TOWN OF BERWICK
VOLUME 3, PAGE 360

AS-BUILT PLANS
1) STATE OF MAINE - STATE HIGHWAY COMMISSION
BERWICK, YORK COUNTY
MAINE FEDERAL AID PRIMARY PROJECT NO. F-06-1(4)
1961
PLOT SET ID NO. 1611
2) STATE OF MAINE - DEPARTMENT OF TRANSPORTATION
FEDERAL AID URBAN PROJECT NO. 4353(1)
BERWICK, YORK COUNTY
PLOT SET ID NO. 4046
3) STATE OF MAINE - DEPARTMENT OF TRANSPORTATION
FEDERAL AID URBAN PROJECT NO. F-STP-006P(20)X
PIN 4994.00
BERWICK, YORK COUNTY
PLOT SET ID NO. 4042

TAX MAP INFORMATION
1) TOWN OF BERWICK, MAINE
TAX MAPS U1 & U4
2) TOWN OF SOMERSWORTH, NH
TAX MAP 11

SYMBOLS
IP or IPF (IRON PIPE or PIN FOUND)
S.T. (SEPTIC TANK)
(ROW MONUMENT)
BM (TRAVERSE POINT)
WELL
(WELL)
BEGINNING LIMIT LINE
CONSTRUCTION LIMIT LINE
PROPERTY LINE
LIMITS OF WROUGHT PORTION (L.O.W.P.)
EXISTING RIGHT OF WAY
NEW RIGHT OF WAY
NEW ROW WITHIN EXIST. ROW
CONTROL OF ACCESS
WATER LINE
GAS LINE
ELECTRIC LINE
TELEPHONE LINE
SEWER LINE

ITEM	TECH	CHECKED
BASE MAP		
EXIST. R/W	G.L.L.	C.W.K.
PROP. LINES	G.L.L.	
AREAS	G.L.L.	N.T.A.

STATE OF MAINE
DEPARTMENT OF TRANSPORTATION
16 STATE HOUSE STATION - AUGUSTA, ME 04333-0016
BERWICK
RIGHT OF WAY MAP

REVISIONS

NO.	DATE	DESCRIPTION	BY

PLAN FILED IN PLAN BOOK PAGE COUNTY RECORD

NO.	GRANTOR	INSTRUMENT	DATE	BOOK	PAGE
		COND.	10/8/13	16710	42

DAVID BERNHARDT
COMMISSIONER
JOYCE NOEL TAYLOR
CHIEF ENGINEER
DATE

To the best of my knowledge and belief the Highway Right of Way lines depicted hereon are based upon a survey conforming to the Standards of Practice promulgated by the Maine Board of Licensure for Professional Land Surveyors 02-360 CMR, Chapter 90; Exceptions: (1) No separate survey report, (2) Monumentation only as shown on plan. See sheet X of this plan set for coordinates. (3) Other boundary lines, including lines between abutters are approximate and for general reference purposes only.

STATE HIGHWAY "6"
SULLIVAN ST. / SAW MILL HILL ROAD / BOW ST.
BERWICK YORK COUNTY
FEDERAL AID PROJECT NO. BR-1927(400)

AUGUST 2013 | RIGHT-OF-WAY MAP | D.O.T. FILE NO. 16-496
SCALE 1" = 25' | SHEET 1 OF 1

SHEET NUMBER
56
OF 56

Filename: ...\00\ROW\MSTA\056_RWPLAN1.dgn Division: ROW Username: Nicholas.Acheson Date:10/11/2013