Updated 10/04/12

FEDERAL PROJECT

BIDDING INSTRUCTIONS

FOR ALL PROJECTS:

1. Use pen and ink to complete all paper Bids.
2. As a minimum, the following must be received prior to the time of Bid opening:

For a Paper Bid:

a) a copy of the Notice to Contractors, b) the completed Acknowledgement of Bid Amendments form, c) the completed Schedule of Items, d) two copies of the completed and signed Contract Offer, Agreement & Award form, e) a Bid Guaranty, (if required), and f) any other certifications or Bid requirements listed in the Bid Documents as due by Bid opening.

For an Electronic Bid:

a) a completed Bid using Expedite® software and submitted via the Bid Express™ web-based service, b) an electronic Bid Guaranty (if required) or a faxed copy of a Bid Bond (with original to be delivered within 72 hours), and c) any other Certifications or Bid requirements listed in the Bid Documents as due by Bid opening.

3. Include prices for all items in the Schedule of Items (<u>excluding non-selected alternates</u>).
4. Bid Guaranty acceptable forms are:
   a) a properly completed and signed Bid Bond on the Department's prescribed form (or on a form that does not contain any significant variations from the Department's form as determined by the Department) for 5% of the Bid Amount or
   b) an Official Bank Check, Cashier's Check, Certified Check, U.S. Postal Money Order or Negotiable Certificate of Deposit in the amount stated in the Notice to Contractors or
   c) an electronic bid bond submitted with an electronic bid.

5. If a paper Bid is to be sent, "FedEx First Overnight" delivery is suggested as the package is delivered directly to the DOT Headquarters Building located at 16 Child Street in Augusta. Other means, such as U.S. Postal Service's Express Mail has proven not to be reliable.

IN ADDITION, FOR FEDERAL AID PROJECTS:

6. Complete the DBE Proposed Utilization form, and submit with your bid. If you are submitting your bid electronically, you must FAX the form to (207) 624-3431. This is a curable defect.

If you need further information regarding Bid preparation, call the DOT Contracts Section at (207) 624-3410.

For complete bidding requirements, refer to Section 102 of the Maine Department of Transportation, Standard Specifications, Revision of December 2002.

January 19, 2012
Supersedes September 09, 2011

NOTICE

The Maine Department of Transportation is attempting to improve the way Bid Amendments/Addendums are handled, and allow for an electronic downloading of bid packages from our website, while continuing to maintain an optional planholders list.

Prospective bidders, subcontractors or suppliers who wish to download a copy of the bid package and receive a courtesy notification of project specific bid amendments, must provide an email address to Diane Barnes or David Venner at the MDOT Contracts mailbox at: MDOT.contracts@maine.gov. Each bid package will require a separate request.

Additionally, interested parties will be responsible for reviewing and retrieving the Bid Amendments from our web site, and acknowledging receipt and incorporating those Bid Amendments in their bids using the Acknowledgement of Bid Amendment Form.

The downloading of bid packages from the MDOT website is not the same as providing an electronic bid to the Department. Electronic bids must be submitted via http://www.BIDX.com. For information on electronic bidding contact Patrick Corum at patrick.corum@maine.gov , Rebecca Snowden at rebecca.snowden@maine.gov or Diane Barnes at diane.barnes@maine.gov.

NOTICE

For security and other reasons, all Bid Packages which are mailed, shall be provided in double (one envelope inside the other) envelopes. The *Inner Envelope* shall have the following information provided on it:

Bid Enclosed - Do Not Open
PIN:
Town:
Date of Bid Opening:
Name of Contractor with mailing address and telephone number:

In Addition to the usual address information, the *Outer Envelope* should have written or typed on it:

Double Envelope: Bid Enclosed
PIN:
Town:
Date of Bid Opening:
Name of Contractor:
This should not be much of a change for those of you who use Federal Express or similar services.

Hand-carried Bids may be in one envelope as before, and should be marked with the following infrormation:

Bid Enclosed: Do Not Open
PIN:
Town:
Name of Contractor:

October 16, 2001

STATE OF MAINE DEPARTMENT OF TRANSPORTATION

Bid Guaranty-Bid Bond Form

KNOW ALL MEN BY THESE PRESENTS THAT_____

_____, of the City/Town of _____and State of_____

as Principal, and _____as Surety, a

Corporation duly organized under the laws of the State of_____and having a usual place of

Business in _____and hereby held and firmly bound unto the Treasurer of

the State of Maine in the sum of_____,for payment which Principal and Surety bind

themselves, their heirs, executers, administrators, successors and assigns, jointly and severally.

The condition of this obligation is that the Principal has submitted to the Maine Department of Transportation, hereafter Department, a certain bid, attached hereto and incorporated as a part herein, to enter into a written contract for the construction of _____

_____

_____and if the Department shall accept said bid and the Principal shall execute and deliver a contract in the form attached hereto (properly completed in accordance with said bid) and shall furnish bonds for this faithful performance of said contract, and for the payment of all persons performing labor or furnishing material in connection therewith, and shall in all other respects perform the agreement created by the acceptance of said bid, then this obligation shall be null and void; otherwise it shall remain in full force, and effect.

Signed and sealed this_____day of _____20_____

WITNESS:

_____

_____

_____

WITNESS

_____

_____

_____

PRINCIPAL:

By_____

By:_____

By:_____

SURETY:

By_____

By:_____

Name of Local Agency: _____

SAMPLE

NOTICE

Bidders:

Please use the attached "Request for Information" form when faxing questions and comments concerning specific Contracts that have been Advertised for Bid. Include additional numbered pages as required. Questions are to be faxed to the number listed in the Notice to Contractors. This is the only allowable mechanism for answering Project specific questions. Maine DOT will not be bound to any answers to Project specific questions received during the Bidding phase through other processes.

State of Maine
Department of Transportation

REQUEST FOR INFORMATION

Date _____ Time _____

Information Requested: **PIN:** _____ **Town(s):** _____

_____

_____

_____

_____

_____

_____

_____

_____

_____

_____

_____

_____

Request by: _____ **Phone: (_____)**_____
Bid Date: _____ **Fax: (_____)**_____

Complete top portion of form and transmit to the number listed in the Notice to Contractors

RFI No: _____ **RFI received:** _____

Response:_____

_____

_____

_____

_____

_____

_____

_____

_____

_____

_____

Response By:_____ Date: _____

NOTICE

Disadvantaged Business Enterprise Proposed Utilization

The Apparent Low Bidder shall submit the Disadvantaged Business Enterprise Proposed Utilization form with their bid. This is a curable bid defect.

The Contractor's Disadvantaged Business Enterprise Proposed Utilization Plan form contains additional information that is required by USDOT.

The Contractor's Disadvantaged Business Enterprise Proposed Utilization Plan form should be used.

A copy of the new Contractor's Disadvantaged Business Enterprise Proposed Utilization Plan and instructions for completing it are attached.

Note: Questions about DBE firms, or to obtain a printed copy of the DBE Directory, contact The Office of Civil Rights at (207) 624-3066.

MDOTs DBE Directory of Certified firms can also be obtained at www.maine.gov/mdot/disadvantaged-business-enterprises/dbe-home.php

INSTRUCTIONS FOR PREPARING THE MaineDOT CONTRACTOR'S DBE/SUBCONTRACTOR UTILIZATION FORM

The Contractor Shall Extend equal opportunity to MaineDOT certified DBE firms (as listed in MaineDOT's DBE Directory of Certified Businesses) in the selection and utilization of Subcontractors and Suppliers.

SPECIFIC INSTRUCTIONS FOR COMPLETING THE FORM:

Insert Contractor name, the name of the person(s) preparing the form, and that person(s) telephone, fax number and e-mail address.

Calculate and provide percentage of your bid that will be allocated to DBE firms, Federal Project Identification Number, and location of the Project work.

In the columns, name each subcontractor, DBE and non-DBE firm to be used, provide the Unit/Item cost of the work/product to be provided by the subcontractor, give a brief description and the dollar value of the work.

Revised 1/12

DBE GOAL NOTICE
Maine Department of Transportation
Disadvantaged Business Enterprise Program

Notice is hereby given that in accordance with US DOT regulation 49 CFR Part 26, the Maine Department of Transportation has established a DBE Program for disadvantaged business participation in the federal-aid highway and bridge construction program; MaineDOT contracts covered by the program include consulting, construction, supplies, manufacturing, and service contracts.

For FFY 2013-15 (October 1, 2012 through September 30, 2015) MaineDOT has established an annual DBE participation goal of **4.0%** to be achieved through race/gender neutral means. This goal has been approved by the Federal Highway Administration and remains in effect through September 30, 2015. Maine DOT must meet this goal each federal fiscal year. If the goal is not met, MaineDOT must provide a justification for not meeting the goal and provide a plan to ensure the goal is met, which may include contract goals on certain projects that contractors will be required to meet.

MaineDOT asks all contractors, consultants and subcontractors to seek certified DBE firms for projects and to work to meet the determined 4.0% goal without the need to impose contract goals. DBE firms are listed on the MaineDOT website at:

http://www.maine.gov/mdot/disadvantaged-business-enterprises/pdf/directory.pdf

Interested parties may view MaineDOT's DBE goal setting methodology also posted on this website. If you have questions regarding this goal or the DBE program you may contact Sherry Tompkins at the Maine Department of Transportation, Civil Rights Office by telephone at (207) 624-3066 or by e-mail at: sherry.tompkins@maine.gov

.

MaineDOT CONTRACTOR'S DBE/SUBCONTRACTOR PROPOSED UTILIZATION FORM

All Bidders must furnish this form with their bid on Bid Opening day

Contractor: _____ **Telephone:** _____ **Ext** _____

Contact Person: _____ **Fax:** _____

E-mail: _____

BID DATE: _____

FEDERAL PROJECT PIN # _____ **PROJECT LOCATION:** _____

TOTAL ANTICIPATED DBE ____ % PARTICIPATION FOR THIS CONTRACT

WBE	DBE	Non DBE	Firm Name	Item Number & Description of Work	Quantity	Cost Per Unit/Item	Anticipated $ Value
						Subcontractor Total>	
						DBE Total >	

NOTE: THIS INFORMATION IS USED TO TRACK AND REPORT ANTICIPATED DBE PARTICIPATION IN ALL FEDERALLY FUNDED MAINE DOT CONTRACTS. THE ANTICIPATED DBE AMOUNT IS VOLUNTARY AND WILL NOT BECOME A PART OF THE CONTRACTUAL TERMS.

Equal Opportunity Use:

Form received: ___/___/___ Verified by: _____

For a complete list of certified firms and company designation (WBE/DBE) go to http://www.maine.gov/mdot

Rev. 05/12

Maine Department of Transportation Civil Rights Office

Directory of Certified Disadvantaged Business Enterprises

Listing can be found at:

www.maine.gov/mdot/disadvantaged-business-enterprises/dbe-home.php

For additional information and guidance contact: Civil Rights Office at (207) 624-3066

It is the responsibility of the Contractor to access the DBE Directory at this site in order to have the most current listings.

Vendor Registration

Prospective Bidders must register as a vendor with the Department of Administrative & Financial Services if the vendor is awarded a contract. Vendors will not be able to receive payment without first being registered. Vendors/Contractors will find information and register through the following link –
http://www.maine.gov/purchases/venbid/index.shtml

STATE OF MAINE DEPARTMENT OF TRANSPORTATION
NOTICE TO CONTRACTORS

Sealed Bids addressed to the Maine Department of Transportation, Augusta, Maine 04333 and endorsed on the wrapper "Bids for **Pavement Milling, Hot Mix Asphalt Overlay with Drainage and Safety Improvements** in the towns of **Frankfort and Winterport**" will be received from contractors at the Reception Desk, Maine DOT Building, Capitol Street, Augusta, Maine, until 11:00 o'clock A.M. (prevailing time) on April 10, 2013 and at that time and place publicly opened and read. Bids will be accepted from all bidders. The lowest responsive bidder must have completed, or successfully complete, a Highway, Paving, or project specific prequalification to be considered for the award of this contract. **We now accept electronic bids for those bid packages posted on the bidx.com website. Electronic bids do not have to be accompanied by paper bids. Please note: the Department will accept a facsimile of the bid bond; however, the original bid bond must then be received at the MDOT Contract Section within 72 hours of the bid opening. Until further notice, dual bids (one paper, one electronic) will be accepted, with the paper copy taking precedence.**

Description: Maine Federal Aid Project No. NH-1914(600), WIN 19146.00

Location: In Waldo County, project is located on US Route 1A, beginning 0.16 mi. north of the Prospect/Frankfort town line and extending northerly 4.22 miles to Mountain View Road.

Outline of Work: Pavement Milling, Hot Mix Asphalt Overlay with Drainage and Safety Improvements and other incidental work.

For general information regarding Bidding and Contracting procedures, contact George Macdougall at (207) 624-3410. Our webpage at http://www.maine.gov/mdot/contractors/ contains a copy of the schedule of items, Plan Holders List, written portions of bid amendments (not drawings), and bid results. For Project-specific information fax all questions to **Scott Bickford** at (207) 624-3431. Questions received after 12:00 noon of Monday prior to bid date will not be answered. Bidders shall not contact any other Departmental staff for clarification of Contract provisions, and the Department will not be responsible for any interpretations so obtained. TTY users call Maine Relay 711.

Specifications and bid forms may be seen at the Maine DOT Building in Augusta,. They may be purchased from the Department between the hours of 8:00 a.m. to 4:30 p.m. by cash, credit card (Visa/Mastercard) or check payable to Treasurer, State of Maine sent to Maine Department of Transportation, Attn.: Mailroom, 16 State House Station, Augusta, Maine 04333-0016. They also may be purchased by telephone at (207) 624-3536 between the hours of 8:00 a.m. to 4:30 p.m. Bid Book $10 ($13 by mail), payment in advance, all non-refundable.

Each Bid must be made upon blank forms provided by the Department and must be accompanied by a bid bond at 5% of the bid amount or an official bank check, cashier's check, certified check, certificate of deposit, or United States postal money order in the amount of **$40,000** payable to Treasurer, State of Maine as a Bid guarantee. A Contract Performance Surety Bond and a Contract Payment Surety Bond, each in the amount of 100 percent of the Contract price, will be required of the successful Bidder.

This Contract is subject to all applicable Federal Laws. This contract is subject to compliance with the Disadvantaged Business Enterprise program requirements as set forth by the Maine Department of Transportation.

All work shall be governed by "State of Maine, Department of Transportation, Standard Specifications, Revision of December 2002", price $10 [$13 by mail], and Standard Details, Revision of December 2002, price $20 [$25 by mail]. They also may be purchased by telephone at (207) 624-3536 between the hours of 8:00 a.m. to 4:30 p.m. Standard Detail updates can be found at http://www.maine.gov/mdot/contractors/publications/ .

The right is hereby reserved to the Maine DOT to reject any or all bids.

Augusta, Maine
March 20, 2013

STATE OF MAINE
Kenneth
L.
Sweeney
4028
LICENSED
PROFESSIONAL ENGINEER

KENNETH L. SWEENEY P. E.
CHIEF ENGINEER

NOTICE

All bids for Federal Projects **shall** be accompanied by the DBE Proposed Utilization form. If you are submitting an electronic bid, the DBE Utilization Form may be faxed to 207-624-3431. Failure to submit the form with the bid will be considered a curable defect.

SPECIAL PROVISION 102.7.3
ACKNOWLEDGMENT OF BID AMENDMENTS

With this form, the Bidder acknowledges its responsibility to check for all Amendments to the Bid Package. For each Project under Advertisement, Amendments are located at http://www.maine.gov/mdot/contractors/ . It is the responsibility of the Bidder to determine if there are Amendments to the Project, to download them, to incorporate them into their Bid Package, and to reference the Amendment number and the date on the form below. The Maine DOT will not post Bid Amendments any later than noon the day before Bid opening without individually notifying all the planholders.

Amendment Number	Date

The Contractor, for itself, its successors and assigns, hereby acknowledges that it has received all of the above referenced Amendments to the Bid Package.

CONTRACTOR

_____
Date

_____
Signature of authorized representative

_____
(Name and Title Printed)

MAINE DEPARTMENT OF TRANSPORTATION

SCHEDULE OF ITEMS

PAGE: 1
DATE: 130315
REVISED:

CONTRACT ID: 019146.00 PROJECT(S): NH-1914(600)

CONTRACTOR :_____

LINE NO	ITEM DESCRIPTION	APPROX. QUANTITY AND UNITS	UNIT PRICE DOLLARS	UNIT PRICE CTS	BID AMOUNT DOLLARS	BID AMOUNT CTS
	SECTION 0001 HIGHWAY ITEMS					
0010	202.202 REMOVING PAVEMENT SURFACE	68000.000 SY				
0020	202.203 PAVEMENT BUTT JOINTS	630.000 SY				
0030	203.242 DIRTY BORROW	145.000 CY				
0040	403.208 HOT MIX ASPHALT 12.5 MM HMA SURFACE	2700.000 T				
0050	403.209 HOT MIX ASPHALT 9.5 MM (SIDEWALKS, DRIVES, INCIDENTALS)	50.000 T				
0060	403.2104 HOT MIX ASPHALT 9.5 MM - 3/4" SURFACE	2000.000 T				
0070	403.211 HOT MIX ASPHALT (SHIMMING)	200.000 T				
0080	403.213 HOT MIX ASPHALT 12.5 MM BASE	3050.000 T				
0090	409.15 BITUMINOUS TACK COAT - APPLIED	4600.000 G				
0100	411.10 UNTREATED AGGREGATE SURFACE COURSE (TRUCK MEASURE)	10.000 CY				

CONTRACT ID: 019146.00 PROJECT(S): NH-1914(600)

CONTRACTOR :_____

LINE NO	ITEM DESCRIPTION	APPROX. QUANTITY AND UNITS	UNIT PRICE DOLLARS	UNIT PRICE CTS	BID AMOUNT DOLLARS	BID AMOUNT CTS
0110	504.07 CONCRETE PIPE TIES	12.000 GP				
0120	603.175 18 INCH REINFORCED CONCRETE PIPE CLASS III	292.000 LF				
0130	603.195 24 INCH REINFORCED CONCRETE PIPE CLASS III	64.000 LF				
0140	603.199 24 INCH CULVERT PIPE OPTION III	10.000 LF				
0150	603.209 30 INCH CULVERT PIPE OPTION III	56.000 LF				
0160	604.18 ADJUSTING MANHOLE OR CATCH BASIN TO GRADE	1.000 EA				
0170	604.247 CATCH BASIN TYPE F5-C	3.000 EA				
0180	605.09 6 INCH UNDERDRAIN TYPE B	100.000 LF				
0190	606.21 GUARDRAIL TYPE 3B - 15 FOOT RADIUS AND LESS	12.500 LF				
0200	606.22 GUARDRAIL TYPE 3B - OVER 15 FOOT RADIUS	12.500 LF				
0210	606.352 REFLECTORIZED BEAM GUARDRAIL DELINEATORS	21.000 EA				

CONTRACT ID: 019146.00 PROJECT(S): NH-1914(600)

CONTRACTOR :_____

LINE NO	ITEM DESCRIPTION	APPROX. QUANTITY AND UNITS	UNIT PRICE DOLLARS	UNIT PRICE CTS	BID AMOUNT DOLLARS	BID AMOUNT CTS
0220	606.353 REFLECTORIZED FLEXIBLE GUARDRAIL MARKER	10.000 EA				
0230	606.65 GUARDRAIL THRIE BEAM - SINGLE RAIL	3462.500 LF				
0240	606.66 TERMINAL END THRIE BEAM	4.000 EA				
0250	606.70 TRANSITION SECTION THRIE BEAM	2.000 EA				
0260	606.71 GUARDRAIL THRIE BEAM - 15 FOOT RADIUS AND LESS	50.000 LF				
0270	606.72 GUARDRAIL THRIE BEAM GREATER THAN 15 FOOT RADIUS	50.000 LF				
0280	606.79 GUARDRAIL 350 FLARED TERMINAL	3.000 EA				
0290	609.31 CURB TYPE 3	216.000 LF				
0300	610.08 PLAIN RIPRAP	54.000 CY				
0310	618.1401 SEEDING METHOD NUMBER 2 - PLAN QUANTITY	50.000 UN				
0320	619.1201 MULCH - PLAN QUANTITY	50.000 UN				

CONTRACT ID: 019146.00 PROJECT(S): NH-1914(600)

CONTRACTOR :_____

LINE NO	ITEM DESCRIPTION	APPROX. QUANTITY AND UNITS	UNIT PRICE DOLLARS	UNIT PRICE CTS	BID AMOUNT DOLLARS	BID AMOUNT CTS
0330	620.58 EROSION CONTROL GEOTEXTILE	160.000 SY				
0340	627.76 TEMPORARY PAVEMENT MARKING LINE, WHITE OR YELLOW	LUMP	LUMP			
0350	629.05 HAND LABOR, STRAIGHT TIME	5.000 HR				
0360	631.12 ALL PURPOSE EXCAVATOR (INCLUDING OPERATOR)	10.000 HR				
0370	631.133 SKID STEER (INCLUDING OPERATOR)	10.000 HR				
0380	631.172 TRUCK - LARGE (INCLUDING OPERATOR)	20.000 HR				
0390	631.32 CULVERT CLEANER (INCLUDING OPERATOR)	10.000 HR				
0400	639.19 FIELD OFFICE TYPE B	1.000 EA				
0410	652.33 DRUM	96.000 EA				
0420	652.34 CONE	152.000 EA				
0430	652.35 CONSTRUCTION SIGNS	864.000 SF				

CONTRACT ID: 019146.00 PROJECT(S): NH-1914(600)

CONTRACTOR :_____

LINE NO	ITEM DESCRIPTION	APPROX. QUANTITY AND UNITS	UNIT PRICE DOLLARS	UNIT PRICE CTS	BID AMOUNT DOLLARS	BID AMOUNT CTS
0440	652.36 MAINTENANCE OF TRAFFIC CONTROL DEVICES	41.000 CD				
0450	652.38 FLAGGER	1150.000 HR				
0460	652.41 PORTABLE CHANGEABLE MESSAGE SIGN	2.000 EA				
0470	656.75 TEMPORARY SOIL EROSION AND WATER POLLUTION CONTROL	LUMP	LUMP			
0480	659.10 MOBILIZATION	LUMP	LUMP			
	SECTION 0001 TOTAL					
	TOTAL BID					

CONTRACT AGREEMENT, OFFER & AWARD

AGREEMENT made on the date last signed below, by and between the State of Maine, acting through and by its Department of Transportation (Department), an agency of state government with its principal administrative offices located at Child Street, Augusta, Maine, with a mailing address at 16 State House Station, Augusta, Maine 04333-0016, and _____ a corporation or other legal entity organized under the laws of the State of _____, with its principal place of business located at _____ _____

The Department and the Contractor, in consideration of the mutual promises set forth in this Agreement (the "Contract"), hereby agree as follows:

A. The Work.

The Contractor agrees to complete all Work as specified or indicated in the Contract including Extra Work in conformity with the **Contract, WIN No. 19146.00, for the Pavement Milling, & Hot Mix Asphalt Overlay with Drainage and Safety Improvements in the towns of _Frankfort and Winterport, County of Waldo, Maine.** The Work includes construction, maintenance during construction, warranty as provided in the Contract, and other incidental work.

The Contractor shall be responsible for furnishing all supervision, labor, equipment, tools supplies, permanent materials and temporary materials required to perform the Work including construction quality control including inspection, testing and documentation, all required documentation at the conclusion of the project, warranting its work and performing all other work indicated in the Contract.

The Department shall have the right to alter the nature and extent of the Work as provided in the Contract; payment to be made as provided in the same.

B. Time.

The Contractor agrees to complete all Work, except warranty work, on or before **August 17, 2013.** Further, the Department may deduct from moneys otherwise due the Contractor, not as a penalty, but as Liquidated Damages in accordance with Sections 107.7 and 107.8 of the State of Maine Department of Transportation Standard Specifications, Revision of December 2002 and related Special Provisions.

C. Price.

The quantities given in the Schedule of Items of the Bid Package will be used as the basis for determining the original Contract amount and for determining the amounts of the required Performance Surety Bond and Payment Surety Bond, and that the amount of this offer is _____

_____

$_ _____ Performance Bond and Payment Bond each being 100% of the amount of this Contract.

D. Contract.

This Contract, which may be amended, modified, or supplemented in writing only, consists of the Contract documents as defined in the Plans, Standard Specifications, Revision of December 2002, Standard Details Revision of December 2002 as updated through advertisement, Supplemental Specifications, Special Provisions, Contract Agreement; and Contract Bonds. It is agreed and understood that this Contract will be governed by the documents listed above.

E. Certifications.

By signing below, the Contractor hereby certifies that to the best of the Contractor's knowledge and belief:

1. All of the statements, representations, covenants, and/or certifications required or set forth in the Bid and the Bid Documents, including those in the Federal Contract Provisions Supplement, and the Contract are still complete and accurate as of the date of this Agreement.

2. The Contractor knows of no legal, contractual, or financial impediment to entering into this Contract.

3. The person signing below is legally authorized by the Contractor to sign this Contract on behalf of the Contractor and to legally bind the Contractor to the terms of the Contract.

F. Offer.

The undersigned, having carefully examined the site of work, the Plans, Standard Specifications Revision of December 2002, Standard Details Revision of December 2002 as updated through advertisement, Supplemental Specifications, Special Provisions, Contract Agreement; and Contract Bonds contained herein for construction of: **Contract, WIN No. 19146.00, for the Pavement Milling, & Hot Mix Asphalt Overlay with Drainage and Safety Improvements in the towns of _Frankfort and Winterport, County of Waldo, State of Maine,** on which bids will be received until the time specified in the "Notice to Contractors" do(es) hereby bid and offer to enter into this contract to supply all the materials, tools, equipment and labor to construct the whole of the Work in strict accordance with the terms and conditions of this Contract at the unit prices in the attached "Schedule of Items".

The Offeror agrees to perform the work required at the price specified above and in accordance with the bids provided in the attached "Schedule of Items" in strict accordance with the terms of this solicitation, and to provide the appropriate insurance and bonds if this offer is accepted by the Government in writing.

As Offeror also agrees:

First: To do any extra work, not covered by the attached "Schedule of Items", which may be ordered by the Resident, and to accept as full compensation the amount determined upon a "Force Account" basis as provided in the Standard Specifications, Revision of December 2002, and as addressed in the contract documents.

Second: That the bid bond at 5% of the bid amount or the official bank check, cashier's check, certificate of deposit or U. S. Postal Money Order in the amount given in the "Notice to Contractors", payable to the Treasurer of the State of Maine and accompanying this bid, shall be forfeited, as liquidated damages, if in case this bid is accepted, and the undersigned shall fail to abide by the terms and conditions of the offer and fail to furnish satisfactory insurance and Contract bonds under the conditions stipulated in the Specifications within 15 days of notice of intent to award the contract.

Third: To begin the Work as stated in Section 107.2 of the Standard Specifications Revision of December 2002 and complete the Work within the time limits given in the Special Provisions of this Contract.

Fourth: The Contractor will be bound to the Disadvantaged Business Enterprise (DBE) Requirements contained in the attached Notice (Additional Instructions to Bidders) and submit a completed Contractor's Disadvantaged Business Enterprise Utilization Plan with their bid.

Fifth: That this offer shall remain open for 30 calendar days after the date of opening of bids.

Sixth: The Bidder hereby certifies, to the best of its knowledge and belief that: the Bidder has not, either directly or indirectly, entered into any agreement, participated in any collusion, or otherwise taken any action in restraint of competitive bidding in connection with its bid, and its subsequent contract with the Department.

IN WITNESS WHEREOF, the Contractor, for itself, its successors and assigns, hereby execute two duplicate originals of this Agreement and thereby binds itself to all covenants, terms, and obligations contained in the Contract Documents.

CONTRACTOR

_____	_____
Date	(Signature of Legally Authorized Representative of the Contractor)
_____	_____
Witness	(Name and Title Printed)

G. Award.

Your offer is hereby accepted. This award consummates the Contract, and the documents referenced herein.

MAINE DEPARTMENT OF TRANSPORTATION

_____	_____
Date	By: David Bernhardt, Commissioner
_____	
Witness	

CONTRACT AGREEMENT, OFFER & AWARD

AGREEMENT made on the date last signed below, by and between the State of Maine, acting through and by its Department of Transportation (Department), an agency of state government with its principal administrative offices located at Child Street, Augusta, Maine, with a mailing address at 16 State House Station, Augusta, Maine 04333-0016, and _____ a corporation or other legal entity organized under the laws of the State of _____, with its principal place of business located at _____ _____

The Department and the Contractor, in consideration of the mutual promises set forth in this Agreement (the "Contract"), hereby agree as follows:

A. The Work.

The Contractor agrees to complete all Work as specified or indicated in the Contract including Extra Work in conformity with the **Contract, WIN No. 19146.00, for the Pavement Milling, & Hot Mix Asphalt Overlay with Drainage and Safety Improvements in the towns of _Frankfort and Winterport, County of Waldo, Maine.** The Work includes construction, maintenance during construction, warranty as provided in the Contract, and other incidental work.

The Contractor shall be responsible for furnishing all supervision, labor, equipment, tools supplies, permanent materials and temporary materials required to perform the Work including construction quality control including inspection, testing and documentation, all required documentation at the conclusion of the project, warranting its work and performing all other work indicated in the Contract.

The Department shall have the right to alter the nature and extent of the Work as provided in the Contract; payment to be made as provided in the same.

B. Time.

The Contractor agrees to complete all Work, except warranty work, on or before **August 17, 2013.** Further, the Department may deduct from moneys otherwise due the Contractor, not as a penalty, but as Liquidated Damages in accordance with Sections 107.7 and 107.8 of the State of Maine Department of Transportation Standard Specifications, Revision of December 2002 and related Special Provisions.

C. Price.

The quantities given in the Schedule of Items of the Bid Package will be used as the basis for determining the original Contract amount and for determining the amounts of the required Performance Surety Bond and Payment Surety Bond, and that the amount of this offer is _____

_____

$_ _____ Performance Bond and Payment Bond each being 100% of the amount of this Contract.

D. Contract.

This Contract, which may be amended, modified, or supplemented in writing only, consists of the Contract documents as defined in the Plans, Standard Specifications, Revision of December 2002, Standard Details Revision of December 2002 as updated through advertisement, Supplemental Specifications, Special Provisions, Contract Agreement; and Contract Bonds. It is agreed and understood that this Contract will be governed by the documents listed above.

E. Certifications.

By signing below, the Contractor hereby certifies that to the best of the Contractor's knowledge and belief:

1. All of the statements, representations, covenants, and/or certifications required or set forth in the Bid and the Bid Documents, including those in the Federal Contract Provisions Supplement, and the Contract are still complete and accurate as of the date of this Agreement.

2. The Contractor knows of no legal, contractual, or financial impediment to entering into this Contract.

3. The person signing below is legally authorized by the Contractor to sign this Contract on behalf of the Contractor and to legally bind the Contractor to the terms of the Contract.

F. Offer.

The undersigned, having carefully examined the site of work, the Plans, Standard Specifications Revision of December 2002, Standard Details Revision of December 2002 as updated through advertisement, Supplemental Specifications, Special Provisions, Contract Agreement; and Contract Bonds contained herein for construction of: **Contract, WIN No. 19146.00, for the Pavement Milling, & Hot Mix Asphalt Overlay with Drainage and Safety Improvements in the towns of _Frankfort and Winterport, County of Waldo, State of Maine,** on which bids will be received until the time specified in the "Notice to Contractors" do(es) hereby bid and offer to enter into this contract to supply all the materials, tools, equipment and labor to construct the whole of the Work in strict accordance with the terms and conditions of this Contract at the unit prices in the attached "Schedule of Items".

The Offeror agrees to perform the work required at the price specified above and in accordance with the bids provided in the attached "Schedule of Items" in strict accordance with the terms of this solicitation, and to provide the appropriate insurance and bonds if this offer is accepted by the Government in writing.

As Offeror also agrees:

First: To do any extra work, not covered by the attached "Schedule of Items", which may be ordered by the Resident, and to accept as full compensation the amount determined upon a "Force Account" basis as provided in the Standard Specifications, Revision of December 2002, and as addressed in the contract documents.

Second: That the bid bond at 5% of the bid amount or the official bank check, cashier's check, certificate of deposit or U. S. Postal Money Order in the amount given in the "Notice to Contractors", payable to the Treasurer of the State of Maine and accompanying this bid, shall be forfeited, as liquidated damages, if in case this bid is accepted, and the undersigned shall fail to abide by the terms and conditions of the offer and fail to furnish satisfactory insurance and Contract bonds under the conditions stipulated in the Specifications within 15 days of notice of intent to award the contract.

Third: To begin the Work as stated in Section 107.2 of the Standard Specifications Revision of December 2002 and complete the Work within the time limits given in the Special Provisions of this Contract.

Fourth: The Contractor will be bound to the Disadvantaged Business Enterprise (DBE) Requirements contained in the attached Notice (Additional Instructions to Bidders) and submit a completed Contractor's Disadvantaged Business Enterprise Utilization Plan with their bid.

Fifth: That this offer shall remain open for 30 calendar days after the date of opening of bids.

Sixth: The Bidder hereby certifies, to the best of its knowledge and belief that: the Bidder has not, either directly or indirectly, entered into any agreement, participated in any collusion, or otherwise taken any action in restraint of competitive bidding in connection with its bid, and its subsequent contract with the Department.

IN WITNESS WHEREOF, the Contractor, for itself, its successors and assigns, hereby execute two duplicate originals of this Agreement and thereby binds itself to all covenants, terms, and obligations contained in the Contract Documents.

CONTRACTOR

_____	_____
Date	(Signature of Legally Authorized Representative of the Contractor)
_____	_____
Witness	(Name and Title Printed)

G. Award.

Your offer is hereby accepted. This award consummates the Contract, and the documents referenced herein.

MAINE DEPARTMENT OF TRANSPORTATION

_____	_____
Date	By: David Bernhardt, Commissioner
_____	
Witness	

CONTRACT AGREEMENT, OFFER & AWARD

AGREEMENT made on the date last signed below, by and between the State of Maine, acting through and by its Department of Transportation (Department), an agency of state government with its principal administrative offices located at Child Street Augusta, Maine, with a mailing address at 16 State House Station, Augusta, Maine 04333-0016, and **(Name of the firm bidding the job)** a corporation or other legal entity organized under the laws of the State of Maine, with its principal place of business located at **(address of the firm bidding the job)**

The Department and the Contractor, in consideration of the mutual promises set forth in this Agreement (the "Contract"), hereby agree as follows:

SAMPLE

A. The Work.

The Contractor agrees to complete all Work as specified or indicated in the Contract including Extra Work in conformity with the Contract, PIN No.**1224.00**, for the **Hot Mix Asphalt Overlay** in the town/city of **South Nowhere,** County of **Washington**, Maine. The Work includes construction, maintenance during construction, warranty as provided in the Contract, and other incidental work.

The Contractor shall be responsible for furnishing all supervision, labor, equipment, tools supplies, permanent materials and temporary materials required to perform the Work including construction quality control including inspection, testing and documentation, all required documentation at the conclusion of the project, warranting its work and performing all other work indicated in the Contract.

The Department shall have the right to alter the nature and extent of the Work as provided in the Contract; payment to be made as provided in the same.

B. Time.

The Contractor agrees to complete all Work, except warranty work, on or before **November 15, 2006.** Further, the Department may deduct from moneys otherwise due the Contractor, not as a penalty, but as Liquidated Damages in accordance with Sections 107.7 and 107.8 of the State of Maine Department of Transportation Standard Specifications, Revision of December 2002 and related Special Provisions.

C. Price.

The quantities given in the Schedule of Items of the Bid Package will be used as the basis for determining the original Contract amount and for determining the amounts of the required Performance Surety Bond and Payment Surety Bond, and that the amount of this offer is **____(Place bid here in alphabetical form such as One Hundred and Two dollars and 10 cents)** **$_ (repeat bid here in numerical terms, such as $102.10)**_____ Performance Bond and Payment Bond each being 100% of the amount of this Contract.

D. Contract.

This Contract, which may be amended, modified, or supplemented in writing only, consists of the Contract documents as defined in the Plans, Standard Specifications, Revision of December 2002, Standard Details Revision of December 2002, Supplemental Specifications, Special Provisions, Contract Agreement; and Contract Bonds. It is agreed and understood that this Contract will be governed by the documents listed above.

E. Certifications.

By signing below, the Contractor hereby certifies that to the best of the Contractor's knowledge and belief:

1. All of the statements, representations, covenants, and/or certifications required or set forth in the Bid and the Bid Documents, including those in Appendix A to Division 100 of the Standard Specifications Revision of December 2002 (Federal Contract Provisions Supplement), and the Contract are still complete and accurate as of the date of this Agreement.

2. The Contractor knows of no legal, contractual, or financial impediment to entering into this Contract.

3. The person signing below is legally authorized by the Contractor to sign this Contract on behalf of the Contractor and to legally bind the Contractor to the terms of the Contract.

SAMPLE

F. Offer.

The undersigned, having carefully examined the site of work, the Plans, Standard Specifications, Revision of December 2002, Standard Details Revision of December 2002, Supplemental Specifications, Special Provisions, Contract Agreement; and Contract Bonds contained herein for construction of:

PIN 1234.00 South Nowhere, Hot Mix Asphalt Overlay,

State of Maine, on which bids will be received until the time specified in the "Notice to Contractors" do(es) hereby bid and offer to enter into this contract to supply all the materials, tools, equipment and labor to construct the whole of the Work in strict accordance with the terms and conditions of this Contract at the unit prices in the attached "Schedule of Items".

The Offeror agrees to perform the work required at the price specified above and in accordance with the bids provided in the attached "Schedule of Items" in strict accordance with the terms of this solicitation, and to provide the appropriate insurance and bonds if this offer is accepted by the Government in writing.

As Offeror also agrees:

First: To do any extra work, not covered by the attached "Schedule of Items", which may be ordered by the Resident, and to accept as full compensation the amount determined upon a "Force Account" basis as provided in the Standard Specifications, Revision of December 2002, and as addressed in the contract documents.

Second: That the bid bond at 5% of the bid amount or the official bank check, cashier's check, certificate of deposit or U. S. Postal Money Order in the amount given in the "Notice to Contractors", payable to the Treasurer of the State of Maine and accompanying this bid, shall be forfeited, as liquidated damages, if in case this bid is accepted, and the undersigned shall fail to abide by the terms and conditions of the offer and fail to furnish satisfactory insurance and Contract bonds under the conditions stipulated in the Specifications within 15 days of notice of intent to award the contract.

Third: To begin the Work as stated in Section 107.2 of the Standard Specifications Revision of 2002 and complete the Work within the time limits given in the Special Provisions of this Contract.

Fourth: The Contractor will be bound to the Disadvantaged Business Enterprise (DBE) Requirements contained in the attached Notice (Additional Instructions to Bidders) and submit a completed Contractor's Disadvantaged Business Enterprise Utilization Plan with their bid.

Fifth: That this offer shall remain open for 30 calendar days after the date of opening of bids.

SAMPLE

Sixth: The Bidder hereby certifies, to the best of its knowledge and belief that: the Bidder has not, either directly or indirectly, entered into any agreement, participated in any collusion, or otherwise taken any action in restraint of competitive bidding in connection with its bid, and its subsequent contract with the Department.

IN WITNESS WHEREOF, the Contractor, for itself, its successors and assigns, hereby execute two duplicate originals of this Agreement and thereby binds itself to all covenants, terms, and obligations contained in the Contract Documents.

CONTRACTOR

_____	**(Sign Here)**
Date	(Signature of Legally Authorized Representative of the Contractor)
____(**Witness Sign Here)**	**(Print Name Here)**
Witness	(Name and Title Printed)

SAMPLE

G. Award.

Your offer is hereby accepted. This award consummates the Contract, and the documents referenced herein.

MAINE DEPARTMENT OF TRANSPORTATION

_____	_____
Date	By: David Bernhardt, Commissioner

_____
(Witness)

BOND # _____

CONTRACT PERFORMANCE BOND
(Surety Company Form)

KNOW ALL MEN BY THESE PRESENTS: That _____ _____ **in the State of** _____, as principal, and……....., a corporation duly organized under the laws of the State of ..... and having a usual place of business ...., as Surety, are held and firmly bound unto the Treasurer of the State of Maine in the sum of _____ **and 00/100 Dollars ($)**, to be paid said Treasurer of the State of Maine or his successors in office, for which payment well and truly to be made, Principal and Surety bind themselves, their heirs, executors and administrators, successors and assigns, jointly and severally by these presents.

The condition of this obligation is such that if the Principal designated as Contractor in the Contract to construct Project Number _____ in the Municipality of _____ promptly and faithfully performs the Contract, then this obligation shall be null and void; otherwise it shall remain in full force and effect.

The Surety hereby waives notice of any alteration or extension of time made by the State of Maine.

Signed and sealed this ..... day of ....., 20….. .

WITNESSES:	SIGNATURES:
	CONTRACTOR:
Signature.....	.....….....
Print Name Legibly	Print Name Legibly ...….....
	SURETY:
Signature	....….....
Print Name Legibly	Print Name Legibly .....
SURETY ADDRESS:	NAME OF LOCAL AGENCY:
.....	ADDRESS .....
.....	...…….....
.....	.....…….....
TELEPHONE.....	.....…….....

SAMPLE

BOND # _____

CONTRACT PAYMENT BOND
(Surety Company Form)

KNOW ALL MEN BY THESE PRESENTS: That _____ _____ **in the State of** _____, as principal, and.....….....
a corporation duly organized under the laws of the State of ..... and having a usual place of business in .....……., as Surety, are held and firmly bound unto the Treasurer of the State of Maine for the use and benefit of claimants as herein below defined, in the sum of _____ **and 00/100 Dollars ($)** for the payment whereof Principal and Surety bind themselves, their heirs, executors and administrators, successors and assigns, jointly and severally by these presents.

The condition of this obligation is such that if the Principal designated as Contractor in the Contract to construct Project Number _____ in the Municipality of _____ promptly satisfies all claims and demands incurred for all labor and material, used or required by him in connection with the work contemplated by said Contract, and fully reimburses the obligee for all outlay and expense which the obligee may incur in making good any default of said Principal, then this obligation shall be null and void; otherwise it shall remain in full force and effect.

A claimant is defined as one having a direct contract with the Principal or with a Subcontractor of the Principal for labor, material or both, used or reasonably required for use in the performance of the contract.

Signed and sealed this ..... day of ...……....., 20 ... .

WITNESS:	SIGNATURES:
	CONTRACTOR:
Signature…….....	.....….....
Print Name Legibly .....……..	Print Name Legibly ….....
	SURETY:
Signature.....	...….....
Print Name Legibly	Print Name Legibly ….....
SURETY ADDRESS:	NAME OF LOCAL AGENCY:
...….....	ADDRESS ….....
.....	…….....
TELEPHONE	…….....

SAMPLE

STATE OF MAINE
DEPARTMENT OF TRANSPORTATION

FRANKFORT-WINTERPORT

WALDO COUNTY

US ROUTE 1A

NH-1914(600)

PROJECT LENGTH : 4.22 MILES

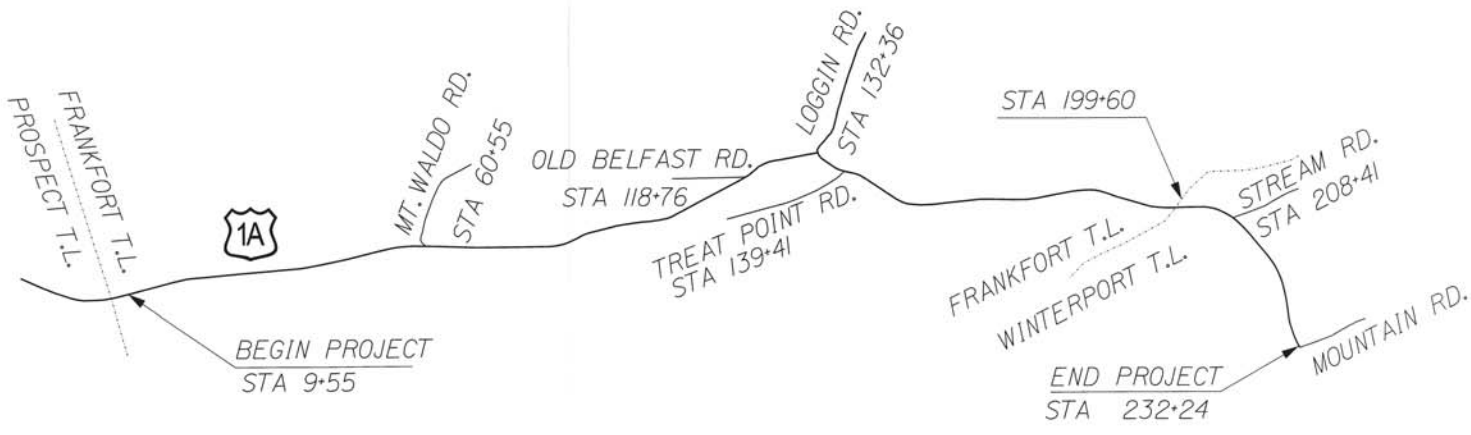

TRAFFIC DATA

Current (2013) AADT	6340
Future (2025) AADT	7480
DHV - % of AADT	10
Design Hour Volume	748
% Heavy Trucks (AADT)	11
% Heavy Trucks (DHV)	11
Directional Distribution (DHV)	52
18 kip Equivalent P 2.0	703
18 kip Equivalent P 2.5	669
Design Speed (mph)	50
Functional Class:	Princ. Arterial

PROJECT LOCATION:	BEGINNING 0.16 MI. NORTH OF PROSPECT/FRANKFORT T.L. EXTENDING NORTHERLY 4.22 MI. TO MOUNTAIN VIEW RD.
PROGRAM AREA:	HIGHWAY RESURFACING: REGION 2
SCOPE OF WORK:	MILL & FILL

WIN 19146.00 NH-1914(600)

STATE OF MAINE
DEPARTMENT OF TRANSPORTATION

APPROVED

	DATE
COMMISSIONER	3/5/13
CHIEF ENGINEER	3/4/13

STATE OF MAINE PROFESSIONAL ENGINEER

PROJECT INFORMATION	
PROGRAM	HIGHWAY
PROJECT MANAGER	R. DARLING
DESIGNER	E. BURR, PE
CONSULTANT	
PROJECT RESIDENT	
CONTRACTOR	
PROJECT COMPLETION DATE	

SIGNATURE: 8580
P.E. NUMBER
DATE: FEB 28, 2013

FRANKFORT-WINTERPORT
US ROUTE 1A

TITLE SHEET

SHEET NUMBER
1
OF 1

Filename: ...\00\HIGHWAY\MSTA\001_Title.dgn Division: HIGHWAY Username: barry.a.breton Date: 2/28/2013

NOTE:

1. THE PAVEMENT DEPTHS AS SHOWN ON THE PLANS ARE INTENDED TO BE NOMINAL.

2. WHEN SUPERELEVATION EXCEEDS THE SLOPE OF THE LOW SIDE SHOULDER, THE LOW SIDE SHOULDER SHALL HAVE THE SAME SLOPE AS THE TRAVELWAY.

3. CROWNS FOR BOTH NORMAL AND SUPERELEVATION SECTIONS FOR ALL COURSES OF PAVEMENT SHALL BE STRAIGHT.

4. THE ALGEBRAIC DIFFERENCE BETWEEN THE SHOULDER AND TRAVEWAY CROSS SLOPES "ROLLOVER" SHALL NOT EXCEED 8%.

5. THE STATIONING SHOWN UNDER EACH TYPICAL IS APPROXIMATE.

1 1/2" MILL & FILL PLUS 3/4" OVERLAY

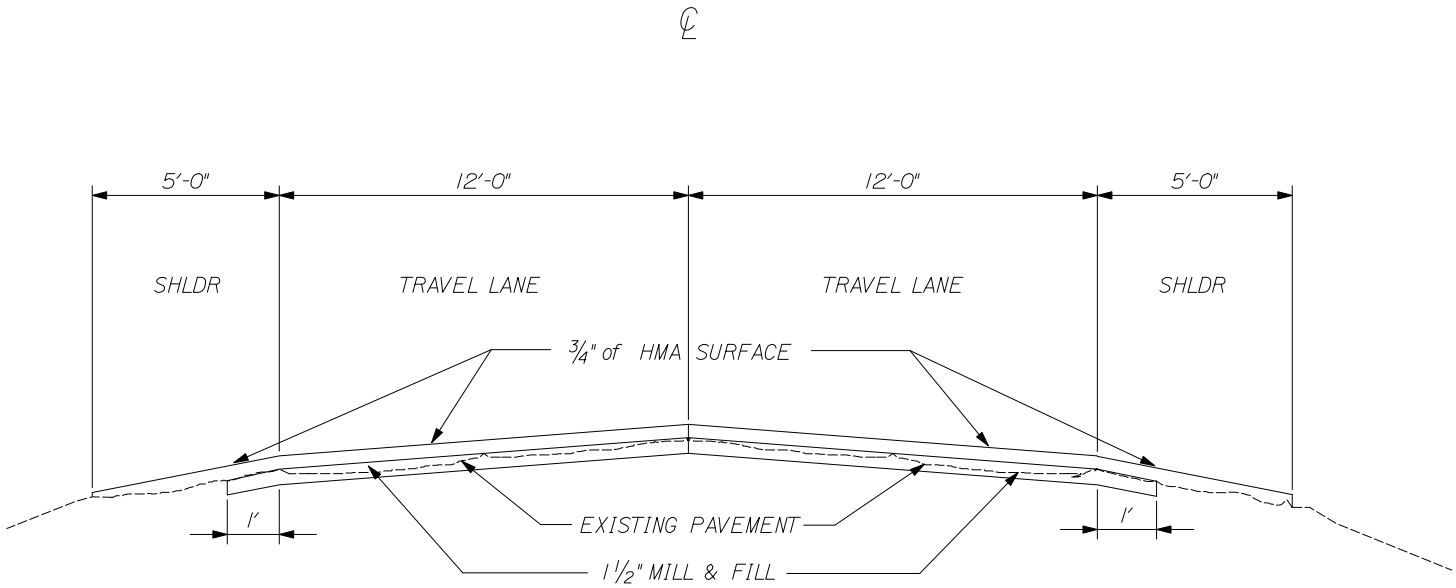

STA 10+00 to 134+83

NOT TO SCALE

STATE OF MAINE
DEPARTMENT OF TRANSPORTATION

NH-1914(600)

WIN 19146.00

HIGHWAY PLANS

		BY	DATE
PROJ. MANAGER	Randy Barrows		
DESIGN-DETAILED			
CHECKED-REVIEWED	D. Rowlands		
DESIGN2-DETAILED2			
DESIGN3-DETAILED3			
REVISIONS 1			
REVISIONS 2			
REVISIONS 3			
REVISIONS 4			
FIELD CHANGES			

SIGNATURE

P.E. NUMBER

DATE

FRANKFORT-WINTERPORT
US ROUTE 1A

TYPICAL SECTIONS

SHEET NUMBER

1

OF 6

Filename: $file$ Division: $wkgroup$ Username: $user$ Date:$date$

NOTE:

1. THE PAVEMENT DEPTHS AS SHOWN ON THE PLANS ARE INTENDED TO BE NOMINAL.

2. WHEN SUPERELEVATION EXCEEDS THE SLOPE OF THE LOW SIDE SHOULDER, THE LOW SIDE SHOULDER SHALL HAVE THE SAME SLOPE AS THE TRAVELWAY.

3. CROWNS FOR BOTH NORMAL AND SUPERELEVATION SECTIONS FOR ALL COURSES OF SUBBASE AND PAVEMENT SHALL BE STRAIGHT.

4. THE ALGEBRAIC DIFFERENCE BETWEEN THE SHOULDER AND TRAVEWAY CROSS SLOPES "ROLLOVER" SHALL NOT EXCEED 8%.

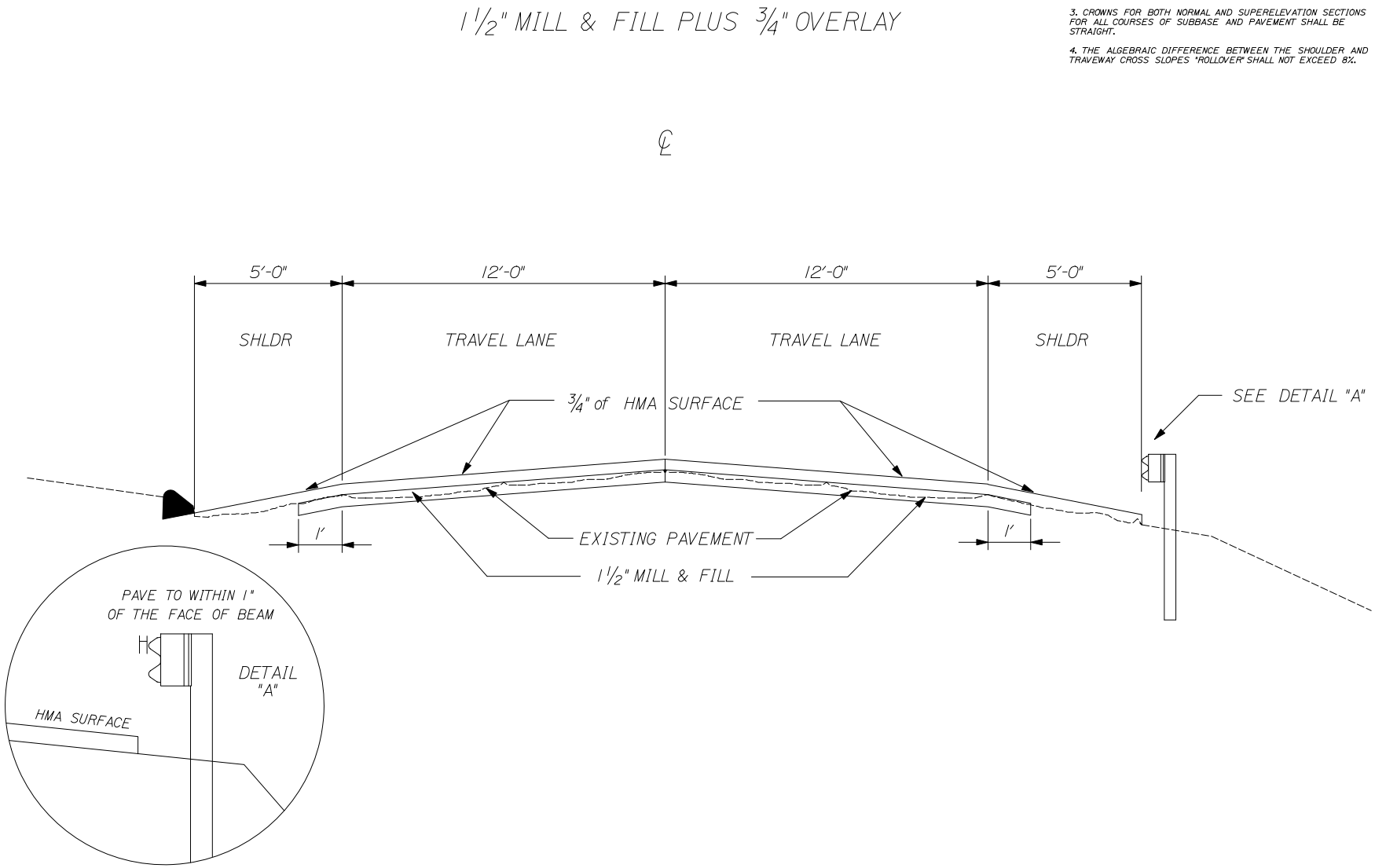

NOT TO SCALE

STATE OF MAINE
DEPARTMENT OF TRANSPORTATION

NH-1914(600)

WIN 19146.00

HIGHWAY PLANS

		BY	DATE
PROJ. MANAGER	Randy Berrow		
DESIGN-DETAILED	Dean Roakrigs		
CHECKED-REVIEWED			
DESIGN-DETAILED2			
DESIGN-DETAILED3			
REVISIONS 1			
REVISIONS 2			
REVISIONS 3			
REVISIONS 4			
FIELD CHANGES			

SIGNATURE

P.E. NUMBER

DATE

FRANKFORT-WINTERPORT
US ROUTE 1A

TYPICAL SECTIONS

SHEET NUMBER
2
OF 6

Filename: $file$ Division: $wkgroup$ Username: $user$ Date:$date$

NOTE:

1. THE PAVEMENT DEPTHS AS SHOWN ON THE PLANS ARE INTENDED TO BE NOMINAL.

2. WHEN SUPERELEVATION EXCEEDS THE SLOPE OF THE LOW SIDE SHOULDER, THE LOW SIDE SHOULDER SHALL HAVE THE SAME SLOPE AS THE TRAVELWAY.

3. CROWNS FOR BOTH NORMAL AND SUPERELEVATION SECTIONS FOR ALL COURSES OF SUBBASE AND PAVEMENT SHALL BE STRAIGHT.

4. THE ALGEBRAIC DIFFERENCE BETWEEN THE SHOULDER AND TRAVEWAY CROSS SLOPES "ROLLOVER" SHALL NOT EXCEED 8%.

5. THE STATIONING SHOWN UNDER EACH TYPICAL IS APPROXIMATE.

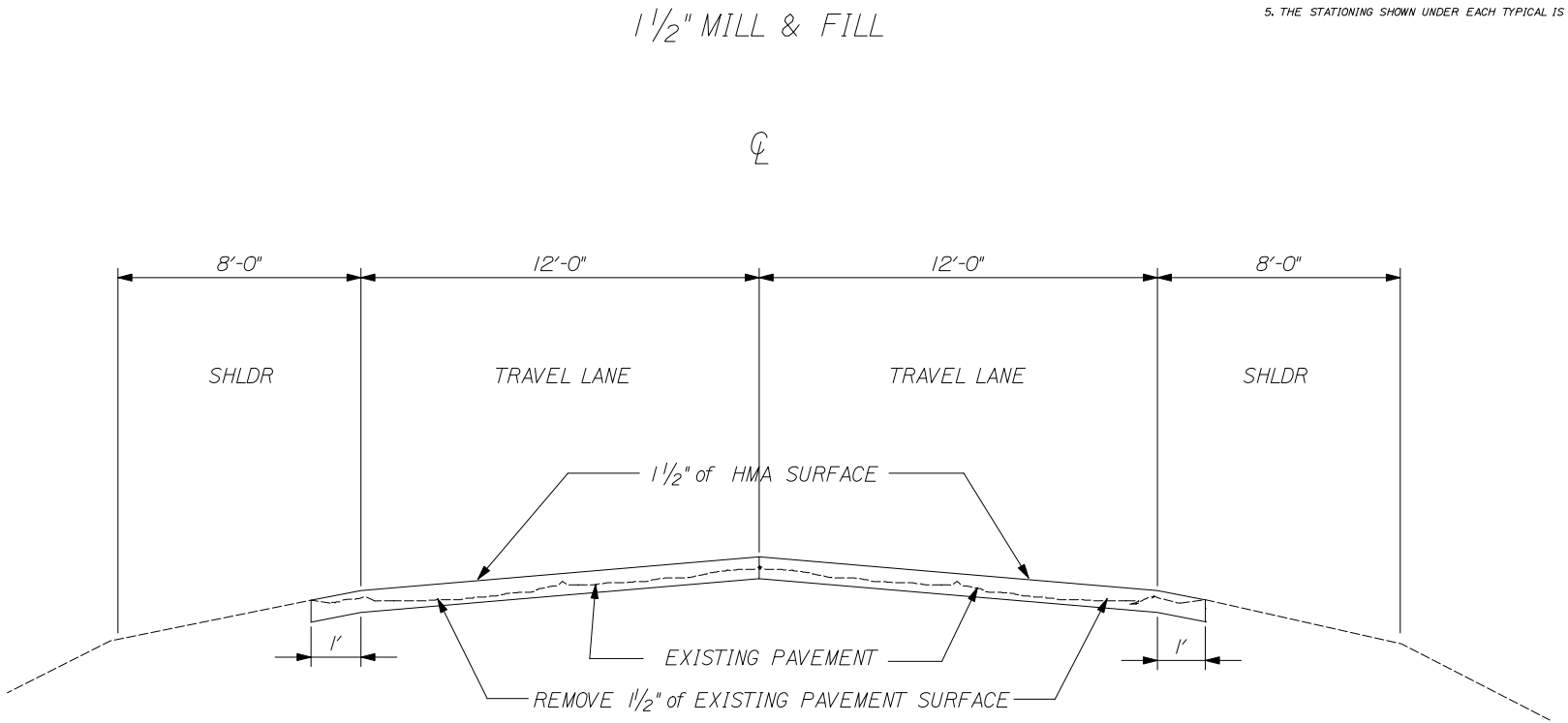

STA 137+02 to 139+40
STA 167+00 to 232+24

NOT TO SCALE

STATE OF MAINE
DEPARTMENT OF TRANSPORTATION

NH-1914(600)

WIN 19146.00

HIGHWAY PLANS

		BY	DATE
PROJ. MANAGER	Randy Barrows		
DESIGN-DETAILED	D. Rowland		
CHECKED-DETAILED			
DESIGN-DETAILED2			
DESIGN-DETAILED3			
REVISIONS 1			
REVISIONS 2			
REVISIONS 3			
REVISIONS 4			
FIELD CHANGES			

SIGNATURE

P.E. NUMBER

DATE

FRANKFORT-WINTERPORT
US ROUTE 1A

TYPICAL SECTIONS

SHEET NUMBER
3
OF 6

Filename: $file$ Division: $wkgroup$ Username: $user$ Date: $date$

1½" MILL & FILL
TRUCK LANE W/ SUPERELEVATION

NOTE:

1. THE PAVEMENT DEPTHS AS SHOWN ON THE PLANS ARE INTENDED TO BE NOMINAL.
2. WHEN SUPERELEVATION EXCEEDS THE SLOPE OF THE LOW SIDE SHOULDER, THE LOW SIDE SHOULDER SHALL HAVE THE SAME SLOPE AS THE TRAVELWAY.
3. CROWNS FOR BOTH NORMAL AND SUPERELEVATION SECTIONS FOR ALL COURSES OF SUBBASE AND PAVEMENT SHALL BE STRAIGHT.
4. THE ALGEBRAIC DIFFERENCE BETWEEN THE SHOULDER AND TRAVEWAY CROSS SLOPES "ROLLOVER" SHALL NOT EXCEED 8%.
5. THE STATIONING SHOWN UNDER EACH TYPICAL IS APPROXIMATE.

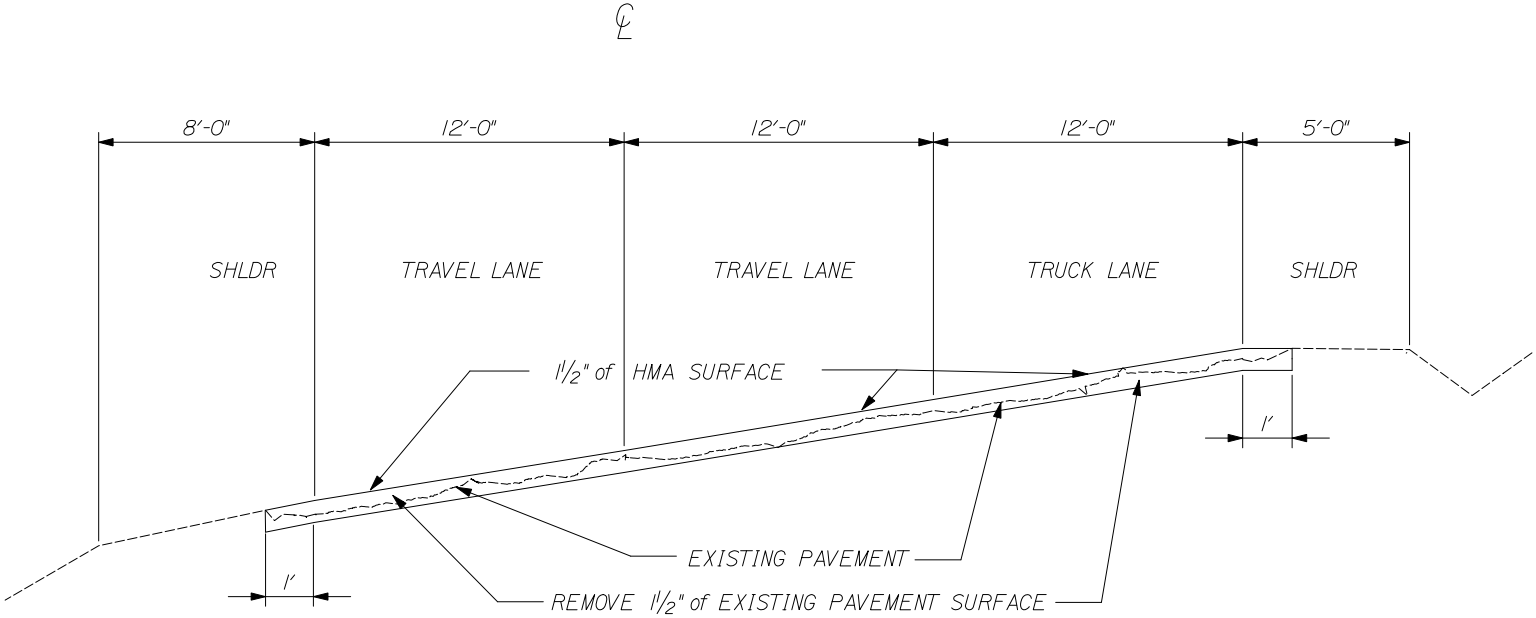

STA 139+40 to 167+00

NOT TO SCALE

STATE OF MAINE
DEPARTMENT OF TRANSPORTATION

NH-1914(600)

WIN 19146.00

HIGHWAY PLANS

		BY	DATE
PROJ. MANAGER	Randy Barrows		
DESIGN-DETAILED	D. Rowlands		
CHECKED-REVIEWED			
DESIGN-DETAILED2			
CHECKED-REVIEWED2			
REVISIONS 1			
REVISIONS 2			
REVISIONS 3			
REVISIONS 4			
FIELD CHANGES			

SIGNATURE

P.E. NUMBER

DATE

FRANKFORT-WINTERPORT
US ROUTE 1A

TYPICAL SECTIONS

SHEET NUMBER
4
OF 6

Filename: $file$ Division: $wkgroup$ Username: $user$ Date:$date$

NOTE:

1. THE PAVEMENT DEPTHS AS SHOWN ON THE PLANS ARE INTENDED TO BE NOMINAL.

2. WHEN SUPERELEVATION EXCEEDS THE SLOPE OF THE LOW SIDE SHOULDER, THE LOW SIDE SHOULDER SHALL HAVE THE SAME SLOPE AS THE TRAVELWAY.

3. CROWNS FOR BOTH NORMAL AND SUPERELEVATION SECTIONS FOR ALL COURSES OF SUBBASE AND PAVEMENT SHALL BE STRAIGHT.

4. THE ALGEBRAIC DIFFERENCE BETWEEN THE SHOULDER AND TRAVEWAY CROSS SLOPES "ROLLOVER" SHALL NOT EXCEED 8%.

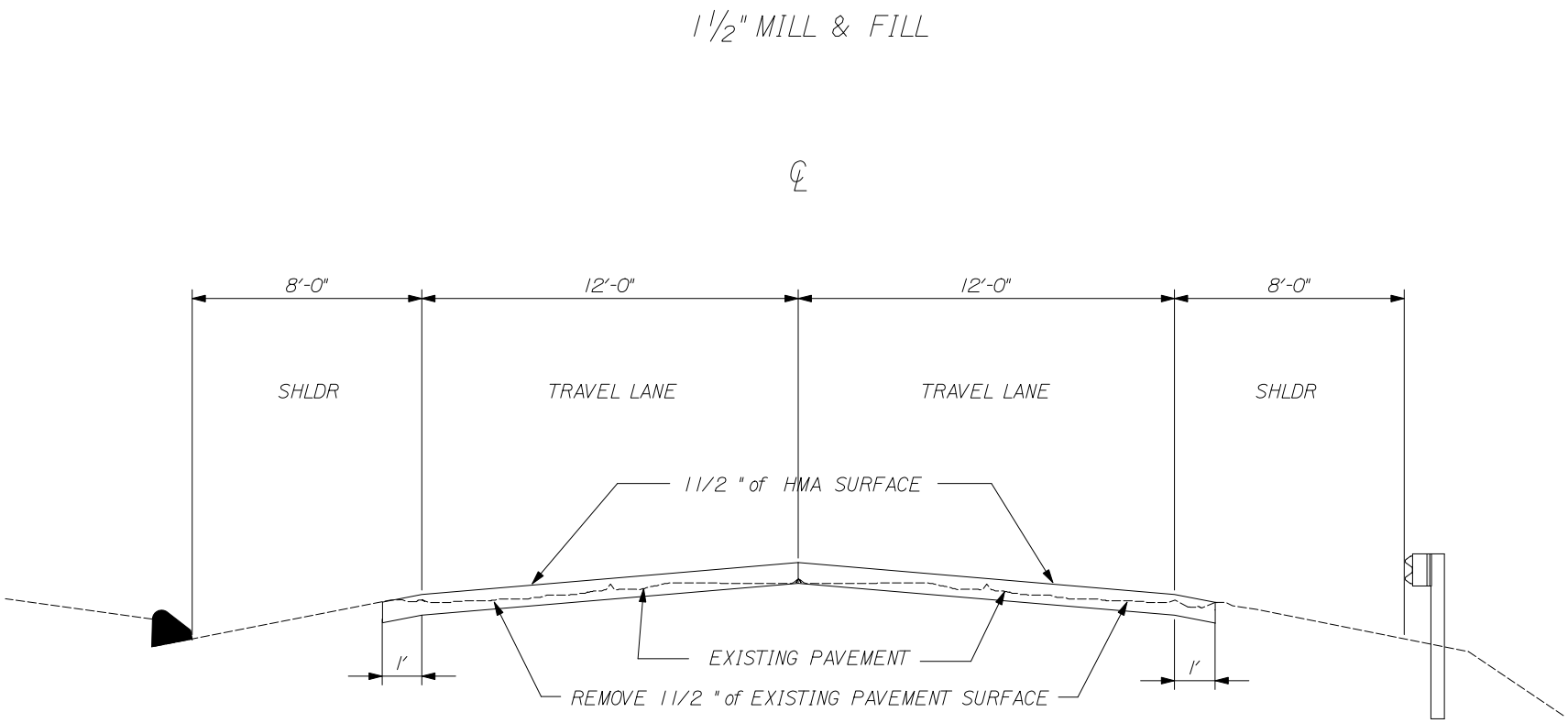

NOT TO SCALE

STATE OF MAINE
DEPARTMENT OF TRANSPORTATION

NH-1914(600)

WIN 19148.00

HIGHWAY PLANS

		BY	DATE
PROJ. MANAGER	Randy Barrows		
DESIGN-DETAILED	D. Rowlands		
CHECKED-DETAILED			
DESIGN-DETAILED3			
REVISIONS 1			
REVISIONS 2			
REVISIONS 3			
REVISIONS 4			
FIELD CHANGES			

SIGNATURE

P.E. NUMBER

DATE

FRANKFORT-WINTERPORT
US ROUTE 1A

TYPICAL SECTIONS

SHEET NUMBER
5
OF 6

Filename: $file$ Division: $wkgroup$ Username: $user$ Date:$date$

NOTE:

1. THE PAVEMENTDEPTHS AS SHOWN ON THE PLANS ARE INTENDED TO BE NOMINAL.

2. WHEN SUPERELEVATION EXCEEDS THE SLOPE OF THE LOW SIDE SHOULDER, THE LOW SIDE SHOULDER SHALL HAVE THE SAME SLOPE AS THE TRAVELWAY.

3. CROWNS FOR BOTH NORMAL AND SUPERELEVATION SECTIONS FOR ALL COURSES OF SUBBASE AND PAVEMENT SHALL BE STRAIGHT.

4. THE ALGEBRAIC DIFFERENCE BETWEEN THE SHOULDER AND TRAVEWAY CROSS SLOPES "ROLLOVER" SHALL NOT EXCEED 8%.

5. THE STATIONING SHOWN UNDER EACH TYPICAL IS APPROXIMATE.

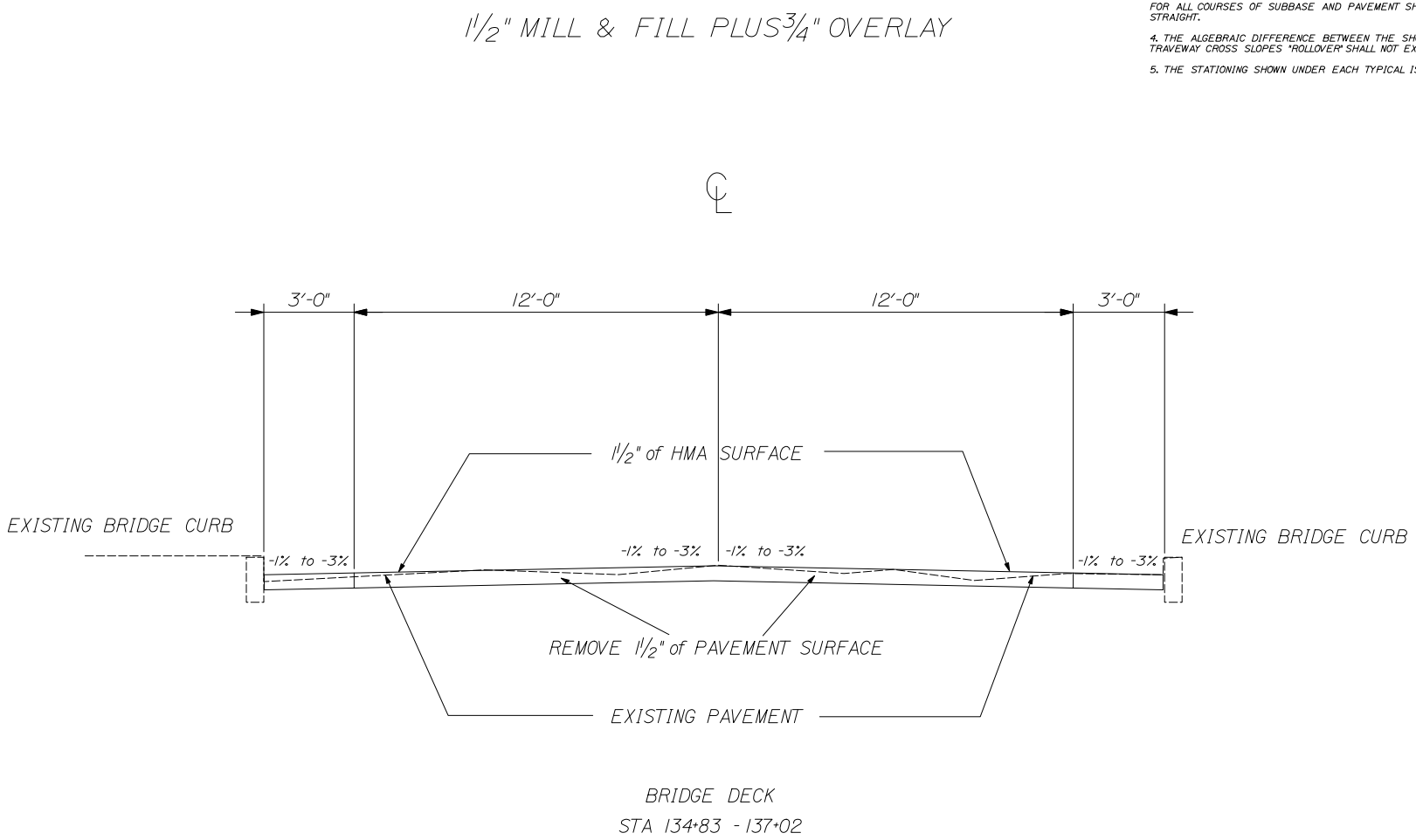

NOT TO SCALE

STATE OF MAINE
DEPARTMENT OF TRANSPORTATION

NH-1914(600)

WIN 19146.00

HIGHWAY PLANS

		BY	DATE
PROJ. MANAGER	Randy Barrows		
DESIGN-DETAILED	D. Rowlands		
CHECKED-REVIEWED			
DESIGN-DETAILED			
DESIGN-DETAILED			
REVISIONS 1			
REVISIONS 2			
REVISIONS 3			
REVISIONS 4			
FIELD CHANGES			

SIGNATURE

P.E. NUMBER

DATE

FRANKFORT-WINTERPORT
US ROUTE 1A

TYPICAL SECTIONS

SHEET NUMBER
6
OF 6

Filename: $file$ Division: $wkgroup$ Username: $user$ Date:$date$

PROJECT STATIONING

End Project	232+24	End Project
Stream Rd.	208+41	
	202+54	Alley Rd.
Town Line	199+60	Winterport/Frankfort
	183+40	CMP Pole #98
	160+34	CMP Pole #83
Hall Ln.	149+80	
	139+41	Treat Point Rd.
Bridge Joint	137+02	Bridge Joint
Bridge Joint	134+83	Bridge Joint
Loggin Rd.	132+36	
Averill St.	129+42	
Old Belfast Rd.	118+76	
CMP Pole #53/9	99+53	
	76+56	CMP Pole #43/19
Mt. Waldo Rd.	60+55	
	40+63	CMP Pole #30/23
	28+50	CMP Pole #26/27
CMP Pole #22	17+47	
Begin Project	9+55	Begin Project

CONSTRUCTION NOTES

Item 202.202 Removing Pavement Surface

Station 10+00 – 134+83 and Station 137+02 – 232+24 remove 26' wide
Station 134+83 – 137+02 (Bridge) remove 30' wide.
Station 139+40 – 167+00 (Truck lane) remove 13' wide
Or as directed by the Resident.

Item 202.203 Pavement Butt Joints

Station 9+55 – 10+00 and Station 134+38 – 134+83 (beginning and end of the overlay section) full width mainline and shoulders. All paved driveways and side roads within the overlay section, as directed by the Resident.

Item 203.242 Dirty Borrow

To be placed from Station 9+55 – 120+00 for backing up pavement, as directed by the Resident.

Item 403.211 Hot Mix Asphalt - Shim

To be used if delamination occurs after milling, as directed by the Resident.

Item 504.07 Concrete Pipe Ties, GP

Station	Left	Right
11+25	1	1
16+88	1	1
24+36	1	1
90+56	1	1
93+79	1	1
96+95	1	1

Item 603.175 18" Reinforced Concrete Pipe Class III

Station	Length
11+25	68'
16+88	56'
90+56	48'
93+79	60'
96+95	60'

CONSTRUCTION NOTES

Item 603.199 24" Culvert Pipe Option III (Metal)

Station	Length
109+77 RT	10'

Item 603.195 24" Reinforced Concrete Pipe Class III

Station	Length
24+36 LT	64'

Item 603.209 30" Culvert Pipe Option III (Metal)

Station	Length
122+82 LT	20'
105+53 RT	36'

Item 604.18 Adjusting Manhole or Catch Basin to Grade

Station
138+05 RT

Item 604.247 Catch Basin Type F5-C

Station
109+77 LT
110+75 LT
126+56 LT

Item 605.09 6" Underdrain Type B

Station	Length
126+56 – 127+56 LT	100'

Item 606.21 Guardrail Type 3b – 15' radius and less

Station
134+08.5 – 134+21 RT

CONSTRUCTION NOTES

Item 606.22 Guardrail Type 3b – over 15' radius

Station
134+21 – 134+33.5 RT

Item 606.352 Reflectorized Beam Guardrail Delineators

Estimated for installation on sections of existing guardrail.

Item 606.353 Reflectorized Flexible Guardrail Marker

Remove all existing delineator posts at each end treatment and replace with new.

Item 606.65 Guardrail Thrie Beam – Single Rail

Station	Length
83+25.5 – 102+00.5 RT	1875'
103+75 – 116+37.5 RT	1262.5'
118+00 – 121+25 RT	325'

Item 606.66 Terminal End Thrie Beam

Station
83+00.5 RT
103+50 RT
116+62.5 RT
117+75 RT

Item 606.70 Transition Section – Thrie Beam

Station
101+88 – 101+94.25 RT
121+12.5 – 121+18.75 RT

Item 606.71 Guardrail Thrie Beam – 15' Radius or less

Station
83+00.5 – 83+13 RT
103+50 – 103+62.5 RT
116+50 – 116+62.5 RT
117+75 – 117+87.5 RT

CONSTRUCTION NOTES

Item 606.72 Guardrail Thrie Beam – Over 15' Radius

Station
83+13 – 83+25.5 RT
103+62.5 – 103+75 RT
116+37.5 – 116+50 RT
117+87.5 – 118+00 RT

Item 606.79 Guardrail 350 Flared Terminal

Station
77+14 – 77+51.5 RT
133+96 – 134+33.5 LT

Item 609.31 Curb Type 3

Station
133+62 – 134+78 LT
137+20 – 137+70 LT

Item 610.08 Plain Riprap & Item 620.58 Drainage Geotextile.

To be installed at all new pipe ends, as directed by the Resident.

Item 627.76 Temporary Pavement Marking Line, White or Yellow

Temporary center and edge lines shall be painted on the surface pavement.
TOMs may be used on the surface pavement until the adjacent lane is paved.
All temporary lines shall be painted prior to doing the final striping.
TOMs may be used for the centerline on shim.
Temporary center line shall be painted on milled surface.

Item 629 Hand Labor and 631 Rental Items

These items will be used to remove excess material in guardrail sections, as directed by the Resident.

GENERAL NOTES

1) All joints between existing and proposed hot bituminous pavement shall be butted. Payment shall be made under Item 202.203 Pavement Butt Joint.

2) Construct butt joints at all paved drives and entrances.

3) A temporary ramp shall be constructed with HMA at the ends of the roadway section paved or milled each day. The use of millings or RAP will not allowed, but cold patch may be temporarily utilized until HMA plants are open for the season.

   For Interstate Highways or roadways with speed limits exceeding 50 mph, temporary ramps shall be constructed with one foot of length for every 1/8” of transition depth on the leading end, and one foot of length for every 1/4” of transition depth on the trailing end.

   For all other roadways with speed limits less than 50 mph, temporary ramps shall be constructed with one foot of length for every 1/4” of transition depth on the leading and the trailing end.

   Materials, placement, maintenance, and removal shall be incidental to contract items.

4) Grind transition tapers at Catch Basins under Item 202.203 Pavement Butt Joints, as directed by the Resident.

5) Where deemed necessary by the Resident, unsuitable excess material shall be removed from the edges of shoulders and placed in designated areas or disposed of. Payment will be made under the appropriate contract items.

6) The Contractor shall place suitable existing or other material acceptable to the Resident on all pavement edges to allow a drop off no greater than the surface pavement thickness. The material shall be graded to match existing in-slope or as directed by the Resident before surface is placed. The contractor will be paid under appropriate equipment rental items. Borrow is not authorized until all acceptable waste material has been utilized. Seed and Mulch will be paid for at the contract unit price.

7) Driveway fill side slopes shall be the same as the non-guardrail fill slopes unless otherwise noted on the plans.

8) All waste material not used on the project shall be disposed of in acceptable waste areas and reviewed by the Resident. Grading, seeding, and mulching of waste areas shall be considered incidental.

GENERAL NOTES

9) Required ditch protection shown on the plans or in the Construction Notes is for estimating purposes only. The actual type and location of ditch protection as determined by the Resident.

10) If foundation material is required under culverts, it shall meet the requirements for granular borrow - underwater backfill and will paid for as granular borrow.

11) Granular borrow used to backfill muck excavation or in low wet areas to 1' above water level or old ground shall meet requirements for granular borrow underwater backfill.

12) A 3' paved lip shall be placed at all gravel entrances unless otherwise noted in the plans or directed by the Resident.

13) Any necessary cleaning of existing pavement prior to paving (or milling) shall be incidental to the related paving (or milling) items.

14) All existing paved shoulders and widenings to be resurfaced as directed by the Resident.

15) The following shall be incidental to the 603 Item(s):
    a. Any cutting of existing culverts and or connectors necessary to install new culvert replacements or extensions
    b. All pipe excavation including any cutting and removal of pavement
    c. All ditching at pipe ends
    d. Furnishing, placing, grading, and compacting of any new gravel and/or fill material. This also includes material used for temporary detours to maintain traffic during pipe installation. Excavation of maintenance of traffic material is also incidental.
    e. All work necessary to connect to existing pipes and drainage structures
    f. Flow lines may be changed by up to 1.5 ft
    g. Any necessary clearing of brush and non-pay trees within 10 feet of culvert ends
    h. An 18” wide strip of non-woven geo-textile meeting the requirements of 620.58 shall be placed over all RCP joints.

16) Existing culverts to remain shall be cleaned as directed by the Resident. Payment will be made under Item 631.32 Culvert Cleaner (Including Operator).

17) No existing drainage shall be abandoned, removed or plugged without prior approval of the Resident.

18) Inlets and outlets of culverts and underdrain outlets shall be riprapped unless otherwise noted on the plans or directed by the Resident.

19) Plastic end caps shall be used on all dead-end 6-inch Type B underdrain.

GENERAL NOTES

20) Any necessary cutting of existing pipes to fit in areas of proposed catch basins will not be paid for separately and will be considered incidental to Item 604.

21) Any necessary cutting of existing catch basins to allow for proposed pipe connections will not be paid for separately and will be considered incidental to Item 603 or 605.

22) As directed by the Resident, all existing underdrain outlets shall be located, cleaned out and ditched as required or replaced as necessary. Payment will be made under appropriate contract items.

23) All connections for underdrain to roadway culverts will be incidental to the related items.

24) Guardrail end treatments shall be installed concurrently with the placement of each section of beam guardrail.

25) Holes created by Guardrail removal will be filled and compacted with approved materials as directed by the Resident. Payment to be considered incidental to the guardrail items.

26) Any guardrail removed and not reused shall become the property of the Contractor. Removal and disposal shall be considered incidental to the guardrail items.

27) Connections for proposed guardrail to existing guardrail will be considered incidental to Item 606.

28) Backing up bituminous curb is incidental to the curb items. If directed, loam or dirty borrow will be paid for separately. In areas where new bituminous curb is designated to replace existing, the removal of the old bituminous curb shall be incidental to the new curb.

29) Dirty borrow has been estimated for all disturbed slope areas other than lawn areas. Actual placement of the dirty borrow shall be as noted on the plans or designated by the Resident.

30) Unless otherwise noted Seeding Method No. 1 shall be utilized on all lawns and developed areas; Seeding Method No. 2 shall be utilized on all non-guardrail slopes. Seeding Method No. 3 shall be utilized on all guardrail fill slopes. On long non-guardrail backslopes, Seeding Method No. 3 may be used instead of Method No. 2 if noted or directed by the Resident.

GENERAL NOTES

31) Dirty borrow shall be placed to a nominal depth of 2 inches unless otherwise noted or directed.

32) The contractor will be responsible for maintaining all existing mailboxes to ensure that the mail will be deliverable each day. Payment will be made under appropriate rental items.

33) Any damage to the slopes caused by the contractor's equipment, personnel, or operation shall be repaired to the satisfaction of the resident. All work, equipment, and materials required to make repairs shall be at the contractor's expense.

34) Areas requiring fill on the project will come from suitable excavation from excavation, Ditch & Inslope, or equipment rental areas.

35) Additional excavation for the contractor's convenience or to comply with backsloping requirements will not be paid for directly but will be considered incidental to the related drainage items.

36) No separate payment for superintendent or foreman will be made for the supervision of equipment being paid for under the equipment rental items.

37) “Undetermined Locations” shall be determined by the Resident.

38) Stations referenced are approximate.

39) All work shall be done in accordance with the Maine Department of Transportation’s Best Management Practices for Erosion & Sedimentation Control, February, 2008.

40) The contractor will place appropriately marked stakes at the following locations on the project: striping pattern changes, cross-slope changes, and every 500’ for stationing. The contractor will paint every full station (100’) on the existing roadway and will transfer the painted stationing through all intermediate lifts (not surface). Appropriately sized striping pattern changes will be painted on surface. Stationing control must be placed before work can commence. Cross-slope and striping change controls must be placed before paving can commence. A Traffic Control penalty will be assessed for each day of non-compliance

41) MaineDOT will final stripe the project.

General Decision Number: ME130047 01/04/2013 ME47

Superseded General Decision Number: ME20120047

State: Maine

Construction Type: Highway

County: Waldo County in Maine.

HIGHWAY CONSTRUCTION PROJECTS (excluding tunnels, building structures in rest area projects & railroad construction; bascule, suspension & spandrel arch bridges designed for commercial navigation, bridges involving marine construction; and other major bridges).

Modification Number	Publication Date
0	01/04/2013

ENGI0004-011 04/01/2012

	Rates	Fringes
POWER EQUIPMENT OPERATOR: Asphalt Roller, Mechanic, Paver	$ 20.00	9.94

SUME2011-042 09/14/2011

	Rates	Fringes
CARPENTER, Includes Form Work	$ 18.34	2.84
INSTALLER - GUARDRAIL	$ 11.53	1.55
IRONWORKER, REINFORCING	$ 18.71	0.00
LABORER: Asphalt Raker	$ 13.91	2.94
LABORER: Common or General	$ 11.85	1.43
LABORER: Flagger	$ 9.00	0.00
LABORER: Highway/Parking Lot Striping	$ 12.77	0.23
LABORER: Landscape	$ 14.44	0.16
LABORER: Pipelayer	$ 13.21	1.58
LABORER: Wheelman	$ 13.81	1.47
OPERATOR: Backhoe	$ 16.18	4.98
OPERATOR: Bobcat/Skid Steer/Skid Loader	$ 16.73	5.57
OPERATOR: Bulldozer	$ 14.05	3.10

OPERATOR: Cold Planer.....$ 17.63 0.00

OPERATOR: Crane.....$ 21.21 6.19

OPERATOR: Excavator.....$ 15.18 3.07

OPERATOR: Grader/Blade.....$ 18.43 5.72

OPERATOR: Loader.....$ 14.89 2.85

OPERATOR: Milling Machine
Reclaimer Combo.....$ 16.81 0.80

OPERATOR: Screed.....$ 15.34 3.67

OPERATOR: Roller (Earth).....$ 11.55 1.72

TRUCK DRIVER, Includes All
Dump Trucks.....$ 11.87 3.33

TRUCK DRIVER: Semi-Trailer
Truck.....$ 16.36 9.09

---

* TEAM0340-002 08/01/2012

	Rates	Fringes
TRUCK DRIVER		
1 and 2 Axle	$ 14.50	17.0725
3 Axle	$ 14.60	17.0725
Low Boy	$ 14.75	17.0725

WELDERS - Receive rate prescribed for craft performing operation to which welding is incidental.

==========

Unlisted classifications needed for work not included within the scope of the classifications listed may be added after award only as provided in the labor standards contract clauses (29CFR 5.5 (a) (1) (ii)).

The body of each wage determination lists the classification and wage rates that have been found to be prevailing for the cited type(s) of construction in the area covered by the wage determination. The classifications are listed in alphabetical order of "identifiers" that indicate whether the particular rate is union or non-union.

Union Identifiers

An identifier enclosed in dotted lines beginning with characters other than "SU" denotes that the union

classification and rate have found to be prevailing for that classification. Example: PLUM0198-005 07/01/2011. The first four letters , PLUM, indicate the international union and the four-digit number, 0198, that follows indicates the local union number or district council number where applicable , i.e., Plumbers Local 0198. The next number, 005 in the example, is an internal number used in processing the wage determination. The date, 07/01/2011, following these characters is the effective date of the most current negotiated rate/collective bargaining agreement which would be July 1, 2011 in the above example.

Union prevailing wage rates will be updated to reflect any changes in the collective bargaining agreements governing the rates.

0000/9999: weighted union wage rates will be published annually each January.

Non-Union Identifiers

Classifications listed under an "SU" identifier were derived from survey data by computing average rates and are not union rates; however, the data used in computing these rates may include both union and non-union data. Example: SULA2004-007 5/13/2010. SU indicates the rates are not union majority rates, LA indicates the State of Louisiana; 2004 is the year of the survey; and 007 is an internal number used in producing the wage determination. A 1993 or later date, 5/13/2010, indicates the classifications and rates under that identifier were issued as a General Wage Determination on that date.

Survey wage rates will remain in effect and will not change until a new survey is conducted.

WAGE DETERMINATION APPEALS PROCESS

1.) Has there been an initial decision in the matter? This can be:

* an existing published wage determination
* a survey underlying a wage determination
* a Wage and Hour Division letter setting forth a position on a wage determination matter
* a conformance (additional classification and rate) ruling

On survey related matters, initial contact, including requests for summaries of surveys, should be with the Wage and Hour Regional Office for the area in which the survey was conducted because those Regional Offices have responsibility for the Davis-Bacon survey program. If the response from this initial contact is not satisfactory, then the process described in 2.) and 3.) should be followed.

With regard to any other matter not yet ripe for the formal

process described here, initial contact should be with the Branch of Construction Wage Determinations. Write to:

Branch of Construction Wage Determinations
Wage and Hour Division
U.S. Department of Labor
200 Constitution Avenue, N.W.
Washington, DC 20210

2.) If the answer to the question in 1.) is yes, then an interested party (those affected by the action) can request review and reconsideration from the Wage and Hour Administrator (See 29 CFR Part 1.8 and 29 CFR Part 7). Write to:

Wage and Hour Administrator
U.S. Department of Labor
200 Constitution Avenue, N.W.
Washington, DC 20210

The request should be accompanied by a full statement of the interested party's position and by any information (wage payment data, project description, area practice material, etc.) that the requestor considers relevant to the issue.

3.) If the decision of the Administrator is not favorable, an interested party may appeal directly to the Administrative Review Board (formerly the Wage Appeals Board). Write to:

Administrative Review Board
U.S. Department of Labor
200 Constitution Avenue, N.W.
Washington, DC 20210

4.) All decisions by the Administrative Review Board are final.

==========

END OF GENERAL DECISION

Town: **Frankfort -Winterport**
Project: **19146.00**
Date: **February 06, 2013**

SPECIAL PROVISIONS
SECTION 104
Utilities

MEETING

A Preconstruction Utility Conference, as defined in Subsection 104.4.6 of the Standard Specifications **IS NOT** required.

GENERAL INFORMATION

These Special Provisions outline the arrangements that have been made by the Department for utility and/or railroad work to be undertaken in conjunction with this project. The following list identifies all known utilities or railroads having facilities presently located within the limits of this project or intending to install facilities during project construction.

Utilities have been notified and will be furnished a copy of the specification.

Overview:

Utility	Aerial	Contact
Central Maine Power Company	X	Steven Cookson (207)480-0733
Northern New England Telephone Operations Llc	X	Brian Smith (207) 712-8604

Temporary utility adjustments are not anticipated on this project however, should the contractor choose to have any poles temporarily relocated, all work will be done by Pole owner at the contractor's request and expense at no additional cost to the Department.

AERIAL

No Utility adjustments are anticipated as part of this project. If utility relocations, though unexpected, become necessary, they will be scheduled in compliance with Section 104 of the Standard Specifications and will be done by the utilities in conjunction with the work by the Contractor.

"There may be project construction activities which will occur beneath or around existing aerial neutral conductors such as ditching or guardrail installation. The contractor shall conduct their work accordingly."

MAINTAINING UTILITY LOCATION MARKINGS

The contractor will be responsible for maintaining the buried utility location markings following the initial locating by the appropriate utility or their designated representative.

UTILITY SIGNING

Any utility working within the construction limits of this project shall ensure that the traveling public is adequately protected at all times. All work areas shall be signed, lighted, and traffic flaggers employed as determined by field conditions. All traffic controls shall be in accordance with the latest edition of the Manual on Uniform Traffic Control Devices for Streets and Highways, as issued by the Federal Highway Administration.

THE CONTRACTOR SHALL PLAN AND CONDUCT HIS WORK ACCORDINGLY.

December 17, 2010
Supersedes December 30, 2009

SPECIAL PROVISION
SECTION 104
GENERAL RIGHTS AND RESPONSIBILITIES
(Electronic Payroll Submission)
(Payment Tracking)

104.3.8.1 Electronic Payroll Submission The prime contractor and all subcontractors and lower-tier subcontractors will submit their certified payrolls electronically on this contract utilizing the Elation System web based reporting. There is no charge to the contracting community for the use of this service. The submission of paper payrolls will not be allowed or accepted. Additional information can be found at http://www.maine.gov/mdot/comprehensive-list-projects/project-information.php under the first "Notice".

104.3.8.2 Payment Tracking The prime contractor and all subcontractors and lower-tier subcontractors will track and confirm the delivery and receipt of all payments through the Elation System

SPECIAL PROVISION
SECTION 104.5.5
GENERAL RIGHTS AND RESPONSIBILITIES
Prompt Payment of Subcontractors

104.5.5

104.5.5 Prompt Payment of Subcontractors

A. Pay When Paid The Contractor shall pay Subcontractors for all Work satisfactorily performed and Invoiced by the Subcontractor no later than 30 Days from the date the Contractor receives payment from the Department for such Subcontractor's Work.

B. Payment Tracking Federal Projects On federally funded projects, the prime contractor, subcontractors and lower-tier subcontractors will track and confirm the delivery and receipt of all payments through the Elation System. They will be responsible for entering all payments to all sub and lower tier contractors. MaineDOT will run a query monthly to ensure that contractors are complying and generate an e-mail to contractors who have not responded to confirm receipt of MaineDOT payment or contractor payment to lower tier subcontractors.

C. Retainage The Contractor shall return to the Subcontractor all retainage withheld from the Subcontractor within 30 Days after the date the Subcontractor's Work is satisfactorily completed. If there is a Delay in such return of retainage, the Subcontractor may pursue all rights it may have under the claims procedure referenced in Section 104.5.6 - Subcontractor Claims for Payment.

December 5, 2011
Supersedes December 1, 2010

SPECIAL PROVISION
SECTION 105
GENERAL SCOPE OF WORK
(Buy America Certification)

105.11 Federal Requirements Add the following as the third and subsequent paragraphs:

"Prior to payment by the Department, the Contractor shall provide a certification from the producer of steel or iron, or any product containing steel or iron as a component, stating that all steel or iron furnished or incorporated into the furnished product was manufactured in the United States in accordance with the requirements of the Buy America provisions of 23 CFR 635.410, as amended. Such certification shall also include (1) a statement that the iron or steel product or component was produced entirely within the United States, or (2) a statement that the iron or steel product or component was produced within the United States except for minimal quantities of foreign steel and iron valued at $ (actual value).

All manufacturing processes must take place domestically. Manufacturing begins with the initial melting and mixing, and continues through the coating stage. Any process which modifies the chemical content, the physical size and shape, or the final finish is considered a manufacturing process. These processes include rolling, extruding, machining, bending, grinding, drilling, and coating. "Coating" includes epoxy coating, galvanizing, painting, or any other coating that protects or enhances the value of the material.

A Buy America Certification is required from each manufacturer, fabricator, supplier, subcontractor, etc. that meets the "manufacturing" definition above.

Buy America does not apply to raw materials (iron ore and alloys), scrap, pig iron, or processed, pelletized, and reduced iron ore."

Project No. NH-1914(600)

SPECIAL PROVISION 105
CONSTRUCTION AREA

A Construction Area located in the **Towns of Frankfort and Winterport** has been established by the Maine Department of Transportation (MDOT) in accordance with provisions of 29-A § 2382 Maine Revised Statutes Annotated (MRSA).

(a) The section of highway under construction in Waldo County, Project No. NH-1914(600) is located on US Route 1A, beginning 0.16 mi. north of the Prospect/Frankfort town line and extending northerly 4.21 miles to Mountain View Road.

Per 29-A § 2382 (7) MRSA, the MDOT may "*issue permits for stated periods of time for loads and equipment employed on public way construction projects, United States Government projects or construction of private ways, when within construction areas established by the Department of Transportation. The permit:*

A. Must be procured from the municipal officers for a construction area within that municipality;

B. May require the contractor to be responsible for damage to ways used in the construction areas and may provide for:

(1) Withholding by the agency contracting the work of final payment under contract; or

(2) The furnishing of a bond by the contractor to guarantee suitable repair or payment of damages.

The suitability of repairs or the amount of damage is to be determined by the Department of Transportation on state-maintained ways and bridges, otherwise by the municipal officers;

C. May be granted by the Department of Transportation or by the state engineer in charge of the construction contract; and

D. For construction areas, carries no fee and does not come within the scope of this section."

The Municipal Officers for the **Towns of Frankfort and Winterport** agreed that an Overlimit Permit will be issued to the Contractor for the purpose of using loads and equipment on municipal ways in excess of the limits as specified in 29-A MRSA, on the municipal ways as described in the "Construction Area".

As noted above, a bond may be required by the municipality, the exact amount of said bond to be determined prior to use of any municipal way. The MDOT will assist in determining the bond amount if requested by the municipality.

The maximum speed limits for trucks on any town way will be 25 mph (40 km per hour) unless a higher legal limit is specifically agreed upon in writing by the Municipal Officers concerned.

SPECIAL PROVISION
SECTION 105
(LIMITATION OF OPERATIONS)

1. A 24 hour notice is required for any changes in work schedule.

2. A 48 hour notice is required for a change in paving operations according to the Department's Standard Specifications - Section 105.3.1.

3. A 48 hour notice is required prior to working any Saturdays.

4. The Contractor will be limited to one paving operation per day (excluding hand work paving), unless otherwise authorized by the Resident.

Town: Frankfort-Winterport
PIN #: 19146.00
Date: 2/26/13

SPECIAL PROVISION
SECTION 105
General Scope of Work
(Environmental Requirements)

In-Water work consists of any activity conducted below the normal high water mark of a river, steam, brook, lake, pond or "Coastal Wetland" areas that are subject to tidal action during the highest tide level for the year which an activity is proposed as identified in the tide tables published by the National Ocean Service. http://www.oceanservice.noaa.gov/ For the full definition of "Coastal Wetlands", please refer to 38 MRSA 480-B(2)

I. Work at the below locations shall take place during low tide only.

II. In-Water work window applies to the following water bodies at the following station #'s:

1. **The outlets of the pipes at STA 16+88; 96+95; 105+53 are submerged or at the water's edge at HIGH TIDE. They discharge to the Coastal Wetland.**

III. Special Conditions:

1.

IV. Approvals:

1. Temporary Soil Erosion and Water Pollution Control Plan

V. All activities are prohibited (including placement and removal of cofferdams unless otherwise permitted by Regulatory Agencies) below the normal high water mark if outside the prescribed in-water work window, except for the following:

1. Work within a cofferdam constructed according to MaineDOT's Standard Specifications and in adherence with the contractors approved "Soil Erosion and Water Pollution Control Plan".

VI. No work is allowed that completely blocks a river, stream, or brook without providing downstream flow. When working in Tidal streams flow needs to be provided in both directions

NOTE: Regulatory Review and Approval is required to modify the existing In-Water work window.

SPECIAL PROVISION 105
GENERAL SCOPE OF WORK
Equal Opportunity and Civil Rights
(Disadvantaged Business Enterprises Program)

105.10.1.1 Disadvantaged Business Enterprises Program The Maine Department of Transportation (MaineDOT) has established a Disadvantaged Business Enterprise (DBE) program in accordance with regulations of the United States Department of Transportation (USDOT), 49 CFR Part 26. The MaineDOT receives federal financial assistance from USDOT, and as a condition of receiving this assistance, the Department has signed an assurance that it will comply with 49 CFR Part 26.The MaineDOT is responsible for determining the eligibility of and certifying DBE firms in Maine.

A DBE is defined as a for-profit business that is owned and controlled by one or more socially and economically disadvantaged person(s). For the purpose of this definition:

1. "Socially and economically disadvantaged person" means an individual who is a citizen or lawful permanent resident of the United States and who is Black, Hispanic, Native American, Asian, Female; or a member of another group or an individual found to be disadvantaged by the Small Business Administration pursuant to Section 3 of the Small Business Act.
2. "Owned and controlled" means a business which is:
   a. A sole proprietorship legitimately owned and controlled by an individual who is a disadvantaged person.
   b. A partnership or limited liability company in which at least 51% of the beneficial ownership interests legitimately are held by a disadvantaged person(s).
   c. A corporation or other entity in which at least 51% of the voting interest and 51% of the beneficial ownership interests legitimately are held by a disadvantaged person(s).

The disadvantaged group owner(s) or stockholder(s) must possess control over management, interest in capital, and interest in earnings commensurate with the percentage of ownership. If the disadvantaged group ownership interests are real, substantial and continuing and not created solely to meet the requirements of this program, a firm is considered a bona fide DBE.

105.10.1.2 Commercially Useful Function MaineDOT will count expenditures of a DBE contractor toward DBE goals only if the DBE is performing a commercially useful function on that contract. A DBE performs a commercially useful function when it is responsible for execution of the work of the contract and is carrying out its responsibilities by actually performing, managing, and supervising the work involved. Credit will only be given when the DBE meets all conditions for a CUF. Credit for labor will be in accordance with the responsibilities outlined in the contract. To perform a commercially useful function, the DBE must also be responsible, with respect to materials and supplies used on the Contract, for negotiating price, determining quality and quantity, ordering the materials, and installing (where applicable) and paying for the material itself. To determine whether a DBE is performing a commercially useful function, MaineDOT will evaluate the amount of work subcontracted, industry practices, whether the amount the firm is to be paid under the Contract is commensurate with the work it is actually performing and DBE credit claimed for its performance of the work, and other relevant factors.

Rented equipment used by the DBE must not be rented from the Prime Contractor on a job that the DBE is subcontracted with that Prime Contractor for regular course of business.

A current listing of certified DBEs that may wish to participate in the highway construction program and the scope of work for which they are certified can be found at http://www.maine.gov/mdot/disadvantaged-business-enterprises/pdf/directory.pdf. Credit will be given for the value described by a DBE performing as:

A. A prime contractor; 100% of actual value of work performed by own workforces.
B. An approved subcontractor; 100% of work performed by own workforces.
C. An owner-operator of construction equipment; 100% of expenditures committed.
D. A manufacturer; 100% of expenditures committed. The manufacturer must be a firm that operates or maintains a factory or establishment that produces on the premises the materials or supplies obtained by the Contractor. Brokers and packagers shall not be regarded as manufacturers.
E. A regular dealer; 60% of expenditures committed. A regular dealer is defined as a firm that owns, operates, or maintains a store, warehouse or other establishment in which the materials or supplies required for the performance of the contract are bought, kept in stock, and regularly sold to the public. For purposes of this provision a "Broker" is a DBE that has entered into a legally binding relationship to provide goods or services delivered or performed by a third party. Brokers and packagers shall not be regarded as regular dealers.
F. A bona fide service provider; 100% of reasonable fees or commissions. Eligible services include professional, technical, consultant, or managerial, services and assistance in the procurement of essential personnel, facilities, equipment, materials or supplies required for the performance of the contract. Eligible services also include agencies providing bonding and insurance specifically required for the performance of the contract.
G. A trucking, hauling or delivery operation. 100% of expenditures committed when trucks are owned, operated, licensed and insured by the DBE and used on the contract and, if applicable, includes the cost of the self supplied materials and supplies.100% of expenditures committed when the DBE leases trucks from another DBE firm including an owner-operator. 100% of reasonable fees or commissions the DBE receives as a result of a lease arrangement for trucks from a non-DBE, including an owner-operator.
H. Any combination of the above.

105.10.1.3 Race-neutral Goals The Maine DOT is required to set an annual goal (approved on a three year basis) for DBE participation in Federal-aid projects. In order to fulfill that goal, bidders are encouraged to utilize DBE businesses certified by the MaineDOT. MaineDOT seeks to meet the established DBE goal solely through race-neutral means. *Race-neutral* DBE participation occurs when a DBE is awarded a prime contract through customary competitive procurement procedures, is awarded a subcontract on a contract that does not carry a DBE contract goal, or wins a subcontract from a prime contractor that did not consider its DBE status in making the award. A DBE/subcontractor Utilization Proposed Form is required to be included in bid documents.

MaineDOT will analyze each project and create a Project Availability Target (PAT), based on a number of factors including project scope, available DBE firms, firms certified in particular project work, etc. Each bid will request that the contractor attempt to meet the PAT. This PAT is developed to assist contractors to better understand what the MaineDOT expectations are for a

specific project. The PAT is NOT a mandate but an assessment of what this particular project can bear for DBE participation. The Department anticipates that each contractor will make the best effort to reach or exceed this PAT for the project.

105.10.1.4 Race-conscious Project Goals If it is determined by the Department that the annual DBE goal will not be met through *race-neutral* means, the Department may implement *race-conscious contract goals* on some projects. Race-conscious contract goals are goals that are enforceable by the Department and require that the prime contractor use good faith effort to achieve the goal set by the Department for that particular project. If race conscious means are implemented on a project, the Prime must comply with the requirements of 49 CFR.

At the time of the bid opening, all Bidders shall submit with their bid a Disadvantaged Business Enterprise (DBE) Commitment Form provided by the Department. This form will list the DBE and non-DBE firms that are proposed to be used during the execution of the Work. The list shall show the name of the firm, the item/material/type of work involved and the dollar amount of work to be performed. The dollar total of each commitment shall be totaled and a percentage determined.

If the project goal is not met, acceptable documentation showing all good faith efforts made to obtain participation may be required in order to award the project. Failure to provide the required listing with the dollar participation total or acceptable documentation of good faith efforts to obtain DBE participation within 3 days after the bid opening date will be considered a lack of responsiveness on the part of the low bidder. Rejection of the low bid under these circumstances will require the low bidder to surrender the Proposal Guaranty to the Department. The submission and approval of the above forms does not constitute a formal subcontract.

If for any reason during the progress of the Work the Contractor finds that DBEs included on the list are unable to perform the proposed work, the Contractor, with written release by the committed DBE or approval of the Department, may substitute other DBE firms for those named on the list. If the Contractor is able to clearly document their inability to find qualified substitute firms to meet the project goal, the Contractor may request in writing approval to substitute the DBE with a non-DBE firm. If at any time during the life of the Contract it is determined that the Contractor is not fulfilling the goal or commitment(s) and is not making a good faith effort to fulfill the DBE requirement, the Department may withhold progress payments. If good faith effort is determined by the Department, failure to meet the DBE contract goal will not be a detriment to the bid award. Fulfillment of the goal percentage shall be determined by dividing the dollars committed to the DBEs by the actual contract dollars. These requirements are in addition to all other Equal Employment Opportunity requirements on Federal-aid contracts.

105.10.1.5 Certification of DBE attainment on Contracts The MaineDOT must certify that it has conducted post-award monitoring of all contracts to ensure that DBEs had done the work for which credit was claimed. The certification is for the purpose of ensuring accountability for monitoring which the regulation already requires. The MaineDOT will certify these contracts through review of CUF forms, Elations sub-contract payment tracking as well as occasional on-site reviews of projects and through the project's final closeout documentation provided by our Contracts Section.

105.10.1.6 Bidders' List Survey Pursuant to 49 CFR 26.11 the MaineDOT is required to "create and maintain" a bidders list and gather bidder information on our construction/consultant projects, Contractors will maintain information on all subcontract bids submitted by DBE and Non-DBE firms and provide that information to the Department. The Following information is required:

Firm Name
Firm Address
Firm status (DBE or non-DBE)
Age of firm (years)
And the annual gross receipts amount as indicated by defined brackets, i.e. $500,000 to $800,000, rather than requesting exact figures.

Not only is this information critical in determining the availability of DBE businesses relative to other businesses that do similar work, but the Federal Highway Administration requires that we obtain this information.

MaineDOT DBE Project Attainment Target (PAT)
for this Project is 5.8 %

The MaineDOT seeks to meet the specified annual Disadvantaged Business Enterprise (DBE) usage goal set out by 49 CFR 26.45 through the efforts of contractors seeking to employ qualified DBE subcontractors. We seek to meet this goal by race neutral means and do not, at this time, use contract specific requirements for each project. We do however, understand the capacity of Maine's DBE community and the unique characteristics a project may have that would differ from the broad annual goal.

Taking this into consideration, the MaineDOT will review each project and develop an anticipated attainment or Project Attainment Target (PAT) based on several factors that are project specific. Those factors include:

- ☐ Scope of Work
- ☐ DBE availability according to Specification Item
- ☐ Geographic location
- ☐ DBE capacity

This PAT is developed to assist contractors to better understand the DBE participation that the MaineDOT can reasonably expect for a specific project. The PAT is NOT a mandate but an assessment of the DBE opportunities that this project could meet or exceed. MaineDOT anticipates that each contractor will make the best effort to reach or exceed the PAT for this project.

SPECIAL PROVISION
SECTION 107
PROSECUTION & PROGRESS
(CONTRACT TIME)

1. The Contractor will be allowed to commence work on **July 8, 2013** provided that all required plans/submittals have been received and approved by the Department.

2. Completion date for this Contract is **August 17, 2013**.

3. For every weekday not worked once operations commence, the Contractor will be charged Supplemental Liquidated Damages per calendar day at the rate stated in Section 107.7.2 of the Standard Specifications.

4. The message boards will be installed and functioning one week prior to performing any physical work on this Contract.

SPECIAL PROVISION
SECTION 107
SCHEDULING OF WORK

Replace Section 107.4.2 with the following:

"107.4.2 Schedule of Work Required Within 21 Days of Contract Execution and before beginning any on-site activities, the Contractor shall provide the Department with its Schedule of Work. The Contractor shall plan the Work, including the activity of Subcontractors, vendors, and suppliers, such that all Work will be performed in Substantial Conformity with its Schedule of Work. The Schedule must include sufficient time for the Department to perform its functions as indicated in this Contract, including QA inspection and testing, approval of the Contractor's TCP, SEWPCP and QCP, and review of Working Drawings.

At a minimum, the Schedule of Work shall include a bar chart which shows the major Work activities, milestones, durations, **submittals and approvals**, and a timeline. Milestones to be included in the schedule include: (A) start of Work, (B) beginning and ending of planned Work suspensions, (C) Completion of Physical Work, and (D) Completion. If the Contractor Plans to Complete the Work before the specified Completion date, the Schedule shall so indicate.

Any restrictions that affect the Schedule of Work such as paving restrictions or In-Stream Work windows must be charted with the related activities to demonstrate that the Schedule of Work complies with the Contract.

The Department will review the Schedule of Work and provide comments to the Contractor within 20 days of receipt of the schedule. The Contractor will make the requested changes to the schedule and issue the finalized version to the Department."

SPECIAL PROVISION
SECTION 107
TIME
(Scheduling of Work – Projected Payment Schedule)

Description The Contractor shall also provide the Department with a Quarterly Projected Payment Schedule that estimates the value of the Work as scheduled, including requests for payment of Delivered Materials. The Projected Payment Schedule must be in accordance with the Contractor's Schedule of Work and prices submitted by the Contractor's Bid. The Contractor shall submit the Projected Payment Schedule as a condition of Award.

SPECIAL PROVISION
SECTION 108
PAYMENT
(Asphalt Escalator)

108.4.1 Price Adjustment for Hot Mix Asphalt: For all contracts with hot mix asphalt in excess of 500 tons total, a price adjustment for performance graded binder will be made for the following pay items:

Item 403.102 Mot Mix Asphalt – Special Areas
Item 403.206 Hot Mix Asphalt - 25 mm
Item 403.207 Hot Mix Asphalt - 19 mm
Item 403.2071 Hot Mix Asphalt - 19 mm (Polymer Modified)
Item 403.2072 Hot Mix Asphalt - 19 mm (Asphalt Rich Base)
Item 403.2073 Warm Mix Asphalt - 19 mm
Item 403.208 Hot Mix Asphalt - 12.5 mm
Item 403.2081 Hot Mix Asphalt - 12.5 mm (Polymer Modified)
Item 403.20813 Warm Mix Asphalt - 12.5 mm (Polymer Modified)
Item 403.2083 Warm Mix Asphalt - 12.5 mm
Item 403.209 Hot Mix Asphalt - 9.5 mm (sidewalks, drives, & incidentals)
Item 403.210 Hot Mix Asphalt - 9.5 mm
Item 403.2101 Hot Mix Asphalt - 9.5 mm (Polymer Modified)
Item 403.2102 Hot Mix Asphalt - 9.5 mm (Asphalt Rich Base)
Item 403.2103 Warm Mix Asphalt - 9.5 mm
Item 403.2104 Hot Mix Asphalt - 9.5 mm (3/4" Surface)
Item 403.211 Hot Mix Asphalt – Shim
Item 403.2111 Hot Mix Asphalt – Shim (Polymer Modified)
Item 403.2113 Warm Mix Asphalt - Shim
Item 403.212 Hot Mix Asphalt - 4.75 mm (Shim)
Item 403.2123 Warm Mix Asphalt - 4.75 mm (Shim)
Item 403.213 Hot Mix Asphalt - 12.5 mm (base and intermediate course)
Item 403.2131 Hot Mix Asphalt - 12.5 mm (base and intermediate course Polymer Modified)
Item 403.2132 Hot Mix Asphalt - 12.5 mm (Asphalt Rich Base and intermediate course)
Item 403.2133 Warm Mix Asphalt - 12.5 mm (base and intermediate course)
Item 403.214 Hot Mix Asphalt - 4.75 mm (Surface)
Item 403.2143 Warm Mix Asphalt - 4.75 mm (Surface)
Item 404.70 Colored Hot Mix Asphalt – 9.5mm (Surface)
Item 404.72 Colored Hot Mix Asphalt – 9.5mm (Islands, sidewalks, & incidentals)
Item 461.13 Maintenance Surface Treatment

Price adjustments will be based on the variance in costs for the performance graded binder component of hot mix asphalt. They will be determined as follows:

The quantity of hot mix asphalt for each pay item will be multiplied by the performance graded binder percentages given in the table below times the difference in price between the base price and the period price of asphalt cement. Adjustments will be made upward or downward, as prices increase or decrease.

Item 403.102–6.2%			
Item 403.206–4.8%			
Item 403.207–5.2%	Item 403.2071–5.2%	Item 403.2072–5.8%	Item 403.2073–5.2%
Item 403.208–5.6%	Item 403.2081–5.6%	Item 403.20813–5.6%	Item 403.2083–5.6%
Item 403.209–6.2%			
Item 403.210–6.2%	Item 403.2101–6.2%	Item 403.2102–6.8%	Item 403.2103–6.2%
Item 403.2104–6.2%			
Item 403.211–6.2%	Item 403.2111–6.2%		Item 403.2113–6.2%
Item 403.212–6.8%			Item 403.2123–6.8%
Item 403.213–5.6%	Item 403.2131–5.6%	Item 403.2132–6.2%	Item 403.2133–5.6%
Item 403.214–6.8%			Item 403.2143–6.8%
Item 404.70–6.2%			
Item 404.72–6.2%			
Item 461.13–6.4%			

Hot Mix Asphalt**:** The quantity of hot mix asphalt will be determined from the quantity shown on the progress estimate for each pay period.

Base Price: The base price of performance graded binder to be used is the price per standard ton current with the bid opening date. This price is determined by using the average New England Selling Price (Excluding the Connecticut market area), as listed in the Asphalt Weekly Monitor.

Period Price: The period price of performance graded binder will be determined by the Department by using the average New England Selling Price (Excluding the Connecticut market area), listed in the Asphalt Weekly Monitor current with the paving date. The maximum Period Price for paving after the adjusted Contract Completion Date will be the Period Price on the adjusted Contract Completion Date.

SPECIAL PROVISIONS
SECTION 202
REMOVING STRUCTURES AND OBSTRUCTIONS
(Removing Pavement Surface)

The December 2002 Revision of the Standard Specifications, Section 202-Removing Structures and Obstructions, subsection 202.061-Removing Pavement Surface, has been removed and replaced in it's entirety by the following:

202.061 Removing Pavement Surface The equipment for removing the bituminous surface shall be a power operated milling machine or grinder capable of removing bituminous concrete pavement to the required depth, transverse cross slope, and profile grade by the use of an automated grade and slope control system. The controls shall automatically increase or decrease the pavement removal depth as required, and readily maintain desired cross slope, to compensate for surface irregularities in the existing pavement course. The equipment shall be capable of accurately establishing profile grades by referencing from a fixed reference such as a grade wire, or from the existing pavement surface using a 30 foot (9m) minimum contact ski (floating beam), or 24 foot (8m) non-contact grade control beam.

The Contractor shall locate and remove all objects in the pavement through the work area that would be detrimental to the planing or grinding machine. Any structures or obstructions left within the travel lane or shoulders shall have tapers installed according to Standard Detail 202(01).

The finished milled surface will be inspected before being accepted, and any deviations in the profile exceeding 12 mm [1/2 inch] under a 5 meter [16 foot] string line or straightedge placed parallel to the centerline will be corrected. Any deviations in the cross-slope that exceed 10 mm [3/8 inch] under a 3 meter [10 foot] string line or straightedge placed transversely to centerline will be corrected. All corrections will be made with approved methods and materials. Any areas that require corrective measures will be subject to the same acceptance tolerances. Excess material that becomes bonded to the milled surface will be removed to the Resident's satisfaction before the area is accepted.

On highways or expressways with directional traffic, the Contractor will be required to remove the pavement surface on the adjacent sections of travel lane and designated portions of adjacent shoulder before the end of the following calendar day unless the centerline edge is tapered to a 12:1. Failure to remove the centerline vertical edge by milling, using the approved taper, or matching the adjacent course the following day will constitute a traffic control violation unless an excusable delay is granted by the Department. The Contractor will be required to remove the specified pavement course over the full width of the mainline traveled ways prior to opening the sections to weekend or holiday traffic.

On roadways with two-way traffic, the Contractor will be required to remove the specified pavement course over the full width of the mainline traveled ways prior to opening the sections to weekend or holiday traffic.

During any period that a centerline vertical or tapered edge exists, the Contractor will be responsible for installing additional warning signage that clearly defines the centerline vertical or tapered edge and elevation differential hazard, as well as additional centerline delineation such as double RPM application, or temporary painted line. The Traffic Control Plan shall include the additional requirements. All signs and traffic control devices will conform to Section 719.01, and Section 652, and will be installed prior to the work, at a maximum spacing of 0.50 mile [0.80 km] for the entire length of the effected roadway section. All additional signing, labor, traffic control devices, or incidentals will not be paid for directly, but will be considered incidental to the appropriate 652 bid items.

Any areas of concern, such as de-lamination or pot-holing shall be identified on a continuous basis as milling progresses. Proper corrective action will be determined by the Resident and paid for under the appropriate contract items, and if required, completed prior to opening lane to traffic. Any issues that arise **up to** 7 calendar days after being milled will be the responsibility of the MaineDOT as noted in Special Provision Section 105 – Limitations Of Operations.

Removed pavement will become property of the State, except that 25% will become property the Contractor. The State's portion of removed pavement will be hauled to an approved State stockpile located at the **MaineDOT Maintenance Lot on US Route 1A in Frankfort.** All processing, hauling and stockpiling will be considered incidental to Item 202.202 – Removing Pavement Surface.

SPECIAL PROVISION
DIVISION 400
PAVEMENTS

SECTION 401 - HOT MIX ASPHALT PAVEMENT

401.01 Description The Contractor shall furnish and place one or more courses of Hot Mix Asphalt Pavement (HMA) on an approved base in accordance with the contract documents and in reasonably close conformity with the lines, grades, thickness, and typical cross sections shown on the plans or established by the Resident. The Department will accept this work under Quality Assurance provisions, in accordance with these specifications and the requirements of Section 106 – Quality, the provisions of AASHTO M 323 except where otherwise noted in sections 401 and 703 of these specifications, and the Maine DOT Policies and Procedures for HMA Sampling and Testing.

401.02 Materials Materials shall meet the requirements specified in Section 700 - Materials:

Asphalt Cement	702.01
Aggregates for HMA Pavement	703.07
HMA Mixture Composition	703.09

401.021 Recycled Asphalt Materials Recycled Asphalt Pavement (RAP) may be introduced into the mixture at percentages approved by the Department according to the Maine DOT Policies and Procedures for HMA Sampling and Testing. If approved by the Department, the Contractor shall provide documentation stating the source, test results for average residual asphalt content, and stockpile gradations showing RAP materials have been sized to meet the maximum aggregate size requirements of each mix designation. The Department will obtain samples for verification and approval prior to its use.

For specification purposes, RAP will be categorized as follows:

Class III – The Contractor may use a maximum of 10 percent Class III RAP in any base, binder, surface, or shim course. Class III RAP will be allowed in hand-placed mixes for item 403.209 at a rate of up to 20 percent.

Class II – The Contractor may use a maximum of 20 percent Class II RAP in any base, binder, surface, or shim course.

Class I – The Contractor may use a maximum of 30 percent Class I RAP in any base, binder, surface, or shim course provided that PG 58-34 asphalt binder is used in the mixture. A PG 52-34 may be used when approved by the Department.

In the event that RAP source or properties change, the Contractor shall notify the Department of the change and submit new documentation stating the new source or properties a minimum of 72 hours prior to the change to allow for obtaining new samples and approval.

401.03 Composition of Mixtures The Contractor shall compose the Hot Mix Asphalt Pavement with aggregate, Performance Graded Asphalt Binder (PGAB), and mineral filler if required. HMA shall be designed and tested according to AASHTO R35 and the volumetric criteria in Table 1. The Contractor shall size, uniformly grade, and combine the aggregate fractions in proportions that provide a mixture meeting the grading requirements of the Job Mix Formula (JMF).

The Contractor shall submit for Department approval a JMF to the Central Laboratory in Bangor for each mixture to be supplied. The Department may approve 1 active design per nominal maximum size, per traffic level, per plant, plus a 9.5mm "fine" mix for shimming and where required, a non-RAP design for bridge decks. The Department shall then have 15 calendar days in which to process a new design before approval. The JMF shall establish a single percentage of aggregate passing each sieve size within the limits shown in section 703.09. The mixture shall be designed and produced, including all production tolerances, to comply with the allowable control points for the particular type of mixture as outlined in 703.09. The JMF shall state the original source, gradation, and percentage to be used of each portion of the aggregate including RAP when utilized, and mineral filler if required. It shall also state the proposed PGAB content, the name and location of the refiner, the supplier, the source of PGAB submitted for approval, the type of PGAB modification if applicable, and the location of the terminal if applicable.

In addition, the Contractor shall provide the following information with the proposed JMF:

- Properly completed JMF indicating all mix properties (Gmm, VMA, VFB, etc.)
- Stockpile Gradation Summary
- Design Aggregate Structure Consensus Property Summary
- Design Aggregate Structure Trial Blend Gradation Plots (0.45 power chart)
- Trial Blend Test Results for at least three different asphalt contents
- Design Aggregate Structure for at least three trial blends
- Test results for the selected aggregate blend at a minimum of three binder contents
- Specific Gravity and temperature/viscosity charts for the PGAB to be used
- Recommended mixing and compaction temperatures from the PGAB supplier
- Material Safety Data Sheets (MSDS) For PGAB
- Asphalt Content vs. Air Voids trial blend curve
- Test report for Contractor's Verification sample
- Summary of RAP test results (if used), including count, average and standard deviation of binder content and gradation

At the time of JMF submittal, the Contractor shall identify and make available the stockpiles of all proposed aggregates at the plant site. There must be a minimum of 150 Mg [150 ton] for stone stockpiles, 75 Mg [75 ton] for sand stockpiles, and 50 Mg [50 ton] of blend sand before the Department will sample. The Department shall obtain samples for laboratory testing. The Contractor shall also make available to the Department the PGAB proposed for use in the mix in sufficient quantity to test the properties of the asphalt and to produce samples for testing of the mixture. Before the start of paving, the Contractor and the Department shall split a production sample for evaluation. The Contractor shall test its split of the sample and determine if the results meet the requirements of the Department's written policy for mix design verification (See Maine DOT Policies and Procedures for HMA Sampling and Testing available at the Central Laboratory in Bangor). If the results are found to be acceptable, the Contractor will forward their results to the Department's Lab, which will test the Department's split of the sample. The results of the two split samples will be compared and shared between the Department and the Contractor. If the Department finds the mixture acceptable, an approved JMF will be forwarded to the Contractor and paving may commence. The first day's production shall be monitored, and the approval may be withdrawn if the mixture exhibits undesirable characteristics such as checking, shoving or displacement.

The Contractor shall be allowed to submit aim changes within 24 hours of receipt of the first Acceptance test result. Should all of the Acceptance samples of a Lot be obtained prior to the receipt of the first Acceptance result, the Department will not allow the aim changes to be applied to that Lot. Adjustments will be allowed of up to 2% on the percent passing the 2.36 mm sieve through the 0.075 mm and 3% on the percent passing the

4.75 mm or larger sieves. Adjustments will be allowed on the %PGAB of up to 0.2%. Adjustments will be allowed on GMM of up to 0.010.

The Contractor shall submit a new JMF for approval each time a change in material source or materials properties is proposed. The same approval process shall be followed. The cold feed percentage of any aggregate may be adjusted up to 10 percentage points from the amount listed on the JMF, however no aggregate listed on the JMF shall be eliminated. The cold feed percentage for RAP may be reduced up to 10 percentage points from the amount listed on the JMF and shall not exceed the percentage of RAP approved in the JMF or for the specific application under any circumstances.

TABLE 1: VOLUMETRIC DESIGN CRITERIA

Design ESAL's (Millions)	Required Density (Percent of G_{mm})			Voids in the Mineral Aggregate (VMA)(Minimum Percent)					Voids Filled with Binder (VFB) (Minimum %)	Fines/Eff. Binder Ratio
				Nominal Maximum Aggregate Size (mm)						
	$N_{initial}$	N_{design}	N_{max}	25	19	12.5	9.5	4.75		
<0.3	≤91.5	96.0	≤98.0	13.0	14.0	15.0	16.0	16.0	70-80	0.6-1.2
0.3 to <3	≤90.5								65-80	
3 to <10	≤89.0								65-80*	
10 to <30										
≥ 30										

*For 9.5 mm nominal maximum aggregate size mixtures, the maximum VFB is 82.
*For 4.75 mm nominal maximum aggregate size mixtures, the maximum VFB is 84.

401.04 Temperature Requirements After the JMF is established, the temperatures of the mixture shall conform to the following tolerances:

In the truck at the mixing plant – allowable range 135° to 163°C [275 to 325°F]
At the Paver – allowable range 135° to 163°C [275 to 325°F]

The JMF and the mix subsequently produced shall meet the requirements of Tables 1 and Section 703.07.

401.05 Performance Graded Asphalt Binder Unless otherwise noted in Special Provision 403 - Hot Mix Asphalt Pavement, the Contractor may utilize either a 64-28 or 58-28 PGAB. The Contractor must stipulate which PGAB grading will be used to construct the entire HMA pavement structure prior to starting work. For mixtures containing greater than 20 percent but no more than 30 percent RAP the PGAB shall be PG 58-34 (or PG 52-34 when approved by the Department). The PGAB shall meet the applicable requirements of AASHTO M320 - Standard Specification for PGAB. The Contractor shall provide the Department with an approved copy of the Quality Control Plan for PGAB in accordance with AASHTO R 26 Certifying Suppliers of PGAB. The Contractor shall request approval from the Department for a change in PGAB supplier or source by submitting documentation stating the new supplier or source a minimum of 24 hours prior to the change. In the event that the PGAB supplier or source is changed, the Contractor shall make efforts to minimize the occurrence of PGAB co-mingling.

401.06 Weather and Seasonal Limitations The State is divided into two paving zones as follows:

a. Zone 1 Areas north of US Route 2 from Gilead to Bangor and north of Route 9 from Bangor to Calais.
b. Zone 2 Areas south of Zone 1 including the US Route 2 and Route 9 boundaries.

The Contractor may place Hot Mix Asphalt Pavement for use other than a traveled way wearing course in either Zone between the dates of April 15th and November 15th, provided that the air temperature as determined by an approved thermometer (placed in the shade at the paving location) is 4°C [40°F] or higher.
The Contractor may place Hot Mix Asphalt Pavement produced with an accepted WMA technology for any base, intermediate base, or shim course in either Zone between the dates of April 15th and November 15th, provided that the air temperature as determined by an approved thermometer (placed in the shade at the paving location) is 2°C [35°F] or higher, and the area to be paved is not frozen. The Hot Mix Asphalt Pavement produced with an approved WMA technology shall meet the requirements of section 401.04 - Temperature Requirements, unless otherwise approved by the Department.

The Contractor may place Hot Mix Asphalt Pavement as traveled way wearing course in Zone 1 between the dates of May 1st and the Saturday following October 1st and in Zone 2 between the dates of April 15th and the Saturday following October 15th, provided the air temperature determined as above is 10°C [50°F] or higher. For the purposes of this Section, the traveled way includes truck lanes, ramps, approach roads and auxiliary lanes. The atmospheric temperature for all courses on bridge decks shall be 10°C [50°F] or higher.

Hot Mix Asphalt Pavement used for curb, driveways, sidewalks, islands, or other incidentals is not subject to seasonal limitations, except that conditions shall be satisfactory for proper handling and finishing of the mixture. All mixtures used for curb, driveways, sidewalks, islands, or other incidentals shall conform to section 401.04 - Temperature Requirements. Unless otherwise specified, the Contractor shall not place Hot Mix Asphalt Pavement on a wet or frozen surface and the air temperature shall be 4°C [40°F] or higher.

On all sections of overlay with wearing courses less than 25 mm [1 in] thick, the wearing course for the travelway and adjacent shoulders shall be placed between the dates of May 15th and the Saturday following September 15th.

On all sections of overlay with wearing courses less than 1 inch thick, the wearing course for the travelway and adjacent shoulders shall be placed between the dates of June 1st and the Saturday following September 1st if the work is to be performed, either by contract requirement, or Contractor option, during conditions defined as "night work".

401.07 Hot Mix Asphalt Plant

401.071 General Requirements HMA plants shall conform to AASHTO M156.

a. Truck Scales When the hot mix asphalt is to be weighed on scales meeting the requirements of Section 108 - Payment, the scales shall be inspected and sealed by the State Sealer as often as the Department deems necessary to verify their accuracy.

Plant scales shall be checked prior to the start of the paving season, and each time a plant is moved to a new location. Subsequent checks will be made as determined by the Resident. The Contractor will have at least ten 20 Kg [50 pound] masses for scale testing.

401.072 Automation of Batching Batch plants shall be automated for weighing, recycling, and monitoring the system. In the case of a malfunction of the printing system, the requirements of Section 401.074 c. of this specification will apply.

The batch plant shall accurately proportion the various materials in the proper order by weight. The entire batching and mixing cycle shall be continuous and shall not require any manual operations. The batch plant

shall use auxiliary interlock circuits to trigger an audible alarm whenever an error exceeding the acceptable tolerance occurs. Along with the alarm, the printer shall print an asterisk on the delivery slip in the same row containing the out-of-tolerance weight. The automatic proportioning system shall be capable of consistently delivering material within the full range of batch sizes. When RAP is being used, the plant must be capable of automatically compensating for the moisture content of the RAP.

All plants shall be equipped with an approved digital recording device. The delivery slip load ticket shall contain information required under Section 108.1.3 - Provisions Relating to Certain Measurements, Mass and paragraphs a, b, and c of Section 401.073

401.073 Automatic Ticket Printer System on Automatic HMA Plant An approved automatic ticket printer system shall be used with all approved automatic HMA plants. The requirements for delivery slips for payment of materials measured by weight, as given in the following Sections, shall be waived: 108.1.3 a., 108.1.3 b., 108.1.3 c., and 108.1.3 d. The automatic printed ticket will be considered as the Weight Certificate.

The requirements of Section 108.1.3 f. - Delivery Slips, shall be met by the weigh slip or ticket, printed by the automatic system, which accompanies each truckload, except for the following changes:

a. The quantity information required shall be individual weights of each batch or total net weight of each truckload.
b. Signatures (legible initials acceptable) of Weighmaster (required only in the event of a malfunction as described in 401.074 c.).
c. The MDOT designation for the JMF.

401.074 Weight Checks on Automatic HMA Plant At least twice during each 5 days of production either of the following checks will be performed:

a. A loaded truck may be intercepted and weighed on a platform scale that has been sealed by the State Sealer of Weights and Measures within the past 12 months. The inspector will notify the producer to take corrective action on any discrepancy over 1.0%. The producer may continue to operate for 48 hours under the following conditions.

1. If the discrepancy does not exceed 1.5%; payment will still be governed by the printed ticket.
2. If the discrepancy exceeds 1.5%, the plant will be allowed to operate as long as payment is determined by truck platform scale net weight.

If, after 48 hours the discrepancy has not been addressed and reduced below 1.0%, than plant operations will cease. Plant operation may resume after the discrepancy has been brought within 1.0%.

b. Where platform scales are not readily available, a check will be made to verify the accuracy and sensitivity of each scale within the normal weighing range and to assure that the interlocking devices and automatic printer system are functioning properly.

c. In the event of a malfunction of the automatic printer system, production may be continued without the use of platform truck scales for a period not to exceed the next two working days, providing total weights of each batch are recorded on weight tickets and certified by a Licensed Public Weighmaster.

401.08 Hauling Equipment Trucks for hauling Hot Mix Asphalt Pavement shall have tight, clean, and smooth metal dump bodies, which have been thinly coated with a small amount of approved release agent to prevent

the mixture from adhering to the bodies. Solvent based agents developed to strip asphalts from aggregates will not be allowed as release agents.

All truck dump bodies shall have a cover of canvas or other water repellent material capable of heat retention, which completely covers the mixture. The cover shall be securely fastened on the truck, unless unloading.

All truck bodies shall have an opening on both sides, which will accommodate a thermometer stem. The opening shall be located near the midpoint of the body, at least 300 mm [12 in] above the bed.

401.09 Pavers Pavers shall be self-contained, self-propelled units with an activated screed (heated if necessary) capable of placing courses of Hot Mix Asphalt Pavement in full lane widths specified in the contract on the main line, shoulder, or similar construction.

On projects with no price adjustment for smoothness, pavers shall be of sufficient class and size to place Hot Mix Asphalt Pavement over the full width of the mainline travel way with a 3 m [10 ft] minimum main screed with activated extensions.

The Contractor shall place Hot Mix Asphalt Pavement on the main line with a paver using an automatic grade and slope controlled screed, unless otherwise authorized by the Department. The controls shall automatically adjust the screed and increase or decrease the layer thickness to compensate for irregularities in the preceding course. The controls shall maintain the proper transverse slope and be readily adjustable so that transitions and superelevated curves can be properly paved. The controls shall operate from a fixed or moving reference such as a grade wire or ski type device (floating beam) with a minimum length of 10 m [30 ft], a non-contact grade control with a minimum span of 7.3 m [24 ft], except that a 12 m [40 ft] reference shall be used on Expressway projects.

The Contractor shall operate the paver in such a manner as to produce a visually uniform surface texture and a thickness within the requirements of Section 401.101 - Surface Tolerances. The paver shall have a receiving hopper with sufficient capacity for a uniform spreading operation and a distribution system to place the mixture uniformly, without segregation in front of the screed. The screed assembly shall produce a finished surface of the required evenness and texture without tearing, shoving, or gouging the mixture. Pavers with extendible screeds shall have auger extensions and tunnel extenders as per the manufacturer's recommendations, a copy of which shall be available if requested.

The Contractor shall have the paver at the project site sufficiently before the start of paving operations to be inspected and approved by the Department. The Contractor shall repair or replace any paver found worn or defective, either before or during placement, to the satisfaction of the Department. Pavers that produce an unevenly textured or non-uniform mat will be repaired or replaced before continuing to place HMA on MaineDOT projects.
On a daily basis, the Contractor shall perform nuclear density testing across the mat being placed, prior to being compacted by equipment., at 300 mm [12 in] intervals, If the density values vary by more than 2.0% from the mean, the Contractor shall make adjustments to the screed until the inconsistencies are remedied.

Failure to replace or repair defective placement equipment may result in a letter of suspension of work and notification of a quality control violation resulting in possible monetary penalties as governed by Section 106 - Quality

401.10 Rollers Rollers shall be static steel, pneumatic tire, oscillatory, or approved vibrator type. Rollers shall be in good mechanical condition, capable of starting and stopping smoothly, and be free from backlash when

reversing direction. Rollers shall be equipped and operated in such a way as to prevent the picking up of hot mixed material by the roller surface. The use of rollers, which result in crushing of the aggregate or in displacement of the HMA will not be permitted. Any Hot Mix Asphalt Pavement that becomes loose, broken, contaminated, shows an excess or deficiency of Performance Graded Asphalt Binder, or is in any other way defective shall be removed and replaced at no additional cost with fresh Hot Mix Asphalt Pavement, which shall be immediately compacted to conform to the adjacent area.

The Contractor shall repair or replace any roller found to be worn or defective, either before or during placement, to the satisfaction of the Department. Rollers that produce grooved, unevenly textured or non-uniform mat will be repaired or replaced before continuing to place HMA on MaineDOT projects.
The type of rollers to be used and their relative position in the compaction sequence shall generally be the Contractor's option, provided specification densities are attained and with the following requirements:

a. On variable-depth courses, the first lift of pavement over gravel, reclaimed pavement, on irregular or milled surfaces, or on bridges, at least one roller shall be 14.5 Mg [16 ton] pneumatic-tired. Unless otherwise allowed by the Resident, pneumatic-tired rollers shall be equipped with skirting to minimize the pickup of HMA materials from the paved surface. When required by the Resident, the roller shall be ballasted to 18.1 Mg [20 ton].

b. Compaction with a vibratory or steel wheel roller shall precede pneumatic-tired rolling, unless otherwise authorized by the Department.

c. Vibratory rollers shall not be operated in the vibratory mode when checking or cracking of the mat occurs, or on bridge decks.

d. Any method, which results in cracking or checking of the mat, will be discontinued and corrective action taken.

The maximum operating speed for a steel wheel or pneumatic roller shall not exceed the manufacturer's recommendations, a copy of which shall be available if requested.

<u>401.101 Surface Tolerances</u> The Department will check surface tolerance utilizing the following methods :

a.) A 5 m [16 ft] straightedge or string line placed directly on the surface, parallel to the centerline of pavement.
b.) A 3 m [10 ft] straightedge or string line placed directly on the surface, transverse to the centerline of pavement.

The Contractor shall correct variations exceeding 6 mm [¼ in] by removing defective work and replacing it with new material as directed by the Department. The Contractor shall furnish a 10 foot straightedge for the Departments use.

<u>401.11 Preparation of Existing Surface</u> The Contractor shall thoroughly clean the surface upon which Hot Mix Asphalt Pavement is to be placed of all objectionable material. When the surface of the existing base or pavement is irregular, the Contractor shall bring it to uniform grade and cross section. All surfaces shall have a tack coat applied prior to placing any new HMA course. Tack coat shall conform to the requirements of Section 409 – Bituminous Tack Coat, Section 702 – Bituminous Material, and all applicable sections of the contract.

401.12 Hot Mix Asphalt Documentation The Contractor and the Department shall agree on the amount of Hot Mix Asphalt Pavement that has been placed each day.

401.13 Preparation of Aggregates The Contractor shall dry and heat the aggregates for the HMA to the required temperature. The Contractor shall properly adjust flames to avoid physical damage to the aggregate and to avoid depositing soot on the aggregate.

401.14 Mixing The Contractor shall combine the dried aggregate in the mixer in the amount of each fraction of aggregate required to meet the JMF. The Contractor shall measure the amount of PGAB and introduce it into the mixer in the amount specified by the JMF.

The Contractor shall produce the HMA at the temperature established by the JMF.

The Contractor shall dry the aggregate sufficiently so that the HMA will not flush, foam excessively, or displace excessively under the action of the rollers. The Contractor shall introduce the aggregate into the mixer at a temperature of not more than 14°C [25°F] above the temperature at which the viscosity of the PGAB being used is 0.150 Pa•s.

The Contractor shall store and introduce into the mixer the Performance Graded Asphalt Binder at a uniformly maintained temperature at which the viscosity of the PGAB is between 0.150 Pa•s and 0.300 Pa•s. The aggregate shall be coated completely and uniformly with a thorough distribution of the PGAB. The Contractor shall determine the wet mixing time for each plant and for each type of aggregate used.

401.15 Spreading and Finishing On areas where irregularities or unavoidable obstacles make the use of mechanical spreading and finishing equipment impracticable, the Contractor shall spread, rake, and lute the HMA with hand tools to provide the required compacted thickness. Solvent based agents developed to strip asphalts from aggregates will not be allowed as release agents.

On roadways with adjoining lanes carrying traffic, the Contractor shall place each course over the full width of the traveled way section being paved that day, unless otherwise noted by the Department in Section 403 - Hot Bituminous Pavement.

401.16 Compaction Immediately after the Hot Mix Asphalt Pavement has been spread, struck off, and any surface irregularities adjusted, the Contractor shall thoroughly and uniformly compact the HMA by rolling.

The Contractor shall roll the surface when the mixture is in the proper condition and when the rolling does not cause undue displacement, cracking, or shoving. The Contractor shall prevent adhesion of the HMA to the rollers or vibrating compactors without the use of fuel oil or other petroleum based release agents. Solvents designed to strip asphalt binders from aggregates will not be permitted as release agents on equipment, tools, or pavement surfaces.
The Contractor shall immediately correct any displacement occurring as a result of the reversing of the direction of a roller or from other causes to the satisfaction of the Department. Any operation other than placement of variable depth shim course that results in breakdown of the aggregate shall be discontinued. Any new pavement that shows obvious cracking, checking, or displacement shall be removed and replaced for the full lane width as directed by the Resident at no cost to the Department.

Along forms, curbs, headers, walls, and other places not accessible to the rollers, the Contractor shall thoroughly compact the HMA with mechanical vibrating compactors. The Contractor shall only use hand

tamping in areas inaccessible to all other compaction equipment. On depressed areas, the Contractor may use a trench roller or cleated compression strips under a roller to transmit compression to the depressed area.

Any HMA that becomes unacceptable due to cooling, cracking, checking, segregation or deformation as a result of an interruption in mix delivery shall be removed and replaced, with material that meets contract specifications at no cost to the Department.

401.17 Joints The Contractor shall construct wearing course transverse joints in such a manner that minimum tolerances shown in Section 401.101 - Surface Tolerances are met when measured with a straightedge.

The paver shall maintain a uniform head of HMA during transverse and longitudinal joint construction.

The HMA shall be free of segregation and meet temperature requirements outlined in section 401.04. Transverse joints of the wearing course shall be straight and neatly trimmed. The Contractor may form a vertical face exposing the full depth of the course by inserting a header, by breaking the bond with the underlying course, or by cutting back with hand tools. The Department may allow feathered or "lap" joints on lower base courses or when matching existing base type pavements.

Longitudinal joints shall be generally straight to the line of travel, and constructed in a manner that best ensure joint integrity. Methods or activities that prove detrimental to the construction of straight, sound longitudinal joints will be discontinued.

The Contractor shall apply a coating of emulsified asphalt immediately before paving all joints to the vertical face and 75 mm [3 in] of the adjacent portion of any pavement being overlaid except those formed by pavers operating in echelon. The Contractor shall use an approved spray apparatus designed for covering a narrow surface. The Department may approve application by a brush for small surfaces, or in the event of a malfunction of the spray apparatus, but for a period of not more than one working day.

Where pavement under this contract joins an existing pavement, or when the Department directs, the Contractor shall cut the existing pavement along a smooth line, producing a neat, even, vertical joint. The Department will not permit broken or raveled edges. The cost of all work necessary for the preparation of joints is incidental to related contract pay items.

401.18 Quality Control Method A, B & C The Contractor shall operate in accordance with the approved Quality Control Plan (QCP) to assure a product meeting the contract requirements. The QCP shall meet the requirements of Section 106.6 - Acceptance and this Section. The Contractor shall not begin paving operations until the Department approves the QCP in writing.

Prior to placing any mix, the Department and the Contractor shall hold a Pre-paving conference to discuss the paving schedule, source of mix, type and amount of equipment to be used, sequence of paving pattern, rate of mix supply, random sampling, project lots and sublots and traffic control. A copy of the QC random numbers to be used on the project shall be provided to The Resident. The Departments' random numbers for Acceptance testing shall be generated and on file with the Resident and the Project Manager. All field and plant supervisors including the responsible onsite paving supervisor shall attend this meeting.

The QCP shall address any items that affect the quality of the Hot Mix Asphalt Pavement including, but not limited to, the following:

a. JMF(s)
b. Hot mix asphalt plant details
c. Stockpile Management (to include provisions for a minimum 2 day stockpile)
d. Make and type of paver(s)
e. Make and type of rollers including weight, weight per inch of steel wheels, and average contact pressure for pneumatic tired rollers
f. Name of QCP Administrator, and certification number
g. Name of Process Control Technician(s) and certification number(s)
h. Name of Quality Control Technicians(s) and certification number(s)
i. Mixing & transportation including process for ensuring that truck bodies are clean and free of debris or contamination that could adversely affect the finished pavement
j. Testing Plan
k. Laydown operations including longitudinal joint construction, procedures for avoiding paving in inclement weather, type of release agent to be used on trucks tools and rollers, compaction of shoulders, tacking of all joints, methods to ensure that segregation is minimized, procedures to determine the maximum rolling and paving speeds based on best engineering practices as well as past experience in achieving the best possible smoothness of the pavement. Solvent based agents developed to strip asphalts from aggregates will not be allowed as release agents.
l. Examples of Quality Control forms including a daily plant report and a daily paving report
m. Silo management and details (can show storage for use on project of up to 36 hours)
n. Provisions for varying mix temperature due to extraordinary conditions.
o. Name and responsibilities of the Responsible onsite Paving Supervisor.
p. Method for calibration/verification of Density Gauge
q. A note that all testing will be done in accordance with AASHTO and the Maine DOT Policies and Procedures for HMA Sampling and Testing.
r. A detailed description of RAP processing, stockpiling and introduction into the plant as well as a note detailing conditions under which the percent of RAP will vary from that specified on the JMF.
s. A detailed procedure outlining when production will be halted due to QC or Acceptance testing results.
t. A plan to address the change in PGAB source or supplier and the potential co-mingling of differing PGAB's.
u. A procedure to take immediate possession of acceptance samples once released by MaineDOT and deliver said samples to the designated acceptance laboratory.
v. Provisions for how the QCP will be communicated to the Contractor's field personnel

The QCP shall include the following technicians together with following minimum requirements:

a. QCP Administrator - A qualified individual shall administer the QCP. The QCP Administrator must be a full-time employee of or a consultant engaged by the Contractor or paving subcontractor. The QCP Administrator shall have full authority to institute any and all actions necessary for the successful operation of the QCP. The QCP Administrator (or its designee in the QCP Administrator's absence) shall be available to communicate with the Department at all times. The QCP Administrator shall be certified as a Quality Assurance Technologist certified by the New England Transportation Technician Certification Program (NETTCP).

b. Process Control Technician(s) (PCT) shall utilize test results and other quality control practices to assure the quality of aggregates and other mix components and control proportioning to meet the JMF(s). The PCT shall inspect all equipment used in mixing to assure it is operating properly and that mixing conforms to the mix design(s) and other Contract requirements. The QCP shall detail how these duties and responsibilities are to be accomplished and documented, and whether more than one PCT is required. The Plan shall include the criteria to be utilized by the PCT to correct or reject unsatisfactory materials. The PCT shall be certified as a Plant Technician by the NETTCP.

c. Quality Control Technician(s) (QCT) shall perform and utilize quality control tests at the job site to assure that delivered materials meet the requirements of the JMF(s). The QCT shall inspect all equipment utilized in transporting, laydown, and compacting to assure it is operating properly and that all laydown and compaction conform to the Contract requirements. The QCP shall detail how these duties and responsibilities are to be accomplished and documented, and whether more than one QCT is required. The QCP shall include the criteria utilized by the QCT to correct or reject unsatisfactory materials. The QCT shall be certified as a Paving Inspector by the NETTCP.

The QCP shall detail the coordination of the activities of the Plan Administrator, the PCT and the QCT. The Project Superintendent shall be named in the QCP, and the responsibilities for successful implementation of the QCP shall be outlined.

The Contractor shall sample, test, and evaluate Hot Mix Asphalt Pavement in accordance with the following minimum frequencies:

TABLE 2 : MINIMUM QUALITY CONTROL FREQUENCIES

Test or Action	Frequency	Test Method
Temperature of mix	6 per day at street and plant	-
Temperature of mat	4 per day	-
%TMD (Surface)	1 per 125 Mg [125 ton] (As noted in QC Plan)	ASTM D2950
%TMD (Base)	1 per 250 Mg [250 ton] (As noted in QC Plan)	AASHTO T269
Fines / Effective Binder	1 per 500 Mg [500 ton]	AASHTO T 312*
Gradation	1 per 500 Mg [500 ton]	AASHTO T30
PGAB content	1 per 500 Mg [500 ton]	AASHTO T164 or T308
Voids at N_{design}	1 per 500 Mg [500 ton]	AASHTO T 312*
Voids in Mineral Aggregate at N_{design}	1 per 500 Mg [500 ton]	AASHTO T 312*
Rice Specific Gravity	1 per 500 Mg [500 ton]	AASHTO T209
Coarse Aggregate Angularity	1 per 5000 Mg [5000 ton]	ASTM D5821
Flat and Elongated Particles	1 Per 5000 Mg [5000 ton]	ASTM D4791
Fine Aggregate Angularity	1 Per 5000 Mg [5000 ton]	AASHTO T304

*Method A and B only

The Contractor may utilize innovative equipment or techniques not addressed by the Contract documents to produce or monitor the production of the mix, subject to approval by the Department.

The Contractor shall submit all Hot Mix Asphalt Pavement plant test reports, inspection reports and updated pay factors in writing, signed by the appropriate technician and present them to the Department by 1:00 P.M. on the next working day, except when otherwise noted in the QCP due to local restrictions. The Contractor shall also

retain splits of the previous 5 QC tests, with QC results enclosed for random selection and testing by The Department during QA inspections of the HMA production facility. Test results of splits that do not meet the Dispute Resolution Variance Limits in Table 10 shall trigger an investigation by the MDOT Independent Assurance Unit, and may result in that lab losing NETTCP certification and the ability to request a dispute [Section 401.223 - Process for Dispute Resolution (Methods A , B and C only)].

The Contractor shall make density test results, including randomly sampled densities, available to the Department onsite. Summaries of each day's results, including a daily paving report, shall be recorded and signed by the QCT and presented to the Department by 1:00 p.m. the next working day.

The Contractor shall have a testing lab at the plant site, equipped with all testing equipment necessary to complete the tests in Table 2. The Contractor shall locate an approved Gyratory Compactor at the plant testing lab or within 30 minutes of the plant site.

The Contractor shall fill all holes in the pavement resulting from cutting cores by the Contractor or the Department with a properly compacted, acceptable mixture no later than the following working day. Before filling, the Contractor shall carefully clean the holes and apply a coating of emulsified asphalt. On surface courses, cores shall not be cut except for Verification of the Nuclear Density Gauge, at a rate not to exceed 3 per day or 2 per 1000 Mg [1000 ton] placed.
The Contractor shall monitor plant production using running average of three control charts as specified in Section 106 - Quality. Control limits shall be as noted in Table 3 below. The UCL and LCL, shall not exceed the allowable gradation control points for the particular type of mixture as outlined in Table 1 of section 703.09

TABLE 3: Control Limits

Property	UCL and LCL
Passing 4.75 mm and larger sieves	Target +/-4.0
Passing 2.36 mm sieve	Target +/-2.5
Passing .075 mm sieve	Target +/-1.2
PGAB Content*	Target +/-0.3
Voids in the Mineral Aggregate	LCL = LSL + 0.2
% Voids at N_{design}	JMF Target +/-1.3

*Based on AASHTO T 308

The Contractor shall cease paving operations whenever one of the following occurs on a lot in progress:

a. Method A: The Pay Factor for VMA, Voids @ N_d, Percent PGAB, composite gradation, VFB, fines to effective binder or density using all Acceptance or all Quality Control tests for the current lot is less than 0.85.
b. Method B: The Pay Factor for VMA, Voids @ N_d, Percent PGAB, composite gradation, VFB, fines to effective binder or density using all Acceptance or all Quality Control tests for the current lot is less than 0.90.
c. Method C: The Pay Factor for VMA, Voids @ $N_{d,}$ Percent PGAB, percent passing the nominal maximum sieve, percent passing 2.36 mm sieve, percent passing 0.300 mm sieve, percent passing 0.075 mm sieve or density using all Acceptance or all available Quality Control tests for the current lot is less than 0.85.
d. The Coarse Aggregate Angularity or Fine Aggregate Angularity value falls below the requirements of Table 3: Aggregate Consensus Properties Criteria in Section 703.07 for the design traffic level.
e. Each of the first 2 control tests for a Method A or B lot fall outside the upper or lower limits for VMA, Voids @ Nd, or Percent PGAB; or under Method C, each of the first 2 control tests for the lot fall

outside the upper or lower limits for the nominal maximum, 2.36 mm, 0.300 mm or 0.075 mm sieves, or percent PGAB.

f. The Flat and Elongated Particles value exceeds 10% by ASTM D4791.
g. There is any visible damage to the aggregate due to over-densification other than on variable depth shim courses.
h. The Contractor fails to follow the approved QCP.

The Contractor shall notify the Resident in writing as to the reason for shutdown, as well as the proposed corrective action, by the end of the work day. Failure to do so will be treated as a second incident under 106.4.6 QCP Non-compliance. The Department will consider corrective action acceptable if the pay factor for the failing property increases, based on samples already in transit, or a verification sample is tested and the property falls within the specification limits.

In cases where the corrective action can be accomplished immediately, such as batch weight or cold feed changes, the Contractor may elect to resume production once the corrective action is completed. Additional QC testing shall be performed to verify the effectiveness of the corrective action. Subsequent occurrences of shutdown for the same property in a Lot in progress will require paving operations to cease. Paving operations shall not resume until the Contactor and the Department determines that material meeting the Contract requirements will be produced. The Department may allow the Contractor to resume production based upon a passing QC sample, with a split of the sample being sent to the Department for verification testing. If the submitted verification sample test results fall outside the specification limits, the Contractor shall cease production until a verification sample is submitted to the Department has been tested by the Department and found to be within specification limits.
If the Contractor's control chart shows the process to be out of control (defined as a single point outside of the control limits on the running average of three chart) on any property listed in Table 3: Control Limits, the Contractor shall notify the Resident in writing of any proposed corrective action by 1:00 PM the next working day.

The Department retains the exclusive right, with the exception of the first day's production of a new JMF, to determine whether the resumption of production involves a significant change to the production process. If the Department so determines, then the current lot will be terminated, a pay factor established, and a new lot will begin.

<u>401.19 Quality Control Method D</u> For Items covered under Method D, the Contractor shall submit a modified QC Plan detailing, how the mix is to be placed, what equipment is to be used, and what HMA plant is to be used. All mix designs (JMF) shall be approved and verified by MDOT prior to use. Certified QC personnel shall not be required. The Contractor shall certify the mix and the test results for each item by a Certificate of Compliance.

<u>401.20 Acceptance Method A, B & C</u> These methods utilizes Quality Level Analysis and pay factor specifications.
For Hot Mix Asphalt Pavement designated for acceptance under Quality Assurance provisions, the Department will sample once per sublot on a statistically random basis, test, and evaluate in accordance with the following Acceptance Criteria:

TABLE 4: ACCEPTANCE CRITERIA

PROPERTIES	POINT OF SAMPLING	TEST METHOD
Gradation	Paver Hopper	AASHTO T30
PGAB Content	Paver Hopper	AASHTO T308
%TMD (Surface)	Mat behind all Rollers	AASHTO T269
%TMD (Base or Binder)	Mat behind all Rollers	AASHTO T269
Air Voids at N_d	Paver Hopper	AASHTO T 312
%VMA at N_d	Paver Hopper	AASHTO T 312
Fines to Effective Binder	Paver Hopper	AASHTO T 312
%VFB	Paver Hopper	AASHTO T 312

In the event the Department terminates a Lot prematurely but fails to obtain the required number of acceptance samples to calculate the volumetric property pay factor under the test method specified in the contract, the pay factor shall be calculated using the number of samples actually obtained from the contract. Should the number of acceptance samples taken total less than three, the resulting pay factor shall be 1.0 for volumetric properties. A minimum of three cores will be used for a density pay factor, if applicable, for quantities placed to date.

Should the Contractor request a termination of the Lot in progress prior to three acceptance samples being obtained, and the Department agrees to terminate the Lot, then the pay factor for mixture properties shall be 0.80. A minimum of three cores will be used to determine a density pay factor, if applicable, for quantities placed to date.

Lot Size For purposes of evaluating all acceptance test properties, a lot shall consist of the total quantity represented by each item listed under the lot size heading.

Sublot size - Refer to section 401.201, 401.202, and 401.203 for minimum size and number of sublots. The quantity represented by each sample will constitute a sublot.

If there is less than one-half of a sublot remaining at the end, then it shall be combined with the previous sublot. If there is more than one-half sublot remaining at the end, then it shall constitute the last sublot and shall be represented by test results. If it becomes apparent partway through a Lot that, due to an underrun, there will be insufficient mix quantity to obtain the minimum number of sublots needed, the Resident may adjust the size of the remaining sublots and select new sample locations based on the estimated quantity of material remaining in the Lot.

Acceptance Testing The Department will obtain samples of Hot Mix Asphalt Pavement in conformance with AASHTO T168 Sampling Bituminous Paving Mixtures, and the Maine DOT Policies and Procedures for HMA Sampling and Testing, which will then be transported by the Contractor to the designated MDOT Laboratory within 48 hours (except when otherwise noted in the project specific QCP due to local restrictions), as directed by MDOT in approved transport containers to be provided by the Department, unless otherwise directed by the Resident. Failure to deliver an acceptance sample to the designated acceptance laboratory will be considered the second incident under 106.4.6–QCP Non-Compliance.

The Department will take the sample randomly within each sublot. Target values shall be as specified in the JMF. The Department will use Table 5 for calculating pay factors for gradation, PGAB Content, Air Voids at N_{design}, VMA, Fines to Effective Binder and VFB. The Department will withhold reporting of the test results for the Acceptance sample until 7:00 AM, on the second working day of receipt of the sample, or after receipt of the Contractors results of the Acceptance sample split. Upon conclusion of each lot, where there is a minimum of four sublots, results shall be examined for statistical outliers, as stated in Section 106.7.2 - Statistical Outliers.

Isolated Areas During the course of inspection, should it appear that there is an isolated area that is not representative of the lot based on a lack of observed compactive effort, excessive segregation or any other questionable practice, that area may be isolated and tested separately. An area so isolated that has a calculated pay factor below 0.80, based on three random tests shall be removed and replaced at the expense of the Contractor for the full lane width and a length not to be less than 50 m [150 ft].

Pavement Density The Department will measure pavement density using core samples tested according to AASHTO T-166. The Department will randomly determine core locations. The Contractor shall cut 6 inch diameter cores at no additional cost to the Department by the end of the working day following the day the pavement is placed, and immediately give them to the Department. Cores for Acceptance testing shall be cut such that the nearest edge is never within 0.225 m (9 inches) of any joint. The cores will be placed in a transport container provided by the Department and transported by the Contractor to the designated MDOT Lab as directed by the Department. Pre-testing of the cores will not be allowed. At the time of sampling, the Contractor and the Department shall mutually determine if a core is damaged. If it is determined that the core(s) is damaged, the Contractor shall cut new core(s) at the same offset and within 1 m [3 ft] of the initial sample. At the time the core is cut, the Contractor and the Department will mutually determine if saw cutting of the core is needed, and will mark the core at the point where sawing is needed. The core may be saw cut by the Contractor in the Department's presence onsite, or in an MDOT Lab by The Department, without disturbing the layer being tested to remove lower layers of Hot Mix Asphalt Pavement, gravel, or RAP. No recuts are allowed at a test location after the core has been tested. Upon conclusion of each lot, density results shall be examined for statistical outliers as stated in Section 106.7.2.

On all sections of overlay with wearing courses designed to be 19 mm [3/4 in] or less in thickness, there shall be no pay adjustment for density otherwise noted in Section 403 - Hot Bituminous Pavement. For overlays designed to be 19 mm [3/4 in] or less in thickness, density shall be obtained by the same rolling train and methods as used on mainline travelway surface courses with a pay adjustments for density, unless otherwise directed by the Department.

There shall be no pay adjustment for density on shoulders unless otherwise noted in Section 403 - Hot Bituminous Pavement. Density for shoulders shall be obtained by the same rolling train and methods as used on mainline travelway, unless otherwise directed by the Department. Efforts to obtain optimum compaction will not be waived by the Department unless it is apparent during construction that local conditions make densification to this point detrimental to the finished pavement surface course.

401.201 Method A Lot Size will be the entire production per JMF for the project, or if so agreed at the Pre-paving Conference, equal lots of up to 4500 Mg [4500 tons], with unanticipated over-runs of up to 1500 Mg [1500 ton] rolled into the last lot. Sublot sizes shall be 750 Mg [750 ton] for mixture properties, 500 Mg [500 ton] for base or binder densities and 250 Mg [250 ton] for surface densities. The minimum number of sublots for mixture properties shall be 4, and the minimum number of sublots for density shall be five.

TABLE 5: METHOD A ACCEPTANCE LIMITS

Property	USL and LSL
Passing 4.75 mm and larger sieves	Target +/-7%
Passing 2.36 mm to 1.18 mm sieves	Target +/-4%
Passing 0.60 mm	Target +/-3%
Passing 0.30 mm to 0.075 mm sieve	Target +/-2%
PGAB Content	Target +/-0.4%
Air Voids	4.0% +/-1.5%
Fines to Effective Binder	0.9 +/-0.3
Voids in the Mineral Aggregate	LSL Only from Table 1
Voids Filled with Binder	Table 1 values plus a 4% production tolerance for USL only
% TMD (In place density)	95.0% +/- 2.5%

401.202 Method B Lot Size will be the entire production per JMF for the project and shall be divided into 3 equal sublots for Mixture Properties and 3 equal sublots for density.

TABLE 6: METHOD B ACCEPTANCE LIMITS

Property	USL and LSL
Percent Passing 4.75 mm and larger sieves	Target +/-7
Percent Passing 2.36 mm to 1.18 mm sieves	Target +/-5
Percent Passing 0.60 mm	Target +/-4
Percent Passing 0.30 mm to 0.075 mm sieve	Target +/-3
PGAB Content	Target +/-0.5
Air Voids	4.0% +/-2.0
Fines to Effective Binder	0.9 +/-0.3
Voids in the Mineral Aggregate	LSL from Table 1
Voids Filled with Binder	Table1 plus a 4% production tolerance for USL.
% TMD (In-place Density)	95.0% +/- 2.5%

401.203 Testing Method C Lot Size will be the entire production per JMF for the project, or if so agreed at the Pre-paving Conference, equal lots of up to 4500 Mg [4500 tons], with unanticipated over-runs of up to 1500 Mg [1500 ton] rolled into the last lot. Sublot sizes shall be 750 Mg [750 ton] for mixture properties, 500 Mg [500 ton] for base or binder densities and 250 Mg [250 ton] for surface densities. The minimum number of sublots for mixture properties shall be 4, and the minimum number of sublots for density shall be five.

TABLE 7: METHOD C ACCEPTANCE LIMITS

Property	USL and LSL
Passing 4.75 mm and larger sieves	Target +/-7%
Passing 2.36 mm to 1.18 mm sieves	Target +/-5%
Passing 0.60 mm	Target +/-4%
Passing 0.30 mm to 0.075 mm sieve	Target +/-2%
PGAB Content	Target +/-0.4%
Air Voids	4.0% +/-1.5%
Fines to Effective Binder	0.9 +/-0.3
Voids in the Mineral Aggregate	LSL Only from Table 1
Voids Filled with Binder	Table 1 values plus a 4% production tolerance for USL only
% TMD (In place density)	95.0% +/- 2.5%

401.204 Testing Method D For hot mix asphalt items designated as Method D in Section 403 - Hot Bituminous Pavement, one sample will be taken from the paver hopper or the truck body per 250 Mg [250 ton] per pay item. The mix will be tested for gradation and PGAB content. Disputes will not be allowed. If the mix is within the tolerances listed in Table 8: Method D Acceptance Limits, the Department will pay the contract unit price. Contractor shall cut two 150 mm [6 in] cores, which shall be tested for percent TMD per AASHTO T-269 unless otherwise noted in Section 403 - Hot Bituminous Pavement. If the average for the two tests falls below 92.5% the disincentive shall apply. If the test results for each 250 Mg [250 ton] increment are outside these limits, the following deductions (Table 8b) shall apply to the HMA quantity represented by the test.

TABLE 8: METHOD D ACCEPTANCE LIMITS

Property	USL and LSL
Percent Passing 4.75 mm and larger sieves	Target +/-7
Percent Passing 2.36 mm to 1.18 mm sieves	Target +/-5
Percent Passing 0.60 mm	Target +/-4
Percent Passing 0.30 mm to 0.075 mm sieve	Target +/-3
PGAB Content	Target +/-0.5
% TMD (In-place Density)	95.0% +/- 2.5%

TABLE 8b Method “D” Price Adjustments

PGAB Content	-5%
2.36 mm sieve	-2%
0.30 mm sieve	-1%
0.075 mm sieve	-2%
Density	-10%

401.21 Method of Measurement The Department will measure Hot Mix Asphalt Pavement by the Mg [ton] in accordance with Section 108.1 - Measurement of Quantities for Payment.

401.22 Basis of Payment The Department will pay for the work, in place and accepted, in accordance with the applicable sections of this Section, for each type of HMA specified.

The Department will pay for the work specified in Section 401.11, for the HMA used, except that cleaning objectionable material from the pavement and furnishing and applying bituminous material to joints and contact surfaces is incidental.

Payment for this work under the appropriate pay items shall be full compensation for all labor, equipment, materials, and incidentals necessary to meet all related contract requirements, including design of the JMF, implementation of the QCP, obtaining core samples, transporting cores and samples, filling core holes, applying emulsified asphalt to joints, and providing testing facilities and equipment.
The Department will make a pay adjustment for quality as specified below.

401.221 Pay Adjustment The Department will sample, test, and evaluate Hot Mix Asphalt Pavement in accordance with Section 106 - Quality and Section 401.20 - Acceptance, of this Specification.

401.222 Pay Factor (PF) The Department will use the following criteria for pay adjustment using the pay adjustment factors under Section 106.7 - Quality Level Analysis:

Density If the pay factor for Density falls below 0.80 for Method A or C or 0.86 for Method B, all of the cores will be randomly re-cut by Sublot. A new pay factor will be calculated that combines all initial and retest results. If the resulting pay factor is below 0.80 for Method A or C or below 0.86 for Method B, the entire Lot shall be removed and replaced with material meeting the specifications at no additional cost to the Department, except that the Department may, when it appears that there is a distinct pattern of defective material, isolate any defective material by investigating each mix sample sublot and require removal of defective mix sample sublots only, leaving any acceptable material in place if it is found to be free of defective material. Pay factors equal to or greater than the reject level will be paid accordingly.

Gradation For HMA evaluated under Acceptance Method A or B, the Department will determine a composite pay factor (CPF) using applicable price adjustment factors “f“ from Table 9: Table of Gradation Composite “f” Factors, and Acceptance limits from Table 5: Method A Acceptance Limits, for Method A or Table 6: Method B Acceptance Limits, for Method B. The Department will not make price adjustments for gradation on Methods A and B, but will monitor them as shutdown criteria.

TABLE 9: TABLE OF GRADATION COMPOSITE " f " FACTORS (Methods A and B)

Constituent		"f" Factor			
		19 mm	12.5 mm	9.5 mm	4.75 mm
Gradation	25 mm	-	-	-	-
	19 mm	4	-	-	-
	12.5 mm		4	4	-
	9.50 mm				4
	2.36 mm	6	6	6	8
	1.18 mm				
	0.60 mm	2	2	2	2
	0.30 mm	2	2	2	2
	0.075 mm	6	6	6	8

For HMA evaluated under Acceptance Method C, the Department will determine a pay factor using acceptance limits from Table **7**: Method C Acceptance Limits.

VMA, Air Voids, VFB and Fines to Effective Binder The Department will determine a pay factor (PF) using the applicable Acceptance Limits.

The following variables will be used for pay adjustment:

PA = Pay Adjustment
Q = Quantity represented by PF in Mg [ton]
P = Contract price per Mg [ton]
PF = Pay Factor

Pay Adjustment Method A

The Department will use the following criteria for pay adjustment: density, Performance Graded Asphalt Binder content, voids @N_d, VMA, VFB, F/B_{eff}, and the screen sizes listed in Table 9 for the type of HMA represented in the JMF. If any single pay factor for PGAB Content, VMA, or Air Voids falls below 0.80, then the composite pay factor for PGAB Content, VMA, and Air Voids shall be 0.55.

Density: For mixes having a density requirement, the Department will determine a pay factor using Table 5: Method A Acceptance Limits:

PA = (density PF- 1.0)(Q)(P)x0.50

PGAB Content, VMA and Air Voids: The Department will determine a pay adjustment using Table 5: Method A Acceptance Limits as follows:

PA = (voids @ N_d PF- 1.0)(Q)(P)x0.20 + (VMA @ N_d PF- 1.0)(Q)(P)x0.20 + (PGAB PF- 1.0)(Q)(P)x0.10

VFB and Fines to Effective Binder The Department will determine a pay factor (PF) using Table 5: Method A Acceptance Limits. The Department will not make price adjustments for VFB or Fines to Effective Binder, but will monitor them as shutdown criteria.

Pay Adjustment Method B

The Department will use the following criteria for pay adjustment: density, Performance Graded Asphalt Binder content, voids @N_d, VMA, VFB, F/B_{eff}, and the screen sizes listed in Table 9 for the type of HMA represented in the JMF. If any single pay factor for PGAB Content, VMA, or Air Voids falls below 0.86, then the composite pay factor for PGAB Content, VMA, and Air Voids shall be 0.70.

Density: For mixes having a density requirement, the Department will determine a pay factor using Table 6: Method B Acceptance Limits:

PA = (density PF- 1.0)(Q)(P)x0.50

PGAB Content, VMA and Air Voids: The Department will determine a pay adjustment using Table 6: Method B Acceptance Limits as follows:

PA = (voids @ N_d PF- 1.0)(Q)(P)x0.20 + (VMA @ N_d PF- 1.0)(Q)(P)x0.20 + (PGAB PF- 1.0)(Q)(P)x0.10

VFB and Fines to Effective Binder The Department will determine a pay factor (PF) using Table 6: Method B Acceptance Limits. The Department will not make price adjustments for VFB or Fines to Effective Binder, but will monitor them as shutdown criteria.

Pay Adjustment Method C

The Department will use density, Performance Graded Asphalt Binder content, and the percent passing the nominal maximum, 2.36 mm, 0.300 mm and 0.075 mm sieves for the type of HMA represented in the JMF. If the PGAB content falls below 0.80, then the PGAB pay factor shall be 0.55.

Density: For mixes having a density requirement, the Department will determine a pay factor using Table 7: Method C Acceptance Limits:

PA = (density PF- 1.0)(Q)(P)x0.50

PGAB Content and Gradation The Department will determine a pay factor using Table **7**: Method C Acceptance Limits. The Department will calculate the price adjustment for Mixture Properties as follows:

PA = (% Passing Nom. Max PF-1.0)(Q)(P)X0.05+(% passing 2.36 mm PF-1.0)(Q)(P)X0.05+(%passing 0.30 mm PF-1.0)(Q)(P)X0.05+(%passing 0.075 mm PF-1.0)(Q)(P)X0.10+(PGAB PF-1.0)(Q)(P)X0.25

VMA, Air Voids, VFB and Fines to Effective Binder The Department will determine a pay factor (PF) using Table 7: Method C Acceptance Limits. The Department will not make price adjustments for VMA, Air Voids, VFB or Fines to Effective Binder, but will monitor them as shutdown criteria.

Pay Adjustment Method D

The Department will use density, Performance Graded Asphalt Binder content, and the screen sizes listed in Table 8b for the type of HMA represented in the JMF. If test results do not meet the Table 8 requirements, deducts as shown in Table 8b shall be applied to the quantity of mix represented by the test.

401.223 Process for Dispute Resolution (Methods A B & C only)

a. Dispute Resolution sampling At the time of Hot-Mix Asphalt sampling, the Department will obtain a split sample of each Acceptance test random sample for possible dispute resolution testing. The Contractor shall also obtain a split sample of the HMA at this same time. If the Contractor wishes to retain the option of requesting dispute testing of the initial Acceptance sample, the Contractor will test their split of the

Acceptance sample and shall report their results to the Resident, with a copy to the QA Engineer at the Central Laboratory in Bangor by 7:00 AM, on the second working day from time of QA sampling, otherwise dispute resolution will not be initiated. The Department's dispute resolution split sample will be properly labeled and stored for a period of at least two weeks, or until the sample is tested.

b. Disputing Acceptance results The Contractor may dispute the Department's Acceptance results and request (Methods A, B, & C) that the dispute resolution split sample be tested by notifying the Department's Resident and the QA Engineer at the Central Laboratory in Bangor in writing within two

working days after receiving the results of the Acceptance test. The following shall be provided in the request:

- Acceptance sample reference number
- The specific test result(s) or property(ies) being disputed, and
- The complete, signed report of the Contractor's testing (In a lab certified by the NETTCP and MDOT) of their split of the Acceptance sample indicating that the variances in Table10: Dispute Resolution Variance Limits, for the specific test result(s) or property(ies) were exceeded.

c. Disputable items The Contractor may dispute any or all of the following Method A or B test results when the difference between the Department's value and the Contractor's value for that test equals or exceeds the corresponding allowable variation in Table 10: Dispute Resolution Variance Limits, PGAB content, G_{mb}, and G_{mm}. In addition, if the allowable variation for these tests is not met or exceeded, the Contractor may dispute either or both of the following material properties provided the difference between results for them equals or exceeds the corresponding allowable variation in Table 10: Voids at N_{design}, and VMA.
For Method C only: The results for PGAB content and the screen sizes used for pay adjustment may be disputed.

d. Outcome The value of any disputed result or property reported for the initial Acceptance sample shall stand if the value reported for the dispute resolution sample is not closer to the value the Contractor reported for their split sample than to the value reported for the initial Acceptance sample. If the value reported for the dispute resolution falls precisely half-way between the other two values the value reported for the dispute resolution will replace the original acceptance value. Otherwise, the value reported for the dispute resolution sample will replace the value reported for the initial Acceptance sample, and will be used to re-calculate any other affected results or properties.

TABLE 10: DISPUTE RESOLUTION VARIANCE LIMITS

PGAB Content	+/-0.4%
G_{mb}	+/-0.030
G_{mm}	+/-0.020
Voids @ N_d	+/-0.8%
VMA	+/-0.8%
Passing 4.75 mm and larger sieves	+/- 4.0%
Passing 2.36 mm to 0.60 mm sieves	+/- 3.0%
Passing 0.30 mm to 0.15	+/- 2.0 %
0.075 mm sieve	+/- 1.0%

SECTION 402 - PAVEMENT SMOOTHNESS

402.00 Smoothness Projects Projects to have their pavement smoothness analyzed in accordance with this Specification will be so noted in Special Provision 403 - Bituminous Box

402.01 Pavement Smoothness The final pavement surface shall be evaluated for smoothness using a Class I or Class II profiler as defined by ASTM E950 (94). Smoothness measurements will be expressed in terms of the International Roughness Index (IRI) as defined by the World Bank, in units of inches/mile.

402.02 Lot Size Lot size for smoothness will be 1000 lane-meters [3000 lane-feet]. A sublot will consist of 20 lane-meters [50 lane-feet]. Partial lots will be included in the previous lot if less than one-half the size of a normal lot. If equal to or greater than one-half the normal lot size, it will be tested as a separate lot.

402.03 Acceptance Testing The Department will conduct Acceptance testing following completion of the surface course. Sections to be excluded from testing include the following:

Bridge decks and joints (no smoothness measurements will be taken within 30 m [100 ft] of bridge joints)
Acceleration and deceleration lanes
Shoulders and ramps
Side streets and roads
Within 30 m [100 ft] of transverse joints at the beginning and end of the project
Within 30 m [100 ft] of railroad crossings
Urban areas with speed limits of 50 kph [30 mph] or lower

Each lot shall have 2 measurements made in each wheel path. The average of the 4 measurements will determine the smoothness for that lot.

The smoothness measurements will be statistically evaluated for pay factors as described in Subsection 106.7 - Quality Level Analysis, using the specification limits shown below.

ACCEPTANCE LIMITS

Level	USL
I	0.95 m/km [60 in/mile]
II	1.10 m/km [70 in/mile]
III	1.25 m/km [80 in/mile]

Computation of Smoothness Pay Adjustment:

PA = (PF-1.0)(Q)(P)
where:
Q = Quantity of surface course in the Lot (excluding shoulders, side streets, bridge decks, ramps, acceleration and deceleration lanes)
PF = smoothness pay factor for the Lot
P = Contract unit price for surface pavement
PA = pay adjustment

402.04 Unacceptable Work In the event that any Lot is found to have a pay factor less than 0.80, the Contractor shall take whatever remedial action is required to correct the pavement surface in that Lot at no additional expense to the Department. Such remedial action may include but is not limited to removal and replacement of the unacceptable pavement. In the event remedial action is necessary, the Contractor shall submit a written plan to the Resident outlining the scope of the remedial work. The Resident must approve this plan before the remedial work can begin. Following remedial work, the Lot shall be retested, and will be subject to the specification limits listed above. The resulting pay factor, if within the acceptable range, will be used in the final pay adjustment. The Contractor shall pay the cost of retesting the pavement following corrective action.

Localized surface tolerance defects will be subject to the provisions outlined in Section 401.101 Surface Tolerances.

Payment will be made under:

Pay Item	Pay Unit
402.10 Incentive/Disincentive - Pavement Smoothness	Lump Sum

SECTION 403 - HOT BITUMINOUS PAVEMENT

403.01 Description This work shall consist of constructing one or more courses of bituminous pavement on an approved base in accordance with these specifications, and in reasonably close conformity with the lines, grades, thickness and typical cross sections shown on the plans or established.

The bituminous pavement shall be composed of a mixture of aggregate, filler if required, and bituminous material.

403.02 General The materials and their use shall conform to the requirements of Section 401 - Hot Mix Asphalt Pavement.

403.03 Construction The construction requirements shall be as specified in Section 401 - Hot Mix Asphalt Pavement.
In addition, hot bituminous pavement placed on bridges shall also conform to the following requirements.

a. The mixture shall be composed of aggregate, PGAB and mineral filler but no recycled asphalt pavement and placed in courses as specified in the Special Provisions.

b. The bottom course shall be placed with an approved rubber mounted bituminous paver of such type and operated in such a manner that the membrane waterproofing will not be damaged in any way.

c. The top course shall not be placed until the bottom course has cooled sufficiently to provide stability.

d. The Contractor will not be required to cut sample cores from the compacted pavement on the bridge deck.

e. After the top course has been placed, the shoulder areas shall be sealed 1 meter [3 ft] wide with two applications of an emulsified bituminous sealer meeting the requirements of Section 702.12 - Emulsified Bituminous Sealing Compound. The first application shall be pre-mixed with fine, sharp sand, similar to mortar sand, as needed to fill all voids in the mix in the area being sealed. The second application may be applied without sand. The sealer shall be carried to the curb at the gutter line in sufficient quantity to leave a bead or fillet of material at the face of the curb. The area to be sealed shall be clean, dry and the surface shall be at ambient temperature.

f. The furnishing and applying of the required quantity of sealer for the bridge shoulder areas shall be incidental to placing the hot bituminous pavement.

g. The atmospheric temperature for all courses on bridge decks shall be 10°C [50°F] or higher.

h. The use of an oscillating steel roller shall be required to compact all mixtures pavements placed on bridge decks.

403.04 Method of Measurement Hot bituminous pavement will be measured as specified in Section 401.21-Method of Measurement.

403.05 Basis of Payment The accepted quantities of hot bituminous pavement will be paid for at the contract unit price per Megagram [ton] for the bituminous mixtures, including bituminous material complete in place.

Method A, Method B, Method C and Method D shall be used for acceptance as specified in Section 401 - Hot Mix Asphalt Pavements. (See Complementary Notes, Section 403 - Hot Bituminous Pavement, for Method location).

Payment will be made under:

Pay Item		Pay Unit
403.102	Hot Mix Asphalt Pavement for Special Areas	MG [Ton]
403.206	Hot Mix Asphalt, 25 mm Nominal Maximum Size	MG [Ton]
403.207	Hot Mix Asphalt, 19.0 mm Nominal Maximum Size	MG [Ton]
403.2071	Hot Mix Asphalt , 19.0 mm Nominal Maximum Size	MG [Ton]
403.2072	Asphalt Rich Hot Mix Asphalt,19.0 mm Nominal Maximum Size (Asphalt Rich Base and Intermediate course)	MG [Ton]
403.208	Hot Mix Asphalt, 12.5 mm Nominal Maximum Size	MG [Ton]
403.2081	Hot Mix Asphalt - 12.5 mm Nominal Maximum Size (PG 70-28)	MG [Ton]
403.209	Hot Mix Asphalt, 9.5 mm Nominal Maximum Size (sidewalks, drives, islands & incidentals)	MG [Ton]
403.210	Hot Mix Asphalt, 9.5 mm Nominal Maximum Size	MG [Ton]
403.2101	Hot Mix Asphalt - 9.5 mm Nominal Maximum Size (PG 70-28)	MG [Ton]
403.2102	Asphalt Rich Hot Mix Asphalt, 9.5 mm Nominal Maximum Size (Asphalt Rich Intermediate course)	MG [Ton]
403.211	Hot Mix Asphalt (shimming)	MG [Ton]
403.212	Hot Mix Asphalt, 4.75 mm Nominal Maximum Size	MG [Ton]
403.2131	Hot Mix Asphalt, 12.5 mm Nominal Maximum Size, (PG 70-28) (Base and Intermediate Base course)	MG [Ton]
403.2132	Asphalt Rich Hot Mix Asphalt, 12.5 mm Nominal Maximum Size (Base and Intermediate Base course)	MG [Ton]

SPECIAL PROVISION
SECTION 401
HOT MIX ASPHALT
(¾ inch (20mm) Surface Treatment)

Description The Contractor shall furnish and place one or more courses of Hot Mix Asphalt (HMA) pavement on an approved base in accordance with the Contract documents and in reasonably close conformity with the lines, grades, thicknesses and typical cross sections shown on the plans or established. The Department shall accept this work under Quality Assurance provisions as specified in Special Provision Section 400; Subsection 401 - Hot Mix Asphalt Pavement, and Standard Specifications Section 106 - Quality.

The ¾ inch [20 mm] HMA Surface Course shall meet all of the Materials, Seasonal Limitations, Equipment, and Construction requirements of Section 401, with the following additions and changes.

GRADATION REQUIREMENTS

Sieve Size	Percent Passing
12.5 mm	100
9.5 mm	95-100
4.75 mm	60-95
2.36 mm	40-65
1.18 mm	-
0.600 mm	-
0.300 mm	-
0.075 mm	2-7.0

VOLUMETRIC DESIGN CRITERIA

Voids at N_{des}	4.0
VMA	16.0 minimum
VFB	65-80
Fines/Eff.Binder	0.9 ± 0.3

If the proposed JMF has been used and approved under Method “A” or “B” testing requirements for mix volumetric and density on a current MaineDOT project, to include layover mix designs used the previous year, a test strip *will not be required.*

A test strip at a nominal depth of 1¼ inch [30mm], full lane width, *shall be required* with any new JMF’s not used and approved under the Method “A” or “B” testing requirements for mix volumetric and density on a current calendar year MaineDOT project.

If a test strip is required, it shall conform to the following requirements:

On roads open to two way traffic, the test strip shall be placed over the full width of the travel way section, not to exceed 2000 ft [600 meters] in length, or 440 ton [400 Mg]

production. Prior to the placement of the test strip a passing verification test is required. A fog coat of Item 409.15, Bituminous Tack Coat, shall be applied to the level course prior to the placement of the 20mm Surface Treatment Course, payment to be made under the 409.15 pay item.

The test strip **will not** be excluded from QA analysis, but will be evaluated in accordance with Section 401.03. The Contractor shall notify the Department at least 48 hours in advance of placing the test strip. The test strip is intended to allow the Contractor to establish a method of compaction for the ¾ inch [20mm] surface course areas.

Once the methods are established, rolling patterns, equipment, and methods will become part of the QCP. The test strip will allow for any necessary adjustments to the mix design and or plant mixing procedures, as well as for the Department to evaluate the quality of the pavement. Changes to the compaction effort, number, or type of rollers may be permitted by the Department if damage to the HMA course becomes evident on the ¾ inch (20mm) surface treatment areas. The use of a 16 ton minimum weight pneumatic-tired roller is required on all materials placed under this specification, unless otherwise authorized by the Department.

Test strips shall be evaluated using Method B testing protocol. Mix samples and cores will be obtained from the test strip. A minimum of three mix samples shall be randomly selected from the test strip. Three cores shall be randomly sampled from the mat and tested for density. If the pay factor for Density falls below 0.86 for Method B, all of the cores will be randomly re-cut. A new pay factor will be calculated that combines all initial and retest results. If the resulting pay factor is below 0.86 for Method B, the Department will reject the test strip. The Contractor will remove and replace rejected test strips at their expense. After completion of the test strip, the Contractor shall make any final adjustments to the job mix formula in accordance to Standard Specifications, Section 401, subsection 401.03 - Composition of Mixtures, or compaction method. Paving operations shall not resume until the Contractor and the Department determines that material meeting the Contract requirements can be produced, and any changes to the Job Mix Formula have been approved by the Department. The Department shall pay for an accepted test strip as determined Section 401.222 – Pay Factor A and B, for this item. A new test strip shall be required if a current lot is terminated or completed, and a new lot is started.

The Department may halt the production and placement of the ¾ in [20mm] HMA Surface Course and require the construction of a new test strip if the Department finds that material being produced, hauled, or placed does not meet the requirements of Sections 401.08 through 401.18.

The final pavement surface may be evaluated for smoothness in accordance with the Special Provision Section 400; Subsection 402 - Pavement Smoothness, for informational data collection, or used in addition to section 401.101 – Surface Tolerances to isolate defective areas found to be of poor ride quality.

The Contractor shall sample, test, and evaluate Hot Mix Asphalt Pavement in accordance with the minimum frequencies outlined in Section 401, Table 2: Minimum Quality Control Frequencies.

The Contractor shall monitor plant production using running average of three control charts as specified in Section 106, and Control Limits as specified in Section 401, Table 3: Control Limits.

The Acceptance Criteria shall be as specified in Section 401.20 – Acceptance Method A, B, or C, and Table 4: Acceptance Criteria.

The Acceptance Limit targets will be as specified on the JMF, and the Department will use the appropriate Acceptance Limits table from Section, Table 5: Method A, Table 6: Method B, or Table 7: Method C for the acceptance method noted in the Special Provision 403.

The Contractor shall cease paving operations whenever one of the following occurs on a lot in progress:

a. Method A: The Pay Factor for VMA, Voids @ N_d, Percent PGAB, composite gradation, VFB, fines to effective binder or density using all Acceptance or all Quality Control tests for the current lot is less than 0.85.

b. Method B: The Pay Factor for VMA, Voids @ N_d, Percent PGAB, composite gradation, VFB, fines to effective binder or density using all Acceptance or all Quality Control tests for the current lot is less than 0.90.

c. Method C: The Pay Factor for VMA, Voids @ $N_{d,}$ Percent PGAB, percent passing the nominal maximum sieve, percent passing 2.36 mm sieve, percent passing 0.300 mm sieve or percent passing 0.075 mm sieve using all Acceptance or all available Quality Control tests for the current lot is less than 0.85.

d. The Coarse Aggregate Angularity or Fine Aggregate Angularity value falls below the requirements of Table 3: Aggregate Consensus Properties Criteria in Section 703.07 for the design traffic level.

e. Each of the first 2 control tests for a Method A or B lot fall outside the upper or lower limits for VMA, Voids @ Nd, or Percent PGAB; or under Method C, each of the first 2 control tests for the lot fall outside the upper or lower limits for the nominal maximum, 2.36 mm, 0.300 mm or 0.075 mm sieves, or percent PGAB.

f. The Flat and Elongated Particles value exceeds 10% by ASTM D4791.

g. There is any visible damage to the aggregate due to over-densification other than on variable depth shim courses.

h. The Contractor fails to follow the approved QCP.

i. The Contractor's control chart shows the process to be out of control (defined as a single point outside of the control limits on the running average of three chart.) on any property listed in Table 3: Control Limits.

The Contractor shall immediately notify the Resident in writing as to the reason for shutdown, as well as the proposed corrective action. Failure to do so will be treated as a second incident under 106.4.6 QCP Non-compliance. The Department will consider corrective action acceptable if the pay factor for the failing property increases, based on samples already in transit, or a verification sample is tested and the property falls within the specification limits.

In cases where the corrective action can be accomplished immediately, such as batch weight or cold feed changes, the Contractor may elect to resume production once the corrective action is completed. Additional QC testing shall be performed to verify the effectiveness of the corrective action. Subsequent occurrences of shutdown for the same property in a Lot in progress will require paving operations to cease. Paving operations shall not resume until the Contactor and the Department determines that material meeting the Contract requirements will be produced. The Department may allow the Contractor to resume production based upon a passing QC sample, with a split of the sample being sent to the Department for verification testing. If the submitted verification sample test results fall outside the specification limits, the Contractor shall cease production until a verification sample is submitted to the Department has been tested by the Department and found to be within specification limits.
The Department retains the exclusive right, with the exception of the first day's production of a new JMF, to determine whether the resumption of production involves a significant change to the production process. If the Department so determines, then the current Lot will be terminated, a pay factor established, and a new Lot will begin.

Price Adjustment The Department will apply price adjustments for the Hot Mix Asphalt utilized under this Special Provision as outlined in Section 401.222 : Pay Factor for Methods A and B for mixes with Volumetric Property requirements, or the Pay Factor for Method C for PGAB content, and sieve sizes listed in Table 7 if so designated.

Dispute Resolution The Contractor may dispute an acceptance test for this item as outlined in Section 401.223 for PGAB, Air Void, VMA, and gradation when applicable under the test Method.

Method of Measurement The Department will measure Hot Mix Asphalt pavement by the ton (megagram) in accordance with Section 109 - Measurement and Payment.

Basis of Payment The Department will pay for the Work, in place and accepted, in accordance with the applicable sections of this Special Provision; at the contract unit price per ton (megagram) for the Pay Item listed in Special Provision Section 403 – Hot Mix Asphalt Overlay.

Payment will be made under:

Pay Item	Pay Unit
403.2104 9.5mm HMA - ¾" Surface	Ton (megagram)

SPECIAL PROVISION
SECTION 403
HOT MIX ASPHALT

Desc. Of Course	Grad Design.	Item Number	Bit Cont. % of Mix	Total Thick	No. Of Layers	Comp. Notes
1 ½" Mill & 1 ½" HMA Overlay Areas						
Mainline Travelway Plus 1' on Shoulders						
Wearing	12.5 mm	403.208	N/A	1 ½"	1	5,7,20,25
1 ½" Mill & 1 ½" HMA Overlay Areas						
Bridge Deck						
Mainline Travelway & Shoulders						
Wearing	12.5 mm	403.208	N/A	1 ½"	1	2,5,7,20
1 ½" Mill & 2 ¼" HMA Overlay Areas						
Mainline Travelway & Shoulders						
Wearing	9.5 mm	403.2104	N/A	¾"	1	5,7,11,20,22
Base	12.5 mm	403.213	N/A	1 ½"	1	5,7,20,25
Culvert Trench Areas						
Base	12.5 mm	403.213	N/A	match existing	2/more	2,5,7,16
Spot Shims – Delaminated Areas as Directed						
Shim	9.5 mm	403.211	N/A	variable	1/more	2,4,10,11
Drives, Misc.						
Wearing	9.5 mm	403.209	N/A	1" - 2"	1/more	2,3,10,11,14

COMPLEMENTARY NOTES

2. The incentive/disincentive provisions for density shall not apply. Rollers shall meet the requirements of this special provision. The use of an oscillating steel roller shall be required to compact all mixtures pavements placed on bridge decks.
3. The design traffic level for mix placed shall be <0.3 million ESALS. The design, verification, Quality Control, and Acceptance tests for this mix will be performed at **50 gyrations**.
4. The design traffic level for mix placed shall be 0.3 to <3 million ESALS. The design, verification, Quality Control, and Acceptance tests for this mix will be performed at **50 gyrations**.
5. The aggregate qualities shall meet the design traffic level of 3 to <10 million ESALS for mix placed under this contract. The design, verification, Quality Control, and Acceptance tests for this mix will be performed at **75 gyrations**.
7. Section 106.6 Acceptance, (1) Method A.
10. Section 106.6 Acceptance, (2) Method D.
11. The combined aggregate gradation required for this item shall be classified as a 9.5mm "**fine graded "** mixture, (using the Primary Control Sieve control point) as defined in 703.09.
14. A mixture meeting the requirements of section 703.09 Grading 'D', with a minimum PGAB content of 6%, and the limits of Special Provision 401, Table 9 (Drives and Sidewalks) for PGAB content and gradation may be substituted for this item. A job mix formula shall be submitted to the department for approval.

16. Compaction of the new Hot Mix Asphalt Pavement will be obtained using a minimal roller train consisting of a **3-5 ton** vibratory roller. An approved release agent is required to ensure the mixture dose not adhere to hand tools, rollers, pavers, and truck bodies. The use of petroleum based fuel oils, or asphalt stripping solvents will not be permitted.
20. The Contractor may place the specified HMA pavement course, not to exceed 2 inch (50mm) compacted depth, over the full single travel lane width, for each production day. If this option is utilized the Contractor will be required to place a matching course of HMA over the adjacent section of travel lane before the end of the following calendar day. The Contractor will also be responsible for installing additional warning signage that clearly defines the centerline elevation differential hazard, as well as additional centerline delineation such as double RPM application, or temporary painted line. The Traffic Control Plan shall be amended to include this option and the additional requirements. All signs and traffic control devices will conform to Section 719.01, and Section 652, and will be installed to the work, at a maximum spacing of 0.50 mile [0.80 km] for the entire length of effected roadway section. On roadways with two-way traffic, the Contractor will be required to place the specified course over the full width of the mainline traveled way being paved prior to opening the sections to weekend or holiday traffic. If this option is utilized, all additional signing, labor, traffic control devices, or incidentals will not be paid for directly, will be considered incidental to the appropriate 652 items.
22. See Special Provision 401 – ¾ inch (20mm) Surface Treatment for project specifics.
25. The mill & fill section shall cover the entire travelway and extend 1 ft. onto the shoulder. See typical sections for more information.

Tack Coat

A tack coat of emulsified asphalt, RS-1, Item 409.15 shall be applied to any existing pavement at a rate of approximately 0.025 gal/yd², and on milled pavement approximately 0.05 gal/yd² prior to placing a new course. A fog coat of emulsified asphalt shall be applied between shim /base courses and the surface course, at a rate not to exceed 0.025 gal/yd². Tack used between layers of pavement will be paid for at the contract unit price for Item 409.15 Bituminous Tack Coat.

SPECIAL PROVISION
SECTION 504
CONCRETE PIPE TIES

Description This work shall consist of furnishing and installing concrete pipe ties in conformance with the Standard Details.

Materials All materials shall meet the requirements shown in the Standard Details.

Method of Measurement Concrete pipe ties shall be measured per Group (2 ties per Group).

Basis of Payment The accepted quantity of concrete pipe ties will be paid for at the contract unit price per Group. Such payment will be full compensation for furnishing, installing, and all other necessary incidentals for satisfactory completion of the work. Any grout or mortar necessary to repair chipping shall be incidental to the installation of the pipe ties.

Pay Item	Pay Unit
504.07 Concrete Pipe Ties	Group

SPECIAL PROVISION
SECTION 606
GUARDRAIL

606.01 Description This work shall consist of furnishing and installing guardrail components in accordance with these specifications and in reasonably close conformity with the lines and grades shown on the plans or as established. The types of guardrail are designated as follows:

Type 3-Galvanized steel "w" beam, wood posts or galvanized steel posts.
Type 3a-Galvanized steel "w" beam, wood posts, wood or composite offset blocks.
Type 3aa-Corrosion resistant steel "w" beam, wood posts, wood or composite offset blocks.
Type 3b-Galvanized steel "w" beam, galvanized steel posts, galvanized steel offset blocks.
Type 3c-Galvanized steel "w" beam, wood posts or galvanized steel posts, wood or composite offset blocks.
Type 3d-Galvanized steel "w" beam, galvanized steel posts, wood or composite offset blocks.
Thrie Beam-Galvanized steel thrie beam, wood posts or galvanized steel posts, wood or composite offset blocks.

Median barriers shall consist of two beams of the above types, mounted on single posts. Except for thrie beam, median barriers may include rub rails when called for.

Bridge mounted guardrail shall consist of furnishing all labor, materials, and equipment necessary to install guardrail as shown on the plans. This work shall also include drilling for and installation of offset blocks if specified, and incidental hardware necessary for satisfactory completion of the work.

Remove and Reset and Remove, Modify, and Reset guardrail shall consist of removing the existing designated guardrail and resetting in a new location as shown on the plans or directed by the Resident. Remove, Modify, and Reset guardrail and Modify guardrail include the following guardrail modifications: Removing plate washers at all posts, except at anchorage assemblies as noted on the Standard Details, Adding offset blocks, and other modifications as listed in the Construction Notes or General Notes. Modifications shall conform to the guardrail Standard Details.

Bridge Connection shall consist of the installation and attachment of beam guardrail to the existing bridge. This work shall consist of constructing a concrete end post or modifying an existing endpost as required, furnishing, and installing a terminal connector, necessary hardware, and incidentals required to complete the work as shown on the plans. Bridge Transition shall consist of a bridge connection and furnishing and installing guardrail components as shown in the Standard Details.

606.02 Materials Materials shall meet the requirements specified in the following Sections of Division 700 - Materials:

Timber Preservative	708.05
Metal Beam Rail	710.04
Guardrail Posts	710.07
Guardrail Hardware	710.08

Guardrail components shall meet the applicable standards of "A Guide to Standardized Highway Barrier Hardware" prepared and approved by the AASHTO-AGC-ARTBA Joint Cooperative Committee, Task Force 13 Report.

Posts for underdrain delineators shall be “U” channel steel, 2.44m [8 ft] long, 3.72 kg/m [2 ½ lb/ft] minimum and have 9.5 mm [3/8 in] round holes, 25 mm [1 in] center to center for a minimum distance of 610 mm [2 ft] from the top of the post.

Reflectorized Flexible Guardrail Markers shall be mounted on all guardrails. A marker shall be mounted onto guardrail posts at the flared end treatment’s terminal and its tangent point, both at the leading and trailing ends of each run of guardrail. The marker’s flexible posts shall be grey with either silver-white or yellow reflectors (to match the edge line striping) at the tangents, red at leading ends, and green at trailing ends. Whenever the end treatment is not flared, markers will only be required at the end treatment’s terminal. These shall be red or green as appropriate. Markers shall be installed on the protected side of guardrail posts unless otherwise approved by the Resident. Reflectorized flexible guardrail markers shall be from the Maine DOT’s Approved Product List of Guardrail Material. The marker shall be grey, flexible, durable, and of a non-discoloring material to which 75 mm [3 in] by 225 mm [9 in] reflectors shall be applied, and capable of recovering from repeated impacts. Reflective material shall meet the requirements of Section 719.01 for ASTM D 4956 Type III reflective sheeting. The marker shall be secured to the guardrail post with two fasteners, as shown in the Standard Details.

Reflectorized beam guardrail (“butterfly”-type) delineators shall be mounted on all “w”-beam guardrail. The delineators shall be mounted within the guardrail beam at guardrail posts. Delineators shall be fabricated from high-impact, ultraviolet & weather resistant thermoplastic. Reflectorized beam guardrail delineators shall be placed at approximately 20 m [62.5 ft] intervals or every tenth post on tangents and at approximately 10 m [31.25 ft] intervals or every fifth post on curves. Exact locations of the delineators shall be as directed by the Resident. On divided highways, the left hand delineators shall be yellow and the right hand delineators shall be silver/white. On two directional highways, the right hand side shall be silver/white and no reflectorized delineator used on the left. All reflectors shall have reflective sheeting applied to only one side of the delineator facing the direction of traffic as shown in the Standard Detail 606(07). Reflectorized sheeting for guardrail delineators shall meet the requirements of Section 719.01.

Single wood post shall be of cedar, white oak, or tamarack, well seasoned, straight, and sound and have been cut from live trees. The outer and inner bark shall be removed and all knots trimmed flush with the surface of the post. Posts shall be uniform taper and free of kinks and bends.

Single steel post shall conform to the requirements of Section 710.07 b.

Single steel pipe post shall be galvanized, seamless steel pipe conforming to the requirements of ASTM A120, Schedule No. 40, Standard Weight.

Acceptable multiple mailbox assemblies shall be listed on the Department’s Approved Products List and shall be NCHRP 350 tested and approved.

The Guardrail 350 Flared Terminal shall be a terminal with a 1.2 m [4 ft] offset as shown in the Manufacturer's installation instructions.

Existing materials damaged or lost during adjusting, removing and resetting, or removing, modifying, and resetting, shall be replaced by the Contractor without additional compensation. Existing guardrail posts and guardrail beams found to be unfit for reuse shall be replaced when directed by the Resident.

606.03 Posts Posts for guardrail shall be set plumb in holes or they may be driven if suitable driving equipment is used to prevent battering and distorting the post. When posts are driven through pavement, the damaged area around the post shall be repaired with approved bituminous patching. Damage to lighting and signal conduit and conductors shall be repaired by the Contractor.

When set in holes, posts shall be on a stable foundation and the space around the posts, backfilled in layers with suitable material, thoroughly tamped.

The reflectorized flexible guardrail markers shall be set plumb with the reflective surface facing the oncoming traffic. Markers shall be installed on the protected side of guardrail posts. Markers, which become bent or otherwise damaged, shall be removed and replaced with new markers.

Single wood posts shall be set plumb in holes and backfilled in layers with suitable material, thoroughly tamped. The Resident will designate the elevation and shape of the top. The posts, that are not pressure treated, shall be painted two coats of good quality oil base exterior house paint.

Single steel posts shall be set plumb in holes as specified for single wood posts or they may be driven if suitable driving equipment is used to prevent battering and distorting the post.

Additional bolt holes required in existing posts shall be drilled or punched, but the size of the holes shall not exceed the dimensions given in the Standard Details. Metal around the holes shall be thoroughly cleaned and painted with two coats of approved aluminum rust resistant paint. Holes shall not be burned.

606.04 Rails Brackets and fittings shall be placed and fastened as shown on the plans. Rail beams shall be erected and aligned to provide a smooth, continuous barrier. Beams shall be lapped with the exposed end away from approaching traffic.

End assemblies shall be installed as shown on the plans and shall be securely attached to the rail section and end post.

All bolts shall be of sufficient length to extend beyond the nuts but not more than 13 mm [½ in]. Nuts shall be drawn tight.

Additional bolt holes required in existing beams shall be drilled or punched, but the size of the holes shall not exceed the dimensions given in the Standard Details. Metal around the holes shall be thoroughly cleaned and painted with two coats of approved aluminum rust resistant paint. Holes shall not be burned.

606.045 Offset Blocks The same offset block material is to be provided for the entire project unless otherwise specified.

606.05 Shoulder Widening At designated locations the existing shoulder of the roadway shall be widened as shown on the plans. All grading, paving, seeding, and other necessary work shall be in accordance with the Specifications for the type work being done.

606.06 Mail Box Post Single wood post shall be installed at the designated location for the support of the mailbox. The multiple mailbox assemblies shall be installed at the designated location in accordance with the Standard Details and as recommended by the Manufacturer. Attachment of the mailbox to the post will be the responsibility of the home or business owner.

606.07 Abraded Surfaces All galvanized surfaces of new guardrail and posts, which have been abraded so that the base metal is exposed, and the threaded portions of all fittings and fasteners and cut ends of bolts shall be cleaned and painted with two coats of approved rust resistant paint.

606.08 Method of Measurement Guardrail will be measured by the meter [linear foot] from center to center of end posts along the gradient of the rail except where end connections are made to masonry or steel structures, in which case measurement will be as shown on the plans.

Terminal section, low volume end, NCHRP 350 end treatments, reflectorized flexible guardrail marker, terminal end, bridge transition, bridge connection, multiple mailbox post, and single post will be measured by each unit of the kind specified and installed.

Widened shoulder will be measured as a unit of grading within the limits shown on the plans.

Excavation in solid rock for placement of posts will be measured by the cubic meter [cubic yard] determined from the actual depth of the hole and a hypothetical circle diameter of 600 mm [2 ft].

606.09 Basis of Payment The accepted quantities of guardrail will be paid for at the contract unit price per meter [linear foot] for the type specified, complete in place. Reflectorized beam guardrail (“butterfly”-type) delineators will not be paid for directly, but will be considered incidental to guardrail items. Terminal section, buffer end, NCHRP 350 end treatment, bridge connection, single post and reflectorized flexible guardrail markers will be paid for at the contract unit price each for the kind specified complete in place.

NCHRP 350 end treatments and low volume guardrail ends will be paid for at the contract price each, complete in place which price shall be full payment for furnishing and installing all components including the terminal section, posts, offset blocks, "w" beam, cable foundation posts, plates and for all incidentals necessary to complete the installation within the limits as shown on the Standard Details or the Manufacturer’s installation instructions. Each end treatment will be clearly marked with the manufacturers name and model number to facilitate any future needed repair. Such payment shall also be full compensation for furnishing all material, excavating, backfilling holes, assembling, and all incidentals necessary to complete the work, except that for excavation for posts or anchorages in solid ledge rock, payment will be made under Pay Item 206.07. Type III Retroreflective Adhesive Sheeting

shall be applied to the approach buffer end sections and sized to substantially cover the end section. On all roadways, the ends shall be marked with alternating black and retroreflective yellow stripes. The stripes shall be 75 mm [3 in] wide and sloped down at an angle of 45 degrees toward the side on which traffic is to pass the end section. Guardrail 350 flared terminal shall also include a set of installation drawings supplied to the Resident.

Anchorages to bridge end posts will be part of the bridge work. Connections thereto will be considered included in the unit bid price for guardrail.

Guardrail to be placed on a radius of curvature of 45 m [150 ft] or less will be paid for under the designated radius pay item for the type guardrail being placed.

Widened shoulder will be paid for at the contract unit price each complete in place and will be full compensation for furnishing and placing, grading and compaction of aggregate subbase and any required fill material.

Adjust guardrail will be paid for at the contract unit price per meter and will be full compensation for adjusting to grade. Payment shall also include adjusting terminal end treatments where required.

Modify guardrail will be paid for at the contract unit price per meter and will be full compensation for furnishing and installing offset blocks, additional posts, and other specified modifications; removing, modifying, installing, and adjusting to grade existing posts and beams; removing plate washers and backup plates, and all incidentals necessary to complete the work. Payment shall also include removing and resetting terminal ends where required.

Remove and Reset guardrail will be paid for at the contract unit price per meter and will be full compensation for removing, transporting, storing, reassembling all parts, necessary cutting, furnishing new parts when necessary, reinstalling at the new location, and all other incidentals necessary to complete the work. Payment shall also include removing and resetting terminal ends when required. No payment will be made for guardrail removed, but not reset and all costs for such removal shall be considered incidental to the various contract pay items.

Remove, Modify, and Reset guardrail will be paid for at the contract unit price per meter and will be full compensation for the requirements listed in Modify guardrail and Remove and Reset guardrail.

Bridge Connections will be paid for at the contract unit price each. Payment shall include, attaching the connection to the endpost including furnishing and placing concrete and reinforcing steel necessary to construct new endposts if required, furnishing and installing the terminal connector, and all miscellaneous hardware, labor, equipment, and incidentals necessary to complete the work.

Bridge Transitions will be paid for at the contract unit price each. Payment shall include furnishing and installing the thrie beam or “w”-beam terminal connector, doubled beam section, and transition section, where called for, posts, hardware, precast concrete transition curb, and any other necessary materials and labor, including the bridge connection as stated in the previous paragraph.

Payment will be made under:

	Pay Item	Pay Unit
606.15	Guardrail Type 3a-Single Rail	meter [Linear Foot]
606.151	Guardrail Type 3aa-Single Rail	meter [Linear Foot]
606.17	Guardrail Type 3b-Single Rail	meter [Linear Foot]
606.1721	Bridge Transition - Type I	Each
606.1722	Bridge Transition - Type II	Each
606.1731	Bridge Connection - Type I	Each
606.1732	Bridge Connection - Type II	Each
606.178	Guardrail Beam	meter [Linear foot]
606.18	Guardrail Type 3b - Double Rail	meter [Linear foot]
606.19	Guardrail Type 3a - 4.5 m [15 ft] radius and less	meter [Linear Foot]
606.191	Guardrail Type 3aa - 4.5 m [15 ft] radius and less	meter [Linear Foot]
606.20	Guardrail Type 3a - over 4.5 m [15 ft] radius	meter [Linear Foot]
606.201	Guardrail Type 3aa - over 4.5 m [15 ft] radius	meter [Linear Foot]
606.21	Guardrail Type 3b - 4.5 m [15 ft] radius and less	meter [Linear Foot]
606.22	Guardrail Type 3b - over 4.5 m [15 ft] radius	meter [Linear Foot]
606.23	Guardrail Type 3c - Single Rail	meter [Linear Foot]
606.2301	Guardrail Type 3c - Double Rail	meter [Linear Foot]
606.231	Guardrail Type 3c - 4.5 m [15 ft] radius and less	meter [Linear Foot]
606.232	Guardrail Type 3c - over 4.5 m [15 ft] radius	meter [Linear Foot]
606.24	Guardrail Type 3d - Single Rail	meter [Linear Foot]
606.2401	Guardrail Type 3d - Double Rail	meter [Linear Foot]
606.241	Guardrail Type 3d - 4.5 m [15 ft] radius and less	meter [Linear Foot]
606.242	Guardrail Type 3d - over 4.5 m [15 feet] radius	meter [Linear Foot]
606.25	Terminal Connector	Each
606.257	Terminal Connector - Thrie Beam	Each
606.265	Terminal End-Single Rail - Galvanized Steel	Each
606.266	Terminal End-Single Rail - Corrosion Resistant Steel	Each
606.275	Terminal End-Double Rail - Galvanized Steel	Each
606.276	Terminal End-Double Rail - Corrosion Resistant Steel	Each
606.353	Reflectorized Flexible Guardrail Marker	Each
606.354	Remove and Reset Reflectorized Flexible Guardrail Marker	Each
606.356	Underdrain Delineator Post	Each
606.358	Guardrail, Modify, Type 3b to 3c	meter [Linear Foot]
606.3581	Guardrail, Modify Existing to Type 3d	meter [Linear Foot]
606.362	Guardrail, Adjust	meter [Linear Foot]
606.365	Guardrail, Remove, Modify, and Reset, Type 3b to 3c	meter [Linear Foot]
606.3651	Guardrail, Remove, Modify, and Reset Existing to Type 3d	meter [Linear Foot]
606.366	Guardrail, Removed and Reset, Type 3c	meter [Linear Foot]
606.367	Replace Unusable Existing Guardrail Posts	Each
606.47	Single Wood Post	Each
606.48	Single Galvanized Steel Post	Each
606.50	Single Steel Pipe Post	Each

606.51	Multiple Mailbox Support	Each
606.55	Guardrail Type 3 - Single Rail	meter [Linear Foot]
606.551	Guardrail Type 3 - Single Rail with Rub Rail	meter [Linear Foot]
606.56	Guardrail Type 3 - Double Rail	meter [Linear Foot]
606.561	Guardrail Type 3 - Double Rail with Rub Rail	meter [Linear Foot]
606.568	Guardrail, Modify Type 3c -Double Rail	meter [Linear Foot]
606.59	Guardrail Type 3 - 4.5 m [15 ft] radius and less	meter [Linear Foot]
606.60	Guardrail Type 3 - over 4.5 m [15 ft] radius	meter [Linear Foot]
606.63	Thrie Beam Rail Beam	meter [Linear Foot]
606.64	Guardrail Thrie Beam - Double Rail	meter [Linear Foot]
606.65	Guardrail Thrie Beam - Single Rail	meter [Linear Foot]
606.66	Terminal End Thrie Beam	Each
606.70	Transition Section - Thrie Beam	Each
606.71	Guardrail Thrie Beam - 4.5 m [15 ft] radius and less	meter [Linear Foot]
606.72	Guardrail Thrie Beam - over 4.5 m [15 ft] radius	meter [Linear Foot]
606.73	Guardrail Thrie Beam - Single Rail Bridge Mounted	meter [Linear Foot]
606.74	Guardrail Type 3 - Single Rail Bridge Mounted	meter [Linear Foot]
606.753	Widen Shoulder for Low Volume Guardrail End - Type 3	Each
606.754	Widen Shoulder for Guardrail 350 Flared Terminal	Each
606.78	Low Volume Guardrail End - Type 3	Each
606.79	Guardrail 350 Flared Terminal	Each

1. Reflectorized Flexible Guardrail Markers shall be from Maine DOT's Approved Product List of Guardrail Material.

2. Installation:
   a. Each bolt-hole diameter shall be the bolt diameter + 1/16".
   b. Wood post attachment - attach marker with 2, 5/16" diameter zinc-coated lag bolts, having 2" of embedment into wood post.
   c. Steel post attachment - attach marker with 2, 1/4" diameter zinc-coated bolt, washer and nut assemblies, having 1/2" of bolt extension behind steel post.
   d. When provided by the marker manufacturer, a stiffening pipe shall be inserted into the base of the marker prior to drilling bolt holes and shall remain in-place.

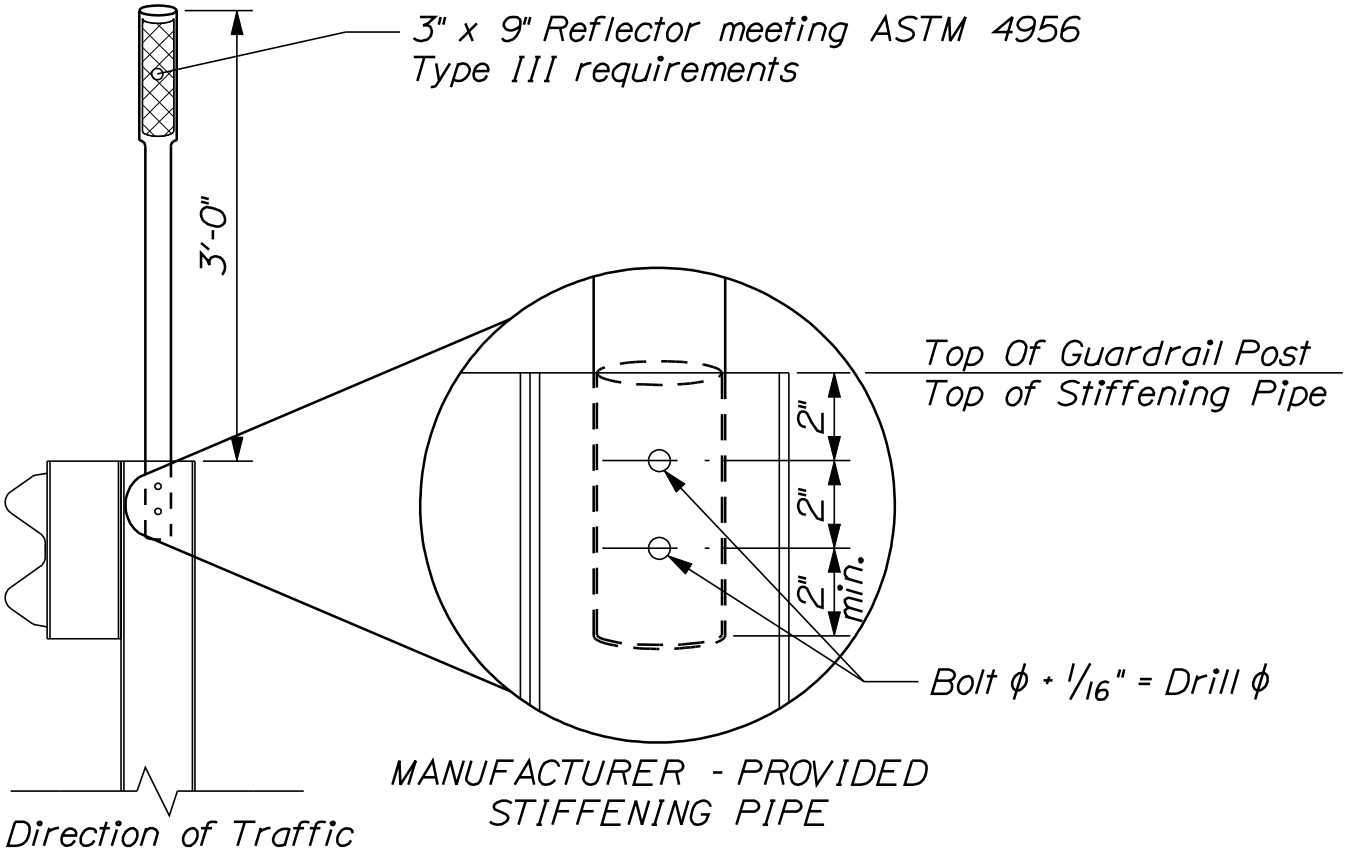

REFLECTORIZED FLEXIBLE GUARDRAIL MARKER DETAILS

606(34)

February 4, 2011
Supersedes February 27, 2003

SPECIAL PROVISION
SECTION 652
MAINTENANCE OF TRAFFIC

Approaches Approach signing shall include the following signs as a minimum. Field conditions may warrant the use of additional signs as determined by the Resident.

Road work Next x Miles
Road work 500 Feet
End Road Work

Work Area At each work site, signs and channelizing devices shall be used as directed by the Resident. Signs include:

Road Work xxxx [1]
One Lane Road Ahead
Flagger Sign

Other typical signs include:

Be Prepared to Stop
Low Shoulder
Bump
Pavement Ends

The above lists of Approach signs and Work Area signs are representative of the contract Requirements. Other sign legends may be required.

The Contractor shall conduct their operations in such a manner that the roadway will not be restricted to one lane for more than 800 m [2,500 ft] at each work area. To encourage quality paving in warm-weather conditions, the length can be extended to 4,000 ft depending on the traffic impacts. Where more than one work area restricts traffic to one lane operation, these work areas shall be separated by at least 1.6 km [1 mile] of two way operation.

Temporary Centerline A temporary centerline shall be placed each day on all new pavement to be used by traffic. The temporary centerline, when specified of reflectorized traffic paint, shall conform to the standard marking patterns used for permanent markings.

Failure to apply a temporary centerline daily will result in a Traffic Control Violation and suspension of paving operations until temporary markers are applied to all previously placed pavement.

[1] "Road Work Ahead" to be used in mobile operations and "Road Work xx ft" to be used in stationary operations as directed by the Resident.

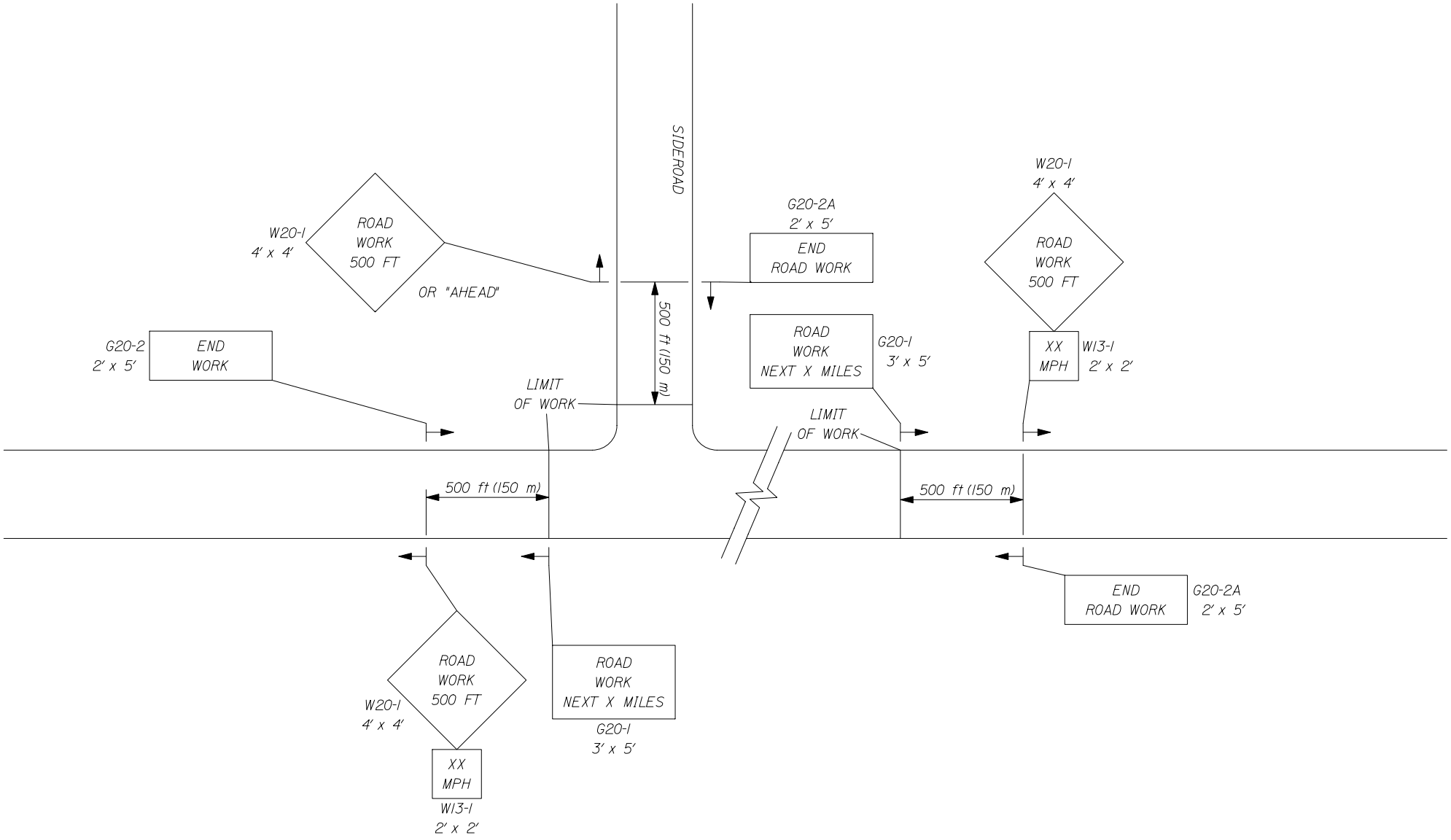

1 of 3

-- PROJECT APPROACH SIGNING --
TWO WAY TRAFFIC

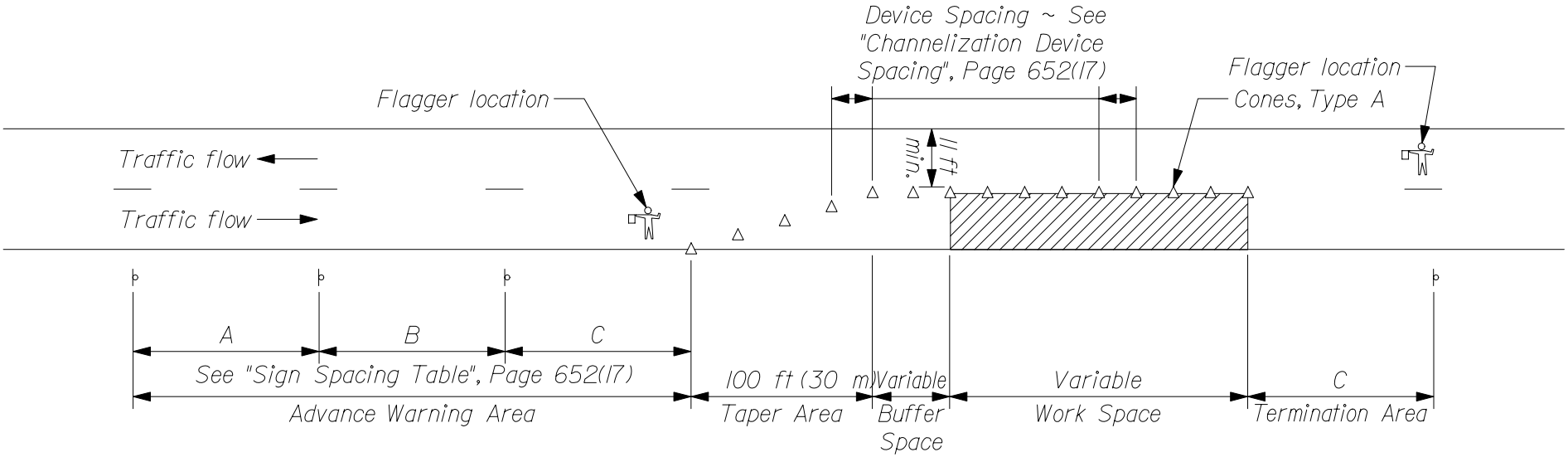

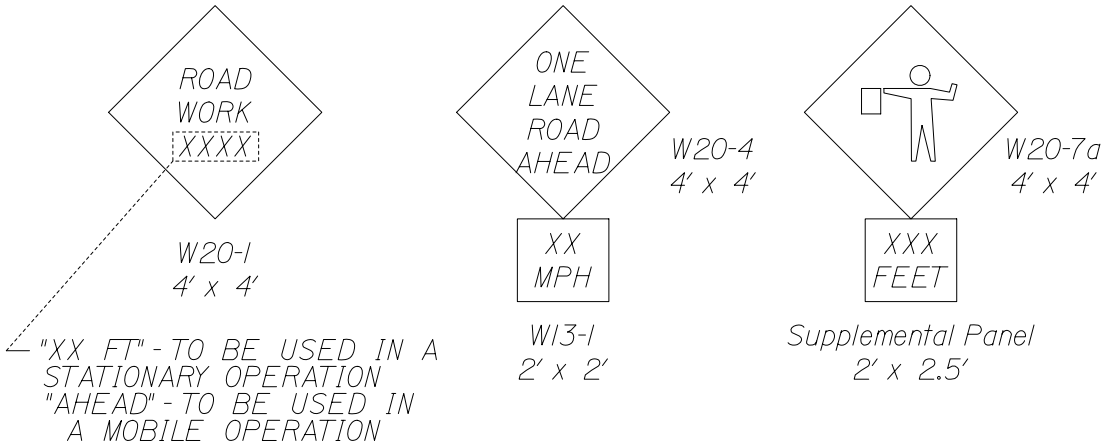

TYPICAL APPLICATION: TWO - WAY, TWO LANE ROADWAY, CLOSING ONE LANE USING FLAGGERS

TYPE OF TAPER	TAPER LENGTH (L)*
Merging Taper	at least L
Shifting Taper	at least 0.5L
Shoulder Taper	at least 0.33L
One-Lane, Two-Way Traffic Taper	100 ft (30 m) maximum
Downstream Taper	100 ft (30 m) per lane

* Formulas for L are as follows:

For speed limits of 40 mph (60 km/h) or less:

$L = \frac{WS^2}{60}$ $\quad (L = \frac{WS^2}{155})$

For speed limits of 45 mph (70 km/h) or greater:

$L = WS$ $\quad (L = \frac{WS}{1.6})$

* Formulas for L are as follows:

A minimum of 5 channelization devices shall be used in the taper.

CHANNELIZATION DEVICE SPACING

The spacing of channelization devices shall not exceed a distance equal to 1.0 times the speed limit in mph when used for taper channelization, and a distance in feet of 2.0 times the speed limit in mph when used for tangent channelization.

SIGN SPACING TABLE			
Road Type	Distance Between Signs**		
	A	B	C
Urban 30 mph (50 km/h) or less	100 (30)	100 (30)	100 (30)
Urban 35 mph (55 km/h) and greater	350 (100)	350 (100)	350 (100)
Rural	500 (150)	500 (150)	500 (150)
Expressway / Urban Parkway	2,640 (800)	1,500 (450)	1000 (300)

**Distances are shown in feet (meters).

GENERAL NOTES;

1. Final placement of signs and devices may be changed to fit field conditions as approved by the Resident.

SUGGESTED BUFFER ZONE LENGTHS

Speed (mph)	Length (feet)	Speed (mph)	Length (feet)
20	115	40	325
25	155	45	360
30	200	50	425
35	250	55	495

SPECIAL PROVISION
SECTION 652
MAINTENANCE OF TRAFFIC
(Traffic Control)

Failure by the contractor to follow the Contracts 652 Special Provisions and Standard Specification and/or The Manual on Uniform Traffic Control Devices (MUTCD) and/or The Contractors own Traffic Control Plan will result in a violation letter and result in a reduction in payment as shown in the schedule below. The Department's Resident or any other representative of The Department reserves the right to suspend the work at any time and request a meeting to discuss violations and remedies. The Department shall not be held responsible for any delay in the work due to any suspension under this item. Any reduction in payment under this Special Provision will be in addition to forfeiting payment of maintenance of traffic control devices for that day.

ORIGINAL CONTRACT AMOUNT				
From	**Up to and**	**Amount of Penalty Damages per Violation**		
More Than	**Including**	**1st**	**2nd**	**3rd & Subsequent**
$0	$1,000,000	$250	$500	$1,250
$1,000,000	$2,000,000	$500	$1,000	$2,500
$2,000,000	$4,000,000	$1,000	$2,000	$5,000
$4,000,000	and more	$2,000	$4,000	$10,000

April 17, 2007
Supersedes May 10, 2006

SPECIAL PROVISION
SECTION 652
MAINTENANCE OF TRAFFIC
Construction Sign Sheeting Material

Super high intensity fluorescent retroreflective sheeting, ASTM D 4956 - Type VII, Type VIII, or Type IX (prismatic), is required for all construction signs.

SPECIAL PROVISION
SECTION 656
Temporary Soil Erosion and Water Pollution Control

The following is added to Section 656 regarding Project Specific Information and Requirements. All references to the Maine Department of Transportation Best Management Practices for Erosion and Sedimentation Control (a.k.a. Best Management Practices manual or BMP Manual) are a reference to the latest revision of said manual. The latest version is dated "February 2008" and is available at:

http://www.maine.gov/mdot/environmental-office-homepage/surface-water-resources.php

Procedures specified shall be according to the BMP Manual unless stated otherwise.

Project Specific Information and Requirements

The following information and requirements apply specifically to this Project. The temporary soil erosion and water pollution control measures associated with this work shall be addressed in the Soil Erosion and Water Pollution Control Plan (SEWPCP.)

1) This project is in the Penobscot River watershed, which is listed as Class B. The Marsh Stream is located within the Distinct Population Segment (DPS) and Critical Habitat (CH) for Atlantic Salmon, and is considered **SENSITIVE** in accordance with the BMP Manual. The Contractor's SEWPCP shall comply with Section II, Standards and Commitments in the BMP Manual.

2) Newly disturbed earth shall be mulched by the end of each workday. Mulch shall be maintained on a daily basis.

3) The SEWPCP shall describe the location and method of temporary erosion and sediment control for existing and proposed catch basins, outlet areas, culvert inlets and culvert outlets.

4) The Contractors SEWPCP shall identify how water will be managed during the course of construction activities. Specific water management activities to be addressed shall include type and location of cofferdams, and the type, location and size of sedimentation basins.

5) Dust control items other than those under *Standard Specification, Section 637 Dust Control* , if applicable, shall be included in the plan.

6) Permanent slope stabilization measures shall be applied within one week of the last soil disturbance.

7) Permanent seeding shall be done in accordance with *Standard Specification, Section 618 - Seeding* unless the Contract states otherwise.

8) After November 1 the Contractor shall use winter stabilization methods, such as Erosion Control Mix as specified in *Standard Specification, Section 619 - Mulch*. If required, spring procedures for permanent stabilization shall also be described in the plan. Use of this product for over-winter temporary erosion control will be incidental to the contract and be paid for as part of Pay Item 656.75.

SPECIAL PROVISION
SECTION 656
Temporary Soil Erosion and Water Pollution Control

9) All disturbed ditches shall be stabilized by the end of each workday. Stabilization shall be maintained on a daily basis.

10) Erosion control blanket shall be installed in the bottoms of all ditches except where a stone lining is planned. Seed shall be applied prior to the placement of the blanket.

11) Demolition debris (including debris from wearing surface removal, saw cut slurry, dust, etc.) shall be contained and shall not be allowed to discharge to any resource. All demolition debris shall be disposed of in accordance with *Standard Specifications, Section 202.03 Removing Existing Superstructure, Structural Concrete, Railings, Curbs, Sidewalks and Bridges*. Containment and disposal of demolition debris shall be addressed in the Contractor's SEWPCP.

12) **CLEARING LIMIT LINES SHALL BE MINIMIZED.** Clearing shall be minimized as shown on the design plans.

13) The SEWPCP shall describe the containment method for removal of the existing structures, including installation of cofferdams and dewatering procedures.

15) If a cofferdam sedimentation basin is used, it shall be located in an upland area where the water can settle and sink into the ground or be released slowly to the resource in a manner that will not cause erosion. The location of such a cofferdam sedimentation basin shall be addressed in the SEWPCP.

16) Prior to release to a natural resource, any impounded water that has been in contact with concrete placed during construction must have a pH between 6.0 and 8.5, must be within one pH unit of the background pH level of the resource and shall have a turbidity no greater than the receiving resource. This requirement is applicable to concrete that is placed or spilled (including leakage from forms) as well as indirect contact via tools or equipment.

17) The Contractor shall be responsible for monitoring pH with a calibrated meter accurate to 0.1 units. A record of pH measurements shall be kept in the Environmental Coordinator's log (*Standard Specification, Section 656.4.4 Inspection and Record Keeping*.)

SPECIAL PROVISION
SECTION 703
AGGREGATES

The Standard Specifications, Revision of 2002 Section 700 - Materials, Subsection 703.09 HMA Mixture Composition has been revised as follows:

703.09 HMA Mixture Composition The coarse and fine aggregate shall meet the requirements of Section 703.07. The several aggregate fractions for mixtures shall be sized, graded, and combined in such proportions that the resulting composite blends will meet the grading requirements of the following tables or as otherwise specified.

TABLE 1: COMPOSITION OF MIXTURES - CONTROL POINTS

SIEVE SIZE	GRADING			
	TYPE 19 mm	TYPE 12.5 mm	TYPE 9.5 mm	TYPE 4.75 mm
	PERCENT BY WEIGHT PASSING - COMBINED AGGREGATE			
37.5 mm				
25 mm	100			
19 mm	90-100	100		
12.5 mm	-90	90-100	100	100
9.5 mm	-	-90	90-100	95-100
4.75 mm	-	-	-90	80-100
2.36 mm	23-49	28-58	32-67	40 - 80
1.18 mm	-	-	-	-
600 µm	-	-	-	-
300 µm	-	-	-	-
75 µm	**2-7**	**2-7**	**2-7**	**2-7**
SIEVE SIZE	RESTRICTED ZONES			
	TYPE 19 mm [¾ in]	TYPE 12.5 mm [½ in]	*TYPE 9.5 mm [⅜ in]	TYPE 4.75 mm [#40]
	PERCENT BY WEIGHT PASSING - COMBINED AGGREGATE			
37.5 mm [1½ in]	-	-	-	-
25 mm [1 in]	-	-	-	-
19 mm [¾ in]	-	-	-	-
12.5 mm [½ in]	-	-	-	-
9.5 mm [⅜ in]	-	-	-	-
4.75 mm [No. 4]	-	-	-	-
2.36 mm [No. 8]	34.6	39.1	47.2	-
1.18 mm [No. 16]	22.3-28.3	25.6-31.6	31.6-37.6	-
600 µm [No. 30]	16.7-20.7	19.1-23.1	23.5-27.5	-
300 µm [No. 50]	13.7	15.5	18.7	-
75 µm [No. 200]	-	-	-	-

* The restricted zone is presented for information and definition of "Fine" 9.5mm mixes only.

STANDARD DETAIL UPDATES

Standard Details and Standard Detail updates are available at:
http://www.maine.gov/mdot/contractor-consultant-information/ss_standard_details_updates.php

Detail #	Description	Revision Date
203(03)	Backslope Rounding	1/29/08
502(03)	Concrete Curb - Bituminous Wearing Surface	8/08/11
502(03)A	Concrete Curb - Concrete Wearing Surface	2/2/09
502(07)	Precast Concrete Deck Panels - Layout Plan	2/2/09
502(07)A	Precast Concrete Deck Panels - Layout Plan	2/2/09
502(08)	Precast Concrete Deck Panels - Panel Plan	2/2/09
502(09)	Precast Concrete Deck Panels - Blocking Detail	2/2/09
502(10)	Precast Concrete Deck Panels	2/2/09
502(11)	Precast Concrete Deck Panels	2/2/09
502(12)	Precast Concrete Deck Panels - Notes	10/28/09
502(12)A	Precast Concrete Deck Panels - Notes	2/2/09
504(15)	Diaphragms	5/19/11
504(21)	Tension Flange Connection for Diaphragm and Cross Frames	10-11-12
504(22)	Diaphragm & Crossframe Notes	10/11/12
504(23)	Hand-Hold Details	12/08/05
502(24)	Hand-Hold Details	10/11/12
507(04)	Steel Bridge Railing	2/05/03
507(09)	Steel Bridge Railing	5/19/11

507(09)A	Steel Bridge Railing	5/19/11
526(06)	Permanent Concrete Barrier	2/2/09
526(08)	Permanent Concrete Barrier – Type IIIA	10/07/10
526(08)A	Permanent Concrete Barrier – Type IIIA	12/07/10
526(13)	Permanent Concrete Barrier – Type IIIB	2/2/09
526(14)	Permanent Concrete Barrier – Type IIIB	2/2/09
526(21)	Concrete Transition Barrier	2/2/09
526(33)	Concrete Transition Barrier	8/18/03
526(39)	Texas Classic Rail – Between Window	2/2/09
526(40)	Texas Classic Rail – Through Window	2/2/09
526(41)	Texas Classic Rail – Through Post	2/2/09
526(42)	Texas Classic Rail – Through Nose	2/2/09
535(01)	Precast Superstructure - Shear Key	10/12/06
535(02)	Precast Superstructure - Curb Key & Drip Notch	5/20/08
535(03)	Precast Superstructure - Shear Key	12/5/07
535(04)	Precast Superstructure - Shear Key	12/05/07
535(05)	Precast Superstructure - Post Tensioning	5/20/08
535(06)	Precast Superstructure - Sections	10/12/06
535(07)	Precast Superstructure - Precast Slab & Box	10/12/06
535(08)	Precast Superstructure - Sections	10/12/06
535(09)	Precast Superstructure - Sections	10/12/06
535(10)	Precast Superstructure - Sections	10/12/06
535(11)	Precast Superstructure - Sections	10/12/06

535(12)	Precast Superstructure - Sections	10/12/06
535(13)	Precast Superstructure - Sections	10/12/06
535(14)	Precast Superstructure - Stirrups	10/12/06
535(15)	Precast Superstructure - Plan	10/12/06
535(16)	Precast Superstructure - Reinforcing	10/12/06
535(17)	Precast Superstructure - Notes	12/05/07
604(01)	Catch Basins	11/16/05
604(05)	Type “A” & “B” Catch Basin Tops	11/16/05
604(06)	Type “C” Catch Basin Tops	11/16/05
604(07)	Manhole Top “D”	11/16/05
604(09)	Catch Basin Type “E”	11/16/05
606(02)	Multiple Mailbox Support	11/16/05
606(03)	Guardrail Standard Detail	9/19/12
606(07)	Reflectorized Beam Guardrail Delineator Details	11/16/05
606(20)	Guardrail - Type 3 - Single Rail - Bridge Mounted	2/2/09
606(21)	Guardrail - Type 3 - Single Rail - Bridge Mounted	2/2/09
606(22)	Guardrail - Type 3 - Single Rail - Bridge Mounted	2/2/09
606(23)	Guardrail - Type 3 - Single Rail - Bridge Mounted	2/2/09
609(03)	Curb Type 3	6/27/06
609(06)	Vertical Bridge Curb	2/12/09
609(07)	Curb Type 1	6/27/06

609(08)	Precast Concrete Transition Curb	2/2/09
610(02)	Stone Scour Protection	8/9/11
610(03)	Stone Scour Protection	5/19/11
610(04)	Stone Scour Protection	5/19/11
620(05)	Geotextile Placement for Protection of Slopes Adjactent to Stream & Tidal Areas	5/19/11
626(09)	Electrical Junction Box for Traffic Signals and Lighting	8/27/10
645(06)	H-Beam Posts – Highway Signing	7/21/04
645(09)	Installation of Type II Signs	7/21/04
801(01)	Drives on Sidewalk Sections	12/13/07
801(02)	Drives on Non-Sidewalk Sections	12/13/07

SUPPLEMENTAL SPECIFICATION

(Corrections, Additions, & Revisions to Standard Specifications - Revision of December 2002)

SECTION 101
CONTRACT INTERPRETATION

101.2 Definitions

Closeout Documentation Replace the sentence "A letter stating the amount….. DBE goals." with "DBE Goal Attainment Verification Form"

Add "Environmental Information Hazardous waste assessments, dredge material test results, boring logs, geophysical studies, and other records and reports of the environmental conditions. For a related provision, see Section 104.3.14 - Interpretation and Interpolation."

Add "Fabrication Engineer The Department's representative responsible for Quality Assurance of pre-fabricated products that are produced off-site."

Geotechnical Information Replace with the following: "Boring logs, soil reports, geotechnical design reports, ground penetrating radar evaluations, seismic refraction studies, and other records of subsurface conditions. For a related provision, see Section 104.3.14 - Interpretation and Interpolation."

SECTION 102
DELIVERY OF BIDS

102.7.1 Location and Time Add the following sentence "As a minimum, the Bidder will submit a Bid Package consisting of the Notice to Contractors, the completed Acknowledgement of Bid Amendments form, the completed Schedule of Items, 2 copies of the completed Agreement, Offer, & Award form, a Bid Bond or Bid Guarantee, and any other Certifications or Bid Requirements listed in the Bid Book."

102.11.1 Non-curable Bid Defects Replace E. with "E. The unit price and bid amount is not provided or a lump sum price is not provided or is illegible as determined by the Department."

SECTION 103
AWARD AND CONTRACTING

103.3.1 Notice and Information Gathering Change the first paragraph to read as follows: "After Bid Opening and as a condition for Award of a Contract, the Department may require an Apparent Successful Bidder to demonstrate to the Department's satisfaction that the Bidder is responsible and qualified to perform the Work."

SECTION 104
GENERAL RIGHTS AND RESPONSIBILITIES

104.3.14 Interpretation and Interpolation In the first sentence, change "…and Geotechnical Information." to "…Environmental Information, and Geotechnical Information."

SECTION 105
GENERAL SCOPE OF WORK

Delete the entire Section 105.6 and replace with the following:

105.6.1 Department Provided Services The Department will provide the Contractor with the description and coordinates of vertical and horizontal control points, set by the Department, within the Project Limits, for full construction Projects and other Projects where survey control is necessary. For Projects of 1,500 feet in length, or less: The Department will provide three points. For Projects between 1,500 and 5,000 feet in length: The Department will provide one set of two points at each end of the Project. For Projects in excess of 5,000 feet in length, the Department will provide one set of two points at each end of the Project, plus one additional set of two points for each mile of Project length. For non-full construction Projects and other Projects where survey control is not necessary, the Department will not set any control points and, therefore, will not provide description and coordinates of any control points. Upon request of the Contractor, the Department will provide the Department's survey data management software and Survey Manual to the Contractor, or its survey Subcontractor, for the exclusive use on the Department's Projects.

105.6.2 Contractor Provided Services Utilizing the survey information and points provided by the Department, described in Subsection 105.6.1, Department Provided Services, the Contractor shall provide all additional survey layout necessary to complete the Work. This may include, but not be limited to, reestablishing all points provided by the Department, establishing additional control points, running axis lines, providing layout and maintenance of all other lines, grades, or points, and survey quality control to ensure conformance with the Contract. The Contractor is also responsible for providing construction centerline, or close reference points, for all Utility Facilities relocations and adjustments as necessary to complete the Work. When the Work is to connect with existing Structures, the Contractor shall verify all dimensions before proceeding with the Work. The Contractor shall employ or retain competent engineering and/or surveying personnel to fulfill these responsibilities.

The Contractor must notify the Department of any errors or inconsistencies regarding the data and layout provided by the Department as provided by Section 104.3.3 - Duty to Notify Department If Ambiguities Discovered.

105.6.2.1 Survey Quality Control The Contractor is responsible for all construction survey quality control. Construction survey quality control is generally defined as, first, performing initial field survey layout of the Work and, second, performing an independent check of the initial layout using independent survey data to assure the accuracy of the initial layout; additional iterations of checks may be required if significant discrepancies are discovered in this process. Construction survey layout quality control also requires written documentation of the layout process such that the process can be followed and repeated, if necessary, by an independent survey crew.

105.6.3 Survey Quality Assurance It is the Department's prerogative to perform construction survey quality assurance. Construction survey quality assurance may, or may not, be performed by the Department. Construction survey quality assurance is generally defined as an independent check of the construction survey quality control. The construction survey

quality assurance process may involve physically checking the Contractor's construction survey layout using independent survey data, or may simply involve reviewing the construction survey quality control written documentation. If the Department elects to physically check the Contractor's survey layout, the Contractor's designated surveyor may be required to be present. The Department will provide a minimum notice of 48 hours to the Contractor, whenever possible, if the Contractor's designated surveyor's presence is required. Any errors discovered through the quality assurance process shall be corrected by the Contractor, at no additional cost to the Department.

105.6.4 Boundary Markers The Contractor shall preserve and protect from damage all monuments or other points that mark the boundaries of the Right-of-Way or abutting parcels that are outside the area that must be disturbed to perform the Work. The Contractor indemnifies and holds harmless the Department from all claims to reestablish the former location of all such monuments or points including claims arising from 14 MRSA § 7554-A. For a related provision, see Section 104.3.11 - Responsibility for Property of Others.

SECTION 106
QUALITY

106.4.3 Testing Change the first sentence in paragraph three from "…maintain records of all inspections and tests." to "…maintain original documentation of all inspections, tests, and calculations used to generate reports."

106.6 Acceptance Add the following to paragraph 1 of A: "This includes Sections 401 - Hot Mix Asphalt, 402 - Pavement Smoothness, and 502 - Structural Concrete - Method A - Air Content."

Add the following to the beginning of paragraph 3 of A: "For pay factors based on Quality Level Analysis, and"

106.7.1 Standard Deviation Method Add the following to F: "Note: In cases where the mean of the values is equal to either the USL or the LSL, then the PWL will be 50 regardless of the computed value of s."

Add the following to H: "Method C Hot Mix Asphalt: PF = [55 + (Quality Level *0.5)] * 0.01"

SECTION 107
TIME

107.3.1 General Add the following: "If a Holiday occurs on a Sunday, the following Monday shall be considered a Holiday. Sunday or Holiday work must be approved by the Department, except that the Contractor may work on Martin Luther King Day, President's Day, Patriot's Day, the Friday after Thanksgiving, and Columbus Day without the Department's approval."

107.7.2 Schedule of Liquidated Damages Replace the table of Liquidated Damages as follows:

From More Than	Up to and Including	Amount of Liquidated Damages per Calendar Day
$0	$100,000	$225

$100,000	$250,000	$350
$250,000	$500,000	$475
$500,000	$1,000,000	$675
$1,000,000	$2,000,000	$900
$2,000,000	$4,000,000	$1,000
$4,000,000	and more	$2,100

SECTION 108
PAYMENT

Remove Section 108.4 and replace with the following:

"108.4 Payment for Materials Obtained and Stored Acting upon a request from the Contractor and accompanied by bills or receipted bills, the Department will pay for all or part of the value of acceptable, non-perishable Materials that are to be incorporated in the Work, including Materials that are to be incorporated into the Work, not delivered on the Work site, and stored at places acceptable to the Department. Examples of such Materials include steel piles, stone masonry, curbing, timber and lumber, metal Culverts, stone and sand, gravel, and other Materials. The Department will not make payment on living or perishable Materials until acceptably planted in their final locations.

If payment for Materials is made to the Contractor based on bills, only, then the Contractor must provide receipted bills to the Department for these Materials within 14 days of the date the Contractor receives payment for the Materials. Failure of the Contractor to provide receipted bills for these Materials within 14 days of the dated the Contractor receives payment will result in the paid amount being withheld from the subsequent progress payment, or payments, until such time the receipted bills are received by the Department.

Materials paid for by the Department are the property of the Department, but the risk of loss shall remain with the Contractor. Payment for Materials does not constitute Acceptance of the Material. If Materials for which the Department has paid are later found to be unacceptable, then the Department may withhold amounts reflecting such unacceptable Materials from payments otherwise due the Contractor.

In the event of Default, the Department may use or cause to be used all paid-for Materials in any manner that is in the best interest of the Department."

SECTION 109
CHANGES

109.1.1 Changes Permitted Add the following to the end of the paragraph: "There will be no adjustment to Contract Time due to an increase or decrease in quantities, compared to those estimated, except as addressed through Contract Modification(s)."

109.1.2 Substantial Changes to Major Items Add the following to the end of the paragraph: "Contract Time adjustments may be made for substantial changes to Major Items when the change affects the Critical Path, as determined by the Department"

109.4.4 Investigation / Adjustment Third sentence, delete the words "subsections (A) - (E)"

109.5.1 Definitions - Types of Delays

B. Compensable Delay Replace (1) with the following; "a weather related Uncontrollable Event of such an unusually severe nature that a Federal Emergency Disaster is declared. The Contractor will only be entitled to an Equitable Adjustment if the Project falls within the geographic boundaries prescribed under the disaster declaration."

109.7.2 Basis of Payment Replace with the following: "Adjustments will be established by mutual Agreement based upon Unit or Lump Sum Prices. These agreed Unit or Lump Sum prices will be full compensation and no additions or mark-ups are allowed. If Agreement cannot be reached, the Contractor shall accept payment on a Force Account basis as provided in Section 109.7.5 - Force Account Work, as full and complete compensation for all Work relating to the Equitable Adjustment."

109.7.3 Compensable Items Delete this Section entirely.

109.7.4 Non-Compensable Items Replace with the following: "The Contractor is not entitled to compensation or reimbursement for any of the following items:

A. Total profit or home office overhead in excess of 15%,
B. ……."

109.7.5 Force Account Work

C. Equipment
Paragraph 2, delete sentence 1 which starts; "Equipment leased…."

Paragraph 6, change sentence 2 from "The Contractor may furnish…" to read "If requested by the Department, the Contractor will produce cost data to assist the Department in the establishment of such rental rate, including all records that are relevant to the Actual Costs including rental Receipts, acquisition costs, financing documents, lease Agreements, and maintenance and operational cost records."
Add the following paragraph; "Equipment leased by the Contractor for Force Account Work and actually used on the Project will be paid for at the actual invoice amount plus 10% markup for administrative costs."

Add the following section;

"F. Subcontractor Work When accomplishing Force Account Work that utilizes Subcontractors, the Contractor will be allowed a maximum markup of 5% for profit and overhead on the Subcontractor's portion of the Force Account Work. If the Department does not accept the Subcontractor quote, then the Subcontractor work will be subject to the Force Account provisions with a 5% markup for profit & overhead.."

SECTION 110
INDEMNIFICATION, BONDING, AND INSURANCE

Delete the entire Section 110.2.3 and replace with the following:

110.2.3 Bonding for Landscape Establishment Period The Contractor shall provide a signed, valid, and enforceable Performance, Warranty, or Maintenance Bond complying with the Contract, to the Department at Final Acceptance.

The bond shall be in the full amount for all Pay Items for work pursuant to Sec 621, Landscape, payable to the "Treasurer - State of Maine," and on the Department's forms, on exact copies thereof, or on forms that do not contain any significant variations from the Department's forms as solely determined by the Department.

The Contractor shall pay all premiums and take all other actions necessary to keep said bond in effect for the duration of the Landscape Establishment Period described in Special Provision 621.0036 - Establishment Period. If the Surety becomes financially insolvent, ceases to be licensed or approved to do business in the State of Maine, or stops operating in the United States, the Contractor shall file new bonds complying with this Section within 10 Days of the date the Contractor is notified or becomes aware of such change.

All Bonds shall be procured from a company organized and operating in the United States, licensed or approved to do business in the State of Maine by the State of Maine Department of Business Regulation, Bureau of Insurance, and listed on the latest Federal Department of the Treasury listing for "Companies Holding Certificates of Authority as Acceptable Sureties on Federal Bonds and as Acceptable Reinsuring Companies."

By issuing a bond, the Surety agrees to be bound by all terms of the Contract, including those related to payment, time for performance, quality, warranties, and the Department's self-help remedy provided in Section 112.1 - Default to the same extent as if all terms of the Contract are contained in the bond(s).

Regarding claims related to any obligations covered by the bond, the Surety shall provide, within 60 Days of Receipt of written notice thereof, full payment of the entire claim or written notice of all bases upon which it is denying or contesting payment. Failure of the Surety to provide such notice within the 60-day period constitutes the Surety's waiver of any right to deny or contest payment and the Surety's acknowledgment that the claim is valid and undisputed.

SECTION 202
REMOVING STRUCTURES AND OBSTRUCTIONS

202.02 Removing Buildings Make the following change to the last sentence in the final paragraph, change "…Code of Maine Regulations 401." to "…Department of Environmental Protection Maine Solid Waste Management Rules, 06-096 CMR Ch. 401, Landfill Siting, Design and Operation."

SECTION 203
EXCAVATION AND EMBANKMENT

203.01 Description Under b. Rock Excavation; add the following sentence: "The use of perchlorate is not allowed in blasting operations."

Delete the entire Section 203.041 and replace with the following:
"203.041 Salvage of Existing Hot Mix Asphalt Pavement All existing hot mix asphalt pavement designated to be removed under this contract must be salvaged for utilization. Existing hot mix asphalt pavement material shall not be deposited in any waste area or be placed below subgrade in any embankment.

Methods of utilization may be any of the following:

1. Used as a replacement for untreated aggregate surface course on entrances provided the material contains no particles greater than 50 mm [2 in] in any dimension. Payment will be made under Pay Item 411.09, Untreated Aggregate Surface Course or 411.10, Untreated Aggregate Surface Course, Truck Measure. Material shall be placed, shaped, compacted and stabilized as directed by the Resident.

2. Used as the top 3" of gravel. Recycled Asphalt Pavement (RAP) shall be process to 1½" minus and blending will not be allowed. When this method is utilized, a surcharge will not be required

3. Stockpiled at commercial or approved sites for commercial or MaineDOT use.

4. Other approved methods proposed by the Contractor, and approved by the Resident which will assure proper use of the existing hot mix asphalt pavement.

The cost of salvaging hot mix asphalt material will be included for payment under the applicable pay item, with no additional allowances made, which will be full compensation for removing, temporarily stockpiling, and rehandling, if necessary, and utilizing the material in entrances or other approved uses, or stockpiling at an approved site as described above. The material will also be measured and paid for under the applicable Pay Item if it is reused for aggregate in entrances, or other approved uses."

SECTION 502
STRUCTURAL CONCRETE

502.05 Composition and Proportioning; TABLE #1; NOTE #2; third sentence; Change "…alcohol based saline sealer…" to "alcohol based silane sealer…". Add NOTE #6 to Class S Concrete.

502.0502 Quality Assurance Method A - Rejection by Resident Change the first sentence to read: "For an individual sublot with test results failing to meet the criteria in Table #1, or if the calculated pay factor for Air Content is less than 0.80……"

502.0503 Quality Assurance Method B - Rejection by Resident Change the first sentence to read: "For material represented by a verification test with test results failing to meet the criteria in Table #1, the Department will……"

502.0505 Resolution of Disputed Acceptance Test Results Combine the second and third sentence to read: "Circumstances may arise, however, where the Department may ……"
502.10 Forms and False work
D. Removal of Forms and False work 1., First paragraph; first, second, and third sentence; replace "forms" with "forms and false work"

502.11 Placing Concrete
G. Concrete Wearing Surface and Structural Slabs on Precast Superstructures Last paragraph; third sentence; replace "The temperature of the concrete shall not exceed 24° C [75° F} at the time of placement." with "The temperature of the concrete shall not exceed 24° C [75° F} at the time the concrete is placed in its final position."

502.15 Curing Concrete First paragraph; replace the first sentence with the following; "All concrete surfaces shall be kept wet with clean, fresh water for a curing period of at least 7 days after concrete placing, with the exception of vertical surfaces as provided for in Section 502.10 (D) - Removal of Forms and False work."

Second paragraph; delete the first two sentences.
Third paragraph; delete the entire paragraph which starts "When the ambient temperature…."
Fourth paragraph; delete "approved" to now read "…continuously wet for the entire curing period…"

Fifth paragraph; second sentence; change "…as soon as it is possible to do so without damaging the concrete surface." to "…as soon as possible."

Seventh paragraph; first sentence; change "…until the end of the curing period." to "…until the end of the curing period, except as provided for in Section 502.10(D) - Removal of Forms and False work."

502.19 Basis of Payment First paragraph, second sentence; add "pier nose armor" to the list of items included in the contract price for concrete.

SECTION 503
REINFORCING STEEL

503.06 Placing and Fastening Change the second paragraph, first sentence from: "All tack welding shall be done in accordance with Section 504, Structural Steel." to "All tack welding shall be done in accordance with AWS D1.4 Structural Welding Code - Reinforcing Steel."

SECTION 504
STRUCTURAL STEEL

504.09 Facilities for Inspection Add the follow as the last paragraph: "Failure to comply with the above requirements will be consider to be a denial to allow access to work by the Contractor. The Department will reject any work done when access for inspection is denied."

504.18 Plates for Fabricated Members Change the second paragraph, first sentence from: "…ASTM A 898/A 898 M…" to "…ASTM A 898/A 898 M or ASTM A 435/A 435 M as applicable and…"

504.31 Shop Assembly Add the following as the last sentence: "The minimum assembly length shall include bearing centerlines of at least two substructure units."

504.64 Non Destructive Testing-Ancillary Bridge Products and Support Structures Change the third paragraph, first sentence from "One hundred percent…" to "Twenty five percent…"

SECTION 535
PRECAST, PRESTRESSED CONCRETE SUPERSTRUCTURE

535.02 Materials Change "Steel Strand for Concrete Reinforcement" to "Steel Strand." Add the following to the beginning of the third paragraph; "Concrete shall be Class P conforming to the requirements in this section. 28 day compressive strength shall be as stated on the plans. Coarse aggregate…."

535.05 Inspection Facilities Add the follow as the last paragraph: "If the above requirements are not met, the Contractor shall be considered to be in violation of Standard Specification 104.2.5 – Right to Inspect Work. All work occurring during a violation of this specification will be rejected."

535.26 Lateral Post-Tensioning Replace the first paragraph; "A final tension…" with "Overstressing strands for setting losses cannot be accomplished for chuck to chuck lengths of 7.6 m [25 ft] and less. In such instances, refer to the Plans for all materials and methods. Otherwise, post-tensioning shall be in accordance with PCI standards and shall provide the anchorage force noted in the Plans. The applied jacking force shall be no less than 100% of the design jacking force."

SECTION 603
PIPE CULVERTS AND STORM DRAINS

603.0311 Corrugated Polyethylene Pipe for Option III Replace the Minimum Mandrel Diameter Table with the following:

Nominal Size US Customary (in)	Minimum Mandrel Diameter (in)	Nominal Size Metric (mm)	Minimum Mandrel Diameter (mm)
12	11.23	300	280.73
15	14.04	375	350.91
18	16.84	450	421.09
24	22.46	600	561.45
30	28.07	750	701.81
36	33.69	900	842.18
42	39.30	1050	982.54
48	44.92	1200	1122.90

SECTION 604
MANHOLES, INLETS, AND CATCH BASINS

604.02 Materials Add the following:

"Tops and Traps 712.07

Corrugated Metal Units	712.08
Catch Basin and Manhole Steps	712.09”

SECTION 605
UNDERDRAINS

605.05 Underdrain Outlets Make the following change:

In the first paragraph, second sentence, delete the words “metal pipe”.

SECTION 606
GUARDRAIL

606.02 Materials Delete the entire paragraph which reads “The sole patented supplier of multiple mailbox….” and replace with “Acceptable multiple mailbox assemblies shall be listed on the Department’s Approved Products List and shall be NCHRP 350 tested and approved.” Delete the entire paragraph which reads “Retroreflective beam guardrail delineators….” and replace with “Reflectorized sheeting for Guardrail Delineators shall meet the requirements of Section 719.01 - Reflective Sheeting. Delineators shall be fabricated from high-impact, ultraviolet and weather resistant thermoplastic.

606.09 Basis of Payment First paragraph; delete the second and third sentence in their entirety and replace with “Butterfly-type guardrail reflectorized delineators shall be mounted on all W-beam guardrail at an interval of every 10 posts [62.5 ft] on tangents sections and every 5 posts [31.25 ft] on curved sections as directed by the Resident. On divided highways, the delineators shall be yellow on the left hand side and silver/white on the right hand side. On two-way roadways, the delineators shall be silver/white on the right hand side. All delineators shall have retroreflective sheeting applied to only the traffic facing side. Reflectorized guardrail delineators will not be paid for directly, but will be considered incidental to the guardrail items.”

SECTION 609
CURB

609.04 Bituminous Curb f., Delete the requirement “Color Natural (White)”

SECTION 610
STONE FILL, RIPRAP, STONE BLANKET, AND STONE DITCH PROTECTION

Add the following paragraph to Section 610.02:
“Materials shall meet the requirements of the following Sections of Special Provision 703:

Stone Fill	703.25
Plain and Hand Laid Riprap	703.26
Stone Blanket	703.27
Heavy Riprap	703.28

Definitions 703.32"

Add the following paragraph to Section 610.032.a.
"Stone fill and stone blanket shall be placed on the slope in a well-knit, compact and uniform layer. The surface stones shall be chinked with smaller stone from the same source."

Add the following paragraph to Section 610.032.b:
"Riprap shall be placed on the slope in a well-knit, compact and uniform layer. The surface stones shall be chinked with smaller stone from the same source."

Add the following to Section 610.032: "Section 610.032.d. The grading of riprap, stone fill, stone blanket and stone ditch protection shall be determined by the Resident by visual inspection of the load before it is dumped into place, or, if ordered by the Resident, by dumping individual loads on a flat surface and sorting and measuring the individual rocks contained in the load. A separate, reference pile of stone with the required gradation will be placed by the Contractor at a convenient location where the Resident can see and judge by eye the suitability of the rock being placed during the duration of the project. The Resident reserves the right to reject stone at the job site or stockpile, and in place. Stone rejected at the job site or in place shall be removed from the site at no additional cost to the Department."

SECTION 615
LOAM

615.02 Materials Make the following change:

Organic Content	Percent by Volume
Humus	"5% - 10%", as determined by Ignition Test

SECTION 618
SEEDING

618.01 Description Change the first sentence to read as follows: "This work shall consist of furnishing and applying seed ….." Also remove ",and cellulose fiber mulch" from 618.01(a).
618.03 Rates of Application In 618.03(a), remove the last sentence and replace with the following: "These rates shall apply to Seeding Method 2, 3, and Crown Vetch."

In 618.03(c) "1.8 kg [4 lb]/unit." to "1.95 kg [4 lb]/unit."

618.09 Construction Method In 618.09(a) 1, sentence two, replace "100 mm [4 in]" with "25 mm [1 in] (Method 1 areas) and 50 mm [2 in] (Method 2 areas)"

618.15 Temporary Seeding Change the Pay Unit from Unit to Kg [lb].

SECTION 620
GEOTEXTILES

620.03 Placement Section (c)
Title: Replace "Non-woven" in title with "Erosion Control".

First Paragraph: Replace first word "Non-woven" with "Woven monofilament".
Second Paragraph: Replace second word "Non-woven" with "Erosion Control".

620.07 Shipment, Storage, Protection and Repair of Fabric Section (a)
Replace the second sentence with the following: "Damaged geotextiles, as identified by the Resident, shall be repaired immediately."

620.09 Basis of Payment
Pay Item 620.58: Replace "Non-woven" with "Erosion Control"
Pay Item 620.59: Replace "Non-woven" with "Erosion Control"

SECTION 621
LANDSCAPING

621.0036 Establishment Period In paragraph 4 and 5, change "time of Final Acceptance" to "end of the period of establishment". In Paragraph 7, change "Final Acceptance date" to ""end of the period of establishment" and change "date of Final Acceptance" to "end of the period of establishment".

SECTION 626
HIGHWAY SIGNING

626.034 Concrete Foundations Add to the following to the end of the second paragraph: "Pre-cast and cast-in-place foundations shall be warranteed against leaning and corrosion for two years after the project is completed. If the lean is greater than 2 degrees from normal or the foundation is spalling within the first two years, the Contractor shall replace the foundation at no extra cost."

SECTION 627
PAVEMENT MARKINGS

627.10 Basis of Payment Add to the following to the end of the third paragraph: "If allowed by Special Provision, the Contractor may utilize Temporary Bi-Directional Yellow and White(As required) Delineators as temporary pavement marking lines and paid for at the contract lump sum price. Such payment will include as many applications as required and removal."

SECTION 637
DUST CONTROL

637.06 Basis of Payment Add the following after the second sentence of the third paragraph: "Failure by the Contractor to follow Standard Specification or Special Provision - Section 637 and/or the Contractor's own Soil Erosion and Pollution Control Plan concerning Dust Control and/or the Contractor's own Traffic Control Plan concerning Dust Control and/or visible evidence of excessive dust problems, as determined by the Resident, will result in a reduction in payment, computed by reducing the Lump Sum Total by 5% per occurrence per day. The Department's Resident or any other representative of the Department reserves the right to

suspend the work at any time and request a meeting to discuss violations and remedies. The Department shall not be held responsible for any delay in the work due to any suspension under this item. Additional penalties may also be assessed in accordance with Special Provision 652 - Work Zone Traffic Control and Standard Specification 656 - Temporary Soil Erosion and Water Pollution Control."

SECTION 639
ENGINEERING FACILITIES

639.04 Field Offices Change the forth to last paragraph from: "The Contractor shall provide a fully functional desktop copier…" to "….desktop copier/scanner…"

Description Change "Floor Area" to "Floor Area (Outside Dimension)". Change Type B floor area from "15 (160)" to "20 (217)".

639.09 Telephone Paragraph 1 is amended as follows:
"The contractor shall provide **two** telephone lines and two telephones,…."

Add- "In addition the contractor will supply one computer broadband connection, modem lease and router. The router shall have wireless access and be 802.11n or 802.11g capable and wireless. The type of connection supplied will be contingent upon the availability of services (i.e. DSL or Cable Broadband). It shall be the contractor's option to provide dynamic or static IP addresses through the service. **The selected service will have a minimum downstream connection of 1.5 Mbps and 384 Kbps upstream.** The contractor shall be responsible for the installation charges and all reinstallation charges following suspended periods. Monthly service and maintenance charges shall be billed by the Internet Service Provider (ISP) directly to the contractor."

SECTION 652
MAINTENANCE OF TRAFFIC

652.2.3 Flashing Arrow Board Delete the existing 5 paragraphs and replace with the following: Flashing Arrow Panels (FAP) must be of a type that has been submitted to AASHTO's National Transportation Product Evaluation Program (NTPEP) for evaluation and placed on the Maine Department of Transportations' Approved Products List of Portable Changeable Message Signs & Flashing Arrow Panels.

FAP units shall meet requirements of the current Manual on Uniform Traffic Control Devices (MUTCD) for Type "C" panels as described in Section 6F.56 - Temporary Traffic Control Devices. An FAP shall have matrix of a minimum of 15 low-glare, sealed beam, Par 46 elements capable of either flashing or sequential displays as well as the various operating modes as described in the MUTCD, Chapter 6-F. If an FAP consisting of a bulb matrix is used, each element should be recess-mounted or equipped with an upper hood of not less than 180 degrees. The color presented by the elements shall be yellow.

FAP elements shall be capable of at least a 50 percent dimming from full brilliance. Full brilliance should be used for daytime operation and the dimmed mode shall be used for nighttime operation. FAP shall be at least 2.4 M x 1.2 M [96" x 48"] and finished in non-

reflective black. The FAP shall be interpretable for a distance not less than 1.6 km [1 mile].

Operating modes shall include, flashing arrow, sequential arrow, sequential chevron, flashing double arrow, and flashing caution. In the three arrow signals, the second light from the arrow point shall not operate.

The minimum element on-time shall be 50 percent for the flashing mode, with equal intervals of 25 percent for each sequential phase. The flashing rate shall be not less than 25 nor more than 40 flashes per minute. All on-board circuitry shall be solid state.

Primary power source shall be 12 volt solar with a battery back-up to provide continuous operation when failure of the primary power source occurs, up to 30 days with fully charged batteries. Batteries must be capable of being charged from an onboard 110 volt AC power source and the unit shall be equipped with a cable for this purpose.

Controller and battery compartments shall be enclosed in lockable, weather-tight boxes.
The FAP shall be mounted on a pneumatic-tired trailer or other suitable support for hauling to various locations, as directed. The minimum mounting height of an arrow panel should be 2.1 M [7 feet] from the roadway to the bottom of the panel.

The face of the trailer shall be delineated on a permanent basis by affixing retro-reflective material, known as conspicuity material, in a continuous line as seen by oncoming drivers.

A portable changeable message sign may be used to simulate an arrow panel display."

652.2.4 Other Devices Delete the last paragraph and add the following:
"652.2.5 Portable Changeable Message Sign Trailer mounted Portable Changeable Message Signs (PCMS) must be of a type that has been submitted to AASHTO's National Transportation Product Evaluation Program (NTPEP) for evaluation and placed on the Maine Department of Transportations' Approved Products List of Portable Changeable Message Signs & Flashing Arrow Panels. The PCMS unit shall meet or exceed the current specifications of the Manual on Uniform Traffic Control Devices (MUTCD), 6F.55.

The front face of the sign should be covered with a low-glare protective material. The color of the LED elements shall be amber on a black background. The PCMS should be visible from a distance of 0.8 km [0.5 mile] day and night and have a minimum 15º viewing angle. Characters must be legible from a distance of at least 200 M [650 feet].

The message panel should have adjustable display rates (minimum of 3 seconds per phase), so that the entire message can be read at least twice at the posted speed, the off-peak 85th-percentile speed prior to work starting, or the anticipated operating speed. Each message shall consist of either one or two phases. A phase shall consist of up to eight characters per line. The unit must be capable of displaying at least three lines of text with eight characters per line. Each character shall be 457 mm [18"] high. Each character module shall use at least a five wide and seven high pixel matrix. The text of the messages shall not scroll or travel horizontally or vertically across the face of the sign.

Units shall automatically adjust their brightness under varying light conditions to maintain legibility.

The control system shall include a display screen upon which messages can be reviewed before being displayed on the message sign. The control system shall be capable of maintaining memory when power is unavailable. Message must be changeable with either a notebook computer or an on-board keypad. The controller shall have the capability to store a minimum of 200 user-defined and 200 pre-programmed messages. Controller and battery compartments shall be enclosed in lockable, weather-tight boxes.

PCMS units shall have the capability of being made programmable by means of wireless communications. PCMS units shall also be fully capable of having an on-board radar system installed if required for a particular application.

PCMS' primary power source shall be solar with a battery back-up to provide continuous operation when failure of the primary power source occurs. Batteries must be capable of being charged from a 110 volt AC power source. The unit must also be capable of being operated solely from a 110 volt AC power source and be equipped with a cable for this purpose.

The PCMS shall be mounted on a trailer in such a way that the bottom of the message sign panel shall be a minimum of 2.1 M [7 ft] above the roadway in urban areas and 1.5 M [5 ft] above the roadway in rural areas when it is in the operating mode. PCMS trailers should be of a heavy duty type with a 51 mm [2"] ball hitch and a minimum of four leveling jacks (at each corner). The sign shall be capable of being rotated 360° relative to the trailer. The face of the trailer shall be delineated on a permanent basis by affixing retro-reflective material, known as conspicuity material, in a continuous line as seen by oncoming drivers."

652.3.3 Submittal of Traffic Control Plan In item e. change "A list of all certified flaggers…" to "A list of all the Contractor's certified flaggers…"

Change a. in the list of requirements to: "a. The name, telephone number, and other contact numbers (cellular phone, pager, if any) of the Contractor's Traffic Control Supervisor (the person with overall responsibility for following the TCP), who has received Work Zone Traffic Control Training commensurate with the level of responsibility shown in the requirements of the Contract, and who is empowered to immediately resolve any work zone traffic control deficiencies or issues. Provide documentation that the Traffic Control Supervisor has completed a Work Zone Traffic Control Training Course (AGC, ATSSA, or other industry-recognized training), and a Supervisory refresher training every 5 years thereafter. Submit the course name, training entity, and date of training.

Traffic Control Training Course curriculum must be based on the standards and guidelines of the MUTCD and must include, at a minimum, the following:

1. Parts of Temporary Traffic Control Zone
2. Appropriate use and spacing of signs
3. Use and spacing of channelizing devices
4. Flagging basics
5. Typical examples and applications

The Traffic Control Supervisor, or designee directly overseeing physical installation, adjustment, and dismantling of work zone traffic control, will ensure all personnel performing

those activities are trained to execute the work in a safe and proper manner, in accordance with their level of decision-making and responsibility."

Add the follow to the list of requirements: "k. The plan for unexpected nighttime work along with a list of emergency nighttime equipment available on-site."

In the last paragraph add the following as the second sentence: "The Department will review and provide comments to the Contractor within 14 days of receipt of the TCP." Add the following as the last sentence: "The creation and modification of the TCP will be considered incidental to the related 652 items."

652.3.5 Installation of Traffic Control Devices In the first paragraph, first sentence; change "Signs shall be erected…" to "Portable signs shall be erected.." In the third sentence; change "Signs must be erected so that the sign face…" to "Post-mounted signs must also be erected so that the sign face…"

652.4 Flaggers Replace the first paragraph with the following; "The Contractor shall furnish flaggers as required by the TCP or as otherwise specified by the Resident. All flaggers must have successfully completed a flagger test approved by the Department and administered by a Department-approved Flagger-Certifier who is employing that flagger. All flaggers must carry an official certification card with them while flagging that has been issued by their employer. Flaggers shall wear safety apparel meeting ANSI 107-2004 Class 2 risk exposure that clearly identifies the wearer as a person, and is visible at a minimum distance of 300 m [1000 ft], and shall wear a hardhat with 360° retro-reflectivity. For nighttime conditions, Class 3 apparel, meeting ANSI 107-2004, shall be worn along with a hardhat with 360° retro-reflectivity. Retro-reflective or flashing SLOW/STOP paddles shall be used, and the flagger station shall be illuminated to assure visibility in accordance with 652.6.2."

Second paragraph, first sentence; change "…have sufficient distance to stop before entering the workspace." to "…have sufficient distance to stop at the intended stopping point." Third sentence; change "At a spot obstruction…" to "At a spot obstruction with adequate sight distance,…"

Fourth paragraph, delete and replace with "Flaggers shall be provided as a minimum, a 10 minute break, every 2 hours and a 30 minute or longer lunch period away from the work station. Flaggers may only receive 1 unpaid break per day; all other breaks must be paid. Sufficient certified flaggers shall be available onsite to provide for continuous flagging operations during break periods. If the flaggers are receiving the appropriate breaks, breaker flagger(s) shall be paid starting 2 hours after the work begins and ending 2 hours before the work ends. A maximum of 1 breaker per 6 flaggers will be paid. (1 breaker flagger for 2 to 6 flaggers, 2 breaker flaggers for 7 to 12 flaggers, etc)"

Add the following:

"652.5.1 Rumble Strip Crossing When lane shifts or lane closures require traffic to cross a permanent longitudinal rumble strip for 7 calendar days or less, the Contractor shall install warning signs that read "RUMBLE STRIP CROSSING" with a supplemental Motorcycle Plaque, (W8-15P).

When lane shifts or lane closures require traffic to cross a permanent longitudinal rumble strip for more than 7 calendar days, the Contractor shall pave in the rumble strips in the area that

traffic will cross, unless otherwise directed by the Resident. Rumble strips shall be replaced prior to the end of the project, when it is no longer necessary to cross them."

652.6 Nightwork Delete this section entirely and replace with the following:
"652.6.1 Daylight Work Times Unless otherwise described in the Contract, the Contractor is allowed to commence work and end work daily according to the Sunrise/Sunset Table at: http://www.sunrisesunset.com/usa/Maine.asp . If the Project town is not listed, the closest town on the list will be used as agreed at the Preconstruction Meeting. Any work conducted before sunrise or after sunset will be considered Night Work.

652.6.2 Night Work When Night Work occurs (either scheduled or unscheduled), the Contractor shall provide and maintain lighting on all equipment and at all work stations.

The lighting facilities shall be capable of providing light of sufficient intensity to permit good workmanship, safety and proper inspection at all times. The lighting shall be cut off and arranged on stanchions at a height that will provide perimeter lighting for each piece of equipment and will not interfere with traffic, including commercial vehicles, approaching the work site from either direction.

The Contractor shall have available portable floodlights for special areas.

The Contractor shall utilize padding, shielding or other insulation of mechanical and electrical equipment, if necessary, to minimize noise, and shall provide sufficient fuel, spare lamps, generators, etc. to maintain lighting of the work site.

The Contractor shall submit, as a subset of the Traffic Control Plan, a lighting plan at the Preconstruction Conference, showing the type and location of lights to be used for night work. The Resident may require modifications be made to the lighting set up in actual field conditions.

Prior to beginning any Night Work, the Contractor shall furnish a light meter for the Residents use that is capable of measuring the range of light levels from 5 to 20 foot-candles.

Horizontal illumination, for activities on the ground, shall be measured with the photometer parallel to the road surface. For purposes of roadway lighting, the photometer is placed on the pavement. Vertical illumination, for overhead activities, shall be measured with the photometer perpendicular to the road surface. Measurements shall be taken at the height and location of the overhead activity.

Night Work lighting requirements:

Mobile Operations: For mobile-type operations, each piece of equipment (paver, roller, milling machine, etc) will carry indirect (i.e. balloon type) lights capable of producing at least 10 foot-candles of lighting around the work area of the equipment.

Fixed Operations: For fixed-type operations (flaggers, curb, bridge, pipes, etc.), direct (i.e. tower) lighting will be utilized capable of illuminating the work area with at least 10 foot-candles of light.

Hybrid Operations: For hybrid-type operations (guardrail, sweeping, Inslope excavation, etc.), either direct or indirect lighting may be utilized. The chosen lights must be capable of producing at least 10 foot-candles of light around the work area of the equipment
Inspection Operations: Areas required to be inspected by the Department will require a minimum of 5 foot-candles of lighting. This may be accomplished through direct or indirect means.

All workers shall wear safety apparel labeled as meeting the ANSI 107-2004 standard performance for Class 3 risk exposure.

The Contractor shall apply 2- inch wide retro-reflective tape, with alternating red and white segments, to outline the front back and sides of construction vehicles and equipment, to define their shape and size to the extent practicable. Pickup trucks and personal vehicles are exempt from this requirement. The Contractor shall furnish approved signs reading "Construction Vehicle - Keep Back" to be used on trucks hauling to the project when such signs are deemed necessary by the Resident. The signs shall be a minimum of 30 inches by 60 inches, Black and Orange, ASTM D 4956 - Type VII, Type VIII, or Type IX (prismatic).

All vehicles used on the project, including pickup trucks and personal vehicles, shall be equipped with amber flashing lights, visible from both front and rear, or by means of single, approved type, revolving, flashing or strobe lights mounted so as to be visible 360º. The vehicle flashing system shall be in continuous operation while the vehicle is on any part of the project.

The Resident or any other representative of the Department reserves the right to suspend the work at any time and request a meeting to discuss violations and remedies. The Department shall not be held responsible for any delay in the work due to any suspension under this item. Failure to follow the approved Lighting Plan will result in a Traffic Control violation.

Payment for lighting, vehicle mounted signs and other costs accrued because of night work will not be made directly but will be considered incidental to the related contract items."

652.8.2 Other Items Replace the first paragraph with the following: "The accepted quantities of flagger hours will be paid for at the contract unit price per hour for each flagging station occupied excluding lunch breaks, and for each approved breaker flagger. Overtime hours, as reported on the certified payrolls, will be paid an additional 30% of the bid price for 652.38. The computation and additional payment for overtime hours will occur during the project close-out process and will be paid as additional hours of 652.38 to the nearest ¼ hour. The contract unit price shall be full compensation for hiring, transporting, equipping, supervising, and the payment of flaggers and all overhead and incidentals necessary to complete the work."
Replace the last paragraph with the following: "There will be no payment made under any 652 pay items after the expiration of the adjusted total contract time."

SECTION 653
POLYSTYRENE PLASTIC INSULATION

653.05 Placing Backfill In the second sentence; change "…shall be not less than 150 mm [6 in] loose measure." to "…shall be not less than 250 mm [10 in] loose measure." In the third sentence; change "…crawler type bulldozer of not more than 390 kg/m^2 [80 lb/ft^2] ground contact pressure…" to "…crawler type bulldozer of not more than 4875 kg/m^2 [2000 lb/ft^2] ground contact pressure…"

653.06 Compaction In the last sentence; change "…not more than 390 kg/m^2 [80 lb/ft^2] ground contact…" to "…not more than 4875 kg/m^2 [2000 lb/ft^2] ground contact…"

SECTION 656
TEMPORARY SOIL EROSION AND WATER POLLUTION CONTROL

656.5.1 If Pay Item 656.75 Provided Replace the second paragraph with the following: "Failure by the Contractor to follow Standard Specification or Special Provision - Section 656 and/or the Contractor's own Soil Erosion and Water Pollution Control Plan (SEWPCP) will result in a violation letter and a reduction in payment as shown in the schedule below. The Department's Resident or any other representative of The Department reserves the right to suspend the work at any time and request a meeting to discuss violations and remedies. The Department shall not be held responsible for any delay in the work due to any suspension under this item.

ORIGINAL CONTRACT AMOUNT

From	Up to and	Amount of Penalty Damages per Violation		
More Than	Including	1st	2nd	3rd & Subsequent
$0	$1,000,000	$250	$500	$1,250
$1,000,000	$2,000,000	$500	$1,000	$2,500
$2,000,000	$4,000,000	$1,000	$2,000	$5,000
$4,000,000	and more	$2,000	$4,000	$10,000"

SECTION 701
STRUCTURAL CONCRETE RELATED MATERIALS

701.10 Fly Ash - Chemical Requirements Change all references from "ASTM C311" to "ASTM C114".

SECTION 703
AGGREGATES

703.05 Aggregate for Sand Leveling Change the percent passing the 9.5 mm [3/8 in] sieve from "85 – 10" to "85 – 100"

703.06 Aggregate for Base and Subbase Delete the first paragraph: "The material shall have…" and replace with "The material shall have a minimum degradation value of 15 as determined by Washington State DOT Test Method T113, Method of Test for Determination of Degradation Value (January 2009 version), except that the reported degradation value will be the result of testing a single specimen from that portion of a sample that passes the 12.5 mm [½ in] sieve and is retained on the 2.00 mm [No. 10] sieve, minus any reclaimed asphalt pavement used."

703.07 Aggregates for HMA Pavements Delete the forth paragraph: "The composite blend shall have…" and replace with "The composite blend, minus any reclaimed asphalt pavement used, shall have a Micro-Deval value of 18.0 or less as determined by AASHTO T 327. In the event the material exceeds the Micro Deval limit, a Washington Degradation test shall be performed. The material shall be acceptable if it has a value of 30 or more as determined by Washington State DOT Test Method T 113, Method of Test for Determination of Degradation Value (January 2009 version) except that the reported degradation value will be the result of testing a single composite specimen from that portion of the sample that passes the 12.5mm [1/2 inch] sieve and is retained on the 2.00mm [No 10] sieve, minus any reclaimed asphalt pavement used."

703.09 HMA Mixture Composition The coarse and fine aggregate shall meet the requirements of Section 703.07. The several aggregate fractions for mixtures shall be sized, graded, and combined in such proportions that the resulting composite blends will meet the grading requirements of the following table.

AGGREGATE GRADATION CONTROL POINTS

SIEVE SIZE	Nominal Maximum Aggregate Size---Control Points (Percent Passing)				
	TYPE 25 mm	TYPE 19 mm	TYPE 12.5 mm	TYPE 9.5 mm	TYPE 4.75 mm
	PERCENT BY WEIGHT PASSING - COMBINED AGGREGATE				
37.5 mm	100				
25 mm	90-100	100			
19 mm	-90	90-100	100		
12.5 mm		-90	90-100	100	100
9.5 mm		-	-90	90-100	95-100
4.75 mm		-	-	-90	80-100
2.36 mm	19-45	23-49	28-58	32-67	40 - 80
1.18 mm		-	-	-	-
600 µm		-	-	-	-
300 µm		-	-	-	-
75 µm	1-7	2-8	2-10	2-10	2-10

Gradation Classification---- The combined aggregate gradation shall be classified as coarse-graded when it passes below the Primary Control Sieve (PCS) control point as defined in the following table. All other gradations shall be classified as fine-graded.

GRADATION CLASSIFICATION

PCS Control Point for Mixture Nominal Maximum Aggregate Size (% passing)				
Nominal Maximum Aggregate Size	TYPE 25 mm	TYPE 19 mm	TYPE 12.5 mm	TYPE 9.5 mm
Primary Control Sieve	4.75 mm	4.75 mm	2.36 mm	2.36 mm
PCS Control Point (% passing)	40	47	39	47

If a Grading "D" mixture is allowed per Special Provision Section 403, it shall meet the following gradation and the aggregate requirements of Section 703.07.

Sieve Designation	Percentage by Weight Passing Square Mesh Sieves
½ inch	100
⅜ inch	93-100
No. 4	60-80
No. 8	46-65
No. 16	25-55
No. 30	16-40
No. 50	10-30
No. 100	6-22
No. 200	3.0-8.0

703.18 Common Borrow Replace the first paragraph with the following: "Common borrow shall consist of earth, suitable for embankment construction. It shall be free from frozen material, perishable rubbish, peat, and other unsuitable material including material currently or previously contaminated by chemical, radiological, or biological agents unless the material is from a DOT project and authorized by DEP for use."

703.22 Underdrain Backfill Material Change the first paragraph from "…for Underdrain Type B…" to "…for Underdrain Type B and C…"

Replace subsections 703.25 through 703.28 with the following:
"703.25 Stone Fill Stones for stone fill shall consist of hard, sound, durable rock that will not disintegrate by exposure to water or weather. Stone for stone fill shall be angular and rough. Rounded, subrounded, or long thin stones will not be allowed. Stone for stone fill may be obtained from quarries or by screening oversized rock from earth borrow pits. The maximum allowable length to thickness ratio will be 3:1. The minimum stone size (10 lbs) shall have an average dimension of 5 inches. The maximum stone size (500 lbs) shall have a maximum dimension of approximately 36 inches. Larger stones may be used if approved by the Resident. Fifty percent of the stones by volume shall have an average dimension of 12 inches (200 lbs).

703.26 Plain and Hand Laid Riprap Stone for riprap shall consist of hard, sound durable rock that will not disintegrate by exposure to water or weather. Stone for riprap shall be angular and rough. Rounded, subrounded or long thin stones will not be allowed. The maximum allowable length to width ratio will be 3:1. Stone for riprap may be obtained from quarries or by screening oversized rock from earth borrow pits. The minimum stone size (10 lbs) shall have an average dimension of 5 inches. The maximum stone size (200 lbs) shall have an average dimension of approximately 12 inches. Larger stones may be used if approved by the Resident. Fifty percent of the stones by volume shall have an average dimension greater than 9 inches (50 lbs).

703.27 Stone Blanket Stones for stone blanket shall consist of sound durable rock that will not disintegrate by exposure to water or weather. Stone for stone blanket shall be angular and rough. Rounded or subrounded stones will not be allowed. Stones may be obtained from

quarries or by screening oversized rock from earth borrow pits. The minimum stone size (300 lbs) shall have minimum dimension of 14 inches, and the maximum stone size (3000 lbs) shall have a maximum dimension of approximately 66 inches. Fifty percent of the stones by volume shall have average dimension greater than 24 inches (1000 lbs).

703.28 Heavy Riprap Stone for heavy riprap shall consist of hard, sound, durable rock that will not disintegrate by exposure to water or weather. Stone for heavy riprap shall be angular and rough. Rounded, subrounded, or thin, flat stones will not be allowed. The maximum allowable length to width ratio will be 3:1. Stone for heavy riprap may be obtained from quarries or by screening oversized rock from earth borrow pits. The minimum stone size (500 lbs) shall have minimum dimension of 15 inches, and at least fifty percent of the stones by volume shall have an average dimension greater than 24 inches (1000 lbs)."

Add the following paragraph:
"703.32 Definitions (ASTM D 2488, Table 1).
Angular: Particles have sharp edges and relatively plane sides with unpolished surfaces
Subrounded: Particles have nearly plane sides but have well-rounded corners and edges
Rounded: Particles have smoothly curved sides and no edges"

SECTION 706
NON-METALLIC PIPE

706.06 Corrugated Polyethylene Pipe for Underdrain, Option I and Option III Culvert Pipe Change the first sentence from "…300 mm diameters to 900 mm" to "…300 mm diameters to 1200 mm" Delete, in its' entirety, the last sentence which begins "This pipe and resins…" and replace with the following; "Manufacturers of corrugated polyethylene pipe must participate in, and maintain compliance with, AASHTO's National Transportation Product Evaluation Program (www.ntpep.org) which audits producers of plastic pipe. A certificate of compliance must be provided with each shipment."

SECTION 708
PAINTS AND PERSERVATIVES

708.03 Pavement Marking Paint Change the first sentence from "…AASHTO M248" to "…the Maine DOT Maintenance Fast-Dry Water-Based Traffic Paint on file at the Traffic Section in Augusta". Delete, in its' entirety, the last sentence.

SECTION 709
REINFORCING STEEL AND WELDED STEEL WIRE FABIC

709.03 Steel Strand Change the second paragraph from "…shall be 12mm [½ inch] AASHTO M203M/M203 (ASTM A416/A416M)…" to "…shall be 15.24 mm [0.600 inch] diameter AASHTO M203 (ASTM A416)…"

SECTION 710
FENCE AND GUARDRAIL

710.03 Chain Link Fabric Add the following sentence: "Chain Link fabric for PVC coated shall conform to the requirements of AASHTO M181, Type IV-Class B."

710.04 Metal Beam Rail Replace with the following: "Galvanized steel rail elements shall conform to the requirements of AASHTO M 180, Class A, Type II.

When corrosion resistant steel is specified, rail shall conform to AASHTO M 180, Class A, Type IV. Beams of corrosion resistant steel shall not be painted or galvanized. They shall be so handled and stored that the traffic face of these beams, used in a continuous run of guardrail, shall not show a distinctive color differential.

When metal beam rail is to be installed on a curve having a radius of curvature of 150 ft. or less, the beam sections shall be fabricated on an arc to the required radius and permanently stamped or embossed with the designated radius.

The engineer may take one piece of guardrail, a backup plate, and end or buffer section from each 200 pieces in a lot, or from each lot if less than 200 pieces are included therein for determination of compliance with specification requirements. If one piece fails to conform to the requirements of this specification, two other pieces shall be tested. If either of these pieces fails to conform to the requirements of this specification, the lot of material represented by these samples shall be rejected. A lot shall be considered that quantity of material offered for inspection at one time that bears the same heat and coating identification."

710.07 Guardrail Posts Section b. change "…AASHTO M183/M183M…" to "…AASHTO M 270M/M 270 Grade 250 (36)…"

SECTION 712
MISCELLANEOUS HIGHWAY MATERIALS

712.04 Stone Curbing and Edging Delete the existing and replace with the following: "Stone for curbing and edging shall be approved granite from acceptable sources. The stone shall be hard and durable, predominantly gray in color, free from seams that would be likely to impair its structural integrity, and of a smooth splitting character. Natural grain size and color variations characteristic of the source deposit will be permitted. Such natural variations may include bands or clusters of mineral crystallization provided they do not impair the structural integrity of the curb stone. The Contractor shall submit for approval the name of the quarry that is the proposed source of the granite for curb materials along with full scale color photos of the granite. Such submission shall be made sufficiently in advance of ordering so that the Resident may have an opportunity to judge the stone, both as to quality and appearance. Samples of curbing shall be submitted for approval only when requested by the Resident. The dimensions, shape, and other details shall be as shown on the plans."

712.06 Precast Concrete Units In the first paragraph, change "…ASTM C478M…" to "…AASHTO M199…" Delete the second paragraph and replace with the following; "Approved structural fibers may be used as a replacement of 6 x 6 #10 gauge welded wire fabric when used at an approved dosage rate for the construction of manhole and catch basin units. The material used shall be one of the products listed on the Maine Department of Transportation's Approved Product List of Structural Fiber Reinforcement." Delete the fifth paragraph and replace with the following; "The concrete mix design shall be approved by the Department. Concrete shall contain 6% air content, plus or minus 1½% tolerance when tested according to AASHTO T152. All concrete shall develop a minimum compressive strength of 28 MPa [4000 psi] in 28 days when tested according to AASHTO T22. The absorption of a

specimen, when tested according to AASHTO T280, Test Method "A", shall not exceed nine percent of the dry mass."

Add the following:
"712.07 Tops, and Traps These metal units shall conform to the plan dimensions and to the following specification requirements for the designated materials.

Gray iron or ductile iron castings shall conform to the requirements of AASHTO M306 unless otherwise designated."

712.08 Corrugated Metal Units The units shall conform to plan dimensions and the metal to AASHTO M36/M36M. Bituminous coating, when specified, shall conform to AASHTO M190 Type A.

712.09 Catch Basin and Manhole Steps Steps for catch basins and for manholes shall conform to ASTM C478M [ASTM C478], Section 13 for either of the following material:

(a) Aluminum steps-ASTM B221M, [ASTM B211] Alloy 6061-T6 or 6005-T5.

(b) Reinforced plastic steps Steel reinforcing bar with injection molded plastic coating copolymer polypropylene. Polypropylene shall conform to ASTM D 4101.

712.23 Flashing Lights Flashing Lights shall be power operated or battery operated as specified.

(a) Power operated flashing lights shall consist of housing, adapters, lamps, sockets, reflectors, lens, hoods and other necessary equipment designed to give clearly visible signal indications within an angle of at least 45 degrees and from 3 to 90 m [10 to 300 ft] under all light and atmospheric conditions.

Two circuit flasher controllers with a two-circuit filter capable of providing alternate flashing operations at the rate of not less than 50 nor more than 60 flashes per minute shall be provided.

The lamps shall be 650 lumens, 120 volt traffic signal lamps with sockets constructed to properly focus and hold the lamp firmly in position.
The housing shall have a rotatable sun visor not less than 175 mm [7 in] in length designed to shield the lens.

Reflectors shall be of such design that light from a properly focused lamp will reflect the light rays parallel. Reflectors shall have a maximum diameter at the point of contact with the lens of approximately 200 mm [8 in].

The lens shall consist of a round one-piece convex amber material which, when mounted, shall have a visible diameter of approximately 200 mm [8 in]. They shall distribute light and not diffuse it. The distribution of the light shall be asymmetrical in a downward direction. The light distribution of the lens shall not be uniform, but shall consist of a small high intensity portion with narrow distribution for long distance throw and a larger

low intensity portion with wide distribution for short distance throw. Lenses shall be marked to indicate the top and bottom of the lens.

(b) Battery operated flashing lights shall be self- illuminated by an electric lamp behind the lens. These lights shall also be externally illuminated by reflex-reflective elements built into the lens to enable it to be seen by reflex-reflection of the light from the headlights of oncoming traffic. The batteries must be entirely enclosed in a case. A locking device must secure the case. The light shall have a flash rate of not less than 50 nor more than 60 flashes per minute from minus 30 °C [minus 20 °F] to plus 65 °C [plus 150 °F]. The light shall have an on time of not less than 10 percent of the flash cycle. The light beam projected upon a surface perpendicular to the axis of the light beam shall produce a lighted rectangular projection whose minimum horizontal dimension shall be 5 degrees each side of the horizontal axis. The effective intensity shall not have an initial value greater than 15.0 candelas or drop below 4.0 candelas during the first 336 hours of continuous flashing. The illuminated lens shall appear to be uniformly bright over its entire illuminated surface when viewed from any point within an angle of 9 degrees each side of the vertical axis and 5 degrees each side of the horizontal axis. The lens shall not be less than 175 mm [7 in] in diameter including a reflex-reflector ring of 13 mm [½ in] minimum width around the periphery. The lens shall be yellow in color and have a minimum relative luminous transmittance of 0.440 with a luminance of 2854° Kelvin. The lens shall be one-piece construction. The lens material shall be plastic and meet the luminous transmission requirements of this specification. The case containing the batteries and circuitry shall be constructed of a material capable of withstanding abuse equal to or greater than 1.21 mm thick steel [No. 18 U.S. Standard Gage Steel]. The housing and the lens frame, if of metal shall be properly cleaned, degreased and pretreated to promote adhesion. It shall be given one or more coats of enamel which, when dry shall completely obscure the metal. The enamel coating shall be of such quality that when the coated case is struck a light blow with a sharp tool, the paint will not chip or crack and if scratched with a knife will not powder. The case shall be so constructed and closed as to exclude moisture that would affect the proper operation of light. The case shall have a weep hole to allow the escape of moisture from condensation. Photoelectric controls, if provided, shall keep the light operating whenever the ambient light falls below 215 lx [20 foot candles]. Each light shall be plainly marked as to the manufacturer's name and model number.

If required by the Resident, certification as to conformance to these specifications shall be furnished based on results of tests made by an independent testing laboratory. All lights are subject to random inspection and testing. All necessary random samples shall be provided to the Resident upon request without cost to the Department. All such samples shall be returned to the Contractor upon completion of the tests.

712.32 Copper Tubing Copper tubing and fittings shall conform to the requirements of ASTM B88M Type A [ASTM B88, Type K] or better.

712.33 Non-metallic Pipe, Flexible Non-metallic pipe and pipe fittings shall be acceptable flexible pipe manufactured from virgin polyethylene polymer suitable for transmitting liquids intended for human or animal consumption.

712.34 Non-metallic Pipe, Rigid Non-metallic pipe shall be Schedule 40 polyvinylchloride (PVC) that meets the requirement of ASTM D1785. Fittings shall be of the same material.

712.341 Metallic Pipe Metallic pipe shall be ANSI, Standard B36.10, Schedule 40 steel pipe conforming to the requirements of ASTM A53 Types E or S, Grade B. End plates shall be steel conforming to ASTM A36/A36M.

Both the sleeve and end plates shall be hot dip galvanized. Pipe sleeve splices shall be welded splices with full penetration weld before galvanizing.

712.35 Epoxy Resin Epoxy resin for grouting or sealing shall consist of a mineral filled thixotropic, flexible epoxy resin having a pot life of approximately one hour at 10°C [50°F]. The grout shall be an approved product suitable for cementing steel dowels into the preformed holes of curb inlets and adjacent curbing. The sealant shall be an approved product, light gray in color and suitable for coating the surface.

712.36 Bituminous Curb The asphalt cement for bituminous curb shall be of the grade required for the wearing course, or shall be Viscosity Grade AC-20 meeting the current requirements of Subsection 702.01 Asphalt Cement. The aggregate shall conform to the requirements of Subsection 703.07. The coarse aggregate portion retained on the 2.36 mm [No. 8] sieve may be either crushed rock or crushed gravel.

The mineral constituents of the bituminous mixture shall be sized and graded and combined in a composite blend that will produce a stable durable curbing with an acceptable texture.

Bituminous material for curb shall meet the requirements of Section 403 - Hot Bituminous Pavement.

712.37 Precast Concrete Slab Portland cement concrete for precast slabs shall meet the requirements of Section 502 - Structural Concrete, Class A.

The slabs shall be precast to the dimension shown on the plans and cross section and in accordance with the Standard Detail plans for Concrete Sidewalk Slab. The surface shall be finished with a float finish in accordance with Subsection 502.14(c). Lift devices of sufficient strength to hold the slab while suspended from cables shall be cast into the top or back of the slab.

712.38 Stone Slab Stone slabs shall be of granite from an acceptable source, hard, durable, predominantly gray in color, free from seams which impair the structural integrity and be of smooth splitting character. Natural color variations characteristic of the deposit will be permitted. Exposed surfaces shall be free from drill holes or indications of drill holes. The granite slabs in any one section of backslope must be all the same finish.

The granite slabs shall be scabble dressed or sawed to an approximately true plane having no projections or depressions over 13 mm [½ in] under a 600 mm [2 ft] straightedge or over 25 mm [1 in] under a 1200 mm [4 ft] straightedge. The arris at the intersection of the top surface and exposed front face shall be pitched so that the arris line is uniform throughout the length of the installed slabs. The sides shall be square to the exposed face unless the slabs are to be set

on a radius or other special condition which requires that the joints be cut to fit, but in any case shall be so finished that when the stones are placed side by side no space more than 20 mm [3/4 in] shall show in the joint for the full exposed height.

Liftpin holes in all sides will be allowed except on the exposed face.

SECTION 717
ROADSIDE IMPROVEMENT MATERIAL

717.03 C. Method #3 - Roadside Mixture #3 Change the seed proportions to the following:

Crown Vetch	25%
Perennial Lupine	25%
Red Clover	12.5%
Annual Rye	37.5%

717.05 Mulch Binder Change the third sentence to read as follows:

"Paper fiber mulch may be used as a binder at the rate of 2.3 kg/unit [5 lb/unit]."

SECTION 720
STRUCTURAL SUPPORTS FOR HIGHWAY SIGNS, LUMINAIRES, AND TRAFFIC SIGNALS

720.08 U-Channel Posts Change the first sentence from "…, U-Channel posts…" to "…, Rib Back U-Channel posts…"

SECTION 722
GEOTEXTILES

722.01 Stabilization/Reinforcement Geotextile Add the following to note #3; "The strengths specified in the columns labeled"<50%" and "≥ 50%" refer to the elongation at which the geotextile material was tested. For example; if a fabric is tested at 15% elongation then it must meet or exceed the minimum strength shown in the "<50%" column. Submittals must include the percent elongation at which the material was tested."

722.02 Drainage Geotextile Add the following to note #3; "The strengths specified in the columns labeled"<50%" and "≥ 50%" refer to the elongation at which the geotextile material was tested. For example; if a fabric is tested at 15% elongation then it must meet or exceed the minimum strength shown in the "<50%" column. Submittals must include the percent elongation at which the material was tested."

722.01 Erosion Control Geotextile Add the following note to Elongation in the Mechanical Property Table; "The strengths specified in the columns labeled"<50%" and "≥ 50%" refer to the elongation at which the geotextile material was tested. For example; if a fabric is tested at 15% elongation then it must meet or exceed the minimum strength shown in the "<50%" column. Submittals must include the percent elongation at which the material was tested."

APPENDIX A TO DIVISION 100

SECTION 1 - BIDDING PROVISIONS

A. Federally Required Certifications By signing and delivering a Bid, the Bidder certifies as provided in all certifications set forth in this Appendix A - Federal Contract Provisions Supplement including:

- Certification Regarding No Kickbacks to Procure Contract as provided on this page 1 below.
- Certification Regarding Non-collusion as provided on page 1 below.
- Certification Regarding Non-segregated Facilities as provided by FHWA Form 1273, section III set forth on page 21 below.
- "Certification Regarding Debarment, Suspension, Ineligibility and Voluntary Exclusion" as provided by FHWA Form 1273, section XI set forth on page 32 below.
- "Certification Regarding Use of Contract Funds for Lobbying" as provided by FHWA Form 1273, section XII set forth on page 35 below.

Unless otherwise provided below, the term "Bidder", for the purposes of these certifications, includes the Bidder, its principals, and the person(s) signing the Bid. Upon execution of the Contract, the Bidder (then called the Contractor) will again make all the certifications indicated in this paragraph above.

CERTIFICATION REGARDING NO KICKBACKS TO PROCURE CONTRACT Except expressly stated by the Bidder on sheets submitted with the Bid (if any), the Bidder hereby certifies, to the best of its knowledge and belief, that it has not:

(A) employed or retained for a commission, percentage, brokerage, contingent fee, or other consideration, any firm or person (other then a bona fide employee working solely for me) to solicit or secure this contract;

(B) agreed, as an express or implied condition for obtaining this contract, to employ or retain the services of any firm or person in connection with carrying out the contract, or;

C) paid, or agreed to pay, to any firm, organization, or person (other than a bona fide employee working solely for me) any fee, contribution, donation, or consideration of any kind for, or in connection with, procuring or carrying out the contract;

By signing and submitting a Bid, the Bidder acknowledges that this certification is to be furnished to the Maine Department of Transportation and the Federal Highway Administration, U.S. Department of Transportation in connection with this contract in anticipation of federal aid highway funds and is subject to applicable state and federal laws, both criminal and civil.

CERTIFICATION REGARDING NONCOLLUSION Under penalty of perjury as provided by federal law (28 U.S.C. §1746), the Bidder hereby certifies, to the best of its knowledge and belief, that:

the Bidder has not, either directly or indirectly, entered into any agreement, participated in any collusion, or otherwise taken any action in restraint of competitive bidding in connection with the Contract.

For a related provisions, see Section 102.7.2 (C) of the Standard Specifications - "Effects of Signing and Delivery of Bids" - "Certifications", Section 3 of this Appendix A entitled "Other Federal Requirements" including section XI - "Certification Regarding Debarment, Suspension, Ineligibility, and Voluntary Exclusion" and section XII. - "Certification Regarding Use of Contract Funds for Lobbying."

****

B. Bid Rigging Hotline To report bid rigging activities call: **1-800-424-9071**

The U.S. Department of Transportation (DOT) operates the above toll-free "hotline" Monday through Friday, 8:00 a.m. to 5:00 p.m., eastern time. Anyone with knowledge of possible bid rigging, bidder collusion, or other fraudulent activities should use the "hotline" to report such activities.

The "hotline" is part of the DOT's continuing effort to identify and investigate highway construction contract fraud and abuse and is operated under the direction of the DOT Inspector General. All information will be treated confidentially and caller anonymity will be respected.

****

SECTION 2 - FEDERAL EEO AND CIVIL RIGHTS REQUIREMENTS

Unless expressly otherwise provided in the Bid Documents, the provisions contained in this Section 2 of this "Federal Contract Provisions Supplement" are hereby incorporated into the Bid Documents and Contract.

A. Nondiscrimination & Civil Rights - Title VI The Contractor and its subcontractors shall not discriminate on the basis of race, color, national origin, or sex in the performance of this Contract. The Contractor shall carry out applicable requirements of 49 CFR Part 26 in the award and administration of DOT assisted contracts. Failure by the Contractor to carry out these requirements is a material breach of this contract, which may result in the termination of this contract or such other remedy as the Department deems appropriate. The Contractor and subcontractors shall comply with Title VI of the Civil Rights Act of 1964, as amended, and with all State of Maine and other Federal Civil Rights laws.

For related provisions, see Subsection B - "Nondiscrimination and Affirmative Action - Executive Order 11246" of this Section 2 and Section 3 - Other Federal Requirements of this "Federal Contract Provisions Supplement" including section II - "Nondiscrimination" of the "Required Contract Provisions, Federal Aid Construction Contracts", FHWA-1273.

B. Nondiscrimination and Affirmative Action - Executive Order 11246 Pursuant to Executive Order 11246, which was issued by President Johnson in 1965 and amended in 1967 and 1978, this Contract provides as follows.

The Contractor shall take specific affirmative actions to ensure equal employment opportunity. The evaluation of the Contractor's compliance with these specifications shall be based upon its efforts to achieve maximum results from its actions. The Contractor shall

document these efforts fully, and shall implement affirmative action steps at least as extensive as the following:

Ensure and maintain a working environment free of harassment, intimidations, and coercion at all sites, and in all facilities at which the Contractor's employees are assigned to work. The Contractor, where possible, will assign two or more women to each construction project. The Contractor shall specifically ensure that all forepersons, superintendents, and other on-site supervisory personnel are aware of and carry out the Contractor's obligation to maintain such a working environment, with specific attention to minority or female individuals working at such sites or in such facilities.

Establish and maintain a current list of minority and female recruitment sources, provide written notification to minority and female recruitment sources and to community organizations when the Contractor or its union have employment opportunities available, and to maintain a record of the organization's responses.

Maintain a current file of the names, addresses and telephone numbers of each minority and female off-the-street applicant and minority or female referral from a union, a recruitment source or community organization and of what action was taken with respect to each such individual. If such individual was sent to the union hiring hall for referral and was not referred back to the Contractor by the union or, if referred, not employed by the Contractor, this shall be documented in the file with the reason therefore, along with whatever additional actions the Contractor may have taken.

Provide immediate written notification to the Department's Civil Rights Office when the union or unions with which the Contractor has a collective bargaining agreement has not referred to the Contractor a minority person or woman sent by the Contractor, or when the Contractor has other information that the union referral process has impeded the Design-Builder's efforts to meet its obligations.

Develop on-the-job training opportunities and/or participate in training programs for the area which expressly include minorities and women, including upgrading programs and apprenticeship and trainee programs relevant to the Contractor's employment needs, especially those programs funded or approved by the Department of Labor. The Contractor shall provide notice of these programs to the sources compiled under B above.

Disseminate the Contractor's EEO policy by providing notice of the policy to unions and training programs and requesting their cooperation in assisting the Contractor in meeting its EEO obligation; by including it in any policy manual and collective bargaining agreement; by publicizing it in the company newspaper, annual report, etc.; by specific review of the policy with all management personnel and with all minority and female employees at least once a year; and by posting the company EEO policy on bulletin boards accessible to all employees at each location where construction work is performed.

Review, at least annually, the company's EEO policy and affirmative action obligations under these specifications with all employees having any responsibility for hiring, assignment, layoff, termination, or other employment decisions including specific review

of these items with on-site supervisory personnel such as Superintendents, General Forepersons, etc., prior to the initiation of construction work at any job site. A written record shall be made and maintained identifying the time and place of these meetings, persons attending, subject matter discussed, and disposition of the subject matter.

Disseminate the Contractor's EEO policy externally by including it in any advertising in the news media, specifically including minority and female news media, and providing written notification to and discussing the Contractor's EEO policy with other Contractor's and Subcontractors with whom the Contractor does or anticipates doing business.

Direct its recruitment efforts, both orally and written to minority, female and community organizations, to schools with minority and female students and to minority and female recruitment and training organizations serving the Contractor's recruitment area and employment needs. Not later that one month prior to the date for the acceptance of applications for apprenticeship or other training by any recruitment source, the Contractor shall send written notification to organizations such as the above describing the openings, screenings, procedures, and test to be used in the selection process.

Encourage present minority and female employees to recruit other minority persons and women and, where reasonable, provide after school, summer and vacation employment to minority and female youth, both on the site and in other areas of a Contractor's workforce.

Validate all tests and other selection requirements.

Conduct, at least annually, an inventory and evaluation at least of all minority and female personnel for promotional opportunities and encourage these employees to seek or to prepare for, through appropriate training, etc., such opportunities.

Ensure that seniority practices, job classifications, work assignments and other personnel practices, do not have a discriminatory effect by continually monitoring all personnel and employment related activities to ensure that the EEO policy and the Contractor's obligations under these specifications are being carried out.

Ensure that all facilities and company activities are non segregated except that separate or single-user toilet and necessary changing facilities shall be provided to assure privacy between the sexes.

Document and maintain a record of all solicitations of offers for subcontracts from minority and female construction Contractor's and suppliers, including circulation of solicitations to minority and female Contractor associations and other business associations.

Conduct a review, at least annually, of all supervisors' adherence to and performance under the Contractor's EEO policies and affirmative action obligations.

C. Goals for Employment of Women and Minorities Per Executive Order 11246, craft tradesperson goals are 6.9% women and .5% minorities employed. However, goals may be

adjusted upward at the mutual agreement of the Contractor and the Department. Calculation of these percentages shall not include On-the-Job Training Program trainees, and shall not include clerical or field clerk position employees.

For a more complete presentation of requirements for such Goals, see the federally required document "Goals for Employment of Females and Minorities" set forth in the next 6 pages below.

****

Start of GOALS FOR EMPLOYMENT OF FEMALES AND MINORITIES
Federally Required Contract Document

§60-4.2 Solicitations

(d) The following notice shall be included in, and shall be part of, all solicitations for offers and bids on all Federal and federally assisted construction contracts or subcontracts in excess of $10,000 to be performed in geographical areas designated by the Director pursuant to §60-4.6 of this part (see 41 CFR 60-4.2(a)):

Notice of Requirement for Affirmative Action to Ensure Equal Opportunity (Executive Order 11246)

1. The Offeror's or bidder's attention is called to the "Equal Opportunity Clause" and the "Standard Federal Equal Employment Specifications" set forth herein.

2. The goals and timetables for minority and female participation, expressed in percentage terms for the Contractor's aggregate work force in each trade on all construction work in the covered area, are as follows:

Goals for female participation in each trade 6.9%

Goals for minority participation for each trade
Maine
001 Bangor, ME 0.8%
Non-SMSA Counties (Aroostook, Hancock, Penobscot, Piscataquis, Waldo, Washington)

002 Portland-Lewiston, ME
SMSA Counties: 4243 Lewiston-Auburn, ME 0.5%
(Androscoggin)

6403 Portland, ME 0.6%
(Cumberland, Sagadahoc)

Non-SMSA Counties: 0.5%
(Franklin, Kennebec, Knox, Lincoln, Oxford, Somerset, York)

These goals are applicable to all the Contractor's construction work (whether or not it is Federal or federally assisted) performed in the covered area. If the contractor performs

construction work in a geographical area located outside of the covered area, it shall apply the goals established for such geographical area where the work is actually performed. With regard to this second area, the contractor also is subject to the goals for both its federally involved and non federally involved construction.

The contractor's compliance with the Executive Order and the regulations in 41 CFR Part 60-4 shall be based on its implementation of the Equal Opportunity Clause, specific affirmative action obligations required by the specifications set forth in 41 CFR 60-4.3(a), and its efforts to meet the goals. The hours of minority and female employment and training must be substantially uniform throughout the length of the contract, and in each trade, and the contractor shall make a good faith effort to employ minorities and women evenly on each of its projects. The transfer of minority or female employees or trainees from Contractor to Contractor or from project to project for the sole purpose of meeting the Contractor's goals shall be in violation of the contract, the Executive Order and the regulations in 41 CFR Part 60-4. Compliance with the goals will be measured against the total work hours performed.

3. The Contractor shall provide written notification to the Director of the Office of Federal Contract Compliance Programs within 10 working days of award of any construction subcontract in excess of $10,000 at any tier for construction work under the contract resulting from this solicitation. The notification shall list the name, address and telephone number of the subcontractor, employer identification number of the subcontractor, estimated dollar amount of the subcontract; estimated started and completion dates of the subcontract; and the geographical area in which the subcontract is to be performed.

4. As used in this Notice, and in the Contract resulting from this solicitation, the "covered area" is (insert description of the geographical areas where the contract is to be performed giving the state, county and city, if any).

STANDARD FEDERAL EQUAL EMPLOYMENT OPPORTUNITY CONSTRUCTION CONTRACT SPECIFICATIONS (EXECUTIVE ORDER 11246)

1. As used in these specifications:

   a. "Covered area" means the geographical area described in the solicitation from which this contract resulted;

   b. "Director" means Director, Office of Federal Contract Compliance Programs, United States Department of Labor, or any person to whom the Director delegates authority;

   c. "Employer identification number" means the Federal Social Security number used on the Employer's Quarterly Federal Tax Return, U.S. Treasury Department form 941;

   d. "Minority" includes:
      (i) Black (all persons having origins in any of the Black African racial groups not of Hispanic origin);
      (ii) Hispanic (all persons of Mexican, Puerto Rican, Cuban, Central or South American or other Spanish Culture or origin, regardless of race);

(iii) Asian and Pacific Islander (all persons having origins in any of the original peoples of the Far East, Southeast Asia, the Indian Subcontinent, or the Pacific Islands); and

(iv) American Indian or Alaskan Native (all persons having origins in any of the original peoples of the North America and maintaining identifiable tribal affiliations through membership and participation or community identification).

2. Whenever the Contractor, or any subcontractor at any tier, subcontracts a portion of the work involving any construction trade, it shall physically include in each subcontract in excess of $10,000 the provisions of these specifications and the Notice which contains the applicable goals for minority and female participation and which is set forth in the solicitations from which this contract resulted.

3. If the contractor, is participating (pursuant to 41 CFR 60-4.5) in a Hometown Plan approved by the U.S. Department of Labor in the covered area either individually or through an association, its affirmative action obligations on all work in the Plan area (including goals and timetables) shall be in accordance with that Plan for those trades which have unions participating in the Plan. Contractors must be able to demonstrate their participation in and compliance with the provisions of any such Hometown Plan. Each Contractor or Subcontractor participating in an approved Plan is individually required to comply with its obligations under the EEO clause, and to make a good faith effort to achieve each goal under the Plan in each trade in which it has employees. The overall good faith performance by other Contractors for Subcontractors toward a goal in an approved Plan does not excuse any covered Contractor's or Subcontractor's failure to take good faith efforts to achieve the Plan goals and timetables.

4. The Contractor shall implement the specific affirmative action standards provided in paragraphs 7 a. through p. of these specifications. The goals set forth in the solicitation from which this contract resulted are expressed as percentages of the total hours of employment and training of minority and female utilization the Contractor should reasonably be able to achieve in each construction trade in which it has employees in contractors performing construction work in geographical areas where they do not have a Federal or federally assisted construction contract shall apply the minority and female goals established for the geographical areas where the work is being performed. Goals are published periodically in the Federal Register in notice form and such notices may be obtained from any Office of Federal Contract Compliance Programs office or from Federal procurement contracting officers. The Contractor is expected to make substantially uniform progress in meeting its goals in each craft during the period specific.

5. Neither the provisions of any collective bargaining agreement, nor the failure by a union with whom the Contractor has a collective bargaining agreement, to refer either minorities or women shall excuse the Contractor's obligations under these specifications, Executive Order 11246, or the regulations promulgated pursuant, thereto.

6. In order for the non working training hours of apprentices and trainees to be counted in meeting the goals, such apprentices and trainees must be employed by the Contractor during the training period, and the Contractor must have made a commitment to employ the apprentices and trainees at the completion of their training, subject to the availability of

employment opportunities. Trainees must be trained pursuant to training programs approved by the U.S. Department of Labor.

7. The Contractor shall take specific affirmative actions to ensure equal employment opportunity. The evaluation of the Contractor's compliance with these specifications shall be based upon its effort to achieve maximum results from its actions. The Contractor shall document these efforts fully, and shall implement affirmative action steps at least as expensive as the following:

   a. Ensure and maintain a working environment free of harassment, intimidation, coercion at all sites, and in all facilities at which the Contractor's employees are assigned to work. The Contractor, when possible, will assign two or more women to each construction project. The Contractor shall specifically ensure that all foremen, superintendents, and other on-site supervisory personnel are aware of and carry out the Contractor's obligation to maintain such a working environment, with specific attention to minority or female individuals working at such sites or in such facilities.

   b. Establish and maintain a current list of minority and female recruitment sources provide written notification to minority and female recruitment sources and to community organizations when the Contractor or its unions have employment opportunities available, and maintain a record of the organization's responses.

   c. Maintain a current file of the names, addresses and telephone numbers of each minority and female off-the-street applicant and minority or female referral from a union, a recruitment sources or community organization and of what action was taken with respect to each such individual. If such individual was sent to the union hiring hall for referral and was not referred back to the Contractor by the union or, if referred, not employed by the Contractor, this shall be documented in the file with the reason therefore, along with whatever additional actions the Contractor may have taken.

   d. Provide immediate written notification to the Director when the union or unions with which the Contractor has a collective bargaining agreement has not referred to the Contractor a minority person or woman sent by the Contractor, or when the Contractor has other information that the union referral process has impeded the Contractor's efforts to meet its obligations.

   e. Develop on-the-job training opportunities and/or participate in training programs for the area which expressly include minorities and women, including upgrading programs and apprenticeship and trainee programs relevant to the Contractor's employment needs, especially those programs funded or approved by the Department of Labor. The Contractor shall provide notice of these programs to the sources complied under 7b above.

   f. Disseminate the Contractor's EEO policy by providing notice of the policy to unions and training programs and requesting their cooperation in assisting the Contractor in meeting its EEO obligations; by including in any policy manual and collective bargaining agreement; by publicizing it in the company newspaper, annual report, etc.; by specific review of the policy with all management personnel and with all minority and female

employees at least once a year; and by posting the company EEO policy on bulletin boards accessible to all employees at each location where construction work is performed.

g. Review, at least annually, the company's EEO policy and affirmative action obligations under these specifications with all employees having any responsibility for hiring, assignment, layoff, termination or other employment decisions including specific review of these items with on-site supervisory personnel such as Superintendents, General Foremen, etc., prior to the initiation of construction work at any job site. A written record shall be made and maintained identifying the time and place of these meetings, persons attending, subject matter discussed, and disposition of the subject matter.

h. Disseminate the Contractor's EEO policy externally by including it in any advertising in the news media, specifically including minority and female news media, and providing written notification to and discussing the Contractor's EEO policy with other Contractors and Subcontractors with whom the Contractor does or anticipates doing business.

i. Direct its recruitment, efforts, both oral and written, to minority, female and community organizations, to schools with minority and female students and to minority and female recruitment and training organizations serving the Contractor's recruitment area and employment needs. Not later than one month other training by any recruitment source, the Contractor shall send written notification to organizations such as the above, describing prior to the date for the acceptance of applications for apprenticeship or the openings, screening procedures, and tests to be used in the selection process.

j. Encourage present minority and female employees to recruit other minority persons and women and, where reasonable, provide after school, summer and vacation employment to minority and female youth both on site and in other areas of a Contractor's work force.

k. Validate all tests and other selection requirements where there is an obligation to do so under 41 CFR Part 60-3.

l. Conduct, at least annually, an inventory and evaluation at least of all minority and female personnel for promotional opportunities and encourage these employees to seek or to prepare for, through appropriate training, etc., such opportunities.

m. Ensure that seniority practices, job classifications, work assignments and other personnel practices, do not have a discriminatory effect by continually monitoring all personnel and employment related activities to ensure that the EEO policy and the Contractor's obligations under these specifications are being carried out.

n. Ensure that all facilities and company activities are non segregated except that separate or single-user toilet and necessary changing facilities shall be provided to assure privacy between the sexes.

o. Document and maintain a record of all solicitations of offers for subcontracts from minority and female construction contractors and suppliers, including circulation of

solicitation to minority and female contractor associations and other business associations.

p. Conduct a review, at least annually, of all supervisor's adherence to and performance under the Contractor's EEO policies and affirmative action obligations.

8. Contractors are encouraged to participate in voluntary associations which assist in fulfilling one or more of their affirmative action obligations (7 a through p.). The efforts of a contractor association, joint contractor-union, contractor-community, or other similar group of which the contractor is a member and participant, may be asserted as fulfilling any one or more of its obligations under 7 a through p. of these specifications provided that the contractor actively participates in the group, makes every effort to assure that the group has a positive impact on the employment of minorities and women in the industry, ensures that the concrete benefits of the program and reflected in the Contractor's minority and female work force participation, makes a good faith effort to meet its individual goals and timetables, and can provide access to documentation which demonstrates the effectiveness of actions take on behalf of the Contractor. The obligation to comply, however, is the Contractor's and failure of such a group to fulfill an obligation shall not be a defense for the Contractor's noncompliance.

9. A single goal for minorities and a separate single goal for women have been established. The Contractor, however, is required to provide equal employment opportunity and to take affirmative action for all minority groups, both make and female, and all women, both minority and non-minority. Consequently, the Contractor may be in violation of the Executive Order if a particular group is employed in a substantially disparate manner (for example, specific minority group of women is underutilized.)

10. The Contractor shall not use the goals and timetables or affirmative action even through the Contractor has achieved its goals for women generally, the Contractor may be in violation of the Executive Order if standards to discriminate against any person because of race, color, religion, sex, or national origin.

11. The Contractor shall not enter into any Subcontract with any person or firm debarred from Government contracts pursuant to Executive Order 11246.

12. The Contractor shall carry out such sanctions and penalties for violation of these specifications and of the Equal Opportunity Clause, including suspension, termination and cancellation of existing subcontracts as may be imposed or ordered pursuant to Executive Order 11246, as amended, and its implementation regulations by the Office of Federal Contract Compliance Programs. Any Contractor who fails to carry out such sanctions and penalties shall be in violation of these specifications and Executive Order 11246, as amended.

13. The Contractor, in fulfilling its obligations under these specifications, shall implement specific affirmative action steps, at least as extensive as those standards prescribed in paragraph 7 of these specifications, so as to achieve maximum results from its efforts to ensure equal employment opportunity. If the Contractor fails to comply with the

requirements of the Executive Order, the implementing regulations, or these specifications, the Director shall proceed in accordance with 41 CFR 60-4.6.

14. The Contractor shall designate a responsible official to monitor all employment related activity to ensure that the company EEO policy is being carried out, to submit reports relating to the provisions hereof as may be required by the Government and to keep records. Records shall at least include for each employee the name, address, telephone numbers, construction trade, union affiliation if any, employee identification number when assigned, social security number, race, sex, status (e.g. mechanic, apprentice, trainee, helper, or laborer), dates of changes in status, hours worked per week in the indicated trade, rate of pay, and location sat which the work was performed. Records be maintained in an easily understandable and retrievable form; however, to the degree that existing records satisfy this requirement, contractors shall not be required to maintain separate records.

15. Nothing herein provided shall be construed as a limitation upon the application of other laws which establish different standards of compliance or upon the application of requirements for the hiring of local or other area residents (e.g., those under the Public Works Employment Act of 1977 and the Community Development Block Grant Program).

End of GOALS FOR EMPLOYMENT OF FEMALES AND MINORITIES
Federally Required Contract Document

****

D. Disadvantaged Business Enterprise (DBE) Requirements The Department has established an annual Disadvantaged Business Enterprise goal to be achieved through race neutral means. This goal will be adjusted periodically and will be provided by Supplemental Provision. The Contractor shall comply with all provisions of this section regarding DBE participation and the Department's latest version of the Disadvantaged Business Enterprise Program Manual, said Manual being incorporated herein by reference. In the case of conflict between this Contract and said Manual, this Contract shall control. The Department reserves the right to adjust DBE goals on a project-by-project basis by addendum.

Policy. It is the Department's policy that DBEs as defined in 23 CFR Part 26 and referenced in the Transportation Equity Act for 21st Century of 1998, as amended from the Surface Transportation Uniform Relocation Assistance Act of 1987, and the Intermodal Surface Transportation Efficiency Act of 1991. The intent hereto remains to provide the maximum opportunity for DBEs to participate in the performance of contracts financed in whole or in part with federal funds.

The Department and its Contractors shall not discriminate on the basis of race, color, national origin, ancestry, sex, age, or disability in the award and performance of DOT assisted contracts.

Disadvantaged Business Enterprises are those so certified by the Maine Department of Transportation Civil Rights Office prior to bid opening date.

The Department has determined that elements of a good faith effort to meet the contract goal include but are not limited to the following:

1. Whether the Contractor advertised in general circulation, trade association, and minority/women's-focus media concerning the subcontracting opportunities;

2. Whether the Contractor provided written notice to a reasonable number of specific DBEs that their interest in the contract is being solicited;

3. Whether the Contractor followed up on initial solicitations of interest by contacting DBEs to determine with certainty whether the DBEs were interested;

4. Whether the Contractor selected portions of the work to be performed by DBEs in order to increase the likelihood of meeting the DBE goals;

5. Whether the Contractor provided interested DBEs with adequate information about the plans, specification and requirements of the contract;

6. Whether the Contractor negotiated in good faith with interested DBEs, not rejecting the DBE as unqualified without sound reasons based on a thorough investigation of their capabilities;

7. Whether the Contractor made efforts to assist interested DBEs with other appropriate technical/financial assistance required by the Department or Contractor;

8. Whether the Contractor effectively used the services of available minority/women's community organizations, minority/women's business assistance offices; and other organizations that provide assistance in the recruitment and placement of DBEs.

Substitutions of DBEs. The following may be acceptable reasons for Civil Rights Office approval of such a change order:

- The DBE defaults, voluntarily removes itself or is over-extended;
- The Department deletes portions of the work to by performed by the DBE.

It is not intended that the ability to negotiate a more advantageous contract with another certified DBE be considered a valid basis for such a change in DBE utilization once the DBE Bid Submission review has been passed. Any requests to alter the DBE commitment must be in writing and included with the change order.

Failure to carry out terms of this Standard Specification shall be treated as a violation of this contract and will result in contract sanctions which may include withholding of partial payments totaling the creditable dollars amount which would have been paid for said DBE participation, termination of this contract or other measures which may affect the ability of the Contractor to obtain Department contracts.

Copies of the Maine Department of Transportation's DBE Program may be obtained from:

Maine Department of Transportation
Civil Rights Office
#16 State House Station
Augusta, Maine 04333-0016
tel. (207) 624-3519

Quarterly Reporting Requirement. The Contractor must submit Semi-annual reports of actual dollars paid to Disadvantaged Business Enterprises (DBE's) on this Project to the MaineDOT Civil Rights Office by the end of the third week of April and October for the period covering the preceding six months considered Federal Fiscal Year periods. The reports will be submitted directly to the Civil Rights Office on the form provided in the latest version of the DBE Program Manual. Failure to submit the report by the deadline may result in a withholding of approval of partial payment estimates by the Department.

SECTION 3 - OTHER FEDERAL REQUIREMENTS

Unless expressly otherwise provided in the Bid Documents, the provisions contained in this Section 3 of this "Federal Contract Provisions Supplement" are hereby incorporated into the Bid Documents and Contract.

A. Buy America

If the cost of products purchased for permanent use in this project which are manufactured of steel, iron or the application of any coating to products of these materials exceeds 0.1 percent of the contract amount, or $2,500.00, whichever is greater, the products shall have been manufactured and the coating applied in the United States. The coating materials are not subject to this clause, only the application of the coating. In computing that amount, only the cost of the product and coating application cost will be included.

Ore, for the manufacture of steel or iron, may be from outside the United States; however, all other manufacturing processes of steel or iron must be in the United States to qualify as having been manufactured in the United States.

United States includes the 50 United States and any place subject to the jurisdiction thereof.

Products of steel include, but are not limited to, such products as structural steel, piles, guardrail, steel culverts, reinforcing steel, structural plate and steel supports for signs, luminaries and signals.

Products of iron include, but are not limited to, such products as cast iron grates.

Application of coatings include, but are not limited to, such applications as epoxy, galvanized and paint.

To assure compliance with this section, the Contractor shall submit a certification letter on its letterhead to the Department stating the following:

> "This is to certify that products made of steel, iron or the application of any coating to products of these materials whose costs are in excess of $2,500.00 or 0.1 percent of the original contract amount, whichever is greater, were manufactured and the coating, if one was required, was applied in the United States."

B. Materials

a. Convict Produced Materials References: 23 U.S.C. 114(b)(2), 23 CFR 635.417

Applicability: FHWA's prohibition against the use of convict material only applies to Federal-aid highways. Materials produced after July 1, 1991, by convict labor may only be incorporated in a Federal-aid highway construction project if: 1) such materials have been produced by convicts who are on parole, supervised release, or probation from a prison; or 2) such material has been produced in a qualified prison facility, e.g., prison industry, with the amount produced during any 12-month period, for use in Federal-aid projects, not exceeding the amount produced, for such use, during the 12-month period ending July 1, 1987.

Materials obtained from prison facilities (e.g., prison industries) are subject to the same requirements for Federal-aid participation that are imposed upon materials acquired from other sources. Materials manufactured or produced by convict labor will be given no preferential treatment.

The preferred method of obtaining materials for a project is through normal contracting procedures which require the contractor to furnish all materials to be incorporated in the work. The contractor selects the source, public or private, from which the materials are to be obtained (23 CFR 635.407). Prison industries are prohibited from bidding on projects directly (23 CFR 635.112e), but may act as material supplier to construction contractors.

Prison materials may also be approved as State-furnished material. However, since public agencies may not bid in competition with private firms, direct acquisition of materials from a prison industry for use as State-furnished material is subject to a public interest finding with the Division Administrator's concurrence (23 CFR 635.407d). Selection of materials produced by convict labor as State-furnished materials for mandatory use should be cleared prior to the submittal of the Plans Specifications & Estimates (PS&E).

b. Patented/Proprietary Products References: 23 U.S.C. 112, 23 CFR 635.411

FHWA will not participate, directly or indirectly, in payment for any premium or royalty on any patented or proprietary material, specification, or process specifically set forth in the plans and specifications for a project, unless:

- the item is purchased or obtained through competitive bidding with equally suitable unpatented items,
- the STA certifies either that the proprietary or patented item is essential for synchronization with the existing highway facilities or that no equally suitable alternative exists, or
- the item is used for research or for a special type of construction on relatively short sections of road for experimental purposes. States should follow FHWA's procedures for "Construction Projects Incorporating Experimental Features" (expermnt.htm) for the submittal of work plans and evaluations.

The primary purpose of the policy is to have competition in selection of materials and allow for development of new materials and products. The policy further permits materials and products that are judged equal may be bid under generic specifications. If only patented or proprietary products are acceptable, they shall be bid as alternatives with all, or at least a

reasonable number of, acceptable materials or products listed; and the Division Administrator may approve a single source if it can be found that its utilization is in the public interest.

Trade names are generally the key to identifying patented or proprietary materials. Trade name examples include 3M, Corten, etc. Generally, products identified by their brand or trade name are not to be specified without an "or equal" phrase, and, if trade names are used, all, or at least a reasonable number of acceptable "equal" materials or products should be listed. The licensing of several suppliers to produce a product does not change the fact that it is a single product and should not be specified to the exclusion of other equally suitable products.

c. State Preference References: 23 U.S.C. 112, 23 CFR 635.409

Materials produced within Maine shall not be favored to the exclusion of comparable materials produced outside of Maine. State preference clauses give particular advantage to the designated source and thus restrict competition. Therefore, State preference provisions shall not be used on any Federal-aid construction projects.

This policy also applies to State preference actions against materials of foreign origin, except as otherwise permitted by Federal law. Thus, States cannot give preference to in-State material sources over foreign material sources. Under the Buy America provisions, the States are permitted to expand the Buy America restrictions provided that the STA is legally authorized under State law to impose more stringent requirements.

d. State Owned/Furnished/Designated Materials References: 23 U.S.C. 112, 23 CFR 635.407

Current FHWA policy requires that the contractor must furnish all materials to be incorporated in the work, and the contractor shall be permitted to select the sources from which the materials are to be obtained. Exceptions to this requirement may be made when there is a definite finding, by MaineDOT and concurred in by Federal Highway Administration's (FHWA) Division Administrator, that it is in the public interest to require the contractor to use materials furnished by the MaineDOT or from sources designated by MaineDOT. The exception policy can best be understood by separating State-furnished materials into the categories of manufactured materials and local natural materials.

Manufactured Materials When the use of State-furnished manufactured materials is approved based on a public interest finding, such use must be made mandatory. The optional use of State-furnished manufactured materials is in violation of our policy prohibiting public agencies from competing with private firms. Manufactured materials to be furnished by MaineDOT must be acquired through competitive bidding, unless there is a public interest finding for another method, and concurred in by FHWA's Division Administrator.

Local Natural Materials When MaineDOT owns or controls a local natural materials source such as a borrow pit or a stockpile of salvaged pavement material, etc., the materials may be designated for either optional or mandatory use; however, mandatory use will require a public interest finding (PIF) and FHWA's Division Administrator's concurrence.

In order to permit prospective bidders to properly prepare their bids, the location, cost, and any conditions to be met for obtaining materials that are made available to the contractor shall be stated in the bidding documents.

Mandatory Disposal Sites Normally, the disposal site for surplus excavated materials is to be of the contractor's choosing; although, an optional site(s) may be shown in the contract provisions. A mandatory site shall be specified when there is a finding by MaineDOT, with the concurrence of the Division Administrator, that such placement is the most economical or that the environment would be substantially enhanced without excessive cost. Discussion of the mandatory use of a disposal site in the environmental document may serve as the basis for the public interest finding.

Summarizing FHWA policy for the mandatory use of borrow or disposal sites:

- mandatory use of either requires a public interest finding and FHWA's Division Administrator's concurrence,
- mandatory use of either may be based on environmental consideration where the environment will be substantially enhanced without excessive additional cost, and
- where the use is based on environmental considerations, the discussion in the environmental document may be used as the basis for the public interest finding.

Factors to justify a public interest finding should include such items as cost effectiveness, system integrity, and local shortages of material.

C. Standard FHWA Contract Provisions - FHWA 1273

Unless expressly otherwise provided in the Bid Documents, the following "Required Contract Provisions, Federal Aid Construction Contracts", FHWA-1273, are hereby incorporated into the Bid Documents and Contract.
****

Start of FHWA 1273 REQUIRED CONTRACT PROVISIONS
FEDERAL-AID CONSTRUCTION CONTRACTS (As revised through May 1, 2012)

FHWA-1273 -- Revised May 1, 2012

REQUIRED CONTRACT PROVISIONS
FEDERAL-AID CONSTRUCTION CONTRACTS

I. General
II. Nondiscrimination

III. Nonsegregated Facilities
IV. Davis-Bacon and Related Act Provisions
V. Contract Work Hours and Safety Standards Act Provisions
VI. Subletting or Assigning the Contract
VII. Safety: Accident Prevention
VIII. False Statements Concerning Highway Projects
IX. Implementation of Clean Air Act and Federal Water Pollution Control Act
X. Compliance with Governmentwide Suspension and Debarment Requirements
XI. Certification Regarding Use of Contract Funds for Lobbying

ATTACHMENTS

A. Employment and Materials Preference for Appalachian Development Highway System or Appalachian Local Access Road Contracts (included in Appalachian contracts only)

I. GENERAL

1. Form FHWA-1273 must be physically incorporated in each construction contract funded under Title 23 (excluding emergency contracts solely intended for debris removal). The contractor (or subcontractor) must insert this form in each subcontract and further require its inclusion in all lower tier subcontracts (excluding purchase orders, rental agreements and other agreements for supplies or services).

The applicable requirements of Form FHWA-1273 are incorporated by reference for work done under any purchase order, rental agreement or agreement for other services. The prime contractor shall be responsible for compliance by any subcontractor, lower-tier subcontractor or service provider.

Form FHWA-1273 must be included in all Federal-aid design-build contracts, in all subcontracts and in lower tier subcontracts (excluding subcontracts for design services, purchase orders, rental agreements and other agreements for supplies or services). The design-builder shall be responsible for compliance by any subcontractor, lower-tier subcontractor or service provider.

Contracting agencies may reference Form FHWA-1273 in bid proposal or request for proposal documents, however, the Form FHWA-1273 must be physically incorporated (not referenced) in all contracts, subcontracts and lower-tier subcontracts (excluding purchase orders, rental agreements and other agreements for supplies or services related to a construction contract).

2. Subject to the applicability criteria noted in the following sections, these contract provisions shall apply to all work performed on the contract by the contractor's own organization and with the assistance of workers under the contractor's immediate superintendence and to all work performed on the contract by piecework, station work, or by subcontract.

3. A breach of any of the stipulations contained in these Required Contract Provisions may be sufficient grounds for withholding of progress payments, withholding of final payment, termination of the contract, suspension / debarment or any other action determined to be appropriate by the contracting agency and FHWA.

4. Selection of Labor: During the performance of this contract, the contractor shall not use convict labor for any purpose within the limits of a construction project on a Federal-aid highway unless it is labor performed by convicts who are on parole, supervised release, or probation. The term Federal-aid highway does not include roadways functionally classified as local roads or rural minor collectors.

II. NONDISCRIMINATION

The provisions of this section related to 23 CFR Part 230 are applicable to all Federal-aid construction contracts and to all related construction subcontracts of $10,000 or more. The provisions of 23 CFR Part 230 are not applicable to material supply, engineering, or architectural service contracts.

In addition, the contractor and all subcontractors must comply with the following policies: Executive Order 11246, 41 CFR 60, 29 CFR 1625-1627, Title 23 USC Section 140, the Rehabilitation Act of 1973, as amended (29 USC 794), Title VI of the Civil Rights Act of 1964, as amended, and related regulations including 49 CFR Parts 21, 26 and 27; and 23 CFR Parts 200, 230, and 633.

The contractor and all subcontractors must comply with: the requirements of the Equal Opportunity Clause in 41 CFR 60-1.4(b) and, for all construction contracts exceeding $10,000, the Standard Federal Equal Employment Opportunity Construction Contract Specifications in 41 CFR 60-4.3.

Note: The U.S. Department of Labor has exclusive authority to determine compliance with Executive Order 11246 and the policies of the Secretary of Labor including 41 CFR 60, and 29 CFR 1625-1627. The contracting agency and the FHWA have the authority and the responsibility to ensure compliance with Title 23 USC Section 140, the Rehabilitation Act of 1973, as amended (29 USC 794), and Title VI of the Civil Rights Act of 1964, as amended, and related regulations including 49 CFR Parts 21, 26 and 27; and 23 CFR Parts 200, 230, and 633.

The following provision is adopted from 23 CFR 230, Appendix A, with appropriate revisions to conform to the U.S. Department of Labor (US DOL) and FHWA requirements.

1. Equal Employment Opportunity: Equal employment opportunity (EEO) requirements not to discriminate and to take affirmative action to assure equal opportunity as set forth under laws, executive orders, rules, regulations (28 CFR 35, 29 CFR 1630, 29 CFR 1625-1627, 41 CFR 60 and 49 CFR 27) and orders of the Secretary of Labor as modified by the provisions prescribed herein, and imposed pursuant to 23 U.S.C. 140 shall constitute the EEO and specific affirmative action standards for the contractor's project activities under this contract. The provisions of the Americans with Disabilities Act of 1990 (42 U.S.C. 12101 et seq.) set forth under 28 CFR 35 and 29 CFR 1630 are incorporated by reference in this contract. In the execution of this contract, the contractor agrees to comply with the following minimum specific requirement activities of EEO:

a. The contractor will work with the contracting agency and the Federal Government to ensure that it has made every good faith effort to provide equal opportunity with respect to all of its terms and conditions of employment and in their review of activities under the contract.

b. The contractor will accept as its operating policy the following statement:

"It is the policy of this Company to assure that applicants are employed, and that employees are treated during employment, without regard to their race, religion, sex, color, national origin, age or disability. Such action shall include: employment, upgrading, demotion, or transfer; recruitment or recruitment advertising; layoff or termination; rates of pay or other forms of compensation; and selection for training, including apprenticeship, pre-apprenticeship, and/or on-the-job training."

2. EEO Officer: The contractor will designate and make known to the contracting officers an EEO Officer who will have the responsibility for and must be capable of effectively administering and promoting an active EEO program and who must be assigned adequate authority and responsibility to do so.

3. Dissemination of Policy: All members of the contractor's staff who are authorized to hire, supervise, promote, and discharge employees, or who recommend such action, or who are substantially involved in such action, will be made fully cognizant of, and will implement, the contractor's EEO policy and contractual responsibilities to provide EEO in each grade and classification of employment. To ensure that the above agreement will be met, the following actions will be taken as a minimum:

a. Periodic meetings of supervisory and personnel office employees will be conducted before the start of work and then not less often than once every six months, at which time the contractor's EEO policy and its implementation will be reviewed and explained. The meetings will be conducted by the EEO Officer.

b. All new supervisory or personnel office employees will be given a thorough indoctrination by the EEO Officer, covering all major aspects of the contractor's EEO obligations within thirty days following their reporting for duty with the contractor.

c. All personnel who are engaged in direct recruitment for the project will be instructed by the EEO Officer in the contractor's procedures for locating and hiring minorities and women.

d. Notices and posters setting forth the contractor's EEO policy will be placed in areas readily accessible to employees, applicants for employment and potential employees.

e. The contractor's EEO policy and the procedures to implement such policy will be brought to the attention of employees by means of meetings, employee handbooks, or other appropriate means.

4. Recruitment: When advertising for employees, the contractor will include in all advertisements for employees the notation: "An Equal Opportunity Employer." All such advertisements will be placed in publications having a large circulation among minorities and women in the area from which the project work force would normally be derived.

a. The contractor will, unless precluded by a valid bargaining agreement, conduct systematic and direct recruitment through public and private employee referral sources likely to yield

qualified minorities and women. To meet this requirement, the contractor will identify sources of potential minority group employees, and establish with such identified sources procedures whereby minority and women applicants may be referred to the contractor for employment consideration.

b. In the event the contractor has a valid bargaining agreement providing for exclusive hiring hall referrals, the contractor is expected to observe the provisions of that agreement to the extent that the system meets the contractor's compliance with EEO contract provisions. Where implementation of such an agreement has the effect of discriminating against minorities or women, or obligates the contractor to do the same, such implementation violates Federal nondiscrimination provisions.

c. The contractor will encourage its present employees to refer minorities and women as applicants for employment. Information and procedures with regard to referring such applicants will be discussed with employees.

5. Personnel Actions: Wages, working conditions, and employee benefits shall be established and administered, and personnel actions of every type, including hiring, upgrading, promotion, transfer, demotion, layoff, and termination, shall be taken without regard to race, color, religion, sex, national origin, age or disability. The following procedures shall be followed:

a. The contractor will conduct periodic inspections of project sites to insure that working conditions and employee facilities do not indicate discriminatory treatment of project site personnel.

b. The contractor will periodically evaluate the spread of wages paid within each classification to determine any evidence of discriminatory wage practices.

c. The contractor will periodically review selected personnel actions in depth to determine whether there is evidence of discrimination. Where evidence is found, the contractor will promptly take corrective action. If the review indicates that the discrimination may extend beyond the actions reviewed, such corrective action shall include all affected persons.

d. The contractor will promptly investigate all complaints of alleged discrimination made to the contractor in connection with its obligations under this contract, will attempt to resolve such complaints, and will take appropriate corrective action within a reasonable time. If the investigation indicates that the discrimination may affect persons other than the complainant, such corrective action shall include such other persons. Upon completion of each investigation, the contractor will inform every complainant of all of their avenues of appeal.

6. Training and Promotion:

a. The contractor will assist in locating, qualifying, and increasing the skills of minorities and women who are applicants for employment or current employees. Such efforts should be aimed at developing full journey level status employees in the type of trade or job classification involved.

b. Consistent with the contractor's work force requirements and as permissible under Federal and State regulations, the contractor shall make full use of training programs, i.e., apprenticeship, and on-the-job training programs for the geographical area of contract performance. In the event a special provision for training is provided under this contract, this subparagraph will be superseded as indicated in the special provision. The contracting agency may reserve training positions for persons who receive welfare assistance in accordance with 23 U.S.C. 140(a).

c. The contractor will advise employees and applicants for employment of available training programs and entrance requirements for each.

d. The contractor will periodically review the training and promotion potential of employees who are minorities and women and will encourage eligible employees to apply for such training and promotion.

7. Unions: If the contractor relies in whole or in part upon unions as a source of employees, the contractor will use good faith efforts to obtain the cooperation of such unions to increase opportunities for minorities and women. Actions by the contractor, either directly or through a contractor's association acting as agent, will include the procedures set forth below:

a. The contractor will use good faith efforts to develop, in cooperation with the unions, joint training programs aimed toward qualifying more minorities and women for membership in the unions and increasing the skills of minorities and women so that they may qualify for higher paying employment.

b. The contractor will use good faith efforts to incorporate an EEO clause into each union agreement to the end that such union will be contractually bound to refer applicants without regard to their race, color, religion, sex, national origin, age or disability.

c. The contractor is to obtain information as to the referral practices and policies of the labor union except that to the extent such information is within the exclusive possession of the labor union and such labor union refuses to furnish such information to the contractor, the contractor shall so certify to the contracting agency and shall set forth what efforts have been made to obtain such information.

d. In the event the union is unable to provide the contractor with a reasonable flow of referrals within the time limit set forth in the collective bargaining agreement, the contractor will, through independent recruitment efforts, fill the employment vacancies without regard to race, color, religion, sex, national origin, age or disability; making full efforts to obtain qualified and/or qualifiable minorities and women. The failure of a union to provide sufficient referrals (even though it is obligated to provide exclusive referrals under the terms of a collective bargaining agreement) does not relieve the contractor from the requirements of this paragraph. In the event the union referral practice prevents the contractor from meeting the obligations pursuant to Executive Order 11246, as amended, and these special provisions, such contractor shall immediately notify the contracting agency.

8. Reasonable Accommodation for Applicants / Employees with Disabilities: The contractor must be familiar with the requirements for and comply with the Americans with

Disabilities Act and all rules and regulations established there under. Employers must provide reasonable accommodation in all employment activities unless to do so would cause an undue hardship.

9. Selection of Subcontractors, Procurement of Materials and Leasing of Equipment: The contractor shall not discriminate on the grounds of race, color, religion, sex, national origin, age or disability in the selection and retention of subcontractors, including procurement of materials and leases of equipment. The contractor shall take all necessary and reasonable steps to ensure nondiscrimination in the administration of this contract.

a. The contractor shall notify all potential subcontractors and suppliers and lessors of their EEO obligations under this contract.

b. The contractor will use good faith efforts to ensure subcontractor compliance with their EEO obligations.

10. Assurance Required by 49 CFR 26.13(b):

a. The requirements of 49 CFR Part 26 and the State DOT's U.S. DOT-approved DBE program are incorporated by reference.

b. The contractor or subcontractor shall not discriminate on the basis of race, color, national origin, or sex in the performance of this contract. The contractor shall carry out applicable requirements of 49 CFR Part 26 in the award and administration of DOT-assisted contracts. Failure by the contractor to carry out these requirements is a material breach of this contract, which may result in the termination of this contract or such other remedy as the contracting agency deems appropriate.

11. Records and Reports: The contractor shall keep such records as necessary to document compliance with the EEO requirements. Such records shall be retained for a period of three years following the date of the final payment to the contractor for all contract work and shall be available at reasonable times and places for inspection by authorized representatives of the contracting agency and the FHWA.

a. The records kept by the contractor shall document the following:

(1) The number and work hours of minority and non-minority group members and women employed in each work classification on the project;

(2) The progress and efforts being made in cooperation with unions, when applicable, to increase employment opportunities for minorities and women; and

(3) The progress and efforts being made in locating, hiring, training, qualifying, and upgrading minorities and women;

b. The contractors and subcontractors will submit an annual report to the contracting agency each July for the duration of the project, indicating the number of minority, women, and non-

minority group employees currently engaged in each work classification required by the contract work. This information is to be reported on Form FHWA-1391. The staffing data should represent the project work force on board in all or any part of the last payroll period preceding the end of July. If on-the-job training is being required by special provision, the contractor will be required to collect and report training data. The employment data should reflect the work force on board during all or any part of the last payroll period preceding the end of July.

III. NONSEGREGATED FACILITIES

This provision is applicable to all Federal-aid construction contracts and to all related construction subcontracts of $10,000 or more.

The contractor must ensure that facilities provided for employees are provided in such a manner that segregation on the basis of race, color, religion, sex, or national origin cannot result. The contractor may neither require such segregated use by written or oral policies nor tolerate such use by employee custom. The contractor's obligation extends further to ensure that its employees are not assigned to perform their services at any location, under the contractor's control, where the facilities are segregated. The term "facilities" includes waiting rooms, work areas, restaurants and other eating areas, time clocks, restrooms, washrooms, locker rooms, and other storage or dressing areas, parking lots, drinking fountains, recreation or entertainment areas, transportation, and housing provided for employees. The contractor shall provide separate or single-user restrooms and necessary dressing or sleeping areas to assure privacy between sexes.

IV. DAVIS-BACON AND RELATED ACT PROVISIONS

This section is applicable to all Federal-aid construction projects exceeding $2,000 and to all related subcontracts and lower-tier subcontracts (regardless of subcontract size). The requirements apply to all projects located within the right-of-way of a roadway that is functionally classified as Federal-aid highway. This excludes roadways functionally classified as local roads or rural minor collectors, which are exempt. Contracting agencies may elect to apply these requirements to other projects.

The following provisions are from the U.S. Department of Labor regulations in 29 CFR 5.5 “Contract provisions and related matters” with minor revisions to conform to the FHWA-1273 format and FHWA program requirements.

1. Minimum wages

a. All laborers and mechanics employed or working upon the site of the work, will be paid unconditionally and not less often than once a week, and without subsequent deduction or rebate on any account (except such payroll deductions as are permitted by regulations issued by the Secretary of Labor under the Copeland Act (29 CFR part 3)), the full amount of wages and bona fide fringe benefits (or cash equivalents thereof) due at time of payment computed at rates not less than those contained in the wage determination of the Secretary of Labor which is attached hereto and made a part hereof, regardless of any contractual relationship which may be alleged to exist between the contractor and such laborers and mechanics.

Contributions made or costs reasonably anticipated for bona fide fringe benefits under section 1(b)(2) of the Davis-Bacon Act on behalf of laborers or mechanics are considered wages paid to

such laborers or mechanics, subject to the provisions of paragraph 1.d. of this section; also, regular contributions made or costs incurred for more than a weekly period (but not less often than quarterly) under plans, funds, or programs which cover the particular weekly period, are deemed to be constructively made or incurred during such weekly period. Such laborers and mechanics shall be paid the appropriate wage rate and fringe benefits on the wage determination for the classification of work actually performed, without regard to skill, except as provided in 29 CFR 5.5(a)(4). Laborers or mechanics performing work in more than one classification may be compensated at the rate specified for each classification for the time actually worked therein: Provided, That the employer's payroll records accurately set forth the time spent in each classification in which work is performed. The wage determination (including any additional classification and wage rates conformed under paragraph 1.b. of this section) and the Davis-Bacon poster (WH–1321) shall be posted at all times by the contractor and its subcontractors at the site of the work in a prominent and accessible place where it can be easily seen by the workers.

b. (1) The contracting officer shall require that any class of laborers or mechanics, including helpers, which is not listed in the wage determination and which is to be employed under the contract shall be classified in conformance with the wage determination. The contracting officer shall approve an additional classification and wage rate and fringe benefits therefore only when the following criteria have been met:

(i) The work to be performed by the classification requested is not performed by a classification in the wage determination; and

(ii) The classification is utilized in the area by the construction industry; and

(iii) The proposed wage rate, including any bona fide fringe benefits, bears a reasonable relationship to the wage rates contained in the wage determination.

(2) If the contractor and the laborers and mechanics to be employed in the classification (if known), or their representatives, and the contracting officer agree on the classification and wage rate (including the amount designated for fringe benefits where appropriate), a report of the action taken shall be sent by the contracting officer to the Administrator of the Wage and Hour Division, Employment Standards Administration, U.S. Department of Labor, Washington, DC 20210. The Administrator, or an authorized representative, will approve, modify, or disapprove every additional classification action within 30 days of receipt and so advise the contracting officer or will notify the contracting officer within the 30-day period that additional time is necessary.

(3) In the event the contractor, the laborers or mechanics to be employed in the classification or their representatives, and the contracting officer do not agree on the proposed classification and wage rate (including the amount designated for fringe benefits, where appropriate), the contracting officer shall refer the questions, including the views of all interested parties and the recommendation of the contracting officer, to the Wage and Hour Administrator for determination. The Wage and Hour Administrator, or an authorized representative, will issue a determination within 30 days of receipt and so advise the contracting officer or will notify the contracting officer within the 30-day period that additional time is necessary.

(4) The wage rate (including fringe benefits where appropriate) determined pursuant to paragraphs 1.b.(2) or 1.b.(3) of this section, shall be paid to all workers performing work in the

classification under this contract from the first day on which work is performed in the classification.

c. Whenever the minimum wage rate prescribed in the contract for a class of laborers or mechanics includes a fringe benefit which is not expressed as an hourly rate, the contractor shall either pay the benefit as stated in the wage determination or shall pay another bona fide fringe benefit or an hourly cash equivalent thereof.

d. If the contractor does not make payments to a trustee or other third person, the contractor may consider as part of the wages of any laborer or mechanic the amount of any costs reasonably anticipated in providing bona fide fringe benefits under a plan or program, Provided, That the Secretary of Labor has found, upon the written request of the contractor, that the applicable standards of the Davis-Bacon Act have been met. The Secretary of Labor may require the contractor to set aside in a separate account assets for the meeting of obligations under the plan or program.

2. Withholding

The contracting agency shall upon its own action or upon written request of an authorized representative of the Department of Labor, withhold or cause to be withheld from the contractor under this contract, or any other Federal contract with the same prime contractor, or any other federally-assisted contract subject to Davis-Bacon prevailing wage requirements, which is held by the same prime contractor, so much of the accrued payments or advances as may be considered necessary to pay laborers and mechanics, including apprentices, trainees, and helpers, employed by the contractor or any subcontractor the full amount of wages required by the contract. In the event of failure to pay any laborer or mechanic, including any apprentice, trainee, or helper, employed or working on the site of the work, all or part of the wages required by the contract, the contracting agency may, after written notice to the contractor, take such action as may be necessary to cause the suspension of any further payment, advance, or guarantee of funds until such violations have ceased.

3. Payrolls and basic records

a. Payrolls and basic records relating thereto shall be maintained by the contractor during the course of the work and preserved for a period of three years thereafter for all laborers and mechanics working at the site of the work. Such records shall contain the name, address, and social security number of each such worker, his or her correct classification, hourly rates of wages paid (including rates of contributions or costs anticipated for bona fide fringe benefits or cash equivalents thereof of the types described in section 1(b)(2)(B) of the Davis-Bacon Act), daily and weekly number of hours worked, deductions made and actual wages paid. Whenever the Secretary of Labor has found under 29 CFR 5.5(a)(1)(iv) that the wages of any laborer or mechanic include the amount of any costs reasonably anticipated in providing benefits under a plan or program described in section 1(b)(2)(B) of the Davis-Bacon Act, the contractor shall maintain records which show that the commitment to provide such benefits is enforceable, that the plan or program is financially responsible, and that the plan or program has been communicated in writing to the laborers or mechanics affected, and records which show the costs anticipated or the actual cost incurred in providing such benefits. Contractors employing apprentices or trainees under approved programs shall maintain written evidence of the

registration of apprenticeship programs and certification of trainee programs, the registration of the apprentices and trainees, and the ratios and wage rates prescribed in the applicable programs.

b. (1) The contractor shall submit weekly for each week in which any contract work is performed a copy of all payrolls to the contracting agency. The payrolls submitted shall set out accurately and completely all of the information required to be maintained under 29 CFR 5.5(a)(3)(i), except that full social security numbers and home addresses shall not be included on weekly transmittals. Instead the payrolls shall only need to include an individually identifying number for each employee (e.g. , the last four digits of the employee's social security number). The required weekly payroll information may be submitted in any form desired. Optional Form WH–347 is available for this purpose from the Wage and Hour Division Web site at http://www.dol.gov/esa/whd/forms/wh347instr.htm or its successor site. The prime contractor is responsible for the submission of copies of payrolls by all subcontractors. Contractors and subcontractors shall maintain the full social security number and current address of each covered worker, and shall provide them upon request to the contracting agency for transmission to the State DOT, the FHWA or the Wage and Hour Division of the Department of Labor for purposes of an investigation or audit of compliance with prevailing wage requirements. It is not a violation of this section for a prime contractor to require a subcontractor to provide addresses and social security numbers to the prime contractor for its own records, without weekly submission to the contracting agency..

(2) Each payroll submitted shall be accompanied by a “Statement of Compliance,” signed by the contractor or subcontractor or his or her agent who pays or supervises the payment of the persons employed under the contract and shall certify the following:

(i) That the payroll for the payroll period contains the information required to be provided under §5.5 (a)(3)(ii) of Regulations, 29 CFR part 5, the appropriate information is being maintained under §5.5 (a)(3)(i) of Regulations, 29 CFR part 5, and that such information is correct and complete;

(ii) That each laborer or mechanic (including each helper, apprentice, and trainee) employed on the contract during the payroll period has been paid the full weekly wages earned, without rebate, either directly or indirectly, and that no deductions have been made either directly or indirectly from the full wages earned, other than permissible deductions as set forth in Regulations, 29 CFR part 3;

(iii) That each laborer or mechanic has been paid not less than the applicable wage rates and fringe benefits or cash equivalents for the classification of work performed, as specified in the applicable wage determination incorporated into the contract.

(3) The weekly submission of a properly executed certification set forth on the reverse side of Optional Form WH–347 shall satisfy the requirement for submission of the “Statement of Compliance” required by paragraph 3.b.(2) of this section.

(4) The falsification of any of the above certifications may subject the contractor or subcontractor to civil or criminal prosecution under section 1001 of title 18 and section 231 of title 31 of the United States Code.

c. The contractor or subcontractor shall make the records required under paragraph 3.a. of this section available for inspection, copying, or transcription by authorized representatives of the

contracting agency, the State DOT, the FHWA, or the Department of Labor, and shall permit such representatives to interview employees during working hours on the job. If the contractor or subcontractor fails to submit the required records or to make them available, the FHWA may, after written notice to the contractor, the contracting agency or the State DOT, take such action as may be necessary to cause the suspension of any further payment, advance, or guarantee of funds. Furthermore, failure to submit the required records upon request or to make such records available may be grounds for debarment action pursuant to 29 CFR 5.12.

4. Apprentices and trainees

a. Apprentices (programs of the USDOL).

Apprentices will be permitted to work at less than the predetermined rate for the work they performed when they are employed pursuant to and individually registered in a bona fide apprenticeship program registered with the U.S. Department of Labor, Employment and Training Administration, Office of Apprenticeship Training, Employer and Labor Services, or with a State Apprenticeship Agency recognized by the Office, or if a person is employed in his or her first 90 days of probationary employment as an apprentice in such an apprenticeship program, who is not individually registered in the program, but who has been certified by the Office of Apprenticeship Training, Employer and Labor Services or a State Apprenticeship Agency (where appropriate) to be eligible for probationary employment as an apprentice.

The allowable ratio of apprentices to journeymen on the job site in any craft classification shall not be greater than the ratio permitted to the contractor as to the entire work force under the registered program. Any worker listed on a payroll at an apprentice wage rate, who is not registered or otherwise employed as stated above, shall be paid not less than the applicable wage rate on the wage determination for the classification of work actually performed. In addition, any apprentice performing work on the job site in excess of the ratio permitted under the registered program shall be paid not less than the applicable wage rate on the wage determination for the work actually performed. Where a contractor is performing construction on a project in a locality other than that in which its program is registered, the ratios and wage rates (expressed in percentages of the journeyman's hourly rate) specified in the contractor's or subcontractor's registered program shall be observed.

Every apprentice must be paid at not less than the rate specified in the registered program for the apprentice's level of progress, expressed as a percentage of the journeymen hourly rate specified in the applicable wage determination. Apprentices shall be paid fringe benefits in accordance with the provisions of the apprenticeship program. If the apprenticeship program does not specify fringe benefits, apprentices must be paid the full amount of fringe benefits listed on the wage determination for the applicable classification. If the Administrator determines that a different practice prevails for the applicable apprentice classification, fringes shall be paid in accordance with that determination.

In the event the Office of Apprenticeship Training, Employer and Labor Services, or a State Apprenticeship Agency recognized by the Office, withdraws approval of an apprenticeship program, the contractor will no longer be permitted to utilize apprentices at less than the applicable predetermined rate for the work performed until an acceptable program is approved.

b. Trainees (programs of the USDOL).

Except as provided in 29 CFR 5.16, trainees will not be permitted to work at less than the predetermined rate for the work performed unless they are employed pursuant to and individually registered in a program which has received prior approval, evidenced by formal certification by the U.S. Department of Labor, Employment and Training Administration.

The ratio of trainees to journeymen on the job site shall not be greater than permitted under the plan approved by the Employment and Training Administration.

Every trainee must be paid at not less than the rate specified in the approved program for the trainee's level of progress, expressed as a percentage of the journeyman hourly rate specified in the applicable wage determination. Trainees shall be paid fringe benefits in accordance with the provisions of the trainee program. If the trainee program does not mention fringe benefits, trainees shall be paid the full amount of fringe benefits listed on the wage determination unless the Administrator of the Wage and Hour Division determines that there is an apprenticeship program associated with the corresponding journeyman wage rate on the wage determination which provides for less than full fringe benefits for apprentices. Any employee listed on the payroll at a trainee rate who is not registered and participating in a training plan approved by the Employment and Training Administration shall be paid not less than the applicable wage rate on the wage determination for the classification of work actually performed. In addition, any trainee performing work on the job site in excess of the ratio permitted under the registered program shall be paid not less than the applicable wage rate on the wage determination for the work actually performed.

In the event the Employment and Training Administration withdraws approval of a training program, the contractor will no longer be permitted to utilize trainees at less than the applicable predetermined rate for the work performed until an acceptable program is approved.

c. Equal employment opportunity. The utilization of apprentices, trainees and journeymen under this part shall be in conformity with the equal employment opportunity requirements of Executive Order 11246, as amended, and 29 CFR part 30.

d. Apprentices and Trainees (programs of the U.S. DOT).

Apprentices and trainees working under apprenticeship and skill training programs which have been certified by the Secretary of Transportation as promoting EEO in connection with Federal-aid highway construction programs are not subject to the requirements of paragraph 4 of this Section IV. The straight time hourly wage rates for apprentices and trainees under such programs will be established by the particular programs. The ratio of apprentices and trainees to journeymen shall not be greater than permitted by the terms of the particular program.

5. Compliance with Copeland Act requirements. The contractor shall comply with the requirements of 29 CFR part 3, which are incorporated by reference in this contract.

6. Subcontracts. The contractor or subcontractor shall insert Form FHWA-1273 in any subcontracts and also require the subcontractors to include Form FHWA-1273 in any lower tier subcontracts. The prime contractor shall be responsible for the compliance by any subcontractor or lower tier subcontractor with all the contract clauses in 29 CFR 5.5.

7. Contract termination: debarment. A breach of the contract clauses in 29 CFR 5.5 may be grounds for termination of the contract, and for debarment as a contractor and a subcontractor as provided in 29 CFR 5.12.

8. Compliance with Davis-Bacon and Related Act requirements. All rulings and interpretations of the Davis-Bacon and Related Acts contained in 29 CFR parts 1, 3, and 5 are herein incorporated by reference in this contract.

9. Disputes concerning labor standards. Disputes arising out of the labor standards provisions of this contract shall not be subject to the general disputes clause of this contract. Such disputes shall be resolved in accordance with the procedures of the Department of Labor set forth in 29 CFR parts 5, 6, and 7. Disputes within the meaning of this clause include disputes between the contractor (or any of its subcontractors) and the contracting agency, the U.S. Department of Labor, or the employees or their representatives.

10. Certification of eligibility.

a. By entering into this contract, the contractor certifies that neither it (nor he or she) nor any person or firm who has an interest in the contractor's firm is a person or firm ineligible to be awarded Government contracts by virtue of section 3(a) of the Davis-Bacon Act or 29 CFR 5.12(a)(1).

b. No part of this contract shall be subcontracted to any person or firm ineligible for award of a Government contract by virtue of section 3(a) of the Davis-Bacon Act or 29 CFR 5.12(a)(1).

c. The penalty for making false statements is prescribed in the U.S. Criminal Code, 18 U.S.C. 1001.

V. CONTRACT WORK HOURS AND SAFETY STANDARDS ACT

The following clauses apply to any Federal-aid construction contract in an amount in excess of $100,000 and subject to the overtime provisions of the Contract Work Hours and Safety Standards Act. These clauses shall be inserted in addition to the clauses required by 29 CFR 5.5(a) or 29 CFR 4.6. As used in this paragraph, the terms laborers and mechanics include watchmen and guards.

1. Overtime requirements. No contractor or subcontractor contracting for any part of the contract work which may require or involve the employment of laborers or mechanics shall require or permit any such laborer or mechanic in any workweek in which he or she is employed on such work to work in excess of forty hours in such workweek unless such laborer or mechanic receives compensation at a rate not less than one and one-half times the basic rate of pay for all hours worked in excess of forty hours in such workweek.

2. Violation; liability for unpaid wages; liquidated damages. In the event of any violation of the clause set forth in paragraph (1.) of this section, the contractor and any subcontractor responsible therefor shall be liable for the unpaid wages. In addition, such contractor and subcontractor shall be liable to the United States (in the case of work done under contract for the District of Columbia or a territory, to such District or to such territory), for liquidated damages.

Such liquidated damages shall be computed with respect to each individual laborer or mechanic, including watchmen and guards, employed in violation of the clause set forth in paragraph (1.) of this section, in the sum of $10 for each calendar day on which such individual was required or permitted to work in excess of the standard workweek of forty hours without payment of the overtime wages required by the clause set forth in paragraph (1.) of this section.

3. Withholding for unpaid wages and liquidated damages. The FHWA or the contacting agency shall upon its own action or upon written request of an authorized representative of the Department of Labor withhold or cause to be withheld, from any moneys payable on account of work performed by the contractor or subcontractor under any such contract or any other Federal contract with the same prime contractor, or any other federally-assisted contract subject to the Contract Work Hours and Safety Standards Act, which is held by the same prime contractor, such sums as may be determined to be necessary to satisfy any liabilities of such contractor or subcontractor for unpaid wages and liquidated damages as provided in the clause set forth in paragraph (2.) of this section.

4. Subcontracts. The contractor or subcontractor shall insert in any subcontracts the clauses set forth in paragraph (1.) through (4.) of this section and also a clause requiring the subcontractors to include these clauses in any lower tier subcontracts. The prime contractor shall be responsible for compliance by any subcontractor or lower tier subcontractor with the clauses set forth in paragraphs (1.) through (4.) of this section.

VI. SUBLETTING OR ASSIGNING THE CONTRACT

This provision is applicable to all Federal-aid construction contracts on the National Highway System.

1. The contractor shall perform with its own organization contract work amounting to not less than 30 percent (or a greater percentage if specified elsewhere in the contract) of the total original contract price, excluding any specialty items designated by the contracting agency. Specialty items may be performed by subcontract and the amount of any such specialty items performed may be deducted from the total original contract price before computing the amount of work required to be performed by the contractor's own organization (23 CFR 635.116).

a. The term “perform work with its own organization” refers to workers employed or leased by the prime contractor, and equipment owned or rented by the prime contractor, with or without operators. Such term does not include employees or equipment of a subcontractor or lower tier subcontractor, agents of the prime contractor, or any other assignees. The term may include payments for the costs of hiring leased employees from an employee leasing firm meeting all relevant Federal and State regulatory requirements. Leased employees may only be included in this term if the prime contractor meets all of the following conditions:

(1) the prime contractor maintains control over the supervision of the day-to-day activities of the leased employees;

(2) the prime contractor remains responsible for the quality of the work of the leased employees;

(3) the prime contractor retains all power to accept or exclude individual employees from work on the project; and

(4) the prime contractor remains ultimately responsible for the payment of predetermined minimum wages, the submission of payrolls, statements of compliance and all other Federal regulatory requirements.

b. "Specialty Items" shall be construed to be limited to work that requires highly specialized knowledge, abilities, or equipment not ordinarily available in the type of contracting organizations qualified and expected to bid or propose on the contract as a whole and in general are to be limited to minor components of the overall contract.

2. The contract amount upon which the requirements set forth in paragraph (1) of Section VI is computed includes the cost of material and manufactured products which are to be purchased or produced by the contractor under the contract provisions.

3. The contractor shall furnish (a) a competent superintendent or supervisor who is employed by the firm, has full authority to direct performance of the work in accordance with the contract requirements, and is in charge of all construction operations (regardless of who performs the work) and (b) such other of its own organizational resources (supervision, management, and engineering services) as the contracting officer determines is necessary to assure the performance of the contract.

4. No portion of the contract shall be sublet, assigned or otherwise disposed of except with the written consent of the contracting officer, or authorized representative, and such consent when given shall not be construed to relieve the contractor of any responsibility for the fulfillment of the contract. Written consent will be given only after the contracting agency has assured that each subcontract is evidenced in writing and that it contains all pertinent provisions and requirements of the prime contract.

5. The 30% self-performance requirement of paragraph (1) is not applicable to design-build contracts; however, contracting agencies may establish their own self-performance requirements.

VII. SAFETY: ACCIDENT PREVENTION

This provision is applicable to all Federal-aid construction contracts and to all related subcontracts.

1. In the performance of this contract the contractor shall comply with all applicable Federal, State, and local laws governing safety, health, and sanitation (23 CFR 635). The contractor shall provide all safeguards, safety devices and protective equipment and take any other needed actions as it determines, or as the contracting officer may determine, to be reasonably necessary to protect the life and health of employees on the job and the safety of the public and to protect property in connection with the performance of the work covered by the contract.

2. It is a condition of this contract, and shall be made a condition of each subcontract, which the contractor enters into pursuant to this contract, that the contractor and any subcontractor shall not

permit any employee, in performance of the contract, to work in surroundings or under conditions which are unsanitary, hazardous or dangerous to his/her health or safety, as determined under construction safety and health standards (29 CFR 1926) promulgated by the Secretary of Labor, in accordance with Section 107 of the Contract Work Hours and Safety Standards Act (40 U.S.C. 3704).

3. Pursuant to 29 CFR 1926.3, it is a condition of this contract that the Secretary of Labor or authorized representative thereof, shall have right of entry to any site of contract performance to inspect or investigate the matter of compliance with the construction safety and health standards and to carry out the duties of the Secretary under Section 107 of the Contract Work Hours and Safety Standards Act (40 U.S.C.3704).

VIII. FALSE STATEMENTS CONCERNING HIGHWAY PROJECTS

This provision is applicable to all Federal-aid construction contracts and to all related subcontracts.

In order to assure high quality and durable construction in conformity with approved plans and specifications and a high degree of reliability on statements and representations made by engineers, contractors, suppliers, and workers on Federal-aid highway projects, it is essential that all persons concerned with the project perform their functions as carefully, thoroughly, and honestly as possible. Willful falsification, distortion, or misrepresentation with respect to any facts related to the project is a violation of Federal law. To prevent any misunderstanding regarding the seriousness of these and similar acts, Form FHWA-1022 shall be posted on each Federal-aid highway project (23 CFR 635) in one or more places where it is readily available to all persons concerned with the project:

18 U.S.C. 1020 reads as follows:

"Whoever, being an officer, agent, or employee of the United States, or of any State or Territory, or whoever, whether a person, association, firm, or corporation, knowingly makes any false statement, false representation, or false report as to the character, quality, quantity, or cost of the material used or to be used, or the quantity or quality of the work performed or to be performed, or the cost thereof in connection with the submission of plans, maps, specifications, contracts, or costs of construction on any highway or related project submitted for approval to the Secretary of Transportation; or

Whoever knowingly makes any false statement, false representation, false report or false claim with respect to the character, quality, quantity, or cost of any work performed or to be performed, or materials furnished or to be furnished, in connection with the construction of any highway or related project approved by the Secretary of Transportation; or

Whoever knowingly makes any false statement or false representation as to material fact in any statement, certificate, or report submitted pursuant to provisions of the Federal-aid Roads Act approved July 1, 1916, (39 Stat. 355), as amended and supplemented;

Shall be fined under this title or imprisoned not more than 5 years or both."

IX. IMPLEMENTATION OF CLEAN AIR ACT AND FEDERAL WATER POLLUTION CONTROL ACT

This provision is applicable to all Federal-aid construction contracts and to all related subcontracts.

By submission of this bid/proposal or the execution of this contract, or subcontract, as appropriate, the bidder, proposer, Federal-aid construction contractor, or subcontractor, as appropriate, will be deemed to have stipulated as follows:

1. That any person who is or will be utilized in the performance of this contract is not prohibited from receiving an award due to a violation of Section 508 of the Clean Water Act or Section 306 of the Clean Air Act.
2. That the contractor agrees to include or cause to be included the requirements of paragraph (1) of this Section X in every subcontract, and further agrees to take such action as the contracting agency may direct as a means of enforcing such requirements.

X. CERTIFICATION REGARDING DEBARMENT, SUSPENSION, INELIGIBILITY AND VOLUNTARY EXCLUSION

This provision is applicable to all Federal-aid construction contracts, design-build contracts, subcontracts, lower-tier subcontracts, purchase orders, lease agreements, consultant contracts or any other covered transaction requiring FHWA approval or that is estimated to cost $25,000 or more – as defined in 2 CFR Parts 180 and 1200.

1**. Instructions for Certification – First Tier Participants:**

a. By signing and submitting this proposal, the prospective first tier participant is providing the certification set out below.

b. The inability of a person to provide the certification set out below will not necessarily result in denial of participation in this covered transaction. The prospective first tier participant shall submit an explanation of why it cannot provide the certification set out below. The certification or explanation will be considered in connection with the department or agency's determination whether to enter into this transaction. However, failure of the prospective first tier participant to furnish a certification or an explanation shall disqualify such a person from participation in this transaction.

c. The certification in this clause is a material representation of fact upon which reliance was placed when the contracting agency determined to enter into this transaction. If it is later determined that the prospective participant knowingly rendered an erroneous certification, in addition to other remedies available to the Federal Government, the contracting agency may terminate this transaction for cause of default.

d. The prospective first tier participant shall provide immediate written notice to the contracting agency to whom this proposal is submitted if any time the prospective first tier participant learns that its certification was erroneous when submitted or has become erroneous by reason of changed circumstances.

e. The terms "covered transaction," "debarred," "suspended," "ineligible," "participant," "person," "principal," and "voluntarily excluded," as used in this clause, are defined in 2 CFR Parts 180 and 1200. “First Tier Covered Transactions” refers to any covered transaction between a grantee or subgrantee of Federal funds and a participant (such as the prime or general contract). “Lower Tier Covered Transactions” refers to any covered transaction under a First Tier Covered Transaction (such as subcontracts). “First Tier Participant” refers to the participant who has entered into a covered transaction with a grantee or subgrantee of Federal funds (such as the prime or general contractor). “Lower Tier Participant” refers any participant who has entered into a covered transaction with a First Tier Participant or other Lower Tier Participants (such as subcontractors and suppliers).

f. The prospective first tier participant agrees by submitting this proposal that, should the proposed covered transaction be entered into, it shall not knowingly enter into any lower tier covered transaction with a person who is debarred, suspended, declared ineligible, or voluntarily excluded from participation in this covered transaction, unless authorized by the department or agency entering into this transaction.

g. The prospective first tier participant further agrees by submitting this proposal that it will include the clause titled "Certification Regarding Debarment, Suspension, Ineligibility and Voluntary Exclusion-Lower Tier Covered Transactions," provided by the department or contracting agency, entering into this covered transaction, without modification, in all lower tier covered transactions and in all solicitations for lower tier covered transactions exceeding the $25,000 threshold.

h. A participant in a covered transaction may rely upon a certification of a prospective participant in a lower tier covered transaction that is not debarred, suspended, ineligible, or voluntarily excluded from the covered transaction, unless it knows that the certification is erroneous. A participant is responsible for ensuring that its principals are not suspended, debarred, or otherwise ineligible to participate in covered transactions. To verify the eligibility of its principals, as well as the eligibility of any lower tier prospective participants, each participant may, but is not required to, check the Excluded Parties List System website (https://www.epls.gov/), which is compiled by the General Services Administration.

i. Nothing contained in the foregoing shall be construed to require the establishment of a system of records in order to render in good faith the certification required by this clause. The knowledge and information of the prospective participant is not required to exceed that which is normally possessed by a prudent person in the ordinary course of business dealings.

j. Except for transactions authorized under paragraph (f) of these instructions, if a participant in a covered transaction knowingly enters into a lower tier covered transaction with a person who is suspended, debarred, ineligible, or voluntarily excluded from participation in this transaction, in addition to other remedies available to the Federal Government, the department or agency may terminate this transaction for cause or default.

* * * * *

2. Certification Regarding Debarment, Suspension, Ineligibility and Voluntary Exclusion – First Tier Participants:

a. The prospective first tier participant certifies to the best of its knowledge and belief, that it and its principals:

(1) Are not presently debarred, suspended, proposed for debarment, declared ineligible, or voluntarily excluded from participating in covered transactions by any Federal department or agency;

(2) Have not within a three-year period preceding this proposal been convicted of or had a civil judgment rendered against them for commission of fraud or a criminal offense in connection with obtaining, attempting to obtain, or performing a public (Federal, State or local) transaction or contract under a public transaction; violation of Federal or State antitrust statutes or commission of embezzlement, theft, forgery, bribery, falsification or destruction of records, making false statements, or receiving stolen property;

(3) Are not presently indicted for or otherwise criminally or civilly charged by a governmental entity (Federal, State or local) with commission of any of the offenses enumerated in paragraph (a)(2) of this certification; and

(4) Have not within a three-year period preceding this application/proposal had one or more public transactions (Federal, State or local) terminated for cause or default.

b. Where the prospective participant is unable to certify to any of the statements in this certification, such prospective participant shall attach an explanation to this proposal.

2. **Instructions for Certification - Lower Tier Participants:**

(Applicable to all subcontracts, purchase orders and other lower tier transactions requiring prior FHWA approval or estimated to cost $25,000 or more - 2 CFR Parts 180 and 1200)

a. By signing and submitting this proposal, the prospective lower tier is providing the certification set out below.

b. The certification in this clause is a material representation of fact upon which reliance was placed when this transaction was entered into. If it is later determined that the prospective lower tier participant knowingly rendered an erroneous certification, in addition to other remedies available to the Federal Government, the department, or agency with which this transaction originated may pursue available remedies, including suspension and/or debarment.

c. The prospective lower tier participant shall provide immediate written notice to the person to which this proposal is submitted if at any time the prospective lower tier participant learns that its certification was erroneous by reason of changed circumstances.

d. The terms "covered transaction," "debarred," "suspended," "ineligible," "participant," "person," "principal," and "voluntarily excluded," as used in this clause, are defined in 2 CFR Parts 180 and 1200. You may contact the person to which this proposal is submitted for assistance in obtaining a copy of those regulations. “First Tier Covered Transactions” refers to any covered transaction between a grantee or subgrantee of Federal funds and a participant (such as the prime or general contract). “Lower Tier Covered Transactions” refers to any covered transaction under a First Tier Covered Transaction (such as subcontracts). “First Tier Participant” refers to the participant who has entered into a covered transaction with a grantee or subgrantee of Federal funds (such as the prime or general contractor). “Lower Tier Participant” refers any participant who has entered into a covered transaction with a First Tier Participant or other Lower Tier Participants (such as subcontractors and suppliers).

e. The prospective lower tier participant agrees by submitting this proposal that, should the proposed covered transaction be entered into, it shall not knowingly enter into any lower tier covered transaction with a person who is debarred, suspended, declared ineligible, or voluntarily excluded from participation in this covered transaction, unless authorized by the department or agency with which this transaction originated.

f. The prospective lower tier participant further agrees by submitting this proposal that it will include this clause titled "Certification Regarding Debarment, Suspension, Ineligibility and Voluntary Exclusion-Lower Tier Covered Transaction," without modification, in all lower tier covered transactions and in all solicitations for lower tier covered transactions exceeding the $25,000 threshold.

g. A participant in a covered transaction may rely upon a certification of a prospective participant in a lower tier covered transaction that is not debarred, suspended, ineligible, or voluntarily excluded from the covered transaction, unless it knows that the certification is erroneous. A participant is responsible for ensuring that its principals are not suspended, debarred, or otherwise ineligible to participate in covered transactions. To verify the eligibility of its principals, as well as the eligibility of any lower tier prospective participants, each participant may, but is not required to, check the Excluded Parties List System website (https://www.epls.gov/), which is compiled by the General Services Administration.

h. Nothing contained in the foregoing shall be construed to require establishment of a system of records in order to render in good faith the certification required by this clause. The knowledge and information of participant is not required to exceed that which is normally possessed by a prudent person in the ordinary course of business dealings.

i. Except for transactions authorized under paragraph e of these instructions, if a participant in a covered transaction knowingly enters into a lower tier covered transaction with a person who is suspended, debarred, ineligible, or voluntarily excluded from participation in this transaction, in addition to other remedies available to the Federal Government, the department or agency with which this transaction originated may pursue available remedies, including suspension and/or debarment.

* * * * *

Certification Regarding Debarment, Suspension, Ineligibility and Voluntary Exclusion--Lower Tier Participants:

1. The prospective lower tier participant certifies, by submission of this proposal, that neither it nor its principals is presently debarred, suspended, proposed for debarment, declared ineligible, or voluntarily excluded from participating in covered transactions by any Federal department or agency.

2. Where the prospective lower tier participant is unable to certify to any of the statements in this certification, such prospective participant shall attach an explanation to this proposal.

* * * * *

XI. CERTIFICATION REGARDING USE OF CONTRACT FUNDS FOR LOBBYING

This provision is applicable to all Federal-aid construction contracts and to all related subcontracts which exceed $100,000 (49 CFR 20).

1. The prospective participant certifies, by signing and submitting this bid or proposal, to the best of his or her knowledge and belief, that:

a. No Federal appropriated funds have been paid or will be paid, by or on behalf of the undersigned, to any person for influencing or attempting to influence an officer or employee of any Federal agency, a Member of Congress, an officer or employee of Congress, or an employee of a Member of Congress in connection with the awarding of any Federal contract, the making of any Federal grant, the making of any Federal loan, the entering into of any cooperative agreement, and the extension, continuation, renewal, amendment, or modification of any Federal contract, grant, loan, or cooperative agreement.

b. If any funds other than Federal appropriated funds have been paid or will be paid to any person for influencing or attempting to influence an officer or employee of any Federal agency, a Member of Congress, an officer or employee of Congress, or an employee of a Member of Congress in connection with this Federal contract, grant, loan, or cooperative agreement, the undersigned shall complete and submit Standard Form-LLL, "Disclosure Form to Report Lobbying," in accordance with its instructions.

2. This certification is a material representation of fact upon which reliance was placed when this transaction was made or entered into. Submission of this certification is a prerequisite for making or entering into this transaction imposed by 31 U.S.C. 1352. Any person who fails to file the required certification shall be subject to a civil penalty of not less than $10,000 and not more than $100,000 for each such failure.

3. The prospective participant also agrees by submitting its bid or proposal that the participant shall require that the language of this certification be included in all lower tier subcontracts, which exceed $100,000 and that all such recipients shall certify and disclose accordingly.

ATTACHMENT A - EMPLOYMENT AND MATERIALS PREFERENCE FOR APPALACHIAN DEVELOPMENT HIGHWAY SYSTEM OR APPALACHIAN LOCAL ACCESS ROAD CONTRACTS

This provision is applicable to all Federal-aid projects funded under the Appalachian Regional Development Act of 1965.

1. During the performance of this contract, the contractor undertaking to do work which is, or reasonably may be, done as on-site work, shall give preference to qualified persons who regularly reside in the labor area as designated by the DOL wherein the contract work is situated, or the subregion, or the Appalachian counties of the State wherein the contract work is situated, except:

a. To the extent that qualified persons regularly residing in the area are not available.

b. For the reasonable needs of the contractor to employ supervisory or specially experienced personnel necessary to assure an efficient execution of the contract work.

c. For the obligation of the contractor to offer employment to present or former employees as the result of a lawful collective bargaining contract, provided that the number of nonresident persons employed under this subparagraph (1c) shall not exceed 20 percent of the total number of employees employed by the contractor on the contract work, except as provided in subparagraph (4) below.

2. The contractor shall place a job order with the State Employment Service indicating (a) the classifications of the laborers, mechanics and other employees required to perform the contract work, (b) the number of employees required in each classification, (c) the date on which the participant estimates such employees will be required, and (d) any other pertinent information required by the State Employment Service to complete the job order form. The job order may be placed with the State Employment Service in writing or by telephone. If during the course of the contract work, the information submitted by the contractor in the original job order is substantially modified, the participant shall promptly notify the State Employment Service.

3. The contractor shall give full consideration to all qualified job applicants referred to him by the State Employment Service. The contractor is not required to grant employment to any job applicants who, in his opinion, are not qualified to perform the classification of work required.

4. If, within one week following the placing of a job order by the contractor with the State Employment Service, the State Employment Service is unable to refer any qualified job applicants to the contractor, or less than the number requested, the State Employment Service will forward a certificate to the contractor indicating the unavailability of applicants. Such certificate shall be made a part of the contractor's permanent project records. Upon receipt of this certificate, the contractor may employ persons who do not normally reside in the labor area to fill positions covered by the certificate, notwithstanding the provisions of subparagraph (1c) above.

5. The provisions of 23 CFR 633.207(e) allow the contracting agency to provide a contractual preference for the use of mineral resource materials native to the Appalachian region.

6. The contractor shall include the provisions of Sections 1 through 4 of this Attachment A in every subcontract for work which is, or reasonably may be, done as on-site work.

End of FHWA 1273

US Army Corps of Engineers®
New England District

Appendix B: Category 1 Notification Form

(for all Inland and Navigable Water Projects in Maine subject to Corps jurisdiction)

Two (2) weeks **before** work commences, submit this to the following mailing address or complete the form at www.nae.usace.army.mil/reg, "State General Permits," "Maine." Call (207) 623-8367 with any questions.

Maine Project Office
U.S. Army Corps of Engineers
New England District
675 Western Avenue #3
Manchester, Maine 04351

State Permit Number: MDEP Exempt
Date of State Permit: _____
State Project Manager: _____

Permittee: MaineDOT
Address, City, State & Zip: 16 State House Station Augusta Maine 04333
Phone(s) and Email: 624-3100 david.gardner@maine.gov

Contractor: _____
Address, City, State & Zip: _____
Phone(s) and Email: _____

Consultant/Engineer/Designer: _____
Address, City, State & Zip: _____
Phone(s) and Email: _____

Wetland/Vernal Pool Consultant: _____
Address, City, State & Zip: _____
Phone(s) and Email: _____

Project Location/Description: Frankfort-Winterport 19146.00
Address, City, State & Zip: Rte. 1A beginning 0.16 miles northerly of the Prospect/Frankfort T.L. extending 4.209 miles to
Latitude/Longitude Coordin Mountain View Dr. in Winterport. 44 36' 68 52'
Waterway Name: Unnamed Wetlands
Work Description: Pavement rehabilitation project with drainage updates

Provide any prior Corps permit numbers: _____
Proposed Work Dates: Start: Spring 2013 Finish: Summer 2013

Area of wetland impact: 100 SF (leave blank if work involves structures & no fill in Navigable Waters)
Area of waterway impact: 0 SF (leave blank if work involves structures & no fill in Navigable Waters)
Area of compensatory mitigation provided: 0 SF

Work will be done under the following Appendix A categories (circle all that apply):

I. Inland Waters and wetlands:	a x	b	c	d	e		
II. Navigable Waters:	a	b	c	d	e	f	g

Your name/signature below, as permittee, indicates that you accept and agree to comply with the terms, eligibility criteria, and general conditions of Category 1 of the Maine General Permit.

Permittee Printed Name: Judy Gates

Permittee Signature: Judy L. Gates Date: 2/27/13

Applicant: General Public, State of Maine

Effective Date: October 12, 2010
Expiration Date: October 12, 2015

DEPARTMENT OF THE ARMY
GENERAL PERMIT
STATE OF MAINE

The New England District of the U.S. Army Corps of Engineers (Corps) hereby issues this General Permit (GP) for activities in waters of the United States (U.S.) that have no more than minimal individual, secondary, and cumulative adverse effects on the aquatic environment in waters of the U.S. within the boundaries of and off the coast of the State of Maine.

I. GENERAL CRITERIA

In order for activities to qualify for this GP, they must meet the GP's terms and eligibility criteria (Pages 1 – 4), general conditions (GC) (Pages 5 – 18), and Appendix A - Definition of Categories.

Under this GP, projects may qualify for the following:

- Category 1: Category 1 Notification Form required.
  (Submittal of the Category 1 Notification Form at Appendix B to the Corps is required.
- Category 2: Application required.
  (Submittal of an application to the Corps is required and written approval from the Corps must be received.

If your project is ineligible for Category 1, it may qualify for Category 2 or an Individual Permit and you must submit an application (see Page 3). The thresholds for Categories 1 and 2 are defined in Appendix A. This GP does not affect the Corps Individual Permit review process or activities exempt from Corps regulation.

II. ACTIVITIES COVERED:

- Work and structures that are located in, under or over any navigable water of the U.S.[1] that affect the course, location, condition, or capacity of such waters; or the excavating from or depositing of material in such waters. The Corps regulates this under Section 10 of the Rivers and Harbors Act of 1899);
- The discharge of dredged or fill material into waters of the U.S[2]. The Corps regulates this under Section 404 of the Clean Water Act (CWA).[3]
- The transportation of dredged material for the purpose of disposal in the ocean. The Corps regulates this under Section 103 of the Marine Protection, Research and Sanctuaries Act.

[1] Defined at 33 CFR 329 and Appendix A, Page 4.
[2] Defined at 33 CFR 328
[3] When there is a regulated discharge of dredged or fill material into waters of the U.S., the Corps will also consider secondary impacts, which are defined at Appendix A, Endnote/Definition 2.

III. PROCEDURES:

1. State Approvals

Applicants are responsible for applying for and obtaining any of the required state or local approvals (see GC 1, Page 5). Federal and state jurisdictions may differ in some instances. State permits may be required for specific projects regardless of the general permit category.

In order for authorizations under this GP to be valid, when any of the following state approvals or statutorily-required reviews is also required, the approvals must be obtained prior to the commencement of work in Corps jurisdiction.

- Maine Department of Environmental Protection (DEP): Natural Resources Protection Act (NRPA) permit, including permit-by-rule and general permit authorizations; Site Location of Development Act permit; and Maine Waterway Development and Conservation Act permit.
- Maine Department of Conservation: Land Use Regulation Commission (LURC) permit.
- Maine Department of Marine Resources: Aquaculture Leases.
- Maine Department of Conservation, Bureau of Parks and Lands, Submerged Lands: Lease

NOTE: This GP may authorize projects that are not regulated by the State of Maine (e.g., seasonal floats or moorings).

2. Corps Authorizations

a. <u>Category 1 (Submission of Category 1 Notification Form required)</u>

Eligibility Criteria

Activities in Maine that:

- Are subject to Corps jurisdiction (see GC 2, Page 5),
- Meet the terms and eligibility criteria of this GP (Pages 1 - 4),
- Meet all GCs of this GP (Pages 5 – 18), and
- Meet the definition of Category 1 in Appendix A - Definition of Categories,

may proceed without application to the Corps provided:

- The Category 1 Notification Form (Appendix B) is submitted to the Corps before starting the work authorized by this GP.

Consultation with the Corps and/or outside experts may be necessary to ensure compliance with this GP's general conditions (starting on Page 5) and related federal laws such as the National Historic Preservation Act, the Endangered Species Act (ESA), and the Wild and Scenic Rivers Act. For example, experts on historic resources may include the agencies and tribes referenced in GC 8, while experts on endangered species include the U.S. Fish and Wildlife Service (USFWS) and National Marine Fisheries Service (NMFS). Project proponents are encouraged to contact the Corps with Category 1 eligibility questions.

Work that is not regulated by the State of Maine, but is subject to Corps jurisdiction, is eligible for Category 1 authorization under this GP. The Maine DEP and LURC have waived WQC for projects authorized under Categories 1 and 2 of this GP. The state has concurred with the determination that projects authorized under Categories 1 and 2 of this GP are consistent with the enforceable policies of the Maine CZM Program.

b. Category 2 (Application to and written approval from the Corps required)

Eligibility Criteria
Activities in Maine that:

- Are subject to Corps jurisdiction (see GC 2, Page 5),
- Meet the terms of this GP (Pages 1 - 4),
- Meet all GCs of this GP (Pages 5 - 18),
- Meet the definition of Category 2 in Appendix A - Definition of Categories,

require an application to and written approval from the Corps. The Corps will coordinate review of Category 2 activities with federal and state agencies, as appropriate. To be eligible and subsequently authorized, an activity must result in no more than minimal impacts to the aquatic environment as determined by the Corps based on comments from the review team and the criteria listed above. This may require project modifications involving avoidance, minimization or compensatory mitigation for unavoidable impacts to ensure the net effects of a project are minimal. Compensatory mitigation for waterway/wetland impacts may take the form of wetland preservation, restoration, enhancement, creation, and/or "in-lieu fee" for inclusion into the Natural Resources Mitigation Fund. See www.nae.usace.army.mil/reg, "Mitigation" and then "Maine" for more information.

Work that is not regulated by the State of Maine, but is subject to Corps jurisdiction, is eligible for Category 2 authorization under this GP. The Maine DEP and LURC have waived WQC for projects authorized under Categories 1 and 2 of this GP. The state has concurred with the determination that projects authorized under Categories 1 and 2 of this GP are consistent with the enforceable policies of the Maine CZM Program.

3. Applying for a Permit

All applicants for Category 2 projects must:

a. Apply directly to the Corps using the state application form or the Corps application form (ENG Form 4345[1]), and apply directly to the state (DEP, LURC, BPL or DMR) as applicable using the appropriate state form, if the work is regulated by the Corps and the state.

b. Apply directly to the Corps using the Corps application form (ENG Form 4345[1]) if the work is regulated by the Corps but not the state (DEP, LURC, BPL or DMR).

c. Provide application information (see "Information Typically Required" in Appendix C) to help ensure the application is complete and to speed project review.

d. Submit a copy of their application materials to the Maine Historic Preservation Commission (MHPC) and the five Indian tribes listed at Appendix D, at the same time, or before, they apply to the state (DEP or LURC) or the Corps, to be reviewed for the presence of historic, archaeological or tribal resources in the permit area that the proposed work may affect. Submittals to the DEP or Corps shall include information to indicate that this has been done (a copy of the applicant's cover letter to MHPC and tribes or a copy of the MHPC and tribal response letters is acceptable).

[1] Located at www.nae.usace.army.mil/reg under "Forms."

4. Review Procedures

The Corps will coordinate review of all Category 2 activities with federal and state agencies, as appropriate, to ensure that the work will result in no more than a minimal impact to the aquatic environment. Applicants are responsible for applying for the appropriate state and local approvals listed on Page 2.

Emergency Procedures: 33 CFR 325.2(e)4 states that an "emergency" is a situation which would result in an unacceptable hazard to life, a significant loss of property, or an immediate, unforeseen, and significant economic hardship if corrective action requiring a permit is not undertaken within a time period less than the normal time needed to process the application under standard procedures." The Corps will work with all applicable agencies to expedite authorization according to established procedures in emergency situations.

Individual Permit Procedures: Proponents of work that does not meet the terms and general conditions of this GP must submit the Corps application form and the appropriate application materials to the Corps at the earliest possible date in order to expedite the Individual Permit review process. General information and application forms can be obtained at our website or by calling us (see Appendix D). Individual WQC and CZM consistency concurrence are required when applicable from the State of Maine before Corps permit issuance. The Corps encourages applicants to concurrently apply for a Corps Individual Permit and state permits.

5. Approval Process

Applicants for Category 2 activities may not proceed with work in Corps jurisdiction until written authorization is received from the Corps. If the Corps determines that the Category 2 activity is eligible for the GP, the Corps will send an authorization letter directly to the applicant. The Corps will attempt to issue a written eligibility determination within the state's review period. If the Corps determines that the activity is not eligible under the GP or that additional information is required, the Corps will notify the applicant in writing and send a copy to the DEP or LURC. Applicants are responsible for obtaining all applicable approvals listed on Page 2 from the appropriate state and local agencies before commencing work in Corps jurisdiction.

V. GENERAL PERMIT CONDITIONS:

The following conditions apply to activities authorized under this Maine GP, unless otherwise specified, including all Category 1 (notification required) and Category 2 (application required) activities:

1. Other Permits. Authorization under this GP does not obviate the need to obtain other federal, state, or local authorizations required by law. This includes, but is not limited to, the project proponent obtaining a Flood Hazard Development Permit issued by the town, if necessary. Inquiries may be directed to the municipality or to the Maine Floodplain Management Coordinator at (207) 287-8063. See www.maine.gov/spo/flood.

2. Federal Jurisdictional Boundaries.
(a) Applicability of this GP shall be evaluated with reference to federal jurisdictional boundaries. Applicants are responsible for ensuring that the boundaries used satisfy the federal criteria defined at 33 CFR 328 "Waters of the U.S." and 33 CFR 329 "Navigable Waters of the U.S."
Note: Waters of the U.S. include the subcategories "navigable waters of the U.S." and "wetlands."
(b) For Category 1 projects, proponents are not required to delineate the waters of the U.S. that they plan to impact, but must approximate the square footage of impacts in order to determine the review category (1 or 2 or Individual Permit). For projects filling <15,000 SF of waters of the U.S. that do not qualify for Category 1 (e.g., vernal pool, secondary or endangered species impacts, etc.) and therefore require an application to the Corps, and for those filling ≥15,000 SF, applicants shall delineate all waters of the U.S. that will be filled (direct impacts) in accordance with the Corps of Engineers Wetlands Delineation Manual and the most recent regional supplements (see Appendix E). In addition, applicants shall approximately identify all waters of the U.S. on the property and known waters adjacent to the property in order for the Corps to evaluate secondary impacts. The waters of the U.S. shall be clearly shown on the project plans submitted with the application. This includes all waters of the U.S. in areas under DEP or LURC jurisdiction regardless of whether they're shown on LURC zoning maps.
(c) On a case-by-case basis, the Corps may modify/refine the above delineation and identification requirements for waters of the U.S.

3. Minimal Direct, Secondary and Cumulative Impacts.
(a) Projects authorized by this GP shall have no more than minimal direct, secondary and cumulative adverse environmental impacts. Category 2 applicants should provide information on secondary and cumulative impacts as stated in Appendix C. Compensatory mitigation may be required to offset unavoidable impacts (see GC 16) and to ensure that they are no more than minimal. Compensatory mitigation requirements will be determined on a case-by-case basis.
(b) Secondary impacts to waterway and/or wetland areas, (e.g., areas drained, flooded, cleared, excavated or fragmented) shall be added to the total fill area when determining whether the project qualifies for Category 1 or 2. Direct, secondary and cumulative impacts are defined at Appendix A, Endnote 2.
(c) Site clearing, grading and construction activities in the upland habitat surrounding vernal pools ("Vernal Pool Management Areas") are secondary impacts. See GC 28 for avoidance and minimization requirements and recommendations.

4. Discretionary Authority. Notwithstanding compliance with the terms and conditions of this permit, the Corps retains discretionary authority to require Category 2 or Individual Permit review based on concerns for the aquatic environment or for any other factor of the public interest [33 CFR

320.4(a)]. This authority is invoked on a case-by-case basis whenever the Corps determines that the potential consequences of the proposal warrant a higher level of review based on the concerns stated above. This authority may be invoked for projects that may contribute to cumulative environmental impacts that are more than minimal or if there is a special resource or concern associated with a particular project that is not already covered by the remaining conditions of the GP and that warrants greater review. Whenever the Corps notifies an applicant that an Individual Permit may be required, the project is not authorized under this GP and no work may be conducted until an Individual Permit is obtained or until the Corps notifies the applicant that further review has demonstrated that the work may proceed under this GP.

5. Single and Complete Projects.
(a) This GP shall not be used to piecemeal work and shall be applied to single and complete projects[1]. When determining the review category in Appendix A (Category 1 or 2) for a single and complete project, proponents must include any permanent historic fill placed since October 1995 that is associated with that project and all currently proposed temporary and permanent impact areas.
(b) A single and complete project must have independent utility[1].
(c) Unless the Corps determines the activity has independent utility[1]:
i. This GP shall not be used for any activity that is part of an overall project for which an Individual Permit is required,
ii. All components of a single project and/or all planned phases of a multi-phased project (e.g., subdivisions should include all work such as roads, utilities, and lot development) shall be treated together as constituting one single and complete project[1].
(d) For linear projects, such as power lines or pipelines with multiple crossings, the single and complete project[1] is all crossings of a single water of the U.S. (i.e., single waterbody) at a specific location. For linear projects crossing a single waterbody several times at separate and distant locations, each crossing is considered a single and complete project. However, individual channels in a braided stream or river, or individual arms of a large, irregularly-shaped wetland or lake, etc., are not separate waterbodies and crossings of such features cannot be considered separately. If any crossing requires a Category 2 activity, then the entire linear project shall be reviewed as one project under Category 2.

6. Permit On-Site. For Category 2 projects, the permittee shall ensure that a copy of this GP and the accompanying authorization letter are at the work site (and the project office) authorized by this GP whenever work is being performed, and that all personnel with operation control of the site ensure that all appropriate personnel performing work are fully aware of its terms and conditions. The entire permit authorization shall be made a part of any and all contracts and sub-contracts for work that affects areas of Corps jurisdiction at the site of the work authorized by this GP. This shall be achieved by including the entire permit authorization in the specifications for work. The term "entire permit authorization" means this GP and the authorization letter (including its drawings, plans, appendices and other attachments) and also includes permit modifications. If the authorization letter is issued after the construction specifications, but before receipt of bids or quotes, the entire permit authorization shall be included as an addendum to the specifications. If the authorization letter is issued after receipt of bids or quotes, the entire permit authorization shall be included in the contract or sub-contract. Although the permittee may assign various aspects of the work to different contractors or sub-contractors, all contractors and sub-contractors shall be obligated by contract to comply with all environmental protection provisions contained within the entire GP authorization, and no contract or sub-contract shall require or allow unauthorized work in areas of Corps jurisdiction.

[1] Single and Complete Project and Independent Utility are defined at Appendix E.

7. St. John/St. Croix Rivers. Work within the Saint John and Saint Croix River basins that requires approval of the International Joint Commission is not eligible for Category 1 and an application to the Corps is required if any temporary or permanent use, obstruction or diversion of international boundary waters could affect the natural flow or levels of waters on the Canadian side of the line; or if any construction or maintenance of remedial works, protective works, dams, or other obstructions in waters downstream from boundary waters could raise the natural level of water on the Canadian side of the boundary.

8. Historic Properties. No activity otherwise authorized by this GP shall result in effects (as that term is defined at 36 C.F.R. § 800.16(i)) on properties listed on, determined to be eligible for listing on, or potentially eligible for listing on the National Register of Historic Places, including previously unidentified properties, unless and until the Corps or another federal agency has satisfied the consultation requirements of Section 106 of the National Historic Preservation Act. Work is not eligible for Category 1 and an application to the Corps is required if the activity may have the potential to cause effects to any historic properties listed, determined to be eligible for listing on, or potentially eligible for listing on the National Register of Historic Places, including previously unidentified properties. Work is eligible for Category 1 if a no effect or no adverse effect determination has been made for that work by another federal action agency in its Section 106 consultation with the Maine Historic Preservation Commission (MHCP) and the five federally recognized Indian tribes listed at Appendix D. Information on the location and existence of known historic resources can be obtained from the MHPC, the National Register of Historic Places, and the five tribes listed in Appendix D. Historic properties include those that are eligible for inclusion, but not necessarily listed on the National Register. If the permittee, either prior to construction or during construction of the work authorized herein, encounters a previously unidentified archaeological or other cultural resource within the area subject to Corps jurisdiction that might be eligible for listing in the National Register of Historic Places, he/she shall stop work and immediately notify the Corps and the MHPC and/or applicable tribe(s).

9. National Lands. None of the following work is eligible as a Category 1 project**:**
(a) Activities that impinge upon the value of any National Wildlife Refuge, National Forest, National Marine Sanctuary, National Park or any other area administered by the National Park Service, U.S. Fish and Wildlife Service (USFWS) or U.S. Forest Service.
(b) Work on Corps properties and Corps-controlled easements. Contact the Corps, Real Estate Division (978) 318-8585 to initiate reviews about both Corps holdings and permit requirements.
(c) Any proposed temporary or permanent modification or use of a federal project (including but not limited to a levee, dike, floodwall, channel, sea wall, bulkhead, jetty, wharf, pier, or other work built but not necessarily owned by the United States), which would obstruct or impair the usefulness of the federal project in any manner, and/or would involve changes to the authorized federal project's scope, purpose, and/or functioning that go beyond minor modifications required for normal operation and maintenance (requires review and approval by the Corps pursuant to 33 USC 408). Federal projects in Maine as of October 2010 are shown at Appendix F. This map may not be inclusive of all projects.

10. Endangered Species.
(a) No activity may be authorized under Category 1 of this GP which:
i. "May affect" a threatened or endangered species, a species proposed for listing as threatened or endangered, or designated or proposed critical habitat (all herein referred to as "listed species or habitat") as identified under the federal Endangered Species Act (ESA) (unless specified in a programmatic agreement with NMFS or USFWS),

ii. Results in a "take" of any federally-listed threatened or endangered species of fish or wildlife, or

iii. Results in any other violation of Section 9 of the ESA protecting threatened or endangered species of plants.

(b) Work in Inland Waters and Wetlands[1] and the non-tidal portions of Navigable Waters[2] (e.g., the Penobscot River, Kennebec River) is not eligible for Category 1 if:

i. The project action area occurs within a watershed occupied by listed Atlantic salmon or shortnose sturgeon. Project proponents must check the site in Footnote 3 below.

ii. In areas outside these watersheds contact the USFWS (see Appendix D, Page 1 for contact information) to check for the presence of other listed species.

(c) Work in the tidal portions of Navigable Waters may be eligible for Category 1. Reference Appendix A, II. Navigable Waters, Pages 4 – 9, and the other terms and general conditions (GC 11 is particularly relevant) of this GP to determine Category 1 eligibility. Project proponents must contact the USFWS (see Appendix D, Page 1 for contact information) to ensure that work in all tidal portions of Navigable Waters[2] is not in critical habitat or areas occupied by listed species other than Atlantic salmon or shortnose sturgeon.

(d) Although some work is excluded from Category 1 as stated in (b) and (c) above, work may qualify for Category 1 if a no effect determination has been made for that work by a federal action agency such as the Corps.

(e) Proponents must submit an application to the Corps if any of the activities in 10(a)-10(c) that do not qualify for Category 1 may occur and provide information on federally-listed species or habitat to allow the Corps to conduct any required consultation under Section 7 of the ESA.

(f) The Corps review may consider species listed as endangered and threatened pursuant to Maine state law.

11. Essential Fish Habitat. Any work in the following rivers and streams, including all tributaries to the extent that they are currently or were historically accessible for salmon migration, shall not be authorized under Category 1 of the GP and must be screened for potential impacts to EFH (see Appendix E for more information).

Androscoggin River	Aroostook River	Boyden River	Dennys River
Ducktrap River	East Machias River	Hobart Stream	Kennebec River
Machias River	Narraguagus River	Orland River	Passagassawaukeag River
Patten Stream	Penobscot River	Pleasant River	Presumpscot River
Saco River	Sheepscot River	St. Croix River	Tunk Stream
			Union River

The above does not apply to the following activities which may qualify for Category 1 work:

- Exploratory drilling and borings for bridges.
- Moorings (see Appendix A, Page 6 for Category 1 thresholds and requirements)
- Structures and floats (see Appendix A, Page 7 for Category 1 thresholds and requirements)
- Other activities specified in a programmatic agreement with NMFS.

---

[1] See Appendix A, Page 1 for definition.

[2] See Appendix A, Page 4 for definition.

[3] For areas considered occupied by listed Atlantic salmon and/or shortnose sturgeon in Inland Waters and Wetlands, and in Navigable Waters, see: www.nero.noaa.gov/prot_res/altsalmon/dpsmaps.html. Tidal portions of navigable waters occupied by listed Atlantic salmon are more specifically described as those waters from the Kennebec River to its mouth at Merrymeeting Bay, northeast to the Dennys River, including the Androscoggin River upstream to the Brunswick Dam, and other streams northeast of this line to the limit of their tidal reaches.

12. Wild and Scenic Rivers. Any activity that occurs in the designated main stem of, within 0.25 mile up or downstream of the designated main stem of, or in tributaries within .25 miles of the designated main stem of a National Wild and Scenic River, or in "bordering and contiguous wetlands" (see Appendix A, Endnote 1) that are adjacent to the designated main stem of a National Wild and Scenic River, or that has the potential to alter flows within a river within the National Wild and Scenic River System, is not eligible for Category 1 regardless of size of the impacts. This condition applies to both designated Wild and Scenic Rivers and rivers officially designated by Congress as study rivers for possible inclusion while such rivers are in an official study status. National Wild and Scenic Rivers System segments for Maine as of October 2010 include: Allagash River beginning at Telos Dam continuing to Allagash checkpoint at Eliza Hole Rapids, approximately 3 miles upstream of the confluence with the St. John River (length = 92 miles).

13. Federal Navigation Project. Any structure or work that extends closer to the horizontal limits of any Corps Federal Navigation Project (see Appendix F) than a distance of three times the project's authorized depth shall be subject to removal at the owner's expense prior to any future Corps dredging or the performance of periodic hydrographic surveys. This is applicable to Category 1 and 2. Reference Appendix A, Page 6 (Moorings) and Page 7 (Structure and Floats).

14. Navigation.
(a) There shall be no unreasonable interference with navigation by the existence or use of the activity authorized herein and no attempt shall be made by the permittee to prevent the full and free use by the public of all navigable waters at or adjacent to the activity authorized herein.
(b) The permittee understands and agrees that, if future U.S. operations require the removal, relocation, or other alteration, of the structure or work herein authorized, or if, in the opinion of the Secretary of the Army or his authorized representative, said structure or work shall cause unreasonable obstruction to the free navigation of the navigable waters, the permittee will be required, upon due notice from the Corps, to remove, relocate, or alter the structural work or obstructions caused thereby, without expense to the U.S. No claim shall be made against the U.S. on account of any such removal or alteration.

15. Federal Liability. In issuing this permit, the Federal Government does not assume any liability for the following: (a) damages to the permitted project or uses thereof as a result of other permitted or unpermitted activities or from natural causes; (b) damages to the permitted project or uses thereof as a result of current or future activities undertaken by or on behalf of the U.S. in the public interest; (c) damages to persons, property, or to other permitted or unpermitted activities or structures caused by the activity authorized by this permit; (d) design or construction deficiencies associated with the permitted work; (e) damage claims associated with any future modification, suspension, or revocation of this permit.

16. Avoidance, Minimization and Compensatory Mitigation.
Discharges of dredged or fill material into waters of the U.S., including wetlands, shall be avoided and minimized to the maximum extent practicable through consideration of alternatives. The Corps may require compensatory mitigation of unavoidable direct and secondary impacts associated with Category 2 projects on a case-by-case basis (see Appendix E).

17. Heavy Equipment in Wetlands. Operating heavy equipment other than fixed equipment (drill rigs, fixed cranes, etc.) within wetlands shall be minimized, and such equipment shall not be stored, maintained or repaired in wetlands, to the maximum extent practicable. Where construction requires heavy equipment operation in wetlands, the equipment shall either have low ground pressure

(typically <3 psi), or it shall be placed on swamp/construction/timber mats (herein referred to as "construction mats" and defined at Appendix A, Endnote 4) that are adequate to support the equipment in such a way as to minimize disturbance of wetland soil and vegetation. Construction mats are to be placed in the wetland from the upland or from equipment positioned on swamp mats if working within a wetland. Dragging construction mats into position is prohibited. Other support structures that are capable of safely supporting equipment may be used with written Corps authorization (Category 2 authorization or Individual Permit). Similarly, the permittee may request written authorization from the Corps to waive use of mats during frozen, dry or other conditions. An adequate supply of spill containment equipment shall be maintained on site.

18. Temporary Fill.
Temporary fill that qualifies for Category 1 (e.g., <15,000 SF of combined temporary and permanent fill associated with the single and complete project) or is authorized in writing under Category 2, shall adhere to the following:
(a) All temporary fill shall be stabilized to prevent its eroding into portions of waters of the U.S., including wetlands, where it is not authorized.
(b) Unconfined temporary fill authorized for discharge into waters of the U.S., including wetlands, shall consist of material that minimizes impacts to water quality (e.g. sandbags, clean gravel, stone, aggregate, etc.).
(c) Temporary fill authorized for discharge into wetlands should be placed on geotextile fabric or other material (e.g., straw) laid on the pre-construction wetland grade where practicable to minimize impacts.
(d) Temporary fill shall be removed as soon as it is no longer needed, disposed of at an upland site, and suitably contained to prevent subsequent erosion into waters of the U.S, including wetlands.
To qualify for Category 1, temporary fill placed during the:
i. Growing season must be removed before the beginning of the next growing season.
ii. Non-growing season may remain throughout the following growing season, but must be removed before the beginning of the next growing season.
(e) Waters of the U.S., including wetlands, where temporary fill was discharged shall be restored (see GC 19).
(f) Appropriate measures must be taken to maintain normal downstream flows and minimize flooding to the maximum extent practicable, when temporary structures, work, and discharges, including cofferdams, are necessary for construction activities, access fills, or dewatering of construction sites. Temporary fills must be placed in a manner that will not be eroded by expected high flows (see GC 21).
(g) Construction mats and corduroy roads (see GC 17 above) are considered as temporary fill when they are removed immediately upon work completion. The area must be restored (see GC 19).

19. Work Site Restoration.
(a) Wetland areas where permanent disturbance is not authorized shall be restored to their original condition and elevation, which under no circumstances shall be higher than the pre-construction elevation. Original condition means careful protection and/or removal of existing soil and vegetation, and replacement back to the original location such that the original soil layering and vegetation schemes are approximately the same, unless otherwise authorized.
(b) Upon completion of construction, all disturbed wetland areas (the disturbance of these areas must be authorized) shall be properly stabilized. Any seed mix shall contain only plant species native to New England and shall not contain any species listed in the "Invasive and Other Unacceptable Plant Species" Appendix in the "New England District Compensatory Mitigation Guidance" (see Appendix E, Paragraph 6). This list may be updated periodically.
(c) In areas of authorized temporary disturbance, if trees are cut they shall be cut at ground level and

not uprooted in order to prevent disruption to the wetland soil structure and to allow stump sprouts to revegetate the work area, unless otherwise authorized.

20. Bank Stabilization.
(a) Projects involving construction or reconstruction/maintenance of bank stabilization structures within Corps jurisdiction shall be designed to minimize environmental effects, effects to neighboring properties, scour, etc. to the maximum extent practicable.
(b) Project proponents must design and construct bank stabilization projects using this sequential minimization process: avoidance of aquatic resource impacts, diversion of overland flow, vegetative stabilization, stone-sloped surfaces, and walls/bulkheads. Vertical walls/bulkheads shall only be used in situations where reflected wave energy can be tolerated. Refer to Appendix E for design guidance.
(c) Inland Water bank stabilization activities necessary for erosion prevention must meet all of the following criteria: **(i)** No material is placed in excess of the minimum needed for erosion protection; **(ii)** The activity is no more than 500 feet in length along the bank; **(iii)** The activity will not exceed an average of one cubic yard per running foot placed along the bank below the plane of the ordinary high water mark; **(iv)** Structures angled steeper than 1H:1V and any material other than angular or subangular stone or fiber roll revetments require at least a Category 2 review. **(v)** The activity does not involve discharges of dredged or fill material into special aquatic sites; **(vi)** No material is of the type, or is placed in any location, or in any manner, to impair surface water flow into or out of any water of the U.S.; **(vii)** No material is placed in a manner that will be eroded by normal or expected high flows (properly anchored trees and treetops may be used in low energy areas); and, **(viii)** The activity is not a stream channelization activity.
(d) Navigable Water bank stabilization activites are provided at Appendix A, Page 4.

21. Sedimentation and Erosion Control.
(a) Adequate sedimentation and erosion control management measures, practices and devices, such as phased construction, installation of sediment control barriers (i.e. silt fence, vegetated filter strips, geotextile silt fences, erosion control mixes, hay bales or other devices) downhill of all exposed areas, retention of existing vegetated buffers, application of temporary mulching during construction, and permanent seeding and stabilization shall be installed and properly maintained to reduce erosion and retain sediment on-site during and after construction. They shall be capable of preventing erosion, of collecting sediment, suspended and floating materials, and of filtering fine sediment.
(b) Temporary sediment control barriers shall be removed upon completion of work, but not until all disturbed areas are permanently stabilized. The sediment collected by these sediment barriers shall be removed and placed at an upland location and stabilized to prevent its later erosion into a waterway or wetland.
(c) All exposed soil and other fills shall be permanently stabilized at the earliest practicable date (see GC 19).

22. Stream Work and Crossings[1].

Notes:

(a) GC 22(a) and (b) apply to Inland Waters and Wetlands (see Appendix A, Page 1 for definition) and Navigable Waters (see Appendix A, Page 4 for definition). GC 22(c)-(l) only apply to Inland Waters and Wetlands that are streams. All new and replacement crossings in Navigable Waters require an application to the Corps and at least a Category 2 review.

(b) In-stream work in a watershed occupied by listed Atlantic salmon or shortnose sturgeon [see GC 10(b)] and some stream work such as crossings on EFH waters (see GC 11) is not eligible for Category 1.

(c) "High-Quality Stream Segments" are shown at www.maine.gov/dep/gis/datamaps and may be useful in evaluating impacts to fisheries. GIS shape files are under "Other Google Earth Interactive Maps" and PDFs by county are under "DEP GIS Maps." See Appendix E, 8(b) for more information.

Conditions:

(a) All permanent crossings of rivers, streams, brooks, etc. (hereon referred to as "streams") shall be suitably culverted, bridged, or otherwise designed to **i)** withstand and to prevent the restriction of high flows to qualify for Category 1, and **ii)** not obstruct the movement of or not substantially disrupt the necessary life-cycle movements of those species of aquatic life indigenous to the waterbody, including those species that normally migrate through the area, beyond the actual duration of construction unless the activity's primary purpose is to impound water to qualify for Category 1 or 2. (NOTE: Areas of fill and/or cofferdams must be included in total waterway/wetlands impacts to determine applicability of this GP).

(b) Any work that temporarily or permanently impacts upstream or downstream flood conditions, or permanently impacts wetlands in excess of Category 1 thresholds, must be reviewed at least under Category 2. See the documents referenced in Appendix E, 8(c) and (d) for guidance.

(c) New Stream Crossings. For new stream crossings to qualify for Category 1:

i. Must ensure compliance with GC 22(a) and GC 22(b) above.

ii. Shall be designed and constructed in accordance with the Corps General Stream Crossing Standards provided on Page 14 and the stream simulation document listed at Appendix E, 8(a).

(d) Replacement Stream Crossings. For replacement stream crossings to qualify for Category 1:

i. Must ensure compliance with GC 22(a) and GC 22(b) above.

ii. Shall be designed and constructed in accordance with the Corps General Stream Crossing Standards provided on Page 14 and the stream simulation document listed at Appendix E, 8(a).

(e) Culvert Extensions. Culvert extensions on culverts that do not meet the Corps General Stream Crossing Standards do not qualify for Category 1 and require an application to the Corps at least as a Category 2 project.

(f) Temporary Stream Crossings.

Note: The General Stream Crossing Standards don't apply to temporary stream crossings.

i. Temporary stream crossings or cofferdams shall be used for equipment access across streams [see Appendix E, 8(e)]. Note: Areas of fill and/or cofferdams must be included in total waterway/wetlands impacts to determine the review category in Appendix A.

ii. Temporary stream crossings shall be removed within 180 days to qualify for Category 1.

iii. Temporary stream crossings that are not spans[2] (typically culverts) must be designed in accordance with 1-6 below to qualify for Category 1. Category 2 applications should include information demonstrating 2-6 below:

---

[1] This condition does not apply to non-tidal drainage systems and irrigation ditches excavated on dry land.

[2] For the purposes of this GP, spans are bridges, three-sided box culverts, open-bottom culverts or arches that span the stream with footings landward of bankfull width.

1. Installed and removed during the low flow period specified in GC 22(l) below.

2. Placed on geotextile fabric or other material where practicable to ensure restoration to the original grade. Soil may not be used to construct or stabilize these structures and rock must be large enough to allow for easy removal without disrupting the streambed.

3. Designed and maintained to withstand and pass high flows. Water height should be no higher than the top of the culvert's inlet. A minimum culvert diameter of two feet is required to pass debris. Culverts must be aligned to prevent bank erosion or streambed scour.

4. Equipped with energy dissipating devices installed downstream if necessary to prevent scour.

5. Designed and maintained to prevent soil from entering the waterbody.

6. Removed upon the completion of work. Impacts to the streambed or banks requires restoration to their original condition using stream simulation methods[1].

(g) Slip Lining. Work using slip lining (retrofitting an existing culvert by inserting a smaller diameter pipe), invert lining, or resulting in decreased diameter, do not qualify for Category 1, either as new work or maintenance activities.

(h) Work in Flowing Waters. To qualify for Category 1, no unconfined fill [see GC 18(b)] or excavation in flowing waters is allowed. To accomplish this:

i. Bank stabilization work below ordinary high water (OHW) shall utilize erosion controls such as inflatable cofferdams, jersey barrier, silt screen, turbidity curtain, etc. where practicable to prevent sediment input to the stream and to minimize turbidity and sedimentation impacts for sensitive life stages. Bank stabilization above OHW must utilize erosion controls.

ii. Management techniques such as temporary flume pipes, culverts, cofferdams, etc. must be used to maintain normal flows within the stream boundary's confines, or water diversions may be used immediately up and downstream of the work footprint (see Appendix A, Endnote 6) or work must be performed in the dry under no flow conditions, or under very low flow conditions following the practices in GC 22(a).

(i) Minimization. In order to make the Category 2 review process more efficient and result in a faster decision, new and replacement stream crossings should be designed using the least intrusive and environmentally damaging method following this sequential minimization process: 1) spans with no stream impacts, 2) spans with stream impacts, and 3) embedded culverts with stream simulation or low-slope design.

(j) Maintenance Requirements. The permittee shall maintain the work authorized herein in good condition and in conformance with the terms and general conditions of this permit to facilitate aquatic life passage as stated in GC 22(a). Culverts that develop "hanging" inlets or outlets, result in bed washout, or a stream that doesn't match the characteristics of the substrate in the natural stream channel such as mobility, slope, stability confinement will require maintenance or repair to comply with this GC. This does not apply to GC 22(f) above.

(k) Maintenance and Replacement Information. An existing stream crossing must be authorized and in compliance with all conditions of its authorization(s) to qualify for maintenance not subject to regulation. See Appendix A, Endnote 7. A non-serviceable crossing is not eligible for maintenance and is therefore considered as a replacement crossing [see 22(d)].

(l) Work Window. For projects that otherwise meet the terms of Category 1, in-stream construction work shall be conducted during the low flow period July 15 - October 1 in any year. Projects that are not to be conducted during that time period are ineligible for Category 1 and shall be screened pursuant to Category 2, regardless of the waterway and wetland fill and/or impact area.

(See next page for Corps General Stream Crossing Standards.)

[1] Design and construction shall be in accordance with the stream simulation document listed at Appendix E, 8(a).

Corps General Stream Crossing Standards (required for Category 1, recommended for Category 2):
(a) Culverts must be embedded:

- ≥ 2 feet for box culverts and other culverts with smooth internal walls,
- ≥ 1 foot for corrugated pipe arches
- ≥ 1 foot and at least 25 percent for corrugated round pipe culverts

(b) For new crossings, spans[1] are required to avoid or cause minimal disruption to the streambed and to meet the requirements of General Condition 22(a) and 22(b). Footings and abutments must be landward of 1.2 times bankfull width. To the greatest extent practicable, work in the stream shall be minimized, and design and construction shall allow the streambed's natural structure and integrity to remain intact. Any fill or excavation of the streambed below bankfull width other than footings, support pilings, or work specified in 22(h)ii requires Category 2 review and, unless demonstrated otherwise, stream simulation[2] to establish substrate and banks in the span structure and work area as specified in (d) and (e) below.
(c) For replacement crossings, spans[1] are required to meet the requirements of General Condition 22(a) and 22(b). Footings and abutments shall be landward of 1.2 times bankfull width. Unless demonstrated otherwise, stream simulation[2] is required to establish substrate and banks in the span structure and work area as specified in (d) and (e) below.
(d) Crossings must have a natural bottom substrate within the structure matching the characteristics of the substrate in the natural stream channel and the banks (mobility, slope, stability, confinement, grain and rock size)[2] at the time of construction and over time as the structure has had the opportunity to pass significant flood events. To allow terrestrial passage for wildlife and prevent undermining the footings, crossings shall have a bank on both sides of the stream matching the horizontal profile of the existing stream and banks[2].
(e) Crossings must be designed and constructed[2] with appropriate bed forms and streambed characteristics so that water depths and velocities are comparable to those found in the natural channel at a variety of flows. In order to provide appropriate water depths and velocities at a variety of flows and especially low flows, it is usually necessary to reconstruct the streambed or preserve the natural channel within the structure. Otherwise, the width of the structure needed to accommodate higher flows will create conditions that are too shallow at low flows. The grain and rock size, and arrangement of streambed materials within the structure should be in accordance with (d) above. Flows could go subsurface within the structure if only large material is used without smaller material filling the voids.

23. Wetland Crossings.
(a) All temporary and permanent crossings of wetlands shall be suitably culverted, bridged, or otherwise designed to: **i)** Withstand and prevent the restriction of high flows, **ii)** Not obstruct the movement of or not substantially disrupt the necessary life-cycle movements of those species of aquatic life indigenous to the wetland, including those species that normally migrate through the area, beyond the actual duration of construction unless the activity's primary purpose is to impound water. See Appendix E for the Maine DEP's crossing standards.
(b) To qualify for Category 1, new and replacement wetland crossings that are permanent shall be culverted, spanned or bridged in such a manner as to preserve hydraulic and ecological connectivity, at its present level, between the wetlands on either side of the road. To meet this requirement, we

[1] For the purposes of this GP, spans are bridges, three-sided box culverts, open-bottom culverts or arches that span the stream with footings landward of bankfull width.
[2] Design and construction shall be in accordance with the stream simulation document listed at Appendix E, 8(a).

recommend that culverts, spans or bridges be placed at least every 50 feet with an opening at least 2 feet high and 3 feet wide at ground level where practicable. Closed bottom culverts shall be embedded at least 6 inches with a natural bottom.
(c) In the case of non-compliance, the permittee shall take necessary measures to correct wetland damage due to lack of hydraulic and ecological connectivity.
(d) Any work that results in flooding, results in impacts to wetlands on either side of the wetland crossing in excess of Category 1 thresholds, or impacts wetland drainage from the upgradient side of the wetland crossing does not qualify for Category 1.

24. Discharge of Pollutants.
(a) All activities involving any discharge of pollutants into waters of the U.S., including wetlands, authorized under this GP shall be consistent with applicable water quality standards, effluent limitations, standards of performance, prohibitions, and pretreatment standards and management practices established pursuant to the Clean Water Act (CWA) (33 USC 1251), and applicable state and local laws. If applicable water quality standards, limitations, etc., are revised or modified during the term of this GP, the authorized work shall be modified to conform with these standards within six months of the effective date of such revision or modification, or within a longer period of time deemed reasonable by the Corps in consultation with the EPA. Issuance of a LURC or DEP NRPA permit confirms that state water quality standards are met.
(b) All projects authorized by this GP shall be designed, constructed and operated to minimize or eliminate the discharge of pollutants.
(c) All activities involving any discharge of pollutants into waters of the U.S., including wetlands, authorized under this GP must comply with Section 402 [33 U.S.C. 1342] of the CWA and the requirements of the National Pollutant Discharge Elimination System (40 CFR 122).

25. Spawning, Breeding and Migratory Areas. Activities and impacts such as excavations, discharges of dredged or fill material, and/or suspended sediment producing activities, in fish migratory areas, fish and shellfish spawning or nursery areas, or amphibian and migratory bird breeding areas, during spawning or breeding seasons shall be avoided and minimized to the maximum extent practicable.

26. Storage of Seasonal Structures. Coastal structures, such as pier sections and floats, that are removed from the waterway for a portion of the year (often referred to as seasonal structures) shall be stored in an upland location located above mean high water (MHW) and not in tidal wetlands or mudflats. These seasonal structures may be stored on the fixed, pile-supported portion of the structure that is seaward of MHW. This is intended to prevent structures from being stored on the marsh substrate, mudflats, or the substrate seaward of MHW. Seasonal storage of structures in navigable waters, e.g., in a protected cove on a mooring, requires Corps and local harbormaster approval.

27. Environmental Functions and Values. The permittee shall make every reasonable effort to carry out the construction or operation of the work authorized herein in a manner that maintains as much as is practicable, and minimize any adverse impacts on existing fish, wildlife, and natural environmental functions and values.

28. Protection of Vernal Pools (VPs).
(a) Impacts to VP Management Areas[1] for all VPs on, and known VPs surrounding, the project site shall be minimized to the maximum extent practicable.
(b) The following management practices must be followed for all work within the VP Management Area (750' of a VP's edge) of all VPs in order to qualify for Category 1 when there is fill placed in a water of the U.S., including wetlands:

- **i.** Similar to the DEP's Significant Wildlife Habitat regulations[2]:
  1. No disturbance within the VP Depression or VP Envelope (area within 100 feet of the VP Depression's edge)[3];
  2. Maintain a minimum of 75% of the Critical Terrestrial Habitat (area within 100-750 feet of the VP Depression's edge) as unfragmented forest with at least a partly-closed canopy of overstory trees to provide shade, deep litter and woody debris[3];
  3. Maintain or restore forest corridors connecting wetlands and significant vernal pools;
  4. Minimize forest floor disturbance; and
  5. Maintain native understory vegetation and downed woody debris.
- **ii.** Cape Cod style-curbing or no curbing options shall be used on new roads to facilitate amphibian passage[2].

(c) For work not complying with the requirements in (b) above, applicants shall submit an application to the Corps for at least Category 2 review with information on directional buffers in accordance with the VP Directional Buffer Guidance document[2]. Conservation of the unimpacted area within the VP Management Area will often be required.
(d) GC 2 requires applicants to delineate or approximately identify on the project plans all waters of the U.S., which include vernal pools. Appendix A, Page 1 lists VP Category 1 thresholds.

29. Invasive Species.
(a) The introduction, spread, or the increased risk of invasion of invasive plant or animal species on the project site, into new or disturbed areas, or areas adjacent to the project site caused by the site work is prohibited (see Appendix E, Paragraph 6).
(b) Unless otherwise directed by the Corps, all applications for Category 2 inland projects and Category 2 coastal fill projects proposing fill in Corps jurisdiction shall include an Invasive Species Control Plan (ISCP) (see Appendix E, Paragraph 6).

30. Cranberry Development Projects. For cranberry development projects authorized under the GP, the following conditions apply:
(a) If a cranberry bog is abandoned for any reason, the area must be allowed to revert to natural wetlands unless an Individual Permit is obtained from the Corps allowing the discharge of fill for an alternate use.

---

[1] The Corps VP Management Area, which includes the VP and a750' radius from the VP's edge, is defined at Appendix A, Endnote 5.
[2] Appendix E, 10(a)-(d) provides links to the state's Significant Wildlife Habitat regulations and references that provide impact minimization measures to reference when designing projects.
[3] The no disturbance requirement in the VP envelope [see (b)(i)(1)], and (b)(i)(2), do not apply to temporary impacts associated with construction mats in previously disturbed areas of existing utility project (e.g., transmission lines, gas pipelines) or linear transportation project (e.g., roads, highways, railways, trails, airport runways and taxiways) right-of-ways provided there is a Vegetation Management Plan that avoids, minimizes and mitigates impacts to aquatic resources.

(b) No stream diversion shall be allowed under Category 1 of this GP.
(c) No impoundments of intermittent or perennial streams shall be allowed under Category 1 and an application to the Corps is required for at least Category 2 review.
(d) The project shall be designed and constructed to not cause flood damage on adjacent properties.

31. Inspections. The permittee shall allow the Corps to make periodic inspections at any time deemed necessary in order to ensure that the work is being or has been performed in accordance with the terms and conditions of this GP. The Corps may also require post-construction engineering drawings for completed work or post-dredging survey drawings for any dredging work.
To facilitate these inspections, the permittee shall complete and return to the Corps:

- For Category 1 projects, the Category 1 Notification Form (Appendix B).
- For Category 2 projects, the 1) Work-Start Notification Form and 2) Compliance Certification Form whenever either is provided with a Category 2 authorization letter.

32. Maintenance.
(a) The permittee shall maintain the work authorized herein in good condition and in conformance with the terms and general conditions of this permit.
(b) This does not include maintenance of dredging projects. Each maintenance dredging event exceeding the Category 1 thresholds (see Appendix A, Page 6) requires a new written Corps authorization unless an unexpired, written Corps authorization specifies that the permittee may "dredge and maintain" an area for a particular time period. Category 1 or 2 maintenance dredging includes only those areas and depths previously authorized and dredged.
(c) Some maintenance activities may not be subject to regulation under Section 404 in accordance with 33 CFR 323.4(a)(2) (see Appendix A, Endnote 7).

33. Property Rights. This PGP does not convey any property rights, either in real estate or material, or any exclusive privileges, nor does it authorize any injury to property or invasion of rights or any infringement of Federal, State, or local laws or regulations.

34. Transfer of GP Verifications. When the structures or work authorized by this GP are still in existence at the time the property is transferred, the terms and conditions of this GP, including any special conditions, will continue to be binding on the entity or individual who received the GP verification, as well as the new owner(s) of the property. The permittee may transfer responsibilities and obligations under the GP verification to the new owner by submitting a letter to the Corps (see Appendix D for address) to validate the transfer. A copy of the GP verification must be attached to the letter and the letter must contain the following statement and signature: "When the structures or work authorized by this GP are still in existence at the time the property is transferred, the terms and conditions of this GP, including any special conditions, will continue to be binding on the new owner(s) of the property. To validate the transfer of this GP and the associated liabilities associated with compliance with its terms and conditions, have the transferee sign and date below."

35. Modification, Suspension, and Revocation. This GP or any work authorized under Category 1 or 2 may be either modified, suspended, or revoked, in whole or in part, pursuant to the policies and procedures of 33 CFR 325.7. Any such action shall not be the basis for any claim for damages against the United States.

36. Restoration Directive. The permittee, upon receipt of a notice of revocation of authorization under this GP, shall restore the wetland or waterway to its former condition without expense to the United States and as directed by the Secretary of the Army or his authorized representative. If the permittee fails

to comply with such a directive, the Secretary or his designee may restore the wetland or waterway to its former condition, by contract or otherwise, and recover the cost from the permittee.

37. Special Conditions. The Corps may independently, or at the request of the Federal resource agencies, impose other special conditions on a project authorized pursuant to this GP that are determined necessary to minimize adverse navigational and/or environmental effects or based on any other factor of the public interest. Failure to comply with all conditions of the authorization, including special conditions, constitutes a permit violation and may subject the permittee to criminal, civil, or administrative penalties and/or an ordered restoration.

38. False or Incomplete Information. If the Corps makes a determination regarding the eligibility of a project under this GP and subsequently discovers that it has relied on false, incomplete, or inaccurate information provided by the permittee, the GP authorization shall not be valid and the U.S. government may institute appropriate legal proceedings.

39. Abandonment. If the permittee decides to abandon the activity authorized under this GP, unless such abandonment is merely the transfer of property to a third party, he/she may be required to restore the area to the satisfaction of the Corps.

40. Enforcement Cases. This GP does not apply to any existing or proposed activity in Corps jurisdiction associated with an on-going Corps or EPA enforcement action, until such time as the enforcement action is resolved or the Corps and/or EPA as appropriate determines that the activity may proceed independently without compromising the enforcement action.

41. Duration of Authorization. This GP expires on October 11, 2015. Activities authorized under this GP that have commenced (i.e., are under construction) or are under contract to commence before this GP expires will have until October 11, 2016 to complete the activity under the terms and conditions of the current GP.

42. Previously Authorized Activities.
(a) Projects that have received authorization (Category 1 or 2) from the Corps and that were completed under the previous PGPs, nationwide permits, regional general permits or letters of permission, shall remain authorized.
(b) Activities authorized pursuant to 33 CFR Part 330.3 ("Activities occurring before certain dates") are not affected by this GP.
(c) Any work not commenced nor completed that was authorized in a written letter from the Corps under the PGP in effect between October 11, 2005 and October 11, 2010 remains authorized subject to the terms and general conditions of this GP along with any special conditions in the authorizing written letter.

43. NEPA Compliance. The Maine PGP was authorized in full compliance with Council for Environmental Quality ("CEQ") NEPA regulations. The Corps has determined that individual permit actions taken under the terms and conditions of the PGP are not a major federal action significantly affecting the quality of the human environment.

10/12/10

District Engineer Date

APPENDIX A: DEFINITION OF CATEGORIES

A. INLAND WATERS AND WETLANDS	**Inland Waters and Wetlands:** Waters that are regulated under Section 404 of the Clean Water Act, including rivers, streams, lakes, ponds and wetlands, and excluding Section 10 Navigable Waters of the U.S. The jurisdictional limits are the ordinary high water (OHW) mark in the absence of adjacent wetlands, beyond the OHW mark to the limit of adjacent wetlands when adjacent wetlands are present, and the wetland limit when only wetlands are present. For the purposes of this GP, fill placed in the area between the mean high water (MHW) and the high tide line (HTL), and in the bordering and contiguous wetlands[1] to tidal waters are reviewed in the Navigable Waters section. (See II. Navigable Waters on page 4 below.)	
	Projects not meeting Category 1 require an application for review as a Category 2 or Individual Permit project. All Category 1 and 2 projects must comply with all of this GP's applicable terms (Pages 1 – 4) and general conditions (Pages 5–18).	
ACTIVITY	**CATEGORY 1**	**CATEGORY 2**
(a) NEW FILL/ EXCAVATION DISCHARGES (You must reference (b) – (e) below for other thresholds that may be relevant to your project.)	**1.** <15,000 square feet (SF) (in LURC or DEP territories) of inland waterway and/or wetland fill and associated secondary impacts[2] (e.g., areas drained, flooded, fragmented, mechanically cleared or excavated). Fill area includes all temporary and permanent fill, and regulated discharges associated with excavation. Construction mats are considered as fill. [See General Condition (GC) 18(g).] <u>Provided:</u> • Historic fill + proposed impact area <15,000 SF and subdivision fill complies with GC 5, Single and Complete Projects. • No work in special aquatic sites (SAS)[4] other than wetlands. **2.** Construction mats[4] of any area necessary to conduct activities that were previously authorized, authorized under Category 1, or not subject to regulation (see Endnote 7). Authorized construction mats must be in place for <3 months, removed immediately upon work completion, and the wetlands must be restored (see GC 19). **3.** For work in Vernal Pool (VP) Management Areas (includes VPs)[5]: • See GC 2 and Appendix C for VP delineation requirements. • See GC 28 to determine if work qualifies for Category 1 or 2. • See Appendix E, Page 3 for VP documents providing mitigation guidance.	**1.** ≥15,000 square feet (SF) (in LURC or DEP territories) to <3 acres of inland waterway and/or wetland fill and associated secondary impacts (e.g., areas drained, flooded, fragmented, or excavated). Fill area includes all temporary and permanent fill, and regulated discharges associated with excavation. Mechanical clearing without grubbing or other soil disturbance >3 acres as a secondary impact may still be eligible for Category 2 at the discretion of the Corps. **2.** Specific activities with impacts of any area ≥15,000 SF required to affect the containment, stabilization, or removal of hazardous or toxic waste materials that are performed, ordered, or sponsored by a government agency with established legal or regulatory authority. Wetlands must be restored in place. **3.** Temporary structures, work, and discharges (including construction mats[4]) ≥15,000 SF necessary for construction activities or access fills or dewatering of construction sites, provided that the associated primary activity is authorized by the Corps, authorized under Category 1, or not subject to Corps regulation. GCs 16 -19 are particularly relevant. See GC 2 and Appendix C for wetland delineation requirements.

ACTIVITY	CATEGORY 1	CATEGORY 2
(b) BANK STABILIZATION PROJECTS	**1.** Inland bank stabilization <500 FT long and <1 CY of fill per linear foot below OHW, provided: • ≤1 cubic yard of fill per linear foot placed along the bank waterward of ordinary high water. • Work complies with the GCs (GC 20 in particular), including: o No structures angled steeper than 1H:1V allowed. Only rough-faced stone or fiber roll revetments allowed. o No in-stream work involving fill or excavation in flowing waters (see GC 22(h)). • In-stream work limited to Jul 15 - Oct 1 [see GC 22 (l)]. • No work in vernal pools[5] or SAS[3]. • GC 10 Endangered Species and GC 11 Essential Fish Habitat are particularly relevant.	**1.** Inland bank stabilization ≥500 FT long and/or ≥1 CY of fill per linear foot, or any amount with fill in wetlands.
(c) RIVER/ STREAM/ BROOK WORK & CROSSINGS *and* WETLAND CROSSINGS	**1.** River, stream and brook work and crossings: • Must comply with GC 22 in particular, including: o No slip lining [see GC 22 (g)]. o No in-stream work involving fill or excavation in flowing waters [see GC 22(h)]. o In-stream work limited to Jul 15 - Oct 1 [see GC 22 (l)]. • No work in riffles and pools[3]. • No stream relocations. • No dams or dikes[6]. • Work in areas designated as Atlantic salmon critical habitat or occupied by listed Atlantic salmon, or any other area occupied by a listed species is not eligible for Category 1 (see GC 10). • No work in EFH streams except for the activities stated in GC 11. **2.** Wetland crossings must comply with the particularly relevant GC 23.	**1.** Work not qualifying for Category 1.

ACTIVITY	CATEGORY 1	CATEGORY 2
(d) REPAIR, REPLACEMENT, & MAINTENANCE OF AUTHORIZED FILLS	**1.** Repair or maintenance of existing, currently serviceable, authorized fills with no expansion or change in use: • Conditions of the original authorization apply • Minor deviations in fill design allowed.[7] • The repair, rehabilitation, or replacement of those structures or fills destroyed or damaged by storms, floods, fire or other discrete events is authorized, provided the repair, rehabilitation, or replacement is commenced, or is under contract to commence, within two years of the date of their destruction or damage.	**2.** Replacement of non-serviceable fills, or repair/maintenance of serviceable fill, with expansion <3 acres, or with a change in use.
(e) MISCELL-ANEOUS	**1.** Activities required for the containment and cleanup of oil and hazardous substances that are subject to the National Oil and Hazardous Substances Pollution Contingency Plan (40 CFR 300) provided that the work is done in accordance with the Spill Control and Countermeasure Plan required by 40 CFR 112.3 and any existing state contingency plan and provided that the Regional Response Team (if one exists in the area) concurs with the proposed containment and cleanup action. SAS[3] must typically be restored in place at the same elevation. **2.** Scientific measurement devices whose purpose is to measure and record scientific data, such as staff gages, water recording devices, water quality testing and improvement devices, and similar structures. This excludes any biological sampling devices. Structures may not restrict movement of aquatic organisms. **3.** Survey activities, such as core sampling, seismic exploratory operations, plugging of seismic shot holes and other exploratory-type bore holes, exploratory trenching, soil surveys, sampling, and historic resources surveys (but not recovery). Exploratory trenches must be restored in accordance with GC 19. The construction of temporary pads is authorized provided the discharge doesn't exceed 25 CY. This doesn't authorize permanent structures or the drilling and the discharge of excavated material from test wells for oil and gas exploration (the plugging of such wells is authorized). **4.** Any work not commenced nor completed that was authorized in a written letter from the Corps under the PGP in effect between October 11, 2005 and October 11, 2010. The terms and general conditions of this GP apply along with any special conditions in the written authorization.	**1.** Aquatic habitat restoration, establishment, and enhancement of wetlands and riparian areas and the restoration and enhancement of streams and other open waters with impacts of any area ≥15,000 SF, provided those activities result in net increase in overall aquatic resource functions and services.[8] **2.** Projects where an EIS is required by the Corps are not eligible for Category 2.

II. NAVIGABLE WATERS	**Navigable Waters of the United States**: Waters that are subject to the ebb and flow of the tide and/or the tidal and non-tidal portions of the Federally designated navigable waters (the Penobscot River, Kennebec River, and Lake Umbagog) (Section 10 Rivers and Harbors Act of 1899). The jurisdictional limits are the mean high water (MHW) line in tidal waters and the ordinary high water (OHW) mark in non-tidal portions of the federally designated navigable rivers. For the purposes of this GP, fill placed in the area between the mean high water (MHW) and the high tide line (HTL), and in the bordering and contiguous wetlands[1] to tidal waters are also reviewed in this Navigable Waters section.	
	Projects not meeting Category 1 require an application for review as a Category 2 or Individual Permit project. All Category 1 and 2 projects must comply with all of this GP's applicable terms (Pages 1 - 4) and general conditions (Pages 5 - 18).	
ACTIVITY	**CATEGORY 1**	**CATEGORY 2**
(a) **FILL**	**1.** Discharges of dredged or fill material incidental to the construction of bridges across navigable waters of the U.S., including cofferdams, abutments, foundation seals, piers, and temporary construction and access fills provided the U.S. Coast Guard authorizes such discharges as part of the bridge permit or appropriate approval. Causeways and approach fills are not included in this category and require Category 2 or Individual Permit authorization. **2.** Bank stabilization projects <200 linear feet: • ≤1 cubic yard of fill per linear foot placed along the bank waterward of high tide line. No fill or equipment will occur in SAS[3]. • Work conducted in the intertidal zone must be conducted in-the-dry during low water, or between Nov. 8 – Apr. 9. • No structures angled steeper than 1H:1V and only rough-faced stone or fiber roll revetments allowed. • No driving of piles or sheeting. **3.** For 1 and 2 above: • Project proponents must contact the USFWS for work on coastal beaches to ensure no impacts to piping plovers, roseate terns or their habitat [see GC 10(b)ii].	**1.** <1 acre temporary or permanent fill, excavation and/or secondary impacts (e.g., areas drained, flooded, fragmented or mechanically cleared). Fill area includes all temporary and permanent waterway fills, provided: • Temporary or permanent fill in eelgrass[14] <1000 SF. • Permanent fill in SAS (excluding eelgrass[14]) <4300 SF.
(b) STREAM WORK & CROSSINGS, *and* WETLAND CROSSINGS	**1.** No new fill for crossings allowed.	**1.** New crossings or replacement crossings that do not fit the (c) Repair and Maintenance activity below.

ACTIVITY	CATEGORY 1	CATEGORY 2
(c) REPAIR AND MAINTENANCE WORK	**1.** Repair, replacement in-kind, or maintenance[7] of existing, currently serviceable[7], authorized structures or fills: • Conditions of the original authorization apply. • No substantial expansion or change in use. • Must be rebuilt in same footprint, however minor deviations in structure design allowed[7]. • The repair, rehabilitation, or replacement of those structures or fills destroyed or damaged by storms, floods, fire or other discrete events is authorized, provided the repair, rehabilitation, or replacement is commenced, or is under contract to commence, within two years of the date of their destruction or damage. Minor deviations for work involving piles shall adhere to one of the 4 methods in a - d below: **a.** Piles installed in-the-dry during low water or in-water between Nov. 8th - Apr. 9th, or **b.** Must be drilled and pinned to ledge, or **c.** Vibratory hammers used to install any size and quantity of wood, concrete or steel piles, or **d.** Impact hammers limited to one hammer and <50 piles installed/day with the following: wood piles of any size, concrete piles ≤18-inches diameter, steel piles <12-inches diameter if the hammer is ≤3000 lbs and a wood cushion is used between the hammer and steel pile, and • For b – d above: o In-water noise levels shall not exceed >187dB SEL re 1µPa or 206dB peak re 1µPa at a distance >10m from the pile being installed~~.~~, and o In-water noise levels >155dB peak re 1µPa shall not exceed 12 consecutive hours on any given day and a 12 hour recovery period (i.e., in-water noise below 155dB peak re 1µPa) must be provided between work days. • For a – d above: o Work is not eligible for Category 1 if conducted in tidal portions of the Penobscot river upstream of a line extending from Turner point in Castine to Moose Point (formerly squaw point) on Cape Jellison in Stockton Springs or in tidal portions of the Kennebec or Androscoggin Rivers upstream of a line extending from Doubling point in Arrowsic to Hospital Point in West Bath.	**1.** Replacement of non-serviceable structures and fills or repair/maintenance of serviceable structures or fills, with fill, replacement or expansion <1 acre, or with a change in use.

ACTIVITY	CATEGORY 1	CATEGORY 2
(d) DREDGING AND ASSOCIATED DISPOSAL	**1.** Maintenance dredging[10] for navigational purposes <1,000 CY with upland disposal. Includes return water from upland contained disposal area, provided: • Proper siltation controls are used. • Dredging & disposal operation limited to Nov. 8 – Apr. 9. • No impact to SAS[3]. • No dredging in intertidal areas. • No dredging in areas considered occupied by listed Atlantic salmon [see GC 10(b)(ii)]. • For dredging in waters outside of Atlantic salmon critical habitat, applicants must contact NMFS (Appendix D) to ensure no impacts to listed species such as shortnose sturgeon. • Project proponents must contact the USFWS for work on coastal beaches to ensure no impacts to piping plovers, roseate terns or their habitat [see GC 10(c)].	**1.** Maintenance dredging[10] ≥1,000 CY, new dredging <25,000 CY, or projects not meeting Category 1. Includes return water from upland contained disposal areas. Disposal includes: • Upland. • Beach nourishment (above mean high water) of any area provided dredging's primary purpose is navigation or sand is from an upland source. • Open water & confined aquatic disposal, if Corps finds the material suitable. **2.** Beach nourishment associated with dredging when the primary purpose is not navigation requires at least a Category 2 review. **3.** Maintenance or new dredging[10] and/or disposal in or affecting a SAS[3] requires an Individual Permit. See II(a) above for dredge disposal in wetlands or waters.
(e) MOORINGS	**1.** Private, non-commercial, non-rental, single-boat moorings, provided: • Authorized by the local harbormaster/town. • Not associated with any boating facility.[11] • Boat or mooring not located in a Federal Navigation Project[12] other than a Federal Anchorage[12]. Moorings in Federal Anchorage not associated with a boating facility[11] and are not for rent. • No interference with navigation. • No new moorings located in SAS[3]. Prior to installation of moorings, a site-specific eelgrass survey should be conducted to document that eelgrass is not present. • When existing, authorized moorings in SAS[3] are going to be replaced, they shall be replaced with elastic mooring systems that prevent mooring chains from resting or dragging on the bottom substrate at all tides and helical anchors, or equivalent SAS protection systems where practicable. **2.** Minor relocation of previously authorized moorings and moored floats, provided: • Authorized by the local harbormaster/town. • Not located in SAS[3] • No interference with navigation. • Cannot be relocated into a Federal Navigation Project[12] other than a Federal Anchorage[12]	**1.** Moorings associated with a boating facility[11]. An eelgrass[14] survey may be required. **2.** Moorings that don't meet the terms in Category 1 and don't require an Individual Permit. This includes private moorings with no harbormaster or means of local approval. **3.** Moorings located such that they, and/or vessels docked or moored at them, are within the buffer zone of the horizontal limits[13] of a Federal Channel[12]. (See Appendix F.) The buffer zone is equal to 3 times the authorized depth of that channel. **4.** An IP is required for moorings within the horizontal limits[11], or with moored vessels that extend, into the horizontal limits of a Federal Navigation Project[12], except those in Federal Anchorages[12]. For 1-4 above, siting of new individual moorings in SAS[3], including eelgrass[14], should be avoided to the maximum extent practicable. If SAS[3] cannot be avoided, plans should show elastic mooring systems that prevent mooring chains from resting or dragging on the bottom substrate at all tides and helical anchors, or equivalent SAS protection systems, where practicable.

ACTIVITY	CATEGORY 1	CATEGORY 2
(f) STRUCTURES AND FLOATS	**1.** Reconfiguration of existing, authorized structures or floats. Provided: **a**. Piles shall adhere to one of the 4 methods in (i) –(iv) below: **i.** Piles installed in-the-dry during low water or in-water between Nov. 8th - Apr. 9th, or **ii.** Must be drilled and pinned to ledge, or **iii.** Vibratory hammers used to install any size and quantity of wood, concrete or steel piles, or **iv.** Impact hammers limited to one hammer and <50 piles installed/day with the following: wood piles of any size, concrete piles ≤18-inches diameter, steel piles <12-inches diameter if the hammer is ≤3000 lbs and a wood cushion is used between the hammer and steel pile. **b**. For (ii) – (iv) above: **i.** In-water noise levels shall not exceed >187dB SEL re 1µPa or 206dB peak re 1µPa at a distance >10m from the pile being installed~~.~~, and **ii.** In-water noise levels >155dB peak re 1µPa shall not exceed 12 consecutive hours on any given day and a 12 hour recovery period (i.e., in-water noise below 155dB peak re 1µPa) must be provided between work days. **c.** For (i) –(iv) above: **i.** Work is not eligible for Category 1 if conducted in tidal portions of the Penobscot river upstream of a line extending from Turner point in Castine to Moose Point (formerly squaw point) on Cape Jellison in Stockton Springs or in tidal portions of the Kennebec or Androscoggin Rivers upstream of a line extending from Doubling point in Arrowsic to Hospital Point in West Bath.	**1.** Private structures or floats, including floatways/skidways, built to access waterway (seasonal and permanent) **2.** Expansions to existing boating facilities[11]. For 1 & 2 above, compliance with the following design standards is not required but recommended: • Pile-supported structures <400 SF, with attached floats totaling ≤200 SF. • Bottom anchored floats ≤200 SF. • Structures are ≤4' wide and have at least a 1:1 height:width ratio[11]. • Floats supported a minimum of 18" above the substrate during all tides. • Structures & floats not located within 25' of any eelgrass[8]. • Moored vessels not positioned over SAS[4]. • No structure located within 25' of the riparian property boundary without written approval from the abutter(s). • No structure extends across >25% of the waterway width at mean low water. • Not located within the buffer zone of the horizontal limits[13] of a Corps Federal Navigation Project (FNP) (App. F). The buffer zone is equal to three times the authorized depth of that FNP. **3.** An Individual Permit is required for structures or floats, including floatways/skidways, located such that they and/or vessels docked or moored at them are within the horizontal limits[13] of a Corps Federal Navigation Project[12] (see App. F). **4.** An Individual Permit is required for structures & floats associated with a new or previously unauthorized boating facility[11].

ACTIVITY	CATEGORY 1	CATEGORY 2
(g) MISCELL-ANEOUS	**1.** Temporary buoys, markers, floats, etc. for recreational use during specific events, provided they are removed within 30 days after use is discontinued. **2.** The placement of aids to navigation and regulatory markers which are approved by and installed in accordance with the requirements of the U.S. Coast Guard. (See 33 CFR 66, Chapter I, subchapter C)." **3.** Activities required for the containment and cleanup of oil and hazardous substances that are subject to the National Oil and Hazardous Substances Pollution Contingency Plan (40 CFR 300) provided that the work is done in accordance with the Spill Control and Countermeasure Plan required by 40 CFR 112.3 and any existing state contingency plan and provided that the Regional Response Team (if one exists in the area) concurs with the proposed containment and cleanup action. SAS[3] must typically be restored in place at the same elevation. **4.** Fish and wildlife harvesting, enhancement, and attraction devices and activities such as pound nets, crab traps, crab dredging, eel pots, lobster traps, and clam and oyster digging, and small fish attraction devices such as open water fish concentrators (sea kites, etc.). This does not authorize artificial reefs or impoundments and semi-impoundments of waters of the U.S. for the culture or holding of motile species such as lobster, or the use of covered oyster trays or clam racks. No activity that results in a hazard to navigation. Note: A Category 1 Notification Form is not required for these devices and activities. **5.** Scientific measurement devices whose purpose is to measure and record scientific data, such as staff gages, water recording devices, water quality testing and improvement devices, and similar structures. Structures may not restrict movement of aquatic organisms. No activity results in a hazard to navigation. **6.** Survey activities such as exploratory drilling, surveying and sampling activities, excluding any biological sampling devices. Does not include oil and gas exploration and fill for roads or construction pads. No activity results in a hazard to navigation. Applicants must contact NMFS to ensure no impacts to listed species.	**1.** Structures or work in or affecting tidal or navigable waters, that are not defined under any of the previous headings listed above. Includes, but is not limited to, utility lines, aerial transmission lines, pipelines, outfalls, boat ramps, floatways/skidways, bridges, tunnels and horizontal directional drilling activities seaward of the mean high water line. **2.** Shellfish/finfish (other than Atlantic salmon), or other aquaculture facilities with no more than minimal individual and cumulative impacts to environmental resources or navigation. –Aquaculture guidelines are provided at: www.maine.gov/dmr/aquaculture/index.htm. **3.** Specific activities with impacts of any area required to affect the containment, stabilization, or removal of hazardous or toxic waste materials that are performed, ordered, or sponsored by a government agency with established legal or regulatory authority. Wetlands must typically be restored in place at the same elevation to qualify. **4.** Aquatic habitat restoration, establishment and enhancement provided those activities are proactive and result in net increases in aquatic resource functions and services.[8] **5.** Projects where an EIS is required by the Corps are not eligible for Category 2.

ACTIVITY	CATEGORY 1	CATEGORY 2
(g) MISCELL-ANEOUS (continued)	**7.** Shellfish seeding (brushing the flats[9]) projects. **8.** Marine railway work not eligible for maintenance[7] (i.e. not currently serviceable[7] or in non-compliance) may be replaced "in-kind" with minor deviations[7] provided: • Work is in the intertidal zone • No fill expansion below high tide line. • Work conducted in-the-dry during low water or in-water between Nov. 8 – Apr. 9. **9.** Test plots <100 SF for the planting of wetland species native to the area. No grading, no structures, no plant growing devices and no interference with navigation, which require at least Category 2 review. **10.** Any work not commenced nor completed that was authorized in a written letter from the Corps under the PGP in effect between October 11, 2005 and October 11, 2010. The terms and general conditions of this GP apply along with any special conditions in the written authorization	

Endnotes/Definitions

[1] **Bordering and Contiguous Wetlands:** A bordering wetland is immediately next to its adjacent waterbody and may lie at, or below, the ordinary high water mark (mean high water in navigable waters) of that waterbody and is directly influenced by its hydrologic regime. Contiguous wetlands extend landward from their adjacent waterbody to a point where a natural or manmade discontinuity exists. Contiguous wetlands include bordering wetlands as well as wetlands that are situated immediately above the ordinary highwater mark and above the normal hydrologic influence of their adjacent waterbody. Note, with respect to the federally designated navigable rivers, the wetlands bordering and contiguous to the tidally influenced portions of those rivers are reviewed under "II. Navigable Waters."

[2] **Direct, Secondary, and Cumulative Impacts/Effects:**

Direct Impacts: The immediate loss of aquatic ecosystem within the footprint of the fill.

Secondary Impacts: These are effects on an aquatic ecosystem that are associated with a discharge of dredged or fill materials, but do not result from the actual placement of the dredged or fill material. Information about secondary effects on aquatic ecosystems shall be considered prior to the time final section 404 action is taken by permitting authorities. Some examples of secondary effects on an aquatic ecosystem are a) fluctuating water levels in all impoundment and downstream associated with the operation of a dam, b) septic tank leaching and surface runoff from residential or commercial developments on fill, and c) leachate and runoff from a sanitary landfill located in waters of the U.S. Put another way, secondary effects are those impacts outside the footprint of the fill that arise from and are associated with the discharge of dredged or fill material, including the operation of an activity or facility associated with the discharge. Examples may include habitat fragmentation; interruption of travel corridors for wildlife (for example, for amphibians that migrate to and from seasonal or vernal pools used as breeding habitat); hydrologic regime changes; and impacts from operation and maintenance activities for constructed facilities; such as noise/lighting, storm water runoff, and road kill of wetland dependent wildlife. Using the directions contained in the guidelines, we consider the circumstances of a proposed discharge and the project of which it is a part to evaluate the scope, extent, severity, and permanence of direct, secondary, and cumulative adverse effects upon the aquatic ecosystem.

Cumulative Impacts: The extent of past, present, and foreseeable developments in the area may be an important consideration in evaluating the significance of a particular project's impacts. Although the impacts associated with a particular discharge may be minor, the cumulative effect of numerous similar discharges can result in a large impact. Cumulative impacts should be estimated only to the extent that they are reasonable and practical.

[3] **Special Aquatic Sites:** Includes wetlands and saltmarsh, mudflats, riffles and pools, and vegetated shallows (predominantly comprised of eelgrass in Maine).

[4] **Construction Mats:** Constructions, swamp and timber mats (herein referred to as "construction mats") are generic terms used to describe structures that distribute equipment weight to prevent wetland damage while facilitating passage and providing work platforms for workers and equipment. They are comprised of sheets or mats made from a variety of materials in various sizes. A timber mat consists of large timbers bolted or cabled together. Corduroy roads, which are not considered to be construction mats, are cut trees and/or saplings with the crowns and branches removed, and the trunks lined up next to one another. Corduroy roads are typically installed as permanent structures. Like construction mats, they are considered as fill whether they're installed temporarily or permanently.

[5] **Vernal Pools:** A vernal pool, also referred to as a seasonal forest pool, is a temporary to semi-permanent body of water occurring in a shallow depression that typically fills during the spring or fall and may dry during the summer. Vernal pools have no permanent inlet or outlet and no viable populations of predatory fish. A vernal pool may provide the primary breeding habitat for wood frogs (*Rana sylvatica*), spotted salamanders (*Ambystoma maculatum*), blue-spotted salamanders (*Ambystoma laterale*), and fairy shrimp (*Eubranchipus* sp.), as well as valuable habitat for other plants and wildlife, including several rare, threatened, and endangered species. A vernal pool intentionally created for the purposes of compensatory mitigation is included in this definition. For the purposes of this GP, the presence of any of the following species in any life stage in any abundance level/quantity would designate the waterbody as a vernal pool: fairy shrimp, blue spotted salamanders, spotted salamanders or wood frogs. The Corps may determine during a Category 2 review that a waterbody should not be regulated as a VP based on available evidence. For the purposes of this GP*, the VP Management Areas are the: Vernal Pool Depression (includes the vernal pool depression up to the spring or fall high water mark, and includes any vegetation growing within the depression), Vernal Pool Envelope (area within 100 FT of the VP Depression's edge) and Critical Terrestrial Habitat (area within 100-750 FT of the Vernal Pool Depression's edge). [*Note: Critical Terrestrial Habitat is defined as 100 -750 FT on page 243 of the document "Science and Conservation of Vernal Pools in Northeastern North America," Calhoun and deMaynadier, 2008, which is referenced in Appendix E, page 3, Paragraph 10(b).

[6] **Water Diversions:** Water diversions are activities such as bypass pumping or water withdrawals. Temporary flume pipes, culverts or cofferdams where normal flows are maintained within the stream boundary's confines aren't water diversions. "Normal flows" are defined as no change in flow from pre-project conditions.

[7] **Maintenance: a)** In accordance with 33 CFR 323.4(a)(2), any discharge of dredged or fill material that may result from any of the following activities is not prohibited by or otherwise subject to regulation under Section 404 of the CWA: "Maintenance, including emergency reconstruction of recently damaged parts, of currently serviceable structures such as dikes, dams, levees, groins, riprap, breakwaters, causeways, bridge abutments or approaches, and transportation structures. Maintenance does not include any modification that changes the character, scope, or size of the original fill design." Otherwise, the following work is regulated and subject to the Category 1 or 2 thresholds in Appendix A above: The repair, rehabilitation, or replacement of any previously authorized, currently serviceable structure or fill, or of any currently serviceable structure or fill authorized by 33 CFR 330.3 – "Activities occurring before certain dates," provided that the structure or fill is not to be put to uses differing from those uses specified or contemplated for it in the original permit or the most recently authorized modification. **b)** Minor deviations in the structure's configuration or filled area, including those due to changes in materials, construction techniques, or current construction codes or safety standards that are necessary to make repair, rehabilitation, or replacement are authorized. **c)** Currently serviceable means useable as is or with some maintenance, but not so degraded as to essentially require reconstruction. **d)** No seaward expansion for bulkheads or any other fill activity is considered Category 1 maintenance. **e)** Only structures or fills that were previously authorized and are in compliance with the terms and condition of the original authorization can be maintained as a non-regulated activity under 33 CFR 323.4(a)(2), or in accordance with the Category 1 or 2 thresholds in Appendix A. **f)** The state's maintenance provisions may differ from the Corps and may require reporting and written authorization from the state. **g)** Contact the Corps to determine whether stream crossing replacements require a written application to the Corps for at least a Category 2 review.

[8] **Aquatic Habitat Restoration, Establishment and Enhancement:** The Corps will decide if a project qualifies and must determine in consultation with federal and state agencies that the net effects are beneficial. The Corps may refer to Nationwide Permit 27 published in the 3/12/07 Federal Register. Activities authorized here may include, but are not limited to: the removal of accumulated sediments; the installation, removal, and maintenance of small water control structures, dikes, and berms; the installation of current deflectors; the enhancement, restoration, or establishment of riffle and pool stream structure; the placement

of in-stream habitat structures; modifications of the stream bed and/or banks to restore or establish stream meanders; the backfilling of artificial channels and drainage ditches; the removal of existing drainage structures; the construction of small nesting islands in inland waters**;** the construction of open water areas; the construction of native shellfish species habitat over unvegetated bottom for the purpose of habitat protection or restoration in tidal waters; shellfish seeding; activities needed to reestablish vegetation, including plowing or discing for seed bed preparation and the planting of appropriate wetland species; mechanized land clearing to remove non-native invasive, exotic, or nuisance vegetation; and other related activities. Only native plant species should be planted at the site.

[9] **Brushing the Flats:** The placement of tree boughs, wooden lath structure, or small-mesh fencing on mudflats to enhance recruitment of soft-shell clams (*Mya arenaria*).

[10] **Maintenance Dredging:** This includes only those areas and depths previously authorized by the Corps and dredged.

[11] **Boating Facilities:** Facilities that provide for a fee, rent, or sell mooring space, such as marinas, yacht clubs, boat clubs, boat yards, town facilities, dockominiums, etc.

[12] **Federal Navigation Projects (FNPs):** FNPs are comprised of Federal Channels and Federal Anchorages. See Appendix F for their location and contact the Corps for more information. "Horizontal Limits" is the outer edge of an FNP. "Buffer Zone" is equal to three times the authorized depth of that channel.

[13] **Horizontal Limits:** The outer edge of a Federal Navigation Project (FNP). See Appendix F and contact the Corps for information on FNP's.

[14] **Eelgrass (Zostera marina):** A type of rooted aquatic vegetation that exists in intertidal and shallow subtidal areas known as vegetated shallows. See www.nero.noaa.gov/hcd/ for eelgrass survey guidance.

[15] **Structures:** The height of structures shall at all points be equal to or exceed the width of the deck. For the purpose of this definition, height shall be measured from the marsh substrate to the bottom of the longitudinal support beam.

Environmental Summary Sheet

Pin: 19146.00 **Date Submitted: 2/26/13**
Town: Frankfort-Winterport
CPD Team Leader: Laurie Rowe
ENV Field Contact: Val Derosier

NEPA Complete: Programmatic CE issued 2/26/13

☒ **Section 106**
PA
Section 106 Resources:

☒ **Section 4(f) and 6(f)**
Section 4(f)
Review Complete-
Section 6(f)
Not Applicable

☒ **Maine Department of Inland Fisheries and Wildlife Essential Habitat**

Not Applicable **Timing Window: Not Applicable**

☒ **Section 7**
No Effect
Species of Concern: Atlantic Salmon-Critical Habitat
Atlantic Salmon DPS
Comments/References:

☒ **Maine Department of Conservation/Public Lands, Submerged Land Lease**
Not Applicable

☒ **Maine Land Use Regulation Commission**
Not Applicable

☒ **Maine Department of Environmental Protection**
Exempt from Permitting

☒ **Army Corps of Engineers, Section 10 of the Rivers and Harbors Act and Section 404 of the Clean Water Act.**
Category 1

☒ **Stormwater Review**
N/A

☒ **Special Provisions Required**

Special Provision 105-Timing of Work Restriction	N/A☐	Applicable☒
Special Provision 656-Erosion Control Plan	N/A☐	Applicable☒
Special Provision 203-Dredge Spec	N/A☒	Applicable☐
General Note for Hazardous Waste	N/A☒	Applicable☐
Special Provision 203-Hazardous Waste	N/A☒	Applicable☐
Special Provision 105.9	N/A☒	Applicable☐

**All permits and approvals based on plans/scope as of: 1/24/13*