STATE OF MAINE
DEPARTMENT OF TRANSPORTATION

FRENCHBORO TRANSFER BRIDGE AND PIER
FRENCHBORO, LONG ISLAND
HANCOCK COUNTY

SEPTEMBER 2013

WIN:18386.00

PROJECT LOCUS

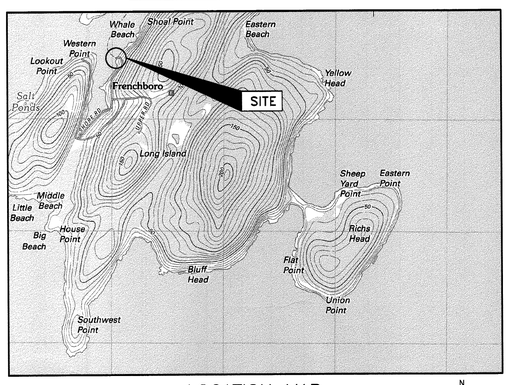

LOCATION MAP

0 1000' 2000' 4000'
APPROXIMATE SCALE IN FEET: 1" = 2000'

N W E S

MAINE

BASE MAP FROM THE FOLLOWING USGS QUADRANGLE MAP:
FRENCHBORO, MAINE (2012)
DIGITAL TOPOGRAPHIC MAPS PROVIDED BY USGSSTORE.GOV.

CONTOUR ELEVATIONS REFERENCE NAVD 88,
CONTOURS ARE SHOWN IN FEET AT 10 FOOT INTERVALS

GZA GeoEnvironmental, Inc.
477 CONGRESS STREET – SUITE 700
Portland, Maine 04101
(207) 879-9190

SPECIFICATIONS:

STATE OF MAINE DEPARTMENT OF TRANSPORTATION
STANDARD SPECIFICATIONS – REVISION OF 2002
SUPPLEMENTAL SPECIFICATION 2008

DESIGN LOADING

DESIGN VESSEL:

MV CAPTAIN HENRY LEE
LENGTH: 130 FT.
BEAM: 36 FT.
MAX DRAFT: 8'–6" FT.
MAX DISPLACEMENT: 383.75 LONG TONS / 859,600 LBS.

APPROACH VELOCITY: VN = 1.69 FPS (50 CM/SEC)

MATERIALS:

CONCRETE (UNLESS NOTED OTHERWISE)	CLASS "A"
REINFORCING STEEL	ASTM A615/A615M, GRADE 60

ALL REINFORCING STEEL SHALL BE EPOXY COATED PER ASTM A775/A775M

STRUCTURAL STEEL	ASTM A36
MISCELLANEOUS METALS, PLATES	ASTM A36
BOLTS	A307
HIGH STRENGTH BOLTS (TRANSFER BRIDGE REPAIRS)	A325
STAINLESS STEEL	TYPE 316L

ALL CARBON STEEL FASTENERS AND HARDWARE SHALL BE HOT DIPPED GALVANIZED PER ASTM A123 OR A153 AS APPLICABLE

STEEL PIPE PILES	ASTM A252, GRADE 3
STRUCTURAL TIMBER	SOUTHERN YELLOW PINE, NO. 1 (OR BETTER)
TIMBER PILES	GREENHEART

BASIC DESIGN STRESSES:

CONCRETE	F'C = 4,350 PSI
REINFORCING STEEL	FY = 60,000PSI
STRUCTURAL STEEL	FY = 36,000 PSI
STEEL PIPE PILES	FY = 45,000 PSI
TIMBER	FB = 1,350 PSI
	FV = 165 PSI

INDEX TO DRAWINGS

SHEET NO.	TITLE
T-1	TITLE SHEET/LOCUS MAP/INDEX
C-1	EXISTING CONDITIONS
C-2	SUBSURFACE PROBE DATA
C-3	DEMOLITION PLAN
C-4	PIER SITE IMPROVEMENTS PLAN
C-5	PIER SECTIONS
S-1	PIER ELEVATIONS AND SEAWALL DETAILS - 1
S-2	PIER ELEVATIONS AND SEAWALL DETAILS - 2
S-3	FENDER PLAN AND ELEVATIONS
S-4	DOLPHIN AND FENDER ELEVATIONS AND DETAILS
S-5	PIER FENDER DETAILS
S-6	MISCELLANEOUS DETAILS
S-7	DOLPHIN ACCESS PLATFORM/LADDER
S-8	DOLPHIN ACCESS PLATFORM/LADDER DETAILS
S-9	MISC. PIER AND TRANSFER BRIDGE REPAIRS
S-10	TRANSFER BRIDGE REPAIRS - 1
S-11	TRANSFER BRIDGE REPAIRS - 2
S-12	TRANSFER BRIDGE REPAIRS - 3
S-13	TRANSFER BRIDGE REPAIRS - 4
S-14	TRANSFER BRIDGE REPAIRS - 5
S-15	TRANSFER BRIDGE REPAIRS - 6
E-1	TRANSFER BRIDGE CONTROL PANEL ELEVATIONS AND DETAILS
E-2	TRANSFER BRIDGE CONTROL PANEL LAYOUT AND DETAILS
E-3	TRANSFER BRIDGE LOCAL PUSHBUTTON PANEL LAYOUT AND DETAILS
E-4	TRANSFER BRIDGE CONTROL PANEL WIRING DIAGRAM
E-5	TRANSFER BRIDGE CONTROL PANEL SCHEMATIC WIRING DIAGRAM SH.1
E-6	TRANSFER BRIDGE CONTROL PANEL DETAILS
E-7	TRANSFER BRIDGE ELECTRICAL SITE PLAN

STATE OF MAINE
DEPARTMENT OF TRANSPORTATION
APPROVED
COMMISSIONER: DATE 9/11/13
CHIEF ENGINEER: 9-10-13

STATE OF MAINE CHRISTOPHER L. BOWN No. 7579 PROFESSIONAL ENGINEER

	SIGNATURE
P.E. NUMBER	
DATE	

INFORMATION	
MULTIMODAL	
J. KITTREDGE	
D. FISCALETTI	
GZA GEOENVIRONMENTAL, INC.	

PROJECT	
PROGRAM	
PROJECT MANAGER	
DESIGNER	
CONSULTANT	
PROJECT RESIDENT	
CONTRACTOR	
PROJECT COMPLETION DATE	

WIN: 18386.00

FRENCHBORO PIER AND TRANSFER BRIDGE
FRENCHBORO, MAINE
LONG ISLAND HANCOCK COUNTY

TITLE SHEET/LOCUS MAP/INDEX

SHEET NUMBER
T–1
1 OF 28

Filename: $file$ Division: $wkgroup$ Username: $user$ Date: $date$

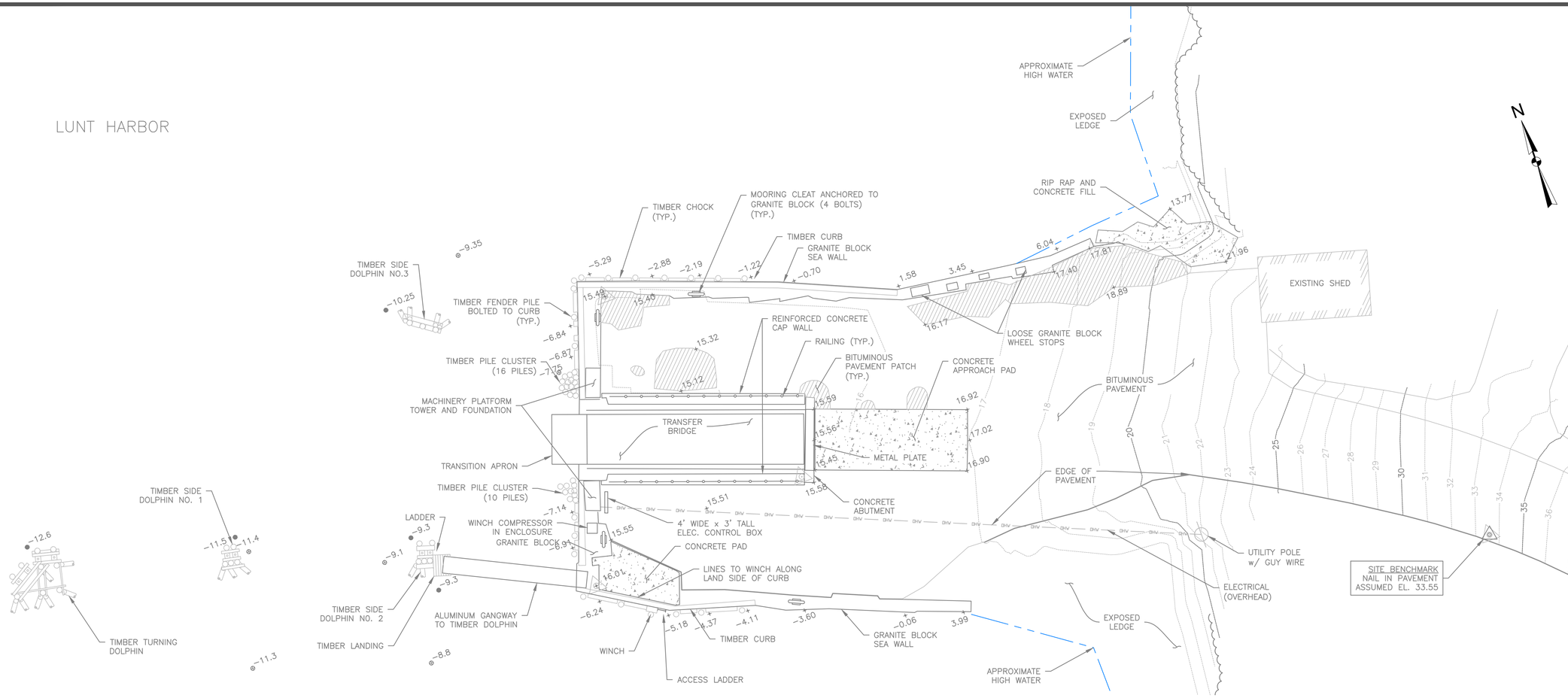

LEGEND:

- CLEAT
- CONCRETE
- OBSERVED PAVEMENT PATCH
- 16.90 SPOT ELEVATION BY TOPOGRAPHIC SURVEY DEC. 13, 2012 BY GZA
- 10.3 SPOT ELEVATION (MUDLINE) BY LEADLINE SURVEY DEC. 13, 2012 BY GZA
- 8.8 SPOT ELEVATION (MUDLINE) BY LEADLINE SURVEY JUNE 4–5, 2013 BY GZA
- TEMPORARY BENCHMARK
- TIMBER PILE (PLUMB)
- TIMBER PILE (BATTER)
- TREELINE
- APPROXIMATE MEAN HIGH WATER

EXISTING CONDITION PLAN

SCALE: 1" = 10'

0 5 10 20
SCALE IN FEET

NOTES:

1. TEMPORARY SITE BENCHMARK IS A NAIL SET IN THE ASPHALT ALONG WEST SHORE DRIVE, ASSUMED ELEV. 33.55.
2. VERTICAL DATUM IS APPROXIMATE MLLW = 0.00
3. GENERAL SITE FEATURES WERE PROVIDED BY MAINE DEPARTMENT OF TRANSPORTATION IN AN ELECTRONIC FILE TITLED "3DTOPO_18OCT12.DGM". ADDITIONAL INFORMATION WAS COLLECTED DURING A LIMITED SITE SURVEY PERFORMED BY GZA GEOENVIRONMENTAL, INC. ON DECEMBER 13, 2012 AND REPRESENTS CONDITIONS AT THE TIME OF SURVEY.
4. A LEADLINE SURVEY WAS COMPLETED BY GZA GEOENVIRONMENTAL, INC. ON JUNE 4–5, 2013 USING AN ASSUMED BENCHMARK ELEVATION . APPROXIMATE MEAN LOWER LOW WATER DATUM WAS ESTIMATED BY TAKING TIDE READINGS ON JUNE 4 AND JUNE 5, 2013 AND ADJUSTING THE TIDE READINGS TO NOAA TIDE PREDICTIONS FOR BURNT COVE HARBOR, SWAN'S ISLAND, MAINE, STATION ID 8413857. ALL SURVEY ELEVATIONS WERE THEN TRANSFERRED TO THE APPROXIMATE MEAN LOWER LOW WATER DATUM.
5. THE CONTRACTOR SHALL ENGAGE A PROFESSIONAL LAND SURVEYOR, LICENSED IN THE STATE OF MAINE, TO SET THE BASELINE AND CENTERLINE OF THE FERRY SLIP AND TRANSFER BRIDGE. THE ESTABLISHED BASELINE SHALL BE SUBMITTED TO THE RESIDENT FOR REVIEW PRIOR TO THE START OF ANY OF THE WORK.
6. THE CONTRACTOR SHALL VERIFY ALL EXISTING CONDITIONS AND DIMENSIONS IN THE FIELD, BEFORE ORDERING ANY MATERIAL, COMMENCING ANY FABRICATION, OR PERFORMING ANY WORK. HE SHALL NOTIFY RESIDENT, IN WRITING, OF ANY CONDITIONS OR DIMENSIONS WHICH VARY FROM THOSE SHOWN ON THE DRAWINGS AND INCORPORATE SUCH VARIATIONS IN THE CONSTRUCTION AS APPROVED BY THE DEPARTMENT.
7. THE EXISTING CONDITIONS INDICATED IN THE DRAWINGS ARE BASED UPON INFORMATION PRESENTED IN THE PLANS REFERENCED HEREIN. THE INFORMATION IN THE REFERENCE PLANS HAS BEEN SUPPLEMENTED THROUGH LIMITED FIELD INVESTIGATION. THE DEPARTMENT AND THE ENGINEER OF RECORD MAKE NO WARRANTY AND ACCEPT NO RESPONSIBILITY FOR THE ACCURACY OF THIS INFORMATION.

STATE OF MAINE
DEPARTMENT OF TRANSPORTATION

WIN 18386.00

HIGHWAY PLANS

STATE OF MAINE CHRISTOPHER L. BOWN No. 7215 LICENSED PROFESSIONAL ENGINEER

	SIGNATURE	DATE	BY	DATE
PROJ. MANAGER $PROJMANAGER$				
DESIGN–DETAILED				
CHECKED–REVIEWED				
DESIGN2–DETAILED2				
DESIGN3–DETAILED3				
REVISIONS 1				
REVISIONS 2				
REVISIONS 3				
REVISIONS 4				
FIELD CHANGES				

P.E. NUMBER

FRENCHBORO PIER AND TRANSFER BRIDGE
FRENCHBORO, MAINE
LONG ISLAND HANCOCK COUNTY

EXISTING CONDITIONS

SHEET NUMBER

C–1

2 OF 28

GZA-J:\Geo\09.0022766.00_Frenchboro\Figures\GZA DWGS\FINAL 25766.00_F2-14_RDL_8-16-2013.dwg [C-1 EX COND] September 05, 2013 - 12:46pm michael.aubin

NOTE:

PROBES P–2 AND P–4 WERE NOT PERFORMED

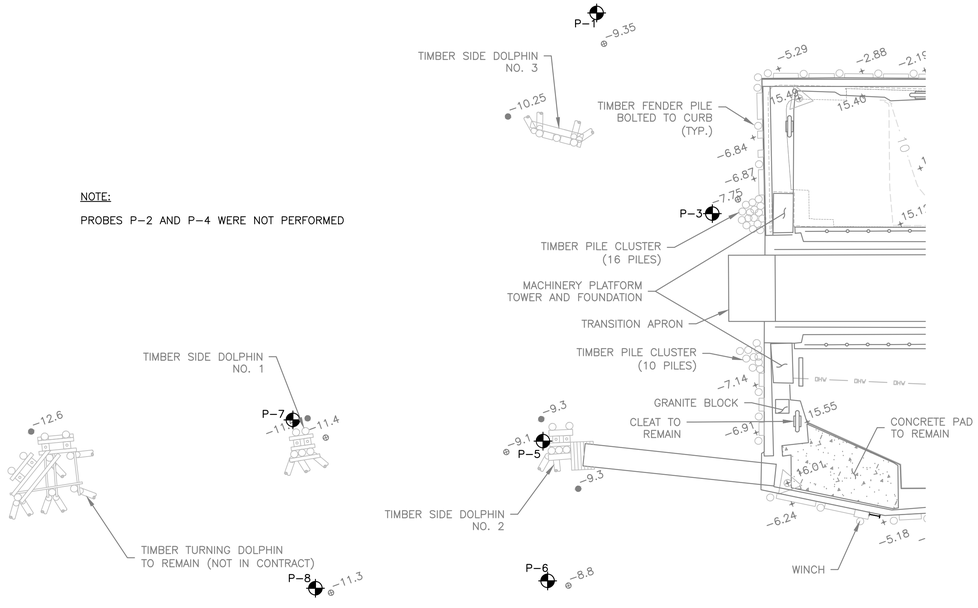

PILE PROBE LAYOUT PLAN

SCALE: 1" = 10'

0 5 10 20

SCALE IN FEET

NOTES:

1. ON JUNE 4 AND 5, 2013 GZA GEOENVIRONMENTAL, INC. (GZA), ON BEHALF OF MAINE DEPARTMENT OF TRANSPORTATION (MAINE DOT), MONITORED A PILE PROBE PROGRAM AT THE FRENCHBORO FERRY SLIP AND PIER.

2. THE PILE PROBE PROGRAM CONSISTED OF ADVANCING A 45 FOOT LONG STEEL HP 10X42 PILE TO PRACTICAL REFUSAL AT SIX PROBE LOCATIONS AROUND THE EXISTING FERRY SLIP AND PIER. AT EACH LOCATION, THE PILE WAS ADVANCED WITH A VULCAN 01 SINGLE ACTING AIR HAMMER USING A BARGE MOUNTED CRANE. PROBE LOCATIONS WERE ESTIMATED USING TAPED MEASUREMENTS FROM EXISTING STRUCTURES.

3. PROBE DRIVING RESISTANCES WERE RECORDED IN BLOWS PER FOOT OVER THE ENTIRE PENETRATION OF THE PILE AT EACH PROBE LOCATION AND ARE PRESENTED HEREIN FOR INFORMATION ONLY. NO WARRANTY REGARDING THE ACCURACY OF THIS INFORMATION IS EITHER EXPRESSED OR IMPLIED BY GZA OR MAINE DOT.

4. ELEVATION DATA WAS ESTIMATED USING A TIDE GAUGE ON THE SOUTHWEST CORNER OF THE PIER, SET UP ON A POINT SURVEYED BY GZA IN DECEMBER 2013. MUDLINE SOUNDINGS, PILE PENETRATION BELOW WATER LEVEL AND TIDE GAUGE READINGS WERE RECORDED AT THE BEGINNING AND END OF EACH PILE INSTALLATION TO ESTIMATE MUDLINE AND PILE TIP ELEVATIONS. PROBE RESISTANCES, LOCATIONS AND ELEVATIONS SHOULD BE CONSIDERED ACCURATE TO THE DEGREE IMPLIED BY THE METHOD USED.

LEGEND:

+11.75	SPOT ELEVATION BY TOPOGRAPHIC SURVEY DEC. 13, 2012 BY GZA
–15.4	SPOT ELEVATION (MUDLINE) BY LEADLINE SURVEY DEC. 13, 2012 BY GZA
–13.9	SPOT ELEVATION (MUDLINE) BY LEADLINE SURVEY JUNE 4–5, 2013 BY GZA
	TEMPORARY BENCHMARK
	TIMBER PILE (PLUMB)
	TIMBER PILE (BATTER)
P–1 –14.45±	PROBE LOCATION AND APPROXIMATE MUDLINE ELEVATION
9	BLOWS PER FOOT
▲	PROBE REFUSAL

NOTES:

1. TEMPORARY SITE BENCHMARK IS A NAIL SET IN THE ASPHALT ALONG WEST SHORE DRIVE, ASSUMED ELEV. 28.4.

2. GENERAL SITE FEATURES WERE PROVIDED BY MAINE DEPARTMENT OF TRANSPORTATION IN AN ELECTRONIC FILE TITLED "3DTOPO_18OCT12.DGM". ADDITIONAL INFORMATION WAS COLLECTED DURING A LIMITED SITE SURVEY PERFORMED BY GZA GEOENVIRONMENTAL, INC. ON DECEMBER 13, 2012 AND REPRESENTS CONDITIONS AT THE TIME OF SURVEY.

4. A LEADLINE SURVEY WAS COMPLETED BY GZA GEOENVIRONMENTAL, INC. ON JUNE 4–5, 2013 USING AN ASSUMED BENCHMARK ELEVATION . APPROXIMATE MEAN LOWER LOW WATER DATUM WAS ESTIMATED BY TAKING TIDE READINGS ON JUNE 4 AND JUNE 5, 2013 AND ADJUSTING THE TIDE READINGS TO NOAA TIDE PREDICTIONS FOR BURNT COVE HARBOR, SWAN'S ISLAND , MAINE, STATION ID 8413857. ALL SURVEY ELEVATIONS WERE THEN TRANSFERRED TO THE APPROXIMATE MEAN LOWER LOW WATER DATUM.

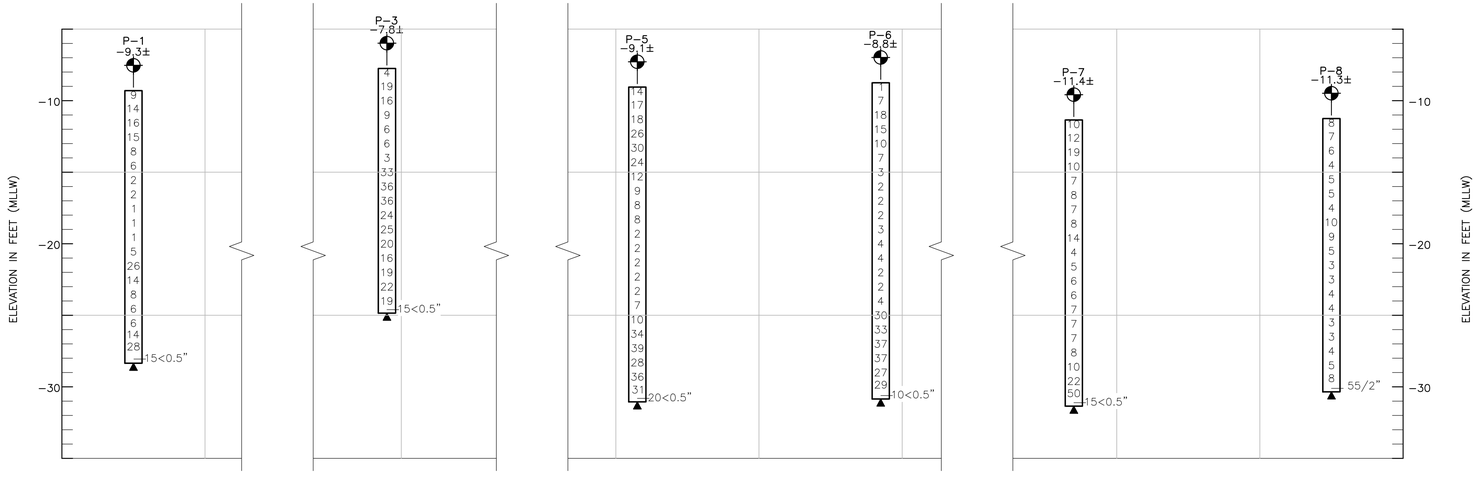

PILE PROBE DATA
(BLOWS PER FOOT)

SCALE: 1/4" = 1'

STATE OF MAINE
DEPARTMENT OF TRANSPORTATION

WIN 18386.00

HIGHWAY PLANS

STATE OF MAINE CHRISTOPHER L. DORAN No. 7275 LICENSED PROFESSIONAL ENGINEER

	SIGNATURE	DATE	BY	PROJ. MANAGER	DATE
P.E. NUMBER				DESIGN–DETAILED	
				CHECKED–REVIEWED	
				DESIGN2–DETAILED2	
				DESIGN3–DETAILED3	
				REVISIONS 1	
				REVISIONS 2	
				REVISIONS 3	
				REVISIONS 4	
				FIELD CHANGES	

FRENCHBORO PIER AND TRANSFER BRIDGE
FRENCHBORO, MAINE
LONG ISLAND HANCOCK COUNTY

SUBSURFACE PROBE DATA

SHEET NUMBER

C–2

GZA–J:\Geo\09.0025766.00_Frenchboro\Figures\GZA DWGS\FINAL 25766.00_F2-14_RO_8-16-2013.dwg [C-2 PROBE DATA] September 05, 2013 – 12:45pm michael.dubin

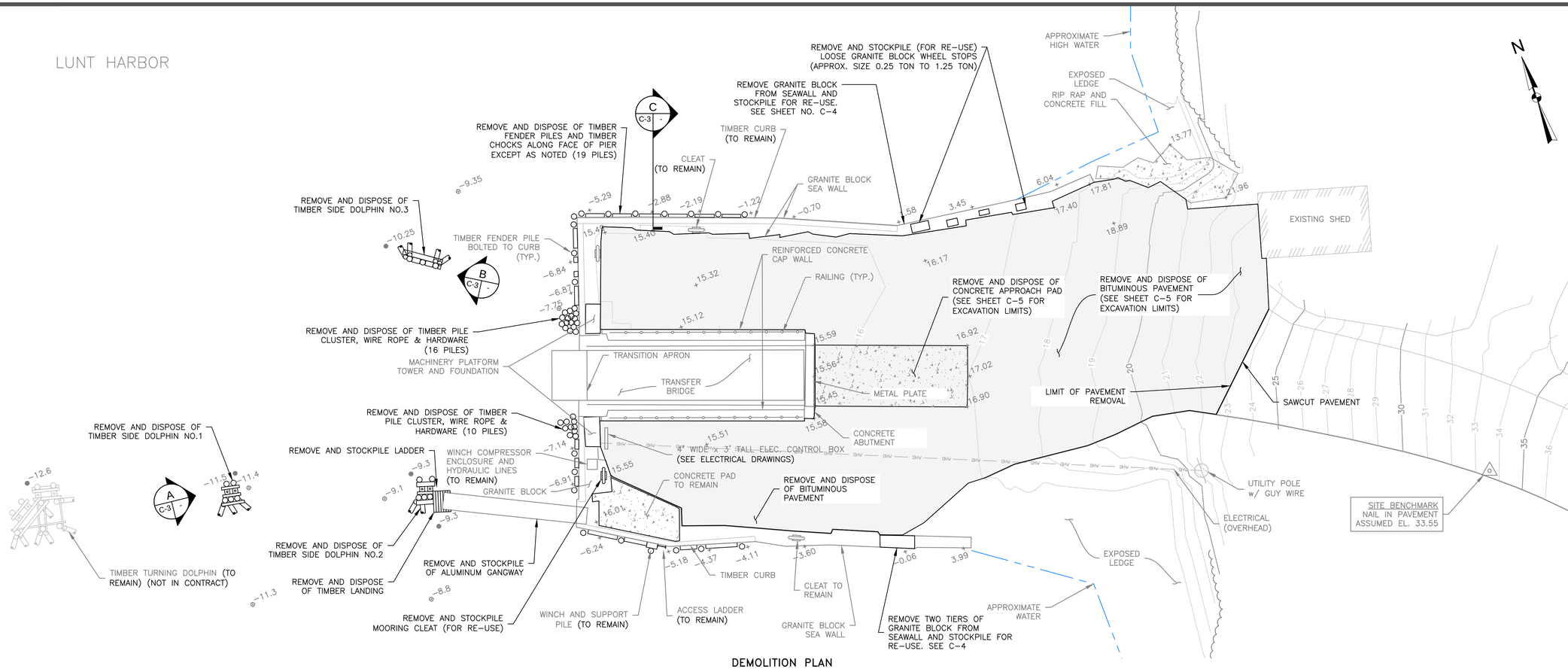

DEMOLITION PLAN

SCALE: 1" = 10'

0 5 10 20
SCALE IN FEET

DEMOLITION NOTES:

1. FOR LEGEND AND SURVEY DATA, SEE SHEET C-1.
2. EXTRACT ALL PILES TO BE REMOVED AND DISPOSED OF. PILES ARE TO BE REMOVED IN THEIR ENTIRETY.
3. ASSUMED EXISTING PILE TIP ELEVATIONS

STRUCTURE	ELEV. (MLLW)
SIDE DOLPHIN NO. 1	-30.0
SIDE DOLPHIN NO. 2	-30.0
SIDE DOLPHIN NO. 3	-28.0
TIMBER PILE CLUSTERS	-25.0
PIER FENDER PILES	-25.0

4. REMOVAL AND DISPOSAL OF BITUMINOUS PAVEMENT SHALL BE INCIDENTAL TO COMMON EXCAVATION.
5. REMOVAL AND DISPOSAL OF CONCRETE APPROACH PAD AND REMOVING, STOCKPILING AND RE-SETTING GRANITE BLOCKS SHALL BE INCIDENTAL TO REMOVING STRUCTURES AND OBSTRUCTIONS

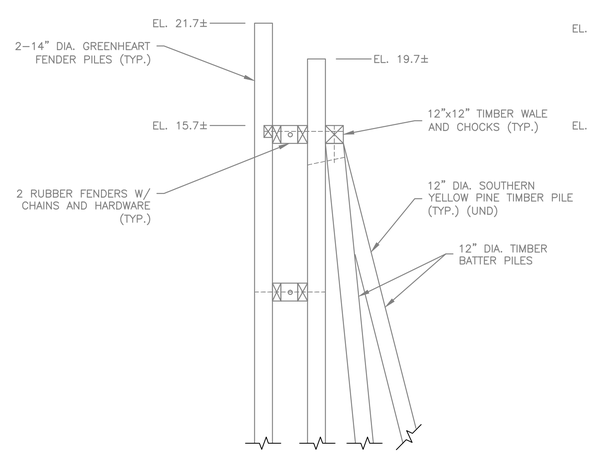

A C-3

ELEVATION TIMBER DOLPHIN NO. 1 & NO. 2

SCALE: 1/4" = 1'

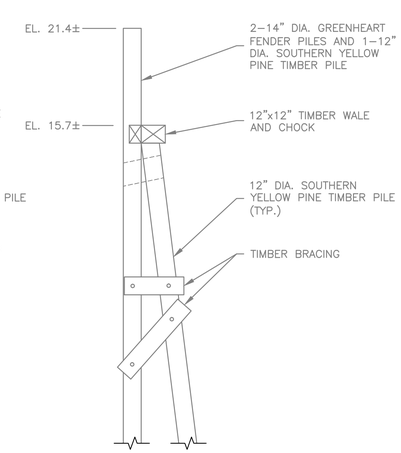

B C-3

ELEVATION TIMBER DOLPHIN NO. 3

SCALE: 1/4" = 1'

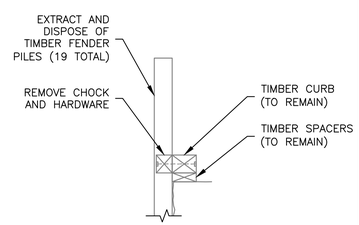

C C-3

TYPICAL PIER FENDER SECTION

SCALE: 1/4" = 1'

0 2 4 8
SCALE: 1/4" = 1'

STATE OF MAINE
DEPARTMENT OF TRANSPORTATION

WIN 18386.00

HIGHWAY PLANS

STATE OF MAINE CHRISTOPHER L. DUBIN No. 7215 LICENSED PROFESSIONAL ENGINEER

	SIGNATURE	DATE	BY	PROJ. MANAGER $
P.E. NUMBER				

PROJ. MANAGER $PROJMANAGER$	
DESIGN-DETAILED	
CHECKED-REVIEWED	
DESIGN2-DETAILED2	
DESIGN3-DETAILED3	
REVISIONS 1	
REVISIONS 2	
REVISIONS 3	
REVISIONS 4	
FIELD CHANGES	

FRENCHBORO PIER AND TRANSFER BRIDGE
FRENCHBORO, MAINE
LONG ISLAND HANCOCK COUNTY

DEMOLITION PLAN

SHEET NUMBER

C-3

G:\Z4-J:\Geo\09.00257766.00_Frenchboro\Figures\GZA DWGS\FINAL 25766.00_72-14_RIL_B-16-2013.dwg [C-3 DEMO] September 05, 2013 - 12:45pm michael.dubin

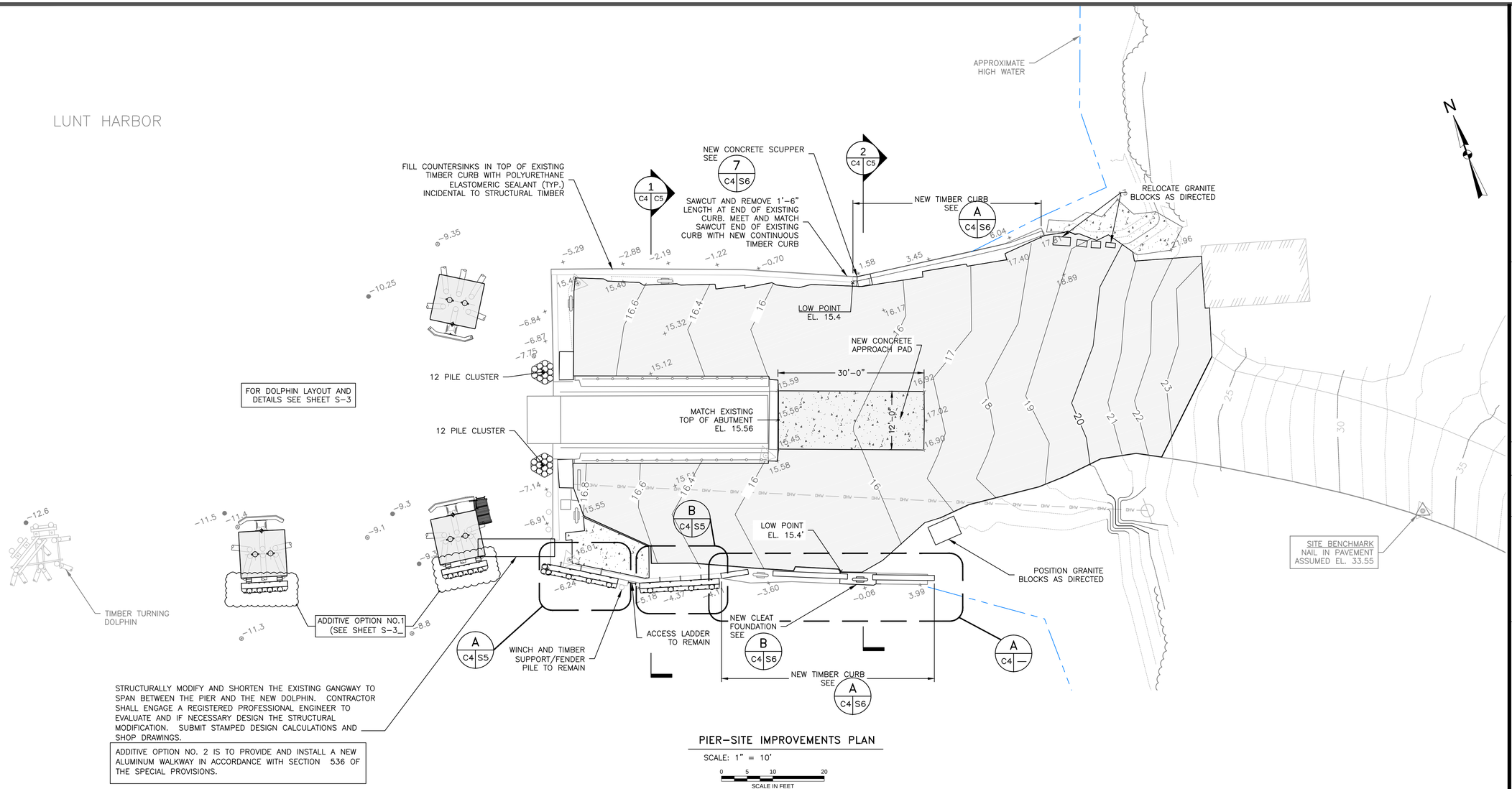

PIER-SITE IMPROVEMENTS PLAN

SCALE: 1" = 10'

0 5 10 20
SCALE IN FEET

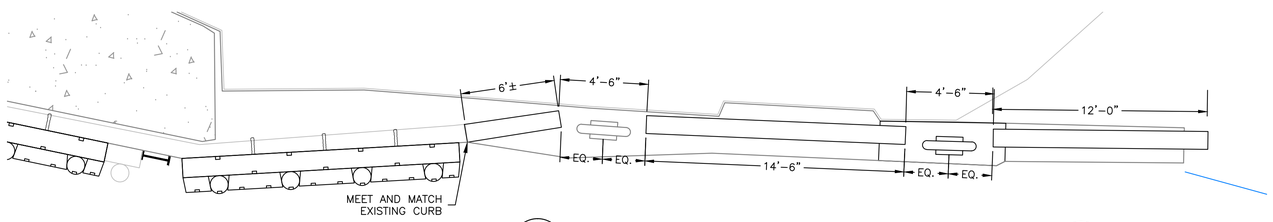

A C4 — TIMBER CURB LAYOUT DETAIL

SCALE: 1/4" = 1'

0 2' 4' 8'
SCALE IN FEET

NOTE:
FOR ADDITIONAL DETAIL SEE A C4 S6

STATE OF MAINE
DEPARTMENT OF TRANSPORTATION

WIN 18386.00

HIGHWAY PLANS

STATE OF MAINE CHRISTOPHER L. SNOW No. 7215 LICENSED PROFESSIONAL ENGINEER

SIGNATURE		
P.E. NUMBER		
DATE		

PROJ. MANAGER $PROJMANAGER$	BY	DATE
DESIGN-DETAILED		
CHECKED-REVIEWED		
DESIGN2-DETAILED2		
DESIGN3-DETAILED3		
REVISIONS 1		
REVISIONS 2		
REVISIONS 3		
REVISIONS 4		
FIELD CHANGES		

FRENCHBORO PIER AND TRANSFER BRIDGE
FRENCHBORO, MAINE
LONG ISLAND HANCOCK COUNTY

PIER-SITE IMPROVEMENTS PLAN

SHEET NUMBER

C-4

GZA-J:\Geo\09.0022766.00_Frenchboro\Figures\GZA DWGS\FINAL 25766.00_F2-14_RDL_8-16-2013.dwg [C-4 LAYOUT AND GRADING] September 05, 2013 - 12:44pm michael.dubin

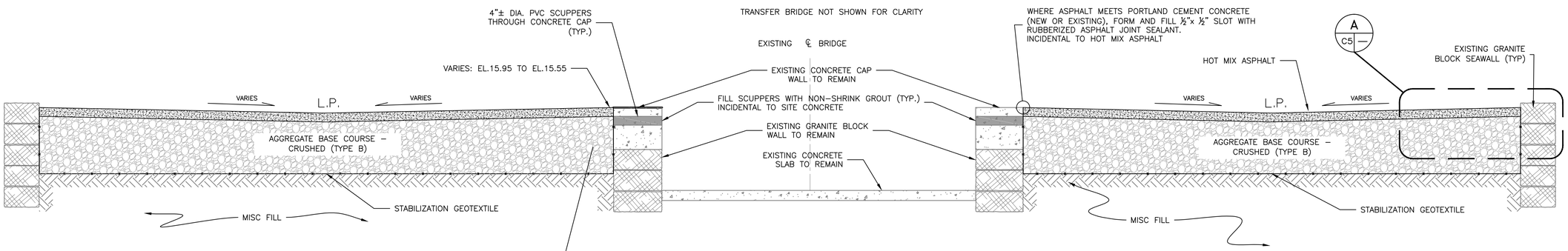

1 C4 C5 SECTION – TRANSFER BRIDGE

SCALE: 1/2" = 1'

0 1' 2' 4'
SCALE IN FEET

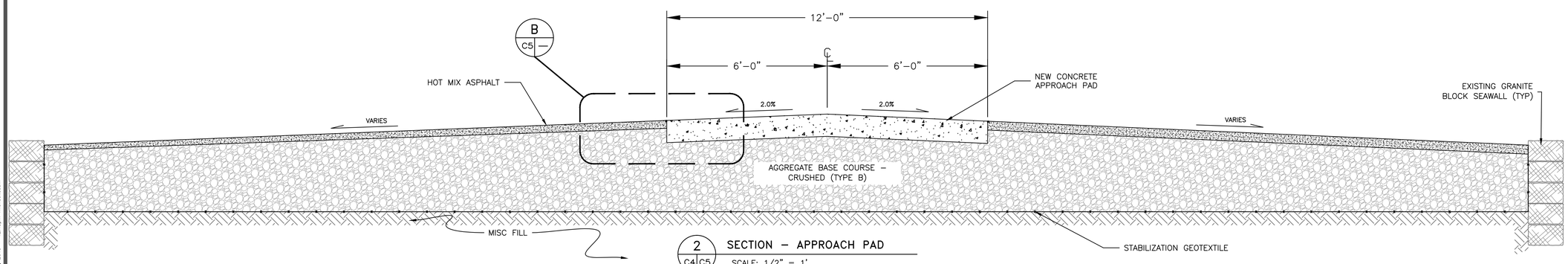

2 C4 C5 SECTION – APPROACH PAD

SCALE: 1/2" = 1'

0 1' 2' 4'
SCALE IN FEET

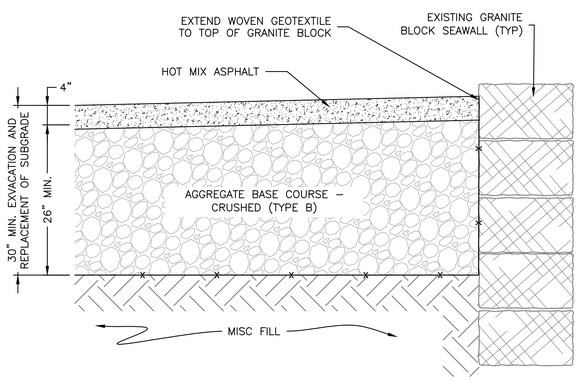

A C5 — SECTION – ASHPALT REPLACEMENT

SCALE: 1/2" = 1'

0 1' 2' 4'
SCALE IN FEET

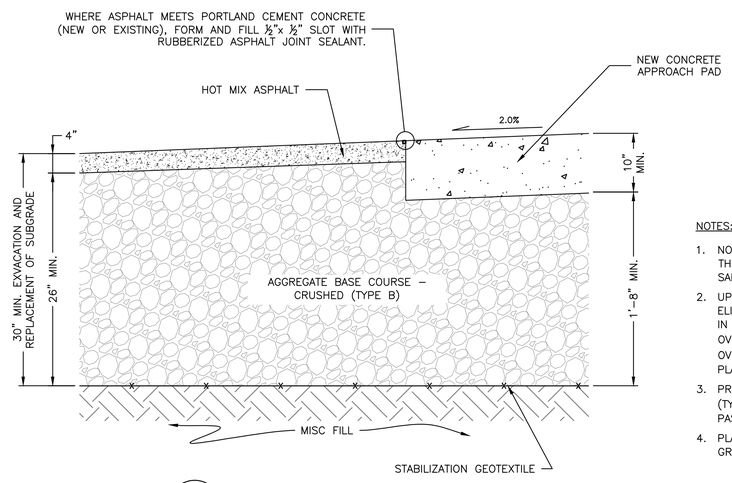

B C5 — SECTION – NEW PORTLAND CEMENT CONCRETE

SCALE: 1/2" = 1'

0 1' 2' 4'
SCALE IN FEET

NOTES:

1. NO SUBSURFACE EXPLORATIONS HAVE BEEN PERFORMED WITHIN THE LIMITS OF THE PIER FOR THIS PROJECT. MISCELLANEOUS FILL IS EXPECTED TO CONSIST OF SAND, GRAVEL, RUBBLE, COBBLES AND BOULDERS.
2. UPON COMPLETION OF EXCAVATION, PREPARE THE EXPOSED SUBGRADE TO ELIMINATE LARGE VOIDS, SHARP EDGES OR OTHER CONDITIONS THAT MAY RESULT IN TEARING OF THE GEOTEXTILE. IF THE EXPOSED SUBGRADE IS IRREGULAR, OVEREXCAVATE AN ADDITIONAL THREE INCHES (3) AND REPLACE THE OVER-EXCAVATED MATERIAL WITH CRUSHED AGGREGATE BASE (TYPE B) PRIOR TO PLACEMENT OF GEOTEXTILE.
3. PROOF-ROLL THE EXPOSED SUBGRADE OR ADDITIONAL CRUSHED AGGREGATE BASE (TYPE B) WITH A 20-TON VIBRATORY ROLLER. MAKE A MINIMUM OF FOUR PASSES IN EACH DIRECTION.
4. PLACE THE GEOTEXTILE LOOSELY UPON THE EXPOSED SUBGRADE AND ALONG THE GRANITE BLOCK SEAWALL.

STATE OF MAINE
DEPARTMENT OF TRANSPORTATION

WIN 18386.00

HIGHWAY PLANS

	BY	DATE
PROJ. MANAGER		
DESIGN-DETAILED		
CHECKED-REVIEWED		
DESIGN2-DETAILED2		
DESIGN3-DETAILED3		
REVISIONS 1		
REVISIONS 2		
REVISIONS 3		
REVISIONS 4		
FIELD CHANGES		

STATE OF MAINE CHRISTOPHER L. DORAN No. 7215 LICENSED PROFESSIONAL ENGINEER

SIGNATURE

P.E. NUMBER

DATE

FRENCHBORO PIER AND TRANSFER BRIDGE
FRENCHBORO, MAINE
LONG ISLAND HANCOCK COUNTY

PIER SECTIONS

SHEET NUMBER

C-5

6 OF 28

GZA-J:\Geo\09.0025766.00_Frenchboro\Figures\GZA DWGS\FINAL 25766.00_F2-14_R0_8-16-2013.dwg [C-5 DETAILS SECTIONS] September 05, 2013 - 12:43pm michael.aubin

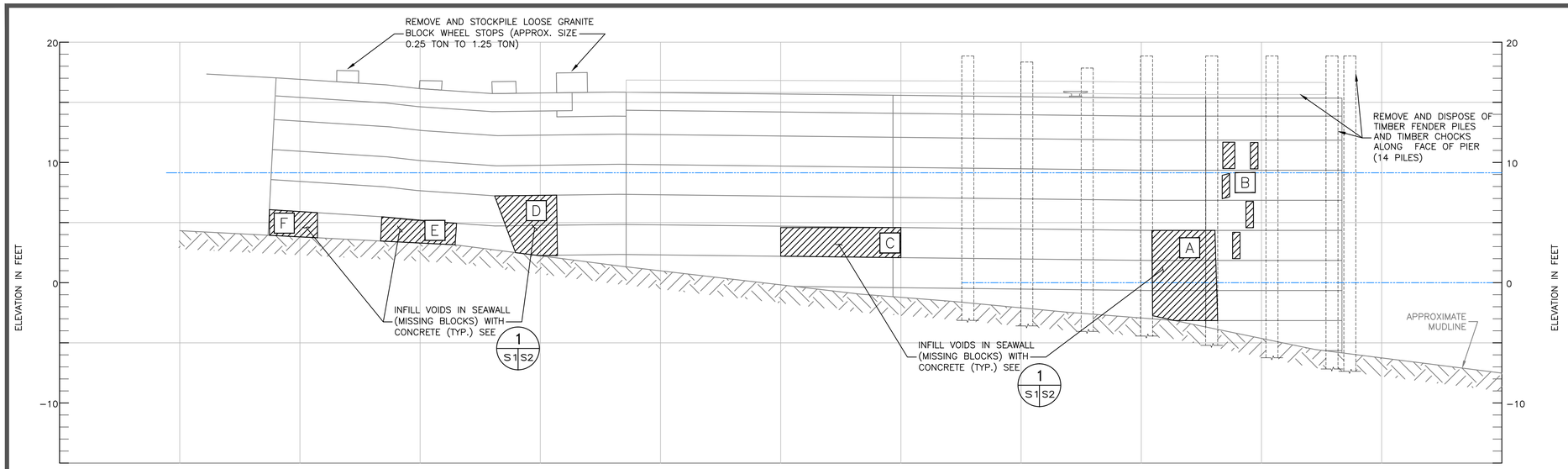

A S1 — PIER ELEVATION – NORTH FACE

SCALE: 1" = 5'

0 5 10 20
SCALE IN FEET

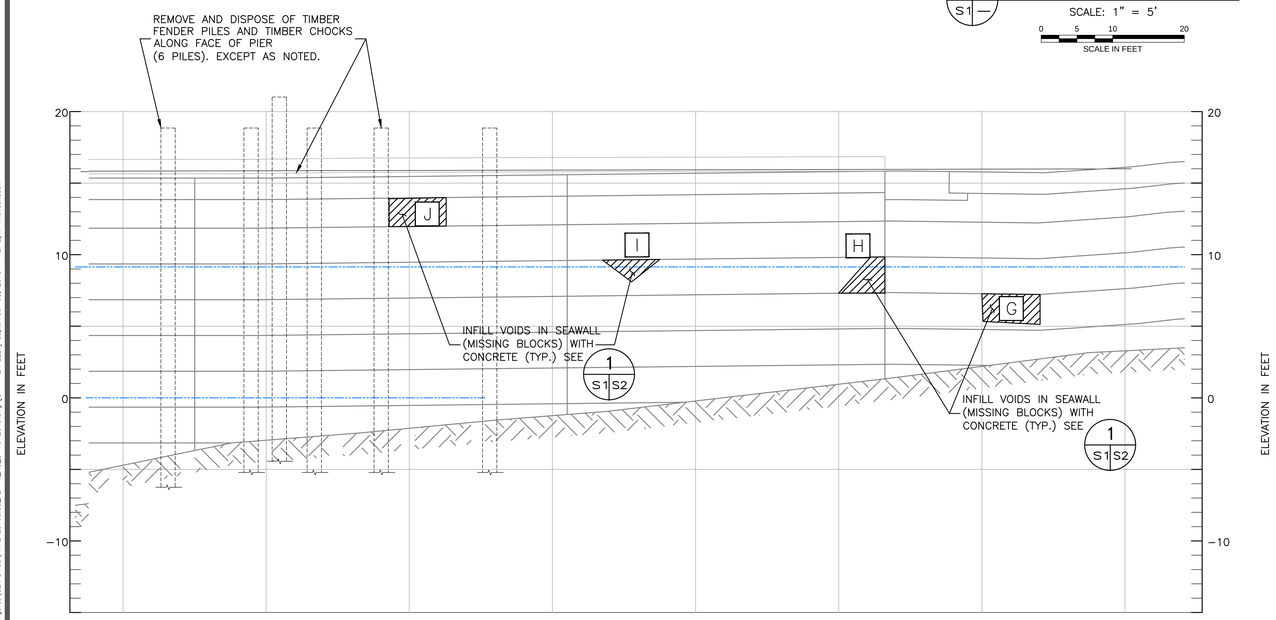

B S1 — PIER ELEVATION – SOUTH FACE

SCALE: 1" = 5'

0 5 10 20
SCALE IN FEET

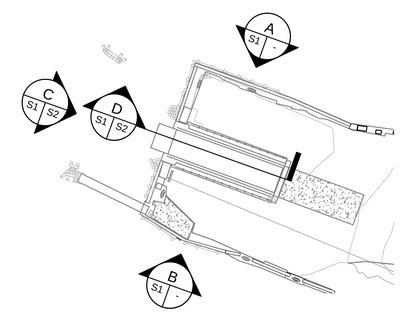

KEY PLAN

NOT TO SCALE

WALL REPAIR AREA	ESTIMATED CONCRETE VOLUME (CU. FT)	ESTIMATED ADHESIVE ANCHORS
A	100	10
B	30	8
C	35	10
D	40	10
E	25	6
F	25	6
G	40	8
H	5	2
I	10	4
J	10	4
K	10	4
L	10	4
M	30	4

NOTE: ADHESIVE ANCHORS ARE INCIDENTAL TO SEAWALL CONCRETE REPAIR

NOTES:

1. ELEVATIONS WERE DEVELOPED BY PROJECTION OF EXIST CONDITIONS PLAN, SURVEY ELEVATIONS, MUDLINE SOUNDINGS AND SURVEY PHOTOGRAPHS. LOCATION OF FEATURES ARE TO BE CONSIDERED APPROXIMATE AND SHALL BE FIELD VERIFIED BY THE CONTRACTOR PRIOR TO START OF PROJECT.
2. ESTIMATED CONCRETE VOLUMES AND NUMBER OF ADHESIVE ANCHORS ARE PROVIDED FOR BIDDING PURPOSES ONLY.
3. THE CONTRACTOR SHALL VERIFY ALL EXISTING CONDITIONS AND DIMENSIONS IN THE FIELD, BEFORE ORDERING ANY MATERIAL, COMMENCING ANY FABRICATION, OR PERFORMING ANY WORK. HE SHALL NOTIFY RESIDENT, IN WRITING, OF ANY CONDITIONS OR DIMENSIONS WHICH VARY FROM THOSE SHOWN ON THE DRAWINGS AND INCORPORATE SUCH VARIATIONS IN THE CONSTRUCTION AS APPROVED BY THE DEPARTMENT.

STATE OF MAINE
DEPARTMENT OF TRANSPORTATION

WIN 18386.00

HIGHWAY PLANS

STATE OF MAINE CHRISTOPHER L. DORAN No. 7275 LICENSED PROFESSIONAL ENGINEER

	BY	DATE
PROJ. MANAGER $PROJMANAGER$		
DESIGN–DETAILED	-	-
CHECKED–REVIEWED	-	-
DESIGN2–DETAILED2	-	-
DESIGN3–DETAILED3	-	-
REVISIONS 1	-	-
REVISIONS 2	-	-
REVISIONS 3	-	-
REVISIONS 4	-	-
FIELD CHANGES	-	-

SIGNATURE

P.E. NUMBER

DATE

FRENCHBORO PIER AND TRANSFER BRIDGE
FRENCHBORO, MAINE
LONG ISLAND HANCOCK COUNTY

PIER ELEVATIONS AND SEAWALL REPAIR DETAILS – 1

SHEET NUMBER

S–1

G:\Z:\Geo\09.0025766.00_Frenchboro\Figures\VZA DWGS\FINAL 25766.00_F2-14_RD_8-16-2013.dwg [S-1 PIER ELEV] September 05, 2013 - 12:42pm michael.aubin

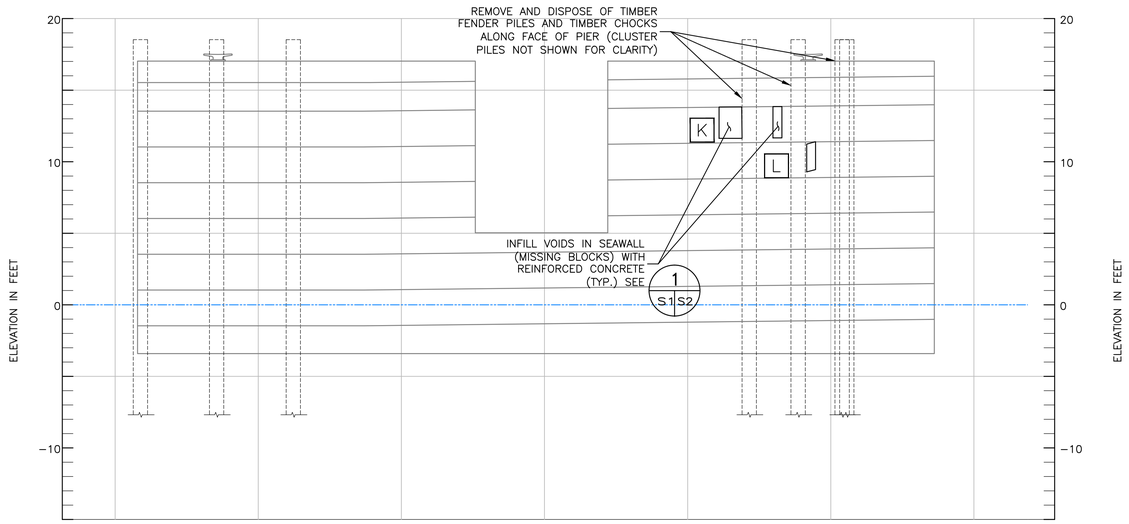

C / S1 S2 PIER ELEVATION – WEST FACE

SCALE: 1" = 5'

0 5 10 20
SCALE IN FEET

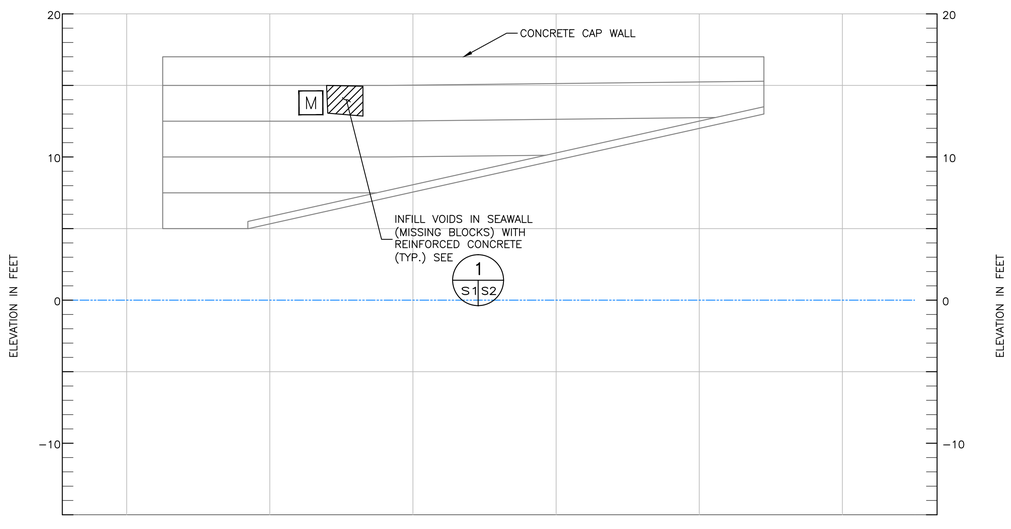

D / S1 S2 SECTION – TRANSFER BRIDGE RECESS

SCALE: 1" = 5'

0 5 10 20
SCALE IN FEET

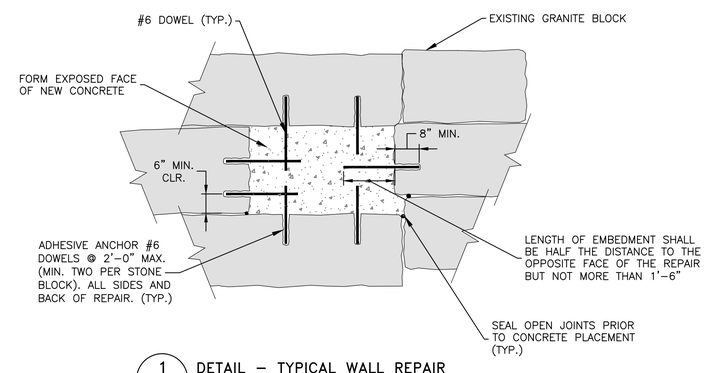

1 / S1 S2 DETAIL – TYPICAL WALL REPAIR

SCALE: 1/2" = 1'

0 1' 2' 4'
SCALE IN FEET

NOTES:

1. ELEVATIONS WERE DEVELOPED BY PROJECTION OF EXIST CONDITIONS PLAN, SURVEY ELEVATIONS, MUDLINE SOUNDINGS AND SURVEY PHOTOGRAPHS. LOCATION OF FEATURES ARE TO BE CONSIDERED APPROXIMATE AND SHALL BE FIELD VERIFIED BY THE CONTRACTOR PRIOR TO START OF PROJECT.

2. ESTIMATED CONCRETE VOLUMES AND NUMBER OF ADHESIVE ANCHORS ARE PROVIDED FOR BIDDING PURPOSES ONLY.

3. THE CONTRACTOR SHALL VERIFY ALL EXISTING CONDITIONS AND DIMENSIONS IN THE FIELD, BEFORE ORDERING ANY MATERIAL, COMMENCING ANY FABRICATION, OR PERFORMING ANY WORK. HE SHALL NOTIFY RESIDENT, IN WRITING, OF ANY CONDITIONS OR DIMENSIONS WHICH VARY FROM THOSE SHOWN ON THE DRAWINGS AND INCORPORATE SUCH VARIATIONS IN THE CONSTRUCTION AS APPROVED BY THE DEPARTMENT.

STATE OF MAINE
DEPARTMENT OF TRANSPORTATION

WIN 18386.00

HIGHWAY PLANS

STATE OF MAINE CHRISTOPHER L. DORAN No. 7215 LICENSED PROFESSIONAL ENGINEER

SIGNATURE			
P.E. NUMBER			
DATE			

PROJ. MANAGER $PROJMANAGER$	-	-	BY
DESIGN–DETAILED	-	-	-
CHECKED–REVIEWED	-	-	-
DESIGN2–DETAILED2	-	-	-
DESIGN3–DETAILED3	-	-	-
REVISIONS 1	-	-	-
REVISIONS 2	-	-	-
REVISIONS 3	-	-	-
REVISIONS 4	-	-	-
FIELD CHANGES	-	-	-

FRENCHBORO PIER AND TRANSFER BRIDGE
FRENCHBORO, MAINE
LONG ISLAND HANCOCK COUNTY

PIER ELEVATIONS AND SEAWALL REPAIR DETAILS – 2

SHEET NUMBER

S–2

G2A-J:\Geo\09.0025766.00_Frenchboro\Figures\G2A DWGS\FINAL 25766.00_F2-14_R0_8-16-2013.dwg [S-2 PIER ELEV-DTLS] September 05, 2013 - 12:42pm michael.cubin

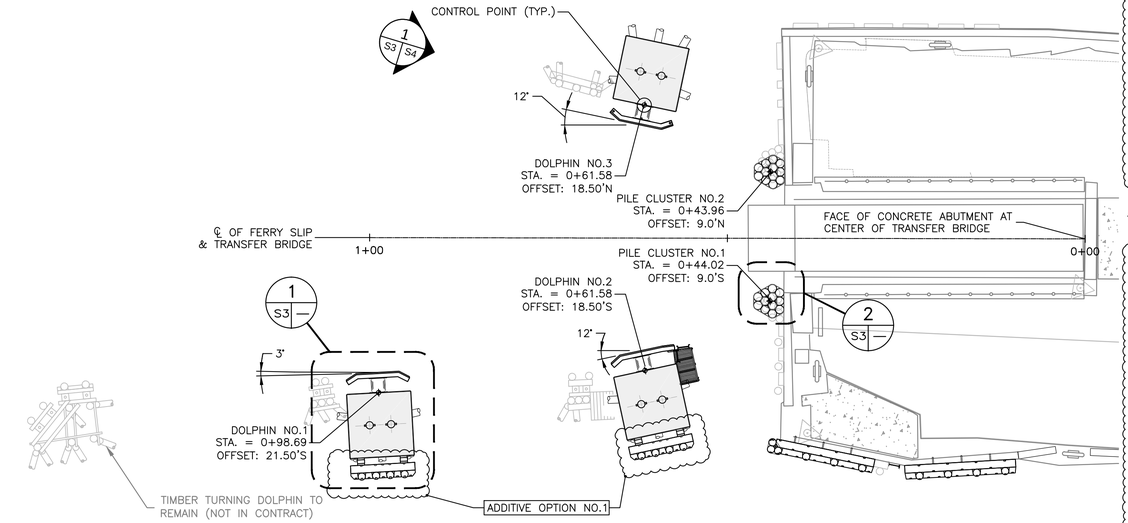

LAYOUT PLAN

SCALE IN FEET

NOTES:

1. VERTICAL DATUM IS MLLW = 0.00
2. THE DOLPHIN AND FENDER PANEL SYSTEM CONTROL POINTS AND LAYOUT SHOWN ON THE DRAWINGS ARE BASED UPON THE PARTICULAR ELASTOMERIC FENDER UNIT AND FENDER PANEL SHOWN ON THIS DRAWNG. THE DOLPHIN CONTROL POINTS AND LAYOUT MAY REQUIRE ALTERATION DUE TO THE ACCEPTANCE OF ALTERNATE EQUIVALENT FENDER PANEL SYSTEMS. FINAL DOLPHIN LAYOUT SHALL BE SUBJECT TO THE ACCEPTANCE OF THE MAINE DOT.

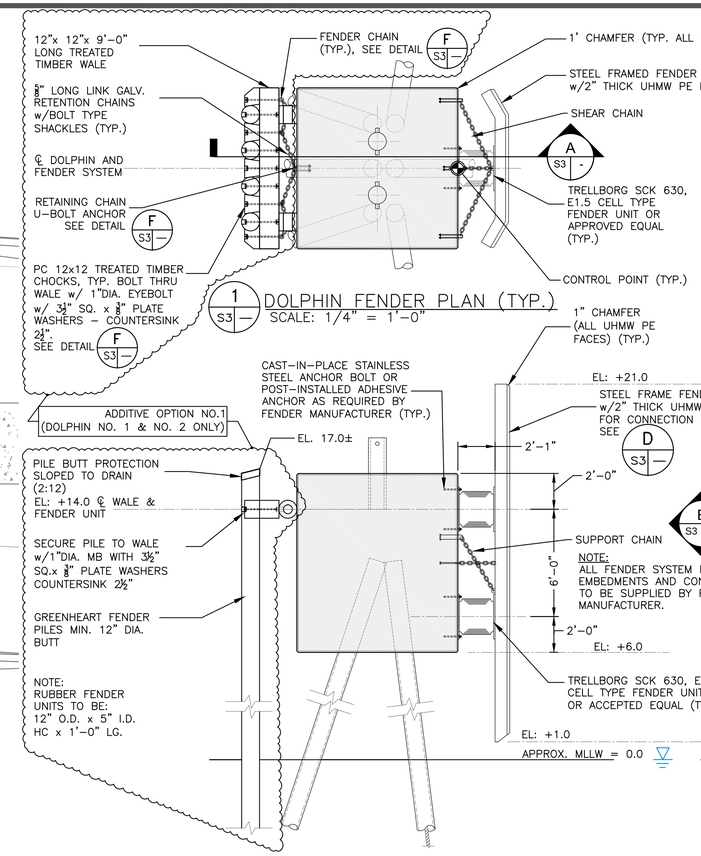

1 S3 — DOLPHIN FENDER PLAN (TYP.)

SCALE: 1/4" = 1'-0"

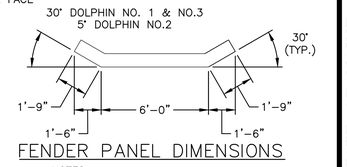

FENDER PANEL DIMENSIONS

NOTES:

1. DESIGN OF FENDER PANELS TO BE BY FENDER MANUFACTURER.
2. SEE SHEET NO. S-7 FOR ADDITIONAL FABRICATIONS SPECIFIC TO DOLPHIN NO.2.

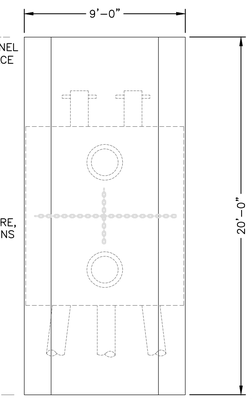

A S3 — DOLPHIN FENDER ELEVATION (TYP.)

SCALE: 1/4" = 1'-0"

SCALE IN FEET

B S3 — FENDER PANEL ELEVATION

SCALE: 1/4" = 1'-0"

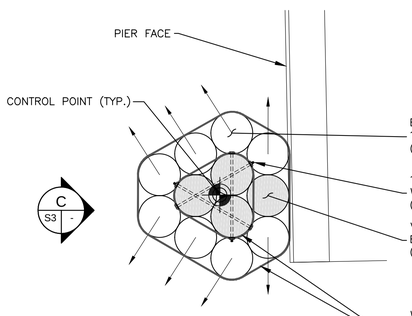

2 S3 — 12 PILE – HEAD DOLPHIN CLUSTER

SCALE: 1/2" = 1'-0"

SCALE IN FEET

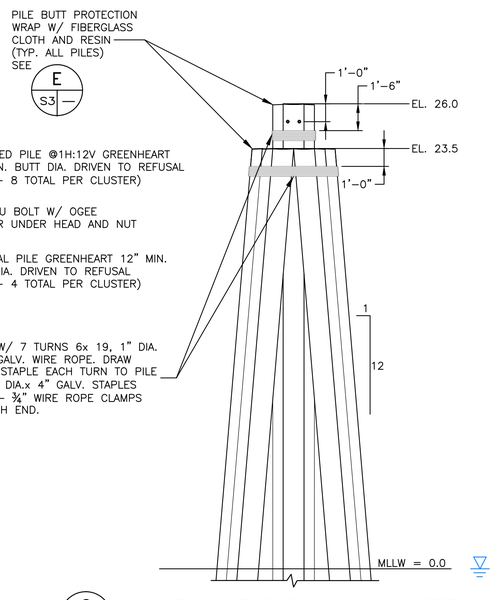

C S3 — 12 PILE – HEAD DOLPHIN CLUSTER

SCALE: 1/4" = 1'-0"

SCALE IN FEET

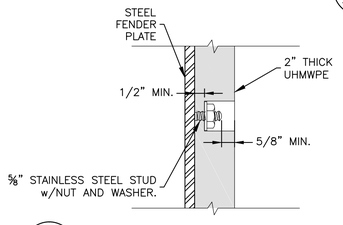

D S3 — UHMW PE CONNECTION DETAIL

NOT TO SCALE

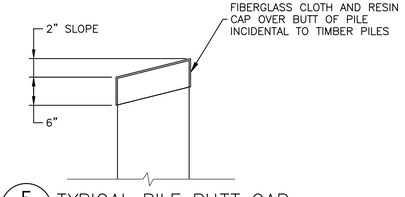

E S3 — TYPICAL PILE BUTT CAP

SCALE: 1" = 1'-0"

SCALE IN FEET

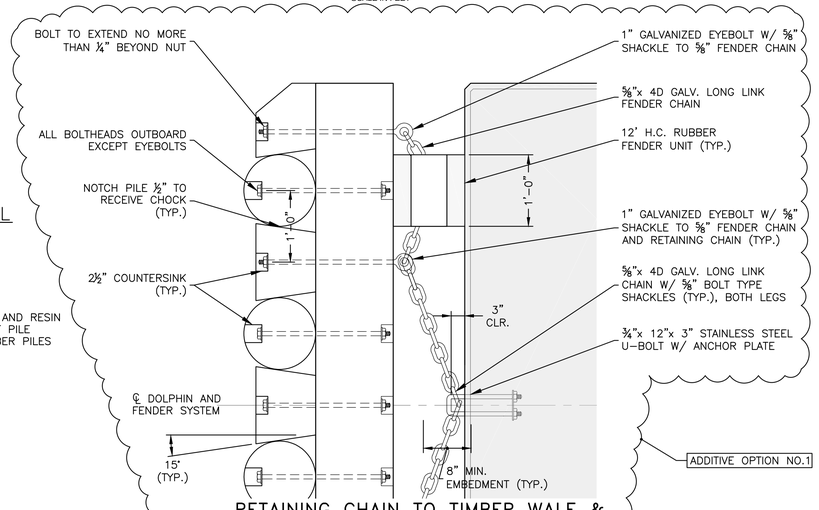

F S3 — RETAINING CHAIN TO TIMBER WALE & DOLPHIN CONNECTION DETAIL

SCALE: 1" = 1'-0"

SCALE IN FEET

STATE OF MAINE
DEPARTMENT OF TRANSPORTATION

WIN 18386.00

HIGHWAY PLANS

STATE OF MAINE — CHRISTOPHER L. BOYD — No. 7215 — LICENSED PROFESSIONAL ENGINEER

	SIGNATURE	DATE	BY	PROJ. MANAGER $PROJMANAGER$
P.E. NUMBER				DESIGN–DETAILED
				CHECKED–REVIEWED
				DESIGN2–DETAILED2
				DESIGN3–DETAILED3
				REVISIONS 1
				REVISIONS 2
				REVISIONS 3
				REVISIONS 4
				FIELD CHANGES

FRENCHBORO PIER AND TRANSFER BRIDGE
FRENCHBORO, MAINE
LONG ISLAND — HANCOCK COUNTY

FENDER PLAN AND ELEVATIONS

SHEET NUMBER

S–3

9 OF 28

G2A-J:\Geo\09.0025766.00_Frenchboro\Figures\G2A DWGS\FINAL 25766.00_F2-14_R0_8-16-2013.dwg [S-3 DOLPHIN-PILE LAYOUT] September 05, 2013 – 12:41pm michael.austin

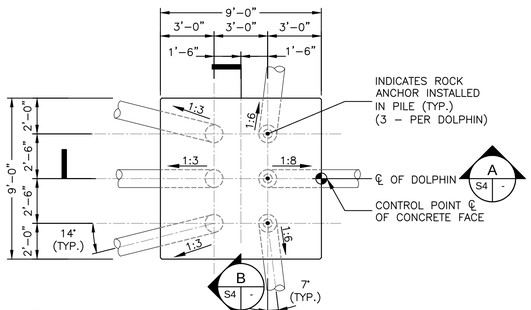

2 S4 — SIDE DOLPHIN PILE PLAN – TYPICAL

NOTE: PILES LOCATIONS SHOWN AT BOTTOM OF CONCRETE, EL:+6.0

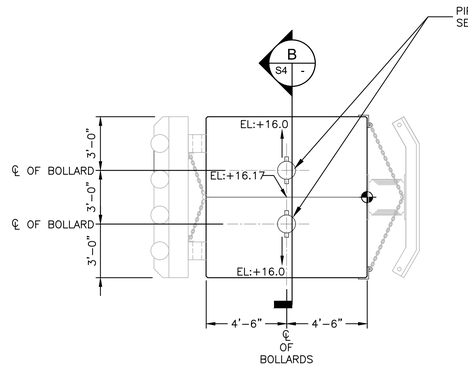

3 S4 — TYPICAL DOLPHIN DECK PLAN

SCALE: 1/4" = 1'-0"

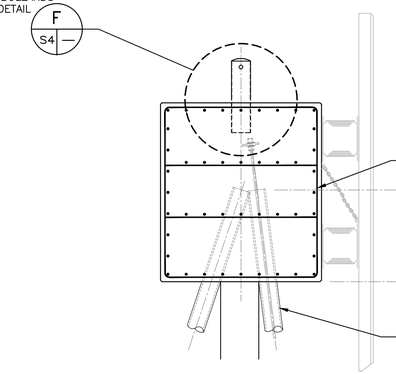

A S4 — DOLPHIN REINFORCING DETAIL

SCALE: 1/4" = 1'-0"

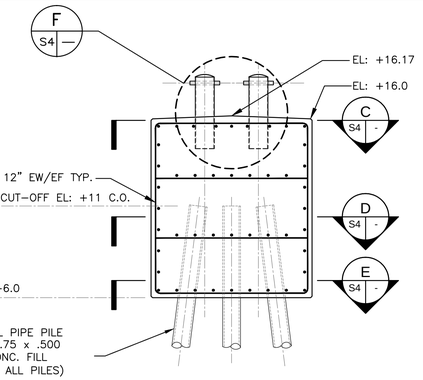

B S4 — DOLPHIN REINFORCING DETAIL

SCALE: 1/4" = 1'-0"

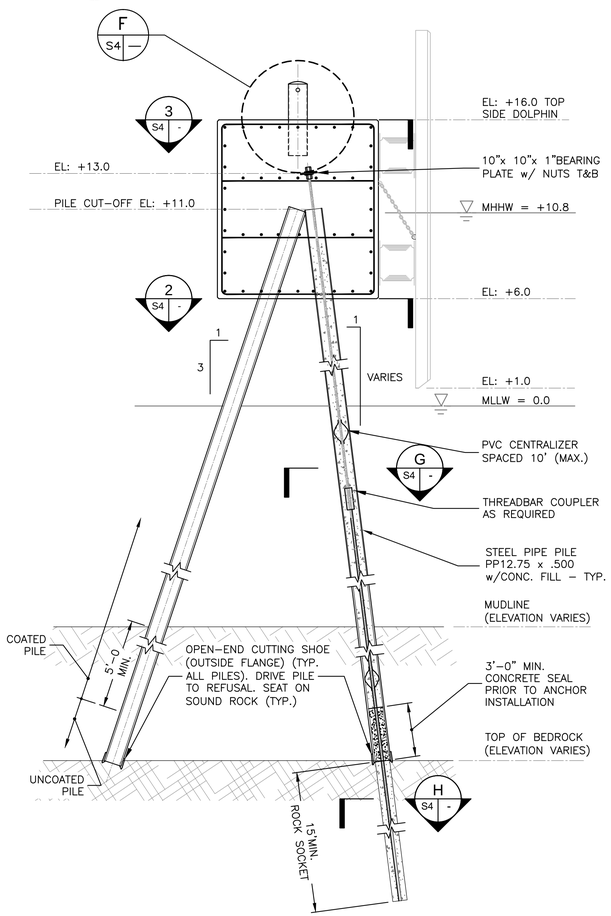

1 S3 S4 SIDE DOLPHIN PILE LAYOUT – TYPICAL

SCALE: 1/4" = 1'-0"

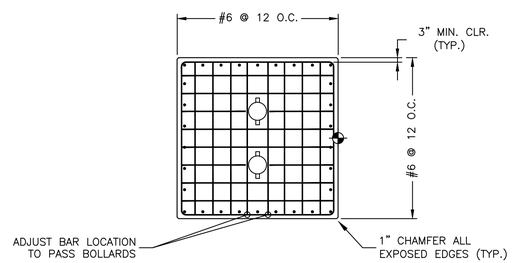

C S4 — TOP REINFORCING LAYOUT EL:+15.7 & EL:+12.5

SCALE: 1/4" = 1'-0"

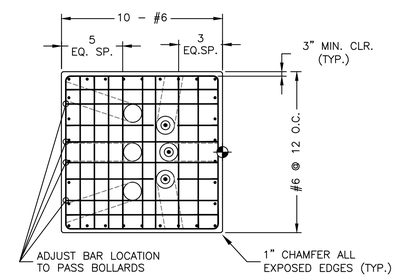

D S4 — REINFORCING LAYOUT EL:+9.6

SCALE: 1/4" = 1'-0"

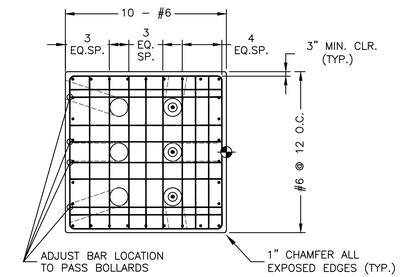

E S4 — BOTTOM REINFORCING LAYOUT EL:+6.3

SCALE: 1/4" = 1'-0"

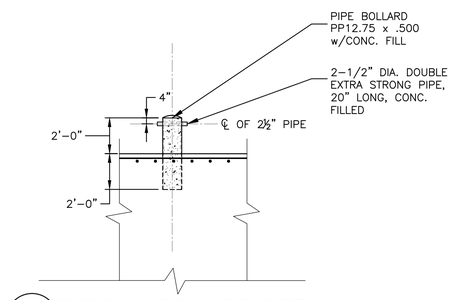

F S4 — TYPICAL BOLLARD DETAIL

SCALE: 1/4" = 1'-0"

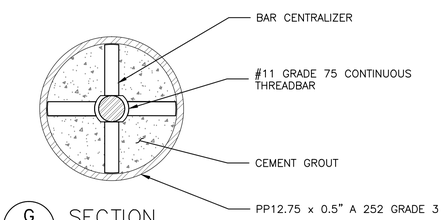

G S4 — SECTION

NOT TO SCALE

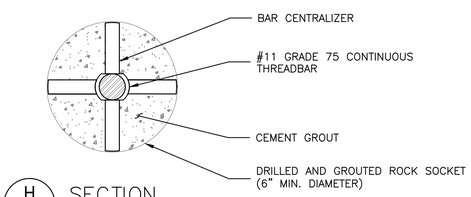

H S4 — SECTION

NOT TO SCALE

STATE OF MAINE
DEPARTMENT OF TRANSPORTATION

WIN 18386.00

HIGHWAY PLANS

STATE OF MAINE CHRISTOPHER L. MERRIGAN No. 7215 LICENSED PROFESSIONAL ENGINEER

PROJ. MANAGER	$PROJMANAGER$	BY	DATE
DESIGN–DETAILED	-	-	-
CHECKED–REVIEWED	-	-	-
DESIGN2–DETAILED2	-	-	-
DESIGN3–DETAILED3	-	-	-
REVISIONS 1	-	-	-
REVISIONS 2	-	-	-
REVISIONS 3	-	-	-
REVISIONS 4	-	-	-
FIELD CHANGES	-	-	-

SIGNATURE

P.E. NUMBER

DATE

FRENCHBORO PIER AND TRANSFER BRIDGE
FRENCHBORO, MAINE
LONG ISLAND HANCOCK COUNTY

DOLPHIN AND FENDER
ELEVATIONS AND DETAILS

SHEET NUMBER

S–4

G:\Z-\Geo\09.0202766.00_Frenchboro\Figures\VZA DWGS\FINAL 25766.00_F2-14_RD_8-16-2013.dwg [S-4 DOLPHIN DTLS] September 05, 2013 - 12:40pm michael.dubin

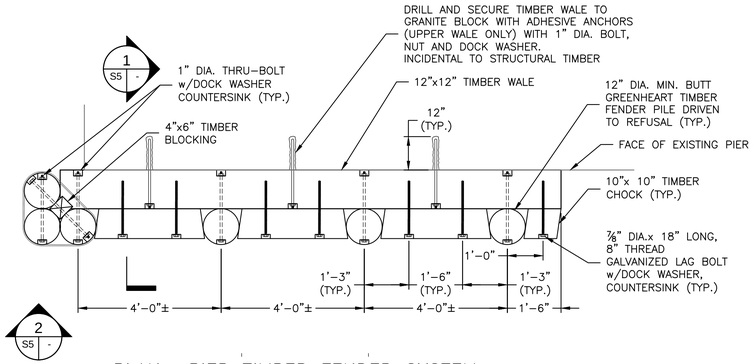

PLAN– PIER TIMBER FENDER SYSTEM TYPICAL UPPER AND LOWER WALE

A / C4 S5

SCALE: 1/2" = 1'-0"

0 2' 4' 8'
SCALE IN FEET

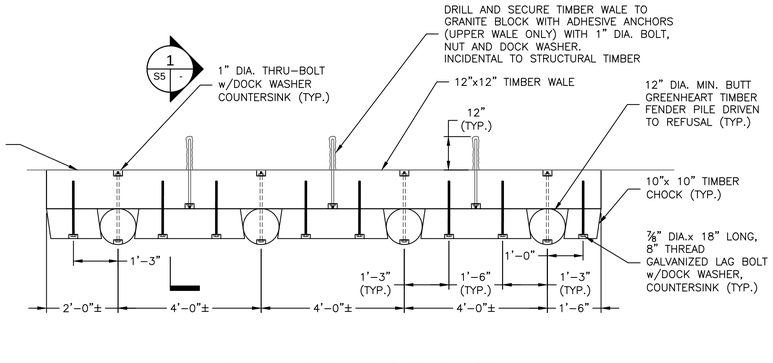

PLAN– PIER TIMBER FENDER SYSTEM TYPICAL UPPER AND LOWER WALE

B / C4 S5

SCALE: 1/2" = 1'-0"

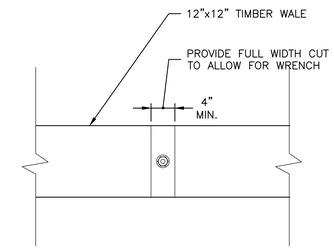

DETAIL– TYPICAL UPPER AND LOWER WALE CONNECTION SLOT

C / S5

SCALE: 1" = 1'-0"

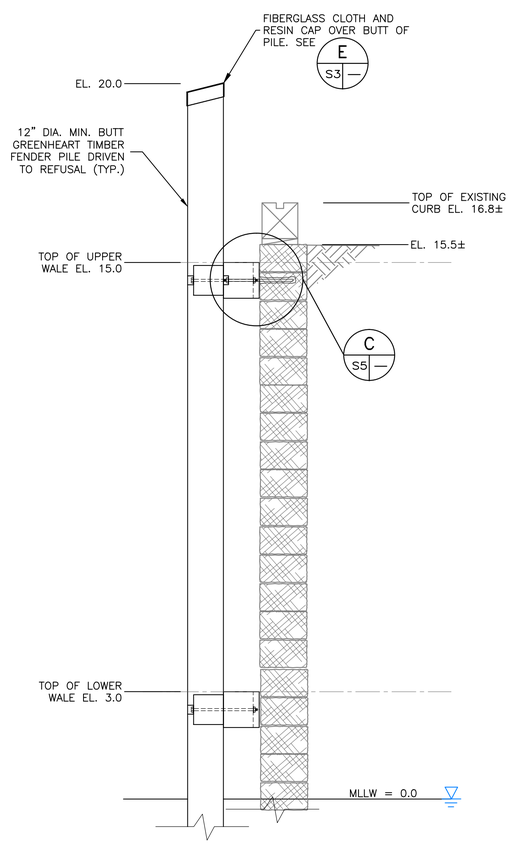

1 TYPICAL SECTION – PIER FENDER SYSTEM

S5

SCALE: 1/2" = 1'-0"

0 2' 4' 8'
SCALE IN FEET

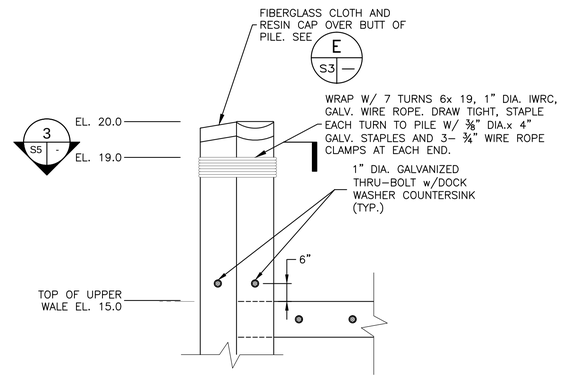

2 ELEVATION – END PILE CLUSTER

S5

SCALE: 1/2" = 1'-0"

0 2' 4' 8'
SCALE IN FEET

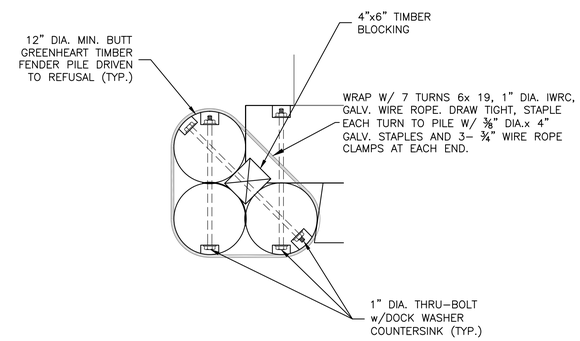

3 SECTION – END PILE CLUSTER

S5

SCALE: 1" = 1'-0"

0 .5' 1' 2'
SCALE IN FEET

NOTE:

PRIOR TO ORDERING PILES, THE CONTRACTOR SHALL PROBE ALONG THE SOUTH SIDE OF THE PIER TO DETERMINE PRACTICAL REFUSAL AND POTENTIAL FENDER PILE EMBEDMENT. PROBES SHALL BE PERFORMED USING A VIBRATORY OR IMPACT HAMMER AND A STEEL H–PILE. ALL PROBES SHALL BE PERFORMED IN THE PRESENCE OF THE MAINE DOT RESIDENT. RESULTS SHALL BE SUBMITTED TO THE RESIDENT FOR REVIEW. PILES SHALL NOT BE ORDERED UNTIL THE MAINE DOT RESIDENT'S REVIEW IS COMPLETE.

STATE OF MAINE
DEPARTMENT OF TRANSPORTATION

WIN 18386.00

HIGHWAY PLANS

STATE OF MAINE CHRISTOPHER L. MERRIGAN No. 7215 LICENSED PROFESSIONAL ENGINEER

	SIGNATURE	P.E. NUMBER	DATE

	PROJ. MANAGER	BY	DATE
DESIGN–DETAILED			
CHECKED–REVIEWED			
DESIGN2–DETAILED2			
DESIGN3–DETAILED3			
REVISIONS 1			
REVISIONS 2			
REVISIONS 3			
REVISIONS 4			
FIELD CHANGES			

FRENCHBORO PIER AND TRANSFER BRIDGE
FRENCHBORO, MAINE
LONG ISLAND
HANCOCK COUNTY

PIER FENDER DETAILS

SHEET NUMBER

S–5

G:\Z:\Geo\09.0025766.00_Frenchboro\Figures\VZA DWGS\FINAL 25766.00_F2-14_R0_8-16-2013.dwg {S-5 PIER FENDER} September 05, 2013 - 12:39pm michael.dubin

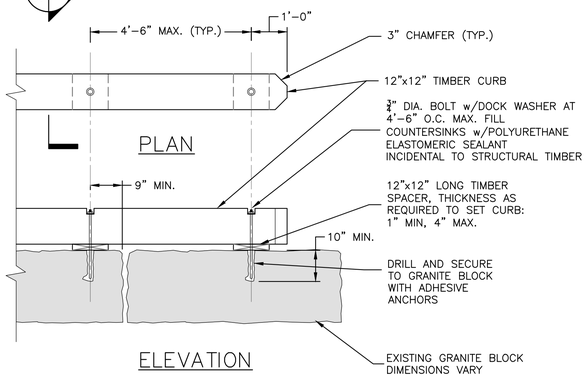

A C4 S6 TYP. CURB DETAIL

SCALE: 1/2" = 1'-0"

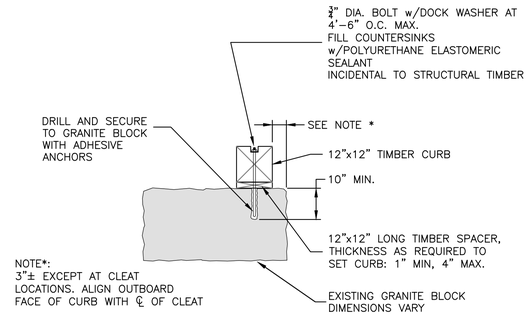

1 S6 — TIMBER CURB SECTION

SCALE: 1/2" = 1'-0"

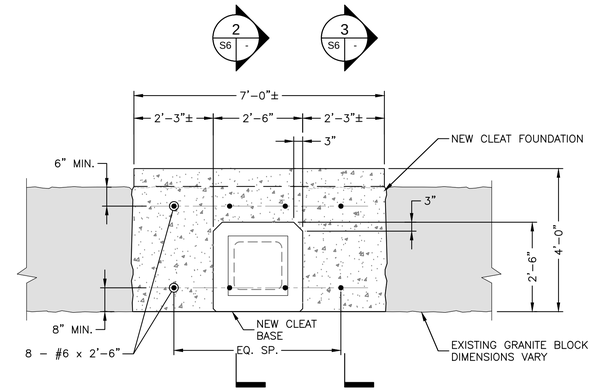

B C4 S6 CLEAT BASE

SCALE: 1/2" = 1'-0"

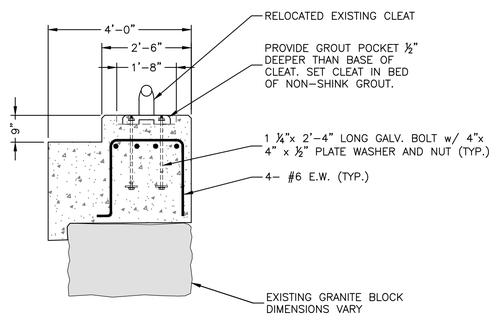

2 S6 — SECTION - PEDESTAL REINFORCING

SCALE: 1/2" = 1'-0"

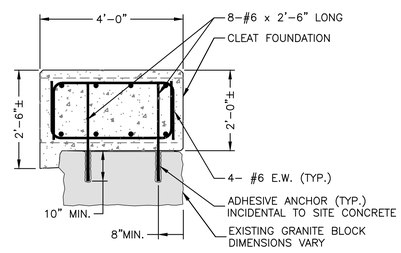

3 S6 — SECTION - FOUNDATION REINFORCING

SCALE: 1/2" = 1'-0"

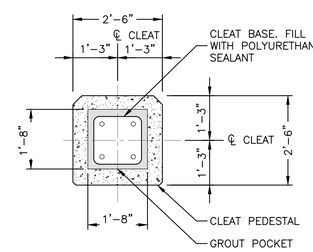

4 S6 — PLAN - CLEAT PEDESTAL

SCALE: 1/2" = 1'-0"

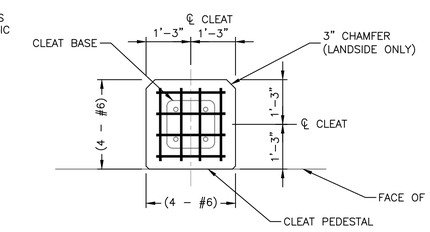

5 S6 — CLEAT REINFORCING

SCALE: 1/2" = 1'-0"

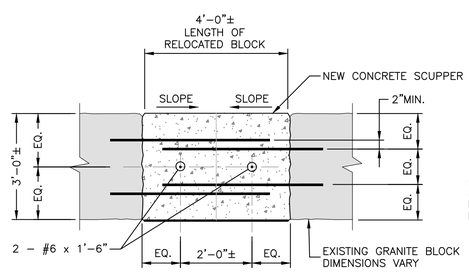

6 S6 — PLAN - CONCRETE SCUPPER

SCALE: 1/2" = 1'-0"

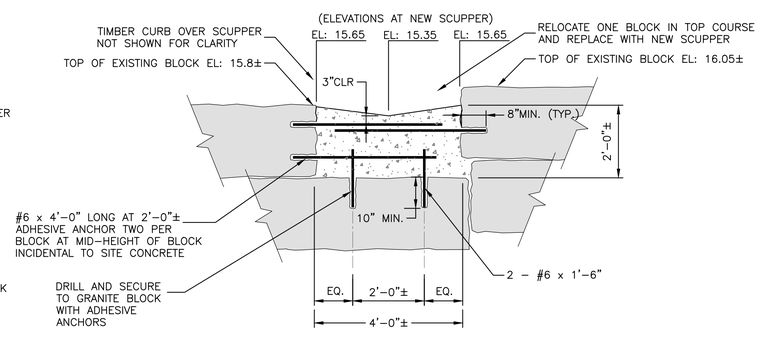

7 C4 S6 — SECTION - CONCRETE SCUPPER

SCALE: 1/2" = 1'-0"

NOTES:

1. VERTICAL DATUM IS MLLW = 0.00
2. THE DOLPHIN AND FENDER PANEL SYSTEM CONTROL POINTS AND LAYOUT SHOWN ON THE DRAWINGS ARE BASED UPON THE PARTICULAR ELASTOMERIC FENDER UNIT AND FENDER PANEL SHOWN ON THIS DRAWNG. THE DOLPHIN CONTROL POINTS AND LAYOUT MAY REQUIRE ALTERATION DUE TO THE ACCEPTANCE OF ALTERNATE EQUIVALENT FENDER PANEL SYSTEMS. FINAL DOLPHIN LAYOUT SHALL BE SUBJECT TO THE ACCEPTANCE OF THE MAINE DOT.

STATE OF MAINE
DEPARTMENT OF TRANSPORTATION

WIN 18386.00

HIGHWAY PLANS

STATE OF MAINE CHRISTOPHER L. SOTIR No. 7215 LICENSED PROFESSIONAL ENGINEER

	SIGNATURE	DATE	BY	
PROJ. MANAGER $PROJMANAGER$				
DESIGN-DETAILED				
CHECKED-REVIEWED				
DESIGN2-DETAILED2				
DESIGN3-DETAILED3				
REVISIONS 1				
REVISIONS 2				
REVISIONS 3				
REVISIONS 4				
FIELD CHANGES				

P.E. NUMBER

FRENCHBORO PIER AND TRANSFER BRIDGE
FRENCHBORO, MAINE
LONG ISLAND HANCOCK COUNTY

MISCELLANEOUS DETAILS

SHEET NUMBER

S-6

G:\Z-J:\Geo\09.00257766.00_Frenchboro\Figures\GZA DWGS\FINAL 25766.00_72-14_RR_8-16-2013.dwg [S-6 SECTIONS-(01L3)] September 05, 2013 - 12:40pm michael.cubin

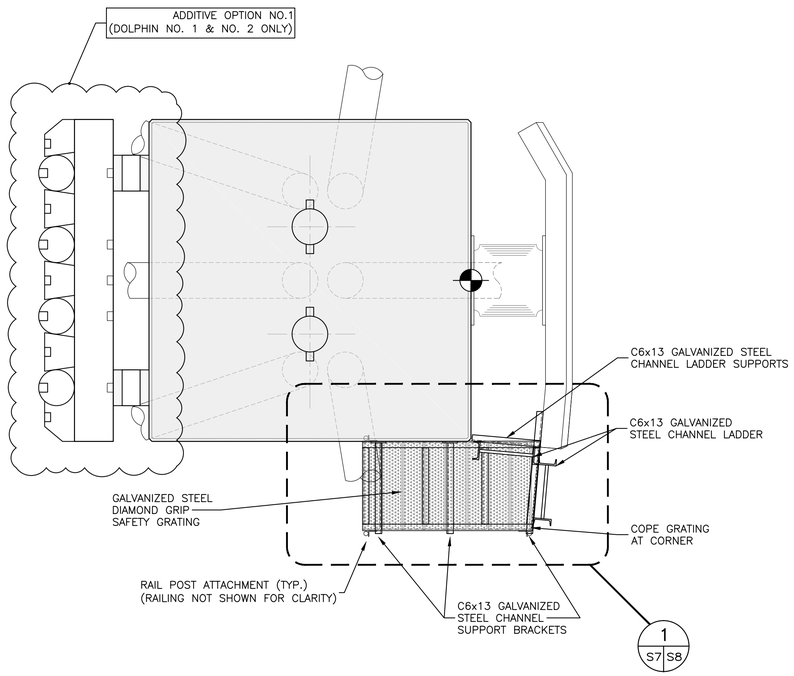

1 S7 — PLAN – DOLPHIN NO. 2 PLATFORM/LADDER

SCALE: 1/2" = 1'–0"

NOTE: PLATFORM AND LADDERS ARE INCIDENTAL TO FENDER PANEL SYSTEM

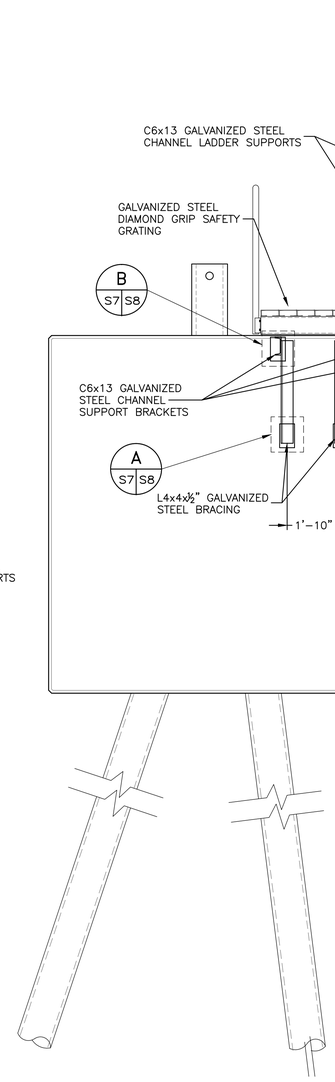

2 S7 — ELEVATION – DOLPHIN NO. 2 PLATFORM/LADDER

SCALE: 1/2" = 1'–0"

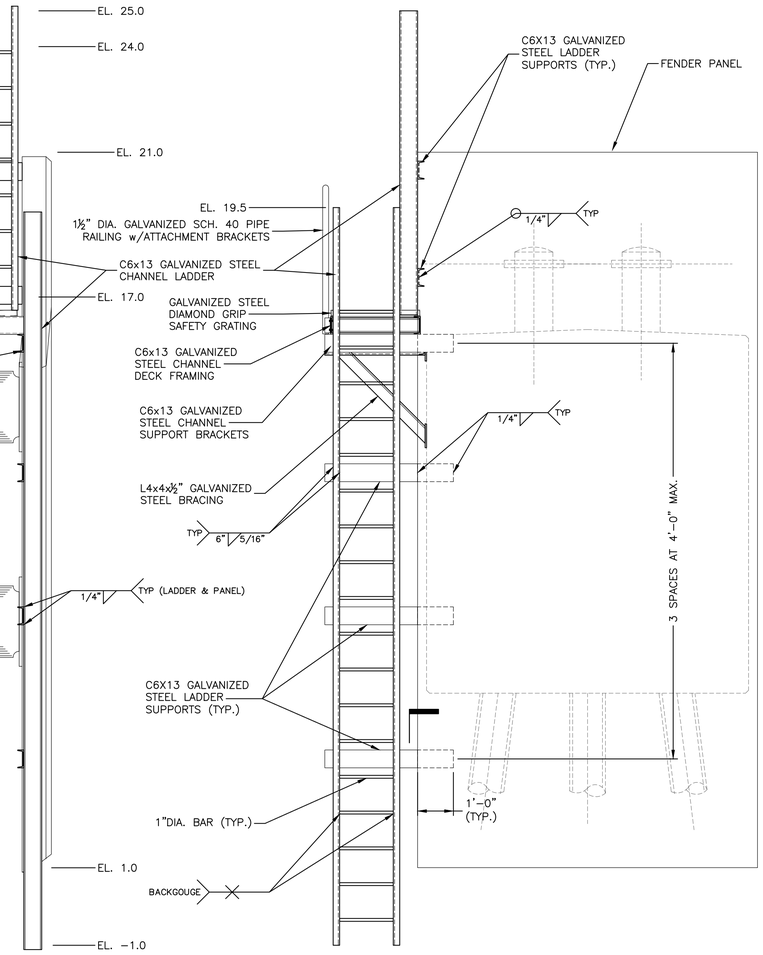

3 S7 — ELEVATION – DOLPHIN NO. 2 PLATFORM/LADDER

SCALE: 1/2" = 1'–0"

NOTES:

1. VERTICAL DATUM IS MLLW = 0.00
2. THE DOLPHIN AND FENDER PANEL SYSTEM CONTROL POINTS AND LAYOUT SHOWN ON THE DRAWINGS ARE BASED UPON THE PARTICULAR ELASTOMERIC FENDER UNIT AND FENDER PANEL SHOWN ON THIS DRAWNG. THE DOLPHIN CONTROL POINTS AND LAYOUT MAY REQUIRE ALTERATION DUE TO THE ACCEPTANCE OF ALTERNATE EQUIVALENT FENDER PANEL SYSTEMS. FINAL DOLPHIN LAYOUT SHALL BE SUBJECT TO THE ACCEPTANCE OF THE MAINE DOT.

STATE OF MAINE
DEPARTMENT OF TRANSPORTATION

WIN 18386.00

HIGHWAY PLANS

STATE OF MAINE CHRISTOPHER S. DORN No. 7215 LICENSED PROFESSIONAL ENGINEER

PROJ. MANAGER $PROJMANAGER$	BY	DATE	
DESIGN–DETAILED			SIGNATURE
CHECKED–REVIEWED			
DESIGN2–DETAILED2			
DESIGN3–DETAILED3			P.E. NUMBER
REVISIONS 1			
REVISIONS 2			
REVISIONS 3			DATE
REVISIONS 4			
FIELD CHANGES			

FRENCHBORO PIER AND TRANSFER BRIDGE
FRENCHBORO, MAINE
LONG ISLAND HANCOCK COUNTY

DOLPHIN ACCESS
PLATFORM/LADDER

SHEET NUMBER

S–7

GZA–J:\Geo\09.0025766.00_Frenchboro\Figures\GZA DWGS\FINAL 25766.00_F2-14_R0_8-16-2013.dwg [S-7 PLATFORM] September 05, 2013 - 12:38pm michael.dubin

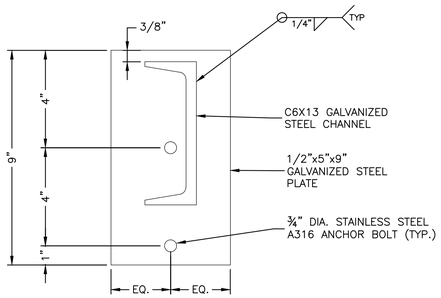

A S7 S8 CHANNEL CONNECTION DETAIL

NOT TO SCALE

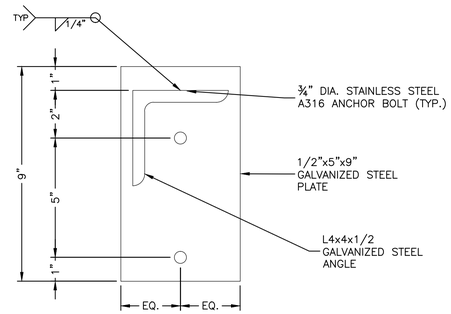

B S7 S8 ANGLE CONNECTION DETAIL

NOT TO SCALE

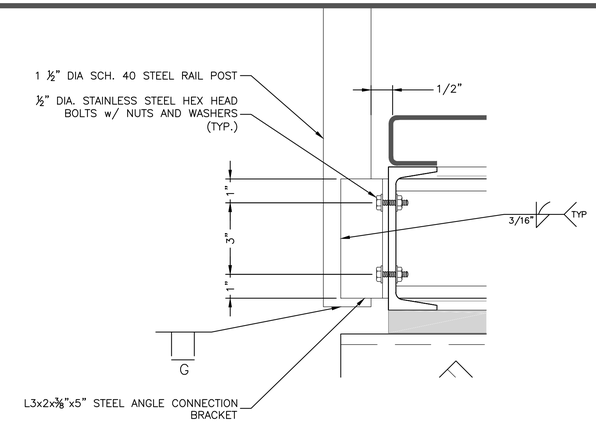

C S8 — RAILING CONNECTION DETAIL

NOT TO SCALE

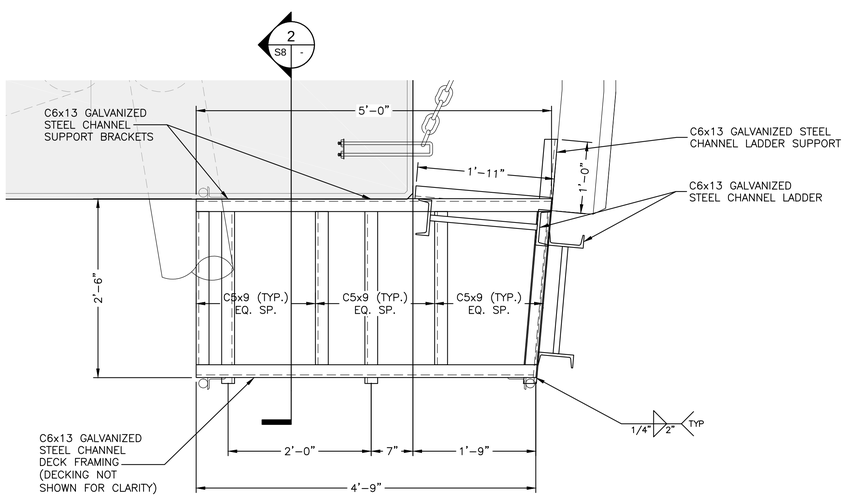

1 S7 S8 PLAN – DOLPHIN NO. 2 PLATFORM/LADDER

SCALE: 1" = 1'-0"

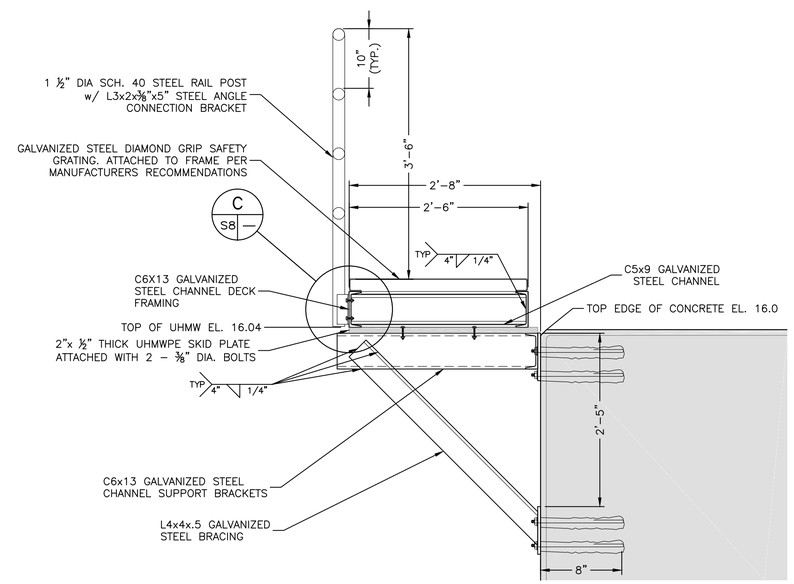

2 S8 — SECTION – DOLPHIN NO. 2 PLATFORM/LADDER

SCALE: 1" = 1'-0"

NOTES:

1. VERTICAL DATUM IS MLLW = 0.00
2. THE DOLPHIN AND FENDER PANEL SYSTEM CONTROL POINTS AND LAYOUT SHOWN ON THE DRAWINGS ARE BASED UPON THE PARTICULAR ELASTOMERIC FENDER UNIT AND FENDER PANEL SHOWN ON THIS DRAWNG. THE DOLPHIN CONTROL POINTS AND LAYOUT MAY REQUIRE ALTERATION DUE TO THE ACCEPTANCE OF ALTERNATE EQUIVALENT FENDER PANEL SYSTEMS. FINAL DOLPHIN LAYOUT SHALL BE SUBJECT TO THE ACCEPTANCE OF THE DEPARTMENT.

STATE OF MAINE
DEPARTMENT OF TRANSPORTATION

WIN 18386.00

HIGHWAY PLANS

STATE OF MAINE CHRISTOPHER S. DORR No. 6725 LICENSED PROFESSIONAL ENGINEER

PROJ. MANAGER $PROJMANAGER$	BY	DATE	
DESIGN–DETAILED	-	-	SIGNATURE
CHECKED–REVIEWED	-	-	
DESIGN2–DETAILED2	-	-	P.E. NUMBER
DESIGN3–DETAILED3	-	-	
REVISIONS 1	-	-	DATE
REVISIONS 2	-	-	
REVISIONS 3	-	-	
REVISIONS 4	-	-	
FIELD CHANGES	-	-	

FRENCHBORO PIER AND TRANSFER BRIDGE
FRENCHBORO, MAINE
LONG ISLAND HANCOCK COUNTY

DOLPHIN ACCESS
PLATFORM/LADDER DETAILS

SHEET NUMBER

S–8

G:\Z:\Civil\09.00257766.00_Frenchboro\Figures\GZA DWGS\FINAL 25766.00_72-14_RR_8-16-2013.dwg [S-8 PLATFORM DETAILS] September 05, 2013 - 1:42pm michael.aubin

FHWA REG. NO.	STATE	PROJECT NUMBER	SHEET NO.	TOTAL SHEETS
1	MAINE	003002.00	2	20

THIS DRAWING IS FROM MAINE DOT PROJECT NO. 003002.00, "TRANSFER BRIDGE, FRENCHBORO, LONG ISLAND, HANCOCK COUNTY", 1987. THE ORIGINAL IMAGE HAS BEEN REDUCED. IT IS PROVIDED HERE TO INDICATE VARIOUS REPAIRS AND FOR REFERENCE. DIMENSIONS AND DETAILS SHOWN IN THE DRAWING ARE SHOWN IN THE AS-DESIGNED CONDITION. MODIFICATIONS MAY HAVE BEEN MADE. THE STRUCTURES HAVE INCURRED DAMAGES AND DETERIORATION. THE CONTRACTOR SHALL FIELD VERIFY ALL DIMENSIONS AND MATERIALS AND SHALL SUBMIT COLLECTED INFORMATION FOR REVIEW PRIOR TO PROCEEDING WITH THE WORK INDICATED HEREIN.

NOTE:
℄ Construction = mid point between the existing bearings and mid point between the backs of the towers.

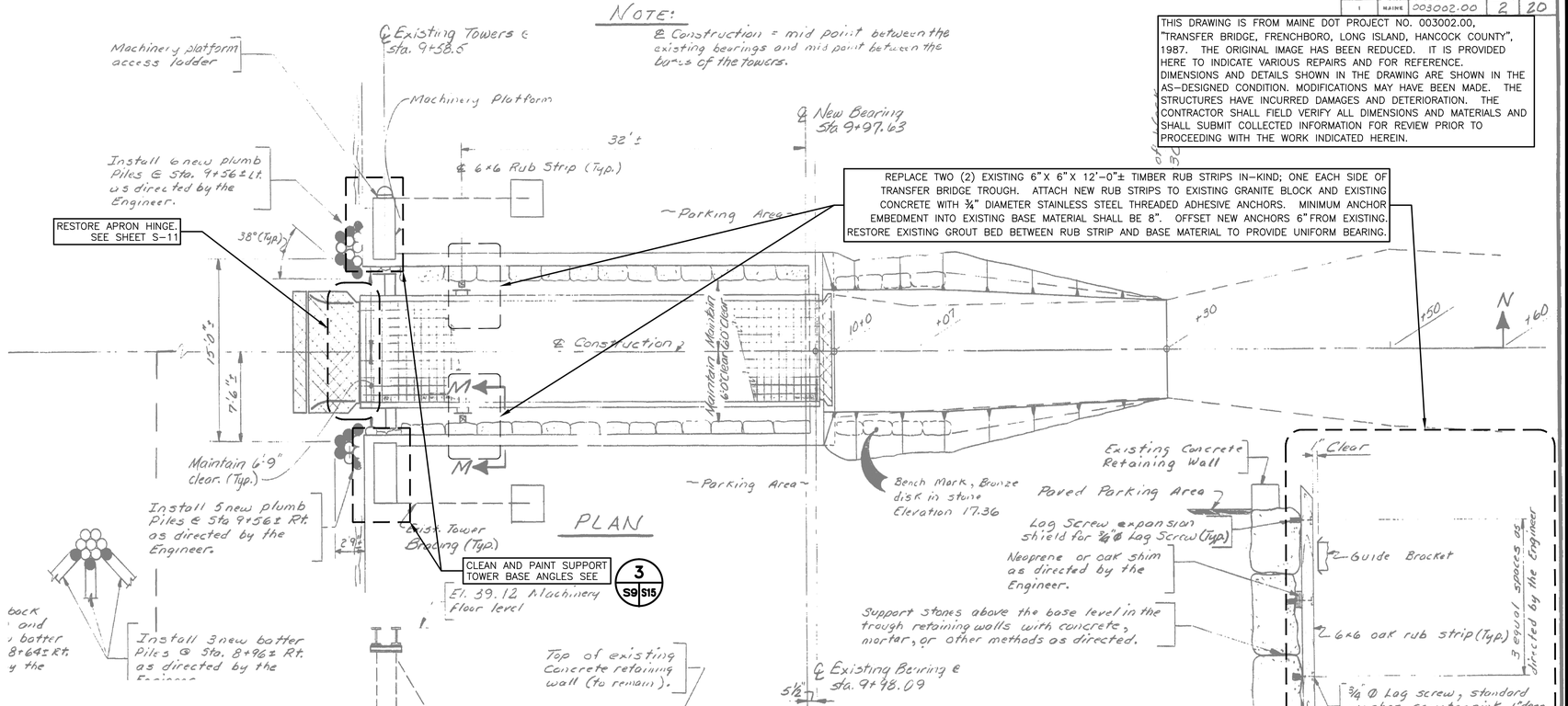

PLAN

SECTION M-M

SECTION N-N

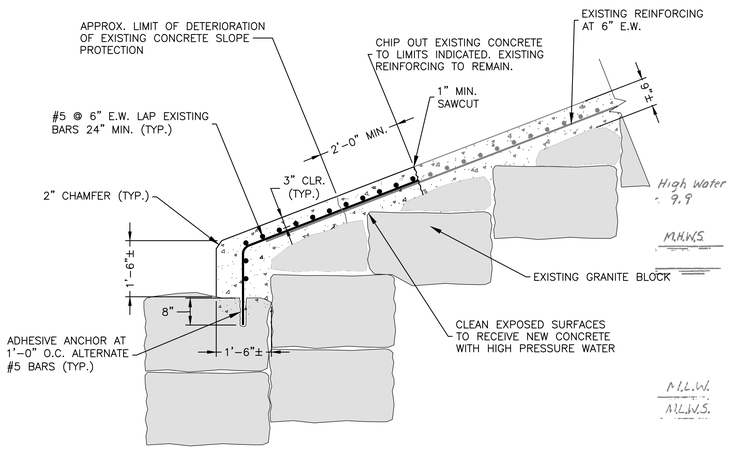

A S9 — DETAIL – SLOPE PROTECTION REPAIR
SCALE: 1/2" = 1'
0 1' 2' 4'
SCALE IN FEET

~ LEGEND ~

- ○ Existing pile to remain
- ● New oak pile
- El. Elevation
- M.H.W.S. Mean High Water (Spring Tide)
- M.L.W. Mean Low Water
- M.L.W.S. Mean Low Water (Spring Tide)

STATE OF MAINE
DEPARTMENT OF TRANSPORTATION

TRANSFER BRIDGE
FRENCHBORO
HANCOCK COUNTY
GENERAL PLAN

SHEET 2 OF 20 AUGUSTA, MAINE

111-260

STATE OF MAINE
DEPARTMENT OF TRANSPORTATION

WIN 18386.00

HIGHWAY PLANS

STATE OF MAINE CHRISTOPHER L. DUPUIS No. 9215 LICENSED PROFESSIONAL ENGINEER

SIGNATURE		P.E. NUMBER	
DATE		DATE	

		BY	DATE
PROJ. MANAGER $PROJMANAGER$			
DESIGN-DETAILED			
CHECKED-REVIEWED			
DESIGN2-DETAILED2			
DESIGN3-DETAILED3			
REVISIONS 1			
REVISIONS 2			
REVISIONS 3			
REVISIONS 4			
FIELD CHANGES			

FRENCHBORO PIER AND TRANSFER BRIDGE
FRENCHBORO, MAINE
LONG ISLAND HANCOCK COUNTY

MISC. PIER AND TRANSFER BRIDGE REPAIRS

SHEET NUMBER
S-9
15 OF 28

G:\Z-J:\Geo\09.0025766.00_Frenchboro\Figures\GZA DWGS\FINAL 25766.00_F15-21_R0_8-16-2013.dwg [S-9 (111-260)] September 05, 2013 - 12:54pm michael.dupin

REG. NO.	STATE	PROJECT NUMBER	NO	SHEETS
1	MAINE	003002.00	6	20

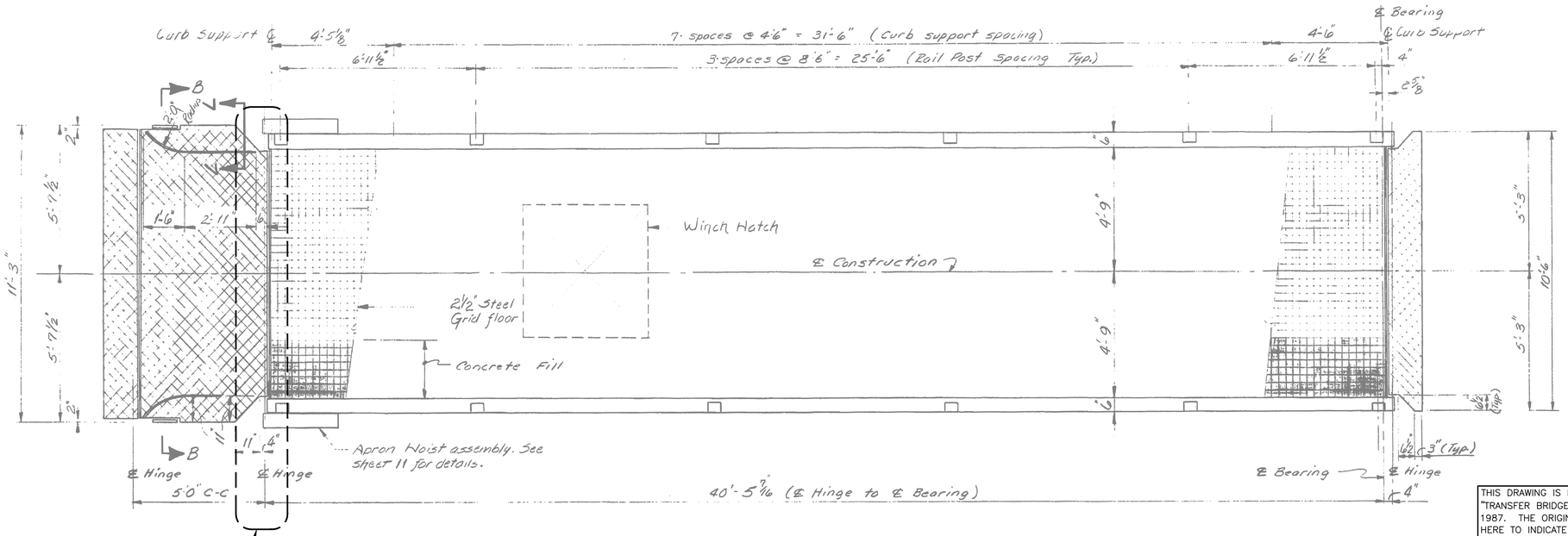

PLAN

RESTORE APRON HINGE SEE SHEET S-11

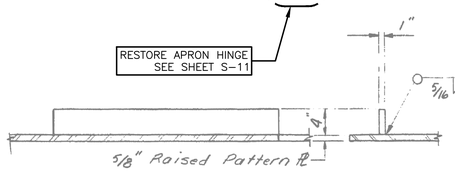

GUIDE BAR DETAIL

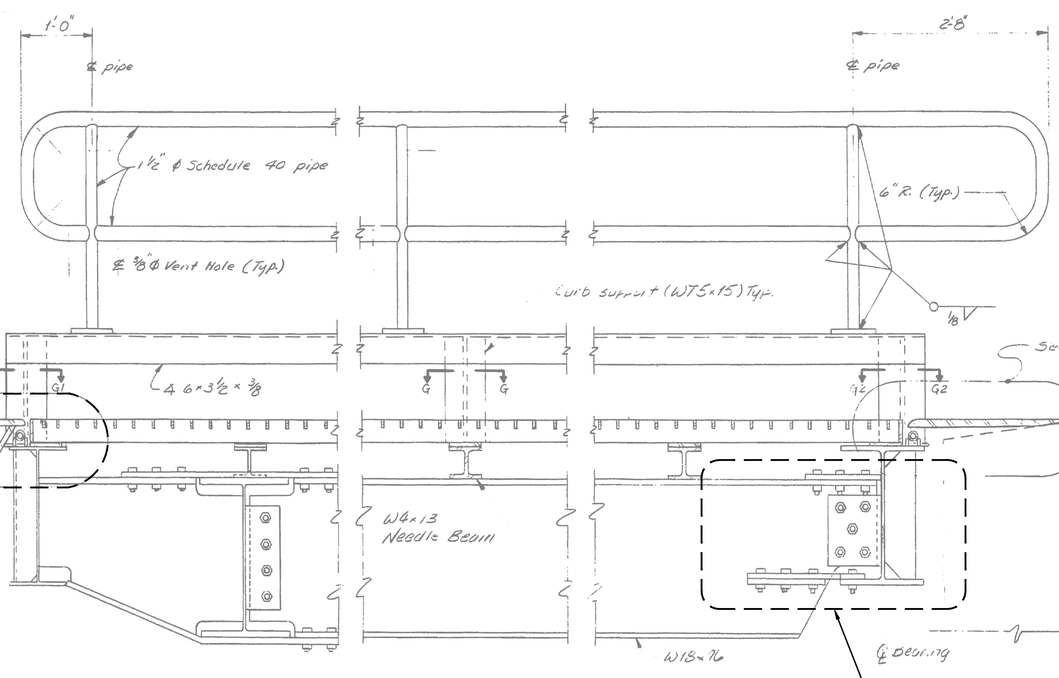

TYPICAL LONGITUDINAL SECTION

NOTE:

All enclosed sections of pipe must be provided with a ⅜" ϕ vent hole 3" from ends, according to galvanizing requirements.

SUPERSTRUCTURE NOTES

1. Concrete fill for superstructure will be paid for under Item 502.21 Structural Concrete Abutments & Retaining Walls, and shall be installed by the Contr.
2. Protective Coating for concrete surfaces shall be applied to both surfaces of the concrete filled grid.

THIS DRAWING IS FROM MAINE DOT PROJECT NO. 003002.00, "TRANSFER BRIDGE, FRENCHBORO, LONG ISLAND, HANCOCK COUNTY", 1987. THE ORIGINAL IMAGE HAS BEEN REDUCED. IT IS PROVIDED HERE TO INDICATE VARIOUS REPAIRS AND FOR REFERENCE. DIMENSIONS AND DETAILS SHOWN IN THE DRAWING ARE SHOWN IN THE AS-DESIGNED CONDITION. MODIFICATIONS MAY HAVE BEEN MADE. THE STRUCTURES HAVE INCURRED DAMAGES AND DETERIORATION. THE CONTRACTOR SHALL FIELD VERIFY ALL DIMENSIONS AND MATERIALS AND SHALL SUBMIT COLLECTED INFORMATION FOR REVIEW PRIOR TO PROCEEDING WITH THE WORK INDICATED HEREIN.

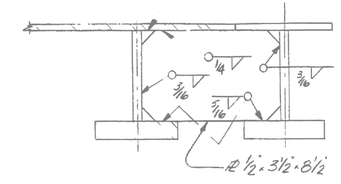

SECTION L~L

NOTE

1. For section B-B, G-G, G1-G1, G2-G2, see sheet 8.
2. For details C, D and E see sheet 9.
3. For transverse section see sheet 8.
4. Complete ramp structure shall be shop assembled including grating, curb/apron hoist tower prior to galvanizing. All necessary reaming and other adjustments shall be made at that time.

STATE OF MAINE
DEPARTMENT OF TRANSPORTATION

TRANSFER BRIDGE
FRENCHBORO
HANCOCK COUNTY
RAMP GENERAL PLAN

SHEET 6 OF 20 AUGUSTA, MAINE

111-264

STATE OF MAINE
DEPARTMENT OF TRANSPORTATION

WIN 18386.00

HIGHWAY PLANS

STATE OF MAINE CHRISTOPHER L. DORR No. 7215 LICENSED PROFESSIONAL ENGINEER

	SIGNATURE	P.E. NUMBER	DATE

	BY	DATE
PROJ. MANAGER		
DESIGN-DETAILED		
CHECKED-REVIEWED		
DESIGN2-DETAILED2		
DESIGN3-DETAILED3		
REVISIONS 1		
REVISIONS 2		
REVISIONS 3		
REVISIONS 4		
FIELD CHANGES		

FRENCHBORO PIER AND TRANSFER BRIDGE
FRENCHBORO, MAINE
LONG ISLAND
HANCOCK COUNTY

TRANSFER BRIDGE
REPAIRS - 1

SHEET NUMBER

S-10

GZA-J:\Geo\09.0025766.00_Frenchboro\Figures\GZA DWGS\FINAL 25766.00_F15-21_RR_B-16-2013.dwg [S-10 (111-264)] September 05, 2013 - 12:53pm michael.aubin

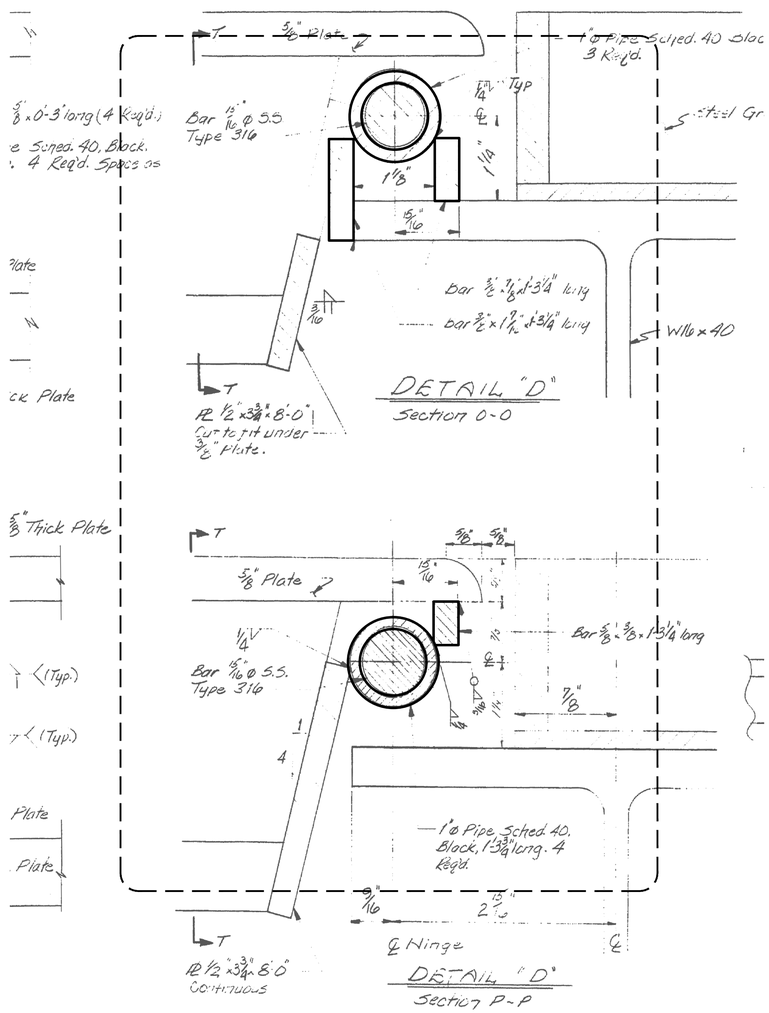

APRON HINGE RESTORATION:

REMOVE, REPLACE WITH NEW AND REINSTALL APRON HINGE ELEMENTS AS INDICATED. REPLACE HINGE PIN (1 5/8" DIA. SS ROD), ALL KNUCKLES (1" DIA. PIPE) AND SUPPORT BARS. HOT DIP GALVANIZE ASSEMBLY AFTER FABRICATION IS COMPLETE. REAM KNUCKLES AFTER GALVANIZING TO RECEIVE PIN.

APPROXIMATE LENGTH OF HINGE = 9'±

THIS DRAWING IS FROM MAINE DOT PROJECT NO. 003002.00, "TRANSFER BRIDGE, FRENCHBORO, LONG ISLAND, HANCOCK COUNTY", 1987. THE ORIGINAL IMAGE HAS BEEN REDUCED AND HAS BEEN MODIFIED. IT IS PROVIDED HERE TO INDICATE VARIOUS REPAIRS AND FOR REFERENCE. DIMENSIONS AND DETAILS SHOWN IN THE DRAWING ARE SHOWN IN THE AS-DESIGNED CONDITION. MODIFICATIONS MAY HAVE BEEN MADE. THE STRUCTURES HAVE INCURRED DAMAGES AND DETERIORATION. THE CONTRACTOR SHALL FIELD VERIFY ALL DIMENSIONS AND MATERIALS AND SHALL SUBMIT COLLECTED INFORMATION FOR REVIEW PRIOR TO PROCEEDING WITH THE WORK INDICATED HEREIN.

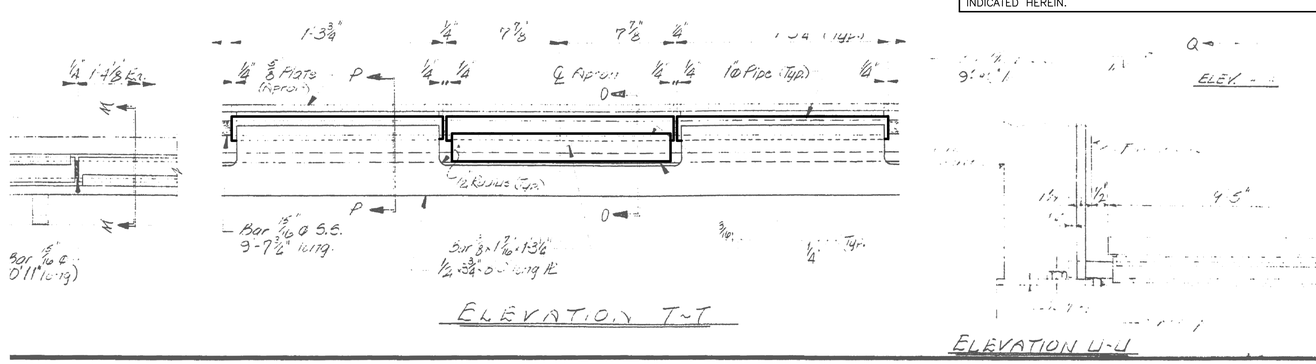

111-267

STATE OF MAINE
DEPARTMENT OF TRANSPORTATION

TRANSFER BRIDGE
FRENCHBORO
HANCOCK COUNTY
RAMP DETAILS

SHEET 9 OF 20 AUGUSTA, MAINE

STATE OF MAINE
DEPARTMENT OF TRANSPORTATION

WIN 18386.00

HIGHWAY PLANS

	BY	DATE
PROJ. MANAGER $PROJMANAGER$		
DESIGN-DETAILED		
CHECKED-REVIEWED		
DESIGN2-DETAILED2		
DESIGN3-DETAILED3		
REVISIONS 1		
REVISIONS 2		
REVISIONS 3		
REVISIONS 4		
FIELD CHANGES		

SIGNATURE

P.E. NUMBER

DATE

FRENCHBORO PIER AND TRANSFER BRIDGE
FRENCHBORO, MAINE
LONG ISLAND HANCOCK COUNTY

TRANSFER BRIDGE
REPAIRS - 2

SHEET NUMBER

S-11

G:\Z-A-J\Geo\09.0025766.00_Frenchboro\Figures\VZA DWGS\FINAL 25766.00_FT5-21_RIL_8-16-2013.dwg [S-11 (111-267)] September 05, 2013 - 12:52pm michael.subin

F.H.W.A. REG. NO.	STATE	PROJECT NUMBER	SHEET NO	TOTAL SHEETS
1	MAINE	003002.00	7	20

POWER TOOL CLEAN THE SURFACE OF THE TRANSFER BRIDGE BEAMS TO 3 INCHES BEYOND THE LIMIT OF COMPROMISED HOT-DIPPED GALVANIZING. REMOVE ALL LOOSE PAINT, SCALE, RUST AND ALL FOREIGN MATTER. POWER SAND TO BRING THE CLEANED SURFACE TO A WHITE METAL FINISH. COAT THE AFFECTED AREA USING BRUSH OR ROLLER OR A LOW PRESSURE OR AIR-LESS SPRAY, AND EXTEND THE NEW GALVANIZING REPAIR COATING BEYOND THE CLEANED AREA. GALVANIZING REPAIR COATING SHALL BE A COLD GALVANIZING COMPOUND CONTAINING NOT LESS THAN 90% METALLIC ZINC CONTENT BY DRY FILM WEIGHT. APPLY REPAIR COATING IN MULTIPLE COATS TO ACHIEVE A DRY FILM BUILD OF NOT LESS THAN 3.0 MILS. SURFACE PREPARATION, APPLICATION AND RE-COAT TIME SHALL BE IN ACCORDANCE WITH THE REPAIR COATING MANUFACTURERS DIRECTION OR THESE NOTES, WHICHEVER IS MORE STRINGENT. USE SANDBAGS OR OTHER ACCEPTED METHOD AS NECESSARY TO KEEP COATING DRY DURING CURE PERIOD.

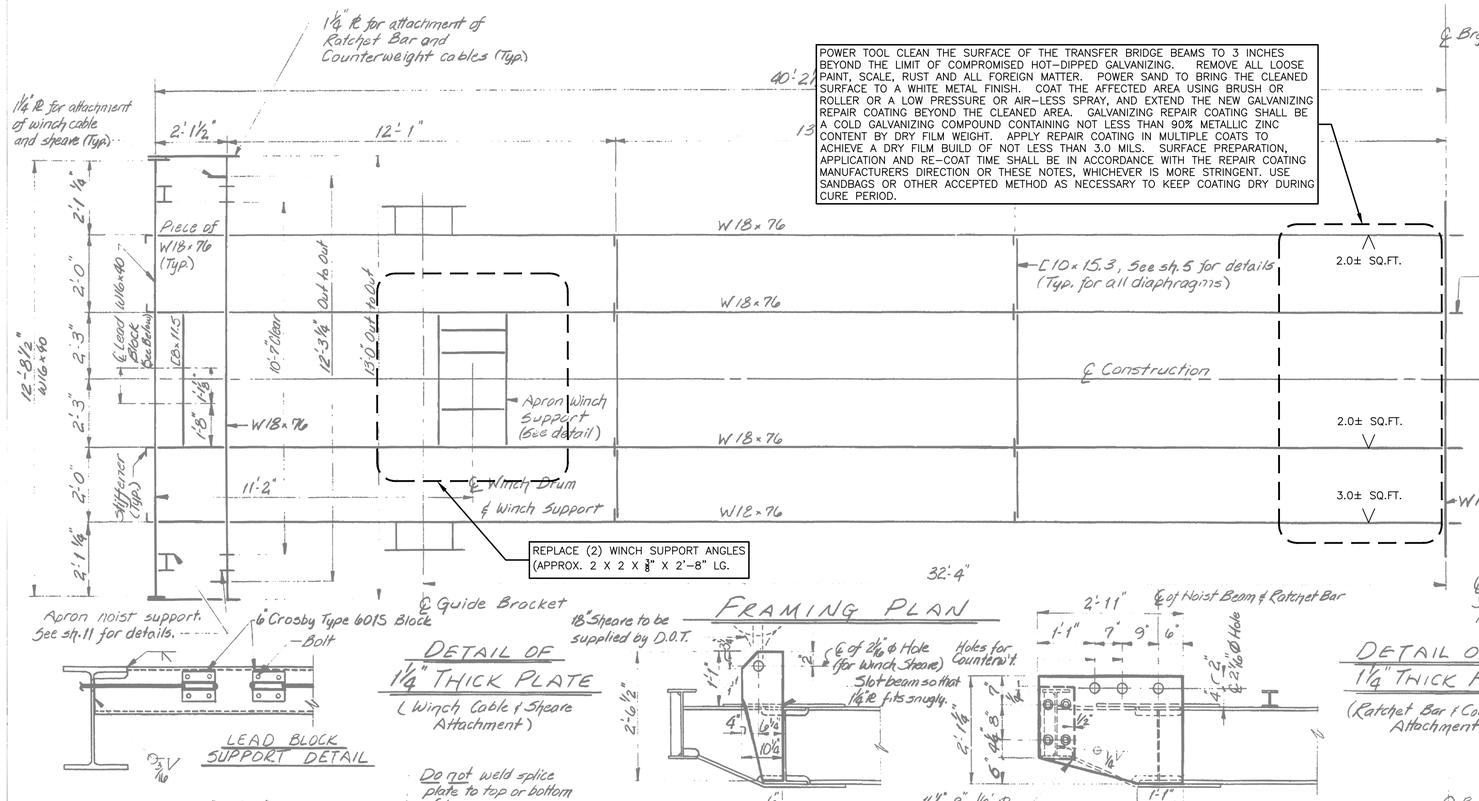

FABRICATION NOTES

1. All bolts shall be ⅞"Ø H.S. Bolts.* Hole sizes for bolts shall conform to section 504.23 of the Standard Specifications, and edge distances shall be 1½" min. unless otherwise noted.

2. Diaphragm connection plate shall be normal to the top flange.

* Bolts shall have a Heavy Hex nut & Standard washer unless otherwise noted.

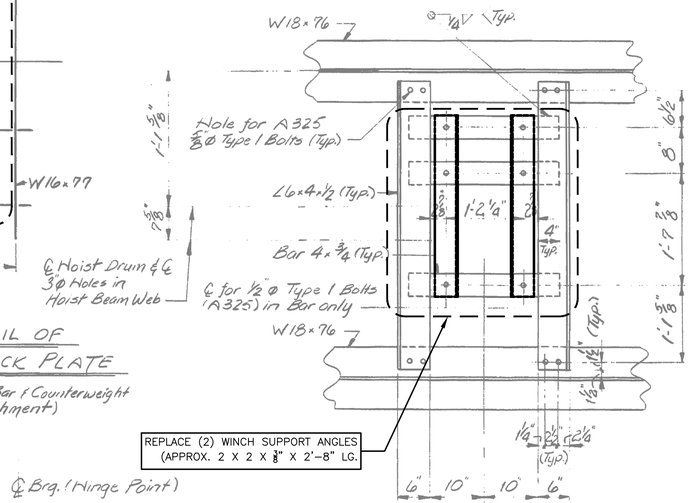

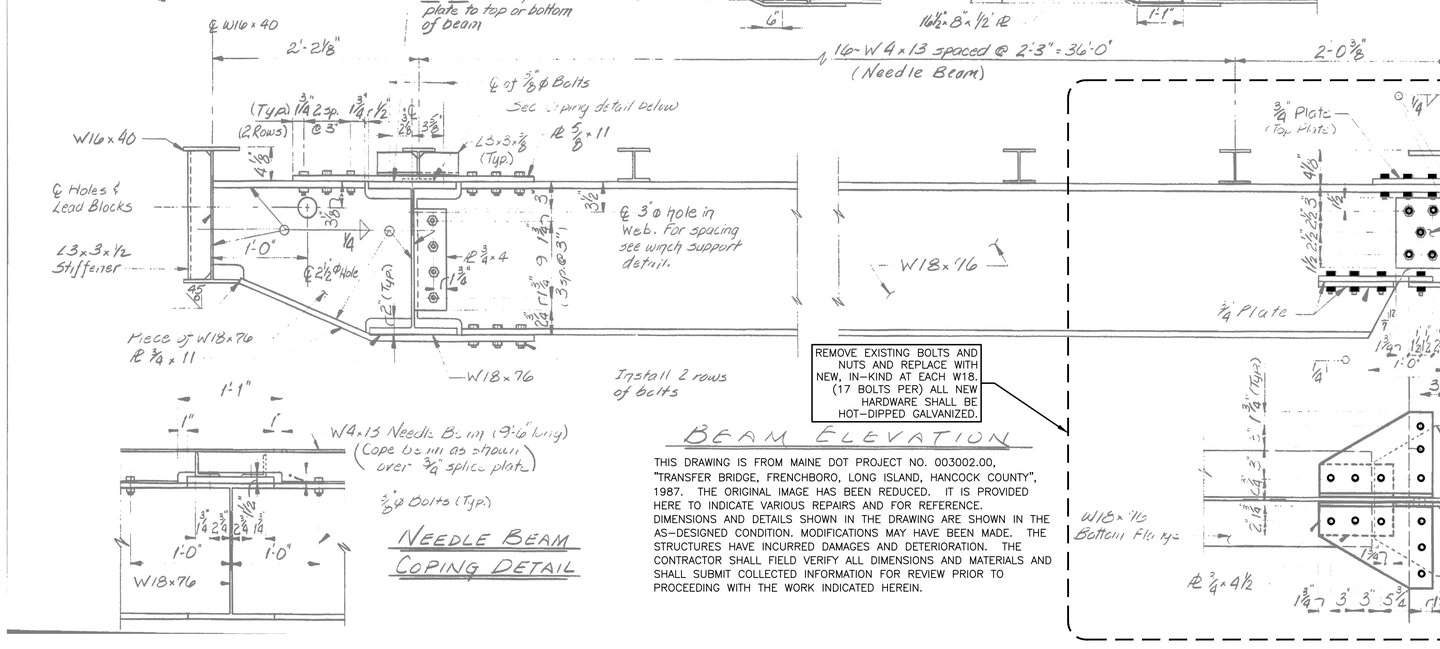

REMOVE EXISTING BOLTS AND NUTS AND REPLACE WITH NEW, IN-KIND AT EACH W18, (17 BOLTS PER) ALL NEW HARDWARE SHALL BE HOT-DIPPED GALVANIZED.

BEAM ELEVATION

THIS DRAWING IS FROM MAINE DOT PROJECT NO. 003002.00, "TRANSFER BRIDGE, FRENCHBORO, LONG ISLAND, HANCOCK COUNTY", 1987. THE ORIGINAL IMAGE HAS BEEN REDUCED. IT IS PROVIDED HERE TO INDICATE VARIOUS REPAIRS AND FOR REFERENCE. DIMENSIONS AND DETAILS SHOWN IN THE DRAWING ARE SHOWN IN THE AS-DESIGNED CONDITION. MODIFICATIONS MAY HAVE BEEN MADE. THE STRUCTURES HAVE INCURRED DAMAGES AND DETERIORATION. THE CONTRACTOR SHALL FIELD VERIFY ALL DIMENSIONS AND MATERIALS AND SHALL SUBMIT COLLECTED INFORMATION FOR REVIEW PRIOR TO PROCEEDING WITH THE WORK INDICATED HEREIN.

WINCH SUPPORT DETAIL

MATERIAL SPECIFICATIONS

STRUCTURAL STEEL: ASTM A36
& GRATING (Hot Dipped Galv.)
BOLTS: ASTM A325 Type 1 (Galv.)
HANDRAIL: A53, Type E, Grade E or S

BASIC DESIGN STRESSES

ASTM A36 F_y = 36,000 psi
ASTM A325 F_v = 25,000 psi

STATE OF MAINE
DEPARTMENT OF TRANSPORTATION

TRANSFER BRIDGE
FRENCHBORO
HANCOCK COUNTY
RAMP FRAME

SHEET 7 OF 20 AUGUSTA, MAINE

111-265

STATE OF MAINE
DEPARTMENT OF TRANSPORTATION

WIN 18386.00 HIGHWAY PLANS

STATE OF MAINE CHRISTOPHER L. MORAN No. 7215 LICENSED PROFESSIONAL ENGINEER

	BY	DATE
PROJ. MANAGER & PROMANAGER	-	-
DESIGN-DETAILED	-	-
CHECKED-REVIEWED	-	-
DESIGN2-DETAILED2	-	-
DESIGN3-DETAILED3	-	-
REVISIONS 1	-	-
REVISIONS 2	-	-
REVISIONS 3	-	-
REVISIONS 4	-	-
FIELD CHANGES	-	-

SIGNATURE
P.E. NUMBER
DATE

FRENCHBORO PIER AND TRANSFER BRIDGE
FRENCHBORO, MAINE
LONG ISLAND HANCOCK COUNTY

TRANSFER BRIDGE
REPAIRS - 3

SHEET NUMBER
S-12

G:\Proj\00.0025766.00_Frenchboro\Figures\02A DWGS\FINAL 25766.00_F15-21_RO_8-16-2013.dwg [S-12 (111-265)] September 05, 2013 - 12:51pm michael.dubin

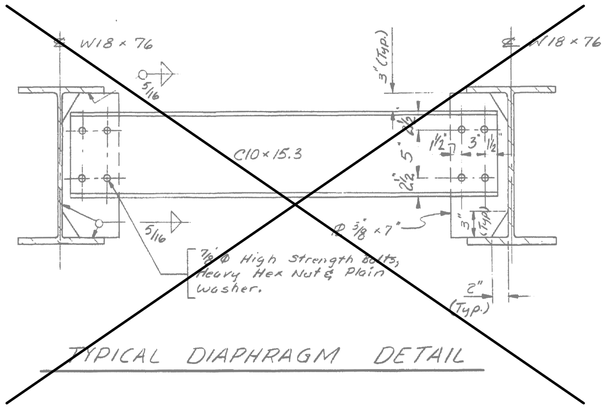

TYPICAL DIAPHRAGM DETAIL

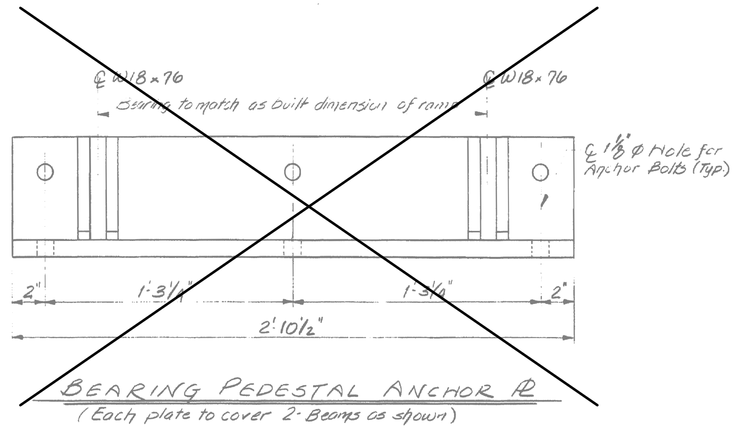

BEARING PEDESTAL ANCHOR PL

(Each plate to cover 2-Beams as shown)

FABRICATION NOTES

1. All steel including anchor bolts, shall be ASTM A36 and Hot Dipped galvanized except for contact surfaces
2. Coat all contact surfaces with 125 micro-inch finish with NEVER-SIEZE or approved equal
3. All areas of galvanizing damaged during assembly or field welding, shall be touched up with a zinc coating as recommended by the galvanizer and as approved by the Engineer.
4. Upset threads on bearing pins and anchor bolts after assembly.

AT EACH W18 (4 TOTAL) REMOVE EXISTING BEARING PINS AND NUTS AND REPLACE WITH NEW STAINLESS STEEL A316 PINS AND NUTS. REMOVE EXISTING BOLTS AND NUTS AND REPLACE WITH NEW, IN-KIND AT EACH W18. ALL NEW HARDWARE SHALL BE HOT-DIPPED GALVANIZED.

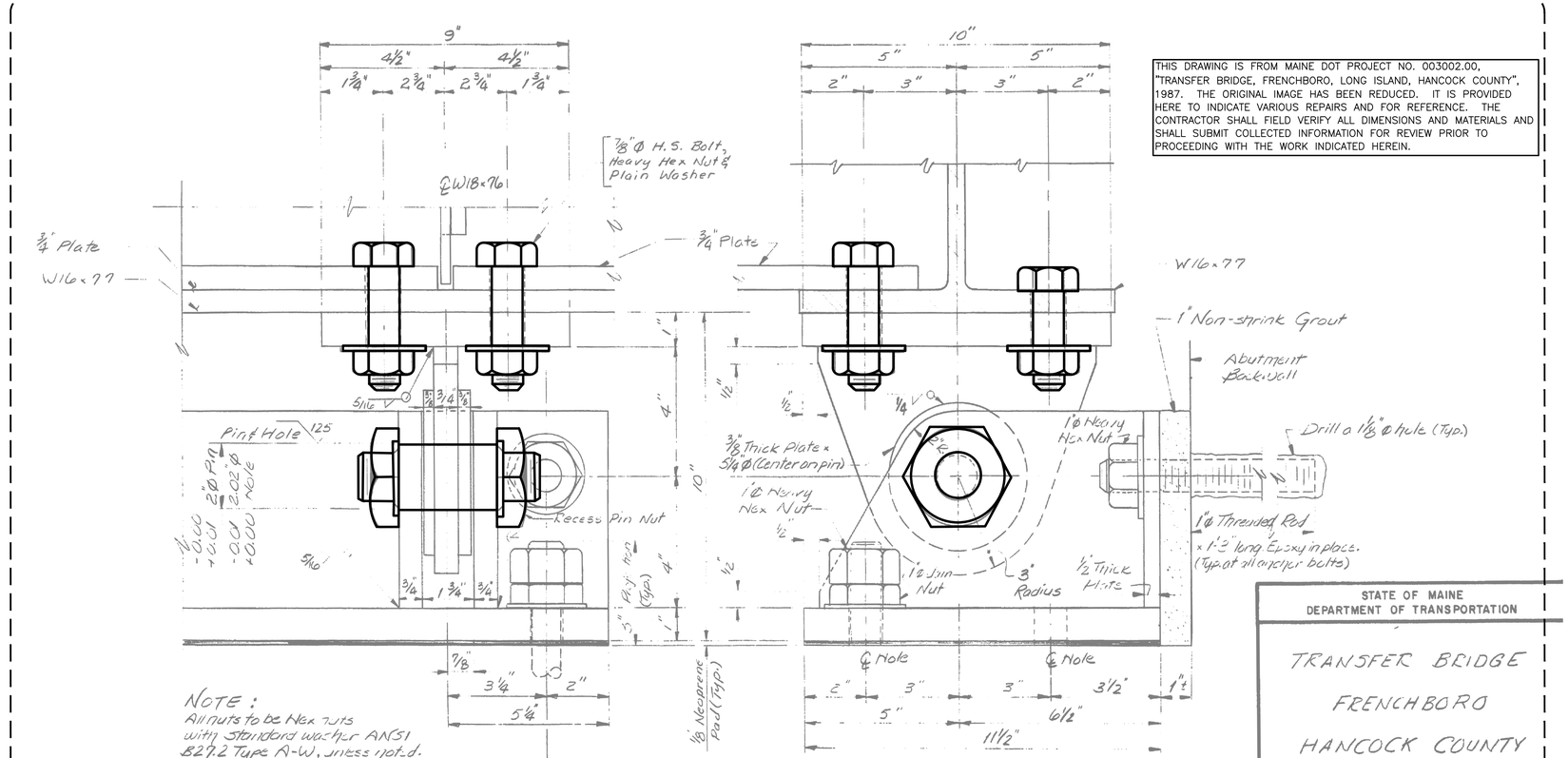

NOTE: All nuts to be Hex nuts with standard washer ANSI B27.2 Type A-W, unless noted.

BEARING PEDESTAL

THIS DRAWING IS FROM MAINE DOT PROJECT NO. 003002.00, "TRANSFER BRIDGE, FRENCHBORO, LONG ISLAND, HANCOCK COUNTY", 1987. THE ORIGINAL IMAGE HAS BEEN REDUCED. IT IS PROVIDED HERE TO INDICATE VARIOUS REPAIRS AND FOR REFERENCE. THE CONTRACTOR SHALL FIELD VERIFY ALL DIMENSIONS AND MATERIALS AND SHALL SUBMIT COLLECTED INFORMATION FOR REVIEW PRIOR TO PROCEEDING WITH THE WORK INDICATED HEREIN.

111-263

STATE OF MAINE
DEPARTMENT OF TRANSPORTATION

TRANSFER BRIDGE
FRENCHBORO
HANCOCK COUNTY
RAMP BEARING

SHEET 5 OF 20 AUGUSTA, MAINE

STATE OF MAINE
DEPARTMENT OF TRANSPORTATION

WIN 18386.00

HIGHWAY PLANS

STATE OF MAINE CHRISTOPHER L. BOWN No. 7275 LICENSED PROFESSIONAL ENGINEER

	SIGNATURE	DATE	BY
PROJ. MANAGER			
DESIGN-DETAILED			
CHECKED-REVIEWED			
DESIGN2-DETAILED2			
DESIGN3-DETAILED3			
REVISIONS 1			
REVISIONS 2			
REVISIONS 3			
REVISIONS 4			
FIELD CHANGES			

P.E. NUMBER

FRENCHBORO PIER AND TRANSFER BRIDGE
FRENCHBORO, MAINE
LONG ISLAND HANCOCK COUNTY

TRANSFER BRIDGE
REPAIRS - 4

SHEET NUMBER

S-13

G:\Z-A\Geo\09.0025766.00_Frenchboro\Figures\V2\A DWGS\FINAL 25766.00_FT5-21_RIL_B-16-2013.dwg [S-13 (111-263)] September 05, 2013 - 12:51pm michael.dubin

REG. NO.	STATE	PROJECT NUMBER	TOTAL NO.	SHEETS
1	MAINE	003002.00	11	20

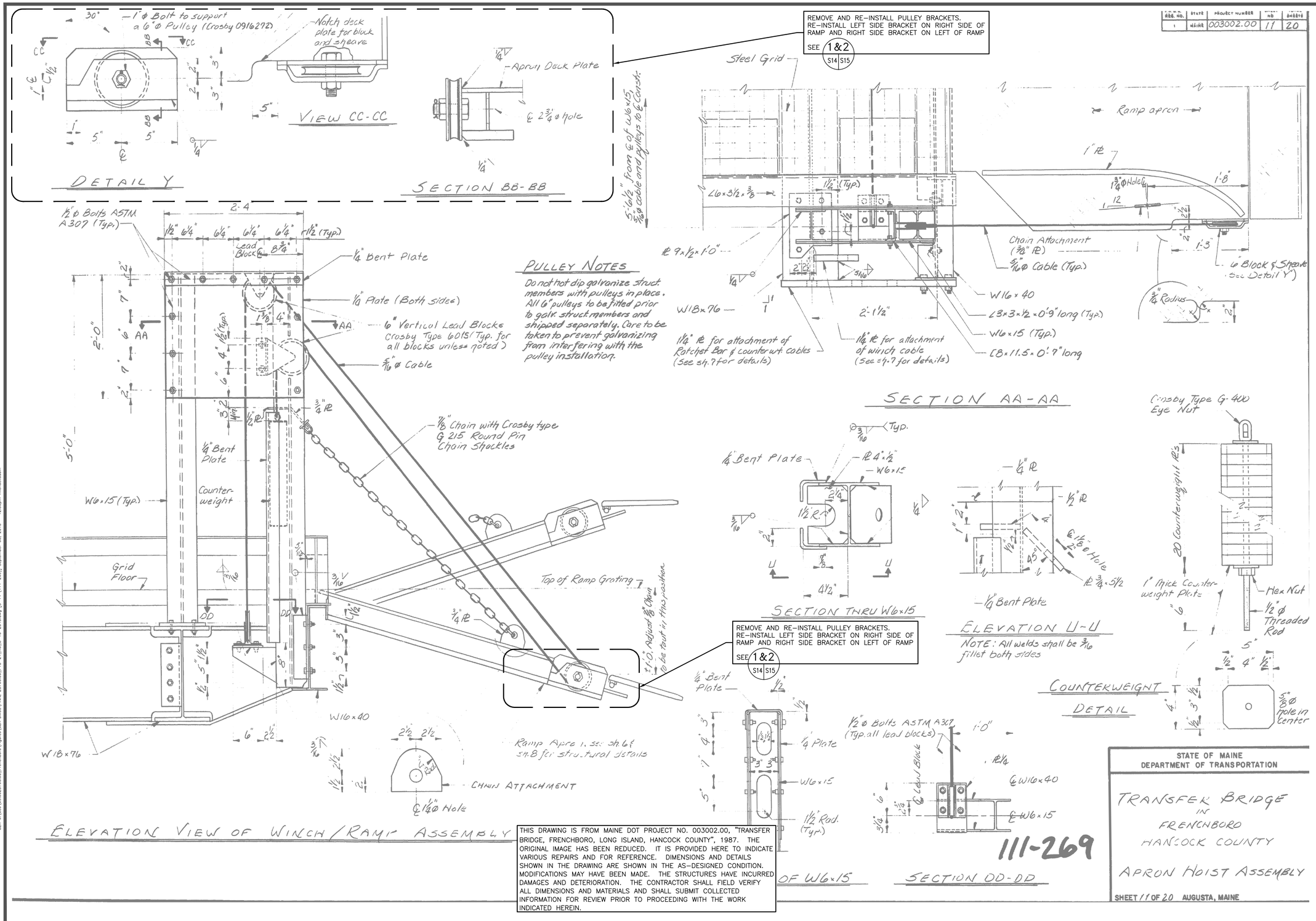

PULLEY NOTES

Do not hot dip galvanize struct members with pulleys in place. All 6" pulleys to be fitted prior to galv. struct. members and shipped separately. Care to be taken to prevent galvanizing from interfering with the pulley installation.

THIS DRAWING IS FROM MAINE DOT PROJECT NO. 003002.00, "TRANSFER BRIDGE, FRENCHBORO, LONG ISLAND, HANCOCK COUNTY", 1987. THE ORIGINAL IMAGE HAS BEEN REDUCED. IT IS PROVIDED HERE TO INDICATE VARIOUS REPAIRS AND FOR REFERENCE. DIMENSIONS AND DETAILS SHOWN IN THE DRAWING ARE SHOWN IN THE AS-DESIGNED CONDITION. MODIFICATIONS MAY HAVE BEEN MADE. THE STRUCTURES HAVE INCURRED DAMAGES AND DETERIORATION. THE CONTRACTOR SHALL FIELD VERIFY ALL DIMENSIONS AND MATERIALS AND SHALL SUBMIT COLLECTED INFORMATION FOR REVIEW PRIOR TO PROCEEDING WITH THE WORK INDICATED HEREIN.

111-269

STATE OF MAINE
DEPARTMENT OF TRANSPORTATION

TRANSFER BRIDGE
IN
FRENCHBORO
HANCOCK COUNTY

APRON HOIST ASSEMBLY

SHEET 11 OF 20 AUGUSTA, MAINE

STATE OF MAINE
DEPARTMENT OF TRANSPORTATION

WIN 18386.00

HIGHWAY PLANS

STATE OF MAINE · CHRISTOPHER J. SNOW · No. 7275 · LICENSED · PROFESSIONAL ENGINEER

	SIGNATURE	P.E. NUMBER	DATE

	BY	DATE
PROJ. MANAGER $PROJMANAGER$		
DESIGN-DETAILED		
CHECKED-REVIEWED		
DESIGN2-DETAILED2		
DESIGN3-DETAILED3		
REVISIONS 1		
REVISIONS 2		
REVISIONS 3		
REVISIONS 4		
FIELD CHANGES		

FRENCHBORO PIER AND TRANSFER BRIDGE
FRENCHBORO, MAINE
LONG ISLAND HANCOCK COUNTY

TRANSFER BRIDGE
REPAIRS - 5

SHEET NUMBER

S-14

20 OF 28

G:\Arc\09.0025766.00_Frenchboro\Figures\GZA DWGS\FINAL 25766.00_F15-21_R0_8-16-2013.dwg [S-14 (111-269)] September 05, 2013 - 12:50pm michael.cubin

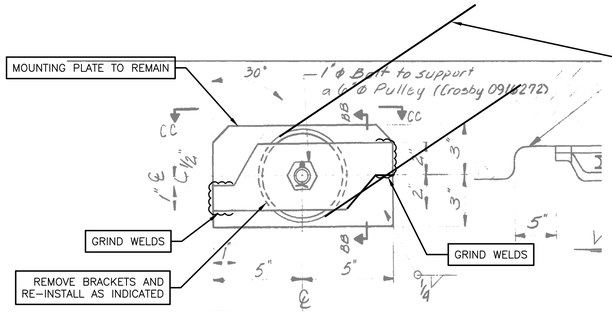

1 S14 S15 **EXISTING**

NOT TO SCALE

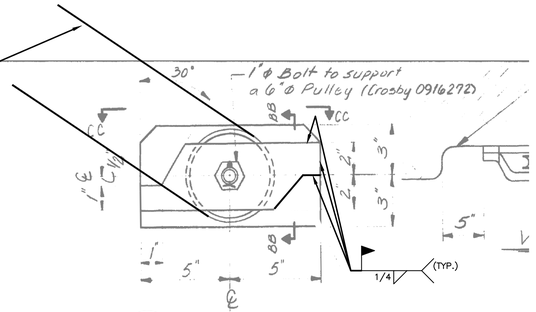

2 S14 S15 **PULLEY BRACKET REINSTALLATION**

NOT TO SCALE

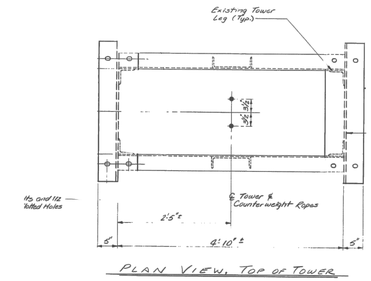

3 S9 S15 **TOWER BASE**

NOT TO SCALE

POWER TOOL CLEAN (SSPC–SP3) TOWER BASE ANGLES, REMOVING ALL LOOSE PAINT, SCALE, RUST AND ALL FOREIGN MATTER AND LEAVING A NEAR WHITE METAL FINISH. IF CLEANING RESULTS IN A SECTION LOSS OF GREATER THAN 25%, NOTIFY THE RESIDENT BEFORE APPLYING PRIMER. PROCEED AS DIRECTED BY THE RESIDENT. PAINTING SHALL BE PERFORMED IN ACCORDANCE WITH SECTION 506, PAINTING STRUCTURAL STEEL

THE DETAILS ON THIS DRAWING ARE FROM MAINE DOT PROJECT NO. 003002.00, "TRANSFER BRIDGE, FRENCHBORO, LONG ISLAND, HANCOCK COUNTY", 1987. THE ORIGINAL IMAGES HAVE BEEN REDUCED. THEY ARE PROVIDED HERE TO INDICATE VARIOUS REPAIRS AND FOR REFERENCE. THE CONTRACTOR SHALL FIELD VERIFY ALL DIMENSIONS AND MATERIALS AND SHALL SUBMIT COLLECTED INFORMATION FOR REVIEW PRIOR TO PROCEEDING WITH THE WORK INDICATED HEREIN.

STATE OF MAINE
DEPARTMENT OF TRANSPORTATION

WIN 18386.00

HIGHWAY PLANS

STATE OF MAINE CHRISTOPHER L. DORAN No. 7215 LICENSED PROFESSIONAL ENGINEER

PROJ. MANAGER $PROJMANAGER$	BY	DATE	SIGNATURE
DESIGN–DETAILED	-	-	P.E. NUMBER
CHECKED–REVIEWED	-	-	
DESIGN2–DETAILED2	-	-	
DESIGN3–DETAILED3	-	-	DATE
REVISIONS 1	-	-	
REVISIONS 2	-	-	
REVISIONS 3	-	-	
REVISIONS 4	-	-	
FIELD CHANGES	-	-	

FRENCHBORO PIER AND TRANSFER BRIDGE
FRENCHBORO, MAINE
LONG ISLAND HANCOCK COUNTY

TRANSFER BRIDGE
REPAIRS – 6

SHEET NUMBER

S–15

G2A-J:\Geo\09.0025766.00_Frenchboro\Figures\G2A DWGS\FINAL 25766.00_F15-21_R0_8-16-2013.dwg [S-15 (11-269) DTLS] September 05, 2013 - 12:49pm michael.aubin

CONDUIT TO PHOTOCELL AND FLOOD LIGHT

CONDUIT TO AMBER BEACON RE-ROUTE INTO NEW WIREWAY

NEW SERVICE FEEDER CONDUIT

TELECRANE F21D RADIO RECEIVER

CONDUIT TO TELECRANE RECEIVER INSTALL NEW AND ROUTE INTO NEW WIREWAY

REMOVE EXISTING SERVICE FEEDER AND INSTALL NEW 230VAC 1PH, 4-WIRE SERVICE DROP INCLUDING WEATHER HEAD, 2-1/2" PCV COATED RGS STEEL CONDUIT WITH 3-#4/0 AWG CU AND 1-#4AWG CU GROUND. INSTALL INTO SIDE OF NEW CONTROL PANEL AND CONNECT TO MAIN BREAKER. PROVIDE FITTINGS AND SUPPORTS AS REQUIRED.

CONDUIT TO RAMP RATCHET BAR SOLENOID AND LIMIT SW.

CONDUIT TO RAMP RATCHET BAR SOLENOID AND LIMIT SW.

CONDUIT TO RAMP WINCH MOTOR LEADS, BRAKE AND LIMIT SWITCHES

PULL BACK WIRING AND CUT BACK EXISTING CONDUITS AND PROVIDE NEW 6"x6"x24" SS. NEMA 4X WIREWAY, HOFFMAN CAT. #F66W24SS WITH CLOSURE PLATES AND GASKETS AT LOCATION SHOWN. CONNECT CONDUIT WITH WATERTIGHT HUBS. PROVIDE SUPPORTS AS REQUIRED

1 OF 2 TRAFFIC LIGHTS

CONDUIT TO TRAFFIC LIGHTS. RE-ROUTE INTO NEW WIREWAY

PROVIDE 2-1/2" WATERTIGHT FLEXIBLE CONDUIT AND FITTINGS FROM WIREWAY TO NEW CONTROL PANEL. HUBS. PROVIDE SUPPORTS AS REQUIRED

NO.1 RAMP RATCHET MECHANISM WITH SOLENOID VALVE AND LIMIT SWITCH. NO.2 LOCATED ON OPPOSITE SIDE OF RAMP

REMOVE EXISTING LOCAL PUSHBUTTON PANEL AND INTERCONNECTING WIRING. INSTALL NEW LOCAL PUSHBUTTON PANEL TO RIGHT OF CONTROL PANEL. PROVIDE NEW WIRING AND SUPPORT AS REQUIRED

REMOVE EXISTING CONTROL PANEL TAKING CARE TO SAVE EXISTING EXTERNAL CONDUIT WIRING FOR REUSE. INSTALL NEW CONTROL PANEL IN LOCATION SHOWN. PROVIDE SUPPORTS AS REQUIRED.

BRIDGE CONTROL PANEL ELEVATION "A"

N.T.S.

EXISTING ROTOPHASE CONVERTER TO REMAIN IN SERVICE

EXISTING SERVICE FEEDER CONDUIT

EXISTING PUSHBUTTON PANEL

INSTALL NEW LOCAL PUSHBUTTON PANEL AT RIGHT SIDE OF CONTROL PANEL PROVIDE STRUT SUPPORT AS REQUIRED

EXISTING CONTROL PANEL 36"H x 48"W x 8"D

OUTLINE OF NEW CONTROL PANEL 42"H x 52"W x 8"D

PROVIDE 60A, 3W, 4P, 240VAC, 1PH NEMA 4X INTERLOCKED FUSIBLE WELDING RECEPTACLE WITH DISCONNECT. COOPER CAT#NSR632 WITH PLUG CAT#APJ6485 AND 60A FUSES. MOUNT ALONG SIDE OF CONTROL PANEL.

CONDUIT TO APRON WINCH MOTOR LEADS AND LIMIT SWITCHES RE-ROUTE INTO BOTTOM OF NEW CONTROL PANEL.

CONDUIT TO TELECRANE F21D RECEIVER. REROUTE INTO NEW 6"X6" WIREWAY ABOVE PANEL AND PROVIDE NEW WIRE AND CONDUIT AS REQUIRED

CONDUIT TO ROTOPHASE CONVERTER. REROUTE AND PROVIDE NEW WIRE AND CONDUIT AS REQUIRED

PROVIDE NEW SUPPORT BASE FOR ROTOPHASE. CONSTRUCT OF (3) 4"X4" PRESSURE TREATED LUMBER AND 3/4" PRESSURE TREATED PLYWOOD ON BOTH SIDES. ANCHOR TO CONCRETE WITH 1/2" EXPANSION ANCHORS AND GALVANIZED STEEL ANGLE CLIPS.

PROVIDE NEW STAINLESS STEEL NEMA 4X, 60A, 7.5 HP RATED, 3 POLE, 230VAC DISCONNECT SWITCH AND INSTALL AT ROTOPHASE UNIT

BRIDGE CONTROL PANEL ELEVATION "B"

N.T.S.

REFERENCE DRAWINGS

E-2	CONTROL PANEL LAYOUT & DETAILS
E-3	LOCAL PUSHBUTTON PANEL LAYOUT & DETAILS
E-4	CONTROL PANEL WIRING DIAGRAM
E-5	SCHEMATIC WIRING DIAGRAM SH1
E-6	SCHEMATIC WIRING DIAGRAM SH2
E-7	ELECTRICAL SITE PLAN

NOTES

1. NO CONDUITS ENTRIES SHALL BE MADE THROUGH THE TOP OF THE CONTROL PANEL. ALL ENTRIES SHALL BE MADE WITH WATERTIGHT HUBS.
2. CONTRACTOR SHALL VERIFY THE FIELD WIRING WITH THAT SHOWN ON THE SCHEMATIC PRIOR TO CONNECTION TO NEW CONTROL PANEL.
3. CONTRACTOR SHALL PROVIDE AND INSTALL NEW CONDUCTORS AS REQUIRED. IF CONDUCTORS ARE SHORT PROVIDE NEW CONDUCTORS TO REPLACE.
4. ALL WORK SHALL PERFORMED IN ACCORDANCE WITH THE CURRENT NATIONAL ELECTRICAL CODE AND ALL STATE AND LOCAL CODES.
5. ALL NEW CONDUITS SHALL BE PVC COATED RIGID GALVANIZED STEEL

RELEASED FOR BID
DATE: 8/15/2013

Stantec

STATE OF MAINE
DEPARTMENT OF TRANSPORTATION

WIN 18386.00
HIGHWAY PLANS

STATE OF MAINE
RICHARD A. NADEAU
No. 10553
LICENSED PROFESSIONAL ENGINEER
8-15-2013

SIGNATURE		
10553	P.E. NUMBER	
08/15/2013	DATE	

	BY	DATE
PROJ. MANAGER		
DESIGN-DETAILED1	PJR	6/21/13
CHECKED-REVIEWED	RAN	8/15/13
DESIGN2-DETAILED2		
DESIGN3-DETAILED3		
REVISIONS 1		
REVISIONS 2		
REVISIONS 3		
REVISIONS 4		
FIELD CHANGES		

FRENCHBORO PIER AND TRANSFER BRIDGE
FRENCHBORO, MAINE
LONG ISLAND HANCOCK COUNTY

TRANSFER BRIDGE CONTROL PANEL
ELEVATIONS AND DETAILS

SHEET NUMBER
E-1

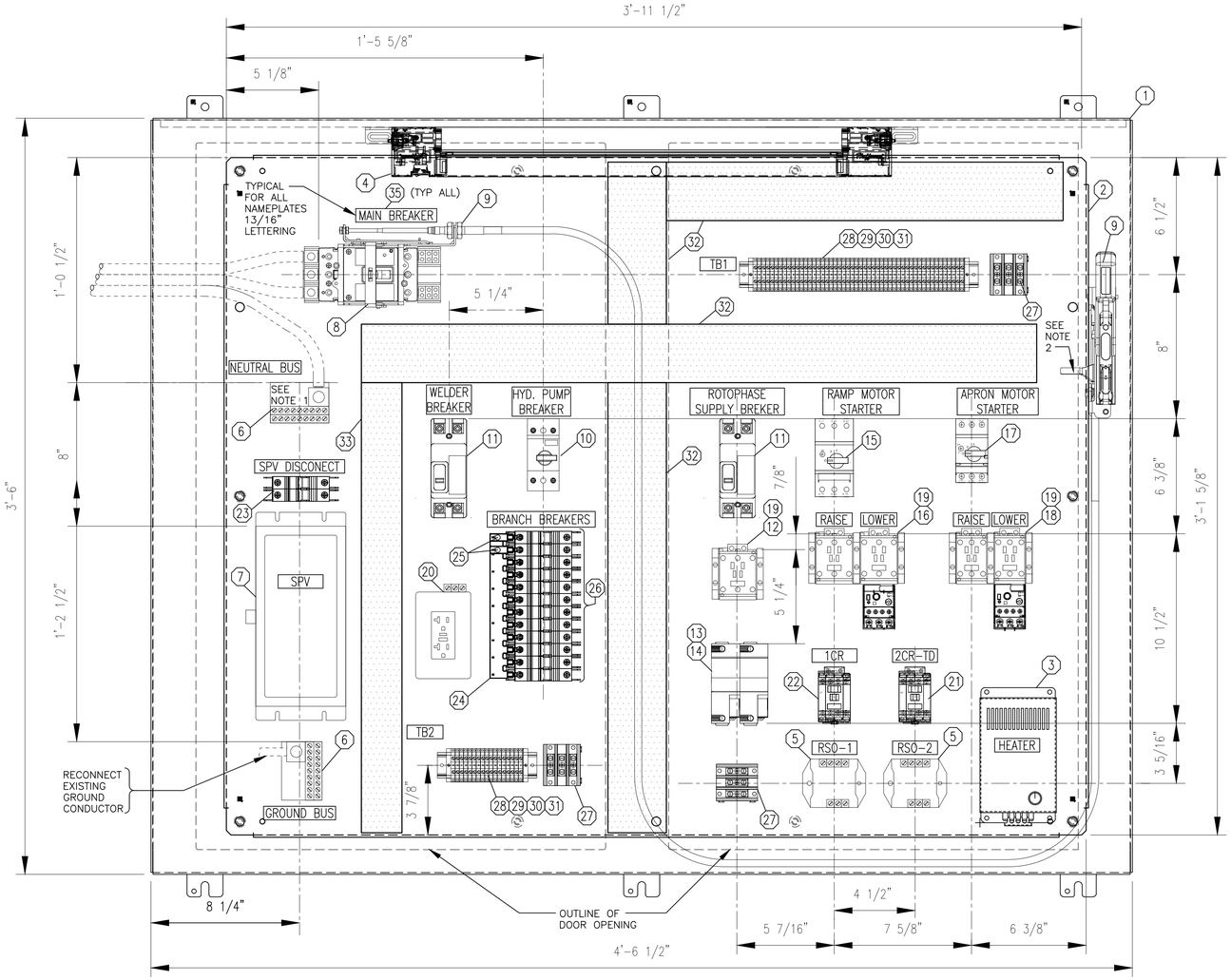

CONTROL PANEL PANEL LAYOUT

MOUNT ON RIGHT SIDE FRONT DOOR OF THE 42" x 54" CONTROL PANEL

DETAIL "A"

NOTES:

1. NEUTRAL BUS SHALL BE ISOLATED FROM EARTH GROUND.
2. INSTALL DOOR CATCH TO INTERLOCK PROVIDED WITH OPERATOR TO INTERLOCK DOORS WITH HANDLE OPERATOR

REFERENCE DRAWINGS

E-1	CONTROL PANEL ELEVATIONS & DETAILS
E-3	LOCAL PUSHBUTTON PANEL LAYOUT & DETAILS
E-4	CONTROL PANEL WIRING DIAGRAM
E-5	SCHEMATIC WIRING DIAGRAM SH1
E-6	SCHEMATIC WIRING DIAGRAM SH2

MATERIAL LIST

ITEM	PART NO.	QTY.	DESCRIPTION	SUPPLIED BY
1	CUSTOM ENCL	1	HOFFMAN SPECIAL ORDER ENCLOSURE TO BE SAME AS CAT NO. A42X2E5408 WALL MOUNT PREFERED CUTOUT DISCONNECT ENCLOSURE WITH 2 INTERLOCKING DOORS. FABRICATE TO NEMA 4X RATING FROM 304 STALINESS STEEL. 42"H X 54"W X 8"D. WITH WELDED SS DRIP SHIELD.	PANEL FAB
2	A37P48G	2	HOFFMAN CONDUCTIVE PANEL 37.88 X 48.00	PANEL FAB
3	DAH4001B	1	HOFFMAN ELECTRIC HEATER, 400 WATT 120VAC WITH THERMOSTAT	PANEL FAB
4	LF120V28	1	HOFFMAN FLUORESCENT PANEL LIGHT, 120V, 28-IN	PANEL FAB
5	S500-A300	2	TROMBETTA SOLENOID ELECTRONIC CONTROL MODULE, 120V.	PANEL FAB
6	1018MB	2	NSI INDUSTRIES NEUTRAL BAR AND NEUTRAL ASSEMBLY, 225A NEUTRAL BAR WITH MOUNTING BASE, (18) 4-14 AWG WIRE RANGE, 600VAC VOLTAGE, 350 MCM - 6 LUG SIZE, 2.250" WIDTH, 2.750" HEIGHT, 3.257" LENGTH	PANEL FAB
7	SPV100240S2K	1	EATON SPV SERIES SURGE PROTECTOR 100KA, 120/240VAC SINGLE SPLIT PHASE (3W+G)	PANEL FAB
8	140U-H2C3-D10	1	AB MOLDED CASE CIRCUIT BREAKER, H-FRAME, 35KA-240V SCCR, T/M - FIXED THERMAL/FIXED MAGNETIC, 100A RATED WITH 4/0 LINE LUGS AND MULTI-TAP LOAD LUGS AS REQUIRED WITH LINE AND LOAD TERMINAL SHIELDS	PANEL FAB
9	140U-H-FCS10	1	AB EXTERNAL BREAKER OPERATOR WITH 10 FT. FLEX CABLE MECHANISM, STAINLESS STEEL	PANEL FAB
10	140U-D6D2-C30	1	AB MOLDED CASE CIRCUIT BREAKER, D-FRAME (UP TO 30A), 20...69 KA, T/M - FIXED THERMAL / FIXED MAGNETIC, RATED CURRENT 630A	PANEL FAB
11	140U-H2C2-C60	2	AB MOLDED CASE CIRCUIT BREAKER, H-FRAME (UP TO 125A), 20...29 KA, T/M - FIXED THERMAL / FIXED MAGNETIC, RATED CURRENT 60A, 2 POLE	PANEL FAB
12	300-COD930	1	300 NEMA CONTACTOR, NEMA SIZE 2, OPEN, 120V 60HZ / 110V 50HZ, THREE POLES AND 3 N.O. AUXILIARY CONTACTS	PANEL FAB
13	1492-FB1J60-L	2	1492-FB FUSE HOLDER WITH 1 POLE, CLASS J TYPE FUSES, 60A AND LED BLOWN FUSE INDICATOR.	PANEL FAB
14	LPJ-35SP	8	BUSS HRC-I CLASS J, 10 SEC TIME DELAY (AT 500 PERCENT RATED LOAD), DUAL ELEMENT, 600 VAC; 35A (6 SPARE)	PANEL FAB
15	140M-F8N-C45	1	MCP, STANDARD MAGNETIC TRIP (FIXED AT 13 X LE), 45 A, 3PH, HIGH PERFORMANCE, FRAME SIZE F	PANEL FAB
16	305-COD-EEF	1	AB 305 NEMA REVERSING STARTER, NEMA 2, 3PH, 110V 50HZ / 120V 60HZ CONTROL VOLTAGE, CONVENTIONAL COIL, 9 - 45 AMPS E1 PLUS OVERLOAD RELAY	PANEL FAB
17	140M-F8N-C32	1	AB MCP, STANDARD MAGNETIC TRIP (FIXED AT 13 X LE), 32 A, 3PH, HIGH PERFORMANCE, FRAME SIZE F	PANEL FAB
18	305-BOD-EEE	1	B 305 NEMA REVERSING STARTER, NEMA 1, 3PH, 110V 50HZ / 120V 60HZ CONTROL VOLTAGE, CONVENTIONAL COIL, 5.4 - 27 AMPS E1 PLUS OVERLOAD RELAY	PANEL FAB
19	100-SA11	6	AB AUXILIARY CONTACT BLOCK, SIDE MOUNTING, 1 N.O. 1 N.C.	PANEL FAB
20	1492-REC20G	1	AB1492 DIN RAIL RECEPTACLE, 20A, GROUND FAULT CURRENT INTERRUPT	PANEL FAB
21	700-CF220D & 100-ETB30	1	AB MCS-CF CONTROL RELAY, 2-NO, 2-NC, 120V 60HZ WITH ELECTRONIC TIMING MODULE, OFF-DELAY (1 SEC. - 30 SEC.)	PANEL FAB
22	700-CF310D	1	AB MCS-CF CONTROL RELAY, 3-NO, 1-NC, 120V 60HZ	PANEL FAB
23	1489-A2C150	1	AB 1489 MINIATURE CIRCUIT BREAKERS, AC DEVICE, 2 POLE, TYPE C TRIP CURVE (INDUCTIVE), 15 AMP, 277 VAC	PANEL FAB
24	1489-AACL212	1	AB 1489 BUS BAR, 2 POLE, L1/L2 CIRCUIT FOR 12 SP BREAKERS	PANEL FAB
25	1489-AACLT35	2	AB 1489 TERMINAL, 1 POLE	PANEL FAB
26	1489-A1C200	12	AB 1489 MINIATURE CIRCUIT BREAKERS, AC DEVICE, 1 POLE, TYPE C TRIP CURVE (INDUCTIVE), 20 AMP, 277 VAC	PANEL FAB
27	1492-PDM3111	3	AB 1492 POWER BLOCK, PDM MINI-STYLE BLOCK, 3-POLE, ALUMINUM, 1 OPENING LINE SIDE, 1 OPENING LOAD SIDE, 115 AMPS	PANEL FAB
28	1492-W4	65	AB IEC TERMINAL BLOCK, SPACE-SAVER FEED-THROUGH BLOCKS, 4 MM (# 22 AWG - # 10 AWG) OR 2.5 MM (# 22 AWG - # 12 AWG), SINGLE-CIRCUIT TERMINAL BLOCK, GRAY	PANEL FAB
29	199-DR1	2	AB ZINC/STEEL DIN RAIL EN 50022 (35MM X 7.5MM X 1 METER)	PANEL FAB
30	1492-EAJ35	4	AB END ANCHOR, DIN RAIL - NORMAL DUTY	PANEL FAB
31	1492-EB3	2	AB END BARRIER FOR 1492-EB3, GRAY (STANDARD)	PANEL FAB
32	HN3X4LG6 & HC2LG6	AS SHOWN	PANDUIT 3X4 TYPE-H NARROW SLOT WIRING DUCT W/COVER	PANEL FAB
33	HN2X3LG6 & HC23LG6	AS SHOWN	PANDUIT 2X3 TYPE-H NARROW SLOT WIRING DUCT W/COVER	PANEL FAB
34		AS SHOWN	WHITE LAMACOID NAMEPLATE WITH BLACK LETTERING SIZE AS NOTED	PANEL FAB
35		AS SHOWN	DANGER HIGH VOLTAGE AHUTRHOIZED PERSONNEL ONLY (SEE DETAIL "A")	PANEL FAB

RELEASED FOR BID
DATE: 8/15/2013

Stantec

STATE OF MAINE
DEPARTMENT OF TRANSPORTATION

WIN 18386.00 HIGHWAY PLANS

STATE OF MAINE RICHARD A. NADEAU No. 10553 LICENSED PROFESSIONAL ENGINEER 8-15-2013

SIGNATURE		
P.E. NUMBER	10553	
DATE	08/15/2013	

BY	DATE
PJR	7/9/13
RAN	8/15/13

PROJ. MANAGER
DESIGN-DETAILED
CHECKED-REVIEWED
DESIGN2-DETAILED2
DESIGN3-DETAILED3
REVISIONS 1
REVISIONS 2
REVISIONS 3
REVISIONS 4
FIELD CHANGES

FRENCHBORO PIER AND TRANSFER BRIDGE
FRENCHBORO, MAINE
LONG ISLAND HANCOCK COUNTY

TRANSFER BRIDGE CONTROL PANEL
LAYOUT AND DETAILS

SHEET NUMBER
E-2
23OF 28

C:\Z-U\118820912\drawings\2d_drawings\20700_electrical\20724_wiring_interconnections\E-2.dwg [Layout1] September 04, 2013 - 2:01pm lhart

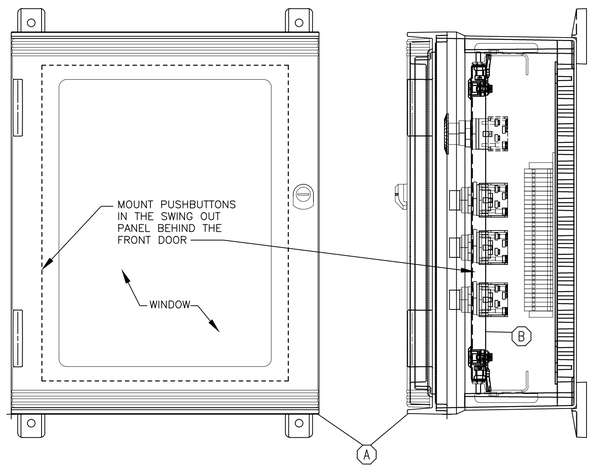

FRONT VIEW

SIDE VIEW

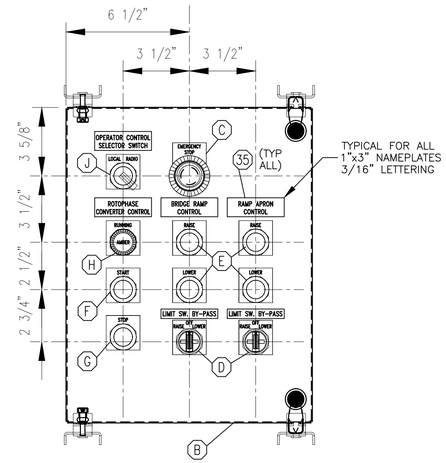

SWING OUT PANEL LAYOUT

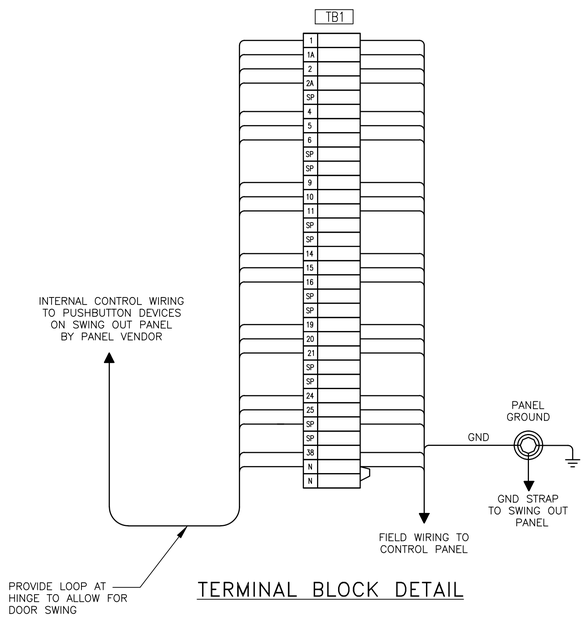

TERMINAL BLOCK DETAIL

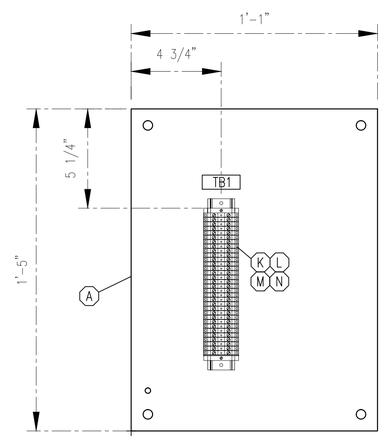

BACK PANEL LAYOUT

MATERIAL LIST

ITEM	PART NO.	QTY.	DESCRIPTION	SUPPLIED BY
A	UU504020W, AP20P16, UUMF & UUHPL	1	HOFFMAN ULTRX, TYPE 4X 20.20 X 16.26 NEMA 4X ENCLOSURE WINDOW DOOR WITH MTG BRACKET KIT, PANEL & PADLOCK HANDLE KIT	PANEL FAB
B	UU5040SP	1	HOFFMAN SWING-OUT PANEL, 17"X12.99"	PANEL FAB
C	800H-FRXJT6A5	1	AB 30.5MM TYPE 4/4X/13 2 POS. PB-NON-ILLUM., JUMBO HD PUSH-PULL W/ TWIST TO REL., RED, 2 NCLB	PANEL FAB
	800H-W300JE	1	AB 800H LEGEND PLATE, JUMBO, EMERGENCY STOP", CUSTOM TEXT, RED	PANEL FAB
D	800H-JR91B	2	AB 30.5MM TYPE 4/4X/13 3 POS. SEL. SW, WHITE, STD. KNOB SPRING RETURN FROM BOTH, 2-NO, 2-NC.	PANEL FAB
	800H-W500E	2	AB 800H LEGEND PLATE,STANDARD, CUSTOM TEXT "RAISE-OFF-LOWER", TEXT, WHITE	PANEL FAB
E	800H-R2B	4	AB 30.5MM TYPE 4/4X/13 MOM. CONTACT PB, NON-ILLUM., BLACK, BOOTED HD, 2-NO, 2-NC	PANEL FAB
	800H-W520	2	AB 800H LEGEND PLATE, STANDARD, "RAISE", WHITE	PANEL FAB
	800H-W515	2	AB 800H LEGEND PLATE, STD, "LOWER", WHITE	PANEL FAB
F	800H-R2B	1	AB 30.5MM TYPE 4/4X/13 MOM. CONTACT PB, NON-ILLUM., BLACK, BOOTED HD, 2-NO, 2-NC	PANEL FAB
	800H-W526	1	AB 800H LEGEND PLATE, STANDARD, "START", WHITE	PANEL FAB
G	800H-R6B	1	30.5MM TYPE 4/4X/13 MOM. CONTACT PB, NON-ILLUM., RED, BOOTED HD, 2 NO-2 NC	PANEL FAB
	800H-W371	1	AB 800H LEGEND PLATE, STANDARD, "STOP", RED	PANEL FAB
H	800H-PRH16A	1	30.5MM TYPE 4/4X/13 PILOT LIGHT, XFMR, LED, AMBER, 120V AC 50/60 HZ	PANEL FAB
	800H-W500E	1	AB 800H LEGEND PLATE, STD, CUSTOM TEXT "RUNNING", WHITE	PANEL FAB
J	800H-HR2B	1	AB 30.5MM TYPE 4/4X/13 2 POS SEL. SW, WHITE, STD. KNOB MAINT, 2-NO, 2-NC	PANEL FAB
	800H-W5	1	AB 800H LEGEND PLATE, STD, CUSTOM TEXT "LOCAL-RADIO", WHITE	PANEL FAB
K	1492-W4	32	AB IEC TERMINAL BLOCK, SPACE-SAVER FEED-THROUGH BLOCKS, 4 MM (# 22 AWG - # 10 AWG) OR 2.5 MM (# 22 AWG - # 12 AWG), SINGLE-CIRCUIT TERMINAL BLOCK, GRAY	PANEL FAB
L	199-DR1	1	AB ZINC/STEEL DIN RAIL EN 50022 (35MM X 7.5MM X 1 METER)	PANEL FAB
M	1492-EAJ35	2	AB END ANCHOR, DIN RAIL - NORMAL DUTY	PANEL FAB
N	1492-EB3	1	AB END BARRIER FOR 1492-EB3, GRAY (STANDARD)	PANEL FAB

REFERENCE DRAWINGS

E-1 CONTROL PANEL ELEVATIONS & DETAILS
E-2 CONTROL PANEL LAYOUT & DETAILS
E-4 CONTROL PANEL WIRING DIAGRAM
E-5 SCHEMATIC WIRING DIAGRAM SH1
E-6 SCHEMATIC WIRING DIAGRAM SH2
E-7 ELECTRICAL SITE PLAN

NOTES:

1. SEE DRAWING E-003 FOR CONTROL WIRING
2. SEE DRAWING E-004 FOR NOTES APPLICABLE TO THIS DRAWING.

RELEASED FOR BID
DATE: 8/15/2013

LOCAL PUSHBUTTON STATION

SCALE =1/4"=0'-1"

Stantec

STATE OF MAINE
DEPARTMENT OF TRANSPORTATION

WIN 18386.00 HIGHWAY PLANS

STATE OF MAINE RICHARD A. NADEAU No. 10553 LICENSED PROFESSIONAL ENGINEER 8-15-2013

SIGNATURE		
P.E. NUMBER	10553	
DATE	08/15/2013	

	BY	DATE
DESIGN-DETAILED	PJR	7/9/13
CHECKED-REVIEWED	RAN	8/15/13
DESIGN2-DETAILED2		
DESIGN3-DETAILED3		
REVISIONS 1		
REVISIONS 2		
REVISIONS 3		
REVISIONS 4		
FIELD CHANGES		

PROJ. MANAGER

FRENCHBORO PIER AND TRANSFER BRIDGE
FRENCHBORO, MAINE
LONG ISLAND HANCOCK COUNTY

TRANSFER BRIDGE LOCAL PUSHBUTTON PANEL LAYOUT AND DETAILS

SHEET NUMBER

E-3

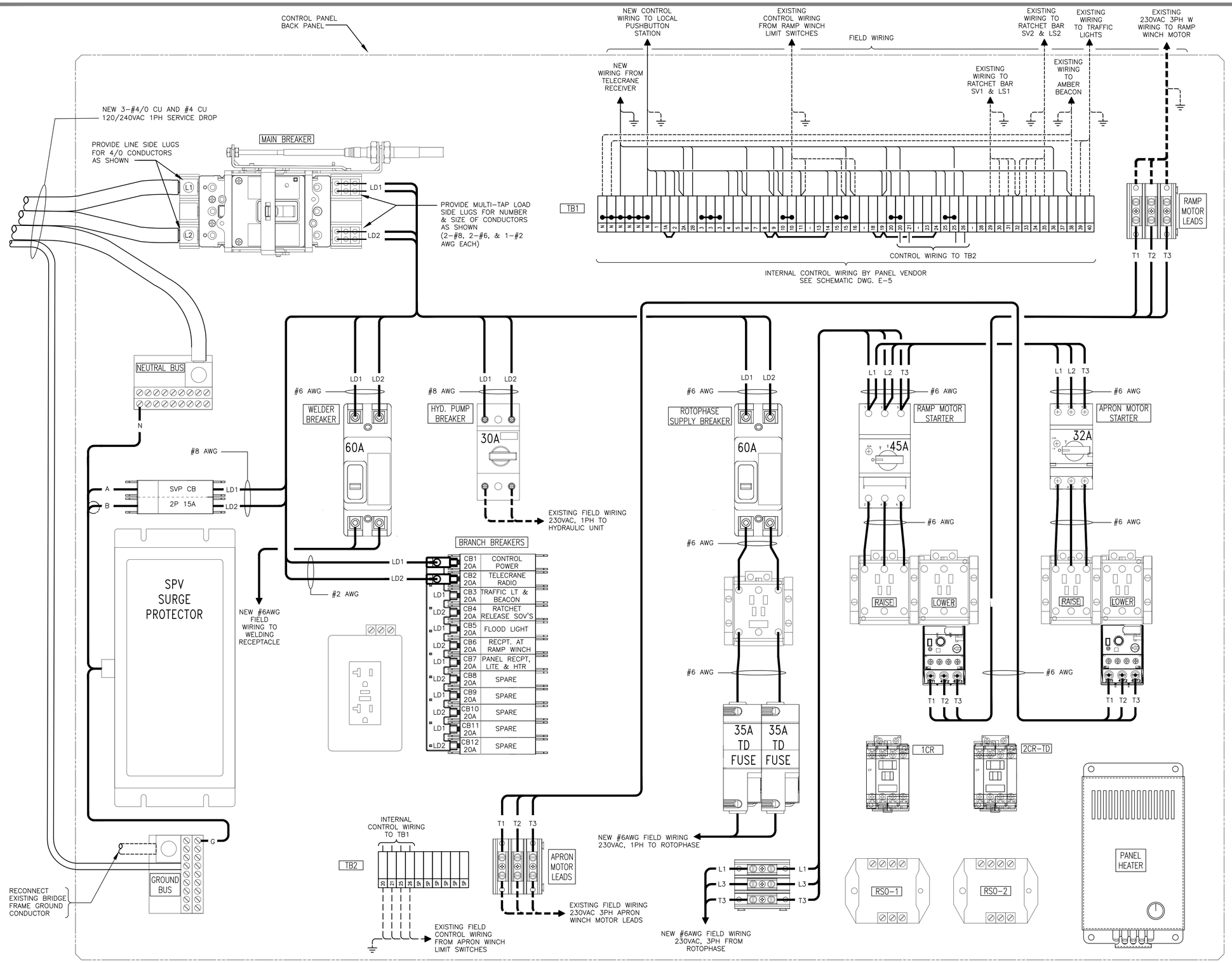

REFERENCE DRAWINGS

E-1	CONTROL PANEL ELEVATIONS & DETAILS
E-2	CONTROL PANEL LAYOUT & DETAILS
E-3	LOCAL PB PANEL LAYOUT & DETAILS
E-4	CONTROL PANEL WIRING DIAGRAM
E-5	SCHEMATIC WIRING DIAGRAM SH1
E-6	SCHEMATIC WIRING DIAGRAM SH2
E-7	ELECTRICAL SITE PLAN

NOTES:

1. SEE DRAWING E-003 FOR CONTROL WIRING.
2. ALL INTERNAL CONTROL WIRING TO BE #12 SIS TYPE OR EQUAL.
3. ALL INTERNAL POWER WIRING TO BE TYPE XHHW STRANDED TYPE, SIZE AS NOTED.
4. NO CONDUITS ENTRIES SHALL BE MADE THROUGH THE TOP OF THE CONTROL PANEL. ALL ENTRIES SHALL BE MADE WITH WATERTIGHT HUBS.
5. CONTRACTOR SHALL VERIFY THE FIELD WIRING WITH THAT SHOWN ON THE SCHEMATIC PRIOR TO CONNECTION TO NEW CONTROL PANEL.
6. CONTRACTOR SHALL PROVIDE AND INSTALL NEW CONDUCTORS AS REQUIRED. IF CONDUCTORS ARE SHORT PROVIDE NEW CONDUCTORS TO REPLACE.
7. ALL WORK SHALL PERFORMED IN ACCORDANCE WITH THE CURRENT NATIONAL ELECTRICAL CODE.
8. ALL CONDUCTORS TO BE PERMANENTLY IDENTIFIED WITH WIRE NUMBERS USING PRINTED HEAT SHRINK TYPE LABELS.

RELEASED FOR BID
DATE: 8/15/2013

STATE OF MAINE
DEPARTMENT OF TRANSPORTATION

WIN 18386.00
HIGHWAY PLANS

STATE OF MAINE
RICHARD A. NADEAU
No. 10553
LICENSED PROFESSIONAL ENGINEER
8-15-2013

SIGNATURE		
P.E. NUMBER	10553	
DATE	08/15/2013	

	BY	DATE
DESIGN-DETAILED	MJD	12-4-12
CHECKED-REVIEWED	RAN	8-15-13
DESIGN2-DETAILED2		
DESIGN3-DETAILED3		
REVISIONS 1		
REVISIONS 2		
REVISIONS 3		
REVISIONS 4		
FIELD CHANGES		

PROJ. MANAGER

FRENCHBORO PIER AND TRANSFER BRIDGE
FRENCHBORO, MAINE
LONG ISLAND HANCOCK COUNTY

TRANSFER BRIDGE CONTROL PANEL
WIRING DIAGRAM

Stantec

SHEET NUMBER
E-4
25 OF 28

G:\Active\1185809121\drawings\2d_drawings\20700_electrical\20724_wiring_interconnections\E-4.dwg [Wiring] September 04, 2013 - 2:02pm rhart

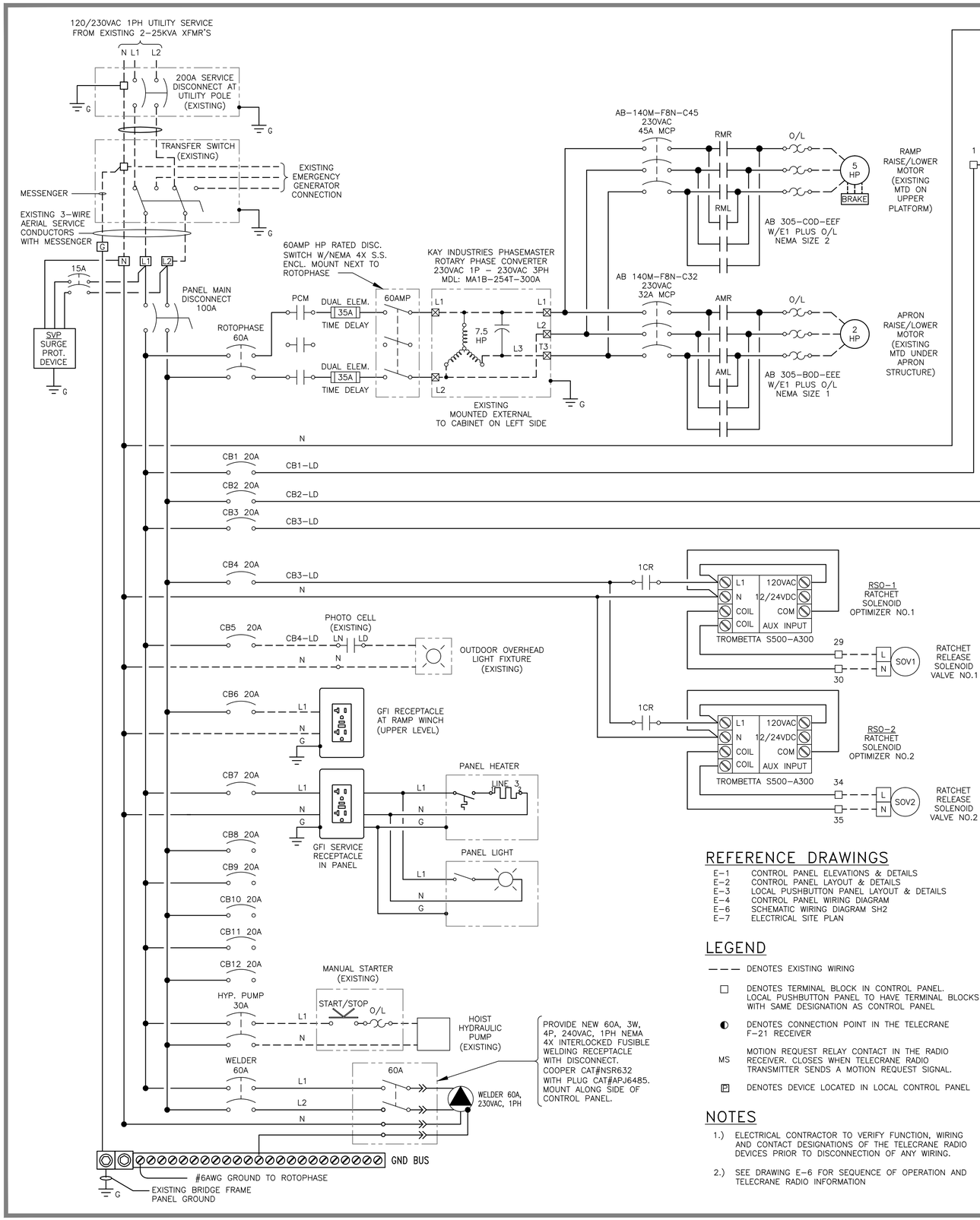

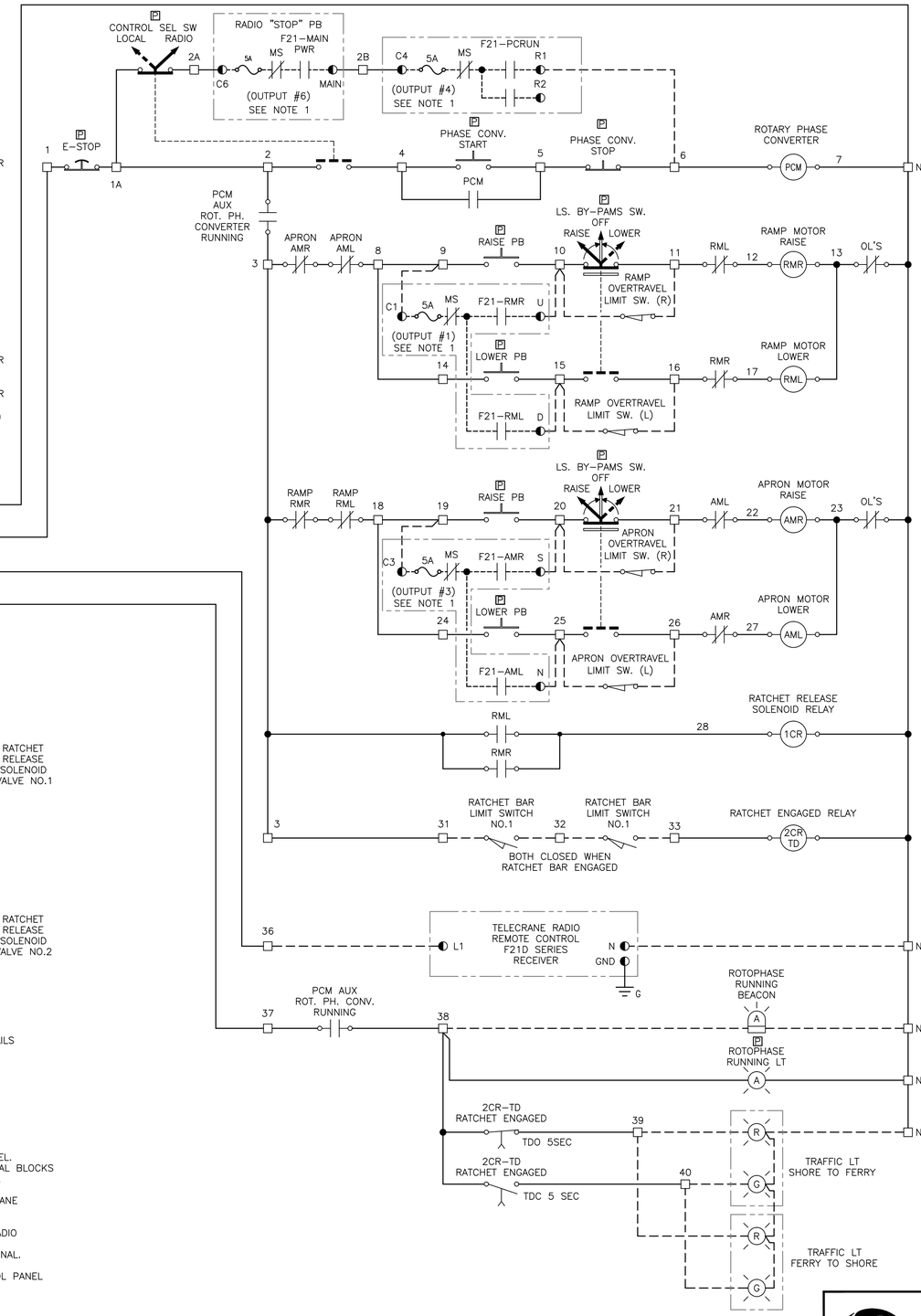

REFERENCE DRAWINGS

E-1	CONTROL PANEL ELEVATIONS & DETAILS
E-2	CONTROL PANEL LAYOUT & DETAILS
E-3	LOCAL PUSHBUTTON PANEL LAYOUT & DETAILS
E-4	CONTROL PANEL WIRING DIAGRAM
E-6	SCHEMATIC WIRING DIAGRAM SH2
E-7	ELECTRICAL SITE PLAN

LEGEND

- — — — DENOTES EXISTING WIRING
- □ DENOTES TERMINAL BLOCK IN CONTROL PANEL. LOCAL PUSHBUTTON PANEL TO HAVE TERMINAL BLOCKS WITH SAME DESIGNATION AS CONTROL PANEL
- ◐ DENOTES CONNECTION POINT IN THE TELECRANE F-21 RECEIVER
- MS MOTION REQUEST RELAY CONTACT IN THE RADIO RECEIVER. CLOSES WHEN TELECRANE RADIO TRANSMITTER SENDS A MOTION REQUEST SIGNAL.
- [P] DENOTES DEVICE LOCATED IN LOCAL CONTROL PANEL

NOTES

1.) ELECTRICAL CONTRACTOR TO VERIFY FUNCTION, WIRING AND CONTACT DESIGNATIONS OF THE TELECRANE RADIO DEVICES PRIOR TO DISCONNECTION OF ANY WIRING.

2.) SEE DRAWING E-6 FOR SEQUENCE OF OPERATION AND TELECRANE RADIO INFORMATION

RELEASED FOR BID
DATE: 8/15/2013

Stantec

DEPARTMENT OF TRANSPORTATION

WIN 18386.00 HIGHWAY PLANS

STATE OF MAINE RICHARD A. NADEAU No. 10553 LICENSED PROFESSIONAL ENGINEER 8-15-13

SIGNATURE	P.E. NUMBER	DATE
	10553	08/15/2013

DESIGN1-DETAILED	PJR	7/9/13
CHECKED-REVIEWED	RAN	8/15/13
DESIGN2-DETAILED2		
DESIGN3-DETAILED3		
REVISIONS 1		
REVISIONS 2		
REVISIONS 3		
REVISIONS 4		
FIELD CHANGES		

FRENCHBORO, MAINE
LONG ISLAND HANCOCK COUNTY

TRANSFER BRIDGE CONTROL PANEL
SCHEMATIC WIRING DIAGRAM SH.1

SHEET NUMBER

E-5

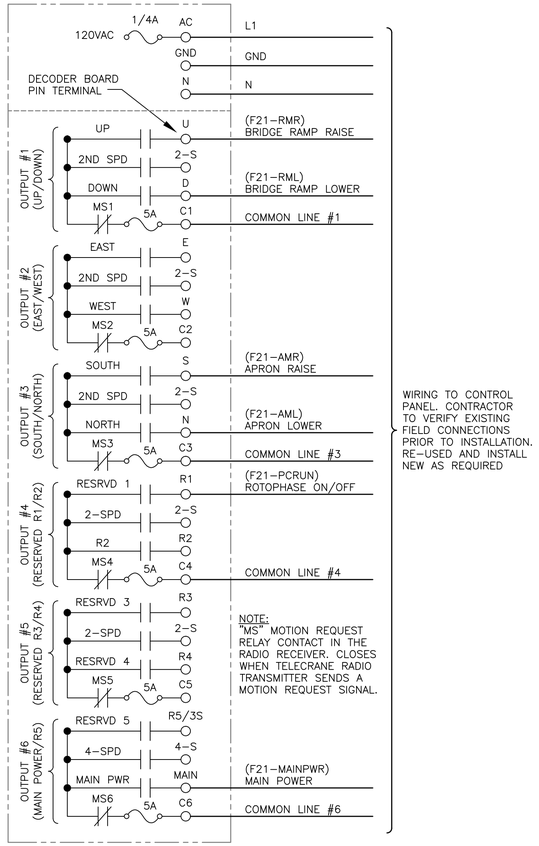

EXISTING TELECRANE F21D
RADIO RECEIVER SCHEMATIC DIAGRAM

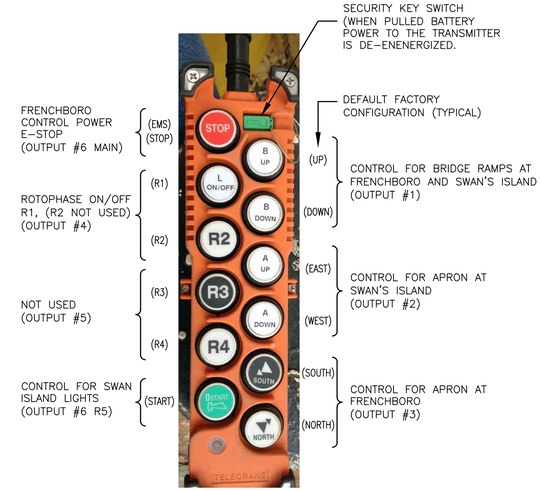

EXISTING FERRY OPERATOR
TELECRANE F21DN1-TRX
RADIO TRANSMITTER DETAIL

SEQUENCE OF OPERATION

1. CONTROL OF THE BRIDGE ROTOPHASE CONVERTER, RAMP AND APRON CAN BE CONTROLLED BY THE FERRY OPERATOR'S REMOTE RADIO CONTROL TRANSMITTER OR BY THE LOCAL CONTROL PB STATION AT THE BRIDGE. THIS IS CONTROLLED BY THE POSITION OF THE OPERATOR CONTROL SELECTOR SWITCH LOCATED IN THE LOCAL PUSHBUTTON PANEL.

2. THE E-STOP PUSHBUTTON AT THE LOCAL PB STATION WILL SHUT DOWN THE ROTOPHASE CONVERTER, POWER TO THE MOTORS AND THE CONTROL CIRCUIT POWER FOR THE MOTORS AND RAMP ENGAGEMENT SOLENOIDS. THE STOP PUSHBUTTON ON FERRY OPERATORS REMOTE RADIO TRANSMITTER WILL PERFORM THE SAME FUNCTION.

3. OPERATION BY THE FERRY OPERATOR'S REMOTE RADIO CONTROL TRANSMITTER – (CONTROL SEL. SW. IN "RADIO" POSITION)

A.) PRESSING THE ROTOPHASE ON/OFF BUTTON ON THE REMOTE TRANSMITTER WILL START THE ROTOPHASE AND TURN ON THE 3PHASE 230VAC POWER. THE AMBER BEACON FACING THE FERRY WILL ILLUMINATE. THE RATCHET BAR WILL BE IN ITS NORMAL DE-ENGAGED STATE AND GREEN TRAFFIC LIGHT WILL ILLUMINATE INDICATING THE BAR IS ENGAGED.

B.) PRESSING THE RAMP RAISE OR LOWER BUTTON ON THE REMOTE TRANSMITTER WILL ENERGIZING THE RAMP MOTOR TO RUN IN THE SELECTED DIRECTION AND ENERGIZING RELAY 1CR THUS ENERGIZING THE RATCHET RELEASE SOLENOIDS, (NOTE: WHEN THE RAMP RATCHET BAR RELEASES THE RATCHET LIMITS SWITCHES WILL OPEN AND DE-ENERGIZE THE TIMING RELAY 2CR-TD. THE RED TRAFFIC LIGHT WILL ILLUMINATE DESIGNATING TRAFFIC TO STOP AND NOT TRAVEL ONTO THE RAMP.)

C.) WHEN THE OPERATOR RELEASES THE RAMP RAISE AND LOWER BUTTONS THE RAMP MOTOR WILL STOP, 1CT WILL DE-ENERGIZE AND THE RATCHET RELEASE SOLENOIDS WILL DE-ENERGIZE. THE RATCHET BAR WILL ENGAGE, THE LIMITS SWITCHES WILL CLOSE AND ENERGIZE THE TIME DELAY RELAY. THE TRAFFIC LIGHT WILL SWITCH FROM RED TO GREEN AFTER A 5 SECOND DELAY. RAMP OVERTRAVEL LIMIT SWITCHES ON THE WINCH WILL SHUT THE MOTOR DOWN WHEN THE TRAVEL LIMITS HAVE BEEN REACHED.

D.) PRESSING THE APRON RAISE OR LOWER BUTTON ON THE REMOTE TRANSMITTER WILL ENERGIZE THE APRON MOTOR TO RUN IN THE SELECTED DIRECTION. OVERTRAVEL LIMIT SWITCHES ON THE WINCH WILL SHUT THE MOTOR DOWN WHEN THE TRAVEL LIMITS HAVE BEEN REACHED.

E.) WHEN THE OPERATOR PRESSES THE ROTOPHASE ON/OFF BUTTON ON THE REMOTE TRANSMITTER THE ROTOPHASE WILL STOP AND SHUT THE 3 PHASE 230VAC OFF.

F.) PRESSING THE STOP BUTTON ON THE REMOTE TRANSMITTER ACTS AS AN E-STOP DISCONNECTING THE CONTROL POWER CIRCUIT. THIS IS THE SAME FUNCTION AS PRESSING THE LOCAL E-STOP PUSHBUTTON.

G.) IF THE OPERATOR PULLS THE "SECURITY KEY SWITCH" (GREEN BUTTON WITH KEY ICON AND PULL WIRE), THIS WILL CAUSE THE RADIO POWER TO TURN OFF AND RADIO TRANSMISSION WILL STOP.

4.) CONTROL FROM THE LOCAL PUSHBUTTON STATION ON SHORE – (CONTROL SE. SW. IN "LOCAL" POSITION)

A.) THE ROTOPHASE CAN BE STARTED AND STOPPED VIA THE LOCAL START AND STOP PUSHBUTTONS.

B.) THE RAMP AND APRON CAN BE CONTROLLED IN THE SAME MANNER AS THE FERRY OPERATOR VIA MOMENTARY RAISE AND LOWER PUSHBUTTONS.

C.) PRESSING THE LOCAL E-STOP PUSHBUTTON WILL DISCONNECT THE POWER TO THE CONTROL CIRCUITS DE-ENERGIZING THE PHASE CONVERTER, RAMP, APRON AND RATCHET CONTROL CIRCUITS.

D.) DURING PERIODS OF EXTREME TIDES THE RAMP AND APRON OVERTRAVEL LIMIT SWITCHES CAN BE BYPASSED BY HOLDING THE APPROPRIATE SELECTOR SWITCH IN THE BYPASS POSITION AND PRESSING THE APPROPRIATE RAISE OR LOWER PUSHBUTTON AT THE SAME TIME. RELEASING THE SELECTOR SWITCH WILL RETURN THE CIRCUIT TO THE NORMAL NON-BYPASSED STATE.

REFERENCE DRAWINGS

E-1	CONTROL PANEL ELEVATIONS & DETAILS
E-2	CONTROL PANEL LAYOUT & DETAILS
E-3	LOCAL PUSHBUTTON PANEL LAYOUT & DETAILS
E-4	CONTROL PANEL WIRING DIAGRAM
E-5	SCHEMATIC WIRING DIAGRAM SH1
E-7	ELECTRICAL SITE PLAN

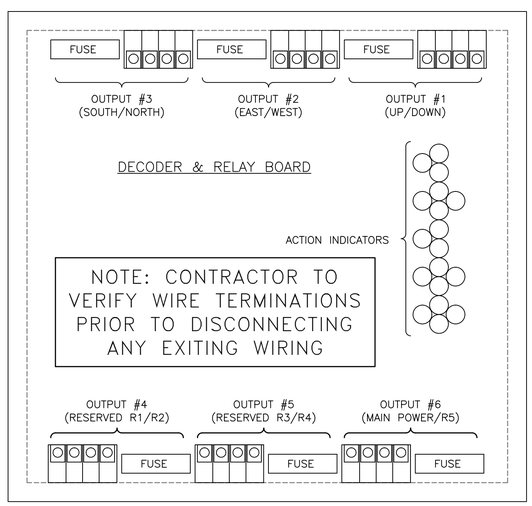

EXISTING TELECRANE F21D
RADIO RECEIVER TERMINAL LAYOUT

F-21D FUNCTION SWITCH SETTING FOR TELECRANE RADIO RECEIVER AT FRENCHBORO

FUNCTION NO. 3	FUNCTION NO. 2	FUNCTION NO. 1	OUTPUT NO.	FACTORY BUTTON NAME	M.D.O.T. BUTTON FUNCTION	SEC KEY	M.D.O.T. BUTTON FUNCTION	FACTORY BUTTON NAME	OUTPUT NO.	FUNCTION
EMERGENCY STOP AND BATTERY POWER DETECTION			6 MAIN	EMS STOP	STOP E-STOP	STOP / B UP	BRIDGE RAMP UP	UP	1 U	UP & DOWN INTERLOCKED TO EACH OTHER
UNCONTROLLED BY STOP = SWITCH #4	TOGGLE = SWITCH #3	R1 & R2 INTERLOCKED = SWITCH #2	4 R1	R1	ROTO-PHASE ON/OFF	ON/OFF / B DOWN	BRIDGE RAMP DOWN	DOWN	1 D	
	TOGGLE = SWITCH #5		4 R2	R2	–	R2 / A UP	–	EAST	2 E	EAST & WEST INTERLOCKED TO EACH OTHER
UNCONTROLLED BY STOP = SWITCH #4	TOGGLE = SWITCH #7	R3 & R4 INTERLOCKED = SWITCH #6	5 R3	R3	–	R3 / A DOWN	–	WEST	2 W	
	TOGGLE = SWITCH #9		5 R4	R4	–	R4 / SOUTH	APRON UP	SOUTH	3 S	SOUTH & NORTH INTERLOCKED TO EACH OTHER
TOGGLE = SWITCH #12	ACCEL = SWITCH #11	INTERLOCK = SWITCH #10	6 R5	R5	–	STOP / NORTH	APRON DOWN	NORTH	3 N	

NOTE: CONTRACTOR TO VERIFY SWITCH SETTINGS PRIOR TO DISCONNECTING ANY WIRING

RELEASED FOR BID
DATE: 8/15/2013

Stantec

DEPARTMENT OF TRANSPORTATION
WIN 18386.00
HIGHWAY PLANS

STATE OF MAINE
RICHARD A. NADEAU
No. 10553
LICENSED PROFESSIONAL ENGINEER
8-15-13

SIGNATURE		7/9/13
P.E. NUMBER	10553	8/15/13
DATE	08/15/2013	

DESIGN-DETAILED	-	PJR
CHECKED-REVIEWED	-	RAN
DESIGN2-DETAILED2		
DESIGN3-DETAILED3		
REVISIONS 1		
REVISIONS 2		
REVISIONS 3		
REVISIONS 4		
FIELD CHANGES		

FRENCHBORO, MAINE
LONG ISLAND HANCOCK COUNTY
TRANSFER BRIDGE CONTROL PANEL
LAYOUT AND DETAILS

SHEET NUMBER
E-6
27OF 28

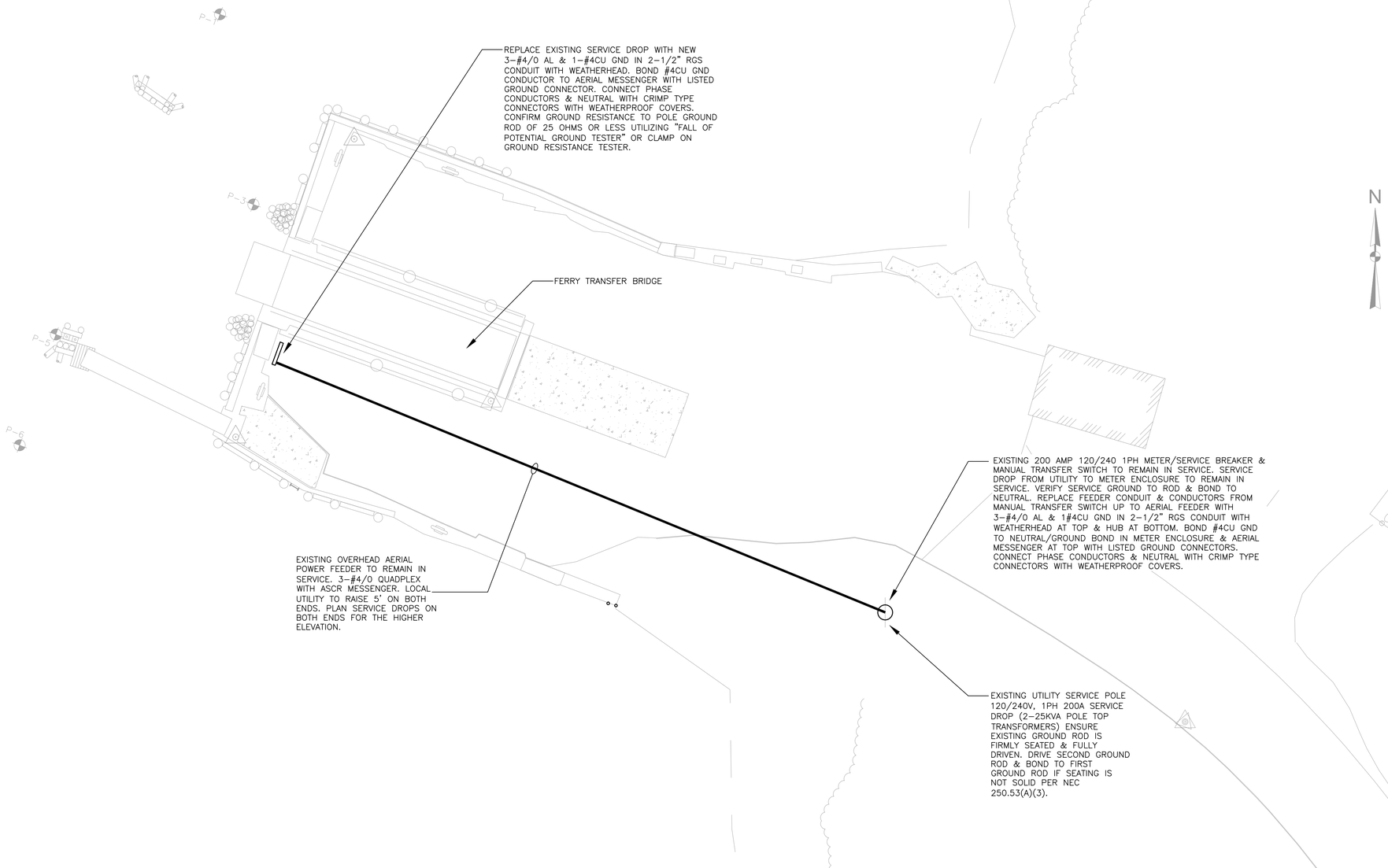

FRENCHBORO TRANSFER BRIDGE POWER PLAN

1"=10'

RELEASED FOR BID
DATE: 8/15/2013

Stantec

DEPARTMENT OF TRANSPORTATION

-

WIN 18386.00

HIGHWAY PLANS

STATE OF MAINE
RICHARD A. NADEAU
No. 10553
LICENSED PROFESSIONAL ENGINEER
8-15-2013

	SIGNATURE	
	10553	P.E. NUMBER
	08/15/2013	DATE

DESIGN–DETAILED	RJR	7/9/13
CHECKED–REVIEWED	RAN	8/15/13
DESIGN2–DETAILED2		
DESIGN3–DETAILED3		
REVISIONS 1		
REVISIONS 2		
REVISIONS 3		
REVISIONS 4		
FIELD CHANGES		

FRENCHBORO, MAINE
LONG ISLAND HANCOCK COUNTY

TRANSFER BRIDGE
ELECTRICAL SITE PLAN

SHEET NUMBER

E–7