Rockland Ferry Terminal

SITE WORK

C-1 SITE PLAN
C-2 SITE PLAN
C-3 SITE DETAILS
C-4 RETAINING WALL
C-5 SANITARY PUMP STATION
C-6 SEAWALL REPAIR
C-7 DETAILS
C-8 DETAILS

STRUCTURAL

S-1 PILE PLAN - TERMINAL BUILDING
S-2 FOUNDATION PLAN - TERMINAL BUILDING
S-3 FOUNDATION SECTIONS & DETAILS
S-4 ROOF FRAMING PLAN
S-5 ROOF FRAMING/SECTIONS & DETAILS
S-6 FOUNDATION PLAN - COLD STORAGE BUILDING

ARCHITECTURAL

A-1 FLOOR PLAN - NORTH
A-2 FLOOR PLAN - SOUTH; KEY/ROOF PLANS
A-3 ELEVATIONS
A-4 INTERIOR ELEVATIONS & DETAILS
A-5 INTERIOR ELEVATIONS & DETAILS
A-6 ENTRY ELEVATIONS & DETAILS
A-7 ENTRY/LOBBY SECTION
A-8 ENTRY/LOBBY CROSS SECTIONS
A-9 CANOPY/WAITING ROOM SECTIONS
A-10 END WALL/WAITING ROOM SECTIONS
A-11 EAST ENTRY/EAST WALL SECTIONS & TICKET BOOTH
A-12 FLAT CANOPY SECTIONS
A-13 REFLECTED CEILING PLAN & DETAILS
A-14 DOOR SCHEDULE & DETAILS
A-15 WINDOW SCHEDULE & DETAILS
A-16 STORAGE BUILDING

MECHANICAL

M-1 PLUMBING PLAN
M-2 HVAC PLAN
M-3 STORAGE BUILDING
M-4 DETAIL SHEET
M-5 SCHEDULE SHEET

ELECTRICAL

E-S ELECTRICAL UTILITIES & SITE LIGHTING
E-1 LIGHTING & FIRE ALARM
E-2 POWER DISTRIBUTION & TELEPHONE
E-3 RISER DIAGRAM & DETAILS
E-4 NOTES, SYMBOLS, & DETAILS

• DESIGN TEAM •

ARCHITECTS

TFH Architects, P.A.
100 Commercial Street
Portland, Maine 04101
207/775-6141

CIVIL ENGINEERING

TEC Associates
169 Front Street
South Portland, Maine 04106
207/767-6068

STRUCTURAL ENGINEERS

Pinkham and Greer
170 U.S.Route 1
Falmouth, Maine 04105
207/781-5242

MECHANICAL ENGINEERS

Pinkham and Greer
170 U.S.Route 1
Falmouth, Maine 04105
207/781-5242

ELECTRICAL ENGINEERS

Electrical Design Consultants, Inc.
P.O.Box 282
Long Island, ME 04050
207/766-5041

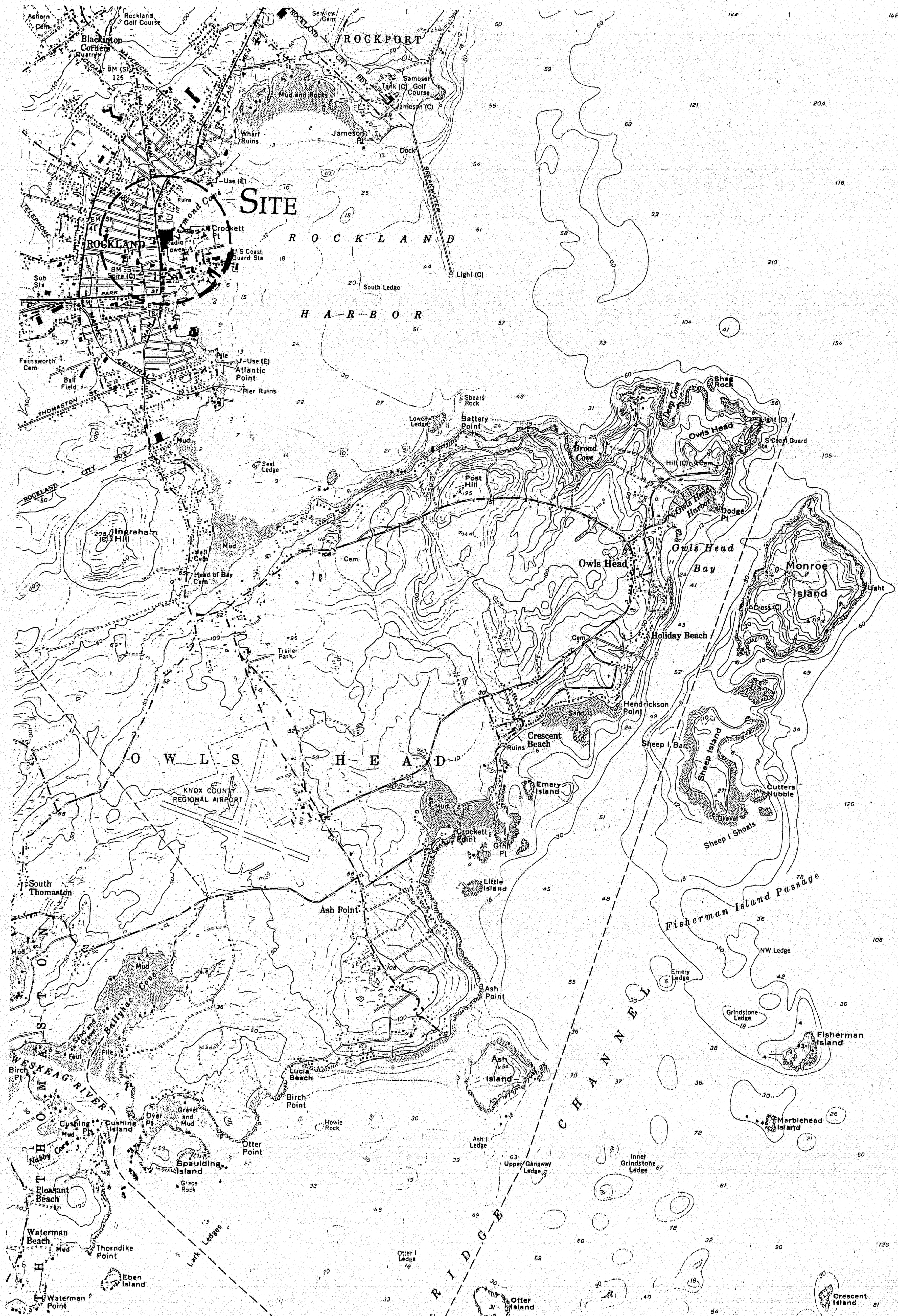

State of Maine

Department of Transportation

Project Number: FBD-6069(00)X

• STATE OF MAINE •
Maine Department of Transportation

129-94

APPROVED

By: [signature]

Title: Deputy Commissioner/MDOT   Date: 11/7/94

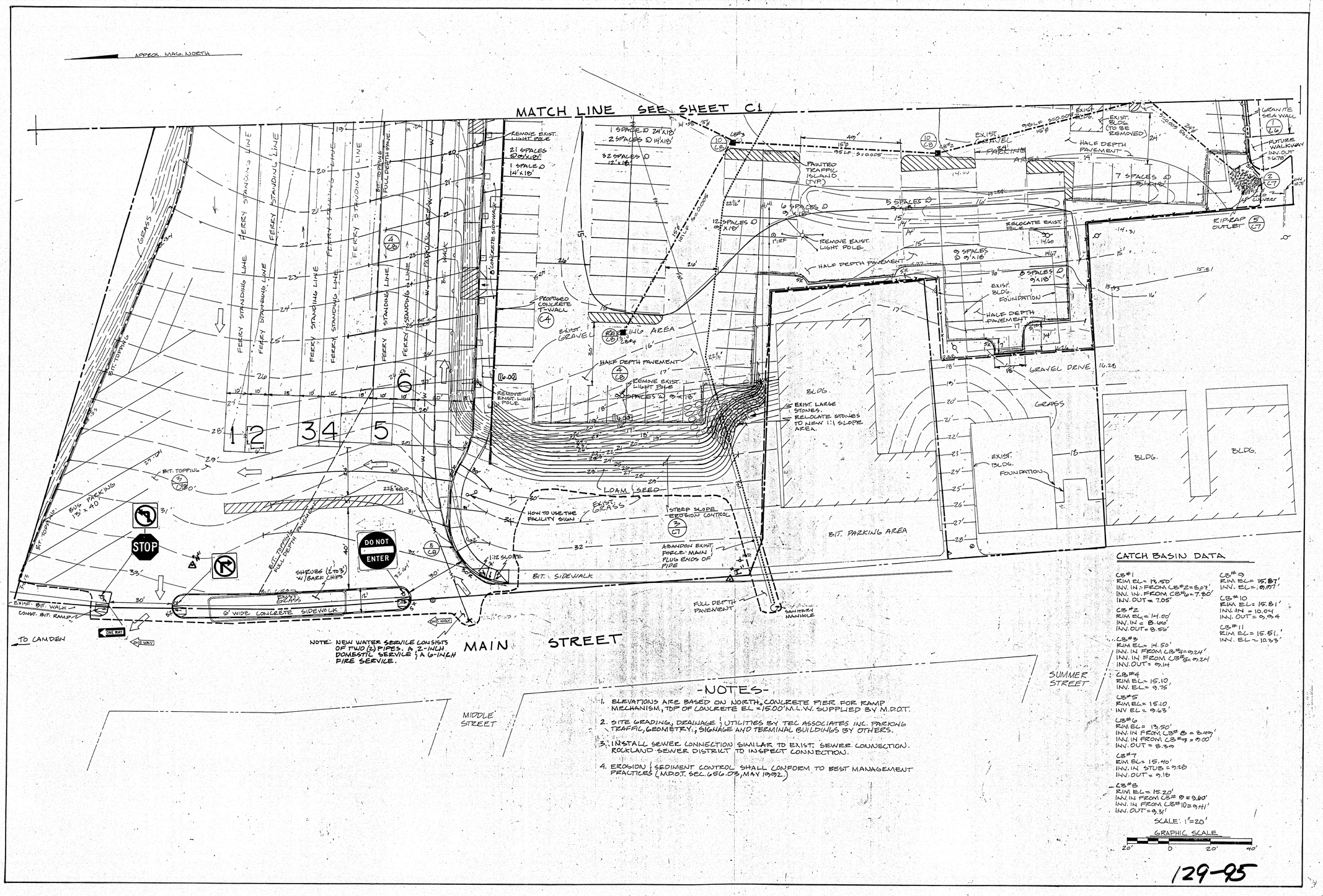

CATCH BASIN DATA

CB#1
RIM EL= 13.50'
INV. IN: FROM CB#2=8.07'
INV. IN: FROM CB#6=7.80'
INV. OUT = 7.05'

CB#2
RIM EL= 14.00'
INV. IN = 8.66'
INV. OUT= 8.56'

CB#3
RIM EL= 14.50'
INV. IN FROM CB#4=9.24'
INV. IN FROM CB#5=9.24'
INV. OUT= 9.14

CB#4
RIM EL= 15.10
INV. EL= 9.75'

CB#5
RIM EL= 15.10
INV EL= 9.63'

CB#6
RIM EL= 13.50'
INV. IN FROM CB#8 = 8.49'
INV. IN FROM CB#7 = 9.00'
INV. OUT = 8.39

CB#7
RIM EL= 15.40'
INV. IN STUB = 9.28
INV. OUT = 9.18

CB#8
RIM EL= 15.20'
INV. IN FROM CB#9 = 9.60'
INV. IN FROM CB#10= 9.41'
INV. OUT= 9.31'

CB#9
RIM EL= 15.87'
INV. EL= 9.97'

CB#10
RIM EL= 15.81'
INV. IN = 10.04
INV. OUT = 9.94

CB#11
RIM EL= 15.51'
INV. EL= 10.33'

SCALE: 1"=20'

GRAPHIC SCALE
20' 0 20' 40'

-NOTES-

1. ELEVATIONS ARE BASED ON NORTH CONCRETE PIER FOR RAMP MECHANISM, TOP OF CONCRETE EL = 15.00' M.L.W. SUPPLIED BY M.D.O.T.
2. SITE GRADING, DRAINAGE & UTILITIES BY TEC ASSOCIATES INC. PARKING TRAFFIC, GEOMETRY, SIGNAGE AND TERMINAL BUILDINGS BY OTHERS.
3. INSTALL SEWER CONNECTION SIMILAR TO EXIST. SEWER CONNECTION. ROCKLAND SEWER DISTRICT TO INSPECT CONNECTION.
4. EROSION & SEDIMENT CONTROL SHALL CONFORM TO BEST MANAGEMENT PRACTICES (M.D.O.T. SEC. 656.03, MAY 1992.)

129-95

REVISIONS

MAINE STATE FERRY SYSTEM
ROCKLAND
NEW TERMINAL FACILITY

TEAS FEELY AND HINGSTON
100 COMMERCIAL STREET
PORTLAND, MAINE 04101
ARCHITECTURE • PLANNING

CIVIL ENGINEERING
TEC ASSOCIATES
STRUCTURAL ENGINEERING
PINKHAM & GREER
MECHANICAL ENGINEERING
BENNETT ENGINEERING
ELECTRICAL ENGINEERING
ELECTRICAL DESIGN CONSULTANTS

APPROVED BY BUREAU OF TRANSPORTATION SERVICES
P. Pottle

STATE OF MAINE
WAYNE WRIGHT DUFFETT
#7673
REGISTERED PROFESSIONAL

DATE	DRAWN
OCT. 12, 1994	J.D.L.
SCALE	CHECKED
1" = 20'	WWD
MDOT PROJ. #	TFH PROJ. #
F.B.D.-6069(00)X	9216

DRAWING TITLE
SITE PLAN

DRAWING NUMBER
C2

ROCKLAND HARBOR

APPROX. MAG. NORTH

-LEGEND-

EXISTING		PROPOSED	
PROPERTY LINE		PAINTED TRAFFIC ISLAND	
FENCE	—x—x—	CHAIN LINK FENCE	—x—x—
WIRE GUARD RAIL		GRANITE OR CONCRETE CURB	
METAL GUARD RAIL		METAL GUARD RAIL	
EXISTING CONTOUR	—16—	PROPOSED CONTOUR	15'
UNDERGROUND ELECTRICAL	—UE—UE—	WASTE OIL LINE	—WO—WO—
ELECTRICAL CONDUIT	—EC—EC—	SANITARY SEWER LINE	
SANITARY PUMP STATION	(PS)	PUMP STATION	(PS)
POWER POLE		STORM DRAIN	
POWER POLE W/ LIGHT		FORCE MAIN	
IRON ROD FOUND	⊙ IRF	CATCH BASIN	
SWALE		MANHOLE	
CATCH BASIN		WATER MAIN	—W—W—
SPOT ELEVATION	15.15	SPOT ELEVATION	⊓5.0
TEST BORING		SILT FENCE	—SF—
SANITARY FORCE MAIN	—FM—FM—	BUILDING	
		LIMIT OF WORK	

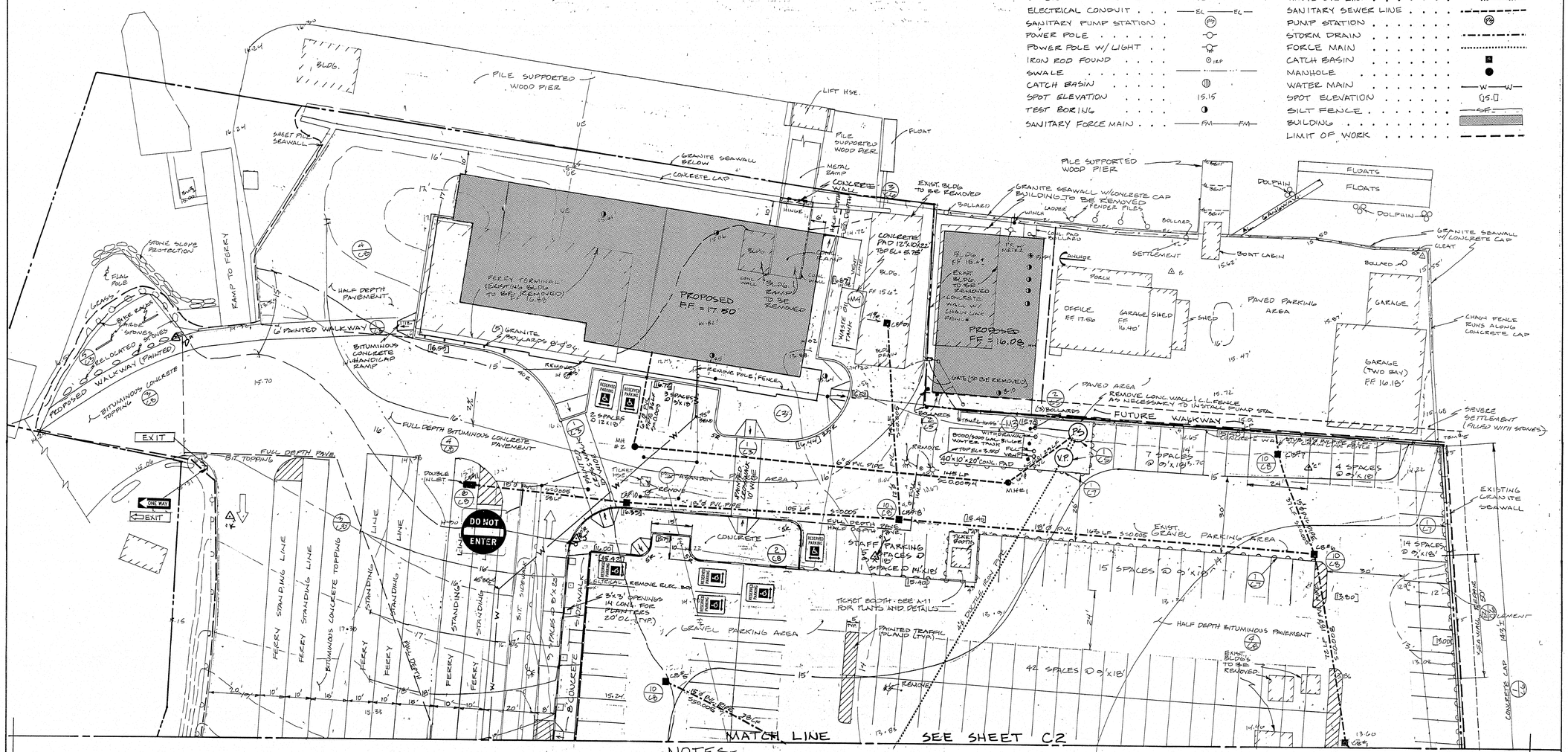

SANITARY MANHOLE DATA

MH #1 RIM EL = 15.05', INV. IN = 10.64', INV. OUT = 10.54'

INV. EL @ BLDG = 12.42'

MH #2 RIM EL = 16.29', INV. IN = 12.10', INV. OUT = 12.00'

-NOTES-

1. WHERE SEWER PIPE CROSSES OVER WATER PIPE THE WATER PIPE MUST BE AT THE MID POINT BETWEEN JOINTS IN THE SEWER PIPE.
2. SITE CONTRACTOR SHALL PROVIDE EXCAVATION, BACKFILL AND CONCRETE WORK FOR WASTE OIL TANK & BILGE WATER TANK INSTALLATION.
3. SANITARY SEWER & STORM SEWER PIPE TO BE PVC SDR 35 PIPE.
4. ALL WORK SHALL CONFORM WITH ALL LOCAL, STATE & FEDERAL REGULATIONS.
5. CONTRACTOR SHALL SECURE ALL NECESSARY PERMITS FOR WORK SHOWN ON THESE PLANS
6. CONTRACTOR SHALL VERIFY LOCATIONS OF EXISTING UTILITIES WITH APPROPIATE UTILITY COMPANIES PRIOR TO START OF CONSTRUCTION.
7. CONTRACTOR SHALL PROVIDE 4" OF LOAM & SEED ON ALL GRADED & DISTURBED AREAS.

SCALE: 1"=20'

GRAPHIC SCALE

20' 0 20' 40'

129-96

REVISIONS

MAINE STATE FERRY SYSTEM

ROCKLAND

NEW TERMINAL FACILITY

TEAS FEELY AND HINGSTON
100 COMMERCIAL STREET
PORTLAND, MAINE 04101
ARCHITECTURE • PLANNING

CIVIL ENGINEERING
TEC ASSOCIATES

STRUCTURAL ENGINEERING
PINKHAM & GREER

MECHANICAL ENGINEERING
BENNETT ENGINEERING

ELECTRICAL ENGINEERING
ELECTRICAL DESIGN CONSULTANTS

APPROVED BY BUREAU OF TRANSPORTATION SERVICES

STATE OF MAINE
WAYNE WRIGHT DUFFIELD
PROFESSIONAL ENGINEER

DATE: OCT 12, 1994	DRAWN: JOL
SCALE: 1"=20'	CHECKED: WWD
MDOT PROJ. #: FERRY 60693(80) X	TEH PROJ. #: 9216

DRAWING TITLE: SITE PLAN

DRAWING NUMBER: C1

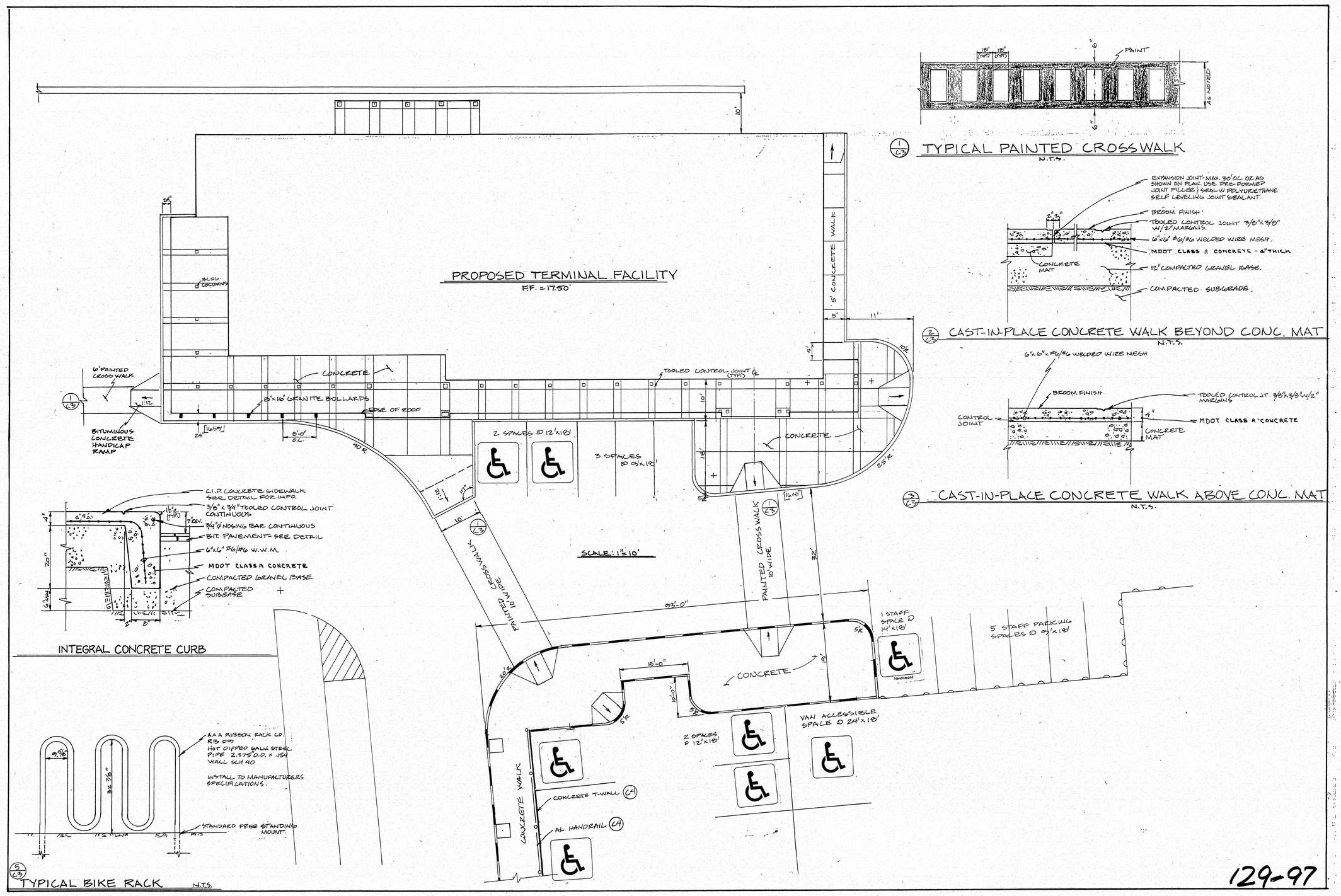

129-97

REVISIONS

MAINE STATE FERRY SYSTEM
ROCKLAND
NEW TERMINAL FACILITY

TEAS FEELY AND HINGSTON
100 COMMERCIAL STREET
PORTLAND, MAINE 04101
ARCHITECTURE • PLANNING

CIVIL ENGINEERING
TEC ASSOCIATES
STRUCTURAL ENGINEERING
PINKHAM & GREER
MECHANICAL ENGINEERING
BENNETT ENGINEERING
ELECTRICAL ENGINEERING
ELECTRICAL DESIGN CONSULTANTS

APPROVED BY BUREAU OF TRANSPORTATION SERVICES
P. Pottle

STATE OF MAINE
WAYNE WRIGHT DUFFETT
#7675
REGISTERED PROFESSIONAL ENGINEER

DATE: OCT 17, 1994	DRAWN: J.D.L.
SCALE: 1" = 10'	CHECKED: W.W.D.
MDOT PROJ. #: FED-6069(00)	TEH PROJ. #: 9216

DRAWING TITLE: SITE DETAILS

DRAWING NUMBER: C3

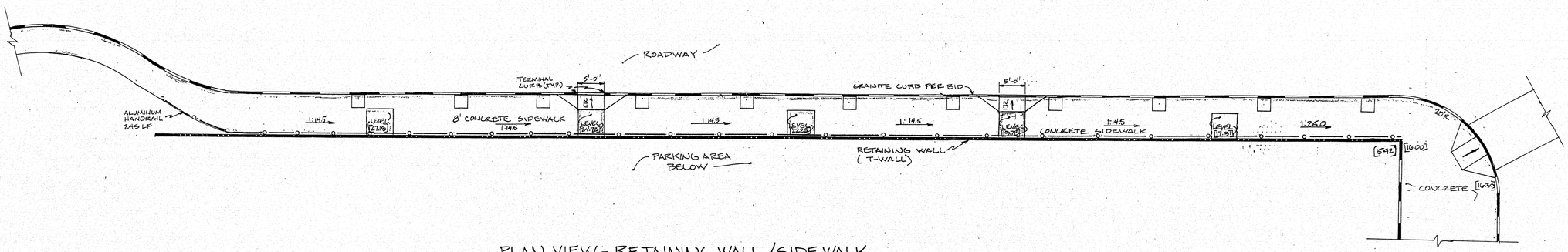

PLAN VIEW - RETAINING WALL / SIDEWALK

SCALE: 1"=10'

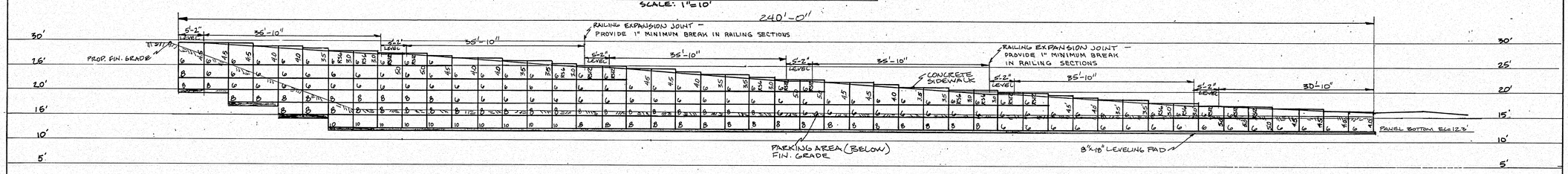

ELEVATION - RETAINING WALL / SIDEWALK

SCALE: 1"=10' H.
1"=10' V.

GENERAL NOTES

HORIZONTAL JOINT - PREFORMED EXPANSION JOINT MATERIAL

VERTICAL JOINT - DRAINAGE GEOTEXTILE CLASS A

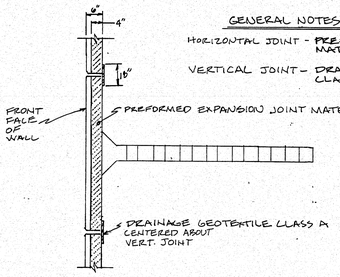

TOP VIEW - T-WALL AT JOINT
N.T.S.

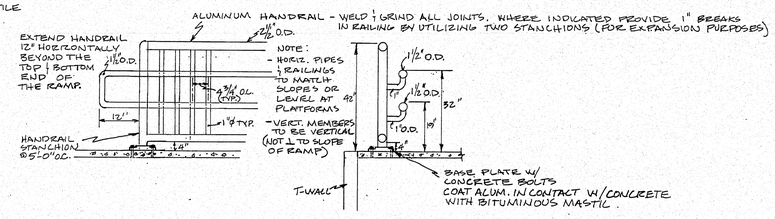

DETAIL A - ALUMINUM HANDRAIL
N.T.S.

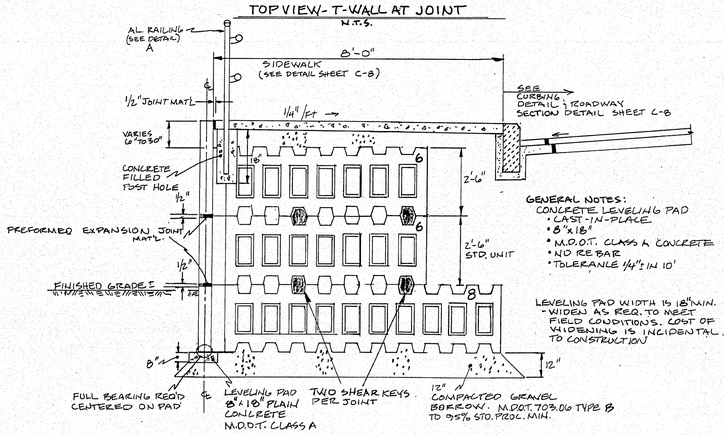

GENERAL NOTES:
CONCRETE LEVELING PAD
- CAST-IN-PLACE
- 8"x18"
- M.D.O.T. CLASS A CONCRETE
- NO RE BAR
- TOLERANCE 1/4" IN 10'

LEVELING PAD WIDTH IS 18" MIN.
- WIDEN AS REQ. TO MEET FIELD CONDITIONS. COST OF WIDENING IS INCIDENTAL TO CONSTRUCTION

SECTION VIEW - T-WALL W/ SIDEWALK N.T.S.

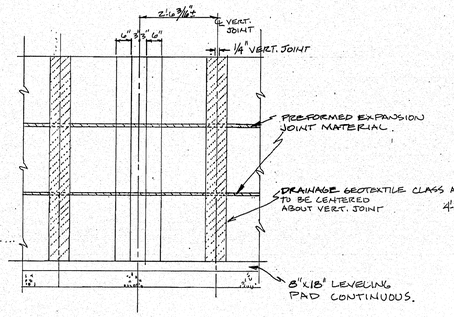

ELEVATION VIEW - BACK SIDE
N.T.S.

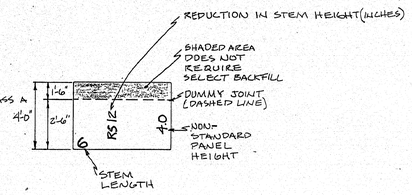

TYPICAL PANEL NOTATION
N.T.S.

129-98

REVISIONS

MAINE STATE FERRY SYSTEM
ROCKLAND
NEW TERMINAL FACILITY

TEAS FEELY AND HINGSTON
100 COMMERCIAL STREET
PORTLAND, MAINE 04101
ARCHITECTURE - PLANNING

CIVIL ENGINEERING
TEC ASSOCIATES
STRUCTURAL ENGINEERING
PINKHAM & GREER
MECHANICAL ENGINEERING
BENNETT ENGINEERING
ELECTRICAL ENGINEERING
ELECTRICAL DESIGN CONSULTANTS

APPROVED BY BUREAU OF TRANSPORTATION SERVICES
P. Pottle

STATE OF MAINE
WAYNE WRIGHT DUFFETT
#7670
ASSISTANT
PROFESSIONAL ENGINEER

DATE	DRAWN
OCT. 12, 1998	S.D.C.
SCALE	CHECKED
AS NOTED	W.W.D.
MDOT PROJ. #	TEH PROJ. #
F80-3666(00)X	9826

DRAWING TITLE
RETAINING WALL

DRAWING NUMBER
C4

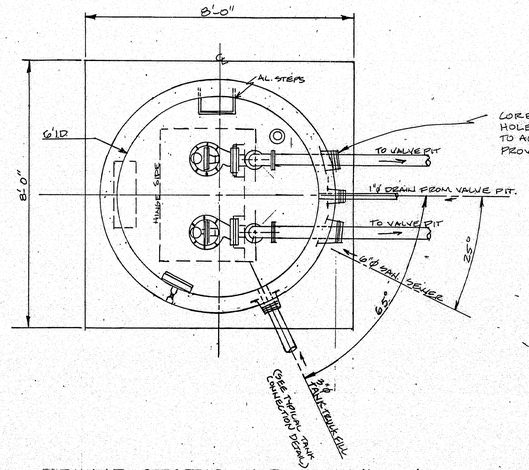

CORE DRILL APPROPRIATE SIZE HOLE FOR ALL INLET/OUTLET PIPES TO ACCOMMODATE PIPE & BOOT. (TYP.) PROVIDE WATERTIGHT SEAL.

PUMP STATION - PLAN VIEW

SCALE: 1/2"=1'-0"

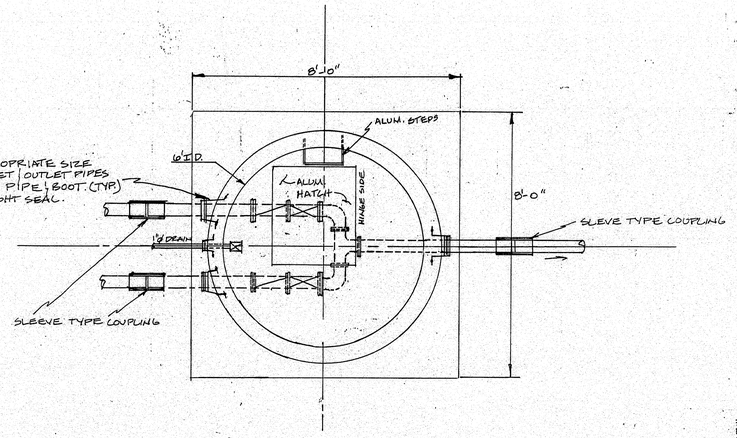

VALVE PIT PLAN VIEW

SCALE: 1/2"=1'-0"

PUMP STATION & VALVE PIT NOTES

1. CONCRETE 3000 PSI AFTER 28 DAYS
2. REINFORCING: PUMP STA. - FLOOR & SLAB TOP #5 @ 8" OC. E.W. WALLS 2 LAYERS OF 4x4/4x4 W.W.M.
3. JOINTS TO BE SEALED W/CON'SEAL CS102 JOINT SEALANT.
4. EXTERIOR TO BE COATED W/KOPPERS COAL TAR EXCEPT SLAB TOPS.
5. PUMPS-BARNES #4SE2B0L
6. PIPING - 4" D.I. (FLANGED)
7. CONTROL PANEL # 065612 (DUPLEX)
8. INTERIOR COATED W/TNEMIL SER. 66 TWO PART EPOXY PAINT.
9. MAINTAIN MIN. 4' OF COVER OVER FORCE MAIN.

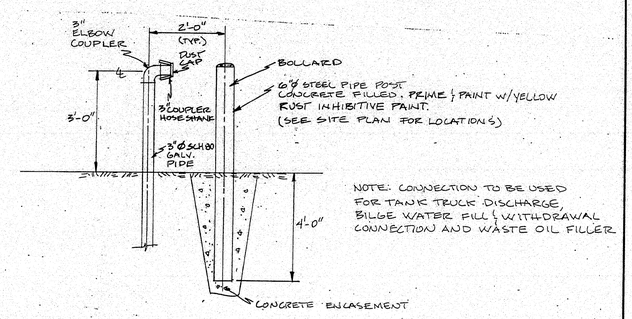

NOTE: CONNECTION TO BE USED FOR TANK TRUCK DISCHARGE, BILGE WATER FILL & WITHDRAWAL CONNECTION AND WASTE OIL FILLER

2/C5 TYPICAL TANK CONNECTION

N.T.S.

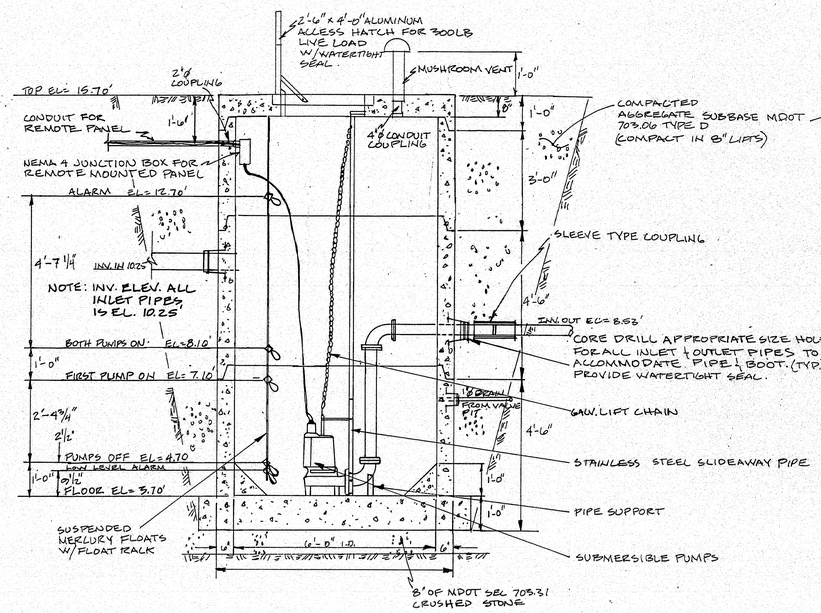

1/C5 PUMP STATION - SECTION VIEW

SCALE: 1/2"=1'-0"

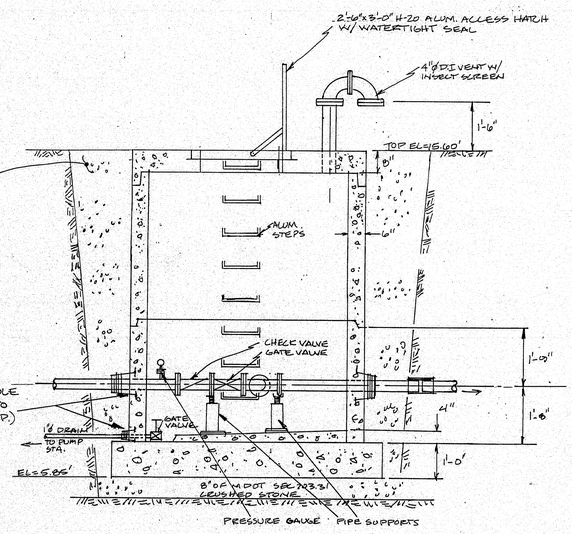

VALVE PIT SECTION VIEW

SCALE: 1/2"=1'-0"

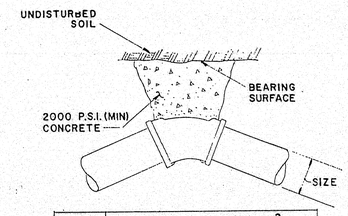

	BEARING SURFACE, FT^2			
SIZE, IN.	TEE, 90°	45°	22 1/2°	11 1/4°
2	1.0	1.0	1.0	1.0
3	1.0	1.0	1.0	1.0
4	1.2	1.0	1.0	1.0
6	2.6	1.4	1.0	1.0
8	4.6	2.5	1.4	1.0
10	7.2	3.9	2.0	1.0
12	10.4	5.6	2.8	1.5
14	14.2	7.7	3.9	2.0
16	18.5	10.0	5.0	2.5
18	23.4	12.7	6.4	3.3

3/C5 WATER MAIN & FORCEMAIN THRUST BLOCK DETAIL

NO SCALE

129-99

REVISIONS

MAINE STATE FERRY SYSTEM
ROCKLAND
NEW TERMINAL FACILITY

TEAS FEELY AND HINGSTON
100 COMMERCIAL STREET
PORTLAND, MAINE 04101
ARCHITECTURE • PLANNING

CIVIL ENGINEERING
TEC ASSOCIATES

STRUCTURAL ENGINEERING
PINKHAM & GREER

MECHANICAL ENGINEERING
BENNETT ENGINEERING

ELECTRICAL ENGINEERING
ELECTRICAL DESIGN CONSULTANTS

APPROVED BY BUREAU OF TRANSPORTATION SERVICES
P Pottle

STATE OF MAINE
WAYNE WRIGHT PUFFETT
17678
PROFESSIONAL ENGINEER

DATE	DRAWN
OCT 12, 1994	J.D.L.
SCALE	CHECKED
1/2"=1'-0"	W.W.P.
MDOT PROJ. #	TFH PROJ. #
~~FBD-6049(00)X~~	9216

DRAWING TITLE
SANITARY PUMP STATION

DRAWING NUMBER
C5

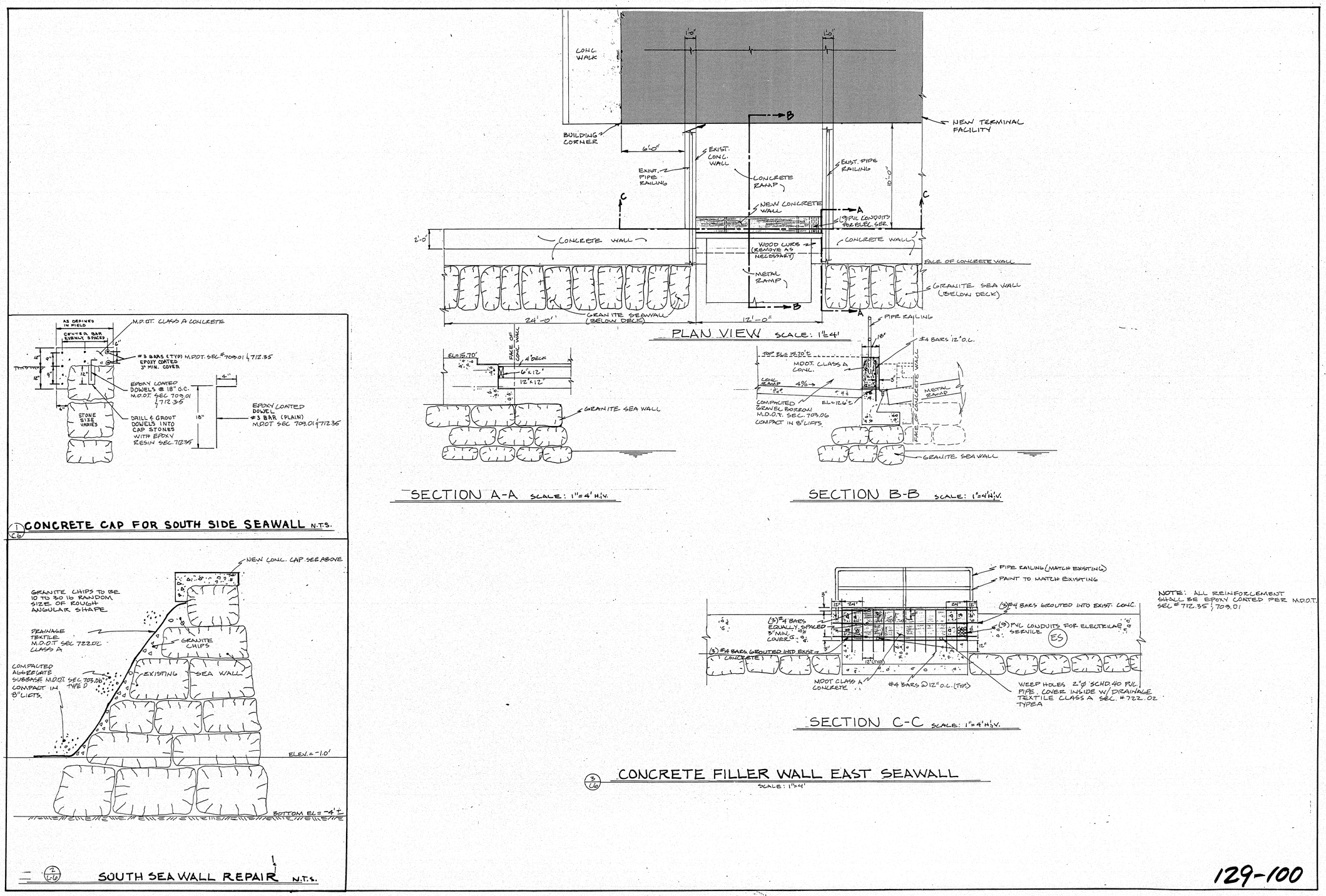

NOTE: ALL REINFORCEMENT SHALL BE EPOXY COATED PER M.D.O.T. SEC #712.35 & 709.01

129-100

REVISIONS

MAINE STATE FERRY SYSTEM
ROCKLAND
NEW TERMINAL FACILITY

TEAS FEELY AND HINGSTON
100 COMMERCIAL STREET
PORTLAND, MAINE 04101
ARCHITECTURE • PLANNING

CIVIL ENGINEERING
TEC ASSOCIATES
STRUCTURAL ENGINEERING
PINKHAM & GREER
MECHANICAL ENGINEERING
BENNETT ENGINEERING
ELECTRICAL ENGINEERING
ELECTRICAL DESIGN CONSULTANTS

APPROVED BY BUREAU OF TRANSPORTATION SERVICES
P. Pottle

STATE OF MAINE
WAYNE WRIGHT BUFFETT
17673
PROFESSIONAL ENGINEER

DATE	DRAWN
OCT 12, 1994	J.P.L.
SCALE	CHECKED
AS NOTED	W.W.D.
MDOT PROJ #	TFH PROJ #
FBD-6069(00)X	9216

DRAWING TITLE
SEAWALL REPAIR

DRAWING NUMBER
C6

TYPICAL GUARD RAIL (1/C7) N.T.S.

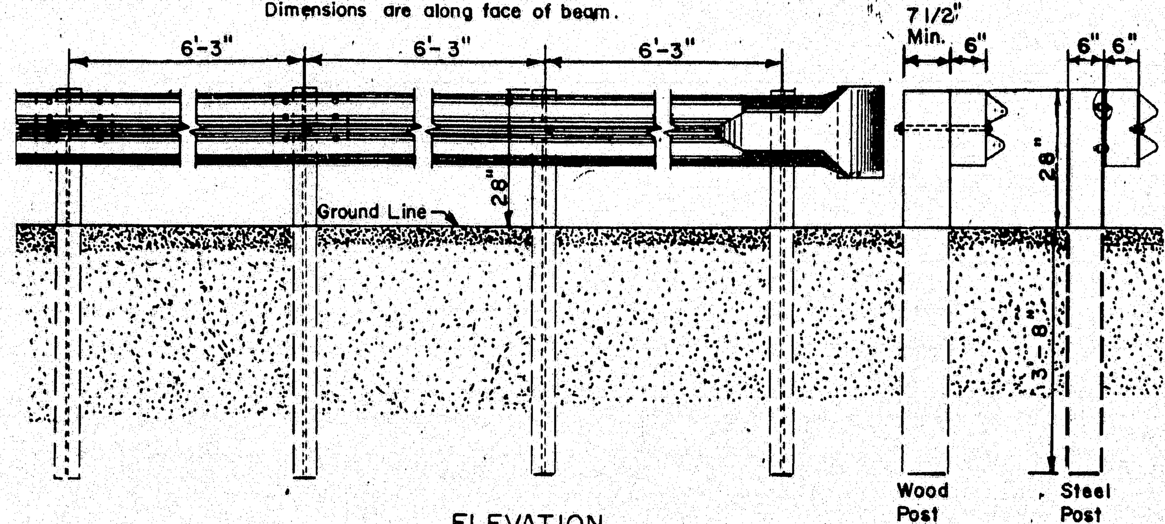

ELEVATION

1. Intermediate post spacing shall be 6'-3" unless otherwise shown.
2. Wood posts for Guard Rail shall be 6" Nom.(5 1/2" Min.) x 8" Nom (7 1/2" Min.) and offset blocks for type "3a" Guard Rail shall be 6" x 6".
3. Steel posts and offset brackets for Guard Rail shall be W6 x 8.5 or W6 x 9.0.
4. Steel posts punched with holes in addition to those specified, to accomodate other types of Guard Rail, will be accepted subject to the approval of the engineer.
5. "W" Beam Back up Plates shall be placed behind rail elements at intermediate steel posts (non splice posts).
6. Beam Type Guard Rail set on radius of 150' or less shall be Circular Guard Rail.
7. Offset Bracket shall be installed on all posts, except at B.C.T. and twisted end sections.
8. Guard Rail – Terminal End (RE-6) to be used only on off-traffic end of guard rail, (four lane road only).

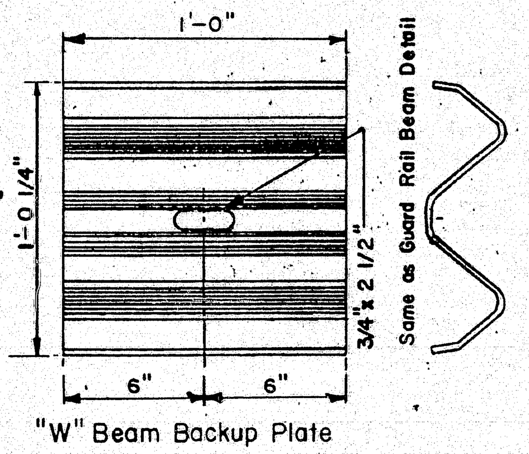

"W" Beam Backup Plate
RE-4

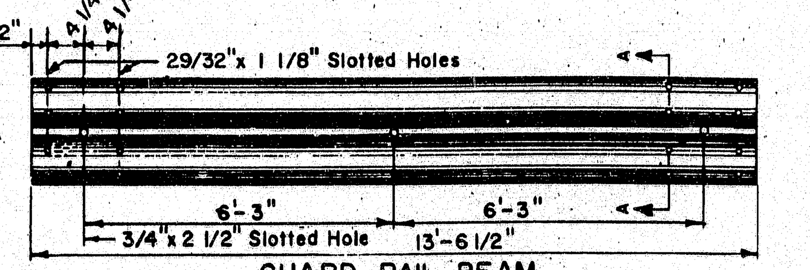

GUARD RAIL BEAM
Minimum Thickness 0.105

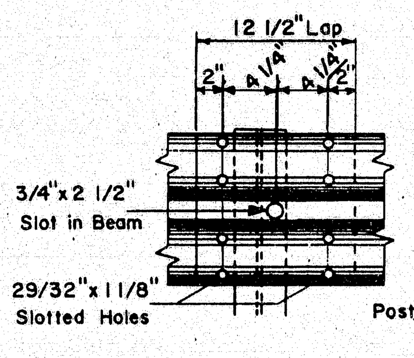

GUARD RAIL SPLICE AT POST

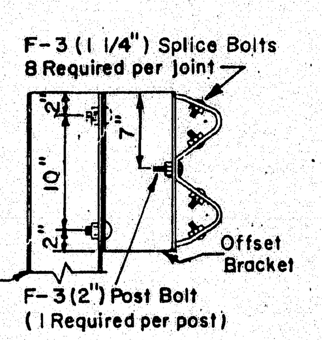

CROSS SECTION THROUGH GUARD RAIL SPLICE

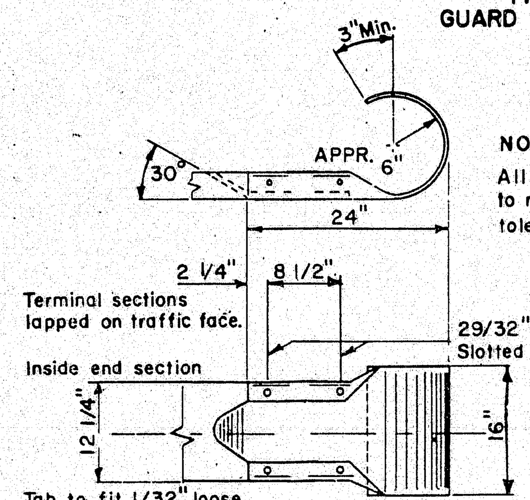

NOTE:
All dimensions subject to manufacturing tolerances.

GUARD RAIL - TERMINAL END
RE-6

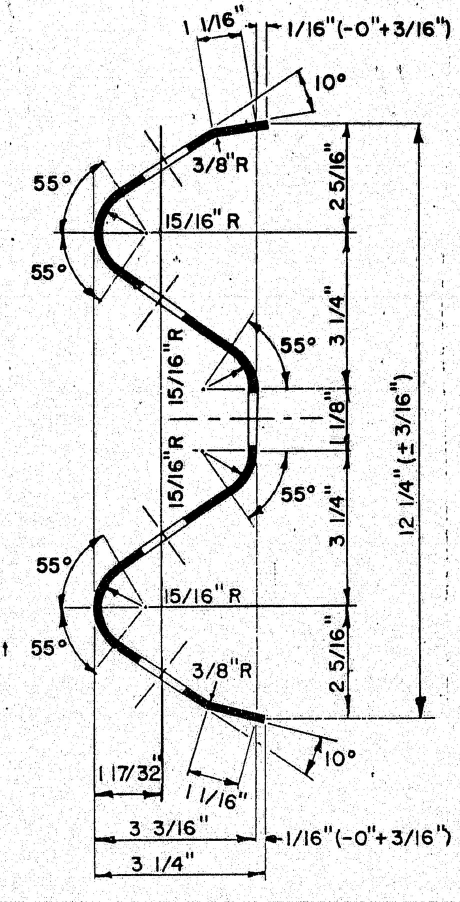

SECTION A-A

GUARD RAIL BEAM DETAIL
RE-3

NOTE:
Wood Bracket and G.R. Beam to be bolted with one 5/8" x 16" Round Head Bolt with Round Washer (F-13) on nut end.

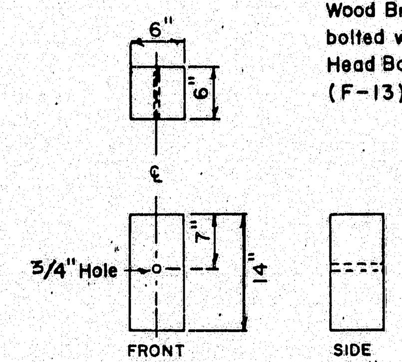

WOOD BRACKET

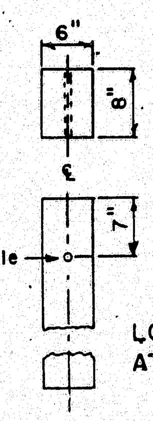

LOCATION OF HOLE FOR ATTACHING BRACKET TO WOOD POST

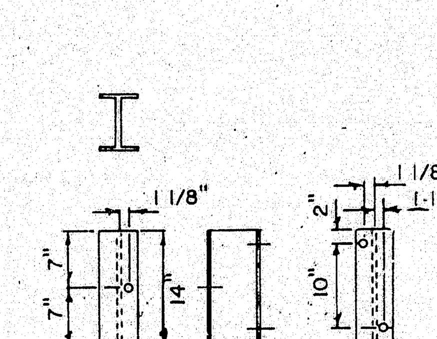

STEEL BRACKET

Holes to be 13/16" Ø

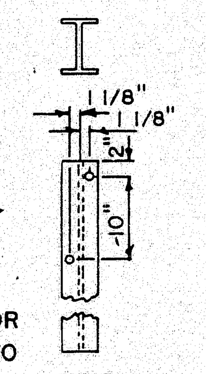

LOCATION OF HOLES FOR ATTACHING BRACKET TO STEEL POST

OFFSET BRACKET FOR GUARD RAIL POSTS

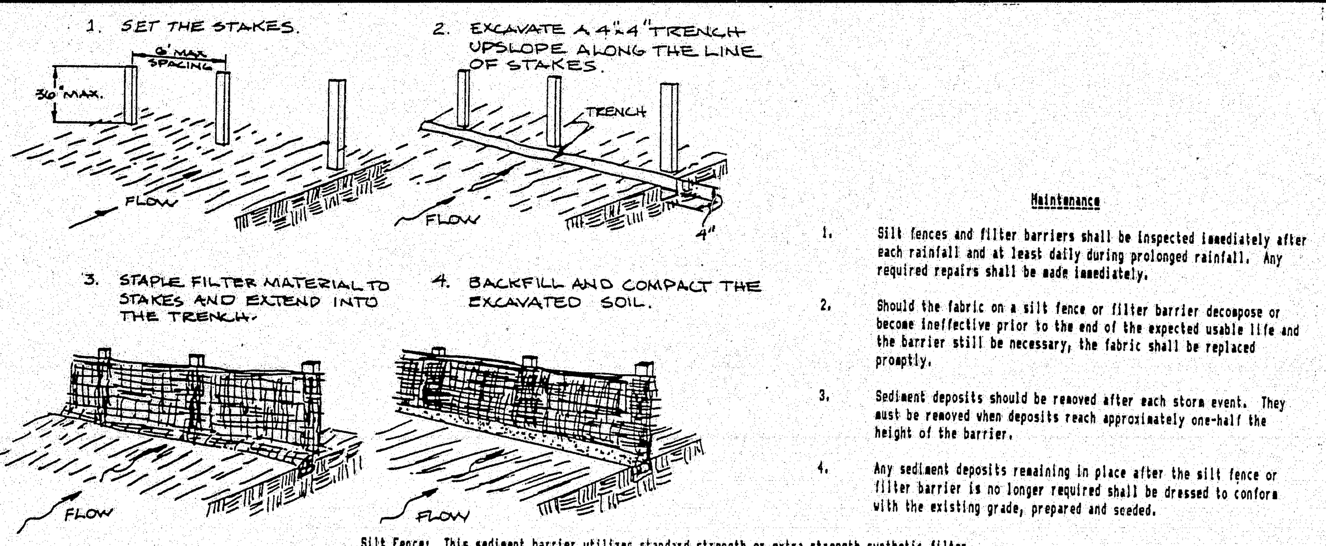

Maintenance

1. Silt fences and filter barriers shall be inspected immediately after each rainfall and at least daily during prolonged rainfall. Any required repairs shall be made immediately.
2. Should the fabric on a silt fence or filter barrier decompose or become ineffective prior to the end of the expected usable life and the barrier still be necessary, the fabric shall be replaced promptly.
3. Sediment deposits should be removed after each storm event. They must be removed when deposits reach approximately one-half the height of the barrier.
4. Any sediment deposits remaining in place after the silt fence or filter barrier is no longer required shall be dressed to conform with the existing grade, prepared and seeded.

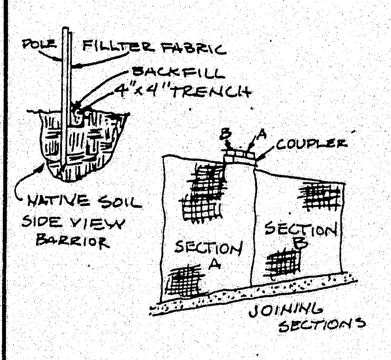

TYPICAL FILTER BARRIER
N.T.S.
(2/C7)

Silt Fence: This sediment barrier utilizes standard strength or extra strength synthetic filter fabrics. It is designed for situations in which only sheet or overland flows are expected. See Plate 1.06c.

1. The height of a silt fence shall not exceed 36 inches (higher fences may impound volumes of water sufficient to cause failure of the structure).
2. The filter fabric shall be purchased in a continuous roll cut to the length of the barrier to avoid the use of joints. When joints are necessary, filter cloth shall be spliced together only at a support post, with a minimum 6-inch overlap, and securely sealed.
3. Posts shall be spaced a maximum of 10 feet apart at the barrier location and driven securely into the ground (minimum of 12 inches). When extra strength fabric is used without the wire support fence, post spacing shall not exceed 6 feet.
4. A trench shall be excavated approximately 4 inches wide and 4 inches deep along the line of posts and upslope from the barrier.
5. When standard strength filter fabric is used, a wire mesh support fence shall be fastened securely to the upslope side of the posts using heavy duty wire staples at least 1 inch long, tie wires of hog rings. The wire shall extend into the trench a minimum of 2 inches and shall not extend more than 36 inches above the original ground surface.
6. The Standard Strength filter fabric shall be stapled or wired to the fence, and 8 inches of the fabric shall be extended into the trench. The fabric shall not extend more than 36 inches above the original ground surface. Filter fabric shall not be stapled to existing trees.
7. When extra strength filter fabric and closer post spacing are used, the wire mesh support fence may be eliminated. In such a case the filter fabric is stapled or wired directly tot he posts with all other provisions of item No 6 applying.
8. The trench shall be backfilled and the soil compacted over the filter fabric.

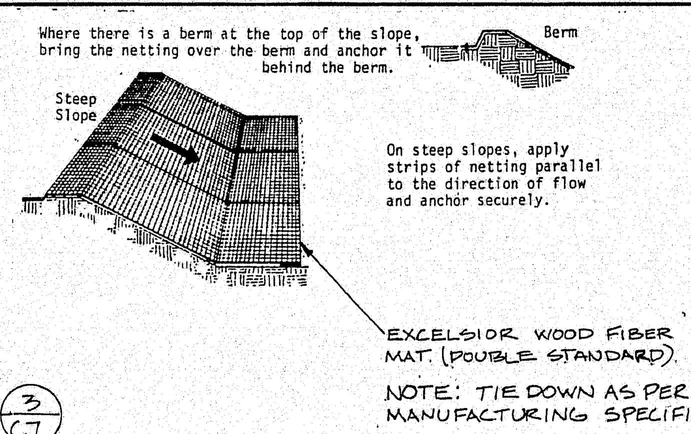

NOTE: TIE DOWN AS PER MANUFACTURING SPECIFICATIONS

(3/C7) EROSION CONTROL - STEEP SLOPES
N.T.S.

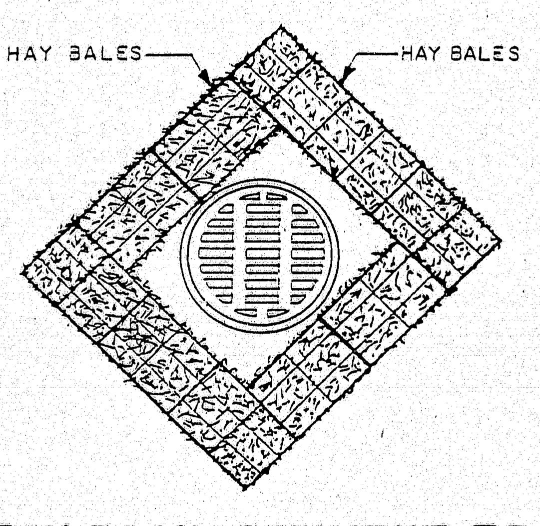

(4/C7) **CATCH BASIN SEDIMENT TRAP**
NOT TO SCALE

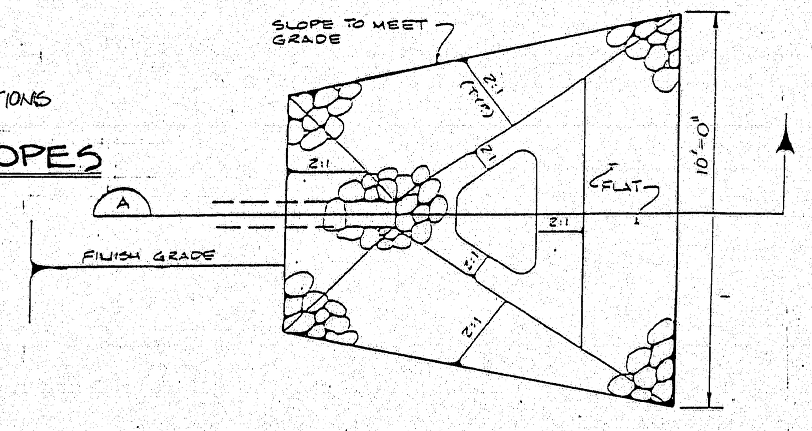

PLAN

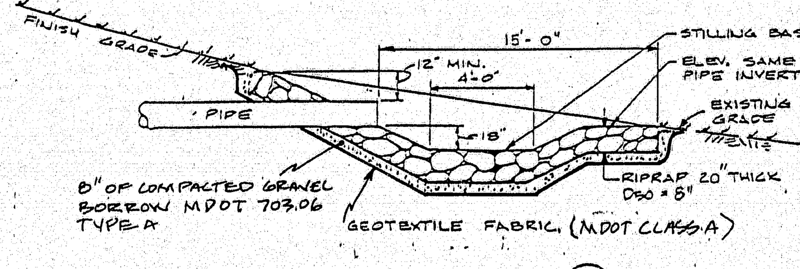

SECTION (A)

(5/C7) RIPRAP APRON #1
NTS

SEDIMENTATION & EROSION CONTROL

A. Pre-Construction Phase

Prior to the beginning of any construction, hay bale/filter fabric fencing will be staked across the slope(s), on the contour as shown on the plan. The placement of silt fences and hay bales shall be completed in accordance with guidelines established in Best Management Practices. This network is to be maintained by the contractor until all exposed slopes have at least 85%-90% vigorous perennial vegetative cover to prevent erosion. The following erosion control measures shall be followed by the site contractor(s) throughout construction of this project.

B. Construction and Post-Construction Phase

1. Areas undergoing actual construction shall only expose that amount of mineral soil necessary for progressive and efficient site construction and shall not exceed 14 days. Areas that will not be completed (covered and/or finish graded) within seven (14) days of disturbance shall be anchored with temporary erosion control within fourteen (14) days of disturbance. Temporary erosion control shall include erosion control mesh, netting or mulch and as directed by the inspecting engineer. If disturbed areas do not receive final seeding by September 15th of the year of construction, then all disturbed areas shall be hay mulched at a rate of 100 lbs. per 1000 square feet and seeded with a winter cover crop of Rye at the rate of 3 lbs./1,000 S.F. to provide winter protection. The hay mulch shall be anchored with a suitable binder, such as RMB plus and/or secured with netting for wind protection.
2. All topsoil shall be collected, stockpiled, seeded with Rye at 3 lbs/1,000 S.F., and mulched on-site and re-used as required. Siltation fencing shall be placed down gradient from stockpiled loam.
3. All silt fences and/or hay bale barriers shall be installed according to this plan. These shall be maintained during development to remove sediment from runoff water. All the silt fences shall be inspected after any rainfall or runoff event, maintained and cleaned until all areas have at least 85%-90% vigorous perennial vegetative cover of grasses.
4. All areas shall be seeded in accordance with the following vegetation plan.

C. Vegetation Plan

- Revegetation measures shall commence immediately upon completion of construction. Disturbed areas shall also be mulched and anchored prior to any storm event. If final seeding cannot be accomplished by September 15th, then all disturbed areas shall be hay mulched at a rate of 100 lbs per 1,000 sq. ft. and seeded with a winter cover crop of Rye at the rate of 3 lbs./1,000 sq. ft. to provide winter protection. Hay mulch shall be secured with a suitable binder to include RMB plus and/or erosion control netting as directed by the owner/inspecting engineer.

- Revegetation measures shall consist of the following:

1. Four inches of loam will be spread over disturbed areas and smoothed to a uniform surface. Loam shall be free of subsoil, clay lumps, stones and other objects over 1" in diameter, and without weeds, roots or other objectionable material.
2. In lieu of soil tests, agricultural limestone shall be spread at the rate of 3 tons per acre. 10-20-20 fertilizer shall be applied at a rate of 800 lbs/acre. These soil amendments shall be incorporated into the soil prior to final seeding.
3. Following seed bed preparation, swale areas, fill areas and back slopes shall be seeded to a mixture of 35% Creeping Red Fescue, 6% Red Top, 24% Kentucky Bluegrass, 10% Perennial Ryegrass, 20% Annual Ryegrass and 5% White Dutch Clover. The lawn areas will be seeded to a premium turf mixture of Bluegrass and/or Fescue; seeding rate of 2-3 lbs. per 1,000 square feet.
4. Hay mulch shall be applied to all disturbed areas at the rate of 100 lbs. per 1,000 square feet, or a hydro-application of asphalt, wood or paper fiber will be applied following seeding. A suitable binder, such as RMB plus and/or erosion control netting will be used on hay mulch for wind control.
5. All hay bale and/or filter fabric barriers will remain in place until seedings have become 85%-90% established and then removed within 10 days.

E. Inspections/Monitoring

Maintenance measures shall be applied as needed during the entire construction cycle. After each rainfall, the site contractor shall perform a visual inspection of all installed erosion control measures and perform repairs as needed to insure their continuing function.

Following the temporary and/or final seedings, the contractor shall inspect the site semimonthly until the seedings have been established. Established means a minimum of 85% - 90% of areas vegetated with vigorous growth. Reseeding shall be carried out by the contractor with follow-up inspections in the event of any failures until vegetation is adequately established.

129-101

REVISIONS

MAINE STATE FERRY SYSTEM
ROCKLAND
NEW TERMINAL FACILITY

TEAS FEELY AND HINGSTON
100 COMMERCIAL STREET
PORTLAND MAINE 04101
ARCHITECTURE • PLANNING

CIVIL ENGINEERING
TEC ASSOCIATES
STRUCTURAL ENGINEERING
PINKHAM & GREER
MECHANICAL ENGINEERING
BENNETT ENGINEERING
ELECTRICAL ENGINEERING
ELECTRICAL DESIGN CONSULTANTS

APPROVED BY BUREAU OF TRANSPORTATION SERVICES
P. Pottle

STATE OF MAINE
WAYNE WRIGHT DUFFETT
#7073
PROFESSIONAL ENGINEER

DATE	DRAWN
OCT. 12, 1994	J.D.L.
SCALE	CHECKED
N.T.S.	W.W.D
MDOT PROJ #	TFH PROJ #
FBD-6065(00)X	9216

DRAWING TITLE
DETAILS

DRAWING NUMBER
C7

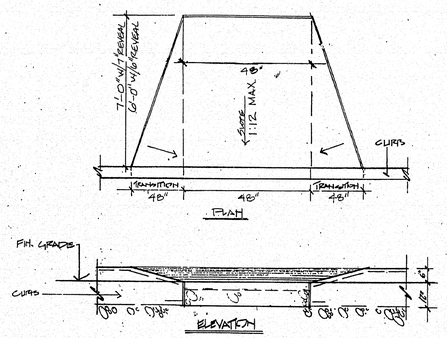

1 C-8 Sidewalk Ramp Detail
3/8" = 1'-0"

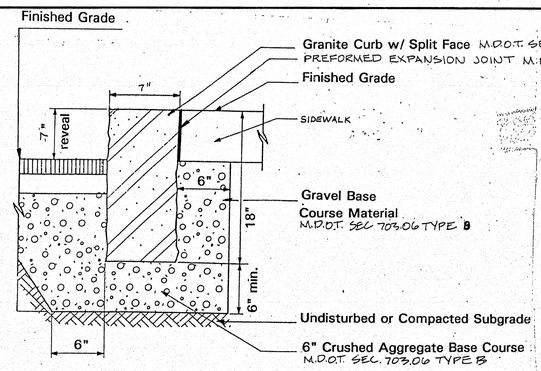

5 C-8 VERTICAL GRANITE CURB TYPE 1
N.T.S.

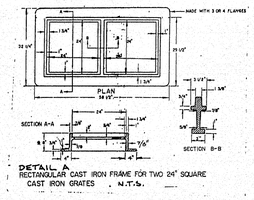

DETAIL A
RECTANGULAR CAST IRON FRAME FOR TWO 24" SQUARE CAST IRON GRATES . N.T.S.

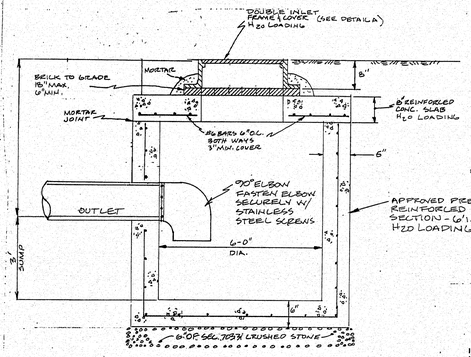

8 C-8 TYPICAL DOUBLE INLET CATCH BASIN
N.T.S.

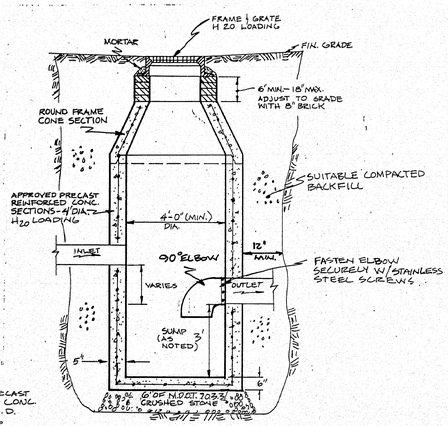

10 C-8 TYPICAL CATCH BASIN SECTION
N.T.S.

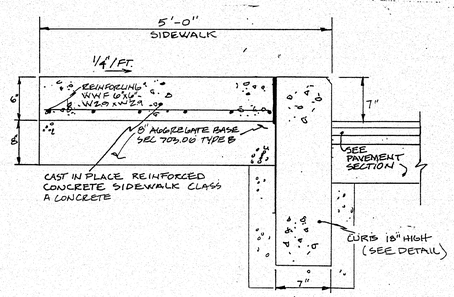

2 C-8 CONCRETE SIDEWALK DETAIL
N.T.S.

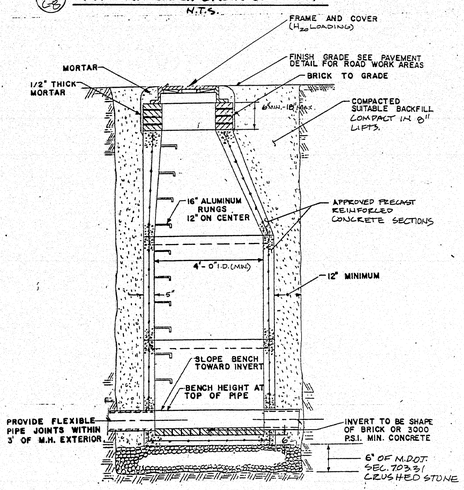

11 C-8 PRECAST MANHOLE SECTION

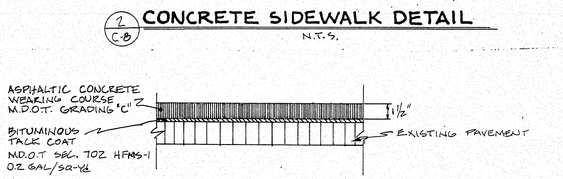

3 C-8 BITUMINOUS CONCRETE TOPPING
N.T.S.

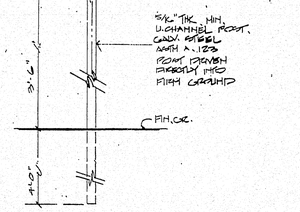

9 C-8 Handicap Signage*
1" = 1'-0"

NOTE: SEE PAVEMENT DETAILS FOR PAVING AND PATCHING REQUIREMENTS FOR ROAD AND PARKING AREAS
TRENCH SECTION TO BE USED FOR SANITARY SEWER, STORM DRAIN AND FORCE MAIN PIPE.

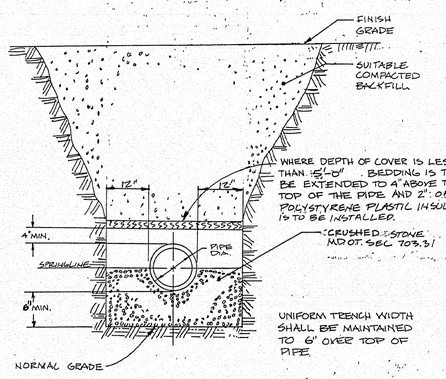

7 C-8 TYPICAL TRENCH SECTION
N.T.S.

* SIGN & PAVEMENT MARKING TO BE USED AT EACH HANDICAP SPACE

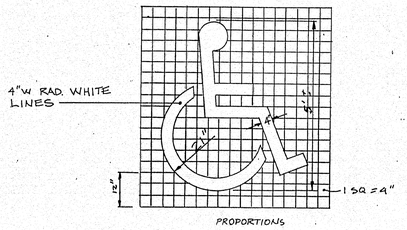

9 C-8 HANDICAP SYMBOL*
N.T.S.

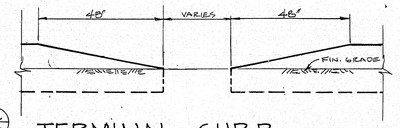

12 C-8 TERMINAL CURB N.T.S.

PAVING SCHEDULE

	FULL DEPTH	HALF DEPTH
A	2"	1 1/2"
B	3"	2"
C	3"	3"
D	VARIES *	VARIES *

NOT TO SCALE

* SEE SPECIFICATIONS SECTION 02231

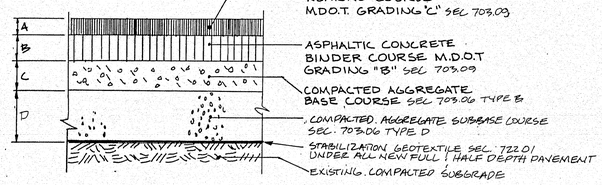

4 C-8 BITUMINOUS CONCRETE PAVEMENT
N.T.S.

129-102

REVISIONS

MAINE STATE FERRY SYSTEM
ROCKLAND
NEW TERMINAL FACILITY

TFH
TEAS FEELY AND HINGSTON
100 COMMERCIAL STREET
PORTLAND, MAINE 04101
ARCHITECTURE + PLANNING

CIVIL ENGINEERING
TEC ASSOCIATES
STRUCTURAL ENGINEERING
PINKHAM & GREER
MECHANICAL ENGINEERING
BENNETT ENGINEERING
ELECTRICAL ENGINEERING
ELECTRICAL DESIGN CONSULTANTS

APPROVED BY BUREAU OF TRANSPORTATION SERVICES
P. Pattie

STATE OF MAINE
WAYNE WRIGHT DUPRETT
REGISTERED PROFESSIONAL ENGINEER

DATE OCT. 12, 1989	DRAWN J.P.L.
SCALE AS NOTED	CHECKED W.W.D.
MDOT PROJ. # BRG 1609(00)X	TFH PROJ. # 8216

DRAWING TITLE
DETAILS

DRAWING NUMBER
C8

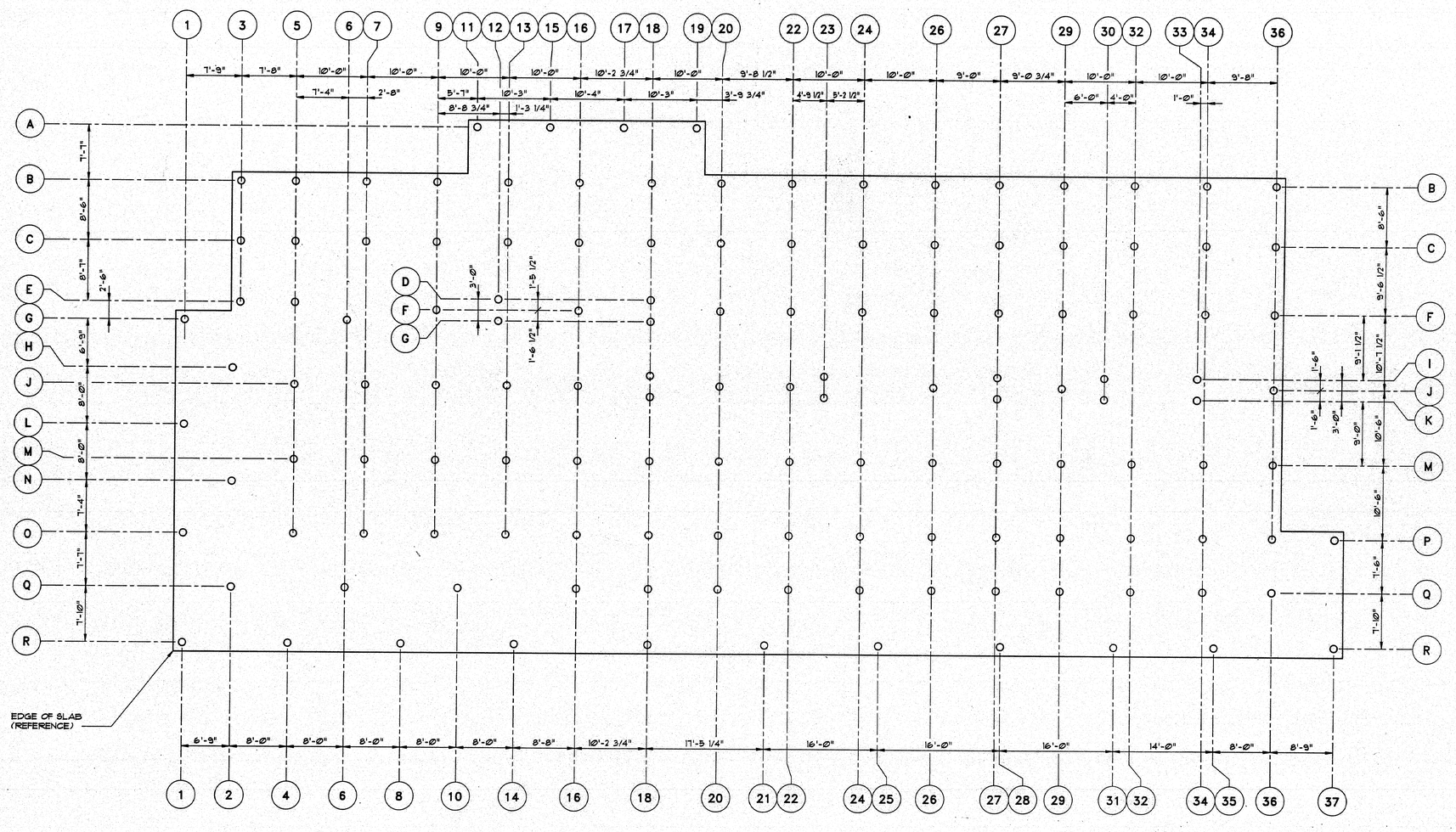

PILE PLAN

SCALE: 1/8"=1'-0"

NOTE:

PILE BENT LINES SHOWN ARE A DIFFERENT GRID THAN THOSE SHOWN FOR BUILDING COLUMNS ON DWG. S2.

O - PILE (TREATED TIMBER OR BORED - INJECTED MICRO PILE)

PILE NOTES:

1. REFER TO THE REPORT ENTITLED "EXPLORATIONS AND GEOTECHNICAL ENGINEERING SERVICES, PROPOSED ROCKLAND FERRY TERMINAL, ROCKLAND, MAINE," DATED JULY 5, 1994, BY S.W. COLE ENGINEERING, INC., GEOTECHNICAL CONSULTANTS, FOR SUBSURFACE INVESTIGATION DATA AND ADDITIONAL INFORMATION.
2. DRIVE PILES IN ACCORDANCE WITH THE 1993 BOCA NATIONAL BUILDING CODE.
3. PILE DESIGN CAPACITY: 20 TONS
4. PILE MATERIAL:

   BASE BID: SOUTHERN YELLOW PINE OR DOUGLAS FIR TIMBER PILES; ASTM D25; TREATED WITH CCA TO A RETENTION OF 2.5 POUNDS PER CUBIC FOOT; MINIMUM TIP DIAMETER 10 INCHES.

   UNIT PRICE ALTERNATE (FOR AREAS WHERE PILES CANNOT BE DRIVEN DUE TO SUBSURFACE OBSTRUCTIONS): BORED-INJECTED MINI-PILES; MINIMUM 5-INCH DIAMETER; END-BEARING ON BEDROCK.

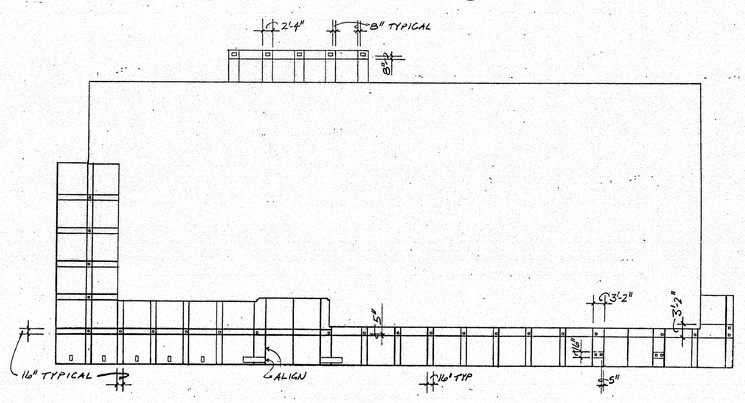

EXTERIOR CONTROL JOINTS PLAN

(USE WITH DRAWING S2)

1/16" = 1'-0"

129-103

REVISIONS

MAINE STATE FERRY SYSTEM

ROCKLAND

NEW TERMINAL FACILITY

TEAS FEELY AND HINGSTON
100 COMMERCIAL STREET
PORTLAND, MAINE 04101
ARCHITECTURE + PLANNING

CIVIL ENGINEERING
TEC ASSOCIATES

STRUCTURAL ENGINEERING
PINKHAM & GREER

MECHANICAL ENGINEERING
BENNETT ENGINEERING

ELECTRICAL ENGINEERING
ELECTRICAL DESIGN CONSULTANTS

APPROVED BY BUREAU OF TRANSPORTATION SERVICES

P. Pothe

STATE OF MAINE
JAMES A. MORAN III
PROFESSIONAL ENGINEER

DATE	DRAWN
10/17/94	LB
SCALE	CHECKED
1/8"=1'-0"	JAM
MDOT PROJ. #	TFH PROJ. #
FBD-6069(00)X	9216

DRAWING TITLE
PILE PLAN
TERMINAL BUILDING

DRAWING NUMBER
S1

CAD FILE: 9238391A FILE SCALE: 1=8'

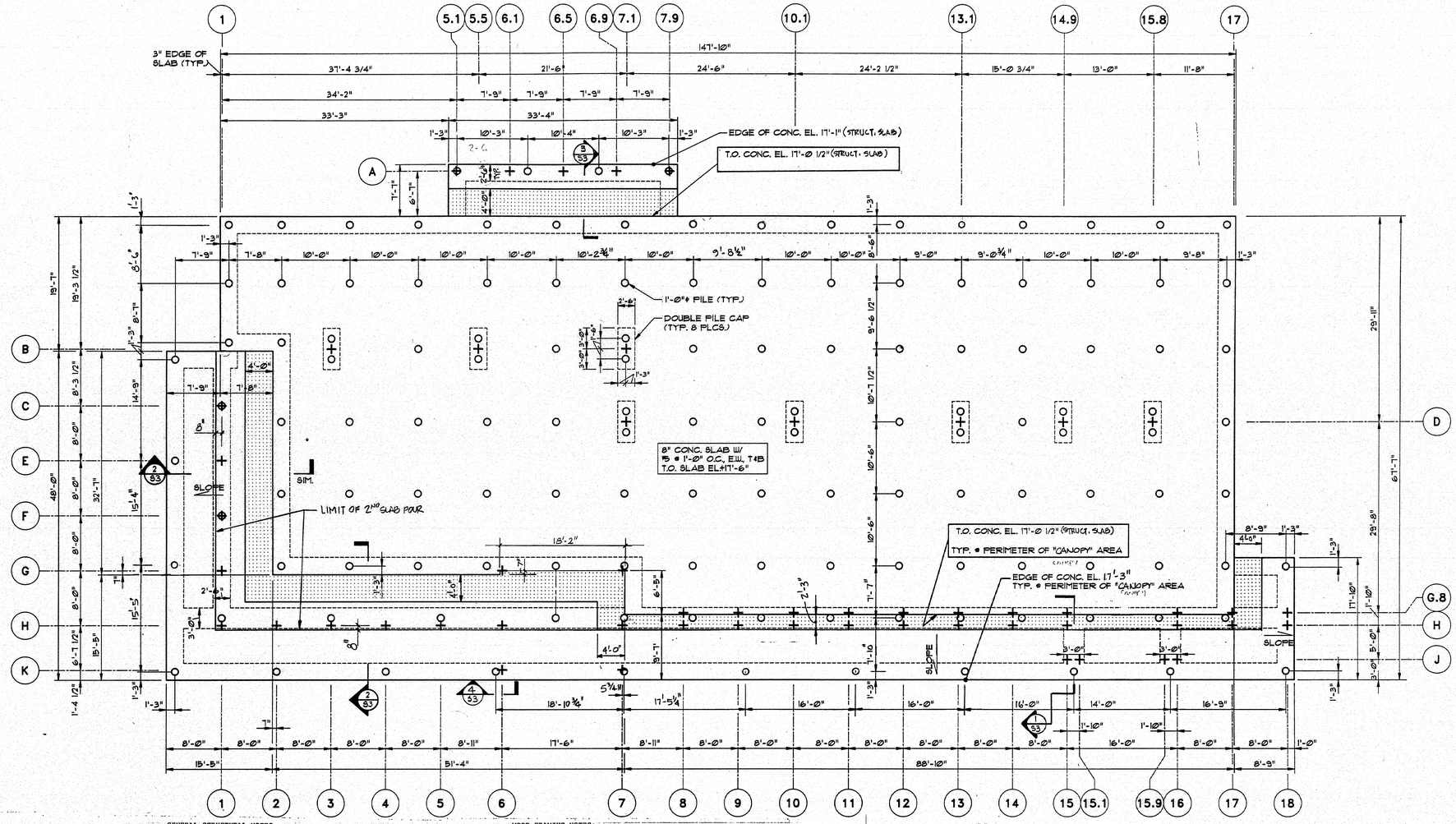

PILE NOTES:

1. REFER TO THE REPORT ENTITLED "EXPLORATIONS AND GEOTECHNICAL ENGINEERING SERVICES, PROPOSED ROCKLAND FERRY TERMINAL, ROCKLAND, MAINE," DATED JULY 5, 1994, BY S.W. COLE ENGINEERING, INC., GEOTECHNICAL CONSULTANTS, FOR SUBSURFACE INVESTIGATION DATA AND ADDITIONAL INFORMATION.
2. DRIVE PILES IN ACCORDANCE WITH THE 1993 BOCA NATIONAL BUILDING CODE.
3. PILE DESIGN CAPACITY: 20 TONS
4. PILE MATERIAL:

   BASE BID: SOUTHERN YELLOW PINE OR DOUGLAS FIR TIMBER PILES; ASTM D25; TREATED WITH CCA TO A RETENTION OF 2.5 POUNDS PER CUBIC FOOT; MINIMUM TIP DIAMETER 10 INCHES.

   UNIT PRICE ALTERNATE (FOR AREAS WHERE PILES CANNOT BE DRIVEN DUE TO SUBSURFACE OBSTRUCTIONS): BORED-INJECTED MINI-PILES; MINIMUM 5-INCH DIAMETER; END-BEARING ON BEDROCK.

CONCRETE NOTES:

1. DESIGN CODE: ACI 318-89
2. MIN. 28-DAY COMPRESSIVE STRENGTH: 4000 PSI
3. REINFORCEMENT: GRADE 60, ASTM A615
4. MIN. CONCRETE COVER:
   - 3" FOR CONCRETE CAST AGAINST SOIL
   - 2" FOR OTHER CONCRETE UNLESS SHOWN OTHERWISE
5. PROVIDE CONTROL JOINTS OR CONSTRUCTION JOINTS IN FOUNDATION WALLS AT 40' O.C. MAX. SPACING. LOCATE JOINTS TO MATCH CONTROL JOINT IN MASONRY WHERE POSSIBLE.
6. SPLICE LENGTHS (UNLESS SHOWN OTHERWISE):

#4	1' - 4"	#7	2' - 6"
#5	1' - 8"	#8	3' - 3"
#6	2' - 0"		

#4	1' - 8"	#7	3' - 5"
#5	2' - 3"	#8	4' - 7"
#6	2' - 9"		

7. COORDINATE PENETRATIONS WITH MECHANICAL AND CIVIL DRAWINGS.

GENERAL STRUCTURAL NOTES:

1. DESIGN CODE: 1990 BOCA NATIONAL BUILDING CODE
2. ROOF DESIGN LOADS:

   SNOW: 42 PSF BALANCED
   53 PSF UNBALANCED
   DRIFTING WHERE APPLICABLE

   MECHANICAL LOAD: 2 PSF
3. WIND LOADS: 30 PSF EFFECTIVE VELOCITY PRESSURE
4. U.N.O. = UNLESS NOTED OTHERWISE

STRUCTURAL STEEL NOTES:

1. DESIGN SPECIFICATION: AISC ALLOWABLE STRESS DESIGN SPECIFICATION FOR BUILDINGS, 1989.
2. CONSTRUCTION IS AISC TYPE 2. FRAMES ARE DESIGNED TO BE SELF-SUPPORTING AFTER ALL FRAME CONNECTIONS ARE COMPLETE.
3. STRUCTURAL STEEL: ASTM A36
   ASTM A500 GRADE B FOR TUBES
4. CONNECTIONS: FIELD BOLTED, ASTM A325N BOLTS
   ANCHOR BOLTS: MIN. YIELD 36 KSI
   WELDING: E70 ELECTRODES
5. CONNECTIONS WITH BOLTS SUBJECT TO SHEAR ONLY ARE DESIGNATED AS SNUG-TIGHT CONNECTIONS REQUIRING WRENCH TIGHTENING ONLY. BOLTS SUBJECT TO TENSION OR SHEAR AND TENSION MUST BE FULLY TIGHTENED. PROVIDE TENSION INDICATOR WASTHERS OR TENSION CONTROL BOLTS FOR FULLY TIGHTENED CONNECTIONS. FULLY TIGHTENED CONNECTIONS ARE REQUIRED ON COLUMN LINE G.8 BEAM-TO-COLUMN CONNECTIONS.
6. WHERE SHOWN, END REACTIONS AND MEMBER FORCES ARE IN KIPS AND KIP-FT. WHERE BEAM REACTIONS ARE NOT SHOWN, DESIGN CONNECTIONS FOR ONE-HALF OF THE ALLOWABLE LOAD CARRYING CAPACITY OF THE BEAM BUT NOT LESS THAN 6 KIPS.
7. PROVIDE MIN. OF 2 BOLTS FOR CONNECTIONS TO BRACING UNLESS SHOWN OTHERWISE.
8. DESIGN AND DETAIL CONNECTIONS USING "ALLOWABLE STRESS DESIGN OF SIMPLE SHEAR CONNECTIONS" BY AISC.
9. IF SINGLE PLATE SHEAR CONNECTIONS ARE USED AT TUBE COLUMNS, BEAM WEBS, OR COLUMN WEBS, LIMIT MAXIMUM PLATE THICKNESS TO 1.6 x TUBE WALL OR WEB THICKNESS.

WOOD FRAMING NOTES:

1. STRUCTURAL LUMBER: NO. 2 SPRUCE-PINE-FIR OR BETTER.

   LAMINATED VENEER LUMBER (LVL): EQUIVALENT TO 2.0E S.P. MICRO-LAM BY TRUS JOIST MACMILLAN.
2. DESIGN CODE: NATIONAL DESIGN SPECIFICATIONS FOR WOOD CONSTRUCTION BY THE NATIONAL FOREST PRODUCTS ASSOCIATION.
3. FASTENERS: COMPLY WITH RECOMMENDED FASTENING SCHEDULE OF THE BOCA NATIONAL BUILDING CODE/1993, UNLESS SHOWN OTHERWISE ON THE DRAWINGS.
4. NAILING REQUIREMENTS FOR PLYWOOD ROOF DECK AND SHEATHING: PROVIDE 8D COMMON NAILS FOR ROOF AND WALLS, AS FOLLOWS, UNLESS SHOWN OTHERWISE:

   6" O.C.: ALONG ALL PANEL EDGES
   12" O.C.: ALONG INTERMEDIATE MEMBERS FOR ROOF AND WALLS
5. SPIKE TOGETHER ALL FRAMING MEMBERS WHICH ARE BUILT-UP USING 2 ROWS OF 16D NAILS AT 12" O.C. STAGGERED.
6. PROVIDE GALVANIZED METAL JOIST HANGERS AT FLUSH FRAMED CONNECTIONS. IF SIZES ARE NOT SHOWN ON PLANS, PROVIDE HANGERS EQUAL TO SIMPSON U210 OR LU210.
7. PROVIDE GALVANIZED METAL RAFTERS TIES EQUAL TO SIMPSON H 2.5 BETWEEN RAFTERS OR ROOF TRUSSES AND SUPPORTING WALLS OR MEMBERS, UNLESS SHOWN OTHERWISE.
8. PROVIDE 3-2 X 10 HEADERS OVER ALL OPENINGS IN BEARING WALLS UNLESS SHOWN OTHERWISE.
9. PROVIDE DOUBLE TOP PLATE IN ALL EXTERIOR WALLS AND ALL BEARING WALLS. STAGGER TOP PLATE SPLICES IN EXTERIOR WALLS 4'-0" AND PROVIDE AT LEAST 8-10D NAILS PER SPLICE.
10. PROVIDE PRESSURE TREATED LUMBER FOR ALL LUMBER IN CONTACT WITH MASONRY OR CONCRETE.
11. PROVIDE MIN. OF 2-2X STUDS AT ENDS OF ALL BUILT-UP 2X BEAMS UNLESS SHOWN OTHERWISE.
12. NAIL MULTIPLE LVL'S TOGETHER USING 2 ROWS OF 16D NAILS 12" O.C. STAGGERED AS RECOMMENDED BY THE MANUFACTURER.
13. ROOF AND WALL SHEATHING: APA RATED SHEATHING, EXPOSURE 1 OR STRUCTURAL I OR II RATED SHEATHING, EXPOSURE 1.

    WALLS AND ROOF: 5/8" SPAN RATING 32/16

    INSTALL SHEETS WITH FACE GRAIN DIRECTION PERPENDICULAR TO SUPPORTING MEMBERS.
14. POSTS AT CORNERS OF EXT. WALLS: PROVIDE 8X8 OR 3-2X8 MIN.
15. PROVIDE FULL DEPTH BLOCKING AT ENDS AND INTERIOR SUPPORTS OF ALL JOISTS AND RAFTERS WHERE JOISTS AND RAFTERS FRAME OVER SUPPORTS.
16. PROVIDE 1X3 DIAGONAL BRIDGING OR FULL DEPTH BLOCKING FOR EACH 8' OF SPAN FOR ALL JOISTS AND RAFTERS.

FOUNDATION PLAN

1/8"=1'-0"

NOTES:

1. ANCHOR BOLTS @PCG IN EXTERIOR WALLS - 1/2"ϕ A. BOLTS (8" MIN. EMBED., 1" HK). PROVIDE MIN. 2-BOLTS PER SECTION OF WALL IE. PROVIDE BOLTS WITHIN 1'-0" OF END OF EACH SEGMENT OF IE W/ INTERMEDIATE BOLTS @ 4'-0" O.C.

   ANCHOR BOLT @PCG IN INTERIOR WALLS - SAME AS ABOVE EXCEPT INTERMEDIATE BOLTS @ 8'-0" O.C.
2. PROVIDE 2" OF INSULATION UNDER SLAB SURFACE. SEE ARCH. DWGS. FOR LIMITS AND CONFIGURATION, IN ADDITION TO WHAT IS SHOWN ON THIS DWG.
3. COLUMN GRID DESIGNATIONS SHOWN ARE FOR BUILDING COLUMN LAYOUT (DIFFERENT FROM PILE BENT LINES ON DWG. S1.
4. AT CANOPY AREAS, FOUNDATION SYSTEM CONSISTS OF A STRUCTURAL SLAB (FIRST POUR) WITH A 3½" SLAB OVERLAY IN CERTAIN AREAS (2ND POUR)
5. LEGEND: + COLUMN
   O PILE
   2" INSULATION
6. SEE DWG. S1 FOR EXTERIOR CONTROL JOINT PLAN.

129-104

CAD FILE: 923835 FILE SCALE: 1=8'

REVISIONS

MAINE STATE FERRY SYSTEM
ROCKLAND
NEW TERMINAL FACILITY

TEAS FEELY AND HINGSTON
100 COMMERCIAL STREET
PORTLAND, MAINE 04101
ARCHITECTURE - PLANNING

CIVIL ENGINEERING
TEC ASSOCIATES

STRUCTURAL ENGINEERING
PINKHAM & GREER

MECHANICAL ENGINEERING
BENNETT ENGINEERING

ELECTRICAL ENGINEERING
ELECTRICAL DESIGN CONSULTANTS

APPROVED BY BUREAU OF TRANSPORTATION SERVICES

STATE OF MAINE
JAMES MORAN III
4637
REGISTERED PROFESSIONAL ENGINEER

DATE 10/3/94	DRAWN
SCALE 1/8"=1'-0"	CHECKED
MDOT PROJ. # FBD-L069(00)X	TFH PROJ. # 9216

DRAWING TITLE
FOUNDATION PLAN
TERMINAL BUILDING

DRAWING NUMBER
S2

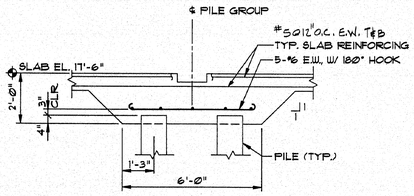

DOUBLE PILE

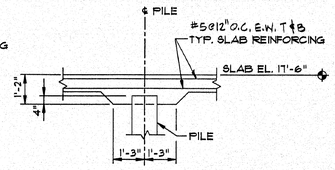

SINGLE PILE

TYP. THICKENED SLAB

3/8"=1'-0"

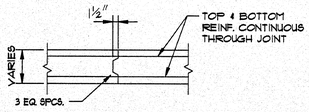

CONSTRUCTION JOINT

TYP. SLAB DETAILS

N.T.S.

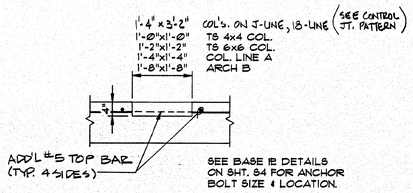

COLUMN BASE RECESS DETAIL

N.T.S. — NOTE: RECESS NOT REQ'D. IF COLUMN BASE IS COVERED BY SECOND SLAB POUR.

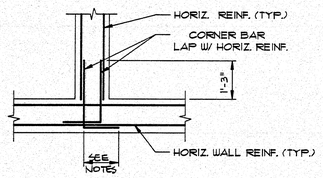

TYP. INTERSECTION REINFORCING

N.T.S.

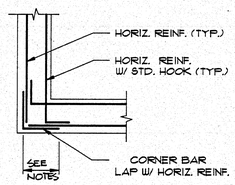

TYP. CORNER REINFORCING

N.T.S.

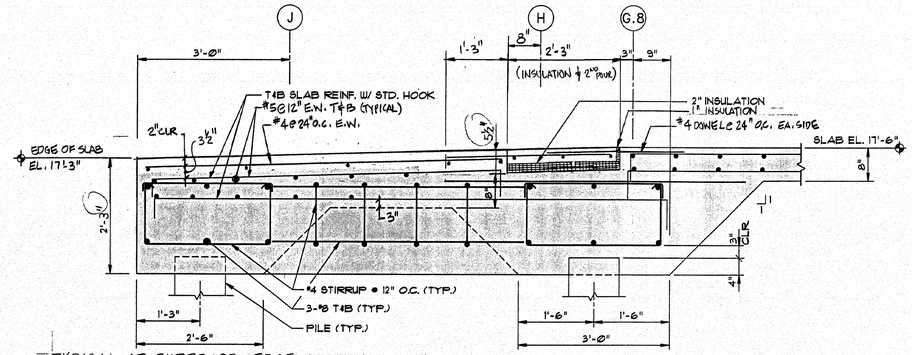

TYPICAL AT EXTERIOR EDGE

SECTION 1/82

3/4"=1'-0"

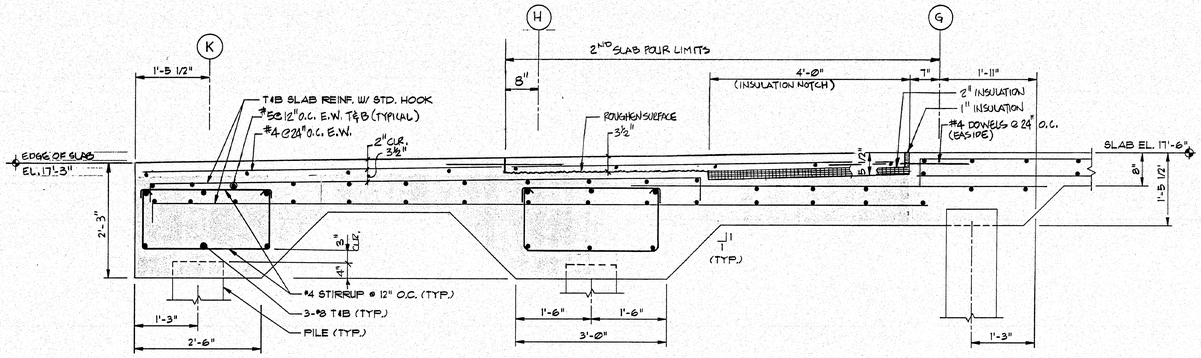

TYPICAL AT EXTERIOR EDGE

SECTION 2/82

3/4"=1'-0"

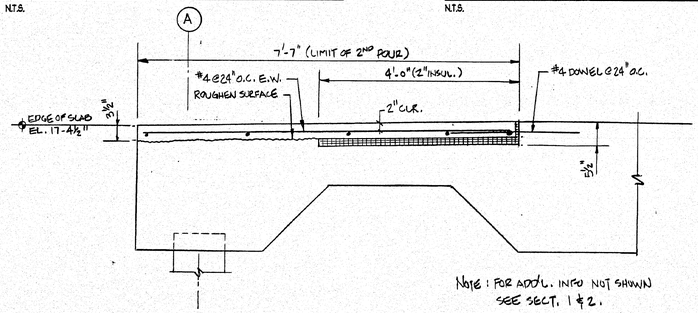

NOTE: FOR ADD'L. INFO NOT SHOWN SEE SECT. 1 & 2.

SECTION 3/82

3/4"=1'-0"

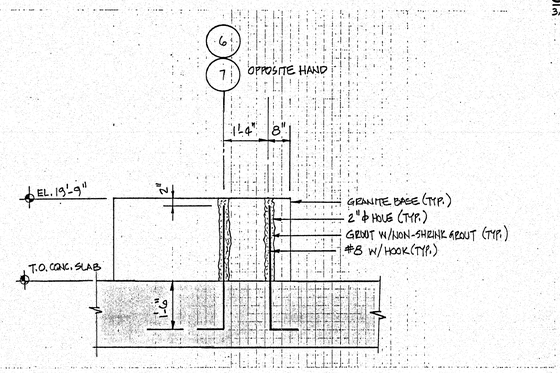

SECTION 4/82

1½"=1'-0"

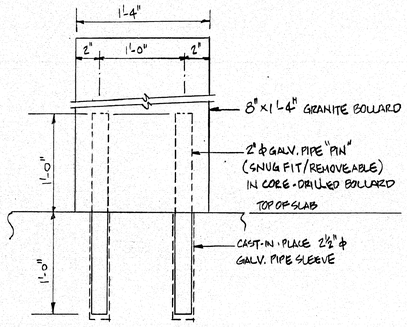

TYP. BOLLARD ANCHOR DETAIL

N TS

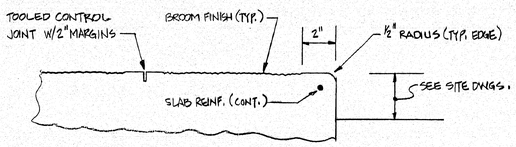

TYP. SLAB EDGE DETAIL

(@ EXTERIOR CANOPY AREAS)

129-105

REVISIONS:

MAINE STATE FERRY SYSTEM

ROCKLAND

NEW TERMINAL FACILITY

TEAS FEELY AND HINGSTON
100 COMMERCIAL STREET
PORTLAND, MAINE 04101
ARCHITECTURE - PLANNING

CIVIL ENGINEERING
TEC ASSOCIATES

STRUCTURAL ENGINEERING
PINKHAM & GREER

MECHANICAL ENGINEERING
BENNETT ENGINEERING

ELECTRICAL ENGINEERING
ELECTRICAL DESIGN CONSULTANTS

APPROVED BY BUREAU OF TRANSPORTATION SERVICES

STATE OF MAINE
JAMES J. MORAN III
4587
REGISTERED PROFESSIONAL ENGINEER

DATE 10/3/94	DRAWN
SCALE AS SHOWN	CHECKED
MDOT PROJ # FBD-6069(00)X	TEH PROJ # 9216

DRAWING TITLE
FOUNDATION SECTIONS & DETAILS

DRAWING NUMBER
S3

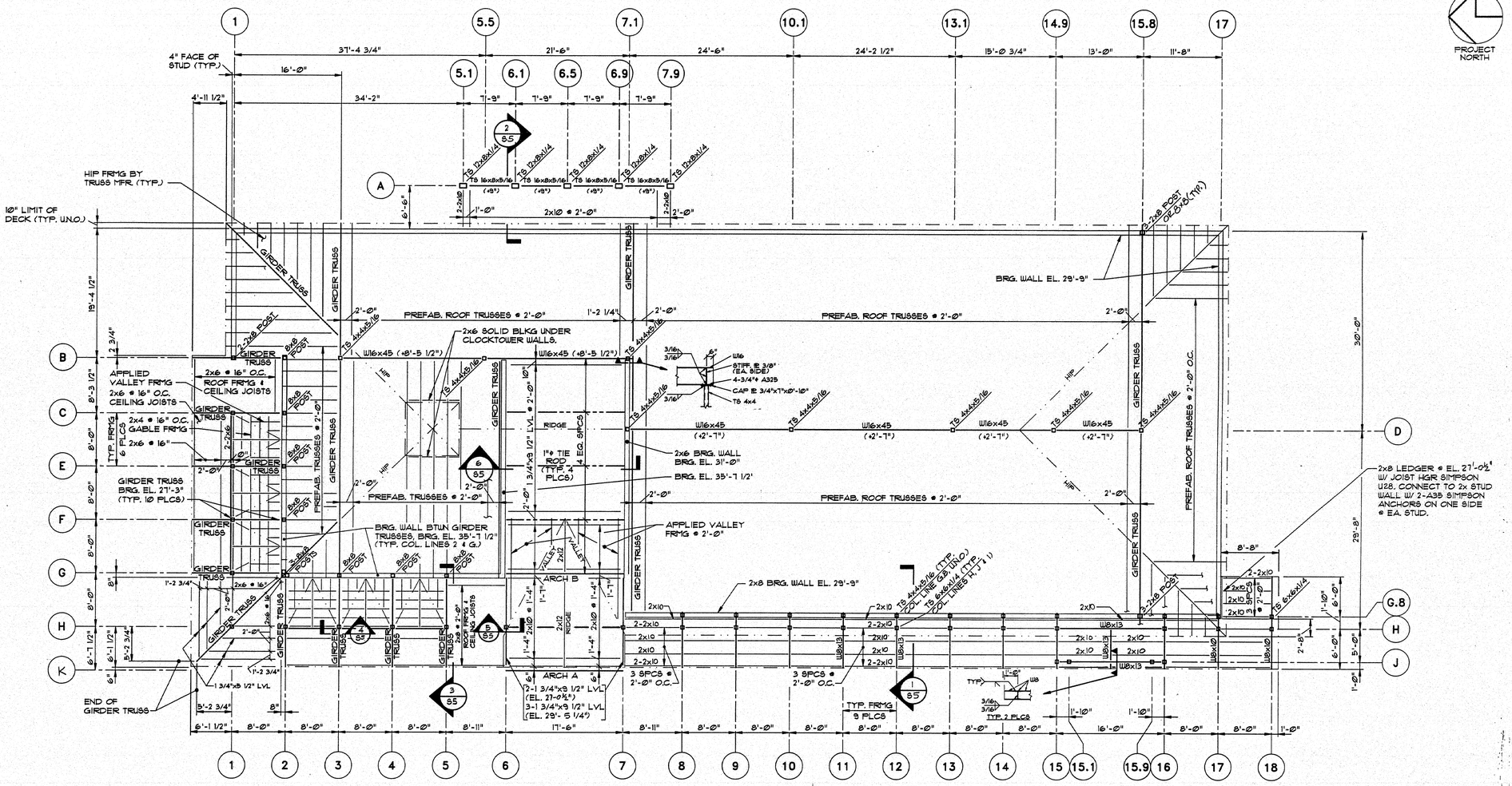

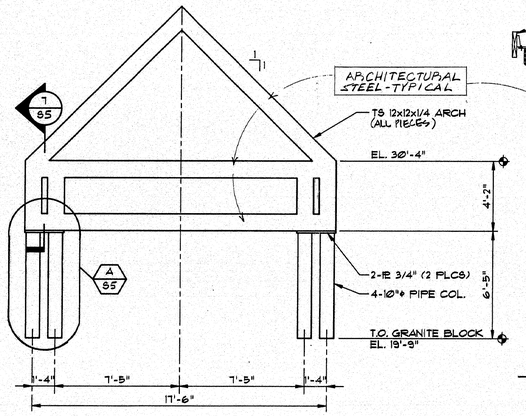

ARCH A
1/4" = 1'-0"

NOTE: ALL TUBE-TO-TUBE JOINTS TO BE MITERED, FULL-PENETRATION BEVEL WELDED, GROUND & SMOOTH.

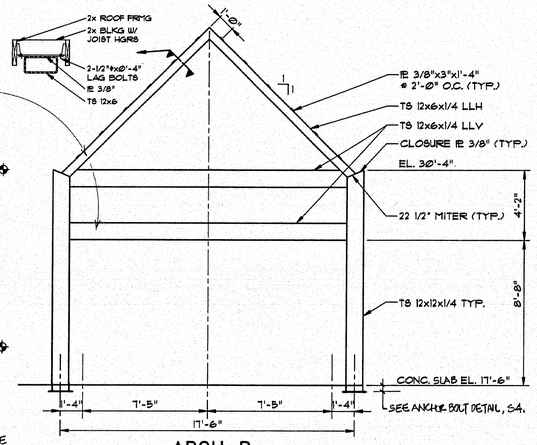

ARCH B
1/4" = 1'-0"

ROOF FRAMING PLAN

1/8" = 1'-0"

NOTES:

1. ROOF DECK: 5/8" PLYWOOD
2. TOP OF STEEL EL. 26'-11" (TYP. U.N.O.)
3. REFERENCE ELEVATION: FINISH FLOOR = +17'-6"
3. BEARING WALLS: 2x8 @ 2'-0" O.C. (TYP. U.N.O.)

129-106

REVISIONS

MAINE STATE FERRY SYSTEM
ROCKLAND
NEW TERMINAL FACILITY

TEAS FEELY AND HINGSTON
100 COMMERCIAL STREET
PORTLAND, MAINE 04101
ARCHITECTURE + PLANNING

CIVIL ENGINEERING: TEC ASSOCIATES
STRUCTURAL ENGINEERING: PINKHAM & GREER
MECHANICAL ENGINEERING: BENNETT ENGINEERING
ELECTRICAL ENGINEERING: ELECTRICAL DESIGN CONSULTANTS

APPROVED BY BUREAU OF TRANSPORTATION SERVICES
P. Pattle

STATE OF MAINE JAMES A. MORAN III 4587 REGISTERED PROFESSIONAL ENGINEER

DATE: 10/3/94	DRAWN:
SCALE: AS SHOWN	CHECKED:
MDOT PROJ #: FBD-6069(001)X	TFH PROJ #: 9216

DRAWING TITLE: ROOF FRAMING PLAN

DRAWING NUMBER: S.4

CAD FILE: 9238353 FILE SCALE: 1=8'

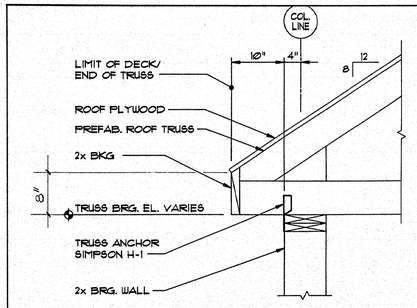

TYP. ROOF TRUSS @ BEARING WALLS
N.T.S.

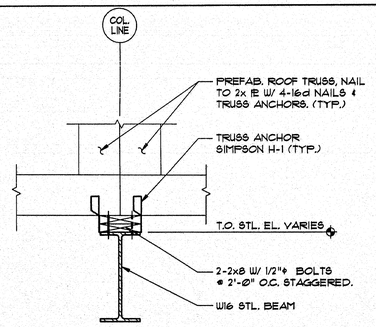

TYP. ROOF TRUSS @ STEEL BEAM
N.T.S.

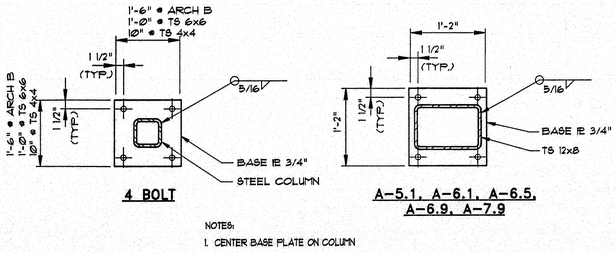

NOTES:
1. CENTER BASE PLATE ON COLUMN

BASE PLATE DETAIL
N.T.S.

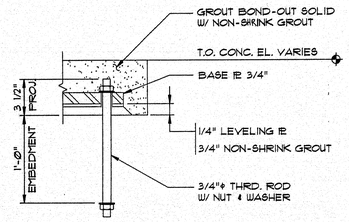

ANCHOR BOLT DETAIL
N.T.S.

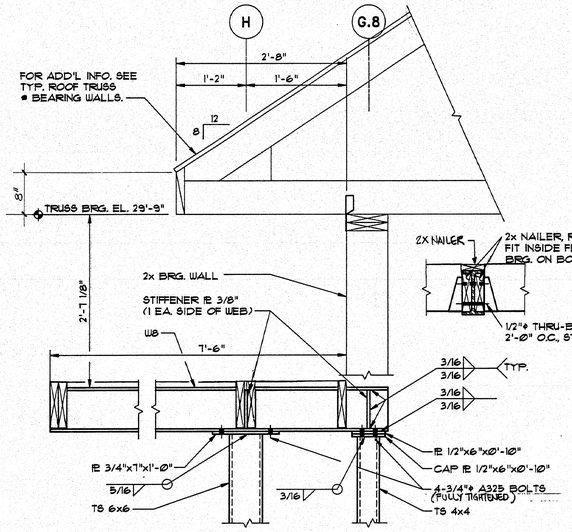

SECTION 1/S4
1"=1'-0"

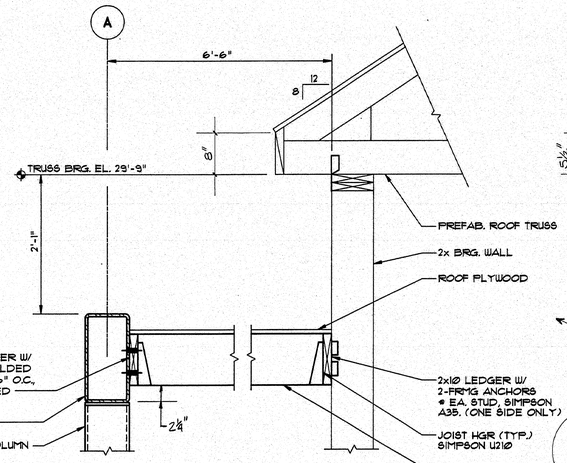

SECTION 2/S4
1"=1'-0"

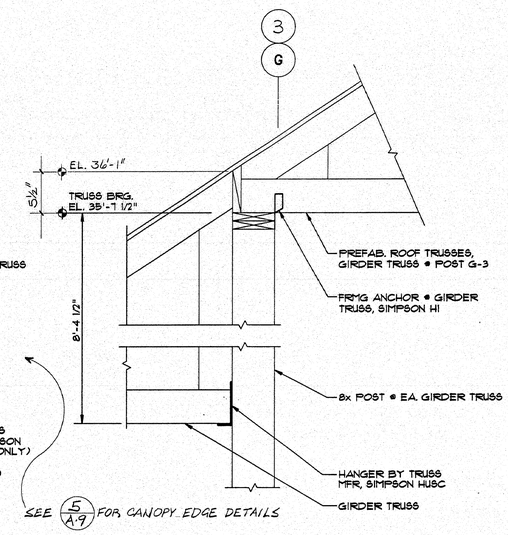

SECTION 3/S4
1"=1'-0"

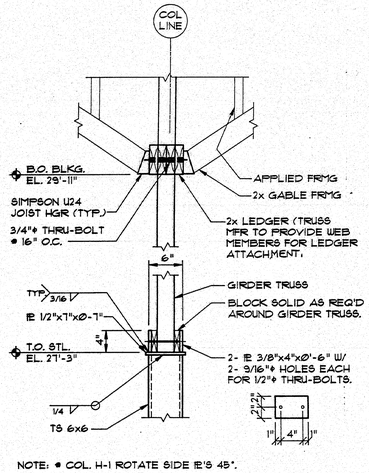

NOTE: @ COL. H-1 ROTATE SIDE PL'S 45°.

SECTION 4/S4
1"=1'-0"

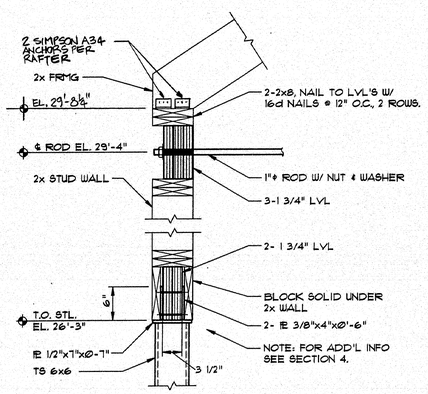

SECTION 5/S4
1"=1'-0"

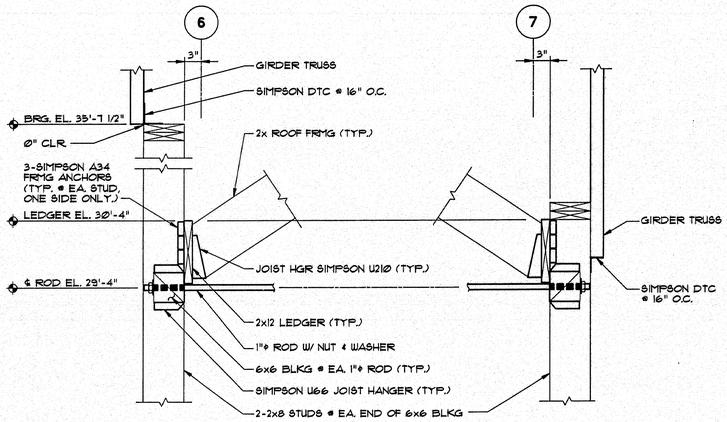

SECTION 6/S4
1"=1'-0"

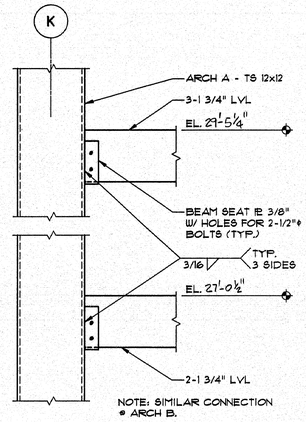

NOTE: SIMILAR CONNECTION @ ARCH B.

SECTION 7/S4
1"=1'-0"

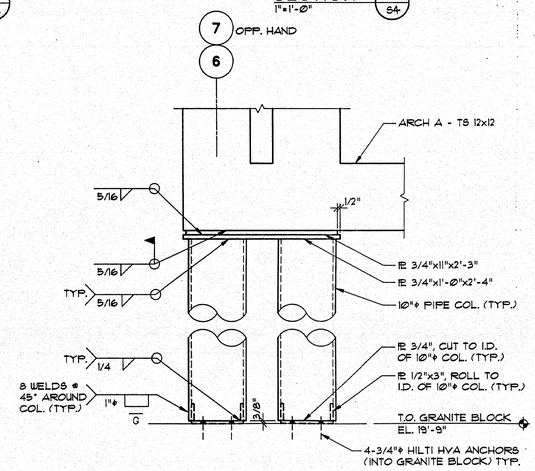

DETAIL A/S4
1"=1'-0"

129-107

REVISIONS

MAINE STATE FERRY SYSTEM
ROCKLAND
NEW TERMINAL FACILITY

TEAS FEELY AND HINGSTON
100 COMMERCIAL STREET
PORTLAND, MAINE 04101
ARCHITECTURE + PLANNING

CIVIL ENGINEERING
TEC ASSOCIATES

STRUCTURAL ENGINEERING
PINKHAM & GREER

MECHANICAL ENGINEERING
BENNETT ENGINEERING

ELECTRICAL ENGINEERING
ELECTRICAL DESIGN CONSULTANTS

APPROVED BY BUREAU OF TRANSPORTATION SERVICES
P. Pattle

STATE OF MAINE
JAMES A. MORAN III
4587
REGISTERED PROFESSIONAL ENGINEER

DATE	DRAWN
10/3/94	
SCALE	CHECKED
AS SHOWN	
MDOT PROJ. #	TFH PROJ. #
FBD-6009(001)X	9216

DRAWING TITLE
ROOF FRAMING
SECTIONS & DETAILS

DRAWING NUMBER
S5

9238354

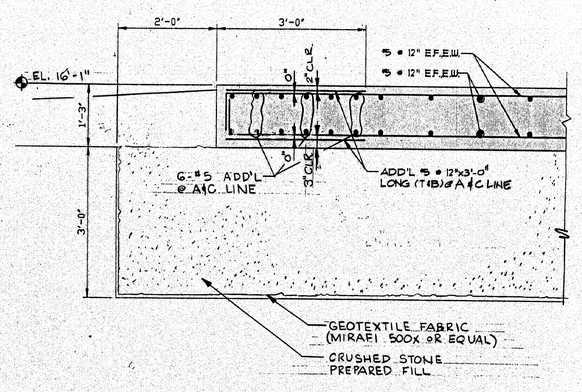

SECTION 1/S6
3/4"=1'-0"

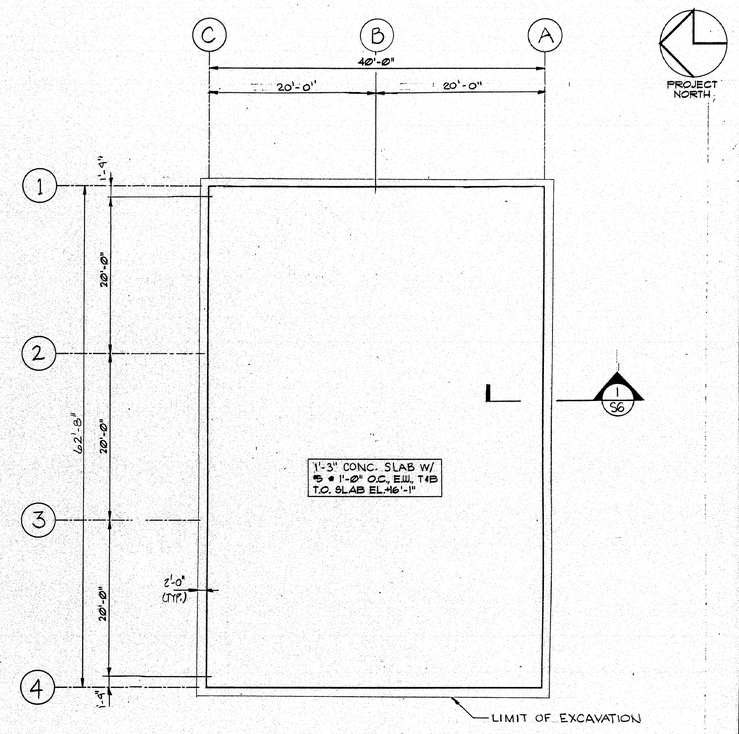

FOUNDATION PLAN

1/8"=1'-0"

NOTES:

1. DIMENSIONS MAY VARY SLIGHTLY FROM THOSE SHOWN TO ACCOMODATE METAL BUILDING SYSTEM. DIMENSIONS AND REINFORCING AT COLUMN PIERS MAY CHANGE FROM THAT SHOWN IF REQUIRED BY ACTUAL METAL BUILDING COLUMN LOADS.

   ANCHOR BOLTS: COORDINATE SIZE AND LOCATION WITH METAL BUILDING MANUFACTURER. PROVIDE HEADED BOLTS OR THREADED ROD WITH HEAVY HEX NUT WELDED TO ROD. (NO HOOKED BOLTS) MINIMUM EMBEDMENT OF 1'-0". ACTUAL EMBEDMENT TO BE DETERMINED BASED ON BUILDING LOADS.

   NO CHANGES IN CONTRACT PRICE WILL BE ALLOWED FOR THESE CHANGES.

2. CONCRETE: SEE CONCRETE NOTES ON DWG. S1.

3. STRUCTURE: PRE-ENGINEERED METAL BUILDING SYSTEM. SEE GENERAL STRUCTURAL NOTES ON DWG. S1. FLOOR SYSTEM DESIGN LIVE LOAD: 125 PSF ASSUMED COLUMN REACTION: 30 KIPS (MAXIMUM)

4. EXCAVATE 3 FEET BELOW BOTTOM ELEVATION OF MAT FOUNDATION. EXTEND EXCAVATION MINIMUM 2 FEET LATERALLY BEYOND THE EDGE OF FOUNDATION ON EACH SIDE. PLACE GEOTEXTILE FABRIC SUCH AS MIRAFI 500X (OR EQUAL) IN THE BOTTOM OF THE EXCAVATION AND EXTEND UP THE EXCAVATION SIDE SLOPES. OVERLAP SEAMS IN ACCORDANCE WITH THE MANUFACTURER'S REQUIREMENTS.

5. BACKFILL EXCAVATION WITH CRUSHED STONE MEETING THE FOLLOWING GRADATION; PLACE STONE IN LIFTS AND COMPACT TO 100 PERCENT OF DRY RODDED UNIT WEIGHT AS DETERMINED BY ASTM C-29.

SIEVE SIZE	PERCENT FINER BY WEIGHT
1 INCH	100
3/4 INCH	90 - 100
3/8 INCH	20 - 55
NO. 4	0 - 10
NO. 8	0 - 5

129-108

REVISIONS:
△1 12-14-94 ENTIRE DWG.

MAINE STATE FERRY SYSTEM
ROCKLAND
NEW TERMINAL FACILITY

TEAS FEELY AND HINGSTON
100 COMMERCIAL STREET
PORTLAND, MAINE 04101
ARCHITECTURE • PLANNING

CIVIL ENGINEERING
TEC ASSOCIATES

STRUCTURAL ENGINEERING
PINKHAM & GREER

MECHANICAL ENGINEERING
BENNETT ENGINEERING

ELECTRICAL ENGINEERING
ELECTRICAL DESIGN CONSULTANTS

APPROVED BY BUREAU OF TRANSPORTATION SERVICES
P. Pattie

STATE OF MAINE
JAMES A. MORAN III
4582
REGISTERED PROFESSIONAL ENGINEER

DATE	DRAWN
10/3/94	JCR
SCALE	CHECKED
1/8"=1'-0"	JAM
MDOT PROJ. #	TFH PROJ. #
FBD-6069(001)	9216

DRAWING TITLE
FOUNDATION PLAN
COLD STORAGE BUILDING

DRAWING NUMBER
S6

CAD FILE: 9216S6 FILE SCALE: 1=8'

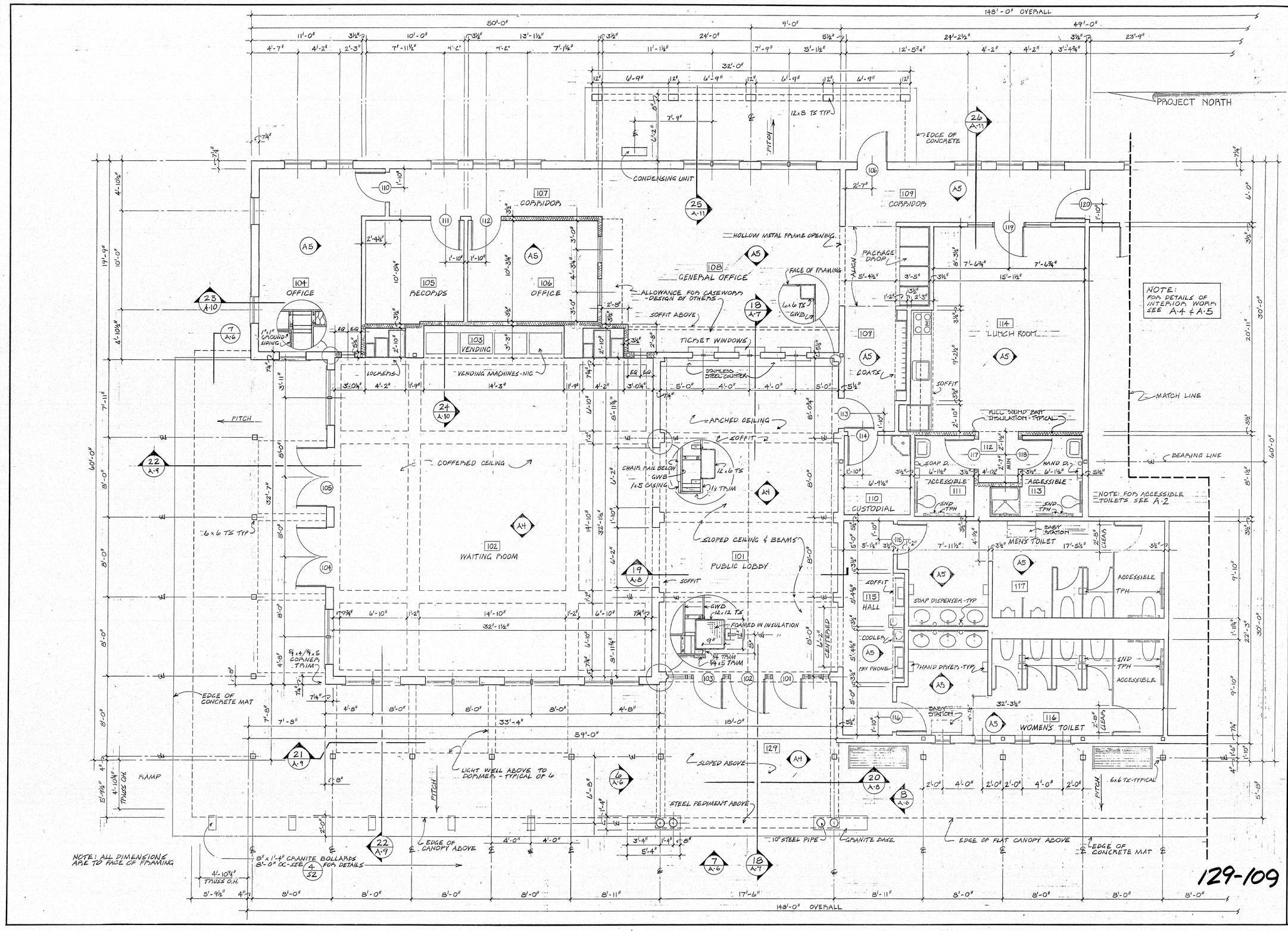

MAINE STATE FERRY SYSTEM

ROCKLAND

NEW TERMINAL FACILITY

TEAS FEELY AND HINGSTON
100 COMMERCIAL STREET
PORTLAND, MAINE 04101
ARCHITECTURE • PLANNING

CIVIL ENGINEERING
TEC ASSOCIATES
STRUCTURAL ENGINEERING
PINKHAM & GREER
MECHANICAL ENGINEERING
BENNETT ENGINEERING
ELECTRICAL ENGINEERING
ELECTRICAL DESIGN CONSULTANTS

APPROVED BY BUREAU OF TRANSPORTATION SERVICES
P. Pottle

REGISTERED ARCHITECT
JOSEPH A. FEELY
No. 1177
CT MAINE

DATE 10/12/99	DRAWN DJT
SCALE 1/4"=1'-0"	CHECKED JAF
MDOT PROJ # FBD-6069(00)X	TFH PROJ # 9216

DRAWING TITLE
FLOOR PLAN - NORTH

A-1

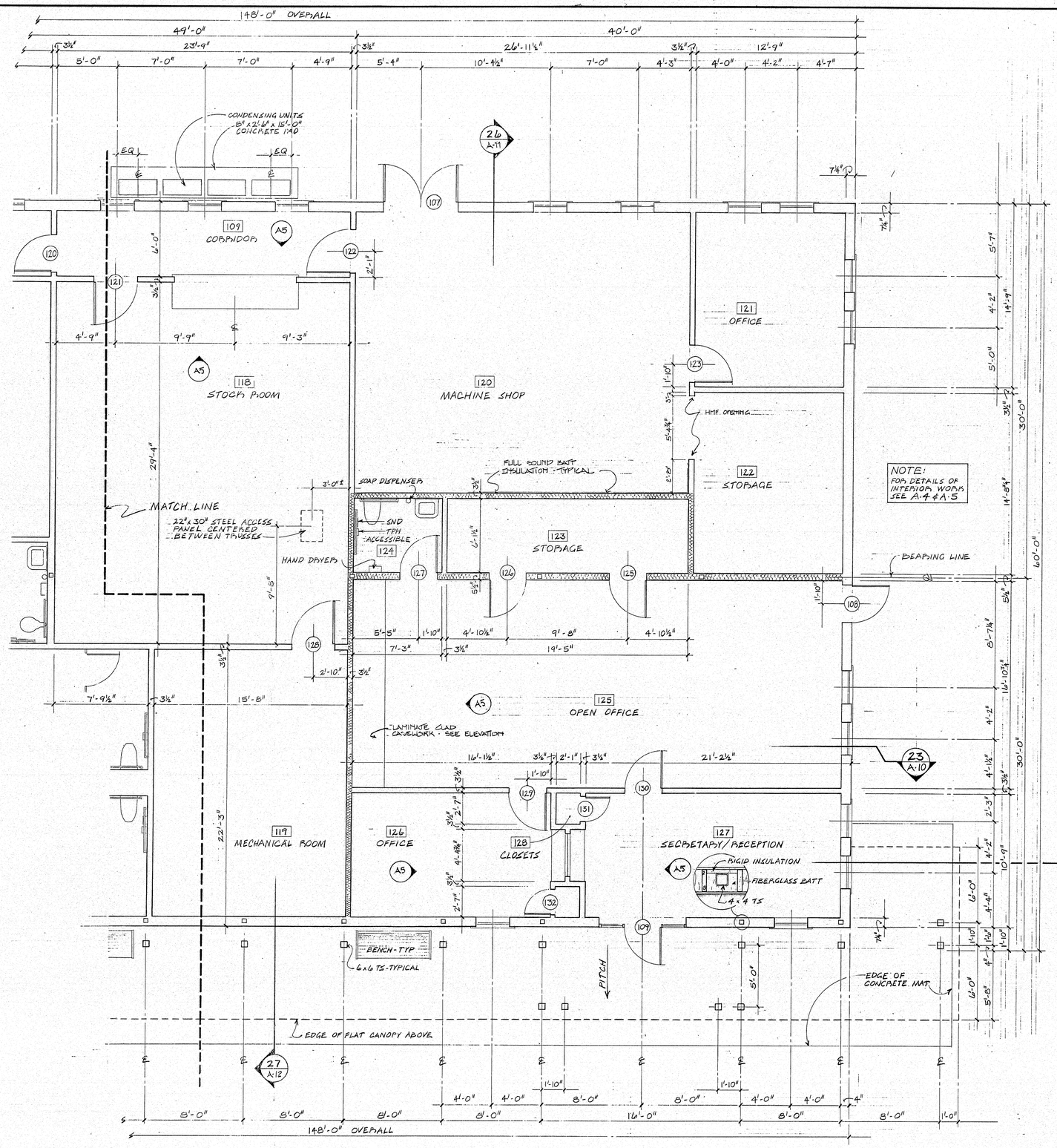

NOTE:
FOR DETAILS OF INTERIOR WORK SEE A.4 & A.5

PROJECT NORTH

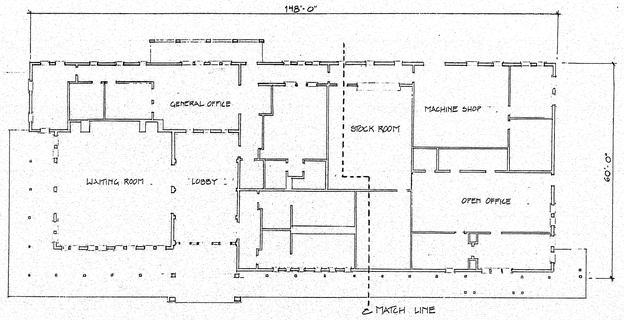

KEY PLAN N.T.S.

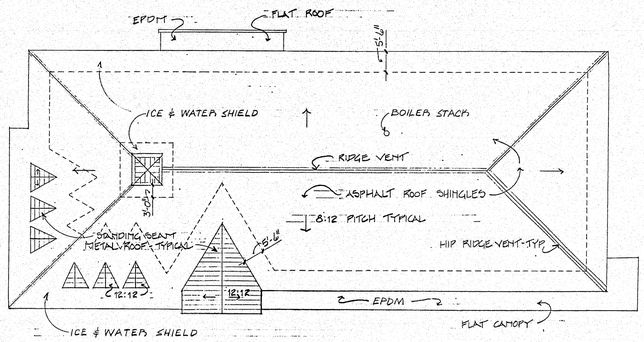

ROOF PLAN N.T.S.

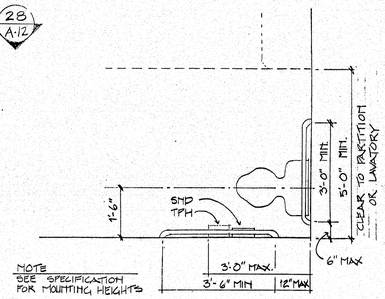

NOTE
SEE SPECIFICATION FOR MOUNTING HEIGHTS

ACCESSIBLE TOILET STALL/ROOM
1/2" = 1'-0"

GENERAL CONTRACTOR NOTE:

THIS PROJECT IS TO BE IN FULL COMPLIANCE WITH BOTH THE AMERICANS WITH DISABILITIES ACT AND THE ACCESSIBILITY REQUIREMENTS OF THE MAINE HUMAN RIGHTS COMMISSION. THE GENERAL CONTRACTOR SHALL CO-ORDINATE THEIR WORK AND THE WORK OF THEIR SUBCONTRACTORS TO ASSURE THAT THESE STANDARDS ARE MET.

129-110

MAINE STATE FERRY SYSTEM
ROCKLAND
NEW TERMINAL FACILITY

TEAS FEELY AND HINGSTON
100 COMMERCIAL STREET
PORTLAND, MAINE 04101
ARCHITECTURE + PLANNING

CIVIL ENGINEERING
TEC ASSOCIATES
STRUCTURAL ENGINEERING
PINKHAM & GREER
MECHANICAL ENGINEERING
BENNETT ENGINEERING
ELECTRICAL ENGINEERING
ELECTRICAL DESIGN CONSULTANTS

APPROVED BY BUREAU OF TRANSPORTATION SERVICES
P. Pothe

REGISTERED ARCHITECT
JOSEPH A. FEELY
No. 1177
MAINE

DATE	DRAWN
10/12/94	WJH/MRH
SCALE	CHECKED
1/4" = 1'-0"	JAF
MDOT PROJ #	TFH PROJ #
FBD 6069(00)X	9216

DRAWING TITLE:
FLOOR PLAN - SOUTH & KEY/ROOF PLANS

A-2

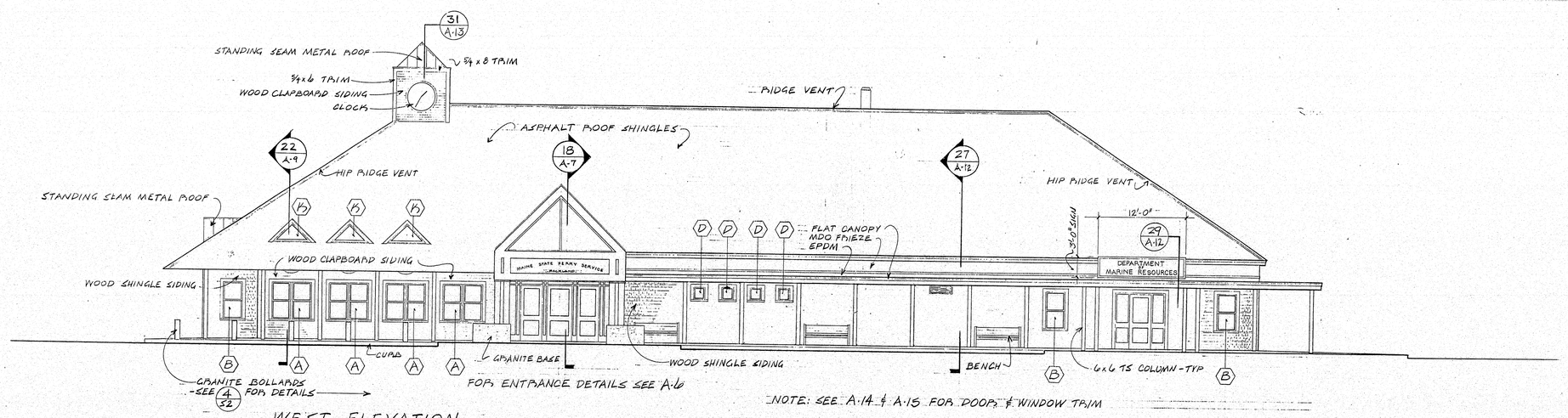

WEST ELEVATION

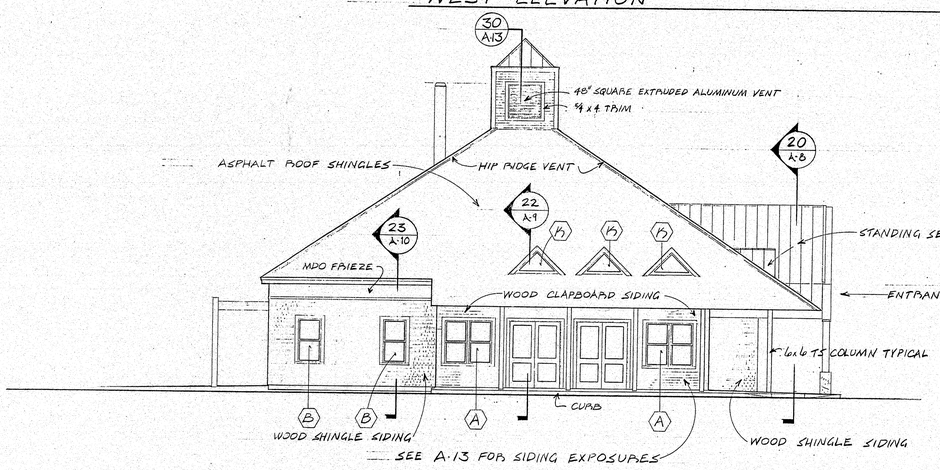

NORTH ELEVATION

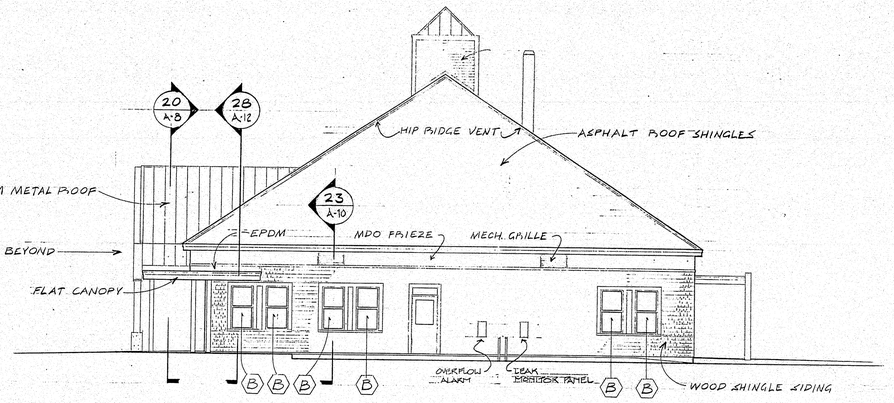

SOUTH ELEVATION

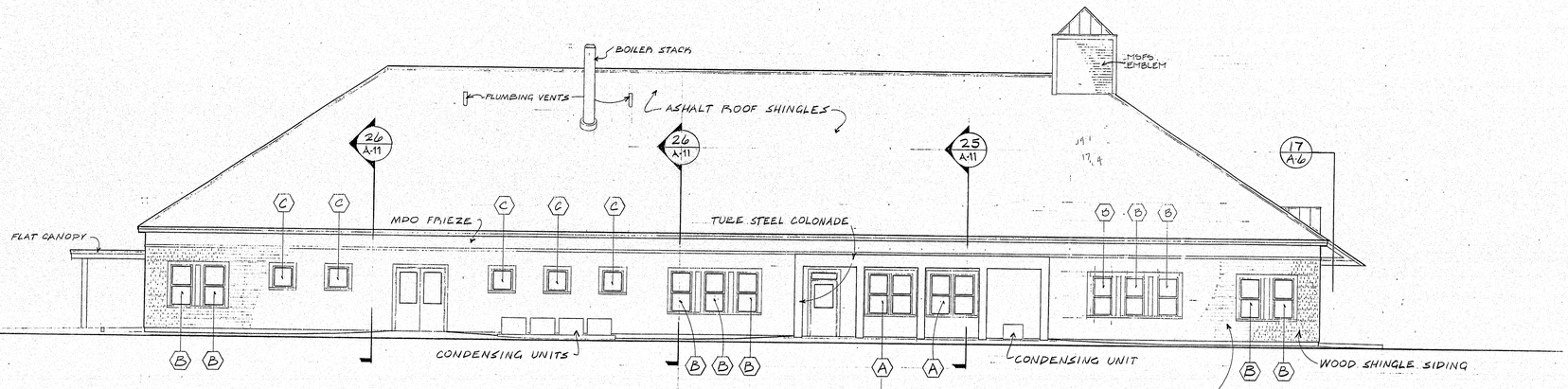

EAST ELEVATION

129-111

MAINE STATE FERRY SYSTEM
ROCKLAND
NEW TERMINAL FACILITY

TEAS FEELY AND HINGSTON
100 COMMERCIAL STREET
PORTLAND, MAINE 04101
ARCHITECTURE - PLANNING

CIVIL ENGINEERING
TEC ASSOCIATES
STRUCTURAL ENGINEERING
PINKHAM & GREER
MECHANICAL ENGINEERING
BENNETT ENGINEERING
ELECTRICAL ENGINEERING
ELECTRICAL DESIGN CONSULTANTS

APPROVED BY BUREAU OF TRANSPORTATION SERVICES
P. Pottle

REGISTERED ARCHITECT
JOSEPH A. FEELY
STATE OF MAINE

DATE	DRAWN
10/12/99	WJT
SCALE	CHECKED
1/8" = 1'-0"	JAF
MDOT PROJ #	TFH PROJ #
FBD-6069(00)X	9216

DRAWING TITLE
ELEVATIONS

A-5

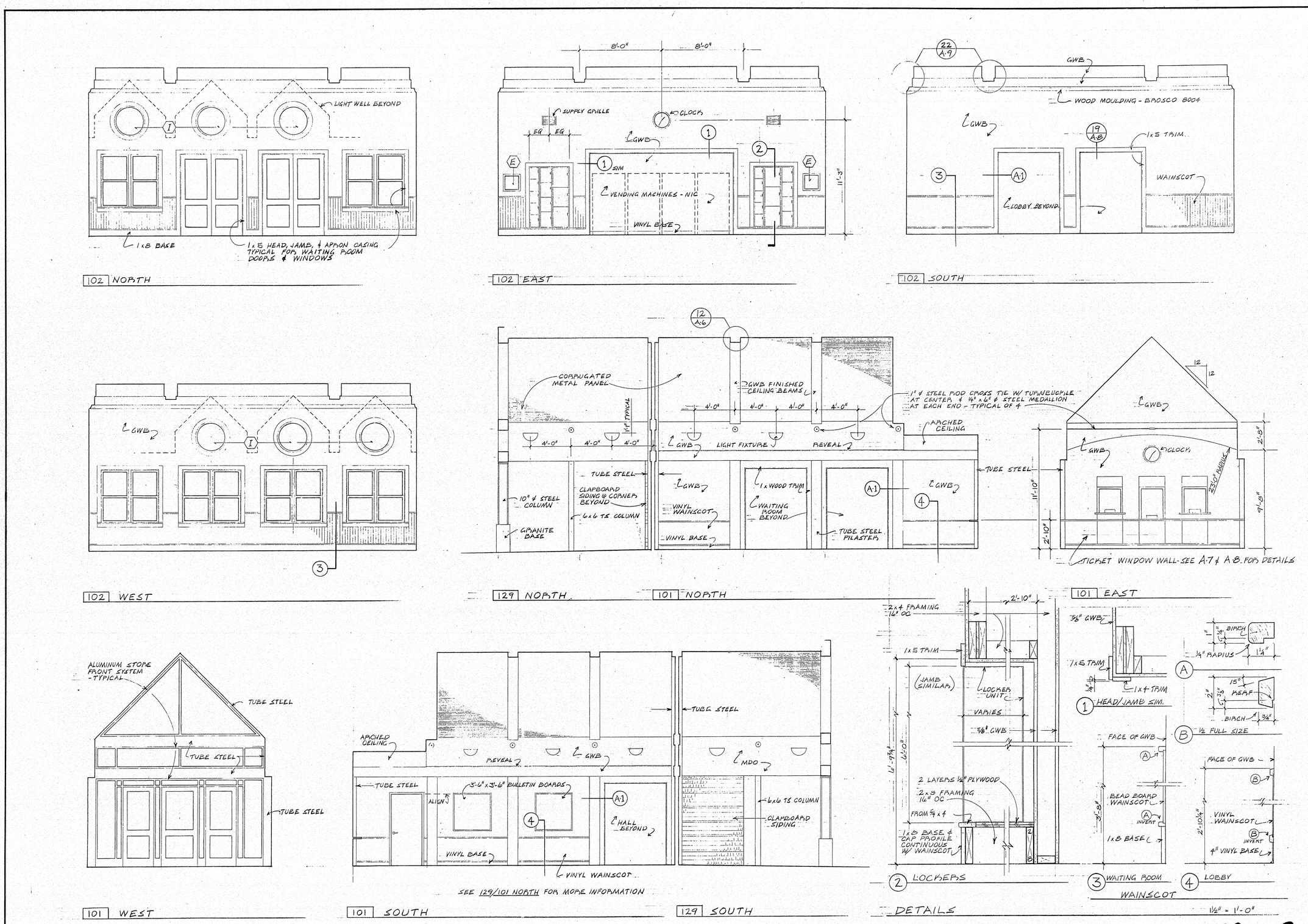

129-112

MAINE STATE FERRY SYSTEM

ROCKLAND

NEW TERMINAL FACILITY

TEAS FEELY AND HINGSTON
100 COMMERCIAL STREET
PORTLAND MAINE 04101
ARCHITECTURE • PLANNING

CIVIL ENGINEERING
TEC ASSOCIATES

STRUCTURAL ENGINEERING
PINKHAM & GREER

MECHANICAL ENGINEERING
BENNETT ENGINEERING

ELECTRICAL ENGINEERING
ELECTRICAL DESIGN CONSULTANTS

APPROVED BY BUREAU OF TRANSPORTATION SERVICES

P. Pohl

DATE 10/12/94	DRAWN WJT
SCALE 1/4" = 1'-0" UNO	CHECKED JAF
MDOT PROJ # FBD-6069(00)X	TFH PROJ # 9216

DRAWING TITLE
INTERIOR ELEVATIONS & DETAILS

A-4

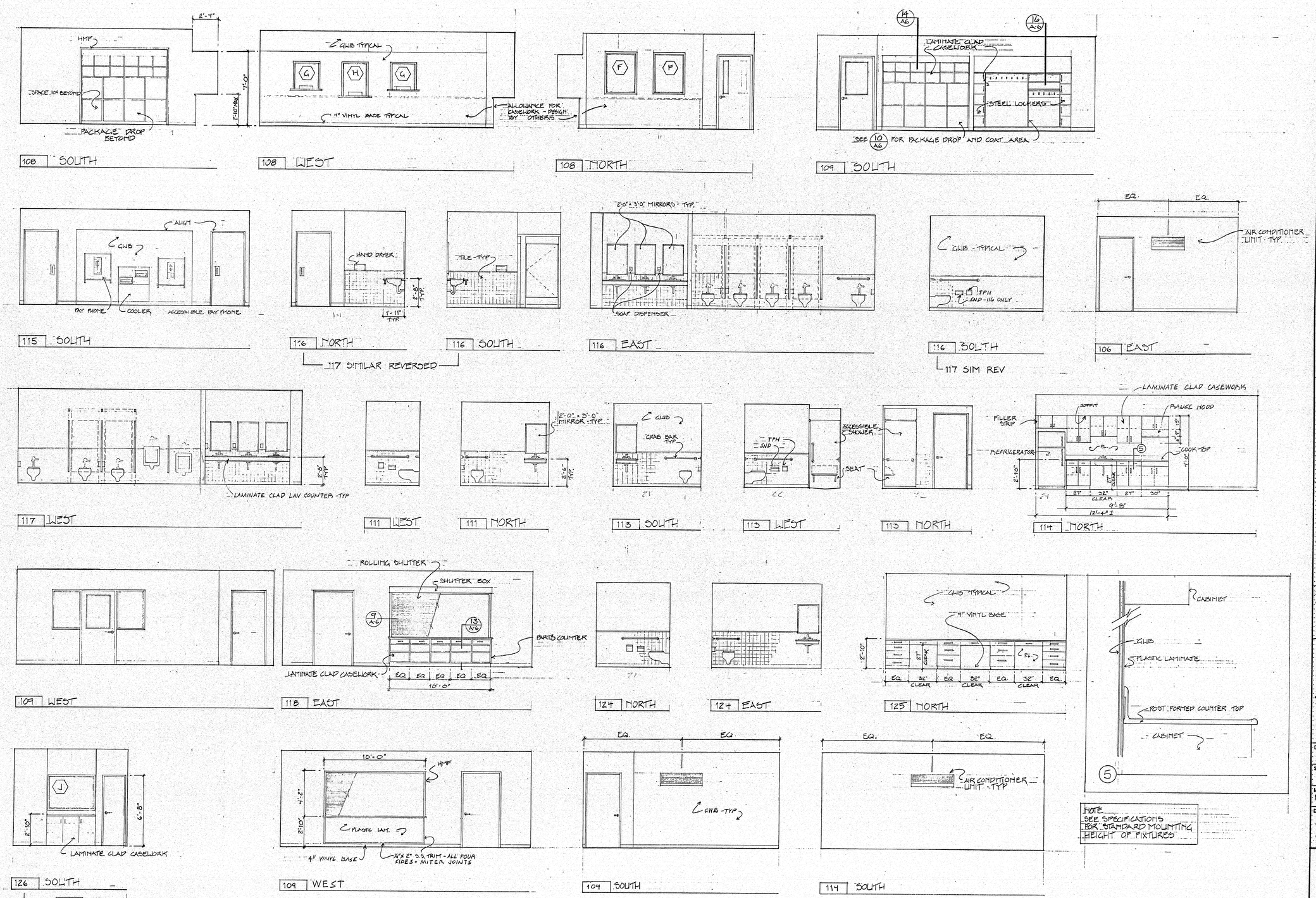

MAINE STATE FERRY SYSTEM

ROCKLAND

NEW TERMINAL FACILITY

TEAS FEELY AND HINGSTON
100 COMMERCIAL STREET
PORTLAND, MAINE 04101
ARCHITECTURE • PLANNING

CIVIL ENGINEERING
TEC ASSOCIATES
STRUCTURAL ENGINEERING
PINKHAM & GREER
MECHANICAL ENGINEERING
BENNETT ENGINEERING
ELECTRICAL ENGINEERING
ELECTRICAL DESIGN CONSULTANTS

APPROVED BY BUREAU OF TRANSPORTATION SERVICES

REGISTERED ARCHITECT No. 1117 STATE OF MAINE

DATE 10/12/94	DRAWN MRM
SCALE 1/4"=1'-0" AS NOTED	CHECKED JAF
MDOT PROJ # FBD-6009(00)X	TEH PROJ # 9216

DRAWING TITLE
INTERIOR ELEVATIONS AND DETAILS

A-13

129-113

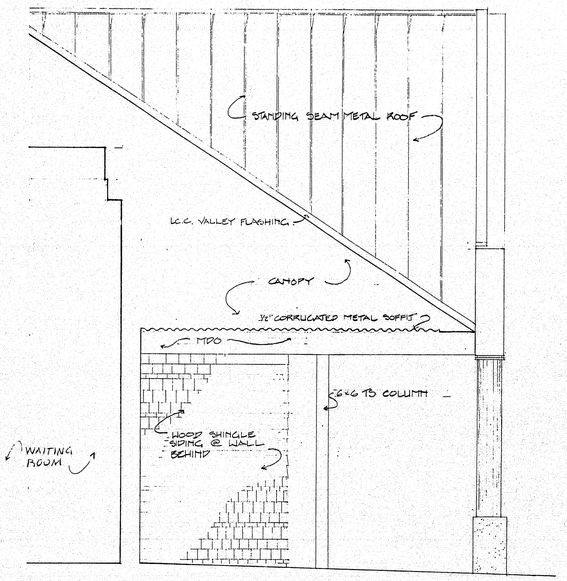

6 / A-1 ENTRY - NORTH ELEVATION
3/8" = 1'-0"

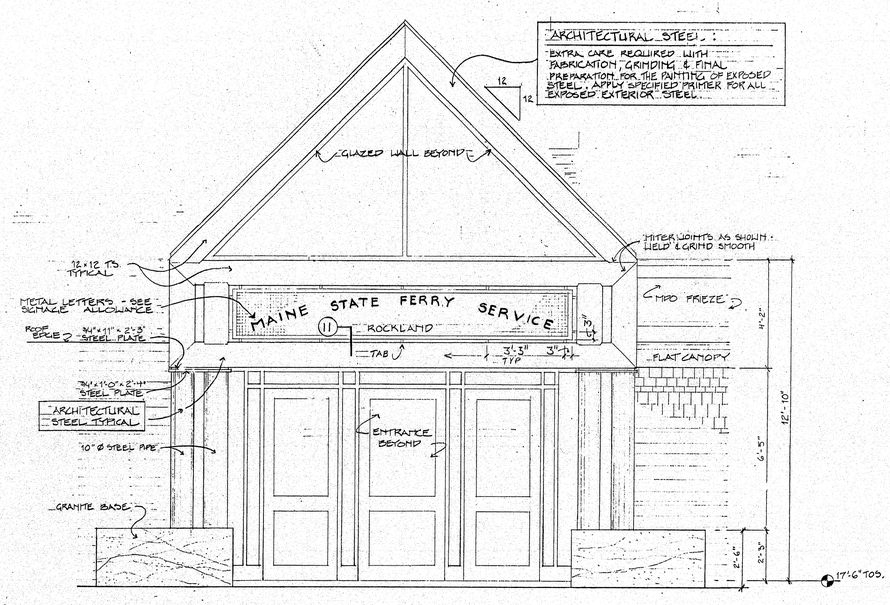

7 / A-1 ENTRY - WEST ELEVATION
3/8" = 1'-0"

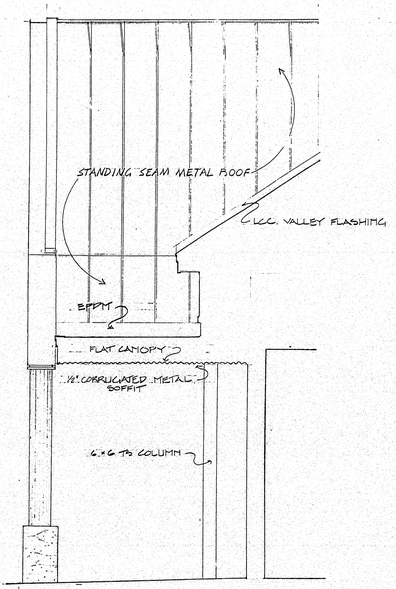

8 / A-1 ENTRY - SOUTH ELEVATION
3/8" = 1'-0"

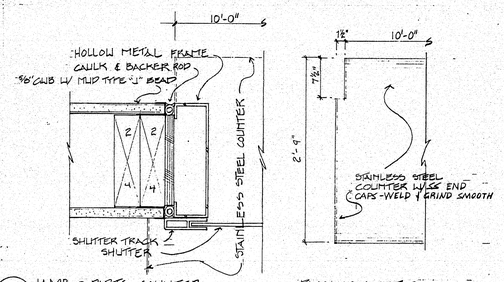

9 / A-5 JAMB @ PARTS COUNTER
3" = 1'-0"

PLAN OF COUNTER
1/2" = 1'-0"

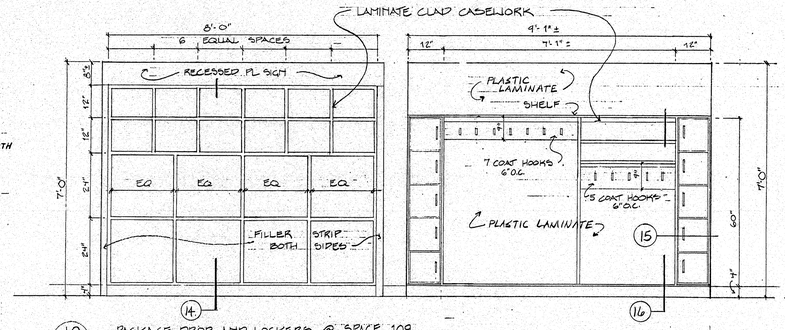

10 / A-5 PACKAGE DROP AND LOCKERS @ SPACE 109
1/2" = 1'-0"

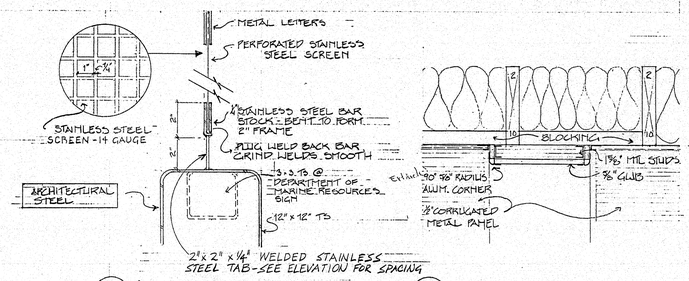

11 / A-12 SIGNBORDERS @ TS. FRAMES
3" = 1'-0"

12 / A-4 LOBBY CEILING BEAM
1 1/2" = 1'-0"

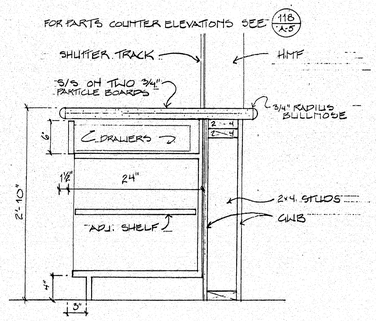

13 / A-5 SECTION @ PARTS COUNTER
1" = 1'-0

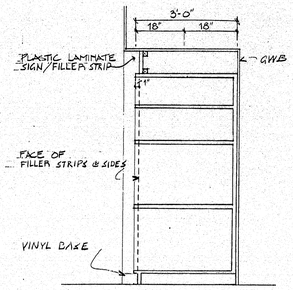

14 / SECTION @ PACKAGE DROP
1/2" = 1'-0"

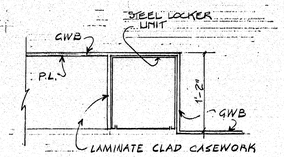

15 / PLAN @ LOCKER
1" = 1'-0"

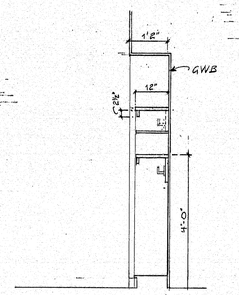

16 / SECTION @ LOCKERS
1/2" = 1'-0"

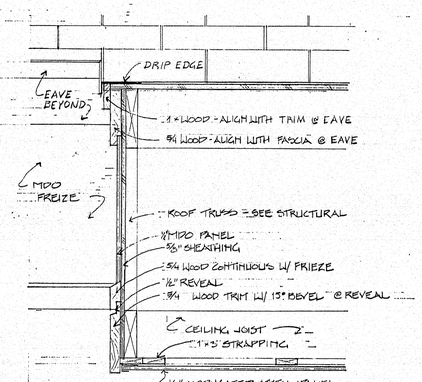

17 / A-3 SECTION @ RAKE
3" = 1'-0"

129-114

MAINE STATE FERRY SYSTEM
ROCKLAND
NEW TERMINAL FACILITY

TEAS FEELY AND HINGSTON
100 COMMERCIAL STREET
PORTLAND, MAINE 04101
ARCHITECTURE + PLANNING

CIVIL ENGINEERING
TEC ASSOCIATES
STRUCTURAL ENGINEERING
PINKHAM & GREER
MECHANICAL ENGINEERING
BENNETT ENGINEERING
ELECTRICAL ENGINEERING
ELECTRICAL DESIGN CONSULTANTS

APPROVED BY BUREAU OF TRANSPORTATION SERVICES

P. Pahle

REGISTERED ARCHITECT
JOSEPH A. FEELY
No. 1771
STATE OF MAINE

DATE 10/12/94	DRAWN HRM
SCALE AS NOTED	CHECKED JAF
MDOT PROJ. # FBD606900X	TEH PROJ. # 9216

DRAWING TITLE
ENTRY ELEVATIONS & DETAILS

A-6

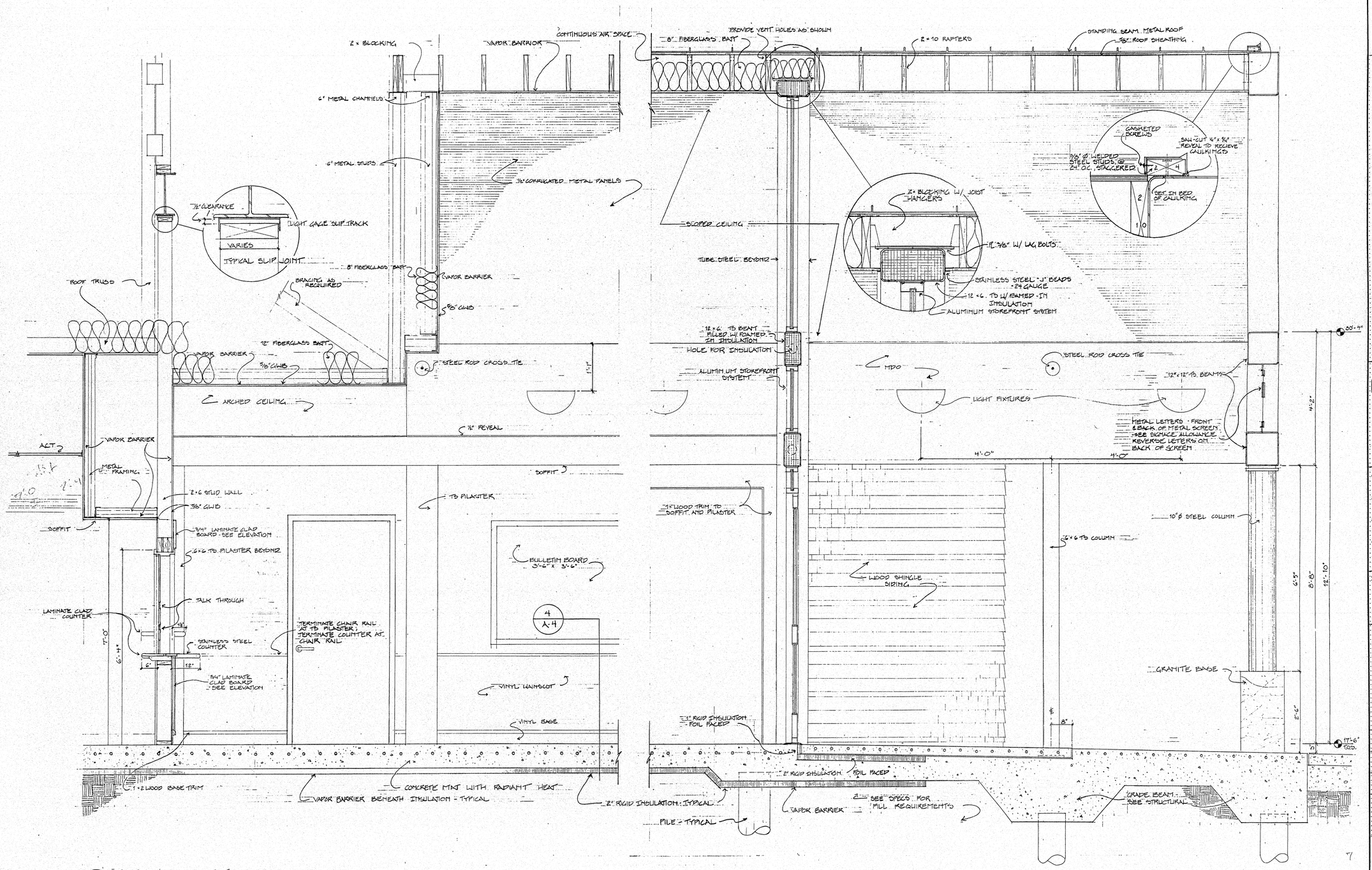

18 / A-1 ENTRY/LOBBY SECTION

129-115

MAINE STATE FERRY SYSTEM

ROCKLAND

NEW TERMINAL FACILITY

TEAS FEELY AND HINGSTON
100 COMMERCIAL STREET
PORTLAND, MAINE 04101
ARCHITECTURE • PLANNING

CIVIL ENGINEERING
TEC ASSOCIATES

STRUCTURAL ENGINEERING
PINKHAM & GREER

MECHANICAL ENGINEERING
BENNETT ENGINEERING

ELECTRICAL ENGINEERING
ELECTRICAL DESIGN CONSULTANTS

APPROVED BY BUREAU OF TRANSPORTATION SERVICES
P. Pottle

REGISTERED ARCHITECT
JOSEPH A. ROCKLAND
STATE OF MAINE

DATE 10/12/94	DRAWN MRM
SCALE 3/4" = 1'-0"	CHECKED JAF
MDOT PROJ # FBD-6069(00)X	TFH PROJ # 9216

DRAWING TITLE
ENTRY/LOBBY SECTION

A-7

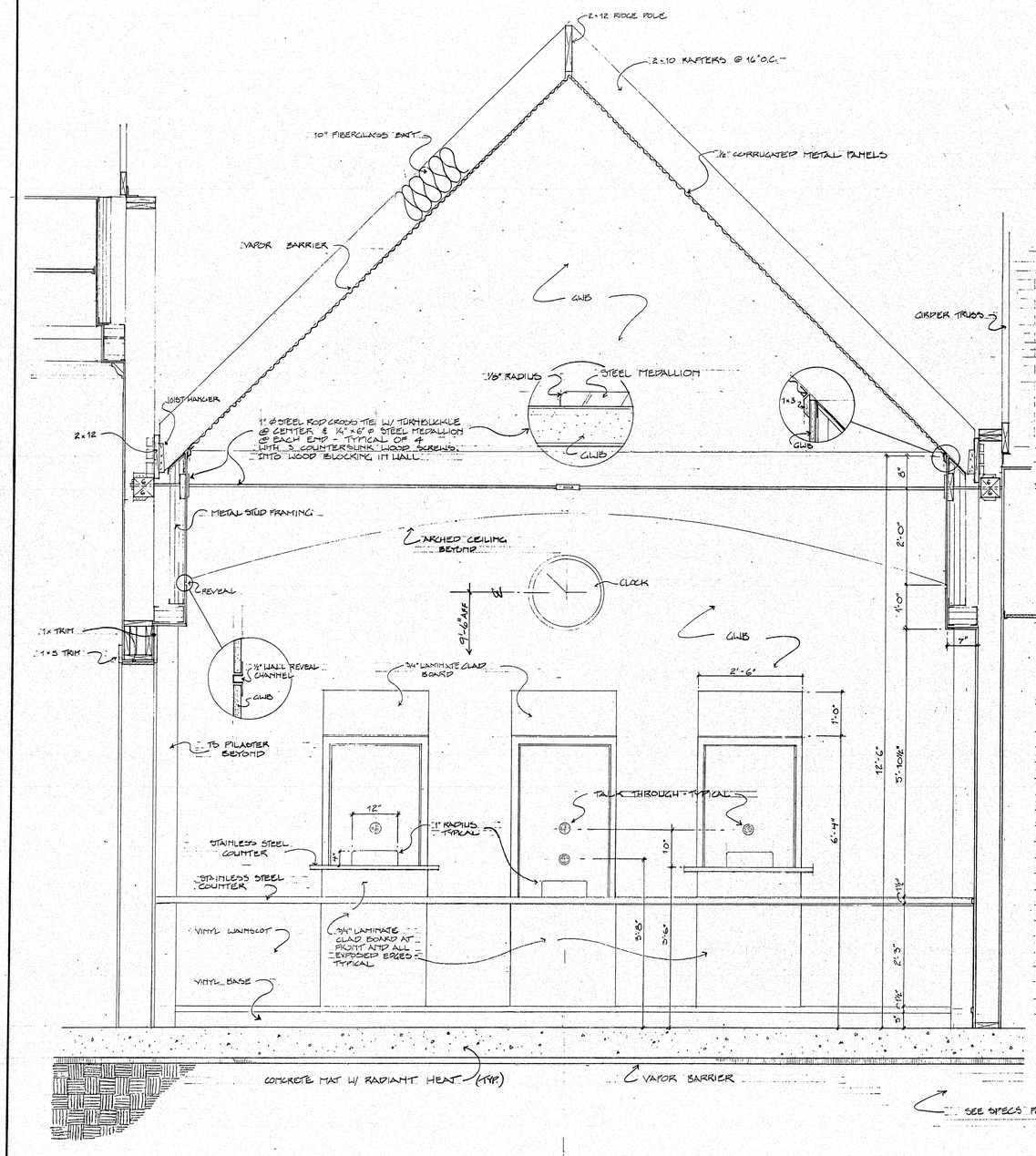

19 A-1 LOBBY CROSS SECTION

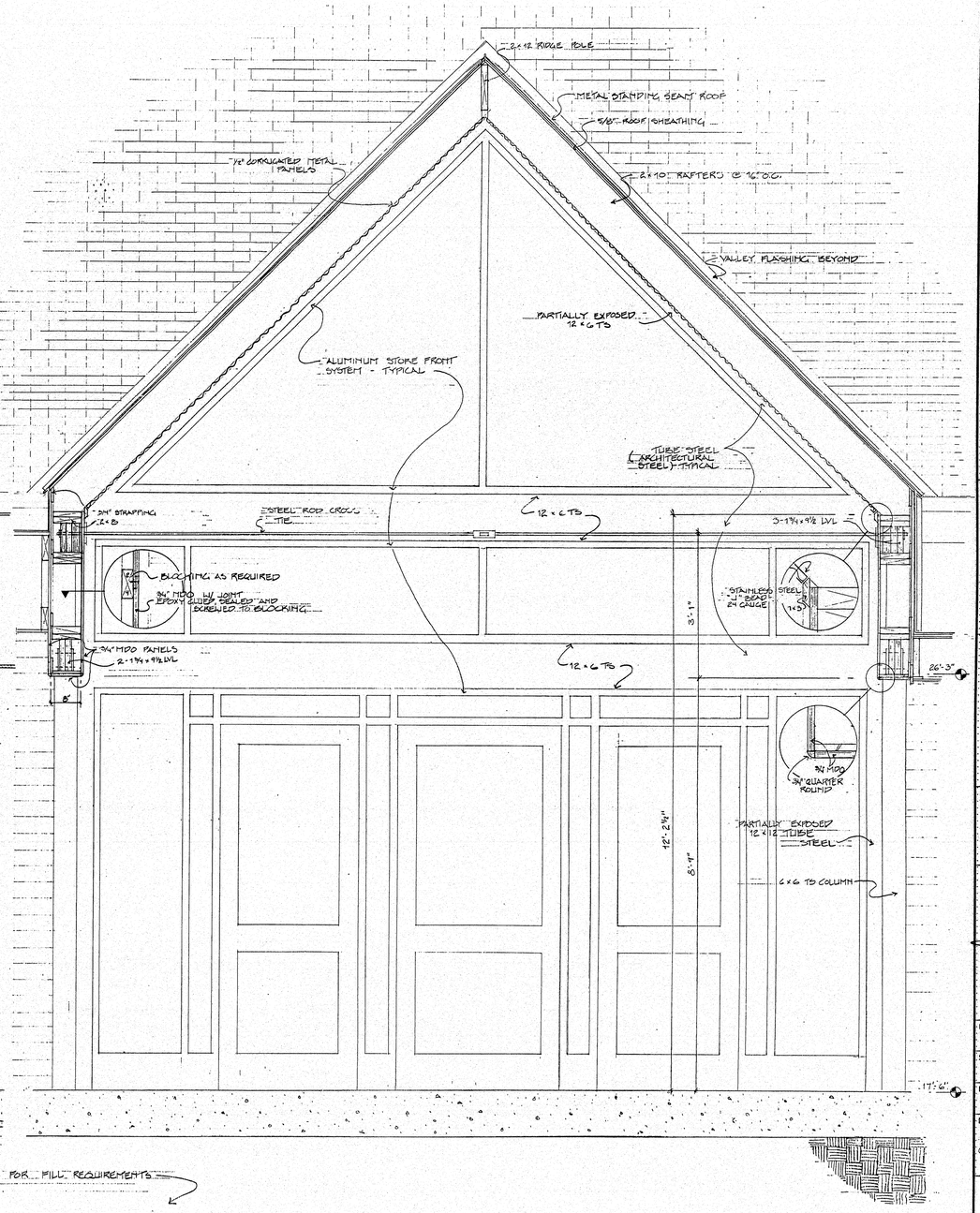

20 A-1 ENTRY CROSS SECTION

129-116

MAINE STATE FERRY SYSTEM
ROCKLAND
NEW TERMINAL FACILITY

TEAS FEELY AND HINGSTON
100 COMMERCIAL STREET
PORTLAND, MAINE 04101
ARCHITECTURE • PLANNING

CIVIL ENGINEERING
TEC ASSOCIATES
STRUCTURAL ENGINEERING
PINKHAM & GREER
MECHANICAL ENGINEERING
BENNETT ENGINEERING
ELECTRICAL ENGINEERING
ELECTRICAL DESIGN CONSULTANTS

APPROVED BY BUREAU OF TRANSPORTATION SERVICES
P. Pohle

REGISTERED ARCHITECT JOSEPH A. FEELY STATE OF MAINE

DATE	DRAWN
10/12/94	MRM
SCALE	CHECKED
3/4" = 1'-0"	NAF
MDOT PROJ #	TFH PROJ #
FBD-6069(00)X	9216

DRAWING TITLE
ENTRY / LOBBY CROSS-SECTIONS

A-8

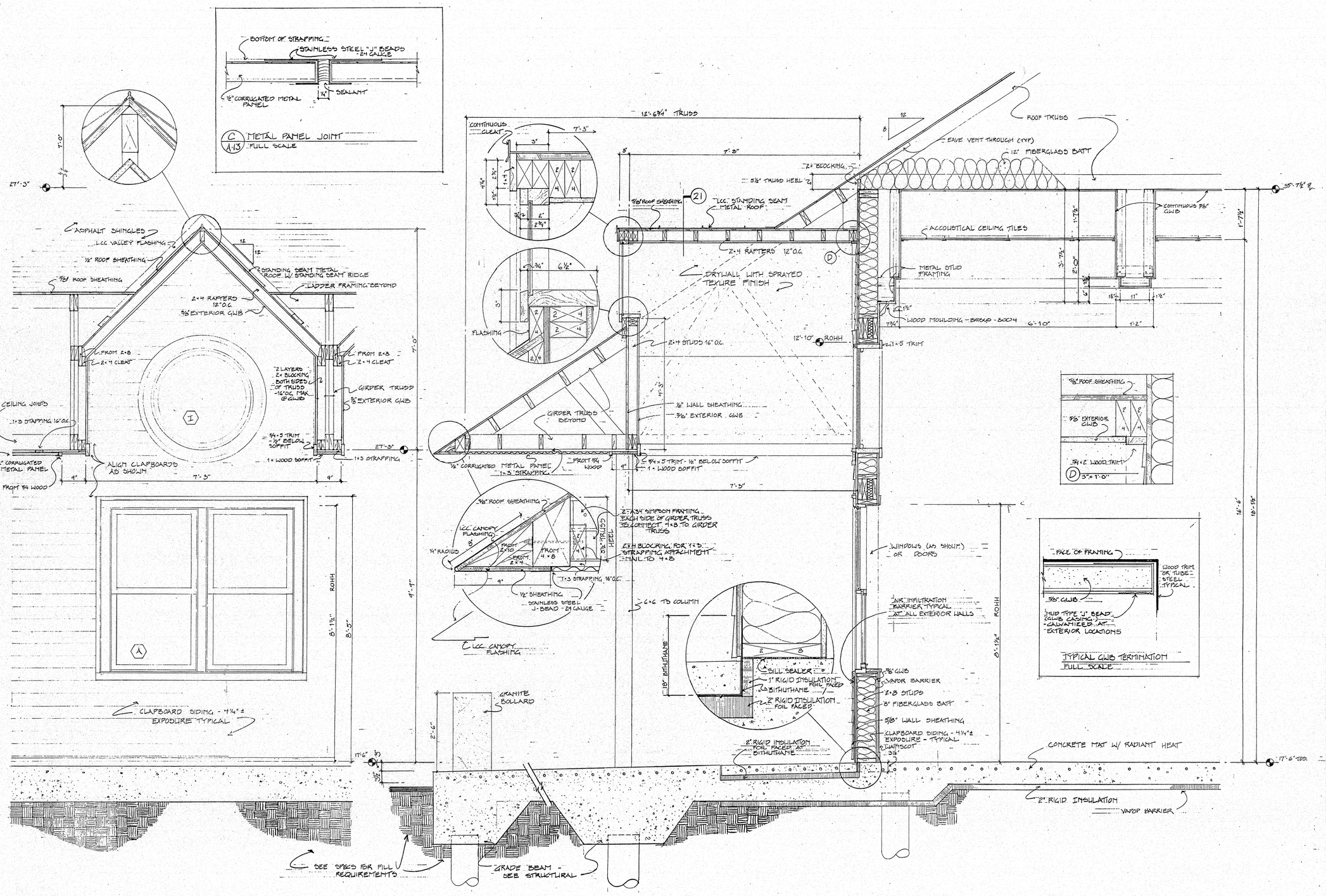

21 A-1 CANOPY SECTION @ LIGHT WELL

22 A-1 CANOPY / WAITING ROOM SECTION

MAINE STATE FERRY SYSTEM
ROCKLAND
NEW TERMINAL FACILITY

TEAS FEELY AND HINGSTON
100 COMMERCIAL STREET
PORTLAND, MAINE 04101
ARCHITECTURE • PLANNING

CIVIL ENGINEERING
TEC ASSOCIATES

STRUCTURAL ENGINEERING
PINKHAM & GREER

MECHANICAL ENGINEERING
BENNETT ENGINEERING

ELECTRICAL ENGINEERING
ELECTRICAL DESIGN CONSULTANTS

APPROVED BY BUREAU OF TRANSPORTATION SERVICES

REGISTERED ARCHITECT JOSEPH A. GREER STATE OF MAINE

DATE	DRAWN
10/12/99	MKM
SCALE	CHECKED
3/4" = 1'-0" UNO	JAF
MDOT PROJ. #	TFH PROJ. #
1980-6069(00)X	9216

DRAWING TITLE
CANOPY / WAITING ROOM SECTIONS

A-9

129-117

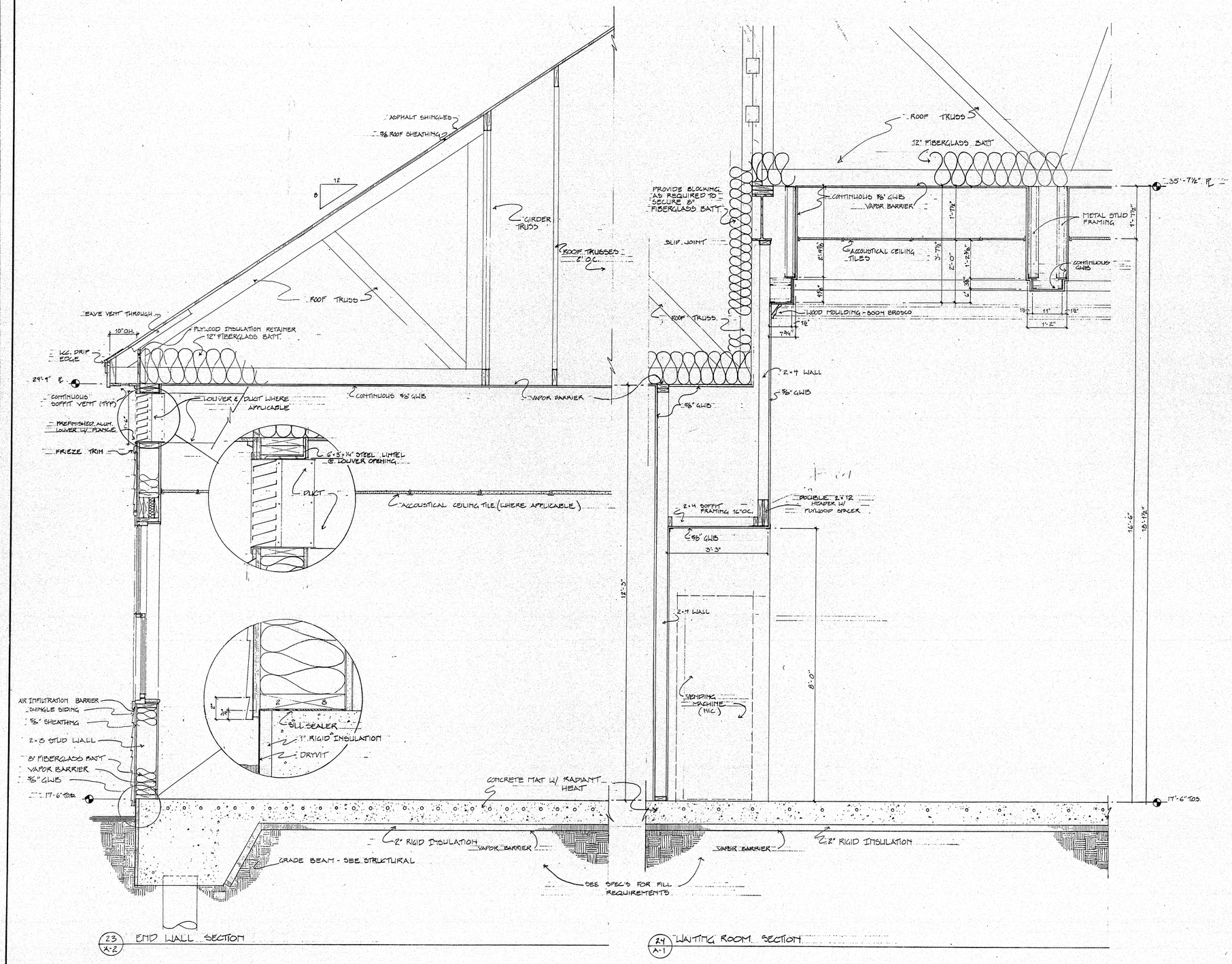

129-118

MAINE STATE FERRY SYSTEM

ROCKLAND

NEW TERMINAL FACILITY

TEAS FEELY AND HINGSTON
100 COMMERCIAL STREET
PORTLAND MAINE 04101
ARCHITECTURE • PLANNING

CIVIL ENGINEERING
TEC ASSOCIATES

STRUCTURAL ENGINEERING
PINKHAM & GREER

MECHANICAL ENGINEERING
BENNETT ENGINEERING

ELECTRICAL ENGINEERING
ELECTRICAL DESIGN CONSULTANTS

APPROVED BY BUREAU OF TRANSPORTATION SERVICES

P. Pottle

REGISTERED ARCHITECT
JOSEPH A. ...
No. 1077
STATE OF MAINE

DATE	DRAWN
10/12/94	MRM
SCALE	CHECKED
3/4" = 1'-0"	JAF
MDOT PROJ #	TFH PROJ #
FBD-6069(00)X	9216

DRAWING TITLE
END WALL / WAITING ROOM SECTIONS

A-10

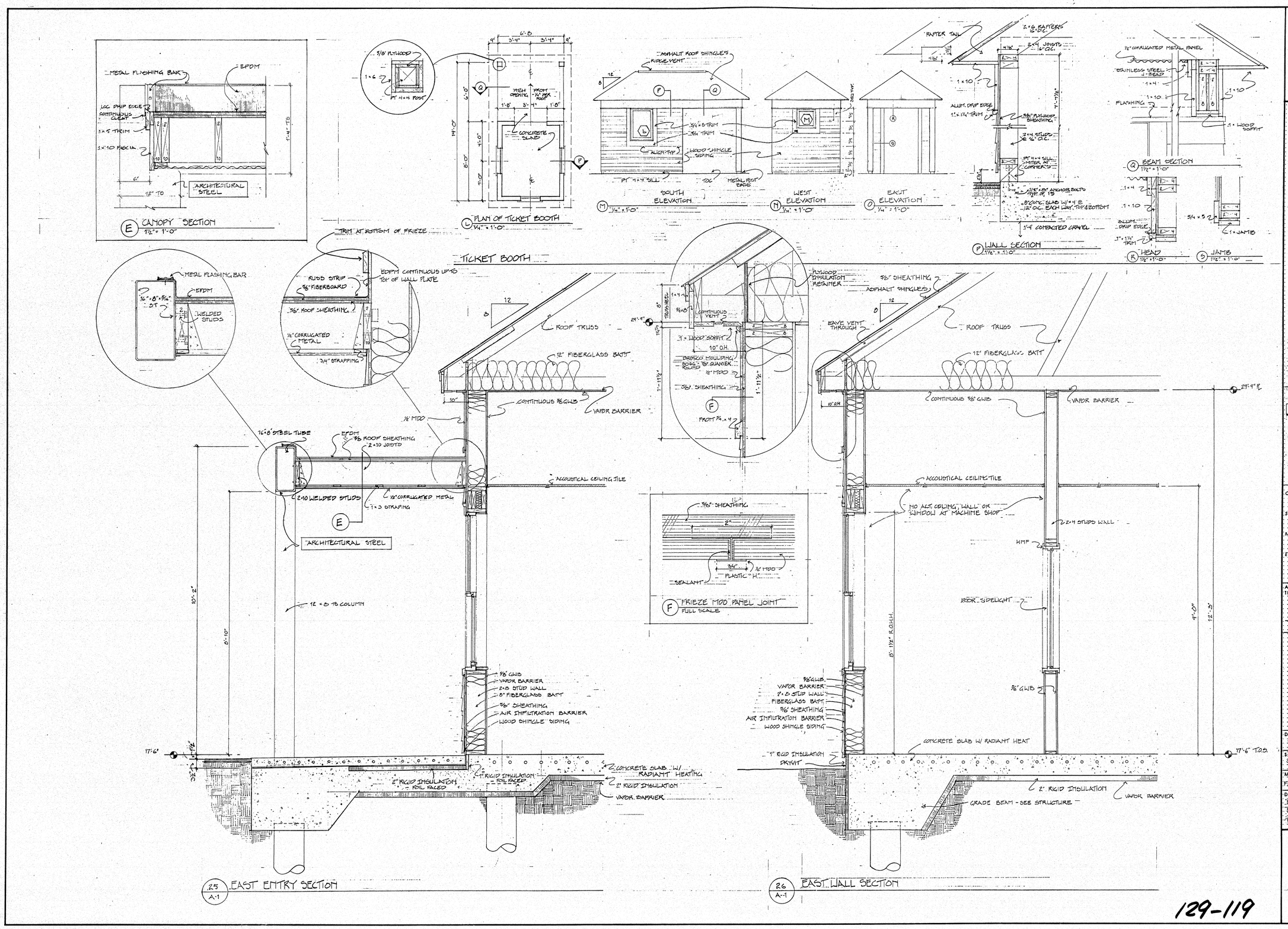

129-119

MAINE STATE FERRY SYSTEM

ROCKLAND

NEW TERMINAL FACILITY

TEAS FEELY AND HINGSTON
100 COMMERCIAL STREET
PORTLAND, MAINE 04101
ARCHITECTURE • PLANNING

CIVIL ENGINEERING
TEC ASSOCIATES
STRUCTURAL ENGINEERING
PINKHAM & GREER
MECHANICAL ENGINEERING
BENNETT ENGINEERING
ELECTRICAL ENGINEERING
ELECTRICAL DESIGN CONSULTANTS

APPROVED BY BUREAU OF TRANSPORTATION SERVICES
P. Pottle

DATE	DRAWN
10/12/94	MRM
SCALE	CHECKED
3/4" = 1'-0" UNO	JAF
MDOT PROJ #	TFH PROJ #
FBD-6069(00)X	9216

DRAWING TITLE
EAST ENTRY
EAST WALL SECTIONS &
TICKET BOOTH

A-11

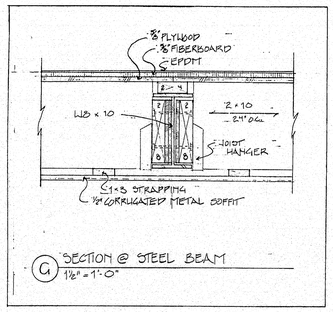

G SECTION @ STEEL BEAM
1½" = 1'-0"

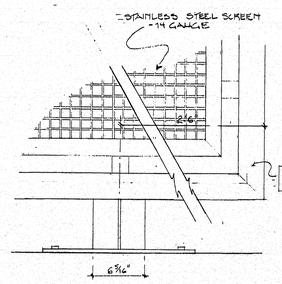

H PARTIAL ELEVATION
1½" = 1'-0"

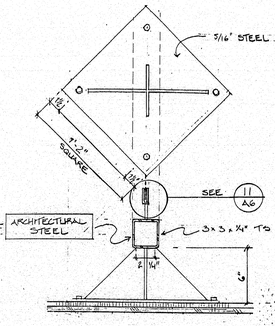

BASE DETAILS
1½" = 1'-0"

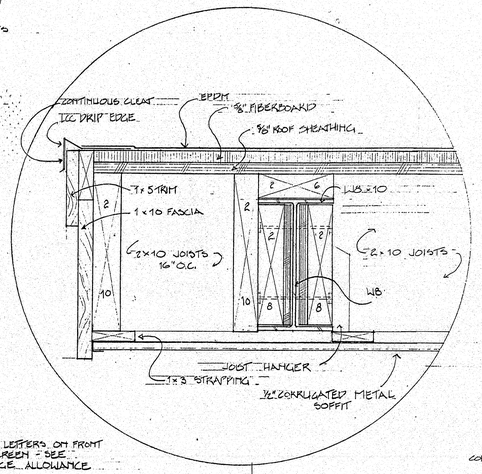

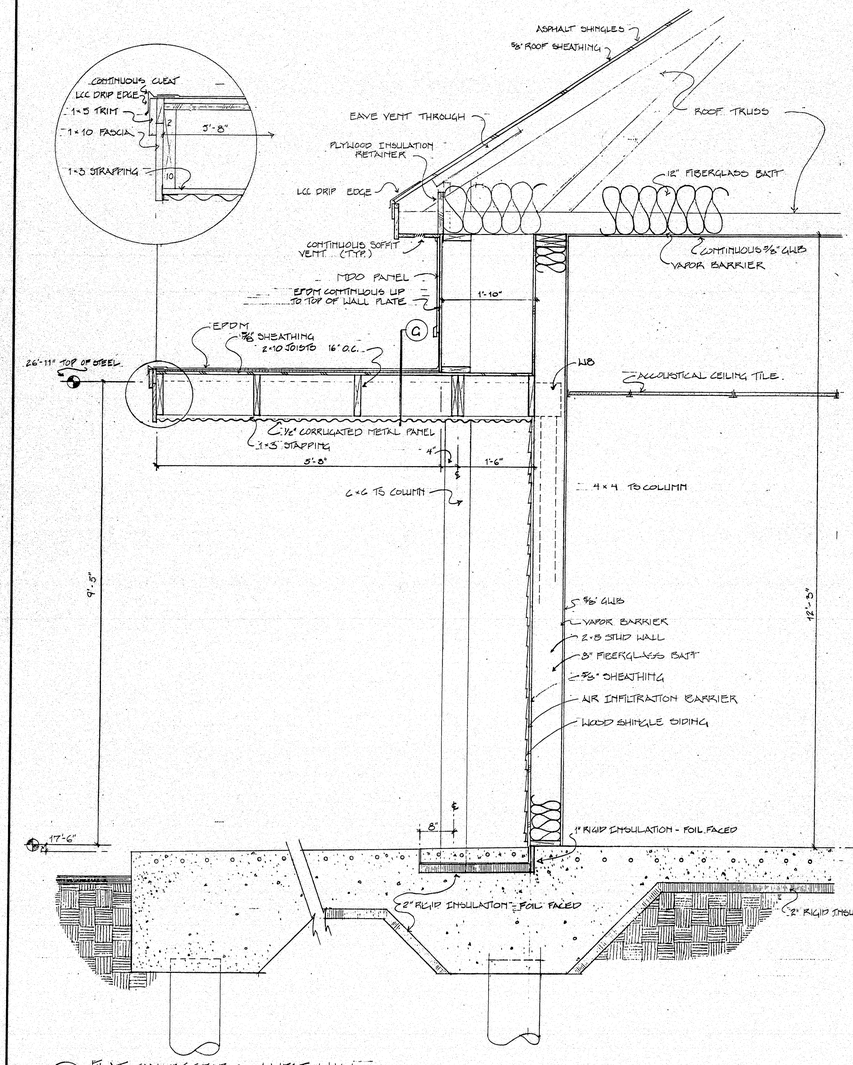

27 A-2 FLAT CANOPY SECTION / WEST WALL

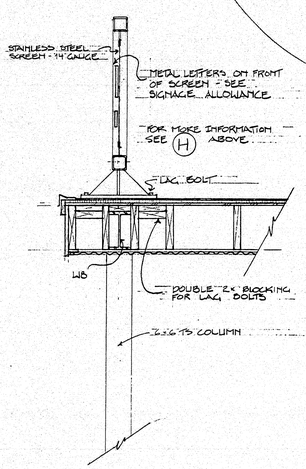

29 A-3 DEPARTMENT OF MARINE RESOURCES SIGN

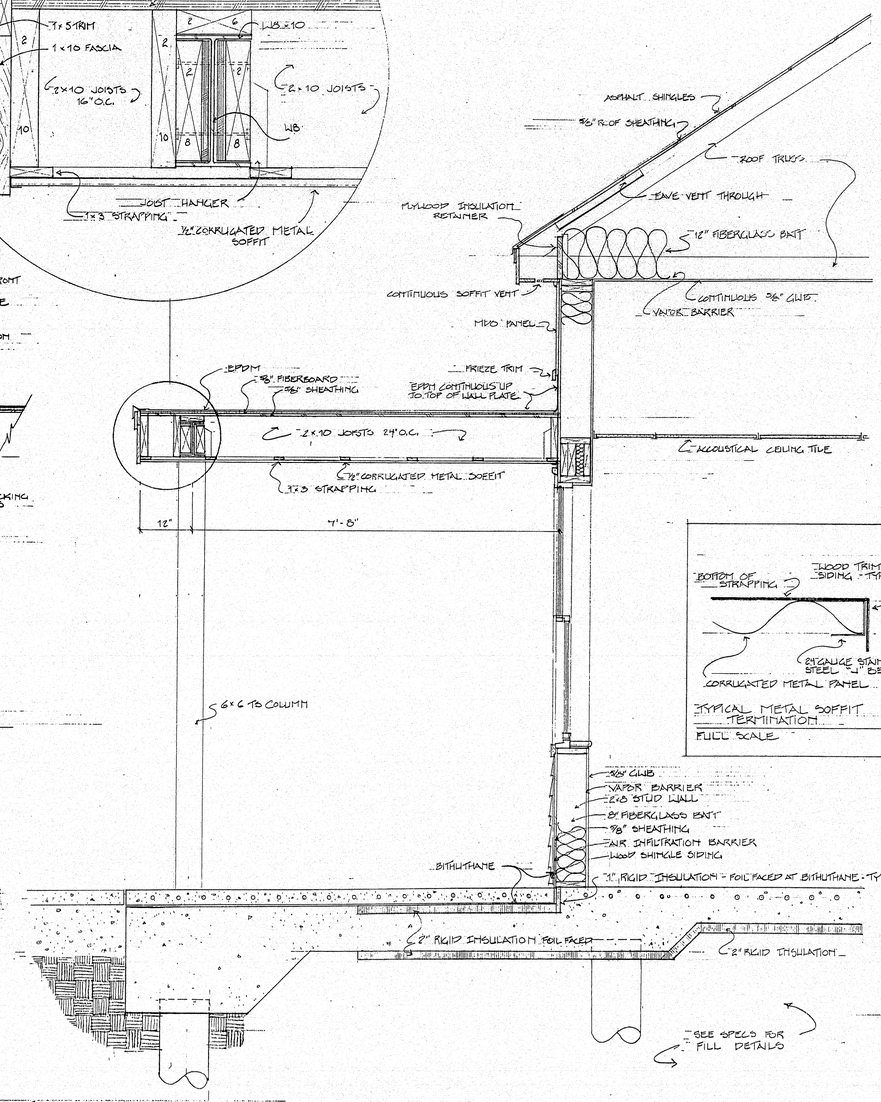

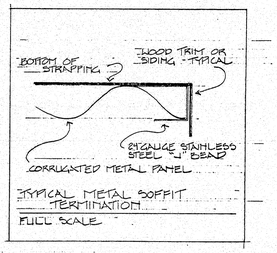

TYPICAL METAL SOFFIT TERMINATION
FULL SCALE

28 A-2 FLAT CANOPY SECTION / SOUTH WALL

129-120

MAINE STATE FERRY SYSTEM
ROCKLAND
NEW TERMINAL FACILITY

TEAS FEELY AND HINGSTON
100 COMMERCIAL STREET
PORTLAND, MAINE 04101
ARCHITECTURE + PLANNING

CIVIL ENGINEERING
TEC ASSOCIATES

STRUCTURAL ENGINEERING
PINKHAM & GREER

MECHANICAL ENGINEERING
BENNETT ENGINEERING

ELECTRICAL ENGINEERING
ELECTRICAL DESIGN CONSULTANTS

APPROVED BY BUREAU OF TRANSPORTATION SERVICES

P. Pothic

REGISTERED ARCHITECT No. 1171 STATE OF MAINE

DATE 10/12/94	DRAWN MRH
SCALE 3/4" = 1'-0"	CHECKED JAF
MDOT PROJ # FBD-C084(00)X	TFH PROJ # 9216

DRAWING TITLE
FLAT CANOPY SECTIONS

A-12

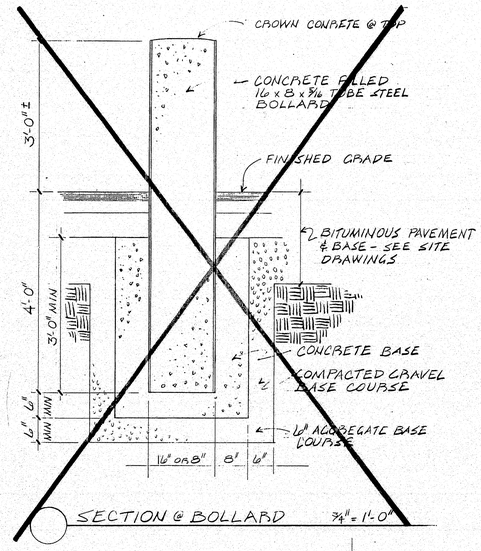

SECTION @ BOLLARD 3/4" = 1'-0"

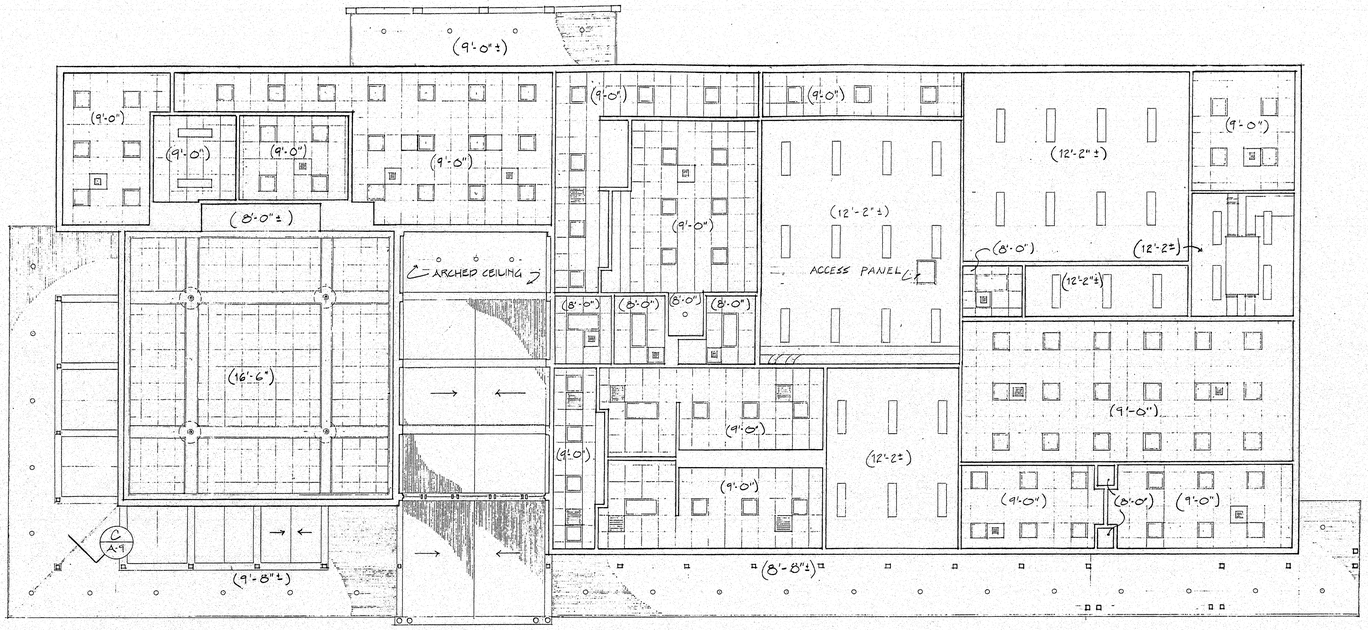

REFLECTED CEILING PLAN
1/8" = 1'-0"

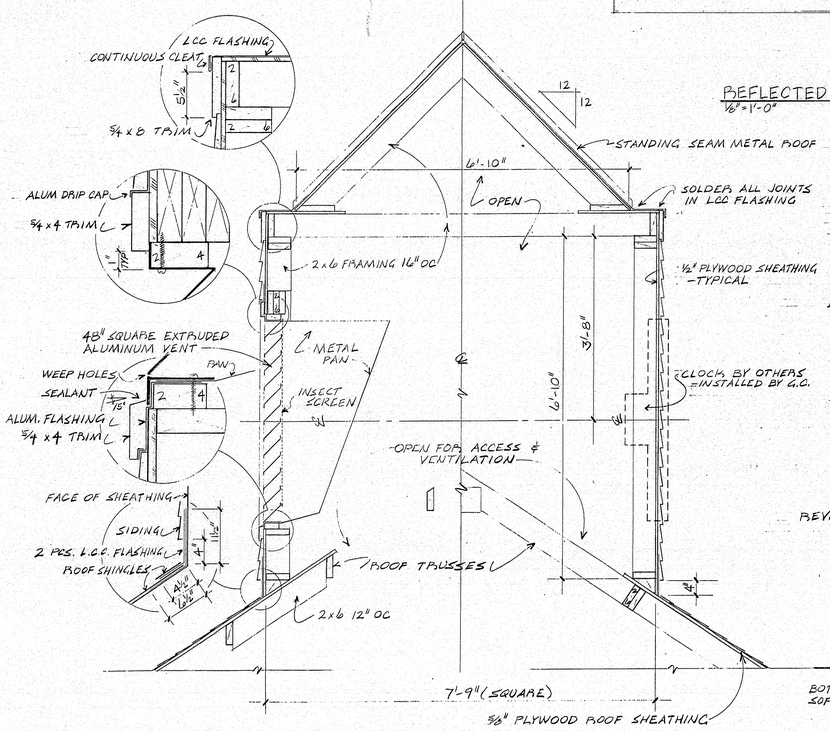

30 A-3 CLOCK TOWER

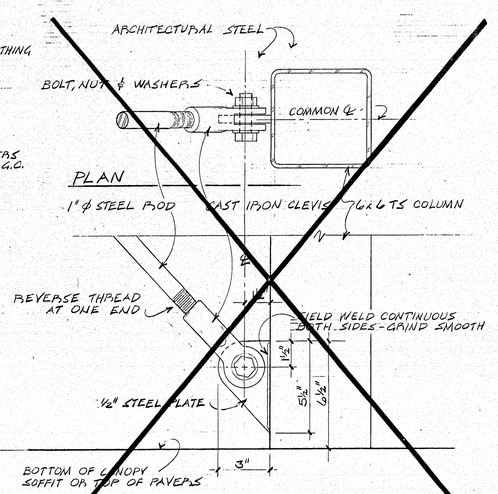

ELEVATION

31 A-3 STEEL ROD "X" BRACE

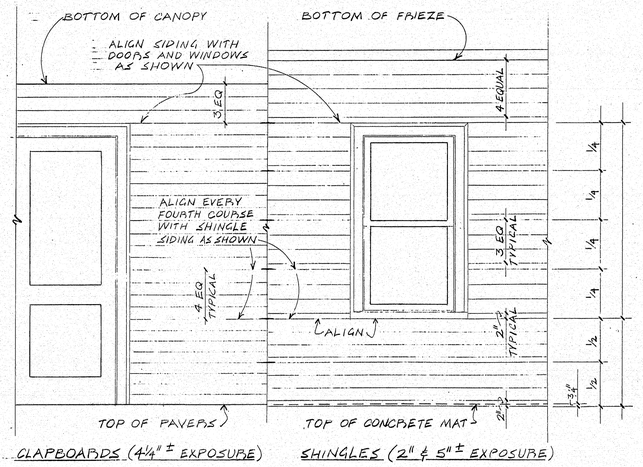

CLAPBOARDS (4 1/4" ± EXPOSURE) SHINGLES (2" & 5" ± EXPOSURE)

WOOD SIDING EXPOSURE LAYOUTS

129-121

MAINE STATE FERRY SYSTEM
ROCKLAND
NEW TERMINAL FACILITY

TEAS FEELY AND HINGSTON
100 COMMERCIAL STREET
PORTLAND, MAINE 04101
ARCHITECTURE • PLANNING

CIVIL ENGINEERING
TEC ASSOCIATES
STRUCTURAL ENGINEERING
PINKHAM & GREER
MECHANICAL ENGINEERING
BENNETT ENGINEERING
ELECTRICAL ENGINEERING
ELECTRICAL DESIGN CONSULTANTS

APPROVED BY BUREAU OF TRANSPORTATION SERVICES
P. Pottle

REGISTERED ARCHITECT No. 1177 STATE OF MAINE

DATE	DRAWN
10/12/94	WJT/MRM
SCALE	CHECKED
AS NOTED	JAF
MDOT PROJ #	TFH PROJ #
FBD-6069(00)X	9216

DRAWING TITLE
REFLECTED CEILING PLAN & DETAILS

A-15

DOOR SCHEDULE

DOOR NUMBER	SIZE	DOOR TYPE	DOOR THICK	DOOR MATERIAL	DOOR FINISH	FRAME TYPE	FRAME MATERIAL	FRAME HEAD	FRAME JAMB	FRAME THRESHOLD	ASSEMBLY LABEL	HW SET	NOTES	DOOR NUMBER
101	3'-0" x 7'-10 1/2"	2	1 3/4"	ALUM		10	ALUM	24	25	22	-	HW 1	LITE	101
102	3'-6" x 7'-10 1/2"	2	1 3/4"	ALUM		10	ALUM	24	25	22	-	HW 1	LITE	102
103	3'-0" x 7'-10 1/2"	2	1 3/4"	ALUM		10	ALUM	24	25	22	-	HW 1	LITE	103
104	(2) 3'-0" x 8'-0"	2	1 3/4"	HM	PAINT	7	HMF	12	12	15	-	HW 2	GALV; LITE	104
105	(2) 3'-0" x 8'-0"	2	1 3/4"	HM	PAINT	7	HMF	12	12	15	-	HW 2	GALV; LITE	105
106	3'-0" x 7'-0"	4	1 3/4"	HM	PAINT	8	HMF	18	18	15	-	HW 3	GALV; LITE	106
107	(2) 3'-0" x 8'-0"	3	1 3/4"	HM	PAINT	7	HMF	18	18	15	-	HW 4	GALV; LITE	107
108	3'-0" x 7'-0"	4	1 3/4"	HM	PAINT	8	HMF	18	18	15	-	HW 5	GALV; LITE	108
109	3'-0" x 7'-10 1/2"	2	1 3/4"	ALUM		11	ALUM	13	16	22	-	HW 1	LITE	109
110	3'-0" x 7'-0"	1	1 3/4"	WOOD	PAINT	6	HMF	21	21	-	-	HW 6	LITE	110
111	3'-0" x 7'-0"	5	1 3/4"	WOOD	PAINT	6	HMF	21	21	-	-	HW 6		111
112	3'-0" x 7'-0"	1	1 3/4"	WOOD	PAINT	6	HMF	21	21	-	-	HW 6	LITE	112
113	3'-0" x 7'-0"	5	1 3/4"	WOOD	PAINT	6	HMF	21	21	-	20 MIN	HW 7		113
114	3'-0" x 7'-0"	5	1 3/4"	WOOD	PAINT	6	HMF	21	21	-	-	HW 8		114
115	3'-0" x 7'-0"	5	1 3/4"	WOOD	PAINT	6	HMF	21	21	-	20 MIN	HW 9		115
116	3'-0" x 7'-0"	5	1 3/4"	WOOD	PAINT	6	HMF	21	21	-	20 MIN	HW 9		116
117	3'-0" x 7'-0"	5	1 3/4"	WOOD	PAINT	6	HMF	21	21	-	-	HW 10	UNDERCUT 3/4"	117
118	3'-0" x 7'-0"	5	1 3/4"	WOOD	PAINT	6	HMF	21	21	-	-	HW 10	UNDERCUT 3/4"	118
119	3'-0" x 7'-0"	4	1 3/4"	WOOD	PAINT	9	HMF	21	21	-	-	HW 6	LITE	119
120	3'-0" x 7'-0"	4	1 3/4"	WOOD	PAINT	6	HMF	21	21	-	20 MIN	HW 9	LITE	120
121	3'-6" x 7'-0"	5	1 3/4"	WOOD	PAINT	6	HMF	21	21	-	-	HW 6		121
122	3'-6" x 7'-0"	1	1 3/4"	WOOD	PAINT	6	HMF	21	21	-	-	HW 6	LITE	122
123	3'-0" x 7'-0"	4	1 3/4"	WOOD	PAINT	6	HMF	21	21	-	-	HW 6	LITE	123
124	-	-	-	-	-	-	-	-	-	-	-	-		124
125	3'-0" x 7'-0"	5	1 3/4"	WOOD	PAINT	6	HMF	21	21	-	-	HW 11		125
126	3'-0" x 7'-0"	5	1 3/4"	WOOD	PAINT	6	HMF	21	21	-	-	HW 11		126
127	3'-0" x 7'-0"	5	1 3/4"	WOOD	PAINT	6	HMF	21	21	-	-	HW 10	UNDERCUT 3/4"	127
128	3'-6" x 7'-0"	5	1 3/4"	WOOD	PAINT	6	HMF	21	21	-	20 MIN	HW 12		128
129	3'-0" x 7'-0"	1	1 3/4"	WOOD	PAINT	6	HMF	21	21	-	-	HW 6	LITE	129
130	3'-0" x 7'-0"	5	1 3/4"	WOOD	PAINT	6	HMF	21	21	-	-	HW 6		130
131	2'-0" x 6'-8"	5	1 3/4"	WOOD	PAINT	6	HMF	21	21	-	-	HW 11		131
132	2'-0" x 6'-8"	5	1 3/4"	WOOD	PAINT	6	HMF	21	21	-	-	HW 11		132

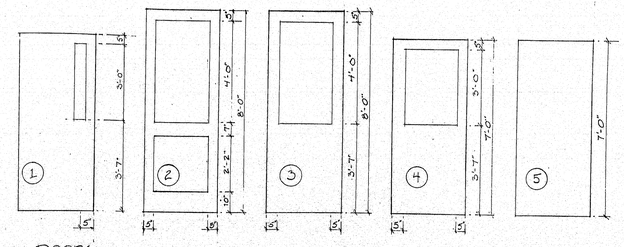

DOORS
3/8" = 1'-0"

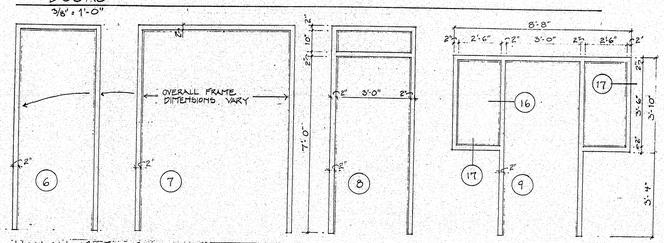

HOLLOW METAL FRAMES SEE NOTE BELOW
3/8" = 1'-0"

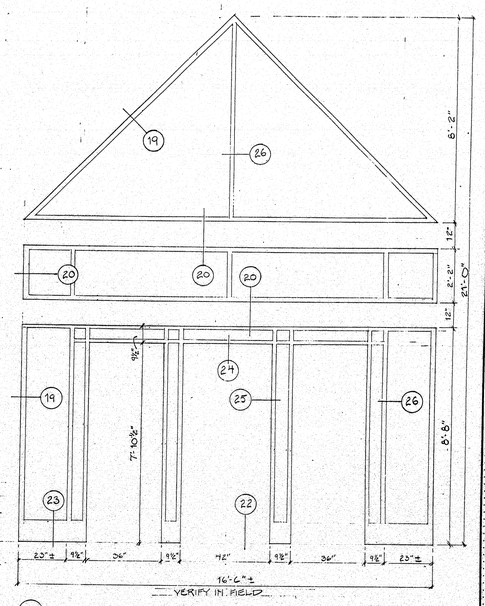

10 ALUMINUM STOREFRONT SYSTEM

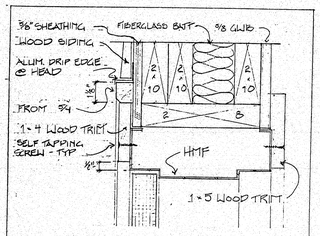

12 HEAD / JAMB

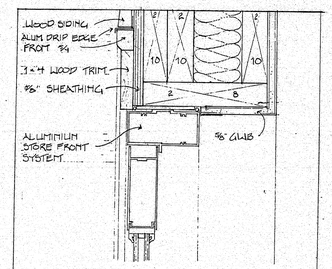

13 HEAD

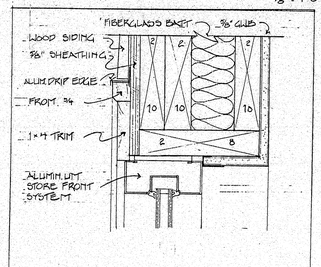

14 HEAD

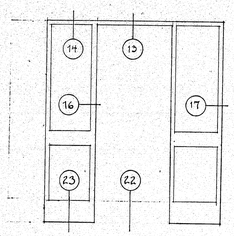

11 ALUMINUM STOREFRONT SYSTEM

NOTE: SEE A-1 & A-2 FOR OPENINGS WITH HOLLOW METAL FRAMES
1) BETWEEN SPACES 108 & 109
2) AT PARTS COUNTER BETWEEN SPACES 118 & 109
3) BETWEEN SPACES 120 & 122

FRAMES
SCALE 3/8" = 1'-0"

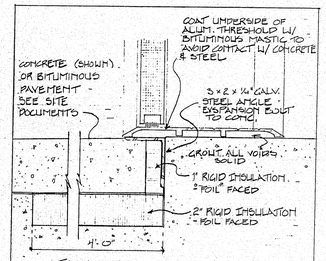

15 THRESHOLD

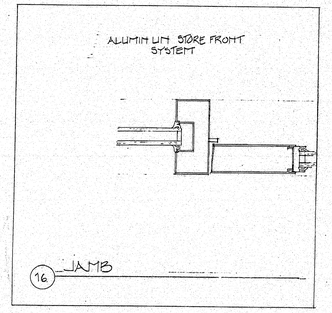

16 JAMB

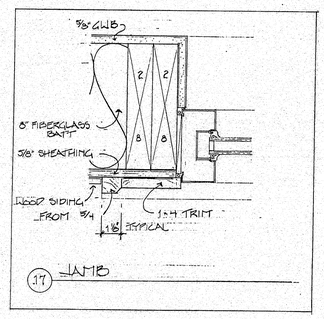

17 JAMB

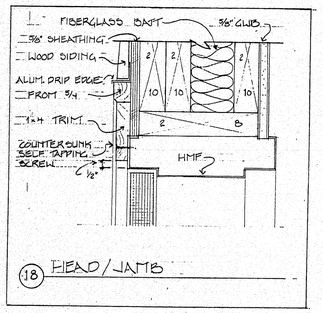

18 HEAD / JAMB

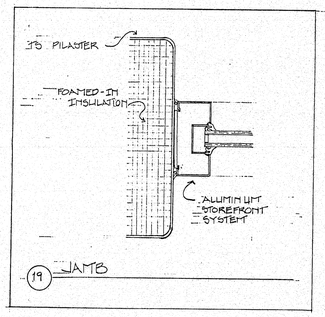

19 JAMB

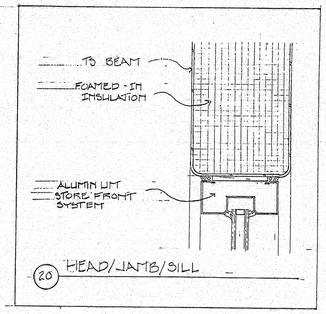

20 HEAD/JAMB/SILL

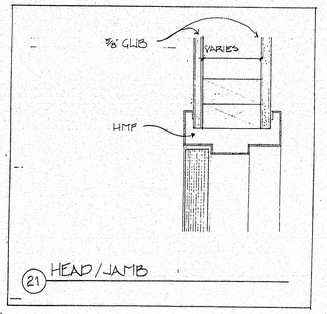

21 HEAD / JAMB

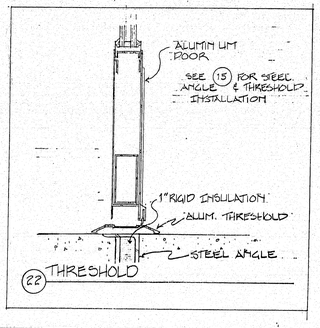

22 THRESHOLD

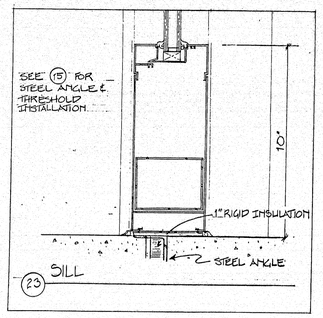

23 SILL

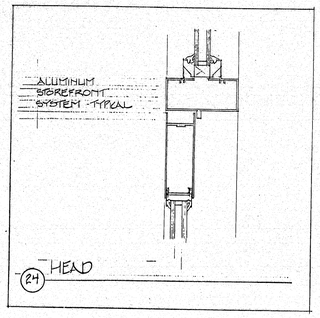

24 HEAD

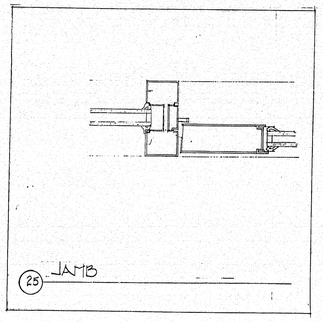

25 JAMB

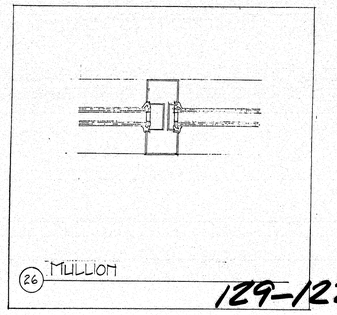

26 MULLION

129-122

MAINE STATE FERRY SYSTEM
ROCKLAND
NEW TERMINAL FACILITY

TEAS FEELY AND HINGSTON
100 COMMERCIAL STREET
PORTLAND, MAINE 04101
ARCHITECTURE • PLANNING

CIVIL ENGINEERING
TEC ASSOCIATES
STRUCTURAL ENGINEERING
PINKHAM & GREER
MECHANICAL ENGINEERING
BENNETT ENGINEERING
ELECTRICAL ENGINEERING
ELECTRICAL DESIGN CONSULTANTS

APPROVED BY BUREAU OF TRANSPORTATION SERVICES
P. Pettie

REGISTERED ARCHITECT No. 1777 STATE OF MAINE

DATE 10/12/94	DRAWN MRM
SCALE 3/8" = 1'-0" UNO	CHECKED JAP
MDOT PROJ # FBD-L061(00)X	TFH PROJ # 9216

DRAWING TITLE
DOOR SCHEDULE AND DETAILS

A-14

WINDOW SCHEDULE

HMF	Hollow Metal Frame
DIMENSIONS	ALUMINUM: Unit dimensions given.
	AL. CLAD WOOD: Unit dimensions given to outside faces of frame, nailing flanges excluded
	See manufacturer's specifications for rough opening dimensions
	HMF: Dimensions to outside faces of frame.
HEAD HEIGHT	Top of rough opening, as measured from top of concrete mat
ALIGN WITH DOORS	Align top of HMF with adjacent door(s).
TICKET	Ticket window
INS.; INSUL.	Insulated
AL.	Aluminum
OPENINGS	See window elevations for openings in glass.

TYPE	DESCRIPTION	MATERIAL	GLAZING	DIMENSIONS (W X H)	HEAD HEIGHT	HEAD	JAMB	SILL	MULLION
A	DOUBLE HUNG X2	ALUMINIUM	INSUL.	5'-9" x 5'-4"	8'-1 1/2"	3	9	15	2
B	DOUBLE HUNG	ALUMINIUM	INSUL.	2'-10" x 5'-4"	8'-1 1/2"	1	7	13	8
C	FIXED	ALUMINIUM	INSUL.	2'-10" x 2'-10"	8'-1"+-	4	4	10	-
D	FIXED	ALUMINIUM	INS./OBSCURE	1'-8" x 1'-8"	8'-1"+-	4	4	10	-
E	FIXED	HMF	SINGLE	1'-8" x 1'-8"	5'-9"	5	5	5	-
F	FIXED	HMF	SINGLE	2'-10" x 3'-10"	ALIGN W/ DOORS	5	5	5	-
G	TICKET	HMF	OPENINGS	2'-6" x 2'-10"	6'-3"+-	6	5	11	-
H	TICKET	HMF	OPENINGS	2'-6" x 3'-6"	6'-3"+-	6	5	12	-
I	FIXED	AL. CLAD WOOD	INSUL.	3'-1" DIA.	12'-10"	14	14	14	-
J	FIXED	HMF	SINGLE	3'-10" x 3'-6"	ALIGN W/ DOORS	5	5	5	-
K	FIXED	WOOD	SINGLE	2'-5"+- x 4'-10"+-	16'-5"+-	SEE A-9	SEE A-9	SEE A-9	-
L	AWNING	AL. CLAD WOOD	SINGLE	2'-4" x 3'-3 1/8"	SEE A-11	-	-	-	-
M	FIXED	AL. CLAD WOOD	SINGLE	2'-0" x 1'-11 1/8"	SEE A-11	-	-	-	-

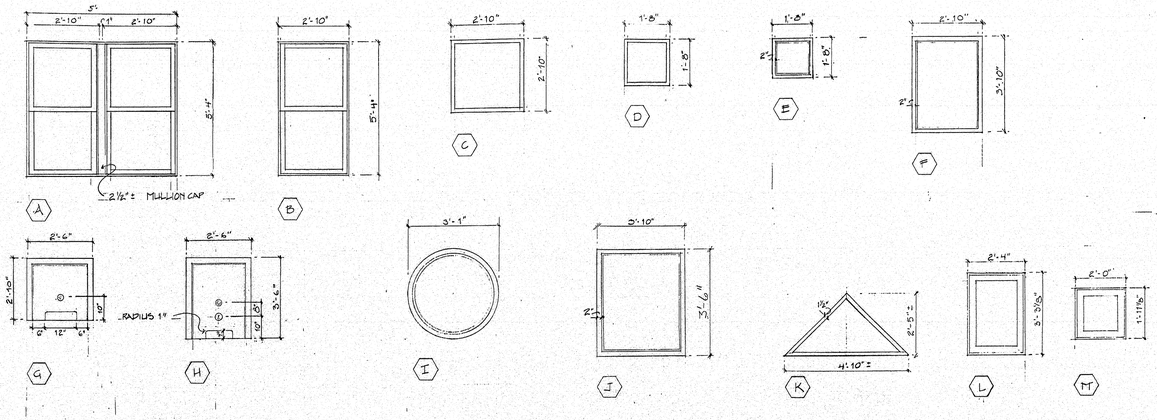

WINDOW ELEVATIONS
3/16" = 1'-0"

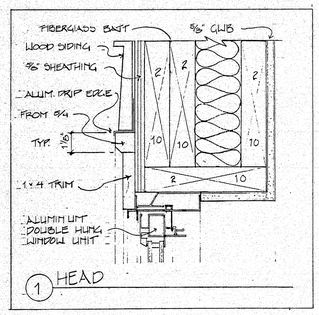

1 HEAD

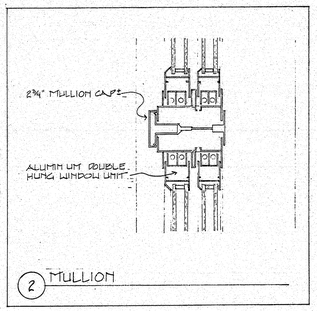

2 MULLION

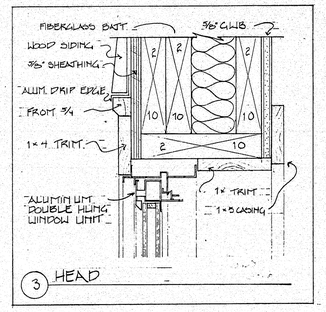

3 HEAD

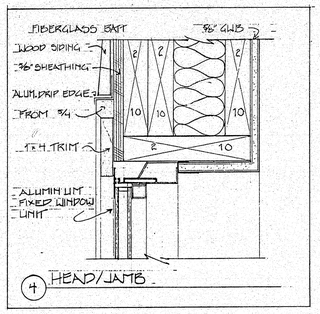

4 HEAD/JAMB

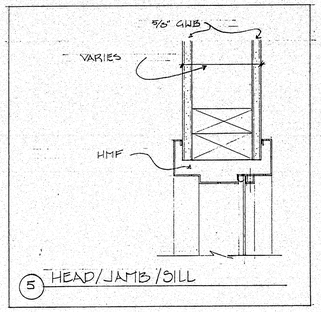

5 HEAD/JAMB/SILL

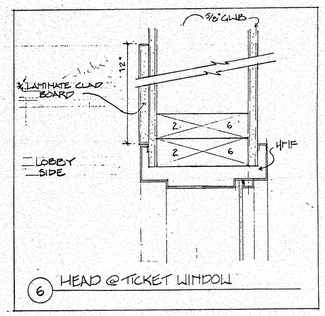

6 HEAD @ TICKET WINDOW

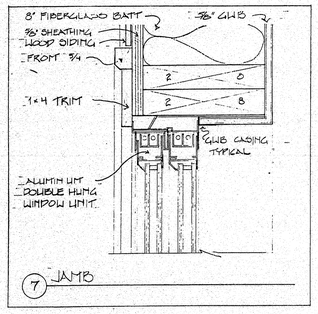

7 JAMB

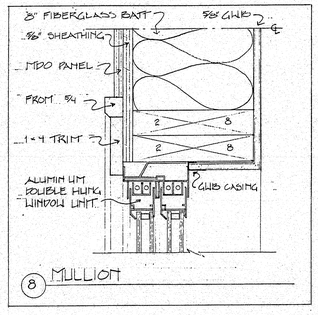

8 MULLION

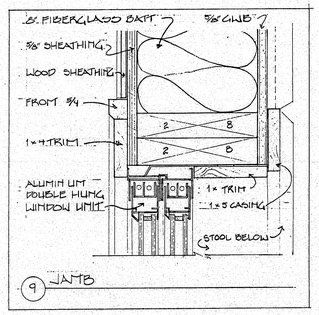

9 JAMB

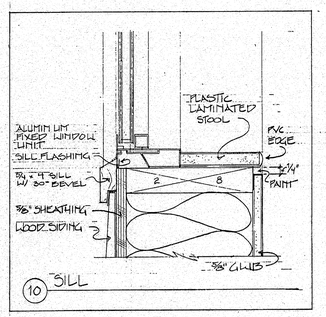

10 SILL

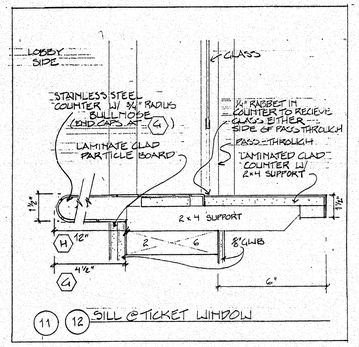

11 12 SILL @ TICKET WINDOW

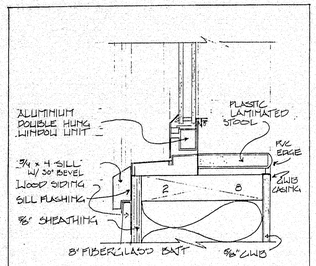

13 SILL

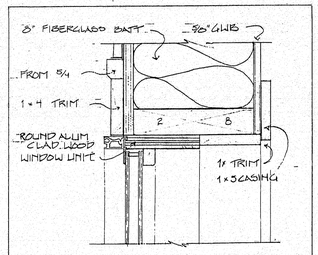

14 HEAD/JAMB/SILL

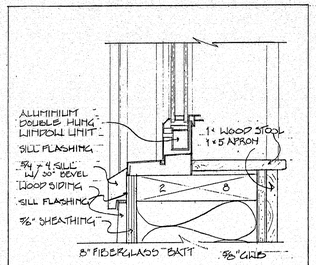

15 SILL

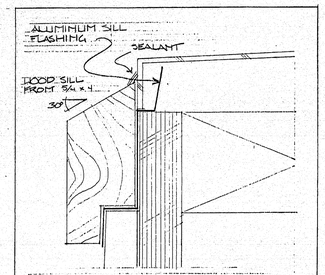

TYPICAL SILL FLASHING DETAIL

129-123

MAINE STATE FERRY SYSTEM
ROCKLAND
NEW TERMINAL FACILITY

TEAS FEELY AND HINGSTON
100 COMMERCIAL STREET
PORTLAND, MAINE 04101
ARCHITECTURE - PLANNING

CIVIL ENGINEERING
TEC ASSOCIATES
STRUCTURAL ENGINEERING
PINKHAM & GREER
MECHANICAL ENGINEERING
BENNETT ENGINEERING
ELECTRICAL ENGINEERING
ELECTRICAL DESIGN CONSULTANTS

APPROVED BY BUREAU OF TRANSPORTATION SERVICES
P. Pothic

REGISTERED ARCHITECT
No. 1177
STATE OF MAINE

DATE 10/12/94	DRAWN MRM
SCALE 3"=1'-0" UNO	CHECKED JAF
MDOT PROJ # FBD-L069(00)X	TFH PROJ # 9216

DRAWING TITLE
WINDOW SCHEDULE & DETAILS

A-15

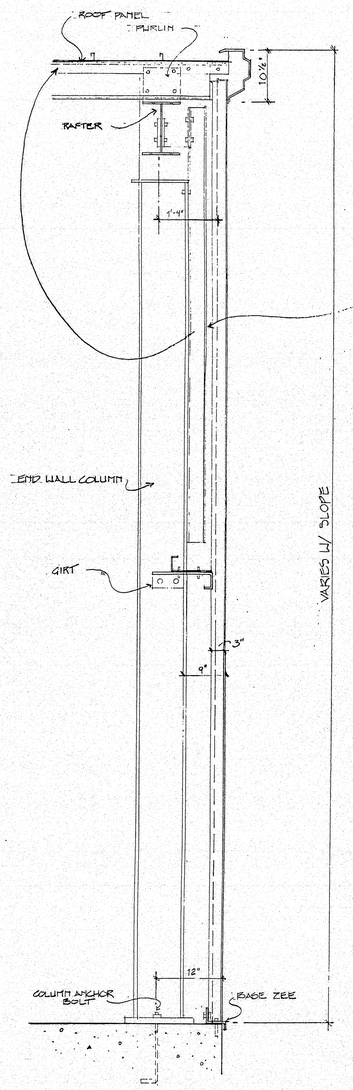

J END WALL SECTION

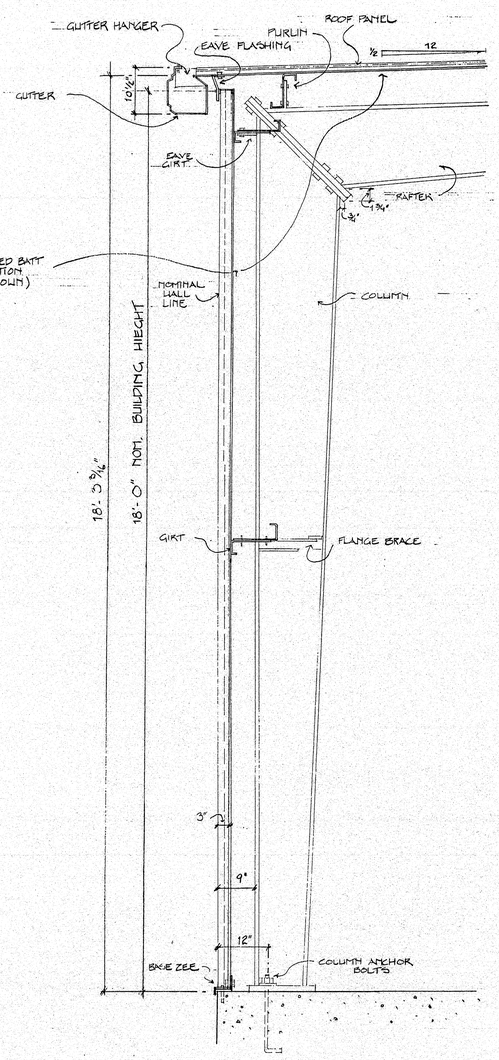

K SIDE WALL SECTION

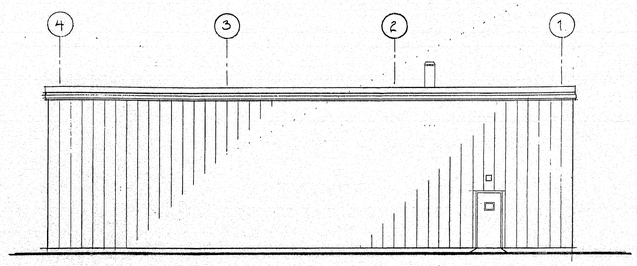

SOUTH

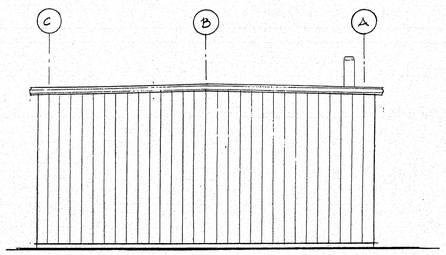

EAST

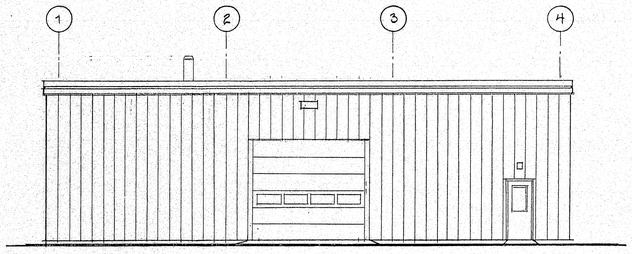

NORTH

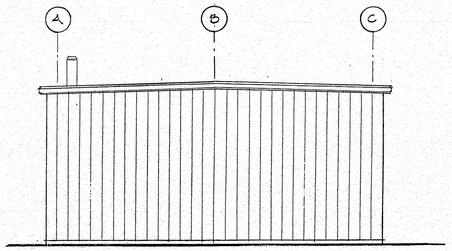

WEST

EXTERIOR ELEVATIONS

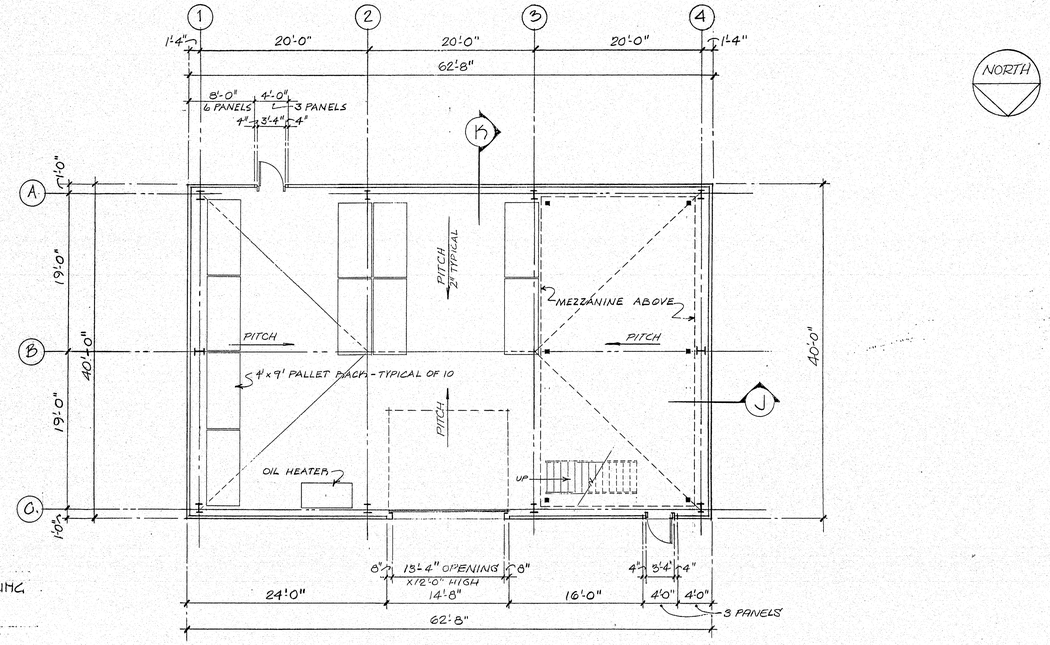

FLOOR PLAN

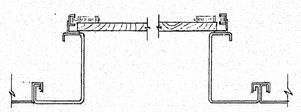

OVER HEAD DOOR JAMBS

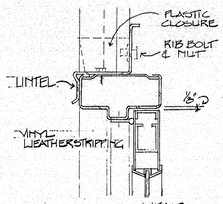

MAN DOOR HEAD

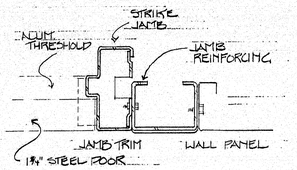

MAN DOOR JAMB

129-124

MAINE STATE FERRY SYSTEM
ROCKLAND
NEW TERMINAL FACILITY

TEAS FEELY AND HINGSTON
100 COMMERCIAL STREET
PORTLAND, MAINE 04101
ARCHITECTURE • PLANNING

CIVIL ENGINEERING
TEC ASSOCIATES

STRUCTURAL ENGINEERING
PINKHAM & GREER

MECHANICAL ENGINEERING
BENNETT ENGINEERING

ELECTRICAL ENGINEERING
ELECTRICAL DESIGN CONSULTANTS

APPROVED BY BUREAU OF TRANSPORTATION SERVICES
P Pothle

REGISTERED PROFESSIONAL ENGINEER
FEELY
No. 11147
STATE OF MAINE

DATE	DRAWN
10/12/94	BED/MAT
SCALE	CHECKED
AS NOTED	JAF
MDOT PROJ. #	TFH PROJ. #
FBD-6069(00)X	9216

DRAWING TITLE
STORAGE BUILDING

A-16

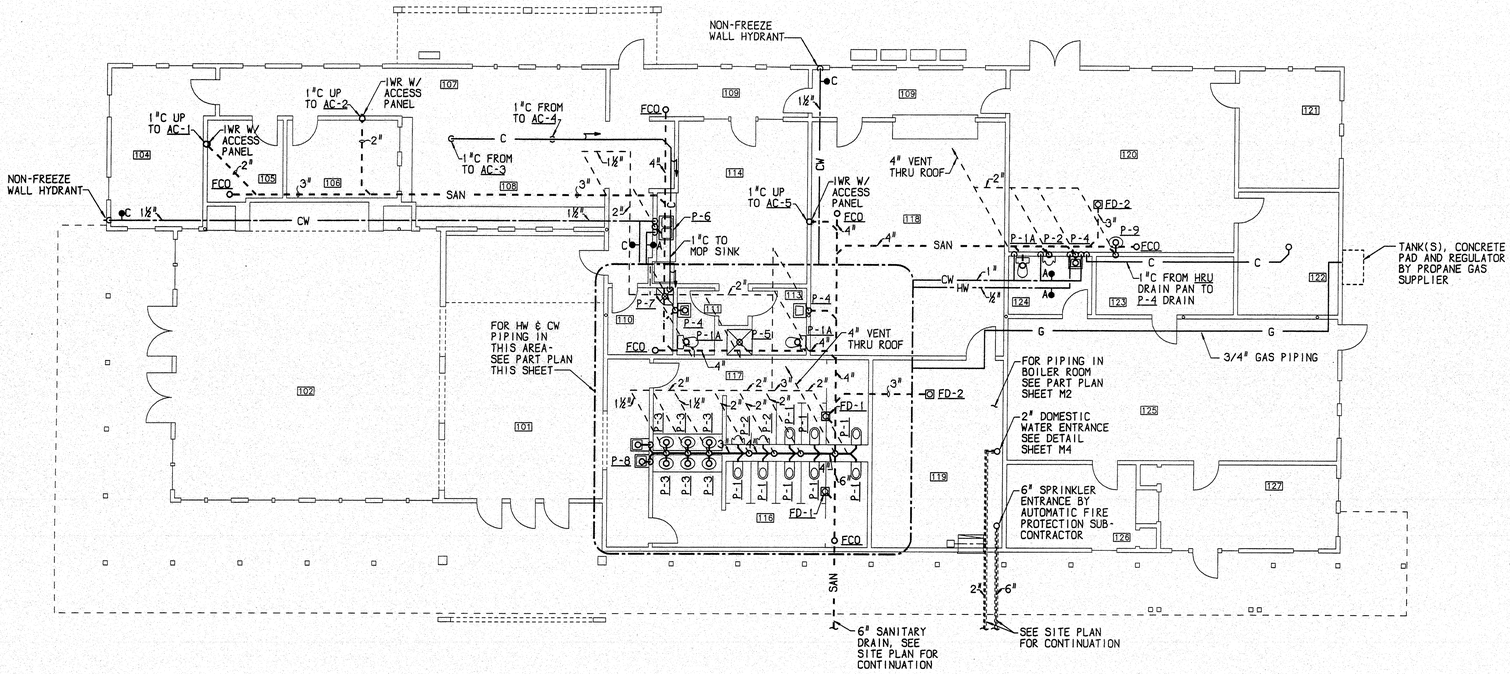

PLUMBING PLAN

SCALE: 1/8" = 1'- 0"

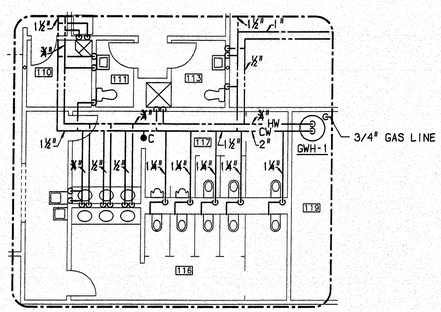

HW & CW PIPING PART PLAN

SCALE: 1/8" = 1'- 0"

PLUMBING FIXTURE CONNECTION SCHEDULE

TAG	DESCRIPTION	SAN	VENT	CW	HW
P-1	WALL HUNG FLUSHMTR WC	4"	2"	1"	-
P-1A	FLR MNTD TANK TYPE WC	3"	2"	1/2"	-
P-2	WALL HUNG FLUSH URINAL	2"	1 1/2"	3/4"	-
P-3	COUNTERTOP LAVATORY	1 1/2"	1 1/4"	1/2"	1/2"
P-4	WALL HUNG LAVATORY	1 1/2"	1 1/4"	1/2"	1/2"
P-5	SHOWER	2"	1 1/2"	1/2"	1/2"
P-6	KITCHEN SINK	1 1/2"	1 1/2"	1/2"	1/2"
P-7	MOP BASIN	3"	2"	1/2"	1/2"
P-8	DRINKING FOUNTAIN	1 1/2"	1 1/4"	1/2"	-
P-9	EMERGENCY EYEWASH	1 1/2"	1 1/4"	1/2"	-
FD	FLOOR DRAIN (ALL)	3"	-	-	-

MINIMUM SIZE OF BELOW SLAB SANITARY & VENT PIPING SHALL BE 2".

PLUMBING NOTES

1. FIXTURES AND EQUIPMENT ARE LOCATED IN THEIR GENERAL LOCATION UNLESS SPECIFICALLY DIMENSIONED. DO NOT INSTALL WITHOUT REFERING TO THE ARCHITECTURAL PLANS FOR SPECIFIC LOCATION AND INFORMATION.
2. PIPING SHALL BE INSTALLED TO ALLOW FOR EXPANSION USING OFFSETS, SWING JOINTS AND EXPANSION JOINTS TO PREVENT UNDUE STRAIN ON PIPING OR EQUIPMENT.
3. NO WATER PIPING SHALL BE RUN IN EXTERIOR WALLS OR ATTIC SPACES WHERE SUSCEPTIBLE TO FREEZING.
4. SANITARY DRAIN (SD) PIPING TO BE INSTALLED AT 1/4" PER FOOT SLOPE.
5. VENT PIPING IN ATTIC SPACE SHALL BE 4" PIPE SIZE.
6. PIPING SHALL BE CONCEALED UNLESS OTHERWISE INDICATED. PIPING SHOWN OUTSIDE OF PARTITIONS OR SOFFITS IS SHOWN THERE FOR CLARITY.
7. ARRANGE VERTICAL DROPS TO PROVIDE "HOT-ON-LEFT" & "COLD-ON-RIGHT" AT EACH FIXTURE.
8. ALL PLUMBING FIXTURES TO BE IN COMPLIANCE WITH THE AMERICANS WITH DISABILITIES ACT (ADA) AND THE MAINE HUMAN RIGHTS ACT.

129-125

REVISIONS

MAINE STATE FERRY SYSTEM

ROCKLAND

NEW TERMINAL FACILITY

TFH ARCHITECTS
100 COMMERCIAL STREET
PORTLAND, MAINE 04101
TELEPHONE 207 775 6141
ARCHITECTURE—PLANNING

BENNETT ENGINEERING
CONSULTING ENGINEERS
BENNETT ROAD, P.O. BOX 297, FREEPORT, MAINE 04032
(207) 865-9470

APPROVED BY BUREAU OF TRANSPORTATION SERVICES

P Pothier

STATE OF MAINE WILLIAM S. BENNETT REGISTERED PROFESSIONAL ENGINEER

DATE 24 OCT 94	DRAWN JMK
SCALE AS NOTED	CHECKED WSB
MDOT PROJECT FBD-6069(00)X	BEI PROJECT 94047

DRAWING TITLE: PLUMBING PLAN

DRAWING NO.: M1

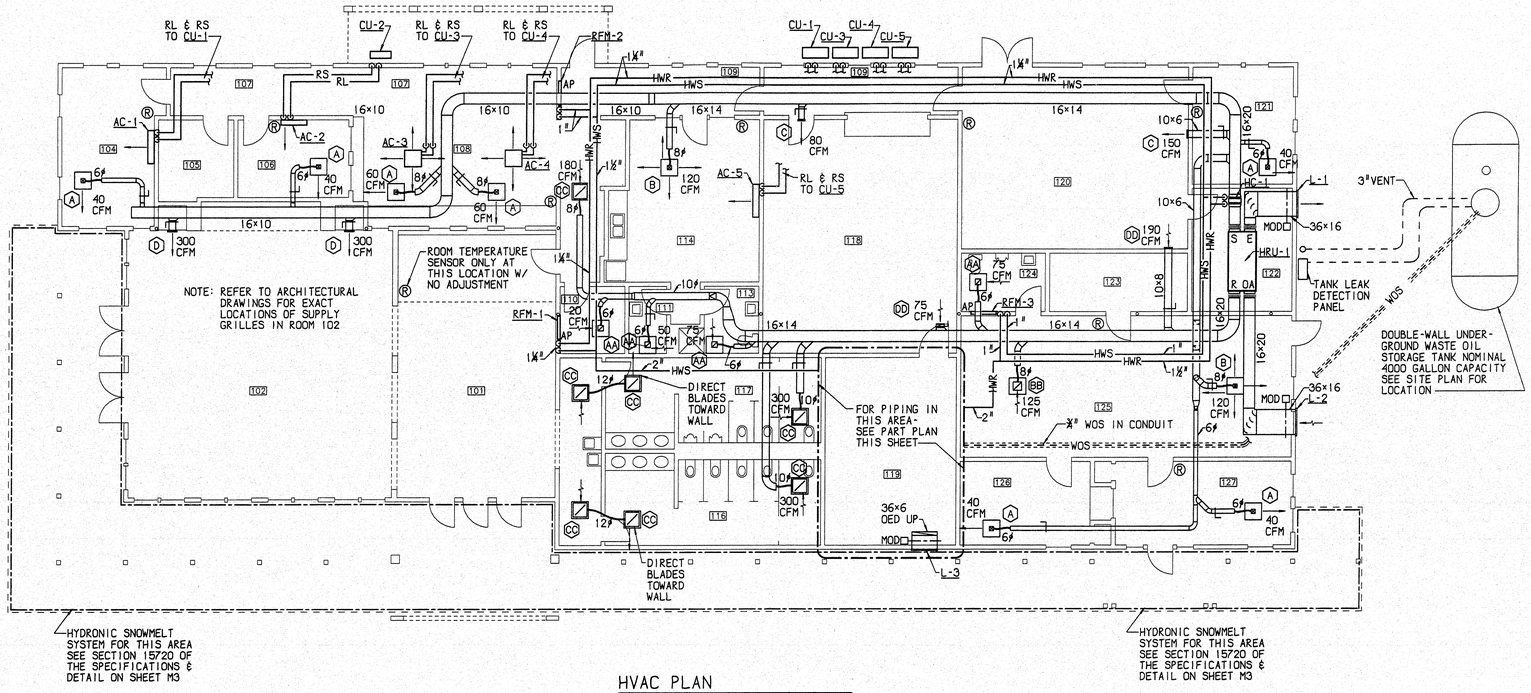

HVAC PLAN

SCALE: ⅛" = 1'- 0"

RADIANT FLOOR HEATING SCHEDULE			
ROOM	LOAD (MBH)	MANI-FOLD	ZONE
101 LOBBY	24.0	RFM-1	Ⓡ
102 WAITING ROOM	45.0		
116 WOMEN'S TOILET	11.0		
117 MEN'S TOILET	5.5		
104 OFFICE	10.5	RFM-2	Ⓡ
105 RECORDS	1.5		
106 OFFICE	1.5		Ⓡ
107 CORRIDOR	12.0		
108 GENERAL OFFICE	6.5		Ⓡ
109 CORRIDOR	11.5		
110 CUSTODIAL	0.5		
111 BATHROOM	0.7		
113 BATHROOM	0.9		
114 CONFERENCE	4.0		Ⓡ
118 STOCK ROOM	6.0	RFM-3	
119 MECHANICAL	N/A		
120 MACHINE SHOP	13.0		Ⓡ
121 OFFICE	7.5		Ⓡ
122 STORAGE	4.5		
123 STORAGE	1.5		
124 BATHROOM	0.9		
125 OPEN OFFICE	12.5		Ⓡ
126 OFFICE	5.5		
127 SECRETARY/RECEPTION	10.5		Ⓡ

Ⓡ INDICATES ROOM TEMPERATURE INPUT TO MIXING VALVE RESET CONTROLLER.

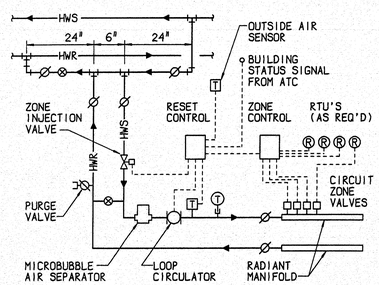

RADIANT FLOOR PIPING & CONTROL SCHEMATIC

NTS

NOTE: ZONE CONTROLLER NOT REQUIRED FOR RFM-1 AS ONLY ONE RTU INPUTS TO THE RESET CONTROL

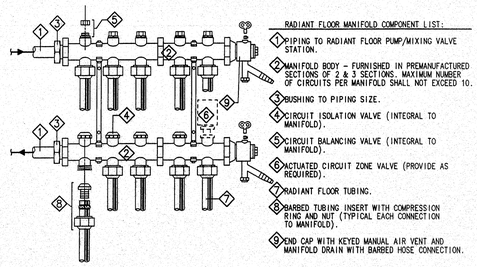

RADIANT FLOOR MANIFOLD

NTS

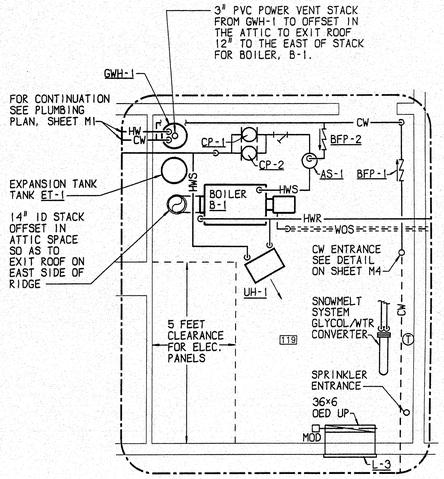

MECHANICAL ROOM PART PLAN

SCALE: ¼" = 1'- 0"

129-126

REVISIONS

MAINE STATE FERRY SYSTEM
ROCKLAND
NEW TERMINAL FACILITY

TFH ARCHITECTS
100 COMMERCIAL STREET
PORTLAND, MAINE 04101
TELEPHONE 207 775 6141
ARCHITECTURE—PLANNING

BENNETT ENGINEERING
CONSULTING ENGINEERS
BENNETT ROAD, P.O. BOX 997, FREEPORT, MAINE 04032
(207) 865-9475

APPROVED BY BUREAU OF TRANSPORTATION SERVICES

P Pottle

STATE OF MAINE WILLIAM S. BEINHORN 2919 REGISTERED PROFESSIONAL ENGINEER

DATE	DRAWN
24 OCT 94	JMK
SCALE	CHECKED
AS NOTED	WSB
MOOT PROJECT	BEI PROJECT
FBD-6069(00)X	94047

DRAWING TITLE: HVAC PLAN

DRAWING NO.

M2

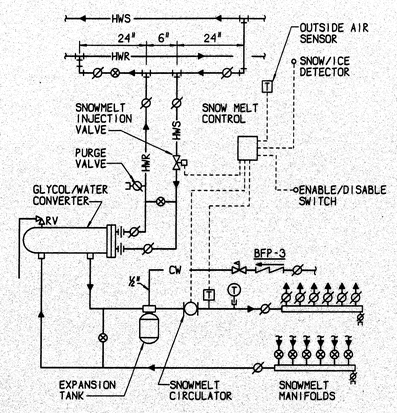

SNOWMELT PIPING & CONTROL SCHEMATIC
NTS

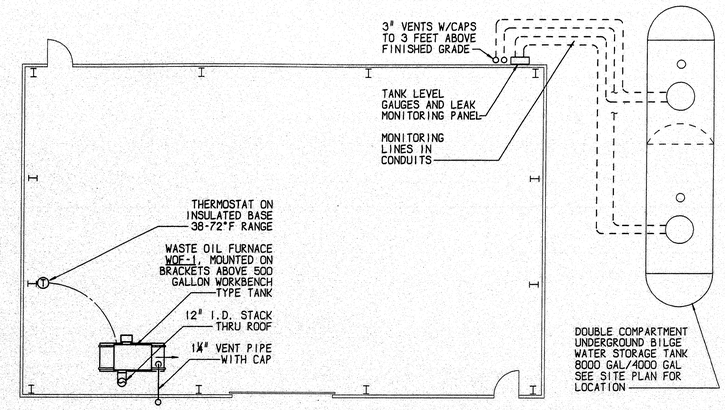

STORAGE BUILDING MECHANICAL PLAN
SCALE: 1/8"=1'-0"

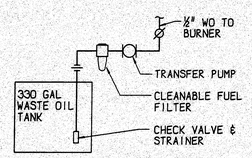

WASTE OIL FURNACE PIPING
NTS

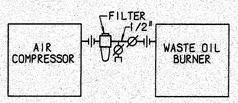

COMPRESSED AIR PIPING DETAIL AT BURNERS
NTS

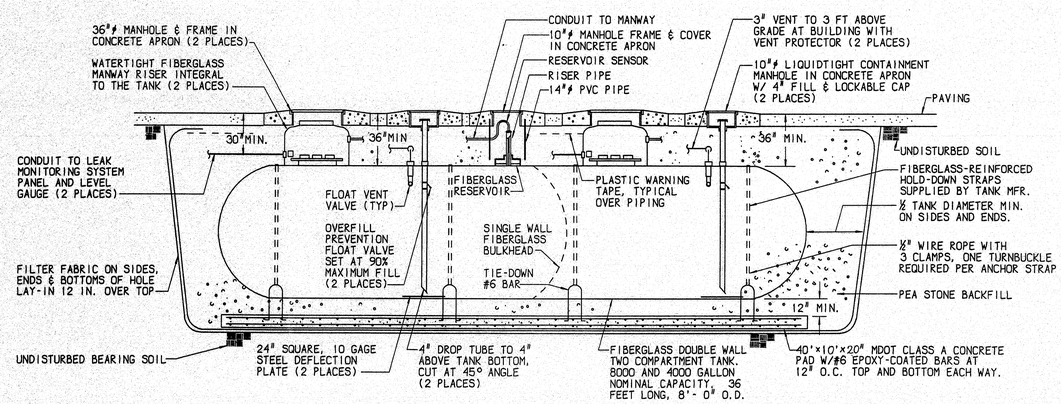

BILGE WATER TANK INSTALLATION DETAIL
NTS

129-127

REVISIONS

MAINE STATE FERRY SYSTEM
ROCKLAND
NEW TERMINAL FACILITY

TFH ARCHITECTS
100 COMMERCIAL STREET
PORTLAND, MAINE 04101
TELEPHONE 207 775 6141
ARCHITECTURE–PLANNING

BENNETT ENGINEERING
CONSULTING ENGINEERS
BENNETT ROAD, P.O. BOX 297, FREEPORT, MAINE 04032
(207) 865-9475

APPROVED BY BUREAU OF TRANSPORTATION SERVICES

P Perth

STATE OF MAINE
WILLIAM T. BENNETT
REGISTERED PROFESSIONAL ENGINEER

DATE	DRAWN
24 OCT 94	JMK
SCALE	CHECKED
AS NOTED	WSB
MDOT PROJECT	BEI PROJECT
FBD-6069(00)X	94047

DRAWING TITLE
STORAGE BUILDING

DRAWING NO.
M3

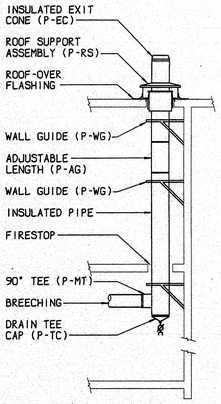

STACK DETAIL

NTS

PART NUMBERS BASED ON METALBESTOS

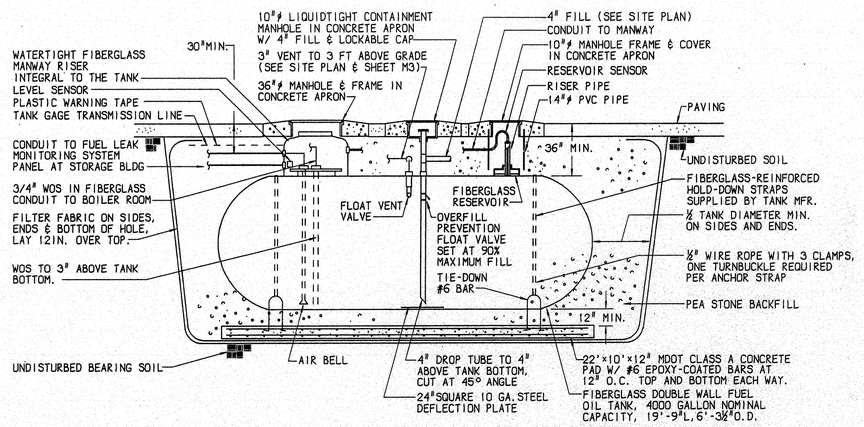

WASTE OIL TANK INSTALLATION DETAIL

NTS

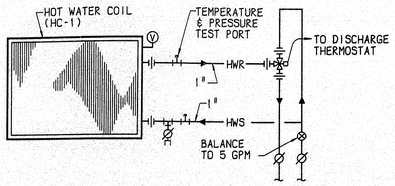

COIL PIPING DETAIL WITH 3-WAY VALVE CONTROL

NTS

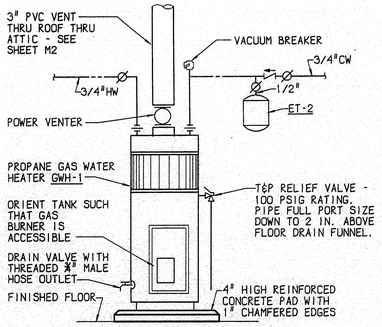

PROPANE GAS WATER HEATER PIPING DETAIL

NTS

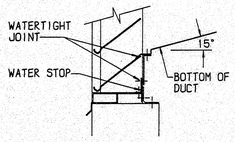

MODIFIED LOUVER DETAIL

NTS

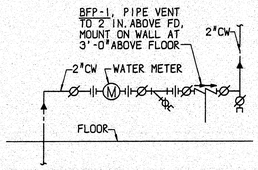

WATER ENTRANCE DETAIL

NTS

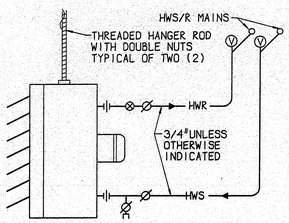

HORIZONTAL UNIT HEATER PIPING DETAIL

NTS

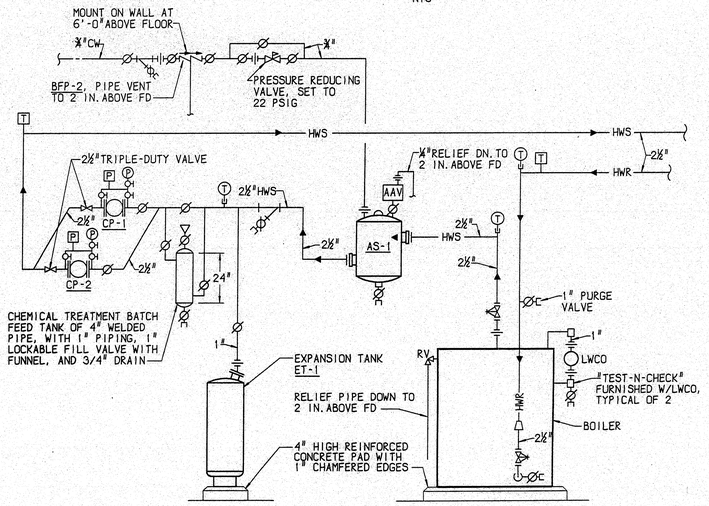

BOILER PIPING SCHEMATIC

NTS

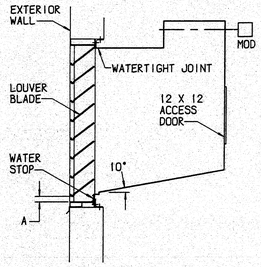

COMBUSTION AIR LOUVER DETAIL

NTS

IF DIMENSION "A" IS LESS THAN 1 INCH SEE MODIFIED LOUVER DETAIL THIS SHEET.

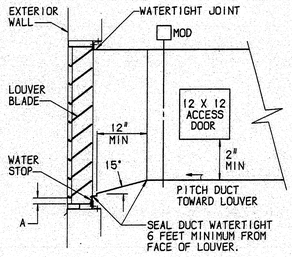

LOUVER DETAIL

NTS

IF DIMENSION "A" IS LESS THAN 1 INCH SEE MODIFIED LOUVER DETAIL THIS SHEET.

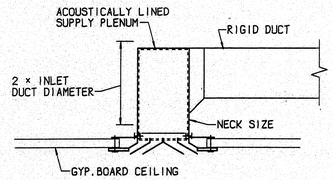

DIFFUSER CONNECTION DETAIL

NTS

DETAIL TYPICAL FOR GRILLES, REGISTERS AND LINEAR DIFFUSERS IN GYPSUM BOARD CEILINGS. SUPPORT PLENUM FROM CEILING FRAMING WITH STEEL ANGLES FASTENED TO THE PLENUM.

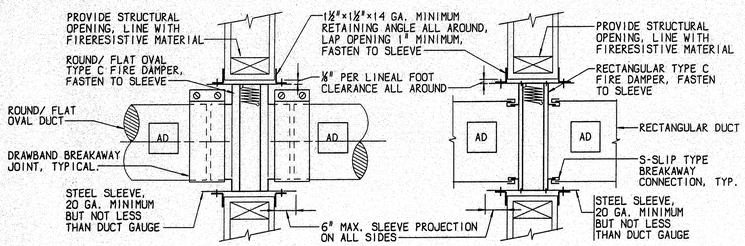

ROUND/FLAT OVAL FIRE DAMPER INSTALLATION DETAIL

NTS

RECTANGULAR FIRE DAMPER INSTALLATION DETAIL

NTS

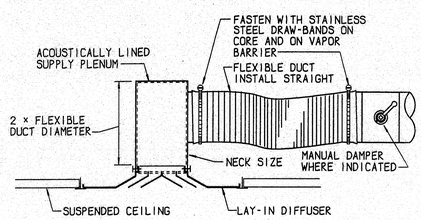

DIFFUSER CONNECTION DETAIL

NTS

DETAIL TYPICAL FOR CEILING GRILLES, REGISTERS AND LINEAR DIFFUSERS. FOR SURFACE-MOUNT DEVICES, SUPPORT PLENUM FROM CEILING GRID WITH STEEL ANGLES FASTENED TO PLENUM. FOR RETURN GRILLES, PROVIDE FLEXIBLE DUCT TO THE PLENUM WHERE INDICATED, 2 FEET LONG MINIMUM, 7 FEET MAXIMUM.

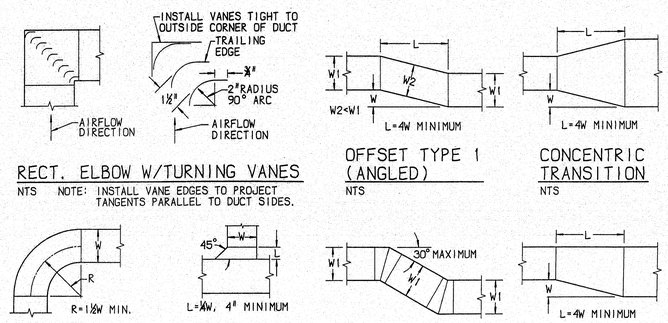

RECT. ELBOW W/TURNING VANES

NTS NOTE: INSTALL VANE EDGES TO PROJECT TANGENTS PARALLEL TO DUCT SIDES.

OFFSET TYPE 1 (ANGLED)

NTS

CONCENTRIC TRANSITION

NTS

RADIUS ELBOW

NTS

RECTANGULAR TAP 45 DEGREE ENTRY

NTS

OFFSET TYPE 2 (MITERED)

NTS

ECCENTRIC TRANSITION

NTS

129-128

REVISIONS

MAINE STATE FERRY SYSTEM
ROCKLAND
NEW TERMINAL FACILITY

TFH ARCHITECTS
100 COMMERCIAL STREET
PORTLAND, MAINE 04101
TELEPHONE 207 775 6141
ARCHITECTURE—PLANNING

BENNETT ENGINEERING
CONSULTING ENGINEERS
BENNETT ROAD, P.O. BOX 257, FREEPORT, MAINE 04032
(207) 865-9475

APPROVED BY BUREAU OF TRANSPORTATION SERVICES

P. Pothle

STATE OF MAINE WILLIAM S. BENNETT 2919 REGISTERED PROFESSIONAL ENGINEER

DATE 24 OCT 94	DRAWN JMK
SCALE AS NOTED	CHECKED WSB
MDOT PROJECT FBD-6069(00)X	BEI PROJECT 94047

DRAWING TITLE: DETAIL SHEET

DRAWING NO. M4

LEGEND

ABBREVIATION	DESCRIPTION
AD	ACCESS DOOR
AC-#	AIR CONDITIONER TAG
AP	ACCESS PANEL
A.P.D	AIR PRESSURE DROP
ATC	AUTOMATIC TEMPERATURE CONTROL
AAV	AUTOMATIC AIR VENT
AFF	ABOVE FINISHED FLOOR
AMPS	AMPERES
AS-#	AIR SEPARATOR TAG
BFP	BACKFLOW PREVENTER
B-#	BOILER TAG
BHP	BRAKE HORSEPOWER
BDD	BACKDRAFT DAMPER
BTUH	BRITISH THERMAL UNITS PER HOUR
CFM	CUBIC FEET PER MINUTE
CD	CEILING DIFFUSER
CBD	COUNTERBALANCED DAMPER
CU-#	CONDENSING UNIT TAG
Cv	VALVE COEFFICIENT
CO	CLEANOUT
CP-#	CIRCULATING PUMP TAG
DEG F	DEGREES FAHRENHEIT
DN	DOWN
DIA	DIAMETER
DB	DRY BULB
ESP	EXTERNAL STATIC PRESSURE
ET-#	EXPANSION TANK TAG
E.A.T	ENTERING AIR TEMPERATURE
EFF	EFFICIENCY
EG	EXHAUST GRILLE
EWT	ENTERING WATER TEMPERATURE
ER	EXHAUST REGISTER
EXH	EXHAUST
FT	FEET
FPM	FEET PER MINUTE
FD	FIRE DAMPER
FD-#	FLOOR DRAIN TAG
GPM	GALLONS PER MINUTE
GA.	GAUGE
GAL	GALLONS
GWH-#	PROPANE GAS WATER HEATER TAG
HC-#	HEATING COIL TAG
HP	HORSEPOWER
HRU-#	HEAT RECOVERY UNIT TAG
IN.	INCHES
I=B=R	THE HYDRONICS INSTITUTE
LB	POUNDS
LF	LINEAR FOOT
LWCO	LOW WATER CUTOUT
LRA	LOCKED ROTOR AMPS
L.A.T	LEAVING AIR TEMPERATURE
L-#	LOUVER TAG
MBH	THOUSANDS OF BTU PER HOUR
MAX	MAXIMUM
MIN	MINIMUM
MCA	MINIMUM CIRCUIT AMPACITY
NC	NOISE CRITERION
NTS	NOT TO SCALE
OA	OUTSIDE AIR
O.D.	OUTSIDE DIAMETER
OBD	OPPOSED BLADE DAMPER
OED	OPEN ENDED DUCT
OPD	OVERCURRENT PROTECTIVE DEVICE
PVC	POLYVINYL CHLORIDE
PSIG	POUNDS PER SQUARE INCH GAUGE
RFM	RADIANT FLOOR MANIFOLD
RL	RAIN LEADER
RLA	RUNNING LOAD AMPS
RPM	REVOLUTIONS PER MINUTE
R.A.	RETURN AIR
RG	RETURN GRILLE
SQ.FT	SQUARE FEET
SP	STATIC PRESSURE
ΔT	TEMPERATURE DIFFERENTIAL
TCP	TEMPERATURE CONTROL PANEL
T.S.P	TOTAL STATIC PRESSURE
TYP	TYPICAL
UH-#	UNIT HEATER TAG
V/PH/HZ	VOLTS/PHASES/HERTZ
WSA	WIRE SIZING AMPS
WB	WET BULB
WG	WATER GAUGE
WPD	WATER PRESSURE DROP
WTD	WATER TEMPERATURE DROP
WOF	WASTE OIL FURNACE
W/	WITH

LEGEND

SYMBOL	DESCRIPTION
—HWS—	HOT WATER SUPPLY PIPING (HWS)
—HWR—	HOT WATER RETURN PIPING (HWR)
—WO—	WASTE OIL SUPPLY PIPING (WO)
	DRAIN PIPING ABOVE GRADE
- -SAN- -	DRAIN PIPING BELOW GRADE
- - - - -	VENT PIPING (V)
—CA—	COMPRESSED AIR PIPING (CA)
—RS—	REFRIGERANT SUCTION PIPING (RS)
—RL—	REFRIGERANT LIQUID PIPING (RL)
—C—	CONDENSATE DRAIN PIPING (C)
	COLD WATER PIPING (CW)
	HOT WATER PIPING (HW)
	RECIRCULATED HOT WATER PIPING (RHW)
— G —	PROPANE GAS PIPING
	PIPE CAP
	DIRECTION OF FLUID FLOW
	ELBOW UP
	ELBOW DOWN
	PIPE TEE UP
	PIPE TEE DOWN
	PIPE REDUCER
A	WATER HAMMER ARRESTOR W/RATING
	BUTTERFLY VALVE
	OS & Y GATE VALVE
	BALANCING VALVE (ADJUSTABLE)
	BACKFLOW PREVENTER (BFP)
	CHECK VALVE
	RELIEF VALVE (RV)
	BALL VALVE
	3/4" BALL VALVE WITH 3/4" HOSE END
	GATE VALVE
	PRESSURE REDUCING VALVE
	STRAINER
	STRAINER W/BLOWDOWN BALL VALVE
	2-WAY CONTROL VALVE
	3-WAY CONTROL VALVE
	UNION
	PIPE FLANGE
	PUMP
FC	FLEXIBLE PIPE CONNECTION (FC)
	PITCH DOWN
	PETCOCK
P	PRESSURE GAUGE WITH GAUGE COCK
T	THERMOMETER IN WELL
P	PRESSURE SWITCH
T	TEMPERATURE SENSOR
T	THERMOSTAT
R	ROOM TEMPERATURE UNIT
V	MANUAL AIR VENT
A	AIR DEVICE TAG
101	ROOM NUMBER
((((((((	TURNING VANES
	DUCT W/MANUAL DAMPER
	DUCT W/FLEXIBLE CONNECTION (FC)
	DUCT W/ACOUSTIC LINING
	DUCT W/SQUARE-TO-ROUND TRANSITION
	FLEXIBLE DUCT
MOD	MOTOR OPERATED DAMPER
	AIRFLOW OUT
	AIRFLOW IN
∅	DIAMETER OR FLAT OVAL
FD	FIRE DAMPER

BOILER PERFORMANCE SCHEDULE

* - UNITS = MBH

TAG	RATINGS*		FIRING RATE (GPH)	WATER CONTENT (GAL)	ELECTRICAL REQUIREMENTS			BASIS OF DESIGN: CLEANBURN		
	INPUT	OUTPUT			HP	AMPS	V/PH/HZ	FUEL	MODEL	BURNER MAKE/MODEL
B-1	500	400	3.6	70	-	15	115/1/60	WASTE OIL	CB-500-BLR	CLEANBURN/CB-85-HS

GAS FIRED WATER HEATER PERFORMANCE SCHEDULE

TAG	STORAGE (GALS)	INPUT (MBH)	RECOVERY @ 90 F	ELECTRICAL REQ.		BASIS OF DESIGN: AS NOTED		
				MOCP	V/PH/HZ	SERVICE	FUEL SOURCE	MAKE/MODEL
GWH-1	40	37	39	15	120/1/60	DOMESTIC HW	LP GAS	A.O. SMITH/PGSE-40
-	-	-	-	-	-	-	-	-

BFP PERFORMANCE SCHEDULE

* - BODY STYLES REFERENCED ARE AS FOLLOWS: (DC) = DOUBLE CHECK; (DCA) = DOUBLE CHECK WITH ATMOSPHERIC VENT; (RPZ) = DOUBLE CHECK WITH REDUCED PRESSURE ZONE RELIEF VALVE.

TAG	SIZE (INCHES)	WATER FLOW (GPM)	W.P.D (PSIG)	WORKING TEMP. (DEG.F)	WORKING PRESSURE (PSIG)	TESTABLE? (Y) OR (N)	BASIS OF DESIGN: FEBCO		
							BODY STYLE*	SERVICE	MODEL
BFP-1	1	20	12	140	175	YES	RPZ	ENTRANCE	825-Y
BFP-2	3/4	12	9	180	175	YES	RPZ	BOILER	825-Y-HW
BFP-3	3/4	12	9	180	175	YES	RPZ	SNOWMELT	825-Y-HW

EXPANSION TANK PERFORMANCE SCHEDULE

TAG	TANK VOLUME (GAL)	ACCEPTANCE VOLUME (GAL)	WORKING TEMP. (DEG.F)	WORKING PRESSURE (PSIG)	PRECHARGE PRESSURE (PSIG)	WATERLOGGED WEIGHT (LB)	BASIS OF DESIGN: AS NOTED		
							MOUNTING	SERVICE	MAKE/MODEL
ET-1	22	12	225	125	12	333	FLOOR	HEATING	TACO/CAX 84
ET-2	4.4	-	200	100	55	-	HUNG	DOMESTIC HW	AMTROL/ST-12

TANK SURFACES AND FITTINGS IN CONTACT WITH DOMESTIC WATER SHALL BE GALVANIZED STEEL, STAINLESS STEEL OR BRONZE.

AIR SEPARATOR PERFORMANCE SCHEDULE

TAG	WATER FLOW (GPM)	W.P.D (FT WG)	Cv FACTOR	STRAINER (Y) OR (N)	WORKING TEMPERATURE (DEGREES F)	WORKING PRESSURE (PSIG)	BASIS OF DESIGN: TACO		
							SERVICE	PIPE SIZE	MODEL
AS-1	80	1.0	86	NO	375	125	HEATING	2 IN.	TACO AC2

AIR DEVICE PERFORMANCE SCHEDULE

1-WAY, OPPOSED, CORNER, 3-WAY, 3-WAY RECT., 4-WAY

TAG	SIZE (INCHES)	AIRFLOW (CFM)	SP LOSS (IN.WG)	THROW(L) (FEET)	THROW(S) (FEET)	NC	BASIS OF DESIGN: ANEMOSTAT		
							FRAME STYLE	PATTERN	MODEL / TYPE
A	6 X 6	75	0.04	5 - 11	-	<20	24×24 LAY-IN	1-WAY	DP / CD
B	6 X 6	125	0.09	4 - 7	-	<20	24×24 LAY-IN	4-WAY	DP / CD
C	10 X 6	150	0.03	15 - 21	-	<20	SURFACE MOUNT	DOUBLE DEFL	X25H/ SR
D	10 X 10	300	0.03	18 - 29	-	<20	SURFACE MOUNT	DOUBLE DEFL	X25H/ SR
AA	8 X 8	100	0.04	-	-	<20	SURFACE MOUNT	1/2", 45°	X35HD/RG
BB	12 X 12	200	0.03	-	-	<20	24×24 LAY-IN	3/4", 45°	XAC3LD/RG
CC	22 X 22	400	0.01	-	-	<20	24×24 LAY-IN	3/4", 45°	XAC3LD/RG
DD	10 X 8	200	0.02	-	-	<20	SURFACE MOUNT	1/2", 45°	X35HD/RG

TYPE: CD = CEILING DIFFUSER, RG = RETURN GRILLE, SR = SUPPLY REGISTER.
DIFFUSER THROW BASED ON TERMINAL VELOCITY OF 300 FPM MIN., 125 FPM MAX.
BALANCE TO CFM INDICATED ON PLANS.

LOUVER PERFORMANCE SCHEDULE

TAG	AIRFLOW (CFM)	SP LOSS (IN.WG)	FREE AREA VELOCITY (FPM)	SIZE (INCHES)	FREE AREA (SQ.FT)	DRAINABLE? (Y) OR (N)	BLADE ANGLE & FRAME DEPTH	BASIS OF DESIGN: RUSKIN	
								SERVICE	MODEL
L-1	1400	0.10	833	36 X 18	1.68	YES	37.5°, 6"	HRU-1 OUTLET	ELF-6375D
L-2	1400	0.08	833	36 X 18	1.68	YES	37.5°, 6"	HRU-1 INLET	ELF-6375D
L-3	-	-	-	36 X 12	0.87	YES	37.5°, 4"	COMB AIR	ELF-375D

HEAT RECOVERY UNIT PERFORMANCE SCHEDULE

BASIS OF DESIGN: AEX

TAG	EXHAUST AIR (CFM)	SUPPLY AIR (CFM)	EXHAUST E.S.P (IN.WG)	SUPPLY E.S.P (IN.WG)	EFF. %	ELECTRICAL REQUIREMENTS			SERVICE	MODEL
						EF HP	SF HP	V/PH/HZ		
HRU-1	1400	1400	0.5	0.5	66	0.75	0.75	208/3/60	VENTILATION	MR-70-40

HEATING COIL PERFORMANCE SCHEDULE

* - OUTPUT BASED ON HEATING CFM
** - BASED ON 180°F ENT. WATER TEMPERATURE

TAG	OUTPUT (MBH)*	WATER FLOW (GPM)**	W.P.D (FT.WG)	HTG.AIR FLOW (CFM)	MAX. AIR FLOW (CFM)	A.P.D (IN.WG)	E.A.T (DEGREES F)	L.A.T (DEGREES F)	SERVICE
HC-1	60.8	5.0	0.66	1400	1400	0.16	32	72	IN-DUCT

COIL SHALL HAVE SAME-END CONNECTIONS.

WASTE OIL FURNACE PERFORMANCE SCHEDULE

TAG	INPUT RATING (MBH)	FIRING RATE (GPH)	FURNACE DIMENSIONS (L x W x H)	ELECTRICAL REQUIREMENTS			BASIS OF DESIGN: CLEANBURN		
				HP	AMPS	V/PH/HZ	MOUNTING	MODEL	BURNER MAKE
WOF-1	280	2.0	63"×48"×33"	1/2	15	115/1/60	PLATFORM	CB-2800	CLEANBURN

UNIT HEATER PERFORMANCE SCHEDULE

HEATING PERFORMANCE BASED ON 180 F ENTERING WATER & 60 F ENTERING AIR TEMPERATURE

TAG	MBH	WATER FLOW (GPM)	WPD (FT WG)	AIRFLOW (CFM)	HEIGHT (FT AFF)	ELECTRICAL REQUIREMENTS			BASIS OF DESIGN: TRANE		
						HP	AMPS	V/PH/HZ	SERVICE	ARRANGEMENT	MODEL
UH-1	23.6	2.0	0.10	815	6.5	1/20	-	120/1/60	BOILER ROOM	HORIZONTAL	60-S

PUMP PERFORMANCE SCHEDULE

TAG	WATER FLOW (GPM)	HEAD (FT WG)	FLANGE (IN.)	RPM	EFF %	ELECTRICAL REQUIREMENTS			BASIS OF DESIGN: TACO		
						HP	BHP	V/PH/HZ	SERVICE	ARRANGEMENT	MODEL
CP-1	35	20	1½×1½	1750	56	0.5	0.32	208/3/60	MAIN HEATING	IN-LINE	1611
CP-2	35	20	1½×1½	1750	56	0.5	0.32	208/3/60	MAIN HEATING	IN-LINE	1611

DUCTLESS AIR CONDITIONER PERFORMANCE SCHEDULE

BASIS OF DESIGN: CARRIER
*SEASONAL ENERGY EFFICIENCY RATIO

TAG	MODEL/TYPE	AIRFLOW (CFM)	REFRIGERANT TUBING				COOLING (MBH)	SEER*	WEIGHT (LBS)	ELECTRICAL		
			HEIGHT	LENGTH	LIQUID	GAS				MCA	MAX FUSE	V/PH/HZ
AC-1	40QYB018-3/HW	500	65'	200'	3/8"	5/8"	18.0	10.2	53	0.37	15	208/1/60
AC-2	42KB012-3/HW	360	30'	49'	1/4"	1/2"	12.3	10.5	36	POWER FROM CU-2 DISCONNECT		
AC-3	40QKB036-3/CAS	975	65'	200'	3/8"	3/4"	33.4	10.4	106	0.9	15	208/1/60
AC-4	40QKB036-3/CAS	975	65'	200'	3/8"	3/4"	33.4	10.4	106	0.9	15	208/1/60
AC-5	40QYB024-3/HW	520	65'	200'	3/8"	5/8"	23.2	11.0	57	0.4	15	208/1/60

TYPE: HW=HIGH WALL MOUNTING, CAS=2×4 CEILING GRID LAY-IN

CONDENSING UNIT PERFORMANCE SCHEDULE

*AT ARI CONDITIONS OF 95 F AMBIENT/75 F WET BULB
BASIS OF DESIGN: CARRIER

TAG	MODEL	NOMINAL COOLING (TONS)	TOTAL COOLING (MBH)	TYPE OF REFRIGERANT	MINIMUM AMBIENT TEMP (F)	MAXIMUM AMBIENT TEMP (F)	DIMENSIONS LENGTHxWIDTHxHEIGHT (INCHES)	WEIGHT (LBS)	ELECTRICAL		
									MCA	MAX FUSE	V/PH/HZ
CU-1	38HD018C-3	1.5	18.0	R-22	35	115	37×15×25	148	11.8	20	208/1/60
CU-2	38KB012-3	1.0	12.3	R-22	35	115	30×10×22	84	8.5	15	208/1/60
CU-3	38HD036C-3	3.0	33.4	R-22	35	115	37×15×25	171	23.1	40	208/1/60
CU-4	38HD036C-3	3.0	33.4	R-22	35	115	37×15×25	171	23.1	40	208/1/60
CU-5	38HD024C-3	2.0	23.2	R-22	35	115	37×15×25	160	14.3	25	208/1/60

129-129

REVISIONS

MAINE STATE FERRY SYSTEM
ROCKLAND
NEW TERMINAL FACILITY

TFH ARCHITECTS
100 COMMERCIAL STREET
PORTLAND, MAINE 04101
TELEPHONE 207 775 6141
ARCHITECTURE–PLANNING

BENNETT ENGINEERING
CONSULTING ENGINEERS
BENNETT ROAD, P.O. BOX 297, FREEPORT, MAINE 04032
(207) 865-9475

APPROVED BY BUREAU OF TRANSPORTATION SERVICES

P Pottle

STATE OF MAINE
WILLIAM BENNETT
2919
REGISTERED
PROFESSIONAL ENGINEER

DATE	DRAWN
24 OCT 94	JMK
SCALE	CHECKED
NO SCALE	WSB
MDOT PROJECT	BEI PROJECT
FBD-6069(00)X	94047

DRAWING TITLE
SCHEDULE SHEET

DRAWING NO.
M5

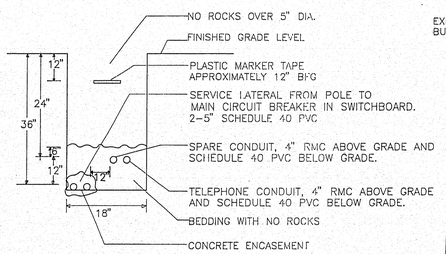

TRENCH DETAIL–POLE TO METER

NOT TO SCALE

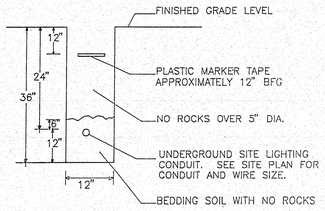

TRENCH DETAIL–SITE LIGHTING

NOT TO SCALE

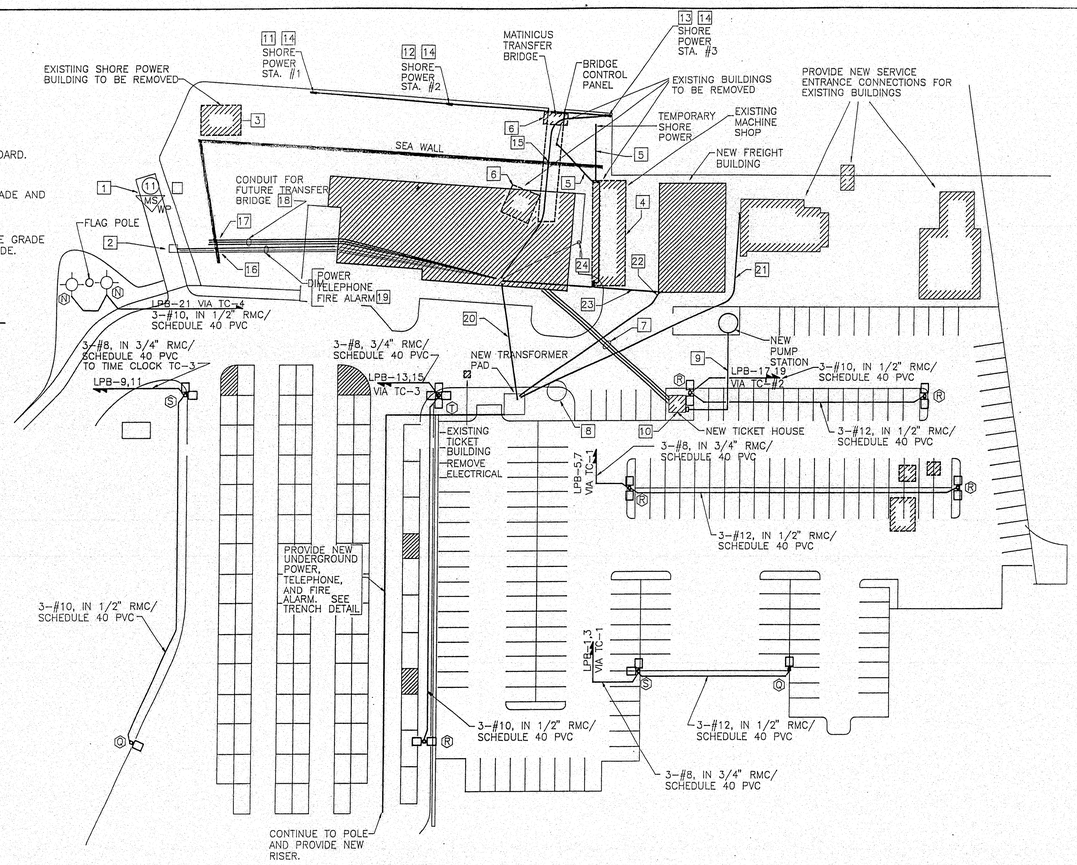

ELECTRICAL SITE DRAWING

SCALE: 1" = 40'

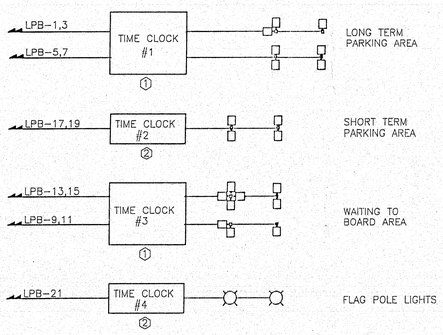

PARKING LOT LIGHTING CONTROL DIAGRAM

NOT TO SCALE

CONSTRUCTION NOTES

1. MOUNT WEATHER PROOF MANUAL FIRE ALARM STATION AT TRANSFER BRIDGE OPERATOR CONSOLE.
2. EXISTING TRANSFER BRIDGE CONTROL PANEL.
3. REMOVE ALL ELECTRICAL EQUIPMENT AND MATERIAL ASSOCIATED WITH THE EXISTING SHORE POWER BUILDING.
4. REMOVE ALL ELECTRICAL EQUIPMENT AND MATERIAL FROM EXISTING MACHINE SHOP.
5. REMOVE CONDUIT, WIRE, AND ELECTRICAL MATERIAL AND EQUIPMENT SERVING MATINICUS TRANSFER BRIDGE AND TEMPORARY SHORE POWER.
6. SECURE POWER AND REMOVE SERVICE ENTRANCE CONNECTIONS TO EXISTING BUILDINGS TO BE DEMOLISHED.
7. PROVIDE NEW UNDERGROUND SERVICE TO NEW TICKET HOUSE FROM BOILER ROOM CONSISTING OF 4–#1/0, AND 1–#6 IN 2" SCHEDULE 40 PVC PLUS TWO 2" SCHEDULE 40 PVC CONDUITS FOR TELEPHONE AND FIRE ALARM.
8. REMOVE EXISTING WIRING TO PUMP STATION AND PUMP STATION ALARM PANEL.
9. PROVIDE 7–#8 AND 4–#10 CONDUCTORS IN ONE 1–1/4" SCHEDULE 40 PVC UNDERGROUND CONDUIT FROM THE PUMP STATION CONTROL/ALARM PANEL TO THE PUMP STATION. PROVIDE ELECTRICAL CONNECTIONS AT BOTH ENDS. INSTALL CONTROL/ ALARM PANEL ON NEW TICKET HOUSE WHERE SHOWN. PROVIDE 4–#6 CONDUCTORS IN 1" EMT FROM 50A3P CIRCUIT BREAKER IN NEW TICKET HOUSE PANELBOARD TO PUMP STATION CONTROL/ALARM PANEL.
10. PROVIDE ONE TYPE "C" LUMINAIRE IN THE NEW TICKET HOUSE WITH A SINGLE LIGHT SWITCH BY THE DOOR. PROVIDE A SINGLE GFCI TYPE DUPLEX RECEPTACLE. PROVIDE A GRAINGER #2E698 ELECTRIC BASEBOARD HEATER AND #2E701 THERMOSTAT. PROVIDE SERFACE MOUNTED PANELBOARD "LPT" AS DESCRIBED ON SHEET E-4. NO DRAWINGS OF THE NEW TICKET HOUSE ARE SHOWN EXCEPT ON SHEET ES.
11. PROVIDE A NEW RUSSELL–STOLL #1304–100A, 277/480 TRIP TYPE SHORE POWER RECEPTACLE CONNECTED TO THE NEW 240VAC, 3–PHASE FEEDER IN THE SAME MANNER AS THE 240VAC, 3–PHASE RECEPTACLE AT STATION #2. PROVIDE CONNECTIONS FROM THE NEW 110VAC, 1–PHASE AND 240VAC, 1–PHASE FEEDERS TO THE EXISTING SHORE POWER RECEPTACLES AT STATION #1.
12. PROVIDE CONNECTIONS FROM THE NEW 110VAC, 1–PHASE, AND THE NEW 240VAC, 1–PHASE AND 3–PHASE FEEDERS TO THE EXISTING SHORE POWER RECEPTACLES AT STATION #2.
13. PROVIDE A NEW SHORE POWER STATION #3 WHERE SHOWN, CONSISTING OF TWO RUSSELL–STOLL #DBRS1304–100, 100A 480/277VAC TRIP TYPE SHORE POWER RECEPTACLES, AND ONE RUSSELL–STOLL #3344–200, WITH 100A TRIP. MOUNT RECEPTACLES ON ALUMINUM STRUCTRUAL FRAMING TO MATCH EXISTING STATIONS. PROVIDE CONNECTIONS TO NEW FEEDERS.
14. SEE SHORE POWER SYSTEM WIRING DETAILS ON SHEET E–3.
15. PROVIDE BOND–OUT IN SEAWALL FOR A DUCT BANK CONSISTING OF SIX 1–1/4" AND THREE 1–1/2" CONDUITS WITH 25% EXTRA SPACE. SEAL BONDOUT AFTER CONDUIT INSTALLATION.
16. PROVIDE BOND–OUT IN SEAWALL FOR A DUCT BANK CONSISTING OF ONE 2" AND TWO 1" CONDUITS WITH 25% EXTRA SPACE. SEAL BONDOUT AFTER CONDUIT INSTALLATION.
17. PROVIDE BOND–OUT IN SEAWALL FOR A DUCT BANK CONSISTING OF TWO 2–1/2" AND TWO 1" CONDUITS WITH 25% EXTRA SPACE. SEAL BONDOUT AFTER CONDUIT INSTALLATION.
18. PROVIDE WATERPROOF SEAL ON EMPTY CONDUITS ON SEAWARD SIDE OF NEW SEA WALL.
19. PROVIDE NEW CONDUITS AND WIRING TO EXISTING TRANSFER BRIDGE CONSISTING OF 4–#2/0 AND 1–#6 IN 2" CONDUIT. PROVIDE FIRE ALARM AND TELEPHONE CABLE IN EACH OF TWO 1" CONDUITS.
20. PROVIDE NEW UNDERGROUND SERVICE LATERAL TO MAIN BUILDING'S ELECTRIC ROOM. SEE RISER DIAGRAM ON SHEET E–3.
21. PROVIDE A NEW UNDERGROUND SERVICE LATERAL CONSISTING OF 4–#4/0 CONDUCTORS IN 2" CONDUIT. MINIMIZE POWER OUTAGE AND NOTIFY OWNER PRIOR TO CONNECTION TO NEW SERVICE.
22. PROVIDE A TEMPORARY UNDERGROUND SERVICE LATERAL CONSISTING OF 4–#1/0 CONDUCTORS IN 2" CONDUIT. PROVIDE TEMPORARY METER ON BUILDING. FINAL BUILDING POWER FROM MAIN BUILDING. REMOVE METER AFTER MAIN BUILDING SERVICE IS COMPLETED.
23. PROVIDE 4–250KCMIL AND 1–#4 IN ONE 3" CONDUIT AS FINAL UNDERGROUND SERVICE TO STORAGE BUILDING FROM MAIN BUILDING ELECTRIC ROOM. PROVIDE THREE UNDERGROUND 2" COMMUNICATIONS CONDUITS..
24. PROVIDE 4–#10 IN 3/4" SCHEDULE 40 PVC FROM PANEL "LPB–27,20" UNDERGROUND TO THE WASTE OIL TANK PUMP.

SYMBOLS: SEE SHEET E–4

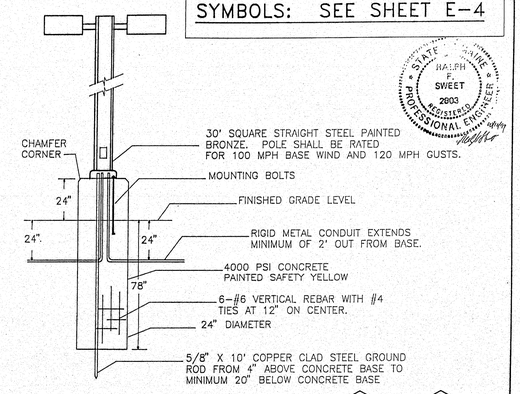

CONCRETE POLE BASE––TYPES (R) AND (S)

NOT TO SCALE

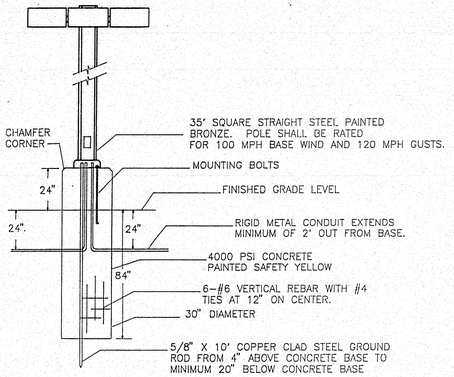

CONCRETE POLE BASE––TYPE (T)

NOT TO SCALE

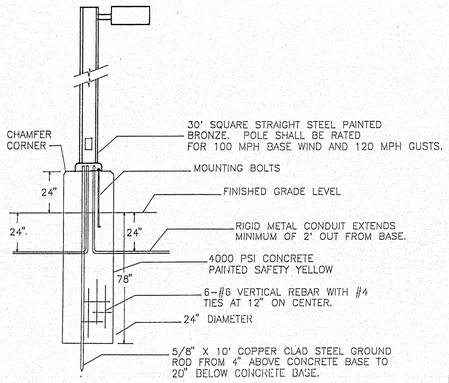

CONCRETE POLE BASE––TYPE (Q)

NOT TO SCALE

129-130

filename:ROCK–AES

35
35
50
70

REVISIONS

ROCKLAND FERRY TERMINAL

MAINE DEPARTMENT OF TRANSPORTATION

T F H ARCHITECTS
100 COMMERCIAL STREET
PORTLAND, MAINE 04101
TELEPHONE 207 775 6141

ELECTRICAL UTILITIES AND SITE LIGHTING

DATE	OCTOBER 12, 1994
SCALE	1" = 40'
DRAWN BY	ACAD
FILE NAME	ROCK–AES
CHECKED BY	RFS
MDOT PROJECT NO.	FDB–6069–(00)X
DRAWING NO.	ES

CONSTRUCTION NOTES (THIS SHEET ONLY)

1. MOUNT FIRE ALARM AUDIO VISUAL UNITS 80" ABOVE THE FLOOR OR 6" BELOW THE CEILING, WHICHEVER IS LOWER.
2. MOUNT TYPE "G" AND "G" STRIP LIGHTS ABOVE CEILING AT MIRROR. SEE MIRROR LIGHT VALANCE CONSTRUCTION DETAIL ON ARCHITECTS DRAWING. CONNECT LIGHTS END TO END.
3. MOUNT TYPE "H" AND "U" WALL SCONCES WHERE SHOWN ON ARCHITECTS ELEVATION DRAWING.
4. PENDANT MOUNT LIGHTS AT SAME HEIGHT AS MAXIMUM HEIGHT ABOVE FLOOR.
5. REMOTE MOUNT TYPE "G" LIGHT FIXTURE BALLASTS ABOVE STORAGE ROOM CEILING, ROOM 105.
6. MOUNT PHOTOCELL SWITCH UNDER EAVES.
7. REMOTE MOUNT TYPE "H" AND "U" BALLASTS ABOVE CEILING OF CORRIDOR 109.
8. MOUNT AT 15' ABOVE FINISHED GRADE.
9. MOUNT AT EAVE, SEE MFR. DIRECTIONS FOR CLEARANCE.

SEE REFLECTED CEILING DRAWING FOR ACCURATE LIGHT FIXTURE LOCATIONS

SEE SHEET E-4 FOR SYMBOL LIST

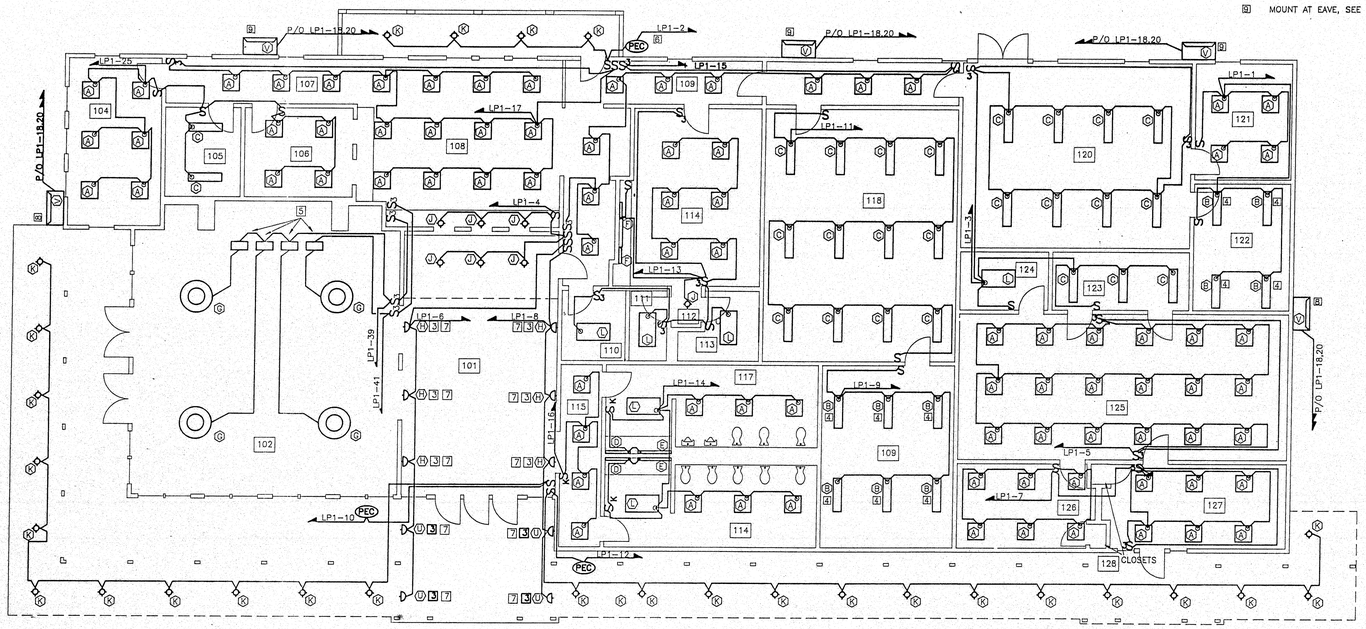

MAIN BUILDING FLOOR PLAN—LIGHTING
SCALE: 1/8" = 1'

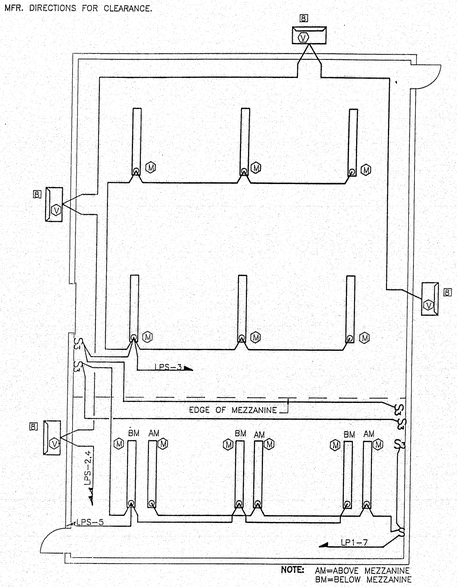

NOTE: AM=ABOVE MEZZANINE
BM=BELOW MEZZANINE

FREIGHT STORAGE BUILDING—LIGHTING
SCALE: 1/8" = 1'

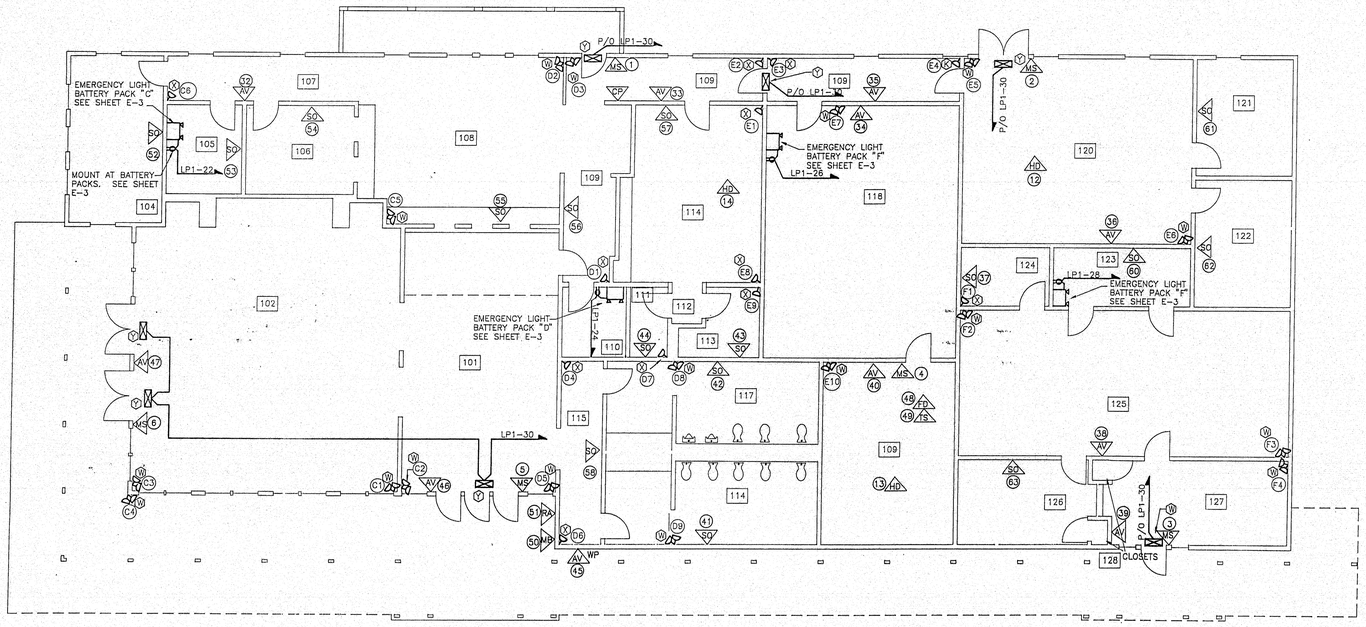

MAIN BUILDING FLOOR PLAN—FIRE ALARM SYSTEM AND EMERGENCY LIGHTING
SCALE: 1/8" = 1'

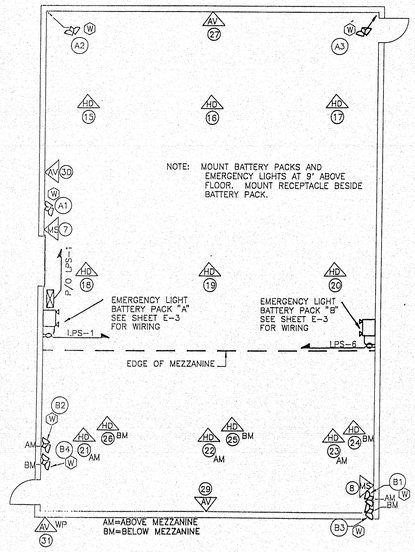

FREIGHT STORAGE BUILDING—FIRE ALARM SYSTEM AND EMERGENCY LIGHTING
SCALE: 1/8" = 1'

129-131

Filename: ROCK-AE1

REVISIONS

STATE OF MAINE
RALPH F. SWEET
2603
LICENSED
PROFESSIONAL ENGINEER

ROCKLAND FERRY TERMINAL

MAINE DEPARTMENT OF TRANSPORTATION

T F H ARCHITECTS
100 COMMERCIAL STREET
PORTLAND, MAINE 04101
TELEPHONE 207 775 6141

LIGHTING AND FIRE ALARM

DATE	OCTOBER 12, 1994
SCALE	1/8" = 1'
DRAWN BY	ACAD
FILE NAME	ROCK-AE1
CHECKED BY	RFS
MDOT PROJECT NO.	FDB-6069-(00)X
REVISION DESCRIPTION:	
DRAWING NO.	E1

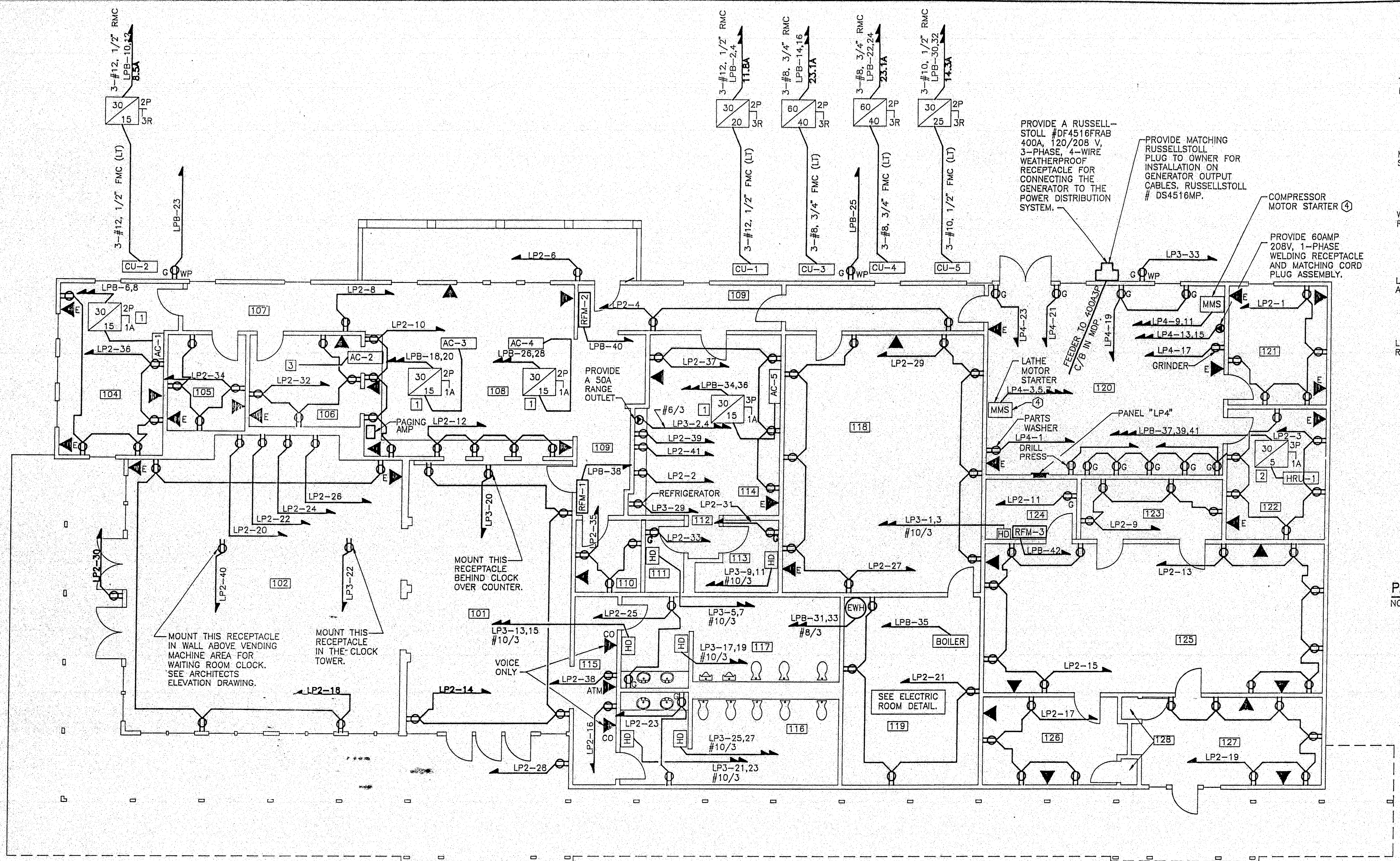

MAIN BUILDING FLOOR PLAN–POWER DISTRIBUTION

SCALE: 1/8" = 1'

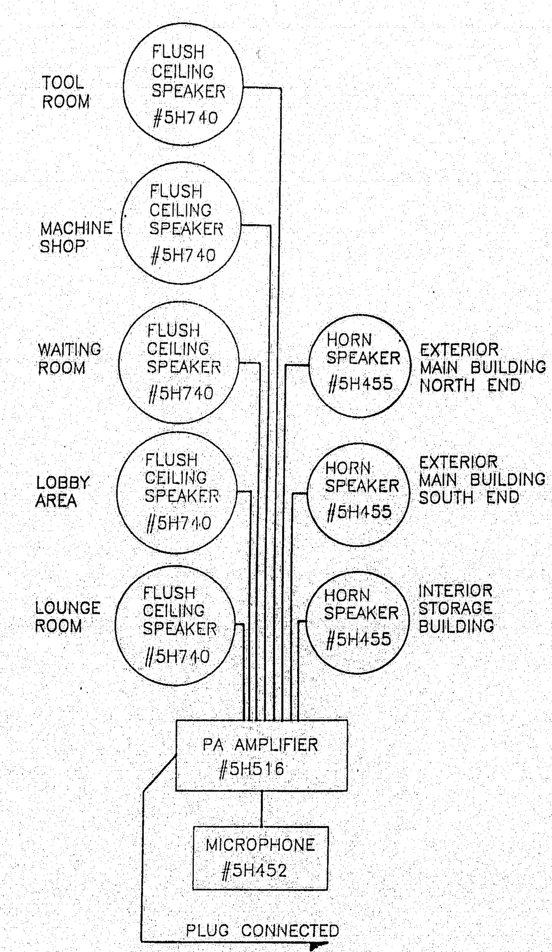

PART NUMBERS ARE GRAINGER SUPPLY NUMBERS.

SYSTEM COMPONENTS NOT SHOWN ON FLOOR PLAN. INSTALL AS DIRECTED BY MANUFACTURER.

PAGING SYSTEM DIAGRAM

NOT TO SCALE

CONSTRUCTION NOTES (THIS SHEET ONLY)

1. MOUNT FUSED DISCONNECT ABOVE CEILING DIRECTLY OVER AC-# UNIT SERVED.
2. MOUNT FUSED DISCONNECT ADJACENT TO BUT NOT ON HEAT RECOVERY UNIT IN #1.
3. POWER FOR AC-2 IS DERIVED FROM THE DISCONNECT SWITCH FOR CU-2. CONTINUE WIRING TO LOAD SIDE OF CU-2 FUSED DISCONNECT SWITCH.

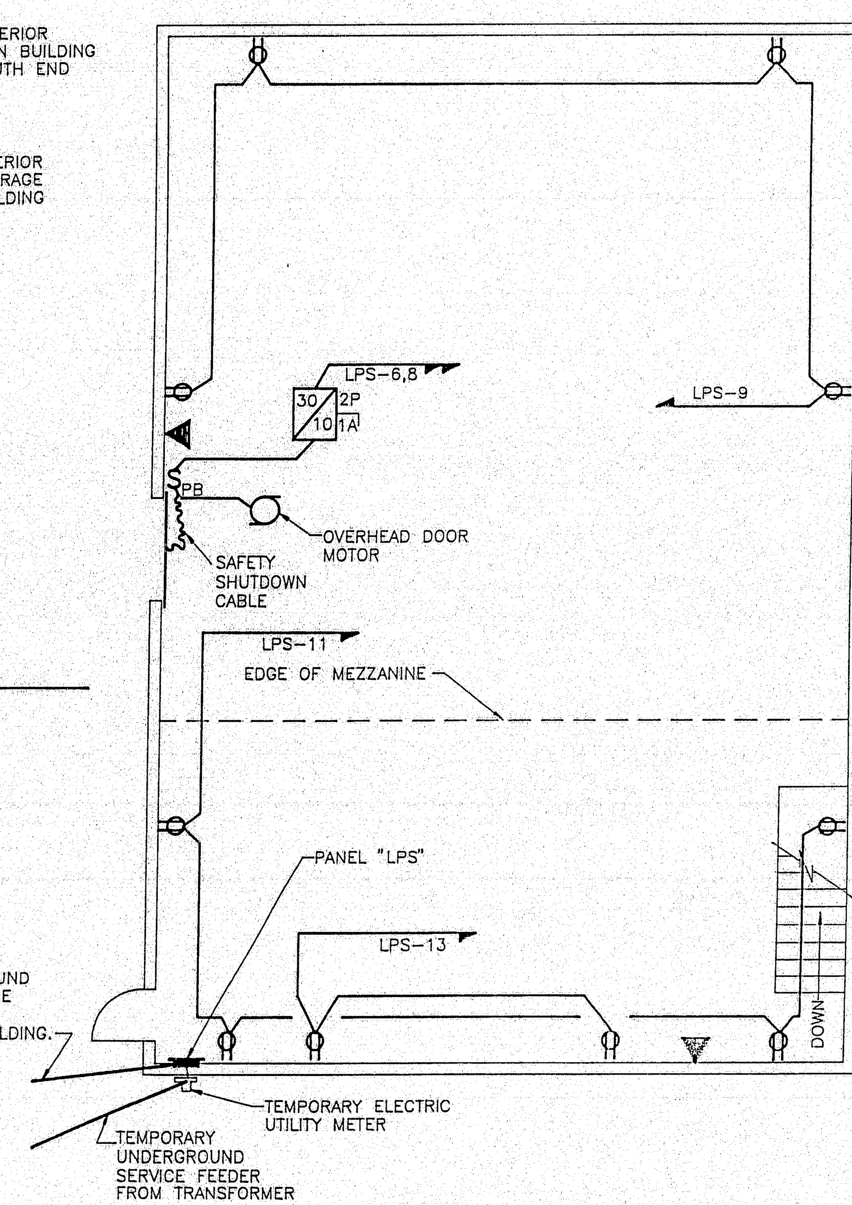

FREIGHT STORAGE BUILDING–POWER DISTRIBUTION

SCALE: 1/8" = 1'

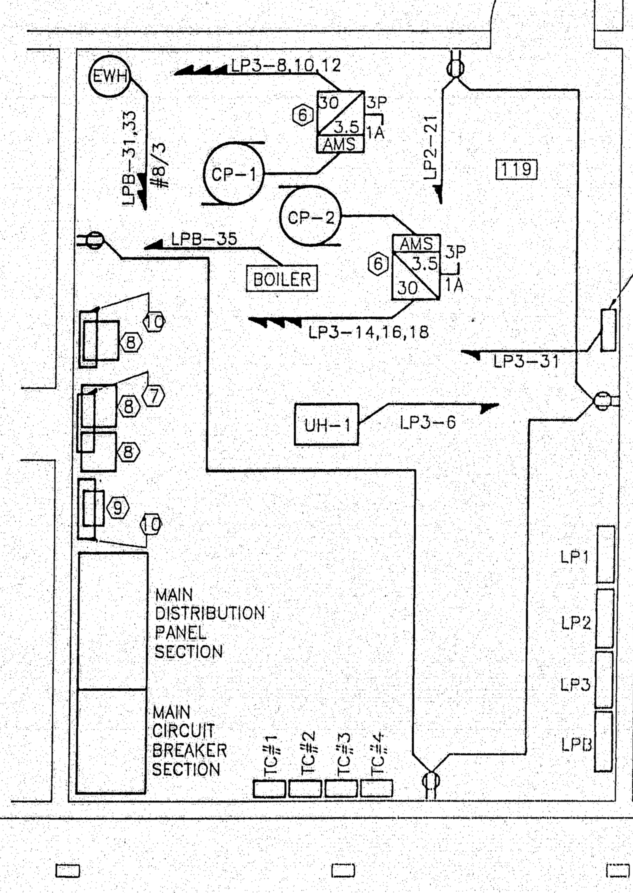

ELECTRIC ROOM DETAIL

SCALE: 1/4" = 1'

PANEL "LP1" PANEL SCHEDULE (NORMAL POWER)

VOLTAGE: 120/208 PHASE: 3 WIRE: 4 — BUS: 200 MLO: YES MCB: NO — AIC: 35,000 CKTS: 42 MOUNTING: SURFACE — CONNECTED KVA: DEMAND KVA:

CKT #	AMP SIZE	POLE	Ø	LIGHTING A	LIGHTING B	LIGHTING C	RECEPTACLES A	RECEPTACLES B	RECEPTACLES C	POWER/HEAT A	POWER/HEAT B	POWER/HEAT C	MISC. A	MISC. B	MISC. C	BRANCH CIRCUIT DESCRIPTION
1	20	1	A	.8												LIGHTING RM 121, 122
3	20	1	B		1.3											LIGT RM 120, 123,124
5	20	1	C			1.8										LIGHTING RM 125
7	20	1	A	1.2												LIGHTING RM 126, 127
9	20	1	B		.6											LIGT RM 109
11	20	1	C			1.6										
13	20	1	A	1.2												LIGT RM 110 THRU 114
15	20	1	B		1.0											LIGT RM 109
17	20	1	C			1.5										LIGHTING RM 107, 108
19			A													
21			B													
23			C													
25	20	1	A	1.2												LIGT RM 104, 105, 106
27			B													
29			C													
31			A													
33			B													
35			C													
37			A													
39	20	1	B		1.6											WAITING AREA LGTS 3/4
41	20	1	C			.6										WAITING AREA LGTS 1/4
2	20	1	A	.5												REAR CANOPY LIGHTS
4	20	1	B		.5											REAR TICK COUNTER LGT
6	20	1	C			1.5										LOBBY SCONCES 1/2
8	20	1	A	1.5												LOBBY SCONCES 1/2
10	20	1	B		1.1											FRONT CANOPY–NORTH
12	20	1	C			1.3										FRONT CANOPY–SOUTH
14	20	1	A	1.2												LIGHTS RM 114, 117
16	20	1	B		.4											LIGHTS RM 115
18	20	2	C													EXTERIOR WALL PACKS
20	↑	↑	A													↑
22	20	1	B		.3											EMERG. BATT PACK "C"
24	20	1	C			.3										EMERG. BATT PACK "D"
26	20	1	A	.3												EMERG. BATT PACK "E"
28	20	1	B		.3											EMERG. BATT PACK "F"
30			C													
32			A													
34			B													
36			C													
38			A													
40			B													
42			C													
CONNECTED TOTAL																NOTES:
DEMAND				100%			70%			80%						
DEMAND TOTAL																

PANEL "LP2" PANEL SCHEDULE (NORMAL POWER)

VOLTAGE: 120/208 PHASE: 3 WIRE: 4 — BUS: 200 MLO: YES MCB: NO — AIC: 35,000 CKTS: 42 MOUNTING: SURFACE — CONNECTED KVA: DEMAND KVA:

CKT #	AMP SIZE	POLE	Ø	LIGHTING A	LIGHTING B	LIGHTING C	RECEPTACLES A	RECEPTACLES B	RECEPTACLES C	POWER/HEAT A	POWER/HEAT B	POWER/HEAT C	MISC. A	MISC. B	MISC. C	BRANCH CIRCUIT DESCRIPTION
1	20	1	A				.9									RECEPTACLE RM 121
3	20	1	B					1.1								RECEPTACLE RM 122
5	20	1	C													SPARE
7	20	1	A													SPARE
9	20	1	B					.72								RECEPTACLE RM 123
11	20	1	C						.36							RECEPTACLE RM 124
13	20	1	A				1.1									RECEPTACLE RM 125
15	20	1	B					.9								RECEPTACLE RM 125
17	20	1	C						.72							RECEPTACLE RM 126
19	20	1	A				1.1									RECEPTACLE RM 127
21	20	1	B					.72								RECEPTACLE RM 119
23	20	1	C						.36							RECEPTACLE RM 116
25	20	1	A				.36									RECEPTACLE RM 117
27	20	1	B					.9								RECEPTACLE RM 118
29	20	1	C						.72							RECEPTACLE RM 118
31	20	1	A				.18									RECEPTACLE RM 113
33	20	1	B					.18								RECEPTACLE RM 111
35	20	1	C						.54							RECEPTACLE RM 110
37	20	1	A				.72									RECEPTACLE RM 114
39	20	1	B					.18								RECEPTACLE RM 114
41	20	1	C						.18							RECEPTACLE RM 114
2	20	1	A				.18									RECEPTACLE RM 114
4	20	1	B					.36								RECEPTACLE RM 109
6	20	1	C						.18							RECEPTACLE EXTERIOR
8	20	1	A				.18									RECEPTACLE RM 107
10	20	1	B					.72								RECEPTACLE RM 108
12	20	1	C						.72							RECEPTACLE RM 108
14	20	1	A				.72									RECEPTACLE RM 102
16	20	1	B					.18								RECEPTACLE RM 115
18	20	1	C						.72							RECEPTACLE RM 102
20	20	1	A				1.0									RECPT VENDING MACHINE
22	20	1	B					1.0								RECPT VENDING MACHINE
24	20	1	C						1.0							RECPT VENDING MACHINE
26	20	1	A				1.0									RECPT VENDING MACHINE
28	20	1	B					.18								RECEPTACLE EXTERIOR
30	20	1	C													RECEPTACLE EXTERIOR
32	20	1	A				.9									RECEPTACLE RM 106
34	20	1	B					.72								RECEPTACLE RM 105
36	20	1	C						.9							RECEPTACLE RM 104
38	20	1	A				1.8									RECEPTACLE ATM
40	20	1	B					.18								WAITING ROOM CLOCK
42	20	1	C													SPARE
CONNECTED TOTAL																NOTES:
DEMAND				100%			70%			80%						
DEMAND TOTAL																

PANEL LP3 PANEL SCHEDULE ELECTRIC ROOM

VOLTAGE: 120/208 PHASE: 3 WIRE: 4 — BUS: 200 MLO: YES MCB: NO — AIC: 35,000 CKTS: 42 MOUNTING: SURFACE — CONNECTED KVA: DEMAND KVA:

CKT #	AMP SIZE	POLE	Ø	LIGHTING A	LIGHTING B	LIGHTING C	RECEPTACLES A	RECEPTACLES B	RECEPTACLES C	POWER/HEAT A	POWER/HEAT B	POWER/HEAT C	MISC. A	MISC. B	MISC. C	BRANCH CIRCUIT DESCRIPTION
1	30	2	A										1.8			HAND DRYER ROOM 124
3	↑	↑	B											1.8		↑
5	30	2	C												1.8	HAND DRYER ROOM 111
7	↑	↑	A										1.8			↑
9	30	2	B											1.8		HAND DRYER ROOM 113
11	↑	↑	C												1.8	↑
13	30	2	A										1.8			HAND DRYER ROOM 117
15	↑	↑	B											1.8		↑
17	30	2	C												1.8	HAND DRYER ROOM 117
19	↑	↑	A										1.8			↑
21	30	2	B											1.8		HAND DRYER ROOM 116
23	↑	↑	C												1.8	↑
25	30	2	A										1.8			HAND DRYER ROOM 116
27	↑	↑	B											1.8		↑
29	20	1	C						.18							REFRIGERATOR ROOM 114
31	20	1	A													TANK LEAK DETECTOR
33	20	1	B													SPARE
35	20	1	C													SPARE
37	20	1	A													SPARE
39	20	1	B													SPARE
41	20	1	C													SPARE
2	30	2	A										4.0			HAND DRYER
4	↑	↑	B											4.0		↑
6	20	1	C									.1				REFRIGERATOR ROOM 114
8	15	3	A							.3						PUMP CP-1
10	↑	↑	B								.3					↑
12	↑	↑	C									.3				↑
14	15	3	A							.3						PUMP CP-1
16	↑	↑	B								.3					↑
18	↑	↑	C									.3				↑
20	20	1	A				.18									TICKET COUNTER CLOCK
22	20	1	B					.18								TOWER CLOCK
24			C													
26			A													
28			B													
30			C													
32			A													
34			B													
36			C													
38			A													
40			B													
42			C													
CONNECTED TOTAL																NOTES:
DEMAND				100%			70%			80%						
DEMAND TOTAL																

PANEL LPB PANEL SCHEDULE

VOLTAGE: 120/208 PHASE: 3 WIRE: 4 — BUS: 200 MLO: YES MCB: NO — AIC: 35,000 CKTS: 42 MOUNTING: SURFACE — CONNECTED KVA: DEMAND KVA:

CKT #	AMP SIZE	POLE	Ø	LIGHTING A	LIGHTING B	LIGHTING C	RECEPTACLES A	RECEPTACLES B	RECEPTACLES C	POWER/HEAT A	POWER/HEAT B	POWER/HEAT C	MISC. A	MISC. B	MISC. C	BRANCH CIRCUIT DESCRIPTION
1	20	2	A	2.0												LONG TERM PARKING
3	↑	↑	B		2.0											↑
5	20	2	C			2.2										LONG TERM PARKING
7	↑	↑	A	1.1												↑
9	20	2	B		.9											WAITING TO BOARD PKG
11	↑	↑	C			.9										↑
13	30	2	A	1.7												WAITING TO BOARD PKG
15	↑	↑	B		1.7											↑
17	20	2	C			1.1										SHORT TERM PARKING
19	↑	↑	A	1.1												↑
21	20	1	B		.5											FLAG POLE LIGHT
23	20	1	C						.18							EXTERIOR REC.
25	20	1	A				.18									EXTERIOR REC.
27	20	2	B													WASTE OIL TANK PUMP
29	↑	↑	C													↑
31	35	2	A										3.4			WATER HEATER
33	↑	↑	B											3.4		↑
35	20	1	C									1.0				OIL BURNER
37	20	3	A							.6						HRU-1
39	↑	↑	B								.6					↑
41	↑	↑	C													↑
2	20	2	A							1.5						CU-1
4	↑	↑	B								1.5					↑
6	20	2	C									.6				AC-1
8	↑	↑	A							.6						↑
10	20	2	B								1.1					CU-2
12	↑	↑	C									1.1				↑
14	40	2	A							2.8						CU-3
16	↑	↑	B								2.8					↑
18	20	2	C									.6				AC-3
20	↑	↑	A							.6						↑
22	40	2	B								2.8					CU-4
24	↑	↑	C									2.8				↑
26	20	2	A							.6						AC-4
28	↑	↑	B								.6					↑
30	30	2	C									1.8				CU-5
32	↑	↑	A							1.8						↑
34	20	2	B								.6					AC-5
36	↑	↑	C									.6				↑
38	20	1	A							.3						RFM-1
40	20	1	B								.3					RFM-2
42	20	1	C									.3				RFM-3
CONNECTED TOTAL																NOTES:
DEMAND				100%			70%			80%						
DEMAND TOTAL																

129-132

filename: ROCK-AE2

.25 .35 .50 .70

REVISIONS

RALPH F. SWEET 2803 REGISTERED PROFESSIONAL ENGINEER

ROCKLAND FERRY TERMINAL

MAINE DEPARTMENT OF TRANSPORTATION

T F H ARCHITECTS
100 COMMERCIAL STREET
PORTLAND, MAINE 04101
TELEPHONE 207 775 6141

POWER DISTRIBUTION AND TELEPHONE

DATE: OCTOBER 12, 1994

SCALE: 1/8" = 1'

DRAWN BY: ACAD

FILE NAME: ROCK-AE2 — CHECKED BY: RFS

REVISION DATE: --

MDOT PROJECT NO. FBD-6069-(00)-X

DRAWING NO. E2

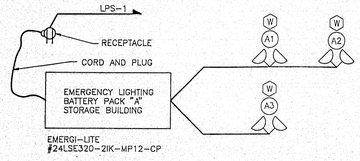

EMERGENCY LIGHTING–BATTERY PACK "A"––WIRING DIAGRAM

NOT TO SCALE (SEE EQUIPMENT LAYOUT ON SHEET E-1)

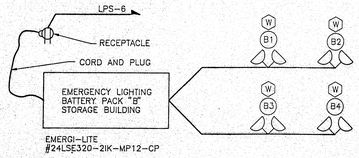

EMERGENCY LIGHTING–BATTERY PACK "B"––WIRING DIAGRAM

NOT TO SCALE (SEE EQUIPMENT LAYOUT ON SHEET E-1)

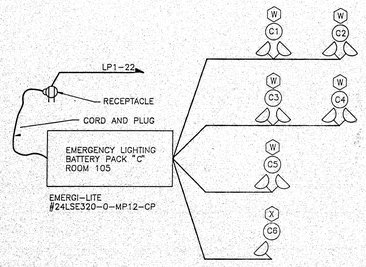

EMERGENCY LIGHTING–BATTERY PACK "C"––WIRING DIAGRAM

NOT TO SCALE (SEE EQUIPMENT LAYOUT ON SHEET E-1)

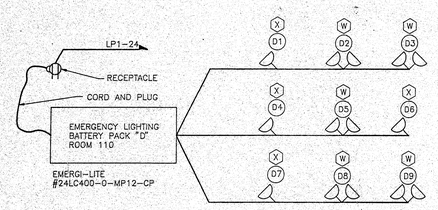

EMERGENCY LIGHTING–BATTERY PACK "D"––WIRING DIAGRAM

NOT TO SCALE (SEE EQUIPMENT LAYOUT ON SHEET E-1)

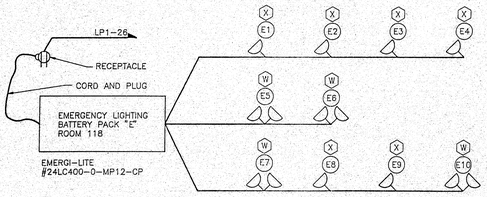

EMERGENCY LIGHTING–BATTERY PACK "E"––WIRING DIAGRAM

NOT TO SCALE (SEE EQUIPMENT LAYOUT ON SHEET E-1)

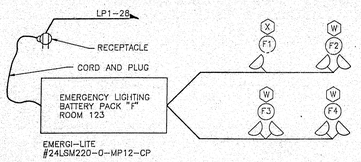

EMERGENCY LIGHTING–BATTERY PACK "F"––WIRING DIAGRAM

NOT TO SCALE (SEE EQUIPMENT LAYOUT ON SHEET E-1)

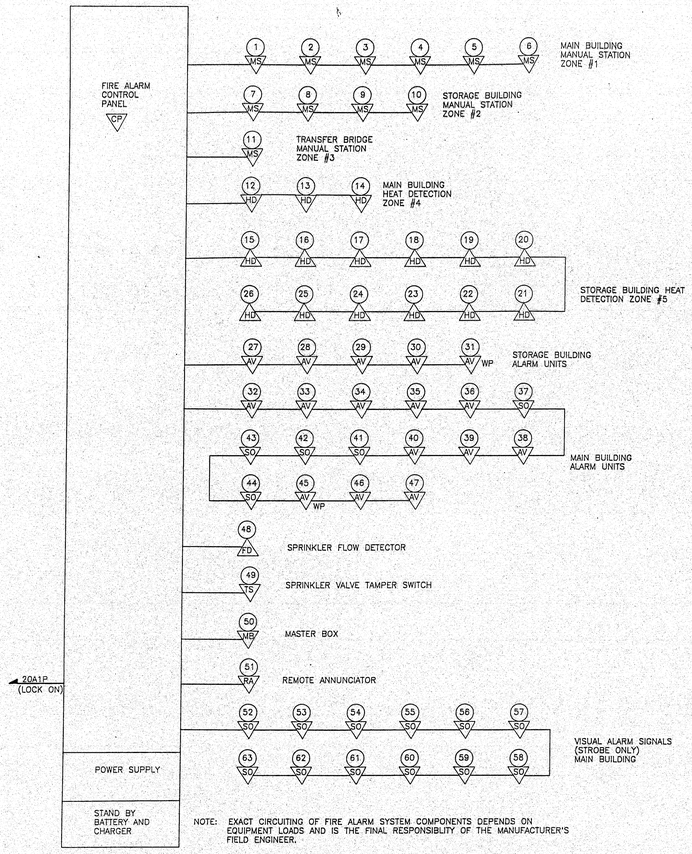

NOTE: EXACT CIRCUITING OF FIRE ALARM SYSTEM COMPONENTS DEPENDS ON EQUIPMENT LOADS AND IS THE FINAL RESPONSIBILITY OF THE MANUFACTURER'S FIELD ENGINEER.

FIRE ALARM SYSTEM FUNCTIONAL BLOCK DIAGRAM

NOT TO SCALE

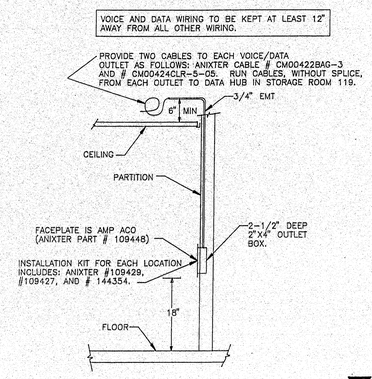

TELEPHONE/DATA OUTLET DETAIL

NOT TO SCALE

TELEPHONE AND COMPUTER OUTLET NOTES:

1 CABLE TERMINATIONS AT THE OUTLET END SHALL BE THE RESPONSIBILITY OF THE ELECTRICAL CONTRACTOR.

2 ALL CABLES, OUTLET COMPONENTS, AND TERMINATION EQUIPMENT SHALL BE PROVIDED BY THE ELECTRICAL CONTTRACTOR.

3 ALL COMPUTER CABLES ARE TO TERMINATE AT THE NETWORK HUB IN THE ROOM 119.

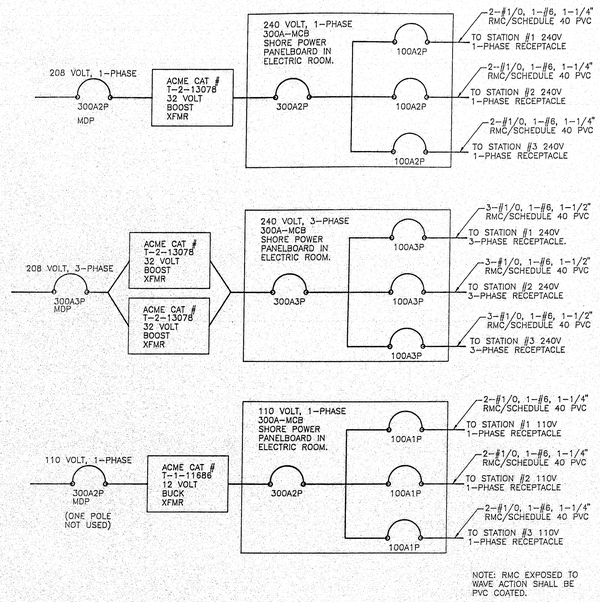

NOTE: RMC EXPOSED TO WAVE ACTION SHALL BE PVC COATED.

SHORE POWER SYSTEM WIRING DETAIL

NOT TO SCALE

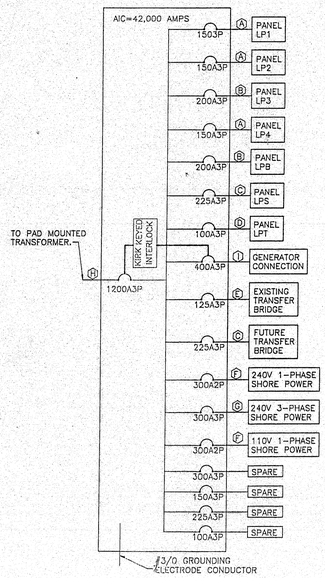

POWER DISTRIBUTION BLOCK DIAGRAM

NOT TO SCALE

FEEDER SCHEDULE

A	4–#1/0, 1–#6, IN 2" EMT
B	4–#3/0, 1–#6, IN 2–1/2" EMT
C	4–250KCMIL, 1–#3, IN 3" EMT/PVC
D	4–#1, 1–#6, IN 2" EMT/PVC
E	4–#3/0, 1–#2, IN 2–1/2" EMT/PVC
F	3–350KCMIL, 1–#2, IN 3" EMT/PVC
G	4–350KCMIL, 1–#2, IN 3–1/2"EMT/PVC
H	4–500KCMIL, IN EACH OF FOUR 3–1/2" SCHEDULE 40 PVC CONDUITS.
I	4–500KCMIL, 1–#1/0 IN 4" EMT

FAULT CURRENT WITHSTAND RATINGS

AIC RATING FOR PANELS LP1, LP2, LP3, AND LPB SHALL BE 35,000 AMPS MINIMUM.

AIC RATINGS FOR PANEL LP4 SHALL BE 22,000 AMPS MINIMUM.

AIC RATINGS FOR PANELS LPS AND LPT SHALL BE 10,000 AMPS MINIMUM.

ADA NOTE:

ALL ELECTRICAL WORK SHALL BE IN ACCORDANCE WITH THE STRICTEST INTERPRETATION OF THE REQUIREMENTS OF THE AMERICANS WITH DISABILITIES ACT.

129-133

(filename: ROCK-AE3) 25 35 50 70

REVISIONS

STATE OF MAINE RALPH F. SWEET 2903 REGISTERED PROFESSIONAL ENGINEER

ROCKLAND FERRY TERMINAL

MAINE DEPARTMENT OF TRANSPORTATION

T F H ARCHITECTS
100 COMMERCIAL STREET
PORTLAND, MAINE 04101
TELEPHONE 207 775 6141

RISER DIAGRAMS AND DETAILS

DATE	OCTOBER 12, 1994
SCALE	1/8" = 1'
DRAWN BY	ACAD
FILE NAME ROCK–AE3	CHECKED BY RFS
NDOT PROJECT NO.	FBD–6069–(00)–X
DRAWING NO.	E3

LUMINAIRE SCHEDULE

TYPE	MANUFACTURER	CATALOG NUMBER	DESCRIPTION	VOLTAGE	LAMPS QUANTITY	LAMPS WATTS	LAMPS COLOR	LAMPS TYPE	NOTES
A	METALUX	2PGAX2U1-5/8533I-120	RECESSED 2X2 TROFFER WITH PARABOLIC, SEMISPECULAR LOUVER AND ELECTRONIC BALLAST FOR T8 LAMPS	120	2	31	3500K	T8	
B	METALUX	SS232-HRS120-WGSS4-AYC/N-36	SURFACE MOUNTED CHANNEL, 48" LONG, WITH ELECTRONIC BALLAST, CHAIN HANGER SET, WIRE GUARD	120	2	32	3500K	T8	
C	METALUX	WS22A-120	SURFACE MOUNTED, WRAPAROUND LENS, 48" LUMINAIRE WITH ELECTRONIC BALLAST	120	2	32	3500K	T8	
D	METALUX	SS225HRS-120-STN/SS-ASY-3-AYC/N-36	CHAIN HUNG STRIP LIGHT, ELECTRONIC BALLAST, ASYMETRIC REFLECTOR - 36"	120	2	25	3500K	T8	
E	METALUX	SS232-HRS-120-STN/SS-ASY-3-AYC/N-36	SAME AS D EXCEPT 48"	120	2	32	3500K	T8	
EX	NOT USED								
F	METALUX	CLZ-13T5-EB-120	UNDER CABINET LIGHT - 24" LONG	120	2	13	3500K	13T5	
G	ALS	SERIES 62-4-9-01W	PENDANT MOUNTED TRANSLUCENT BOWL - 120-1-400-3200K-MH	120	1	250	3200K	MH	
H	MANNING	D5-25-18-M1+175-C-	WALL SCONCE - REMOTE MOUNT BALLAST						
I	NOT USED								
J	HALO	H801-HP-810C	RECESSED DOWNLIGHT, CLEAR ALZAK, 8" OPEN APERATURE	120	2	28	3500K	28DTT	
K	HALO	H600CFHP-1603C	RECESSED DOWN LIGHT, - 20° STARTING, CLEAR ALZAK, 6" OPEN APERATURE	120	1	22	3500K	QT4	
L	METALUX	2PGAX332S361120	RECESSED 2X4 TROFFER WITH PARABOLIC, SEMI SPECULAR LOUVER AND ELECTRONIC BALLAST	120	3	32	3500K	T8	
LL	NOT USED								
M	METALUX	M-29GHO-120-WG/IC	INDUSTRIAL HIGH OUTPUT, LIGHT WITH APERTURED REFLECTOR - ELECTROINC BALLAST	120	2	110	3500K	F96T12HO	
N	PRESCOLITE	515DFQ-120	FLUSH GROUND MOUNTED FLAG POLE LIGHT WITH GUARD	120	1	175	CLEAR	MH	
O	GENERAL ELECTRIC	PF54F-25-S2H-PCR-7X6-DB	BUILDING MOUNTED FLOOD LIGHT, PROVIDE TOP AND SIDES VISOR, PHOTO CELL SWITCH, SLIPFITTER AND WALL BRACKET.						
P	GENERAL ELECTRIC	PF54F-40-S2H-PCR-7X6-DB	SAME AS TYPE "O" EXCEPT 400 WATT LAMP						
Q	GARDCO	H1913-400HPS-208-BRA-PC	SINGLE POLE LIGHT - MEDIUM CUTOFF, BRONZE ANODIZED - POLE IS 30'	208	1	400	--	HPS	1
R	GARDCO	H1923-400HPS-208-BRA-PC	DOUBLE 180° POLE LIGHTS, MEDIUM CUTOFF, BRONZE ANODIZED - POLE IS 30'	208	2	400	--	HPS	1
S	GARDCO	H192R3-400HPS-208-BRA-PC	DOUBLE RIGHT ANGLE POLE LIGHT, MEDIUM CUTOFF, BRONZE ANODIZED - POLE IS 30'	208	2	400	--	HPS	1
T	GARDCO	H1943-400HPS-208-BRA-PC	QUAD POLE LIGHT, MEDIUM CUTOFF, BRONZE ANODIZED - POLE IS 35'	208	4	400	--	HPS	1
U	MANNING	D5-25-18C-175MH	WALL SCONCE - SAME AS "H" EXCEPT WITH DAMP LOCATION RATING						
V	MOLDCAST	PCL1-03-25-DP-BL-PCR	WALL PACK WITH 70° CUT OFF ANGLE	208	1	250	HPS	HPS	
W	EMERGI-LITE	EF160-W-80X80	SURFACE MOUNTED, DOUBLE HEAD, REMOTE POWER EMERGENCY LIGHT	24VDC	2	25	--	HIT	
X	EMERGI-LITE	EF-18-W-80X80	SURFACE COUNTED, SINGLE HEAD, REMOTE POWER EMERGENCY LIGHT	24VDC	1	25	--	HIT	
Y	SURE-LITES	ELX-5-1-70-WH-RW-W							
Z									

LUMINAIRE CATALOG NUMBERS ARE TO ESTABLISH MINIMUM STANDARDS. LUMINAIRES EQUAL TO OR BETTER THAN THOSE SPECIFIED WILL BE ACCEPTED. THE ELECTRICAL ENGINEER SHALL BE THE SOLE JUDGE OF EQUIVALENCE.

NOTE 1 SEE SHEET E-5 FOR POLE DESCRIPTION

PANEL SCHEDULE (STORAGE BUILDING)

PANEL "LPS"

VOLTAGE: 120/208 PHASE: 3 WIRE: 4 BUS: 225 MLO: -- MCB: 225 AIC: 22,000 CKTS: 42 MOUNTING: SURFACE CONNECTED KVA: DEMAND KVA:

CKT.BRKR. #	AMP SIZE	POLE	P	LIGHTING A	LIGHTING B	LIGHTING C	RECEPTACLES A	RECEPTACLES B	RECEPTACLES C	POWER/HEAT A	POWER/HEAT B	POWER/HEAT C	MISC. A	MISC. B	MISC. C	BRANCH CIRCUIT DESCRIPTION
1	20	1	A	.3												BATTERY PACK "A"
3	20	1	B		.1.5											OPEN AREA LIGHTS
5	20	1	C			.75										BELOW MEZZ.-LIGHTS
7	20	1	A	.75												ABOVE MEZZ.-LIGHTS
9	20	1	B				.72									RECEPTACLES
11	20	1	C					.72								RECEPTACLES
13	20	1	A				.36									RECEPTACLES
15	20	1	B													SPARE
17	20	1	C													SPARE
19	20	1	A													SPARE
21	20	1	B													SPARE
23	20	1	C													SPARE
25	20	1	A													SPARE
27	20	1	B													SPARE
29	20	1	C													SPARE
31	20	1	A													SPARE
33	20	1	B													SPARE
35	20	1	C													SPARE
37	20	1	A													SPARE
39	20	1	B													SPARE
41	20	1	C													SPARE
2	20	2	A	.7												EXTERIOR WALL PACKS
4			B		.7											
6	20	2	C													.6 OVERHEAD DOOR MOTOR
8			A										.6			
10			B													
12			C													
14			A													
16			B													
18			C													
20			A													
22			B													
24			C													
26			A													
28			B													
30			C													
32			A													
34			B													
36			C													
38			A													
40			B													
42			C													
CONNECTED TOTAL																
DEMAND				100%			70%			80%						
DEMAND TOTAL																

NOTES:

PANEL SCHEDULE MACHINE SHOP

PANEL "LP4"

VOLTAGE: 120/208 PHASE: 3 WIRE: 4 BUS: 150 MLO: YES MCB: NO AIC: 22,000 CKTS: 42 MOUNTING: SURFACE CONNECTED KVA: DEMAND KVA:

CKT.BRKR. #	AMP SIZE	POLE	P	LIGHTING A	LIGHTING B	LIGHTING C	RECEPTACLES A	RECEPTACLES B	RECEPTACLES C	POWER/HEAT A	POWER/HEAT B	POWER/HEAT C	MISC. A	MISC. B	MISC. C	BRANCH CIRCUIT DESCRIPTION
1	20	1	A	0.4			.5									PARTS WASHER
3	20	3	B					.98								LATHE
5			C						.98							
7			A				.96									
9	20	2	B					1.2								COMPRESSOR 1.5 HP
11			C						1.2							
13	60	2	A										4.8			WELDER
15			B											4.8		
17	20	1	C					.9								GRINDER
19	20	1	A				.36									RECEPTACLES
21	20	1	B					.18								RECEPTACLES
23	20	1	C						.18							RECEPTACLES
25			A													
27			B													
29			C													
31			A													
33			B													
35			C													
37			A													
39			B													
41			C													
2	20	1	A													WORK BENCH REC
4	20	1	B													SPARE
6	20	1	C													SPARE
8	20	1	A													SPARE
10	20	1	B													SPARE
12	20	1	C													SPARE
14	20	1	A													SPARE
16			B													
18			C													
20			A													
22			B													
24			C													
26			A													
28			B													
30			C													
32			A													
34			B													
36			C													
38			A													
40			B													
42			C													
CONNECTED TOTAL																
DEMAND				100%			70%			60%						
DEMAND TOTAL																

NOTES:

PANEL SCHEDULE NEW TICKET HOUSE

PANEL "LPT"

VOLTAGE: 120/208 PHASE: 3 WIRE: 4 BUS: 100 MLO: -- MCB: 100 AIC: 10,000 CKTS: 24 MOUNTING: SURFACE CONNECTED KVA: DEMAND KVA:

CKT.BRKR. #	AMP SIZE	POLE	P	LIGHTING A	LIGHTING B	LIGHTING C	RECEPTACLES A	RECEPTACLES B	RECEPTACLES C	POWER/HEAT A	POWER/HEAT B	POWER/HEAT C	MISC. A	MISC. B	MISC. C	BRANCH CIRCUIT DESCRIPTION
1	50	3	A							4.1						PUMP STATION
3			B								4.1					
5			C									4.1				
7	20	1	A	.2												LIGHTS
9	20	1	B					.18								RECEPTACLES
11	20	1	C													SPARE
13	20	1	A													SPARE
15	20	1	B													SPARE
17	20	1	C													SPARE
19	20	1	A													SPARE
21	20	1	B													SPARE
23	20	1	C													SPARE
25			A													
27			B													
29			C													
31			A													
33			B													
35			C													
37			A													
39			B													
41			C													
2	20	2	A							.25						ELECTRIC HEAT
4			B								.25					
6	20	2	C													SPARE
8			A													
10			B													
12			C													
14			A													
16			B													
18			C													
20			A													
22			B													
24			C													
26			A													
28			B													
30			C													
32			A													
34			B													
36			C													
38			A													
40			B													
42			C													
CONNECTED TOTAL																
DEMAND				100%			70%			80%						
DEMAND TOTAL																

NOTES:

MATERIAL SCHEDULE

ITEM	MANUFACTURER	CATALOG NUMBER	
1	PARAGON	47217-20S	TIME CLOCK SWITCH, 4PST, 40A CONTACTS, 208V, SKIP DAY, CARRY OVER
2	PARAGON	4213-00S	TIME CLOCK SWITCH, 2PST, 40A CONTACTS, 208V, SKIP DAY, CARRY OVER
3	NOT USED		
4	SQUARE D	2510-MBG22V08	MANUAL MOTOR STARTER W/ OL, LV PROTECTION 2HP 3-PHASE
5	SQUARE D	2510MBG21V08	MANUAL MOTOR STARTER W/ OL, LV PROTECTION 2 HP 3-PHASE
6	SQUARE D	8538SBG12V08	AUTOMATIC STARTER W/ HOA, OL, LV PROTECTION, PILOT LGT, 1/2HP 3-PH
7	SQUARE D	NQOD430L400CU	SHORE POWER PANEL BOARD, BOLT-ON CB, 300A MCB, 3-PHASE
8	ACME	T-2-13078	BOOST TRANSFORMER, 32V
9	ACME	T-1-11686	BUCK TRANSFORMER, 12V
10	SQUARE D	NQOD30L400CU	SHORE POWER PANELBOARD, BOLT-ON CB, 300A MCB, 1-PHASE
11			
12			
13			
14			
15			
16			

GENERAL NOTES

1. ALL WORK SHALL BE DONE IN ACCORDANCE WITH THE NATIONAL ELECTRICAL CODE, NFPA70-1993.
2. THE ELECTRICAL CONTRACTOR SHALL COORDINATE HIS WORK WITH THAT OF OTHER TRADES.
3. THE ELECTRICAL CONTRACTOR SHALL VERIFY THE EXACT ELECTRICAL CONNECTION POINT FOR EQUIPMENT OF OTHER TRADES WITH THOSE TRADES BEFORE ROUGHING-IN ELECTRICAL WORK.
4. ALL ELECTRICAL WORK SHOWN WITHOUT DIMENSIONS IS SHOWN DIAGRAMMATICALLY AND EXACT LOCATIONS ARE TO BE DETERMINED IN THE FIELD.
5. ALL REMOVED ELECTRICAL EQUIPMENT AND MATERIAL SHALL REMAIN THE PROPERTY OF THE OWNER UNTIL SUCH TIME THAT THE OWNER'S REPRESENTATIVE HAS REVIEWED AND RELEASED THE ELECTRICAL EQUIPMENT AND MATERIAL TO THE CONTRACTOR. ELECTRICAL EQUIPMENT AND MATERIAL RELEASED TO THE CONTRACTOR SHALL BE REMOVED FROM THE PREMISES BY THE CONTRACTOR.
6. THE ELECTRICAL CONTRACTOR SHALL VERIFY THE FIRE RATING OF WALLS, FLOORS AND CEILINGS WITH THE ARCHITECT'S DRAWINGS AND SHALL INSTALL PENETRATIONS WITH THE SAME FIRE RATING IN THESE PARTITIONS AS SHOWN IN THE UL FIRE RESISTANCE DIRECTORY FOR EACH CIRCUMSTANCE.
7. THE ELECTRICAL DRAWINGS AND SPECIFICATIONS FORM AN INTEGRAL PART OF THE CONTRACT DOCUMENTATION AND INFORMATION GIVEN IN EITHER IS AS APPLICABLE AS IF GIVEN IN BOTH.
8. WHERE DIFFERENCES EXIST BETWEEN TWO OR MORE DESCRIPTIONS OF WORK TO BE DONE, THE MORE DETAILED DESCRIPTION SHALL PREVAIL.
9. WHERE ALLOWED AND UNLESS OTHERWISE NOTED ON THE DRAWINGS OR IN THE SPECIFICATIONS, ALL WIRING FOR 20 AMPERE, 120 VOLT BRANCH CIRCUITS SHALL BE COPPER NUMBER 12/2 TYPE NMB OR TYPE NMC (ROMEX) CABLE.
10. GFCI RECEPTACLES ARE NOT TO BE THROUGH WIRED TO PROTECT DOWNSTREAM EQUIPMENT UNLESS OTHERWISE SPECIFICALLY NOTED ON THE DRAWINGS OR IN THE SPECIFICATIONS.
11. LUMINAIRES RECESSED INTO FIRE RATED CEILINGS SHALL HAVE FIRE RATED ENCLOSURES IN ACCORDANCE WITH THE UL FIRE RESISTANCE DIRECTORY.
12. THE ELECTRICAL CONTRACTOR SHALL COORDINATE THE MOUNTING HEIGHT OF ALL LIGHT SWITCHES AND RECEPTACLES IN THE FIELD WITH ARCHITECT'S FLOOR PLANS AND ELEVATIONS.
13. ALL FUSES SHALL BE UL CLASS RK-1, CURRENT LIMITING, TIME DELAY, CARTRIDGE TYPE UNLESS OTHERWISE NOTED.
14. ALL INDIVIDUAL CONDUCTORS ARE COPPER WITH THWN INSULATION COLOR CODED AS SPECIFIED.
15. THE ELECTRICAL CONTRACTOR SHALL VERIFY WITH OTHER TRADES THAT RECEPTACLES MATCH THE PLUG PROVIDED WITH THEIR EQUIPMENT WHEN THAT EQUIPMENT IS REFERENCED ON THE ELECTRICAL DRAWINGS.
16. THE ELECTRICAL CONTRACTOR SHALL ARRANGE TO HAVE THE ELECTRICAL INSPECTOR HAVING JURISDICTION INSPECT ALL WIRING BEFORE IT IS CONCEALED.
17. ALL TEMPORARY WIRING AND ELECTRICAL EQUIPMENT USED DURING CONSTRUCTION SHALL BE REMOVED FROM THE BUILDING BEFORE COMPLETION.
18. ALL ELECTRICAL WORK SHALL BE IN ACCORDANCE WITH THE STRICTEST INTERPRETATION OF THE AMERICANS WITH DISIBILITIES ACT.

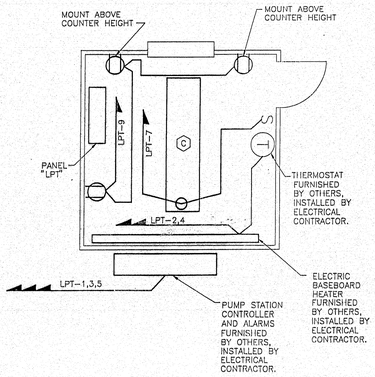

NEW TICKET BUILDING--FLOOR PLAN
NOT TO SCALE

SYMBOLS

- LETTER REFERS TO ITEM ON LUMINAIRE SCHEDULE
- DOWN LIGHT RECESSED IN EXTERIOR CANOPY
- PENDANT MOUNTED LIGHT IN WAITING AREA
- RECESSED FLUORESCENT LIGHT WITH PARABOLIC LOUVERS
- EXTERIOR, BUILDING MOUNTED FLOOD LIGHT (AIMABLE)
- RECESSED FLUORESCENT DOWN LIGHT
- WALL MOUNTED INCANDESCENT LIGHT
- TYPICAL FLUORESCENT LUMINAIRES (SEE LUMINAIRE FOR DESCRIPTION)
- 30 / 10 / AMS, 2P / 1A — AUTOMATIC MOTOR STARTER WITH FUSED DISCONNECT SWITCH DISCONNECT SWITCH RATED 30A, 2-POLE, NEMA-1A AND FUSED AT 10 AMPS. SEE MATERIAL LIST FOR CATALOG NUMBERS
- REFERS TO ITEM NUMBER ON MATERIAL SCHEDULE
- LP-15 — BRANCH CIRCUIT HOMERUN TO PANEL CIRCUIT LP-15. SINGLE HALF ARROW HEAD INDICATES 120 VOLT CIRCUIT. TWO HALF ARROW HEADS INDICATES 240 VOLT CIRCUIT.
- MOTOR DRIVEN MECHANICAL EQUIPMENT
- SURFACE MOUNTED LOADCENTER
- EXIT LIGHT
- EWH — ELECTRIC WATER HEATER
- Sc — SPEED CONTROL SWITCH
- DUPLEX RECEPTACLE
- IG — DUPLEX RECEPTACLE-ISOLATED/INSULATED GROUND TYPE.
- DOUBLE DUPLEX RECEPTACLE
- G — DUPLEX RECEPTACLEGFCI TYPE
- WP — DUPLEX RECEPTACLE WITH LOCKABLE, WEATHERPROOF COVER
- MS — MANUAL FIRE ALARM STATION
- MB — MASTER BOX (CITY BOX)
- CP — FIRE ALARM SYSTEM CONTROL PANEL
- TS — SPRINKLER SYSTEM TAMPER SWITCH
- FD — SPRINKLER SYSTEM FLOW DETECTOR
- HD — FIRE ALARM SYSTEM HEAT DETECTOR
- DS — FIRE ALARM SYSTEM DUCT SMOKE DETECTOR
- SD — FIRE ALARM SYSTEM AREA SMOKE DETECTOR
- AV — AUDIO/VISUAL FIRE ALARM UNIT
- RI — REMOTE INDICATOR FOR CONCEALED SMOKE DETECTOR
- RA — FIRE ALARM SYSTEM REMOTE ANNUNCIATOR
- WP — DESIGNATION INDICATING COMPONENT IS WEATHERPROOF
- S — LIGHT SWITCH
- Sp — LIGHT SWITCH WITH PILOT LIGHT HANDLE
- S3 — THREE WAY LIGHT SWITCH
- S4 — FOUR WAY LIGHT SWITCH
- FIRE RATED WALL
- J — CONNECTION POINT JUNCTION BOX
- GROUNDING ELECTRODE AND CONDUTOR
- # — REFERS TO CONSTRUCTION NOTE NUMBER
- J — JUNCTION BOX OR ELECTRICAL CONNECTION POINT
- P/O — ABBREVIATION: PART OF
- PEC — PHOTOELECTRIC SWITCH
- F — DOUBLE DUPLEX RECEPTACLE-FLOOR MOUNTED
- SK — KEY OPERATED LIGHT SWITCH
- 30 / 25, 2P / 3R — FUSED DISCONNECT SWITCH, RATED AT 30 AMPS, FUSED AT 25 AMPS, 2-POLE, NEMA-3R ENCLOSURE.
- CU-1 — CONDENSING UNIT
- AC-1 — AIR CONDITIONER #1
- HRU-1 — HEAT RECOVERY UNIT #1
- CP-1 — CIRCULATION PUMP #1
- VOICE/DATA OUTLET
- CO — OUTLET FOR COIN OPERATED TELEPHONE-VOICE ONLY
- ATM — AUTOMATIC TELLER MACHINE TELEPHONE CONNECTION OUTLET.
- HD — WALL MOUNTED HAND DRYER
- SPB — PUSH BUTTON TYPE SWITCH
- SO — FIRE ALARM SYSTEM VISUAL (STROBE ONLY) ALARM UNIT.
- E — VOICE/DATA OUTLET WITH NO WIRING. EMPTY CONDUIT TERMINATES ABOVE CEILING. OUTLET BOX HAS BLANK, FLUSH WALL PLATE.

129-134

filename: ROCK-AE3

REVISIONS

STATE OF MAINE — RALPH E. SWEET 2803 REGISTERED PROFESSIONAL ENGINEER

ROCKLAND FERRY TERMINAL

MAINE DEPARTMENT OF TRANSPORTATION

T F H ARCHITECTS
100 COMMERCIAL STREET
PORTLAND, MAINE 04101
TELEPHONE 207 775 6141

NOTES, SYMBOLS, AND DETAILS

DATE	OCTOBER 12 1994
SCALE	1/8" = 1'
DRAWN BY	ACAD
FILE NAME	ROCK-AE4
CHECKED BY	RFS
MDOT PROJECT NO.	FBD-6069-(00)-X
DRAWING NO.	E4