STATE OF MAINE
DEPARTMENT OF TRANSPORTATION

TRAFFIC DATA

Current (2011) ADT	278

HYDROLOGIC DATA

Drainage Area	24.2 sq mi
Design Discharge (Q50)	1333 cfs
Check Discharge (Q100)	1527 cfs
Headwater Elevation (Q50)	442.67 ft
Headwater Elevation (Q100)	443.03 ft
Discharge Velocity (Q50)	9.16 fps
Discharge Velocity (Q100)	9.63 fps

LIST OF DRAWINGS

Title Sheet 1
Estimated Quantities & General Notes 2
Plan 3
Countermeasure Details 4
Right of Way Map 5

LINNEUS
AROOSTOOK COUNTY
CAMPBELL BRIDGE
OVER
SOUTH BRANCH MEDUXNESKEAG RIVER
NEW LIMERICK ROAD
BH-1833(200)X
BRIDGE NO. 5311

UTILITIES

Houlton Water Co.

Northern NE Tel., LLC

MAINTENANCE OF TRAFFIC

Contractor Shall Maintain a Minimum of One 11 Foot Lane of Alternating Traffic During Periods of Work. Road is to be Reopened to Traffic at the Close of Each Work Day.

PROJECT LOCATION:	Campbell Bridge (#5311) over the South Branch of the Meduxnekeag River on New Limerick Road. Located 0.5 Miles North of the junction with Burton Road. Lat 46°05'6.3", Long. -67°58'28.8"
PROGRAM AREA:	Bridge
OUTLINE OF WORK:	Bridge Scour Countermeasures: Installation of Countermeasure over full channel width, on adjacent banks, and Incidental Work.

WIN 18332.00

18332.00

STATE OF MAINE
DEPARTMENT OF TRANSPORTATION
APPROVED
COMMISSIONER: DATE 3/13/13
CHIEF ENGINEER: 3/12/13

STATE OF MAINE ROBERT L. FAULKNER No. 11944 LICENSED PROFESSIONAL ENGINEER

SIGNATURE
11944
P.E. NUMBER
March. 12 2013
DATE

PROJECT INFORMATION

PROGRAM	BRIDGE
PROJECT MANAGER	R. FAULKNER
DESIGNER	S. JOHNSON
CONSULTANT	CHA, INC.
PROJECT RESIDENT	
CONTRACTOR	
PROJECT COMPLETION DATE	

LINNEUS
CAMPBELL BRIDGE

TITLE SHEET

SHEET NUMBER
1
OF 5

Filename:\Linneus -- #5311\001_Title.dgn Division: Username: Date:3/12/2013

ESTIMATED QUANTITIES

ITEM NO.	DESCRIPTION	UNIT	QUANTITY
	ITEMS COMMON TO BOTH ALTERNATES		
203.20	COMMON EXCAVATION	CY	20
511.07	COFFERDAM (LEFT ABUTMENT)	LS	1
511.07	COFFERDAM (RIGHT ABUTMENT)	LS	1
610.07	STONE FILL	CY	55
629.05	HAND LABOR, STRAIGHT TIME	HR	10
631.121	HVY DUTY ALL PURP EXC (INC OPER)	HR	10
631.172	TRUCK-LARGE (INC OPER)	HR	10
639.19	FIELD OFFICE TYPE B	EA	1
652.33	DRUM	EA	25
652.34	CONE	EA	25
652.35	CONSTRUCTION SIGNS	SF	100
652.361	MAINTENANCE OF TRAFFICE CONTROL DEVICES	LS	1
652.38	FLAGGER	HR	40
656.75	TEMP SOIL EROSION & WATER POLLUTION CONTROL	LS	1
659.10	MOBILIZATION	LS	1
	ITEMS COMMON TO ALTERNATE NO. 1 (PARTIALLY GROUTED RIPRAP)		
203.2315	DISPOSAL OF DREDGE MATERIAL	T	185
610.522	PARTIALLY GROUTED RIP-RAP (9 INCH)	CY	90
620.50	EROSION CONTROL FILTER LAYER	SY	250
	ITEMS COMMON TO ALTERNATE NO. 2 (CONCRETE CABLE MATS)		
502.83	CONCRETE CABLE MAT	SF	1460
620.50	EROSION CONTROL FILTER LAYER	SY	80

GENERAL CONSTRUCTION NOTES

1. If necessary, temporary one lane closure with flagged alternating one way traffic may be utilized during periods of work. Road is to be reopened to two-way traffic at the close of each work day. Subject to coordination with the Resident and the Town.

2. Left and Right designations are based on looking downstream.

3. Payment for equipment, labor, and materials to access the work, as well as re-establish original ground, will be considered incidental to related Contract Bid Items.

4. The clearing limits as shown on the plans are approximate. The exact limits will be established in the field by the Resident. Payment for clearing will be considered incidental to Contract Bid Items.

5. Contractor shall be aware of overhead utilities that cross over the bridge and run parallel to the road on the Upstream Right and Downstream Left quadrants. Locations of any additional utilities are unknown.

6. Plans of the existing structure are available on the MaineDOT website for information only. Existing plans may not be current or "as-built".

7. Contractor shall field verify stream bed elevations along the upstream bridge fascia, downstream bridge fascia and along the centerline of the bridge. Streambed elevations shall be taken every 5 feet along all three lines and provided to the Resident. Resident will determine final streambed elevation(s) based on this information. This work shall not be paid for directly and will be considered incidental to related contract items.

8. Sections shown on the design plans depict "typical" conditions and the intent of the installation and may have to be altered to fit actual site conditions as directed by the Resident.

9. Outlines of the countermeasure installation are approximate and represent the minimum dimensions desired. The Resident may direct modifications to fit site conditions.

10. Estimates of quantities are necessarily approximate. Payment will be made on actual quantities installed to the satisfaction of the Resident.

11. Quantities included for pay items measured and paid for by Lump Sum are estimate quantities and are provided by MaineDOT for informational purposes only. Lump Sum pay items will be paid for at the Contract Bid amount, with no addition or reduction in payment to the Contractor if the actual final quantities are different from the MaineDOT provided estimate quantities, except as follows:

    a. If a Lump Sum pay item is eliminated, the requirements of Standard Specifications Section 109.2, Elimination of Items, will take precedence.

    b. If other Contract Documents specifically allow a change in payment for a Lump Sum pay item, those requirements will be followed.

    c. If a design change results in changes to estimate quantities for Lump Sum pay items, price adjustments will be made in accordance with Standard Specifications Section 109.7, Equitable Adjustments to Compensation.

12. Excavation required for installation of countermeasure, as shown on the plans, shall be considered incidental to related Contract Bid Items. Quantity estimate for Item 203.20 shall be for any additional miscellaneous excavation, as directed by the Resident.

13. Grout testing and curing boxes shall be considered incidental to related Contract Bid Items.

14. Installation of countermeasure material to be placed on the adjacent wingwall banks of the bridge shall be similar to that described for work in the streambed in front of the abutments, except that if stone protection exists on the banks, additional stone may be added to augment the protection, if approved by the Resident. The Resident may require removal of existing material judged unacceptable and installation of geotextile and filter material.

15. Contractor shall avoid damaging existing culvert at the downstream left corner of the bridge. Any repairs to the pipe, as directed by the Resident, shall be at the Contractor's expense.

STATE OF MAINE
DEPARTMENT OF TRANSPORTATION

BH - 1833(200)X

WIN 18332.00

Bridge No. 5311

BRIDGE PLANS

SIGNATURE

P.E. NUMBER

DATE

		BY	DATE
PROJ. MANAGER	R. Faulkner		
DESIGN-DETAILED	S. Johnson	M. Dames	3/2013
CHECKED-REVIEWED	B. Horne	B. Horne	3/2013
DESIGN2-DETAILED2			
DESIGN3-DETAILED3			
REVISIONS 1			
REVISIONS 2			
REVISIONS 3			
REVISIONS 4			
FIELD CHANGES			

Linneus - BR 5311
SCOUR COUNTERMEASURE
INSTALLATION PLAN

ESTIMATED QUANTITIES
& GENERAL NOTES

SHEET NUMBER

2

OF 5

Filename: ...\002_Estimate.dgn Division: Username: Date:3/7/2013

PLAN LEGEND

- Proposed Stone Fill** (Item 610.07)
- Proposed Channel Countermeasure*
- Proposed Channel Countermeasure* Under Bridge

* See Sections on Sheet 4 for Minimum Thickness Requirements.
** Average Stone Fill Thickness of 2.0ft (MaineDOT Item No. 610.07)

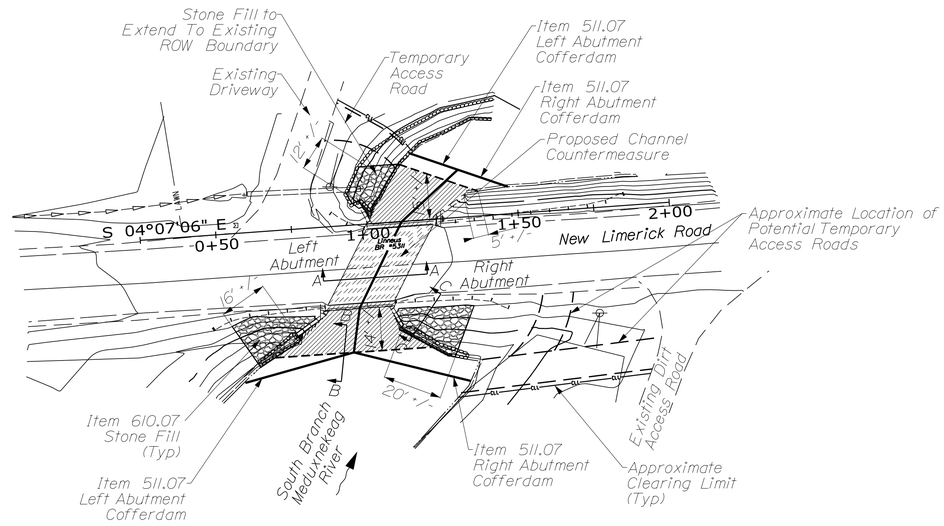

PLAN VIEW

Scale: 1" = 25'

Notes:

1. See Countermeasure Detail Sheet for Section A-A and B-B.
2. Dimensions Noted on the Upstream and Downstream Quadrents are Average Distances From the End of the Wingwall to the Edge of the Countermeasure.
3. Channel Countermeasures on the Downstream Side Shall Extend a Minimum of 15 Feet From the Edge of Fascia.

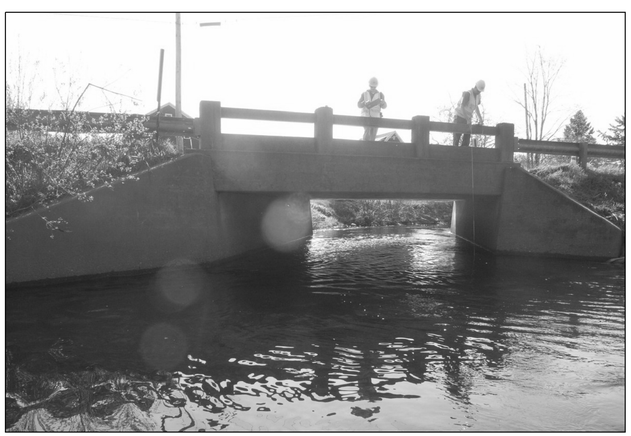

Upstream Elevation

Downstream Elevation

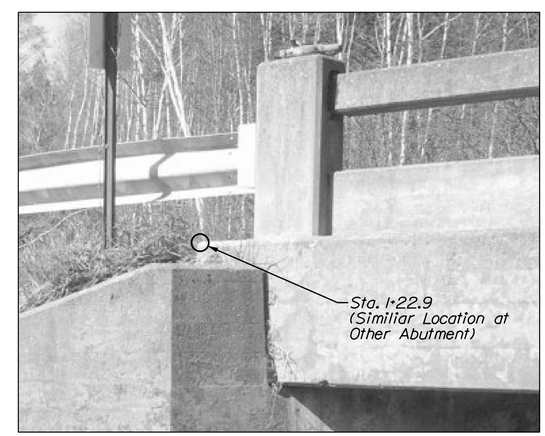

Right Abutment (Downstream)

Note: Straight Alignment Based Between Stations 1+00 and 1+22.9. Located at Corner of the Exterior Concrete Fascia as Shown in the Above Photo.

STATE OF MAINE
DEPARTMENT OF TRANSPORTATION

BH - 1833(200)X

WIN 18332.00

Bridge No. 5311

BRIDGE PLANS

		BY	DATE
PROJ. MANAGER	R. Faulkner		
DESIGN-DETAILED	S. Johnson	M. Domes	3/2013
CHECKED-REVIEWED	B. Horne	B. Horne	3/2013

SIGNATURE

P.E. NUMBER

DATE

LINNEUS BR 5311
SCOUR COUNTERMEASURE
INSTALLATION PLAN

PLAN

SHEET NUMBER

3

OF 5

Filename: ...\003_Bridge.dgn
Division:
Username:
Date:3/7/2013

ALTERNATE 1 - PARTIALLY GROUTED RIPRAP

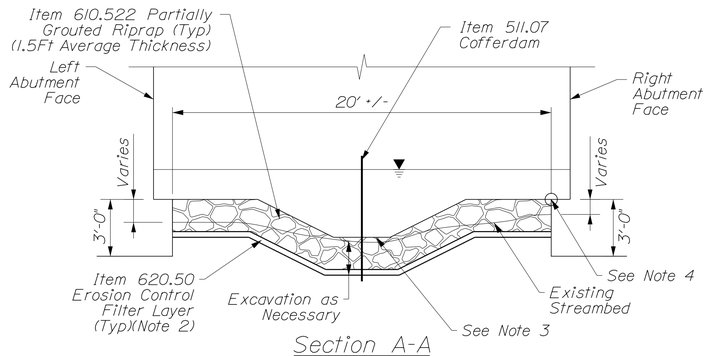

Section A-A

N.T.S.

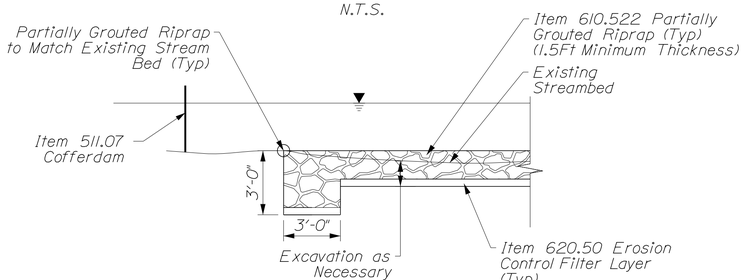

Section B-B

N.T.S.

Note: Upstream Shown. Downstream Reach Similiar

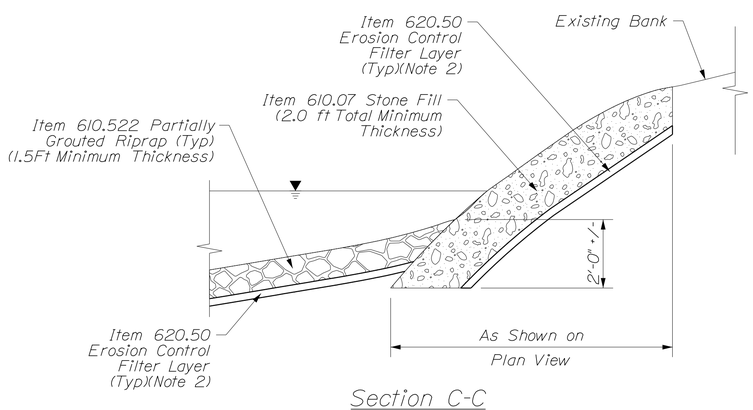

Section C-C

N.T.S.

ALTERNATE 2 - CONCRETE CABLE MAT

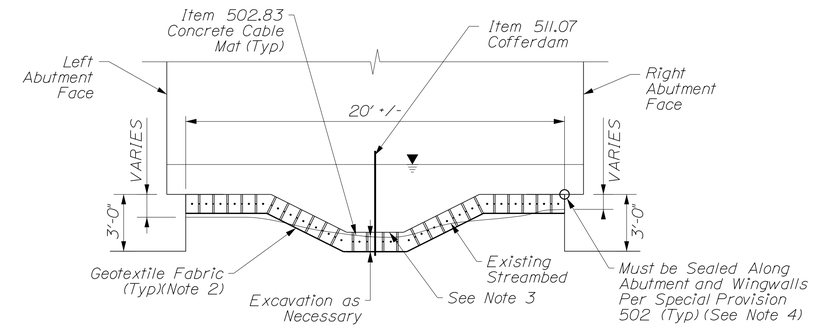

Section A-A

N.T.S.

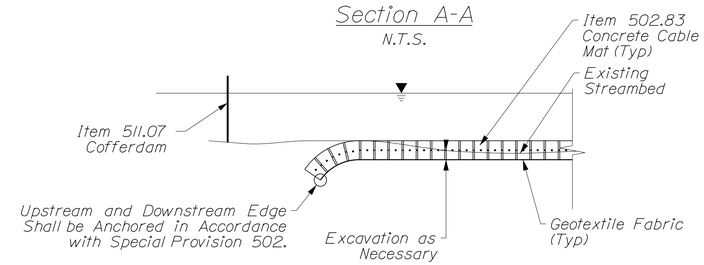

Section B-B

N.T.S.

Note: Upstream Shown. Downstream Reach Similiar

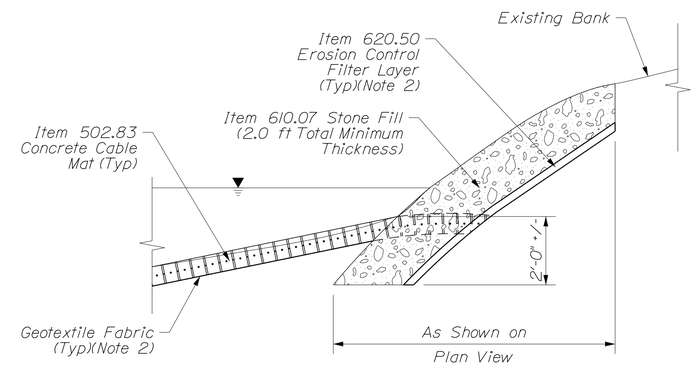

Section C-C

N.T.S.

Notes:

1. Clearance From Low Chord to Streambed During Field Visit on 5/13/2009 Varied From 6.7ft to 7.2ft. With a Water Depth of Approximately 2.8ft.

2. Protective Aggregate Cushion of Erosion Control Filter Layer Shall be 6" Thick Beneath Partially Grouted Riprap or Stone Fill. Concrete Cable Mats Shall Bear Directly on Geotextile Fabric. Geotextile Fabric Under Concrete Cable Mats Shall be Considered Incidental to Item 502.83.

3. For Required Low Flow Channel Dimensions. See the Related Countermeasure Specification. Upstream & Downstream Transition of Low Flow Channel to Existing Streambed Shall be as Directed by Resident.

4. Top of Countermeasure Shall be Flush with Top of Footing to Re-establish Streambed Elevation.

STATE OF MAINE
DEPARTMENT OF TRANSPORTATION

BH - 1833(200)X

WIN 18332.00

Bridge No. 5311

BRIDGE PLANS

PROJ. MANAGER	R. Faulkner	BY	DATE
DESIGN-DETAILED	S. Johnson	M. Domes	3/2013
CHECKED-REVIEWED	B. Horne	B. Horne	3/2013

SIGNATURE

P.E. NUMBER

DATE

LINNEUS BR 5311
SCOUR COUNTERMEASURE
INSTALLATION PLAN

COUNTERMEASURE DETAIL

SHEET NUMBER

4

OF 5

Date:3/7/2013

Username:

Division:

Filename: ...\Linneus -- #5311\004_Btyp.dgn

SEE SURVEY:
STANDARD BOUNDARY SURVEY
OF A PORTION OF THE JOHN R. JAMISON PROPERTY
NEW LIMERICK ROAD- LINNEUS
SHOWING BALSAM ACRES SUBDIVISION
BY PLISGA AND DAY LAND SURVEYORS
REC. SOUTHERN DISTRICT OF AROOSTOOK REGISTRY
BOOK OF PLANS 39 PAGE 56 B

THERESA L DUFF
ITEM NO. (2)
TEMP. CONST. RIGHTS = 940± S.F. (1)
TOTAL AREA = 17.5± AC. (PER TOWN)

TEMP. CONST. RIGHTS
THERESA L. DUFF
TO
STATE OF MAINE
DATED: 11/7/12

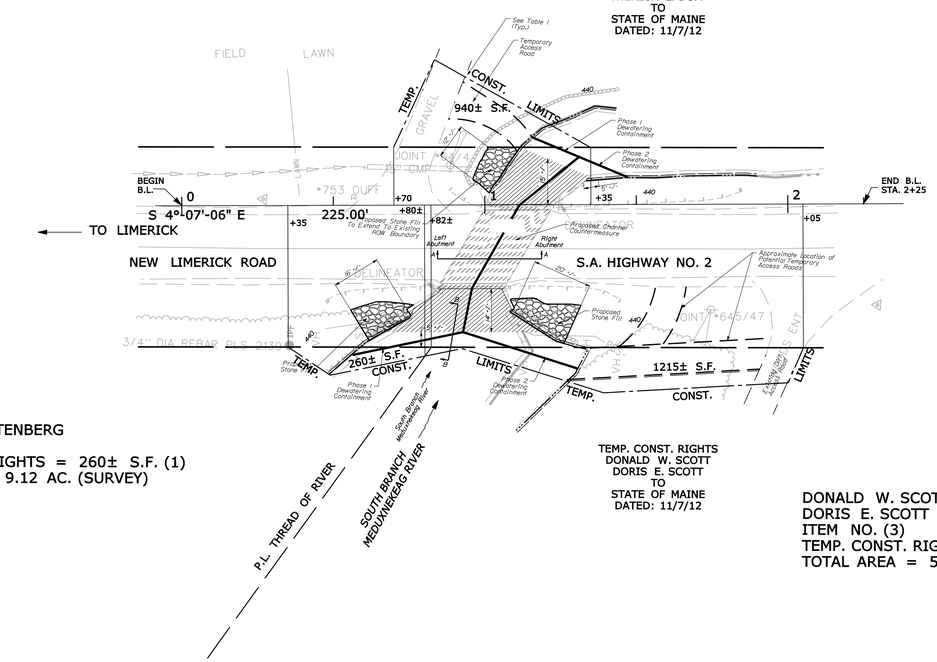

CARL H. TRACHTENBERG
ITEM NO. (1)
TEMP. CONST. RIGHTS = 260± S.F. (1)
TOTAL AREA = 9.12 AC. (SURVEY)

TEMP. CONST. RIGHTS
DONALD W. SCOTT
DORIS E. SCOTT
TO
STATE OF MAINE
DATED: 11/7/12

DONALD W. SCOTT
DORIS E. SCOTT
ITEM NO. (3)
TEMP. CONST. RIGHTS = 1215± S.F. (1)
TOTAL AREA = 56± AC. (SURVEY)

SEE SURVEY PLAN "JOHN R. JAMISON PROPERTY,
NEW LIMERICK ROAD-LINNEUS, AROOSTOOK COUNTY, MAINE,
SHOWING DREW HILL VIEW SUBDIVISION" DATED JAN. 8, 1998
PREPARED BY PLISGA & DAY, LAND SURVEYORS
RECORDED SOUTHERN DISTRICT OF THE AROOSTOOK REGISTRY
OF DEEDS IN BOOK OF PLANS 39, PAGE 57- A

TEMP. CONST. RIGHTS
CARL H. TRACHTENBERG
TO
STATE OF MAINE
DATED: 11/7/12

EXISTING R/W
LINNEUS TOWN RECORDS
1840 PAGE 128
ACCEPTED PAGE 134
4 RODS

BRIDGE NO. 5311

CAMPBELL BRIDGE
OVER
SOUTH BRANCH OF
MEDUXNEKEAG RIVER

WIN 18332.00

SYMBOLS

- IP or ● IPF (IRON PIPE or PIN FOUND)
- ☐ S.T. (SEPTIC TANK)
- ⊡ (ROW MONUMENT)
- ⚠BM (TRAVERSE POINT)
- WATER LINE
- GAS LINE
- ELECTRIC LINE
- TELEPHONE LINE
- SEWER LINE
- WELL (WELL)
- GRADING LIMIT LINE
- CONSTRUCTION LIMIT LINE
- PROPERTY LINE
- LIMITS OF WROUGHT PORTION (L.O.W.P.)
- EXISTING RIGHT OF WAY
- NEW RIGHT OF WAY
- NEW ROW WITHIN EXIST. ROW
- CONTROL OF ACCESS

ITEM	TECH	CHECKED
BASE MAP		
EXIST. R/W		
PROP. LINES	D.S.G.	
AREAS		

STATE OF MAINE
DEPARTMENT OF TRANSPORTATION
16 STATE HOUSE STATION - AUGUSTA, ME 04333-0016
LINNEUS
RIGHT OF WAY MAP

REVISIONS			
NO.	DATE	DESCRIPTION	BY

PLAN FILED IN PLAN BOOK PAGE COUNTY RECORD

NO.	GRANTOR	INSTRUMENT	DATE	BOOK	PAGE

DAVID BERNHARDT
COMMISSIONER
KENNETH L. SWEENEY
CHIEF ENGINEER
DATE

PLAN NOT TO BE RECORDED

STATE AID HIGHWAY NO. 2
NEW LIMERICK ROAD
LINNEUS AROOSTOOK COUNTY
FEDERAL AID PROJECT NO. BH-1833(200)X

SEPTEMBER 2012 | RIGHT-OF-WAY MAP | D.O.T. FILE NO. 2-549
SCALE 1" = 25' | SHEET 1 OF 1

SHEET NUMBER
5
OF 5

Filename: ...\00\ROW\MSTA\001_RWPLAN1.dgn Division: ROW Username: diana.grady Date:2/11/2013